DIST	COUNTY	ROUTE	POST MILES TOTAL PROJECT	SHEET No	TOTAL SHEETS
11	SD	75	R21.8	9	9

REGISTERED CIVIL ENGINEER 01/06/12 DATE

03-26-12
PLANS APPROVAL DATE

REGISTERED PROFESSIONAL ENGINEER VINH DUC L. DANG No. C65096 Exp. 09/30/13 CIVIL STATE OF CALIFORNIA

The State of California or its officers or agents shall not be responsible for the accuracy or completeness of electronic copies of this plan sheet.

4 REVISED PER ADDENDUM No. 4 DATED NOVEMBER 1, 2012

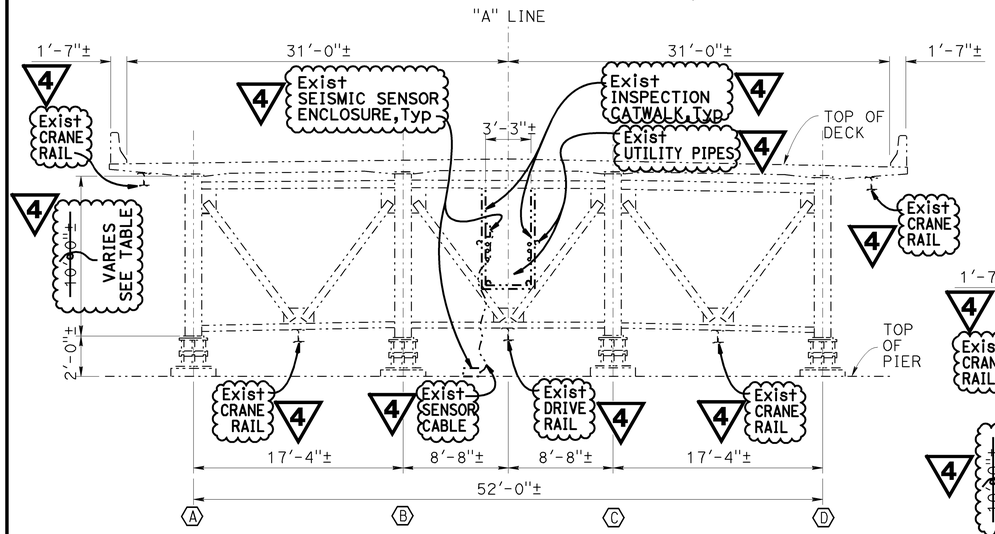

TYPICAL SECTION - SPANS 26,27

N.T.S.

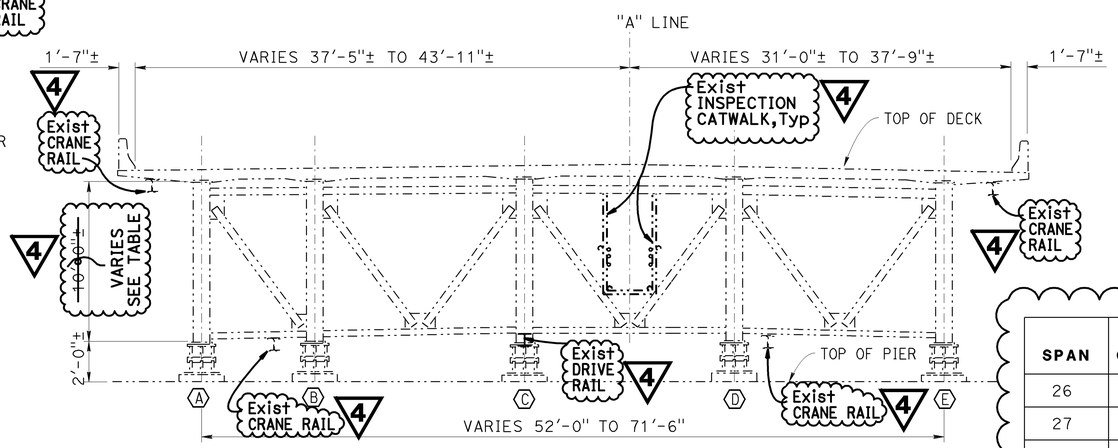

TYPICAL SECTION - SPANS 28,29

N.T.S.

SPAN	PIER NO./ GIRDER DEPTH	PIER NO./ GIRDER DEPTH	SPAN LENGTH
26	26/13'-0"±	27/12'-5"±	231'±
27	27/12'-5"±	28/10'-0"±	144'±
28	28/10'-0"±	29/10'-0"±	144'±
29	29/10'-0"±	30/10'-0"±	144'±

ALL GIRDER DEPTHS ARE 4"±

NOTES:

1. UTILITY PIPES ARE FOR HIGH VOLTAGE,WATER, AIR AND WASTE WATER.
2. ALL EXISTING UTILITIES TO BE PROTECTED INPLACE.

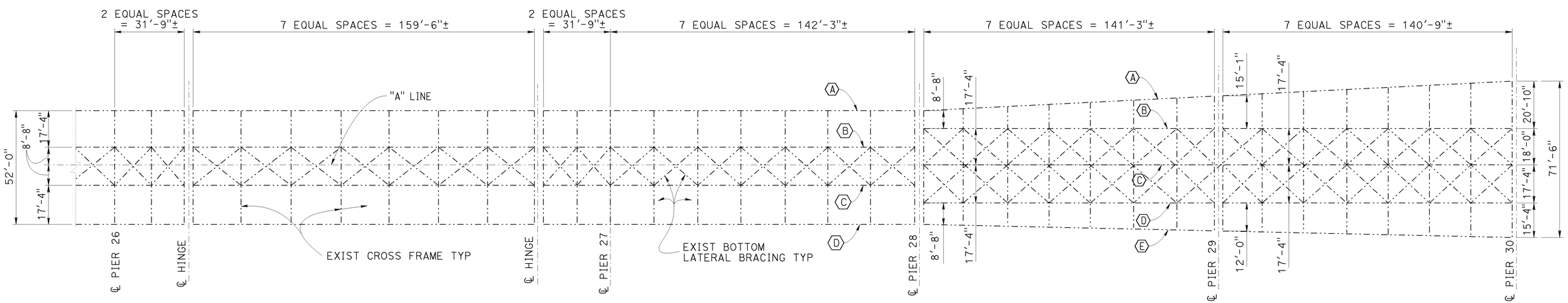

EXISTING FRAMING PLAN - SPANS 26,27,28,29

N.T.S.

NOTE:
THE CONTRACTOR SHALL VERIFY ALL CONTROLLING FIELD DIMENSIONS BEFORE ORDERING OR FABRICATING ANY MATERIAL. EXISTING UTILITY FACILITIES HAVE NOT BEEN PLOTTED ON THESE PLANS.

~~NOTE:~~
~~Catwalk and crane rails not shown.~~

DESIGN	BY Vinh Dang	CHECKED Tony Brake	
DETAILS	BY Tom Dang	CHECKED Vinh Dang	
QUANTITIES	BY Vinh Dang	CHECKED Tony Brake	

STATE OF CALIFORNIA
DEPARTMENT OF TRANSPORTATION

DIVISION OF MAINTENANCE
STRUCTURE MAINTENANCE DESIGN

BRIDGE NO. 57-0857
POST MILE R20.5

SAN DIEGO-CORONADO BAY BRIDGE
MISCELLANEOUS DETAILS

STRUCTURES MAINTENANCE DETAIL SHEET (ENGLISH) (REV. 10/25/05)

ORIGINAL SCALE IN INCHES FOR REDUCED PLANS 0 1 2 3

CU 11235
EA 409501

DISREGARD PRINTS BEARING EARLIER REVISION DATES 10-11-12 10-15-12 10-16-12

REVISION DATES

SHEET 02 OF 02

FILE => 11-409501-b-miscdtl.dgn

USERNAME => s129233 DATE PLOTTED => 19-OCT-2012 TIME PLOTTED => 08:10