Dist	COUNTY	ROUTE	POST MILES TOTAL PROJECT	SHEET No.	TOTAL SHEETS
11	Imp	8	R7.4/R7.9	1	16

STATE OF CALIFORNIA

DEPARTMENT OF TRANSPORTATION

ACHSIMG-008-2(102)E

PROJECT PLANS FOR CONSTRUCTION ON

STATE HIGHWAY

IN IMPERIAL COUNTY NEAR OCOTILLO FROM 0.2 MILE EAST TO 0.7 MILE EAST OF MYER CREEK BRIDGE NUMBER 58-0270R

TO BE SUPPLEMENTED BY STANDARD PLANS DATED MAY 2006

INDEX OF PLANS

Sheet No.	Description
1	Title and Location Map
2	Typical Cross Sections
3	Layout
4-6	Construction Details
7	Construction Area Signs
8	Traffic Handling Plan
9	Pavement Delineation Details and Quantities
10-11	Summary of Quantities
12-16	Revised Standard Plans

THE STANDARD PLANS LIST APPLICABLE TO THIS CONTRACT IS INCLUDED IN THE NOTICE TO BIDDERS AND SPECIAL PROVISIONS BOOK.

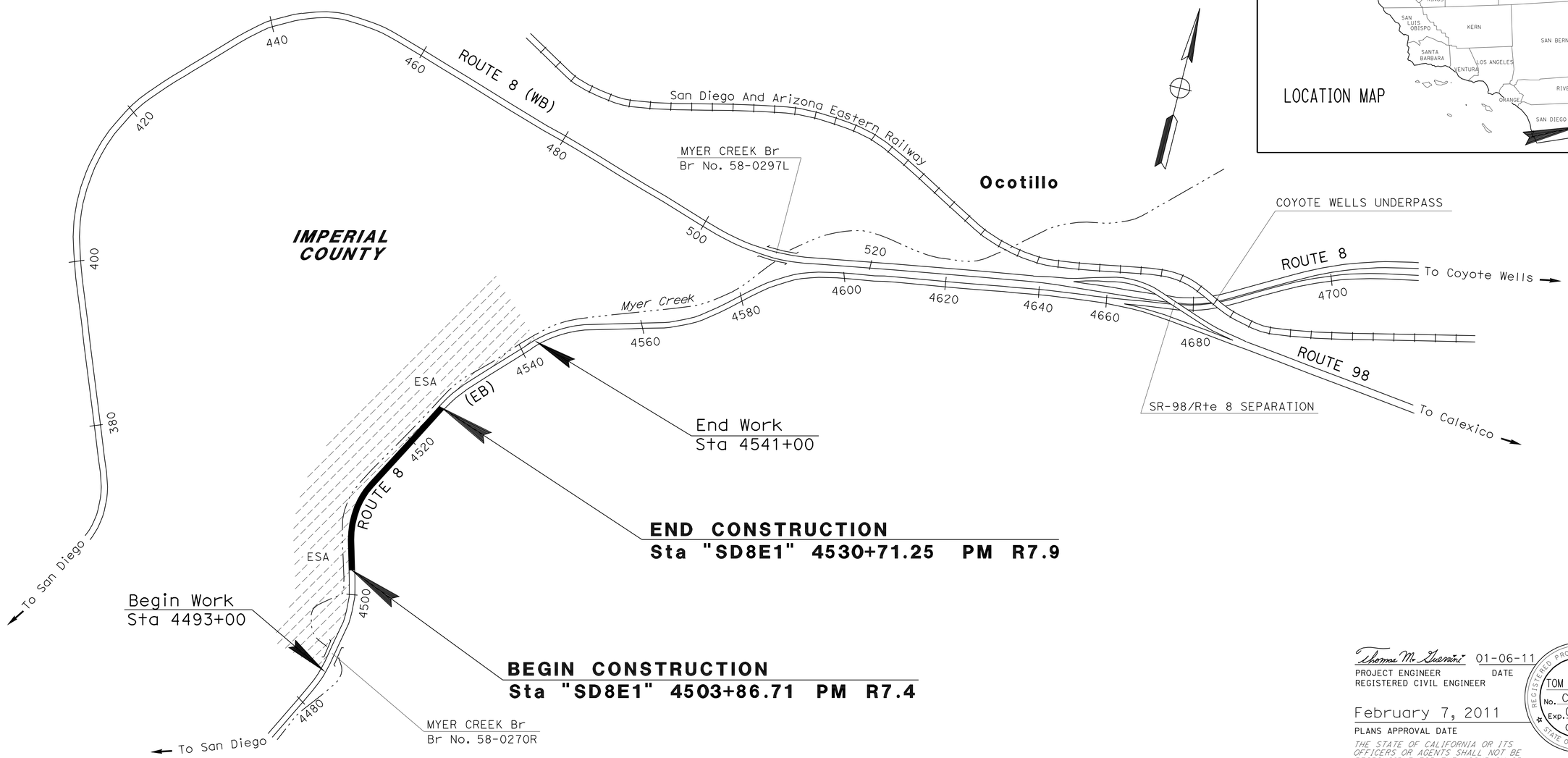

ESA = ENVIRONMENTALLY SENSITIVE AREA

NO SCALE

THE CONTRACTOR SHALL POSSESS THE CLASS (OR CLASSES) OF LICENSE AS SPECIFIED IN THE "NOTICE TO BIDDERS."

Thomas M. Guerrini 01-06-11
PROJECT ENGINEER DATE
REGISTERED CIVIL ENGINEER

February 7, 2011
PLANS APPROVAL DATE

REGISTERED PROFESSIONAL ENGINEER TOM GUERRINI No. C65539 Exp. 09-30-11 CIVIL STATE OF CALIFORNIA

THE STATE OF CALIFORNIA OR ITS OFFICERS OR AGENTS SHALL NOT BE RESPONSIBLE FOR THE ACCURACY OR COMPLETENESS OF SCANNED COPIES OF THIS PLAN SHEET.

CONTRACT No.	11-402704
PROJECT ID	1100000540

PROJECT MANAGER: ED HAJJ
DESIGN ENGINEER: TOM GUERRINI

LAST REVISION 01-07-11
DATE PLOTTED => 25-FEB-2011
TIME PLOTTED => 10:21

Dist	COUNTY	ROUTE	POST MILES TOTAL PROJECT	SHEET No.	TOTAL SHEETS
11	Imp	8	R7.4/R7.9	2	16

REGISTERED CIVIL ENGINEER 01-06-11 DATE

02-07-11
PLANS APPROVAL DATE

REGISTERED PROFESSIONAL ENGINEER TOM GUERRINI No. C65539 Exp. 09-30-11 CIVIL STATE OF CALIFORNIA

THE STATE OF CALIFORNIA OR ITS OFFICERS OR AGENTS SHALL NOT BE RESPONSIBLE FOR THE ACCURACY OR COMPLETENESS OF SCANNED COPIES OF THIS PLAN SHEET.

NOTES:

1. DIMENSIONS OF THE STRUCTURAL SECTIONS ARE SUBJECT TO TOLERANCES SPECIFIED IN THE STANDARD SPECIFICATIONS.
2. FOR LOCATIONS OF WILDLIFE PASSAGE WAY SEE LAYOUT SHEETS.
3. FOG SEAL COAT SHALL BE APPLIED TO ALL HMA SURFACES EXCEPT TRAVELED WAYS.

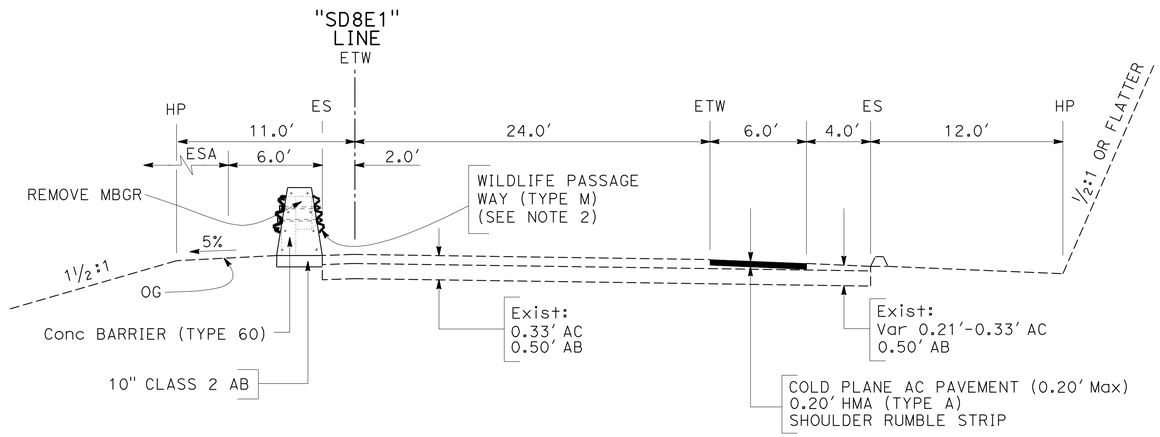

ROUTE 8 (EB)

"SD8E1" Sta 4508+59.00 TO Sta 4530+71.25

DESIGN DESIGNATION

ROUTE	PM	LOCATION	DIRECTION	ADT YEAR 2008	ADT YEAR 2018	ADT YEAR 2030	DHV	D%	T%	V (MPH)
8	R7.4-R7.9	WEST OF SR-98 MAIN LANE	EB	7,300	9,250	12,200	2,070	50	13.9	N/A
			WB	7,400	9,300	12,100	2,140	59	13.9	N/A

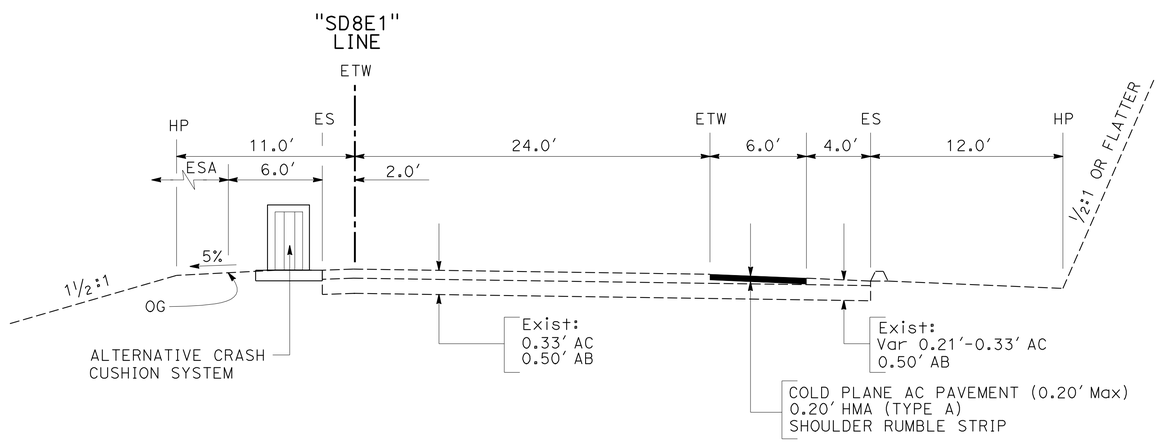

ROUTE 8 (EB)

"SD8E1" Sta 4503+86.71 TO Sta 4508+59.00

TYPICAL CROSS SECTIONS

NO SCALE

X-1

REVISED BY | DATE REVISED
THIN BUI | TOM GUERRINI
CALCULATED-DESIGNED BY | CHECKED BY
FUNCTIONAL SUPERVISOR | ED HAJJ
STATE OF CALIFORNIA - DEPARTMENT OF TRANSPORTATION
Caltrans® DESIGN

LAST REVISION 01-05-11 | DATE PLOTTED => 11-FEB-2011 TIME PLOTTED => 14:25

Dist	COUNTY	ROUTE	POST MILES TOTAL PROJECT	SHEET No.	TOTAL SHEETS
11	Imp	8	R7.4/R7.9	3	16

Thomas M. Guerrini 01-06-11
REGISTERED CIVIL ENGINEER DATE

02-07-11
PLANS APPROVAL DATE

REGISTERED PROFESSIONAL ENGINEER TOM GUERRINI No. C65539 Exp. 09-30-11 CIVIL STATE OF CALIFORNIA

THE STATE OF CALIFORNIA OR ITS OFFICERS OR AGENTS SHALL NOT BE RESPONSIBLE FOR THE ACCURACY OR COMPLETENESS OF SCANNED COPIES OF THIS PLAN SHEET.

NOTES:

1. FOR ACCURATE RIGHT OF WAY DATA, CONTACT RIGHT OF WAY ENGINEERING AT DISTRICT OFFICE.
2. EXISTING UTILITY FACILITIES HAVE NOT BEEN PLOTTED ON THESE PLAN SHEETS.
3. COORDINATES, BEARINGS AND GRID DISTANCES ARE BASED ON CCS83 (1991.35) ZONE 6.
4. Conc BARRIER SHALL BE END ANCHORED PER STANDARD PLAN A76B AT WILDLIFE PASSAGE WAY.

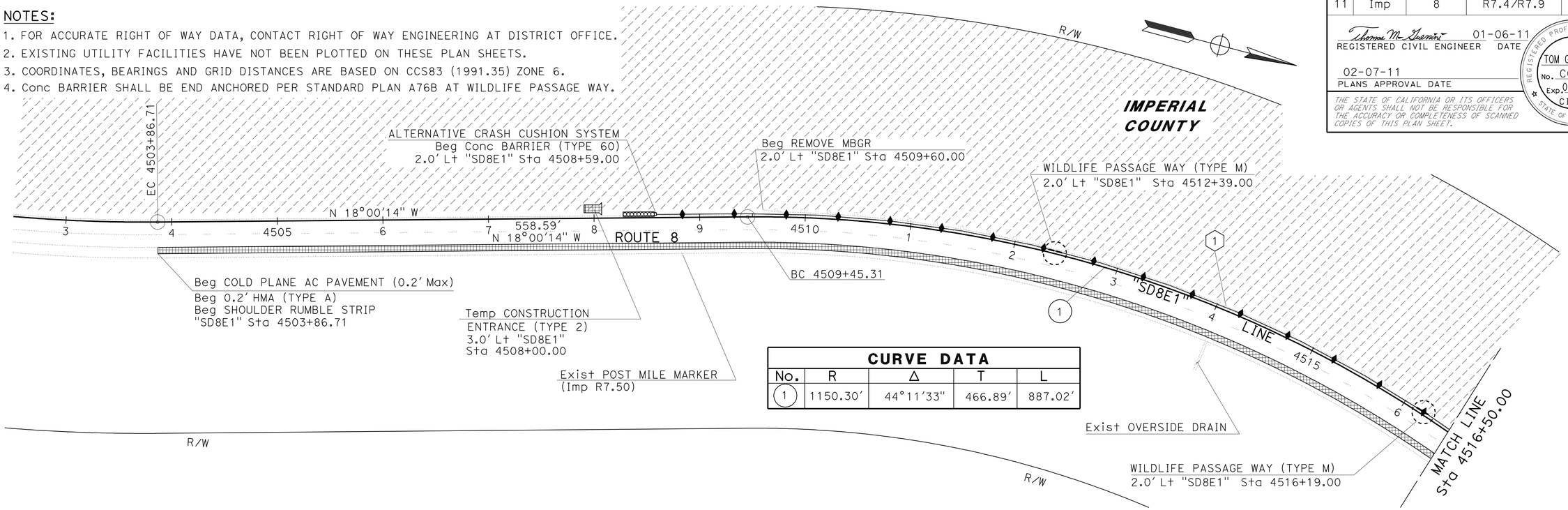

CURVE DATA

No.	R	Δ	T	L
1	1150.30'	44°11'33"	466.89'	887.02'

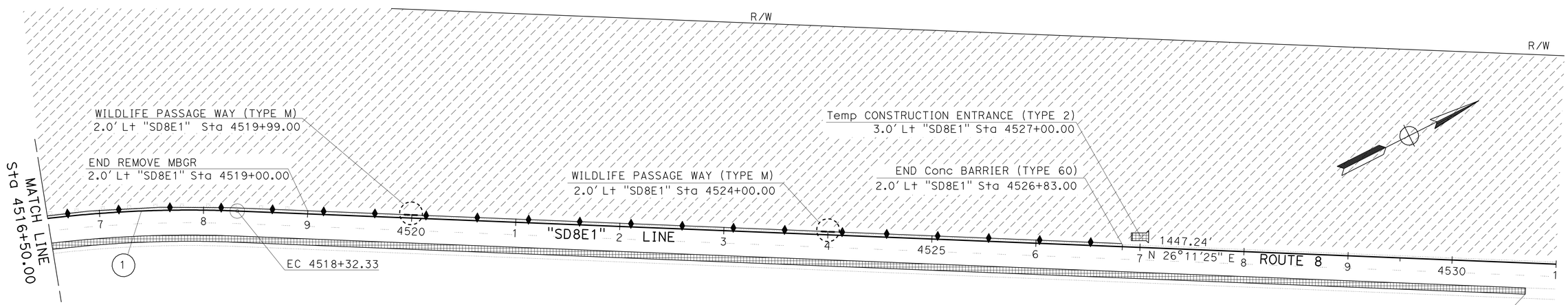

CURVE DATA

No.	R	Δ	T	L
1	1150.30'	44°11'33"	466.89'	887.02'

R/W

R/W

LEGEND:

= COLD PLANE AC PAVEMENT (0.20' Max)
= 0.20' HMA (TYPE A)
= SHOULDER RUMBLE STRIP
= METAL BEAM GUARD RAILING
ESA = ENVIRONMENTALLY SENSITIVE AREA

SCALE: 1" = 50'

LAYOUT L-1

REVISED BY	DATE REVISED
THIN BUI	TOM GUERRINI
CALCULATED-DESIGNED BY	CHECKED BY
FUNCTIONAL SUPERVISOR	ED HAJJ

STATE OF CALIFORNIA - DEPARTMENT OF TRANSPORTATION
Caltrans DESIGN

LAST REVISION 01-07-11 | DATE PLOTTED => 11-FEB-2011 TIME PLOTTED => 14:25

Dist	COUNTY	ROUTE	POST MILES TOTAL PROJECT	SHEET No.	TOTAL SHEETS
11	Imp	8	R7.4/R7.9	4	16

Thomas M. Guerrini 01-06-11
REGISTERED CIVIL ENGINEER DATE

02-07-11
PLANS APPROVAL DATE

REGISTERED PROFESSIONAL ENGINEER
TOM GUERRINI
No. C65539
Exp. 09-30-11
CIVIL
STATE OF CALIFORNIA

THE STATE OF CALIFORNIA OR ITS OFFICERS OR AGENTS SHALL NOT BE RESPONSIBLE FOR THE ACCURACY OR COMPLETENESS OF SCANNED COPIES OF THIS PLAN SHEET.

NOTES:

1. SEE MANUFACTURER'S INSTALLATION MANUAL FOR ADDITIONAL INFORMATION.
2. FOR TRANSITION BETWEEN CRASH CUSHION (TYPE SCI100GM) AND CONCRETE BARRIER SEE MANUFACTURER'S MANUAL.

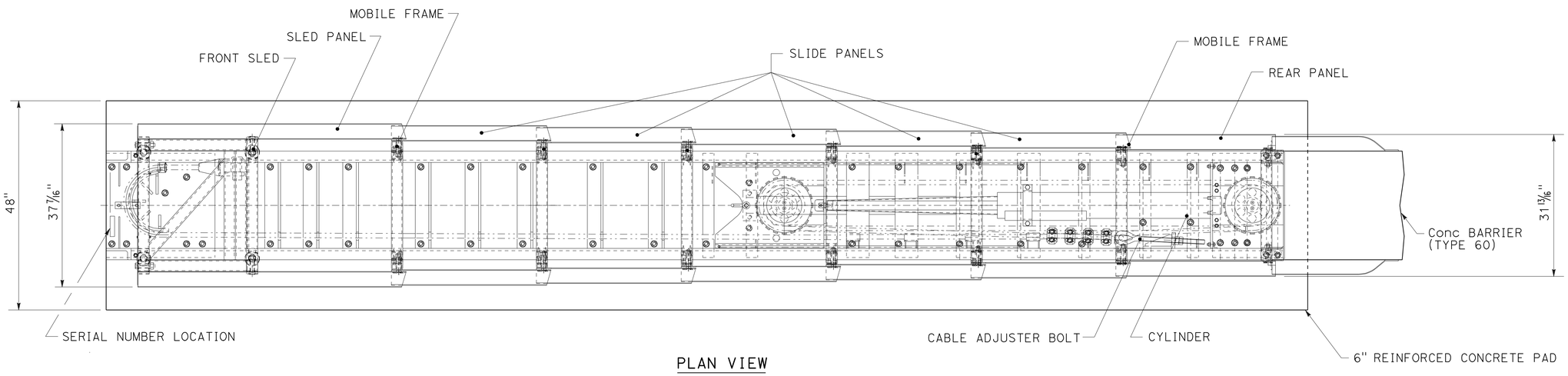

PLAN VIEW

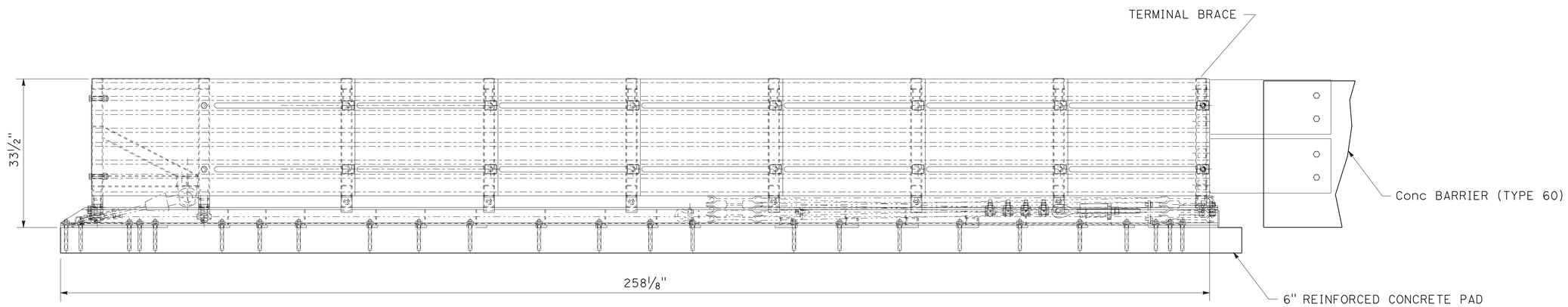

ELEVATION

ALTERNATIVE CRASH CUSHION SYSTEM

CRASH CUSHION (TYPE SMART MODEL SCI-100GM)

CONSTRUCTION DETAILS

NO SCALE

C-1

STATE OF CALIFORNIA - DEPARTMENT OF TRANSPORTATION
Caltrans DESIGN

FUNCTIONAL SUPERVISOR: ED HAJJ
CALCULATED-DESIGNED BY: THIN BUI
CHECKED BY: TOM GUERRINI
REVISED BY
DATE REVISED

LAST REVISION 01-10-11
DATE PLOTTED => 11-FEB-2011
TIME PLOTTED => 14:25

Dist	COUNTY	ROUTE	POST MILES TOTAL PROJECT	SHEET No.	TOTAL SHEETS
11	Imp	8	R7.4/R7.9	5	16

REGISTERED CIVIL ENGINEER 01-06-11 DATE

02-07-11
PLANS APPROVAL DATE

REGISTERED PROFESSIONAL ENGINEER TOM GUERRINI No. C65539 Exp. 09-30-11 CIVIL STATE OF CALIFORNIA

THE STATE OF CALIFORNIA OR ITS OFFICERS OR AGENTS SHALL NOT BE RESPONSIBLE FOR THE ACCURACY OR COMPLETENESS OF SCANNED COPIES OF THIS PLAN SHEET.

NOTES:

1. REFER TO MANUFACTURER'S INSTALLATION MANUAL AND/OR RECOMMENDATIONS FOR MORE INFORMATION.
2. AN 8" UNREINFORCED CONCRETE PAD WITH ANCHOR EMBEDMENT OF 5.5" MAY BE USED IN LIEU OF A REINFORCED PAD.

Reinf QUANTITIES

ITEMS (X)	Reinf	QUANTITIES	LENGTH (LF)
A	#4	56	3.33
B	#4	4	10.66
C	#4	4	12.66

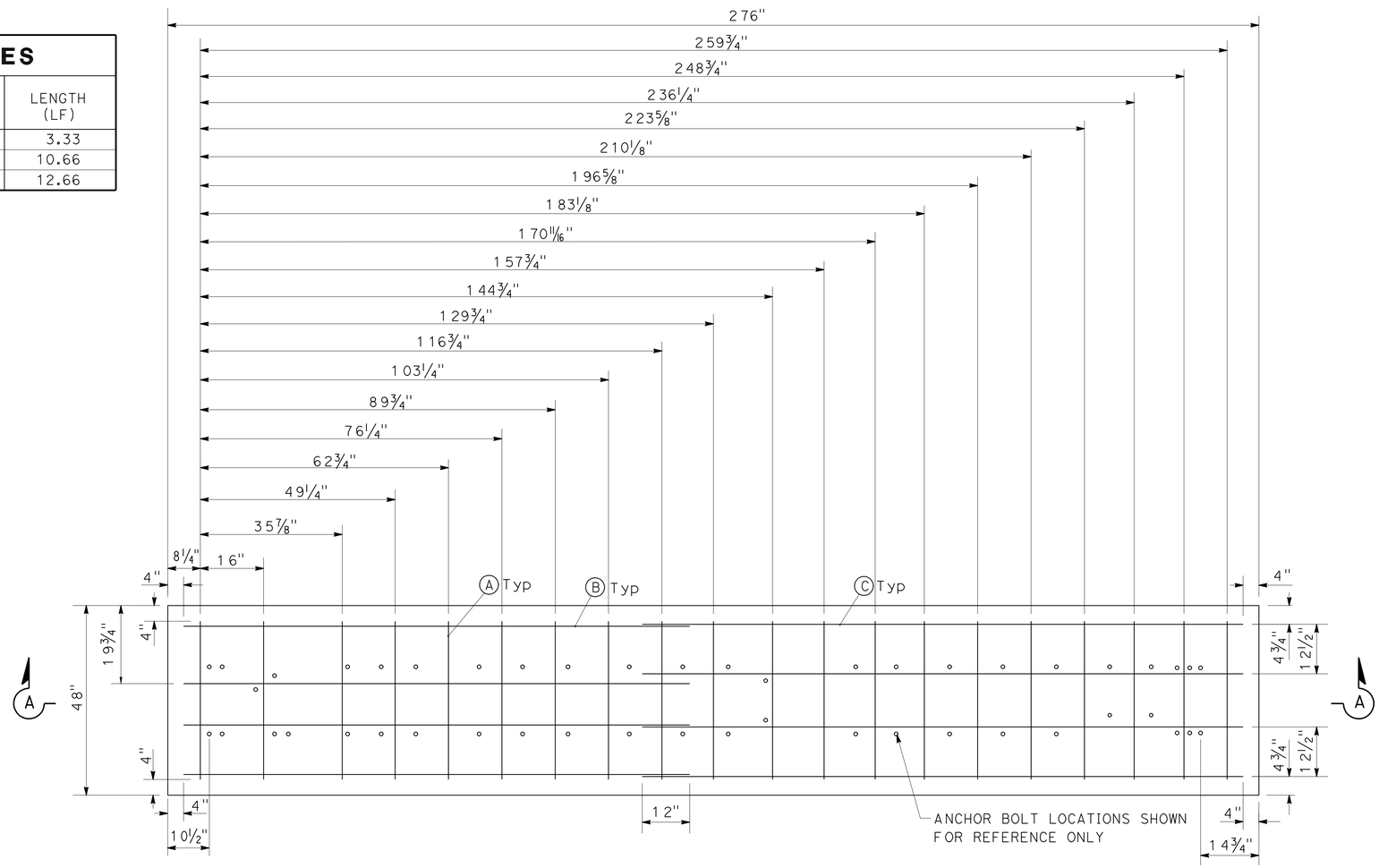

PLAN

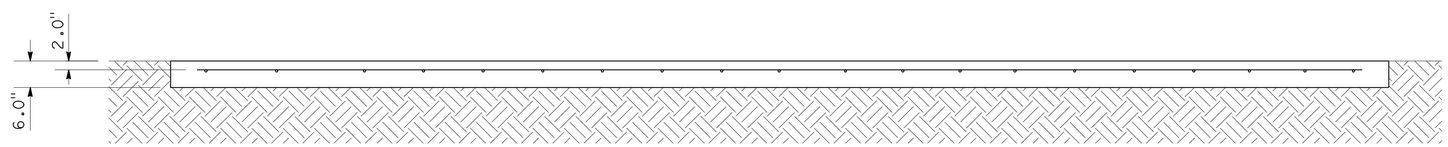

SECTION A-A

ALTERNATIVE CRASH CUSHION SYSTEM

CRASH CUSHION (TYPE SMART MODEL SCI-100GM)

CONCRETE PAD DETAIL

CONSTRUCTION DETAILS

NO SCALE

C-2

REVISED BY	DATE REVISED
THIN BUI	TOM GUERRINI
CALCULATED-DESIGNED BY	CHECKED BY
FUNCTIONAL SUPERVISOR	ED HAJJ

STATE OF CALIFORNIA - DEPARTMENT OF TRANSPORTATION

Caltrans

DESIGN

LAST REVISION 01-11-11 | DATE PLOTTED => 11-FEB-2011 TIME PLOTTED => 14:25

Dist	COUNTY	ROUTE	POST MILES TOTAL PROJECT	SHEET No.	TOTAL SHEETS
11	Imp	8	R7.4/R7.9	6	16

Thomas M. Guerrini 01-06-11
REGISTERED CIVIL ENGINEER DATE

02-07-11
PLANS APPROVAL DATE

REGISTERED PROFESSIONAL ENGINEER TOM GUERRINI No. C65539 Exp. 09-30-11 CIVIL STATE OF CALIFORNIA

THE STATE OF CALIFORNIA OR ITS OFFICERS OR AGENTS SHALL NOT BE RESPONSIBLE FOR THE ACCURACY OR COMPLETENESS OF SCANNED COPIES OF THIS PLAN SHEET.

NOTE:

1. FOR DETAILS NOT SHOWN, REFER TO MANUFACTURER'S INSTALLATION MANUAL.

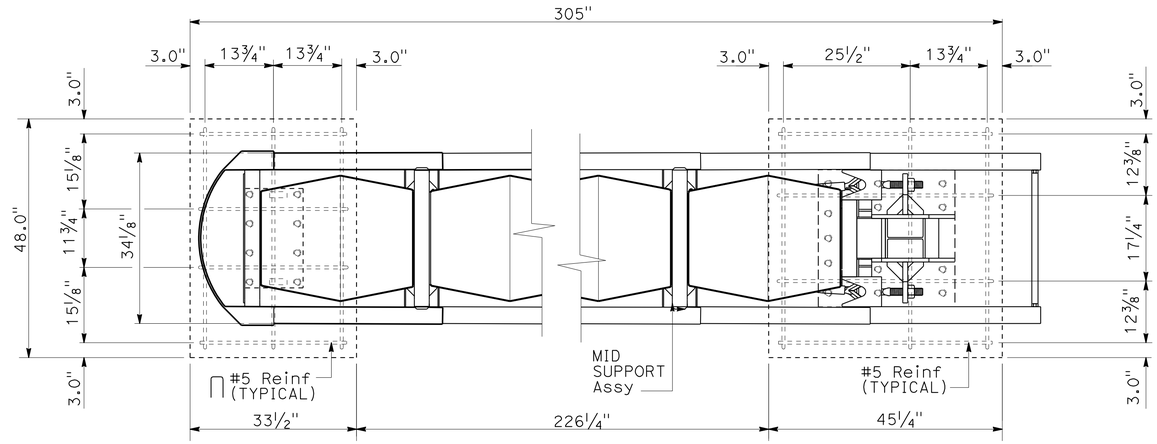

PLAN

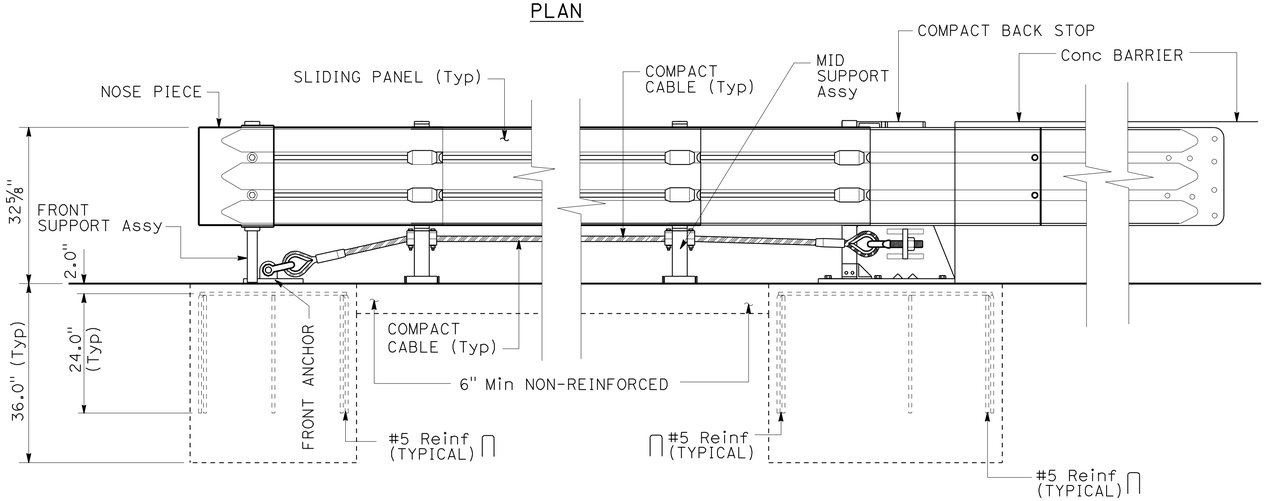

ELEVATION

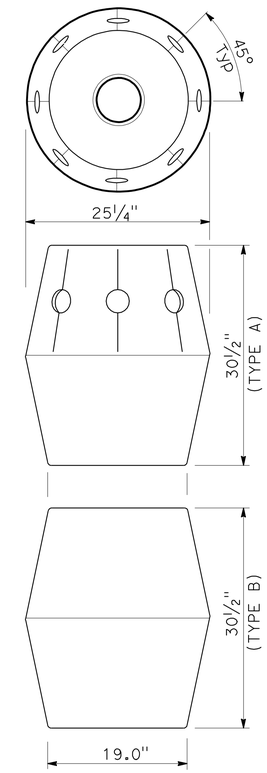

ENERGY ABSORBING CARTRIDGE

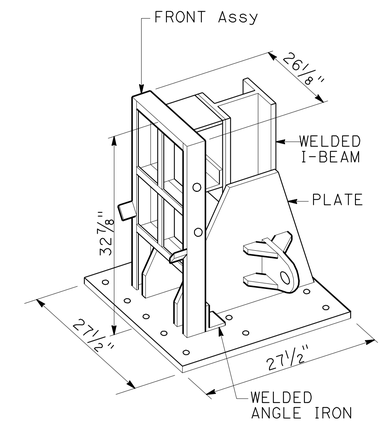

COMPACT BACK STOP

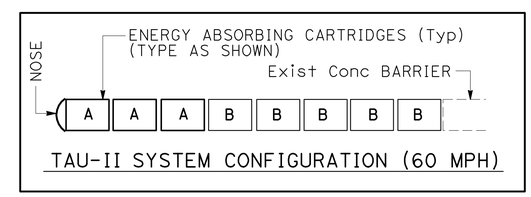

TAU-II SYSTEM CONFIGURATION (60 MPH)

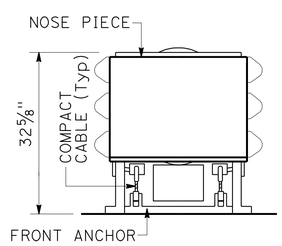

FRONT ELEVATION

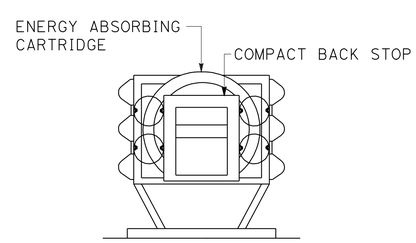

BACK ELEVATION

ALTERNATIVE CRASH CUSHION SYSTEM

(CRASH CUSHION TYPE TAU-II)

CONSTRUCTION DETAILS

NO SCALE

C-3

STATE OF CALIFORNIA - DEPARTMENT OF TRANSPORTATION
Caltrans DESIGN

FUNCTIONAL SUPERVISOR: ED HAJJ
CALCULATED-DESIGNED BY: THIN BUI
CHECKED BY: TOM GUERRINI
REVISED BY
DATE REVISED

LAST REVISION 01-10-11
DATE PLOTTED => 11-FEB-2011
TIME PLOTTED => 14:25

Dist	COUNTY	ROUTE	POST MILES TOTAL PROJECT	SHEET No.	TOTAL SHEETS
11	Imp	8	R7.4/R7.9	7	16

01-06-11
REGISTERED CIVIL ENGINEER DATE

02-07-11
PLANS APPROVAL DATE

REGISTERED PROFESSIONAL ENGINEER
SHAHIN T. ADIBI
No. 54839
Exp. 06-30-12
CIVIL
STATE OF CALIFORNIA

THE STATE OF CALIFORNIA OR ITS OFFICERS OR AGENTS SHALL NOT BE RESPONSIBLE FOR THE ACCURACY OR COMPLETENESS OF SCANNED COPIES OF THIS PLAN SHEET.

NOTES:

1. EXACT LOCATION OF CONSTRUCTION AREA SIGNS WILL BE DETERMINED BY THE ENGINEER.
2. FEDERAL MANUAL ON UNIFORM TRAFFIC CONTROL DEVICES (MUTCD) SIGN CODES ARE SHOWN UNLESS DESIGNATED BY (CA), INDICATING CALIFORNIA SPECIFICATIONS ARE USED.
3. SEE TRAFFIC HANDLING PLANS FOR ADDITIONAL CONSTRUCTION AREA SIGNS.
4. EXISTING UTILITIES ARE NOT SHOWN ON THESE PLAN SHEETS. THE CONTRACTOR SHALL VERIFY LOCATIONS OF EXISTING UTILITIES AND ADJUST THE FIELD LOCATION OF SIGN POSTS IN CONSULTATION WITH THE ENGINEER.

LEGEND:

[X] = CONSTRUCTION AREA SIGNS

CONSTRUCTION AREA SIGNS

SIGN No.	TYPE	PANEL SIZE (In)x(In)	No. OF POST AND SIZE (In)x(In)	No. OF SIGNS
1*	C30A (CA)	48 X 48	1-4 X 6 (s)	1
2	C40 (CA)	108 X 42	2-4 X 6 (s)	1
3	C23 (CA)	48 X 48	1-4 X 6 (s)	1
4	C14 (CA)	48 X 24	1-4 X 4 (s)	1
			TOTAL	4

(s) DENOTES STATIONARY MOUNTED SIGN

* SEE TRAFFIC HANDLING PLAN (TH-1)

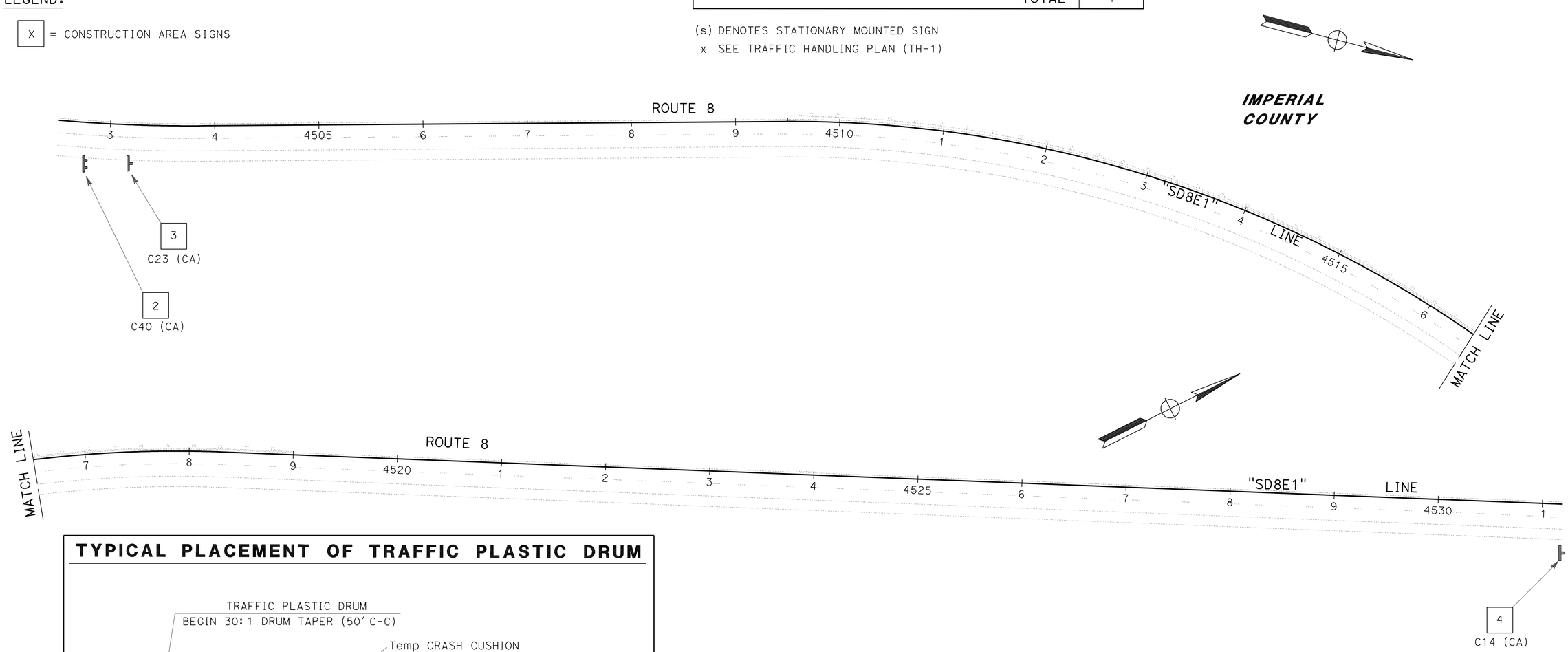

TYPICAL PLACEMENT OF TRAFFIC PLASTIC DRUM

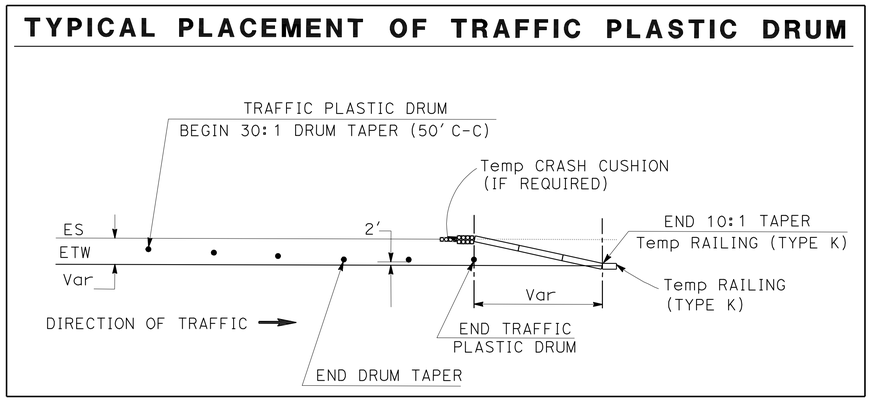

THIS PLAN ACCURATE FOR CONSTRUCTION AREA SIGNS WORK ONLY.

CONSTRUCTION AREA SIGNS

SCALE: 1" = 50'

CS-1

STATE OF CALIFORNIA - DEPARTMENT OF TRANSPORTATION
Caltrans® TRAFFIC DESIGN

FUNCTIONAL SUPERVISOR: CAMILLE ABOU-FADEL
CALCULATED-DESIGNED BY: SHAHIN ADIBI
CHECKED BY: RYAN CHAO
REVISED BY / DATE REVISED

LAST REVISION 01-10-11
DATE PLOTTED => 11-FEB-2011
TIME PLOTTED => 14:25

Dist	COUNTY	ROUTE	POST MILES TOTAL PROJECT	SHEET No.	TOTAL SHEETS
11	Imp	8	R7.4/R7.9	8	16

Thomas M. Guerrini 01-06-11
REGISTERED CIVIL ENGINEER DATE

02-07-11
PLANS APPROVAL DATE

REGISTERED PROFESSIONAL ENGINEER
TOM GUERRINI
No. C65539
Exp. 09-30-11
CIVIL
STATE OF CALIFORNIA

THE STATE OF CALIFORNIA OR ITS OFFICERS OR AGENTS SHALL NOT BE RESPONSIBLE FOR THE ACCURACY OR COMPLETENESS OF SCANNED COPIES OF THIS PLAN SHEET.

NOTES:

1. FOR ACCURATE RIGHT OF WAY DATA, CONTACT RIGHT OF WAY ENGINEERING AT DISTRICT OFFICE.
2. EXACT LOCATION OF CONSTRUCTION AREA SIGNS WILL BE DETERMINED BY THE ENGINEER.
3. FEDERAL MANUAL ON UNIFORM TRAFFIC CONTROL DEVICES (MUTCD) SIGN CODES ARE SHOWN UNLESS DESIGNATED BY (CA), INDICATING CALIFORNIA SPECIFICATIONS ARE USED.

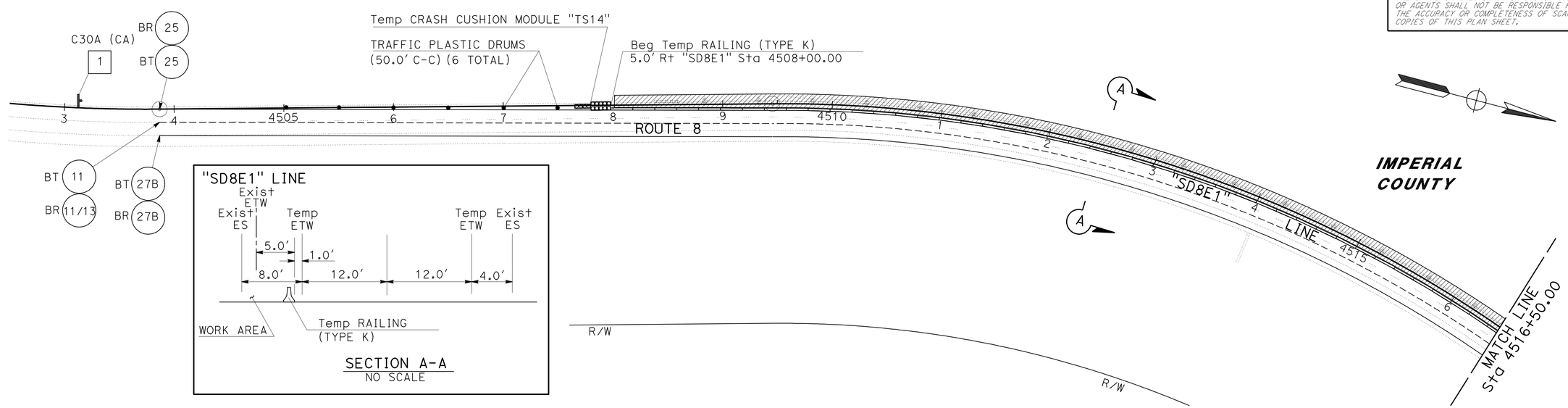

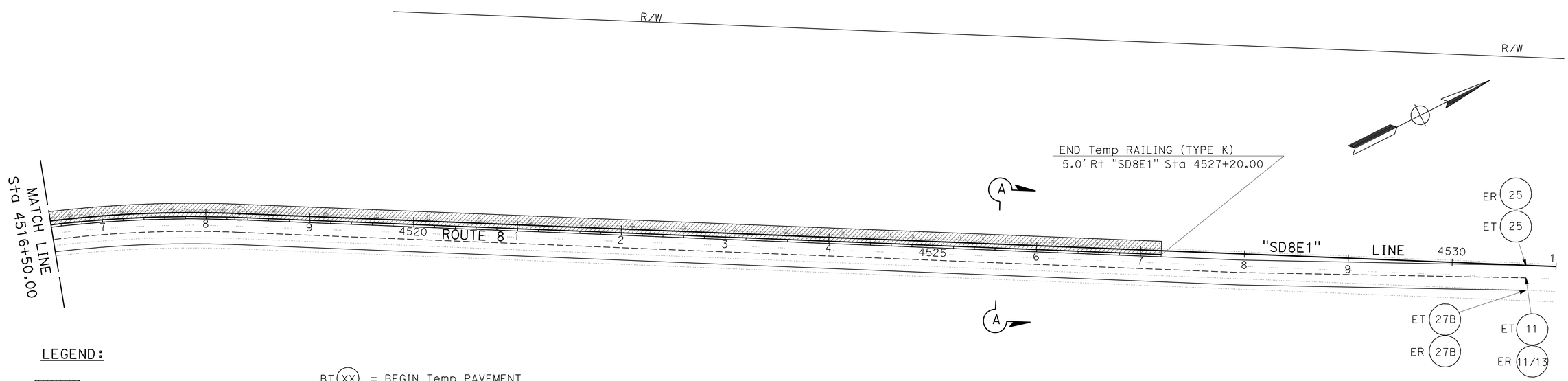

LEGEND:

= WORK AREA

X = CONSTRUCTION AREA SIGN

= BEGIN / END Temp PAVEMENT DELINEATION DETAIL

BT XX = BEGIN Temp PAVEMENT DELINEATION DETAIL

ET XX = END Temp PAVEMENT DELINEATION DETAIL

BR XX = BEGIN REMOVE PAVEMENT DELINEATION DETAIL

ER XX = END REMOVE PAVEMENT DELINEATION DETAIL

THIS PLAN ACCURATE FOR TRAFFIC HANDLING ONLY.

TRAFFIC HANDLING PLAN

SCALE: 1" = 50'

TH-1

STATE OF CALIFORNIA - DEPARTMENT OF TRANSPORTATION
Caltrans
DESIGN

FUNCTIONAL SUPERVISOR: ED HAJJ

CALCULATED-DESIGNED BY: THIN BUI
CHECKED BY: TOM GUERRINI
REVISED BY
DATE REVISED

LAST REVISION 01-10-11
DATE PLOTTED => 11-FEB-2011
TIME PLOTTED => 14:25

Dist	COUNTY	ROUTE	POST MILES TOTAL PROJECT	SHEET No.	TOTAL SHEETS
11	Imp	8	R7.4/R7.9	9	16

REGISTERED CIVIL ENGINEER 01-06-11 DATE

02-07-11
PLANS APPROVAL DATE

REGISTERED PROFESSIONAL ENGINEER SHAHIN T. ADIBI No. 54839 Exp. 06-30-12 CIVIL STATE OF CALIFORNIA

THE STATE OF CALIFORNIA OR ITS OFFICERS OR AGENTS SHALL NOT BE RESPONSIBLE FOR THE ACCURACY OR COMPLETENESS OF SCANNED COPIES OF THIS PLAN SHEET.

NOTES:

(N) = NOT A SEPARATE PAY ITEM, FOR INFORMATION ONLY.

(*) = SEE SUMMARY OF QUANTITIES SHEET FOR ADDITIONAL QUANTITIES.

ROUTE	DESCRIPTION	STATION		DETAIL	PAVEMENT MARKER SUMMARY			TRAFFIC STRIPE SUMMARY		REMARKS
					NON-REFLECTIVE (EA)	RETROREFLECTIVE (EA)		THERMOPLASTIC (LF)		
								4"	4"	
					TYPE A	TYPE G	TYPE H	BROKEN	SOLID	
		BEGIN	END		WHITE	CLEAR	YELLOW	36-12		
8	EASTBOUND	4503+86.71	4530+71.25	11/13	224	57		2,684.54		
8	EASTBOUND	4503+86.71	4530+71.25	25			57		2,684.54	
8	EASTBOUND	4503+86.71	4530+71.25	27B					2,684.54	
				SUBTOTAL	224	57	57			
				TOTAL	224	114		2,684.54	5,369.08	

REMOVE PAINTED TRAFFIC STRIPE

ROUTE	STATION		DETAIL (TEMPORARY)	LF
	BEGIN	END		
8	4503+86.71	4530+71.25	11	671.00
8	4503+86.71	4530+71.25	27B	2,684.54
8	4503+86.71	4530+71.25	25	2,684.54
			TOTAL	6,040.08*

REMOVE PAVEMENT MARKER (N)

ROUTE	STATION		DETAIL (TEMPORARY)	TYPE (EA)	REMARKS
	BEGIN	END			
			25	H	
8	4503+86.71	4530+71.25		57	
			TOTAL	57 (*)	

DETAIL 11/13 COMBINATION

TYPICAL

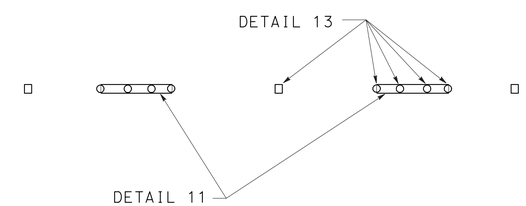

PAVEMENT DELINEATION DETAILS AND QUANTITIES

NO SCALE

PDD-1

STATE OF CALIFORNIA - DEPARTMENT OF TRANSPORTATION
Caltrans® TRAFFIC DESIGN

FUNCTIONAL SUPERVISOR: CAMILLE ABOU-FADEL
CALCULATED-DESIGNED BY: SHAHIN ADIBI
CHECKED BY: RYAN CHAO
REVISED BY
DATE REVISED

LAST REVISION 01-10-11 | DATE PLOTTED => 11-FEB-2011 | TIME PLOTTED => 14:26

Dist	COUNTY	ROUTE	POST MILES TOTAL PROJECT	SHEET No.	TOTAL SHEETS
11	Imp	8	R7.4/R7.9	10	16

Thomas M. Guerrini 01-06-11
REGISTERED CIVIL ENGINEER DATE

02-07-11
PLANS APPROVAL DATE

REGISTERED PROFESSIONAL ENGINEER
TOM GUERRINI
No. C65539
Exp. 09-30-11
CIVIL
STATE OF CALIFORNIA

THE STATE OF CALIFORNIA OR ITS OFFICERS OR AGENTS SHALL NOT BE RESPONSIBLE FOR THE ACCURACY OR COMPLETENESS OF SCANNED COPIES OF THIS PLAN SHEET.

Conc BARRIER QUANTITIES

ROUTE	SHEET	LINE	STATION BEGIN	STATION END	ROADWAY EXCAVATION (CY)	CLASS 2 AGGREGATE BASE (CY)	CONCRETE BARRIER (TYPE 60) (LF)	WILDLIFE PASSAGE WAY (TYPE M) (EA)
8	L-1	"SD8E1"	4508+59.00	4526+83.00	112.59	112.59	1,824.00	
			4512+39.00	4512+39.00				1
			4516+19.00	4516+19.00				1
			4519+99.00	4519+99.00				1
			4524+00.00	4524+00.00				1
				TOTAL	112.59	112.59	1,824.00	4

TEMPORARY WATER POLLUTION CONTROL

ROUTE	SHEET	LINE	STATION	TEMPORARY CONSTRUCTION ENTRANCE (TYPE 2) (EA)
8	L-1	"SD8E1"	4508+00.00	1
			4527+00.00	1
			TOTAL	2

REMOVE METAL BEAM GUARD RAILING

⬡ MBGR No.	SHEET No.	(N) LAYOUT TYPE	STATION BEGIN	STATION END	REMOVE MBGR (LF)
1	L-1	11B	4509+60.00	4519+00.00	940.0
				TOTAL	940.0

CRASH CUSHION

ROUTE	SHEET	LINE	STATION	ALTERNATIVE CRASH CUSHION SYSTEM (EA)
8	L-1	"SD8E1"	4508+59.00	1
			TOTAL	1

TEMPORARY PAVEMENT DELINEATION

ROUTE	SHEET	LINE	STATION BEGIN	STATION END	DETAIL No.	TEMPORARY PAVEMENT MARKER RETROREFLECTIVE TYPE H YELLOW (EA)	TEMPORARY TRAFFIC STRIPE (PAINT) BROKEN STRIPE (LF)	TEMPORARY TRAFFIC STRIPE (PAINT) SOLID STRIPE (LF)
8	TH-1	"SD8E1"	4503+86.71	4530+71.25	11		2,684.54	
			4503+86.71	4530+71.25	25	57.00		2,684.54
			4503+86.71	4530+71.25	27B			2,684.54
					SUBTOTAL	57.00	2,684.54	5,369.08
					TOTAL	57.00	8,053.62	

TRAFFIC HANDLING QUANTITIES

ROUTE	SHEET	LINE	STATION BEGIN	STATION END	TEMPORARY RAILING (TYPE K) (LF)	TEMPORARY CRASH CUSHION MODULE (EA)	TRAFFIC PLASTIC DRUM (EA)
8	TH-1	"SD8E1"	4505+00.00	4507+50.00			6.00
			4507+65.00	4507+98.10		14.00	
			4508+00.00	4527+20.00	1,920.00		
				TOTAL	1,920.00	14.00	6.00

SUMMARY OF QUANTITIES

Q-1

REVISED BY	DATE REVISED
THIN BUI	TOM GUERRINI
CALCULATED-DESIGNED BY	CHECKED BY
FUNCTIONAL SUPERVISOR	ED HAJJ

STATE OF CALIFORNIA - DEPARTMENT OF TRANSPORTATION
Caltrans
DESIGN

LAST REVISION 01-10-11
DATE PLOTTED => 11-FEB-2011
TIME PLOTTED => 14:26

Dist	COUNTY	ROUTE	POST MILES TOTAL PROJECT	SHEET No.	TOTAL SHEETS
11	Imp	8	R7.4/R7.9	11	16

Thomas M. Guerrini 01-06-11
REGISTERED CIVIL ENGINEER DATE

02-07-11
PLANS APPROVAL DATE

REGISTERED PROFESSIONAL ENGINEER TOM GUERRINI No. C65539 Exp. 09-30-11 CIVIL STATE OF CALIFORNIA

THE STATE OF CALIFORNIA OR ITS OFFICERS OR AGENTS SHALL NOT BE RESPONSIBLE FOR THE ACCURACY OR COMPLETENESS OF SCANNED COPIES OF THIS PLAN SHEET.

NOTES:

(N) = NOT A SEPARATE PAY ITEM, FOR INFORMATION ONLY.

(*) = SEE PAVEMENT DELINEATION DETAILS AND QUANTITIES SHEET FOR ADDITIONAL QUANTITIES.

REMOVE PAINTED TRAFFIC STRIPE

ROUTE	SHEET	LINE	STATION BEGIN	STATION END	DETAIL No.	REMOVE PAINTED TRAFFIC STRIPE (LF)
8	TH-1	"SD8E1"	4503+86.71	4530+71.25	11/13	671.00
			4503+86.71	4530+71.25	27B	2,684.54
					TOTAL	3,355.54 (*)

ROADWAY QUANTITIES

ROUTE	SHEET	LINE	STATION BEGIN	STATION END	COLD PLANE ASPHALT CONCRETE PAVEMENT (SQYD)	HOT MIX ASPHALT (TYPE A) (TON)	TACK COAT (TON)	ASPHALTIC EMULSION (FOG SEAL COAT) (TON)	SHOULDER RUMBLE STRIP (HMA, GROUND-IN INDENTATIONS) (STA)
8	L-1	"SD8E1"	4503+86.71	4516+50.00	842.19	108.15	0.20	0.26	12.63
			4516+50.00	4530+71.25	947.50	122.73	0.22	0.30	14.21
				TOTAL	1,789.69	230.88	0.42	0.56	26.84

REMOVE PAVEMENT MARKER (N)

ROUTE	SHEET	LINE	STATION BEGIN	STATION END	DETAIL No.	NON - REFLECTIVE TYPE A WHITE (EA)	RETROREFLECTIVE TYPE G CLEAR (EA)	RETROREFLECTIVE TYPE H YELLOW (EA)
8	TH-1	"SD8E1"	4503+86.71	4530+71.25	11/13	224.00	57.00	
			4503+86.71	4530+71.25	25			57.00
					SUBTOTAL	224.00	57.00	57.00
					TOTAL	224.00 (*)	114.00 (*)	

REMOVE YELLOW PAINTED TRAFFIC STRIPE (HAZARDOUS WASTE)

ROUTE	SHEET	LINE	STATION BEGIN	STATION END	DETAIL No.	REMOVE YELLOW PAINTED TRAFFIC STRIPE (HAZARDOUS WASTE) (LF)
8	TH-1	"SD8E1"	4503+86.71	4530+71.25	25	2,684.54
					TOTAL	2,684.54

SUMMARY OF QUANTITIES

Q-2

REVISED BY | DATE REVISED
THIN BUI | TOM GUERRINI
CALCULATED-DESIGNED BY | CHECKED BY
FUNCTIONAL SUPERVISOR: ED HAJJ
STATE OF CALIFORNIA - DEPARTMENT OF TRANSPORTATION
Caltrans® DESIGN

LAST REVISION 01-10-11 | DATE PLOTTED => 11-FEB-2011 TIME PLOTTED => 14:26

DIST	COUNTY	ROUTE	POST MILES TOTAL PROJECT	SHEET NO.	TOTAL SHEETS
11	Imp	8	R7.4/R7.9	12	16

Randell D. Hiatt
REGISTERED CIVIL ENGINEER

June 6, 2008
PLANS APPROVAL DATE

REGISTERED PROFESSIONAL ENGINEER
Randell D. Hiatt
No. C50200
Exp. 6-30-09
CIVIL
STATE OF CALIFORNIA

The State of California or its officers or agents shall not be responsible for the accuracy or completeness of electronic copies of this plan sheet.

To accompany plans dated 02-07-11

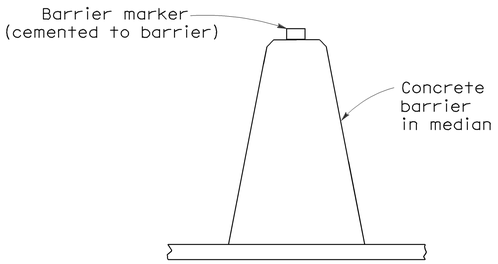

CONCRETE BARRIER TYPE 60 DELINEATION

See Notes 7 and 8

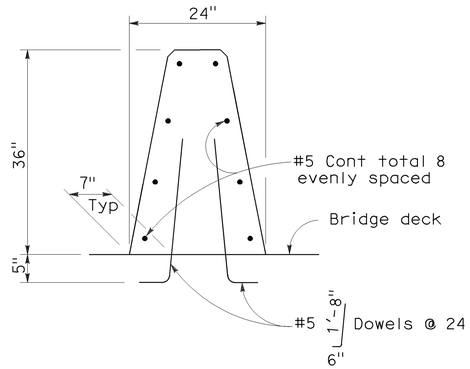

CONCRETE BARRIER TYPE 60A

Details similar to Type 60 except as noted.

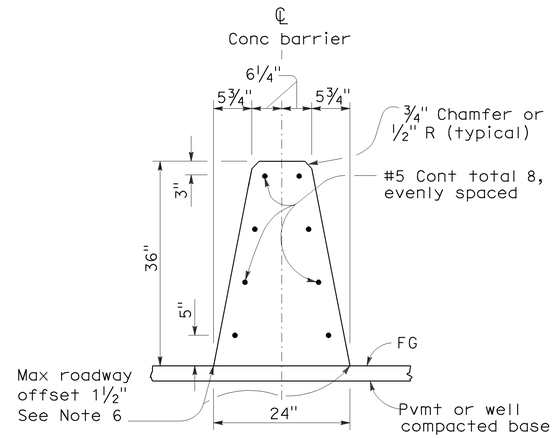

CONCRETE BARRIER TYPE 60

NOTES:

1. See Standard Plan A76B for details of Concrete Barrier Type 60 end anchors, connection to structures and transitions to Concrete Barrier Type 50 and Concrete Barrier Type 60S.
2. See Standard Plan A76C for Concrete Barrier Type 60 transitions at bridge column and sign pedestals.
3. Where glare screen is required on Concrete Barrier Type 60, use Concrete Barrier Type 60G.
4. Where the concrete barrier is added to the face of existing concrete structure, match existing weep holes.
5. Expansion joints in concrete barrier shall be located at all deck, pavement and principal wall joints. Expansion joint filler material shall be the same size as joint or ½" minimum.
6. Where roadway offset is greater than 1½", see Concrete Barrier Type 60C.
7. Barrier delineation to be used when required by the Special Provisions.
8. Spacing of barrier markers to match spacing of raised pavement markers on the adjacent median edgeline pavement delineation.
9. Reinforcing stirrup not required for roadway offsets less than 1'-0".
10. For roadway surfaces offset greater than 1½" to 3", no rebars required. For roadway surfaces offset greater than 3" to 8" use two #4 rebars at 3" above the lower roadway surface. For roadway surfaces offset greater than 8" to 12", use two #4 rebars at 3" above the lower roadway surface and two #4 rebars at 8" above the lower roadway surface. For roadway surfaces offset greater than 12" to 36", use two #4 rebars at 3" above the lower roadway surface and two #4 rebars at every 8" increment vertical spacing above the first two #4 rebars.

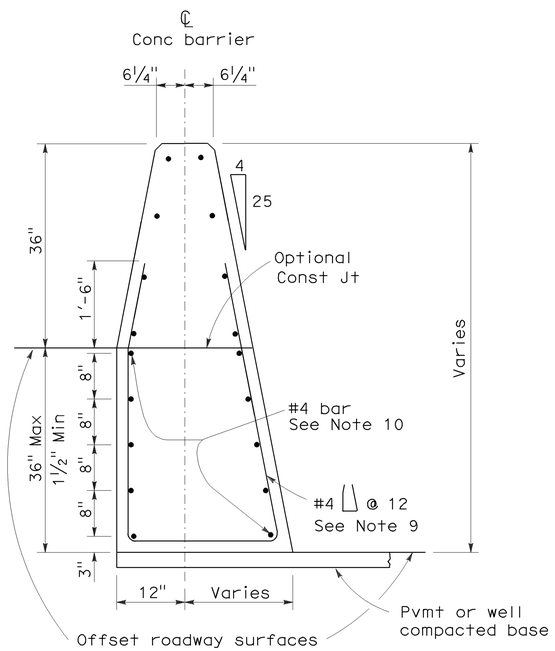

CONCRETE BARRIER TYPE 60C

Details similar to Type 60 except as noted.
Concrete barrier end anchor when necessary.
36" roadway surfaces offset shown.

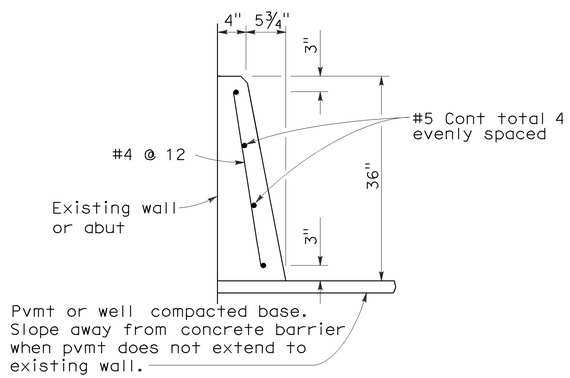

CONCRETE BARRIER TYPE 60D

STATE OF CALIFORNIA
DEPARTMENT OF TRANSPORTATION

CONCRETE BARRIER TYPE 60

NO SCALE

RSP A76A DATED JUNE 6, 2008 SUPERSEDES STANDARD PLAN A76A
DATED MAY 1, 2006 - PAGE 29 OF THE STANDARD PLANS BOOK DATED MAY 2006.

REVISED STANDARD PLAN RSP A76A

2006 REVISED STANDARD PLAN RSP A76A

5-21-08

DIST	COUNTY	ROUTE	POST MILES TOTAL PROJECT	SHEET NO.	TOTAL SHEETS
11	Imp	8	R7.4/R7.9	13	16

Randell D. Hiatt
REGISTERED CIVIL ENGINEER

October 20, 2006
PLANS APPROVAL DATE

REGISTERED PROFESSIONAL ENGINEER
Randell D. Hiatt
No. C50200
Exp. 6-30-07
CIVIL
STATE OF CALIFORNIA

The State of California or its officers or agents shall not be responsible for the accuracy or completeness of electronic copies of this plan sheet.

To accompany plans dated 02-07-11

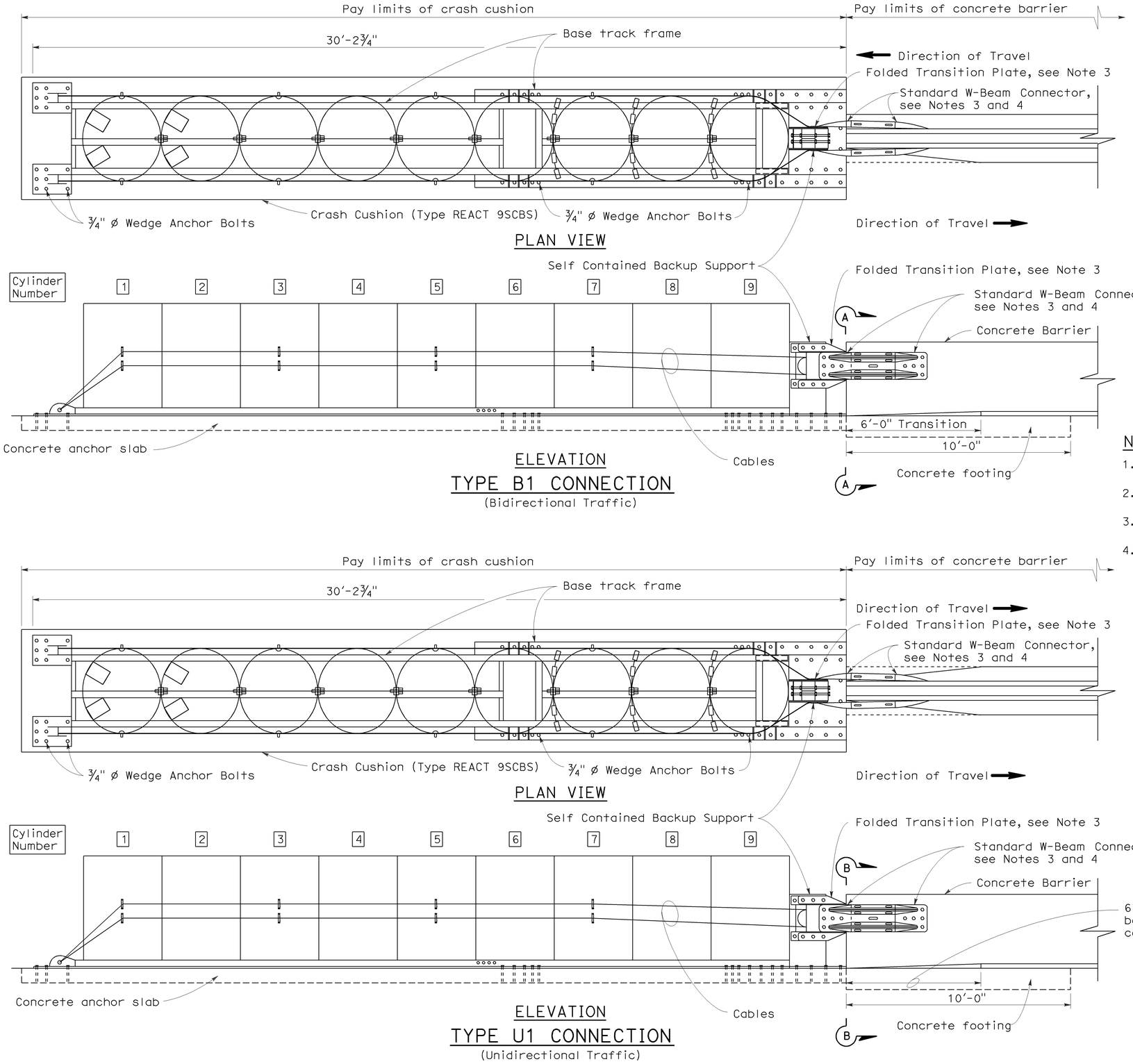

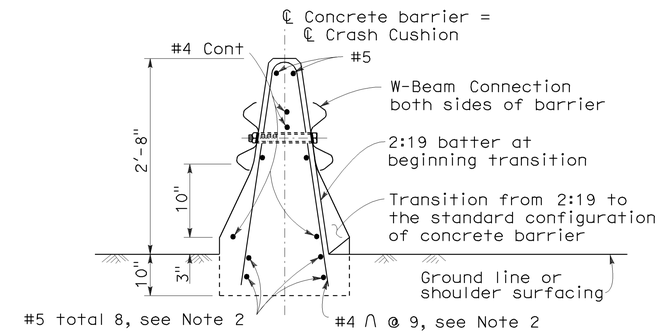

SECTION A-A
(Type 50 Barrier shown)

NOTES:

1. For additional details of Crash Cushion (Type REACT 9SCBS), see Standard Plan A82D1.
2. Place this reinforcement for the full 10'-0" length of the terminus of the concrete barrier.
3. Attach manufacturer supplied folded transition plates and W-Beam connectors to backup support with manufacturer supplied bolts.
4. Attach W-Beam Connectors to barrier with manufacturer supplied anchor bolts in the manner recommended by the manufacturer.

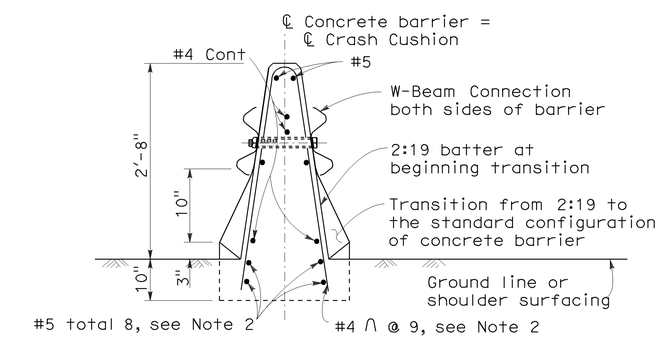

SECTION B-B
(Type 50 Barrier shown)

STATE OF CALIFORNIA
DEPARTMENT OF TRANSPORTATION

CRASH CUSHION (TYPE REACT 9SCBS) CONNECTION TO CONCRETE BARRIER

NO SCALE

RSP A82D2 DATED OCTOBER 20, 2006 SUPERSEDES STANDARD PLAN A82D2 DATED MAY 1, 2006 - PAGE 108 OF THE STANDARD PLANS BOOK DATED MAY 2006.

REVISED STANDARD PLAN RSP A82D2

2006 REVISED STANDARD PLAN RSP A82D2

9-13-06

DIST	COUNTY	ROUTE	POST MILES TOTAL PROJECT	SHEET NO.	TOTAL SHEETS
11	Imp	8	R7.4/R7.9	14	16

Randell D. Hiatt
REGISTERED CIVIL ENGINEER

June 6, 2008
PLANS APPROVAL DATE

REGISTERED PROFESSIONAL ENGINEER
Randell D. Hiatt
No. C50200
Exp. 6-30-09
CIVIL
STATE OF CALIFORNIA

The State of California or its officers or agents shall not be responsible for the accuracy or completeness of electronic copies of this plan sheet.

To accompany plans dated 02-07-11

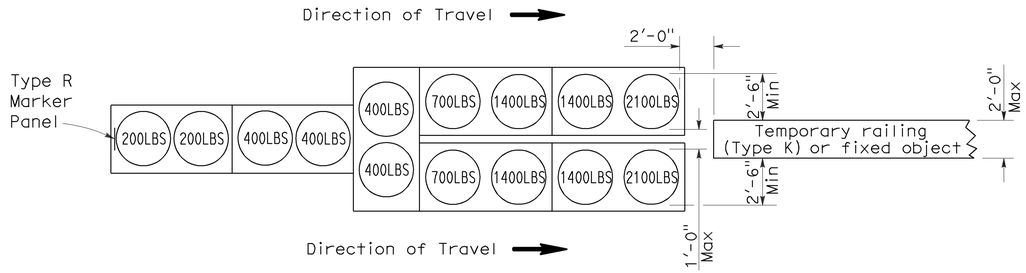

ARRAY 'TU14'

Approach speed 45 mph or more

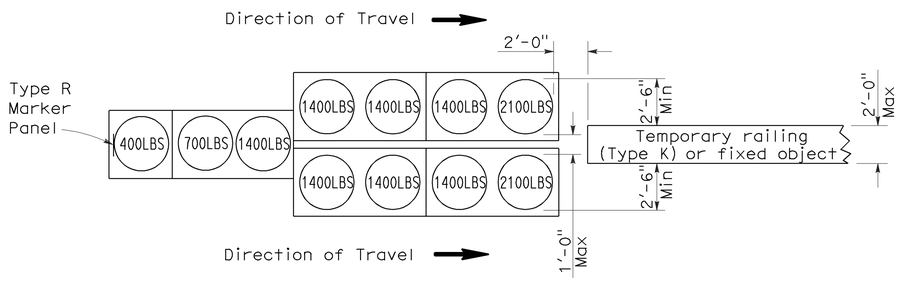

ARRAY 'TU11'

Approach speed less than 45 mph

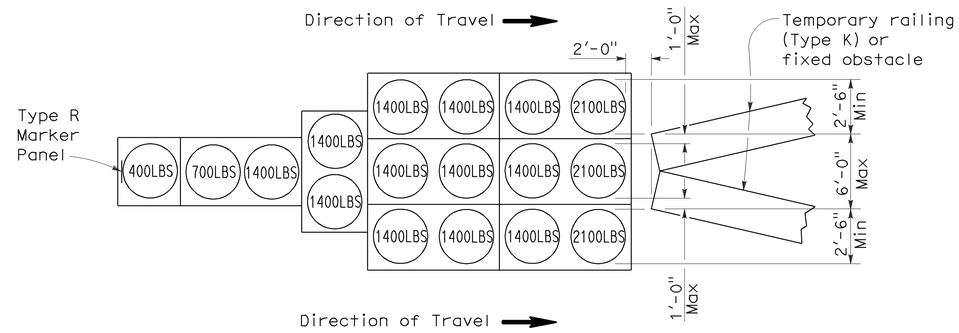

ARRAY 'TU17'

Approach speed less than 45 mph

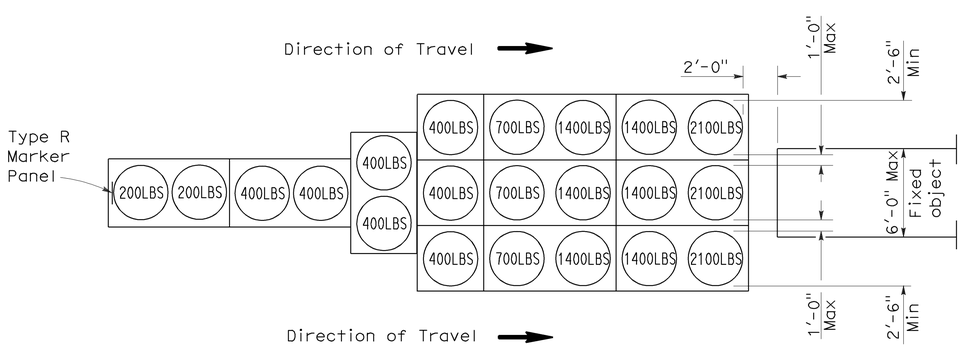

ARRAY 'TU21'

Approach speed 45 mph or more

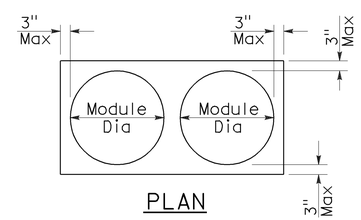

PLAN

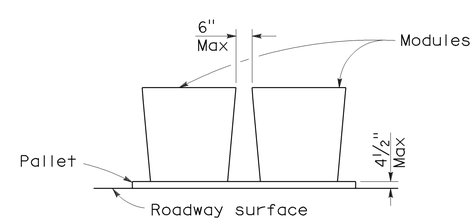

ELEVATION

CRASH CUSHION PALLET DETAIL

See Note 7

NOTES:

1. (XXX) Indicates sand filled module location and weight of sand in pounds for each module. Module spacing is based on the greater diameter of the module.
2. All sand weights are nominal.
3. Temporary crash cushion arrays shall not encroach on the traveled way.
4. Place the top of Type R marker panel 1" below the module lid.
5. Refer to Standard Plan A73B for marker details.
6. Approach speeds indicated conform to NCHRP 350 Report criteria.
7. Use of pallets is optional.

STATE OF CALIFORNIA
DEPARTMENT OF TRANSPORTATION

TEMPORARY CRASH CUSHION, SAND FILLED (UNIDIRECTIONAL)

NO SCALE

RSP T1A DATED JUNE 6, 2008 SUPERSEDES STANDARD PLAN T1A
DATED MAY 1, 2006 - PAGE 211 OF THE STANDARD PLANS BOOK DATED MAY 2006.

REVISED STANDARD PLAN RSP T1A

2006 REVISED STANDARD PLAN RSP T1A

DIST	COUNTY	ROUTE	POST MILES TOTAL PROJECT	SHEET NO.	TOTAL SHEETS
11	Imp	8	R7.4/R7.9	15	16

Randell D. Hiatt
REGISTERED CIVIL ENGINEER

June 6, 2008
PLANS APPROVAL DATE

REGISTERED PROFESSIONAL ENGINEER
Randell D. Hiatt
No. C50200
Exp. 6-30-09
CIVIL
STATE OF CALIFORNIA

The State of California or its officers or agents shall not be responsible for the accuracy or completeness of electronic copies of this plan sheet.

To accompany plans dated 02-07-11

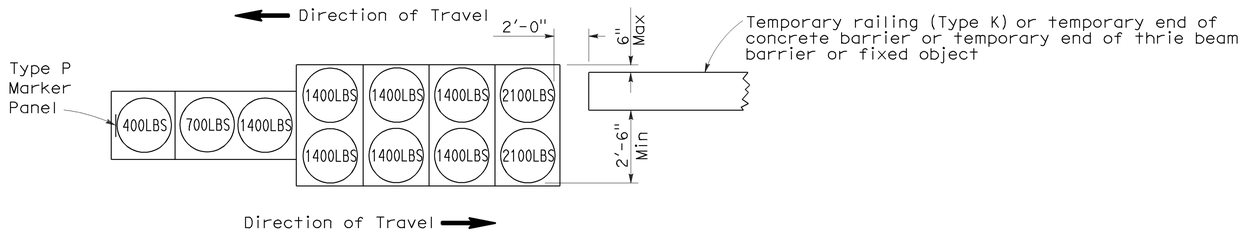

ARRAY 'TB11'

Approach speed less than 45 mph

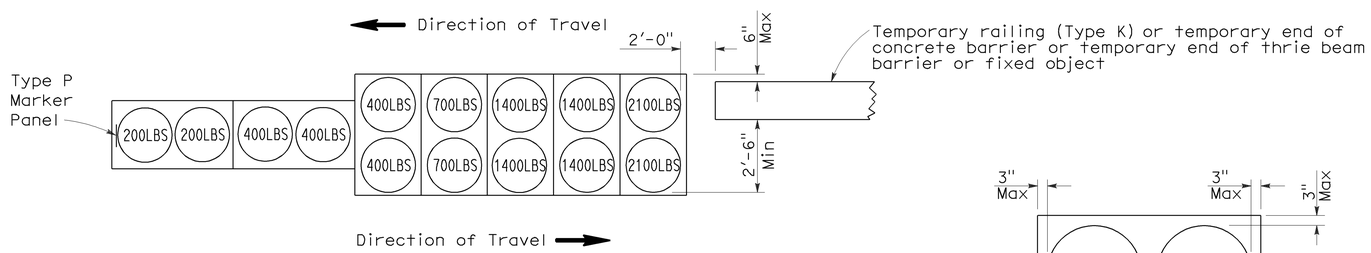

ARRAY 'TB14'

Approach speed 45 mph or more

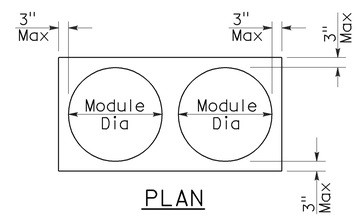

PLAN

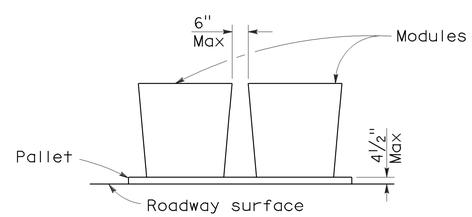

ELEVATION

CRASH CUSHION PALLET DETAIL

See Note 7

NOTES:

1. (XXX) Indicates sand filled module location and weight of sand in pounds for each module. Module spacing is based on the greater diameter of the module.
2. All sand weights are nominal.
3. Temporary crash cushion arrays shall not encroach on the traveled way.
4. Place the Type P marker panel so that the bottom of the panel rests upon the pallet.
5. Refer to Standard Plan A73B for marker details.
6. Approach speeds indicated conform to NCHRP 350 Report criteria.
7. Use of pallets is optional.

STATE OF CALIFORNIA
DEPARTMENT OF TRANSPORTATION

TEMPORARY CRASH CUSHION, SAND FILLED (BIDIRECTIONAL)

NO SCALE

RSP T1B DATED JUNE 6, 2008 SUPERSEDES STANDARD PLAN T1B
DATED MAY 1, 2006 - PAGE 212 OF THE STANDARD PLANS BOOK DATED MAY 2006.

REVISED STANDARD PLAN RSP T1B

2006 REVISED STANDARD PLAN RSP T1B

5-15-08

DIST	COUNTY	ROUTE	POST MILES TOTAL PROJECT	SHEET NO.	TOTAL SHEETS
11	Imp	8	R7.4/R7.9	16	16

Randell D. Hiatt
REGISTERED CIVIL ENGINEER

June 6, 2008
PLANS APPROVAL DATE

REGISTERED PROFESSIONAL ENGINEER
Randell D. Hiatt
No. C50200
Exp. 6-30-09
CIVIL
STATE OF CALIFORNIA

The State of California or its officers or agents shall not be responsible for the accuracy or completeness of electronic copies of this plan sheet.

To accompany plans dated 02-07-11

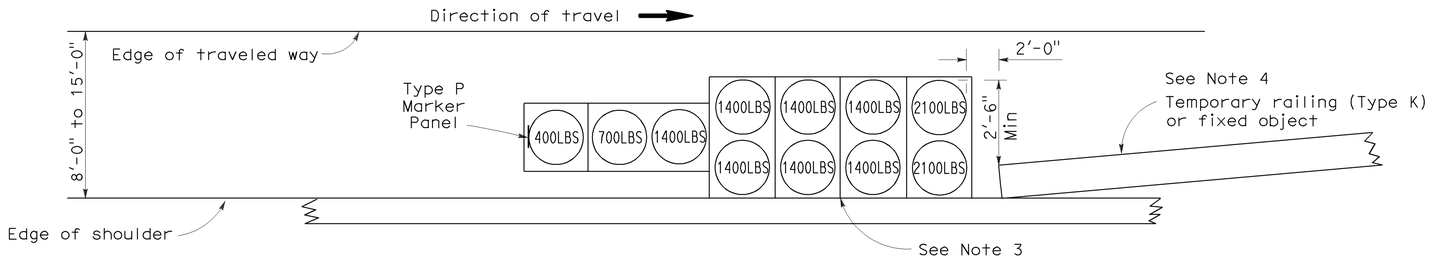

ARRAY 'TS11'

Approach speed less than 45 mph
See Note 9

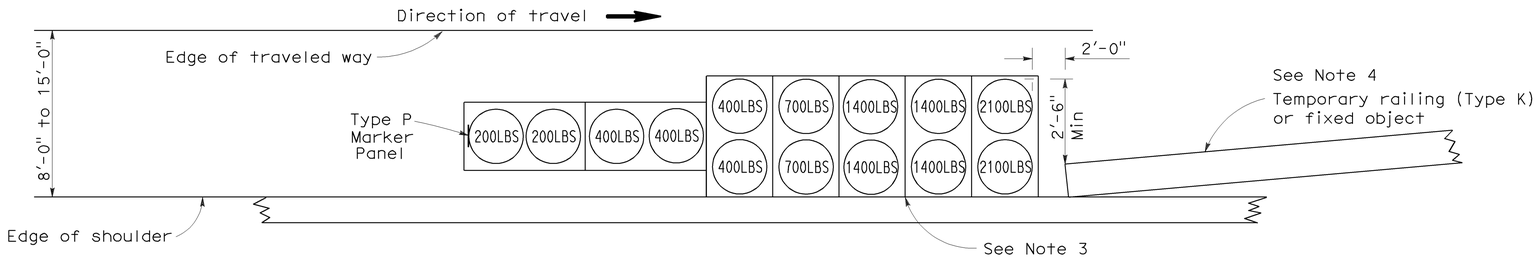

ARRAY 'TS14'

Approach speed 45 mph or more
See Note 9

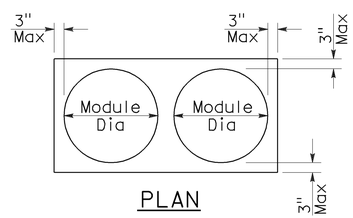

PLAN

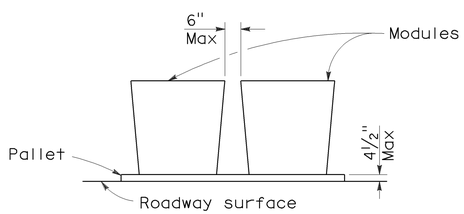

ELEVATION

CRASH CUSHION PALLET DETAIL

See Note 11

NOTES:

1. (XXX) Indicates sand filled module location and weight of sand in pounds for each module. Module spacing is based on the greater diameter of the module.
2. All sand weights are nominal.
3. The temporary crash cushion arrays shown on this plan shall be used only in locations where there will be traffic on one side of the temporary crash cushion array.
4. If the fixed object or approach end of the temporary railing is less than 15'-0" from the edge of traveled way, a temporary crash cushion is required in a construction or work zone.
5. Temporary crash cushion arrays shall not encroach on the traveled way.
6. Arrays for median shoulders shall conform to details shown on this plan for outside shoulders.
7. Place the Type P marker panel so that the bottom of the panel rests upon the pallet and faces traffic.
8. Refer to Standard Plan A73B for marker details.
9. For shoulder widths less than 8'-0", appropriate approved crash cushion protection, other than sand filled modules, shall be provided at fixed objects and at approach ends of temporary railing. The specific type of crash cushion shall be as shown on the project plans or as specified in the Special Provisions, or if not shown on the project plans or specified in the Special Provisions, shall be as approved by the Engineer.
10. Approach speeds indicated conform to NCHRP 350 Report criteria.
11. Use of pallets is optional.

STATE OF CALIFORNIA
DEPARTMENT OF TRANSPORTATION

TEMPORARY CRASH CUSHION, SAND FILLED (SHOULDER INSTALLATIONS)

NO SCALE

RSP T2 DATED JUNE 6, 2008 SUPERSEDES STANDARD PLAN T2
DATED MAY 1, 2006 - PAGE 213 OF THE STANDARD PLANS BOOK DATED MAY 2006.

REVISED STANDARD PLAN RSP T2

2006 REVISED STANDARD PLAN RSP T2

5-15-08