Dist	COUNTY	ROUTE	POST MILES TOTAL PROJECT	SHEET No.	TOTAL SHEETS
11	SD	5,8	Var	1	76

INDEX OF PLANS

SHEET NO.	DESCRIPTION
1	TITLE AND LOCATION MAP
2	CONSTRUCTION AREA SIGNS
3-6	REVISED AND NEW STANDARD PLANS
	STRUCTURE PLANS
7-59	ELECTRICAL PLANS
60-76	MECHANICAL PLANS

THE STANDARD PLANS LIST APPLICABLE TO THIS CONTRACT IS INCLUDED IN THE NOTICE TO BIDDERS AND SPECIAL PROVISIONS BOOK.

STATE OF CALIFORNIA

DEPARTMENT OF TRANSPORTATION

PROJECT PLANS FOR CONSTRUCTION ON

STATE HIGHWAY

IN SAN DIEGO COUNTY AT VARIOUS LOCATIONS

TO BE SUPPLEMENTED BY STANDARD PLANS DATED MAY 2006

LOCATION MAP

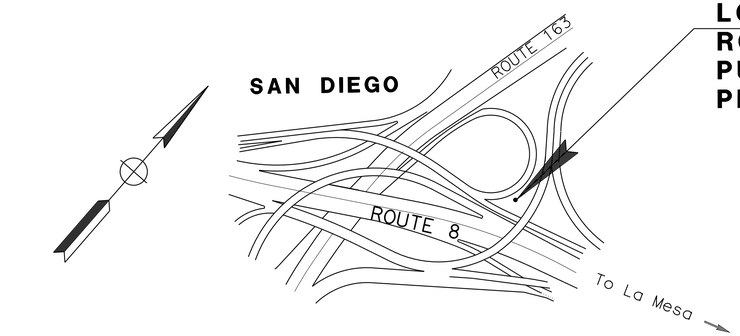

LOCATION 4 - ROUTE 8
ROUTE 8/163 CONNECTOR RAMP
PUMPING PLANT No. 57-0358W
PM 2.57

LOCATION 1 - ROUTE 5
E STREET PUMPING PLANT No. 57-0725W
PM 8.55

LOCATION 2 - ROUTE 5
H STREET PUMPING PLANT No. 57-0256W
PM 7.80

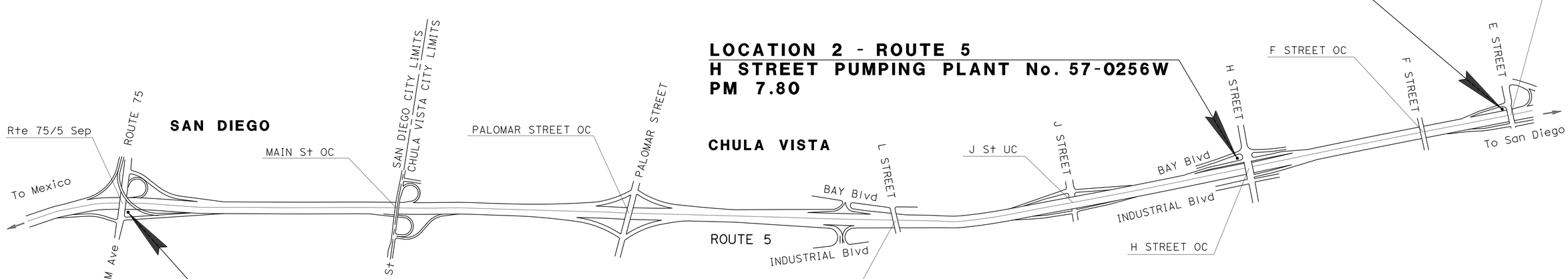

LOCATION 3 - ROUTE 5
PALM Ave PUMPING PLANT No. 57-0180W
PM 4.67

ACCESSIBILITY DESIGN APPROVAL STAMP
DOT / DES / OTA
PROJECT ID 11000004064
• EXEMPTION
Reviewed by:
Date: 12-07-2011
• EXEMPTION DOCUMENT ON FILE

CALIFORNIA STATE FIRE MARSHAL
APPROVED FIRE AND PANIC ONLY
Approval of this plan does not authorize or approve any omission or deviation from applicable regulations. Final approval is subject to field inspection. One set of approved plans shall be available on the project site at all times.
Reviewed by: FRANCIS SOLICH
Approval date: 08-28-12
CSFM File No. 01-37-11-0007

RGabriel 08-29-12
PROJECT ENGINEER DATE
REGISTERED CIVIL ENGINEER

September 24, 2012
PLANS APPROVAL DATE

REGISTERED PROFESSIONAL ENGINEER
RODOLFO D. GABRIEL
No. C67462
Exp. 6-30-13
CIVIL
STATE OF CALIFORNIA

THE STATE OF CALIFORNIA OR ITS OFFICERS OR AGENTS SHALL NOT BE RESPONSIBLE FOR THE ACCURACY OR COMPLETENESS OF SCANNED COPIES OF THIS PLAN SHEET.

PROJECT MANAGER KAZIM MAMDANI
DESIGN ENGINEER RUDY GABRIEL

THE CONTRACTOR SHALL POSSESS THE CLASS (OR CLASSES) OF LICENSE AS SPECIFIED IN THE "NOTICE TO BIDDERS."

NO SCALE

CONTRACT No.	11-297104
PROJECT ID	1100000406

LAST REVISION 08-30-12
DATE PLOTTED => 27-SEP-2012
TIME PLOTTED => 13:16

Dist	COUNTY	ROUTE	POST MILES TOTAL PROJECT	SHEET No.	TOTAL SHEETS
11	SD	5,8	Var	2	76

RDGabriel 08-29-12
REGISTERED CIVIL ENGINEER DATE

09-24-12
PLANS APPROVAL DATE

REGISTERED PROFESSIONAL ENGINEER
RODOLFO D. GABRIEL
No. C67462
Exp. 6-30-13
CIVIL
STATE OF CALIFORNIA

THE STATE OF CALIFORNIA OR ITS OFFICERS OR AGENTS SHALL NOT BE RESPONSIBLE FOR THE ACCURACY OR COMPLETENESS OF SCANNED COPIES OF THIS PLAN SHEET.

TYPICAL- PLACEMENT OF C23 (CA) AND C14 (CA) CONSTRUCTION AREA SIGNS

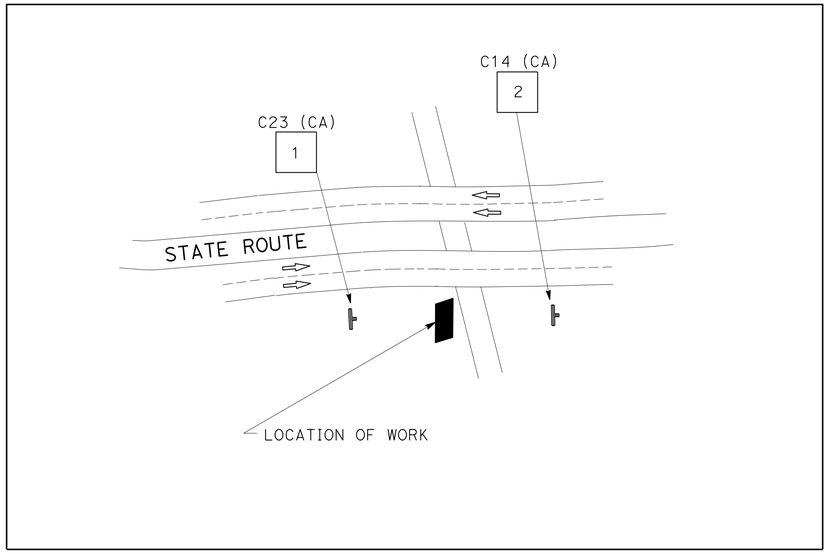

TYPICAL- PLACEMENT OF TRAFFIC PLASTIC DRUM

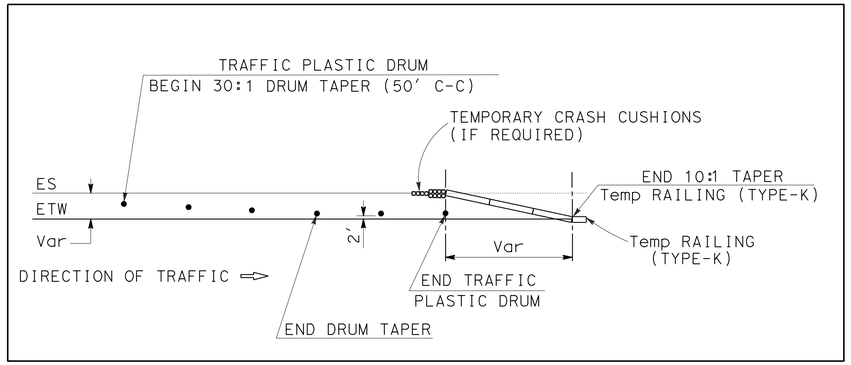

CONSTRUCTION AREA SIGNS

SIGN No.	CODE	PANEL SIZE INCHES	No. OF POST AND SIZE	No. OF SIGNS
1	C23 (CA)	48 X 48	PORTABLE	8
2	C14 (CA)	48 X 24	PORTABLE	8

LEGEND:

XX = CONSTRUCTION AREA SIGN

⇨ = DIRECTION OF TRAFFIC

NOTES:

1. EXACT LOCATION OF CONSTRUCTION AREA SIGNS SHALL BE DETERMINED BY THE ENGINEER.
2. FEDERAL MANUAL ON UNIFORM TRAFFIC CONTROL DEVICES (MUTCD) SIGN CODES ARE SHOWN UNLESS DESIGNATED (CA) INDICATING STANDARD CALIFORNIA SIGN SPECIFICATIONS ARE USED.
3. EXISTING UTILITY FACILITIES HAVE NOT BEEN SHOWN ON THESE PLAN SHEETS. THE CONTRACTOR SHALL VERIFY LOCATIONS OF EXISTING UTILITIES AND ADJUST THE FIELD LOCATION OF SIGN POSTS IN CONSULTATION WITH THE ENGINEER.
4. PLACE C23 (CA) APPROXIMATELY 1000' PRIOR TO CONSTRUCTION AND C14 (CA) APPROXIMATELY 500' AFTER CONSTRUCTION.

CONSTRUCTION AREA SIGNS

NO SCALE

CS-1

REVISED BY | DATE REVISED
RUDY GABRIEL | GERRY CRUZ
CALCULATED-DESIGNED BY | CHECKED BY
FUNCTIONAL SUPERVISOR
KAZIM MAMDANI

STATE OF CALIFORNIA - DEPARTMENT OF TRANSPORTATION
Caltrans
DESIGN

LAST REVISION 08-30-12 | DATE PLOTTED => 27-SEP-2012 | TIME PLOTTED => 13:16

DIST	COUNTY	ROUTE	POST MILES TOTAL PROJECT	SHEET NO.	TOTAL SHEETS
11	SD	5,8	Var	3	76

Randell D. Hiatt
REGISTERED CIVIL ENGINEER

June 6, 2008
PLANS APPROVAL DATE

REGISTERED PROFESSIONAL ENGINEER
Randell D. Hiatt
No. C50200
Exp. 6-30-09
CIVIL
STATE OF CALIFORNIA

The State of California or its officers or agents shall not be responsible for the accuracy or completeness of electronic copies of this plan sheet.

To accompany plans dated 09-24-12

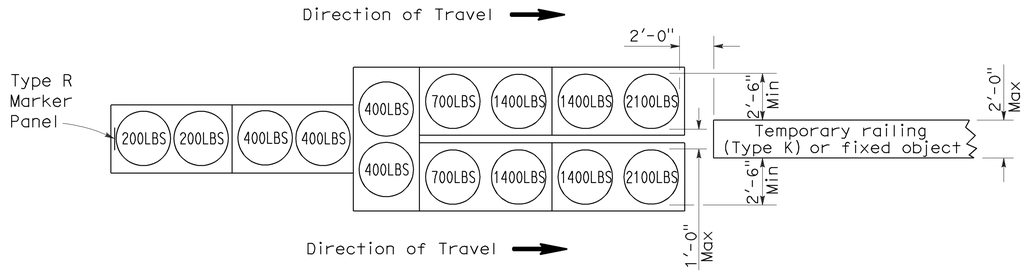

ARRAY 'TU14'

Approach speed 45 mph or more

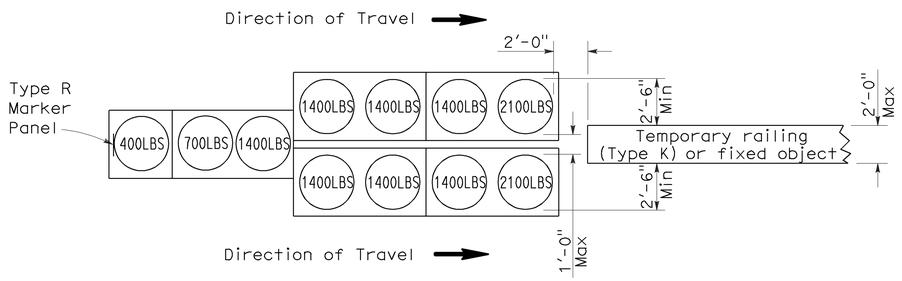

ARRAY 'TU11'

Approach speed less than 45 mph

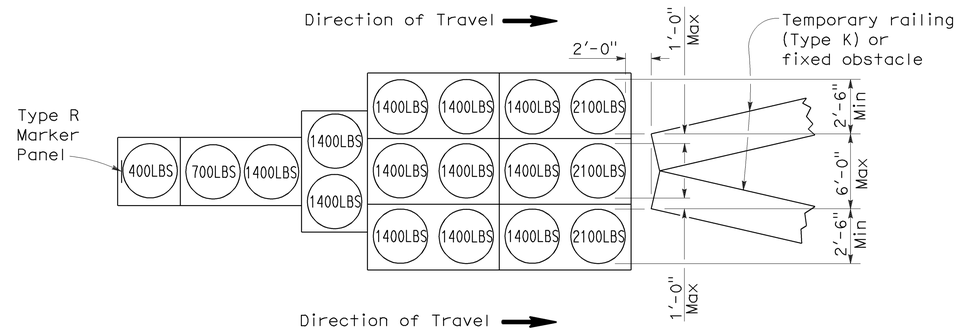

ARRAY 'TU17'

Approach speed less than 45 mph

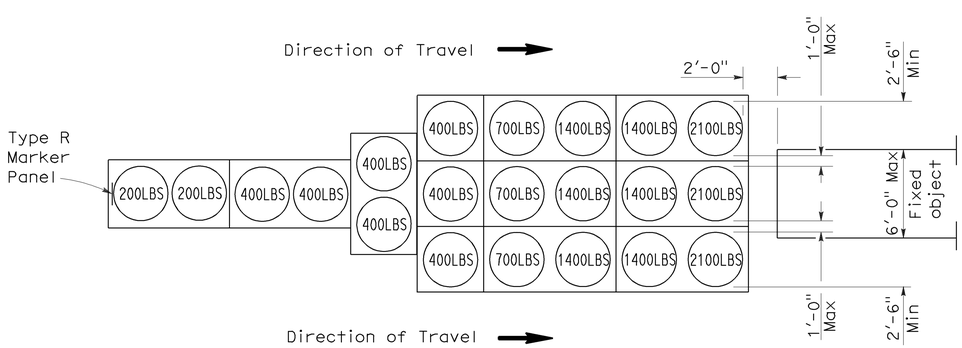

ARRAY 'TU21'

Approach speed 45 mph or more

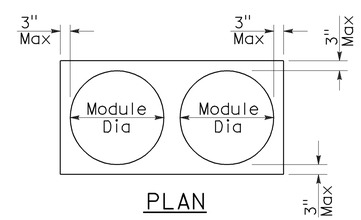

PLAN

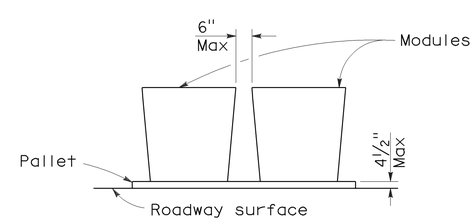

ELEVATION

CRASH CUSHION PALLET DETAIL

See Note 7

NOTES:

1. (XXX) Indicates sand filled module location and weight of sand in pounds for each module. Module spacing is based on the greater diameter of the module.
2. All sand weights are nominal.
3. Temporary crash cushion arrays shall not encroach on the traveled way.
4. Place the top of Type R marker panel 1" below the module lid.
5. Refer to Standard Plan A73B for marker details.
6. Approach speeds indicated conform to NCHRP 350 Report criteria.
7. Use of pallets is optional.

STATE OF CALIFORNIA
DEPARTMENT OF TRANSPORTATION

TEMPORARY CRASH CUSHION, SAND FILLED (UNIDIRECTIONAL)

NO SCALE

RSP T1A DATED JUNE 6, 2008 SUPERSEDES STANDARD PLAN T1A
DATED MAY 1, 2006 - PAGE 211 OF THE STANDARD PLANS BOOK DATED MAY 2006.

REVISED STANDARD PLAN RSP T1A

2006 REVISED STANDARD PLAN RSP T1A

DIST	COUNTY	ROUTE	POST MILES TOTAL PROJECT	SHEET NO.	TOTAL SHEETS
11	SD	5,8	Var	4	76

Randell D. Hiatt
REGISTERED CIVIL ENGINEER

June 6, 2008
PLANS APPROVAL DATE

REGISTERED PROFESSIONAL ENGINEER
Randell D. Hiatt
No. C50200
Exp. 6-30-09
CIVIL
STATE OF CALIFORNIA

The State of California or its officers or agents shall not be responsible for the accuracy or completeness of electronic copies of this plan sheet.

To accompany plans dated 09-24-12

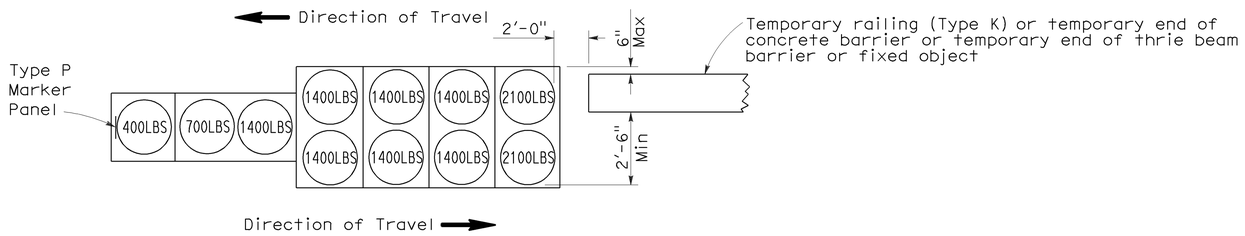

ARRAY 'TB11'

Approach speed less than 45 mph

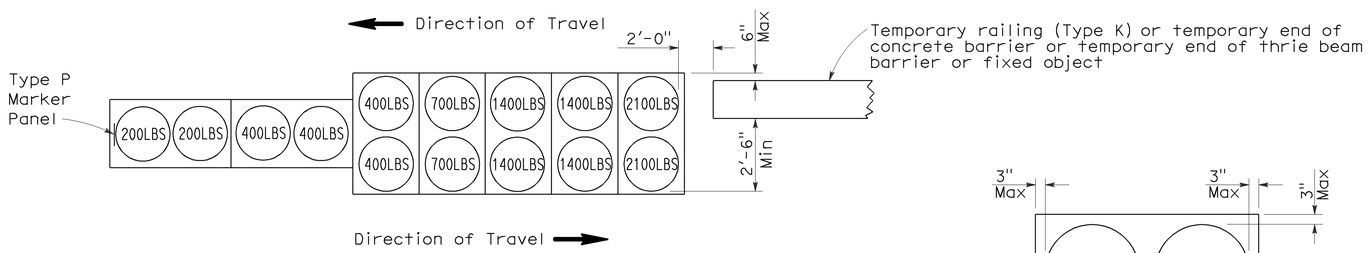

ARRAY 'TB14'

Approach speed 45 mph or more

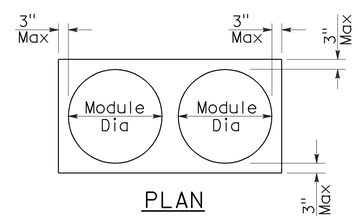

PLAN

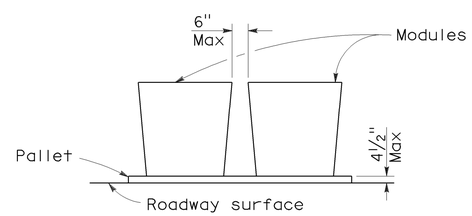

ELEVATION

CRASH CUSHION PALLET DETAIL

See Note 7

NOTES:

1. (XXX) Indicates sand filled module location and weight of sand in pounds for each module. Module spacing is based on the greater diameter of the module.
2. All sand weights are nominal.
3. Temporary crash cushion arrays shall not encroach on the traveled way.
4. Place the Type P marker panel so that the bottom of the panel rests upon the pallet.
5. Refer to Standard Plan A73B for marker details.
6. Approach speeds indicated conform to NCHRP 350 Report criteria.
7. Use of pallets is optional.

STATE OF CALIFORNIA
DEPARTMENT OF TRANSPORTATION

TEMPORARY CRASH CUSHION, SAND FILLED (BIDIRECTIONAL)

NO SCALE

RSP T1B DATED JUNE 6, 2008 SUPERSEDES STANDARD PLAN T1B
DATED MAY 1, 2006 - PAGE 212 OF THE STANDARD PLANS BOOK DATED MAY 2006.

REVISED STANDARD PLAN RSP T1B

2006 REVISED STANDARD PLAN RSP T1B

DIST	COUNTY	ROUTE	POST MILES TOTAL PROJECT	SHEET NO.	TOTAL SHEETS
11	SD	5,8	Var	5	76

Randell D. Hiatt
REGISTERED CIVIL ENGINEER

June 6, 2008
PLANS APPROVAL DATE

REGISTERED PROFESSIONAL ENGINEER
Randell D. Hiatt
No. C50200
Exp. 6-30-09
CIVIL
STATE OF CALIFORNIA

The State of California or its officers or agents shall not be responsible for the accuracy or completeness of electronic copies of this plan sheet.

To accompany plans dated 09-24-12

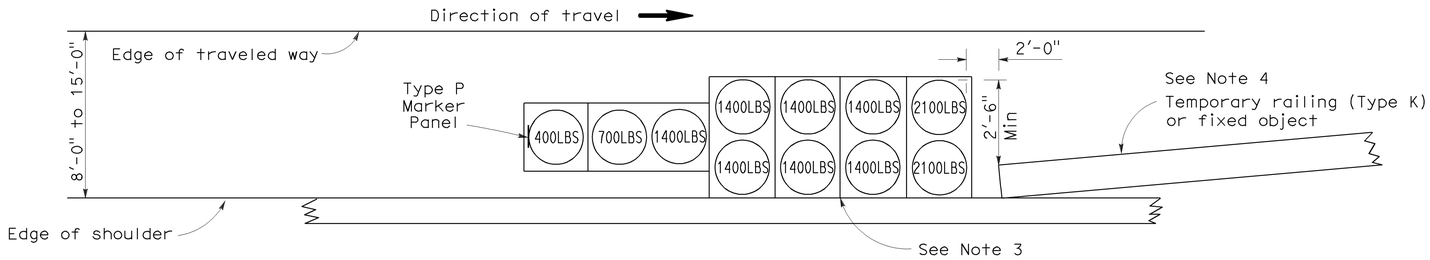

ARRAY 'TS11'

Approach speed less than 45 mph
See Note 9

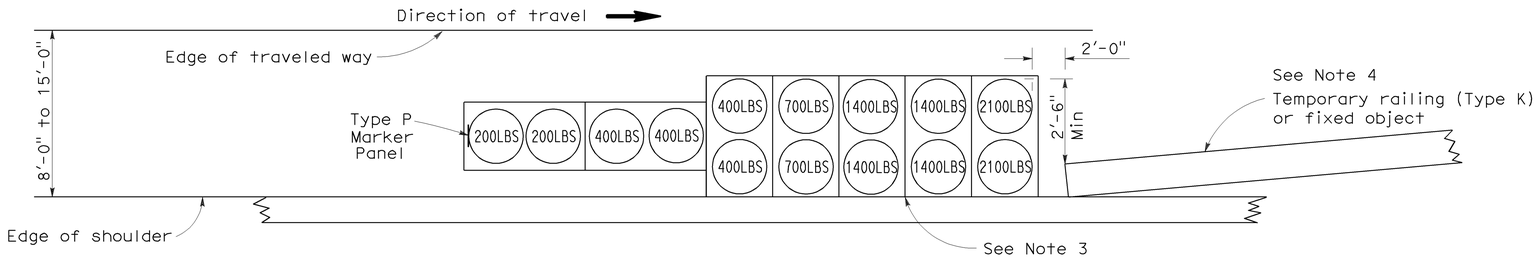

ARRAY 'TS14'

Approach speed 45 mph or more
See Note 9

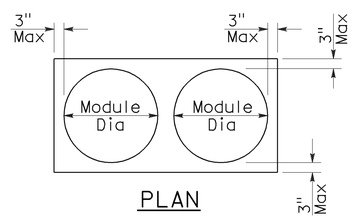

PLAN

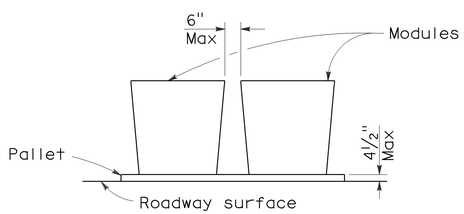

ELEVATION

CRASH CUSHION PALLET DETAIL

See Note 11

NOTES:

1. (XXX) Indicates sand filled module location and weight of sand in pounds for each module. Module spacing is based on the greater diameter of the module.
2. All sand weights are nominal.
3. The temporary crash cushion arrays shown on this plan shall be used only in locations where there will be traffic on one side of the temporary crash cushion array.
4. If the fixed object or approach end of the temporary railing is less than 15'-0" from the edge of traveled way, a temporary crash cushion is required in a construction or work zone.
5. Temporary crash cushion arrays shall not encroach on the traveled way.
6. Arrays for median shoulders shall conform to details shown on this plan for outside shoulders.
7. Place the Type P marker panel so that the bottom of the panel rests upon the pallet and faces traffic.
8. Refer to Standard Plan A73B for marker details.
9. For shoulder widths less than 8'-0", appropriate approved crash cushion protection, other than sand filled modules, shall be provided at fixed objects and at approach ends of temporary railing. The specific type of crash cushion shall be as shown on the project plans or as specified in the Special Provisions, or if not shown on the project plans or specified in the Special Provisions, shall be as approved by the Engineer.
10. Approach speeds indicated conform to NCHRP 350 Report criteria.
11. Use of pallets is optional.

STATE OF CALIFORNIA
DEPARTMENT OF TRANSPORTATION

TEMPORARY CRASH CUSHION, SAND FILLED (SHOULDER INSTALLATIONS)

NO SCALE

RSP T2 DATED JUNE 6, 2008 SUPERSEDES STANDARD PLAN T2
DATED MAY 1, 2006 - PAGE 213 OF THE STANDARD PLANS BOOK DATED MAY 2006.

REVISED STANDARD PLAN RSP T2

2006 REVISED STANDARD PLAN RSP T2

Dist	COUNTY	ROUTE	POST MILES TOTAL PROJECT	SHEET No.	TOTAL SHEETS
11	SD	5,8	Var	6	76

Randell D. Hiatt
REGISTERED CIVIL ENGINEER

May 20, 2011
PLANS APPROVAL DATE

REGISTERED PROFESSIONAL ENGINEER
Randell D. Hiatt
No. C50200
Exp. 6-30-11
CIVIL
STATE OF CALIFORNIA

The State of California or its officers or agents shall not be responsible for the accuracy or completeness of electronic copies of this plan sheet.

To accompany plans dated 09-24-12

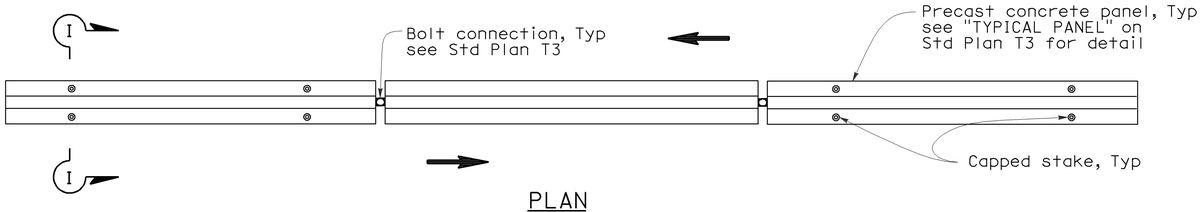

PLAN

RAILING STAKING CONFIGURATION FOR TWO-WAY TRAFFIC

See Note 1

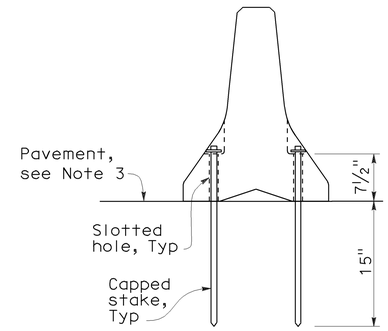

SECTION I-I

NOTES:

1. Where Type K Temporary Railing is placed as a temporary or long term barrier in two-way traffic on highways with less than 24" from the edge of traveled way, use four capped stakes per every other panel with end panels staked.
2. Where Type K Temporary Railing is placed 3" to 24" from the edge of an excavation on highways, use two capped stakes per panel along the traffic side.
3. Staked Type K Temporary Railing must be supported by at least 4" thick concrete, hot mix asphalt or existing asphalt concrete pavement.
4. The minimum yield strength for the washer must be 60,000 psi.
5. Direction of adjacent traffic indicated by ⟹.

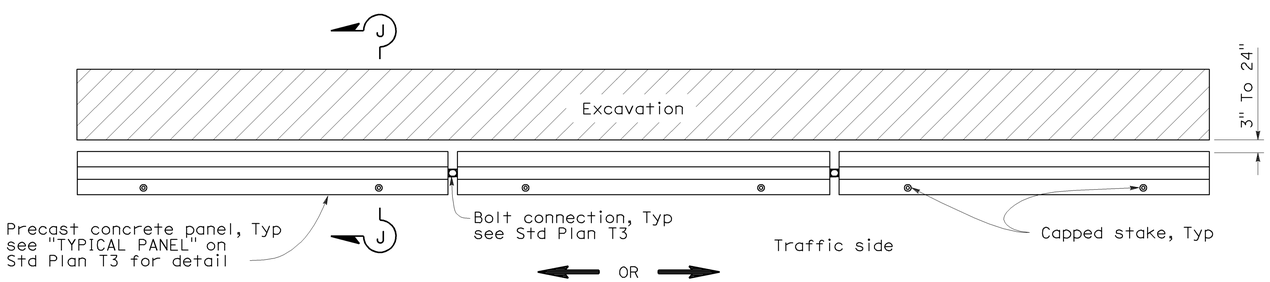

PLAN

RAILING STAKING CONFIGURATION ADJACENT TO AN EXCAVATION

See Note 2

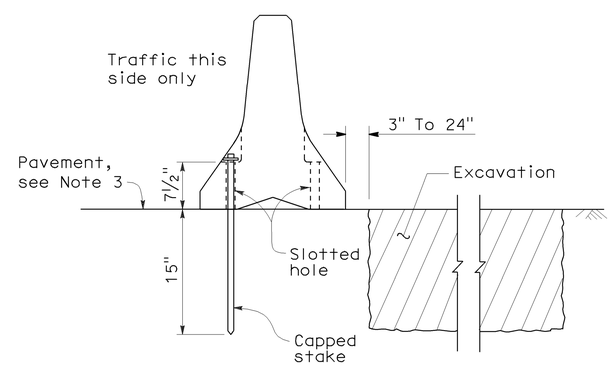

SECTION J-J

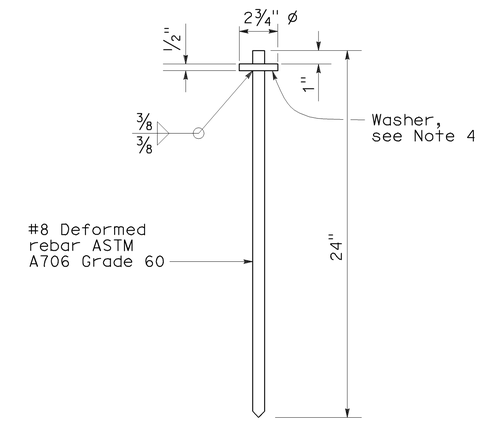

CAPPED STAKE DETAIL

STATE OF CALIFORNIA
DEPARTMENT OF TRANSPORTATION

TEMPORARY RAILING (TYPE K)

NO SCALE

NSP T3A DATED MAY 20, 2011 SUPPLEMENTS
THE STANDARD PLANS BOOK DATED MAY 2006.

NEW STANDARD PLAN NSP T3A

2006 NEW STANDARD PLAN NSP T3A

DIST.	COUNTY	ROUTE	POST MILES TOTAL PROJECT	SHEET NO.	TOTAL SHEETS
11	SD	5,8	Var	7	76

REGISTERED ELECTRICAL ENGINEER — 08-28-12 DATE

REGISTERED PROFESSIONAL ENGINEER — MARK CHEAP — No. E 15795 — Exp. 12-31-12 — ELEC — STATE OF CALIFORNIA

09-24-12
PLANS APPROVAL DATE

The State of California or its officers or agents shall not be responsible for the accuracy or completeness of electronic copies of this plan sheet.

GRAPHIC SYMBOLS FOR ELECTRICAL WIRING AND LAYOUT DIAGRAMS

SYMBOL	DESCRIPTION
	POLE-TOP ELECTROLIER
	POLE-ARM ELECTROLIER
CEILING WALL	
(S) -(S)	SURFACE FLUORESCENT, METAL HALIDE OR SODIUM VAPOR FIXTURE
(R) -(R)	RECESSED FLUORESCENT, METAL HALIDE, OR SODIUM VAPOR FIXTURE
(X) -(X)	EXIT LIGHT
	SURFACE OR PENDANT INDIVIDUAL FLUORESCENT FIXTURE
(R)	RECESSED INDIVIDUAL FLUORESCENT FIXTURE
	SURFACE OR PENDANT CONTINUOUS ROW FLUORESCENT FIXTURES

NOTE: A LOWER CASE LETTER NEAR GRAPHIC LIGHTING FIXTURE SYMBOL DENOTES THAT FIXTURE IS CONTROLLED BY A SIMILARLY MARKED SWITCH, AN ALPHA-NUMERIC SYMBOL NEAR GRAPHIC LIGHTING FIXTURE SYMBOL DENOTES FIXTURE TYPE, (I=INCANDESCENT, F=FLUORESCENT, MH=METAL HALIDE, H=HIGH PRESSURE SODIUM VAPOR), DESIGN TYPE, NUMBER OF LAMPS AND WATTAGE.

EXAMPLE : (4) F 2 - 2 x 32
- 32 WATT LAMPS
- 2 LAMPS
- DESIGN TYPE
- FLUORESCENT
- NUMBER OF FIXTURES

(B) -(B)	BLANK OUTLET
(J) -(J)	JUNCTION BOX
(D)	DROP CORD
	SINGLE RECEPTACLE OUTLET
	DUPLEX RECEPTACLE OUTLET
(GFCI)	DUPLEX RECEPTACLE OUTLET (WITH GFCI)
(GFCI) WP	DUPLEX RECEPTACLE OUTLET, WEATHERPROOF (WITH GFCI)
	SINGLE, SPECIAL PURPOSE RECEPTACLE OUTLET
	DUPLEX, SPECIAL PURPOSE RECEPTACLE OUTLET
(F)	FAN HANGER RECEPTACLE
S	SINGLE POLE SWITCH
S_2	DOUBLE POLE SWITCH
S_P	SWITCH AND PILOT LIGHT
S_{MC}	MOMENTARY CONTACT SWITCH
S_{RC}	REMOTE CONTROL SWITCH
S_{WP}	WEATHERPROOF SWITCH
S_F	FAN SWITCH
S_L	LIGHT SWITCH
S_H	HEATER SWITCH

SYMBOL	DESCRIPTION
S^{O}_{1}	OCCUPANCY SENSOR WALL SWITCH, SINGLE LEVEL
S^{O}_{2}	OCCUPANCY SENSOR WALL SWITCH, BILEVEL
S_M	MOTION SENSOR SWITCH
S_T	MANUAL MOTOR STARTING SWITCH, THERMAL OVERLOAD TYPE
S_{HP}	MANUAL MOTOR STARTING SWITCH, WITHOUT OVERLOAD ELEMENT
T_S	TIMER SWITCH
S	SWITCH AND SINGLE RECEPTACLE
S	SWITCH AND DUPLEX RECEPTACLE
(T)	THERMOSTAT
(PS)	PRESSURE SWITCH
(R)	CONTROL RELAY
(FS)	FLOW SWITCH
PEC	PHOTOELECTRIC CELL
	FLUSH-MOUNTED PANELBOARD AND CABINET
	SURFACE-MOUNTED PANELBOARD AND CABINET
	LIGHTING PANEL
	POWER PANEL
	COMBINATION LIGHTING AND POWER
MC	MOTOR CONTROLLER
	DISCONNECT SWITCH
	CONDUIT CONCEALED IN CEILING OR WALL
	CONDUIT CONCEALED IN FLOOR
	CONDUIT EXPOSED
MC-P	CONDUIT, PVC COATED RIGID STEEL, EXPOSED

(2) 1/2"C, PVC, 2#12
- CONDUCTOR INFO (PER CONDUIT)
- CONDUIT TYPE
- CONDUIT SIZE
- NUMBER OF CONDUITS (NO NUMBER INDICATES ONE CONDUIT)

	CROSS-LINES INDICATE NUMBER OF #12 AWG CONDUCTORS. LONGER CROSS-LINE INDICATES 1#12 AWG (G) FOR EQUIPMENT GROUNDING CONDUCTOR. NO CROSS-LINE INDICATES 2#12 WITH 1#12 (G) UNLESS OTHERWISE NOTED. ALL CONDUIT 1/2" UNLESS OTHERWISE NOTED.
A1, 2	HOMERUN TO PANELBOARD, ARROWS INDICATE NUMBER OF CIRCUITS, LETTER DENOTES PANELBOARD, NUMERAL DENOTES CIRCUIT.
SM	SURFACE METAL RACEWAY
MC	CONDUIT, RIGID STEEL, UNDERGROUND
PVC	CONDUIT, POLYVINYL CHLORIDE, UNDERGROUND
	CONDUIT, FLEXIBLE
	CONDUIT, TURN UP
	CONDUIT, TURN DOWN
	CONDUIT SEAL, EXPLOSION-PROOF
	CONDUIT, EXPANSION JOINT
	ADAPTER, ONE TYPE CONDUIT TO ANOTHER
	POLE
	PULL BOX-LETTER INDICATES TYPE OF PULL BOX (E-ELECTRICAL, T-TELEPHONE, R-RADIO)
(T)	PULL BOX (TRAFFIC RATED)-LETTER INDICATES TYPE OF PULL BOX (E-ELECTRICAL, T-TELEPHONE, R-RADIO)

A / EE-2 — SECTION/ELEVATION LETTER — SHEET NUMBER

1 / EE-2 — DETAIL NUMBER — SHEET NUMBER

REMODEL WORK

SYMBOL	DESCRIPTION
	EXISTING FLUORESCENT FIXTURE-TO REMAIN
	EXISTING FLUORESCENT FIXTURE-REMOVE
(SN)	EXISTING INCANDESCENT FIXTURE-TO REMAIN
	EXISTING INCANDESCENT FIXTURE-REMOVE
	EXISTING OUTLET-TO REMAIN
	EXISTING RECEPTACLE OUTLET-TO REMAIN
	EXISTING RECEPTACLE OUTLET-REMOVE
-E-E-	EXISTING CONDUIT AND CONDUCTORS-TO REMAIN UNLESS OTHERWISE NOTED
-**-	EXISTING CONDUIT AND CONDUCTORS-REMOVE
S	EXISTING SWITCH-TO REMAIN
	EXISTING SWITCH-REMOVE
(J)	EXISTING JUNCTION BOX-TO REMAIN
	EXISTING JUNCTION BOX-REMOVE

GRAPHIC SYMBOLS FOR ELECTRICAL DIAGRAMS

SYMBOL	DESCRIPTION
	CIRCUIT BREAKER, SINGLE POLE
	CIRCUIT BREAKER, DOUBLE POLE
	CIRCUIT BREAKER, THREE POLE
GFCI	CIRCUIT BREAKER, WITH GROUND FAULT CIRCUIT INTERRUPTER
	CONTACT, NORMALLY OPEN
	CONTACT, NORMALLY CLOSED
	CONTACT, NORMALLY CLOSED, TIME DELAY CLOSING ON DE-ENERGIZING
	CONTACT, NORMALLY OPEN, TIME DELAY OPENING ON DE-ENERGIZING
	CONTACT, NORMALLY OPEN, TIME DELAY CLOSING ON ENERGIZING
	CONTACT, NORMALLY CLOSED, TIME DELAY OPENING ON ENERGIZING
	CONTACT, SINGLE POLE DOUBLE-THROW
	OPERATING COIL
	LIQUID LEVEL ACTUATED SWITCH, NORMALLY CLOSED
	LIQUID LEVEL ACTUATED SWITCH, NORMALLY OPEN
	PRESSURE ACTUATED SWITCH, NORMALLY CLOSED
	PRESSURE ACTUATED SWITCH, NORMALLY OPEN
	FLOW ACTUATED SWITCH, NORMALLY CLOSED
	FLOW ACTUATED SWITCH, NORMALLY OPEN
	TEMPERATURE ACTUATED SWITCH, NORMALLY CLOSED
	TEMPERATURE ACTUATED SWITCH, NORMALLY OPEN
	LIMIT SWITCH, NORMALLY CLOSED
	LIMIT SWITCH, NORMALLY OPEN
	PUSHBUTTON SWITCH, NORMALLY CLOSED
	PUSHBUTTON SWITCH, NORMALLY OPEN
	SWITCH, SINGLE-POLE
	SWITCH, SINGLE-POLE, DOUBLE-THROW
	SWITCH, 3-POLE
	SWITCH, 3-POLE, 3-POSITION
	SWITCH, SINGLE-POLE, 3-POSITION
	THERMAL OVERLOAD
	FUSE
	RESISTOR
	TRANSFORMER WINDING
	GROUNDING ELECTRODE
	ENCLOSURE BOND
(A)	PILOT LIGHT (A=AMBER, G=GREEN, R=RED)
(G)	GENERATOR
(M)	MOTOR
(F)	FAN MOTOR

CALIFORNIA STATE FIRE MARSHAL APPROVED FIRE AND PANIC ONLY
Approval of this plan does not authorize or approve any omission or deviation from applicable regulations. Final approval is subject to field inspection. One set of approved plans shall be available on the project site at all times.
Reviewed by: FRANCIS SOLICH
Approval date: 08-28-12
CSFM File No. 01-37-11-0007

ABBREVIATIONS

A	AMPERES
ACS	AIR COMPRESSOR STARTER
AI	ANALOG INPUT
AL	ALARM LIGHT
AO	ANALOG OUTPUT
BD	BUILDING DISCONNECT
BRK	BREAKER
C	CONDUIT
CB	CIRCUIT BREAKER
CKT	CIRCUIT
CR	CONTROL RELAY
CSW	CURRENT SWITCH
CT	CONTROL TRANSFORMER
CTO	CONTROL TRANSFORMER OVERLOAD
DI	DIGITAL INPUT
DO	DIGITAL OUTPUT
DP	DUPLEX PLUG RECEPTACLE
(E)	EXISTING
EF	EXHAUST FAN
EL	ELEVATION
F	FUSE
FL	FAILURE LIGHT
FLA	FLASHER
FLEX	FLEXIBLE CONDUIT
FLS	FLOW SWITCH
FR	FAILURE RESET
FS	FLOAT SWITCH
G	GROUND
GFCI	GROUND FAULT CIRCUIT INTERRUPTER
GRS	GALVANIZED RIGID STEEL
IL	INDICATING LIGHT
ILS	INDICATING LIGHT SWITCH
IR	INDUCTION RELAY
JB	JUNCTION BOX
L	LIGHT
LC	LIGHTING CONTACTOR
LD	LIGHT DISCONNECT
LL	LIQUID LEVEL RELAY
LP	LIGHT PANEL
LS	LIGHT SWITCH
LT	LIGHT TRANSFORMER
LTO	LIGHT TRANSFORMER OVERLOAD
MB	MAIN BREAKER
MC	METALLIC CONDUIT
MCC	MOTOR CONTROL CENTER
MCP	MOTOR CIRCUIT PROTECTOR
MD	MOTOR DISCONNECT
MSB	MAIN SWITCHBOARD
MT	EMPTY CONDUIT
(N)	NEW
NC	NORMALLY CLOSED
NO	NORMALLY OPEN
Ø	PHASE
OL	OVERLOAD
P	POLE
PB	PULL BOX
PB	PUSHBUTTON
PCP	PUMP CONTROL PANEL
PEC	PHOTOELECTRIC CELL
PL	PILOT LIGHT
PS	POWER SWITCH
PTS	POWER TRANSFER SWITCH
PVC	POLYVINYL CHLORIDE
RES	RESISTOR
S	STARTER COIL
SD	SERVICE DISCONNECT
SFR	SEAL FAILURE RELAY
SL	SUMP LIGHT
SPD	SUMP PUMP DISCONNECT
SPR	STANDBY POWER RECEPTACLE
SS	SELECTOR SWITCH
ST	STARTER
SV	SOLENOID VALVE
T	TRANSFORMER
TB	TERMINAL BLOCKS
TDR	TIME DELAY RELAY
TGLS	TOGGLE SWITCH
TM	TIME METER
TOT	TOTAL
TS	TIMER SWITCH
TSW	TEST SWITCH
TYP	TYPICAL
UPS	UNINTERRUPTIBLE POWER SUPPLY
V	VOLT
WLS	WATER LEVEL SWITCH
WP	WEATHERPROOF

	BY	CHECKED
DESIGN	Baldev S. Dehal	Tech Ngov
DETAILS	Kathi Andreasen	Baldev S. Dehal
QUANTITIES	Baldev S. Dehal	Tech Ngov

STATE OF CALIFORNIA
DEPARTMENT OF TRANSPORTATION

DIVISION OF ENGINEERING SERVICES
ELECTRICAL-MECHANICAL-WATER AND WASTEWATER DESIGN

BRIDGE NO. 57-725W
POST MILE

PUMPING PLANT REHABILITATION
E STREET PUMPING PLANT (LOCATION 1)
LEGEND

SHEET **EE1-0**

TAEMWW Imperial Rev. 7/10

ORIGINAL SCALE IN INCHES FOR REDUCED PLANS 0 1 2 3

UNIT 3597
PROJECT NUMBER & PHASE 11000004061
EA 297101

DISREGARD PRINTS BEARING EARLIER REVISION DATES →
REVISION DATES (PRELIMINARY STAGE ONLY) 7/8/11 8/26/11 9/15/11 10/18/11 12/18/11 8/28/12 SHEET OF

28-AUG-2012 15:19
ee1_00.dgn

DIST.	COUNTY	ROUTE	POST MILES TOTAL PROJECT	SHEET NO.	TOTAL SHEETS
11	SD	5,8	Var	8	76

REGISTERED ELECTRICAL ENGINEER — 08-28-12 DATE

REGISTERED PROFESSIONAL ENGINEER MARK CHEAP No. E 15795 Exp. 12-31-12 ELEC STATE OF CALIFORNIA

09-24-12
PLANS APPROVAL DATE

The State of California or its officers or agents shall not be responsible for the accuracy or completeness of electronic copies of this plan sheet.

CERTIFICATE OF COMPLIANCE (Page 1 of 4) LTG-1C

Project Name: PUMPING PLANT REHABILITATION E STREET PUMPING PLANT (LOCATION 1)			Date: 07/20/2011
Project Address: INTERSTATE 5 & E STREET INTERSECTION SAN DIEGO, CA 91910	Climate Zone: 7		Building CFA: N/A Unconditioned Floor Area: 250 SF

General Information

Building Type:	☑ Nonresidential	☐ High-Rise Residential	☐ Hotel/Motel	
☐ Schools	☐ Relocatable Public Schools	☐ Conditioned Spaces	☑ Unconditioned Spaces	
Phase of Construction:	☐ New Construction	☐ Addition	☑ Alteration	
Method of Compliance:	☐ Complete Building	☑ Area Category	☐ Tailored	

Documentation Author's Declaration Statement

- I Certify that this Certificate of Compliance documentation is accurate and complete.

Name: BALDEV S. (DAVE) DEHAL	Signature:		
Company: CALTRANS		Date: 07/20/2011	
Address: 1801 30TH STREET		If applicable: CEA # CEPE #	
City/State/Zip: SACRAMENTO, CA 95816		Phone: (916) 227-8346	

Principal Lighting Designer's Declaration Statement

- I am eligible under Division 3 of the California Business and Professions Code to accept responsibility for the lighting design.
- This Certificate of Compliance identifies the lighting features and performance specifications required for compliance with Title 24, Pages 1 and 6 of the California Code of Regulations.
- The design features represented on this Certificate of Compliance are consistent with the information provided to document this design on the other applicable compliance forms, worksheets, calculations, plans and specifications submitted to the enforcement agency for approval with this building permit application.

Name: TECH NGOV	Signature:		
Company: CALTRANS		Phone: (916) 227-8529	
Address: 1801 30TH STREET		License # E 14521	
City/State/Zip: SACRAMENTO, CA 95816		Date: 07/20/2011	

Lighting Mandatory Measures

Indicate location on building plans of Mandatory Measures Note Block: EE1-0.2

LIGHTING COMPLIANCE FORMS & WORKSHEETS (Check box if worksheet is included)

For detailed instructions on the use of this and all Energy Efficiency Standards compliance forms, please refer to the Nonresidential Manual published by the California Energy Commission.

☑	LTG-1C Pages 1 through 4	Certificate of Compliance. All pages required on plans for all submittals.
☐	LTG-2C	Lighting Controls Credit Worksheet
☑	LTG-3C	Indoor Lighting Power Allowance
☐	LTG-4C Pages 1 through 4	Tailored Method Worksheet
☐	LTG-5C Pages 1 and 2	Line Voltage Track Lighting Worksheet

CERTIFICATE OF COMPLIANCE (Page 2 of 4) LTG-1C

INDOOR LIGHTING SCHEDULE and FIELD INSPECTION ENERGY CHECKLIST

Project Name: PUMPING PLANT REHABILITATION E STREET PUMPING PLANT (LOCATION 1)	Date: 07/20/2011	
Installation Certificate, LTG-1-INST (Retain a copy and verify form is completed and signed.)	Field Inspector ☐	
Certificate of Acceptance, LTG-2A and LTG-3A (Retain a copy and verify form is completed and signed.)	Field Inspector ☐	

A separate Lighting Schedule Must Be Filled Out for Conditioned and Unconditioned Spaces Installed Lighting Power listed on this Lighting Schedule is only for: ☐ CONDITIONED SPACE ☑ UNCONDITIONED SPACE

☐ The actual indoor lighting power listed below includes all installed permanent and portable lighting system in accordance with S 146 (a)

☐ Only for offices: Up to the first 0.2 watts per square foot of portable lighting shall not be required to be included in the calculation of actual indoor lighting power density in accordance with Exception to S 146 (a). All portable lighting in excess of 0.2 watts per square foot is totaled below.

	Luminaire Schedule (Type, Lamps, Ballasts)		Installed Watts						
A	B	C	D	E		F	G	H	
Name or Item Tag	Complete Luminaire Description (i.e, 3 lamp fluorescent troffer, F32T8, one dimmable electronic ballast)	Special Features	Watts per Luminaire 1	How wattage was determined: CEC Default from NA8	According to S 130 (d or e)	Number of Luminaires	Installed Watts (D x F)	Field 2 Inspector: Pass	Fail
L1	F32T8, WRAPAROUND, CEILING MOUNTED, ES	✓	54	☐	☐	1	54	☐	☐
L2	F32T8, WRAPAROUND, WALL MOUNTED, ES	✓	54	☐	☐	1	54	☐	☐
L3	F32T8, WRAPAROUND, WALL MOUNTED, ES	✓	54	☐	☐	1	54	☐	☐
L4	F32T8, WRAPAROUND, CEILING MOUNTED, ES	✓	54	☐	☐	1	54	☐	☐
L5	F32T8, WRAPAROUND, WALL MOUNTED, ES	✓	54	☐	☐	1	54	☐	☐
				☐	☐			☐	☐
				☐	☐			☐	☐
				☐	☐			☐	☐
				☐	☐			☐	☐
				☐	☐			☐	☐
				☐	☐			☐	☐
				☐	☐			☐	☐
				☐	☐			☐	☐
				☐	☐			☐	☐
				☐	☐			☐	☐
				☐	☐			☐	☐
				☐	☐			☐	☐
			INSTALLED WATTS PAGE TOTAL:				270		

Building total number of pages	1	Installed Watts Building Total (Sum of all pages)	270

Enter into LTG-1C Page 4 of 4

1. Wattage shall be determined according to Section 130 (d and e). Wattage shall be rating of light fixture, not rating of bulb.
2. If Fail then describe on Page 2 of the Inspection Checklist Form and take appropriate action to correct. Verify building plans if necessary.

CALIFORNIA STATE FIRE MARSHAL APPROVED FIRE AND PANIC ONLY
Approval of this plan does not authorize or approve any omission or deviation from applicable regulations. Final approval is subject to field inspection. One set of approved plans shall be available on the project site at all times.
Reviewed by: FRANCIS SOLICH
Approval date: 08-28-12
CSFM File No. 01-37-11-0007

DESIGN	BY Baldev S. Dehal	CHECKED Tech Ngov	
DETAILS	BY Kathi Andreasen	CHECKED Baldev S. Dehal	
QUANTITIES	BY Baldev S. Dehal	CHECKED Tech Ngov	

STATE OF CALIFORNIA DEPARTMENT OF TRANSPORTATION

DIVISION OF ENGINEERING SERVICES ELECTRICAL-MECHANICAL-WATER AND WASTEWATER DESIGN

BRIDGE NO. 57-725W
POST MILE

PUMPING PLANT REHABILITATION
E STREET PUMPING PLANT (LOCATION 1)
TITLE 24 COMPLIANCE NO. 1

SHEET EE1-0.1

TAEMWW Imperial Rev. 7/10

ORIGINAL SCALE IN INCHES FOR REDUCED PLANS 0 1 2 3

UNIT 3597
PROJECT NUMBER & PHASE 11000004061
EA 297101

DISREGARD PRINTS BEARING EARLIER REVISION DATES →

REVISION DATES (PRELIMINARY STAGE ONLY) 7/25/11 8/25/11 9/13/11 10/19/11 12/19/11 8/28/12 SHEET OF

28-AUG-2012 15:19

ee1_00_1.dgn

DIST.	COUNTY	ROUTE	POST MILES TOTAL PROJECT	SHEET NO.	TOTAL SHEETS
11	SD	5,8	Var	9	76

REGISTERED ELECTRICAL ENGINEER — 08-28-12 DATE

REGISTERED PROFESSIONAL ENGINEER MARK CHEAP No. E 15795 Exp. 12-31-12 ELEC STATE OF CALIFORNIA

09-24-12
PLANS APPROVAL DATE

The State of California or its officers or agents shall not be responsible for the accuracy or completeness of electronic copies of this plan sheet.

CALIFORNIA STATE FIRE MARSHAL
APPROVED FIRE AND PANIC ONLY
Approval of this plan does not authorize or approve any omission or deviation from applicable regulations. Final approval is subject to field inspection. One set of approved plans shall be available on the project site at all times.
Reviewed by: FRANCIS SOLICH
Approval date: 08-28-12
CSFM File No. OI-37-11-0007

CERTIFICATE OF COMPLIANCE (Page 3 of 4) LTG-1C

Project Name: PUMPING PLANT REHABILITATION
E STREET PUMPING PLANT (LOCATION 1)

Date: 07/20/2011

INDOOR LIGHTING SCHEDULE and FIELD ENERGY CHECKLIST

Fill in controls for all spaces: a) area controls, b) multi-level controls, c) manual daylighting controls for daylit areas> 250 sq ft, automatic daylighting controls for daylit areas> 2,500 sq ft, d) shut-off controls, e) display lighting controls, f) tailored lighting controls-general lighting controlled separately from display, ornamental and display case lighting and g) demand responsive automatic controls for retail stores> 50,000 sq ft, in accordance with Section 131.

MANDATORY LIGHTING CONTROLS - FIELD INSPECTION ENERGY CHECKLIST				Field Inspector	
Type/Description	Number of Units	Location in Building		Pass	Fail
N/A (SECTION 146-30)				☐	☐
				☐	☐
				☐	☐
				☐	☐
				☐	☐
				☐	☐
				☐	☐
				☐	☐
				☐	☐
				☐	☐
				☐	☐
				☐	☐
				☐	☐

Field Inspectors's Notes or Discrepancies:

2008 Nonresidential Compliance Forms *July 2010*

CERTIFICATE OF COMPLIANCE (Page 4 of 4) LTG-1C

Project Name: PUMPING PLANT REHABILITATION
E STREET PUMPING PLANT (LOCATION 1)

Date: 07/20/2011

Conditioned and Unconditioned space Lighting must not be combined for compliance

Indoor Lighting Power for Conditioned Spaces		Watts	Indoor Lighting Power for Unconditioned Spaces		Watts
Installed Lighting (from Conditioned LTG-1C Page 2			Installed Lighting (from Unconditioned LTG-1C Page 2		270
Lighting Control Credit Conditioned Spaces (from LTG-2C)	-		Lighting Control Credit Unconditioned Spaces (from LTG-2C)	-	
Adjusted Installed Lighting Power	=		Adjusted Installed Lighting Power	=	270
Complies if Installed ≤ Allowed			Complies if Installed ≤ Allowed		
Allowed Lighting Power Conditioned Spaces (from LTG-3C)			Allowed Lighting Power Unconditioned Spaces (from LTG-3C)		300

Required Acceptance Tests

Designer:
This form is to be used by the designer and attached to the plans. Listed below is the acceptance test for the Lighting system, LTG-2A and LTG-3A. The designer is required to check the acceptance tests and list all control devices serving the building or space shall be certified as meeting the Acceptance Requirements for Code Compliance. If all the lighting system or control of a certain type requires a test, list the different lighting and the number of systems. The NA7 Section in the Appendix of the Nonresidential Reference Appendices Manual describes the test. Since this form will be part of the plans, completion of this section will allow the responsible party to budget for the scope of work appropriately. Forms can be grouped by type of Luminaire controlled.

Enforcement Agency:
System Acceptance. Before Occupancy Permit is granted for a newly constructed building or space or when ever new lighting system with controls is installed in the building or space shall be certified as meeting the Acceptance Requirements.
The LTG-2A and LTG-3A forms are not considered a complete form and is not to be accepted by the enforcement agency unless the boxes are checked and/or filled and signed. In addition, a Certificate of Acceptance forms shall be submitted to the enforcement agency that certifies plans, specifications, installation certificates, and operating and maintenance information meet the requirements of S 10-103 (b) of Title 24 Part 6. The field inspector must receive the properly filled out and signed forms before the building can receive final occupancy. A copy of the LTG-2A and LTG-3A for each different lighting luminaire control(s) must be provided to the owner of the building for their records.

Luminaires Controlled				LTG-2A and LTG-3A
Equipment Requiring Testing	Description	Number of like Controls	Location	Controls and Sensors and Automatic Daylighting Controls Acceptance
				☐
				☐
				☐
				☐
				☐
				☐
				☐
				☐
				☐
				☐
				☐
				☐
				☐
				☐

2008 Nonresidential Compliance Forms *July 2010*

DESIGN	BY Baldev S. Dehal	CHECKED Tech Ngov	
DETAILS	BY Kathi Andreasen	CHECKED Baldev S. Dehal	
QUANTITIES	BY Baldev S. Dehal	CHECKED Tech Ngov	

STATE OF CALIFORNIA
DEPARTMENT OF TRANSPORTATION

DIVISION OF ENGINEERING SERVICES
ELECTRICAL-MECHANICAL-WATER AND WASTEWATER DESIGN

BRIDGE NO. 57-725W
POST MILE

PUMPING PLANT REHABILITATION
E STREET PUMPING PLANT (LOCATION 1)
TITLE 24 COMPLIANCE NO. 2

SHEET EE1-0.2

TAEMWW Imperial Rev. 7/10

ORIGINAL SCALE IN INCHES FOR REDUCED PLANS 0 1 2 3

UNIT 3597
PROJECT NUMBER & PHASE 11000004061
EA 297101

DISREGARD PRINTS BEARING EARLIER REVISION DATES → 7/29/11 8/29/11 10/19/11 12/19/11 8/28/12

REVISION DATES (PRELIMINARY STAGE ONLY) SHEET OF

28-AUG-2012 15:19
ee1_00_2.dgn

DIST.	COUNTY	ROUTE	POST MILES TOTAL PROJECT	SHEET NO.	TOTAL SHEETS
11	SD	5,8	Var	10	76

REGISTERED ELECTRICAL ENGINEER — 08-28-12 DATE

REGISTERED PROFESSIONAL ENGINEER — MARK CHEAP — No. E 15795 — Exp. 12-31-12 — ELEC — STATE OF CALIFORNIA

09-24-12
PLANS APPROVAL DATE

The State of California or its officers or agents shall not be responsible for the accuracy or completeness of electronic copies of this plan sheet.

CALIFORNIA STATE FIRE MARSHAL
APPROVED FIRE AND PANIC ONLY
Approval of this plan does not authorize or approve any omission or deviation from applicable regulations. Final approval is subject to field inspection. One set of approved plans shall be available on the project site at all times.
Reviewed by: FRANCIS SOLICH
Approval date: 08-28-12
CSFM File No. 01-37-11-0007

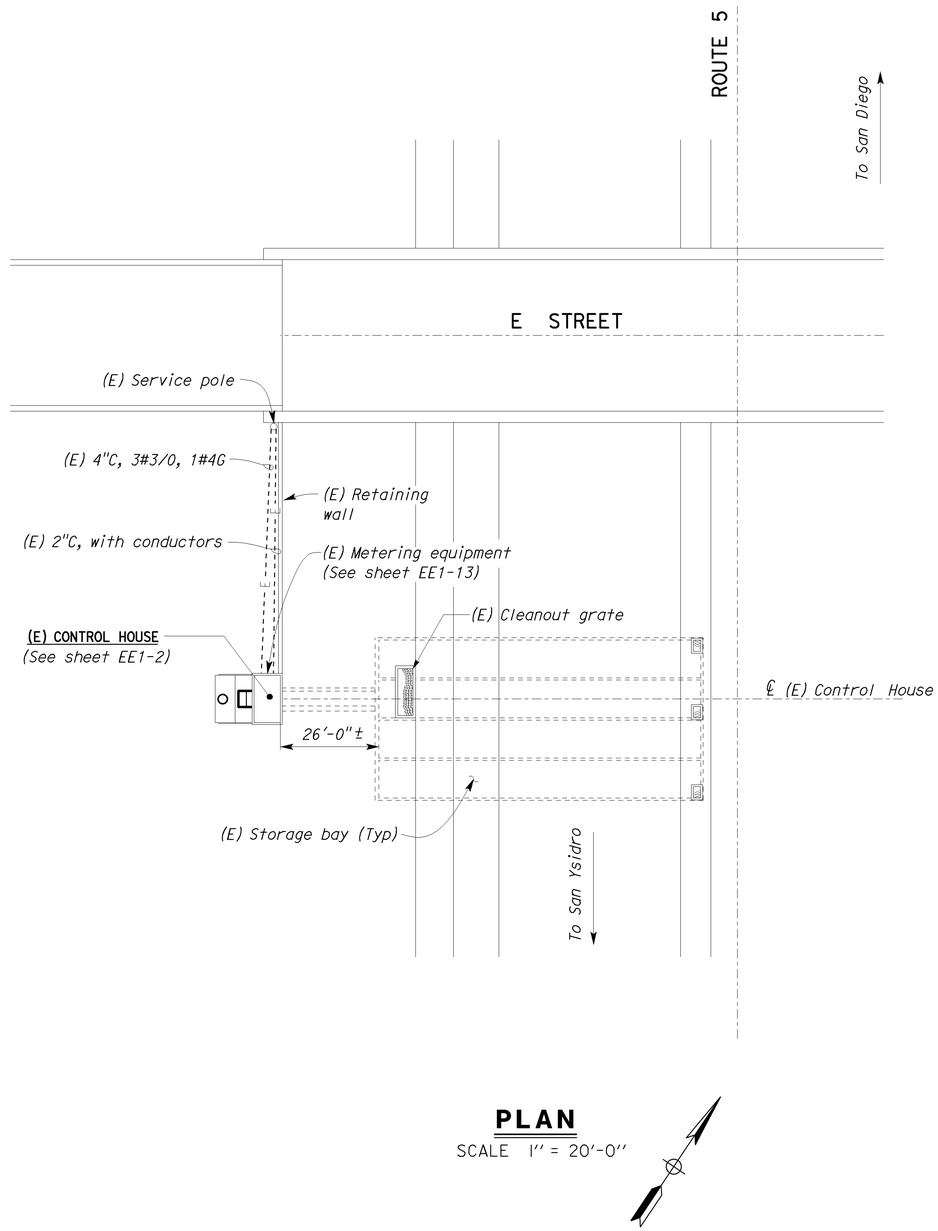

PLAN
SCALE 1" = 20'-0"

THIS DRAWING ACCURATE FOR ELECTRICAL WORK ONLY.

DESIGN SUPERVISOR
DESIGN ENGINEER

	BY	CHECKED
DESIGN	Baldev S. Dehal	Tech Ngov
DETAILS	Kathi Andreasen	Baldev S. Dehal
QUANTITIES	Baldev S. Dehal	Tech Ngov

STATE OF CALIFORNIA
DEPARTMENT OF TRANSPORTATION

DIVISION OF ENGINEERING SERVICES
ELECTRICAL-MECHANICAL-WATER AND WASTEWATER DESIGN

BRIDGE NO. 57-725W
POST MILE

E STREET PUMPING PLANT (LOCATION 1)

PUMPING PLANT REHABILITATION
ELECTRICAL SITE PLAN

SHEET **EE1-1**

TAEMWW Imperial Rev. 7/10

ORIGINAL SCALE IN INCHES FOR REDUCED PLANS 0 1 2 3

UNIT 3597
PROJECT NUMBER & PHASE 11000004061
EA 297101

DISREGARD PRINTS BEARING EARLIER REVISION DATES →
REVISION DATES (PRELIMINARY STAGE ONLY): 4/29/11 8/29/11 10/19/11 12/19/11 8/28/12

SHEET OF

28-AUG-2012 15:19
ee1_01.dgn

DIST.	COUNTY	ROUTE	POST MILES TOTAL PROJECT	SHEET NO.	TOTAL SHEETS
11	SD	5,8	Var	11	76

REGISTERED ELECTRICAL ENGINEER — 08-28-12 DATE

REGISTERED PROFESSIONAL ENGINEER MARK CHEAP No. E 15795 Exp. 12-31-12 ELEC STATE OF CALIFORNIA

09-24-12
PLANS APPROVAL DATE

The State of California or its officers or agents shall not be responsible for the accuracy or completeness of electronic copies of this plan sheet.

CALIFORNIA STATE FIRE MARSHAL APPROVED FIRE AND PANIC ONLY
Approval of this plan does not authorize or approve any omission or deviation from applicable regulations. Final approval is subject to field inspection. One set of approved plans shall be available on the project site at all times.
Reviewed by: FRANCIS SOLICH
Approval date: 08-28-12
CSFM File No. 01-37-11-0007

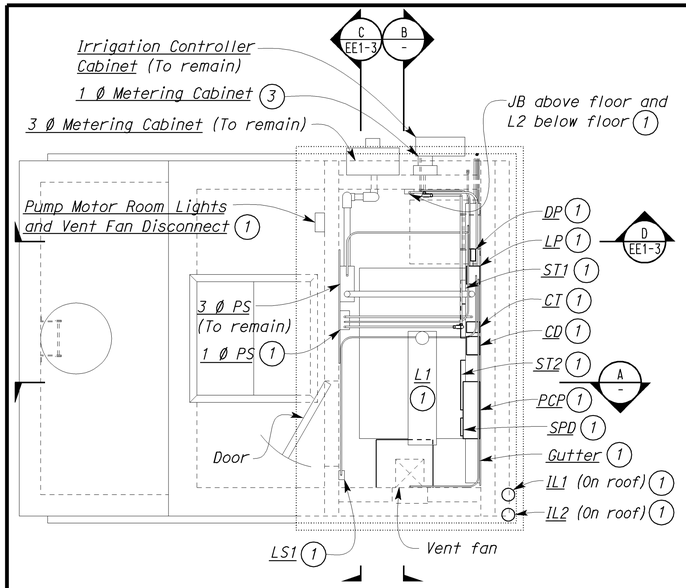

CONTROL ROOM PLAN

SCALE 3/8"= 1'-0"

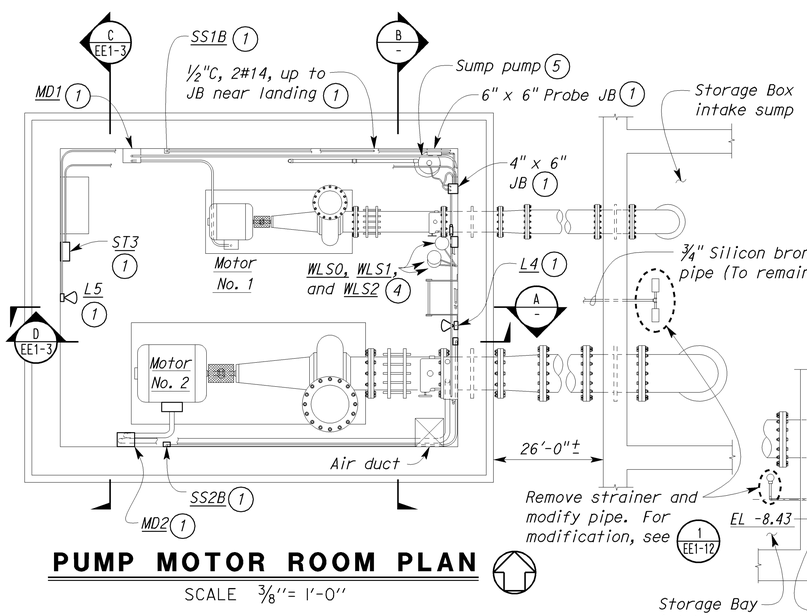

PUMP MOTOR ROOM PLAN

SCALE 3/8"= 1'-0"

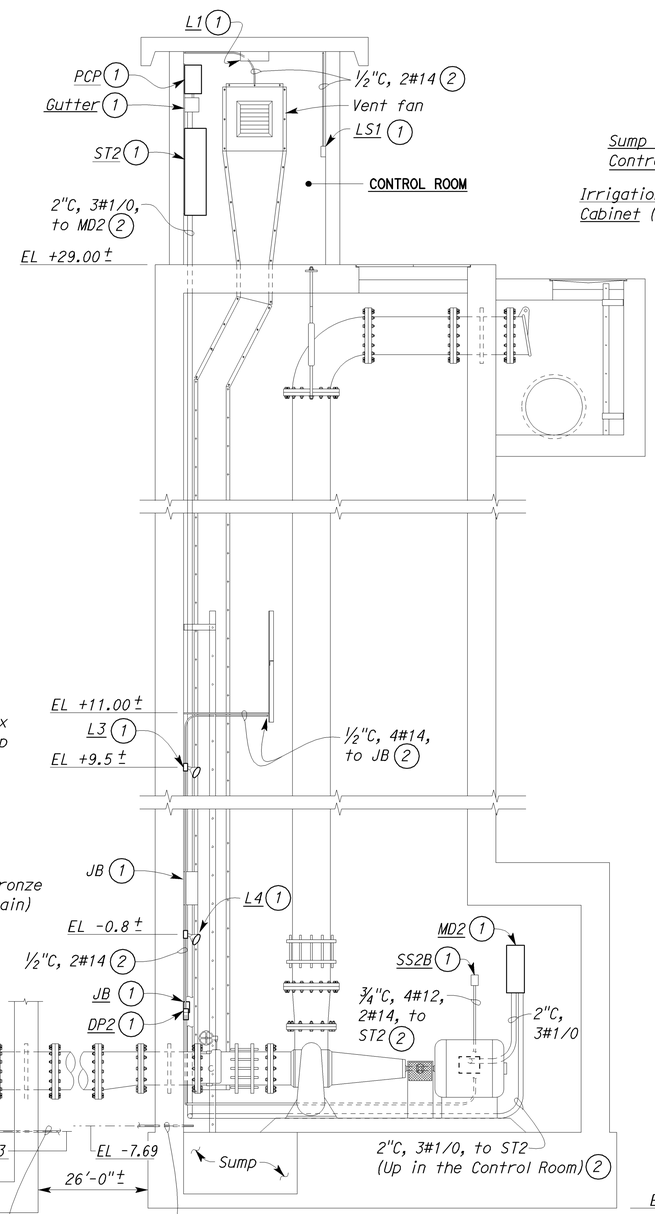

A SECTION

SCALE 3/8"= 1'-0"

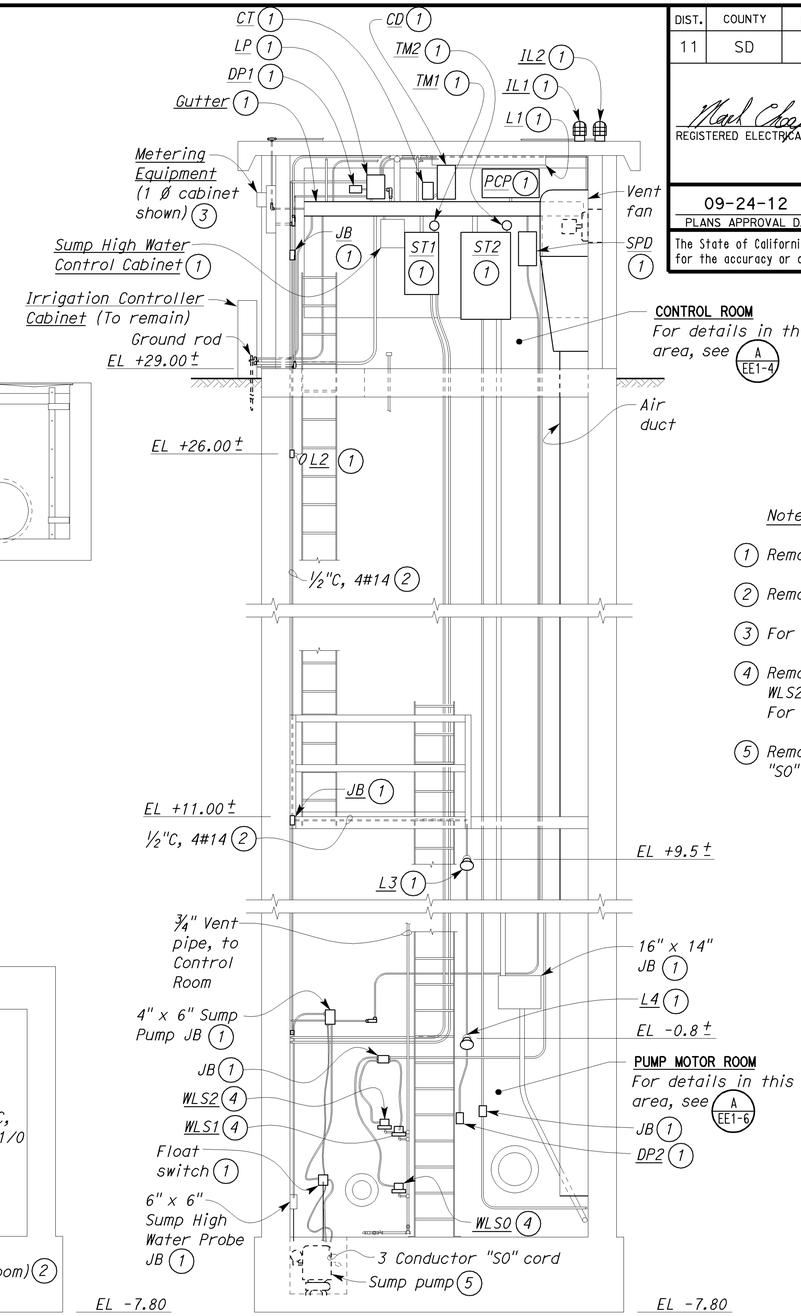

B SECTION

SCALE 3/8"= 1'-0"

Notes:

1. Remove.
2. Remove conductors and conduit.
3. For detail, see A/EE1-13.
4. Remove water level switch WLS0, WLS1, WLS2, flexible conduits and conductors. For 3/4" pipe modification, see 2/EE1-13.
5. Remove sump pump and 3 conductor "S0" cord.

THIS DRAWING ACCURATE FOR ELECTRICAL WORK ONLY.

	BY	CHECKED
DESIGN	Baldev S. Dehal	Tech Ngov
DETAILS	Kathi Andreasen	Baldev S. Dehal
QUANTITIES	Baldev S. Dehal	Tech Ngov

STATE OF CALIFORNIA
DEPARTMENT OF TRANSPORTATION

DIVISION OF ENGINEERING SERVICES
ELECTRICAL-MECHANICAL-WATER AND WASTEWATER DESIGN

BRIDGE NO. 57-725W
POST MILE

PUMPING PLANT REHABILITATION

E STREET PUMPING PLANT (LOCATION 1)

EXISTING CONTROL ROOM AND PUMP MOTOR ROOM DETAILS NO. 1

SHEET EE1-2

TAEMWW Imperial Rev. 7/10

ORIGINAL SCALE IN INCHES FOR REDUCED PLANS 0 1 2 3

UNIT 3597
PROJECT NUMBER & PHASE 11000004061
EA 297101

DISREGARD PRINTS BEARING EARLIER REVISION DATES

REVISION DATES (PRELIMINARY STAGE ONLY) — SHEET — OF
5/18/11 7/18/11 8/29/11 10/18/11 12/18/11 8/28/12

28-AUG-2012 15:19
ee1_02.dgn

DIST.	COUNTY	ROUTE	POST MILES TOTAL PROJECT	SHEET NO.	TOTAL SHEETS
11	SD	5,8	Var	12	76

REGISTERED ELECTRICAL ENGINEER — 08-28-12 DATE

REGISTERED PROFESSIONAL ENGINEER — MARK CHEAP — No. E 15795 — Exp. 12-31-12 — ELEC — STATE OF CALIFORNIA

09-24-12
PLANS APPROVAL DATE

The State of California or its officers or agents shall not be responsible for the accuracy or completeness of electronic copies of this plan sheet.

CALIFORNIA STATE FIRE MARSHAL APPROVED FIRE AND PANIC ONLY
Approval of this plan does not authorize or approve any omission or deviation from applicable regulations. Final approval is subject to field inspection. One set of approved plans shall be available on the project site at all times.
Reviewed by: FRANCIS SOLICH
Approval date: 08-28-12
CSFM File No. 01-37-11-0007

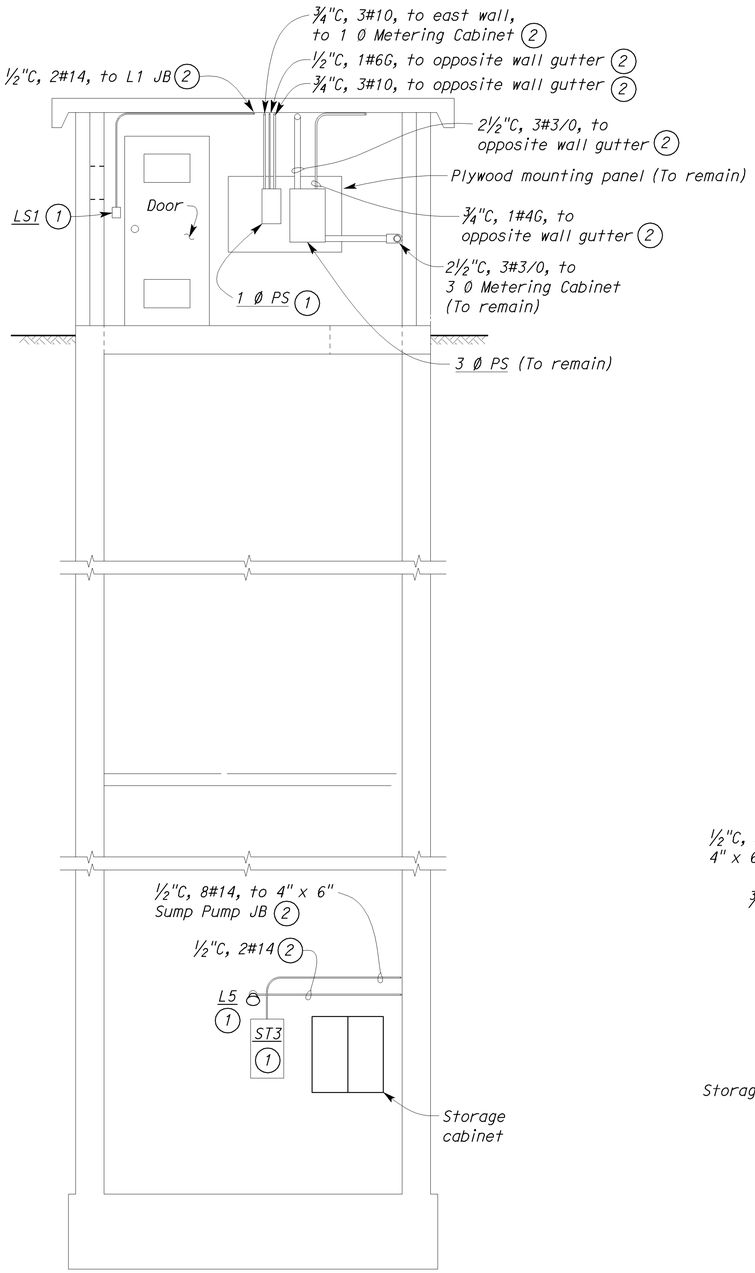

(C) SECTION
SCALE 3/8"= 1'-0"

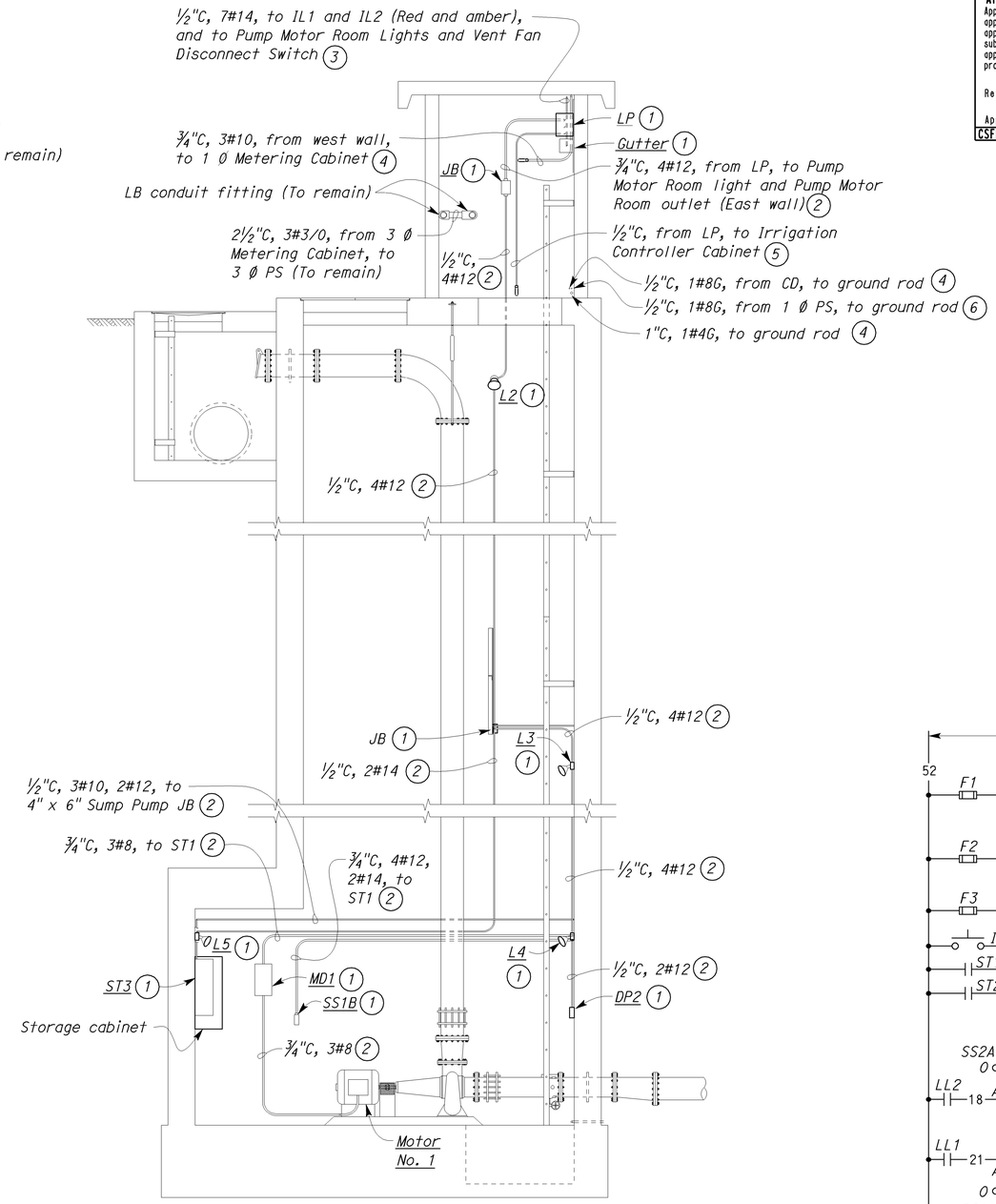

(D) SECTION
SCALE 3/8"= 1'-0"

Notes:

(1) Remove.

(2) Remove conductors and conduit.

(3) Remove conductors and portion of the conduit from gutter. Portion of conduit through the wall and roof to remain. Remove conductors and conduit from IL2 to Pump Motor Room Lights and Vent Fan Disconnect Switch, located on exterior of west wall.

(4) Remove conductors and conduit from the connection closest to the wall. Portion of conduit in the wall to remain. Install plug at the end of conduit.

(5) Disconnect conductors from Panel LP. Pull back conductors thru LB condulet. Remove portion of conduit, from LB condulet to LP.

(6) Remove conductors and conduit from the connection closest to wall. Plug the conduit on both ends.

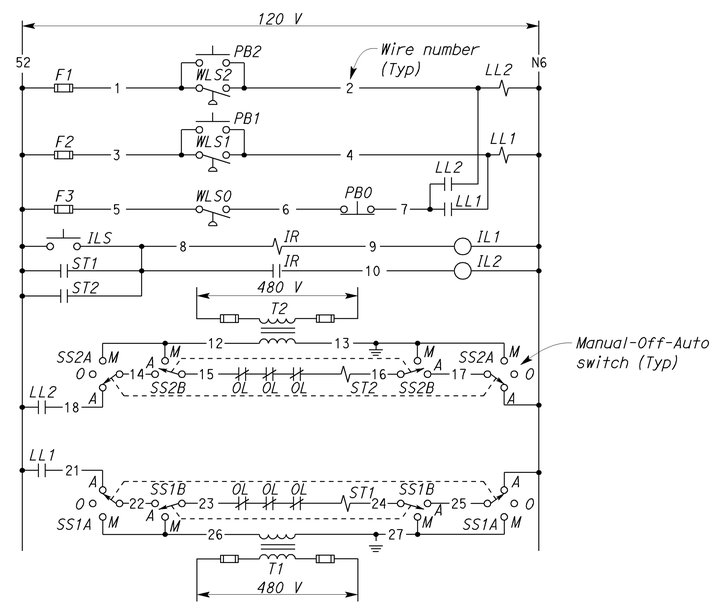

CONTROL SCHEMATIC

THIS DRAWING ACCURATE FOR ELECTRICAL WORK ONLY.

	BY	CHECKED
DESIGN	Baldev S. Dehal	Tech Ngov
DETAILS	Kathi Andreasen	Baldev S. Dehal
QUANTITIES	Baldev S. Dehal	Tech Ngov

STATE OF CALIFORNIA
DEPARTMENT OF TRANSPORTATION

DIVISION OF ENGINEERING SERVICES
ELECTRICAL-MECHANICAL-WATER AND WASTEWATER DESIGN

BRIDGE NO. 57-725W
POST MILE

PUMPING PLANT REHABILITATION

E STREET PUMPING PLANT (LOCATION 1)

EXISTING CONTROL ROOM AND PUMP MOTOR ROOM DETAILS NO. 2

SHEET **EE1-3**

TAEMWW Imperial Rev. 7/10

ORIGINAL SCALE IN INCHES FOR REDUCED PLANS 0 1 2 3

UNIT 3597
PROJECT NUMBER & PHASE 11000004061
EA 297101

DISREGARD PRINTS BEARING EARLIER REVISION DATES →

REVISION DATES (PRELIMINARY STAGE ONLY) 5/26/11 7/15/11 8/29/11 9/23/11 9/13/11 10/28/11 12/19/11 SHEET OF

18-SEP-2012 15:41
ee1_03.dgn

DIST.	COUNTY	ROUTE	POST MILES TOTAL PROJECT	SHEET NO.	TOTAL SHEETS
11	SD	5,8	Var	13	76

REGISTERED ELECTRICAL ENGINEER — 08-28-12 DATE

REGISTERED PROFESSIONAL ENGINEER MARK CHEAP No. E 15795 Exp. 12-31-12 ELEC STATE OF CALIFORNIA

09-24-12
PLANS APPROVAL DATE

The State of California or its officers or agents shall not be responsible for the accuracy or completeness of electronic copies of this plan sheet.

General Notes:

A. Cut all conduits going through Control Room floor flush with top and botttom of the floor. Fill with mortar.

B. In Modified Elevation, all existing work and equipment is shown in lightweight or dropout lines. New work and equipment is shown in bolder, heavier lines.

Notes:

(1) Remove.

(2) Remove conductors and conduit.

(3) Remove conductors and portion of the conduit. Portion of conduit through the wall and roof to remain. Remove conductors and conduit from IL2 to Pump Motor Room Lights and Vent Fan Disconnect Switch, located on exterior of west wall.

(4) Remove conductors and conduit from the connection closest to the wall. Portion of conduit in the wall to remain.

(5) 1 Ø Metering Cabinet and 3 Ø Metering Cabinet (Not shown for clarity) to remain. For details, see sheet EE1-13.

(6) Remove conductor and conduit from the connection closest to wall. Plug the conduit on both ends.

Notes (Continued):

(7) Disconnect conductors from Panel LP. Pull back conductors through LB condulet. Remove portion of conduit from LB condulet to LP.

(8) Install 1#2G, from existing 3 Ø Power Switch. Provide grounding hub and clamp for connecting to existing ground rod.

(9) Install 1#8G, from LT. Provide grounding hub and clamp for connecting to existing ground rod.

(10) Install power terminal blocks inside gutter in lieu of splices.

(11) After conduit installation, fill the hole cavity with silicone epoxy sealant.

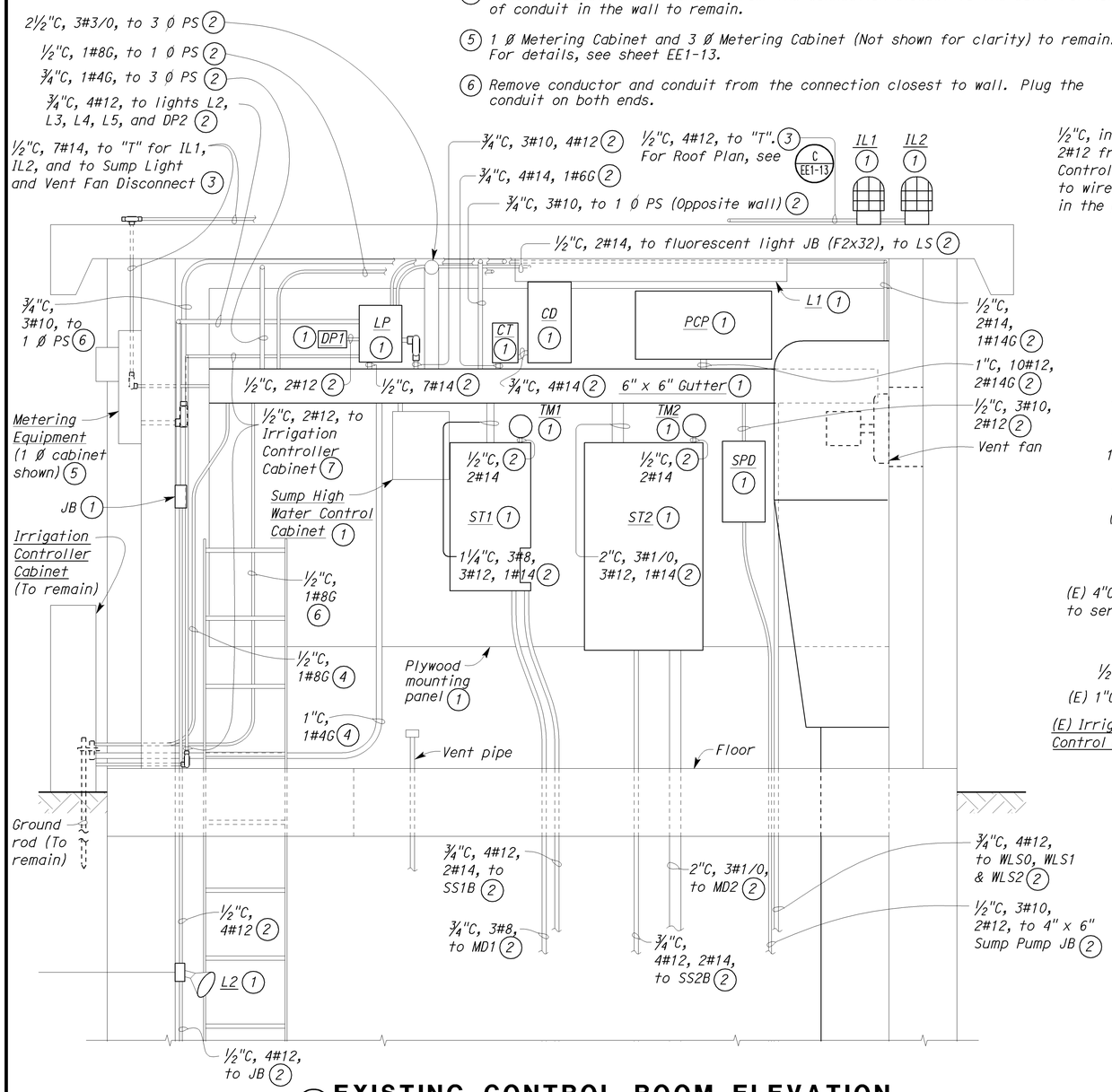

(A) EXISTING CONTROL ROOM ELEVATION

SCALE 1" = 1'-0"

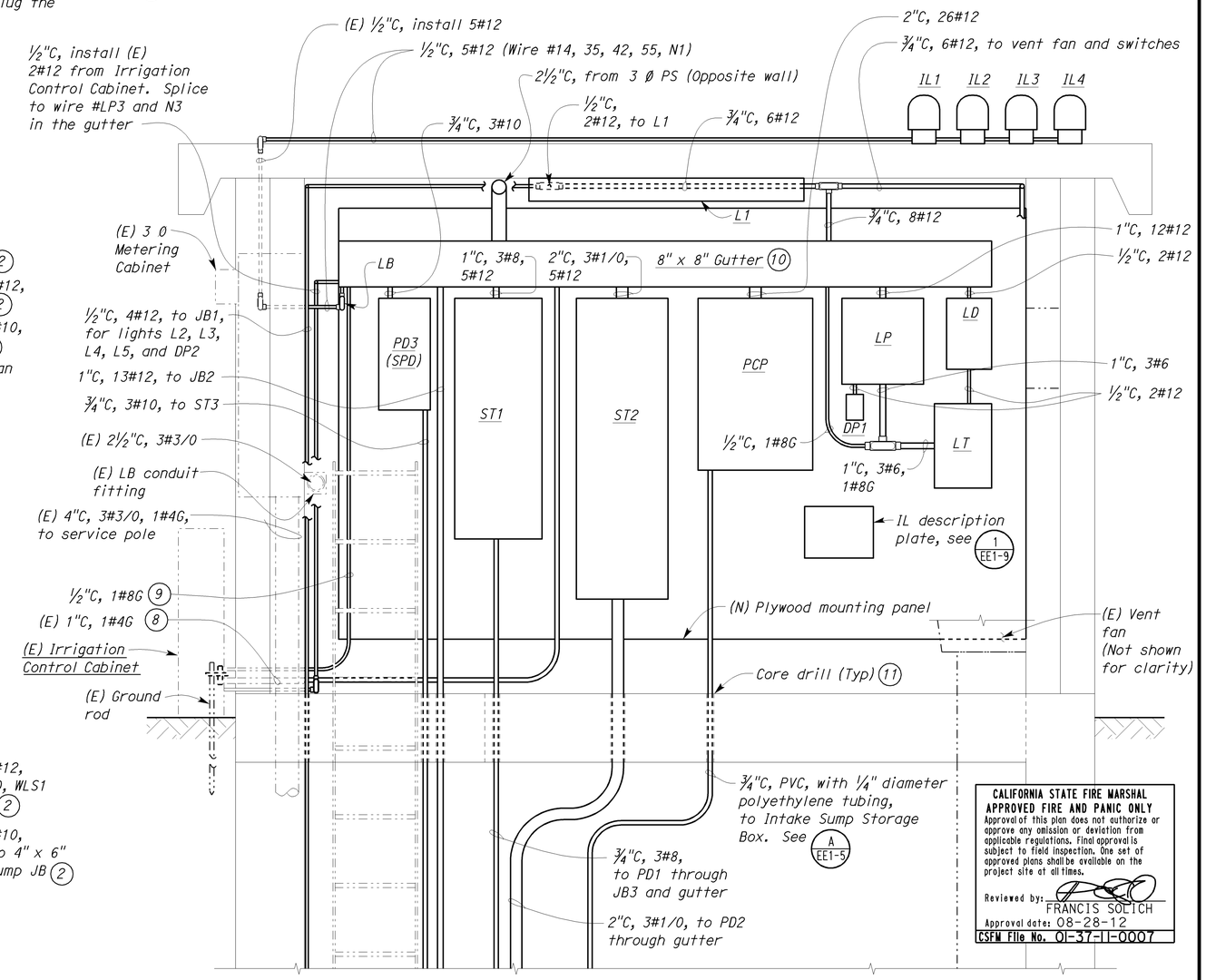

CALIFORNIA STATE FIRE MARSHAL
APPROVED FIRE AND PANIC ONLY
Approval of this plan does not authorize or approve any omission or deviation from applicable regulations. Final approval is subject to field inspection. One set of approved plans shall be available on the project site at all times.
Reviewed by: FRANCIS SOLICH
Approval date: 08-28-12
CSFM File No. 01-37-11-0007

(B) MODIFIED CONTROL ROOM ELEVATION

SCALE 1" = 1'-0"

THIS DRAWING ACCURATE FOR ELECTRICAL WORK ONLY.

	BY	CHECKED
DESIGN	Baldev S. Dehal	Tech Ngov
DETAILS	Kathi Andreasen	Baldev S. Dehal
QUANTITIES	Baldev S. Dehal	Tech Ngov

STATE OF CALIFORNIA
DEPARTMENT OF TRANSPORTATION

DIVISION OF ENGINEERING SERVICES
ELECTRICAL-MECHANICAL-WATER AND WASTEWATER DESIGN

BRIDGE NO. 57-725W
POST MILE

PUMPING PLANT REHABILITATION
E STREET PUMPING PLANT (LOCATION 1)
EXISTING AND MODIFIED CONTROL ROOM ELEVATION

SHEET EE1-4

TAEMWW Imperial Rev. 7/10

ORIGINAL SCALE IN INCHES FOR REDUCED PLANS 0 1 2 3

UNIT 3597
PROJECT NUMBER & PHASE 11000004061
EA 297101

DISREGARD PRINTS BEARING EARLIER REVISION DATES
REVISION DATES (PRELIMINARY STAGE ONLY) 3/23/11 7/14/11 8/3/11 8/22/11 8/23/11 8/25/11 10/19/11 12/19/11 8/28/12
SHEET OF

28-AUG-2012 15:19
ee1_04.dgn

DIST.	COUNTY	ROUTE	POST MILES TOTAL PROJECT	SHEET NO.	TOTAL SHEETS
11	SD	5,8	Var	14	76

REGISTERED ELECTRICAL ENGINEER — 08-28-12 DATE

REGISTERED PROFESSIONAL ENGINEER — MARK CHEAP — No. E 15795 — Exp. 12-31-12 — ELEC — STATE OF CALIFORNIA

09-24-12
PLANS APPROVAL DATE

The State of California or its officers or agents shall not be responsible for the accuracy or completeness of electronic copies of this plan sheet.

CALIFORNIA STATE FIRE MARSHAL APPROVED FIRE AND PANIC ONLY
Approval of this plan does not authorize or approve any omission or deviation from applicable regulations. Final approval is subject to field inspection. One set of approved plans shall be available on the project site at all times.
Reviewed by: FRANCIS SOLICH
Approval date: 08-28-12
CSFM File No. 01-37-11-0007

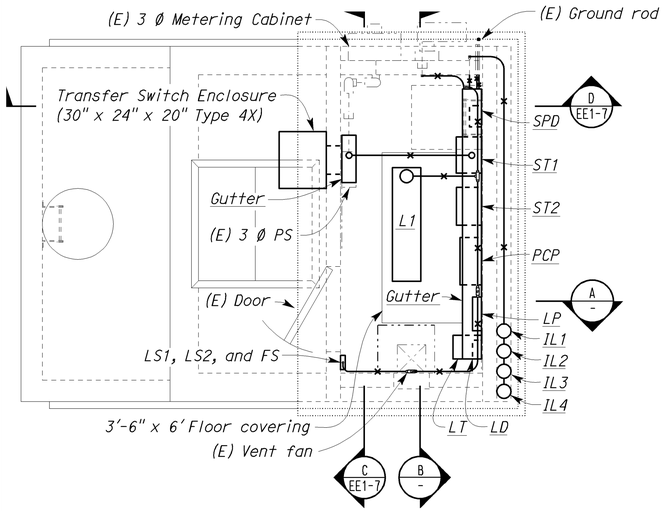

CONTROL ROOM PLAN

SCALE 3/8"= 1'-0"

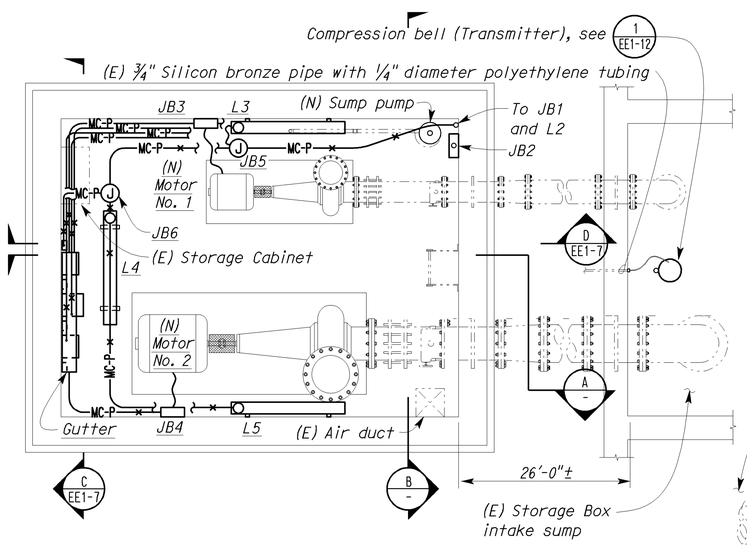

PUMP MOTOR ROOM PLAN

SCALE 3/8"= 1'-0"

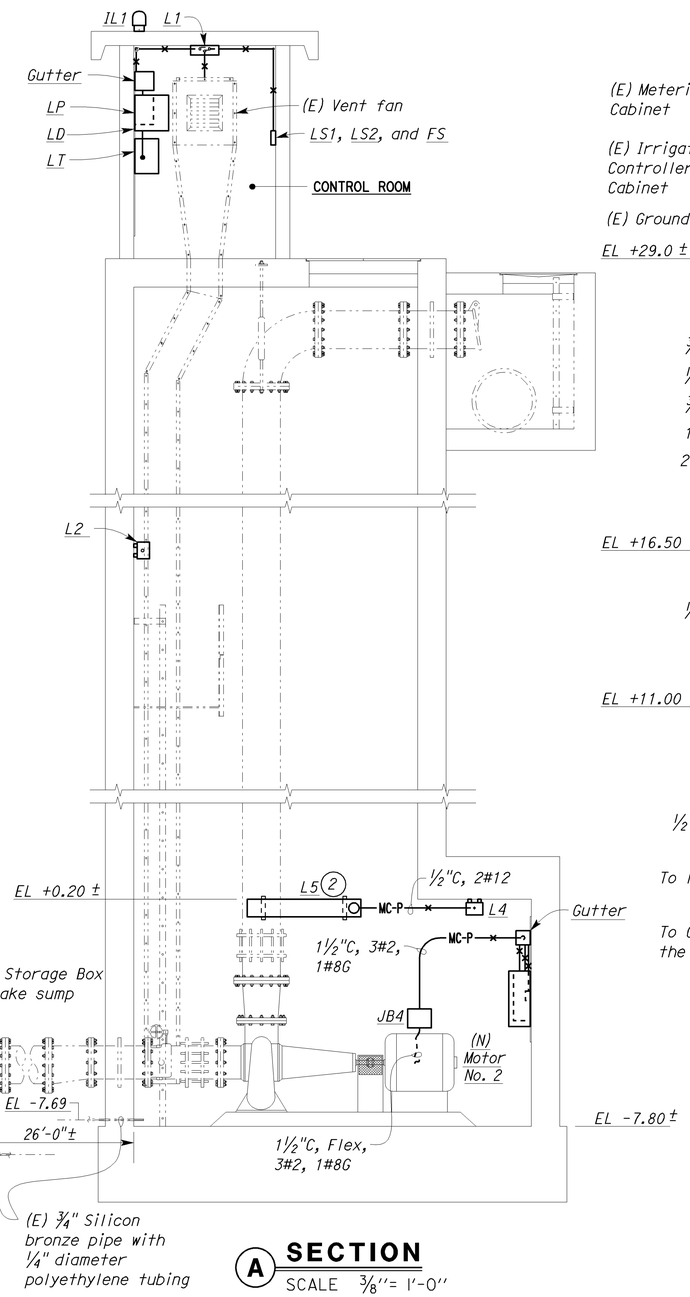

A SECTION

SCALE 3/8"= 1'-0"

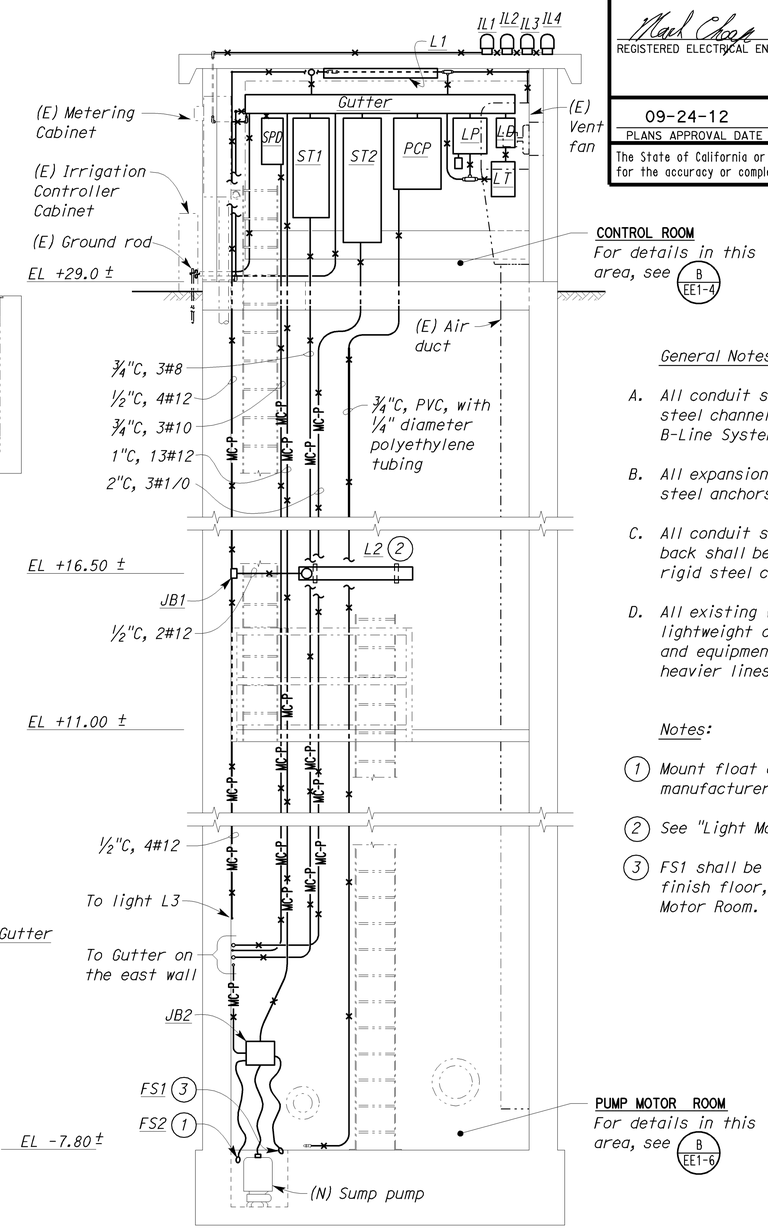

B SECTION

SCALE 3/8"= 1'-0"

General Notes:

A. All conduit support shall be 316 stainless steel channel, Unistrut No. P4000, B-Line System No. B54, or equal.

B. All expansion anchors shall be stainless steel anchors.

C. All conduit strap, one-hole clamp, and clamp back shall be PVC coated for PVC coated rigid steel conduit.

D. All existing work and equipment is shown in lightweight or dropout lines. New work and equipment is shown in bolder, heavier lines.

Notes:

1. Mount float as recommended by the float manufacturer.
2. See "Light Mounting Detail", 1 EE1-7.
3. FS1 shall be energized at +1/2" above finish floor, to prevent flooding of Pump Motor Room.

THIS DRAWING ACCURATE FOR ELECTRICAL WORK ONLY.

	BY	CHECKED
DESIGN	Baldev S. Dehal	Tech Ngov
DETAILS	Kathi Andreasen	Baldev S. Dehal
QUANTITIES	Baldev S. Dehal	Tech Ngov

STATE OF CALIFORNIA
DEPARTMENT OF TRANSPORTATION

DIVISION OF ENGINEERING SERVICES
ELECTRICAL-MECHANICAL-WATER AND WASTEWATER DESIGN

BRIDGE NO. 57-725W
POST MILE

PUMPING PLANT REHABILITATION
E STREET PUMPING PLANT (LOCATION 1)
MODIFIED CONTROL ROOM AND PUMP MOTOR ROOM DETAILS NO. 1

SHEET **EE1-5**

TAEMWW Imperial Rev. 7/10

ORIGINAL SCALE IN INCHES FOR REDUCED PLANS 0 1 2 3

UNIT 3597
PROJECT NUMBER & PHASE 11000004061
EA 297101

DISREGARD PRINTS BEARING EARLIER REVISION DATES
REVISION DATES (PRELIMINARY STAGE ONLY) 7/14/11 8/26/11 8/25/11 9/13/11 10/12/11 12/12/11 8/28/12
SHEET OF

28-AUG-2012 13:19
ee1_05.dgn

Notes:

1. Remove.
2. Remove conductors and conduit.
3. Remove sump pump and 3 conductor "SO" cord.
4. Remove water level switch WLSO, WLS1, WLS2, flexible conduits and conductors. For ¾" pipe modification, see 2/EE1-13.

CALIFORNIA STATE FIRE MARSHAL
APPROVED FIRE AND PANIC ONLY
Approval of this plan does not authorize or approve any omission or deviation from applicable regulations. Final approval is subject to field inspection. One set of approved plans shall be available on the project site at all times.
Reviewed by: FRANCIS SOLICH
Approval date: 08-28-12
CSFM File No. 01-37-11-0007

DIST.	COUNTY	ROUTE	POST MILES TOTAL PROJECT	SHEET NO.	TOTAL SHEETS
11	SD	5,8	Var	15	76

REGISTERED ELECTRICAL ENGINEER — 08-28-12 DATE

REGISTERED PROFESSIONAL ENGINEER — MARK CHEAP — No. E 15795 — Exp. 12-31-12 — ELEC — STATE OF CALIFORNIA

09-24-12
PLANS APPROVAL DATE

The State of California or its officers or agents shall not be responsible for the accuracy or completeness of electronic copies of this plan sheet.

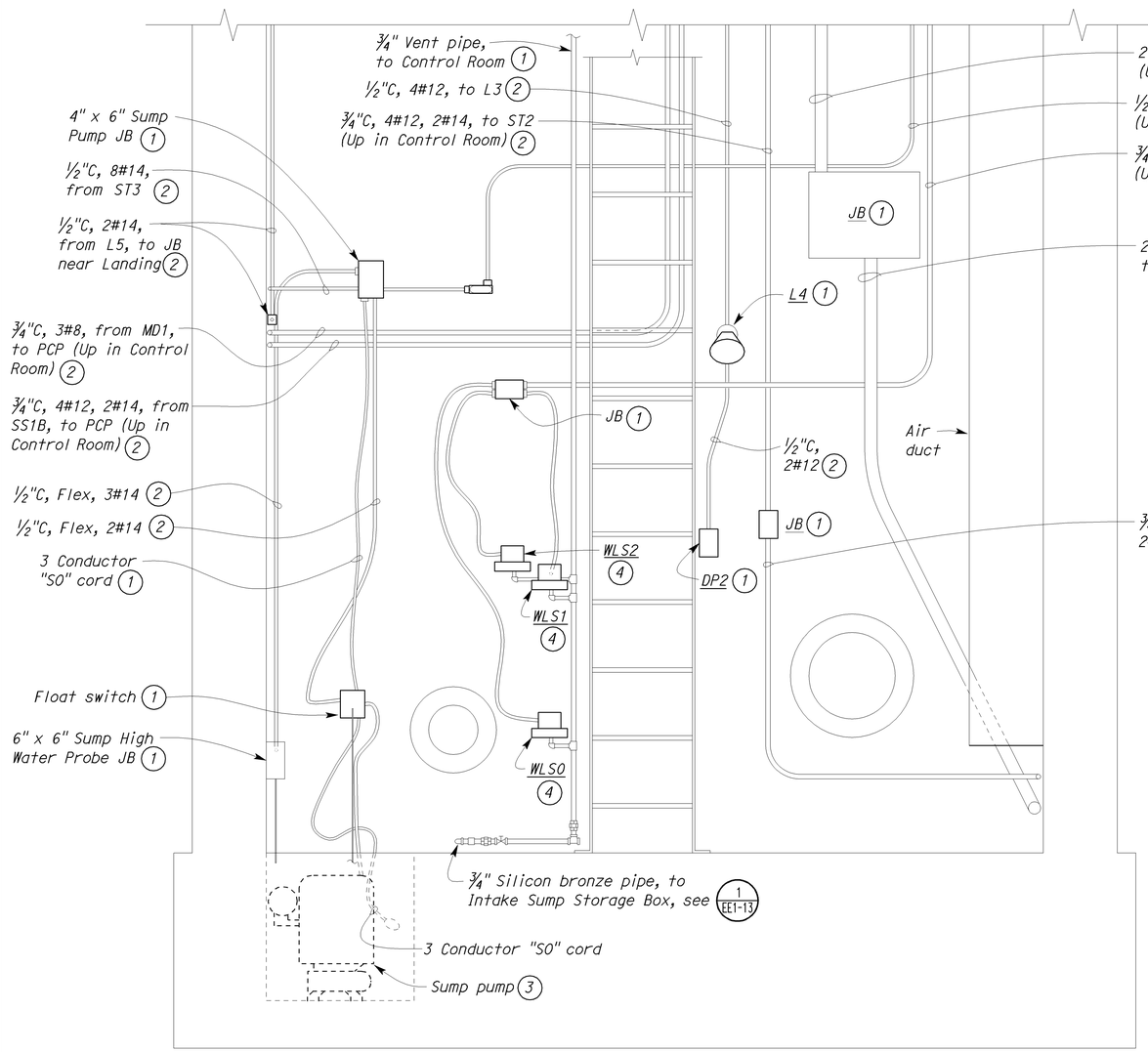

(A) EXISTING PUMP MOTOR ROOM ELEVATION

SCALE 1" = 1'-0"

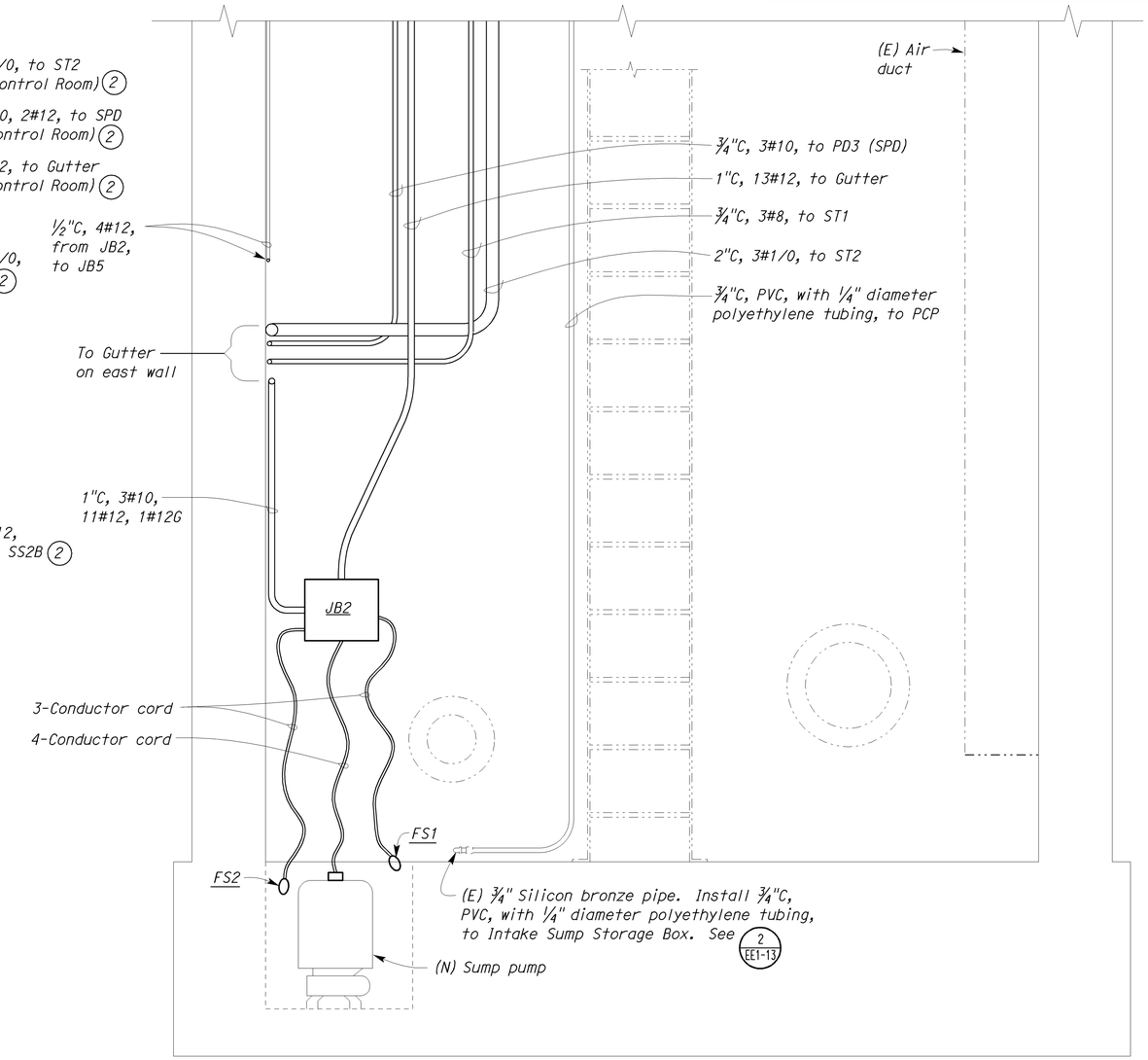

(B) MODIFIED PUMP MOTOR ROOM ELEVATION

SCALE 1" = 1'-0"

THIS DRAWING ACCURATE FOR ELECTRICAL WORK ONLY.

	BY	CHECKED
DESIGN	Baldev S. Dehal	Tech Ngov
DETAILS	Kathi Andreasen	Baldev S. Dehal
QUANTITIES	Baldev S. Dehal	Tech Ngov

STATE OF CALIFORNIA
DEPARTMENT OF TRANSPORTATION

DIVISION OF ENGINEERING SERVICES
ELECTRICAL-MECHANICAL-WATER AND WASTEWATER DESIGN

BRIDGE NO. 57-725W
POST MILE

PUMPING PLANT REHABILITATION
E STREET PUMPING PLANT (LOCATION 1)
EXISTING AND MODIFIED PUMP MOTOR ROOM ELEVATION

SHEET EE1-6

TAEMWW Imperial Rev. 7/10

ORIGINAL SCALE IN INCHES FOR REDUCED PLANS 0 1 2 3

UNIT 3597
PROJECT NUMBER & PHASE 11000004061
EA 297101

DISREGARD PRINTS BEARING EARLIER REVISION DATES
REVISION DATES (PRELIMINARY STAGE ONLY) 7/15/11 8/28/11 10/19/11 12/19/11 8/28/12
SHEET OF

28-AUG-2012 15:19
ee1_06.dgn

DIST.	COUNTY	ROUTE	POST MILES TOTAL PROJECT	SHEET NO.	TOTAL SHEETS
11	SD	5,8	Var	16	76

REGISTERED ELECTRICAL ENGINEER — 08-28-12 DATE

REGISTERED PROFESSIONAL ENGINEER — MARK CHEAP — No. E 15795 — Exp. 12-31-12 — ELEC — STATE OF CALIFORNIA

09-24-12
PLANS APPROVAL DATE

The State of California or its officers or agents shall not be responsible for the accuracy or completeness of electronic copies of this plan sheet.

CALIFORNIA STATE FIRE MARSHAL APPROVED FIRE AND PANIC ONLY
Approval of this plan does not authorize or approve any omission or deviation from applicable regulations. Final approval is subject to field inspection. One set of approved plans shall be available on the project site at all times.
Reviewed by: FRANCIS SOLICH
Approval date: 08-28-12
CSFM File No. 01-37-11-0007

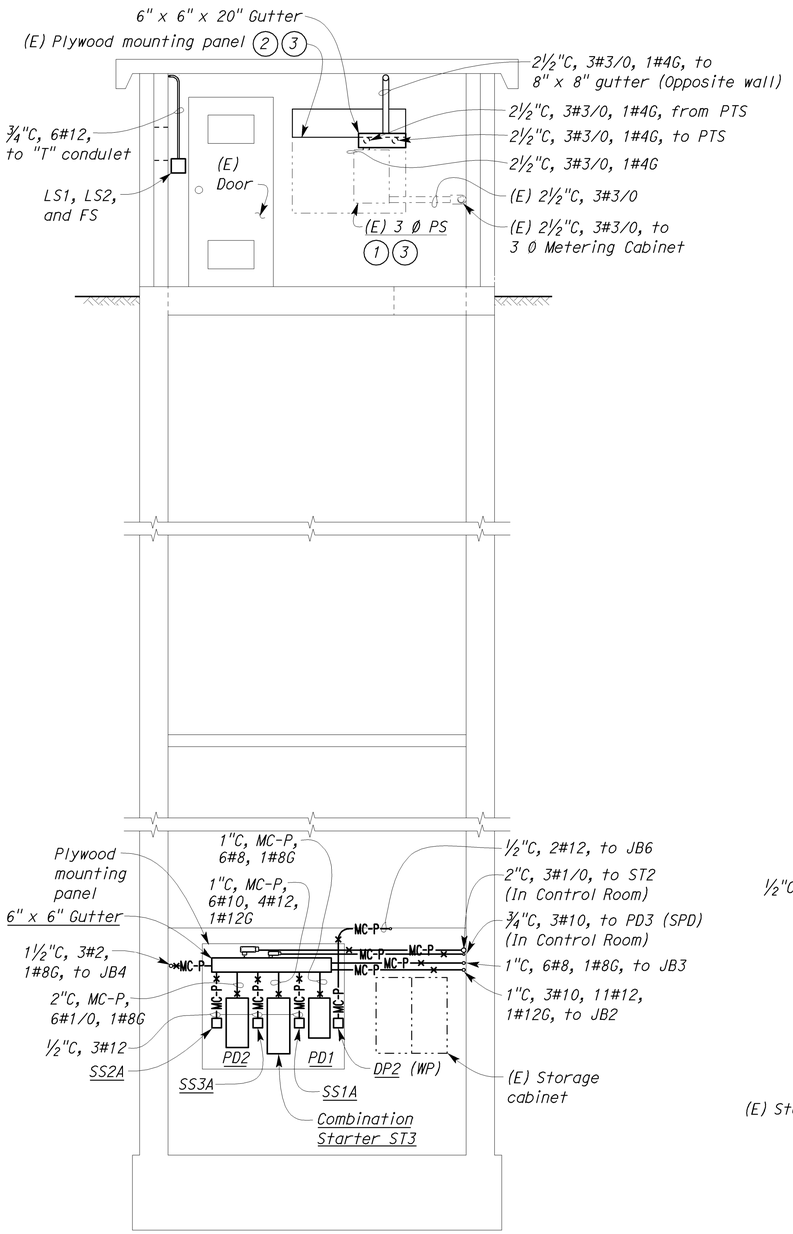

(C) SECTION
SCALE 3/8"= 1'-0"

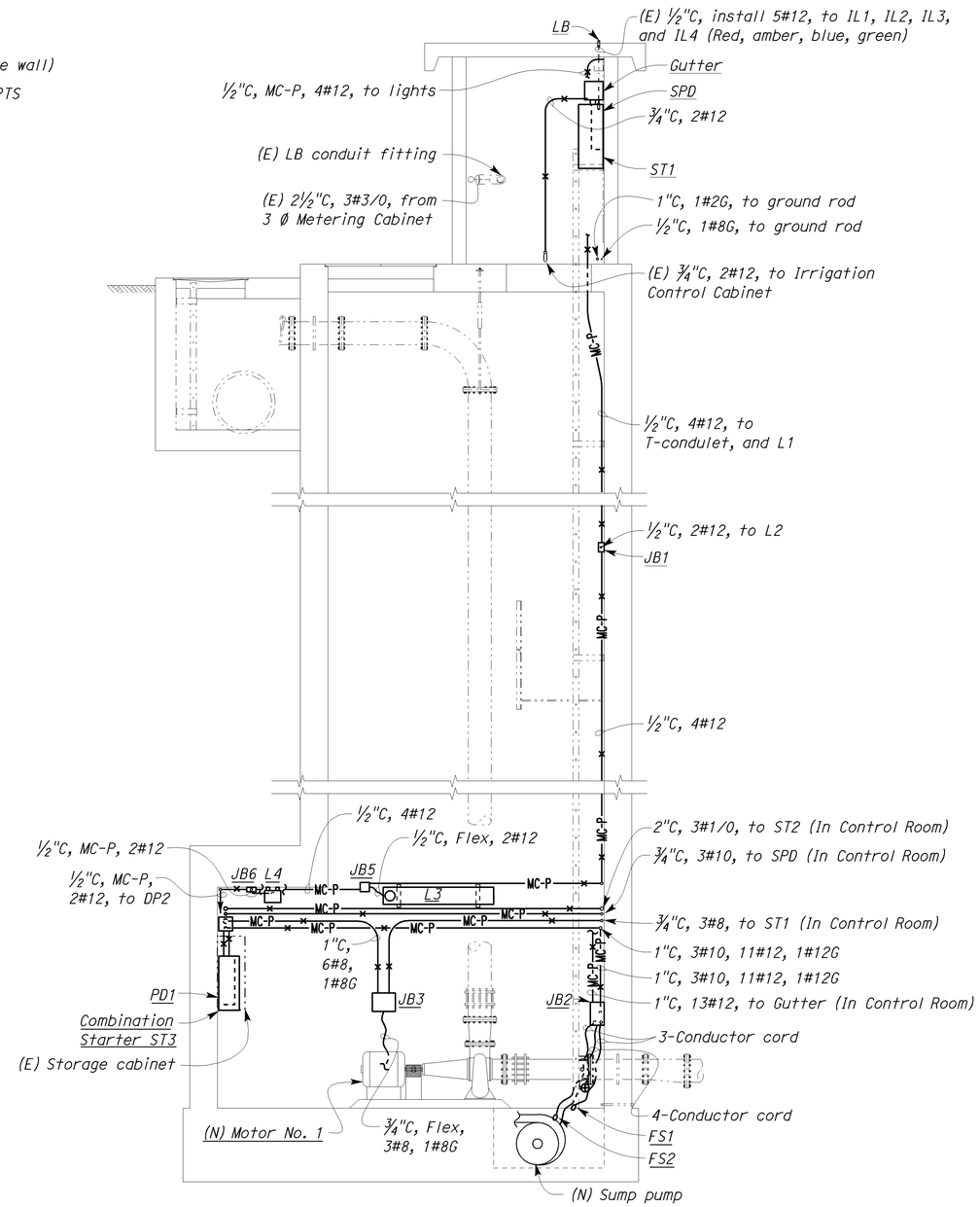

(D) SECTION
SCALE 3/8"= 1'-0"

General Notes:

A. All conduit support shall be 316 stainless steel channel, Unistrut No. P4000, B-Line System No. B54, or equal.

B. All expansion anchors shall be stainless steel anchors.

C. All conduit strap, one-hole clamp, and clamp back shall be PVC coated for PVC coated rigid steel conduit.

D. All existing work and equipment is shown in lightweight or dropout lines. New work and equipment is shown in bolder, heavier lines.

Notes:

(1) Plug all unused openings with two-piece steel seals.

(2) Fill all holes with caulking.

(3) Clean and paint with semi-gloss grey color paint.

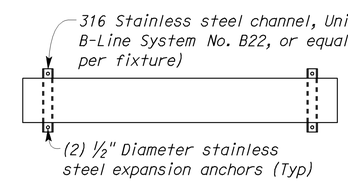

(1) LIGHT MOUNTING DETAIL
NO SCALE

THIS DRAWING ACCURATE FOR ELECTRICAL WORK ONLY.

	BY	CHECKED
DESIGN	Baldev S. Dehal	Tech Ngov
DETAILS	Kathi Andreasen	Baldev S. Dehal
QUANTITIES	Baldev S. Dehal	Tech Ngov

STATE OF CALIFORNIA DEPARTMENT OF TRANSPORTATION

DIVISION OF ENGINEERING SERVICES
ELECTRICAL-MECHANICAL-WATER AND WASTEWATER DESIGN

BRIDGE NO. 57-725W
POST MILE

PUMPING PLANT REHABILITATION
E STREET PUMPING PLANT (LOCATION 1)
MODIFIED CONTROL ROOM AND PUMP MOTOR ROOM DETAILS NO. 2

SHEET **EE1-7**

TAEMWW Imperial Rev. 7/10

ORIGINAL SCALE IN INCHES FOR REDUCED PLANS 0 1 2 3

UNIT 3597
PROJECT NUMBER & PHASE 11000004061
EA 297101

DISREGARD PRINTS BEARING EARLIER REVISION DATES →
REVISION DATES (PRELIMINARY STAGE ONLY) 7/15/11 8/22/11 8/23/11 8/25/11 9/13/11 10/18/11 12/19/11 8/28/12 SHEET OF

28-AUG-2012 15:19
ee1_07.dgn

CALIFORNIA STATE FIRE MARSHAL
APPROVED FIRE AND PANIC ONLY
Approval of this plan does not authorize or approve any omission or deviation from applicable regulations. Final approval is subject to field inspection. One set of approved plans shall be available on the project site at all times.
Reviewed by: FRANCIS SOLICH
Approval date: 08-28-12
CSFM File No. 01-37-11-0007

DIST.	COUNTY	ROUTE	POST MILES TOTAL PROJECT	SHEET NO.	TOTAL SHEETS
11	SD	5,8	Var	17	76

REGISTERED ELECTRICAL ENGINEER — 08-28-12 DATE

REGISTERED PROFESSIONAL ENGINEER — MARK CHEAP — No. E 15795 — Exp. 12-31-12 — ELEC — STATE OF CALIFORNIA

09-24-12
PLANS APPROVAL DATE

The State of California or its officers or agents shall not be responsible for the accuracy or completeness of electronic copies of this plan sheet.

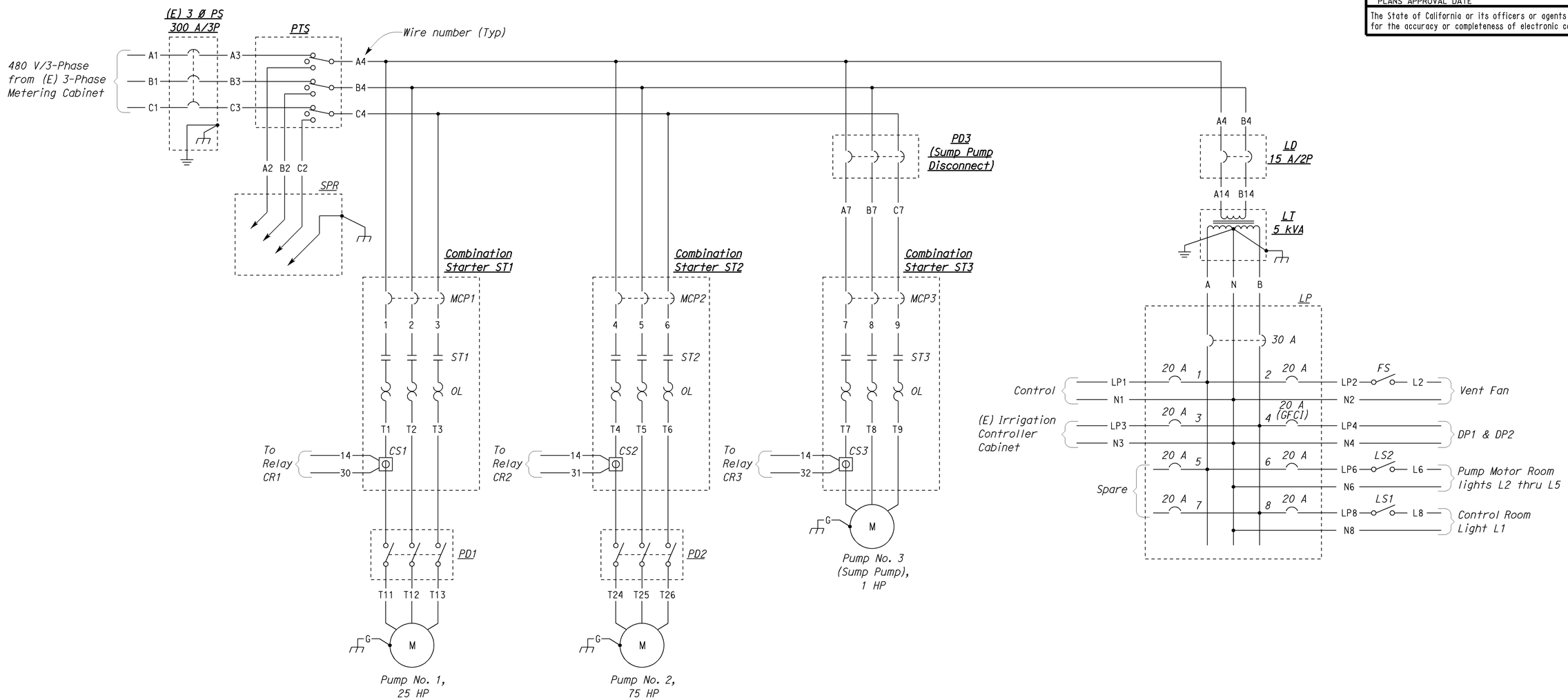

POWER SCHEMATIC DIAGRAM

DESIGN	BY Baldev S. Dehal	CHECKED Tech Ngov	
DETAILS	BY Kathi Andreasen	CHECKED Baldev S. Dehal	
QUANTITIES	BY Baldev S. Dehal	CHECKED Tech Ngov	

STATE OF CALIFORNIA
DEPARTMENT OF TRANSPORTATION

DIVISION OF ENGINEERING SERVICES
ELECTRICAL-MECHANICAL-WATER AND WASTEWATER DESIGN

BRIDGE NO. 57-725W
POST MILE

PUMPING PLANT REHABILITATION
E STREET PUMPING PLANT (LOCATION 1)
POWER SCHEMATIC DIAGRAM

SHEET EE1-8

TAEMWW Imperial Rev. 7/10

ORIGINAL SCALE IN INCHES FOR REDUCED PLANS 0 1 2 3

UNIT 3597
PROJECT NUMBER & PHASE 11000004061
EA 297101

DISREGARD PRINTS BEARING EARLIER REVISION DATES
REVISION DATES (PRELIMINARY STAGE ONLY) 7/8/11 8/29/11 8/29/11 10/19/11 12/12/11 8/28/12
SHEET OF

28-AUG-2012 15:20
ee1_08.dgn

DIST.	COUNTY	ROUTE	POST MILES TOTAL PROJECT	SHEET NO.	TOTAL SHEETS
11	SD	5,8	Var	18	76

REGISTERED ELECTRICAL ENGINEER — 08-28-12 DATE

REGISTERED PROFESSIONAL ENGINEER MARK CHEAP No. E 15795 Exp. 12-31-12 ELEC STATE OF CALIFORNIA

09-24-12
PLANS APPROVAL DATE

The State of California or its officers or agents shall not be responsible for the accuracy or completeness of electronic copies of this plan sheet.

CALIFORNIA STATE FIRE MARSHAL APPROVED FIRE AND PANIC ONLY
Approval of this plan does not authorize or approve any omission or deviation from applicable regulations. Final approval is subject to field inspection. One set of approved plans shall be available on the project site at all times.
Reviewed by: FRANCIS SOLICH
Approval date: 08-28-12
CSFM File No. 01-37-11-0007

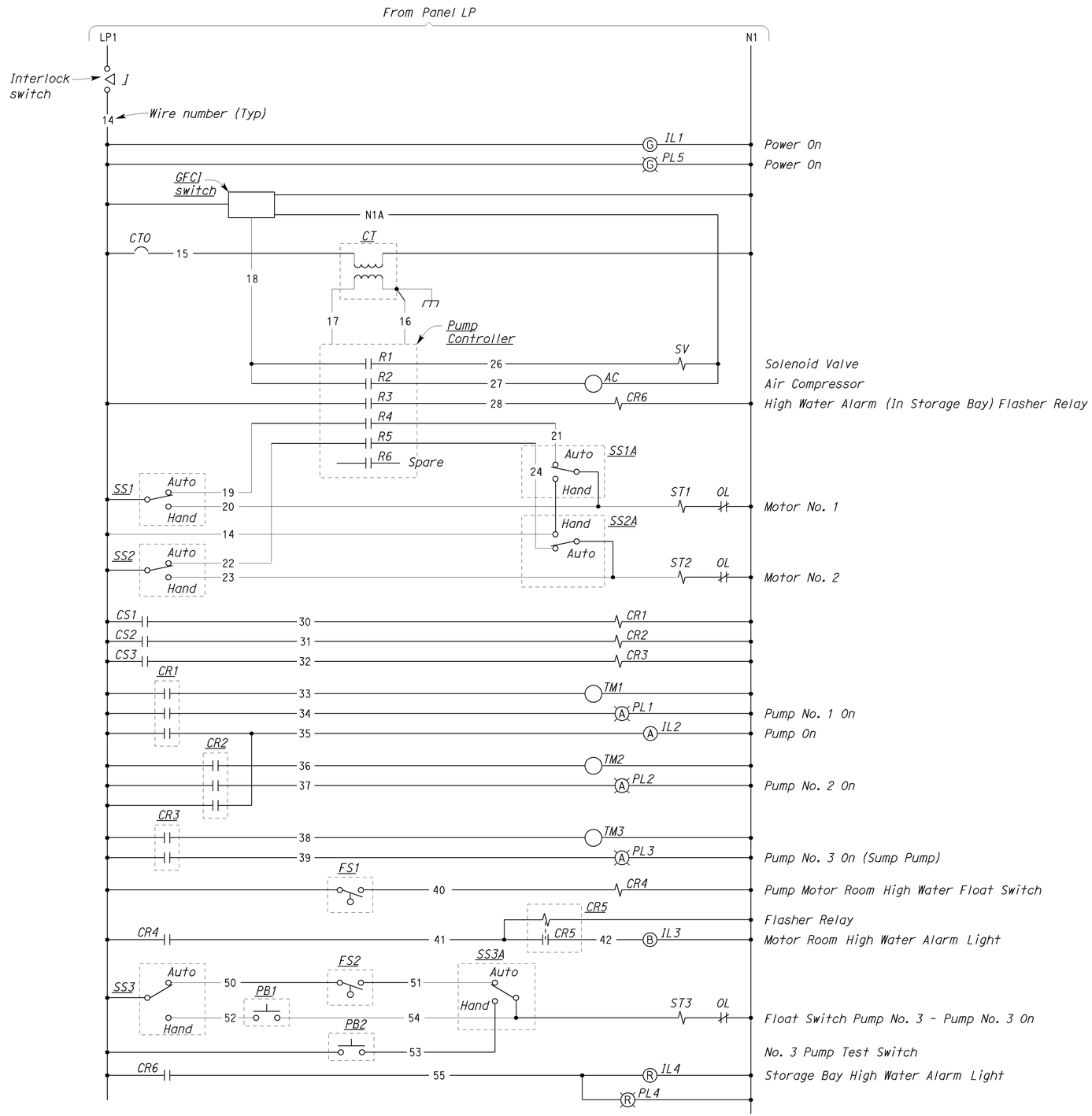

INDICATING LIGHT	DESCRIPTION
GREEN LIGHT	POWER ON
AMBER LIGHT	PUMP ON
BLUE LIGHT	MOTOR ROOM HIGH WATER ALARM
RED LIGHT	STORAGE BOX HIGH WATER ALARM

1 INDICATING LIGHT DESCRIPTION PLATE

DESIGN	BY Baldev S. Dehal	CHECKED Tech Ngov	
DETAILS	BY Kathi Andreasen	CHECKED Baldev S. Dehal	
QUANTITIES	BY Baldev S. Dehal	CHECKED Tech Ngov	

STATE OF CALIFORNIA
DEPARTMENT OF TRANSPORTATION

DIVISION OF ENGINEERING SERVICES
ELECTRICAL-MECHANICAL-WATER AND WASTEWATER DESIGN

BRIDGE NO. 57-725W
POST MILE

PUMPING PLANT REHABILITATION
E STREET PUMPING PLANT (LOCATION 1)
CONTROL SCHEMATIC DIAGRAM

SHEET EE1-9

TAEMWW Imperial Rev. 7/10

ORIGINAL SCALE IN INCHES FOR REDUCED PLANS 0 1 2 3

UNIT 3597
PROJECT NUMBER & PHASE 11000004061
EA 297101

DISREGARD PRINTS BEARING EARLIER REVISION DATES
REVISION DATES (PRELIMINARY STAGE ONLY) 7/16/11 8/29/11 10/19/11 12/19/11 8/28/12
SHEET OF

28-AUG-2012 15:20
ee1_09.dgn

DIST.	COUNTY	ROUTE	POST MILES TOTAL PROJECT	SHEET NO.	TOTAL SHEETS
11	SD	5,8	Var	19	76

REGISTERED ELECTRICAL ENGINEER — 08-28-12 DATE

REGISTERED PROFESSIONAL ENGINEER — MARK CHEAP — No. E 15795 — Exp. 12-31-12 — ELEC — STATE OF CALIFORNIA

09-24-12
PLANS APPROVAL DATE

The State of California or its officers or agents shall not be responsible for the accuracy or completeness of electronic copies of this plan sheet.

CALIFORNIA STATE FIRE MARSHAL APPROVED FIRE AND PANIC ONLY
Approval of this plan does not authorize or approve any omission or deviation from applicable regulations. Final approval is subject to field inspection. One set of approved plans shall be available on the project site at all times.
Reviewed by: FRANCIS SOLICH
Approval date: 08-28-12
CSFM File No. 01-37-11-0007

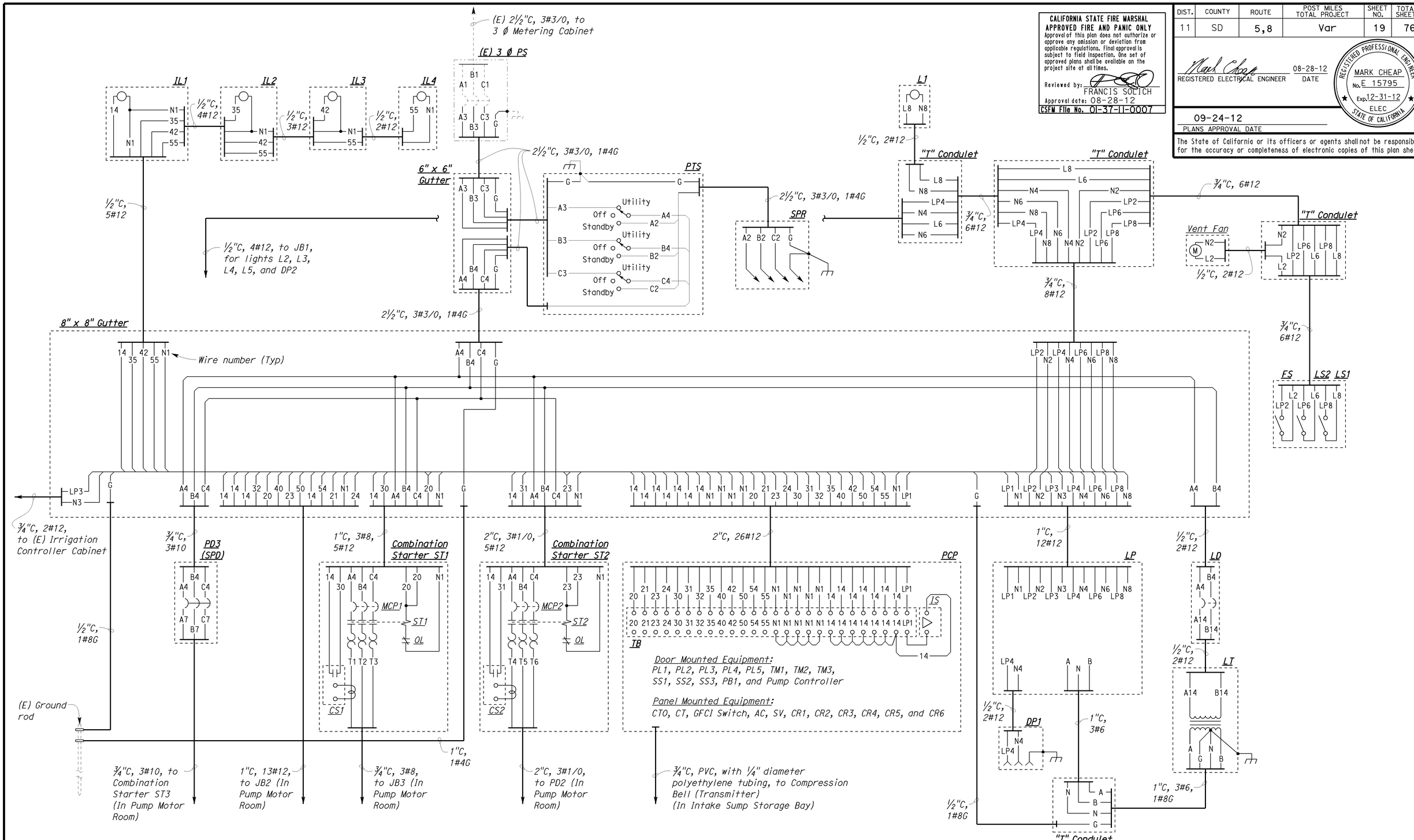

DESIGN	BY Baldev S. Dehal	CHECKED Tech Ngov	
DETAILS	BY Kathi Andreasen	CHECKED Baldev S. Dehal	
QUANTITIES	BY Baldev S. Dehal	CHECKED Tech Ngov	

STATE OF CALIFORNIA
DEPARTMENT OF TRANSPORTATION

DIVISION OF ENGINEERING SERVICES
ELECTRICAL-MECHANICAL-WATER AND WASTEWATER DESIGN

BRIDGE NO. 57-725W
POST MILE

PUMPING PLANT REHABILITATION

E STREET PUMPING PLANT (LOCATION 1)

CONTROL ROOM WIRING DIAGRAM

SHEET EE1-10

TAEMWW Imperial Rev. 7/10

ORIGINAL SCALE IN INCHES FOR REDUCED PLANS 0 1 2 3

UNIT 3597
PROJECT NUMBER & PHASE 11000004061
EA 297101

DISREGARD PRINTS BEARING EARLIER REVISION DATES →

REVISION DATES (PRELIMINARY STAGE ONLY) 7/8/11 8/26/11 8/29/11 9/13/11 10/18/11 12/19/11 8/28/12 SHEET OF

28-AUG-2012 15:20

ee1_10.dgn

DIST.	COUNTY	ROUTE	POST MILES TOTAL PROJECT	SHEET NO.	TOTAL SHEETS
11	SD	5,8	Var	20	76

REGISTERED ELECTRICAL ENGINEER — 08-28-12 DATE

REGISTERED PROFESSIONAL ENGINEER — MARK CHEAP — No. E 15795 — Exp. 12-31-12 — ELEC — STATE OF CALIFORNIA

09-24-12
PLANS APPROVAL DATE

The State of California or its officers or agents shall not be responsible for the accuracy or completeness of electronic copies of this plan sheet.

CALIFORNIA STATE FIRE MARSHAL APPROVED FIRE AND PANIC ONLY
Approval of this plan does not authorize or approve any omission or deviation from applicable regulations. Final approval is subject to field inspection. One set of approved plans shall be available on the project site at all times.
Reviewed by: FRANCIS SOLICH
Approval date: 08-28-12
CSFM File No. 01-37-11-0007

For continuation, see sheet EE1-10

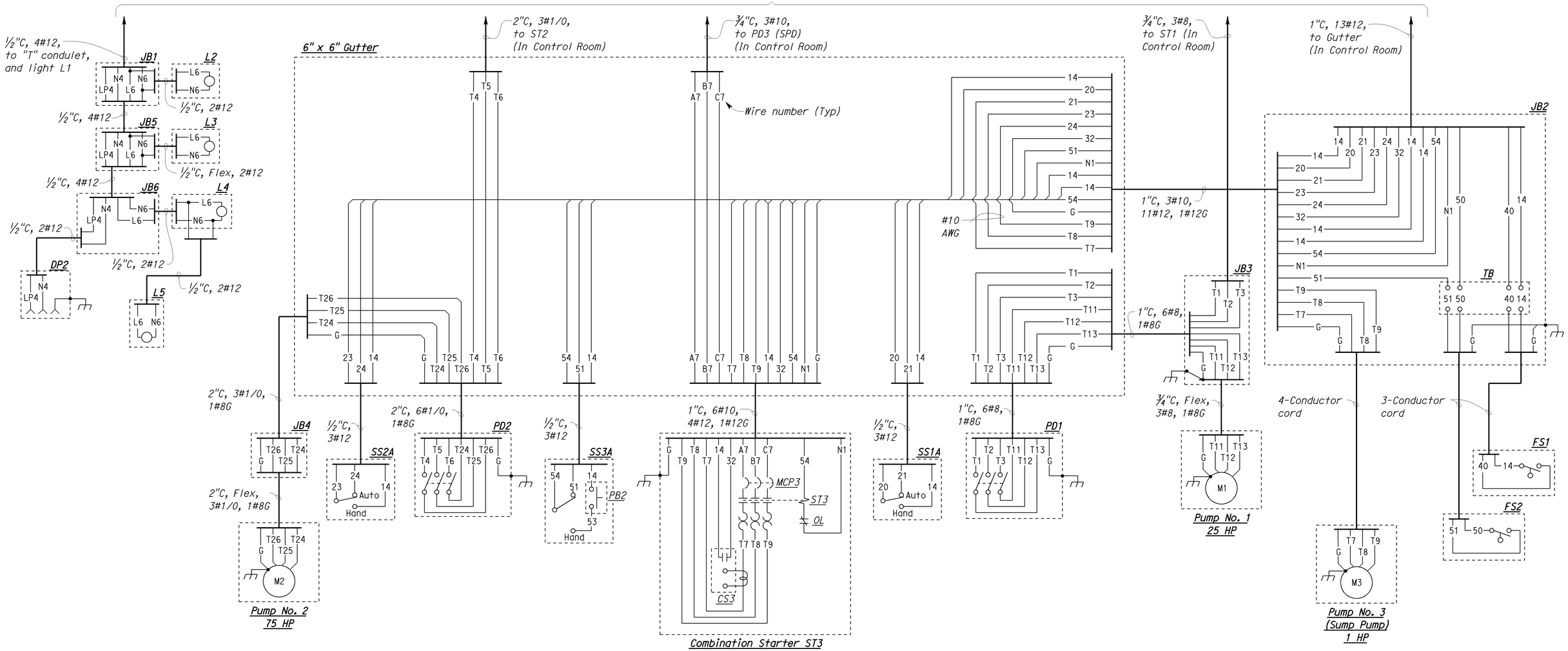

DESIGN	BY Baldev S. Dehal	CHECKED Tech Ngov	
DETAILS	BY Kathi Andreasen	CHECKED Baldev S. Dehal	
QUANTITIES	BY Baldev S. Dehal	CHECKED Tech Ngov	

STATE OF CALIFORNIA
DEPARTMENT OF TRANSPORTATION

DIVISION OF ENGINEERING SERVICES
ELECTRICAL-MECHANICAL-WATER AND WASTEWATER DESIGN

BRIDGE NO. 57-725W
POST MILE

PUMPING PLANT REHABILITATION
E STREET PUMPING PLANT (LOCATION 1)
PUMP ROOM WIRING DIAGRAM

SHEET **EE1-11**

TAEMWW Imperial Rev. 7/10

ORIGINAL SCALE IN INCHES FOR REDUCED PLANS 0 1 2 3

UNIT 3597
PROJECT NUMBER & PHASE 11000004061
EA 297101

DISREGARD PRINTS BEARING EARLIER REVISION DATES
REVISION DATES (PRELIMINARY STAGE ONLY) 7/16/11 8/29/11 10/19/11 12/19/11 8/28/12
SHEET OF

28-AUG-2012 15:20
ee1_11.dgn

DIST.	COUNTY	ROUTE	POST MILES TOTAL PROJECT	SHEET NO.	TOTAL SHEETS
11	SD	5,8	Var	21	76

REGISTERED ELECTRICAL ENGINEER — 08-28-12 DATE

REGISTERED PROFESSIONAL ENGINEER MARK CHEAP No. E 15795 Exp. 12-31-12 ELEC STATE OF CALIFORNIA

09-24-12
PLANS APPROVAL DATE

The State of California or its officers or agents shall not be responsible for the accuracy or completeness of electronic copies of this plan sheet.

CALIFORNIA STATE FIRE MARSHAL APPROVED FIRE AND PANIC ONLY
Approval of this plan does not authorize or approve any omission or deviation from applicable regulations. Final approval is subject to field inspection. One set of approved plans shall be available on the project site at all times.
Reviewed by: FRANCIS SOLICH
Approval date: 08-28-12
CSFM File No. 01-37-11-0007

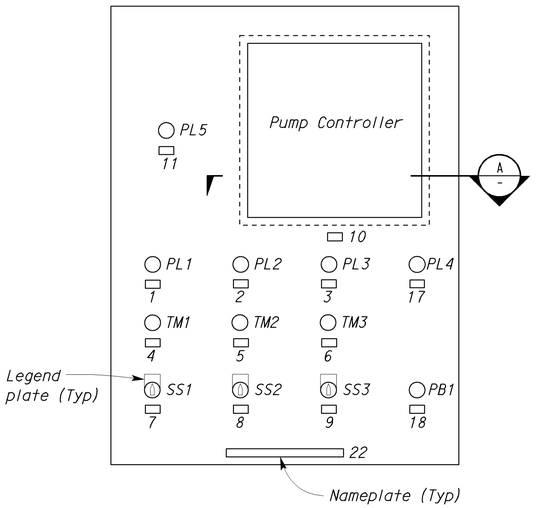

EXTERIOR DOOR
ELEVATION - PUMP CONTROL PANEL
NO SCALE

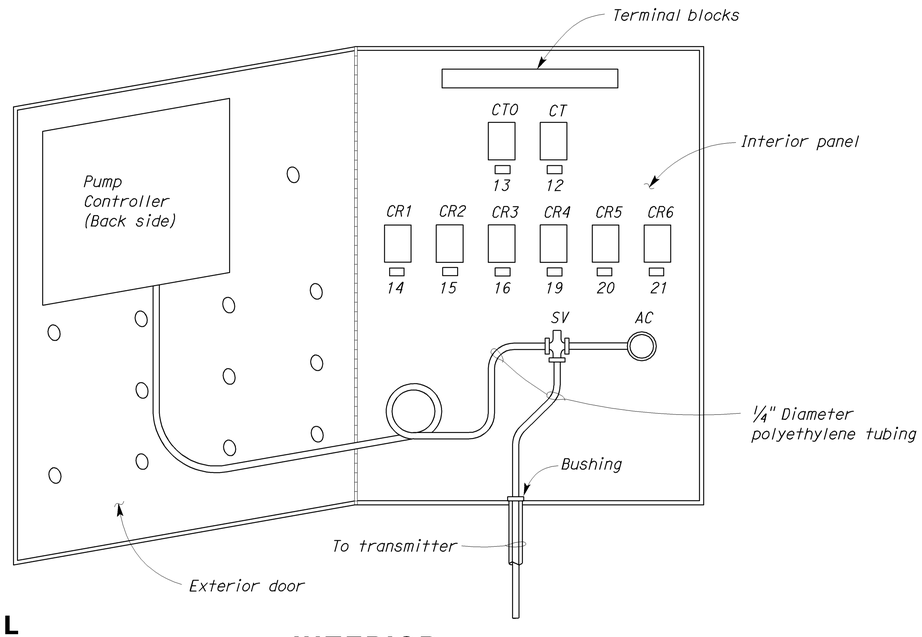

INTERIOR
ELEVATION - PUMP CONTROL PANEL
NO SCALE

General Notes:

A. All fasteners to concrete shall be stainless steel expansion anchorage. Size of studs shown.

B. Provide plastic wiring duct as required inside Pump Control Panel.

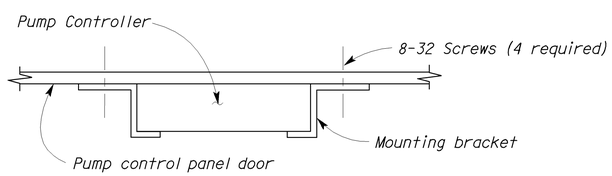

A SECTION
NO SCALE

NAMEPLATE SCHEDULE		
ITEM NO.	INSCRIPTION	LETTER HEIGHT
1	PUMP NO. 1 ON	1/8"
2	PUMP NO. 2 ON	1/8"
3	PUMP NO. 3 ON	1/8"
4	PUMP NO. 1 TIME METER - TM1	1/8"
5	PUMP NO. 2 TIME METER - TM2	1/8"
6	PUMP NO. 3 TIME METER - TM3	1/8"
7	PUMP NO. 1 - SS1	1/8"
8	PUMP NO. 2 - SS2	1/8"
9	PUMP NO. 3 - SS3	1/8"
10	PUMP CONTROLLER	1/8"
11	POWER ON	1/8"
12	CT	1/8"
13	CTO	1/8"
14	CR1	1/8"
15	CR2	1/8"
16	CR3	1/8"
17	HIGH WATER IN STORAGE BOX	1/8"
18	SUMP PUMP TEST PB	1/8"
19	CR4	1/8"
20	CR5	1/8"
21	CR6	1/8"
22	PUMP CONTROL PANEL	1/2"

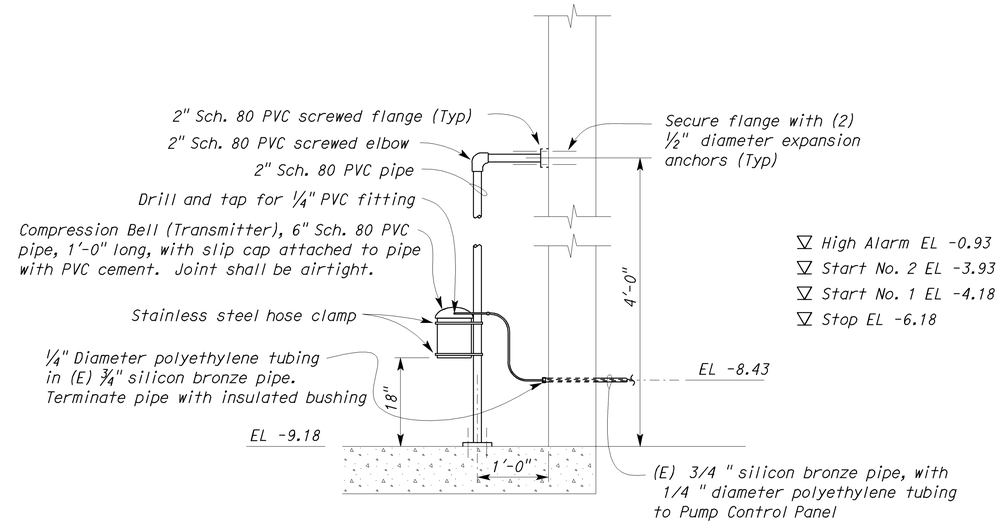

1 COMPRESSION BELL (TRANSMITTER) MOUNTING DETAIL
NO SCALE

DESIGN	BY Baldev S. Dehal	CHECKED Tech Ngov
DETAILS	BY Kathi Andreasen	CHECKED Baldev S. Dehal
QUANTITIES	BY Baldev S. Dehal	CHECKED Tech Ngov

STATE OF CALIFORNIA
DEPARTMENT OF TRANSPORTATION

DIVISION OF ENGINEERING SERVICES
ELECTRICAL-MECHANICAL-WATER AND WASTEWATER DESIGN

BRIDGE NO. 57-725W
POST MILE

PUMPING PLANT REHABILITATION
E STREET PUMPING PLANT (LOCATION 1)
ELECTRICAL DETAILS

SHEET EE1-12

TAEMWW Imperial Rev. 7/10

ORIGINAL SCALE IN INCHES FOR REDUCED PLANS 0 1 2 3

UNIT 3597
PROJECT NUMBER & PHASE 11000004061
EA 297101

DISREGARD PRINTS BEARING EARLIER REVISION DATES
REVISION DATES (PRELIMINARY STAGE ONLY) 7/8/11 8/26/11 8/25/11 9/13/11 10/18/11 12/18/11 8/28/12
SHEET OF

28-AUG-2012 13:20
ee1_12.dgn

DIST.	COUNTY	ROUTE	POST MILES TOTAL PROJECT	SHEET NO.	TOTAL SHEETS
11	SD	5,8	Var	22	76

REGISTERED ELECTRICAL ENGINEER — 08-28-12 DATE

REGISTERED PROFESSIONAL ENGINEER MARK CHEAP No. E 15795 Exp. 12-31-12 ELEC STATE OF CALIFORNIA

09-24-12
PLANS APPROVAL DATE

The State of California or its officers or agents shall not be responsible for the accuracy or completeness of electronic copies of this plan sheet.

CALIFORNIA STATE FIRE MARSHAL
APPROVED FIRE AND PANIC ONLY
Approval of this plan does not authorize or approve any omission or deviation from applicable regulations. Final approval is subject to field inspection. One set of approved plans shall be available on the project site at all times.
Reviewed by: FRANCIS SOLICH
Approval date: 08-28-12
CSFM File No. 01-37-11-0007

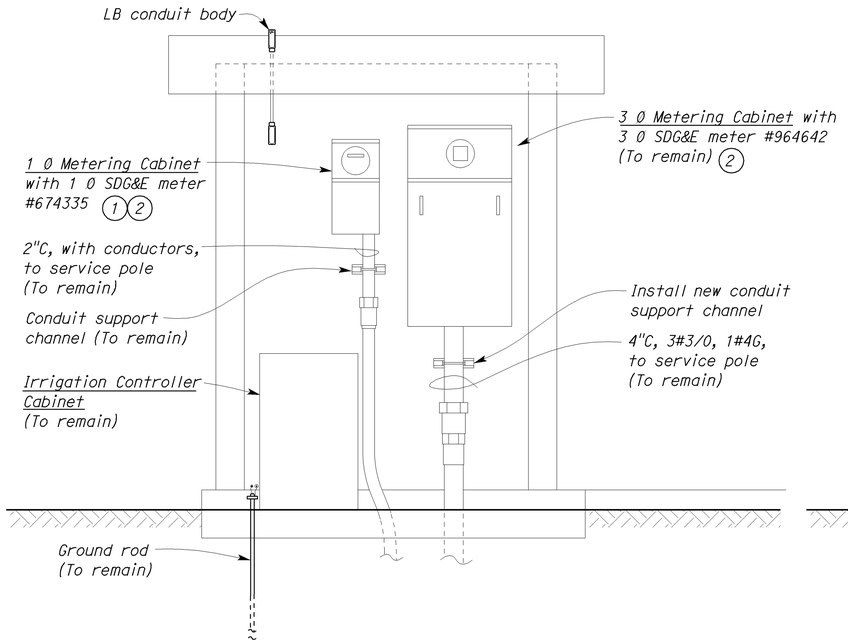

METERING EQUIPMENT
A NORTH WALL EXTERIOR ELEVATION
SCALE 3/4" = 1'-0"

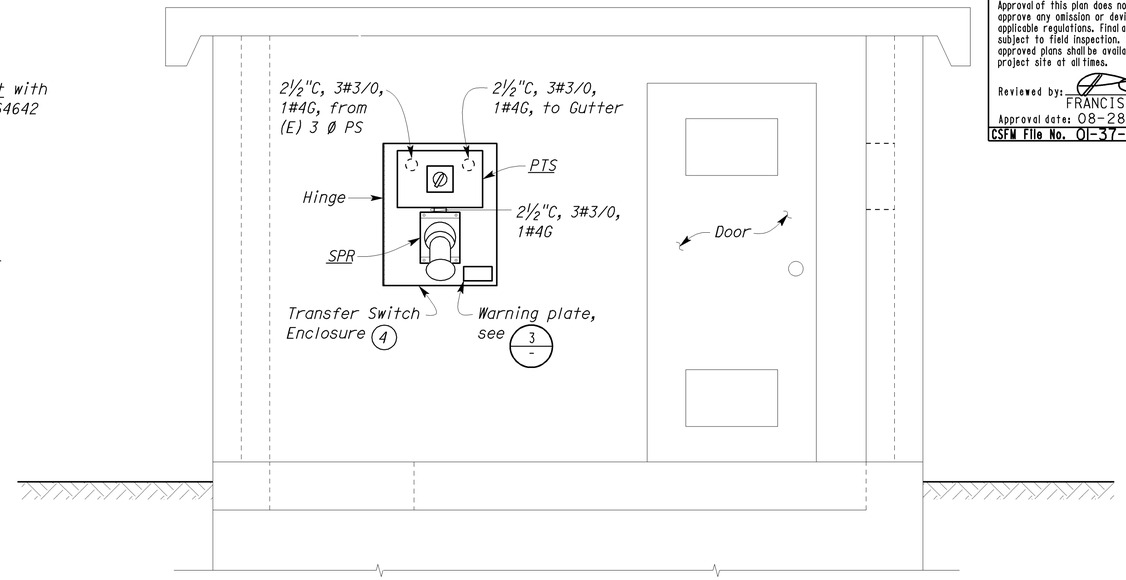

TRANSFER SWITCH ENCLOSURE
B WEST WALL EXTERIOR ELEVATION
SCALE 3/4" = 1'-0"

General Note:

A. Plug all holes on the wall and paint to match the wall color.

Notes:

1. Arrange with San Diego Gas & Electric Utility Company to disconnect power and meter removal of 1 0 service. Install blank plate in the meter faceplate.
2. Clean and paint with semi-gloss grey color paint.
3. Remove.
4. Transfer Switch Enclosure cover not shown for clarity.

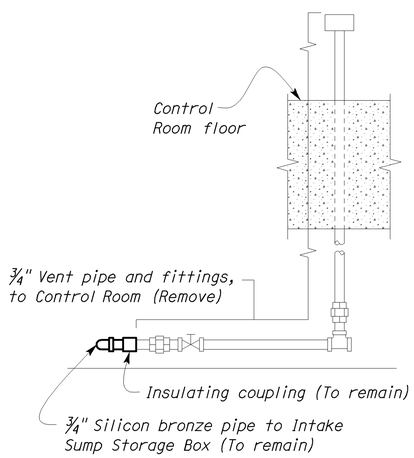

1 DETAIL
SCALE 2" = 1'-0"

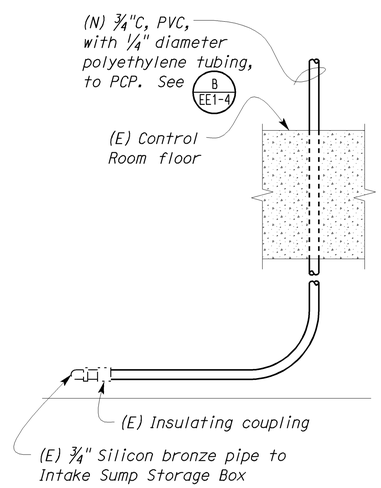

2 DETAIL
SCALE 2" = 1'-0"

PHASE SEQUENCE IS
A-B-C
SELECT PROPER VOLTAGE
BEFORE CONNECTING PLUG

3 DETAIL
NO SCALE

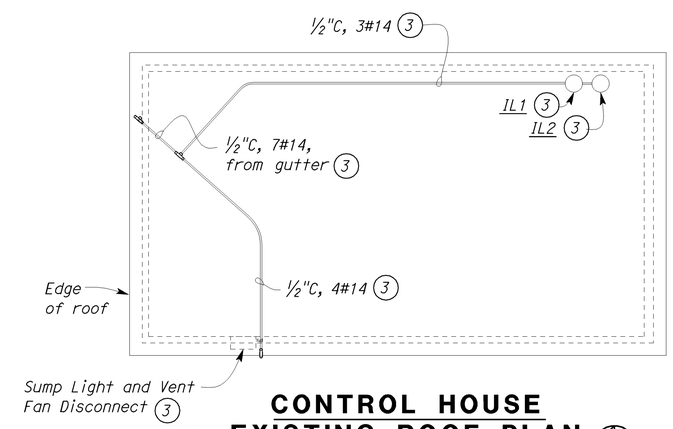

CONTROL HOUSE
C EXISTING ROOF PLAN
SCALE 1/2" = 1'-0"

THIS DRAWING ACCURATE FOR ELECTRICAL WORK ONLY.

	BY	CHECKED
DESIGN	Baldev S. Dehal	Tech Ngov
DETAILS	Kathi Andreasen	Baldev S. Dehal
QUANTITIES	Baldev S. Dehal	Tech Ngov

STATE OF CALIFORNIA DEPARTMENT OF TRANSPORTATION

DIVISION OF ENGINEERING SERVICES
ELECTRICAL-MECHANICAL-WATER AND WASTEWATER DESIGN

BRIDGE NO. 57-725W
POST MILE

PUMPING PLANT REHABILITATION
E STREET PUMPING PLANT (LOCATION 1)
CONTROL HOUSE EXTERIOR ELEVATIONS AND MISCELLANEOUS DETAILS

SHEET EE1-13

TAEMWW Imperial Rev. 7/10

ORIGINAL SCALE IN INCHES FOR REDUCED PLANS 0 1 2 3

UNIT 3597
PROJECT NUMBER & PHASE 11000004061
EA 297101

DISREGARD PRINTS BEARING EARLIER REVISION DATES
REVISION DATES (PRELIMINARY STAGE ONLY) 7/8/11 8/26/11 8/29/11 9/15/11 10/18/11 12/18/11 8/28/12 SHEET OF

28-AUG-2012 15:20
ee1_13.dgn

DIST.	COUNTY	ROUTE	POST MILES TOTAL PROJECT	SHEET NO.	TOTAL SHEETS
11	SD	5,8	Var	23	76

REGISTERED ELECTRICAL ENGINEER — 08-28-12 DATE

REGISTERED PROFESSIONAL ENGINEER — MARK CHEAP — No. E 15795 — Exp. 12-31-12 — ELEC — STATE OF CALIFORNIA

09-24-12
PLANS APPROVAL DATE

The State of California or its officers or agents shall not be responsible for the accuracy or completeness of electronic copies of this plan sheet.

GRAPHIC SYMBOLS FOR ELECTRICAL WIRING AND LAYOUT DIAGRAMS

SYMBOL	DESCRIPTION
	POLE-TOP ELECTROLIER
	POLE-ARM ELECTROLIER
CEILING WALL	
(S) -(S)	SURFACE FLUORESCENT, METAL HALIDE OR SODIUM VAPOR FIXTURE
(R) -(R)	RECESSED FLUORESCENT, METAL HALIDE, OR SODIUM VAPOR FIXTURE
(X) -(X)	EXIT LIGHT
	SURFACE OR PENDANT INDIVIDUAL FLUORESCENT FIXTURE
(R)	RECESSED INDIVIDUAL FLUORESCENT FIXTURE
	SURFACE OR PENDANT CONTINUOUS ROW FLUORESCENT FIXTURES

NOTE: A LOWER CASE LETTER NEAR GRAPHIC LIGHTING FIXTURE SYMBOL DENOTES THAT FIXTURE IS CONTROLLED BY A SIMILARLY MARKED SWITCH, AN ALPHA-NUMERIC SYMBOL NEAR GRAPHIC LIGHTING FIXTURE SYMBOL DENOTES FIXTURE TYPE, (I=INCANDESCENT, F=FLUORESCENT, MH=METAL HALIDE, H=HIGH PRESSURE SODIUM VAPOR), DESIGN TYPE, NUMBER OF LAMPS AND WATTAGE.

EXAMPLE : (4) F 2 - 2 x 32
- 32 WATT LAMPS
- 2 LAMPS
- DESIGN TYPE
- FLUORESCENT
- NUMBER OF FIXTURES

(B) -(B)	BLANK OUTLET
(J) -(J)	JUNCTION BOX
(D)	DROP CORD
	SINGLE RECEPTACLE OUTLET
	DUPLEX RECEPTACLE OUTLET
(GFCI)	DUPLEX RECEPTACLE OUTLET (WITH GFCI)
(GFCI) WP	DUPLEX RECEPTACLE OUTLET, WEATHERPROOF (WITH GFCI)
	SINGLE, SPECIAL PURPOSE RECEPTACLE OUTLET
	DUPLEX, SPECIAL PURPOSE RECEPTACLE OUTLET
(F)	FAN HANGER RECEPTACLE
S	SINGLE POLE SWITCH
S_2	DOUBLE POLE SWITCH
S_P	SWITCH AND PILOT LIGHT
S_{MC}	MOMENTARY CONTACT SWITCH
S_{RC}	REMOTE CONTROL SWITCH
S_{WP}	WEATHERPROOF SWITCH
S_F	FAN SWITCH
S_L	LIGHT SWITCH
S_H	HEATER SWITCH

SYMBOL	DESCRIPTION
S_1	OCCUPANCY SENSOR WALL SWITCH, SINGLE LEVEL
S_2	OCCUPANCY SENSOR WALL SWITCH, BILEVEL
S_M	MOTION SENSOR SWITCH
S_T	MANUAL MOTOR STARTING SWITCH, THERMAL OVERLOAD TYPE
S_{HP}	MANUAL MOTOR STARTING SWITCH, WITHOUT OVERLOAD ELEMENT
TS	TIMER SWITCH
S	SWITCH AND SINGLE RECEPTACLE
S	SWITCH AND DUPLEX RECEPTACLE
(T)	THERMOSTAT
(PS)	PRESSURE SWITCH
(R)	CONTROL RELAY
(FS)	FLOW SWITCH
PEC	PHOTOELECTRIC CELL
	FLUSH-MOUNTED PANELBOARD AND CABINET
	SURFACE-MOUNTED PANELBOARD AND CABINET
	LIGHTING PANEL
	POWER PANEL
	COMBINATION LIGHTING AND POWER
MC	MOTOR CONTROLLER
	DISCONNECT SWITCH
	CONDUIT CONCEALED IN CEILING OR WALL
	CONDUIT CONCEALED IN FLOOR
	CONDUIT EXPOSED
MC-P	CONDUIT, PVC COATED RIGID STEEL, EXPOSED
(2) 1/2"C, PVC, 2#12	CONDUCTOR INFO (PER CONDUIT); CONDUIT TYPE; CONDUIT SIZE; NUMBER OF CONDUITS (NO NUMBER INDICATES ONE CONDUIT)
	CROSS-LINES INDICATE NUMBER OF #12 AWG CONDUCTORS. LONGER CROSS-LINE INDICATES 1#12 AWG (G) FOR EQUIPMENT GROUNDING CONDUCTOR. NO CROSS-LINE INDICATES 2#12 WITH 1#12 (G) UNLESS OTHERWISE NOTED. ALL CONDUIT 1/2" UNLESS OTHERWISE NOTED.
A1, 2	HOMERUN TO PANELBOARD, ARROWS INDICATE NUMBER OF CIRCUITS, LETTER DENOTES PANELBOARD, NUMERAL DENOTES CIRCUIT.
SM	SURFACE METAL RACEWAY
MC	CONDUIT, RIGID STEEL, UNDERGROUND
PVC	CONDUIT, POLYVINYL CHLORIDE, UNDERGROUND
	CONDUIT, FLEXIBLE
	CONDUIT, TURN UP
	CONDUIT, TURN DOWN
	CONDUIT SEAL, EXPLOSION-PROOF
	CONDUIT, EXPANSION JOINT
	ADAPTER, ONE TYPE CONDUIT TO ANOTHER
	POLE
	PULL BOX-LETTER INDICATES TYPE OF PULL BOX (E-ELECTRICAL, T-TELEPHONE, R-RADIO)
(T)	PULL BOX (TRAFFIC RATED)-LETTER INDICATES TYPE OF PULL BOX (E-ELECTRICAL, T-TELEPHONE, R-RADIO)
A / EE-2	SECTION/ELEVATION LETTER; SHEET NUMBER
1 / EE-2	DETAIL NUMBER; SHEET NUMBER

REMODEL WORK

SYMBOL	DESCRIPTION
	EXISTING FLUORESCENT FIXTURE-TO REMAIN
	EXISTING FLUORESCENT FIXTURE-REMOVE
(IN)	EXISTING INCANDESCENT FIXTURE-TO REMAIN
	EXISTING INCANDESCENT FIXTURE-REMOVE
	EXISTING OUTLET-TO REMAIN
	EXISTING RECEPTACLE OUTLET-TO REMAIN
	EXISTING RECEPTACLE OUTLET-REMOVE
E	EXISTING CONDUIT AND CONDUCTORS-TO REMAIN UNLESS OTHERWISE NOTED
	EXISTING CONDUIT AND CONDUCTORS-REMOVE
S	EXISTING SWITCH-TO REMAIN
	EXISTING SWITCH-REMOVE
(J)	EXISTING JUNCTION BOX-TO REMAIN
	EXISTING JUNCTION BOX-REMOVE

GRAPHIC SYMBOLS FOR ELECTRICAL DIAGRAMS

SYMBOL	DESCRIPTION
	CIRCUIT BREAKER, SINGLE POLE
	CIRCUIT BREAKER, DOUBLE POLE
	CIRCUIT BREAKER, THREE POLE
GFCI	CIRCUIT BREAKER, WITH GROUND FAULT CIRCUIT INTERRUPTER
	CONTACT, NORMALLY OPEN
	CONTACT, NORMALLY CLOSED
	CONTACT, NORMALLY CLOSED, TIME DELAY CLOSING ON DE-ENERGIZING
	CONTACT, NORMALLY OPEN, TIME DELAY OPENING ON DE-ENERGIZING
	CONTACT, NORMALLY OPEN, TIME DELAY CLOSING ON ENERGIZING
	CONTACT, NORMALLY CLOSED, TIME DELAY OPENING ON ENERGIZING
	CONTACT, SINGLE POLE DOUBLE-THROW
	OPERATING COIL
	LIQUID LEVEL ACTUATED SWITCH, NORMALLY CLOSED
	LIQUID LEVEL ACTUATED SWITCH, NORMALLY OPEN
	PRESSURE ACTUATED SWITCH, NORMALLY CLOSED
	PRESSURE ACTUATED SWITCH, NORMALLY OPEN
	FLOW ACTUATED SWITCH, NORMALLY CLOSED
	FLOW ACTUATED SWITCH, NORMALLY OPEN
	TEMPERATURE ACTUATED SWITCH, NORMALLY CLOSED
	TEMPERATURE ACTUATED SWITCH, NORMALLY OPEN
	LIMIT SWITCH, NORMALLY CLOSED
	LIMIT SWITCH, NORMALLY OPEN
	PUSHBUTTON SWITCH, NORMALLY CLOSED
	PUSHBUTTON SWITCH, NORMALLY OPEN
	SWITCH, SINGLE-POLE
	SWITCH, SINGLE-POLE, DOUBLE-THROW
	SWITCH, 3-POLE
	SWITCH, 3-POLE, 3-POSITION
	SWITCH, SINGLE-POLE, 3-POSITION
	THERMAL OVERLOAD
	FUSE
	RESISTOR
	TRANSFORMER WINDING
	GROUNDING ELECTRODE
	ENCLOSURE BOND
(A)	PILOT LIGHT (A=AMBER, G=GREEN, R=RED)
(G)	GENERATOR
(M)	MOTOR
(F)	FAN MOTOR

CALIFORNIA STATE FIRE MARSHAL APPROVED FIRE AND PANIC ONLY

Approval of this plan does not authorize or approve any omission or deviation from applicable regulations. Final approval is subject to field inspection. One set of approved plans shall be available on the project site at all times.

Reviewed by: FRANCIS SOLICH

Approval date: 08-28-12

CSFM File No. 01-37-11-0007

ABBREVIATIONS

A	AMPERES
ACS	AIR COMPRESSOR STARTER
AI	ANALOG INPUT
AL	ALARM LIGHT
AO	ANALOG OUTPUT
BD	BUILDING DISCONNECT
BRK	BREAKER
C	CONDUIT
CB	CIRCUIT BREAKER
CKT	CIRCUIT
CR	CONTROL RELAY
CSW	CURRENT SWITCH
CT	CONTROL TRANSFORMER
CTO	CONTROL TRANSFORMER OVERLOAD
DI	DIGITAL INPUT
DO	DIGITAL OUTPUT
DP	DUPLEX PLUG RECEPTACLE
(E)	EXISTING
EF	EXHAUST FAN
EL	ELEVATION
F	FUSE
FL	FAILURE LIGHT
FLA	FLASHER
FLEX	FLEXIBLE CONDUIT
FLS	FLOW SWITCH
FR	FAILURE RESET
FS	FLOAT SWITCH
G	GROUND
GFCI	GROUND FAULT CIRCUIT INTERRUPTER
GRS	GALVANIZED RIGID STEEL
IL	INDICATING LIGHT
ILS	INDICATING LIGHT SWITCH
IR	INDUCTION RELAY
JB	JUNCTION BOX
L	LIGHT
LC	LIGHTING CONTACTOR
LD	LIGHT DISCONNECT
LL	LIQUID LEVEL RELAY
LP	LIGHT PANEL
LS	LIGHT SWITCH
LT	LIGHT TRANSFORMER
LTO	LIGHT TRANSFORMER OVERLOAD
MB	MAIN BREAKER
MC	METALLIC CONDUIT
MCC	MOTOR CONTROL CENTER
MCP	MOTOR CIRCUIT PROTECTOR
MD	MOTOR DISCONNECT
MSB	MAIN SWITCHBOARD
MT	EMPTY CONDUIT
(N)	NEW
NC	NORMALLY CLOSED
NO	NORMALLY OPEN
Ø	PHASE
OL	OVERLOAD
P	POLE
PB	PULL BOX
PB	PUSHBUTTON
PCP	PUMP CONTROL PANEL
PEC	PHOTOELECTRIC CELL
PL	PILOT LIGHT
PS	POWER SWITCH
PTS	POWER TRANSFER SWITCH
PVC	POLYVINYL CHLORIDE
RES	RESISTOR
S	STARTER COIL
SD	SERVICE DISCONNECT
SFR	SEAL FAILURE RELAY
SL	SUMP LIGHT
SPD	SUMP PUMP DISCONNECT
SPR	STANDBY POWER RECEPTACLE
SS	SELECTOR SWITCH
ST	STARTER
SV	SOLENOID VALVE
T	TRANSFORMER
TB	TERMINAL BLOCKS
TDR	TIME DELAY RELAY
TGLS	TOGGLE SWITCH
TM	TIME METER
TOT	TOTAL
TS	TIMER SWITCH
TSW	TEST SWITCH
TYP	TYPICAL
UPS	UNINTERRUPTIBLE POWER SUPPLY
V	VOLT
WLS	WATER LEVEL SWITCH
WP	WEATHERPROOF

	BY	CHECKED
DESIGN	Baldev S. Dehal	Tech Ngov
DETAILS	Kathi Andreasen	Baldev S. Dehal
QUANTITIES	Baldev S. Dehal	Tech Ngov

STATE OF CALIFORNIA
DEPARTMENT OF TRANSPORTATION

DIVISION OF ENGINEERING SERVICES
ELECTRICAL-MECHANICAL-WATER AND WASTEWATER DESIGN

BRIDGE NO. 57-256W
POST MILE

PUMPING PLANT REHABILITATION

H STREET PUMPING PLANT (LOCATION 2)

LEGEND

SHEET EE2-0

TAEMWW Imperial Rev. 7/10

ORIGINAL SCALE IN INCHES FOR REDUCED PLANS 0 1 2 3

UNIT 3597
PROJECT NUMBER & PHASE 11000004061
EA 297101

DISREGARD PRINTS BEARING EARLIER REVISION DATES

REVISION DATES (PRELIMINARY STAGE ONLY): 3/31/11 8/31/11 8/29/11 9/15/11 10/18/11 12/16/11 8/28/12 — SHEET — OF

28-AUG-2012 15:20

ee2_00.dgn

DIST.	COUNTY	ROUTE	POST MILES TOTAL PROJECT	SHEET NO.	TOTAL SHEETS
11	SD	5,8	Var	24	76

REGISTERED ELECTRICAL ENGINEER — 08-28-12 DATE

REGISTERED PROFESSIONAL ENGINEER MARK CHEAP No. E 15795 Exp. 12-31-12 ELEC STATE OF CALIFORNIA

09-24-12
PLANS APPROVAL DATE

The State of California or its officers or agents shall not be responsible for the accuracy or completeness of electronic copies of this plan sheet.

CALIFORNIA STATE FIRE MARSHAL APPROVED FIRE AND PANIC ONLY
Approval of this plan does not authorize or approve any omission or deviation from applicable regulations. Final approval is subject to field inspection. One set of approved plans shall be available on the project site at all times.
Reviewed by: FRANCIS SOLICH
Approval date: 08-28-12
CSFM File No. 01-37-11-0007

CERTIFICATE OF COMPLIANCE (Page 1 of 4) LTG-1C

Project Name: PUMPING PLANT REHABILITATION H STREET PUMPING PLANT (LOCATION 2)			Date: 07/20/2011
Project Address: INTERSTATE 5 & H STREET INTERSECTION SAN DIEGO, CA 91910	Climate Zone: 7		Building CFA: N/A Unconditioned Floor Area: 250 SF

General Information

Building Type:	☑ Nonresidential	☐ High-Rise Residential	☐ Hotel/Motel
☐ Schools	☐ Relocatable Public Schools	☐ Conditioned Spaces	☑ Unconditioned Spaces
Phase of Construction:	☐ New Construction	☐ Addition	☑ Alteration
Method of Compliance:	☐ Complete Building	☑ Area Category	☐ Tailored

Documentation Author's Declaration Statement
- I Certify that this Certificate of Compliance documentation is accurate and complete.

Name:	BALDEV S. (DAVE) DEHAL	Signature:	
Company:	CALTRANS	Date:	07/20/2011
Address:	1801 30TH STREET	If applicable: CEA # CEPE #	
City/State/Zip:	SACRAMENTO, CA 95816	Phone:	(916) 227-8346

Principal Lighting Designer's Declaration Statement
- I am eligible under Division 3 of the California Business and Professions Code to accept responsibility for the lighting design.
- This Certificate of Compliance identifies the lighting features and performance specifications required for compliance with Title 24, Pages 1 and 6 of the California Code of Regulations.
- The design features represented on this Certificate of Compliance are consistent with the information provided to document this design on the other applicable compliance forms, worksheets, calculations, plans and specifications submitted to the enforcement agency for approval with this building permit application.

Name:	TECH NGOV	Signature:	
Company:	CALTRANS	Phone:	(916) 227-8529
Address:	1801 30TH STREET	License #	E 14521
City/State/Zip:	SACRAMENTO, CA 95816	Date:	07/20/2011

Lighting Mandatory Measures
Indicate location on building plans of Mandatory Measures Note Block: EE2-0.2

LIGHTING COMPLIANCE FORMS & WORKSHEETS (Check box if worksheet is included)

For detailed instructions on the use of this and all Energy Efficiency Standards compliance forms, please refer to the Nonresidential Manual published by the California Energy Commission.

☑	LTG-1C Pages 1 through 4	Certificate of Compliance. All pages required on plans for all submittals.
☐	LTG-2C	Lighting Controls Credit Worksheet
☑	LTG-3C	Indoor Lighting Power Allowance
☐	LTG-4C Pages 1 through 4	Tailored Method Worksheet
☐	LTG-5C Pages 1 and 2	Line Voltage Track Lighting Worksheet

CERTIFICATE OF COMPLIANCE (Page 2 of 4) LTG-1C

INDOOR LIGHTING SCHEDULE and FIELD INSPECTION ENERGY CHECKLIST

Project Name: PUMPING PLANT REHABILITATION H STREET PUMPING PLANT (LOCATION 2)	Date: 07/20/2011	
Installation Certificate, LTG-1-INST (Retain a copy and verify form is completed and signed.)		Field Inspector ☐
Certificate of Acceptance, LTG-2A and LTG-3A (Retain a copy and verify form is completed and signed.)		Field Inspector ☐

A separate Lighting Schedule Must Be Filled Out for Conditioned and Unconditioned Spaces Installed Lighting Power listed on this Lighting Schedule is only for: ☐ CONDITIONED SPACE ☑ UNCONDITIONED SPACE

☐ The actual indoor lighting power listed below includes all installed permanent and portable lighting system in accordance with S 146 (a)

☐ Only for offices: Up to the first 0.2 watts per square foot of portable lighting shall not be required to be included in the calculation of actual indoor lighting power density in accordance with Exception to S 146 (a). All portable lighting in excess of 0.2 watts per square foot is totaled below.

	Luminaire Schedule (Type, Lamps, Ballasts)		Installed Watts						
A	B	C	D	E		F	G	H	
				How wattage was determined				Field 2 Inspector	
Name or Item Tag	Complete Luminaire Description (i.e, 3 lamp fluorescent troffer, F32T8, one dimmable electronic ballast)	Special Features	Watts per Luminaire 1	CEC Default from NA8	According to S 130 (d or e)	Number of Luminaires	Installed Watts (D x F)	Pass	Fail
L1	F32T8, WRAPAROUND, CEILING MOUNTED, ES	✓	54	☐	☐	1	54	☐	☐
L2	F32T8, WRAPAROUND, WALL MOUNTED, ES	✓	54	☐	☐	1	54	☐	☐
L3	F32T8, WRAPAROUND, WALL MOUNTED, ES	✓	54	☐	☐	1	54	☐	☐
L4	F32T8, WRAPAROUND, CEILING MOUNTED, ES	✓	54	☐	☐	1	54	☐	☐
L5	F32T8, WRAPAROUND, WALL MOUNTED, ES	✓	54	☐	☐	1	54	☐	☐
				☐	☐			☐	☐
				☐	☐			☐	☐
				☐	☐			☐	☐
				☐	☐			☐	☐
				☐	☐			☐	☐
				☐	☐			☐	☐
				☐	☐			☐	☐
				☐	☐			☐	☐
				☐	☐			☐	☐
				☐	☐			☐	☐
				☐	☐			☐	☐
				☐	☐			☐	☐
			INSTALLED WATTS PAGE TOTAL:				270		

Building total number of pages	1	Installed Watts Building Total (Sum of all pages)	270

Enter into LTG-1C Page 4 of 4

1. Wattage shall be determined according to Section 130 (d and e). Wattage shall be rating of light fixture, not rating of bulb.
2. If Fail then describe on Page 2 of the Inspection Checklist Form and take appropriate action to correct. Verify building plans if necessary.

DIST.	COUNTY	ROUTE	POST MILES TOTAL PROJECT	SHEET NO.	TOTAL SHEETS
11	SD	5,8	Var	25	76

REGISTERED ELECTRICAL ENGINEER — 08-28-12 DATE

REGISTERED PROFESSIONAL ENGINEER — MARK CHEAP — No. E 15795 — Exp. 12-31-12 — ELEC — STATE OF CALIFORNIA

09-24-12
PLANS APPROVAL DATE

The State of California or its officers or agents shall not be responsible for the accuracy or completeness of electronic copies of this plan sheet.

CALIFORNIA STATE FIRE MARSHAL APPROVED FIRE AND PANIC ONLY
Approval of this plan does not authorize or approve any omission or deviation from applicable regulations. Final approval is subject to field inspection. One set of approved plans shall be available on the project site at all times.
Reviewed by: FRANCIS SOLICH
Approval date: 08-28-12
CSFM File No. 01-37-11-0007

CERTIFICATE OF COMPLIANCE (Page 3 of 4) LTG-1C

Project Name: PUMPING PLANT REHABILITATION
H STREET PUMPING PLANT (LOCATION 2)

Date: 07/20/2011

INDOOR LIGHTING SCHEDULE and FIELD ENERGY CHECKLIST

Fill in controls for all spaces: a) area controls, b) multi-level controls, c) manual daylighting controls for daylit areas> 250 sq ft, automatic daylighting controls for daylit areas> 2,500 sq ft, d) shut-off controls, e) display lighting controls, f) tailored lighting controls-general lighting controlled separately from display, ornamental and display case lighting and g) demand responsive automatic controls for retail stores> 50,000 sq ft, in accordance with Section 131.

MANDATORY LIGHTING CONTROLS - FIELD INSPECTION ENERGY CHECKLIST				Field Inspector	
Type/Description	Number of Units	Location in Building		Pass	Fail
N/A (SECTION 146-30)				☐	☐
				☐	☐
				☐	☐
				☐	☐
				☐	☐
				☐	☐
				☐	☐
				☐	☐
				☐	☐
				☐	☐
				☐	☐
				☐	☐
				☐	☐

Field Inspectors's Notes or Discrepancies:

2008 Nonresidential Compliance Forms *July 2010*

CERTIFICATE OF COMPLIANCE (Page 4 of 4) LTG-1C

Project Name: PUMPING PLANT REHABILITATION
H STREET PUMPING PLANT (LOCATION 2)

Date: 07/20/2011

Conditioned and Unconditioned space Lighting must not be combined for compliance

Indoor Lighting Power for Conditioned Spaces		Watts	Indoor Lighting Power for Unconditioned Spaces		Watts
Installed Lighting (from Conditioned LTG-1C Page 2			Installed Lighting (from Unconditioned LTG-1C Page 2		270
Lighting Control Credit Conditioned Spaces (from LTG-2C)	-		Lighting Control Credit Unconditioned Spaces (from LTG-2C)	-	
Adjusted Installed Lighting Power	=		Adjusted Installed Lighting Power	=	270
Complies if Installed ≤ Allowed			Complies if Installed ≤ Allowed		
Allowed Lighting Power Conditioned Spaces (from LTG-3C)			Allowed Lighting Power Unconditioned Spaces (from LTG-3C)		300

Required Acceptance Tests

Designer:
This form is to be used by the designer and attached to the plans. Listed below is the acceptance test for the Lighting system, LTG-2A and LTG-3A. The designer is required to check the acceptance tests and list all control devices serving the building or space shall be certified as meeting the Acceptance Requirements for Code Compliance. If all the lighting system or control of a certain type requires a test, list the different lighting and the number of systems. The NA7 Section in the Appendix of the Nonresidential Reference Appendices Manual describes the test. Since this form will be part of the plans, completion of this section will allow the responsible party to budget for the scope of work appropriately. Forms can be grouped by type of Luminaire controlled.

Enforcement Agency:
System Acceptance. Before Occupancy Permit is granted for a newly constructed building or space or when ever new lighting system with controls is installed in the building or space shall be certified as meeting the Acceptance Requirements.
The LTG-2A and LTG-3A forms are not considered a complete form and is not to be accepted by the enforcement agency unless the boxes are checked and/or filled and signed. In addition, a Certificate of Acceptance forms shall be submitted to the enforcement agency that certifies plans, specifications, installation certificates, and operating and maintenance information meet the requirements of S 10-103 (b) of Title 24 Part 6. The field inspector must receive the properly filled out and signed forms before the building can receive final occupancy. A copy of the LTG-2A and LTG-3A for each different lighting luminaire control(s) must be provided to the owner of the building for their records.

Luminaires Controlled				LTG-2A and LTG-3A
Equipment Requiring Testing	Description	Number of like Controls	Location	Controls and Sensors and Automatic Daylighting Controls Acceptance
				☐
				☐
				☐
				☐
				☐
				☐
				☐
				☐
				☐
				☐
				☐
				☐
				☐
				☐

2008 Nonresidential Compliance Forms *July 2010*

DESIGN	BY Baldev S. Dehal	CHECKED Tech Ngov	
DETAILS	BY Kathi Andreasen	CHECKED Baldev S. Dehal	
QUANTITIES	BY Baldev S. Dehal	CHECKED Tech Ngov	

STATE OF CALIFORNIA
DEPARTMENT OF TRANSPORTATION

DIVISION OF ENGINEERING SERVICES
ELECTRICAL-MECHANICAL-WATER AND WASTEWATER DESIGN

BRIDGE NO. 57-256W
POST MILE

PUMPING PLANT REHABILITATION
H STREET PUMPING PLANT (LOCATION 2)
TITLE 24 COMPLIANCE NO. 2

SHEET EE2-0.2

TAEMWW Imperial Rev. 7/10

ORIGINAL SCALE IN INCHES FOR REDUCED PLANS 0 1 2 3

UNIT 3597
PROJECT NUMBER & PHASE 11000004061
EA 297101

DISREGARD PRINTS BEARING EARLIER REVISION DATES → 7/29/11 8/29/11 10/19/11 12/19/11 8/28/12

REVISION DATES (PRELIMINARY STAGE ONLY) SHEET OF

28-AUG-2012 15:20
ee2_00_2.dgn

DIST.	COUNTY	ROUTE	POST MILES TOTAL PROJECT	SHEET NO.	TOTAL SHEETS
11	SD	5,8	Var	26	76

REGISTERED ELECTRICAL ENGINEER — 08-28-12 DATE

REGISTERED PROFESSIONAL ENGINEER MARK CHEAP No. E 15795 Exp. 12-31-12 ELEC STATE OF CALIFORNIA

09-24-12
PLANS APPROVAL DATE

The State of California or its officers or agents shall not be responsible for the accuracy or completeness of electronic copies of this plan sheet.

CALIFORNIA STATE FIRE MARSHAL APPROVED FIRE AND PANIC ONLY
Approval of this plan does not authorize or approve any omission or deviation from applicable regulations. Final approval is subject to field inspection. One set of approved plans shall be available on the project site at all times.
Reviewed by: FRANCIS SOLICH
Approval date: 08-28-12
CSFM File No. 01-37-11-0007

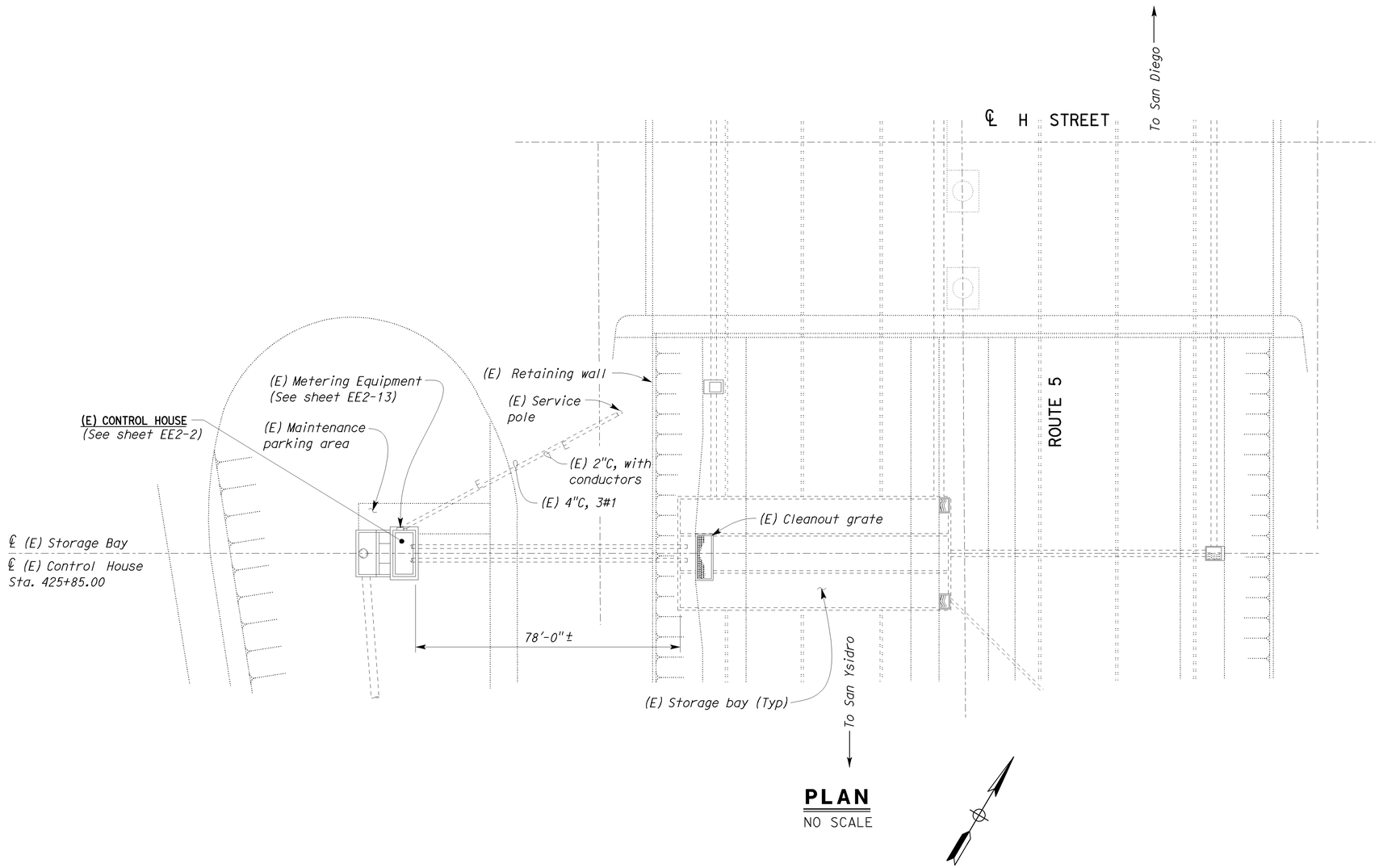

PLAN
NO SCALE

THIS DRAWING ACCURATE FOR ELECTRICAL WORK ONLY.

	BY	CHECKED
DESIGN	Baldev S. Dehal	Tech Ngov
DETAILS	Kathi Andreasen	Baldev S. Dehal
QUANTITIES	Baldev S. Dehal	Tech Ngov

STATE OF CALIFORNIA
DEPARTMENT OF TRANSPORTATION

DIVISION OF ENGINEERING SERVICES
ELECTRICAL-MECHANICAL-WATER AND WASTEWATER DESIGN

BRIDGE NO. 57-256W
POST MILE

PUMPING PLANT REHABILITATION
H STREET PUMPING PLANT (LOCATION 2)
ELECTRICAL SITE PLAN

SHEET **EE2-1**

TAEMWW Imperial Rev. 7/10

ORIGINAL SCALE IN INCHES FOR REDUCED PLANS 0 1 2 3

UNIT 3597
PROJECT NUMBER & PHASE 11000004061
EA 297101

DISREGARD PRINTS BEARING EARLIER REVISION DATES →
REVISION DATES (PRELIMINARY STAGE ONLY): 5/31/11 6/24/11 8/19/11 8/23/11 9/15/11 10/19/11 12/19/11 8/28/12

SHEET OF

28-AUG-2012 15:20
ee2_01.dgn

DIST.	COUNTY	ROUTE	POST MILES TOTAL PROJECT	SHEET NO.	TOTAL SHEETS
11	SD	5,8	Var	27	76

REGISTERED ELECTRICAL ENGINEER — 08-28-12 DATE

REGISTERED PROFESSIONAL ENGINEER MARK CHEAP No. E 15795 Exp. 12-31-12 ELEC STATE OF CALIFORNIA

09-24-12
PLANS APPROVAL DATE

The State of California or its officers or agents shall not be responsible for the accuracy or completeness of electronic copies of this plan sheet.

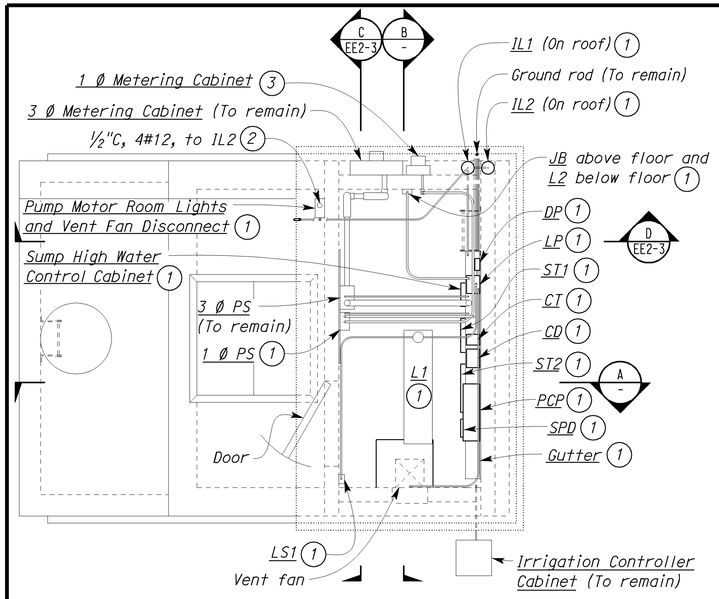

CONTROL ROOM PLAN

SCALE 3/8"= 1'-0"

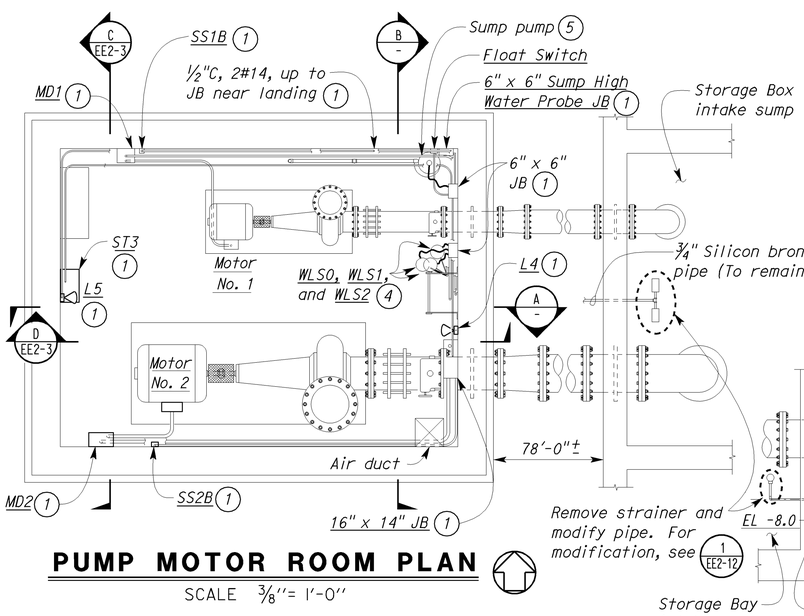

PUMP MOTOR ROOM PLAN

SCALE 3/8"= 1'-0"

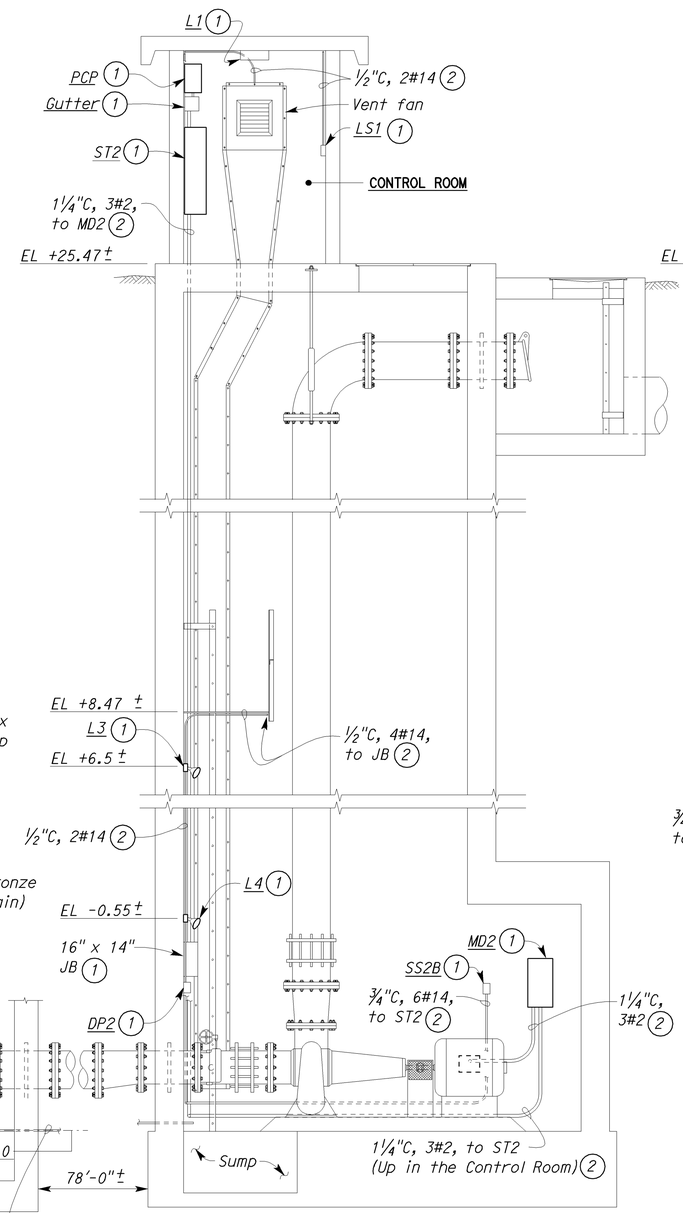

A SECTION

SCALE 3/8"= 1'-0"

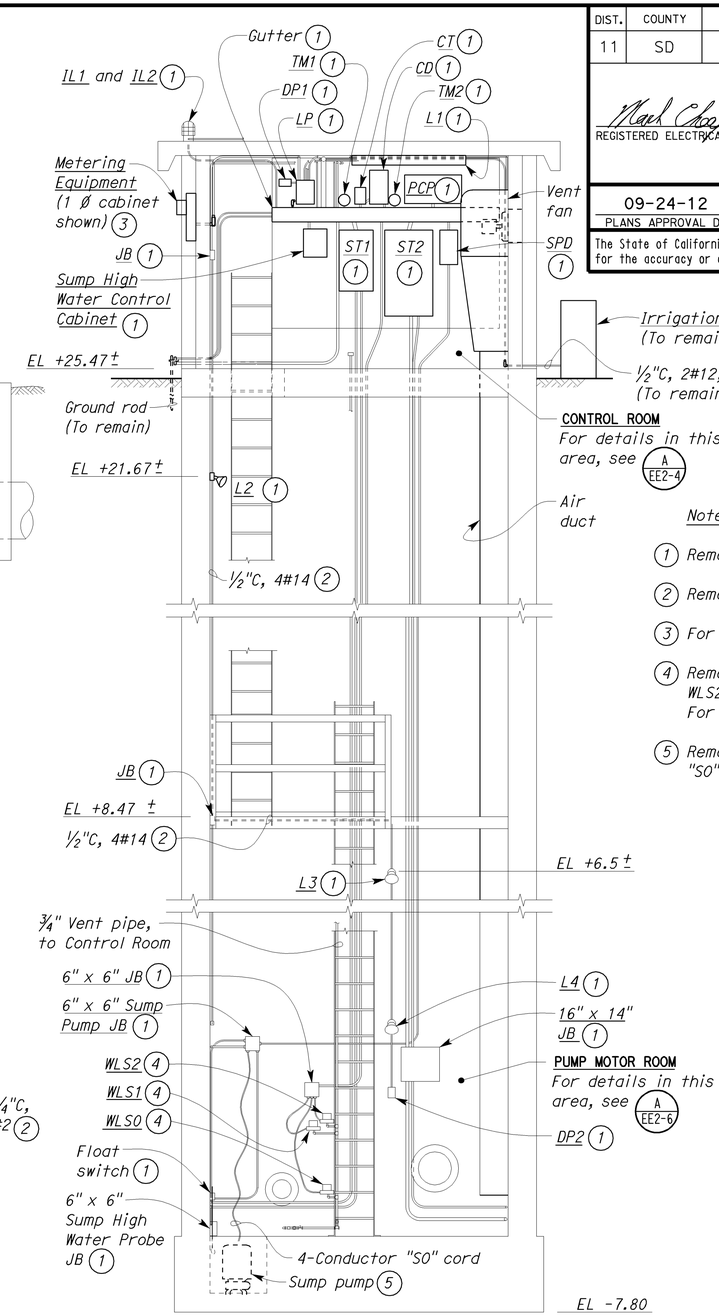

B SECTION

SCALE 3/8"= 1'-0"

Notes:

1. Remove.
2. Remove conductors and conduit.
3. For detail, see A EE2-13.
4. Remove water level switch WLS0, WLS1, WLS2, flexible conduits and conductors. For ¾" pipe modification, see 2 EE2-13.
5. Remove sump pump and 3 conductor "S0" cord.

CALIFORNIA STATE FIRE MARSHAL APPROVED FIRE AND PANIC ONLY
Approval of this plan does not authorize or approve any omission or deviation from applicable regulations. Final approval is subject to field inspection. One set of approved plans shall be available on the project site at all times.
Reviewed by: FRANCIS SOLICH
Approval date: 08-28-12
CSFM File No. 01-37-11-0007

THIS DRAWING ACCURATE FOR ELECTRICAL WORK ONLY.

	BY	CHECKED
DESIGN	Baldev S. Dehal	Tech Ngov
DETAILS	Kathi Andreasen	Baldev S. Dehal
QUANTITIES	Baldev S. Dehal	Tech Ngov

STATE OF CALIFORNIA DEPARTMENT OF TRANSPORTATION

DIVISION OF ENGINEERING SERVICES
ELECTRICAL-MECHANICAL-WATER AND WASTEWATER DESIGN

BRIDGE NO. 57-256W
POST MILE

PUMPING PLANT REHABILITATION

H STREET PUMPING PLANT (LOCATION 2)

EXISTING CONTROL ROOM AND PUMP MOTOR ROOM DETAILS NO. 1

SHEET EE2-2

TAEMWW Imperial Rev. 7/10

ORIGINAL SCALE IN INCHES FOR REDUCED PLANS 0 1 2 3

UNIT 3597
PROJECT NUMBER & PHASE 11000004061
EA 297101

DISREGARD PRINTS BEARING EARLIER REVISION DATES

REVISION DATES (PRELIMINARY STAGE ONLY) 5/19/11 6/20/11 7/8/11 8/3/11 8/23/11 9/13/11 10/19/11 12/19/11 8/28/12 SHEET OF

28-AUG-2012 15:20
ee2_02.dgn

DIST.	COUNTY	ROUTE	POST MILES TOTAL PROJECT	SHEET NO.	TOTAL SHEETS
11	SD	5,8	Var	28	76

REGISTERED ELECTRICAL ENGINEER — 08-28-12 DATE

REGISTERED PROFESSIONAL ENGINEER — MARK CHEAP — No. E 15795 — Exp. 12-31-12 — ELEC — STATE OF CALIFORNIA

09-24-12
PLANS APPROVAL DATE

The State of California or its officers or agents shall not be responsible for the accuracy or completeness of electronic copies of this plan sheet.

CALIFORNIA STATE FIRE MARSHAL APPROVED FIRE AND PANIC ONLY
Approval of this plan does not authorize or approve any omission or deviation from applicable regulations. Final approval is subject to field inspection. One set of approved plans shall be available on the project site at all times.
Reviewed by: FRANCIS SOLICH
Approval date: 08-28-12
CSFM File No. 01-37-11-0007

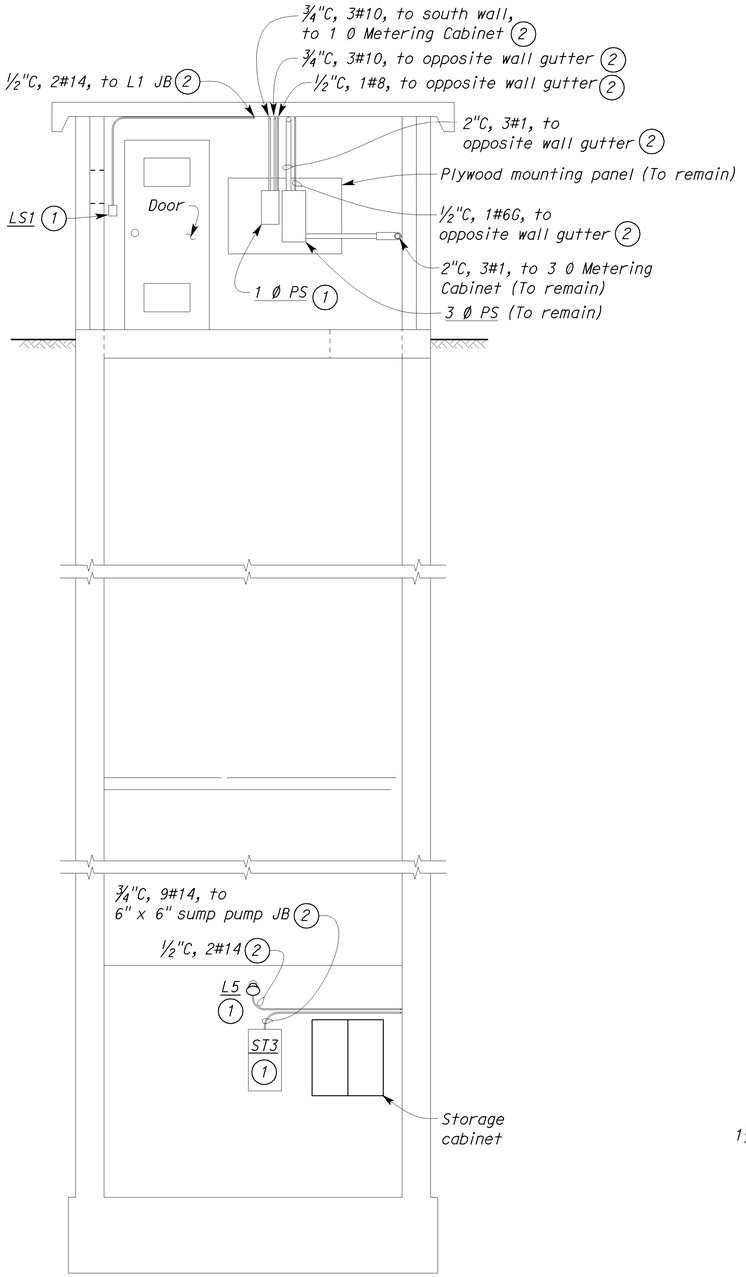

C SECTION
SCALE 3/8"= 1'-0"

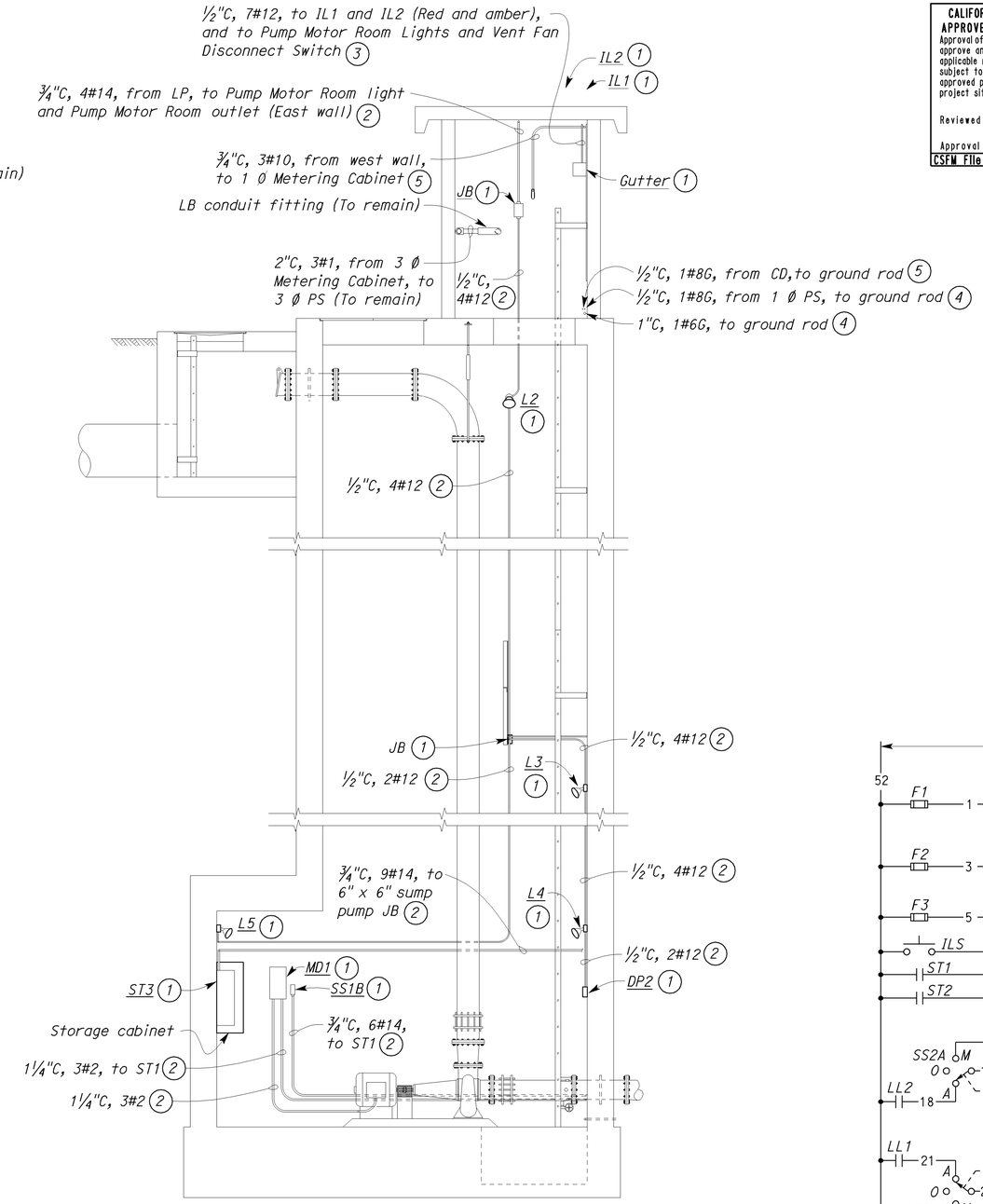

D SECTION
SCALE 3/8"= 1'-0"

Notes:

1. Remove.
2. Remove conductors and conduit.
3. Remove conductors and portion of the conduit from gutter. Portion of conduit through the wall and roof to remain. Remove conductors and conduit from IL2 to Pump Motor Room Lights and Vent Fan Disconnect Switch located on exterior of west wall.
4. Remove conductors and conduit from the connection closest to the wall. Portion of conduit in the wall to remain.
5. Remove conductor and conduit from the connection closest to wall. Plug the conduit on both ends.

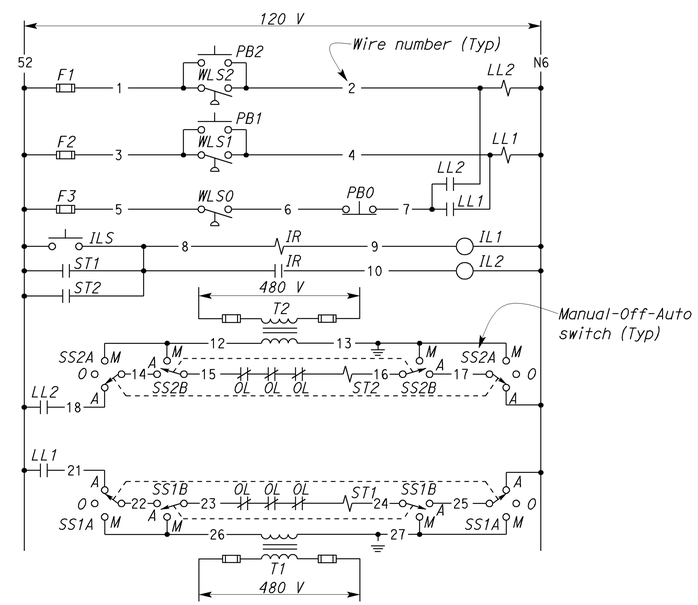

CONTROL SCHEMATIC

THIS DRAWING ACCURATE FOR ELECTRICAL WORK ONLY.

	BY	CHECKED
DESIGN	Baldev S. Dehal	Tech Ngov
DETAILS	Kathi Andreasen	Baldev S. Dehal
QUANTITIES	Baldev S. Dehal	Tech Ngov

STATE OF CALIFORNIA
DEPARTMENT OF TRANSPORTATION

DIVISION OF ENGINEERING SERVICES
ELECTRICAL-MECHANICAL-WATER AND WASTEWATER DESIGN

BRIDGE NO. 57-256W
POST MILE

PUMPING PLANT REHABILITATION
H STREET PUMPING PLANT (LOCATION 2)
EXISTING CONTROL ROOM AND PUMP MOTOR ROOM DETAILS NO. 2

SHEET **EE2-3**

TAEMWW Imperial Rev. 7/10

ORIGINAL SCALE IN INCHES FOR REDUCED PLANS 0 1 2 3

UNIT 3597
PROJECT NUMBER & PHASE 11000004061
EA 297101

DISREGARD PRINTS BEARING EARLIER REVISION DATES
REVISION DATES (PRELIMINARY STAGE ONLY) 6/28/11 8/24/11 8/29/11 10/19/11 12/19/11 8/28/12 SHEET OF

28-AUG-2012 15:20
ee2_03.dgn

DIST.	COUNTY	ROUTE	POST MILES TOTAL PROJECT	SHEET NO.	TOTAL SHEETS
11	SD	5,8	Var	29	76

REGISTERED ELECTRICAL ENGINEER — 08-28-12 DATE

REGISTERED PROFESSIONAL ENGINEER — MARK CHEAP — No. E 15795 — Exp. 12-31-12 — ELEC — STATE OF CALIFORNIA

09-24-12
PLANS APPROVAL DATE

The State of California or its officers or agents shall not be responsible for the accuracy or completeness of electronic copies of this plan sheet.

General Notes:

A. Cut all conduits going through Control Room floor flush with top and botttom of the floor. Fill with mortar.

B. In Modified Elevation, all existing work and equipment is shown in lightweight or dropout lines. New work and equipment is shown in bolder, heavier lines.

Notes:

(1) Remove.

(2) Remove conductors and conduit.

(3) Remove conductors and portion of the conduit. Portion of conduit through the wall and roof to remain. Remove conductors and conduit from IL2 to Pump Motor Room Lights and Vent Fan Disconnect Switch, located on exterior of west wall.

(4) Remove conductors and conduit from the connection closest to the wall. Portion of conduit in the wall to remain.

(5) 1 Ø Metering Cabinet and 3 Ø Metering Cabinet (Not shown for clarity) to remain. For details, see sheet EE2-13.

(6) Remove conductor and conduit from the connection closest to wall. Plug the conduit on both ends.

Notes (Continued):

(7) Disconnect conductors from Panel LP. Pull back conductors through LB condulet. Remove portion of conduit from LB condulet to LP.

(8) Install 1#6G, from existing 3 Ø Power Switch. Provide grounding hub and clamp for connecting to existing ground rod.

(9) Install 1#8G, from LT. Provide grounding hub and clamp for connecting to existing ground rod.

(10) Install power terminal blocks inside gutter in lieu of splices.

(11) After conduit installation, fill the hole cavity with silicone epoxy sealant.

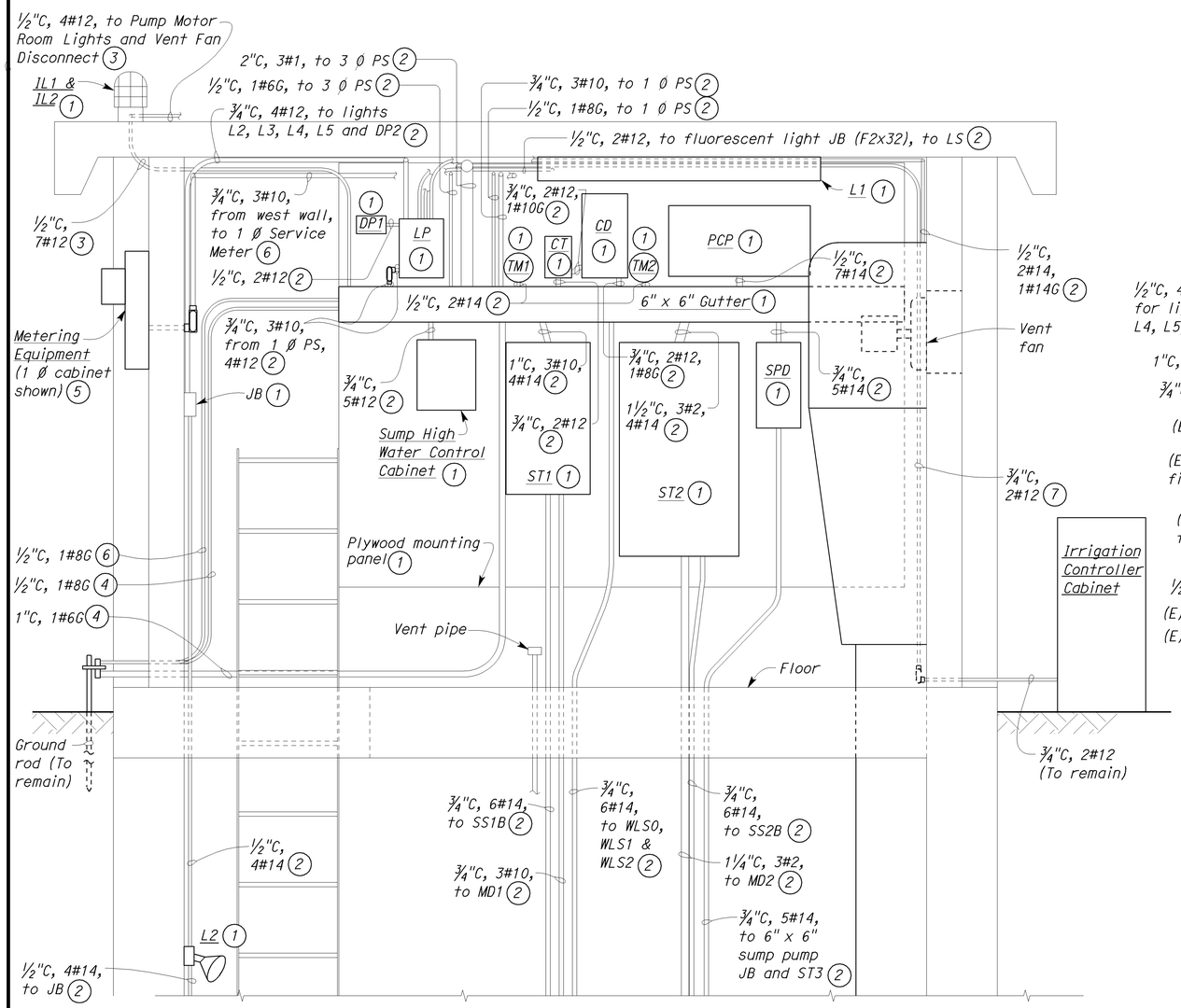

(A) EXISTING CONTROL ROOM ELEVATION

SCALE 1" = 1'-0"

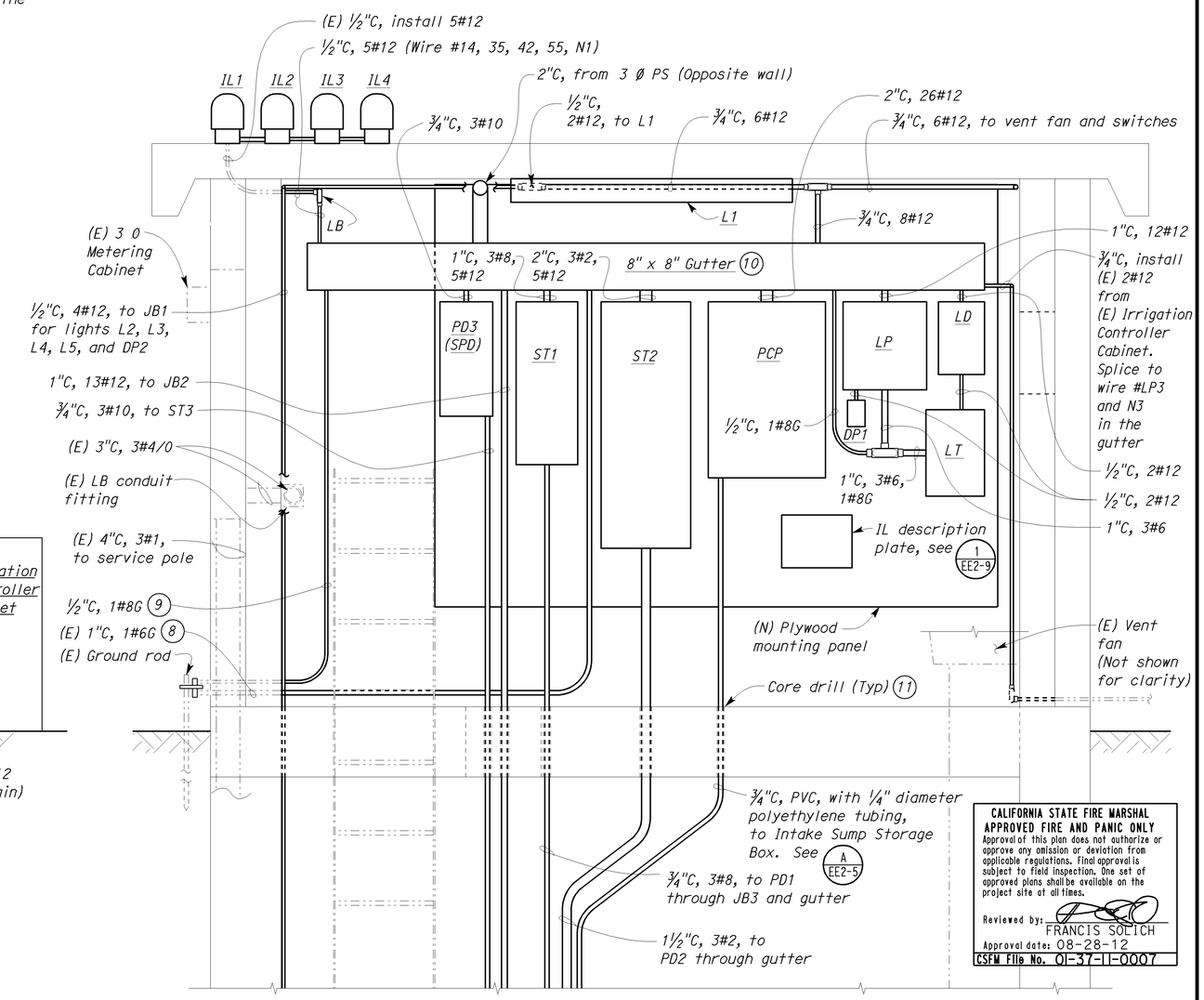

CALIFORNIA STATE FIRE MARSHAL APPROVED FIRE AND PANIC ONLY
Approval of this plan does not authorize or approve any omission or deviation from applicable regulations. Final approval is subject to field inspection. One set of approved plans shall be available on the project site at all times.
Reviewed by: FRANCIS SOLICH
Approval date: 08-28-12
CSFM File No. 01-37-11-0007

(B) MODIFIED CONTROL ROOM ELEVATION

SCALE 1" = 1'-0"

THIS DRAWING ACCURATE FOR ELECTRICAL WORK ONLY.

	BY	CHECKED
DESIGN	Baldev S. Dehal	Tech Ngov
DETAILS	Kathi Andreasen	Baldev S. Dehal
QUANTITIES	Baldev S. Dehal	Tech Ngov

STATE OF CALIFORNIA DEPARTMENT OF TRANSPORTATION

DIVISION OF ENGINEERING SERVICES
ELECTRICAL-MECHANICAL-WATER AND WASTEWATER DESIGN

BRIDGE NO. 57-256W
POST MILE

PUMPING PLANT REHABILITATION
H STREET PUMPING PLANT (LOCATION 2)
EXISTING AND MODIFIED CONTROL ROOM ELEVATION

SHEET EE2-4

TAEMWW Imperial Rev. 7/10

ORIGINAL SCALE IN INCHES FOR REDUCED PLANS 0 1 2 3

UNIT 3597
PROJECT NUMBER & PHASE 11000004061
EA 297101

DISREGARD PRINTS BEARING EARLIER REVISION DATES

REVISION DATES (PRELIMINARY STAGE ONLY) 7/5/11 7/18/11 8/3/11 8/23/11 8/25/11 10/19/11 12/19/11 8/28/12 SHEET OF

28-AUG-2012 13:20
ee2_04.dgn

DIST.	COUNTY	ROUTE	POST MILES TOTAL PROJECT	SHEET NO.	TOTAL SHEETS
11	SD	5,8	Var	30	76

REGISTERED ELECTRICAL ENGINEER — 08-28-12 DATE

REGISTERED PROFESSIONAL ENGINEER MARK CHEAP No. E 15795 Exp. 12-31-12 ELEC STATE OF CALIFORNIA

09-24-12
PLANS APPROVAL DATE

The State of California or its officers or agents shall not be responsible for the accuracy or completeness of electronic copies of this plan sheet.

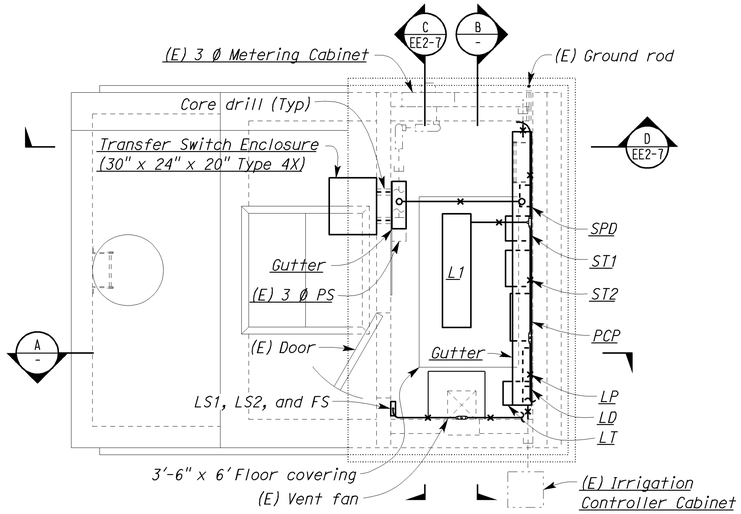

CONTROL ROOM PLAN

SCALE 3/8"= 1'-0"

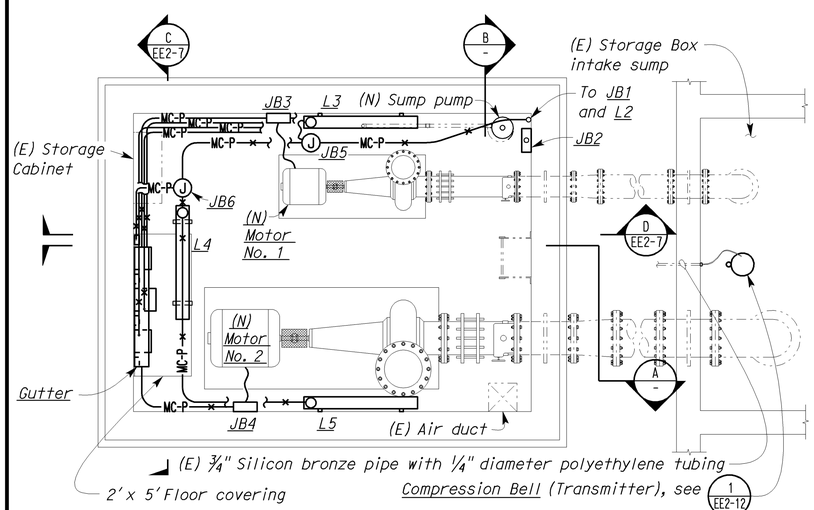

PUMP MOTOR ROOM PLAN

SCALE 3/8"= 1'-0"

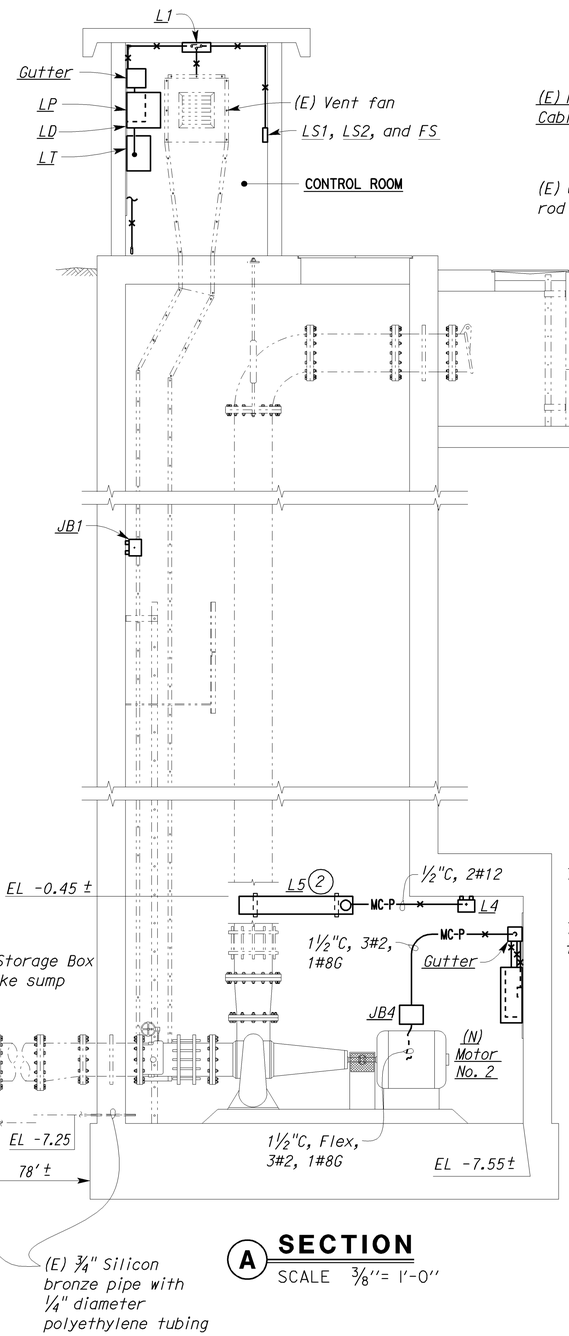

A SECTION

SCALE 3/8"= 1'-0"

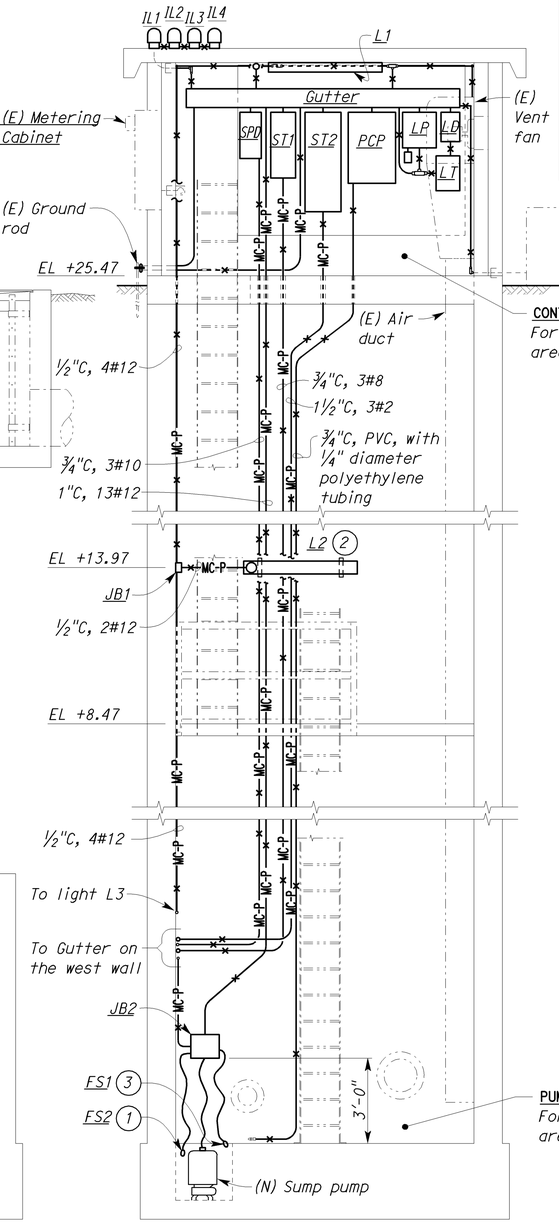

B SECTION

SCALE 3/8"= 1'-0"

CALIFORNIA STATE FIRE MARSHAL
APPROVED FIRE AND PANIC ONLY
Approval of this plan does not authorize or approve any omission or deviation from applicable regulations. Final approval is subject to field inspection. One set of approved plans shall be available on the project site at all times.
Reviewed by: FRANCIS SOLICH
Approval date: 08-28-12
CSFM File No. 01-37-11-0007

General Notes:

A. All conduit support shall be 316 stainless steel channel, Unistrut No. P4000, B-Line System No. B54, or equal.

B. All expansion anchors shall be stainless steel anchors.

C. All conduit strap, one-hole clamp, and clamp back shall be PVC coated for PVC coated rigid steel conduit.

D. All existing work and equipment is shown in lightweight or dropout lines. New work and equipment is shown in bolder, heavier lines.

Notes:

1. Mount float as recommended by the float manufacturer.
2. See "Light Mounting Detail", 1 EE2-7.
3. FS1 shall be energized at +1/2" above finish floor, to prevent flooding of Pump Motor Room.

THIS DRAWING ACCURATE FOR ELECTRICAL WORK ONLY.

	BY	CHECKED
DESIGN	Baldev S. Dehal	Tech Ngov
DETAILS	Kathi Andreasen	Baldev S. Dehal
QUANTITIES	Baldev S. Dehal	Tech Ngov

STATE OF CALIFORNIA
DEPARTMENT OF TRANSPORTATION

DIVISION OF ENGINEERING SERVICES
ELECTRICAL-MECHANICAL-WATER AND WASTEWATER DESIGN

BRIDGE NO. 57-256W
POST MILE

PUMPING PLANT REHABILITATION

H STREET PUMPING PLANT (LOCATION 2)

MODIFIED CONTROL ROOM AND PUMP MOTOR ROOM DETAILS NO. 1

SHEET EE2-5

ORIGINAL SCALE IN INCHES FOR REDUCED PLANS 0 1 2 3

UNIT 3597
PROJECT NUMBER & PHASE 11000004061
EA 297101

DISREGARD PRINTS BEARING EARLIER REVISION DATES

REVISION DATES (PRELIMINARY STAGE ONLY) 7/6/11 7/6/11 8/23/11 8/23/11 8/25/11 9/13/11 10/18/11 12/18/11 8/28/12 SHEET OF

TAEMWW Imperial Rev. 7/10

28-AUG-2012 15:20

ee2_05.dgn

Notes:

1. Remove.
2. Remove conductors and conduit.
3. Remove sump pump and 3 conductor "S0" cord.
4. Remove water level switch WLS0, WLS1, WLS2, flexible conduits and conductors. For ¾" pipe modification, see 2/EE2-13.

DIST.	COUNTY	ROUTE	POST MILES TOTAL PROJECT	SHEET NO.	TOTAL SHEETS
11	SD	5,8	Var	31	76

REGISTERED ELECTRICAL ENGINEER — 08-28-12 DATE

REGISTERED PROFESSIONAL ENGINEER — MARK CHEAP — No. E 15795 — Exp. 12-31-12 — ELEC — STATE OF CALIFORNIA

09-24-12
PLANS APPROVAL DATE

The State of California or its officers or agents shall not be responsible for the accuracy or completeness of electronic copies of this plan sheet.

CALIFORNIA STATE FIRE MARSHAL APPROVED FIRE AND PANIC ONLY
Approval of this plan does not authorize or approve any omission or deviation from applicable regulations. Final approval is subject to field inspection. One set of approved plans shall be available on the project site at all times.
Reviewed by: FRANCIS SOLICH
Approval date: 08-28-12
CSFM File No. 01-37-11-0007

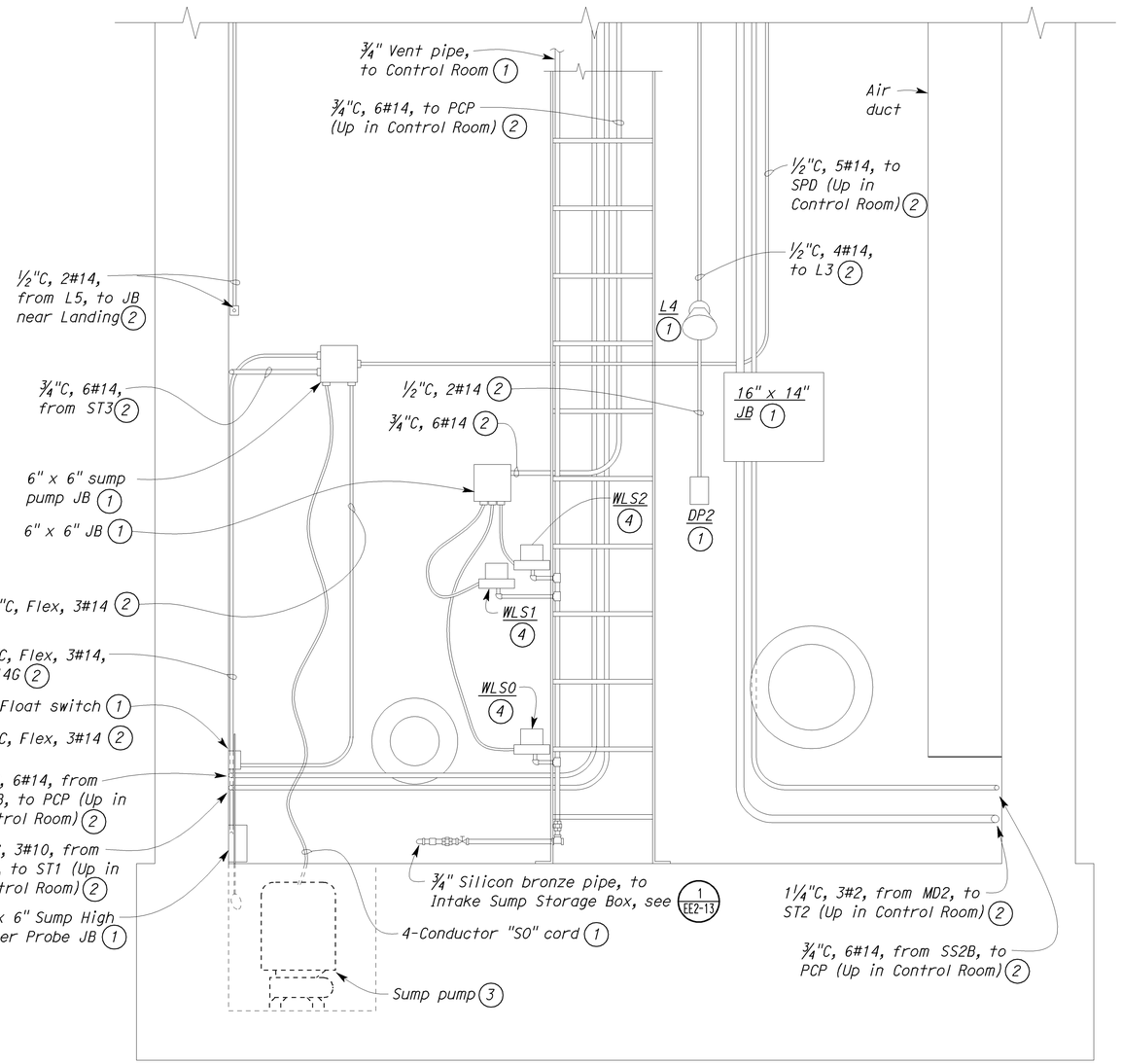

A EXISTING PUMP MOTOR ROOM ELEVATION

SCALE 1" = 1'-0"

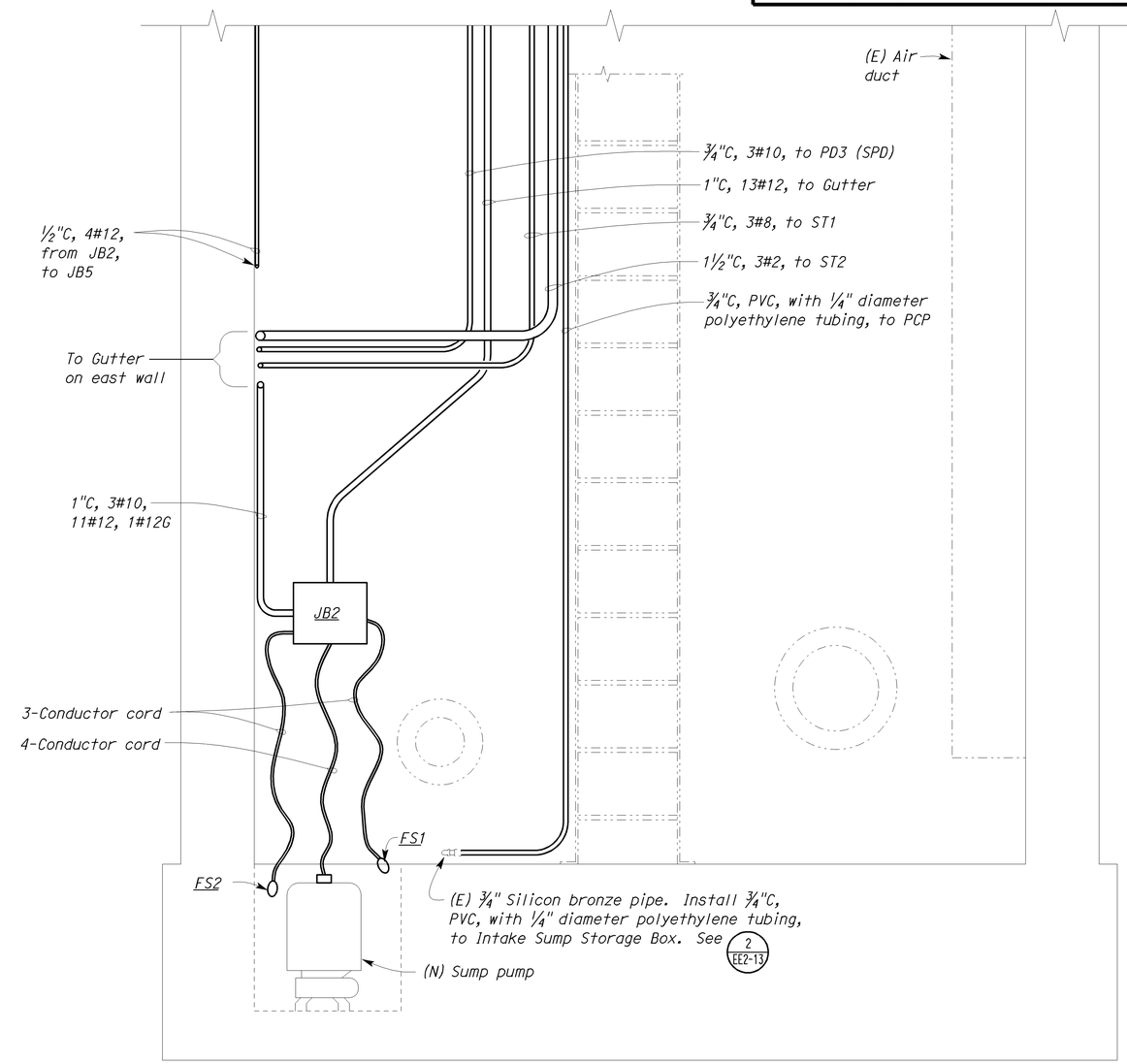

B MODIFIED PUMP MOTOR ROOM ELEVATION

SCALE 1" = 1'-0"

THIS DRAWING ACCURATE FOR ELECTRICAL WORK ONLY.

	BY	CHECKED
DESIGN	Baldev S. Dehal	Tech Ngov
DETAILS	Kathi Andreasen	Baldev S. Dehal
QUANTITIES	Baldev S. Dehal	Tech Ngov

STATE OF CALIFORNIA DEPARTMENT OF TRANSPORTATION

DIVISION OF ENGINEERING SERVICES
ELECTRICAL-MECHANICAL-WATER AND WASTEWATER DESIGN

BRIDGE NO. 57-256W
POST MILE

PUMPING PLANT REHABILITATION
H STREET PUMPING PLANT (LOCATION 2)
EXISTING AND MODIFIED PUMP MOTOR ROOM ELEVATION

SHEET EE2-6

TAEMWW Imperial Rev. 7/10

ORIGINAL SCALE IN INCHES FOR REDUCED PLANS 0 1 2 3

UNIT 3597
PROJECT NUMBER & PHASE 11000004061
EA 297101

DISREGARD PRINTS BEARING EARLIER REVISION DATES
REVISION DATES (PRELIMINARY STAGE ONLY) 7/7/11 8/5/11 8/22/11 10/18/11 12/12/11 8/28/12
SHEET OF

28-AUG-2012 15:20
ee2_06.dgn

DIST.	COUNTY	ROUTE	POST MILES TOTAL PROJECT	SHEET NO.	TOTAL SHEETS
11	SD	5,8	Var	32	76

REGISTERED ELECTRICAL ENGINEER — 08-28-12 DATE

REGISTERED PROFESSIONAL ENGINEER — MARK CHEAP — No. E 15795 — Exp. 12-31-12 — ELEC — STATE OF CALIFORNIA

09-24-12
PLANS APPROVAL DATE

The State of California or its officers or agents shall not be responsible for the accuracy or completeness of electronic copies of this plan sheet.

CALIFORNIA STATE FIRE MARSHAL APPROVED FIRE AND PANIC ONLY
Approval of this plan does not authorize or approve any omission or deviation from applicable regulations. Final approval is subject to field inspection. One set of approved plans shall be available on the project site at all times.
Reviewed by: FRANCIS SOLICH
Approval date: 08-28-12
CSFM File No. 01-37-11-0007

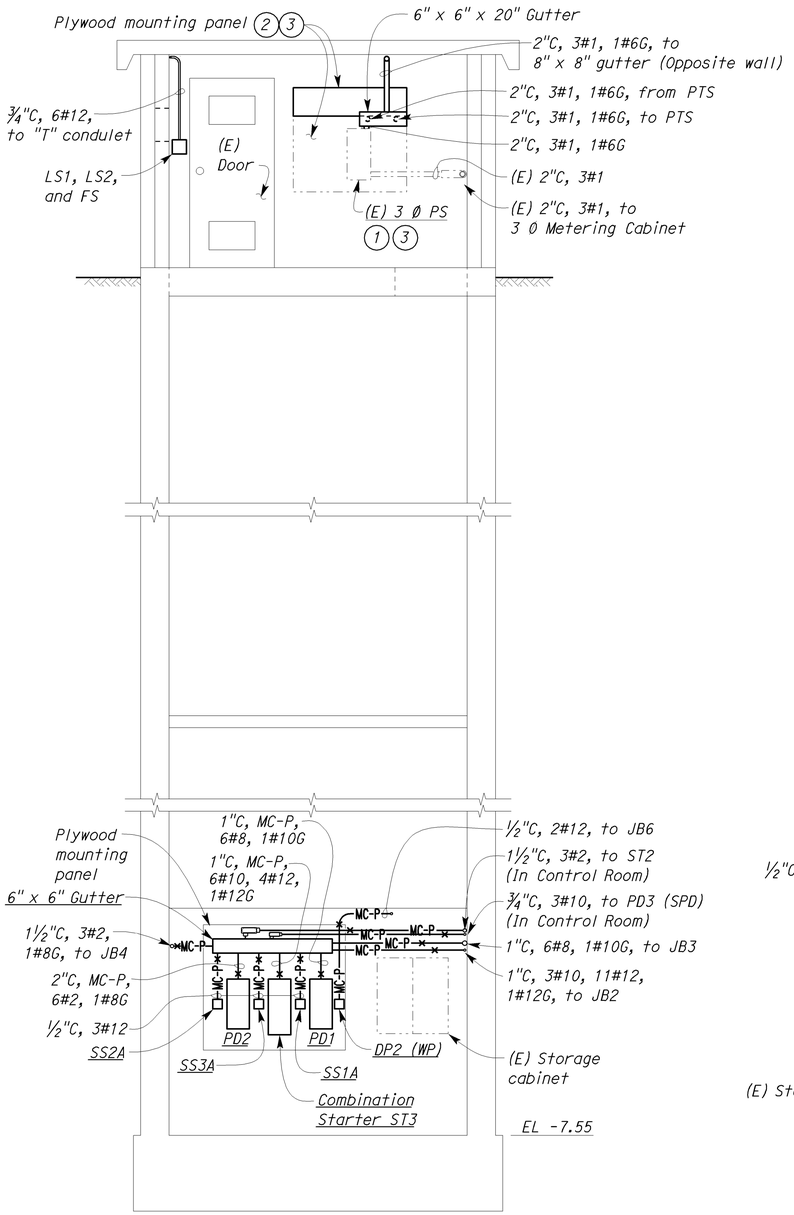

(C) SECTION
SCALE 3/8"= 1'-0"

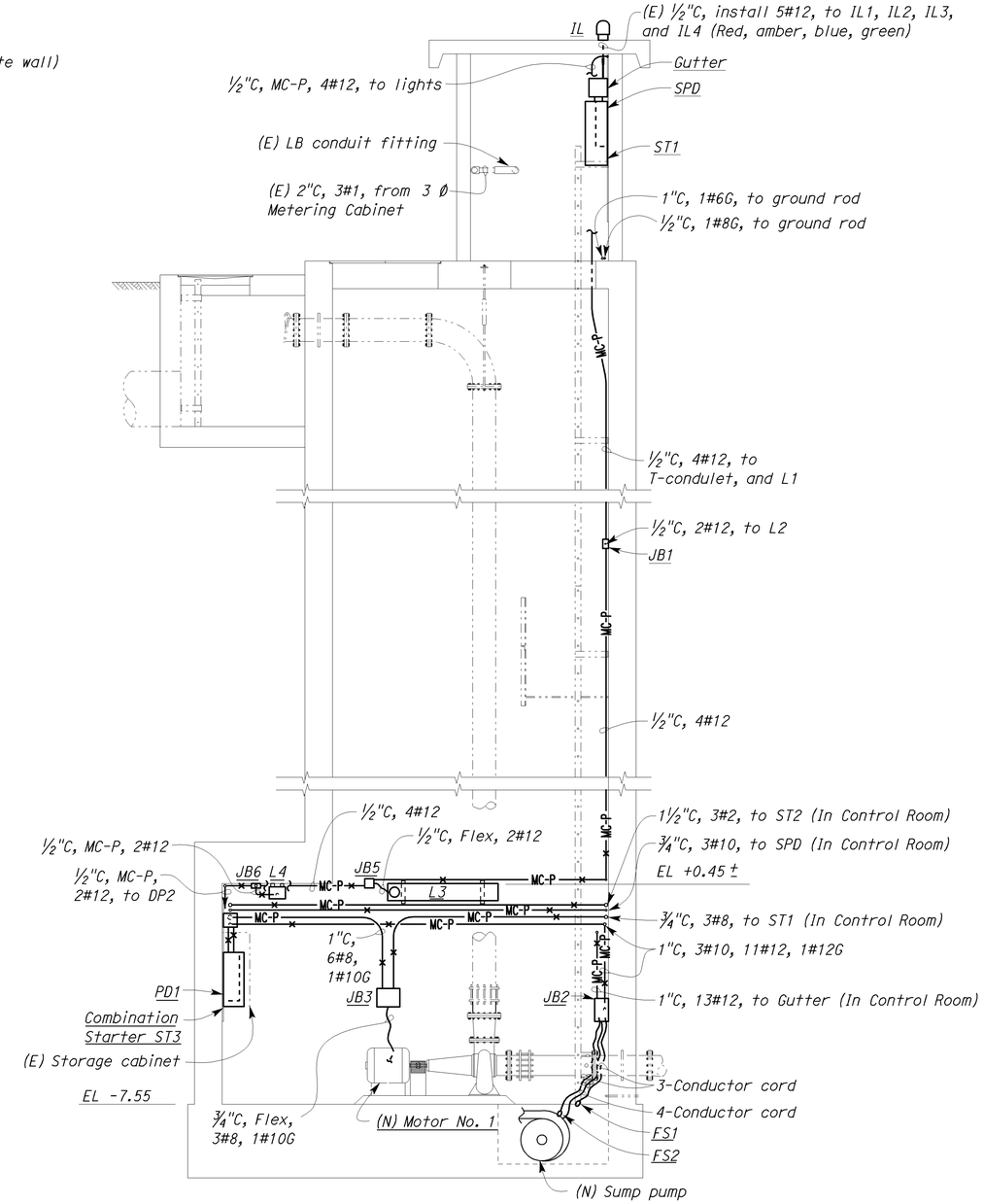

(D) SECTION
SCALE 3/8"= 1'-0"

General Notes:

A. All conduit support shall be 316 stainless steel channel, Unistrut No. P4000, B-Line System No. B54, or equal.

B. All expansion anchors shall be stainless steel anchors.

C. All conduit strap, one-hole clamp, and clamp back shall be PVC coated for PVC coated rigid steel conduit.

D. All existing work and equipment is shown in lightweight or dropout lines. New work and equipment is shown in bolder, heavier lines.

Notes:

(1) Plug all unused openings with two-piece steel seals.

(2) Fill all holes with caulking.

(3) Clean and paint existing plywood mounting panel with semi-gloss grey color paint. Add 1' X 4' plywood extension on top of existing plywood mounting panel to match existing, and paint to match.

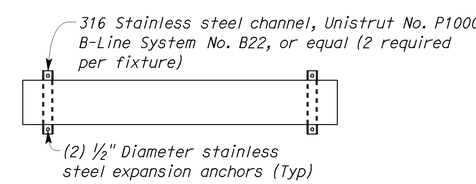

(1) LIGHT MOUNTING DETAIL
NO SCALE

THIS DRAWING ACCURATE FOR ELECTRICAL WORK ONLY.

	BY	CHECKED
DESIGN	Baldev S. Dehal	Tech Ngov
DETAILS	Kathi Andreasen	Baldev S. Dehal
QUANTITIES	Baldev S. Dehal	Tech Ngov

STATE OF CALIFORNIA
DEPARTMENT OF TRANSPORTATION

DIVISION OF ENGINEERING SERVICES
ELECTRICAL-MECHANICAL-WATER AND WASTEWATER DESIGN

BRIDGE NO. 57-256W
POST MILE

PUMPING PLANT REHABILITATION
H STREET PUMPING PLANT (LOCATION 2)
MODIFIED CONTROL ROOM AND PUMP MOTOR ROOM DETAILS NO. 2

SHEET **EE2-7**

TAEMWW Imperial Rev. 7/10

ORIGINAL SCALE IN INCHES FOR REDUCED PLANS 0 1 2 3

UNIT 3597
PROJECT NUMBER & PHASE 11000004061
EA 297101

DISREGARD PRINTS BEARING EARLIER REVISION DATES →
REVISION DATES (PRELIMINARY STAGE ONLY) 7/7/11 7/18/11 8/5/11 8/23/11 8/25/11 9/13/11 10/19/11 12/19/11 8/28/12
SHEET OF

28-AUG-2012 15:20
ee2_07.dgn

DIST.	COUNTY	ROUTE	POST MILES TOTAL PROJECT	SHEET NO.	TOTAL SHEETS
11	SD	5,8	Var	33	76

REGISTERED ELECTRICAL ENGINEER — 08-28-12 DATE

REGISTERED PROFESSIONAL ENGINEER — MARK CHEAP — No. E 15795 — Exp. 12-31-12 — ELEC — STATE OF CALIFORNIA

09-24-12
PLANS APPROVAL DATE

The State of California or its officers or agents shall not be responsible for the accuracy or completeness of electronic copies of this plan sheet.

CALIFORNIA STATE FIRE MARSHAL APPROVED FIRE AND PANIC ONLY
Approval of this plan does not authorize or approve any omission or deviation from applicable regulations. Final approval is subject to field inspection. One set of approved plans shall be available on the project site at all times.
Reviewed by: FRANCIS SOLICH
Approval date: 08-28-12
CSFM File No. 01-37-11-0007

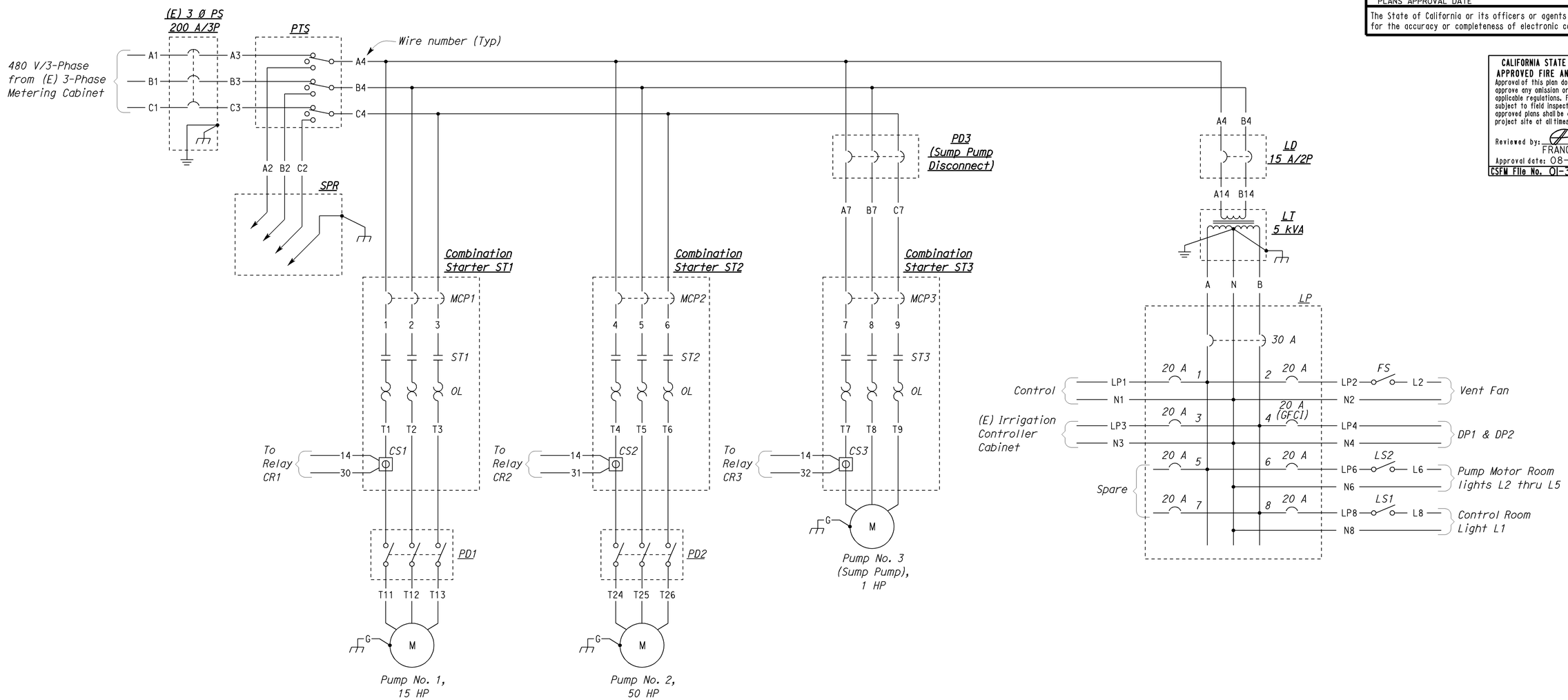

POWER SCHEMATIC DIAGRAM

DESIGN	BY Baldev S. Dehal	CHECKED Tech Ngov	
DETAILS	BY Kathi Andreasen	CHECKED Baldev S. Dehal	
QUANTITIES	BY Baldev S. Dehal	CHECKED Tech Ngov	

STATE OF CALIFORNIA
DEPARTMENT OF TRANSPORTATION

DIVISION OF ENGINEERING SERVICES
ELECTRICAL-MECHANICAL-WATER AND WASTEWATER DESIGN

BRIDGE NO. 57-256W
POST MILE

PUMPING PLANT REHABILITATION
H STREET PUMPING PLANT (LOCATION 2)
POWER SCHEMATIC DIAGRAM

SHEET **EE2-8**

TAEMWW Imperial Rev. 7/10

ORIGINAL SCALE IN INCHES FOR REDUCED PLANS 0 1 2 3

UNIT 3597
PROJECT NUMBER & PHASE 11000004061
EA 297101

DISREGARD PRINTS BEARING EARLIER REVISION DATES
REVISION DATES (PRELIMINARY STAGE ONLY) 6/29/11 8/29/11 8/29/11 10/19/11 12/19/11 8/28/12
SHEET OF

28-AUG-2012 15:20
ee2_08.dgn

DIST.	COUNTY	ROUTE	POST MILES TOTAL PROJECT	SHEET NO.	TOTAL SHEETS
11	SD	5,8	Var	34	76

REGISTERED ELECTRICAL ENGINEER — 08-28-12 DATE

REGISTERED PROFESSIONAL ENGINEER — MARK CHEAP — No. E 15795 — Exp. 12-31-12 — ELEC — STATE OF CALIFORNIA

09-24-12
PLANS APPROVAL DATE

The State of California or its officers or agents shall not be responsible for the accuracy or completeness of electronic copies of this plan sheet.

CALIFORNIA STATE FIRE MARSHAL APPROVED FIRE AND PANIC ONLY
Approval of this plan does not authorize or approve any omission or deviation from applicable regulations. Final approval is subject to field inspection. One set of approved plans shall be available on the project site at all times.
Reviewed by: FRANCIS SOLICH
Approval date: 08-28-12
CSFM File No. 01-37-11-0007

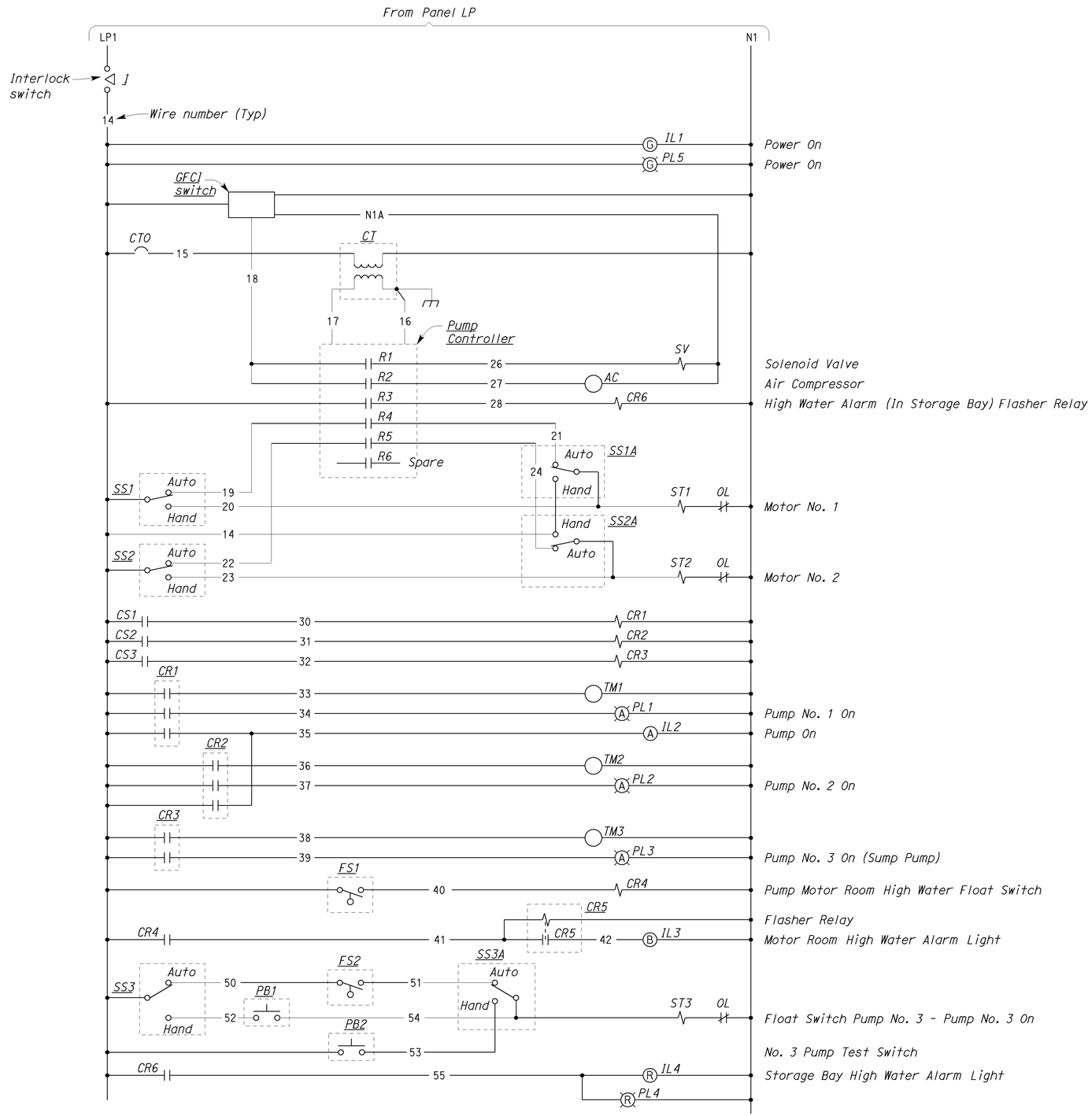

INDICATING LIGHT	DESCRIPTION
GREEN LIGHT	POWER ON
AMBER LIGHT	PUMP ON
BLUE LIGHT	MOTOR ROOM HIGH WATER ALARM
RED LIGHT	STORAGE BOX HIGH WATER ALARM

1 INDICATING LIGHT DESCRIPTION PLATE

DESIGN	BY Baldev S. Dehal	CHECKED Tech Ngov	
DETAILS	BY Kathi Andreasen	CHECKED Baldev S. Dehal	
QUANTITIES	BY Baldev S. Dehal	CHECKED Tech Ngov	

STATE OF CALIFORNIA
DEPARTMENT OF TRANSPORTATION

DIVISION OF ENGINEERING SERVICES
ELECTRICAL-MECHANICAL-WATER AND WASTEWATER DESIGN

BRIDGE NO. 57-256W
POST MILE

PUMPING PLANT REHABILITATION
H STREET PUMPING PLANT (LOCATION 2)
CONTROL SCHEMATIC DIAGRAM

SHEET EE2-9

TAEMWW Imperial Rev. 7/10

ORIGINAL SCALE IN INCHES FOR REDUCED PLANS 0 1 2 3

UNIT 3597
PROJECT NUMBER & PHASE 11000004061
EA 297101

DISREGARD PRINTS BEARING EARLIER REVISION DATES
REVISION DATES (PRELIMINARY STAGE ONLY) 6/29/11 8/29/11 8/29/11 10/19/11 12/19/11 8/28/12
SHEET OF

28-AUG-2012 15:20
ee2_09.dgn

DIST.	COUNTY	ROUTE	POST MILES TOTAL PROJECT	SHEET NO.	TOTAL SHEETS
11	SD	5,8	Var	35	76

REGISTERED ELECTRICAL ENGINEER — 08-28-12 DATE

REGISTERED PROFESSIONAL ENGINEER — MARK CHEAP — No. E 15795 — Exp. 12-31-12 — ELEC — STATE OF CALIFORNIA

09-24-12
PLANS APPROVAL DATE

The State of California or its officers or agents shall not be responsible for the accuracy or completeness of electronic copies of this plan sheet.

CALIFORNIA STATE FIRE MARSHAL APPROVED FIRE AND PANIC ONLY
Approval of this plan does not authorize or approve any omission or deviation from applicable regulations. Final approval is subject to field inspection. One set of approved plans shall be available on the project site at all times.
Reviewed by: FRANCIS SOLICH
Approval date: 08-28-12
CSFM File No. 01-37-11-0007

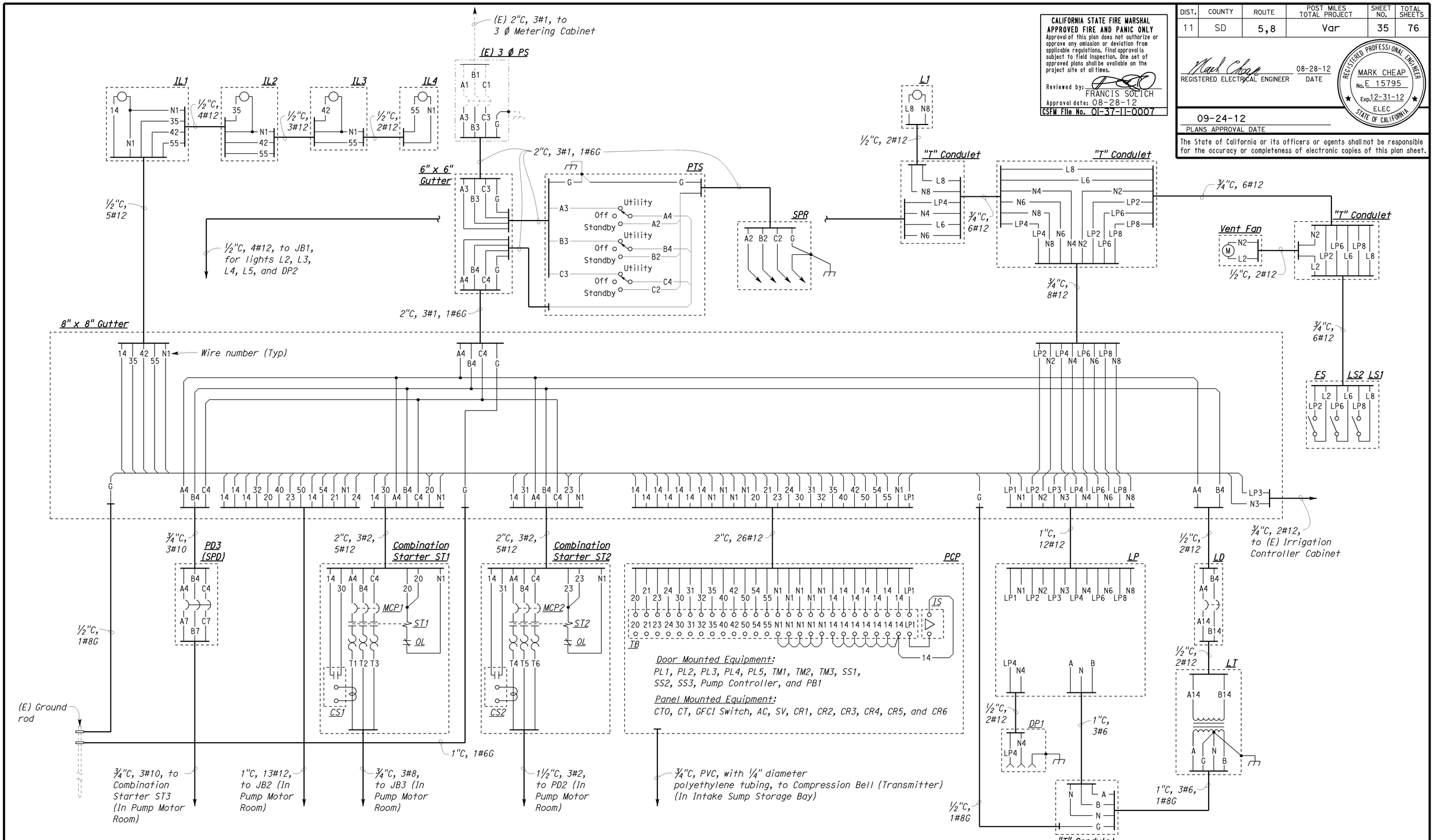

DESIGN	BY Baldev S. Dehal	CHECKED Tech Ngov	
DETAILS	BY Kathi Andreasen	CHECKED Baldev S. Dehal	
QUANTITIES	BY Baldev S. Dehal	CHECKED Tech Ngov	

STATE OF CALIFORNIA
DEPARTMENT OF TRANSPORTATION

DIVISION OF ENGINEERING SERVICES
ELECTRICAL-MECHANICAL-WATER AND WASTEWATER DESIGN

BRIDGE NO. 57-256W
POST MILE

PUMPING PLANT REHABILITATION

H STREET PUMPING PLANT (LOCATION 2)

CONTROL ROOM WIRING DIAGRAM

SHEET EE2-10

TAEMWW Imperial Rev. 7/10

ORIGINAL SCALE IN INCHES FOR REDUCED PLANS 0 1 2 3

UNIT 3597
PROJECT NUMBER & PHASE 11000004061
EA 297101

DISREGARD PRINTS BEARING EARLIER REVISION DATES →

REVISION DATES (PRELIMINARY STAGE ONLY) 6/24/11 7/8/11 8/3/11 8/25/11 9/15/11 10/19/11 10/19/11 8/28/12 SHEET OF

28-AUG-2012 15:20

ee2_10.dgn

DIST.	COUNTY	ROUTE	POST MILES TOTAL PROJECT	SHEET NO.	TOTAL SHEETS
11	SD	5,8	Var	36	76

REGISTERED ELECTRICAL ENGINEER — 08-28-12 DATE

REGISTERED PROFESSIONAL ENGINEER — MARK CHEAP — No. E 15795 — Exp. 12-31-12 — ELEC — STATE OF CALIFORNIA

09-24-12
PLANS APPROVAL DATE

The State of California or its officers or agents shall not be responsible for the accuracy or completeness of electronic copies of this plan sheet.

CALIFORNIA STATE FIRE MARSHAL APPROVED FIRE AND PANIC ONLY
Approval of this plan does not authorize or approve any omission or deviation from applicable regulations. Final approval is subject to field inspection. One set of approved plans shall be available on the project site at all times.
Reviewed by: FRANCIS SOLICH
Approval date: 08-28-12
CSFM File No. 01-37-11-0007

For continuation, see sheet EE2-10

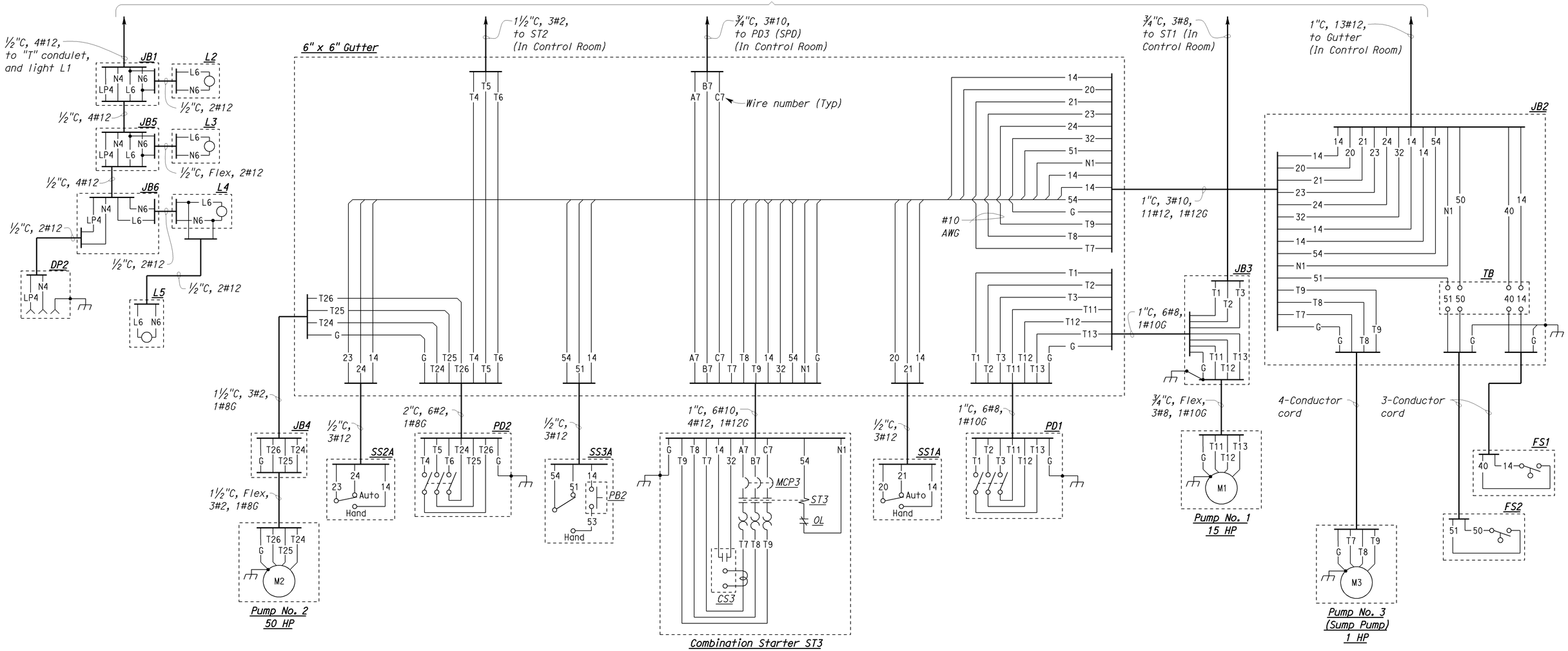

DESIGN	BY Baldev S. Dehal	CHECKED Tech Ngov	
DETAILS	BY Kathi Andreasen	CHECKED Baldev S. Dehal	
QUANTITIES	BY Baldev S. Dehal	CHECKED Tech Ngov	

STATE OF CALIFORNIA
DEPARTMENT OF TRANSPORTATION

DIVISION OF ENGINEERING SERVICES
ELECTRICAL-MECHANICAL-WATER AND WASTEWATER DESIGN

BRIDGE NO. 57-256W
POST MILE

PUMPING PLANT REHABILITATION

H STREET PUMPING PLANT (LOCATION 2)

PUMP ROOM WIRING DIAGRAM

SHEET EE2-11

TAEMWW Imperial Rev. 7/10

ORIGINAL SCALE IN INCHES FOR REDUCED PLANS 0 1 2 3

UNIT 3597
PROJECT NUMBER & PHASE 11000004061
EA 297101

DISREGARD PRINTS BEARING EARLIER REVISION DATES

REVISION DATES (PRELIMINARY STAGE ONLY) 6/29/11 7/18/11 8/15/11 8/25/11 10/19/11 12/19/11 8/28/12 SHEET OF

28-AUG-2012 15:20
ee2_11.dgn

DIST.	COUNTY	ROUTE	POST MILES TOTAL PROJECT	SHEET NO.	TOTAL SHEETS
11	SD	5,8	Var	37	76

CALIFORNIA STATE FIRE MARSHAL
APPROVED FIRE AND PANIC ONLY
Approval of this plan does not authorize or approve any omission or deviation from applicable regulations. Final approval is subject to field inspection. One set of approved plans shall be available on the project site at all times.
Reviewed by: FRANCIS SOLICH
Approval date: 08-28-12
CSFM File No. 01-37-11-0007

REGISTERED ELECTRICAL ENGINEER — 08-28-12 DATE

REGISTERED PROFESSIONAL ENGINEER — MARK CHEAP — No. E 15795 — Exp. 12-31-12 — ELEC — STATE OF CALIFORNIA

09-24-12
PLANS APPROVAL DATE

The State of California or its officers or agents shall not be responsible for the accuracy or completeness of electronic copies of this plan sheet.

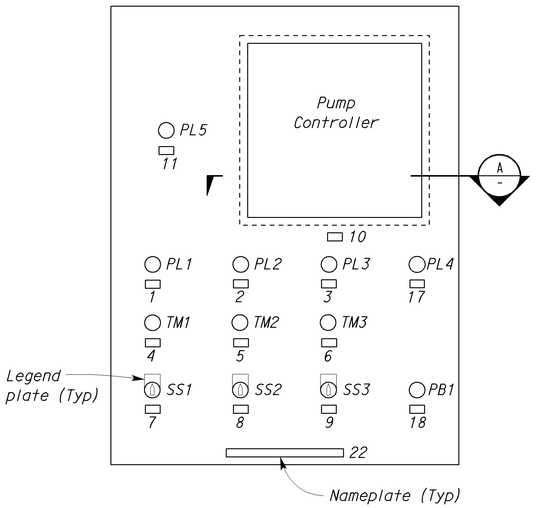

EXTERIOR DOOR
ELEVATION - PUMP CONTROL PANEL
NO SCALE

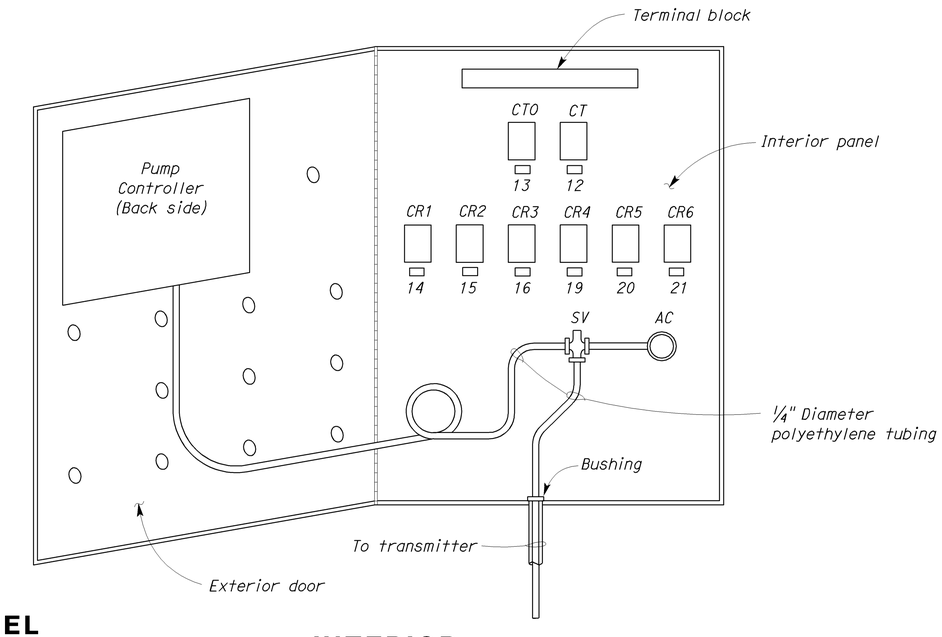

INTERIOR
ELEVATION - PUMP CONTROL PANEL
NO SCALE

General Notes:

A. All fasteners to concrete shall be stainless steel expansion anchorage. Size of studs shown.

B. Provide plastic wiring duct as required inside Pump Control Panel.

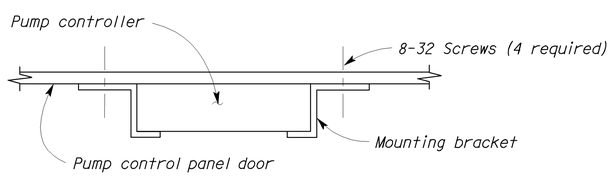

A SECTION
NO SCALE

NAMEPLATE SCHEDULE		
ITEM NO.	INSCRIPTION	LETTER HEIGHT
1	PUMP NO. 1 ON	1/8"
2	PUMP NO. 2 ON	1/8"
3	PUMP NO. 3 ON	1/8"
4	PUMP NO. 1 TIME METER - TM1	1/8"
5	PUMP NO. 2 TIME METER - TM2	1/8"
6	PUMP NO. 3 TIME METER - TM3	1/8"
7	PUMP NO. 1 - SS1	1/8"
8	PUMP NO. 2 - SS2	1/8"
9	PUMP NO. 3 - SS3	1/8"
10	PUMP CONTROLLER	1/8"
11	POWER ON	1/8"
12	CT	1/8"
13	CT0	1/8"
14	CR1	1/8"
15	CR2	1/8"
16	CR3	1/8"
17	HIGH WATER IN STORAGE BOX	1/8"
18	SUMP PUMP TEST PB	1/8"
19	CR4	1/8"
20	CR5	1/8"
21	CR6	1/8"
22	PUMP CONTROL PANEL	1/2"

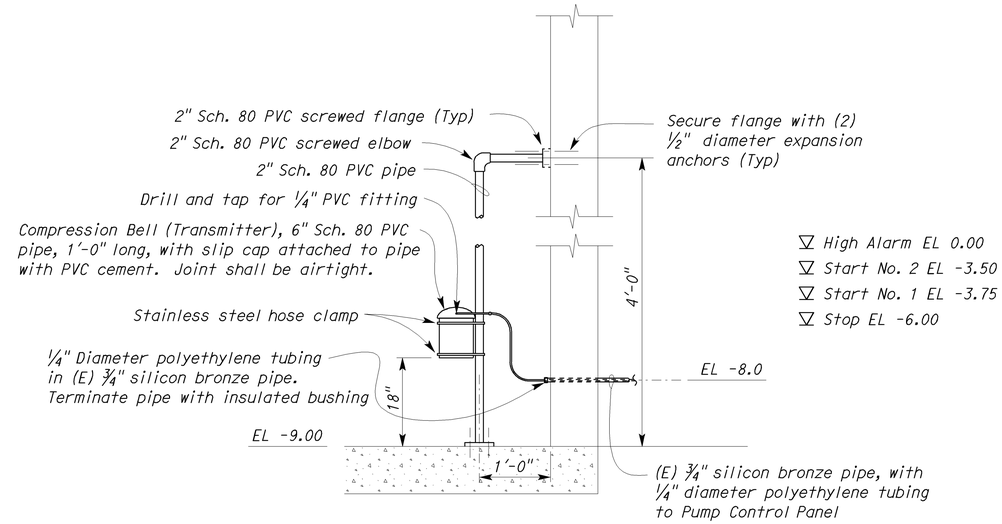

1 COMPRESSION BELL (TRANSMITTER) MOUNTING DETAIL
NO SCALE

	BY	CHECKED
DESIGN	Baldev S. Dehal	Tech Ngov
DETAILS	Kathi Andreasen	Baldev S. Dehal
QUANTITIES	Baldev S. Dehal	Tech Ngov

STATE OF CALIFORNIA
DEPARTMENT OF TRANSPORTATION

DIVISION OF ENGINEERING SERVICES
ELECTRICAL-MECHANICAL-WATER AND WASTEWATER DESIGN

BRIDGE NO. 57-256W
POST MILE

PUMPING PLANT REHABILITATION
H STREET PUMPING PLANT (LOCATION 2)
ELECTRICAL DETAILS

SHEET EE2-12

TAEMWW Imperial Rev. 7/10

ORIGINAL SCALE IN INCHES FOR REDUCED PLANS 0 1 2 3

UNIT 3597
PROJECT NUMBER & PHASE 11000004061
EA 297101

DISREGARD PRINTS BEARING EARLIER REVISION DATES
REVISION DATES (PRELIMINARY STAGE ONLY) 6/29/11 8/24/11 8/29/11 8/25/11 9/13/11 10/19/11 12/19/11 8/28/12
SHEET OF

28-AUG-2012 13:20
ee2_12.dgn

DIST.	COUNTY	ROUTE	POST MILES TOTAL PROJECT	SHEET NO.	TOTAL SHEETS
11	SD	5,8	Var	38	76

REGISTERED ELECTRICAL ENGINEER — 08-28-12 DATE

REGISTERED PROFESSIONAL ENGINEER MARK CHEAP No. E 15795 Exp. 12-31-12 ELEC STATE OF CALIFORNIA

09-24-12
PLANS APPROVAL DATE

The State of California or its officers or agents shall not be responsible for the accuracy or completeness of electronic copies of this plan sheet.

CALIFORNIA STATE FIRE MARSHAL APPROVED FIRE AND PANIC ONLY
Approval of this plan does not authorize or approve any omission or deviation from applicable regulations. Final approval is subject to field inspection. One set of approved plans shall be available on the project site at all times.
Reviewed by: FRANCIS SOLICH
Approval date: 08-28-12
CSFM File No. 01-37-11-0007

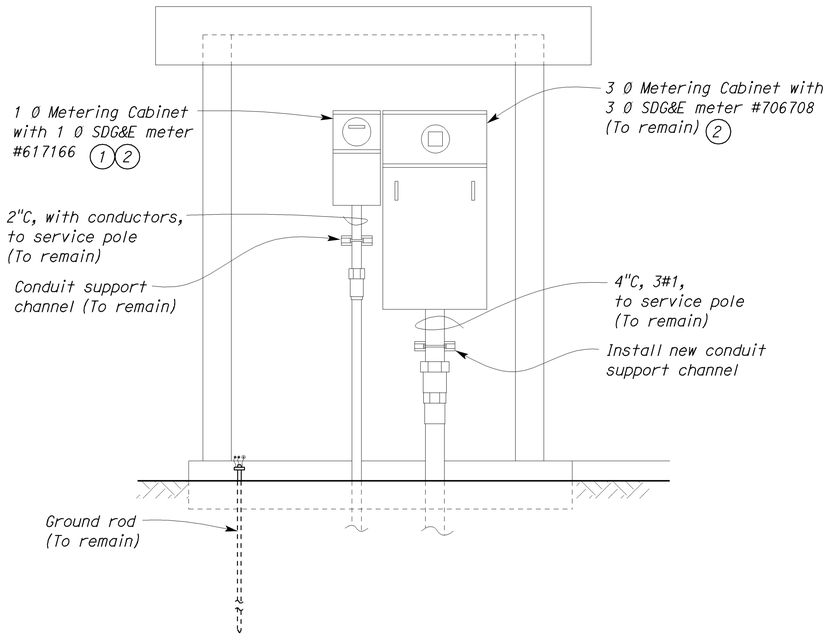

METERING EQUIPMENT
(A) NORTH WALL EXTERIOR ELEVATION
SCALE 3/4" = 1'-0"

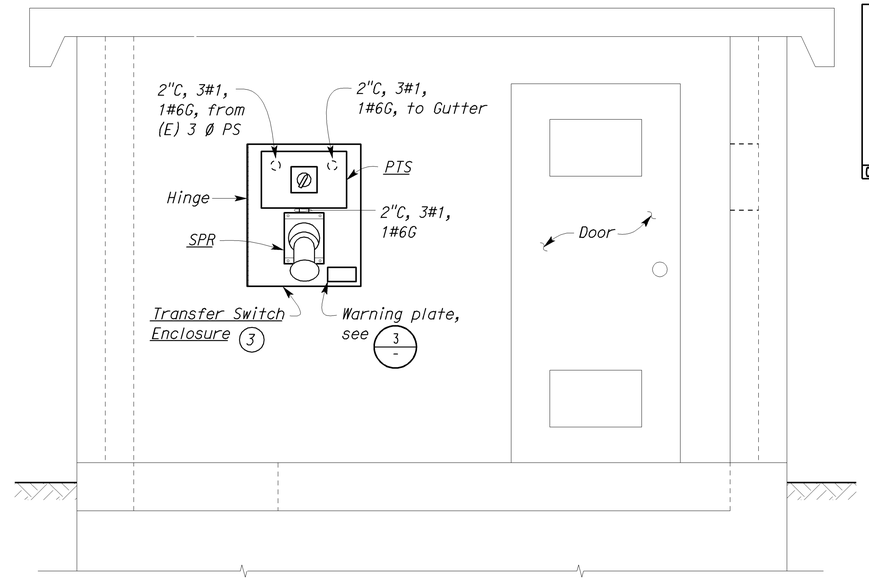

TRANSFER SWITCH ENCLOSURE
(B) WEST WALL EXTERIOR ELEVATION
SCALE 3/4" = 1'-0"

General Note:

A. *Plug all holes on the wall and paint to match the wall color.*

Notes:

(1) *Arrange with San Diego Gas & Electric Utility Company to disconnect power and meter removal of 1 Ø service. Install blank plate in the meter faceplate.*

(2) *Clean and paint with semi-gloss grey color paint.*

(3) *Transfer Switch Enclosure cover not shown for clarity.*

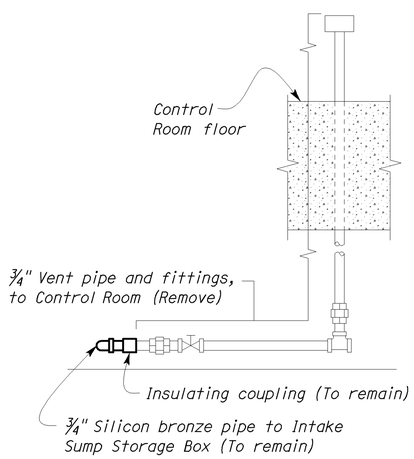

(1) DETAIL
SCALE 2" = 1'-0"

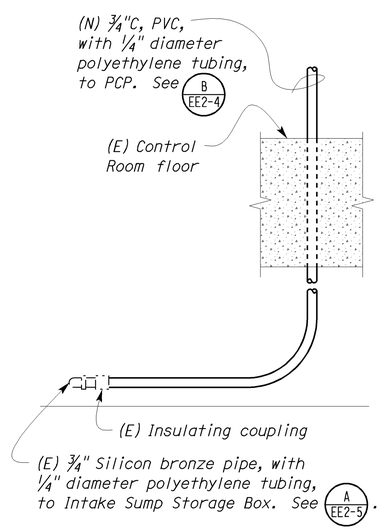

(2) DETAIL
SCALE 2" = 1'-0"

PHASE SEQUENCE IS
A-B-C
SELECT PROPER VOLTAGE
BEFORE CONNECTING PLUG

(3) DETAIL
NO SCALE

THIS DRAWING ACCURATE FOR ELECTRICAL WORK ONLY.

DESIGN	BY Baldev S. Dehal	CHECKED Tech Ngov	
DETAILS	BY Kathi Andreasen	CHECKED Baldev S. Dehal	
QUANTITIES	BY Baldev S. Dehal	CHECKED Tech Ngov	

STATE OF CALIFORNIA
DEPARTMENT OF TRANSPORTATION

DIVISION OF ENGINEERING SERVICES
ELECTRICAL-MECHANICAL-WATER AND WASTEWATER DESIGN

BRIDGE NO. 57-256W
POST MILE

PUMPING PLANT REHABILITATION
H STREET PUMPING PLANT (LOCATION 2)
CONTROL HOUSE EXTERIOR ELEVATIONS AND MISCELLANEOUS DETAILS

SHEET EE2-13

TAEMWW Imperial Rev. 7/10

ORIGINAL SCALE IN INCHES FOR REDUCED PLANS 0 1 2 3

UNIT 3597
PROJECT NUMBER & PHASE 11000004061
EA 297101

DISREGARD PRINTS BEARING EARLIER REVISION DATES
REVISION DATES (PRELIMINARY STAGE ONLY) 7/14/11 7/26/11 8/15/11 8/25/11 9/13/11 10/18/11 12/19/11 8/28/12
SHEET OF

28-AUG-2012 15:20
ee2_13.dgn

DIST.	COUNTY	ROUTE	POST MILES TOTAL PROJECT	SHEET NO.	TOTAL SHEETS
11	SD	5,8	Var	39	76

REGISTERED ELECTRICAL ENGINEER — 08-28-12 DATE

REGISTERED PROFESSIONAL ENGINEER — MARK CHEAP — No. E 15795 — Exp. 12-31-12 — ELEC — STATE OF CALIFORNIA

09-24-12
PLANS APPROVAL DATE

The State of California or its officers or agents shall not be responsible for the accuracy or completeness of electronic copies of this plan sheet.

GRAPHIC SYMBOLS FOR ELECTRICAL WIRING AND LAYOUT DIAGRAMS

SYMBOL	DESCRIPTION
	POLE-TOP ELECTROLIER
	POLE-ARM ELECTROLIER
CEILING WALL	
(S) -(S)	SURFACE FLUORESCENT, METAL HALIDE OR SODIUM VAPOR FIXTURE
(R) -(R)	RECESSED FLUORESCENT, METAL HALIDE, OR SODIUM VAPOR FIXTURE
(X) -(X)	EXIT LIGHT
	SURFACE OR PENDANT INDIVIDUAL FLUORESCENT FIXTURE
(R)	RECESSED INDIVIDUAL FLUORESCENT FIXTURE
	SURFACE OR PENDANT CONTINUOUS ROW FLUORESCENT FIXTURES

NOTE: A LOWER CASE LETTER NEAR GRAPHIC LIGHTING FIXTURE SYMBOL DENOTES THAT FIXTURE IS CONTROLLED BY A SIMILARLY MARKED SWITCH, AN ALPHA-NUMERIC SYMBOL NEAR GRAPHIC LIGHTING FIXTURE SYMBOL DENOTES FIXTURE TYPE, (I=INCANDESCENT, F=FLUORESCENT, MH=METAL HALIDE, H=HIGH PRESSURE SODIUM VAPOR), DESIGN TYPE, NUMBER OF LAMPS AND WATTAGE.

EXAMPLE : (4) F 2 - 2 x 32
- 32 WATT LAMPS
- 2 LAMPS
- DESIGN TYPE
- FLUORESCENT
- NUMBER OF FIXTURES

SYMBOL	DESCRIPTION
(B) -(B)	BLANK OUTLET
(J) -(J)	JUNCTION BOX
(D)	DROP CORD
	SINGLE RECEPTACLE OUTLET
	DUPLEX RECEPTACLE OUTLET
(GFCI)	DUPLEX RECEPTACLE OUTLET (WITH GFCI)
(GFCI) WP	DUPLEX RECEPTACLE OUTLET, WEATHERPROOF (WITH GFCI)
	SINGLE, SPECIAL PURPOSE RECEPTACLE OUTLET
	DUPLEX, SPECIAL PURPOSE RECEPTACLE OUTLET
(F)	FAN HANGER RECEPTACLE
S	SINGLE POLE SWITCH
S_2	DOUBLE POLE SWITCH
S_P	SWITCH AND PILOT LIGHT
S_{MC}	MOMENTARY CONTACT SWITCH
S_{RC}	REMOTE CONTROL SWITCH
S_{WP}	WEATHERPROOF SWITCH
S_F	FAN SWITCH
S_L	LIGHT SWITCH
S_H	HEATER SWITCH

SYMBOL	DESCRIPTION
S_1^O	OCCUPANCY SENSOR WALL SWITCH, SINGLE LEVEL
S_2^O	OCCUPANCY SENSOR WALL SWITCH, BILEVEL
S_M	MOTION SENSOR SWITCH
S_T	MANUAL MOTOR STARTING SWITCH, THERMAL OVERLOAD TYPE
S_{HP}	MANUAL MOTOR STARTING SWITCH, WITHOUT OVERLOAD ELEMENT
T_S	TIMER SWITCH
S	SWITCH AND SINGLE RECEPTACLE
S	SWITCH AND DUPLEX RECEPTACLE
(T)	THERMOSTAT
(PS)	PRESSURE SWITCH
(R)	CONTROL RELAY
(FS)	FLOW SWITCH
PEC	PHOTOELECTRIC CELL
	FLUSH-MOUNTED PANELBOARD AND CABINET
	SURFACE-MOUNTED PANELBOARD AND CABINET
	LIGHTING PANEL
	POWER PANEL
	COMBINATION LIGHTING AND POWER
MC	MOTOR CONTROLLER
	DISCONNECT SWITCH
	CONDUIT CONCEALED IN CEILING OR WALL
	CONDUIT CONCEALED IN FLOOR
	CONDUIT EXPOSED
MC-P	CONDUIT, PVC COATED RIGID STEEL, EXPOSED

(2) 1/2"C, PVC, 2#12
- CONDUCTOR INFO (PER CONDUIT)
- CONDUIT TYPE
- CONDUIT SIZE
- NUMBER OF CONDUITS (NO NUMBER INDICATES ONE CONDUIT)

SYMBOL	DESCRIPTION
	CROSS-LINES INDICATE NUMBER OF #12 AWG CONDUCTORS. LONGER CROSS-LINE INDICATES 1#12 AWG (G) FOR EQUIPMENT GROUNDING CONDUCTOR. NO CROSS-LINE INDICATES 2#12 WITH 1#12 (G) UNLESS OTHERWISE NOTED. ALL CONDUIT 1/2" UNLESS OTHERWISE NOTED.
A1, 2	HOMERUN TO PANELBOARD, ARROWS INDICATE NUMBER OF CIRCUITS, LETTER DENOTES PANELBOARD, NUMERAL DENOTES CIRCUIT.
SM	SURFACE METAL RACEWAY
MC	CONDUIT, RIGID STEEL, UNDERGROUND
PVC	CONDUIT, POLYVINYL CHLORIDE, UNDERGROUND
	CONDUIT, FLEXIBLE
	CONDUIT, TURN UP
	CONDUIT, TURN DOWN
	CONDUIT SEAL, EXPLOSION-PROOF
	CONDUIT, EXPANSION JOINT
	ADAPTER, ONE TYPE CONDUIT TO ANOTHER
	POLE
	PULL BOX-LETTER INDICATES TYPE OF PULL BOX (E-ELECTRICAL, T-TELEPHONE, R-RADIO)
(T)	PULL BOX (TRAFFIC RATED)-LETTER INDICATES TYPE OF PULL BOX (E-ELECTRICAL, T-TELEPHONE, R-RADIO)

A / EE-2 — SECTION/ELEVATION LETTER — SHEET NUMBER

1 / EE-2 — DETAIL NUMBER — SHEET NUMBER

REMODEL WORK

SYMBOL	DESCRIPTION
	EXISTING FLUORESCENT FIXTURE-TO REMAIN
	EXISTING FLUORESCENT FIXTURE-REMOVE
	EXISTING INCANDESCENT FIXTURE-TO REMAIN
	EXISTING INCANDESCENT FIXTURE-REMOVE
	EXISTING OUTLET-TO REMAIN
	EXISTING RECEPTACLE OUTLET-TO REMAIN
	EXISTING RECEPTACLE OUTLET-REMOVE
-E-E-	EXISTING CONDUIT AND CONDUCTORS-TO REMAIN UNLESS OTHERWISE NOTED
-**-	EXISTING CONDUIT AND CONDUCTORS-REMOVE
S	EXISTING SWITCH-TO REMAIN
	EXISTING SWITCH-REMOVE
(J)	EXISTING JUNCTION BOX-TO REMAIN
	EXISTING JUNCTION BOX-REMOVE

GRAPHIC SYMBOLS FOR ELECTRICAL DIAGRAMS

SYMBOL	DESCRIPTION
	CIRCUIT BREAKER, SINGLE POLE
	CIRCUIT BREAKER, DOUBLE POLE
	CIRCUIT BREAKER, THREE POLE
GFCI	CIRCUIT BREAKER, WITH GROUND FAULT CIRCUIT INTERRUPTER
	CONTACT, NORMALLY OPEN
	CONTACT, NORMALLY CLOSED
	CONTACT, NORMALLY CLOSED, TIME DELAY CLOSING ON DE-ENERGIZING
	CONTACT, NORMALLY OPEN, TIME DELAY OPENING ON DE-ENERGIZING
	CONTACT, NORMALLY OPEN, TIME DELAY CLOSING ON ENERGIZING
	CONTACT, NORMALLY CLOSED, TIME DELAY OPENING ON ENERGIZING
	CONTACT, SINGLE POLE DOUBLE-THROW
	OPERATING COIL
	LIQUID LEVEL ACTUATED SWITCH, NORMALLY CLOSED
	LIQUID LEVEL ACTUATED SWITCH, NORMALLY OPEN
	PRESSURE ACTUATED SWITCH, NORMALLY CLOSED
	PRESSURE ACTUATED SWITCH, NORMALLY OPEN
	FLOW ACTUATED SWITCH, NORMALLY CLOSED
	FLOW ACTUATED SWITCH, NORMALLY OPEN
	TEMPERATURE ACTUATED SWITCH, NORMALLY CLOSED
	TEMPERATURE ACTUATED SWITCH, NORMALLY OPEN
	LIMIT SWITCH, NORMALLY CLOSED
	LIMIT SWITCH, NORMALLY OPEN
	PUSHBUTTON SWITCH, NORMALLY CLOSED
	PUSHBUTTON SWITCH, NORMALLY OPEN
	SWITCH, SINGLE-POLE
	SWITCH, SINGLE-POLE, DOUBLE-THROW
	SWITCH, 3-POLE
	SWITCH, 3-POLE, 3-POSITION
	SWITCH, SINGLE-POLE, 3-POSITION
	THERMAL OVERLOAD
	FUSE
	RESISTOR
	TRANSFORMER WINDING
	GROUNDING ELECTRODE
	ENCLOSURE BOND
(A)	PILOT LIGHT (A=AMBER, G=GREEN, R=RED)
(G)	GENERATOR
(M)	MOTOR
(F)	FAN MOTOR

CALIFORNIA STATE FIRE MARSHAL APPROVED FIRE AND PANIC ONLY
Approval of this plan does not authorize or approve any omission or deviation from applicable regulations. Final approval is subject to field inspection. One set of approved plans shall be available on the project site at all times.
Reviewed by: FRANCIS SOLICH
Approval date: 08-28-12
CSFM File No. 01-37-11-0007

ABBREVIATIONS

A	AMPERES
ACS	AIR COMPRESSOR STARTER
AI	ANALOG INPUT
AL	ALARM LIGHT
AO	ANALOG OUTPUT
BD	BUILDING DISCONNECT
BRK	BREAKER
C	CONDUIT
CB	CIRCUIT BREAKER
CKT	CIRCUIT
CR	CONTROL RELAY
CSW	CURRENT SWITCH
CT	CONTROL TRANSFORMER
CTO	CONTROL TRANSFORMER OVERLOAD
DI	DIGITAL INPUT
DO	DIGITAL OUTPUT
DP	DUPLEX PLUG RECEPTACLE
(E)	EXISTING
EF	EXHAUST FAN
EL	ELEVATION
F	FUSE
FL	FAILURE LIGHT
FLA	FLASHER
FLEX	FLEXIBLE CONDUIT
FLS	FLOW SWITCH
FR	FAILURE RESET
FS	FLOAT SWITCH
G	GROUND
GFCI	GROUND FAULT CIRCUIT INTERRUPTER
GRS	GALVANIZED RIGID STEEL
IL	INDICATING LIGHT
ILS	INDICATING LIGHT SWITCH
IR	INDUCTION RELAY
JB	JUNCTION BOX
L	LIGHT
LC	LIGHTING CONTACTOR
LD	LIGHT DISCONNECT
LL	LIQUID LEVEL RELAY
LP	LIGHT PANEL
LS	LIGHT SWITCH
LT	LIGHT TRANSFORMER
LTO	LIGHT TRANSFORMER OVERLOAD
MB	MAIN BREAKER
MC	METALLIC CONDUIT
MCC	MOTOR CONTROL CENTER
MCP	MOTOR CIRCUIT PROTECTOR
MD	MOTOR DISCONNECT
MSB	MAIN SWITCHBOARD
MT	EMPTY CONDUIT
(N)	NEW
NC	NORMALLY CLOSED
NO	NORMALLY OPEN
Ø	PHASE
OL	OVERLOAD
P	POLE
PB	PULL BOX
PB	PUSHBUTTON
PCP	PUMP CONTROL PANEL
PEC	PHOTOELECTRIC CELL
PL	PILOT LIGHT
PS	POWER SWITCH
PTS	POWER TRANSFER SWITCH
PVC	POLYVINYL CHLORIDE
RES	RESISTOR
S	STARTER COIL
SD	SERVICE DISCONNECT
SFR	SEAL FAILURE RELAY
SL	SUMP LIGHT
SPD	SUMP PUMP DISCONNECT
SPR	STANDBY POWER RECEPTACLE
SS	SELECTOR SWITCH
ST	STARTER
SV	SOLENOID VALVE
T	TRANSFORMER
TB	TERMINAL BLOCKS
TDR	TIME DELAY RELAY
TGLS	TOGGLE SWITCH
TM	TIME METER
TOT	TOTAL
TS	TIMER SWITCH
TSW	TEST SWITCH
TYP	TYPICAL
UPS	UNINTERRUPTIBLE POWER SUPPLY
V	VOLT
WLS	WATER LEVEL SWITCH
WP	WEATHERPROOF

	BY	CHECKED
DESIGN	Baldev S. Dehal	Tech Ngov
DETAILS	Kathi Andreasen	Baldev S. Dehal
QUANTITIES	Baldev S. Dehal	Tech Ngov

STATE OF CALIFORNIA
DEPARTMENT OF TRANSPORTATION

DIVISION OF ENGINEERING SERVICES
ELECTRICAL-MECHANICAL-WATER AND WASTEWATER DESIGN

BRIDGE NO. 57-180W
POST MILE

75/5 SEPARATION PUMPING PLANT (LOCATION 3)

PUMPING PLANT REHABILITATION

LEGEND

SHEET EE3-0

TAEMWW Imperial Rev. 7/10

ORIGINAL SCALE IN INCHES FOR REDUCED PLANS 0 1 2 3

UNIT 3597
PROJECT NUMBER & PHASE 11000004061
EA 297101

DISREGARD PRINTS BEARING EARLIER REVISION DATES →

REVISION DATES (PRELIMINARY STAGE ONLY): 2/13/11 3/11/11 6/14/11 8/23/11 8/25/11 9/13/11 10/18/11 11/7/11 12/12/11 8/28/12

SHEET OF

28-AUG-2012 15:20

ee3_00.dgn

DIST.	COUNTY	ROUTE	POST MILES TOTAL PROJECT	SHEET NO.	TOTAL SHEETS
11	SD	5,8	Var	40	76

REGISTERED ELECTRICAL ENGINEER — 08-28-12 DATE

REGISTERED PROFESSIONAL ENGINEER MARK CHEAP No. E 15795 Exp. 12-31-12 ELEC STATE OF CALIFORNIA

09-24-12
PLANS APPROVAL DATE

The State of California or its officers or agents shall not be responsible for the accuracy or completeness of electronic copies of this plan sheet.

CERTIFICATE OF COMPLIANCE (Page 1 of 4) LTG-1C

Project Name:	PUMPING PLANT REHABILITATION 75/5 SEPARATION PUMPING PLANT (LOCATION 3)		Date: 07/20/2011
Project Address:	INTERSTATE 5 & PALM AVENUE INTERSECTION SAN DIEGO, CA 92154	Climate Zone: 7	Building CFA: N/A Unconditioned Floor Area: 250 SF

General Information

Building Type:	☑ Nonresidential	☐ High-Rise Residential	☐ Hotel/Motel	
☐ Schools	☐ Relocatable Public Schools	☐ Conditioned Spaces	☑ Unconditioned Spaces	
Phase of Construction:	☐ New Construction	☐ Addition	☑ Alteration	
Method of Compliance:	☐ Complete Building	☑ Area Category	☐ Tailored	

Documentation Author's Declaration Statement

- I Certify that this Certificate of Compliance documentation is accurate and complete.

Name:	BALDEV S. (DAVE) DEHAL	Signature:	
Company:	CALTRANS	Date:	07/20/2011
Address:	1801 30TH STREET	If applicable: CEA # CEPE #	
City/State/Zip:	SACRAMENTO, CA 95816	Phone:	(916) 227-8346

Principal Lighting Designer's Declaration Statement

- I am eligible under Division 3 of the California Business and Professions Code to accept responsibility for the lighting design.
- This Certificate of Compliance identifies the lighting features and performance specifications required for compliance with Title 24, Pages 1 and 6 of the California Code of Regulations.
- The design features represented on this Certificate of Compliance are consistent with the information provided to document this design on the other applicable compliance forms, worksheets, calculations, plans and specifications submitted to the enforcement agency for approval with this building permit application.

Name:	TECH NGOV	Signature:	
Company:	CALTRANS	Phone:	(916) 227-8529
Address:	1801 30TH STREET	License #	E 14521
City/State/Zip:	SACRAMENTO, CA 95816	Date:	07/20/2011

Lighting Mandatory Measures

Indicate location on building plans of Mandatory Measures Note Block: EE3-0.2

LIGHTING COMPLIANCE FORMS & WORKSHEETS (Check box if worksheet is included)

For detailed instructions on the use of this and all Energy Efficiency Standards compliance forms, please refer to the Nonresidential Manual published by the California Energy Commission.

☑	LTG-1C Pages 1 through 4	Certificate of Compliance. All pages required on plans for all submittals.
☐	LTG-2C	Lighting Controls Credit Worksheet
☑	LTG-3C	Indoor Lighting Power Allowance
☐	LTG-4C Pages 1 through 4	Tailored Method Worksheet
☐	LTG-5C Pages 1 and 2	Line Voltage Track Lighting Worksheet

CERTIFICATE OF COMPLIANCE (Page 2 of 4) LTG-1C

INDOOR LIGHTING SCHEDULE and FIELD INSPECTION ENERGY CHECKLIST

Project Name:	PUMPING PLANT REHABILITATION 75/5 SEPARATION PUMPING PLANT (LOCATION 3)	Date: 07/20/2011
Installation Certificate, LTG-1-INST (Retain a copy and verify form is completed and signed.)		Field Inspector ☐
Certificate of Acceptance, LTG-2A and LTG-3A (Retain a copy and verify form is completed and signed.)		Field Inspector ☐

A separate Lighting Schedule Must Be Filled Out for Conditioned and Unconditioned Spaces Installed Lighting Power listed on this Lighting Schedule is only for: ☐ CONDITIONED SPACE ☑ UNCONDITIONED SPACE

☐ The actual indoor lighting power listed below includes all installed permanent and portable lighting system in accordance with S 146 (a)

☐ Only for offices: Up to the first 0.2 watts per square foot of portable lighting shall not be required to be included in the calculation of actual indoor lighting power density in accordance with Exception to S 146 (a). All portable lighting in excess of 0.2 watts per square foot is totaled below.

	Luminaire Schedule (Type, Lamps, Ballasts)		Installed Watts						
A	B	C	D	E		F	G	H	
				How wattage was determined				Field 2 Inspector	
Name or Item Tag	Complete Luminaire Description (i.e, 3 lamp fluorescent troffer, F32T8, one dimmable electronic ballast)	Special Features	Watts per Luminaire 1	CEC Default from NA8	According to S 130 (d or e)	Number of Luminaires	Installed Watts (D x F)	Pass	Fail
L1	F32T8, WRAPAROUND, CEILING MOUNTED, ES	✓	54	☐	☐	1	54	☐	☐
L2	F32T8, WRAPAROUND, WALL MOUNTED, ES	✓	54	☐	☐	1	54	☐	☐
L3	F32T8, WRAPAROUND, WALL MOUNTED, ES	✓	54	☐	☐	1	54	☐	☐
L4	F32T8, WRAPAROUND, CEILING MOUNTED, ES	✓	54	☐	☐	1	54	☐	☐
L5	F32T8, WRAPAROUND, WALL MOUNTED, ES	✓	54	☐	☐	1	54	☐	☐
				☐	☐			☐	☐
				☐	☐			☐	☐
				☐	☐			☐	☐
				☐	☐			☐	☐
				☐	☐			☐	☐
				☐	☐			☐	☐
				☐	☐			☐	☐
				☐	☐			☐	☐
				☐	☐			☐	☐
				☐	☐			☐	☐
				☐	☐			☐	☐
				☐	☐			☐	☐
			INSTALLED WATTS PAGE TOTAL:				270		

Building total number of pages	1	Installed Watts Building Total (Sum of all pages)	270

Enter into LTG-1C Page 4 of 4

1. Wattage shall be determined according to Section 130 (d and e). Wattage shall be rating of light fixture, not rating of bulb.
2. If Fail then describe on Page 2 of the Inspection Checklist Form and take appropriate action to correct. Verify building plans if necessary.

CALIFORNIA STATE FIRE MARSHAL APPROVED FIRE AND PANIC ONLY
Approval of this plan does not authorize or approve any omission or deviation from applicable regulations. Final approval is subject to field inspection. One set of approved plans shall be available on the project site at all times.
Reviewed by: FRANCIS SOLICH
Approval date: 08-28-12
CSFM File No. 01-37-11-0007

DESIGN	BY Baldev S. Dehal	CHECKED Tech Ngov	
DETAILS	BY Kathi Andreasen	CHECKED Baldev S. Dehal	
QUANTITIES	BY Baldev S. Dehal	CHECKED Tech Ngov	

STATE OF CALIFORNIA DEPARTMENT OF TRANSPORTATION

DIVISION OF ENGINEERING SERVICES
ELECTRICAL-MECHANICAL-WATER AND WASTEWATER DESIGN

BRIDGE NO. 57-180W
POST MILE

PUMPING PLANT REHABILITATION
75/5 SEPARATION PUMPING PLANT (LOCATION 3)
TITLE 24 COMPLIANCE NO. 1

SHEET **EE3-0.1**

TAEMWW Imperial Rev. 7/10

ORIGINAL SCALE IN INCHES FOR REDUCED PLANS 0 1 2 3

UNIT 3597
PROJECT NUMBER & PHASE 11000004061
EA 297101

DISREGARD PRINTS BEARING EARLIER REVISION DATES →
REVISION DATES (PRELIMINARY STAGE ONLY) 7/25/11 8/25/11 9/13/11 10/19/11 11/19/11 12/19/11 8/28/12
SHEET OF

28-AUG-2012 15:21
ee3_00_1.dgn

DIST.	COUNTY	ROUTE	POST MILES TOTAL PROJECT	SHEET NO.	TOTAL SHEETS
11	SD	5,8	Var	41	76

REGISTERED ELECTRICAL ENGINEER — 08-28-12 DATE

REGISTERED PROFESSIONAL ENGINEER MARK CHEAP No. E 15795 Exp. 12-31-12 ELEC STATE OF CALIFORNIA

09-24-12
PLANS APPROVAL DATE

The State of California or its officers or agents shall not be responsible for the accuracy or completeness of electronic copies of this plan sheet.

CALIFORNIA STATE FIRE MARSHAL APPROVED FIRE AND PANIC ONLY
Approval of this plan does not authorize or approve any omission or deviation from applicable regulations. Final approval is subject to field inspection. One set of approved plans shall be available on the project site at all times.
Reviewed by: FRANCIS SOLICH
Approval date: 08-28-12
CSFM File No. 01-37-11-0007

CERTIFICATE OF COMPLIANCE (Page 3 of 4) LTG-1C

Project Name: PUMPING PLANT REHABILITATION
75/5 SEPARATION PUMPING PLANT (LOCATION 3)

Date: 07/20/2011

INDOOR LIGHTING SCHEDULE and FIELD ENERGY CHECKLIST

Fill in controls for all spaces: a) area controls, b) multi-level controls, c) manual daylighting controls for daylit areas> 250 sq ft, automatic daylighting controls for daylit areas> 2,500 sq ft, d) shut-off controls, e) display lighting controls, f) tailored lighting controls-general lighting controlled separately from display, ornamental and display case lighting and g) demand responsive automatic controls for retail stores> 50,000 sq ft, in accordance with Section 131.

MANDATORY LIGHTING CONTROLS - FIELD INSPECTION ENERGY CHECKLIST				Field Inspector	
Type/Description	Number of Units	Location in Building		Pass	Fail
N/A (SECTION 146-30)				☐	☐
				☐	☐
				☐	☐
				☐	☐
				☐	☐
				☐	☐
				☐	☐
				☐	☐
				☐	☐
				☐	☐
				☐	☐
				☐	☐
				☐	☐

Field Inspectors's Notes or Discrepancies:

2008 Nonresidential Compliance Forms *July 2010*

CERTIFICATE OF COMPLIANCE (Page 4 of 4) LTG-1C

Project Name: PUMPING PLANT REHABILITATION
75/5 SEPARATION PUMPING PLANT (LOCATION 3)

Date: 07/20/2011

Conditioned and Unconditioned space Lighting must not be combined for compliance

Indoor Lighting Power for Conditioned Spaces		Watts	Indoor Lighting Power for Unconditioned Spaces		Watts
Installed Lighting (from Conditioned LTG-1C Page 2			Installed Lighting (from Unconditioned LTG-1C Page 2		270
Lighting Control Credit Conditioned Spaces (from LTG-2C)	-		Lighting Control Credit Unconditioned Spaces (from LTG-2C)	-	
Adjusted Installed Lighting Power	=		Adjusted Installed Lighting Power	=	270
Complies if Installed ≤ Allowed			Complies if Installed ≤ Allowed		
Allowed Lighting Power Conditioned Spaces (from LTG-3C)			Allowed Lighting Power Unconditioned Spaces (from LTG-3C)		300

Required Acceptance Tests

Designer:
This form is to be used by the designer and attached to the plans. Listed below is the acceptance test for the Lighting system, LTG-2A and LTG-3A. The designer is required to check the acceptance tests and list all control devices serving the building or space shall be certified as meeting the Acceptance Requirements for Code Compliance. If all the lighting system or control of a certain type requires a test, list the different lighting and the number of systems. The NA7 Section in the Appendix of the Nonresidential Reference Appendices Manual describes the test. Since this form will be part of the plans, completion of this section will allow the responsible party to budget for the scope of work appropriately. Forms can be grouped by type of Luminaire controlled.

Enforcement Agency:
System Acceptance. Before Occupancy Permit is granted for a newly constructed building or space or when ever new lighting system with controls is installed in the building or space shall be certified as meeting the Acceptance Requirements.
The LTG-2A and LTG-3A forms are not considered a complete form and is not to be accepted by the enforcement agency unless the boxes are checked and/or filled and signed. In addition, a Certificate of Acceptance forms shall be submitted to the enforcement agency that certifies plans, specifications, installation certificates, and operating and maintenance information meet the requirements of S 10-103 (b) of Title 24 Part 6. The field inspector must receive the properly filled out and signed forms before the building can receive final occupancy. A copy of the LTG-2A and LTG-3A for each different lighting luminaire control(s) must be provided to the owner of the building for their records.

Luminaires Controlled				LTG-2A and LTG-3A
Equipment Requiring Testing	Description	Number of like Controls	Location	Controls and Sensors and Automatic Daylighting Controls Acceptance
				☐
				☐
				☐
				☐
				☐
				☐
				☐
				☐
				☐
				☐
				☐
				☐
				☐
				☐

2008 Nonresidential Compliance Forms *July 2010*

DESIGN	BY Baldev S. Dehal	CHECKED Tech Ngov	
DETAILS	BY Kathi Andreasen	CHECKED Baldev S. Dehal	
QUANTITIES	BY Baldev S. Dehal	CHECKED Tech Ngov	

STATE OF CALIFORNIA
DEPARTMENT OF TRANSPORTATION

DIVISION OF ENGINEERING SERVICES
ELECTRICAL-MECHANICAL-WATER AND WASTEWATER DESIGN

BRIDGE NO. 57-180W
POST MILE

PUMPING PLANT REHABILITATION
75/5 SEPARATION PUMPING PLANT (LOCATION 3)
TITLE 24 COMPLIANCE NO. 2

SHEET EE3-0.2

TAEMWW Imperial Rev. 7/10

ORIGINAL SCALE IN INCHES FOR REDUCED PLANS 0 1 2 3

UNIT 3597
PROJECT NUMBER & PHASE 11000004061
EA 297101

DISREGARD PRINTS BEARING EARLIER REVISION DATES →
REVISION DATES (PRELIMINARY STAGE ONLY) 7/29/11 8/29/11 10/19/11 11/19/11 12/19/11 8/28/12
SHEET OF

28-AUG-2012 15:21
ee3_00_2.dgn

DIST.	COUNTY	ROUTE	POST MILES TOTAL PROJECT	SHEET NO.	TOTAL SHEETS
11	SD	5,8	Var	42	76

REGISTERED ELECTRICAL ENGINEER — 08-28-12 DATE

REGISTERED PROFESSIONAL ENGINEER MARK CHEAP No. E 15795 Exp. 12-31-12 ELEC STATE OF CALIFORNIA

09-24-12
PLANS APPROVAL DATE

The State of California or its officers or agents shall not be responsible for the accuracy or completeness of electronic copies of this plan sheet.

GENERAL NOTE:

1. EXISTING UTILITY FACILITIES HAVE NOT BEEN PLOTTED ON THESE PLANS.

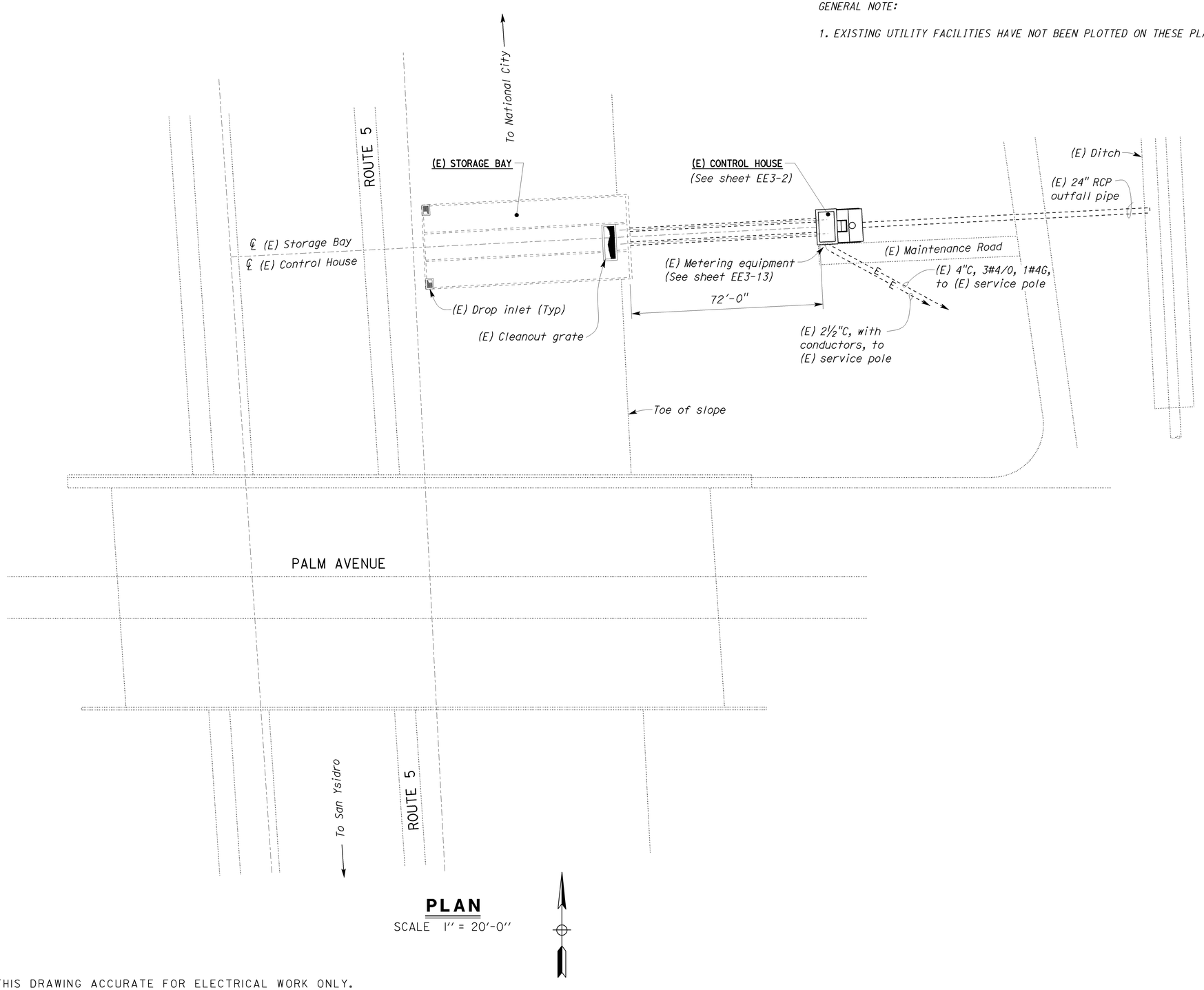

PLAN
SCALE 1" = 20'-0"

THIS DRAWING ACCURATE FOR ELECTRICAL WORK ONLY.

CALIFORNIA STATE FIRE MARSHAL
APPROVED FIRE AND PANIC ONLY
Approval of this plan does not authorize or approve any omission or deviation from applicable regulations. Final approval is subject to field inspection. One set of approved plans shall be available on the project site at all times.
Reviewed by: FRANCIS SOLICH
Approval date: 08-28-12
CSFM File No. OI-37-11-0007

DESIGN SUPERVISOR
DESIGN ENGINEER

	BY	CHECKED
DESIGN	Baldev S. Dehal	Tech Ngov
DETAILS	Kathi Andreasen	Baldev S. Dehal
QUANTITIES	Baldev S. Dehal	Tech Ngov

STATE OF CALIFORNIA
DEPARTMENT OF TRANSPORTATION

DIVISION OF ENGINEERING SERVICES
ELECTRICAL-MECHANICAL-WATER AND WASTEWATER DESIGN

BRIDGE NO. 57-180W
POST MILE

PUMPING PLANT REHABILITATION
75/5 SEPARATION PUMPING PLANT (LOCATION 3)
ELECTRICAL SITE PLAN

SHEET **EE3-1**

TAEMWW Imperial Rev. 7/10

ORIGINAL SCALE IN INCHES FOR REDUCED PLANS 0 1 2 3

UNIT 3597
PROJECT NUMBER & PHASE 11000004061
EA 297101

DISREGARD PRINTS BEARING EARLIER REVISION DATES →
REVISION DATES (PRELIMINARY STAGE ONLY) 4/19/11 5/19/11 6/19/11 7/18/11 8/18/11 8/23/11 10/19/11 11/19/11 12/19/11 8/28/12
SHEET OF

28-AUG-2012 15:21
ee3_01.dgn

DIST.	COUNTY	ROUTE	POST MILES TOTAL PROJECT	SHEET NO.	TOTAL SHEETS
11	SD	5,8	Var	43	76

REGISTERED ELECTRICAL ENGINEER — 08-28-12 DATE

REGISTERED PROFESSIONAL ENGINEER MARK CHEAP No. E 15795 Exp. 12-31-12 ELEC STATE OF CALIFORNIA

09-24-12
PLANS APPROVAL DATE

The State of California or its officers or agents shall not be responsible for the accuracy or completeness of electronic copies of this plan sheet.

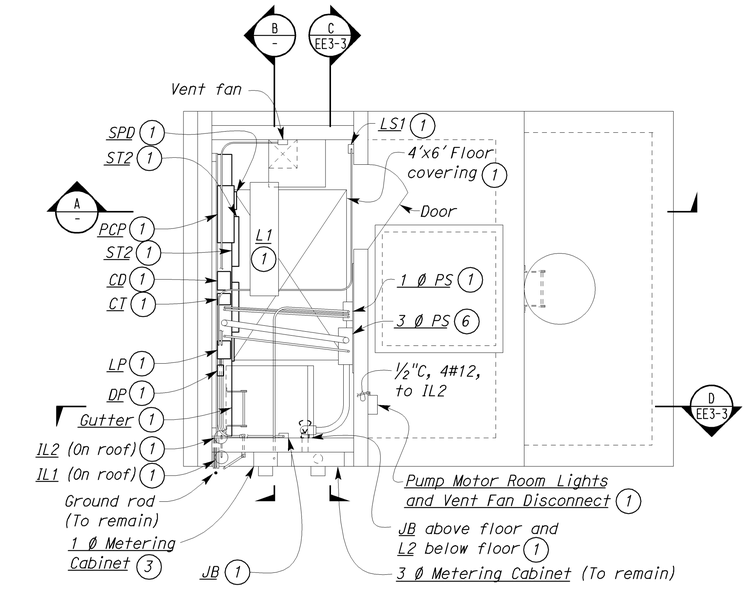

CONTROL ROOM PLAN

SCALE 3/8"= 1'-0"

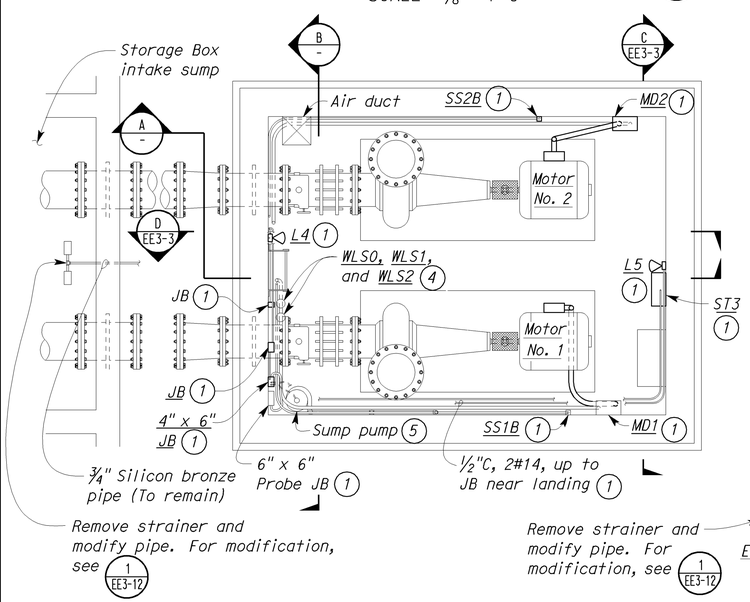

PUMP MOTOR ROOM PLAN

SCALE 3/8"= 1'-0"

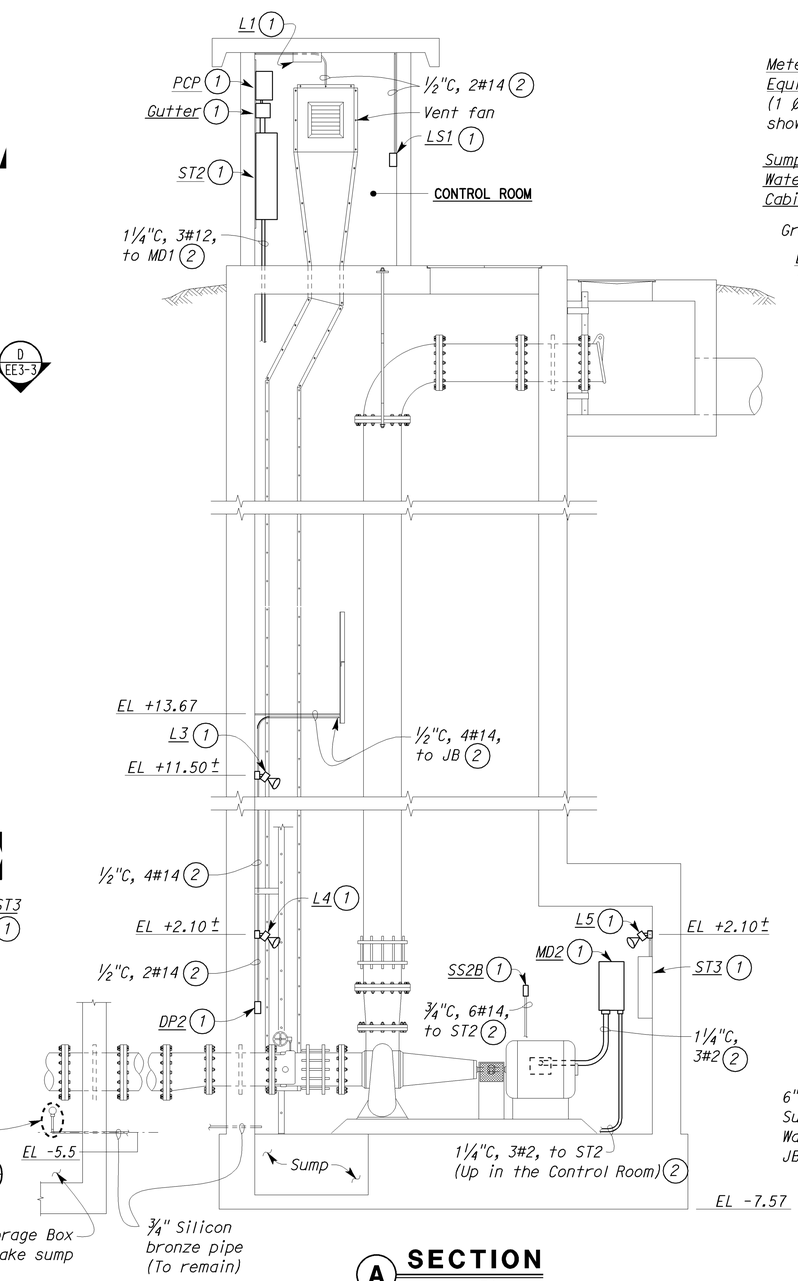

A SECTION

SCALE 3/8"= 1'-0"

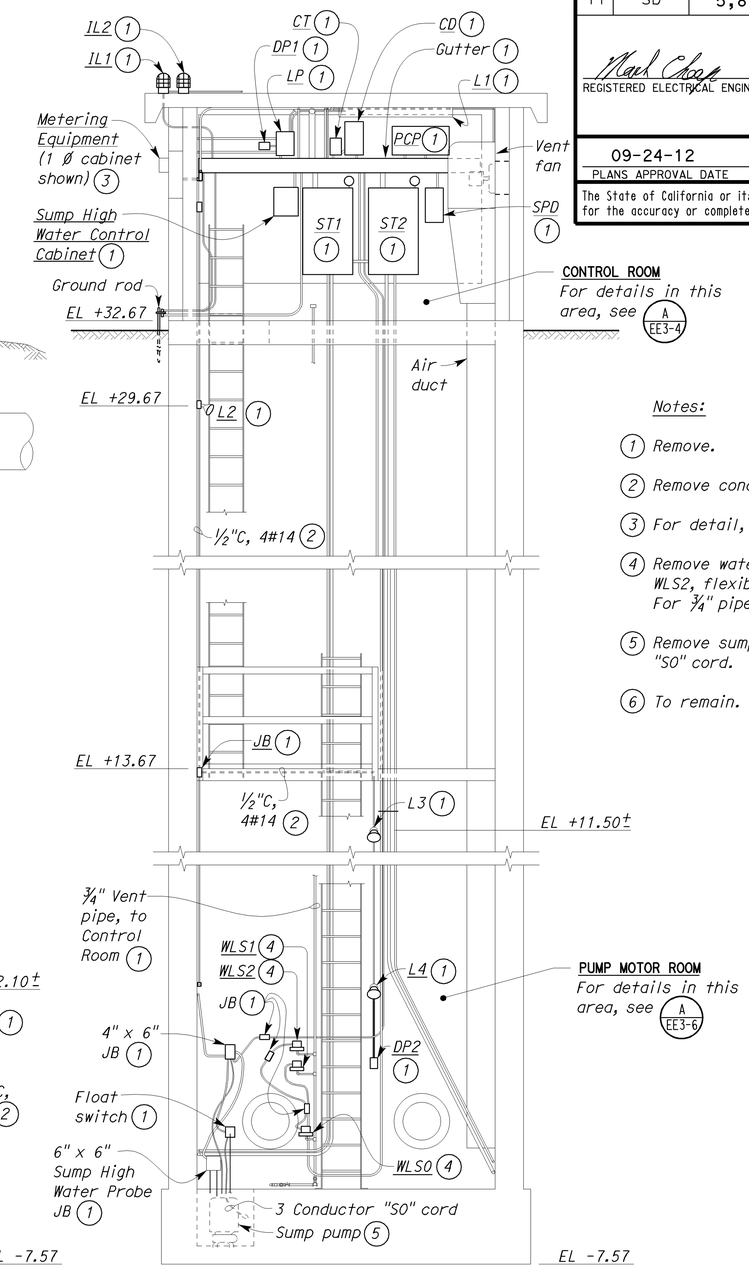

B SECTION

SCALE 3/8"= 1'-0"

CALIFORNIA STATE FIRE MARSHAL APPROVED FIRE AND PANIC ONLY
Approval of this plan does not authorize or approve any omission or deviation from applicable regulations. Final approval is subject to field inspection. One set of approved plans shall be available on the project site at all times.
Reviewed by: FRANCIS SOLICH
Approval date: 08-28-12
CSFM File No. 01-37-11-0007

Notes:

1. Remove.
2. Remove conductors and conduit.
3. For detail, see A EE3-13.
4. Remove water level switch WLS0, WLS1, WLS2, flexible conduits and conductors. For ¾" pipe modification, see 2 EE3-13.
5. Remove sump pump and 3 conductor "SO" cord.
6. To remain.

THIS DRAWING ACCURATE FOR ELECTRICAL WORK ONLY.

	BY	CHECKED
DESIGN	Baldev S. Dehal	Tech Ngov
DETAILS	Kathi Andreasen	Baldev S. Dehal
QUANTITIES	Baldev S. Dehal	Tech Ngov

STATE OF CALIFORNIA
DEPARTMENT OF TRANSPORTATION

DIVISION OF ENGINEERING SERVICES
ELECTRICAL-MECHANICAL-WATER AND WASTEWATER DESIGN

BRIDGE NO. 57-180W
POST MILE 75/5 SEPARATION PUMPING PLANT (LOCATION 3)

PUMPING PLANT REHABILITATION

EXISTING CONTROL ROOM AND PUMP MOTOR ROOM DETAILS NO. 1

SHEET EE3-2

TAEMWW Imperial Rev. 7/10

ORIGINAL SCALE IN INCHES FOR REDUCED PLANS 0 1 2 3

UNIT 3597
PROJECT NUMBER & PHASE 11000004061
EA 297101

DISREGARD PRINTS BEARING EARLIER REVISION DATES

REVISION DATES (PRELIMINARY STAGE ONLY): 2/14/11, 11/19/11, 12/19/11, 8/28/12, 5/26/11, 6/8/11, 7/8/11, 8/23/11, 10/19/11

SHEET OF

28-AUG-2012 15:21

ee3_02.dgn

DIST.	COUNTY	ROUTE	POST MILES TOTAL PROJECT	SHEET NO.	TOTAL SHEETS
11	SD	5,8	Var	44	76

REGISTERED ELECTRICAL ENGINEER — 08-28-12 DATE

REGISTERED PROFESSIONAL ENGINEER MARK CHEAP No. E 15795 Exp. 12-31-12 ELEC STATE OF CALIFORNIA

09-24-12
PLANS APPROVAL DATE

The State of California or its officers or agents shall not be responsible for the accuracy or completeness of electronic copies of this plan sheet.

CALIFORNIA STATE FIRE MARSHAL APPROVED FIRE AND PANIC ONLY
Approval of this plan does not authorize or approve any omission or deviation from applicable regulations. Final approval is subject to field inspection. One set of approved plans shall be available on the project site at all times.
Reviewed by: FRANCIS SOLICH
Approval date: 08-28-12
CSFM File No. 01-37-11-0007

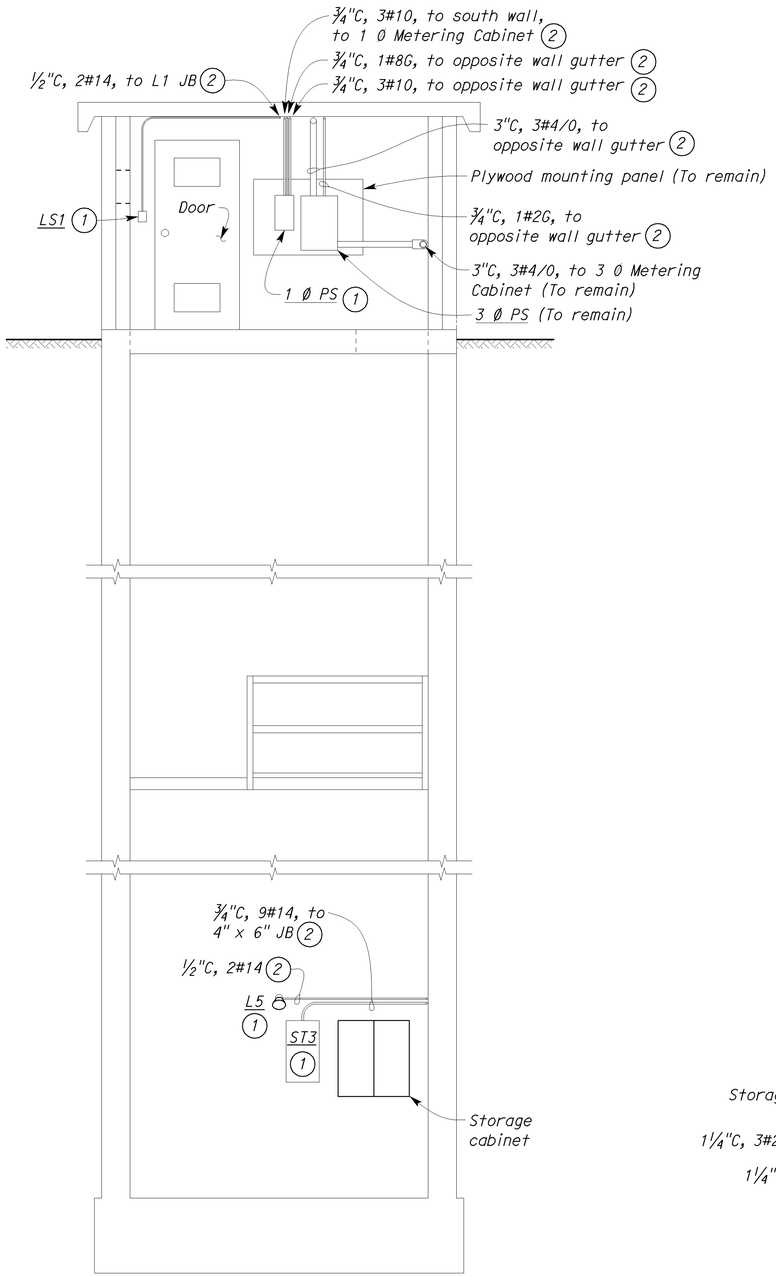

C SECTION
SCALE 3/8"= 1'-0"

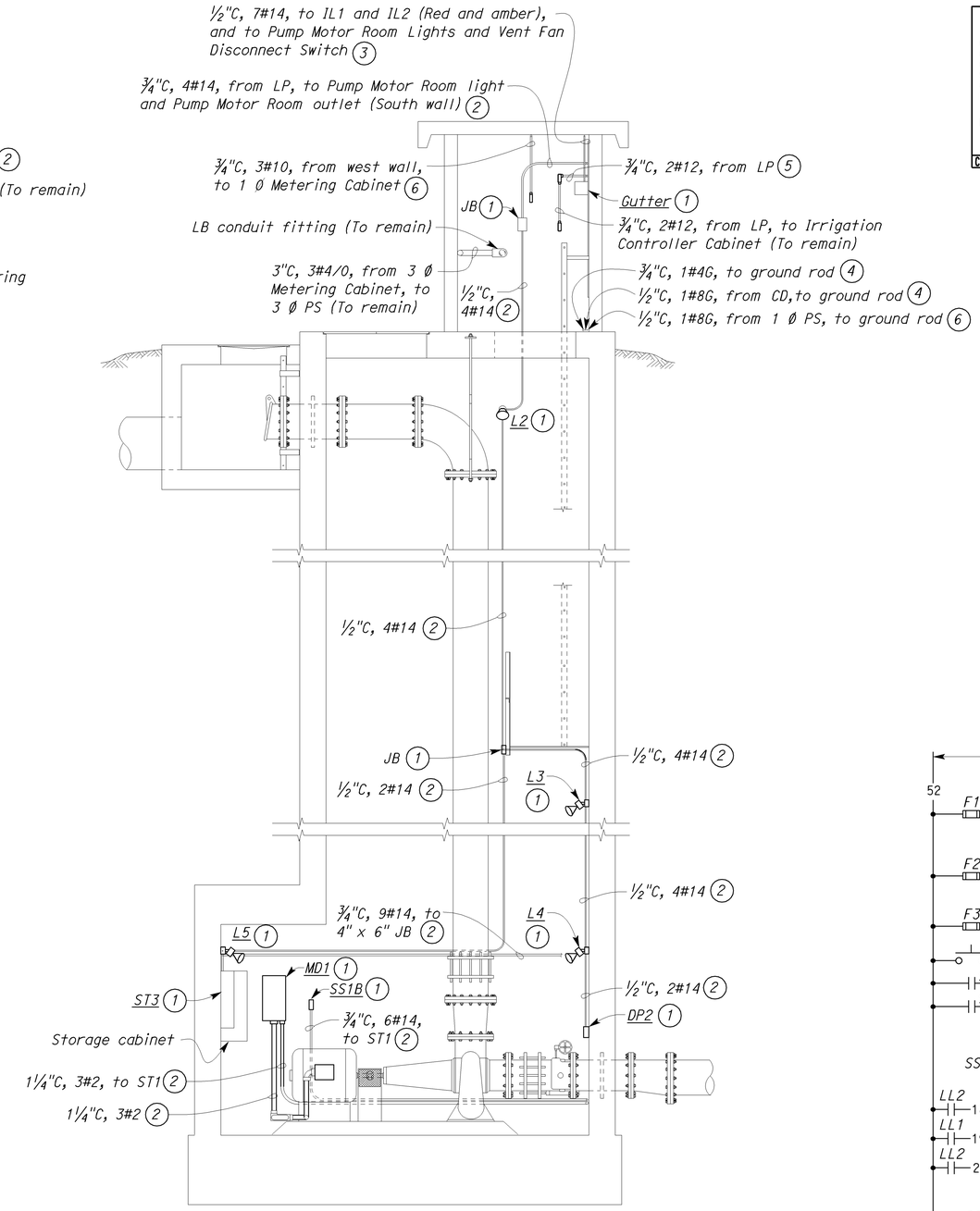

D SECTION
SCALE 3/8"= 1'-0"

Notes:

(1) Remove.

(2) Remove conductors and conduit.

(3) Remove conductors and portion of the conduit from gutter. Portion of conduit through the wall and roof to remain. Remove conductors and conduit from IL2 to Pump Motor Room Lights and Vent Fan Disconnect Switch., located on exterior of east wall.

(4) Remove conductors and conduit from the connection closest to the wall. Portion of conduit in the wall to remain. Install plug at the end of conduit.

(5) Disconnect conductors from Panel LP. Pull back conductors thru LB condulet. Remove portion of conduit, from LB condulet to LP.

(6) Remove conductor and conduit from connection closest to wall. Plug the conduit on both ends.

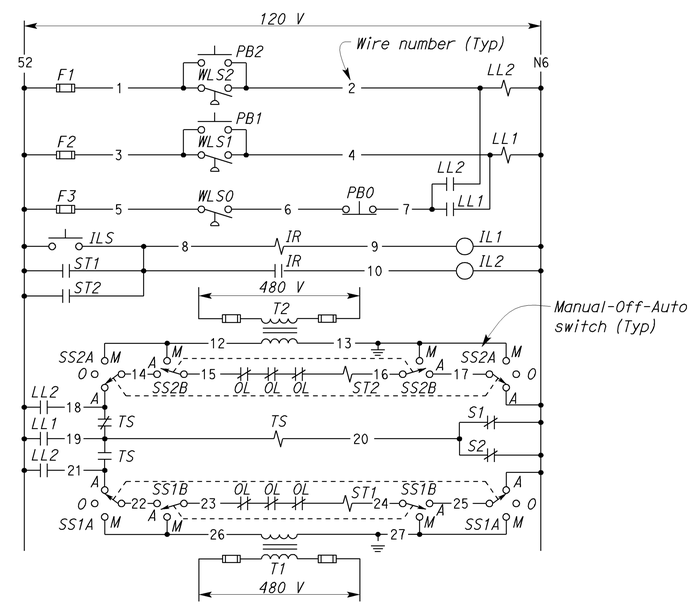

CONTROL SCHEMATIC

THIS DRAWING ACCURATE FOR ELECTRICAL WORK ONLY.

	BY	CHECKED
DESIGN	Baldev S. Dehal	Tech Ngov
DETAILS	Kathi Andreasen	Baldev S. Dehal
QUANTITIES	Baldev S. Dehal	Tech Ngov

STATE OF CALIFORNIA DEPARTMENT OF TRANSPORTATION

DIVISION OF ENGINEERING SERVICES
ELECTRICAL-MECHANICAL-WATER AND WASTEWATER DESIGN

BRIDGE NO. 57-180W
POST MILE

PUMPING PLANT REHABILITATION
75/5 SEPARATION PUMPING PLANT (LOCATION 3)
EXISTING CONTROL ROOM AND PUMP MOTOR ROOM DETAILS NO. 2

SHEET **EE3-3**

TAEMWW Imperial Rev. 7/10

ORIGINAL SCALE IN INCHES FOR REDUCED PLANS 0 1 2 3

UNIT 3597
PROJECT NUMBER & PHASE 11000004061
EA 297101

DISREGARD PRINTS BEARING EARLIER REVISION DATES →
REVISION DATES (PRELIMINARY STAGE ONLY): 2/14/11 8/28/12 5/11/11 5/26/11 6/9/11 8/22/11 10/19/11 11/14/11 12/12/11
SHEET OF

28-AUG-2012 15:21
ee3_03.dgn

DIST.	COUNTY	ROUTE	POST MILES TOTAL PROJECT	SHEET NO.	TOTAL SHEETS
11	SD	5,8	Var	45	76

REGISTERED ELECTRICAL ENGINEER — 08-28-12 DATE

REGISTERED PROFESSIONAL ENGINEER MARK CHEAP No. E 15795 Exp. 12-31-12 ELEC STATE OF CALIFORNIA

09-24-12
PLANS APPROVAL DATE

The State of California or its officers or agents shall not be responsible for the accuracy or completeness of electronic copies of this plan sheet.

General Notes:

A. Cut all conduits going through Control Room floor flush with top and botttom of the floor. Fill with mortar.

B. In Modified Elevation, all existing work and equipment is shown in lightweight or dropout lines. New work and equipment is shown in bolder, heavier lines.

Notes:

(1) Remove.

(2) Remove conductors and conduit.

(3) Remove conductors and portion of the conduit. Portion of conduit through the wall and roof to remain. Remove conductors and conduit from IL2 to Pump Motor Room Lights and Vent Fan Disconnect Switch, located on exterior of east wall.

(4) Remove conductors and conduit from the connection closest to the wall. Portion of conduit in the wall to remain.

(5) 1 Ø Metering Cabinet and 3 Ø Metering Cabinet (Not shown for clarity) to remain. For details, see sheet EE3-13.

(6) Remove conductor and conduit from the connection closest to wall. Plug the conduit on both ends.

Notes (Continued):

(7) Disconnect conductors from Panel LP. Pull back conductors through LB condulet. Remove portion of conduit from LB condulet to LP.

(8) Install 1#2G, from existing 3 Ø Power Switch. Provide grounding hub and clamp for connecting to existing ground rod.

(9) Install 1#8G, from LT. Provide grounding hub and clamp for connecting to existing ground rod.

(10) Install power terminal blocks inside gutter in lieu of splices.

(11) After conduit installation, fill the hole cavity with silicone epoxy sealant.

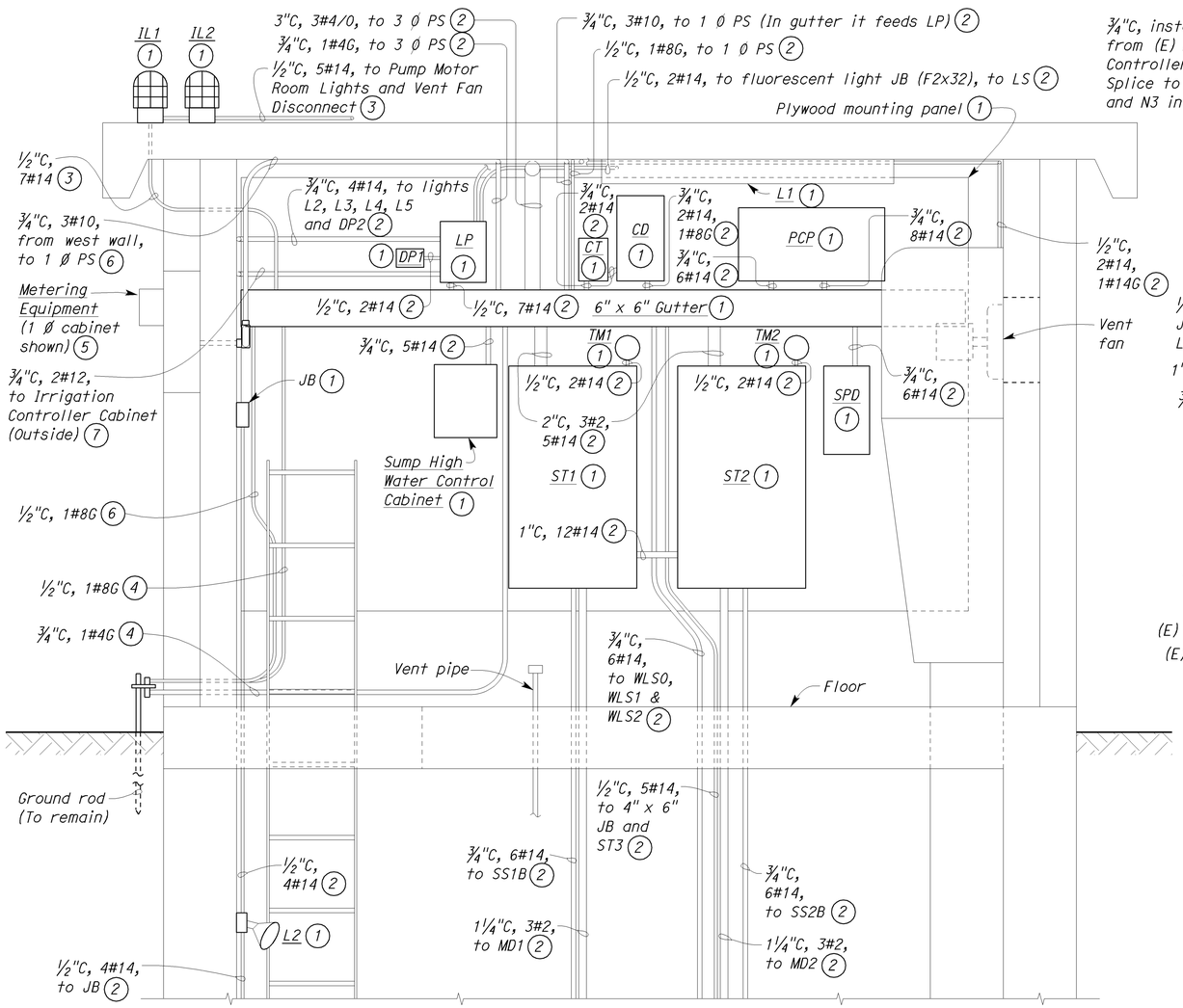

(A) EXISTING CONTROL ROOM ELEVATION

SCALE 1" = 1'-0"

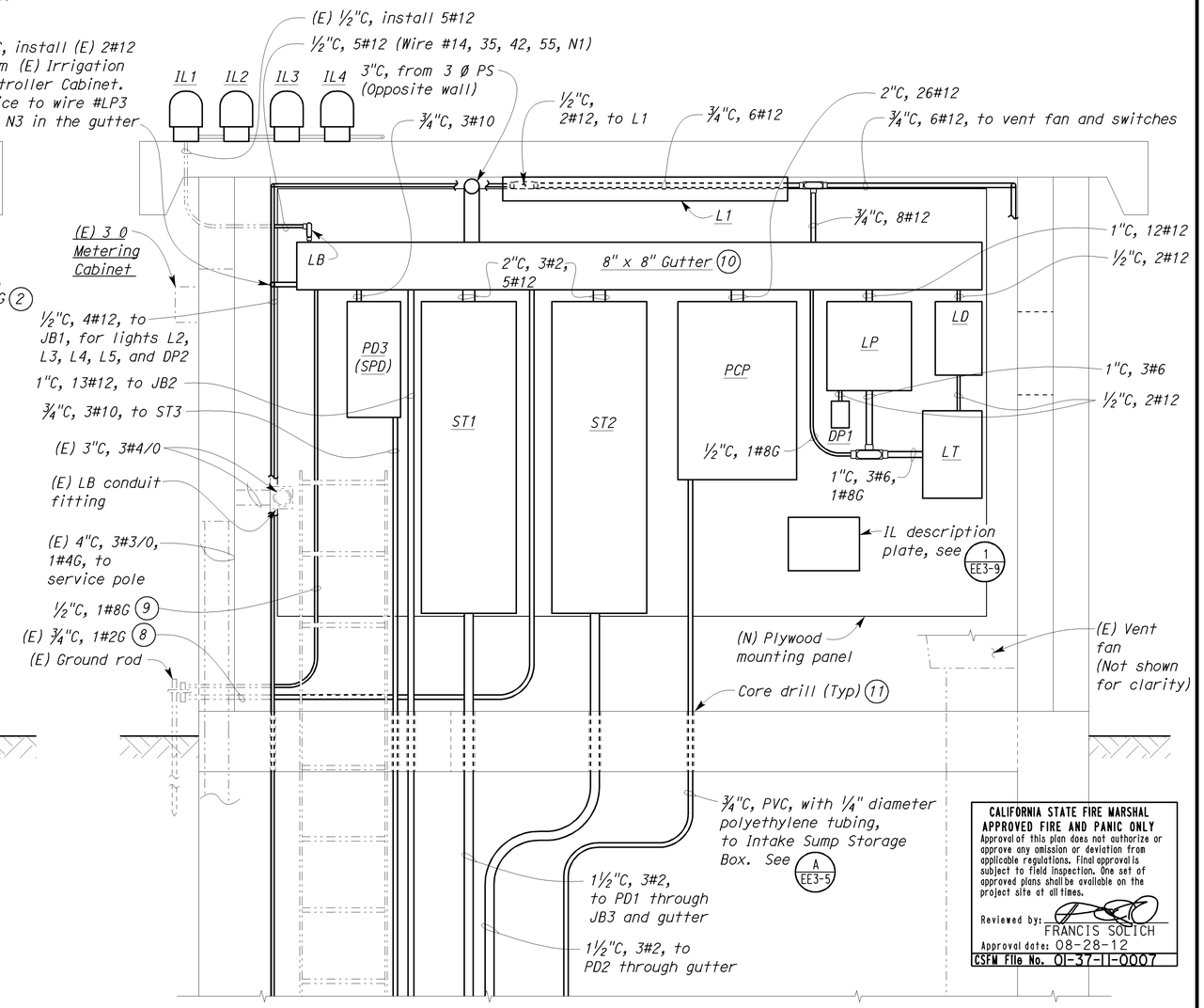

CALIFORNIA STATE FIRE MARSHAL APPROVED FIRE AND PANIC ONLY
Approval of this plan does not authorize or approve any omission or deviation from applicable regulations. Final approval is subject to field inspection. One set of approved plans shall be available on the project site at all times.
Reviewed by: FRANCIS SOLICH
Approval date: 08-28-12
CSFM File No. 01-37-11-0007

(B) MODIFIED CONTROL ROOM ELEVATION

SCALE 1" = 1'-0"

THIS DRAWING ACCURATE FOR ELECTRICAL WORK ONLY.

	BY	CHECKED
DESIGN	Baldev S. Dehal	Tech Ngov
DETAILS	Kathi Andreasen	Baldev S. Dehal
QUANTITIES	Baldev S. Dehal	Tech Ngov

STATE OF CALIFORNIA DEPARTMENT OF TRANSPORTATION

DIVISION OF ENGINEERING SERVICES
ELECTRICAL-MECHANICAL-WATER AND WASTEWATER DESIGN

BRIDGE NO. 57-180W
POST MILE 75/5 SEPARATION PUMPING PLANT (LOCATION 3)

PUMPING PLANT REHABILITATION
EXISTING AND MODIFIED CONTROL ROOM ELEVATION

SHEET EE3-4

TAEMWW Imperial Rev. 7/10

ORIGINAL SCALE IN INCHES FOR REDUCED PLANS 0 1 2 3

UNIT 3597
PROJECT NUMBER & PHASE 11000004061
EA 297101

DISREGARD PRINTS BEARING EARLIER REVISION DATES
REVISION DATES (PRELIMINARY STAGE ONLY) 2/14/11 10/19/11 11/19/11 12/19/11 8/28/12 6/23/11 7/8/11 8/23/11 8/25/11
SHEET OF

28-AUG-2012 15:21
ee3_04.dgn

DIST.	COUNTY	ROUTE	POST MILES TOTAL PROJECT	SHEET NO.	TOTAL SHEETS
11	SD	5,8	Var	46	76

REGISTERED ELECTRICAL ENGINEER — 08-28-12 DATE

REGISTERED PROFESSIONAL ENGINEER MARK CHEAP No. E 15795 Exp. 12-31-12 ELEC STATE OF CALIFORNIA

09-24-12
PLANS APPROVAL DATE

The State of California or its officers or agents shall not be responsible for the accuracy or completeness of electronic copies of this plan sheet.

CALIFORNIA STATE FIRE MARSHAL APPROVED FIRE AND PANIC ONLY
Approval of this plan does not authorize or approve any omission or deviation from applicable regulations. Final approval is subject to field inspection. One set of approved plans shall be available on the project site at all times.
Reviewed by: FRANCIS SOLICH
Approval date: 08-28-12
CSFM File No. 01-37-11-0007

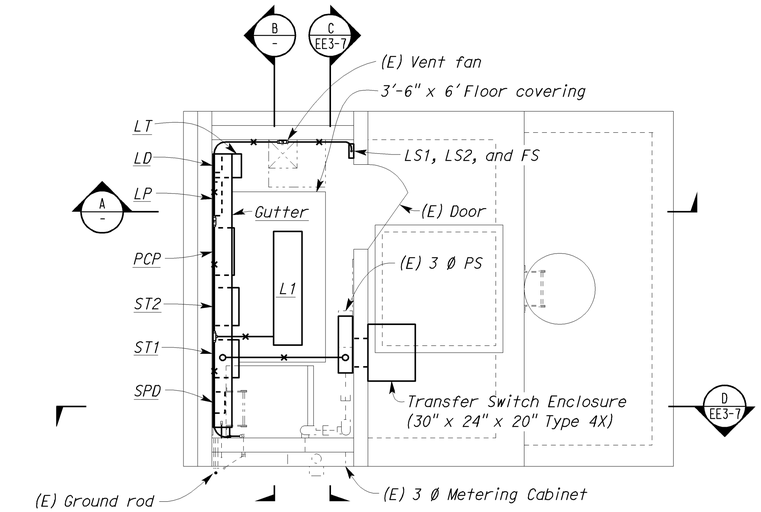

CONTROL ROOM PLAN

SCALE 3/8"= 1'-0"

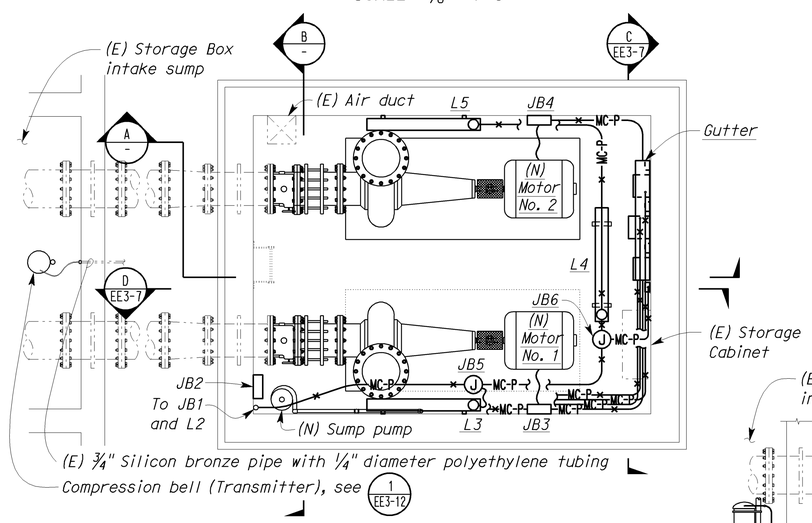

PUMP MOTOR ROOM PLAN

SCALE 3/8"= 1'-0"

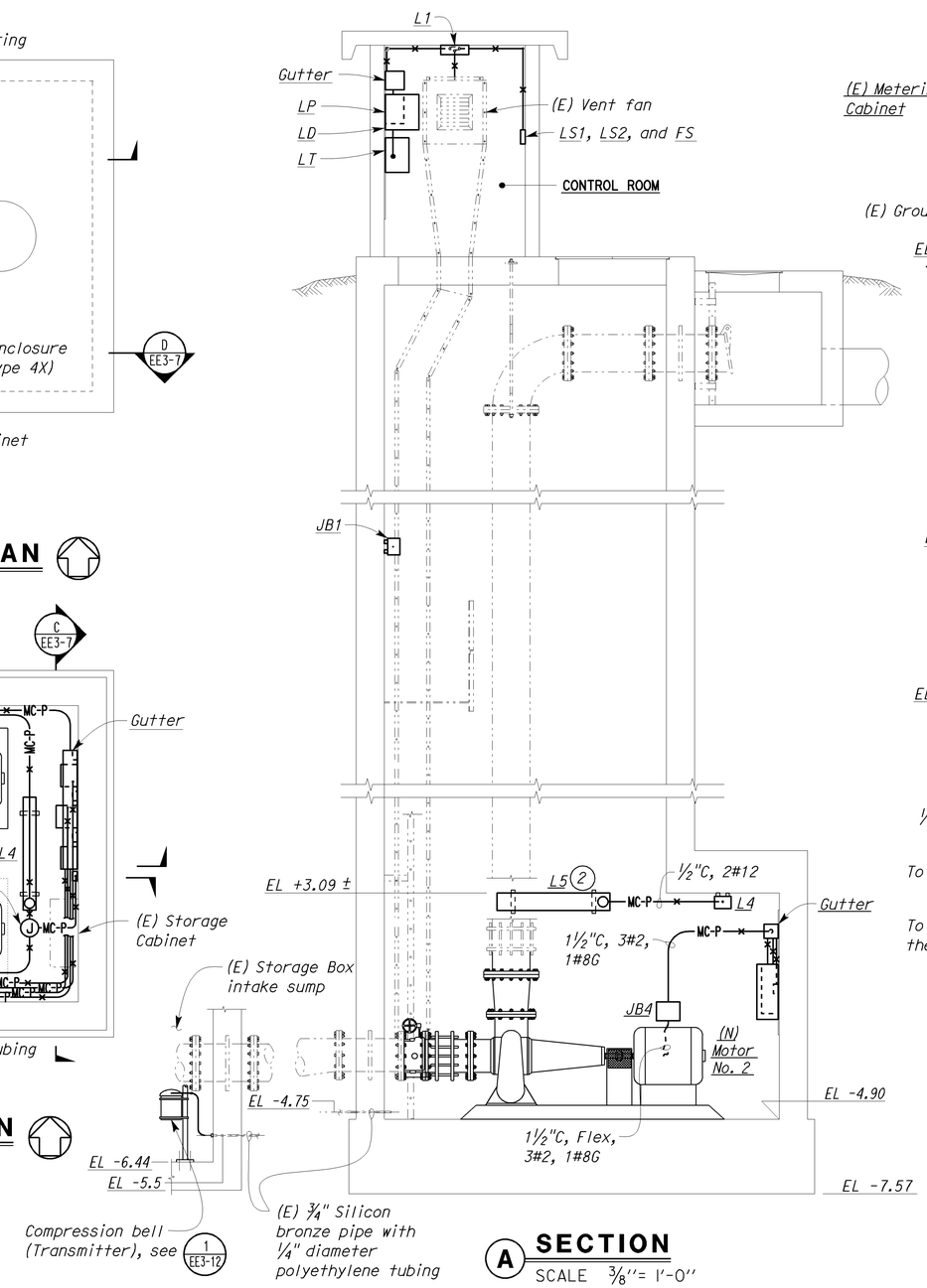

A SECTION

SCALE 3/8"= 1'-0"

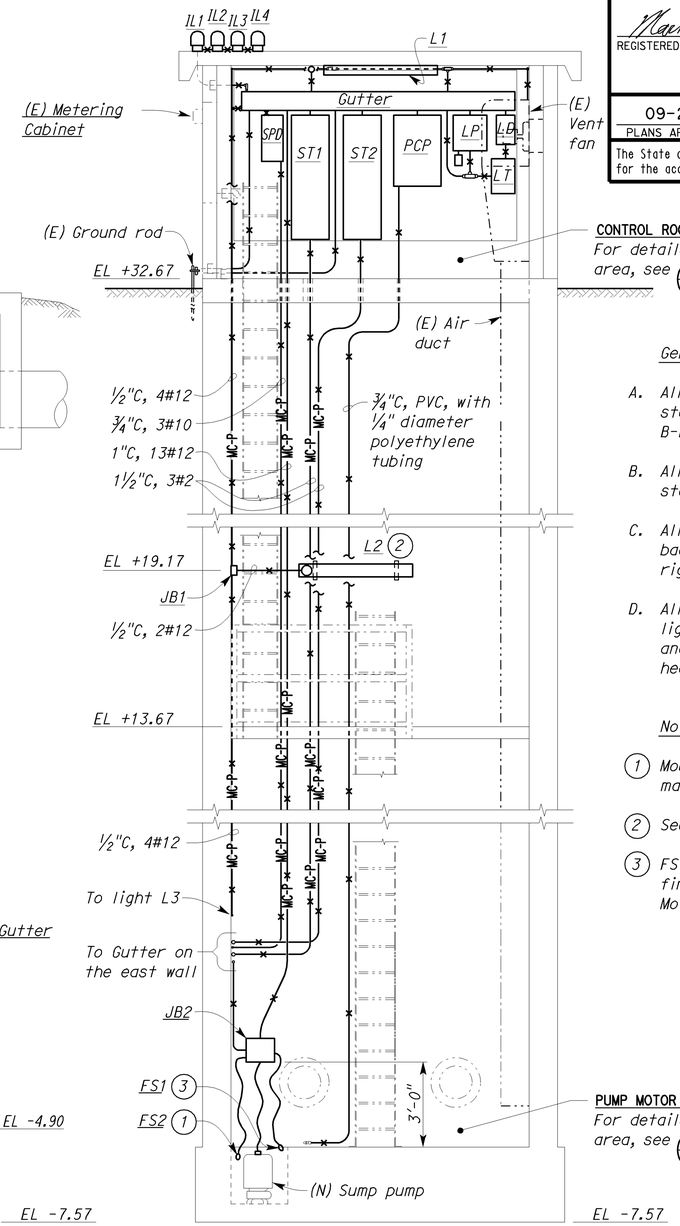

B SECTION

SCALE 3/8"= 1'-0"

General Notes:

A. All conduit support shall be 316 stainless steel channel, Unistrut No. P4000, B-Line System No. B54, or equal.

B. All expansion anchors shall be stainless steel anchors.

C. All conduit strap, one-hole clamp, and clamp back shall be PVC coated for PVC coated rigid steel conduit.

D. All existing work and equipment is shown in lightweight or dropout lines. New work and equipment is shown in bolder, heavier lines.

Notes:

1. Mount float as recommended by the float manufacturer.
2. See "Light Mounting Detail", 1 EE3-7.
3. FS1 shall be energized at +1/2" above finish floor, to prevent flooding of Pump Motor Room.

THIS DRAWING ACCURATE FOR ELECTRICAL WORK ONLY.

	BY	CHECKED
DESIGN	Baldev S. Dehal	Tech Ngov
DETAILS	Kathi Andreasen	Baldev S. Dehal
QUANTITIES	Baldev S. Dehal	Tech Ngov

STATE OF CALIFORNIA DEPARTMENT OF TRANSPORTATION

DIVISION OF ENGINEERING SERVICES
ELECTRICAL-MECHANICAL-WATER AND WASTEWATER DESIGN

BRIDGE NO. 57-180W
POST MILE

PUMPING PLANT REHABILITATION
75/5 SEPARATION PUMPING PLANT (LOCATION 3)
MODIFIED CONTROL ROOM AND PUMP MOTOR ROOM DETAILS NO. 1

SHEET EE3-5

ORIGINAL SCALE IN INCHES FOR REDUCED PLANS 0 1 2 3

UNIT 3597
PROJECT NUMBER & PHASE 11000004061
EA 297101

DISREGARD PRINTS BEARING EARLIER REVISION DATES
REVISION DATES (PRELIMINARY STAGE ONLY): 4/15/11 10/18/11 11/14/11 12/19/11 8/28/12 7/6/11 8/25/11 8/25/11 9/15/11
SHEET OF

TAEMWW Imperial Rev. 7/10

28-AUG-2012 15:21
ee3_05.dgn

Notes:

1. Remove.
2. Remove conductors and conduit.
3. Remove sump pump and 3 conductor "SO" cord.
4. Remove water level switch WLSO, WLS1, WLS2, flexible conduits and conductors. For ¾" pipe modification, see 2/EE3-13.

CALIFORNIA STATE FIRE MARSHAL
APPROVED FIRE AND PANIC ONLY
Approval of this plan does not authorize or approve any omission or deviation from applicable regulations. Final approval is subject to field inspection. One set of approved plans shall be available on the project site at all times.
Reviewed by: FRANCIS SOLICH
Approval date: 08-28-12
CSFM File No. 01-37-11-0007

DIST.	COUNTY	ROUTE	POST MILES TOTAL PROJECT	SHEET NO.	TOTAL SHEETS
11	SD	5,8	Var	47	76

REGISTERED ELECTRICAL ENGINEER — 08-28-12 DATE

REGISTERED PROFESSIONAL ENGINEER — MARK CHEAP — No. E 15795 — Exp. 12-31-12 — ELEC — STATE OF CALIFORNIA

09-24-12
PLANS APPROVAL DATE

The State of California or its officers or agents shall not be responsible for the accuracy or completeness of electronic copies of this plan sheet.

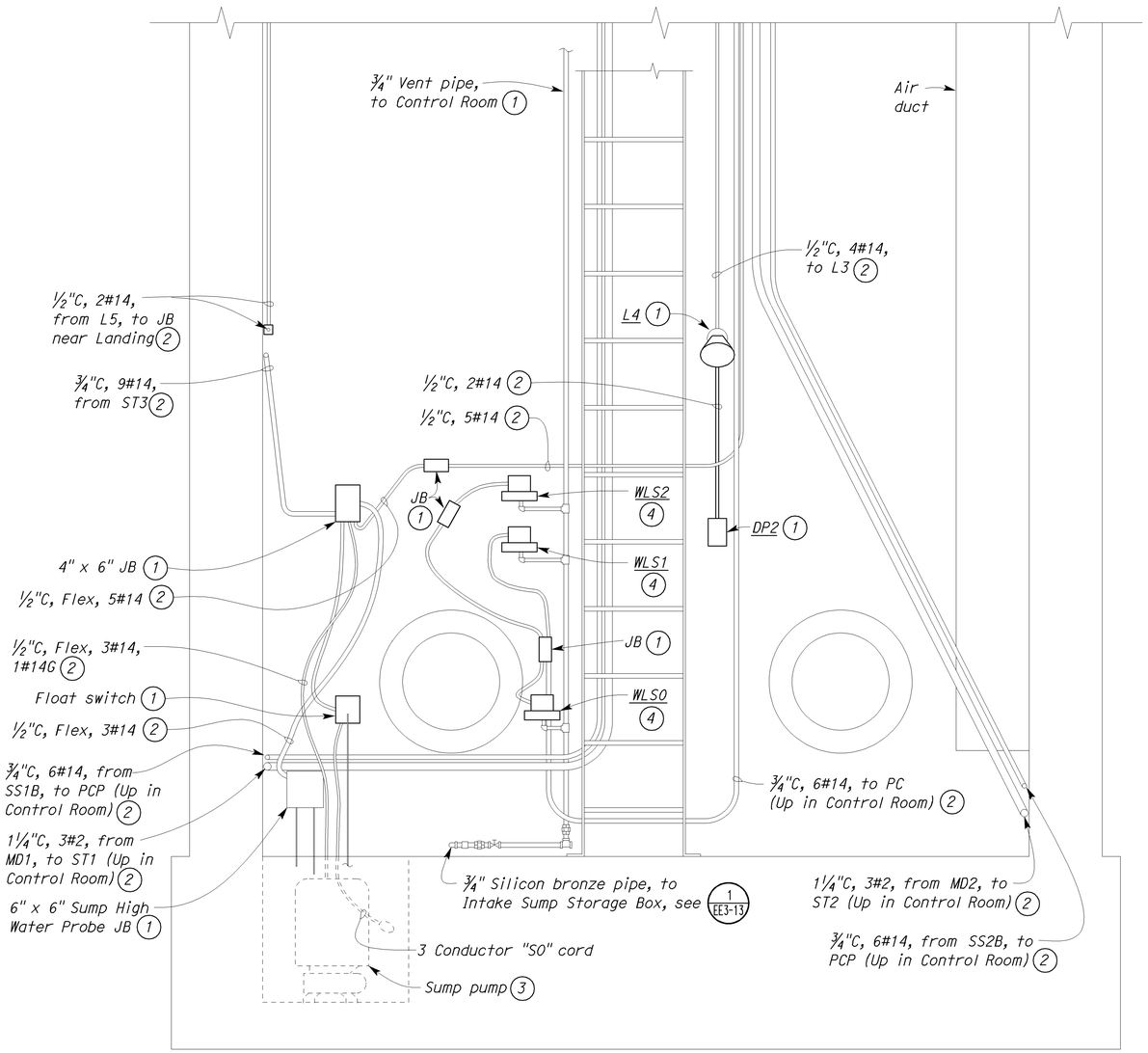

(A) EXISTING PUMP MOTOR ROOM ELEVATION

SCALE 1" = 1'-0"

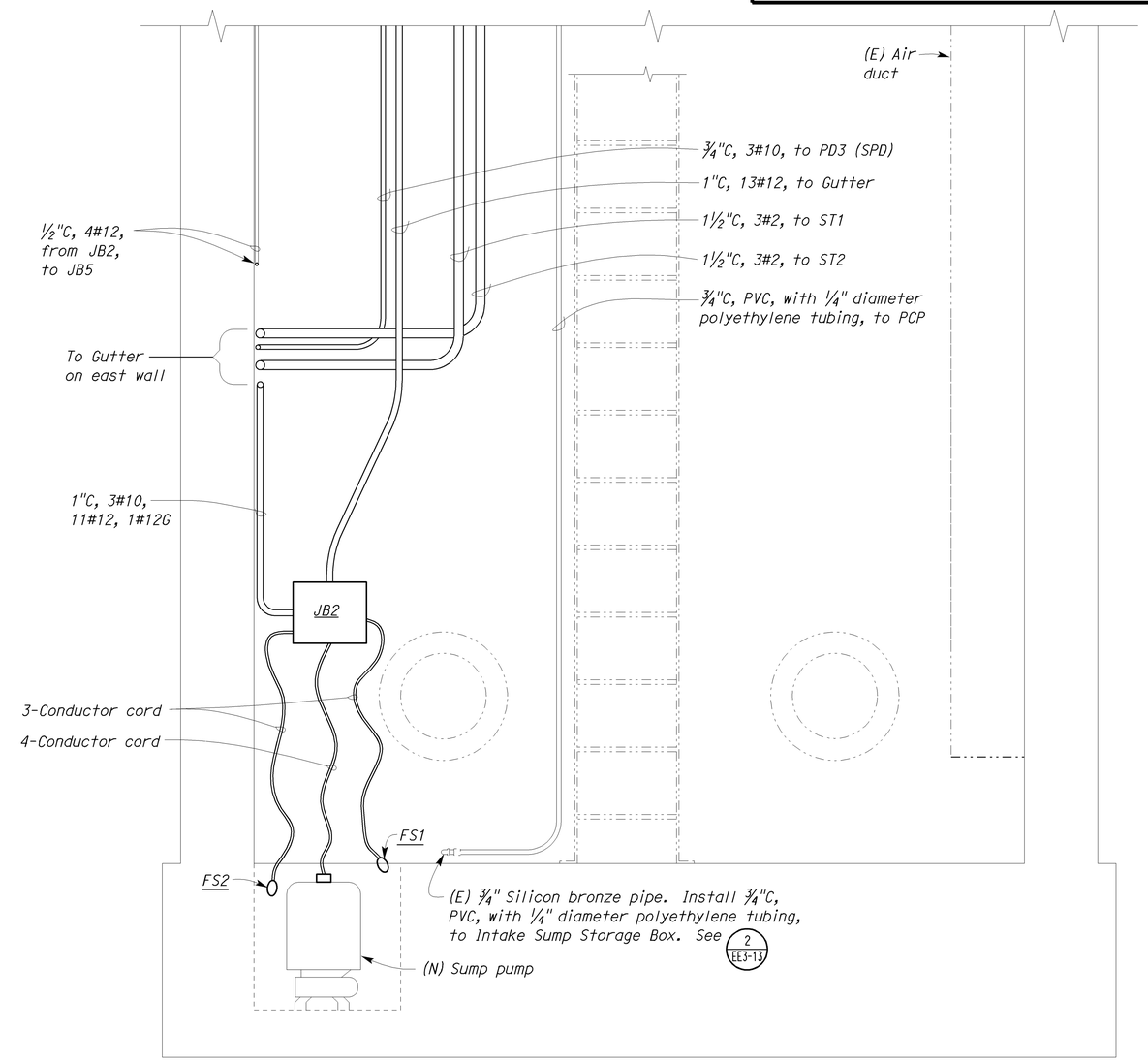

(B) MODIFIED PUMP MOTOR ROOM ELEVATION

SCALE 1" = 1'-0"

THIS DRAWING ACCURATE FOR ELECTRICAL WORK ONLY.

	BY	CHECKED
DESIGN	Baldev S. Dehal	Tech Ngov
DETAILS	Kathi Andreasen	Baldev S. Dehal
QUANTITIES	Baldev S. Dehal	Tech Ngov

STATE OF CALIFORNIA
DEPARTMENT OF TRANSPORTATION

DIVISION OF ENGINEERING SERVICES
ELECTRICAL-MECHANICAL-WATER AND WASTEWATER DESIGN

BRIDGE NO. 57-180W
POST MILE

PUMPING PLANT REHABILITATION
75/5 SEPARATION PUMPING PLANT (LOCATION 3)
EXISTING AND MODIFIED PUMP MOTOR ROOM ELEVATION

SHEET EE3-6

TAEMWW Imperial Rev. 7/10

ORIGINAL SCALE IN INCHES FOR REDUCED PLANS 0 1 2 3

UNIT 3597
PROJECT NUMBER & PHASE 11000004061
EA 297101

DISREGARD PRINTS BEARING EARLIER REVISION DATES
REVISION DATES (PRELIMINARY STAGE ONLY): 2/14/11 8/28/12 5/11/11 6/28/11 8/23/11 8/23/11 10/18/11 11/19/11 12/19/11
SHEET OF

28-AUG-2012 15:21
ee3_06.dgn

DIST.	COUNTY	ROUTE	POST MILES TOTAL PROJECT	SHEET NO.	TOTAL SHEETS
11	SD	5,8	Var	48	76

REGISTERED ELECTRICAL ENGINEER — 08-28-12 DATE

REGISTERED PROFESSIONAL ENGINEER — MARK CHEAP — No. E 15795 — Exp. 12-31-12 — ELEC — STATE OF CALIFORNIA

09-24-12
PLANS APPROVAL DATE

The State of California or its officers or agents shall not be responsible for the accuracy or completeness of electronic copies of this plan sheet.

CALIFORNIA STATE FIRE MARSHAL APPROVED FIRE AND PANIC ONLY
Approval of this plan does not authorize or approve any omission or deviation from applicable regulations. Final approval is subject to field inspection. One set of approved plans shall be available on the project site at all times.
Reviewed by: FRANCIS SOLICH
Approval date: 08-28-12
CSFM File No. 01-37-11-0007

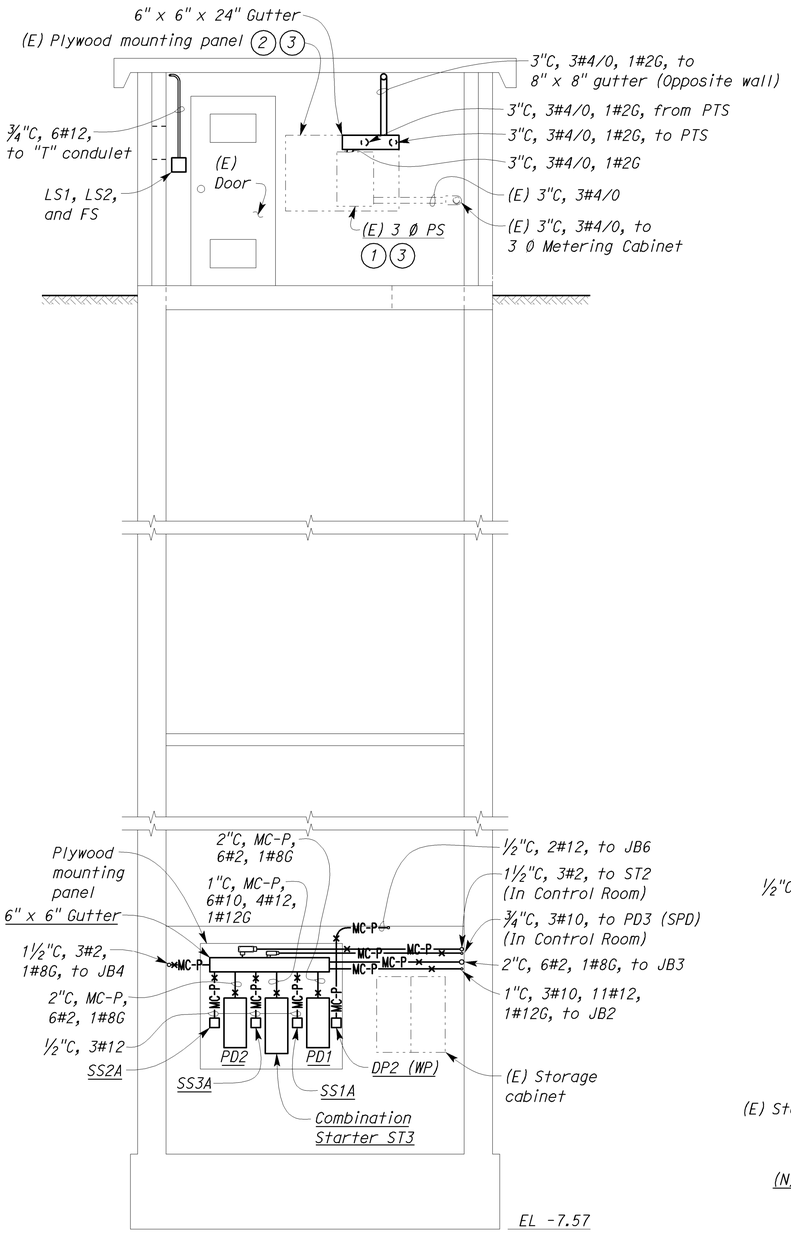

(C) SECTION
SCALE ⅜"= 1'-0"

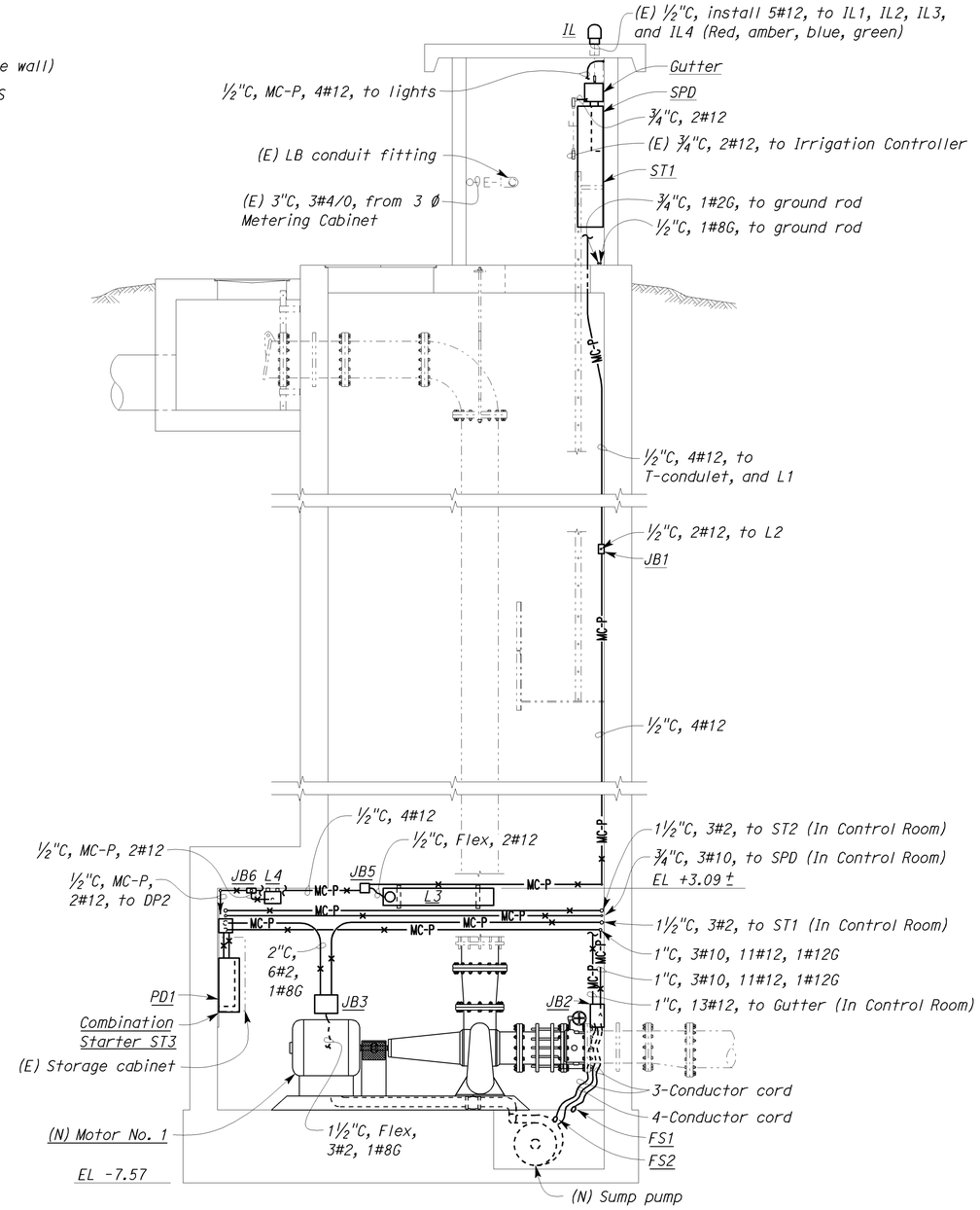

(D) SECTION
SCALE ⅜"= 1'-0"

General Notes:

A. All conduit support shall be 316 stainless steel channel, Unistrut No. P4000, B-Line System No. B54, or equal.

B. All expansion anchors shall be stainless steel anchors.

C. All conduit strap, one-hole clamp, and clamp back shall be PVC coated for PVC coated rigid steel conduit.

D. All existing work and equipment is shown in lightweight or dropout lines. New work and equipment is shown in bolder, heavier lines.

Notes:

(1) Plug all unused openings with two-piece steel seals.

(2) Fill all holes with caulking.

(3) Clean and paint with semi-gloss grey color paint.

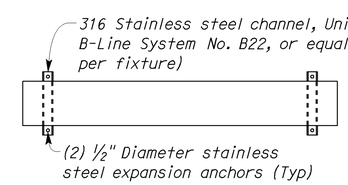

(1) LIGHT MOUNTING DETAIL
NO SCALE

THIS DRAWING ACCURATE FOR ELECTRICAL WORK ONLY.

	BY	CHECKED
DESIGN	Baldev S. Dehal	Tech Ngov
DETAILS	Kathi Andreasen	Baldev S. Dehal
QUANTITIES	Baldev S. Dehal	Tech Ngov

STATE OF CALIFORNIA DEPARTMENT OF TRANSPORTATION

DIVISION OF ENGINEERING SERVICES
ELECTRICAL-MECHANICAL-WATER AND WASTEWATER DESIGN

BRIDGE NO. 57-180W
POST MILE 75/5 SEPARATION PUMPING PLANT (LOCATION 3)

PUMPING PLANT REHABILITATION
MODIFIED CONTROL ROOM AND PUMP MOTOR ROOM DETAILS NO. 2

SHEET EE3-7

TAEMWW Imperial Rev. 7/10

ORIGINAL SCALE IN INCHES FOR REDUCED PLANS 0 1 2 3

UNIT 3597
PROJECT NUMBER & PHASE 11000004061
EA 297101

DISREGARD PRINTS BEARING EARLIER REVISION DATES →
REVISION DATES (PRELIMINARY STAGE ONLY) 4/26/11 8/26/12 7/19/11 8/25/11 8/25/11 9/13/11 10/18/11 11/19/11 12/19/11
SHEET OF

28-AUG-2012 15:21
ee3_07.dgn

DIST.	COUNTY	ROUTE	POST MILES TOTAL PROJECT	SHEET NO.	TOTAL SHEETS
11	SD	5,8	Var	49	76

REGISTERED ELECTRICAL ENGINEER — 08-28-12 DATE

REGISTERED PROFESSIONAL ENGINEER — MARK CHEAP — No. E 15795 — Exp. 12-31-12 — ELEC — STATE OF CALIFORNIA

09-24-12
PLANS APPROVAL DATE

The State of California or its officers or agents shall not be responsible for the accuracy or completeness of electronic copies of this plan sheet.

CALIFORNIA STATE FIRE MARSHAL APPROVED FIRE AND PANIC ONLY
Approval of this plan does not authorize or approve any omission or deviation from applicable regulations. Final approval is subject to field inspection. One set of approved plans shall be available on the project site at all times.
Reviewed by: FRANCIS SOLICH
Approval date: 08-28-12
CSFM File No. 01-37-11-0007

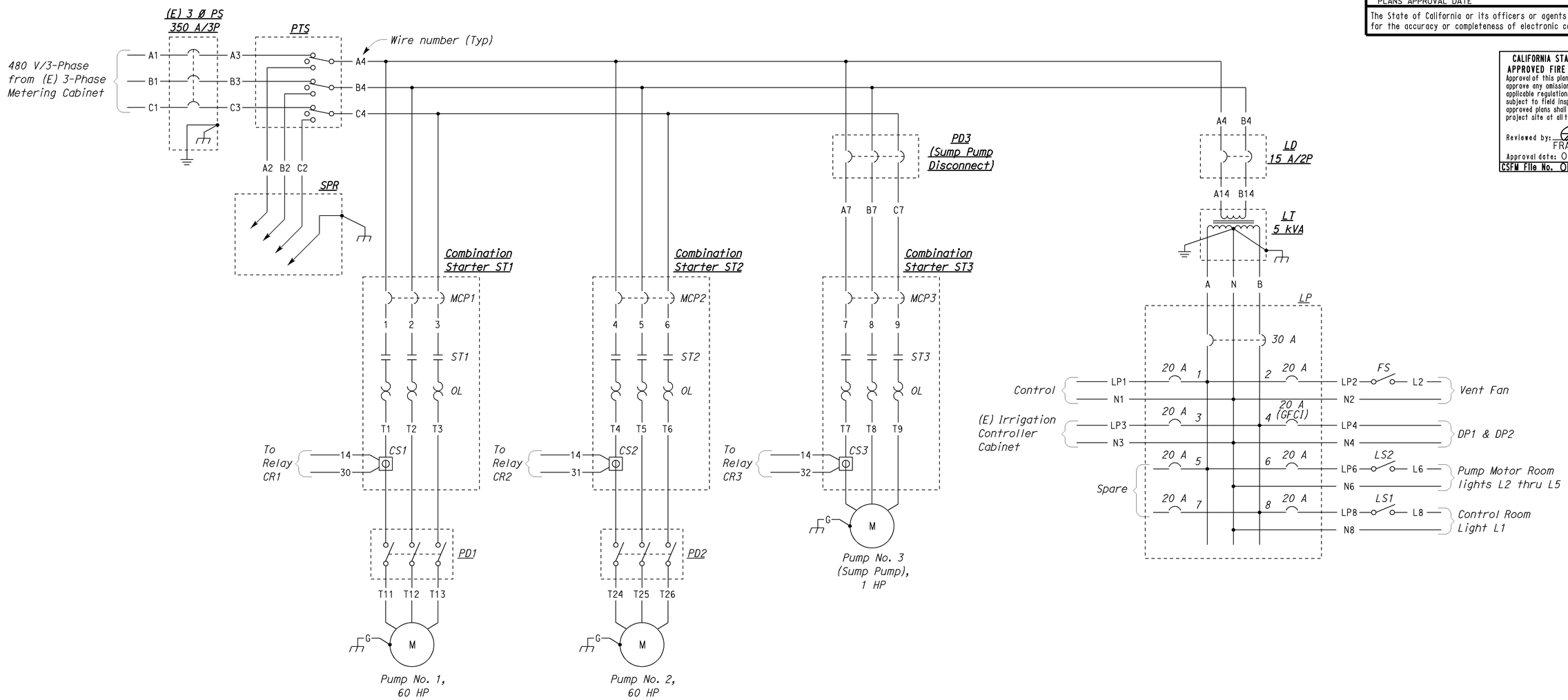

POWER SCHEMATIC DIAGRAM

DESIGN	BY Baldev S. Dehal	CHECKED Tech Ngov	
DETAILS	BY Kathi Andreasen	CHECKED Baldev S. Dehal	
QUANTITIES	BY Baldev S. Dehal	CHECKED Tech Ngov	

STATE OF CALIFORNIA
DEPARTMENT OF TRANSPORTATION

DIVISION OF ENGINEERING SERVICES
ELECTRICAL-MECHANICAL-WATER AND WASTEWATER DESIGN

BRIDGE NO. 57-180W
POST MILE

PUMPING PLANT REHABILITATION
75/5 SEPARATION PUMPING PLANT (LOCATION 3)
POWER SCHEMATIC DIAGRAM

SHEET **EE3-8**

TAEMWW Imperial Rev. 7/10

ORIGINAL SCALE IN INCHES FOR REDUCED PLANS 0 1 2 3

UNIT 3597
PROJECT NUMBER & PHASE 11000004061
EA 297101

DISREGARD PRINTS BEARING EARLIER REVISION DATES
REVISION DATES (PRELIMINARY STAGE ONLY) 4/14/11 4/15/11 5/24/11 6/24/11 8/23/11 10/19/11 11/19/11 12/19/11 8/28/12
SHEET OF

28-AUG-2012 15:21
ee3_08.dgn

DIST.	COUNTY	ROUTE	POST MILES TOTAL PROJECT	SHEET NO.	TOTAL SHEETS
11	SD	5,8	Var	50	76

REGISTERED ELECTRICAL ENGINEER — 08-28-12 DATE

REGISTERED PROFESSIONAL ENGINEER MARK CHEAP No. E 15795 Exp. 12-31-12 ELEC STATE OF CALIFORNIA

09-24-12
PLANS APPROVAL DATE

The State of California or its officers or agents shall not be responsible for the accuracy or completeness of electronic copies of this plan sheet.

CALIFORNIA STATE FIRE MARSHAL APPROVED FIRE AND PANIC ONLY
Approval of this plan does not authorize or approve any omission or deviation from applicable regulations. Final approval is subject to field inspection. One set of approved plans shall be available on the project site at all times.
Reviewed by: FRANCIS SOLICH
Approval date: 08-28-12
CSFM File No. OI-37-11-0007

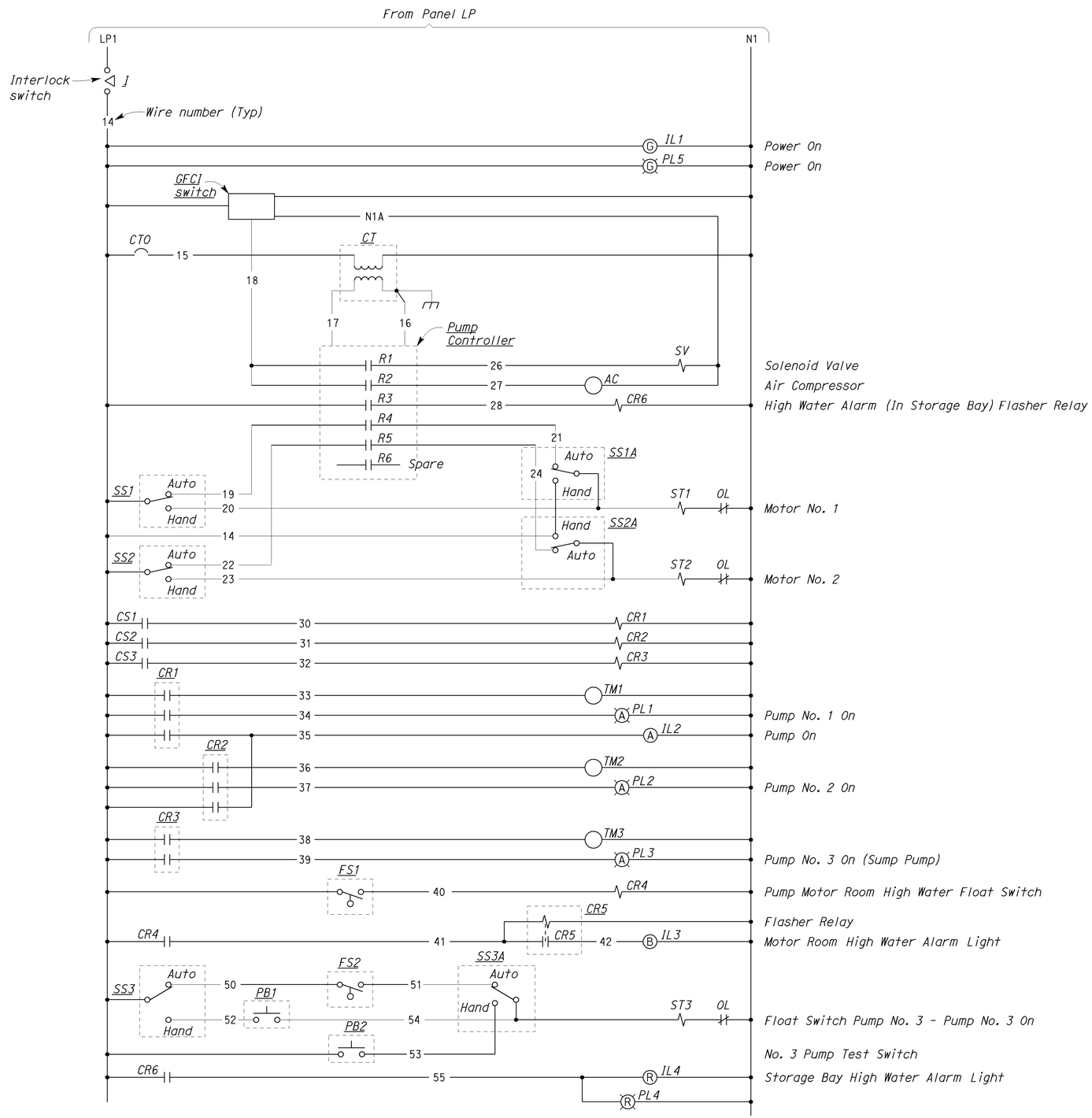

INDICATING LIGHT	DESCRIPTION
GREEN LIGHT	POWER ON
AMBER LIGHT	PUMP ON
BLUE LIGHT	MOTOR ROOM HIGH WATER ALARM
RED LIGHT	STORAGE BOX HIGH WATER ALARM

1 INDICATING LIGHT DESCRIPTION PLATE

DESIGN	BY Baldev S. Dehal	CHECKED Tech Ngov	
DETAILS	BY Kathi Andreasen	CHECKED Baldev S. Dehal	
QUANTITIES	BY Baldev S. Dehal	CHECKED Tech Ngov	

STATE OF CALIFORNIA
DEPARTMENT OF TRANSPORTATION

DIVISION OF ENGINEERING SERVICES
ELECTRICAL-MECHANICAL-WATER AND WASTEWATER DESIGN

BRIDGE NO. 57-180W
POST MILE

PUMPING PLANT REHABILITATION
75/5 SEPARATION PUMPING PLANT (LOCATION 3)
CONTROL SCHEMATIC DIAGRAM

SHEET **EE3-9**

TAEMWW Imperial Rev. 7/10

ORIGINAL SCALE IN INCHES FOR REDUCED PLANS 0 1 2 3

UNIT 3597
PROJECT NUMBER & PHASE 11000004061
EA 297101

DISREGARD PRINTS BEARING EARLIER REVISION DATES
REVISION DATES (PRELIMINARY STAGE ONLY) 4/14/11 4/15/11 5/13/11 6/27/11 8/23/11 10/18/11 11/7/11 12/19/11 8/28/12
SHEET OF

28-AUG-2012 15:21
ee3_09.dgn

DIST.	COUNTY	ROUTE	POST MILES TOTAL PROJECT	SHEET NO.	TOTAL SHEETS
11	SD	5,8	Var	51	76

REGISTERED ELECTRICAL ENGINEER — 08-28-12 DATE

REGISTERED PROFESSIONAL ENGINEER — MARK CHEAP — No. E 15795 — Exp. 12-31-12 — ELEC — STATE OF CALIFORNIA

09-24-12
PLANS APPROVAL DATE

The State of California or its officers or agents shall not be responsible for the accuracy or completeness of electronic copies of this plan sheet.

CALIFORNIA STATE FIRE MARSHAL APPROVED FIRE AND PANIC ONLY
Approval of this plan does not authorize or approve any omission or deviation from applicable regulations. Final approval is subject to field inspection. One set of approved plans shall be available on the project site at all times.
Reviewed by: FRANCIS SOLICH
Approval date: 08-28-12
CSFM File No. 01-37-11-0007

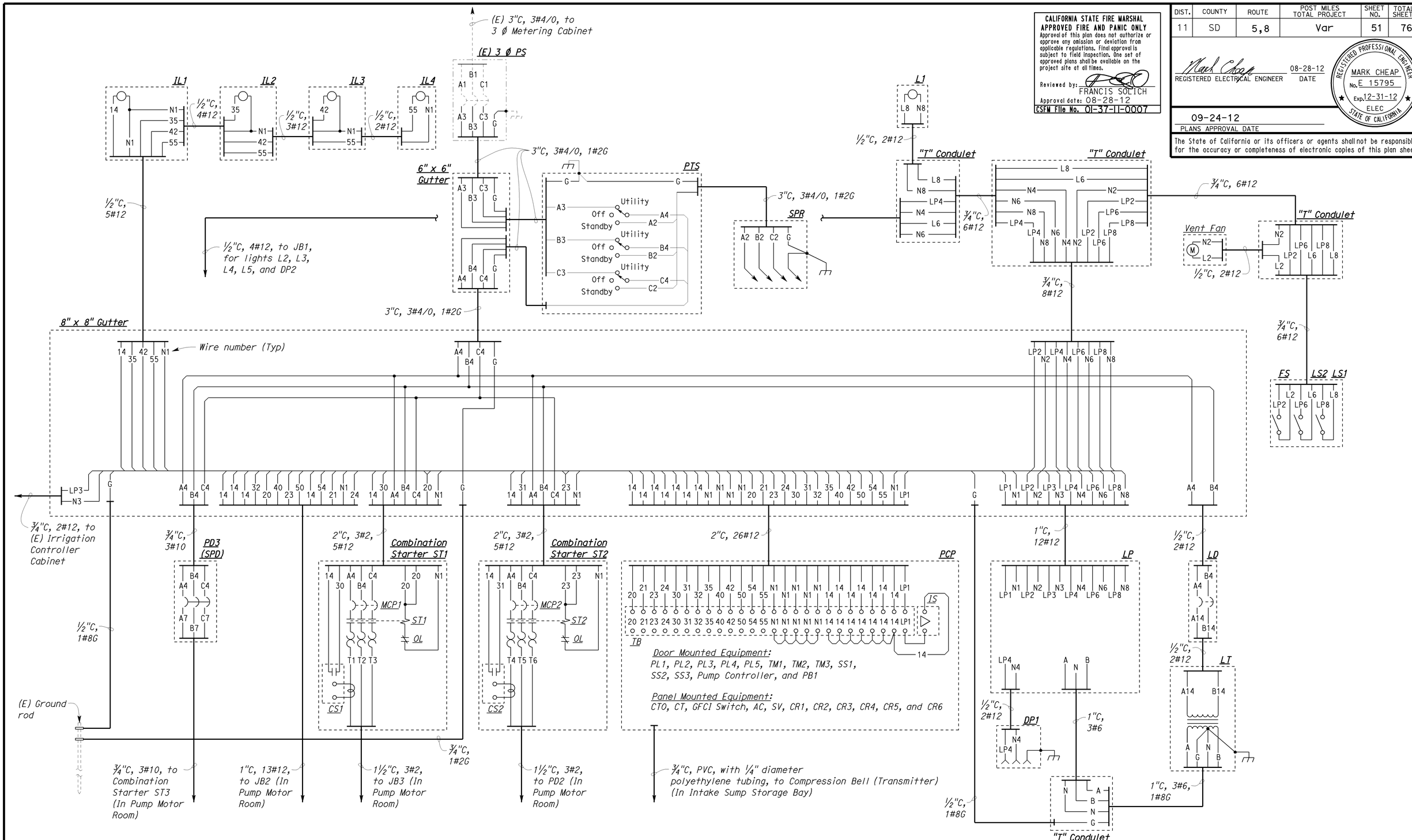

DESIGN	BY Baldev S. Dehal	CHECKED Tech Ngov	
DETAILS	BY Kathi Andreasen	CHECKED Baldev S. Dehal	
QUANTITIES	BY Baldev S. Dehal	CHECKED Tech Ngov	

STATE OF CALIFORNIA
DEPARTMENT OF TRANSPORTATION

DIVISION OF ENGINEERING SERVICES
ELECTRICAL-MECHANICAL-WATER AND WASTEWATER DESIGN

BRIDGE NO. 57-180W
POST MILE

PUMPING PLANT REHABILITATION

75/5 SEPARATION PUMPING PLANT (LOCATION 3)

CONTROL ROOM WIRING DIAGRAM

SHEET EE3-10

TAEMWW Imperial Rev. 7/10

ORIGINAL SCALE IN INCHES FOR REDUCED PLANS 0 1 2 3

UNIT 3597
PROJECT NUMBER & PHASE 11000004061
EA 297101

DISREGARD PRINTS BEARING EARLIER REVISION DATES →

REVISION DATES (PRELIMINARY STAGE ONLY) 6/28/11 8/24/11 9/7/11 9/23/11 9/13/11 10/19/11 11/7/11 12/19/11 8/28/12 SHEET OF

28-AUG-2012 15:21

ee3_10.dgn

CALIFORNIA STATE FIRE MARSHAL
APPROVED FIRE AND PANIC ONLY
Approval of this plan does not authorize or approve any omission or deviation from applicable regulations. Final approval is subject to field inspection. One set of approved plans shall be available on the project site at all times.
Reviewed by: FRANCIS SOLICH
Approval date: 08-28-12
CSFM File No. 01-37-11-0007

DIST.	COUNTY	ROUTE	POST MILES TOTAL PROJECT	SHEET NO.	TOTAL SHEETS
11	SD	5,8	Var	52	76

REGISTERED ELECTRICAL ENGINEER — 08-28-12 DATE

REGISTERED PROFESSIONAL ENGINEER — MARK CHEAP — No. E 15795 — Exp. 12-31-12 — ELEC — STATE OF CALIFORNIA

09-24-12
PLANS APPROVAL DATE

The State of California or its officers or agents shall not be responsible for the accuracy or completeness of electronic copies of this plan sheet.

For continuation, see sheet EE3-10

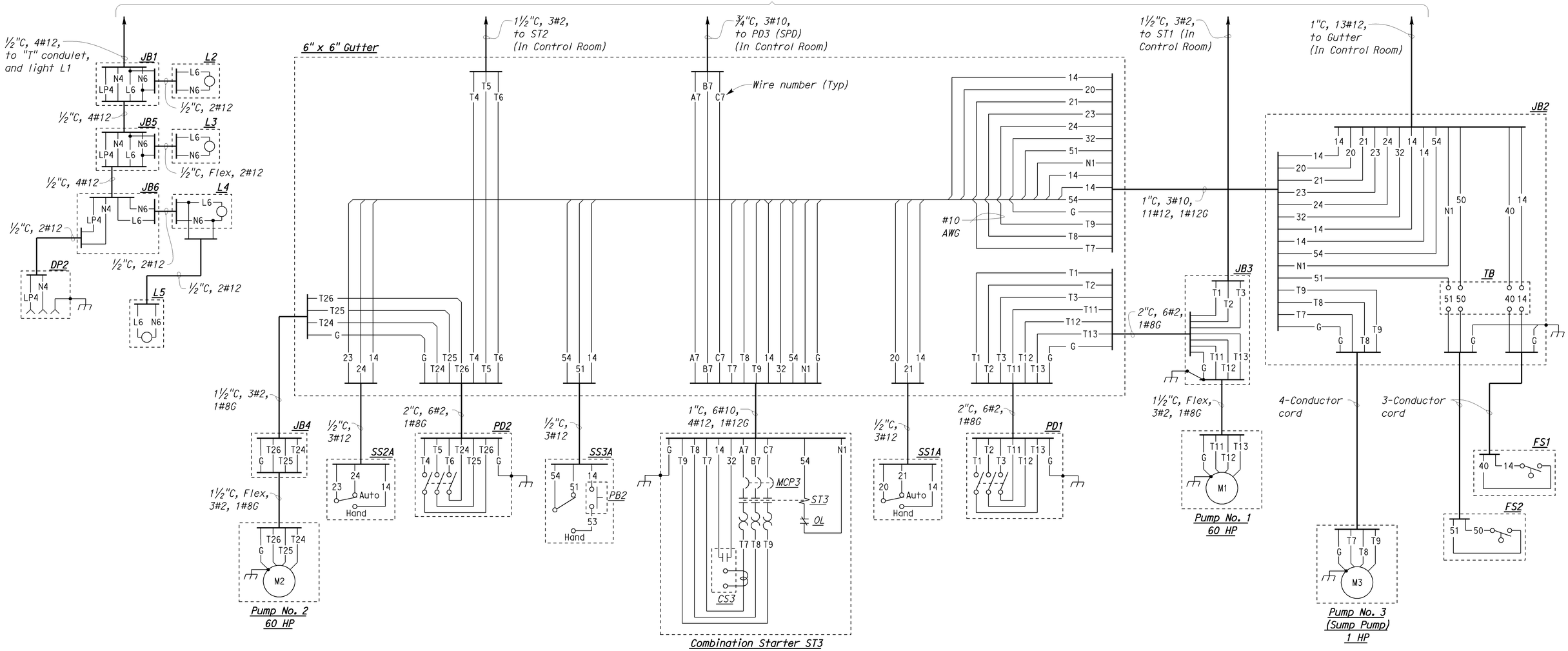

DESIGN	BY Baldev S. Dehal	CHECKED Tech Ngov	
DETAILS	BY Kathi Andreasen	CHECKED Baldev S. Dehal	
QUANTITIES	BY Baldev S. Dehal	CHECKED Tech Ngov	

STATE OF CALIFORNIA
DEPARTMENT OF TRANSPORTATION

DIVISION OF ENGINEERING SERVICES
ELECTRICAL-MECHANICAL-WATER AND WASTEWATER DESIGN

BRIDGE NO. 57-180W
POST MILE 75/5 SEPARATION PUMPING PLANT (LOCATION 3)

PUMPING PLANT REHABILITATION

PUMP ROOM WIRING DIAGRAM

SHEET **EE3-11**

TAEMWW Imperial Rev. 7/10

ORIGINAL SCALE IN INCHES FOR REDUCED PLANS 0 1 2 3

UNIT 3597
PROJECT NUMBER & PHASE 11000004061
EA 297101

DISREGARD PRINTS BEARING EARLIER REVISION DATES → 6/24/11 6/24/11 7/8/11 8/25/11 10/19/11 11/19/11 12/19/11 8/28/12

REVISION DATES (PRELIMINARY STAGE ONLY) SHEET OF

28-AUG-2012 15:21
ee3_11.dgn

DIST.	COUNTY	ROUTE	POST MILES TOTAL PROJECT	SHEET NO.	TOTAL SHEETS
11	SD	5,8	Var	53	76

CALIFORNIA STATE FIRE MARSHAL
APPROVED FIRE AND PANIC ONLY
Approval of this plan does not authorize or approve any omission or deviation from applicable regulations. Final approval is subject to field inspection. One set of approved plans shall be available on the project site at all times.
Reviewed by: FRANCIS SOLICH
Approval date: 08-28-12
CSFM File No. 01-37-11-0007

REGISTERED ELECTRICAL ENGINEER — 08-28-12 DATE

REGISTERED PROFESSIONAL ENGINEER — MARK CHEAP — No. E 15795 — Exp. 12-31-12 — ELEC — STATE OF CALIFORNIA

09-24-12
PLANS APPROVAL DATE

The State of California or its officers or agents shall not be responsible for the accuracy or completeness of electronic copies of this plan sheet.

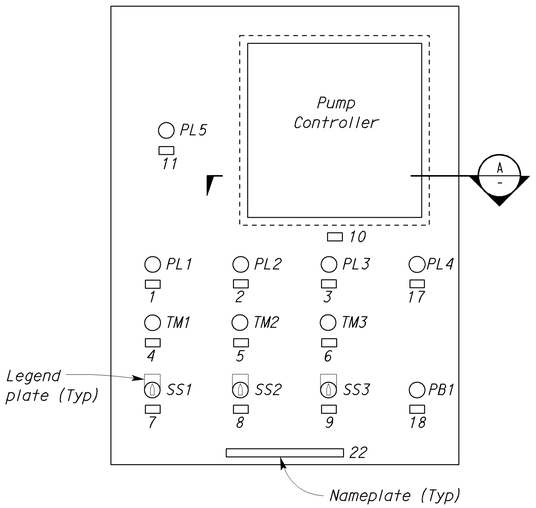

EXTERIOR DOOR
ELEVATION - PUMP CONTROL PANEL
NO SCALE

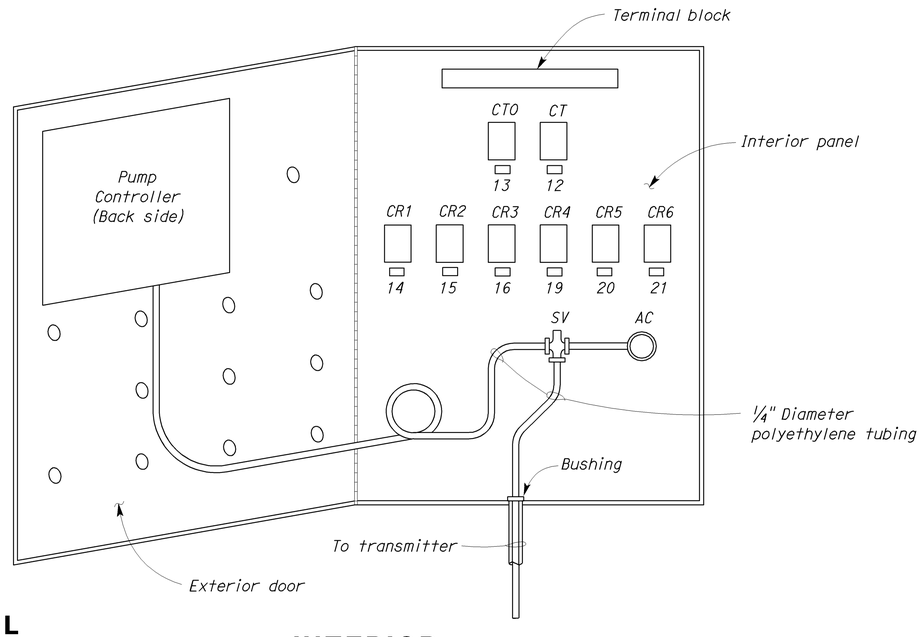

INTERIOR
ELEVATION - PUMP CONTROL PANEL
NO SCALE

General Notes:

A. All fasteners to concrete shall be stainless steel expansion anchorage. Size of studs shown.

B. Provide plastic wiring duct as required inside Pump Control Panel.

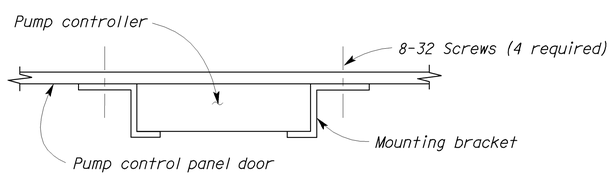

A SECTION
NO SCALE

NAMEPLATE SCHEDULE		
ITEM NO.	INSCRIPTION	LETTER HEIGHT
1	PUMP NO. 1 ON	⅛"
2	PUMP NO. 2 ON	⅛"
3	PUMP NO. 3 ON	⅛"
4	PUMP NO. 1 TIME METER - TM1	⅛"
5	PUMP NO. 2 TIME METER - TM2	⅛"
6	PUMP NO. 3 TIME METER - TM3	⅛"
7	PUMP NO. 1 - SS1	⅛"
8	PUMP NO. 2 - SS2	⅛"
9	PUMP NO. 3 - SS3	⅛"
10	PUMP CONTROLLER	⅛"
11	POWER ON	⅛"
12	CT	⅛"
13	CTO	⅛"
14	CR1	⅛"
15	CR2	⅛"
16	CR3	⅛"
17	HIGH WATER IN STORAGE BOX	⅛"
18	SUMP PUMP TEST PB	⅛"
19	CR4	⅛"
20	CR5	⅛"
21	CR6	⅛"
22	PUMP CONTROL PANEL	½"

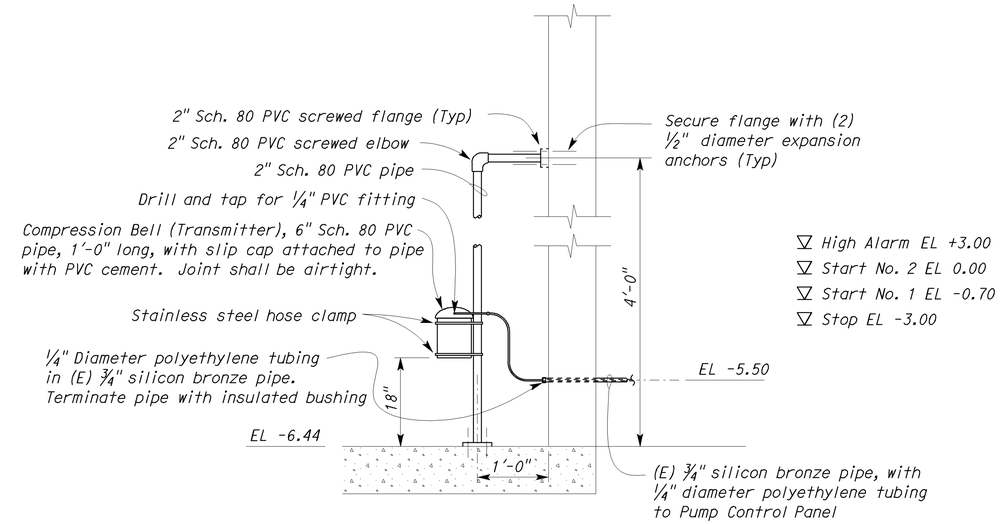

1 COMPRESSION BELL (TRANSMITTER) MOUNTING DETAIL
NO SCALE

DESIGN	BY Baldev S. Dehal	CHECKED Tech Ngov
DETAILS	BY Kathi Andreasen	CHECKED Baldev S. Dehal
QUANTITIES	BY Baldev S. Dehal	CHECKED Tech Ngov

STATE OF CALIFORNIA
DEPARTMENT OF TRANSPORTATION

DIVISION OF ENGINEERING SERVICES
ELECTRICAL-MECHANICAL-WATER AND WASTEWATER DESIGN

BRIDGE NO. 57-180W
POST MILE

75/5 SEPARATION PUMPING PLANT (LOCATION 3)

PUMPING PLANT REHABILITATION
ELECTRICAL DETAILS

SHEET EE3-12

TAEMWW Imperial Rev. 7/10

ORIGINAL SCALE IN INCHES FOR REDUCED PLANS 0 1 2 3

UNIT 3597
PROJECT NUMBER & PHASE 11000004061
EA 297101

DISREGARD PRINTS BEARING EARLIER REVISION DATES
REVISION DATES (PRELIMINARY STAGE ONLY) 6/8/11 6/24/11 7/8/11 8/23/11 8/25/11 9/13/11 10/12/11 11/14/11 12/12/11 8/28/12
SHEET OF

28-AUG-2012 13:21
ee3_12.dgn

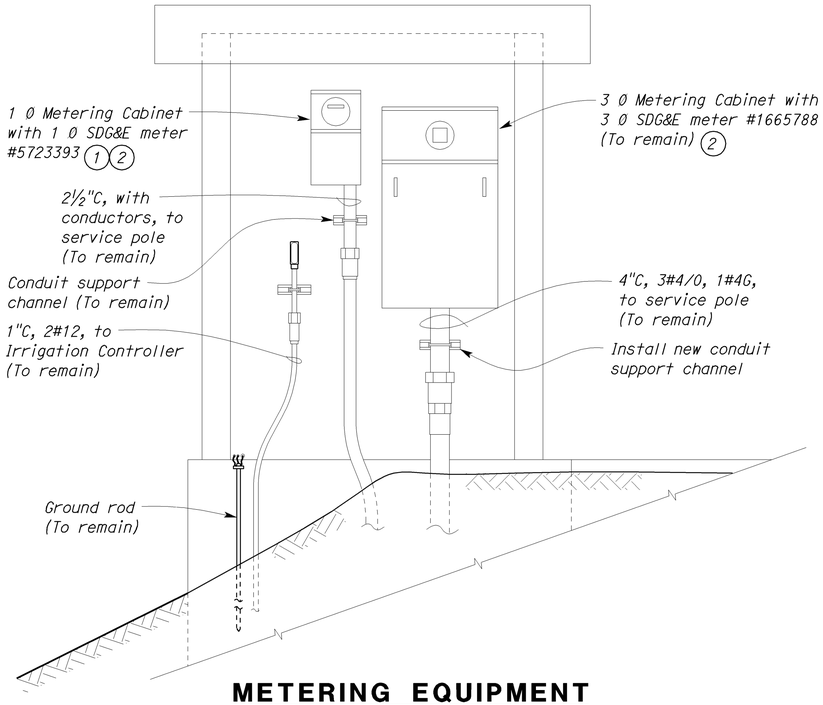

METERING EQUIPMENT
(A) SOUTH WALL EXTERIOR ELEVATION

SCALE ¾" = 1'-0"

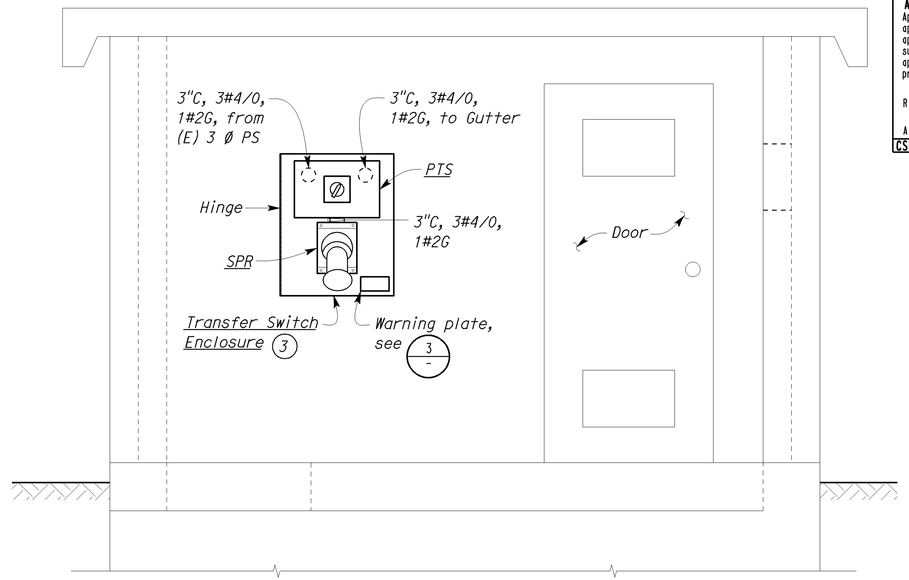

(B) TRANSFER SWITCH ENCLOSURE EAST WALL EXTERIOR ELEVATION

SCALE ¾" = 1'-0"

CALIFORNIA STATE FIRE MARSHAL
APPROVED FIRE AND PANIC ONLY
Approval of this plan does not authorize or approve any omission or deviation from applicable regulations. Final approval is subject to field inspection. One set of approved plans shall be available on the project site at all times.
Reviewed by: FRANCIS SOLICH
Approval date: 08-28-12
CSFM File No. 01-37-11-0007

DIST.	COUNTY	ROUTE	POST MILES TOTAL PROJECT	SHEET NO.	TOTAL SHEETS
11	SD	5,8	Var	54	76

REGISTERED ELECTRICAL ENGINEER — 08-28-12 DATE

REGISTERED PROFESSIONAL ENGINEER MARK CHEAP No. E 15795 Exp. 12-31-12 ELEC STATE OF CALIFORNIA

09-24-12
PLANS APPROVAL DATE

The State of California or its officers or agents shall not be responsible for the accuracy or completeness of electronic copies of this plan sheet.

General Note:

A. Plug all holes on the wall and paint to match the wall color.

Notes:

(1) Arrange with San Diego Gas & Electric Utility Company to disconnect power and meter removal of 1 Ø service. Install blank plate in the meter faceplate.

(2) Clean and paint with semi-gloss grey color paint.

(3) Transfer Switch Enclosure cover not shown for clarity.

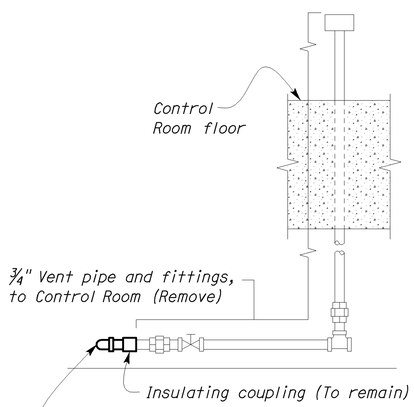

(1) DETAIL

SCALE 2" = 1'-0"

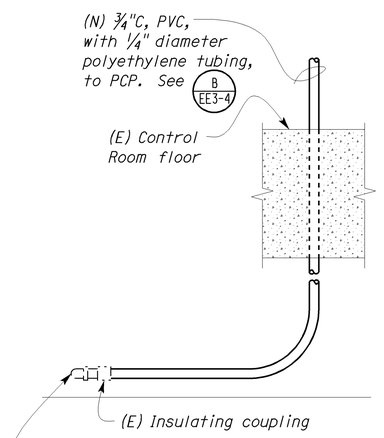

(2) DETAIL

SCALE 2" = 1'-0"

PHASE SEQUENCE IS
A-B-C
SELECT PROPER VOLTAGE
BEFORE CONNECTING PLUG

(3) DETAIL

NO SCALE

THIS DRAWING ACCURATE FOR ELECTRICAL WORK ONLY.

	BY	CHECKED
DESIGN	Baldev S. Dehal	Tech Ngov
DETAILS	Kathi Andreasen	Baldev S. Dehal
QUANTITIES	Baldev S. Dehal	Tech Ngov

STATE OF CALIFORNIA
DEPARTMENT OF TRANSPORTATION

DIVISION OF ENGINEERING SERVICES
ELECTRICAL-MECHANICAL-WATER AND WASTEWATER DESIGN

BRIDGE NO. 57-180W
POST MILE

PUMPING PLANT REHABILITATION
75/5 SEPARATION PUMPING PLANT (LOCATION 3)
CONTROL HOUSE EXTERIOR ELEVATIONS AND MISCELLANEOUS DETAILS

SHEET EE3-13

TAEMWW Imperial Rev. 7/10

ORIGINAL SCALE IN INCHES FOR REDUCED PLANS 0 1 2 3

UNIT 3597
PROJECT NUMBER & PHASE 11000004061
EA 297101

DISREGARD PRINTS BEARING EARLIER REVISION DATES
REVISION DATES (PRELIMINARY STAGE ONLY): 4/14/11 6/28/12 7/8/11 8/23/11 8/25/11 9/13/11 10/18/11 11/7/11 12/19/11
SHEET OF

28-AUG-2012 15:21
ee3_13.dgn

DIST.	COUNTY	ROUTE	POST MILES TOTAL PROJECT	SHEET NO.	TOTAL SHEETS
11	SD	5,8	Var	55	76

REGISTERED ELECTRICAL ENGINEER — 08-28-12 DATE

REGISTERED PROFESSIONAL ENGINEER — MARK CHEAP — No. E 15795 — Exp. 12-31-12 — ELEC — STATE OF CALIFORNIA

09-24-12
PLANS APPROVAL DATE

The State of California or its officers or agents shall not be responsible for the accuracy or completeness of electronic copies of this plan sheet.

GRAPHIC SYMBOLS FOR ELECTRICAL WIRING AND LAYOUT DIAGRAMS

SYMBOL	DESCRIPTION
	POLE-TOP ELECTROLIER
	POLE-ARM ELECTROLIER
CEILING WALL	
(S) -(S)	SURFACE FLUORESCENT, METAL HALIDE OR SODIUM VAPOR FIXTURE
(R) -(R)	RECESSED FLUORESCENT, METAL HALIDE, OR SODIUM VAPOR FIXTURE
(X) -(X)	EXIT LIGHT
	SURFACE OR PENDANT INDIVIDUAL FLUORESCENT FIXTURE
(R)	RECESSED INDIVIDUAL FLUORESCENT FIXTURE
	SURFACE OR PENDANT CONTINUOUS ROW FLUORESCENT FIXTURES

NOTE: A LOWER CASE LETTER NEAR GRAPHIC LIGHTING FIXTURE SYMBOL DENOTES THAT FIXTURE IS CONTROLLED BY A SIMILARLY MARKED SWITCH, AN ALPHA-NUMERIC SYMBOL NEAR GRAPHIC LIGHTING FIXTURE SYMBOL DENOTES FIXTURE TYPE, (I=INCANDESCENT, F=FLUORESCENT, MH=METAL HALIDE, H=HIGH PRESSURE SODIUM VAPOR), DESIGN TYPE, NUMBER OF LAMPS AND WATTAGE.

EXAMPLE : (4) F 2 - 2 x 32
- 32 WATT LAMPS
- 2 LAMPS
- DESIGN TYPE
- FLUORESCENT
- NUMBER OF FIXTURES

SYMBOL	DESCRIPTION
(B) -(B)	BLANK OUTLET
(J) -(J)	JUNCTION BOX
(D)	DROP CORD
	SINGLE RECEPTACLE OUTLET
	DUPLEX RECEPTACLE OUTLET
(GFCI)	DUPLEX RECEPTACLE OUTLET (WITH GFCI)
(GFCI) WP	DUPLEX RECEPTACLE OUTLET, WEATHERPROOF (WITH GFCI)
	SINGLE, SPECIAL PURPOSE RECEPTACLE OUTLET
	DUPLEX, SPECIAL PURPOSE RECEPTACLE OUTLET
(F)	FAN HANGER RECEPTACLE
S	SINGLE POLE SWITCH
S_2	DOUBLE POLE SWITCH
S_P	SWITCH AND PILOT LIGHT
S_{MC}	MOMENTARY CONTACT SWITCH
S_{RC}	REMOTE CONTROL SWITCH
S_{WP}	WEATHERPROOF SWITCH
S_F	FAN SWITCH
S_L	LIGHT SWITCH
S_H	HEATER SWITCH

SYMBOL	DESCRIPTION
S_1^O	OCCUPANCY SENSOR WALL SWITCH, SINGLE LEVEL
S_2^O	OCCUPANCY SENSOR WALL SWITCH, BILEVEL
S_M	MOTION SENSOR SWITCH
S_T	MANUAL MOTOR STARTING SWITCH, THERMAL OVERLOAD TYPE
S_{HP}	MANUAL MOTOR STARTING SWITCH, WITHOUT OVERLOAD ELEMENT
T_S	TIMER SWITCH
S_S	SWITCH AND SINGLE RECEPTACLE
S_S	SWITCH AND DUPLEX RECEPTACLE
(T)	THERMOSTAT
(PS)	PRESSURE SWITCH
(R)	CONTROL RELAY
(FS)	FLOW SWITCH
PEC	PHOTOELECTRIC CELL
	FLUSH-MOUNTED PANELBOARD AND CABINET
	SURFACE-MOUNTED PANELBOARD AND CABINET
	LIGHTING PANEL
	POWER PANEL
	COMBINATION LIGHTING AND POWER
MC	MOTOR CONTROLLER
	DISCONNECT SWITCH
	CONDUIT CONCEALED IN CEILING OR WALL
	CONDUIT CONCEALED IN FLOOR
	CONDUIT EXPOSED
MC-P	CONDUIT, PVC COATED RIGID STEEL, EXPOSED

(2) 1/2"C, PVC, 2#12
- CONDUCTOR INFO (PER CONDUIT)
- CONDUIT TYPE
- CONDUIT SIZE
- NUMBER OF CONDUITS (NO NUMBER INDICATES ONE CONDUIT)

SYMBOL	DESCRIPTION
	CROSS-LINES INDICATE NUMBER OF #12 AWG CONDUCTORS. LONGER CROSS-LINE INDICATES 1#12 AWG (G) FOR EQUIPMENT GROUNDING CONDUCTOR. NO CROSS-LINE INDICATES 2#12 WITH 1#12 (G) UNLESS OTHERWISE NOTED. ALL CONDUIT 1/2" UNLESS OTHERWISE NOTED.
A1, 2	HOMERUN TO PANELBOARD, ARROWS INDICATE NUMBER OF CIRCUITS, LETTER DENOTES PANELBOARD, NUMERAL DENOTES CIRCUIT.
SM	SURFACE METAL RACEWAY
MC	CONDUIT, RIGID STEEL, UNDERGROUND
PVC	CONDUIT, POLYVINYL CHLORIDE, UNDERGROUND
	CONDUIT, FLEXIBLE
	CONDUIT, TURN UP
	CONDUIT, TURN DOWN
	CONDUIT SEAL, EXPLOSION-PROOF
	CONDUIT, EXPANSION JOINT
	ADAPTER, ONE TYPE CONDUIT TO ANOTHER
	POLE
	PULL BOX-LETTER INDICATES TYPE OF PULL BOX (E-ELECTRICAL, T-TELEPHONE, R-RADIO)
(T)	PULL BOX (TRAFFIC RATED)-LETTER INDICATES TYPE OF PULL BOX (E-ELECTRICAL, T-TELEPHONE, R-RADIO)
A / EE-2	SECTION/ELEVATION LETTER — SHEET NUMBER
1 / EE-2	DETAIL NUMBER — SHEET NUMBER

REMODEL WORK

SYMBOL	DESCRIPTION
	EXISTING FLUORESCENT FIXTURE-TO REMAIN
	EXISTING FLUORESCENT FIXTURE-REMOVE
(SN)	EXISTING INCANDESCENT FIXTURE-TO REMAIN
	EXISTING INCANDESCENT FIXTURE-REMOVE
	EXISTING OUTLET-TO REMAIN
	EXISTING RECEPTACLE OUTLET-TO REMAIN
	EXISTING RECEPTACLE OUTLET-REMOVE
-E-E-	EXISTING CONDUIT AND CONDUCTORS-TO REMAIN UNLESS OTHERWISE NOTED
-**-	EXISTING CONDUIT AND CONDUCTORS-REMOVE
S	EXISTING SWITCH-TO REMAIN
	EXISTING SWITCH-REMOVE
(J)	EXISTING JUNCTION BOX-TO REMAIN
	EXISTING JUNCTION BOX-REMOVE

GRAPHIC SYMBOLS FOR ELECTRICAL DIAGRAMS

SYMBOL	DESCRIPTION
	CIRCUIT BREAKER, SINGLE POLE
	CIRCUIT BREAKER, DOUBLE POLE
	CIRCUIT BREAKER, THREE POLE
GFCI	CIRCUIT BREAKER, WITH GROUND FAULT CIRCUIT INTERRUPTER
	CONTACT, NORMALLY OPEN
	CONTACT, NORMALLY CLOSED
	CONTACT, NORMALLY CLOSED, TIME DELAY CLOSING ON DE-ENERGIZING
	CONTACT, NORMALLY OPEN, TIME DELAY OPENING ON DE-ENERGIZING
	CONTACT, NORMALLY OPEN, TIME DELAY CLOSING ON ENERGIZING
	CONTACT, NORMALLY CLOSED, TIME DELAY OPENING ON ENERGIZING
	CONTACT, SINGLE POLE DOUBLE-THROW
	OPERATING COIL
	LIQUID LEVEL ACTUATED SWITCH, NORMALLY CLOSED
	LIQUID LEVEL ACTUATED SWITCH, NORMALLY OPEN
	PRESSURE ACTUATED SWITCH, NORMALLY CLOSED
	PRESSURE ACTUATED SWITCH, NORMALLY OPEN
	FLOW ACTUATED SWITCH, NORMALLY CLOSED
	FLOW ACTUATED SWITCH, NORMALLY OPEN
	TEMPERATURE ACTUATED SWITCH, NORMALLY CLOSED
	TEMPERATURE ACTUATED SWITCH, NORMALLY OPEN
	LIMIT SWITCH, NORMALLY CLOSED
	LIMIT SWITCH, NORMALLY OPEN
	PUSHBUTTON SWITCH, NORMALLY CLOSED
	PUSHBUTTON SWITCH, NORMALLY OPEN
	SWITCH, SINGLE-POLE
	SWITCH, SINGLE-POLE, DOUBLE-THROW
	SWITCH, 3-POLE
	SWITCH, 3-POLE, 3-POSITION
	SWITCH, SINGLE-POLE, 3-POSITION
	THERMAL OVERLOAD
	FUSE
	RESISTOR
	TRANSFORMER WINDING
	GROUNDING ELECTRODE
	ENCLOSURE BOND
(A)	PILOT LIGHT (A=AMBER, G=GREEN, R=RED)
(G)	GENERATOR
(M)	MOTOR
(F)	FAN MOTOR

CALIFORNIA STATE FIRE MARSHAL APPROVED FIRE AND PANIC ONLY
Approval of this plan does not authorize or approve any omission or deviation from applicable regulations. Final approval is subject to field inspection. One set of approved plans shall be available on the project site at all times.
Reviewed by: FRANCIS SOLICH
Approval date: 08-28-12
CSFM File No. 01-37-11-0007

ABBREVIATIONS

A	AMPERES
ACS	AIR COMPRESSOR STARTER
AI	ANALOG INPUT
AL	ALARM LIGHT
AO	ANALOG OUTPUT
AVC	AIR VOLUME CONTROLLER
BD	BUILDING DISCONNECT
BRK	BREAKER
C	CONDUIT
CB	CIRCUIT BREAKER
CKT	CIRCUIT
CR	CONTROL RELAY
CSW	CURRENT SWITCH
CT	CONTROL TRANSFORMER
CTO	CONTROL TRANSFORMER OVERLOAD
DI	DIGITAL INPUT
DO	DIGITAL OUTPUT
DP	DUPLEX PLUG RECEPTACLE
(E)	EXISTING
EF	EXHAUST FAN
EL	ELEVATION
F	FUSE
FL	FAILURE LIGHT
FLA	FLASHER
FLEX	FLEXIBLE CONDUIT
FLS	FLOW SWITCH
FR	FAILURE RESET
FS	FLOAT SWITCH
G	GROUND
GFCI	GROUND FAULT CIRCUIT INTERRUPTER
GRS	GALVANIZED RIGID STEEL
IL	INDICATING LIGHT
IR	INDUCTION RELAY
JB	JUNCTION BOX
L	LIGHT
LC	LIGHTING CONTACTOR
LD	LIGHT DISCONNECT
LL	LIQUID LEVEL RELAY
LLC	LIQUID LEVEL CONTROLLER
LP	LIGHT PANEL
LS	LIGHT SWITCH
LT	LIGHT TRANSFORMER
LTO	LIGHT TRANSFORMER OVERLOAD
MB	MAIN BREAKER
MC	METALLIC CONDUIT
MCC	MOTOR CONTROL CENTER
MCP	MOTOR CIRCUIT PROTECTOR
MD	MAIN DISCONNECT
MSB	MAIN SWITCHBOARD
MT	EMPTY CONDUIT
(N)	NEW
NC	NORMALLY CLOSED
NO	NORMALLY OPEN
Ø	PHASE
OL	OVERLOAD
P	POLE
PB	PULL BOX
PB	PUSHBUTTON
PCP	PUMP CONTROL PANEL
PEC	PHOTOELECTRIC CELL
PL	PILOT LIGHT
PS	POWER SWITCH
PTS	POWER TRANSFER SWITCH
PVC	POLYVINYL CHLORIDE
RES	RESISTOR
S	STARTER COIL
SD	SERVICE DISCONNECT
SFR	SEAL FAILURE RELAY
SL	SUMP LIGHT
SPR	STANDBY POWER RECEPTACLE
SS	SELECTOR SWITCH
ST	STARTER
SV	SOLENOID VALVE
T	TRANSFORMER
TB	TERMINAL BLOCKS
TDR	TIME DELAY RELAY
TGLS	TOGGLE SWITCH
TM	TIME METER
TOT	TOTAL
TS	TIMER SWITCH
TSW	TEST SWITCH
TYP	TYPICAL
UPS	UNINTERRUPTIBLE POWER SUPPLY
V	VOLT
WLS	WATER LEVEL SWITCH
WP	WEATHERPROOF

	BY	CHECKED
DESIGN	Baldev S. Dehal	Tech Ngov
DETAILS	Kathi Andreasen	Baldev S. Dehal
QUANTITIES	Baldev S. Dehal	Tech Ngov

STATE OF CALIFORNIA
DEPARTMENT OF TRANSPORTATION

DIVISION OF ENGINEERING SERVICES
ELECTRICAL-MECHANICAL-WATER AND WASTEWATER DESIGN

BRIDGE NO. 57-0358W
POST MILE

EAST CABRILLO PUMPING PLANT (LOCATION 4)

PUMP PLANT REHABILITATION

LEGEND

SHEET EE4-0

TAEMWW Imperial Rev. 7/10

ORIGINAL SCALE IN INCHES FOR REDUCED PLANS 0 1 2 3

UNIT 3597
PROJECT NUMBER & PHASE 11000004061
EA 297101

DISREGARD PRINTS BEARING EARLIER REVISION DATES →
REVISION DATES (PRELIMINARY STAGE ONLY) 7/29/11 8/5/11 8/23/11 8/25/11 9/15/11 10/18/11 10/19/11 8/28/12
SHEET OF

28-AUG-2012 15:21
ee4_00.dgn

DIST.	COUNTY	ROUTE	POST MILES TOTAL PROJECT	SHEET NO.	TOTAL SHEETS
11	SD	5,8	Var	56	76

REGISTERED ELECTRICAL ENGINEER — 08-28-12 DATE

REGISTERED PROFESSIONAL ENGINEER MARK CHEAP No. E 15795 Exp. 12-31-12 ELEC STATE OF CALIFORNIA

09-24-12
PLANS APPROVAL DATE

The State of California or its officers or agents shall not be responsible for the accuracy or completeness of electronic copies of this plan sheet.

Note:

(1) *Pad mounted Service Pedestal is located at the corner of Camino Del Rio N and Camino De La Siesta streets.*

CALIFORNIA STATE FIRE MARSHAL APPROVED FIRE AND PANIC ONLY
Approval of this plan does not authorize or approve any omission or deviation from applicable regulations. Final approval is subject to field inspection. One set of approved plans shall be available on the project site at all times.
Reviewed by: FRANCIS SOLICH
Approval date: 08-28-12
CSFM File No. 01-37-11-0007

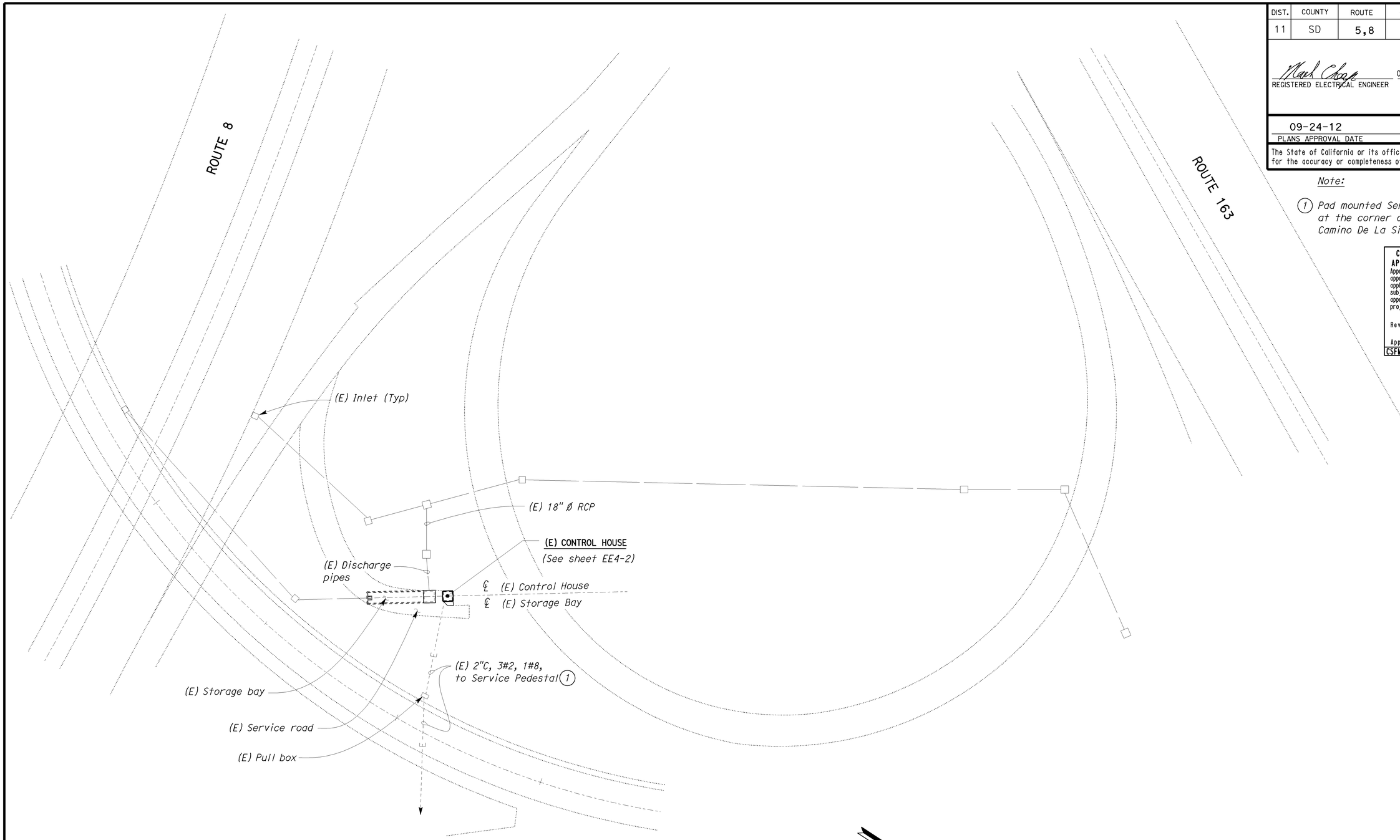

SITE PLAN
NO SCALE

THIS DRAWING ACCURATE FOR ELECTRICAL WORK ONLY.

	BY	CHECKED
DESIGN	Baldev S. Dehal	Tech Ngov
DETAILS	Kathi Andreasen	Baldev S. Dehal
QUANTITIES	Baldev S. Dehal	Tech Ngov

STATE OF CALIFORNIA
DEPARTMENT OF TRANSPORTATION

DIVISION OF ENGINEERING SERVICES
ELECTRICAL-MECHANICAL-WATER AND WASTEWATER DESIGN

BRIDGE NO. 57-0358W
POST MILE

PUMP PLANT REHABILITATION
EAST CABRILLO PUMPING PLANT (LOCATION 4)
ELECTRICAL SITE PLAN

SHEET **EE4-1**

TAEMWW Imperial Rev. 7/10

ORIGINAL SCALE IN INCHES FOR REDUCED PLANS 0 1 2 3

UNIT 3597
PROJECT NUMBER & PHASE 11000004061
EA 297101

DISREGARD PRINTS BEARING EARLIER REVISION DATES →

REVISION DATES (PRELIMINARY STAGE ONLY) 7/29/11 8/29/11 8/29/11 8/29/11 10/18/11 10/18/11 8/28/12 SHEET OF

28-AUG-2012 15:21
ee4_01.dgn

DIST.	COUNTY	ROUTE	POST MILES TOTAL PROJECT	SHEET NO.	TOTAL SHEETS
11	SD	5,8	Var	57	76

REGISTERED ELECTRICAL ENGINEER — 08-28-12 DATE

REGISTERED PROFESSIONAL ENGINEER MARK CHEAP No. E 15795 Exp. 12-31-12 ELEC STATE OF CALIFORNIA

09-24-12
PLANS APPROVAL DATE

The State of California or its officers or agents shall not be responsible for the accuracy or completeness of electronic copies of this plan sheet.

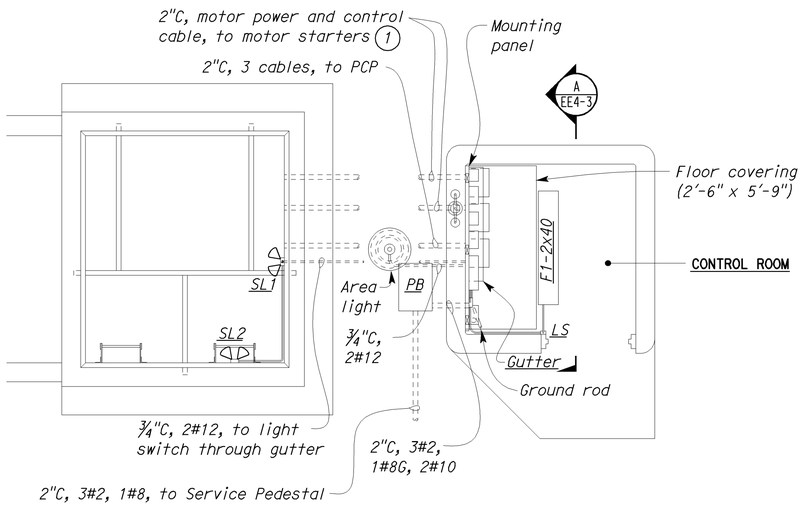

EXISTING CONTROL ROOM PLAN

SCALE 3/8"= 1'-0"

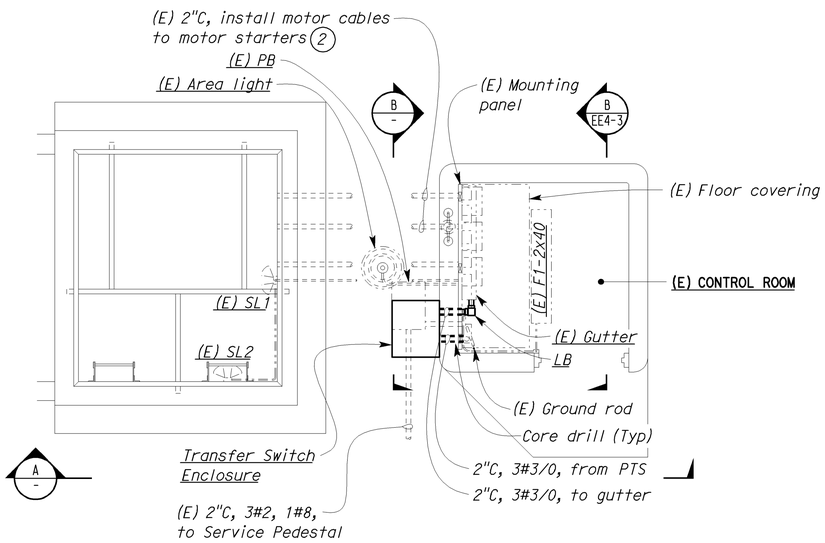

MODIFIED CONTROL ROOM PLAN

SCALE 3/8"= 1'-0"

THIS DRAWING ACCURATE FOR ELECTRICAL WORK ONLY.

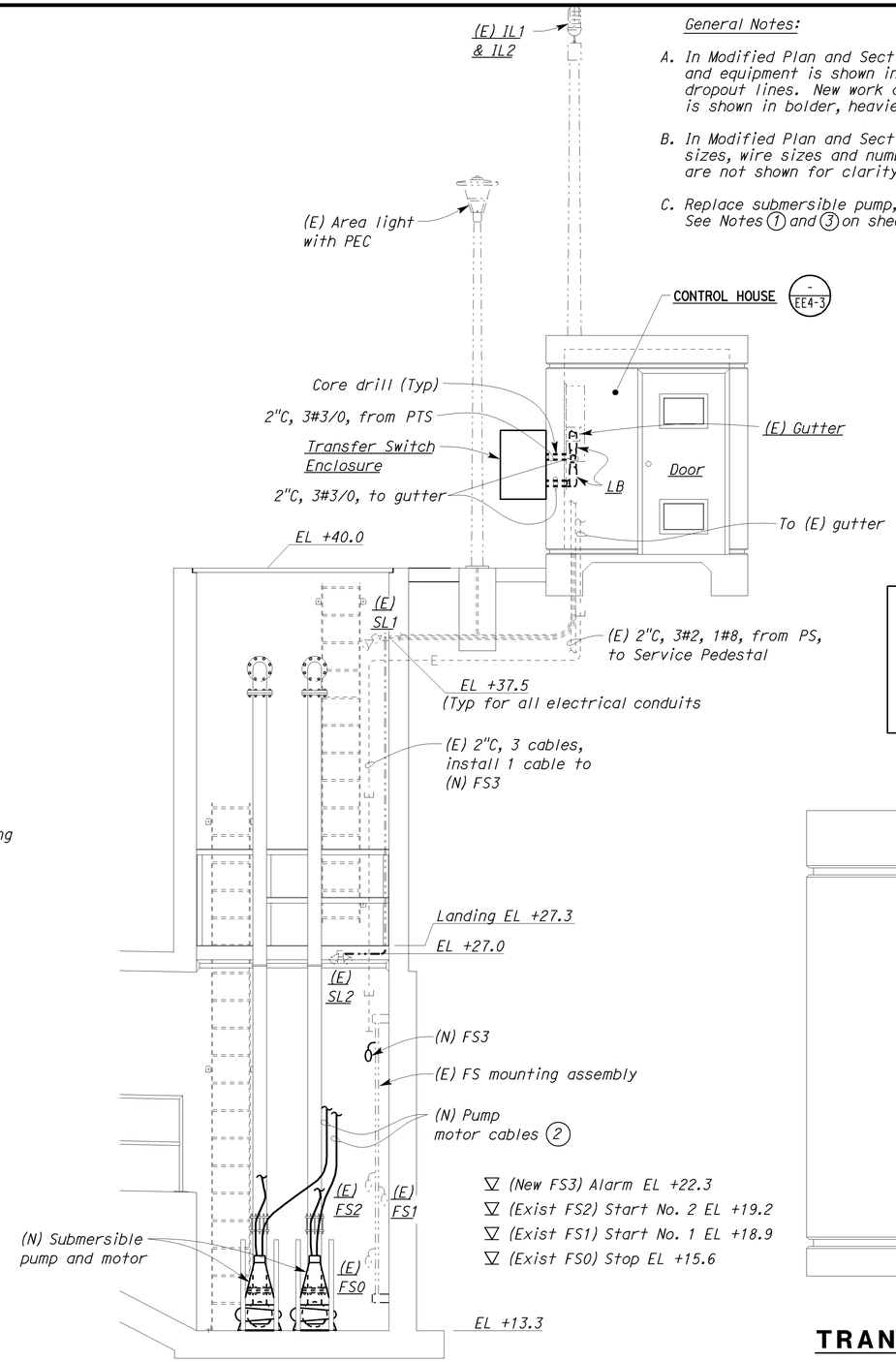

▽ (New FS3) Alarm EL +22.3
▽ (Exist FS2) Start No. 2 EL +19.2
▽ (Exist FS1) Start No. 1 EL +18.9
▽ (Exist FS0) Stop EL +15.6

(A) SECTION

SCALE 3/8"= 1'-0"

General Notes:

A. In Modified Plan and Section A, all existing work and equipment is shown in lightweight or dropout lines. New work and equipment is shown in bolder, heavier lines.

B. In Modified Plan and Section A, all existing conduit sizes, wire sizes and number of wires. and equipment are not shown for clarity.

C. Replace submersible pump, motor, and motor cables. See Notes (1) and (3) on sheet M-4.

Notes:

(1) Remove.

(2) Connect power and control cable conductor to respective starter and control terminal blocks. If seal failure probe of new motor is not compatible with existing seal failure board, replace seal failure board or relay, as recommended by the submersible pump motor manufacturer.

CALIFORNIA STATE FIRE MARSHAL
APPROVED FIRE AND PANIC ONLY
Approval of this plan does not authorize or approve any omission or deviation from applicable regulations. Final approval is subject to field inspection. One set of approved plans shall be available on the project site at all times.
Reviewed by: FRANCIS SOLICH
Approval date: 08-28-12
CSFM File No. 01-37-11-0007

PHASE SEQUENCE IS
A-B-C
SELECT PROPER VOLTAGE
BEFORE CONNECTING PLUG

(1) DETAIL

NO SCALE

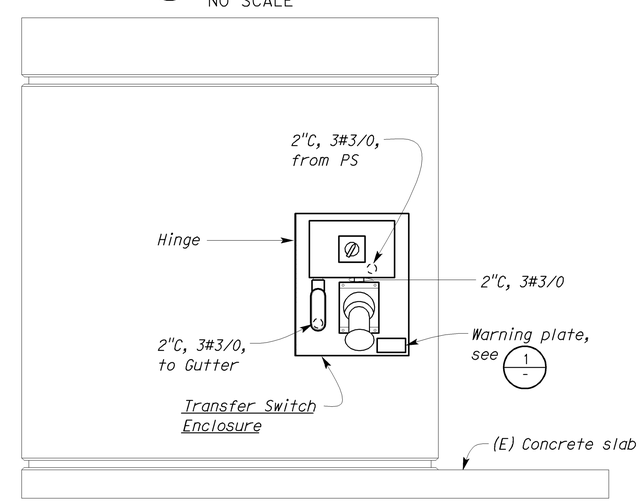

TRANSFER SWITCH ENCLOSURE EAST WALL EXTERIOR ELEVATION (B)

SCALE 1" = 1'-0"

DESIGN	BY Baldev S. Dehal	CHECKED Tech Ngov	
DETAILS	BY Kathi Andreasen	CHECKED Baldev S. Dehal	
QUANTITIES	BY Baldev S. Dehal	CHECKED Tech Ngov	

STATE OF CALIFORNIA DEPARTMENT OF TRANSPORTATION

DIVISION OF ENGINEERING SERVICES
ELECTRICAL-MECHANICAL-WATER AND WASTEWATER DESIGN

BRIDGE NO. 57-0358W
POST MILE

PUMP PLANT REHABILITATION
EAST CABRILLO PUMPING PLANT (LOCATION 4)
EXISTING AND MODIFIED CONTROL ROOM DETAILS

SHEET EE4-2

TAEMWW Imperial Rev. 7/10

ORIGINAL SCALE IN INCHES FOR REDUCED PLANS 0 1 2 3

UNIT 3597
PROJECT NUMBER & PHASE 11000004061
EA 297101

DISREGARD PRINTS BEARING EARLIER REVISION DATES
REVISION DATES (PRELIMINARY STAGE ONLY) 3/30/11 7/29/11 8/2/11 8/3/11 8/25/11 9/13/11 10/19/11 12/19/11 8/28/12
SHEET OF

28-AUG-2012 15:21
ee4_02.dgn

General Notes:

A. In Modified Elevation, all existing work and equipment is shown in lightweight or dropout lines. New work and equipment is shown in bolder, heavier lines.

B. In Modified Elevation, all existing conduit sizes, wire sizes and number of wires are not shown for clarity.

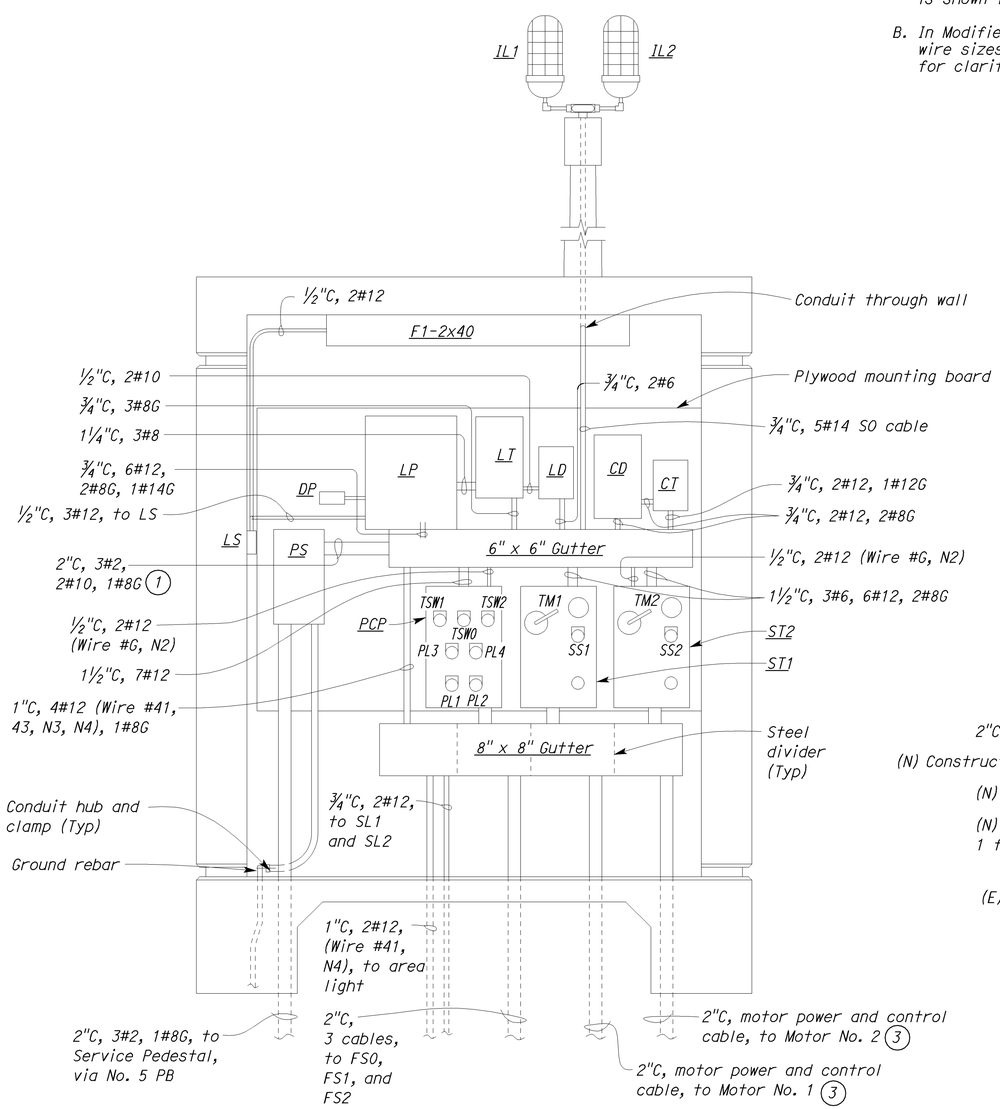

(B) EXISTING ELEVATION

SCALE 1" = 1'-0"

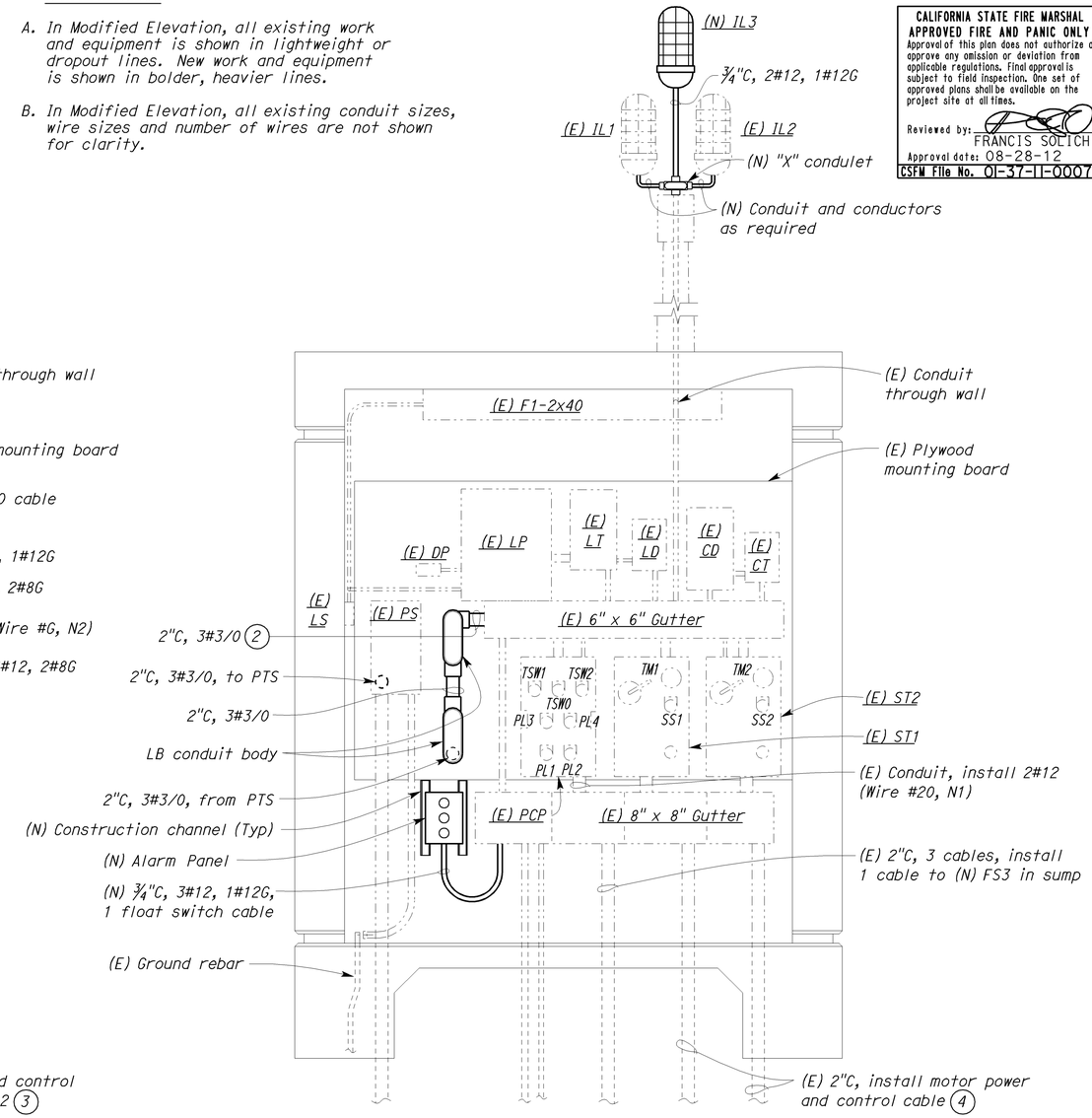

(B) MODIFIED ELEVATION

SCALE 1" = 1'-0"

CALIFORNIA STATE FIRE MARSHAL APPROVED FIRE AND PANIC ONLY
Approval of this plan does not authorize or approve any omission or deviation from applicable regulations. Final approval is subject to field inspection. One set of approved plans shall be available on the project site at all times.
Reviewed by: FRANCIS SOLICH
Approval date: 08-28-12
CSFM File No. 01-37-11-0007

DIST.	COUNTY	ROUTE	POST MILES TOTAL PROJECT	SHEET NO.	TOTAL SHEETS
11	SD	5,8	Var	58	76

REGISTERED ELECTRICAL ENGINEER — 08-28-12 DATE

REGISTERED PROFESSIONAL ENGINEER MARK CHEAP No. E 15795 Exp. 12-31-12 ELEC STATE OF CALIFORNIA

09-24-12
PLANS APPROVAL DATE

The State of California or its officers or agents shall not be responsible for the accuracy or completeness of electronic copies of this plan sheet.

Notes:

(1) Remove conductors, from load side of the circuit breaker to power terminal block inside the gutter, and remove conduit. Plug opening with two-piece steel seal.

(2) Hook up 3#3/0 on the existing power terminal block inside the gutter.

(3) Remove.

(4) Connect power and control cable conductor to respective starter and control terminal blocks. If seal failure probe of new motor is not compatible with existing seal failure board, replace seal failure board or relay, as recommended by the submersible pump motor manufacturer.

THIS DRAWING ACCURATE FOR ELECTRICAL WORK ONLY.

	BY	CHECKED
DESIGN	Baldev S. Dehal	Tech Ngov
DETAILS	Kathi Andreasen	Baldev S. Dehal
QUANTITIES	Baldev S. Dehal	Tech Ngov

STATE OF CALIFORNIA DEPARTMENT OF TRANSPORTATION

DIVISION OF ENGINEERING SERVICES
ELECTRICAL-MECHANICAL-WATER AND WASTEWATER DESIGN

BRIDGE NO. 57-0358W
POST MILE

PUMP PLANT REHABILITATION
EAST CABRILLO PUMPING PLANT (LOCATION 4)
EXISTING AND MODIFIED CONTROL ROOM ELEVATION

SHEET EE4-3

TAEMWW Imperial Rev. 7/10

ORIGINAL SCALE IN INCHES FOR REDUCED PLANS 0 1 2 3

UNIT 3597
PROJECT NUMBER & PHASE 11000004061
EA 297101

DISREGARD PRINTS BEARING EARLIER REVISION DATES
REVISION DATES (PRELIMINARY STAGE ONLY): 3/5/11 7/29/11 8/1/11 8/2/11 8/3/11 8/23/11 10/19/11 12/19/11 8/28/12

SHEET OF

28-AUG-2012 15:21

ee4_03.dgn

DIST.	COUNTY	ROUTE	POST MILES TOTAL PROJECT	SHEET NO.	TOTAL SHEETS
11	SD	5,8	Var	59	76

REGISTERED ELECTRICAL ENGINEER — 08-28-12 DATE

REGISTERED PROFESSIONAL ENGINEER — MARK CHEAP — No. E 15795 — Exp. 12-31-12 — ELEC — STATE OF CALIFORNIA

09-24-12
PLANS APPROVAL DATE

The State of California or its officers or agents shall not be responsible for the accuracy or completeness of electronic copies of this plan sheet.

CALIFORNIA STATE FIRE MARSHAL APPROVED FIRE AND PANIC ONLY
Approval of this plan does not authorize or approve any omission or deviation from applicable regulations. Final approval is subject to field inspection. One set of approved plans shall be available on the project site at all times.
Reviewed by: FRANCIS SOLICH
Approval date: 08-28-12
CSFM File No. 01-37-11-0007

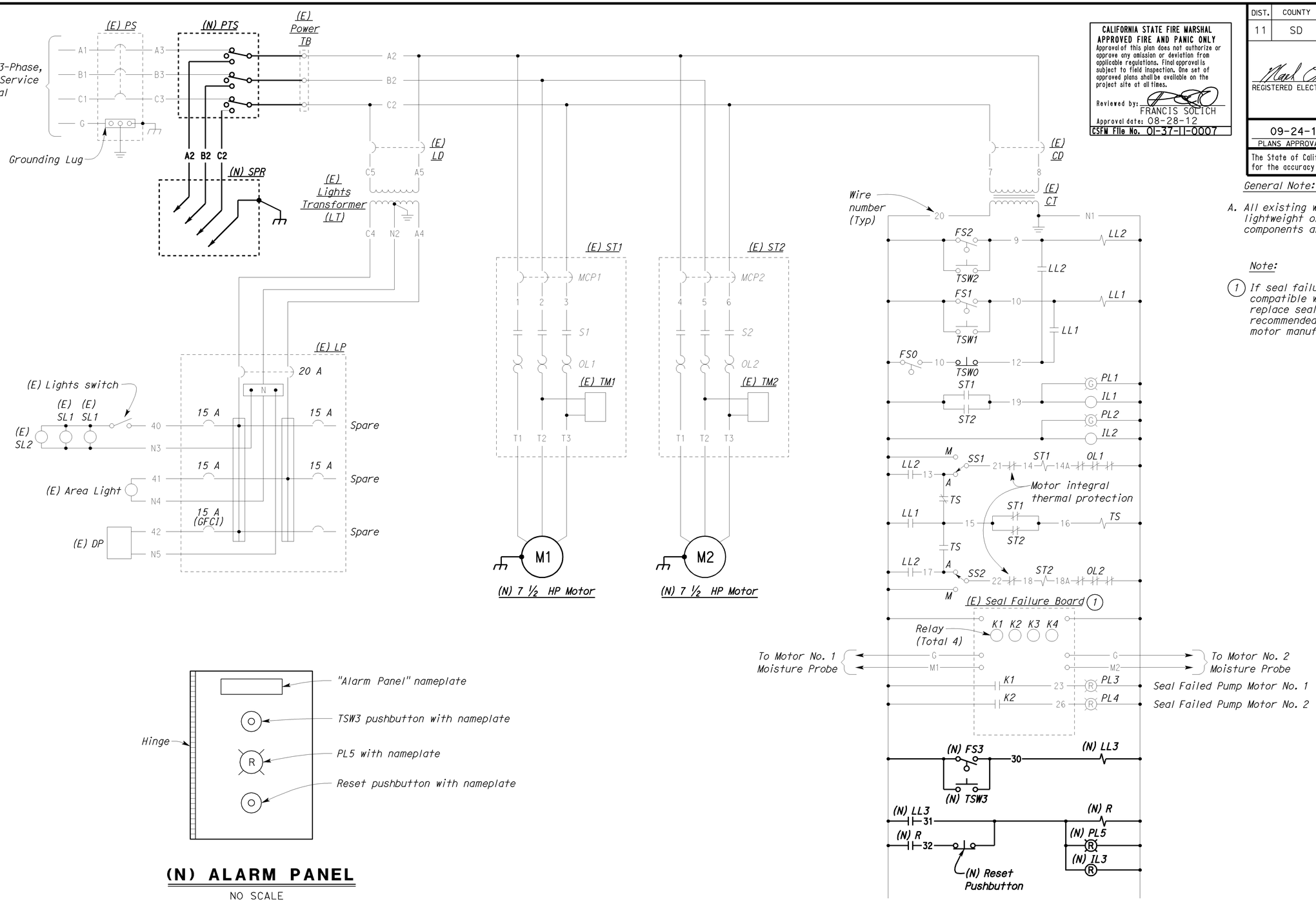

(N) ALARM PANEL
NO SCALE

General Note:

A. All existing work and components are shown in lightweight or dropout lines. New work and components are shown in bolder, heavier lines.

Note:

(1) If seal failure probe of new motor is not compatible with existing seal failure board, replace seal failure board or relay, as recommended by the submersible pump motor manufacturer.

DESIGN	BY Baldev S. Dehal	CHECKED Tech Ngov	
DETAILS	BY Kathi Andreasen	CHECKED Baldev S. Dehal	
QUANTITIES	BY Baldev S. Dehal	CHECKED Tech Ngov	

STATE OF CALIFORNIA
DEPARTMENT OF TRANSPORTATION

DIVISION OF ENGINEERING SERVICES
ELECTRICAL-MECHANICAL-WATER AND WASTEWATER DESIGN

BRIDGE NO. 57-0358W
POST MILE

PUMP PLANT REHABILITATION
EAST CABRILLO PUMPING PLANT (LOCATION 4)
MODIFIED SCHEMATIC

SHEET **EE4-4**

TAEMWW Imperial Rev. 7/10

ORIGINAL SCALE IN INCHES FOR REDUCED PLANS 0 1 2 3

UNIT 3597
PROJECT NUMBER & PHASE 11000004061
EA 297101

DISREGARD PRINTS BEARING EARLIER REVISION DATES
REVISION DATES (PRELIMINARY STAGE ONLY) 2/25/11 8/25/11 8/25/11 8/25/11 10/18/11 12/18/11 8/28/12
SHEET OF

28-AUG-2012 15:21
ee4_04.dgn

SHEET INDEX
(LOCATION 1)

MECHANICAL PLANS

M1-0 GENERAL PLAN
M1-1 EXISTING PLAN NO.1
M1-2 EXISTING PLAN NO.2
M1-3 MODIFIED PLAN
M1-4 MECHANICAL PLAN

ELECTRICAL PLANS

EE1-0 LEGEND
EE1-0.1 TITLE 24 COMPLIANCE NO. 1
EE1-0.2 TITLE 24 COMPLIANCE NO. 2
EE1-1 ELECTRICAL SITE PLAN
EE1-2 EXISTING CONTROL ROOM AND PUMP MOTOR ROOM DETAILS NO.1
EE1-3 EXISTING CONTROL ROOM AND PUMP MOTOR ROOM DETAILS NO.2
EE1-4 EXISTING AND MODIFIED CONTROL ROOM ELEVATION
EE1-5 MODIFIED CONTROL ROOM AND PUMP MOTOR ROOM DETAILS NO.1
EE1-6 EXISTING AND MODIFIED CONTROL ROOM ELEVATION
EE1-7 MODIFIED CONTROL ROOM AND PUMP MOTOR ROOM DETAILS NO.2
EE1-8 POWER SCHEMATIC DIAGRAM
EE1-9 CONTROL SCHEMATIC DIAGRAM
EE1-10 CONTROL ROOM WIRING DIAGRAM
EE1-11 PUMP ROOM WIRING DIAGRAM
EE1-12 ELECTRICAL DETAILS
EE1-13 CONTROL HOUSE EXTERIOR ELEVATIONS AND MISCELLANEOUS DETAILS

GENERAL NOTE:

1. EXISTING UTILITY FACILITIES HAVE NOT BEEN PLOTTED ON THESE PLANS.

CALIFORNIA STATE FIRE MARSHAL APPROVED FIRE AND PANIC ONLY
Approval of this plan does not authorize or approve any omission or deviation from applicable regulations. Final approval is subject to field inspection. One set of approved plans shall be available on the project site at all times.
Reviewed by: FRANCIS SOLICH
Approval date: 08-28-12
CSFM File No. 01-37-11-0007

DIST.	COUNTY	ROUTE	POST MILES TOTAL PROJECT	SHEET NO.	TOTAL SHEETS
11	SD	5,8	Var	60	76

REGISTERED MECHANICAL ENGINEER — 08-28-12 DATE

REGISTERED PROFESSIONAL ENGINEER — TOM H. HATAM — No. M33666 — Exp. 6-30-13 MECH — STATE OF CALIFORNIA

09-24-12
PLANS APPROVAL DATE

The State of California or its officers or agents shall not be responsible for the accuracy or completeness of electronic copies of this plan sheet.

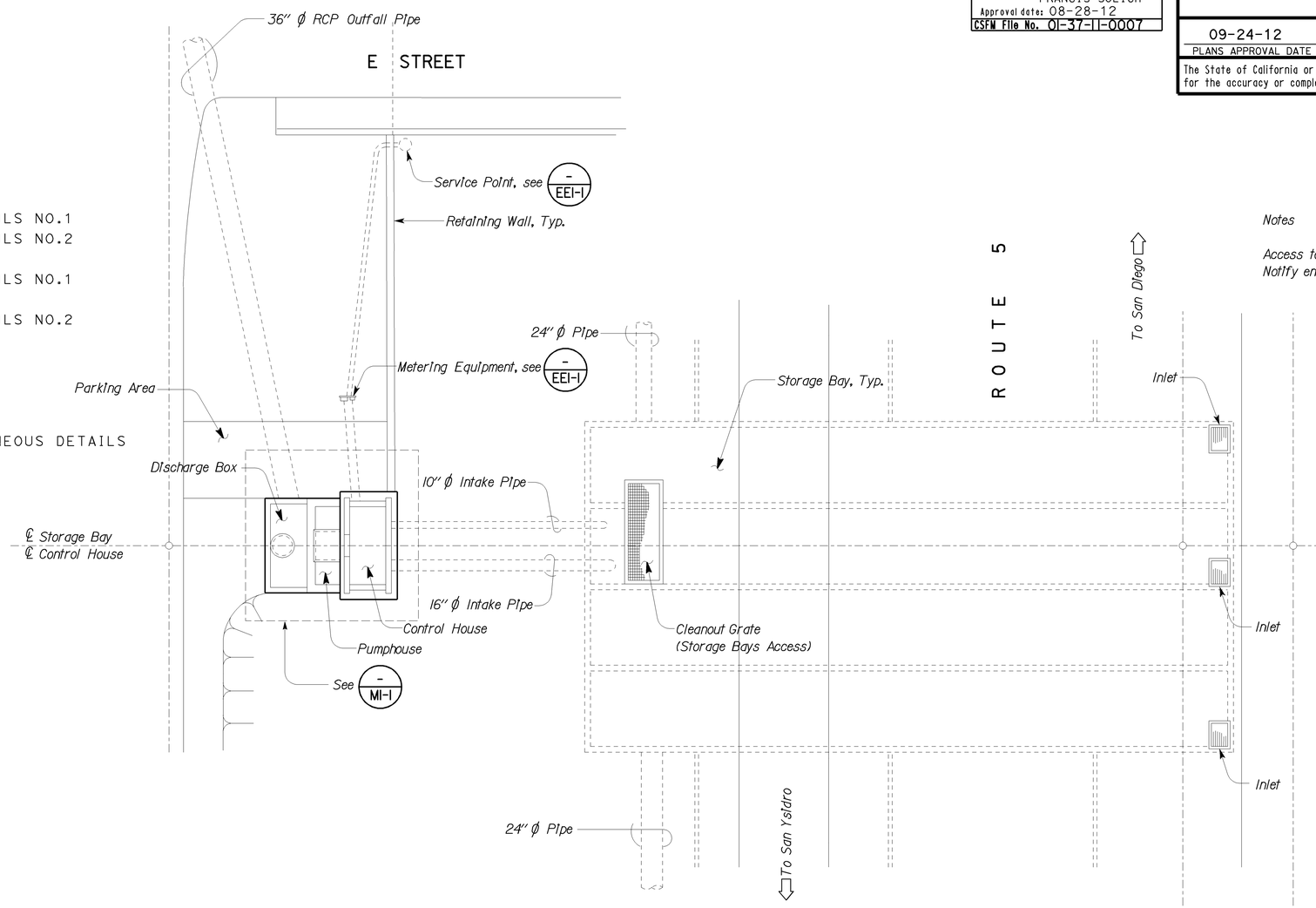

Notes

Access to storage bay requires traffic control. Notify engineer 28 days in advance.

EXISTING SITE PLAN

NO SCALE

THIS DRAWING ACCURATE FOR MECHANICAL WORK ONLY

DESIGN SUPERVISOR
DESIGN ENGINEER

	BY	CHECKED
DESIGN	Severiano Gutierrez	Tom Hatam
DETAILS	Rudy Sarte	Severiano Gutierrez
QUANTITIES	Severiano Gutierrez	Tom Hatam

STATE OF CALIFORNIA
DEPARTMENT OF TRANSPORTATION

DIVISION OF ENGINEERING SERVICES
ELECTRICAL-MECHANICAL-WATER AND WASTEWATER DESIGN

BRIDGE NO. 57-725W
POST MILE

PUMPING PLANT REHABILITATION
E STREET PUMPING PLANT (Location 1)
GENERAL PLAN

SHEET **M1-0**

DS OSD 2139A (4/89)
FILE NO.:
FILE => m1_0.dgn
DATE PLOTTED => 29-AUG-2012 TIME PLOTTED => 08:00

ORIGINAL SCALE IN INCHES FOR REDUCED PLANS 0 1 2 3

UNIT 3580
PROJECT NUMBER & PHASE 11000004061

DISREGARD PRINTS BEARING EARLIER REVISION DATES
REVISION DATES (PRELIMINARY STAGE ONLY) 07-15-11 09-16-11 10-12-11 12-12-11 08-28-12
SHEET OF

USERNAME => s124392 DATE PLOTTED => 29-AUG-2012 TIME PLOTTED => 08:00

V|=|

DIST.	COUNTY	ROUTE	POST MILES TOTAL PROJECT	SHEET NO.	TOTAL SHEETS
11	SD	5,8	Var	61	76

CALIFORNIA STATE FIRE MARSHAL APPROVED FIRE AND PANIC ONLY
Approval of this plan does not authorize or approve any omission or deviation from applicable regulations. Final approval is subject to field inspection. One set of approved plans shall be available on the project site at all times.
Reviewed by: FRANCIS SOLICH
Approval date: 08-28-12
CSFM File No. 01-37-11-0007

REGISTERED MECHANICAL ENGINEER — DATE: 08-28-12
TOM H. HATAM, No. M33666, Exp. 6-30-13 MECH — REGISTERED PROFESSIONAL ENGINEER — STATE OF CALIFORNIA

09-24-12
PLANS APPROVAL DATE

The State of California or its officers or agents shall not be responsible for the accuracy or completeness of electronic copies of this plan sheet.

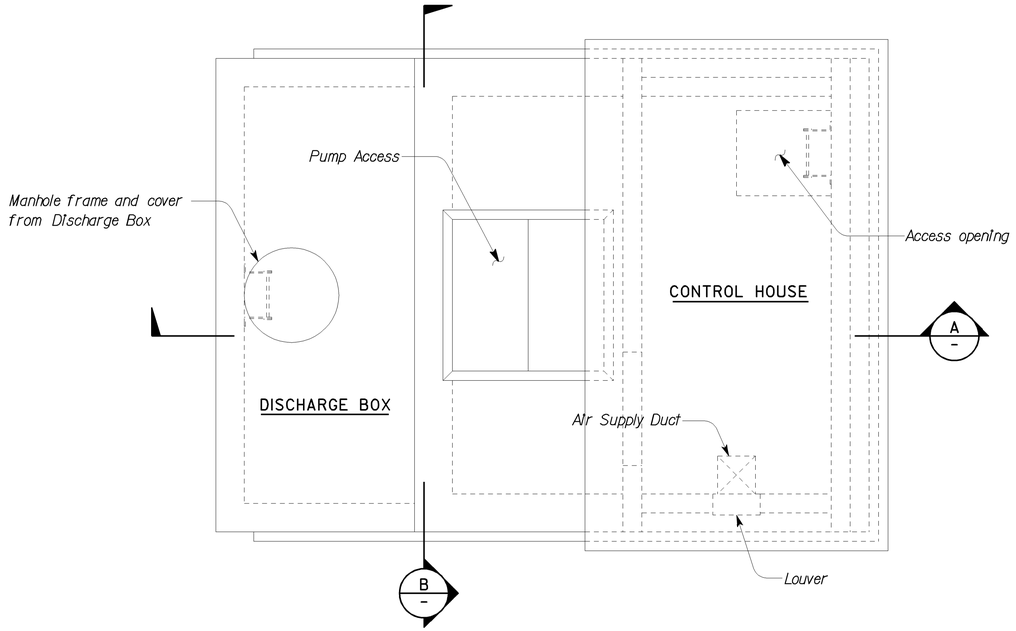

PLAN

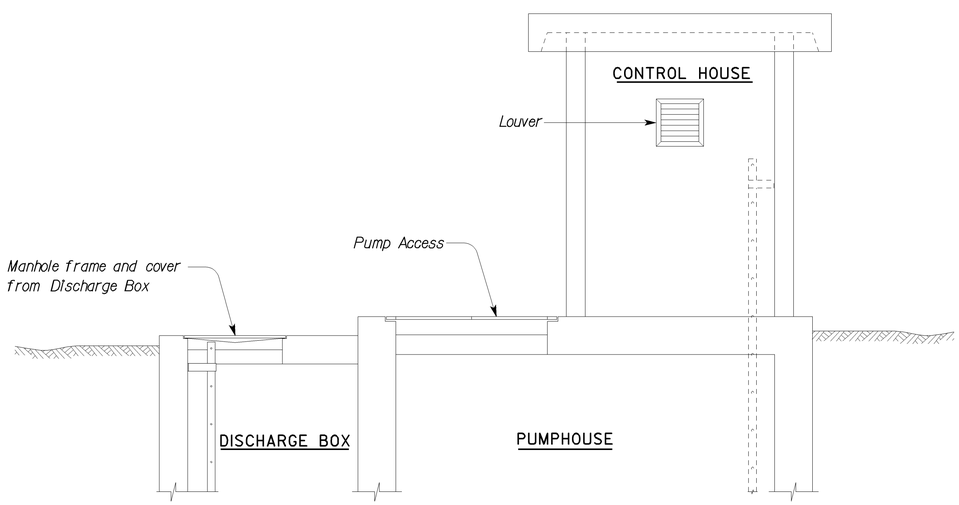

A SECTION

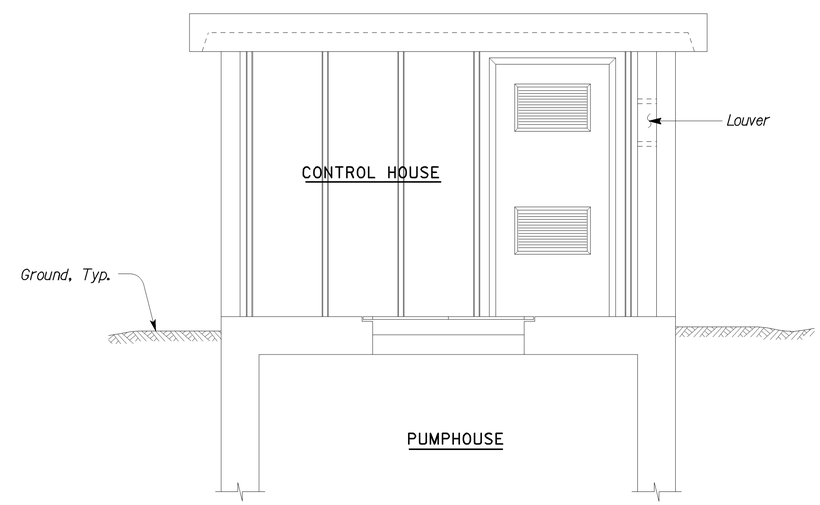

B SECTION

THIS DRAWING ACCURATE FOR MECHANICAL WORK ONLY

SCALE: 1/2" = 1'-0"

	BY	CHECKED
DESIGN	Severiano Gutierrez	Tom Hatam
DETAILS	Rudy Sarte	Severiano Gutierrez
QUANTITIES	Severiano Gutierrez	Tom Hatam

STATE OF CALIFORNIA DEPARTMENT OF TRANSPORTATION

DIVISION OF ENGINEERING SERVICES
ELECTRICAL-MECHANICAL-WATER AND WASTEWATER DESIGN

BRIDGE NO. 57-725W
POST MILE

PUMPING PLANT REHABILITATION
E STREET PUMPING PLANT (Location I)
EXISTING PLAN NO. I

SHEET **M1-1**

TAEMWW Imperial Rev. 7/10
FILE => m1_1.dgn
DATE PLOTTED => 29-AUG-2012 TIME PLOTTED => 08:00

ORIGINAL SCALE IN INCHES FOR REDUCED PLANS 0 1 2 3

UNIT 3580
PROJECT NUMBER & PHASE 11000004061

DISREGARD PRINTS BEARING EARLIER REVISION DATES →
REVISION DATES (PRELIMINARY STAGE ONLY): 07-15-11 09-16-11 10-12-11 12-12-11 08-28-12
SHEET OF

USERNAME => s124392 DATE PLOTTED => 29-AUG-2012 TIME PLOTTED => 08:00

V|=|

DIST.	COUNTY	ROUTE	POST MILES TOTAL PROJECT	SHEET NO.	TOTAL SHEETS
11	SD	5,8	Var	62	76

REGISTERED MECHANICAL ENGINEER — 08-28-12 DATE

REGISTERED PROFESSIONAL ENGINEER TOM H. HATAM No. M33666 Exp. 6-30-13 MECH STATE OF CALIFORNIA

09-24-12
PLANS APPROVAL DATE

The State of California or its officers or agents shall not be responsible for the accuracy or completeness of electronic copies of this plan sheet.

CALIFORNIA STATE FIRE MARSHAL APPROVED FIRE AND PANIC ONLY
Approval of this plan does not authorize or approve any omission or deviation from applicable regulations. Final approval is subject to field inspection. One set of approved plans shall be available on the project site at all times.
Reviewed by: FRANCIS SOLICH
Approval date: 08-28-12
CSFM File No. 01-37-11-0007

General Note:

1. Existing Pumps:
   Pump #1, Fairbanks Morse, Model # 5424C, Serial # K3S1058790-0, 2,300 GPM @ 33 ft, Electric Motor #1, General Electric, Model # 5K364EK414, Serial # FH254037, 875 RPM, 25 HP, 460V, 60HZ, 3 Phase.
2. Pump #2, Fairbanks Morse, Model # 5720, Serial # K2S1063612, 7,000 GPM @ 33 ft, Electric Motor #2, General Electric, Model # 5K445EK413, Serial # BH123033, 885 RPM, 75 HP, 460V, 60HZ, 3 Phase.
3. All items and equipment to be replaced or removed are indicated, all other items and equipment shall remained.
4. Remove existing 2" sump pump discharge horizontal line fittings and valves up to vertical discharge.

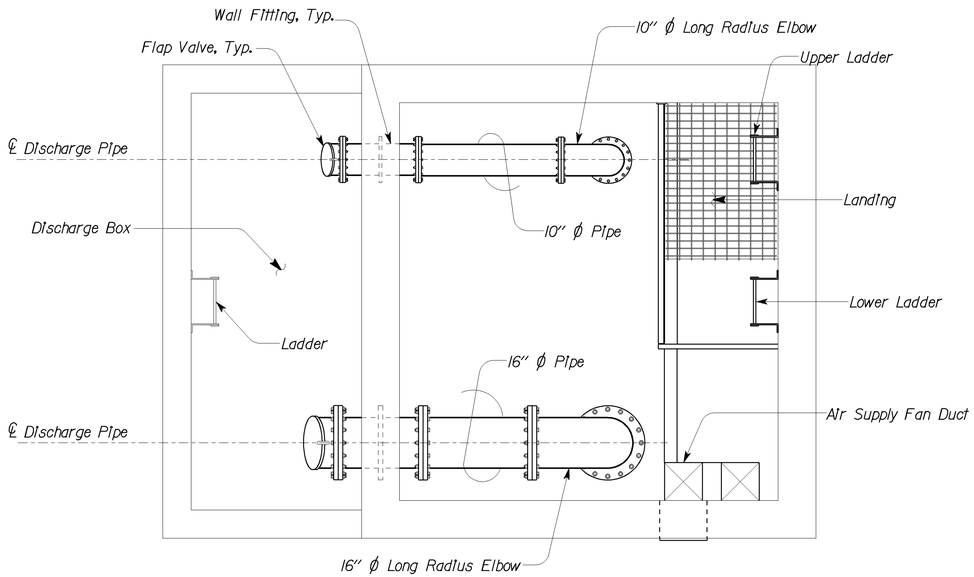

PLAN

SCALE: 1/2" = 1'-0"

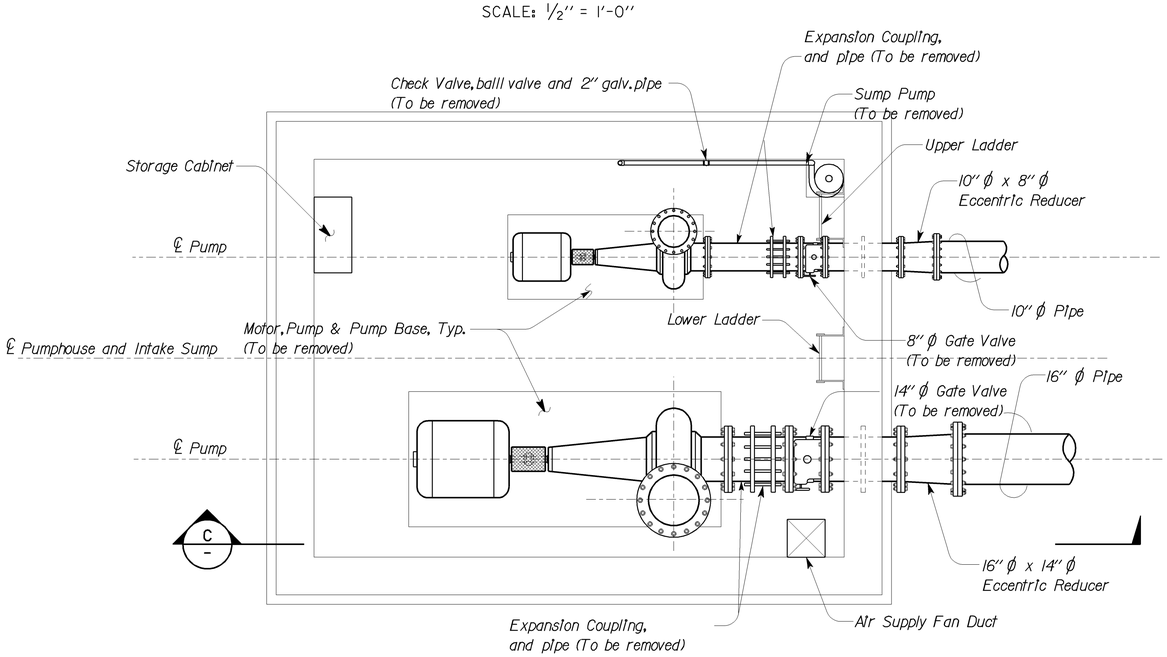

MOTOR ROOM PLAN

SCALE: 1/2" = 1'-0"

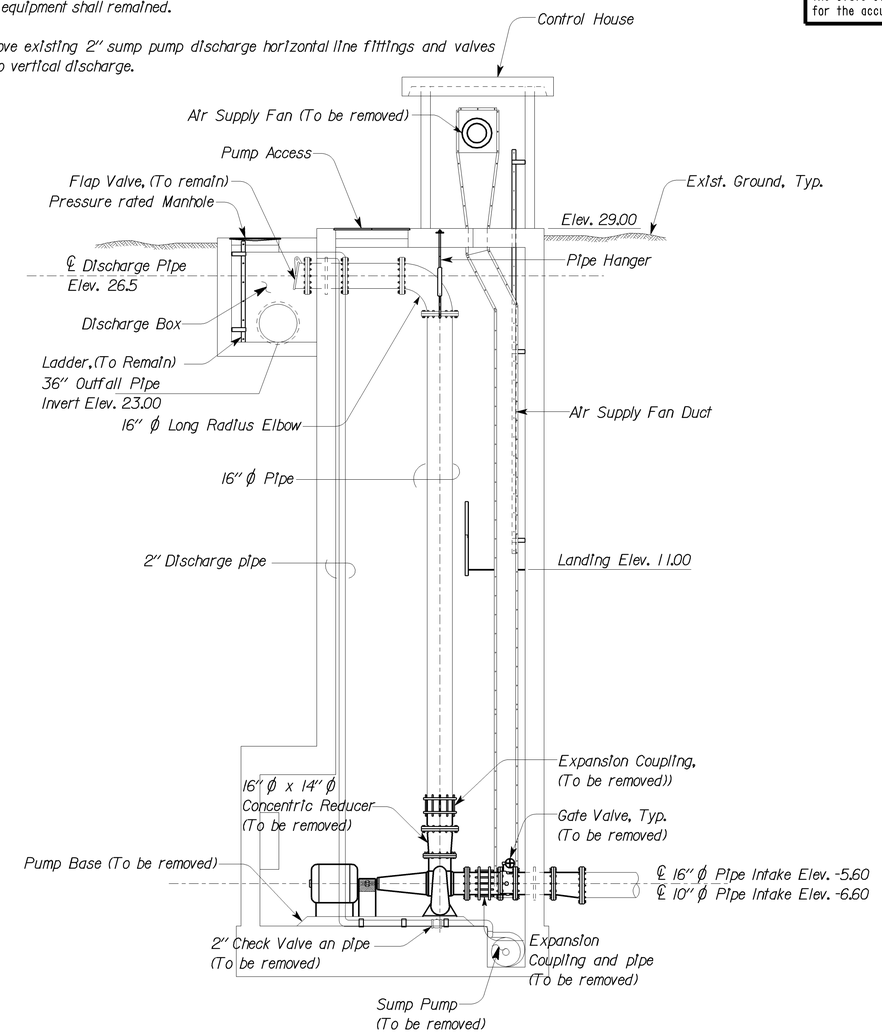

C SECTION

SCALE: 1/4" = 1'-0"

THIS DRAWING ACCURATE FOR MECHANICAL WORK ONLY

DESIGN	BY Severiano Gutierrez	CHECKED Tom Hatam	
DETAILS	BY Rudy Sarte	CHECKED Severiano Gutierrez	
QUANTITIES	BY Severiano Gutierrez	CHECKED Tom Hatam	

STATE OF CALIFORNIA DEPARTMENT OF TRANSPORTATION

DIVISION OF ENGINEERING SERVICES
ELECTRICAL-MECHANICAL-WATER AND WASTEWATER DESIGN

BRIDGE NO. 57-725W
POST MILE

PUMPING PLANT REHABILITATION
E STREET PUMPING PLANT (Location I)
EXISTING PLAN NO. 2

SHEET **M1-2**

TAEMWW Imperial Rev. 7/10
FILE => m1_2.dgn
DATE PLOTTED => 29-AUG-2012 TIME PLOTTED => 08:00

ORIGINAL SCALE IN INCHES FOR REDUCED PLANS 0 1 2 3

UNIT 3580
PROJECT NUMBER & PHASE 11000004061

DISREGARD PRINTS BEARING EARLIER REVISION DATES →
REVISION DATES (PRELIMINARY STAGE ONLY) 07-15-11 09-16-11 10-12-11 12-12-11 08-28-12
SHEET OF

USERNAME => s124392 DATE PLOTTED => 29-AUG-2012 TIME PLOTTED => 08:00

VI=1

DIST.	COUNTY	ROUTE	POST MILES TOTAL PROJECT	SHEET NO.	TOTAL SHEETS
11	SD	5,8	Var	63	76

CALIFORNIA STATE FIRE MARSHAL APPROVED FIRE AND PANIC ONLY
Approval of this plan does not authorize or approve any omission or deviation from applicable regulations. Final approval is subject to field inspection. One set of approved plans shall be available on the project site at all times.
Reviewed by: FRANCIS SOLICH
Approval date: 08-28-12
CSFM File No. 01-37-11-0007

REGISTERED MECHANICAL ENGINEER — 08-28-12 DATE

REGISTERED PROFESSIONAL ENGINEER — TOM H. HATAM — No. M33666 — Exp. 6-30-13 MECH — STATE OF CALIFORNIA

09-24-12
PLANS APPROVAL DATE

The State of California or its officers or agents shall not be responsible for the accuracy or completeness of electronic copies of this plan sheet.

Notes:

1. Submitt motor, pump and pump base shop drawings for approval.
2. Walls and floor of pump room shall be sand blasted up to 8' from floor. Paint wall and floor with primer and two coats of epoxy base paint. Epoxy paint color to determine by Engineer.
3. Pumps and motors shall be rated as follows:
   Pump#1- 25 HP, 480V, 60Hz, 3 Phase. 2,300 GPM @ 33 feet.
   Pump#2- 75 HP, 480V, 60HZ, 3 Phase, 7,000 GPM @ 33 feet.
   Sump Pump- 1 Hp, 480V, 60 HZ, 3 Phase, 45 GPM @ 35 feet.
4. Air supply fan must be 600 CFM, 3/4HP, 115V, 60HZ, 1Phase, @ .5 SP. Fan shall be able to fit into existing opening.

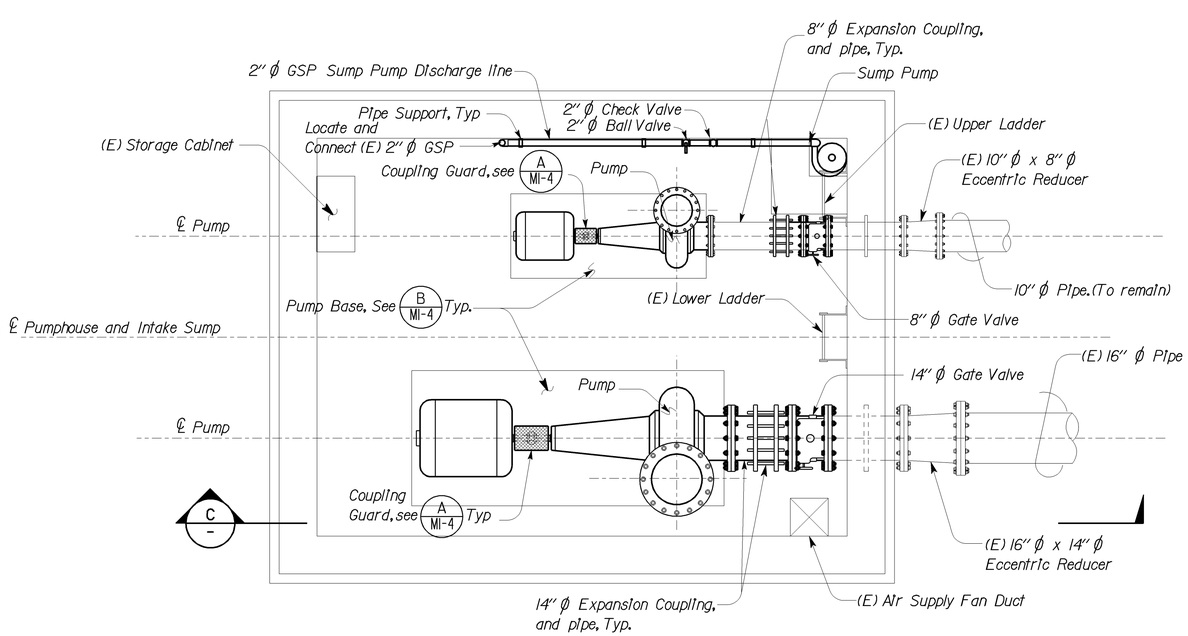

MOTOR ROOM PLAN

SCALE: 1/2" = 1'-0"

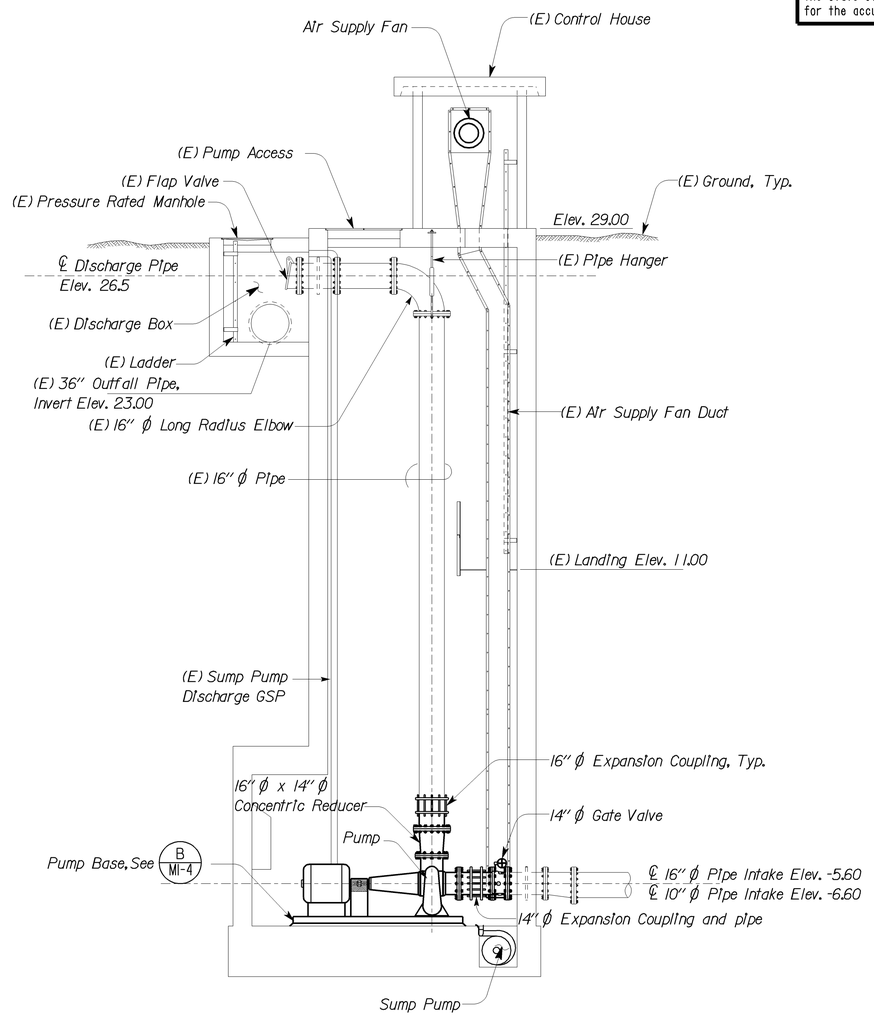

C SECTION

SCALE: 1/4" = 1'-0"

THIS DRAWING ACCURATE FOR MECHANICAL WORK ONLY

DESIGN	BY Severiano Gutierrez	CHECKED Tom Hatam	
DETAILS	BY Rudy Sarte	CHECKED Severiano Gutierrez	
QUANTITIES	BY Severiano Gutierrez	CHECKED Tom Hatam	

STATE OF CALIFORNIA DEPARTMENT OF TRANSPORTATION

DIVISION OF ENGINEERING SERVICES
ELECTRICAL-MECHANICAL-WATER AND WASTEWATER DESIGN

BRIDGE NO. 57-725W
POST MILE

PUMPING PLANT REHABILITATION
E STREET PUMPING PLANT (Location 1)
MODIFIED PLAN

SHEET **M1-3**

TAEMWW Imperial Rev. 7/10
FILE => m1_3.dgn
DATE PLOTTED => 29-AUG-2012 TIME PLOTTED => 08:00
ORIGINAL SCALE IN INCHES FOR REDUCED PLANS 0 1 2 3
UNIT 3580
PROJECT NUMBER & PHASE 11000004061
DISREGARD PRINTS BEARING EARLIER REVISION DATES →
REVISION DATES (PRELIMINARY STAGE ONLY) 07-15-11 09-16-11 10-12-11 12-12-11 08-28-12
SHEET OF

USERNAME => s124392 DATE PLOTTED => 29-AUG-2012 TIME PLOTTED => 08:00

V1=1

DIST.	COUNTY	ROUTE	POST MILES TOTAL PROJECT	SHEET NO.	TOTAL SHEETS
11	SD	5,8	Var	64	76

CALIFORNIA STATE FIRE MARSHAL
APPROVED FIRE AND PANIC ONLY
Approval of this plan does not authorize or approve any omission or deviation from applicable regulations. Final approval is subject to field inspection. One set of approved plans shall be available on the project site at all times.
Reviewed by: FRANCIS SOLICH
Approval date: 08-28-12
CSFM File No. 01-37-11-0007

REGISTERED MECHANICAL ENGINEER — 08-28-12 DATE

REGISTERED PROFESSIONAL ENGINEER — TOM H. HATAM — No. M33666 — Exp. 6-30-13 MECH — STATE OF CALIFORNIA

09-24-12
PLANS APPROVAL DATE

The State of California or its officers or agents shall not be responsible for the accuracy or completeness of electronic copies of this plan sheet.

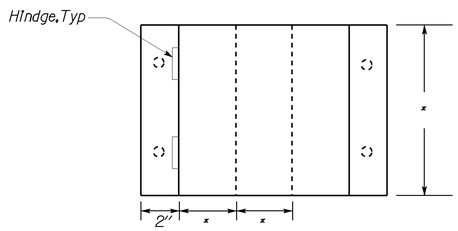

TOP

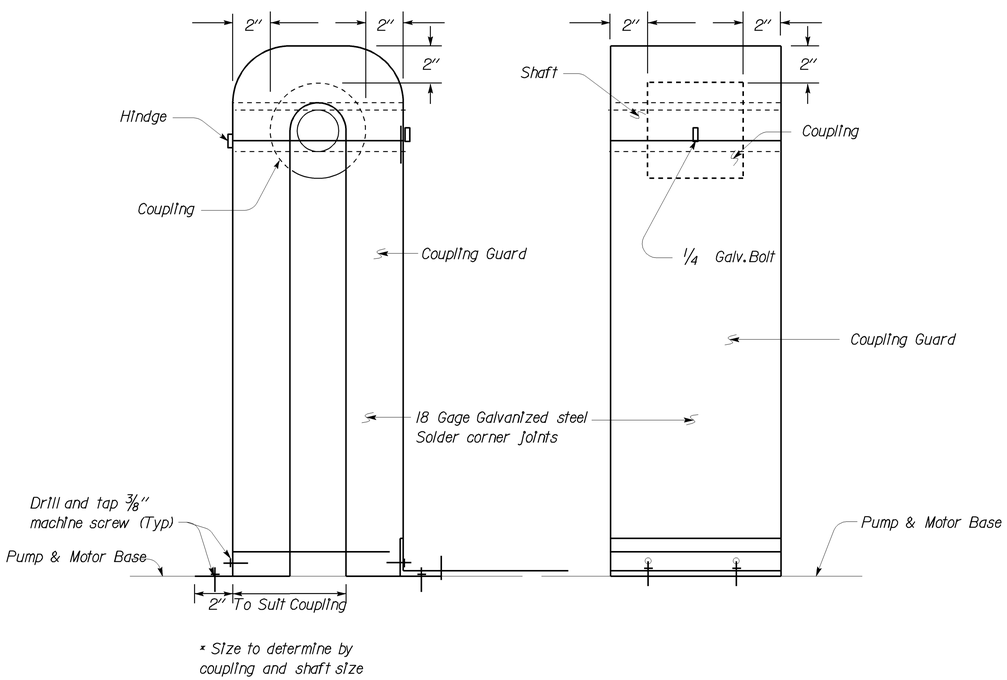

SIDE **FRONT**

(A) COUPLING GUARD

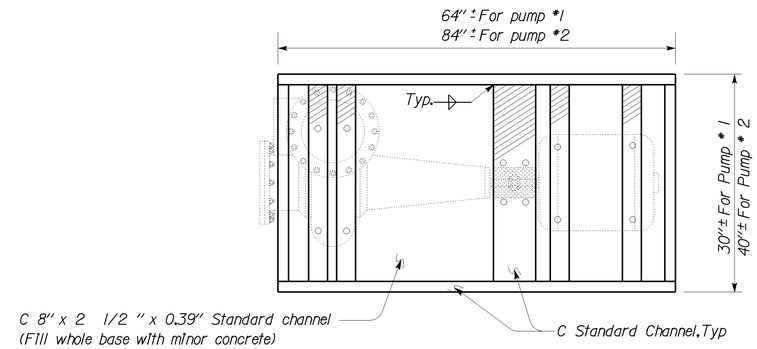

TOP

Note:
Location of motor and pump supports
to be determine by pump manufacturer

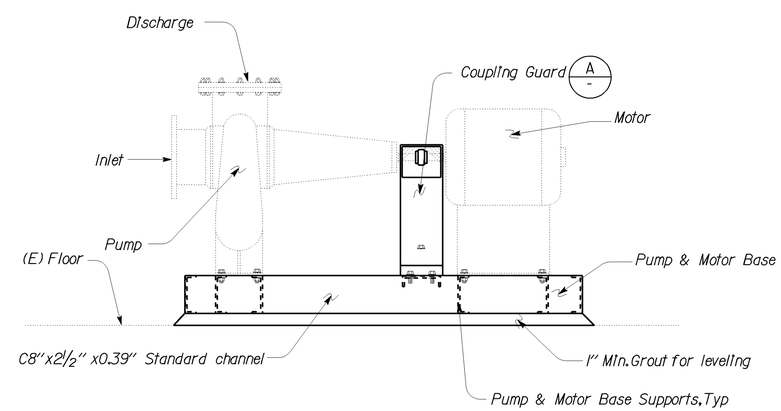

FRONT

(B) PUMP SYSTEM

Notes:
1. Contractor shall submit shop drawings for coupling guard and Pump & motor base for approval.
2. Pump and motor base shall be set level. Space between base and floor shall be filled with minor concrete. Contractor shall submit shop drawings for anchoring pump/motor base to existing floor.
3. Mount motor and pump per maufaturer recommendations.

THIS DRAWING ACCURATE FOR MECHANICAL WORK ONLY

NO SCALE

DESIGN	BY Severiano Gutierrez	CHECKED Tom Hatam	
DETAILS	BY Rudy Sarte	CHECKED Severiano Gutierrez	
QUANTITIES	BY Severiano Gutierrez	CHECKED Tom Hatam	

STATE OF CALIFORNIA
DEPARTMENT OF TRANSPORTATION

DIVISION OF ENGINEERING SERVICES
ELECTRICAL-MECHANICAL-WATER AND WASTEWATER DESIGN

BRIDGE NO. 57-725W
POST MILE

PUMPING PLANT REHABILITATION
E STREET PUMPING PLANT (Location I)
MECHANICAL PLAN

SHEET **M1-4**

TAEMWW Imperial Rev. 7/10
FILE => m1_4.dgn
DATE PLOTTED => 29-AUG-2012 TIME PLOTTED => 08:00

ORIGINAL SCALE IN INCHES FOR REDUCED PLANS 0 1 2 3

UNIT 3580
PROJECT NUMBER & PHASE 11000004061

DISREGARD PRINTS BEARING EARLIER REVISION DATES → 07-15-11 | 09-16-11 | 10-12-11 | 12-2-11 | 08-28-12

REVISION DATES (PRELIMINARY STAGE ONLY) SHEET OF

USERNAME => s124392 DATE PLOTTED => 29-AUG-2012 TIME PLOTTED => 08:00

V|=|

DIST.	COUNTY	ROUTE	POST MILES TOTAL PROJECT	SHEET NO.	TOTAL SHEETS
11	SD	5,8	Var	65	76

REGISTERED ENGINEER-MECHANICAL 08-28-12

REGISTERED PROFESSIONAL ENGINEER TOM H. HATAM No. M33666 Exp. 6-30-13 MECH STATE OF CALIFORNIA

09-24-12
PLANS APPROVAL DATE

The State of California or its officers or agents shall not be responsible for the accuracy or completeness of electronic copies of this plan sheet.

CALIFORNIA STATE FIRE MARSHAL APPROVED FIRE AND PANIC ONLY
Approval of this plan does not authorize or approve any omission or deviation from applicable regulations. Final approval is subject to field inspection. One set of approved plans shall be available on the project site at all times.
Reviewed by: FRANCIS SOLICH
Approval date: 08-28-12
CSFM File No. 01-37-11-0007

SHEET INDEX (LOCATION 2)

MECHANICAL PLANS

M2-0 GENERAL PLAN
M2-1 EXISTING PLAN NO.1
M2-2 EXISTING PLAN NO.2
M2-3 MODIFIED PLAN
M2-4 MECHANICAL PLAN

ELECTRICAL PLANS

EE2-0 LEGEND
EE2-0.1 TITLE 24 COMPLIANCE NO. 1
EE2-0.2 TITLE 24 COMPLIANCE NO. 2
EE2-1 ELECTRICAL SITE PLAN
EE2-2 EXISTING CONTROL ROOM AND PUMP MOTOR ROOM DETAILS NO.1
EE2-3 EXISTING CONTROL ROOM AND PUMP MOTOR ROOM DETAILS NO.2
EE2-4 EXISTING AND MODIFIED CONTROL ROOM ELEVATION
EE2-5 MODIFIED CONTROL ROOM AND PUMP MOTOR ROOM DETAILS NO.1
EE2-6 EXISTING AND MODIFIED PUMP MOTOR ROOM ELEVATION
EE2-7 MODIFIED CONTROL ROOM AND PUMP MOTOR ROOM DETAILS NO.2
EE2-8 POWER SCHEMATIC DIAGRAM
EE2-9 CONTROL SCHEMATIC DIAGRAM
EE2-10 CONTROL ROOM WIRING DIAGRAM
EE2-11 PUMP ROOM WIRING DIAGRAM
EE2-12 ELECTRICAL DETAILS
EE2-13 CONTROL HOUSE EXTERIOR ELEVATIONS AND MISCELLANEOUS DETAILS

GENERAL NOTE:

1. EXISTING UTILITY FACILITIES HAVE NOT BEEN PLOTTED ON THESE PLANS.

Note

Access to storage bay requires traffic control.
Notify engineer 28 days in advance.

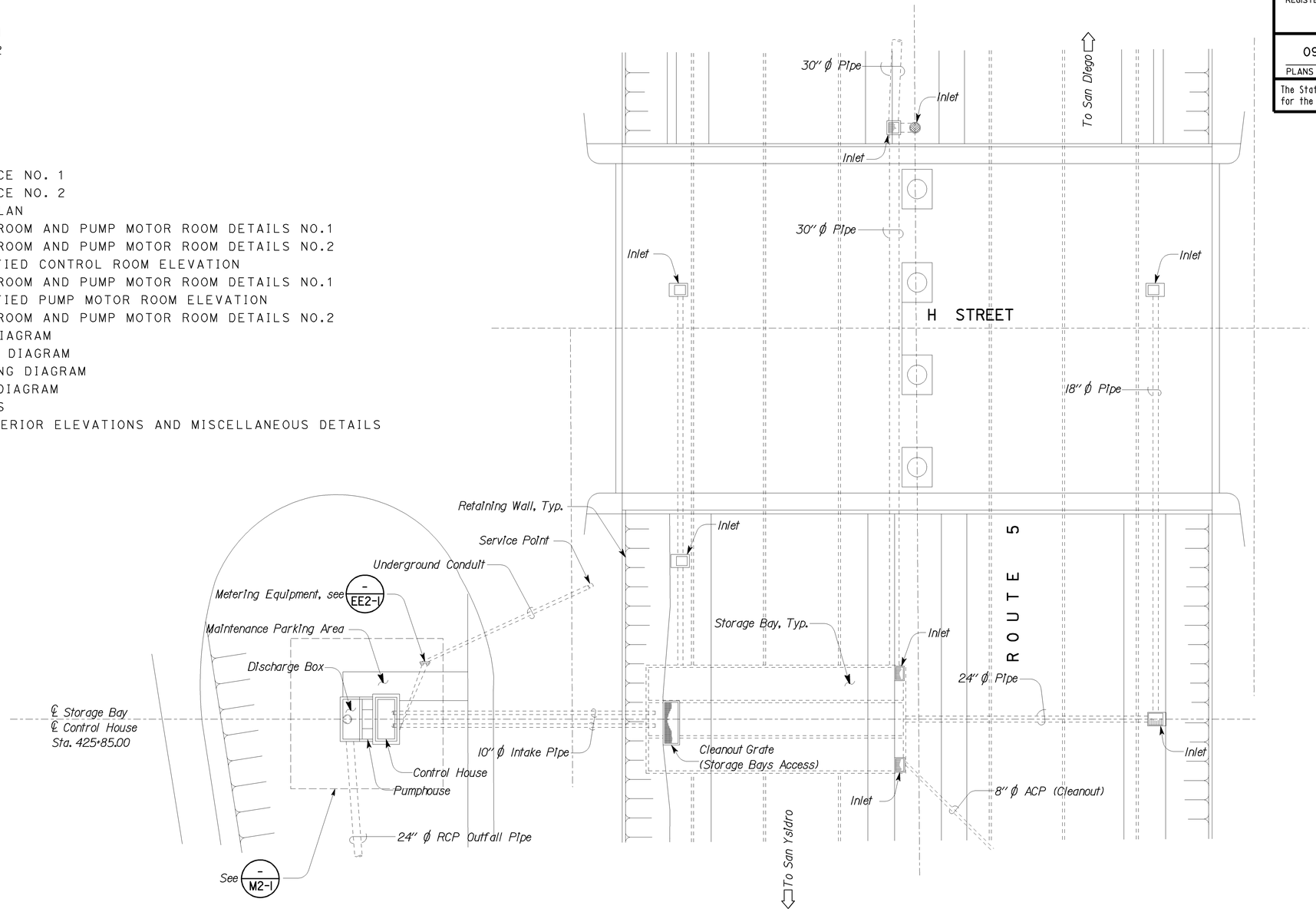

EXISTING SITE PLAN

NO SCALE

THIS DRAWING ACCURATE FOR MECHANICAL WORK ONLY

	BY	CHECKED
DESIGN	Severiano Gutierrez	Tom Hatam
DETAILS	Rudy Sarte	Severiano Gutierrez
QUANTITIES	Severiano Gutierrez	Tom Hatam

STATE OF CALIFORNIA DEPARTMENT OF TRANSPORTATION

DIVISION OF ENGINEERING SERVICES
ELECTRICAL-MECHANICAL-WATER AND WASTEWATER DESIGN

BRIDGE NO. 57-256W
POST MILE

PUMPING PLANT REHABILITATION
H STREET PUMPING PLANT (Location 2)
GENERAL PLAN

SHEET **M2-0**

DS OSD 2139A (4/89)
FILE NO.:
FILE => m2_0.dgn
DATE PLOTTED => 29-AUG-2012 TIME PLOTTED => 08:00

ORIGINAL SCALE IN INCHES FOR REDUCED PLANS 0 1 2 3

UNIT 3580
PROJECT NUMBER & PHASE 11000004061

DISREGARD PRINTS BEARING EARLIER REVISION DATES

REVISION DATES (PRELIMINARY STAGE ONLY) 07-15-11 09-16-11 10-12-11 12-12-11 08-28-12 SHEET OF

USERNAME => s124392 DATE PLOTTED => 29-AUG-2012 TIME PLOTTED => 08:00

V|=|

DIST.	COUNTY	ROUTE	POST MILES TOTAL PROJECT	SHEET NO.	TOTAL SHEETS
11	SD	5,8	Var	66	76

CALIFORNIA STATE FIRE MARSHAL APPROVED FIRE AND PANIC ONLY
Approval of this plan does not authorize or approve any omission or deviation from applicable regulations. Final approval is subject to field inspection. One set of approved plans shall be available on the project site at all times.
Reviewed by: FRANCIS SOLICH
Approval date: 08-28-12
CSFM File No. 01-37-11-0007

REGISTERED MECHANICAL ENGINEER — 08-28-12 DATE

REGISTERED PROFESSIONAL ENGINEER — TOM H. HATAM — No. M33666 — Exp. 6-30-13 MECH — STATE OF CALIFORNIA

09-24-12
PLANS APPROVAL DATE

The State of California or its officers or agents shall not be responsible for the accuracy or completeness of electronic copies of this plan sheet.

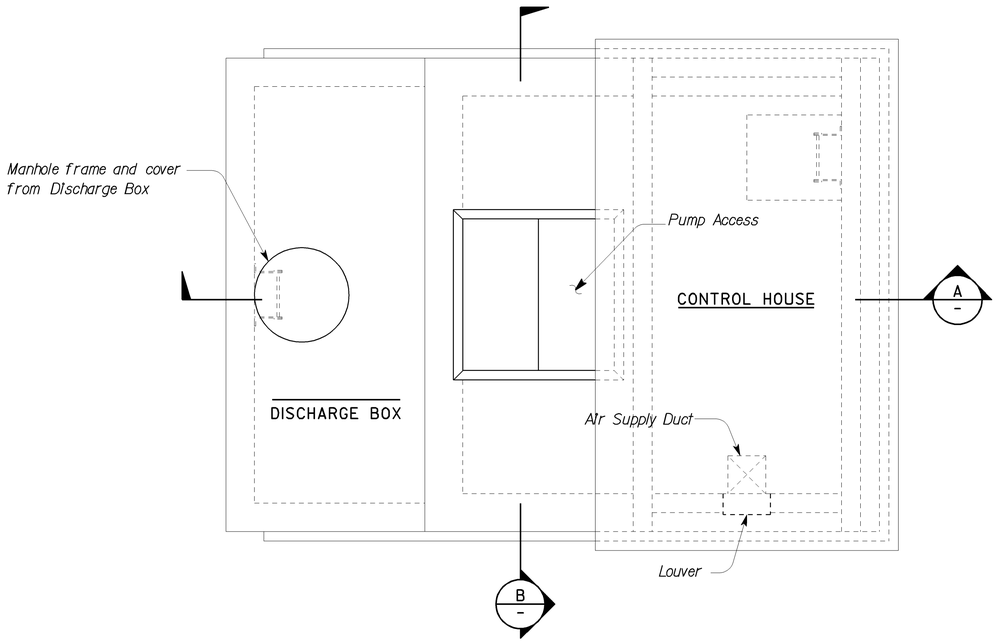

PLAN

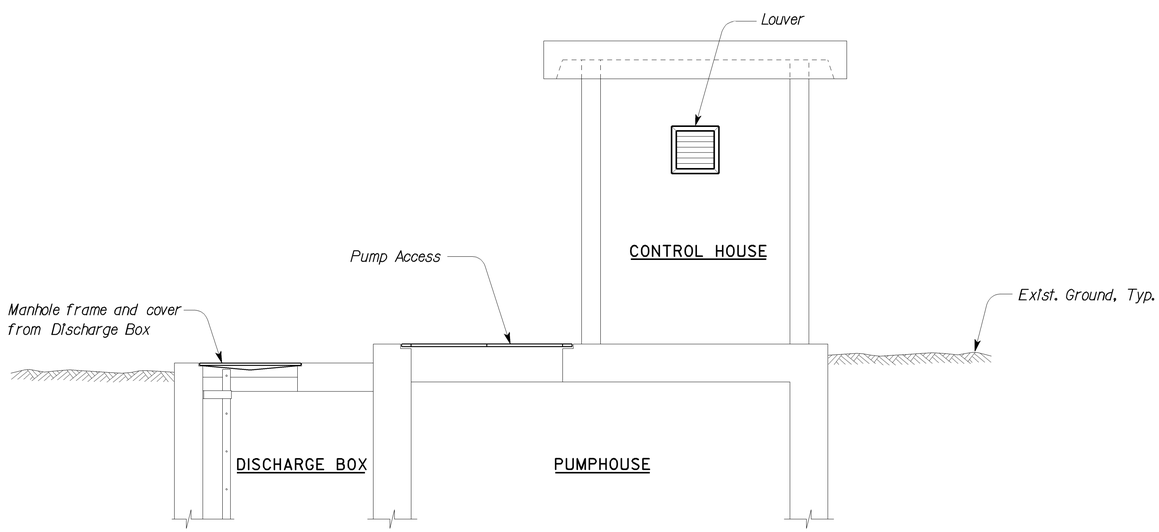

A SECTION

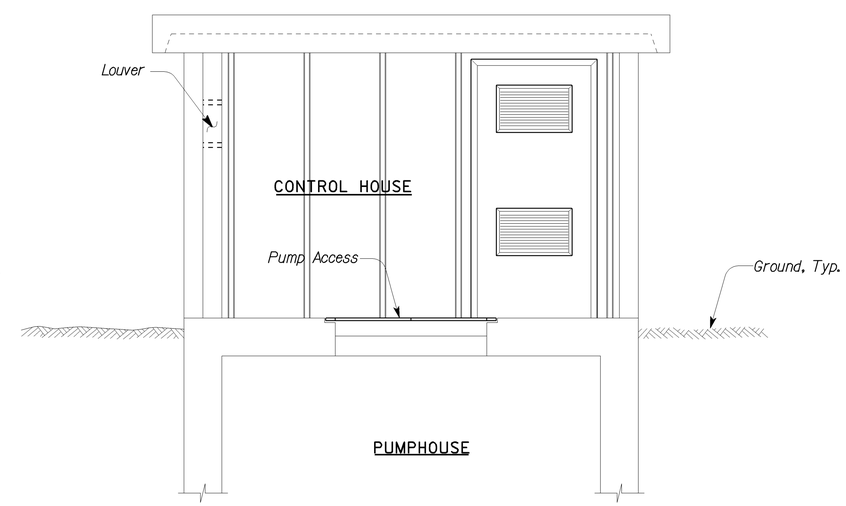

B SECTION

THIS DRAWING ACCURATE FOR MECHANICAL WORK ONLY

SCALE: 1/2" = 1'-0"

DESIGN	BY Severiano Gutierrez	CHECKED Tom Hatam	
DETAILS	BY Rudy Sarte	CHECKED Severiano Gutierrez	
QUANTITIES	BY Severiano Gutierrez	CHECKED Tom Hatam	

STATE OF CALIFORNIA
DEPARTMENT OF TRANSPORTATION

DIVISION OF ENGINEERING SERVICES
ELECTRICAL-MECHANICAL-WATER AND WASTEWATER DESIGN

BRIDGE NO. 57-256W
POST MILE

PUMPING PLANT REHABILITATION
H STREET PUMPING PLANT (Location 2)
EXISTING PLAN NO. 1

SHEET **M2-1**

TAEMWW Imperial Rev. 7/10
FILE => m2_1.dgn
DATE PLOTTED => 29-AUG-2012 TIME PLOTTED => 08:00

ORIGINAL SCALE IN INCHES FOR REDUCED PLANS 0 1 2 3

UNIT 3580
PROJECT NUMBER & PHASE 11000004061

DISREGARD PRINTS BEARING EARLIER REVISION DATES →
REVISION DATES (PRELIMINARY STAGE ONLY): 07-15-11 09-16-11 10-12-11 12-12-11 08-28-12
SHEET OF

USERNAME => s124392 DATE PLOTTED => 29-AUG-2012 TIME PLOTTED => 08:00

V|=|

DIST.	COUNTY	ROUTE	POST MILES TOTAL PROJECT	SHEET NO.	TOTAL SHEETS
11	SD	5,8	Var	67	76

REGISTERED MECHANICAL ENGINEER — 08-28-12 DATE

REGISTERED PROFESSIONAL ENGINEER TOM H. HATAM No. M33666 Exp. 6-30-13 MECH STATE OF CALIFORNIA

09-24-12
PLANS APPROVAL DATE

The State of California or its officers or agents shall not be responsible for the accuracy or completeness of electronic copies of this plan sheet.

CALIFORNIA STATE FIRE MARSHAL APPROVED FIRE AND PANIC ONLY
Approval of this plan does not authorize or approve any omission or deviation from applicable regulations. Final approval is subject to field inspection. One set of approved plans shall be available on the project site at all times.
Reviewed by: FRANCIS SOLICH
Approval date: 08-28-12
CSFM File No. 01-37-11-0007

General Note:

1. Existing Pumps:
   Pump #1, Fairbanks Morse, Model # 5424D, Serial # K2S106361 4, 1,750 GPM @ 25 ft,
   Electric Motor #1, General Electric, Model # 5K324EK414. 900 RPM,
   15 HP, 460V, 60HZ, 3 Phase.
2. Pump #2, Fairbanks Morse, Model # 5720, Serial # K2S106361 3, 6,300 GPM @ 25 ft,
   Electric Motor #2, General Electric, Model # 5K405EK423. 900 RPM,
   50 HP, 460V, 60HZ, 3 Phase.
3. All items and equipment to be replaced or removed are indicated, all other items and equipment shall remained.
4. Remove existing 2" sump pump discharge horizontal line fittings and valves up to vertical discharge.

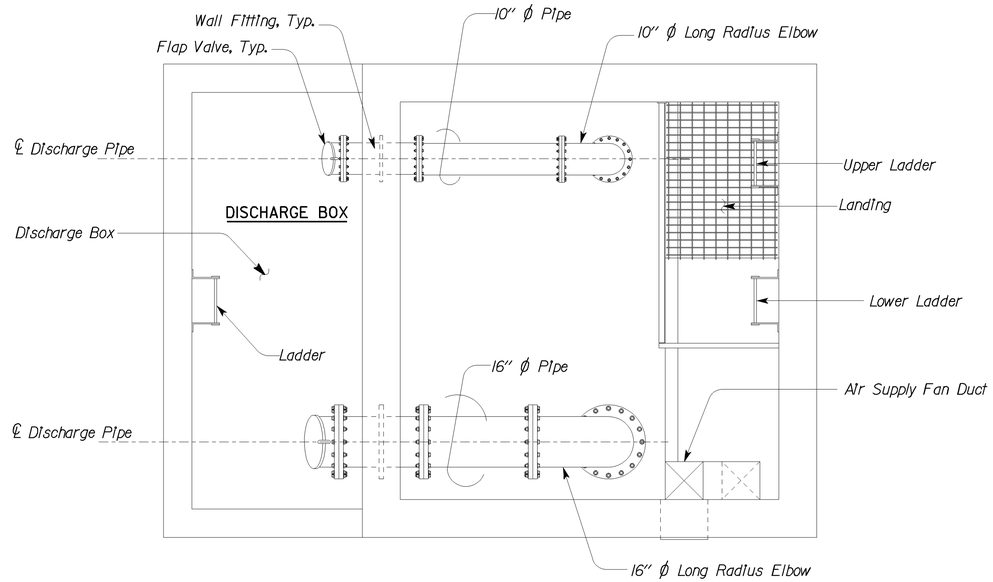

PLAN

SCALE: 1/2" = 1'-0"

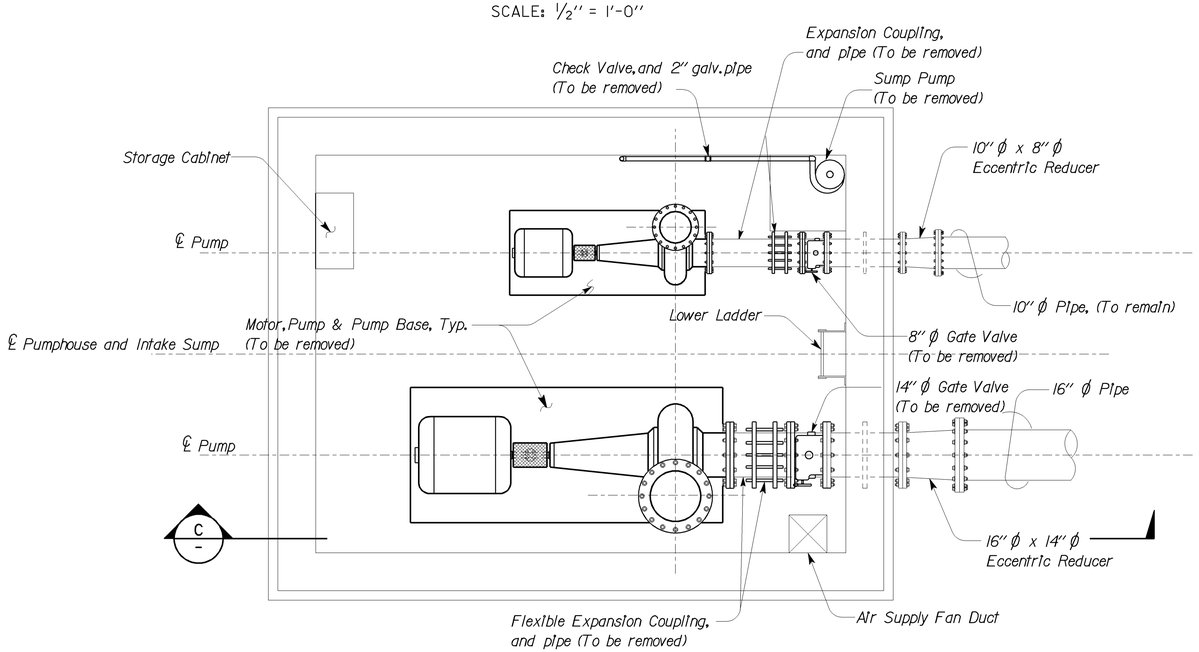

MOTOR ROOM PLAN

SCALE: 1/2" = 1'-0"

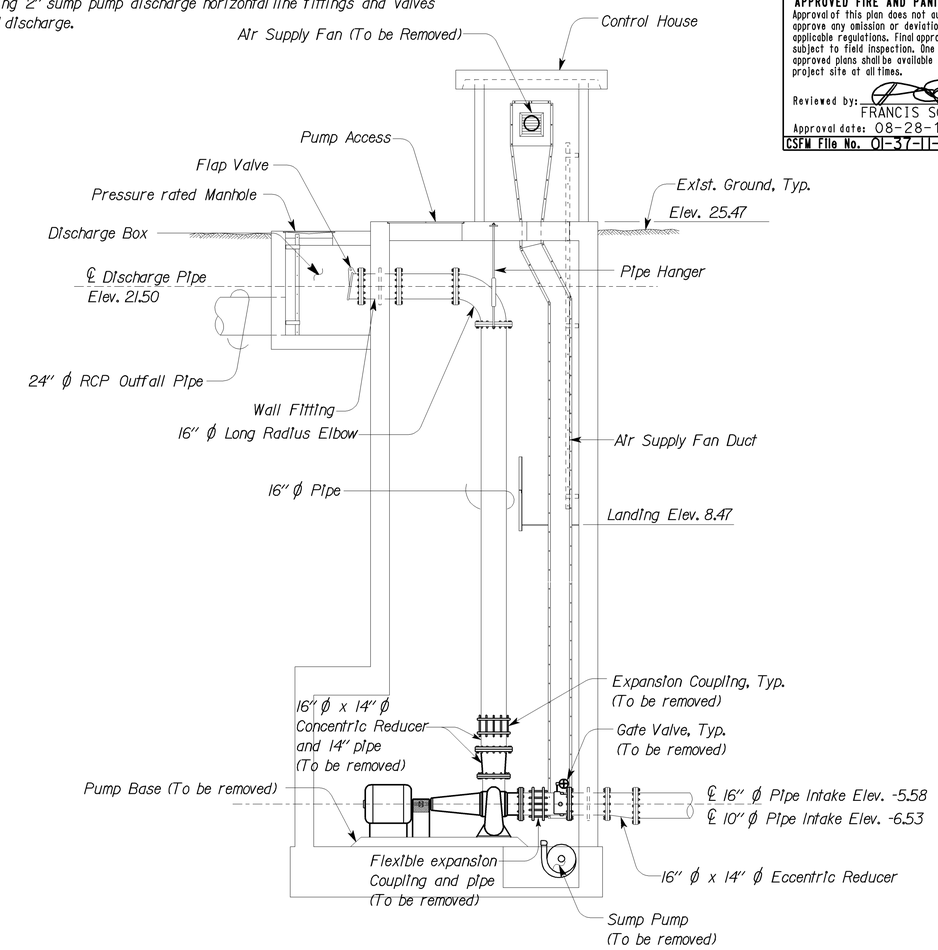

C SECTION

SCALE: 1/4" = 1'-0"

THIS DRAWING ACCURATE FOR MECHANICAL WORK ONLY

	BY	CHECKED
DESIGN	Severiano Gutierrez	Tom Hatam
DETAILS	Rudy Sarte	Severiano Gutierrez
QUANTITIES	Severiano Gutierrez	Tom Hatam

STATE OF CALIFORNIA DEPARTMENT OF TRANSPORTATION

DIVISION OF ENGINEERING SERVICES
ELECTRICAL-MECHANICAL-WATER AND WASTEWATER DESIGN

BRIDGE NO. 57-256W
POST MILE

PUMPING PLANT REHABILITATION
H STREET PUMPING PLANT (Location 2)
EXISTING PLAN NO. 2

SHEET **M2-2**

TAEMWW Imperial Rev. 7/10
FILE => m2_2.dgn
DATE PLOTTED => 29-AUG-2012 TIME PLOTTED => 08:00

ORIGINAL SCALE IN INCHES FOR REDUCED PLANS 0 1 2 3

UNIT 3580
PROJECT NUMBER & PHASE 11000004061

DISREGARD PRINTS BEARING EARLIER REVISION DATES →
REVISION DATES (PRELIMINARY STAGE ONLY) 07-15-11 09-16-11 10-12-11 12-12-11 08-28-12
SHEET OF

USERNAME => s124392 DATE PLOTTED => 29-AUG-2012 TIME PLOTTED => 08:00

V1=1

DIST.	COUNTY	ROUTE	POST MILES TOTAL PROJECT	SHEET NO.	TOTAL SHEETS
11	SD	5,8	Var	68	76

CALIFORNIA STATE FIRE MARSHAL APPROVED FIRE AND PANIC ONLY
Approval of this plan does not authorize or approve any omission or deviation from applicable regulations. Final approval is subject to field inspection. One set of approved plans shall be available on the project site at all times.
Reviewed by: FRANCIS SOLICH
Approval date: 08-28-12
CSFM File No. 01-37-11-0007

REGISTERED MECHANICAL ENGINEER — 08-28-12 DATE

REGISTERED PROFESSIONAL ENGINEER — TOM H. HATAM — No. M33666 — Exp. 6-30-13 — MECH — STATE OF CALIFORNIA

09-24-12
PLANS APPROVAL DATE

The State of California or its officers or agents shall not be responsible for the accuracy or completeness of electronic copies of this plan sheet.

Notes:

1. *Submitt motor, pump and pump base shop drawings for approval.*
2. *Walls and floor of pump room shall be sand blasted up to 8' from floor. Paint wall and floor with primer and two coats of epoxy base paint. Epoxy paint color to determine by Engineer.*
3. *Pumps and motors shall be rated as follows:*
   Pump#1- 15 HP, 480V, 60Hz, 3 Phase. 1180 GPM @ 23 feet.
   Pump#2- 50 HP, 480V, 60HZ, 3 Phase, 6270 GPM @ 24 feet.
   Sump Pump- 1 Hp, 480V, 60 HZ, 3 Phase, 45 GPM @ 33 feet.
4. *Air supply fan must be 600 CFM, ¾HP, 115V, 60HZ, 1Phase, @ .5 SP. Fan shall be able to fit into existing opening.*

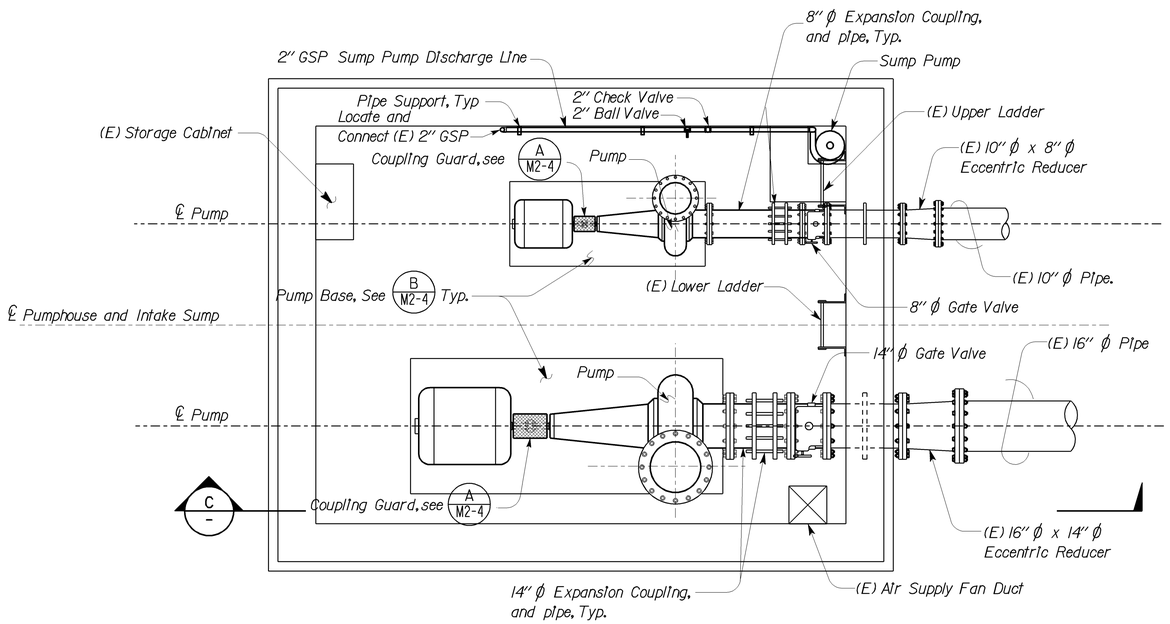

MOTOR ROOM PLAN

SCALE: ½" = 1'-0"

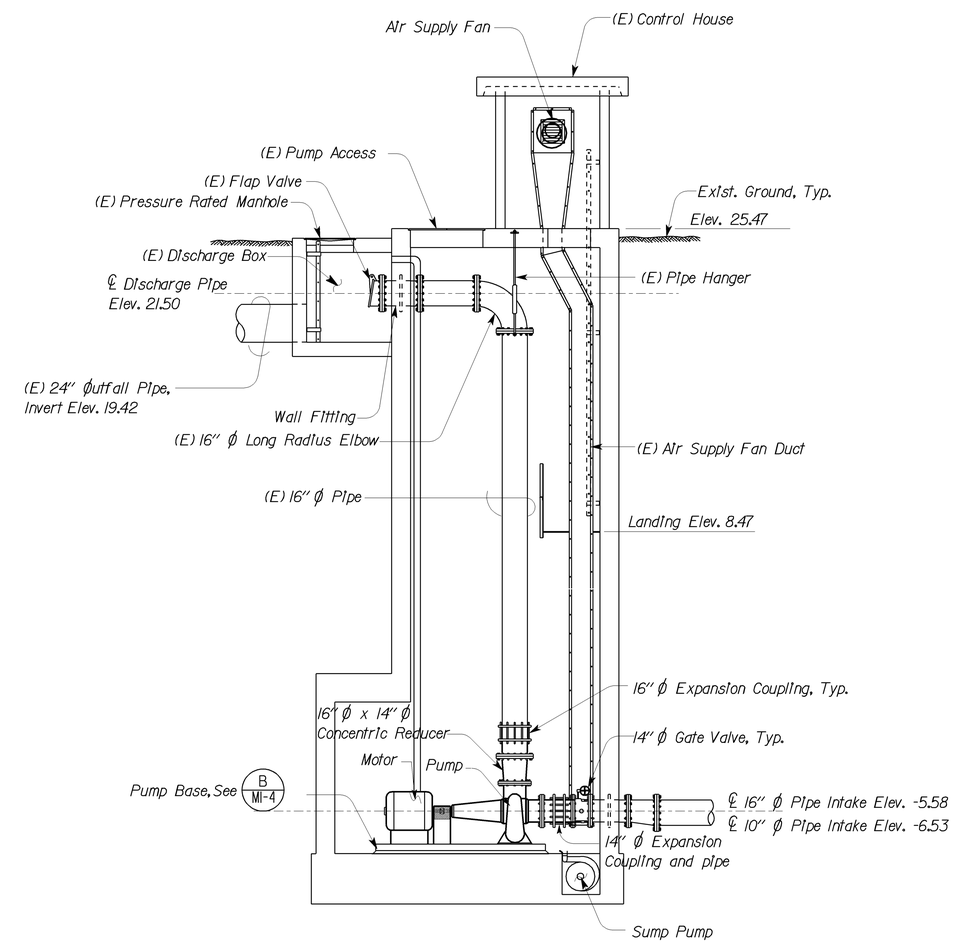

C SECTION

SCALE: ¼" = 1'-0"

THIS DRAWING ACCURATE FOR MECHANICAL WORK ONLY

	BY	CHECKED
DESIGN	Severiano Gutierrez	Tom Hatam
DETAILS	Rudy Sarte	Severiano Gutierrez
QUANTITIES	Severiano Gutierrez	Tom Hatam

STATE OF CALIFORNIA DEPARTMENT OF TRANSPORTATION

DIVISION OF ENGINEERING SERVICES
ELECTRICAL-MECHANICAL-WATER AND WASTEWATER DESIGN

BRIDGE NO. 57-256W
POST MILE

PUMPING PLANT REHABILITATION
H STREET PUMPING PLANT (Location 2)
MODIFIED PLAN

SHEET **M2-3**

TAEMWW Imperial Rev. 7/10
FILE => m2_3.dgn
DATE PLOTTED => 29-AUG-2012 TIME PLOTTED => 08:00
ORIGINAL SCALE IN INCHES FOR REDUCED PLANS 0 1 2 3
UNIT 3580
PROJECT NUMBER & PHASE 11000004061
DISREGARD PRINTS BEARING EARLIER REVISION DATES →
REVISION DATES (PRELIMINARY STAGE ONLY) 07-15-11 09-16-11 10-12-11 12-12-11 08-28-12
SHEET OF

USERNAME => s124392 DATE PLOTTED => 29-AUG-2012 TIME PLOTTED => 08:00

V1=1

DIST.	COUNTY	ROUTE	POST MILES TOTAL PROJECT	SHEET NO.	TOTAL SHEETS
11	SD	5,8	Var	69	76

CALIFORNIA STATE FIRE MARSHAL
APPROVED FIRE AND PANIC ONLY
Approval of this plan does not authorize or approve any omission or deviation from applicable regulations. Final approval is subject to field inspection. One set of approved plans shall be available on the project site at all times.
Reviewed by: FRANCIS SOLICH
Approval date: 08-28-12
CSFM File No. 01-37-11-0007

REGISTERED MECHANICAL ENGINEER — 08-28-12 DATE

REGISTERED PROFESSIONAL ENGINEER — TOM H. HATAM — No. M33666 — Exp. 6-30-13 — MECH — STATE OF CALIFORNIA

09-24-12
PLANS APPROVAL DATE

The State of California or its officers or agents shall not be responsible for the accuracy or completeness of electronic copies of this plan sheet.

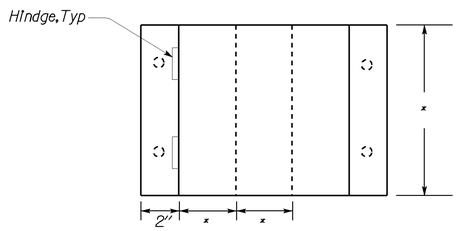

TOP

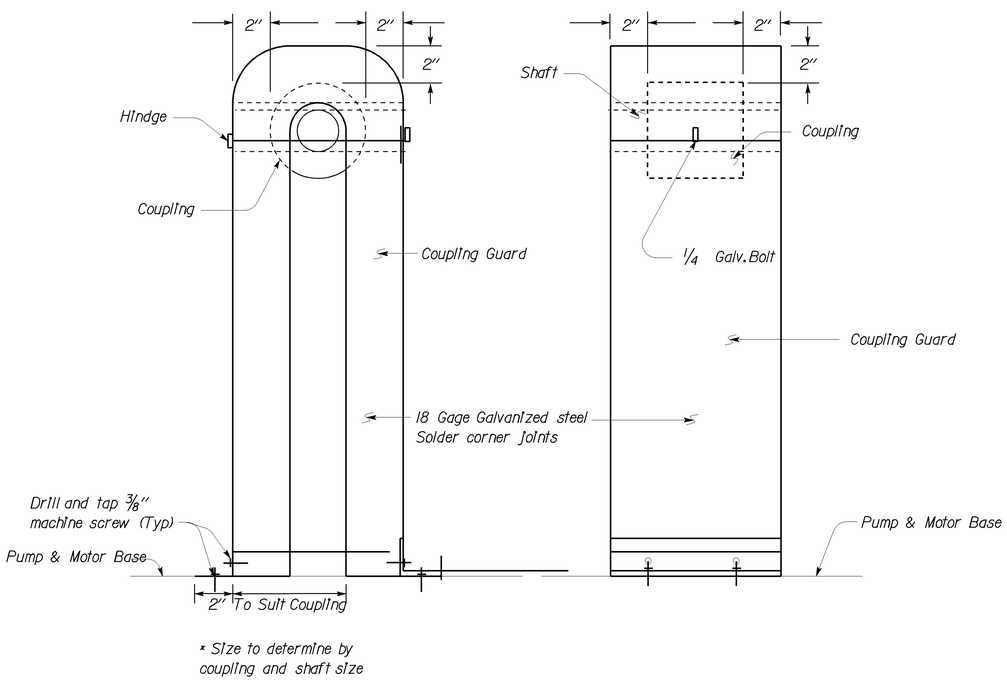

* Size to determine by coupling and shaft size

SIDE **FRONT**

(A) COUPLING GUARD

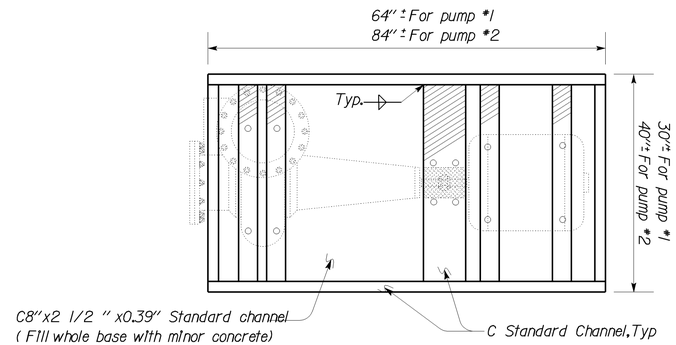

TOP

Note:
Location of motor and pump supports to be determine by pump manufacturer

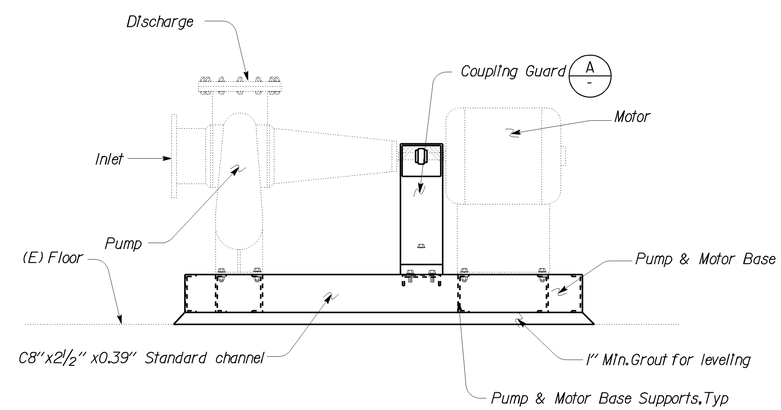

FRONT

Notes:
1. Contractor shall submit shop drawings for coupling guard and Pump & motor base for approval.
2. Pump and motor base shall be set level. Space between base and floor shall be filled with minor concrete. Contractor shall submit shop drawings for anchoring pump/motor base to existing floor.
3. Mount motor and pump per maufaturer recommendations.

(B) PUMP SYSTEM

THIS DRAWING ACCURATE FOR MECHANICAL WORK ONLY

NO SCALE

	BY	CHECKED
DESIGN	Severiano Gutierrez	Tom Hatam
DETAILS	Rudy Sarte	Severiano Gutierrez
QUANTITIES	Severiano Gutierrez	Tom Hatam

STATE OF CALIFORNIA
DEPARTMENT OF TRANSPORTATION

DIVISION OF ENGINEERING SERVICES
ELECTRICAL-MECHANICAL-WATER AND WASTEWATER DESIGN

BRIDGE NO. 57-256W
POST MILE

PUMPING PLANT REHABILITATION
H STREET PUMPING PLANT (Location 2)
MECHANICAL PLAN

SHEET **M2-4**

TAEMWW Imperial Rev. 7/10
FILE => m2_4.dgn
DATE PLOTTED => 29-AUG-2012 TIME PLOTTED => 08:00
ORIGINAL SCALE IN INCHES FOR REDUCED PLANS 0 1 2 3
UNIT 3580
PROJECT NUMBER & PHASE 11000004061
DISREGARD PRINTS BEARING EARLIER REVISION DATES
REVISION DATES (PRELIMINARY STAGE ONLY) 07-15-11 09-16-11 10-12-11 12-12-11 08-28-12
SHEET OF

USERNAME => s124392 DATE PLOTTED => 29-AUG-2012 TIME PLOTTED => 08:00

V1=1

SHEET INDEX
(LOCATION 1)

MECHANICAL PLANS

M3-0 GENERAL PLAN
M3-1 EXISTING PLAN NO.1
M3-2 EXISTING PLAN NO.2
M3-3 MODIFIED PLAN
M3-4 MECHANICAL PLAN

ELECTRICAL PLANS

EE3-0 LEGEND
EE3-0.1 TITLE 24 COMPLIANCE NO. 1
EE3-0.2 TITLE 24 COMPLIANCE NO. 2
EE3-1 ELECTRICAL SITE PLAN
EE3-2 EXISTING CONTROL ROOM AND PUMP MOTOR ROOM DETAILS NO.1
EE3-3 EXISTING CONTROL ROOM AND PUMP MOTOR ROOM DETAILS NO.2
EE3-4 EXISTING AND MODIFIED CONTROL ROOM ELEVATION
EE3-5 MODIFIED CONTROL ROOM AND PUMP MOTOR ROOM DETAILS NO.1
EE3-6 EXISTING AND MODIFIED PUMP MOTOR ROOM ELEVATION
EE3-7 MODIFIED CONTROL ROOM AND PUMP MOTOR ROOM DETAILS NO.2
EE3-8 POWER SCHEMATIC DIAGRAM
EE3-9 CONTROL SCHEMATIC DIAGRAM
EE3-10 CONTROL ROOM WIRING DIAGRAM
EE3-11 PUMP ROOM WIRING DIAGRAM
EE3-12 ELECTRICAL DETAILS
EE3-13 CONTROL HOUSE EXTERIOR ELEVATIONS AND MISCELLANEOUS DETAILS

GENERAL NOTE:

1. EXISTING UTILITY FACILITIES HAVE NOT BEEN PLOTTED ON THESE PLANS.

CALIFORNIA STATE FIRE MARSHAL APPROVED FIRE AND PANIC ONLY
Approval of this plan does not authorize or approve any omission or deviation from applicable regulations. Final approval is subject to field inspection. One set of approved plans shall be available on the project site at all times.
Reviewed by: FRANCIS SOLICH
Approval date: 08-28-12
CSFM File No. 01-37-11-0007

DIST.	COUNTY	ROUTE	POST MILES TOTAL PROJECT	SHEET NO.	TOTAL SHEETS
11	SD	5,8	Var	70	76

REGISTERED ENGINEER-MECHANICAL 08-28-12

REGISTERED PROFESSIONAL ENGINEER TOM H. HATAM No. M33666 Exp. 6-30-13 MECH STATE OF CALIFORNIA

09-24-12
PLANS APPROVAL DATE

The State of California or its officers or agents shall not be responsible for the accuracy or completeness of electronic copies of this plan sheet.

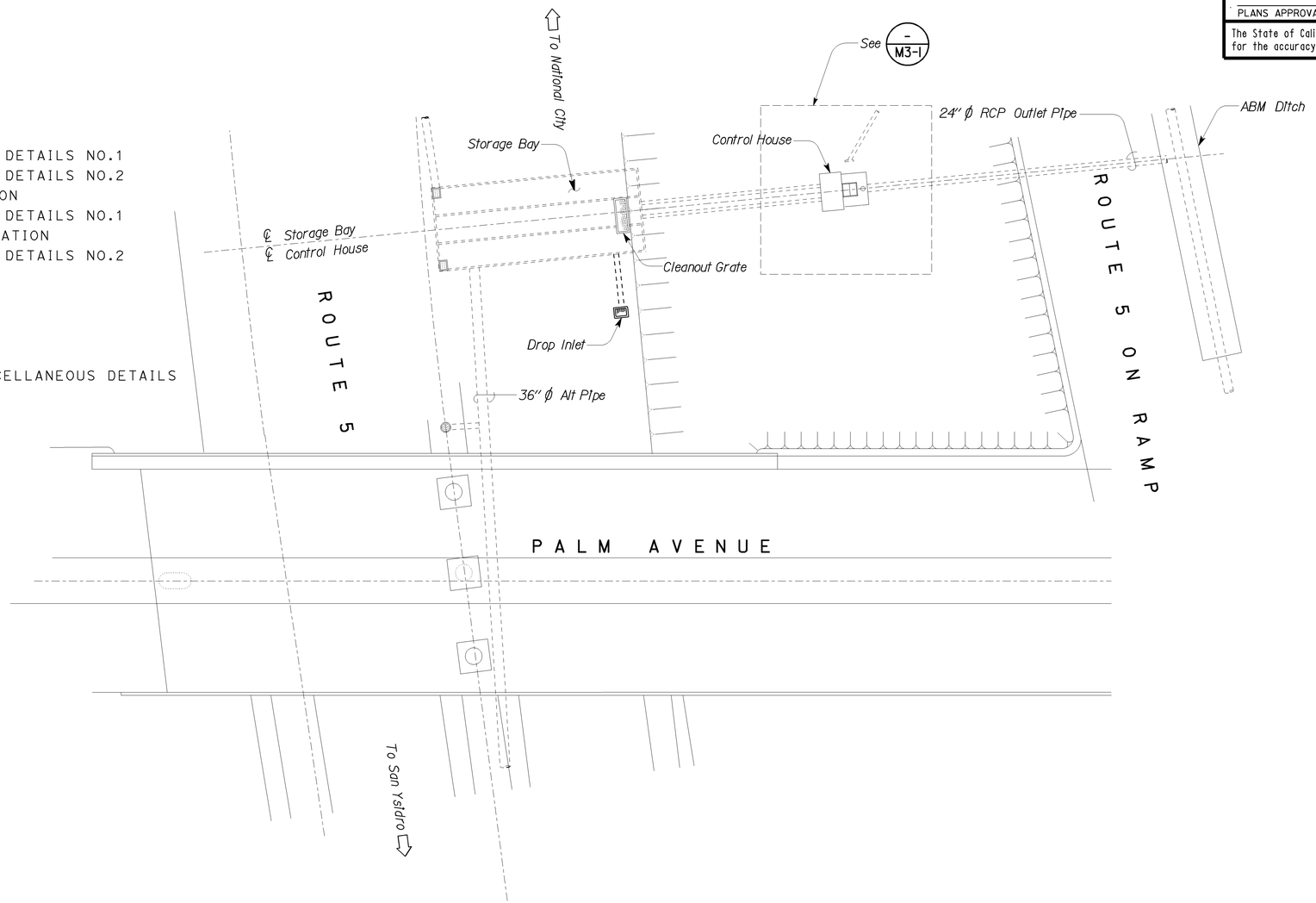

EXISTING SITE PLAN

NO SCALE

THIS DRAWING ACCURATE FOR MECHANICAL WORK ONLY

DESIGN	BY Severiano Gutierrez	CHECKED Tom Hatam	
DETAILS	BY Rudy Sarte	CHECKED Severiano Gutierrez	
QUANTITIES	BY Severiano Gutierrez	CHECKED Tom Hatam	

STATE OF CALIFORNIA
DEPARTMENT OF TRANSPORTATION

DIVISION OF ENGINEERING SERVICES
ELECTRICAL-MECHANICAL-WATER AND WASTEWATER DESIGN

BRIDGE NO. 57-180W
POST MILE

PUMPING PLANT REHABILITATION
75/5 SEPARATION PUMPING PLANT (Location I)
GENERAL PLAN

SHEET **M3-0**

DS OSD 2139A (4/89)
FILE NO.:
FILE => m3_0.dgn
DATE PLOTTED => 29-AUG-2012 TIME PLOTTED => 08:00

ORIGINAL SCALE IN INCHES FOR REDUCED PLANS 0 1 2 3

UNIT 3580
PROJECT NUMBER & PHASE 11000004061

DISREGARD PRINTS BEARING EARLIER REVISION DATES
REVISION DATES (PRELIMINARY STAGE ONLY) 07-15-11 09-16-11 10-12-11 12-12-11 08-28-12
SHEET OF

XXXXXX

USERNAME => s124392 DATE PLOTTED => 29-AUG-2012 TIME PLOTTED => 08:00

VI=1

DIST.	COUNTY	ROUTE	POST MILES TOTAL PROJECT	SHEET NO.	TOTAL SHEETS
11	SD	5,8	Var	71	76

CALIFORNIA STATE FIRE MARSHAL APPROVED FIRE AND PANIC ONLY
Approval of this plan does not authorize or approve any omission or deviation from applicable regulations. Final approval is subject to field inspection. One set of approved plans shall be available on the project site at all times.
Reviewed by: FRANCIS SOLICH
Approval date: 08-28-12
CSFM File No. 01-37-11-0007

REGISTERED MECHANICAL ENGINEER — 08-28-12 DATE

REGISTERED PROFESSIONAL ENGINEER — TOM H. HATAM — No. M33666 — Exp. 6-30-13 — MECH — STATE OF CALIFORNIA

09-24-12
PLANS APPROVAL DATE

The State of California or its officers or agents shall not be responsible for the accuracy or completeness of electronic copies of this plan sheet.

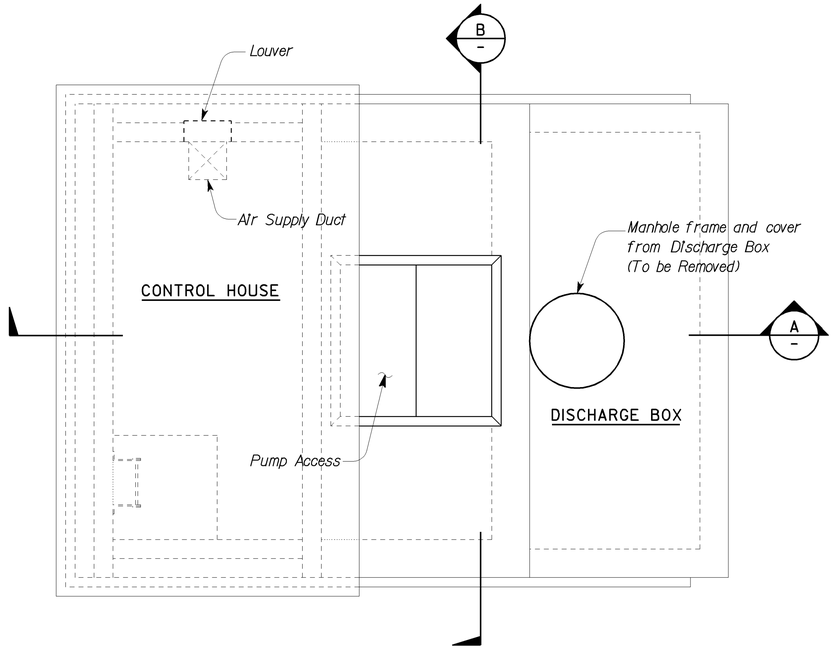

PLAN

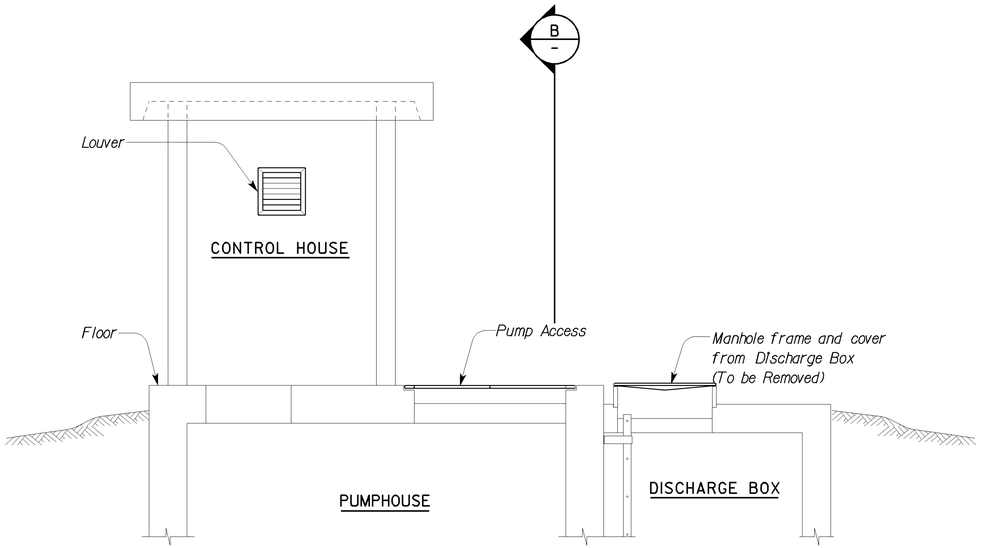

A SECTION

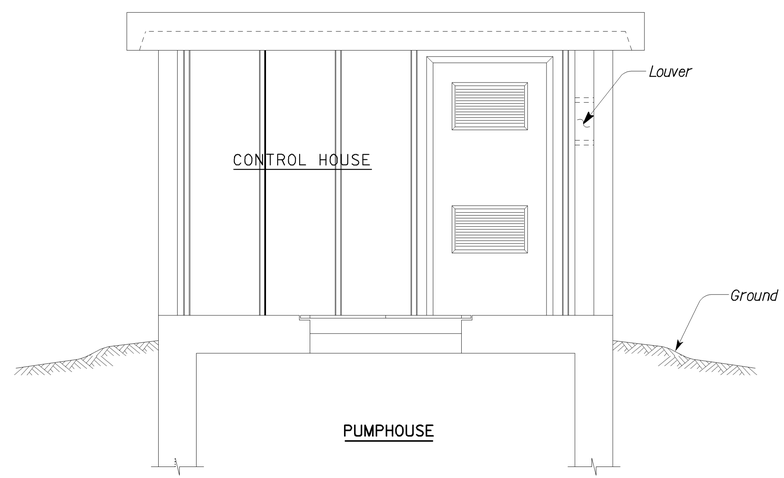

B SECTION

THIS DRAWING ACCURATE FOR MECHANICAL WORK ONLY

SCALE: 1/2" = 1'-0"

DESIGN	BY Severiano Gutierrez	CHECKED Tom Hatam	
DETAILS	BY Rudy Sarte	CHECKED Severiano Gutierrez	
QUANTITIES	BY Severiano Gutierrez	CHECKED Tom Hatam	

STATE OF CALIFORNIA
DEPARTMENT OF TRANSPORTATION

DIVISION OF ENGINEERING SERVICES
ELECTRICAL-MECHANICAL-WATER AND WASTEWATER DESIGN

BRIDGE NO. 57-180W
POST MILE 75/5 SEPARATION PUMPING PLANT (Location 3)

PUMPING PLANT REHABILITATION

EXISTING PLAN NO. 1

SHEET **M3-1**

TAEMWW Imperial Rev. 7/10
FILE => m3_1.dgn
DATE PLOTTED => 29-AUG-2012 TIME PLOTTED => 08:00

ORIGINAL SCALE IN INCHES FOR REDUCED PLANS 0 1 2 3

UNIT 3580
PROJECT NUMBER & PHASE 11000004061

DISREGARD PRINTS BEARING EARLIER REVISION DATES →
REVISION DATES (PRELIMINARY STAGE ONLY) 07-15-11 09-16-11 10-12-11 02-12-11 08-28-12
SHEET OF

USERNAME => s124392 DATE PLOTTED => 29-AUG-2012 TIME PLOTTED => 08:00

V|=|

DIST.	COUNTY	ROUTE	POST MILES TOTAL PROJECT	SHEET NO.	TOTAL SHEETS
11	SD	5,8	Var	72	76

REGISTERED MECHANICAL ENGINEER — 08-28-12 DATE

REGISTERED PROFESSIONAL ENGINEER — TOM H. HATAM — No. M33666 — Exp. 6-30-13 — MECH — STATE OF CALIFORNIA

09-24-12
PLANS APPROVAL DATE

The State of California or its officers or agents shall not be responsible for the accuracy or completeness of electronic copies of this plan sheet.

CALIFORNIA STATE FIRE MARSHAL APPROVED FIRE AND PANIC ONLY
Approval of this plan does not authorize or approve any omission or deviation from applicable regulations. Final approval is subject to field inspection. One set of approved plans shall be available on the project site at all times.
Reviewed by: FRANCIS SOLICH
Approval date: 08-28-12
CSFM File No. 01-37-11-0007

General Note:

1. Existing pumps are Fairbanks Morse, Model * 5720, Serial * K2S110633615, 5,500 GPM @ 34 ft, Electric Motors are General Electric, Model * 5K444EK416, Serial * CH121036, 885 RPM, 60 HP, 460V, 60HZ, 3 Phase. (Total of 2)
2. Remove existing 2" sump pump discharge horizontal line and valves up to vertical discharge.
3. All items and equipment to be replaced or removed are indicated, all other items and equipment shall remained.
4. Remove existing manhole and cover, Install new manhole, cover, and minor concrete. Submit shop drawings for approval.

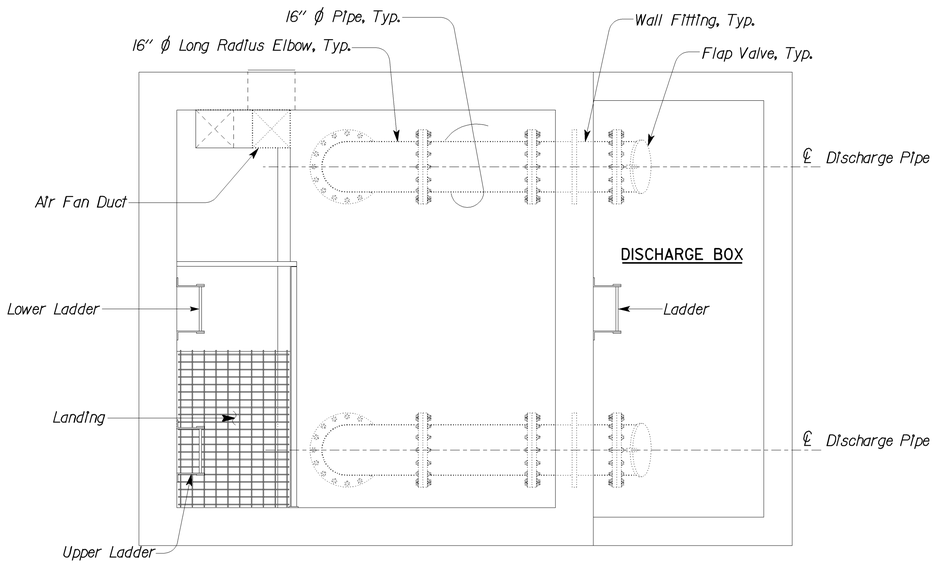

PLAN

SCALE: 1/2" = 1'-0"

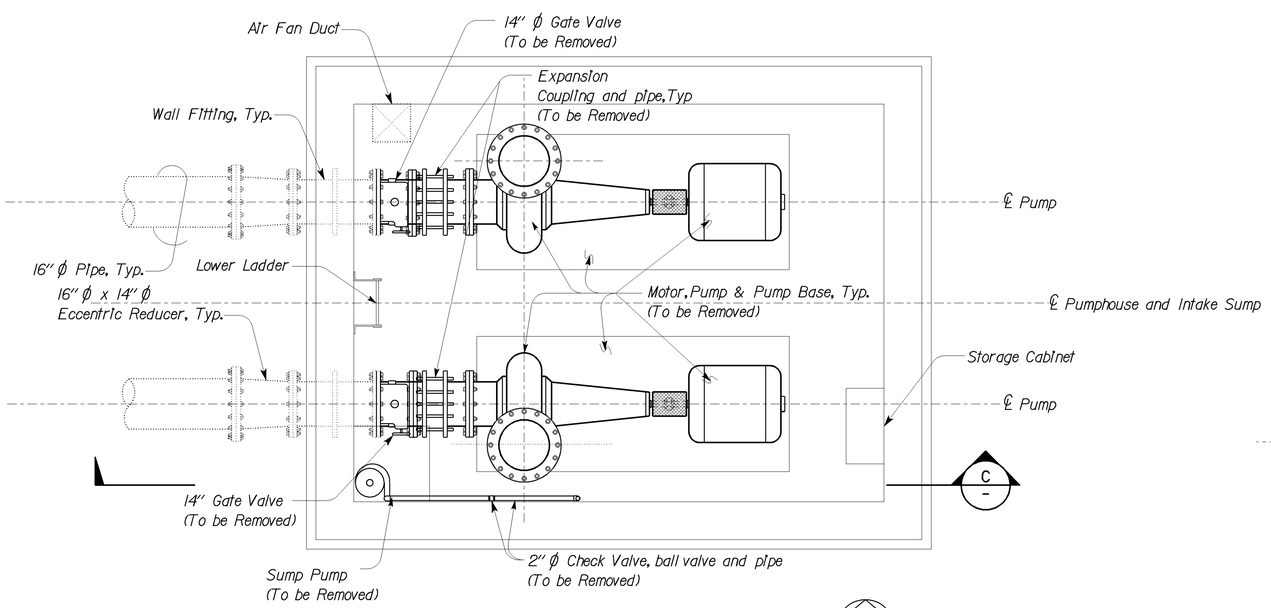

MOTOR ROOM PLAN

SCALE: 1/2" = 1'-0"

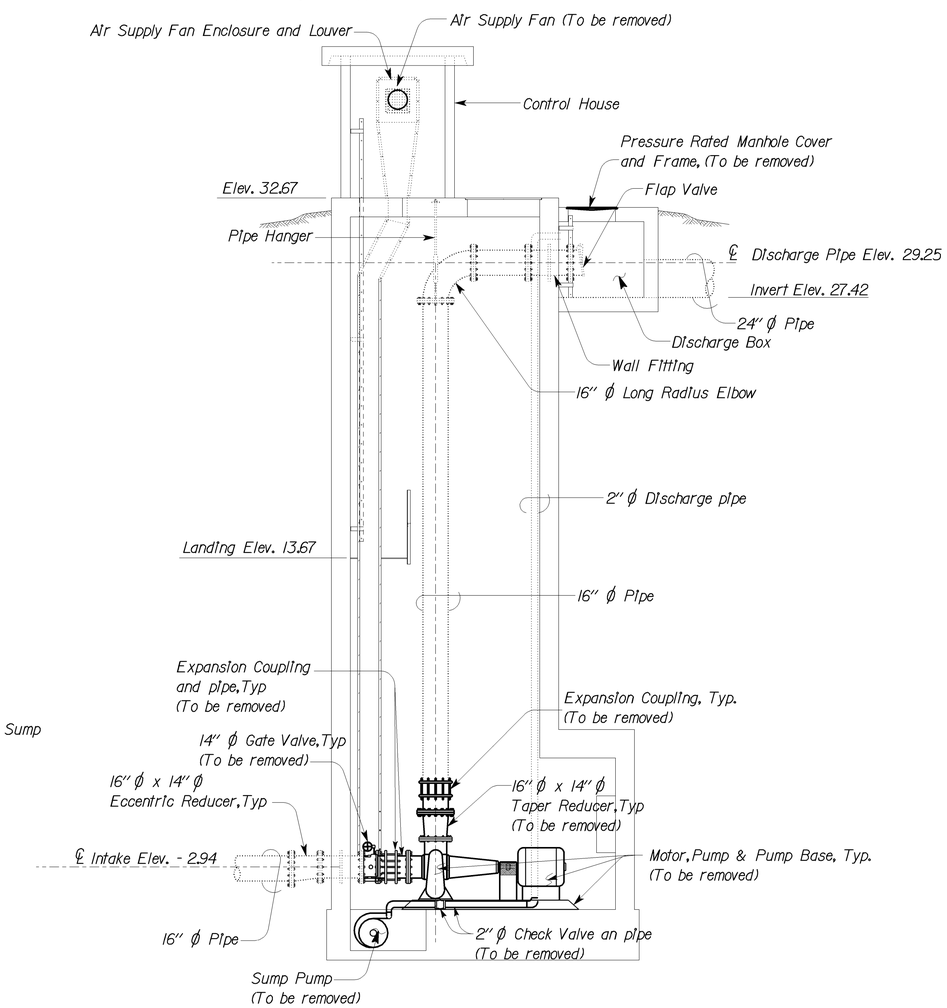

C SECTION

SCALE: 1/4" = 1'-0"

THIS DRAWING ACCURATE FOR MECHANICAL WORK ONLY

	BY	CHECKED
DESIGN	Severiano Gutierrez	Tom Hatam
DETAILS	Rudy Sarte	Severiano Gutierrez
QUANTITIES	Severiano Gutierrez	Tom Hatam

STATE OF CALIFORNIA
DEPARTMENT OF TRANSPORTATION

DIVISION OF ENGINEERING SERVICES
ELECTRICAL-MECHANICAL-WATER AND WASTEWATER DESIGN

BRIDGE NO. 57-180W
POST MILE 75/5 SEPARATION PUMPING PLANT (Location 3)

PUMPING PLANT REHABILITATION

EXISTING PLAN NO.2

SHEET **M3-2**

TAEMWW Imperial Rev. 7/10
FILE => m3_2.dgn
DATE PLOTTED => 29-AUG-2012 TIME PLOTTED => 08:00
ORIGINAL SCALE IN INCHES FOR REDUCED PLANS 0 1 2 3
UNIT 3580
PROJECT NUMBER & PHASE 11000004061
EA 000000
DISREGARD PRINTS BEARING EARLIER REVISION DATES
REVISION DATES (PRELIMINARY STAGE ONLY) 07-15-11 09-16-11 10-12-11 12-12-11 08-28-12
SHEET OF

USERNAME => s124392 DATE PLOTTED => 29-AUG-2012 TIME PLOTTED => 08:00

V1=1

DIST.	COUNTY	ROUTE	POST MILES TOTAL PROJECT	SHEET NO.	TOTAL SHEETS
11	SD	5,8	Var	73	76

REGISTERED MECHANICAL ENGINEER — 08-28-12 DATE

REGISTERED PROFESSIONAL ENGINEER — TOM H. HATAM — No. M33666 — Exp. 6-30-13 — MECH — STATE OF CALIFORNIA

09-24-12
PLANS APPROVAL DATE

The State of California or its officers or agents shall not be responsible for the accuracy or completeness of electronic copies of this plan sheet.

CALIFORNIA STATE FIRE MARSHAL
APPROVED FIRE AND PANIC ONLY
Approval of this plan does not authorize or approve any omission or deviation from applicable regulations. Final approval is subject to field inspection. One set of approved plans shall be available on the project site at all times.
Reviewed by: FRANCIS SOLICH
Approval date: 08-28-12
CSFM File No. 01-37-11-0007

Notes:

1. *Submit motor, pump and pump base shop drawings for approval.*
2. *Walls and floor of pump room shall be sand blasted up to 8' from floor. Paint wall and floor with primer and two coats of epoxy base paint. Epoxy paint color to determine by Engineer.*
3. *Pumps and motors shall be rated as follows:*
   Pump 1- 60 HP, 480V, 60Hz, 3 Phase, 5,500 GPM @ 34 feet.*
   *Pump*2- 60 HP, 480V, 60HZ, 3 Phase, 5,500 GPM @ 34 feet.*
   Sump Pump- 1 Hp, 480V, 60 HZ, 3 Phase, 45 GPM @ 33 feet.
4. *Supply air fan shall be 600 CFM, 3/4 HP, 115V, 60HZ, 1 Phase, @ .5 SP. Fan shall be able to fit into existing opening.*

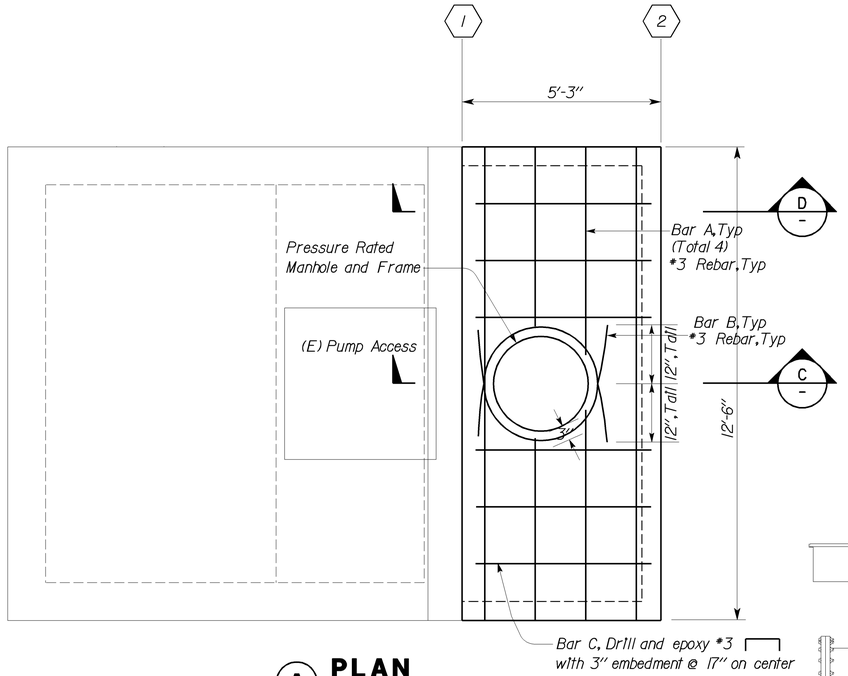

A PLAN
SCALE: 1/2" = 1'-0"

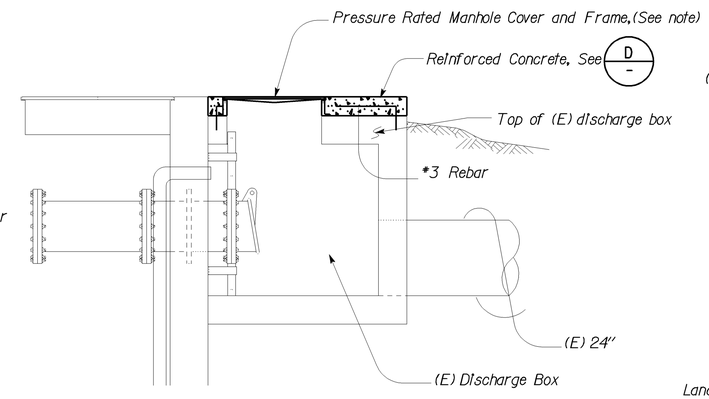

C ELEVATION
NO SCALE

Note:
New manhole cover and frame to be attached to (E) anchor bolts on top of discharge box.

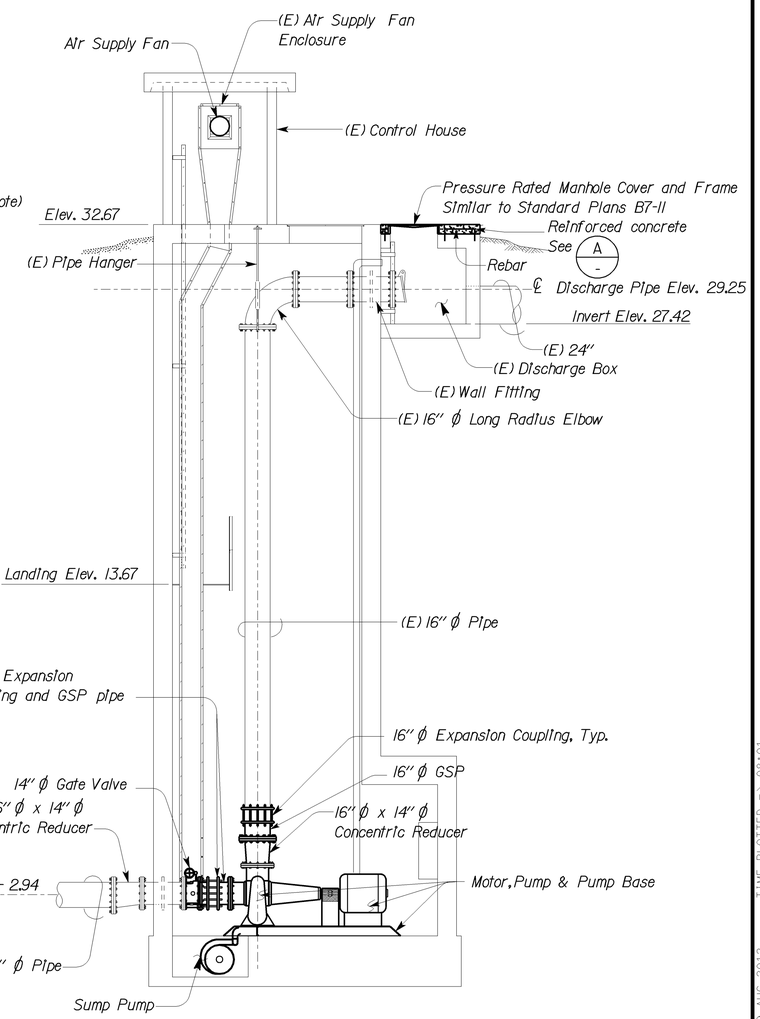

E SECTION
SCALE: 1/4" = 1'-0"

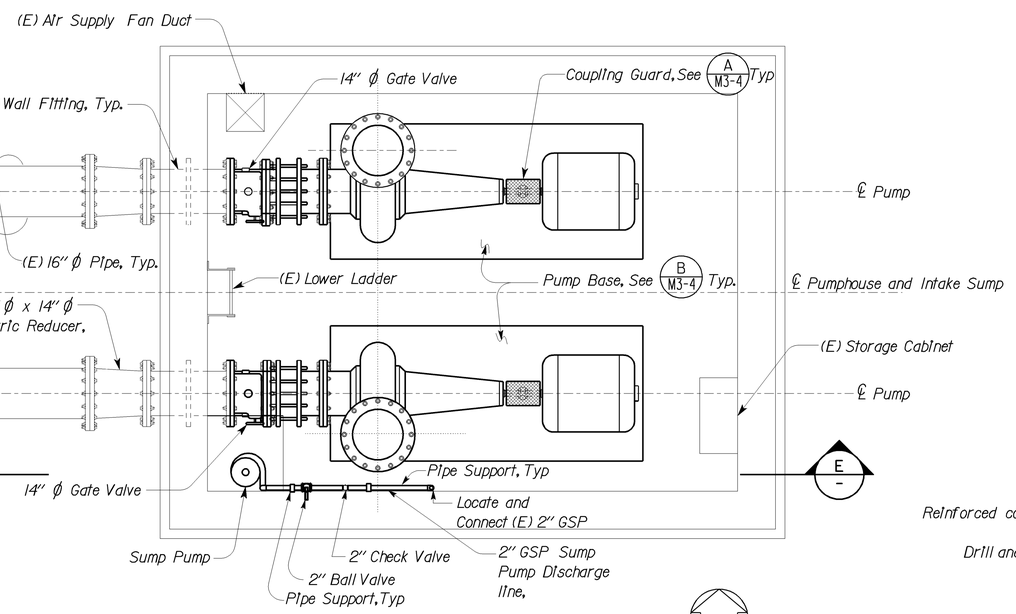

B MOTOR ROOM PLAN
SCALE: 1/2" = 1'-0"

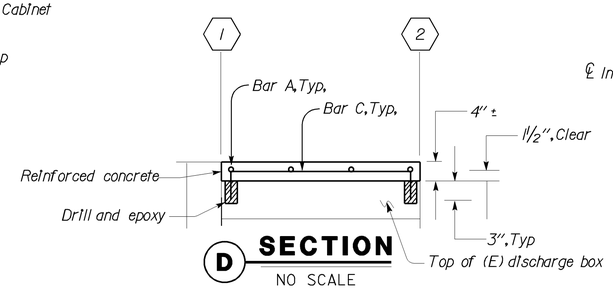

D SECTION
NO SCALE

THIS DRAWING ACCURATE FOR MECHANICAL WORK ONLY

DESIGN	BY Severiano Gutierrez	CHECKED Tom Hatam	
DETAILS	BY Rudy Sarte	CHECKED Severiano Gutierrez	
QUANTITIES	BY Severiano Gutierrez	CHECKED Tom Hatam	

Structure Review By:

STATE OF CALIFORNIA
DEPARTMENT OF TRANSPORTATION

DIVISION OF ENGINEERING SERVICES
ELECTRICAL-MECHANICAL-WATER AND WASTEWATER DESIGN

BRIDGE NO. 57-180W
POST MILE 75/5 SEPARATION PUMPING PLANT (Location 3)

PUMPING PLANT REHABILITATION
MODIFIED PLAN

SHEET **M3-3**

TAEMWW Imperial Rev. 7/10
FILE => m3_3.dgn
DATE PLOTTED => 29-AUG-2012 TIME PLOTTED => 08:01

ORIGINAL SCALE IN INCHES FOR REDUCED PLANS 0 1 2 3

UNIT 3580
PROJECT NUMBER & PHASE 11000004061

DISREGARD PRINTS BEARING EARLIER REVISION DATES
REVISION DATES (PRELIMINARY STAGE ONLY) 07-15-11 09-16-11 10-12-11 12-12-11 08-28-12 SHEET OF

USERNAME => s124392 DATE PLOTTED => 29-AUG-2012 TIME PLOTTED => 08:01

VI=I

DIST.	COUNTY	ROUTE	POST MILES TOTAL PROJECT	SHEET NO.	TOTAL SHEETS
11	SD	5,8	Var	74	76

CALIFORNIA STATE FIRE MARSHAL APPROVED FIRE AND PANIC ONLY
Approval of this plan does not authorize or approve any omission or deviation from applicable regulations. Final approval is subject to field inspection. One set of approved plans shall be available on the project site at all times.
Reviewed by: FRANCIS SOLICH
Approval date: 08-28-12
CSFM File No. 01-37-11-0007

REGISTERED MECHANICAL ENGINEER — 08-28-12 DATE

REGISTERED PROFESSIONAL ENGINEER — TOM H. HATAM — No. M33666 — Exp. 6-30-13 — MECH — STATE OF CALIFORNIA

09-24-12
PLANS APPROVAL DATE

The State of California or its officers or agents shall not be responsible for the accuracy or completeness of electronic copies of this plan sheet.

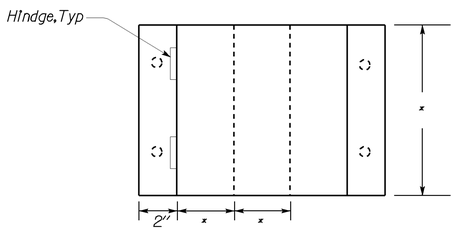

TOP

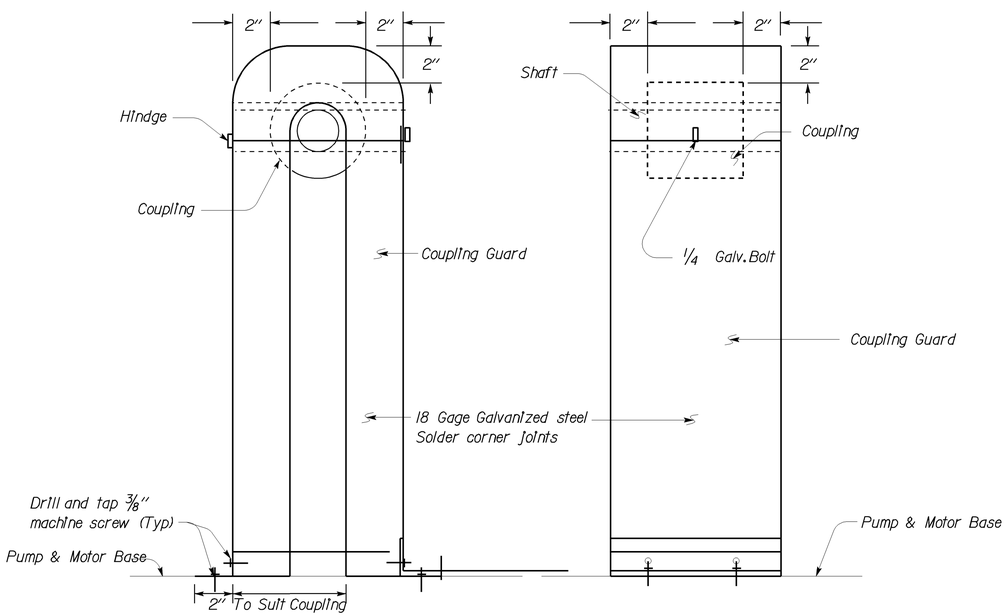

* Size to determine by coupling and shaft size

SIDE **FRONT**

(A) COUPLING GUARD PUMP #2

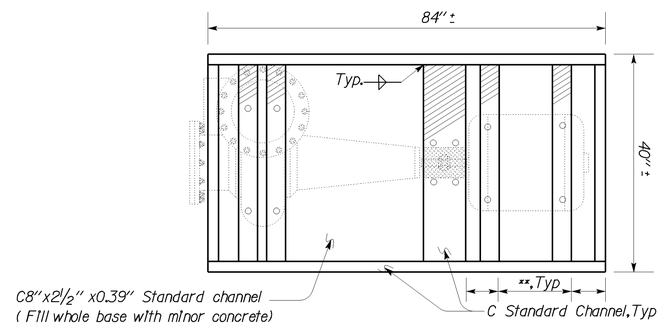

TOP

Note:
Location of motor and pump supports to be determine by pump manufacturer

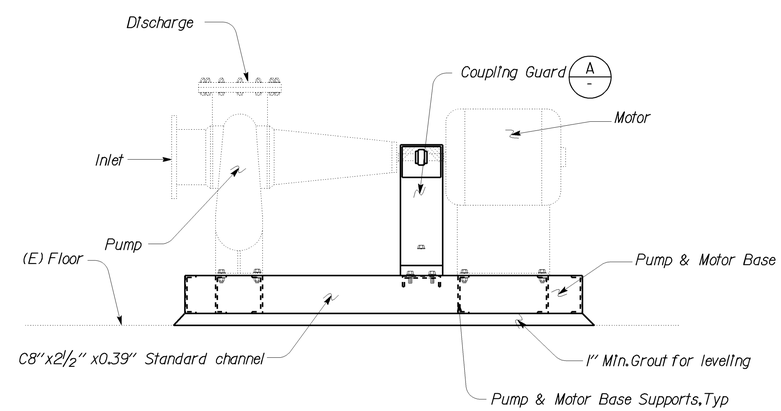

FRONT

(B) PUMP & MOTOR BASE

Notes:
1. Contractor shall submit shop drawings for coupling guard and Pump & motor base for approval.
2. Pump and motor base shall be set level. Space between base and floor shall be filled with minor concrete. Contractor shall submit shop drawings for anchoring pump/motor base to existing floor.
3. Mount motor and pump per maufaturer recommendations.

THIS DRAWING ACCURATE FOR MECHANICAL WORK ONLY

NO SCALE

	BY	CHECKED
DESIGN	Severiano Gutierrez	Tom Hatam
DETAILS	Rudy Sarte	Severiano Gutierrez
QUANTITIES	Severiano Gutierrez	Tom Hatam

STATE OF CALIFORNIA DEPARTMENT OF TRANSPORTATION

DIVISION OF ENGINEERING SERVICES
ELECTRICAL-MECHANICAL-WATER AND WASTEWATER DESIGN

BRIDGE NO. 57-180W
POST MILE

PUMPING PLANT REHABILITATION
75/5 SEPARATION PUMPING PLANT (Location 3)
MECHANICAL PLAN

SHEET **M3-4**

TAEMWW Imperial Rev. 7/10
FILE => m3_4.dgn
DATE PLOTTED => 29-AUG-2012 TIME PLOTTED => 08:01
ORIGINAL SCALE IN INCHES FOR REDUCED PLANS 0 1 2 3
UNIT 3580
PROJECT NUMBER & PHASE 11000004061
EA 000000
DISREGARD PRINTS BEARING EARLIER REVISION DATES
REVISION DATES (PRELIMINARY STAGE ONLY) 07-15-11 09-16-11 10-12-11 12-12-11 08-28-12
SHEET OF

USERNAME => s124392 DATE PLOTTED => 29-AUG-2012 TIME PLOTTED => 08:01
V|=|

DIST.	COUNTY	ROUTE	POST MILES TOTAL PROJECT	SHEET NO.	TOTAL SHEETS
11	SD	5,8	Var	75	76

CALIFORNIA STATE FIRE MARSHAL
APPROVED FIRE AND PANIC ONLY
Approval of this plan does not authorize or approve any omission or deviation from applicable regulations. Final approval is subject to field inspection. One set of approved plans shall be available on the project site at all times.
Reviewed by: FRANCIS SOLICH
Approval date: 08-28-12
CSFM File No. 01-37-11-0007

Tom H. Hatam 08-28-12
REGISTERED ENGINEER-MECHANICAL

REGISTERED PROFESSIONAL ENGINEER
TOM H. HATAM
No. M33666
Exp. 6-30-13
MECH
STATE OF CALIFORNIA

09-24-12
PLANS APPROVAL DATE

The State of California or its officers or agents shall not be responsible for the accuracy or completeness of electronic copies of this plan sheet.

SHEET INDEX
(LOCATION 4)

MECHANICAL PLANS

M4-0 GENERAL PLAN
M4-1 MODIFIED PLAN

ELECTRICAL PLANS

EE4-0 LEGEND
EE4-1 ELECTRICAL SITE PLAN
EE4-2 EXISTING AND MODIFIED CONTROL ROOM DETAILS
EE4-3 EXISTING AND MODIFIED CONTROL ROOM ELEVATION
EE4-4 MODIFIED SCHEMATIC

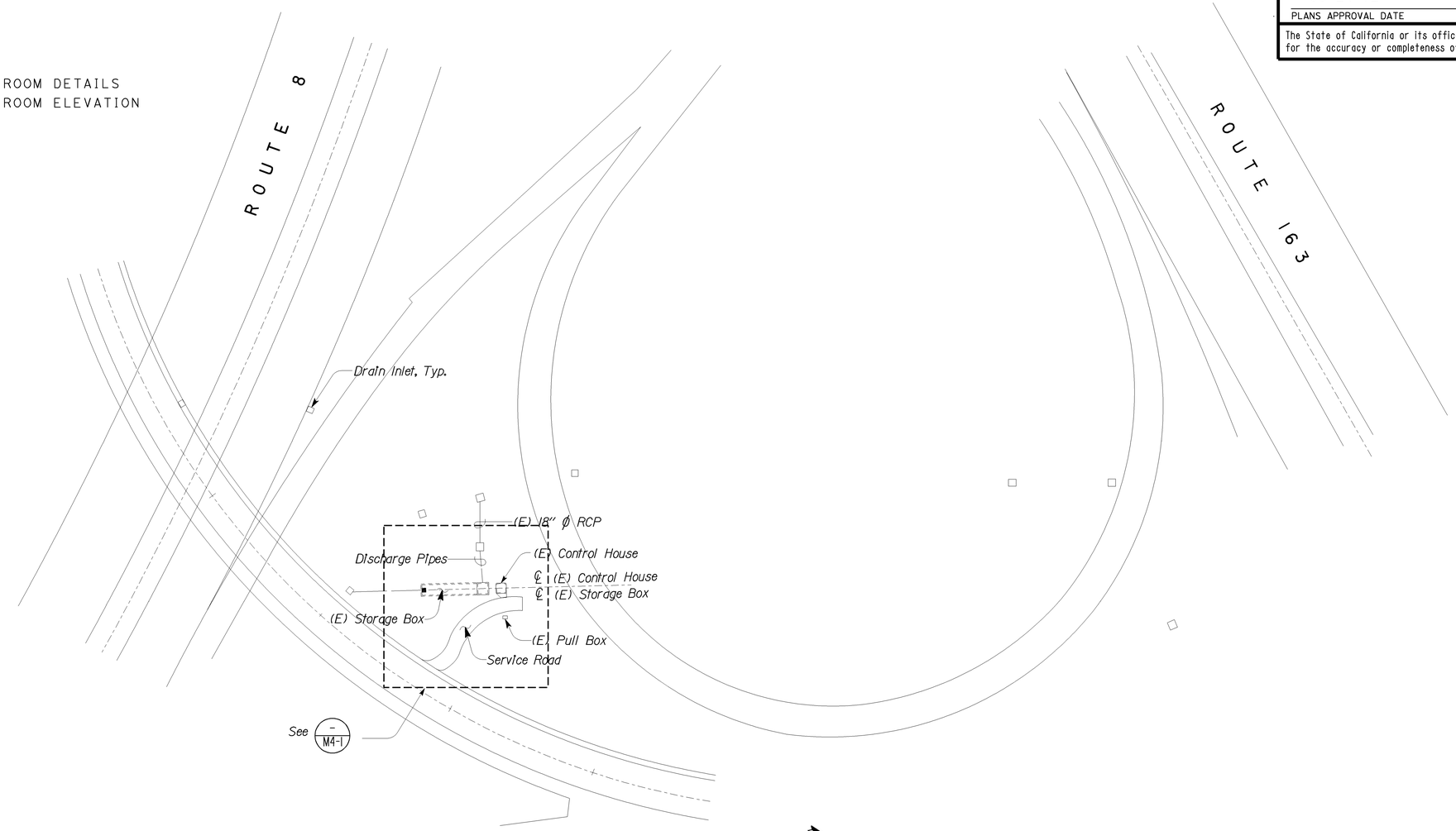

SITE PLAN

NO SCALE

THIS DRAWING ACCURATE FOR MECHANICAL WORK ONLY

DESIGN	BY Severiano Gutierrez	CHECKED Tom Hatam	
DETAILS	BY Rudy Sarte	CHECKED Severiano Gutierrez	
QUANTITIES	BY Severiano Gutierrez	CHECKED Tom Hatam	

STATE OF CALIFORNIA
DEPARTMENT OF TRANSPORTATION

DIVISION OF ENGINEERING SERVICES
ELECTRICAL-MECHANICAL-WATER AND WASTEWATER DESIGN

BRIDGE NO. 57-0358W
POST MILE

PUMPING PLANT REHABILITATION
EAST CABRILLO PUMPING PLANT (Location 4)
GENERAL PLAN

SHEET **M4-0**

DS OSD 2139A (4/89)
FILE NO.:
FILE => m4_0.dgn
DATE PLOTTED => 29-AUG-2012 TIME PLOTTED => 08:01

ORIGINAL SCALE IN INCHES FOR REDUCED PLANS 0 1 2 3

UNIT 3580
PROJECT NUMBER & PHASE 11000004061

DISREGARD PRINTS BEARING EARLIER REVISION DATES
REVISION DATES (PRELIMINARY STAGE ONLY) 07-15-11 09-16-11 10-12-11 12-12-11 08-28-12
SHEET OF

USERNAME => s124392 DATE PLOTTED => 29-AUG-2012 TIME PLOTTED => 08:01

V|=|

General Note:

Existing Pumps are Hydromatic, Model * S6L750M3-4, 7-1/2HP, 1150 RPM, 900 GPM @ 23 ft, 230 V, 60 HZ, 3 Phase, Impeller diameter = 10.38" (2 Total)

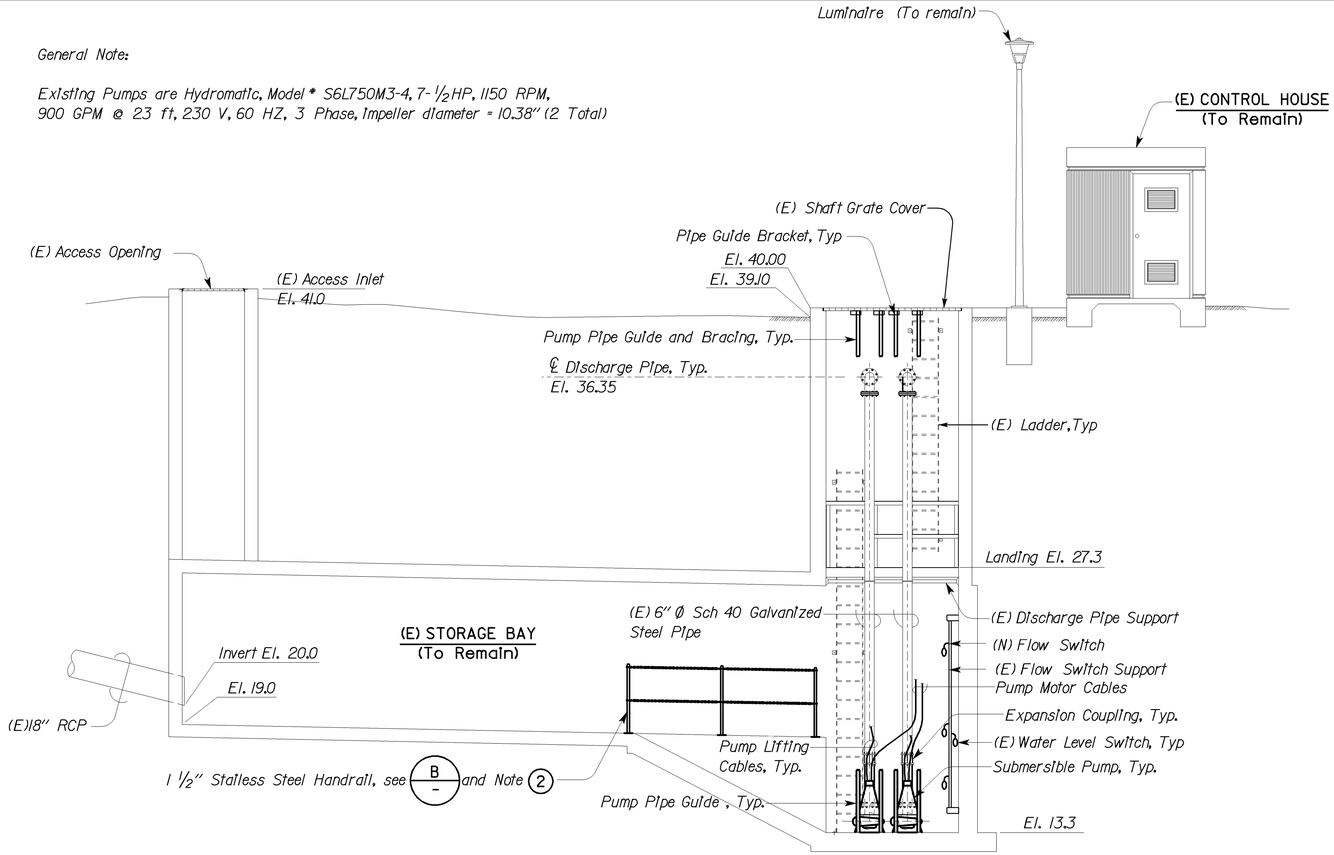

A SECTION

SCALE: 1/4" = 1'-0"

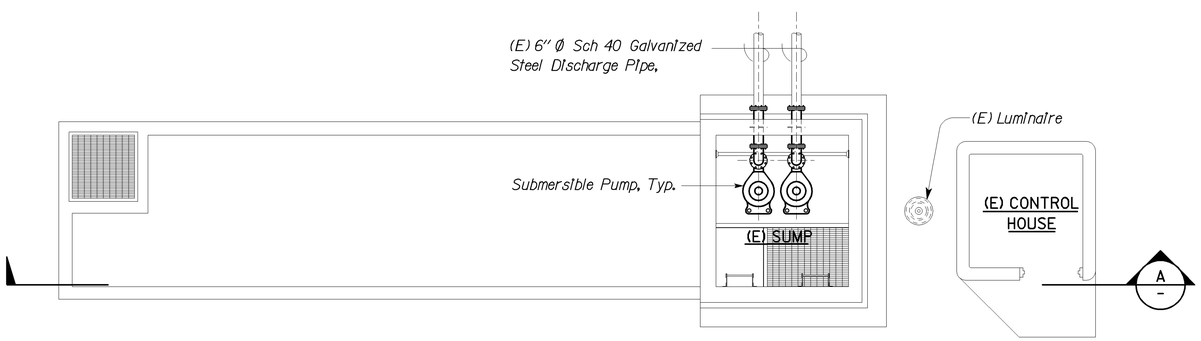

PLAN

SCALE: 1/4" = 1'-0"

CALIFORNIA STATE FIRE MARSHAL APPROVED FIRE AND PANIC ONLY
Approval of this plan does not authorize or approve any omission or deviation from applicable regulations. Final approval is subject to field inspection. One set of approved plans shall be available on the project site at all times.
Reviewed by: FRANCIS SOLICH
Approval date: 08-28-12
CSFM File No. 01-37-11-0007

DIST.	COUNTY	ROUTE	POST MILES TOTAL PROJECT	SHEET NO.	TOTAL SHEETS
11	SD	5,8	Var	76	76

REGISTERED ENGINEER-MECHANICAL 08-28-12

REGISTERED PROFESSIONAL ENGINEER TOM H. HATAM No. M33666 Exp. 6-30-13 MECH STATE OF CALIFORNIA

09-24-12
PLANS APPROVAL DATE

The State of California or its officers or agents shall not be responsible for the accuracy or completeness of electronic copies of this plan sheet.

Notes:

1. Remove (E) 7-1/2 HP Submersible pumps, 6" pump discharge mating connections, 6" Galvanized pipe up to the flexible couplings, Pump Motor Cables, 2" pump pipe guides and pump guide anchor bolts.
2. Remove existing Guard Post and Flanges. (3 Total)
3. Install new Submersible Pumps, Pump Motor Cables, 6" Pump Discharge mating connections, Pump Pipe Guides and Anchor Bolts per manufacturer recommendations.
4. Install new Stainless Steel Guard, see B
5. Use existing 3/8" Eye Bolts to support Pump Motor Cable and Water Level Switch Cable.
6. Pump shall be 7-1/2 HP, 1150 RPM, 900 GPM @ 23 ft, 230V, 60HZ, 3 Phase. (2 Total)

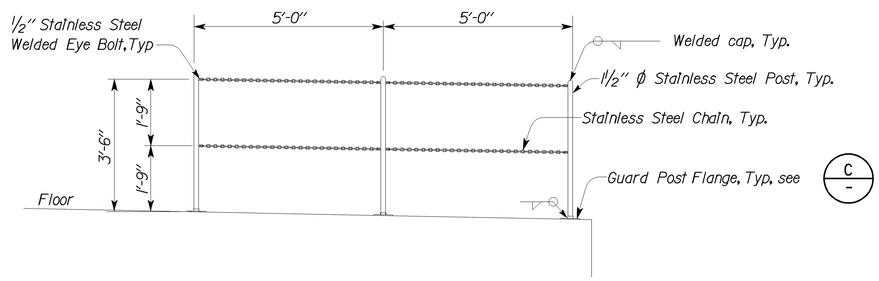

B GUARD ELEVATION

SCALE: 1/2" = 1'-0"

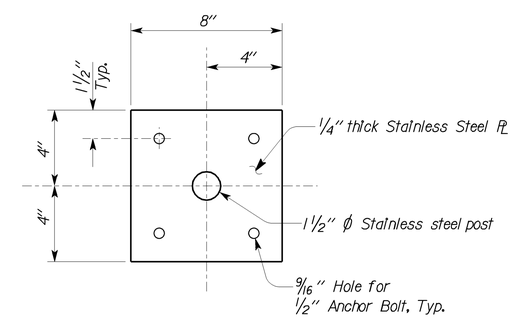

C GUARD POST FLANGE

SCALE: 3" = 1'-0"

THIS DRAWING ACCURATE FOR MECHANICAL WORK ONLY

	BY	CHECKED
DESIGN	Severiano Gutierrez	Tom Hatam
DETAILS	Rudy Sarte	Severiano Gutierrez
QUANTITIES	Severiano Gutierrez	Tom Hatam

STATE OF CALIFORNIA DEPARTMENT OF TRANSPORTATION

DIVISION OF ENGINEERING SERVICES
ELECTRICAL-MECHANICAL-WATER AND WASTEWATER DESIGN

BRIDGE NO. 57-0358W
POST MILE

PUMPING PLANT REHABILITATION
EAST CABRILLO PUMPING PLANT (Location 4)
MODIFIED PLAN

SHEET M4-1

TAEMWW Imperial Rev. 7/10
FILE => m4_1.dgn
DATE PLOTTED => 29-AUG-2012 TIME PLOTTED => 08:01

ORIGINAL SCALE IN INCHES FOR REDUCED PLANS 0 1 2 3

UNIT 3580
PROJECT NUMBER & PHASE 11000004061

DISREGARD PRINTS BEARING EARLIER REVISION DATES

REVISION DATES (PRELIMINARY STAGE ONLY) 07-15-11 09-16-11 12-12-11 08-28-12 SHEET OF

USERNAME => s124392 DATE PLOTTED => 29-AUG-2012 TIME PLOTTED => 08:01

V|=|