Dist	COUNTY	ROUTE	POST MILES TOTAL PROJECT	SHEET No.	TOTAL SHEETS
10	SJ	99	32.6	1	15

INDEX OF PLANS

SHEET No.	DESCRIPTION
1	TITLE AND LOCATION MAP
2	TRAFFIC HANDLING PLAN
3	CONSTRUCTION AREA SIGNS AND SUMMARY OF QUANTITIES
4	SIGN DETAILS AND QUANTITIES
5	ELECTRICAL PLANS
6-11	REVISED STANDARD PLANS

STRUCTURE PLANS

12-15	WOODBRIDGE ROAD OC-HEAT STRENGTHEN Br No. 29-0145

THE STANDARD PLANS LIST APPLICABLE TO THIS CONTRACT IS INCLUDED IN THE NOTICE TO BIDDERS AND SPECIAL PROVISIONS BOOK.

STATE OF CALIFORNIA

DEPARTMENT OF TRANSPORTATION

PROJECT PLANS FOR CONSTRUCTION ON

STATE HIGHWAY

IN SAN JOAQUIN COUNTY
NEAR LODI
AT WOODBRIDGE ROAD OVERCROSSING

TO BE SUPPLEMENTED BY STANDARD PLANS DATED MAY 2006

LOCATION MAP

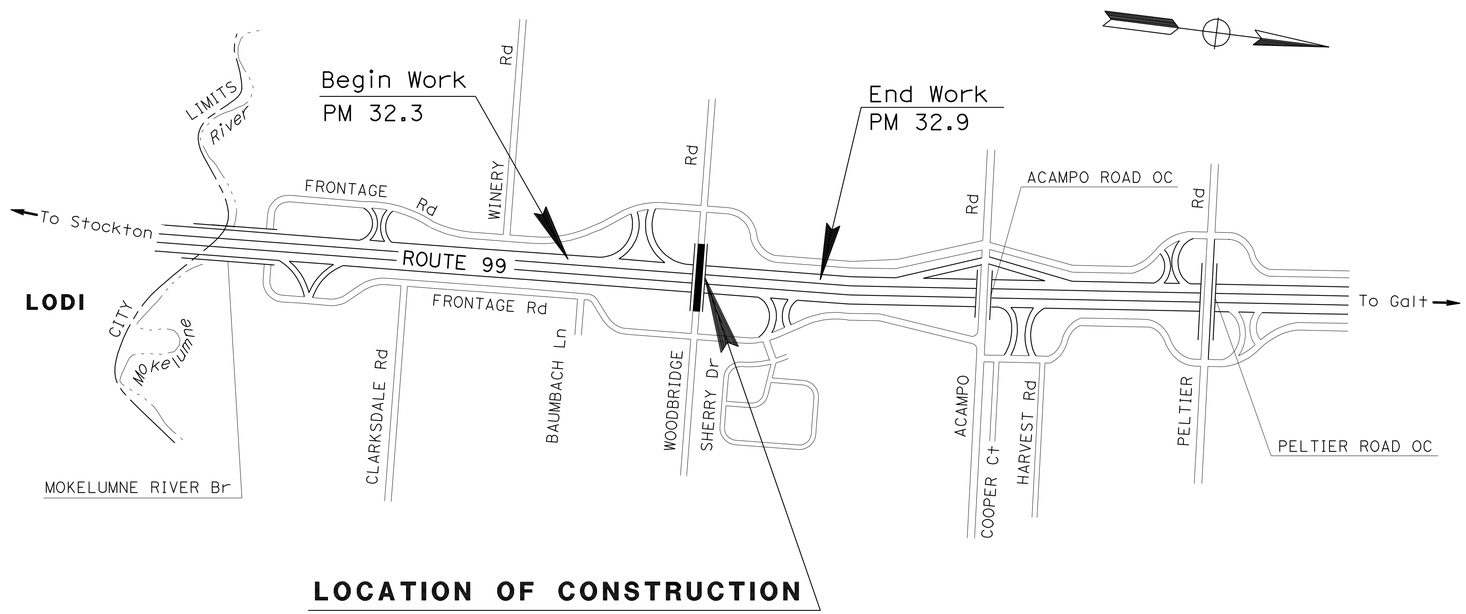

LOCATION OF CONSTRUCTION

WOODBRIDGE ROAD OC
Br No. 29-0145 PM 32.6

NO SCALE

THE CONTRACTOR SHALL POSSESS THE CLASS (OR CLASSES) OF LICENSE AS SPECIFIED IN THE "NOTICE TO BIDDERS."

PROJECT MANAGER ALVIN MANGINDIN

DESIGN ENGINEER ALVIN MANGINDIN

Rhodel De Claro 9/19/11
PROJECT ENGINEER DATE
REGISTERED CIVIL ENGINEER

December 12, 2011
PLANS APPROVAL DATE

REGISTERED PROFESSIONAL ENGINEER RHODEL De CLARO No. 74058 Exp. 6/30/13 CIVIL STATE OF CALIFORNIA

THE STATE OF CALIFORNIA OR ITS OFFICERS OR AGENTS SHALL NOT BE RESPONSIBLE FOR THE ACCURACY OR COMPLETENESS OF SCANNED COPIES OF THIS PLAN SHEET.

CONTRACT No.	**10-0V5604**
PROJECT ID	**1000020472**

LAST REVISION 00-00-00 DATE PLOTTED => 14-DEC-2011 TIME PLOTTED => 13:54

Dist	COUNTY	ROUTE	POST MILES TOTAL PROJECT	SHEET No.	TOTAL SHEETS
10	SJ	99	32.6	2	15

Rhodel De Claro 9/17/11
REGISTERED CIVIL ENGINEER DATE

12-12-11
PLANS APPROVAL DATE

REGISTERED PROFESSIONAL ENGINEER RHODEL De CLARO No. 74058 Exp 6/30/13 CIVIL STATE OF CALIFORNIA

THE STATE OF CALIFORNIA OR ITS OFFICERS OR AGENTS SHALL NOT BE RESPONSIBLE FOR THE ACCURACY OR COMPLETENESS OF SCANNED COPIES OF THIS PLAN SHEET.

NOTES:

1. EXACT SIGN LOCATIONS TO BE DETERMINED BY ENGINEER.
2. * ADVANCED SPECIAL MESSAGE ADVISORY SIGN AT RAMPS.
3. THE STOP SIGN AND MOUNTING BASE SHALL BE REMOVED DURING DETOUR AND REPLACED WITH A TEMPORARY SIGN.
4. WHEN DETOUR IS NOT IN USE, COVER ALL CONFLICTING ROADSIDE SIGNS EXCEPT SC6-4.
5. ALL TEMPORARY SIGNS SHALL COMPLEMENT STANDARD PLANS T10A, T13 AND T14.
6. DURING THE SB ROUTE 99 CLOSURE,

THE PCMS MESSAGE AT (G) SHOULD READ:

1ST FRAME	→	2ND FRAME
ROAD WORK AHEAD	→	FWY CLOSED AHEAD

THE PCMS MESSAGE AT (H) SHOULD READ:

1ST FRAME	→	2ND FRAME
FWY CLOSED AHEAD	→	FOLLOW DETOUR

LEGEND

- ◯ - SIGN No.
- ⚑ - CONSTRUCTION AREA SIGNS (PORTABLE)
- → - DIRECTION OF TRAFFIC
- ▯ - PORTABLE CHANGEABLE MESSAGE SIGN

CONSTRUCTION AREA SIGNS (PORTABLE)

SIGN No.	SIGN CODE	PANEL SIZE	No. OF SIGNS	No. OF POSTS AND SIZE	SIGN MESSAGE
(A)*	SC6-4(CA)	48" x 60"	2	1 - 6" x 6"	"RAMP CLOSED INFO"
(B)	M4-10(R†)	48" x 18"	2	1 - 4" x 4"	DETOUR (ARROW)
(C)	M4-10(L†)	48" x 18"	2	1 - 4" x 4"	DETOUR (ARROW)
(D)	M4-8	24" x 12"	4	1 - 4" x 4"	DETOUR
	G28-1(4)	24" x 24"	4		"99" SHIELD
	M3-1	30" x 15"	4		SOUTH
(E)	SC3 (CA)	36" x 12"	1	1 - 4" x 4"	DETOUR WITH ARROW
(F)	M4-8a	24" x 12"	1	1 - 4" x 4"	END DETOUR

TRAFFIC DETOUR PLAN

1. SB ROUTE 99 CLOSED
2. TAKE ACAMPO Rd OFF-RAMP
3. TURN RIGHT ON ACAMPO Rd
4. TURN LEFT ONTO FRONTAGE Rd
5. CONTINUE ON FRONTAGE Rd PAST WOODBRIDGE Rd
6. TURN LEFT ONTO SB ROUTE 99

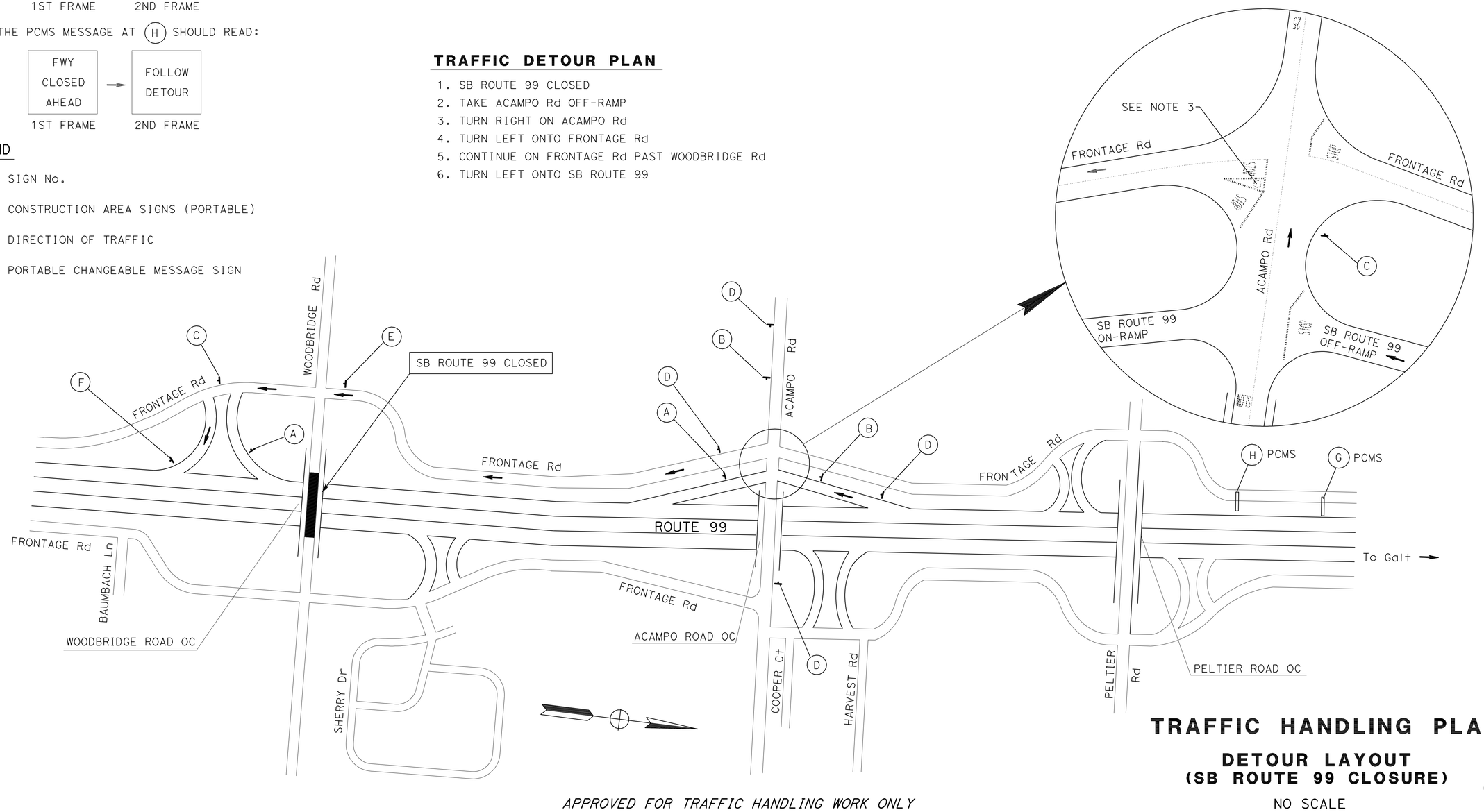

APPROVED FOR TRAFFIC HANDLING WORK ONLY

TRAFFIC HANDLING PLAN

DETOUR LAYOUT (SB ROUTE 99 CLOSURE)

NO SCALE

TH-1

STATE OF CALIFORNIA - DEPARTMENT OF TRANSPORTATION
Caltrans® MAINTENANCE

FUNCTIONAL SUPERVISOR: ALVIN MANGINDIN
CALCULATED-DESIGNED BY: RHODEL De CLARO
CHECKED BY: JOSE A ALICEA II
REVISED BY: RDC
DATE REVISED: 9/16/11

LAST REVISION 00-00-00
DATE PLOTTED => 14-DEC-2011
TIME PLOTTED => 13:18

Dist	COUNTY	ROUTE	POST MILES TOTAL PROJECT	SHEET No.	TOTAL SHEETS
10	SJ	99	32.6	3	15

Rhodel De Claro 9/17/11
REGISTERED CIVIL ENGINEER DATE

12-12-11
PLANS APPROVAL DATE

REGISTERED PROFESSIONAL ENGINEER
RHODEL De CLARO
No. 74058
Exp 6/30/13
CIVIL
STATE OF CALIFORNIA

THE STATE OF CALIFORNIA OR ITS OFFICERS OR AGENTS SHALL NOT BE RESPONSIBLE FOR THE ACCURACY OR COMPLETENESS OF SCANNED COPIES OF THIS PLAN SHEET.

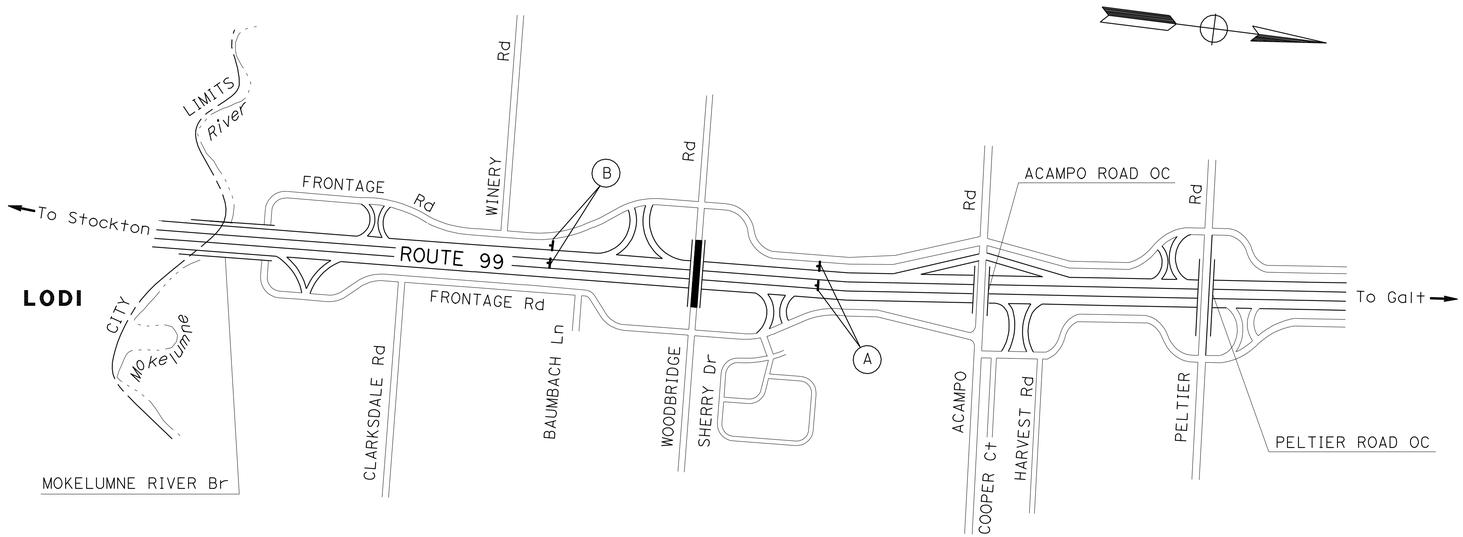

STATIONARY MOUNTED CONSTRUCTION AREA SIGNS

SIGN	SIGN CODE	PANEL SIZE	No. OF POSTS AND SIZE	No. OF SIGNS	SIGN MESSAGE
A	W20-1	48" X 48"	1 - 4" x 6"	2	ROAD WORK AHEAD
B	G20-2	48" x 24"	1 - 4" x 4"	2	END ROAD WORK

NOTE: EXACT SIGN LOCATIONS TO BE DETERMINED BY THE ENGINEER.

SIGN QUANTITIES

LOCATION	RESET ROADSIDE SIGN
	EA
FRONTAGE ROAD	1
TOTAL	1

TRAFFIC MANAGEMENT SYSTEM ELEMENTS (EXISTING)

LOCATION	PM	SIDE	TYPE	DESCRIPTION
ROUTE 99	32.50	NB	LOOP	TRAFFIC MONITORING STATION
ROUTE 99	32.50	SB	LOOP	TRAFFIC MONITORING STATION

APPROVED FOR CONSTRUCTION AREA SIGN WORK ONLY

CONSTRUCTION AREA SIGNS AND SUMMARY OF QUANTITIES

NO SCALE

CS-1

REVISED BY	RDC
DATE REVISED	9/16/11
RHODEL De CLARO	
JOSE A ALICEA II	
CALCULATED-DESIGNED BY	
CHECKED BY	
FUNCTIONAL SUPERVISOR	
ALVIN MANGINDIN	

STATE OF CALIFORNIA - DEPARTMENT OF TRANSPORTATION
Caltrans® MAINTENANCE

LAST REVISION 00-00-00
DATE PLOTTED => 14-DEC-2011
TIME PLOTTED => 13:18

Dist	COUNTY	ROUTE	POST MILES TOTAL PROJECT	SHEET No.	TOTAL SHEETS
10	SJ	99	32.6	4	15

REGISTERED CIVIL ENGINEER 9/19/11 DATE

12-12-11
PLANS APPROVAL DATE

REGISTERED PROFESSIONAL ENGINEER HUE NGUYEN No. 74484 Exp 12/31/13 CIVIL STATE OF CALIFORNIA

THE STATE OF CALIFORNIA OR ITS OFFICERS OR AGENTS SHALL NOT BE RESPONSIBLE FOR THE ACCURACY OR COMPLETENESS OF SCANNED COPIES OF THIS PLAN SHEET.

NOTES:

FOR LOCATION AND BRIDGE MOUNTED SIGN DETAILS SEE STRUCTURE SHEET.

Ⓐ G83-4(CA)

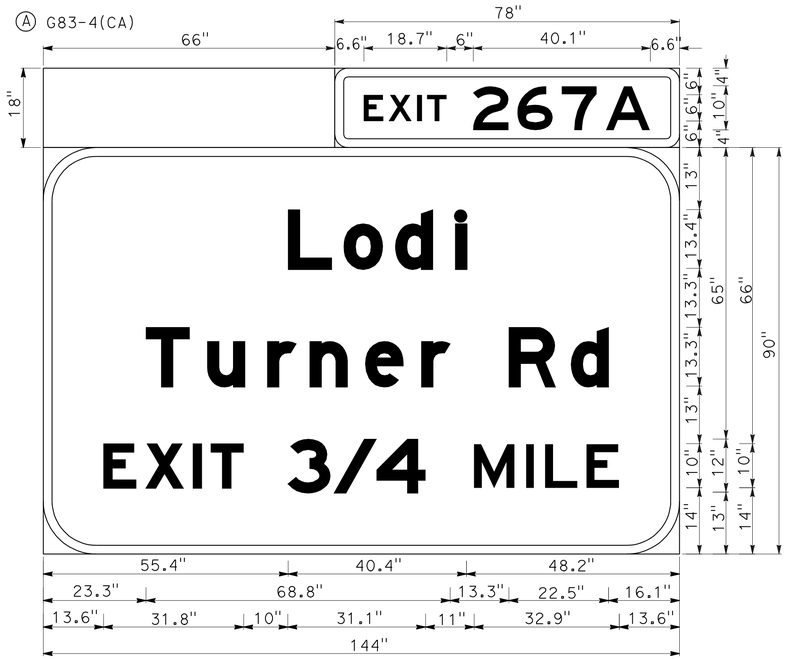

NO BORDER, WHITE ON GREEN;
3.0" RADIUS, 2.0" BORDER, WHITE ON GREEN;
[EXIT] E; [267A] E;
12.0" RADIUS, 2.0" BORDER, WHITE ON GREEN;
[Lodi] E Mod; [Turner Rd] E Mod; [EXIT 3/4] E Mod; [MILE] E;

SIGN A

Ⓑ G85-10(CA)

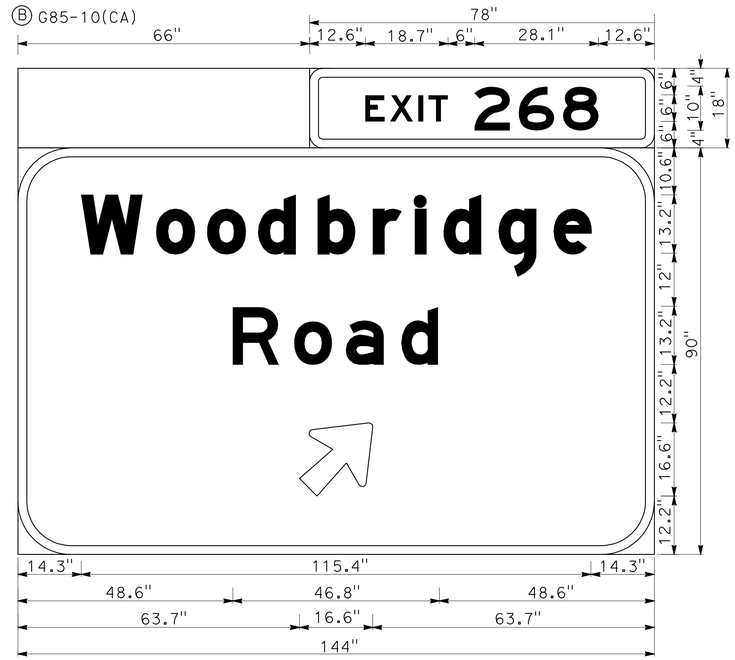

NO BORDER, WHITE ON GREEN;
3.0" RADIUS, 2.0" BORDER, WHITE ON GREEN;
[EXIT] E; [268] E;
G85-10(CA); 12.0" RADIUS, 2.0" BORDER, WHITE ON GREEN;
[Woodbridge] E Mod; [Road] E; Arrow 13.33UC-1L - 20.3" 45°;

SIGN B

SIGN ITEMS

SIGN	SIGN CODE	LOCATION	PANEL SIZE	SIGN PANEL: SINGLE FACED	SIGN PANEL: DOUBLE FACED	SIGN PANEL: BACKGROUND: SHEETING COLOR	SIGN PANEL: BACKGROUND: RETROREFLECTIVITY ASTM TYPE	SIGN PANEL: LEGEND: SHEETING COLOR	SIGN PANEL: LEGEND: RETROREFLECTIVITY ASTM TYPE	SIGN PANEL: GRAFFITI FLOW: STANDARD	SIGN PANEL: GRAFFITI FLOW: PREMIUM	FURNISH LAMINATED SIGN PANEL (1"-TYPE A)	REMOVE SIGN PANEL	REMOVE ROADSIDE SIGN
												SQFT	EA	EA
Ⓐ	G83-1(CA) G83-4(CA)	FSBT PM 32.57	144" x 108"	X		GREEN	VII	WHITE	VII		X	108	1	
Ⓑ	G85-11(CA) G85-10(CA)	FSBT PM 32.57	144" x 108"	X		GREEN	XI	WHITE	XI		X	108		1
TOTAL												216	1	1

SIGN DETAILS AND QUANTITIES

SD-1

REVISED BY	DATE REVISED
HN	9/19/11

CALCULATED-DESIGNED BY: HUE NGUYEN
CHECKED BY: FERNANDO LOPEZ
FUNCTIONAL SUPERVISOR: MOHAMMED QATAMI

STATE OF CALIFORNIA - DEPARTMENT OF TRANSPORTATION
Caltrans
TRAFFIC DESIGN

LAST REVISION 00-00-00 | DATE PLOTTED => 14-DEC-2011 | TIME PLOTTED => 13:18

Dist	COUNTY	ROUTE	POST MILES TOTAL PROJECT	SHEET No.	TOTAL SHEETS
10	SJ	99	32.6	5	15

REGISTERED ELECTRICAL ENGINEER 9/19/11 DATE

12-12-11
PLANS APPROVAL DATE

REGISTERED PROFESSIONAL ENGINEER Jaspal Singh No. E16657 Exp 6/30/12 ELECTRICAL STATE OF CALIFORNIA

THE STATE OF CALIFORNIA OR ITS OFFICERS OR AGENTS SHALL NOT BE RESPONSIBLE FOR THE ACCURACY OR COMPLETENESS OF SCANNED COPIES OF THIS PLAN SHEET.

LEGEND:

1. Exist TYPE A SERVICE.
2. INSTALL 240 V, 1-85 W ISL.
3. Exist OH ILLUMINATED SIGN, RS Exist mv LAMP FIXTURE AND FITTINGS TO THE DSE. INSTALL 240 V, 1-85 W ISL.
4. Exist MODIFIED tdc CABINET FOR mvds.

ABBREVIATIONS:

DSE - DISCONNECTING SWITCH ENCLOSURE
PG&E - PACIFIC GAS AND ELECTRIC COMPANY
MVDS - MICROWAVE VEHICLE DETECTION SYSTEM

NOTES:

1. FOR SIGN DETAIL, SEE SHEET SD-1.
2. FOR ACCURATE RIGHT OF WAY DATA, CONTACT RIGHT OF WAY ENGINEERING AT THE DISTRICT OFFICE.

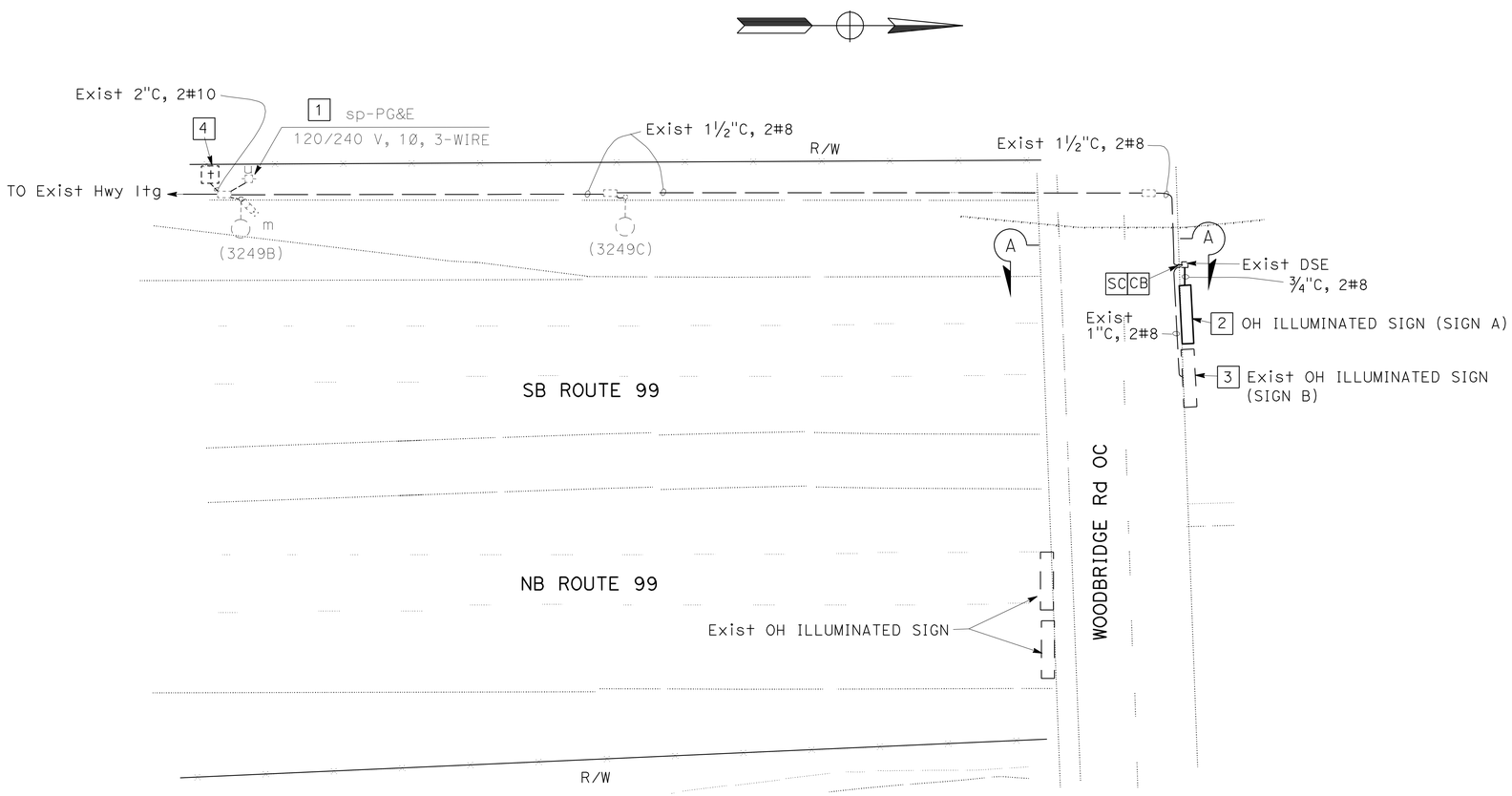

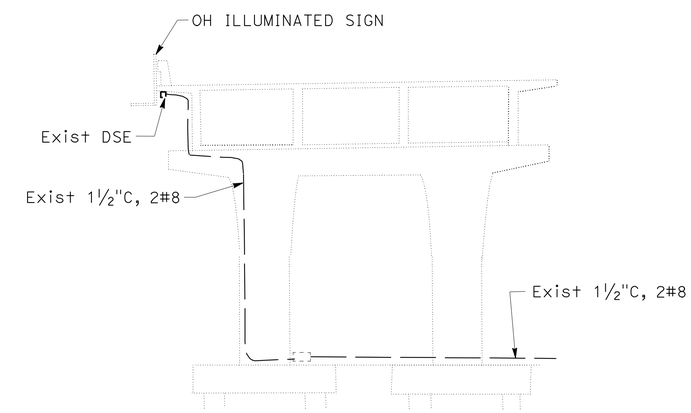

WOODBRIDGE Rd OC
SECTION A-A

APPROVED FOR ELECTRICAL WORK ONLY

MODIFY SIGN ILLUMINATION

NO SCALE

E-1

STATE OF CALIFORNIA - DEPARTMENT OF TRANSPORTATION
Caltrans
ELECTRICAL DESIGN

FUNCTIONAL SUPERVISOR: ALI BAKHDOUD
CALCULATED-DESIGNED BY: JASPAL SINGH
CHECKED BY: FRED IYASERE
REVISED BY: JS
DATE REVISED: 9/19/11

LAST REVISION 07-25-11
DATE PLOTTED => 14-DEC-2011
TIME PLOTTED => 14:09

DIST	COUNTY	ROUTE	POST MILES TOTAL PROJECT	SHEET NO.	TOTAL SHEETS
10	SJ	99	32.6	6	15

Randell D. Hiatt
REGISTERED CIVIL ENGINEER

June 6, 2008
PLANS APPROVAL DATE

REGISTERED PROFESSIONAL ENGINEER
Randell D. Hiatt
No. C50200
Exp. 6-30-09
CIVIL
STATE OF CALIFORNIA

The State of California or its officers or agents shall not be responsible for the accuracy or completeness of electronic copies of this plan sheet.

To accompany plans dated 12-12-11

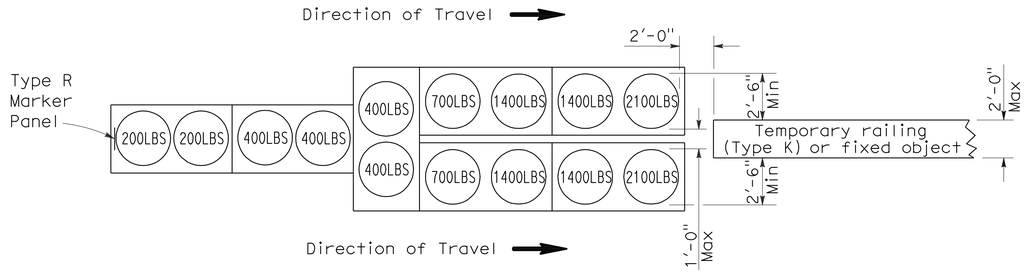

ARRAY 'TU14'

Approach speed 45 mph or more

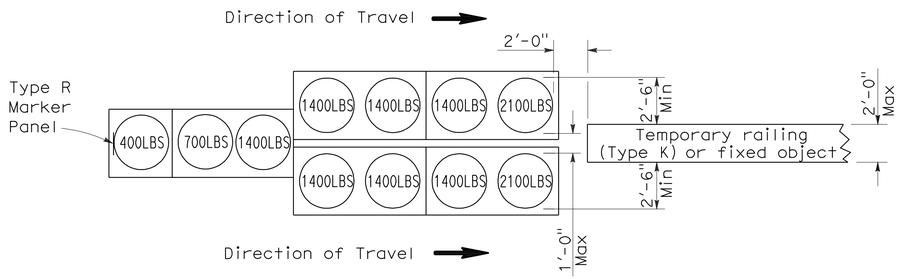

ARRAY 'TU11'

Approach speed less than 45 mph

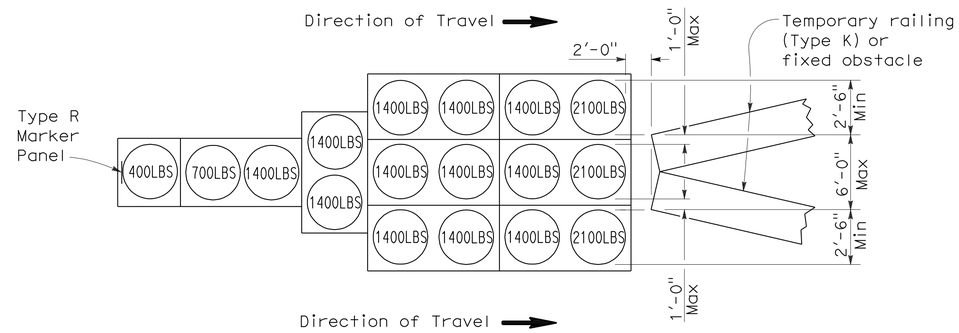

ARRAY 'TU17'

Approach speed less than 45 mph

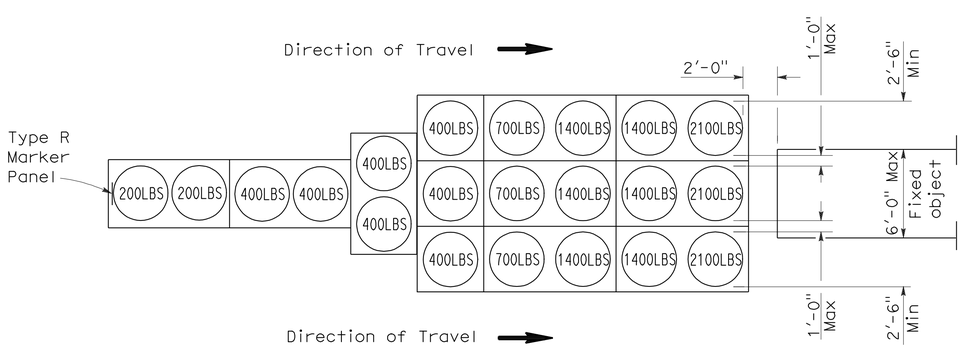

ARRAY 'TU21'

Approach speed 45 mph or more

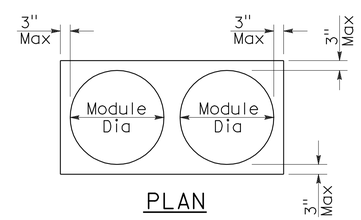

PLAN

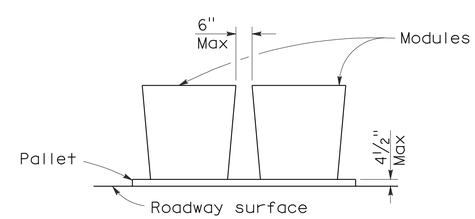

ELEVATION

CRASH CUSHION PALLET DETAIL

See Note 7

NOTES:

1. (XXX) Indicates sand filled module location and weight of sand in pounds for each module. Module spacing is based on the greater diameter of the module.
2. All sand weights are nominal.
3. Temporary crash cushion arrays shall not encroach on the traveled way.
4. Place the top of Type R marker panel 1" below the module lid.
5. Refer to Standard Plan A73B for marker details.
6. Approach speeds indicated conform to NCHRP 350 Report criteria.
7. Use of pallets is optional.

STATE OF CALIFORNIA
DEPARTMENT OF TRANSPORTATION

TEMPORARY CRASH CUSHION, SAND FILLED (UNIDIRECTIONAL)

NO SCALE

RSP T1A DATED JUNE 6, 2008 SUPERSEDES STANDARD PLAN T1A
DATED MAY 1, 2006 - PAGE 211 OF THE STANDARD PLANS BOOK DATED MAY 2006.

REVISED STANDARD PLAN RSP T1A

2006 REVISED STANDARD PLAN RSP T1A

DIST	COUNTY	ROUTE	POST MILES TOTAL PROJECT	SHEET NO.	TOTAL SHEETS
10	SJ	99	32.6	7	15

Randell D. Hiatt
REGISTERED CIVIL ENGINEER

June 6, 2008
PLANS APPROVAL DATE

REGISTERED PROFESSIONAL ENGINEER
Randell D. Hiatt
No. C50200
Exp. 6-30-09
CIVIL
STATE OF CALIFORNIA

The State of California or its officers or agents shall not be responsible for the accuracy or completeness of electronic copies of this plan sheet.

To accompany plans dated 12-12-11

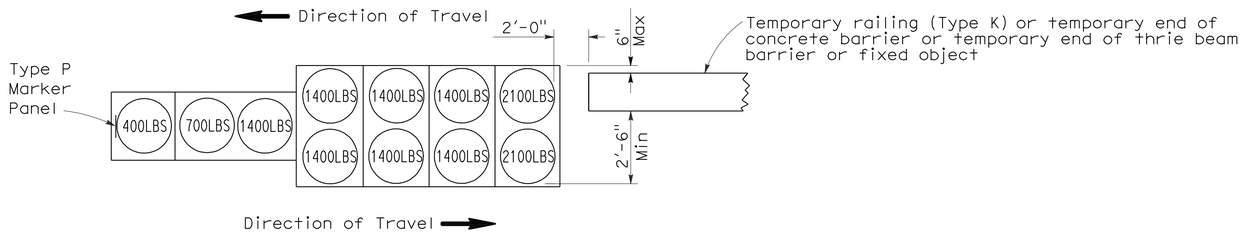

ARRAY 'TB11'

Approach speed less than 45 mph

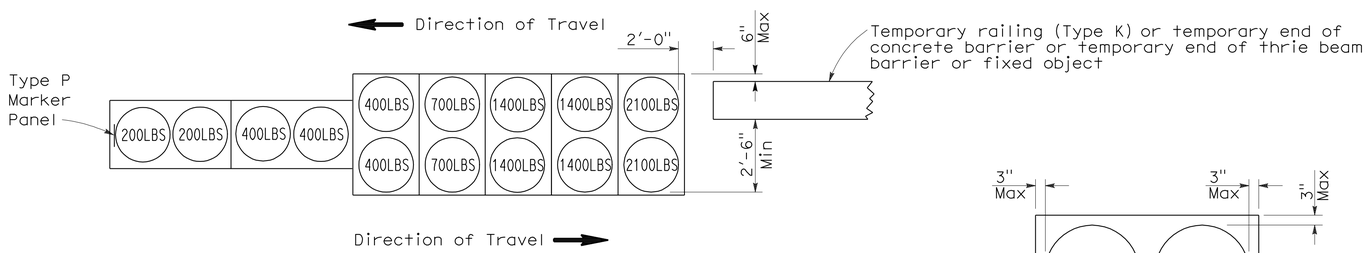

ARRAY 'TB14'

Approach speed 45 mph or more

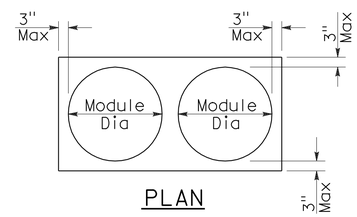

PLAN

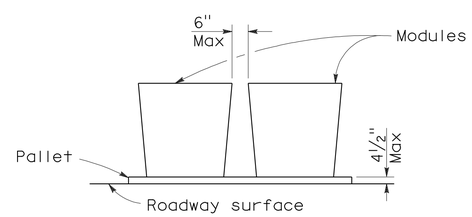

ELEVATION

CRASH CUSHION PALLET DETAIL

See Note 7

NOTES:

1. (XXX) Indicates sand filled module location and weight of sand in pounds for each module. Module spacing is based on the greater diameter of the module.
2. All sand weights are nominal.
3. Temporary crash cushion arrays shall not encroach on the traveled way.
4. Place the Type P marker panel so that the bottom of the panel rests upon the pallet.
5. Refer to Standard Plan A73B for marker details.
6. Approach speeds indicated conform to NCHRP 350 Report criteria.
7. Use of pallets is optional.

STATE OF CALIFORNIA
DEPARTMENT OF TRANSPORTATION

TEMPORARY CRASH CUSHION, SAND FILLED (BIDIRECTIONAL)

NO SCALE

RSP T1B DATED JUNE 6, 2008 SUPERSEDES STANDARD PLAN T1B
DATED MAY 1, 2006 - PAGE 212 OF THE STANDARD PLANS BOOK DATED MAY 2006.

REVISED STANDARD PLAN RSP T1B

2006 REVISED STANDARD PLAN RSP T1B

5-15-08

DIST	COUNTY	ROUTE	POST MILES TOTAL PROJECT	SHEET NO.	TOTAL SHEETS
10	SJ	99	32.6	8	15

Randell D. Hiatt
REGISTERED CIVIL ENGINEER

June 6, 2008
PLANS APPROVAL DATE

REGISTERED PROFESSIONAL ENGINEER
Randell D. Hiatt
No. C50200
Exp. 6-30-09
CIVIL
STATE OF CALIFORNIA

The State of California or its officers or agents shall not be responsible for the accuracy or completeness of electronic copies of this plan sheet.

To accompany plans dated 12-12-11

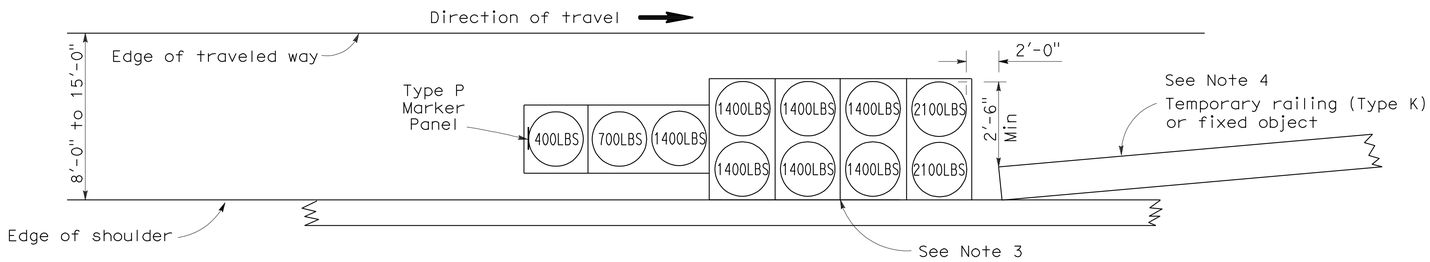

ARRAY 'TS11'

Approach speed less than 45 mph
See Note 9

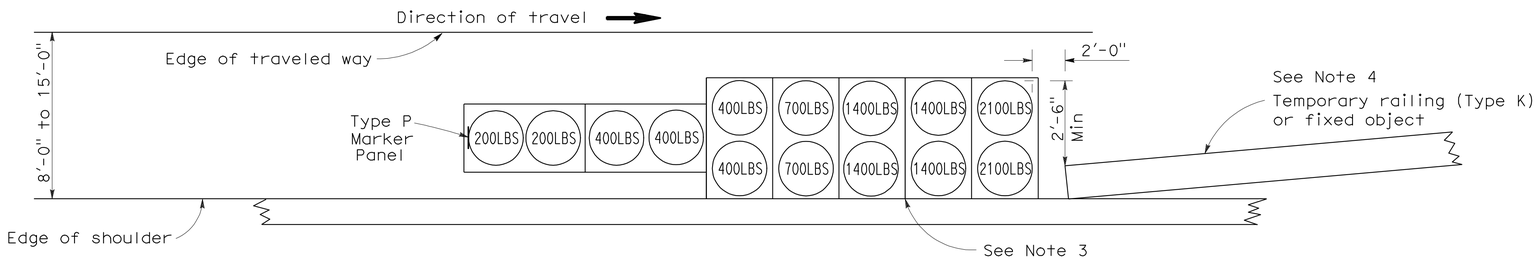

ARRAY 'TS14'

Approach speed 45 mph or more
See Note 9

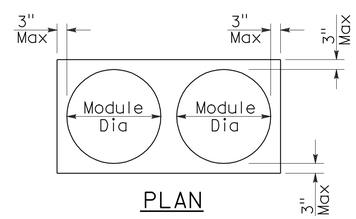

PLAN

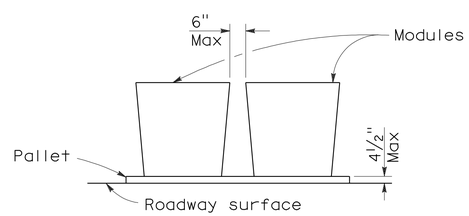

ELEVATION

CRASH CUSHION PALLET DETAIL

See Note 11

NOTES:

1. (XXX) Indicates sand filled module location and weight of sand in pounds for each module. Module spacing is based on the greater diameter of the module.
2. All sand weights are nominal.
3. The temporary crash cushion arrays shown on this plan shall be used only in locations where there will be traffic on one side of the temporary crash cushion array.
4. If the fixed object or approach end of the temporary railing is less than 15'-0" from the edge of traveled way, a temporary crash cushion is required in a construction or work zone.
5. Temporary crash cushion arrays shall not encroach on the traveled way.
6. Arrays for median shoulders shall conform to details shown on this plan for outside shoulders.
7. Place the Type P marker panel so that the bottom of the panel rests upon the pallet and faces traffic.
8. Refer to Standard Plan A73B for marker details.
9. For shoulder widths less than 8'-0", appropriate approved crash cushion protection, other than sand filled modules, shall be provided at fixed objects and at approach ends of temporary railing. The specific type of crash cushion shall be as shown on the project plans or as specified in the Special Provisions, or if not shown on the project plans or specified in the Special Provisions, shall be as approved by the Engineer.
10. Approach speeds indicated conform to NCHRP 350 Report criteria.
11. Use of pallets is optional.

STATE OF CALIFORNIA
DEPARTMENT OF TRANSPORTATION

TEMPORARY CRASH CUSHION, SAND FILLED (SHOULDER INSTALLATIONS)

NO SCALE

RSP T2 DATED JUNE 6, 2008 SUPERSEDES STANDARD PLAN T2
DATED MAY 1, 2006 - PAGE 213 OF THE STANDARD PLANS BOOK DATED MAY 2006.

REVISED STANDARD PLAN RSP T2

2006 REVISED STANDARD PLAN RSP T2

DIST	COUNTY	ROUTE	POST MILES TOTAL PROJECT	SHEET NO.	TOTAL SHEETS
10	SJ	99	32.6	9	15

REGISTERED ELECTRICAL ENGINEER

October 5, 2007
PLANS APPROVAL DATE

REGISTERED PROFESSIONAL ENGINEER Jeffery G. McRae No. E14512 Exp. 6-30-08 ELECTRICAL STATE OF CALIFORNIA

The State of California or its officers or agents shall not be responsible for the accuracy or completeness of electronic copies of this plan sheet.

To accompany plans dated 12-12-11

ELECTROLIERS

STANDARD TYPES
15, 15D
15 STRUCTURE
21, 21D STRUCTURE
30
31
32
35
36-20A

High mast light pole

Double Arm lighting standard

Existing electrolier

Electrolier foundation (Future installation)

NOTES:

1. Luminaires shall be 310 W HPS when installed on Type 21, 21D, 30, 31, 32, 35 and 36-20A Standards, unless otherwise specified. Luminaires shall be 200 W HPS when installed on other type standards or poles, unless otherwise specified.
2. Luminaires shall be the cutoff type, ANSI Type Ⅲ medium cutoff lighting distribution, unless otherwise specified.
3. Variations noted adjacent to symbol on project plans.

Electrolier (see project notes or project plans)

Luminaire on wood pole

STANDARD NOTES:

- AB — Abandon. If applied to conduit, remove conductors.
- BC — Install pull box in existing conduit run.
- BP — Pedestrian barricade, type as indicated on plan.
- CB — Install conduit into existing pull box.
- CC — Connect new and existing conduit. Remove existing conductors and install conductors as indicated.
- CF — Conduit to remain for future use. Remove conductors. Install pull wire or rope.
- DH — Detector handhole.
- FA — Foundation to be abandoned.
- IS — Install sign on signal mast arm.
- NS — No slip base on standard.
- PEC — Photoelectric control.
- PEU — Photoelectric unit.
- RC — Equipment or material to be removed and become the property of the Contractor.
- RE — Remove electrolier, fuses and ballast. Tape ends of conductors.
- RL — Relocate equipment.
- RR — Remove and reuse equipment.
- RS — Remove and salvage equipment.
- SC — Splice new to existing conductors.
- SD — Service disconnect.
- SF — Standard to remain for future use. Remove luminaire, pole conductors, fuses and ballast.
- TSP — Telephone service point.

ABBREVIATIONS AND EQUIPMENT DESIGNATIONS

PROPOSED	EXISTING	
BBS	bbs	Battery backup system
BC	bc	Bolt circle
C	C	Conduit
CCTV	cctv	Closed circuit television
CKT	ckt	Circuit
CMS	cms	Changeable message sign
DLC	dlc	Loop detector lead-in cable
EMS	ems	Extinguishable message sign
EVC	evc	Emergency vehicle cable
EVD	evd	Emergency vehicle detector
FB	fb	Flashing beacon
FBCA	fbca	Flashing beacon control assembly
FBS	fbs	Flashing beacon with slip base
FO	fo	Fiber optic
G	G	Ground (Equipment Grounding Conductor)
GFCI	GFCI	Ground fault circuit interrupt
HAR	har	Highway advisory radio
HEX	hex	Hexagonal
HPS	hps	High pressure sodium
IISNS	iisns	Internally illuminated street name sign
ISL	isl	Induction sign lighting
LED	led	Light emitting diode
LMA	lma	Luminaire mast arm
LPS	lps	Low pressure sodium
LTG	ltg	Lighting
LUM	lum	Luminaire
MAT	mat	Mast arm mounting vehicle signal faces, top attachment
MAS	mas	Mast arm mounting vehicle signal faces, side attachment
MAS-4A	mas-4A	Mast arm mounting vehicle signal faces, side attachment - 4 signal section
MAS-4B	mas-4B	
MAS-4C	mas-4C	
MAS-5A	mas-5A	Mast arm mounting vehicle signal faces, side attachment - 5 signal section
MAS-5B	mas-5B	
MC	mc	Mercury contactor
M/M	m/m	Multiple to multiple transformer
MT	mt	Conduit with pull wire or rope only
MTG	mtg	Mounting
	mv	Mercury vapor lighting fixture
N	N	Neutral (Grounded Conductor)
NC	NC	Normally closed
NO	NO	Normally open
PB	pb	Pull box
PEC	pec	Photoelectric control (Type Ⅰ, Ⅱ, Ⅲ, Ⅳ or Ⅴ as shown)
PED	ped	Pedestrian
PEU	peu	Photoelectric unit
PPB	ppb	Pedestrian push button
RL		Relocated equipment
RM	rm	Ramp metering
SB	sb	Slip base
SIC	sic	Signal interconnect cable
SIG	sig	Signal
SMA	sma	Signal mast arm
SNS	sns	Street name sign
SP	sp	Service point
TDC	tdc	Telephone demarcation cabinet
TMS	tms	Traffic monitoring station
TOS	tos	Traffic Operations System
VEH	veh	Vehicle
XFMR	xfmr	Transformer
COMM	comm	Communication
RWIS	rwis	Roadway weather information system

SOFFIT AND WALL MOUNTED LUMINAIRES

Pendant, 70 W HPS unless otherwise specified.

Flush, 70 W HPS unless otherwise specified.

Wall surface, 70 W HPS unless otherwise specified.

Existing soffit or wall luminaire to remain unmodified.

Existing soffit or wall luminaire to be modified as specified.

NOTE:

Arrow indicates "street side" of luminaire.

STATE OF CALIFORNIA
DEPARTMENT OF TRANSPORTATION

ELECTRICAL SYSTEMS (SYMBOLS AND ABBREVIATIONS)

NO SCALE

RSP ES-1A DATED OCTOBER 5, 2007 SUPERSEDES STANDARD PLAN ES-1A DATED MAY 1, 2006 - PAGE 400 OF THE STANDARD PLANS BOOK DATED MAY 2006.

REVISED STANDARD PLAN RSP ES-1A

2006 REVISED STANDARD PLAN RSP ES-1A

DIST	COUNTY	ROUTE	POST MILES TOTAL PROJECT	SHEET NO.	TOTAL SHEETS
10	SJ	99	32.6	10	15

REGISTERED ELECTRICAL ENGINEER

October 5, 2007
PLANS APPROVAL DATE

REGISTERED PROFESSIONAL ENGINEER
Jeffery G. McRae
No. E14512
Exp. 6-30-08
ELECTRICAL
STATE OF CALIFORNIA

The State of California or its officers or agents shall not be responsible for the accuracy or completeness of electronic copies of this plan sheet.

To accompany plans dated 12-12-11

CONDUIT

PROPOSED	EXISTING	
		Lighting Conduit, unless otherwise indicated or noted
		Traffic signal conduit
C	c	Communication conduit
T	t	Telephone conduit
F	f	Fire alarm conduit
FO	fo	Fiber optic conduit
		Conduit termination (RSP ES-9A C)
R	r	Conduit riser in/on structure or service pole

SERVICE EQUIPMENT

PROPOSED	EXISTING	
OH	oh	Overhead lines
U	U	Wood pole "U" indicates utility owned
		Pole guy with anchor
		Utility transformer - ground mounted
III		Service equipment enclosure type
		Service equipment enclosure door indicates front of enclosure
T	t	Telephone demarcation cabinet

POLE-MOUNTED SERVICE DESIGNATION

Type of installation

TYPE H SERVICE - 28'-10"

Pole height above grade

ILLUMINATED OVERHEAD SIGN

PROPOSED	EXISTING	
		Overhead sign - Single post
		Overhead sign - Two post
		Overhead sign - Mounted on structure
		Overhead sign with electrolier

SIGNAL EQUIPMENT

PROPOSED	EXISTING	
		Pedestrian signal face
		Pedestrian push button post
		Pedestrian barricade
		Vehicle signal face (with backplate, 3-Section: red, yellow and green)
		Vehicle signal face with angle visors
PV	PV	Modifications of basic symbols: "L" indicates all non-arrow sections louvered "LG" indicates louvered green section only "PV" indicates 12" programmed visibility sections "8" indicates all 8" sections (only when specified)
		Type 15TS and Vehicle signal face
		Vehicle signal face with red, yellow and green left arrow sections
		Vehicle signal face with red and yellow sections and up green arrow
		Vehicle signal face (5 Section) with red, yellow and green sections and yellow and green right arrows
		Type 1 Standard and attached vehicle signal faces
		Standard with signal mast arm only and attached vehicle signal faces and internally illuminated street name sign
		Type 33 Standard, Left-turn vehicle signal face and sign
		Standard with luminaire and signal mast arms and attached vehicle signal faces
		Cantilever flashing beacon Type 9 Frame, with a sign unless otherwise specified or indicated
		Type 15-FBS Standard with two vehicle signal face sections with lens, backplate and visor with a sign
R	Y	Flashing beacon. One vehicle signal face section with lens, backplate and visor. "R" indicates red indication, "Y" indicates yellow indication
		Controller assembly. Door indicates front of cabinet

SIGNAL EQUIPMENT Cont

PROPOSED	EXISTING	
		Guard post
		Type 1 Standard with "Meter On" sign
		Emergency Vehicle detector

NOTES:

1. All signal sections shall be 12" unless shown otherwise.
2. Signal heads shall be provided with backplates unless shown otherwise.
3. Signal indication shall be LED.

STATE OF CALIFORNIA
DEPARTMENT OF TRANSPORTATION

ELECTRICAL SYSTEMS (SYMBOLS AND ABBREVIATIONS)

NO SCALE

RSP ES-1B DATED OCTOBER 5, 2007 SUPERCEDES STANDARD PLAN ES-1B DATED MAY 1, 2006 - PAGE 401 OF THE STANDARD PLANS BOOK DATED MAY 2006.

REVISED STANDARD PLAN RSP ES-1B

2006 REVISED STANDARD PLAN RSP ES-1B

DIST	COUNTY	ROUTE	POST MILES TOTAL PROJECT	SHEET NO.	TOTAL SHEETS
10	SJ	99	32.6	11	15

REGISTERED ELECTRICAL ENGINEER

October 5, 2007
PLANS APPROVAL DATE

REGISTERED PROFESSIONAL ENGINEER Jeffery G. McRae No. E14512 Exp. 6-30-08 ELECTRICAL STATE OF CALIFORNIA

The State of California or its officers or agents shall not be responsible for the accuracy or completeness of electronic copies of this plan sheet.

To accompany plans dated 12-12-11

EQUIPMENT IDENTIFICATION

ILLUMINATED SIGN IDENTIFICATION NUMBER:

Sign No. 12345 — Sign number - Place on post or structure

10 ISL SCI 1.0

- 1.0 — Transformer rating (kVA)
- SCI — Lighting control type
- ISL — Number and type of fixtures

Do NOT place on standard or structure

ELECTROLIER OR EQUIPMENT IDENTIFICATION NUMBER:

12345 - 15'-0"

- 15'-0" — Mast arm length, if shown. Do not place on standard or structure.
- 12345 — Equipment number - Place on standard or structure. Existing equipment numbers are shown in parenthesis

CONDUIT AND CONDUCTOR IDENTIFICATION:

1½"C, 2#10, 15#14, 2 DLC

- 2#10, 15#14, 2 DLC — Number and size of conductors and cables
- 1½"C — Size of conduit in inches

Ø1, Ø2, Ø2P, etc.	Traffic phase identification for signal faces, detectors and phase diagrams
1 2 3	Project note numbers
A B C	Equipment description, installation or item numbers
1 2 3	Conduit run numbers

SIGNAL AND LIGHTING STANDARD (TYPICAL DESIGNATION):

19A - 3 - 100

- 100 — Wind velocity = 100 mph
- 3 — Case 3 arm loading
- 19A — Standard type
- Standard Plan sheet number
- Detail number or letter

MISCELLANEOUS EQUIPMENT

PROPOSED	EXISTING	
CMS	cms	Changeable message sign
		Closed circuit television camera
		Highway advisory radio pole and antenna
EMS	ems	Extinguishable message sign
M V	m v	Detection device M = Microwave sensor V = Video image sensor

WIRING DIAGRAM LEGEND

P	Pole
CB	Circuit breaker
A	Ampere
V	Volt
M	Metered
UM	Unmetered
NB	Neutral bus
GB	Ground bus
G	Equipment grounding conductor
N	Grounded conductor (Neutral)

- External conductor
- Conductor or bus
- Tie point
- Contactor coil
- Contactor, Contact NO
- Terminal blocks
- Contactor, Contact NC
- Enclosure bond
- Grounding electrode
- Circuit breaker
- Receptacle

PULL BOXES

PROPOSED EXISTING

Pull box-No. 5 unless otherwise indicated or noted.

3 — 9A(21)

Pull box-Additional designations or descriptions

3 = No. 3½ pull box
5 = No. 5 pull box
6 = No. 6 pull box
7 = No. 7 (Ceiling pull box)
8 = No. 8 (Pendant soffit pull box)
9 = No. 9 pull box
9A = No. 9A pull box

(C) = Communications pull box
(E) = Pull box with extension
(S) = Sprinkler control pull box
(21) = Anchor bolts and conduit for future installation of Type 21 Standard
(T) = Traffic pull box

VEHICLE DETECTORS

5 J 9 U

- U — U = Upper, L = Lower
- 9 — Slot number in input file
- J — Input file (I or J)
- 5 — Phase

PROPOSED	EXISTING	
		Type A detector loop. Outline of sawcut shown.
		Type B detector loop. Outline of sawcut shown.
		Type C detector loop. Outline of sawcut shown.
		Type D detector loop. Outline of sawcut shown.
		Type E detector loop. Outline of sawcut shown.
		Type Q detector loop. Outline of sawcut shown.
		Magnetic detector
DH	dh	Detector handhole
		Microwave or video detection zone

STATE OF CALIFORNIA
DEPARTMENT OF TRANSPORTATION

ELECTRICAL SYSTEMS (SYMBOLS AND ABBREVIATIONS)

NO SCALE

RSP ES-1C DATED OCTOBER 5, 2007 SUPERCEDES STANDARD PLAN ES-1C DATED MAY 1, 2006 - PAGE 402 OF THE STANDARD PLANS BOOK DATED MAY 2006.

REVISED STANDARD PLAN RSP ES-1C

2006 REVISED STANDARD PLAN RSP ES-1C

DIST	COUNTY	ROUTE	POST MILES TOTAL PROJECT	SHEET No.	TOTAL SHEETS
10	SJ	99	32.6	12	15

Heidi Kuntz 9-22-11
REGISTERED CIVIL ENGINEER DATE

12-12-11
PLANS APPROVAL DATE

REGISTERED PROFESSIONAL ENGINEER Heidi Kuntz No. C62489 Exp. 9-30-13 CIVIL STATE OF CALIFORNIA

The State of California or its officers or agents shall not be responsible for the accuracy or completeness of electronic copies of this plan sheet.

STANDARD PLANS DATED MAY 2006

SHEET NO.	TITLE
A10A	ACRONYMS AND ABBREVIATIONS (SHEET 1 OF 2)
A10B	ACRONYMS AND ABBREVIATIONS (SHEET 2 OF 2)
S16	OVERHEAD SIGNS WALKWAY DETAILS No. 1
S17	OVERHEAD SIGNS WALKWAY DETAILS No. 2
S17A	OVERHEAD SIGNS WALKWAY DETAILS No. 3
S18	OVERHEAD SIGNS WALKWAY SAFETY RAILING DETAILS
S19	OVERHEAD SIGNS - TRUSS SIGN MOUNTING DETAILS LAMINATED PANEL - TYPE A

INDEX TO PLANS

SHEET NO.	TITLE
1	GENERAL PLAN
2	REPAIR DETAILS NO.1
3	BRIDGE MOUNTED SIGN DETAILS NO. 1
4	BRIDGE MOUNTED SIGN DETAILS NO. 2

NOTES:

-·-·-·- Indicates existing.

(1) Indicates limits of repair and heat straighten damaged girder. Remove existing paint prior to heat straightened operation.

✳ Remove and Replace existing sign and mounts. Replacement sign mount bolts to be placed minimum 9" upstation from existing sign mount bolts. Also maintain 1' clear distance between signs. See "BRIDGE MOUNTED SIGN DETAILS NO. 1" and "BRIDGE MOUNTED SIGN DETAILS NO. 2" sheets.

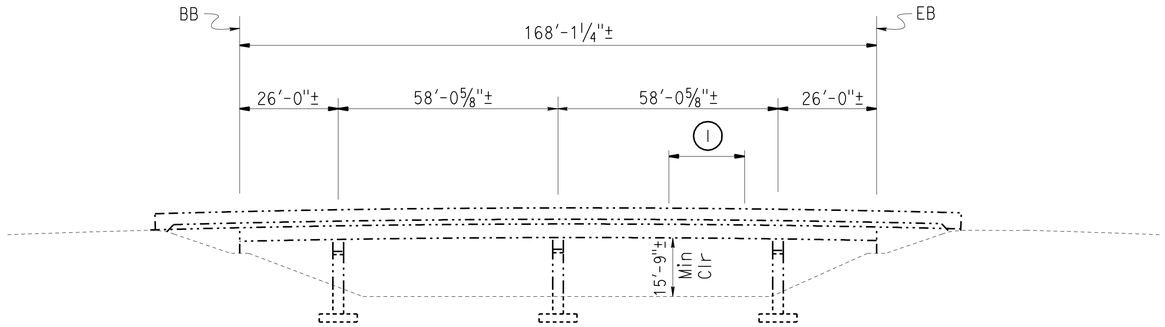

QUANTITIES

WOODBRIDGE ROAD OC BRIDGE NO. 29-0145

REMOVE BRIDGE MOUNTED SIGN	2	EA
REMOVE GROUT PAD	4	CF
SALVAGE SIGN MOUNTS	LUMP	SUM
PLACE GROUT PAD	4	CF
STRUCTURAL STEEL (BRIDGE)	444	LB
HEAT STRAIGHTEN STEEL GIRDER	LUMP	SUM
FURNISH SIGN STRUCTURE (BRIDGE MOUNTED WITH WALKWAY)	3,900	LB
INSTALL SIGN STRUCTURE (BRIDGE MOUNTED WITH WALKWAY)	3,900	LB
CLEAN AND PAINT STRUCTURAL STEEL	LUMP	SUM
SPOT BLAST CLEAN AND PAINT UNDERCOAT	101	SQFT

ELEVATION

1" = 20'

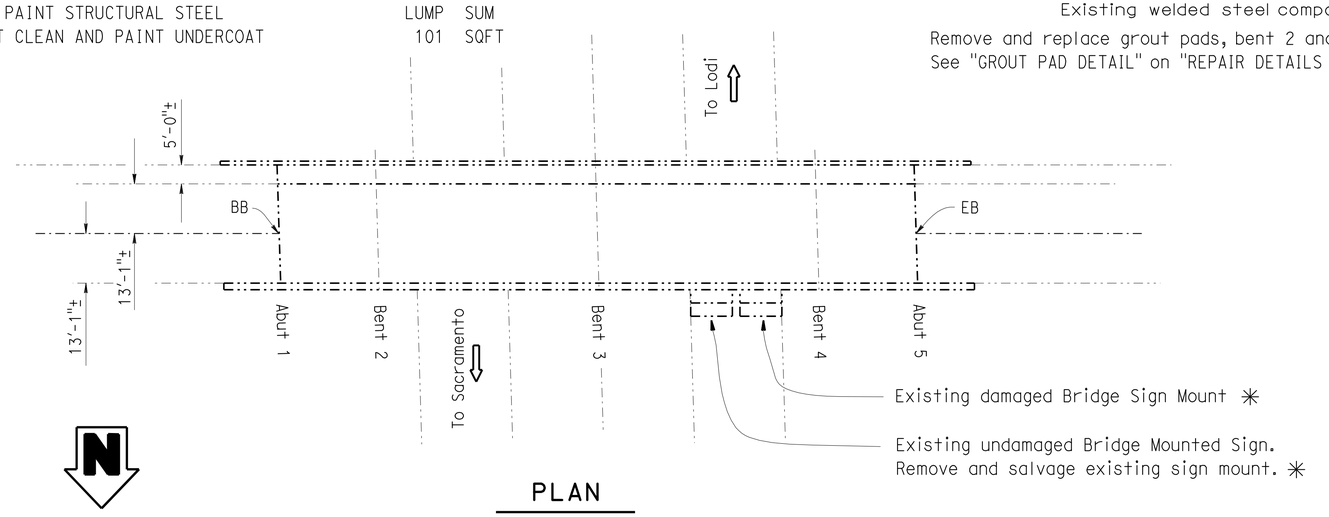

PLAN

1" = 20'

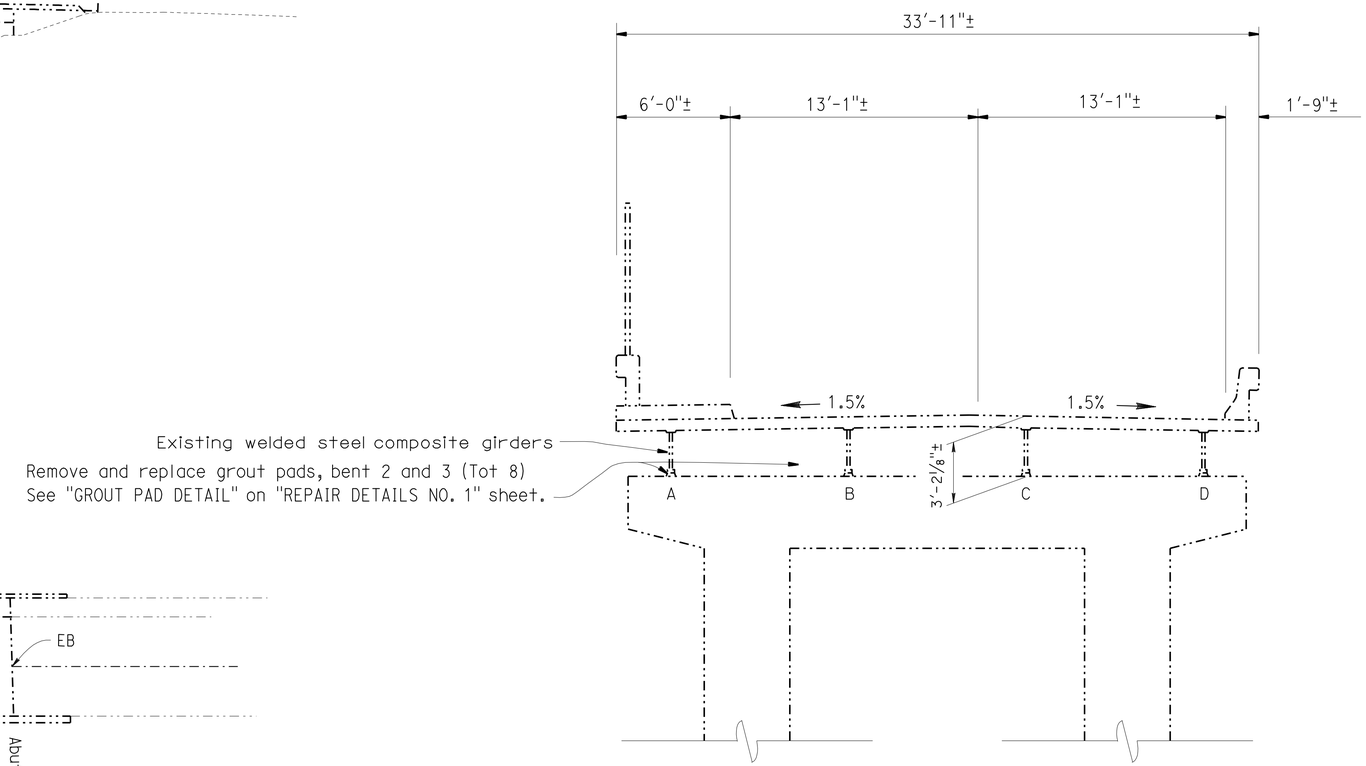

TYPICAL SECTION

¼" = 1'

Matthew Lee 9-22-11 DESIGN ENGINEER	DESIGN	BY Heidi Kuntz	CHECKED A. Frank	LOAD FACTOR DESIGN	LIVE LOADING: HS20-44 AND ALTERNATIVE AND PERMIT DESIGN LOAD
	DETAILS	BY David Kish	CHECKED A. Frank	LAYOUT	BY David Kish / CHECKED A. Frank
	QUANTITIES	BY Heidi Kuntz	CHECKED A. Frank	SPECIFICATIONS	BY Erwin Ruffino / PLANS AND SPECS COMPARED Erwin Ruffino

STATE OF CALIFORNIA DEPARTMENT OF TRANSPORTATION

DIVISION OF MAINTENANCE STRUCTURE MAINTENANCE DESIGN

BRIDGE NO. 29-0145 POST MILE 32.57

WOODBRIDGE ROAD OVERCROSSING-HEAT STRAIGHTEN

GENERAL PLAN

STRUCTURES MAINTENANCE GENERAL PLAN SHEET (ENGLISH) (REV. 09-01-10)

ORIGINAL SCALE IN INCHES FOR REDUCED PLANS 0 1 2 3

UNIT: 3488
PROJECT NUMBER & PHASE: 1000020472 CONTRACT NO.: 10-0V5601

DISREGARD PRINTS BEARING EARLIER REVISION DATES

REVISION DATES 4-11-11 4-18-11 5-18-11

SHEET 1 OF 4

FILE => 10-0v5601_01gp.dgn

USERNAME => s128843 DATE PLOTTED => 14-DEC-2011 TIME PLOTTED => 12:46

DIST	COUNTY	ROUTE	POST MILES TOTAL PROJECT	SHEET No.	TOTAL SHEETS
10	SJ	99	32.6	13	15

Heidi Kuntz 9-22-11
REGISTERED CIVIL ENGINEER DATE

12-12-11
PLANS APPROVAL DATE

REGISTERED PROFESSIONAL ENGINEER Heidi Kuntz No. C62489 Exp. 9-30-13 CIVIL STATE OF CALIFORNIA

The State of California or its officers or agents shall not be responsible for the accuracy or completeness of electronic copies of this plan sheet.

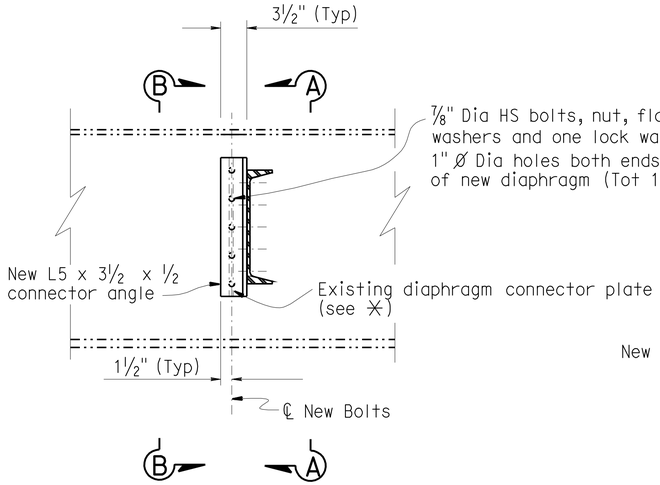

PARTIAL GIRDER "D" ELEVATION

1" = 1'

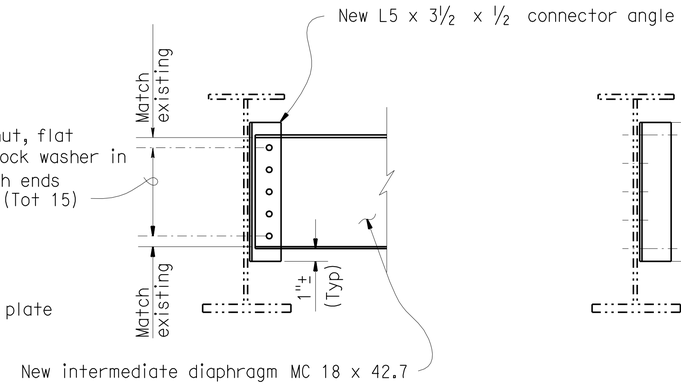

SECTION A-A

1" = 1'

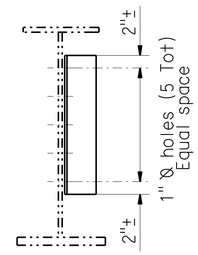

SECTION B-B

1" = 1'

GENERAL NOTES
LOAD FACTOR DESIGN

DESIGN:	BRIDGE DESIGN SPECIFICATIONS (1996 AASHTO with Interims and Revisions by CALTRANS)
DEAD LOAD:	Includes 35 psf for future wearing surface.
LIVE LOADING:	HS20-44 and alternative
STRUCTURAL	
STEEL:	f_y = 50,000 psi
HS THREADED BOLTS :	ASTM A325, Type I

NOTES:

-·-·-·-·- Indicates existing.

THE CONTRACTOR SHALL VERIFY ALL CONTROLLING FIELD DIMENSIONS BEFORE ORDERING OR FABRICATING ANY MATERIAL.

(1) Indicates limits of repair and heat straighten damaged girder. Remove existing paint prior to heat straightened operation.

(2) Existing damaged intermediate diaphragm and partial-height diaphragm connector plate total (1 each) to be replaced. Connector plate at girder C to remain and be reused. Replace ⅞" Dia HS bolts , nut, flat washer and one lock washer.

✳ Approximate location - weld lengths to be ground flush without damage to the existing girder. All areas ground flush shall have 2 undercoats of paint applied before finished coats.

All bolted connections between stiffeners and girder shall be bearing type connection

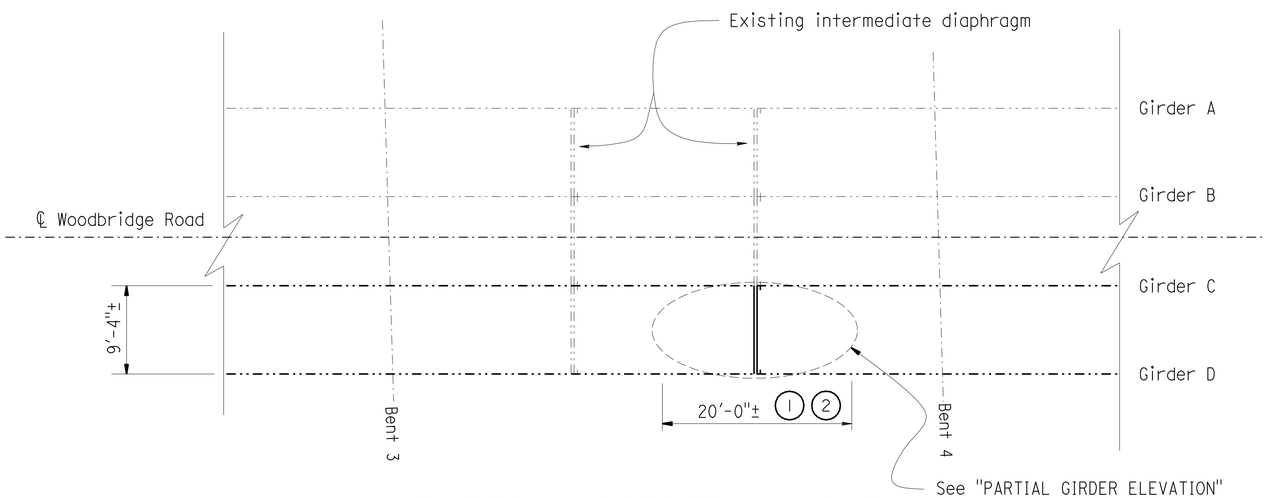

PARTIAL GIRDER LAYOUT

⅛" = 1'

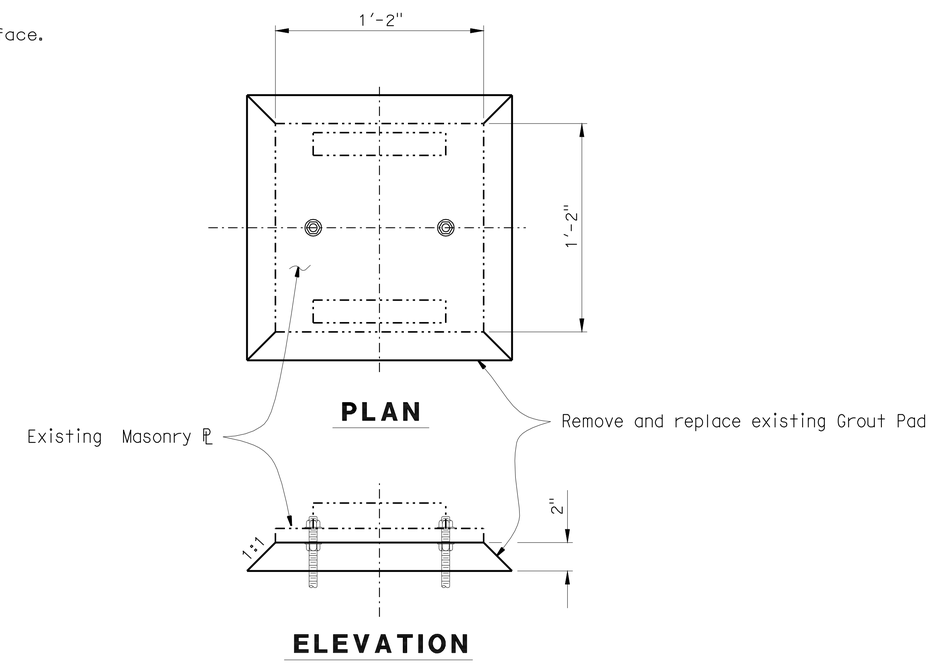

GROUT PAD DETAIL

3" = 1'-0"

DESIGN	BY Heidi Kuntz	CHECKED A. Frank	
DETAILS	BY David Kish	CHECKED A. Frank	
QUANTITIES	BY Heidi Kuntz	CHECKED A. Frank	

STATE OF CALIFORNIA
DEPARTMENT OF TRANSPORTATION

DIVISION OF MAINTENANCE
STRUCTURE MAINTENANCE DESIGN

BRIDGE NO. 29-0145
POST MILE 32.57

WOODBRIDGE ROAD OVERCROSSING-HEAT STRAIGHTEN

REPAIR DETAILS NO.1

STRUCTURES MAINTENANCE DETAIL SHEET (ENGLISH) (REV. 09-01-10)

ORIGINAL SCALE IN INCHES FOR REDUCED PLANS 0 1 2 3

UNIT: 3488
PROJECT NUMBER & PHASE: 1000020472
CONTRACT NO.: 10-0V5601

DISREGARD PRINTS BEARING EARLIER REVISION DATES

REVISION DATES 4-7-11 4-18-11 5-18-11

SHEET 2 OF 4

FILE => 10-0v5601_02det.dgn

USERNAME => s121614 DATE PLOTTED => 14-DEC-2011 TIME PLOTTED => 13:58

DIST	COUNTY	ROUTE	POST MILES TOTAL PROJECT	SHEET No.	TOTAL SHEETS
10	SJ	99	32.6	14	15

Heidi Kuntz 9-22-11
REGISTERED CIVIL ENGINEER DATE

12-12-11
PLANS APPROVAL DATE

REGISTERED PROFESSIONAL ENGINEER
Heidi Kuntz
No. C62489
Exp. 9-30-13
CIVIL
STATE OF CALIFORNIA

The State of California or its officers or agents shall not be responsible for the accuracy or completeness of electronic copies of this plan sheet.

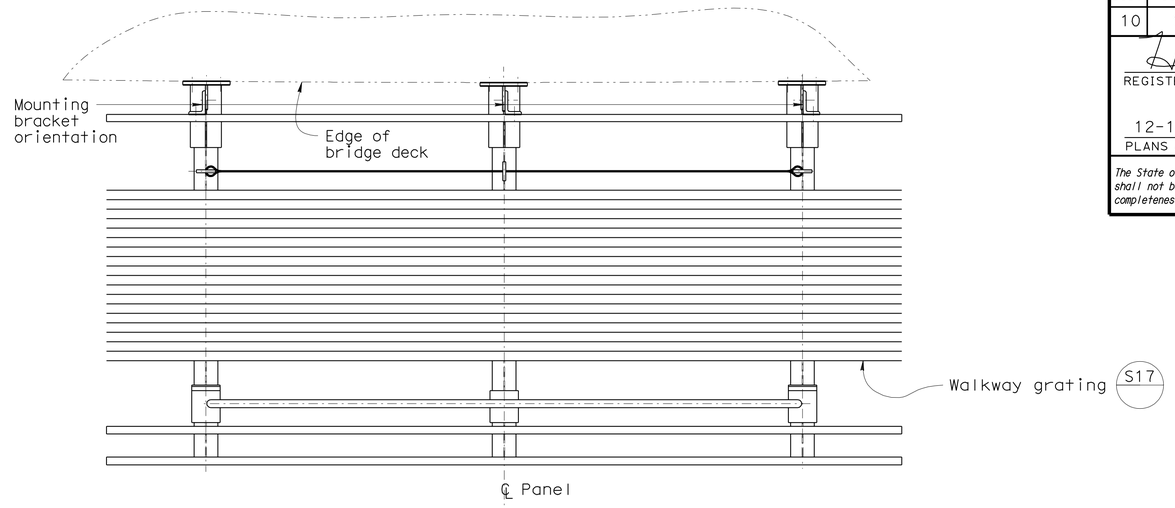

PLAN VIEW

SCALE ¾"= 1′

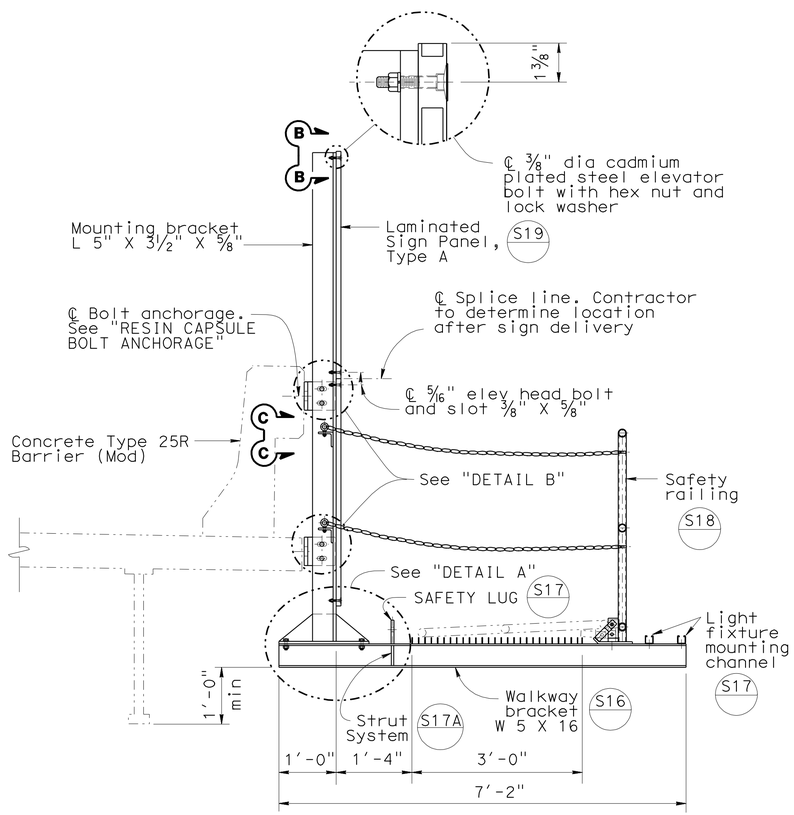

TYPICAL SECTION

SCALE ¾"= 1′

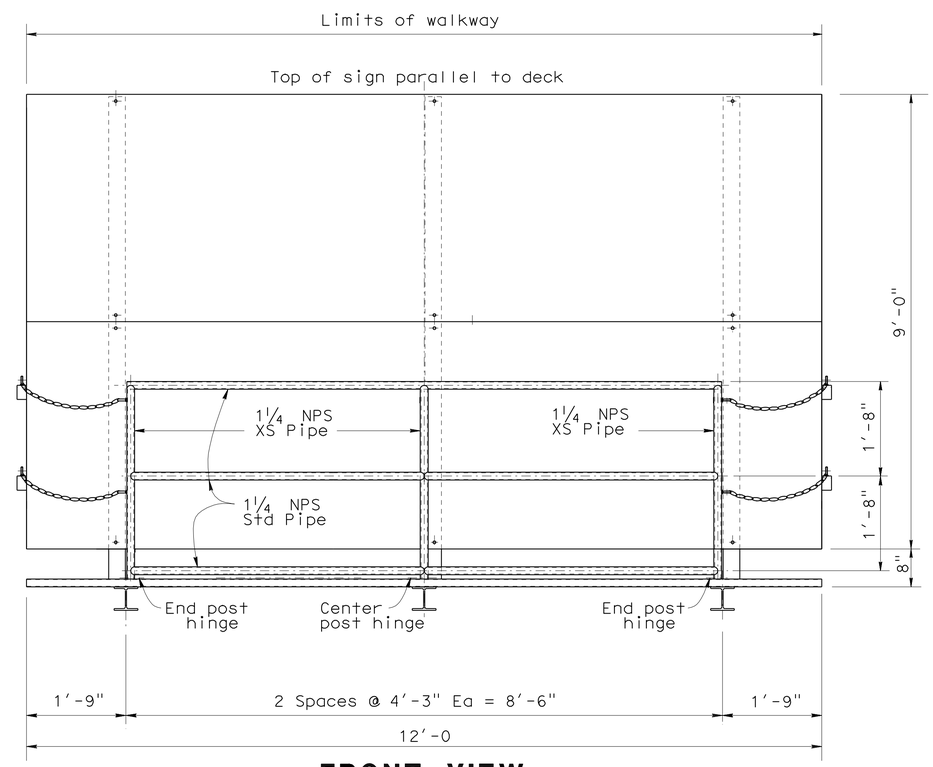

FRONT VIEW

SCALE ¾"= 1′
(Note: Strut system not shown)

NOTES:

1. For details not shown, see 2006 "STANDARD PLANS".
2. All high strength (HS) bolts shall be snug tightened.
3. Min size fillet weld is ¼" or thickness of thinner part unless noted otherwise.
4. Exterior mounting bracket to face outward to accommodate walkway chain angle.
5. For "DETAIL A", "DETAIL B", "SECTION B-B", and "SECTION C-C" see "BRIDGE MOUNTED SIGN DETAILS No. 2" sheet.
6. All steel shall be galvanized after fabrication.
7. For sign location, see "GENERAL PLAN" sheet.

STANDARD PLAN SHEET NO.
DETAIL NO.

DESIGN	BY Heidi Kuntz	CHECKED A. Frank	
DETAILS	BY David Kish	CHECKED A. Frank	
QUANTITIES	BY Heidi Kuntz	CHECKED A. Frank	

STATE OF CALIFORNIA
DEPARTMENT OF TRANSPORTATION

DIVISION OF MAINTENANCE
STRUCTURE MAINTENANCE DESIGN

BRIDGE NO. 29-0145
POST MILE 32.57

WOODBRIDGE ROAD OVERCROSSING-HEAT STRAIGHTEN
BRIDGE MOUNTED SIGN DETAILS NO.1

STRUCTURES MAINTENANCE DETAIL SHEET (ENGLISH) (REV. 09-01-10)

ORIGINAL SCALE IN INCHES FOR REDUCED PLANS 0 1 2 3

UNIT: 3488
PROJECT NUMBER & PHASE: 1000020472
CONTRACT NO.: 10-0V5601

DISREGARD PRINTS BEARING EARLIER REVISION DATES

REVISION DATES: ~~4-12-11~~ ~~4-14-11~~ 4-29-11

SHEET 3 OF 4

FILE => 10-0v5601_03det.dgn

USERNAME => s121614 DATE PLOTTED => 14-DEC-2011 TIME PLOTTED => 13:58

DIST	COUNTY	ROUTE	POST MILES TOTAL PROJECT	SHEET No.	TOTAL SHEETS
10	SJ	99	32.6	15	15

REGISTERED CIVIL ENGINEER — DATE 9-22-11

12-12-11
PLANS APPROVAL DATE

REGISTERED PROFESSIONAL ENGINEER — Heidi Kuntz — No. C62489 — Exp. 9-30-13 — CIVIL — STATE OF CALIFORNIA

The State of California or its officers or agents shall not be responsible for the accuracy or completeness of electronic copies of this plan sheet.

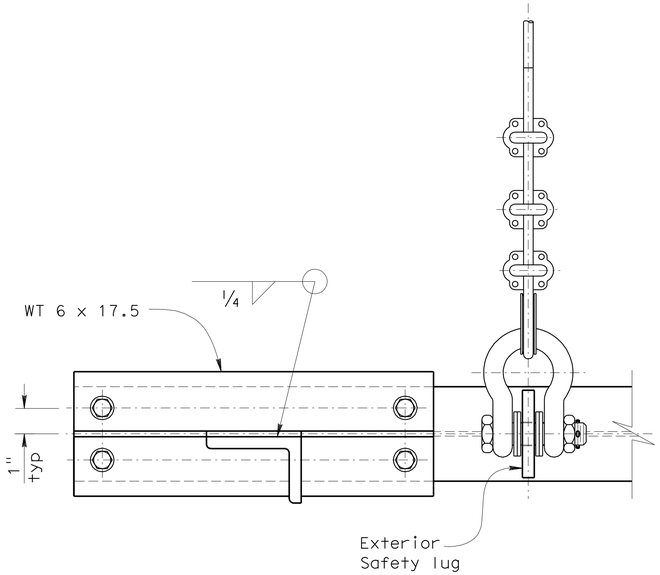

SECTION A-A
Scale 3"=1'

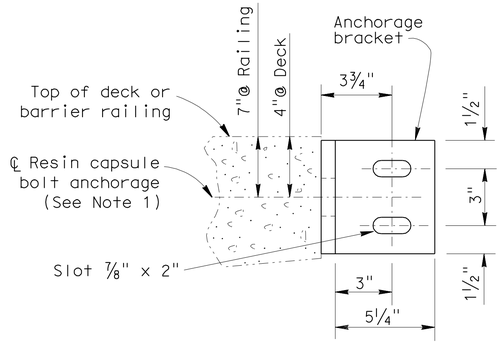

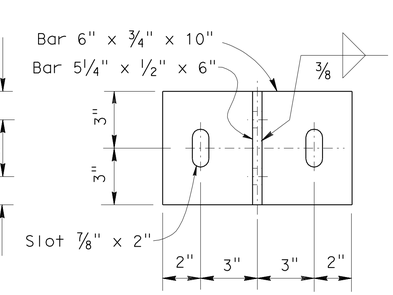

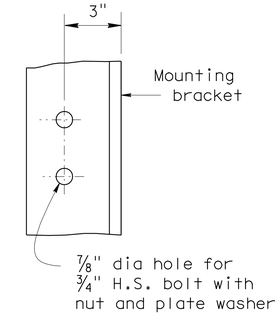

DETAIL B
Scale 3" = 1'

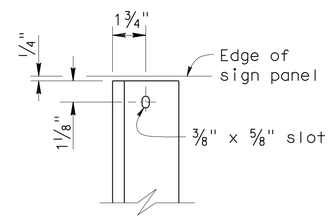

SECTION B-B
Scale 3" = 1'

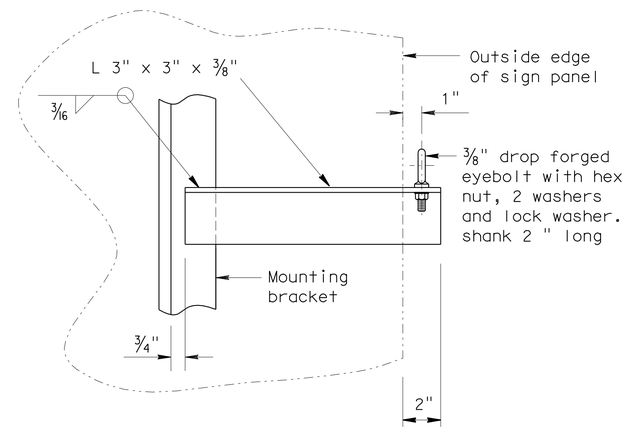

SECTION C-C
Scale 3" = 1'

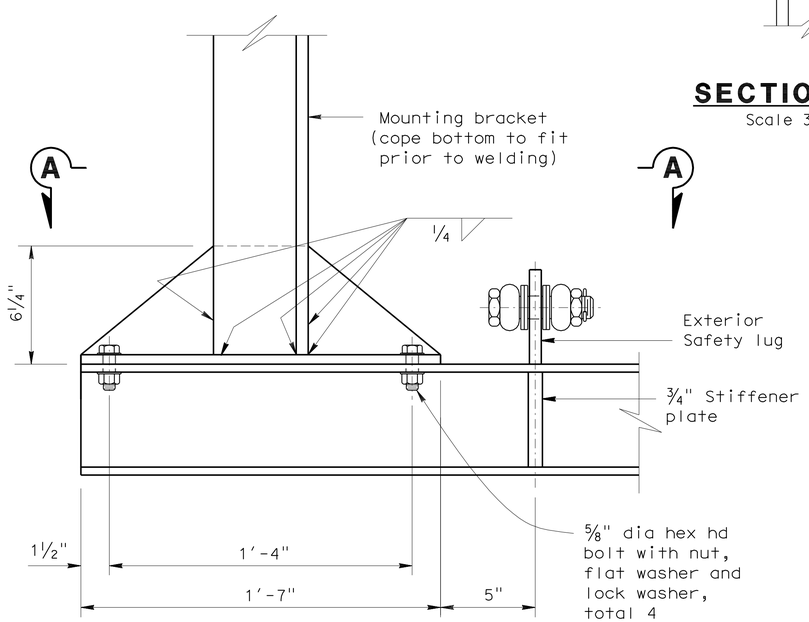

DETAIL A
Scale 3"=1'

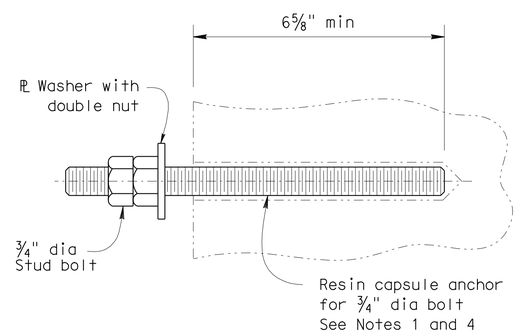

RESIN CAPSULE BOLT ANCHORAGE
Scale 6"=1'

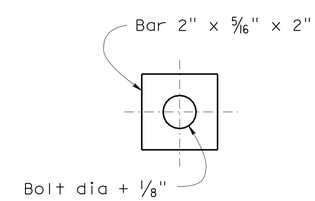

PLATE WASHER
Scale 6"=1'
FOR ALL SLOTTED HOLES

NOTES:

1. Contractor to provide anchor bolt layout before anchor bolts are placed. Resin capsule bolt locations to be a minimum of 9" upstation from existing bolts and shall be approved by the Engineer.
2. Resin capsule anchorage is subject to approval of engineer. Installation procedure shall comply with manufacturer's instructions.
3. Resin capsule bolt anchors shall be installed in sound concrete free of cracks or delamination.

DESIGN	BY Heidi Kuntz	CHECKED A. Frank	
DETAILS	BY David Kish	CHECKED A. Frank	
QUANTITIES	BY Heidi Kuntz	CHECKED A. Frank	

STATE OF CALIFORNIA
DEPARTMENT OF TRANSPORTATION

DIVISION OF MAINTENANCE
STRUCTURE MAINTENANCE DESIGN

BRIDGE NO. 29-0145
POST MILE 32.57

WOODBRIDGE ROAD OVERCROSSING-HEAT STRAIGHTEN
BRIDGE MOUNTED SIGN DETAILS NO.2

STRUCTURES MAINTENANCE DETAIL SHEET (ENGLISH) (REV. 09-01-10)

ORIGINAL SCALE IN INCHES FOR REDUCED PLANS 0 1 2 3

UNIT: 3488
PROJECT NUMBER & PHASE: 1000020472
CONTRACT NO.: 10-0V5601

DISREGARD PRINTS BEARING EARLIER REVISION DATES

REVISION DATES 4-12-11 4-14-11

SHEET 4 OF 4

FILE => 10-0v5601_04det.dgn

USERNAME => s121614 DATE PLOTTED => 14-DEC-2011 TIME PLOTTED => 13:58