Dist	COUNTY	ROUTE	POST MILES TOTAL PROJECT	SHEET No.	TOTAL SHEETS
10	Sta	99	R2.3/R20.2	1	36

ACSTPE-P099(564)E

STATE OF CALIFORNIA
DEPARTMENT OF TRANSPORTATION

PROJECT PLANS FOR CONSTRUCTION ON
STATE HIGHWAY
IN STANISLAUS COUNTY
IN AND NEAR TURLOCK, CERES AND MODESTO
AT VARIOUS LOCATIONS
FROM LINWOOD AVENUE OVERCROSSING
TO BECKWITH ROAD OVERCROSSING

TO BE SUPPLEMENTED BY STANDARD PLANS DATED MAY 2006

INDEX OF PLANS

SHEET NO.	DESCRIPTION
1	TITLE AND LOCATION MAP
2	LOCATIONS OF CONSTRUCTION
3	TYPICAL CROSS SECTION
4-12	CONSTRUCTION DETAILS
13-17	EROSION CONTROL AND IRRIGATION PLANS
18	CONSTRUCTION AREA SIGNS
19	SUMMARY OF QUANTITIES
20	LANDSCAPE DETAILS
21-27	REVISED AND NEW STANDARD PLANS
STRUCTURE PLANS	
28-36	ROUTE 99 BRIDGES

THE STANDARD PLANS LIST APPLICABLE TO THIS CONTRACT IS INCLUDED IN THE NOTICE TO BIDDERS AND SPECIAL PROVISIONS BOOK.

LOCATION MAP

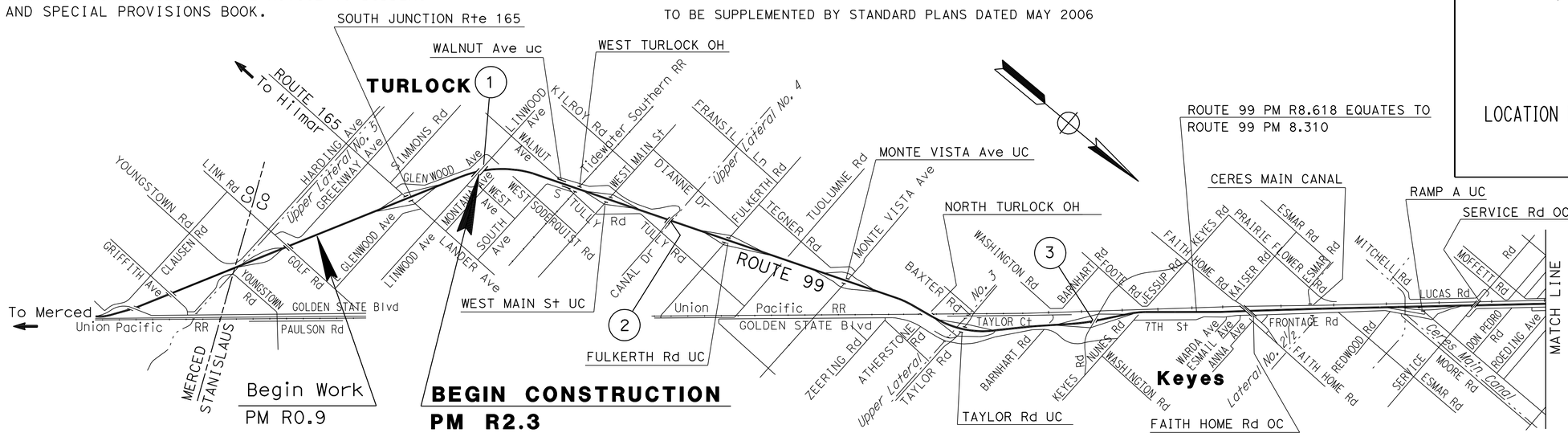

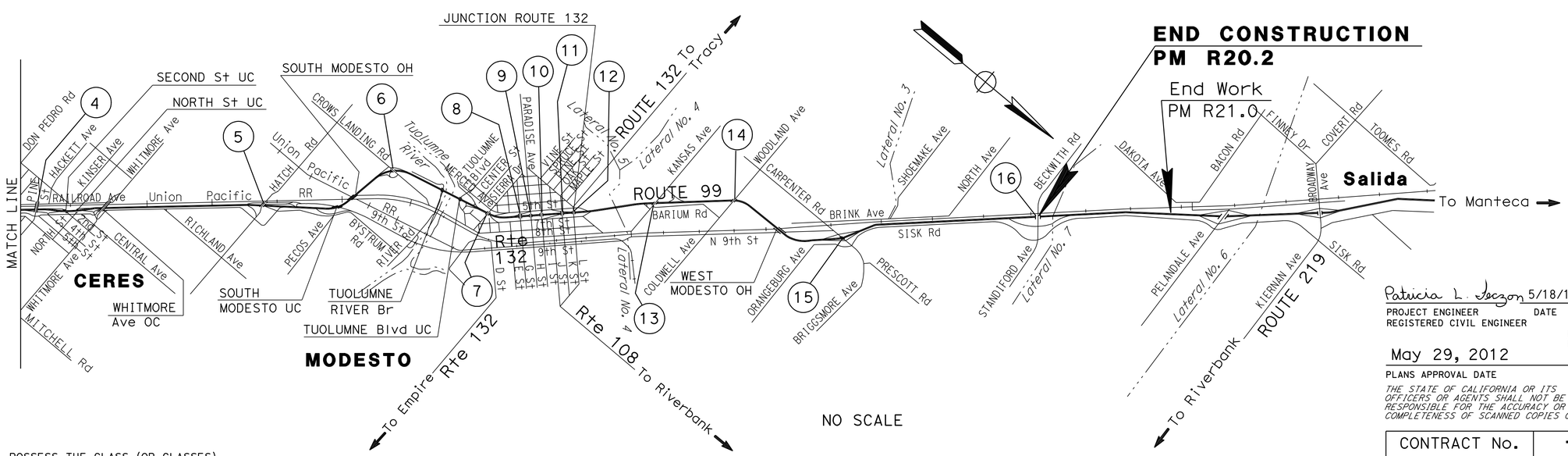

THE CONTRACTOR SHALL POSSESS THE CLASS (OR CLASSES) OF LICENSE AS SPECIFIED IN THE "NOTICE TO BIDDERS."

Patricia L. Teczon 5/18/12
PROJECT ENGINEER DATE
REGISTERED CIVIL ENGINEER

May 29, 2012
PLANS APPROVAL DATE

REGISTERED PROFESSIONAL ENGINEER Patricia Teczon No. 37294 Exp. 6/30/14 CIVIL STATE OF CALIFORNIA

THE STATE OF CALIFORNIA OR ITS OFFICERS OR AGENTS SHALL NOT BE RESPONSIBLE FOR THE ACCURACY OR COMPLETENESS OF SCANNED COPIES OF THIS PLAN SHEET.

CONTRACT No.	10-0S7804
PROJECT ID	1000020094

PROJECT MANAGER: SCOTT GUIDI
DESIGN ENGINEER: CAROLINE REYES

LAST REVISION 00-00-00 DATE PLOTTED => 14-AUG-2012 TIME PLOTTED => 09:17

Dist	COUNTY	ROUTE	POST MILES TOTAL PROJECT	SHEET No.	TOTAL SHEETS
10	Sta	99	R2.3/R20.2	2	36

Patricia L. Teczon 5/18/12
REGISTERED CIVIL ENGINEER DATE

5/29/12
PLANS APPROVAL DATE

REGISTERED PROFESSIONAL ENGINEER
Patricia Teczon
No. 37294
Exp. 6/30/14
CIVIL
STATE OF CALIFORNIA

THE STATE OF CALIFORNIA OR ITS OFFICERS OR AGENTS SHALL NOT BE RESPONSIBLE FOR THE ACCURACY OR COMPLETENESS OF SCANNED COPIES OF THIS PLAN SHEET.

LOCATIONS OF CONSTRUCTION

Loc	PM	Br No.	DESCRIPTION
1	R2.29	38-0079	LINWOOD Ave OC
2	R4.01	38-0148	CANAL DRIVE OC
3	R7.81	38-0139	KEYES Rd OC
4	R11.30	38-0074	PINE St OC
5	R13.26	38-0081	HATCH Rd OC
6	R14.47	38-0077	CROWS LANDING Rd OC
7	R15.37	38-0095	SIERRA Dr OC
8	R15.66	38-0088	G St OC
9	R15.75	38-0089	H St OC
10	R15.85	38-0090	I St OC
11	R16.03	38-0091	K St OC
12	R16.12	38-0092	ROUTE 132/99 SEPARATION
13	R16.82	38-0086	KANSAS Ave OC
14	R17.51	38-0087	WOODLAND Ave OC
15	M18.52	38-0085	CARPENTER/BRIGGSMORE OC
16	R20.22	38-0149	BECKWITH Rd OC

LOCATIONS OF CONTRUCTION
LC-1

STATE OF CALIFORNIA - DEPARTMENT OF TRANSPORTATION
Caltrans
DESIGN

FUNCTIONAL SUPERVISOR: CAROLINE REYES
CALCULATED-DESIGNED BY: STEVE LAWRENCE
CHECKED BY: PATRICIA TECZON
REVISED BY: SL
DATE REVISED: 03/22/12

LAST REVISION 00-00-00
DATE PLOTTED => 14-AUG-2012
TIME PLOTTED => 09:17

Dist	COUNTY	ROUTE	POST MILES TOTAL PROJECT	SHEET No.	TOTAL SHEETS
10	Sta	99	R2.3/R20.2	3	36

Patricia L. Teczon 5/18/12
REGISTERED CIVIL ENGINEER DATE

5/29/12
PLANS APPROVAL DATE

REGISTERED PROFESSIONAL ENGINEER
Patricia Teczon
No. 37294
Exp. 6/30/14
CIVIL
STATE OF CALIFORNIA

THE STATE OF CALIFORNIA OR ITS OFFICERS OR AGENTS SHALL NOT BE RESPONSIBLE FOR THE ACCURACY OR COMPLETENESS OF SCANNED COPIES OF THIS PLAN SHEET.

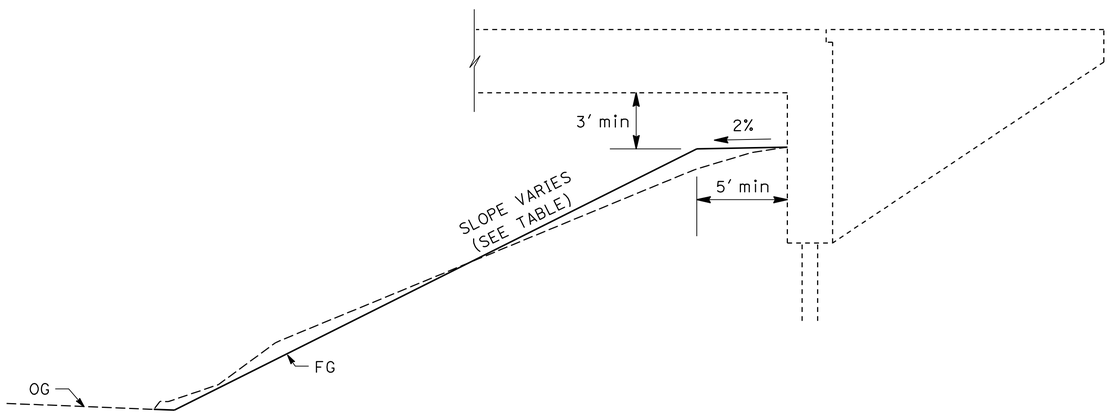

ROUTE 99

SLOPE TABLE

PM	LOCATION	NB	SB
R15.66	"G" St OC	2:1	1.5:1 TO 1.9:1
R15.75	"H" St OC	1.8:1 TO 1.9:1	1.6:1 TO 1.9:1
R15.85	"I" St OC	1.6:1 TO 2:1	1.5:1 TO 2:1
R16.03	"K" St OC	2:1	1.8:1 TO 2.2:1
R16.12	"ROUTE 132/99 SEP" OC	1.6:1 TO 1.8:1	1.7:1 TO 2.2:1

TYPICAL CROSS SECTIONS

NO SCALE

X-1

STATE OF CALIFORNIA - DEPARTMENT OF TRANSPORTATION
Caltrans®
DESIGN

FUNCTIONAL SUPERVISOR: CAROLINE REYES
CALCULATED-DESIGNED BY: STEVE LAWRENCE
CHECKED BY: PATRICIA TECZON
REVISED BY: SL
DATE REVISED: 05/01/12

LAST REVISION 00-00-00
DATE PLOTTED => 14-AUG-2012
TIME PLOTTED => 09:17

Dist	COUNTY	ROUTE	POST MILES TOTAL PROJECT	SHEET No.	TOTAL SHEETS
10	Sta	99	R2.3/R20.2	4	36

Patricia L. Teczon 5/18/12
REGISTERED CIVIL ENGINEER DATE

5/29/12
PLANS APPROVAL DATE

REGISTERED PROFESSIONAL ENGINEER Patricia Teczon No. 37294 Exp 6/30/14 CIVIL STATE OF CALIFORNIA

THE STATE OF CALIFORNIA OR ITS OFFICERS OR AGENTS SHALL NOT BE RESPONSIBLE FOR THE ACCURACY OR COMPLETENESS OF SCANNED COPIES OF THIS PLAN SHEET.

LEGEND

- EXPANDED POLYSTYRENE
- PREPARE AND PAINT CONCRETE
- SLOPE PAVING
- CONCRETE PAINT PATTERN

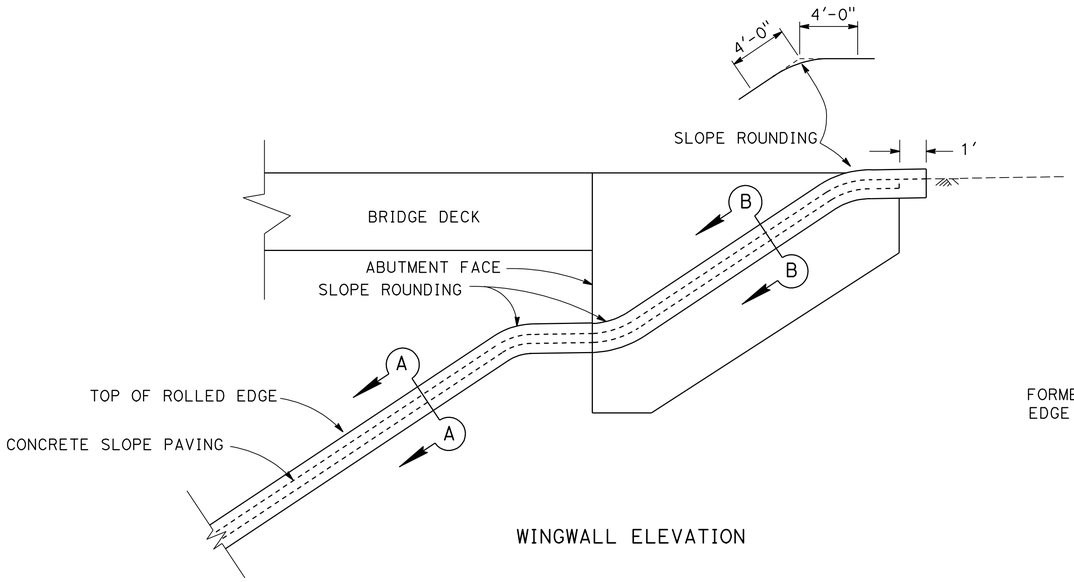

WINGWALL ELEVATION

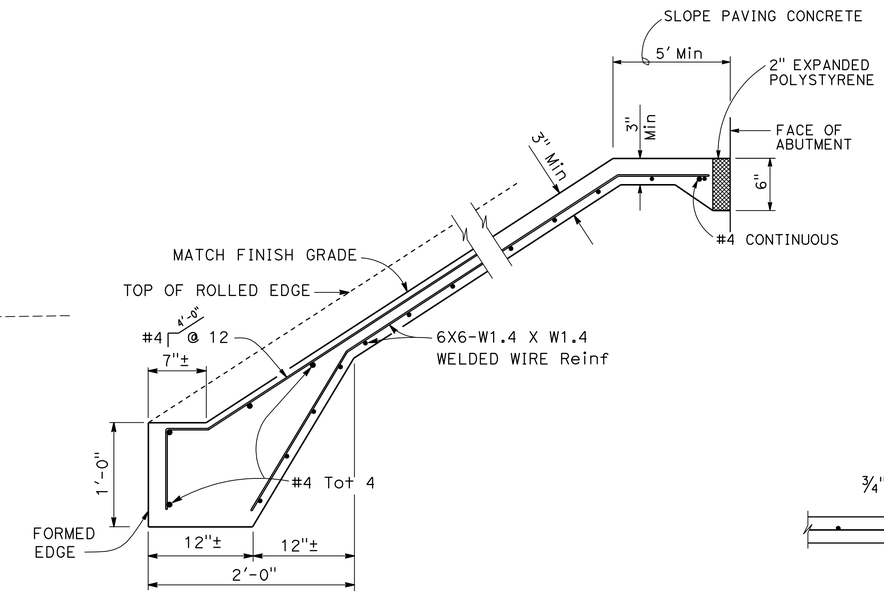

TYPICAL SECTION
CONCRETE SLOPE PAVING

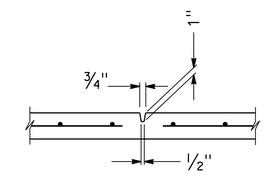

PREFORMED GROOVE
DETAIL "A"

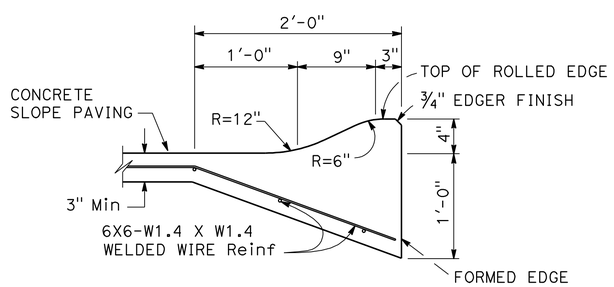

SECTION A-A

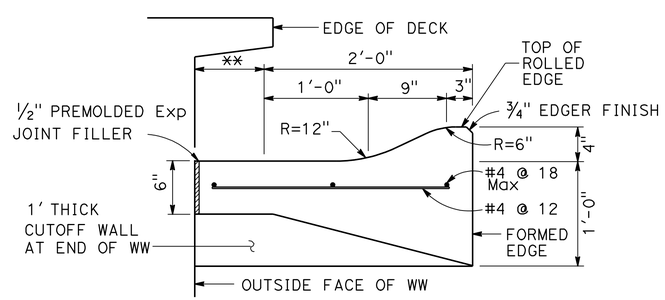

SECTION B-B

** THIS DIMENSION BECOMES ZERO WHEN EDGE OF DECK IS AT OUTSIDE FACE OF WW

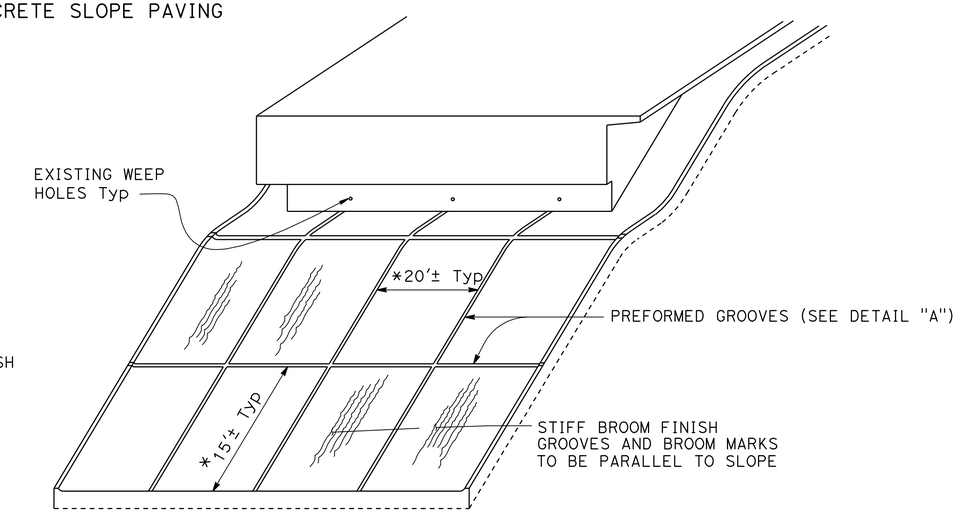

PICTORIAL VIEW OF TYPICAL CONCRETE SLOPE PAVING

* OR AS DIRECTED BY THE ENGINEER TO PROVIDE UNIFORM SPACING

CONCRETE SLOPE PAVING DETAILS

CONSTRUCTION DETAILS

NO SCALE

C-1

STATE OF CALIFORNIA - DEPARTMENT OF TRANSPORTATION
Caltrans DESIGN

FUNCTIONAL SUPERVISOR: CAROLINE REYES
CALCULATED-DESIGNED BY: STEVE LAWRENCE
CHECKED BY: PATRICIA TECZON
REVISED BY: SL
DATE REVISED: 05/01/12

LAST REVISION 00-00-00
DATE PLOTTED => 14-AUG-2012
TIME PLOTTED => 09:17

Dist	COUNTY	ROUTE	POST MILES TOTAL PROJECT	SHEET No.	TOTAL SHEETS
10	Sta	99	R2.3/R20.2	5	36

Patricia L. Teczon 5/18/12
REGISTERED CIVIL ENGINEER DATE

5/29/12
PLANS APPROVAL DATE

REGISTERED PROFESSIONAL ENGINEER Patricia Teczon No. 37294 Exp. 6/30/14 CIVIL STATE OF CALIFORNIA

THE STATE OF CALIFORNIA OR ITS OFFICERS OR AGENTS SHALL NOT BE RESPONSIBLE FOR THE ACCURACY OR COMPLETENESS OF SCANNED COPIES OF THIS PLAN SHEET.

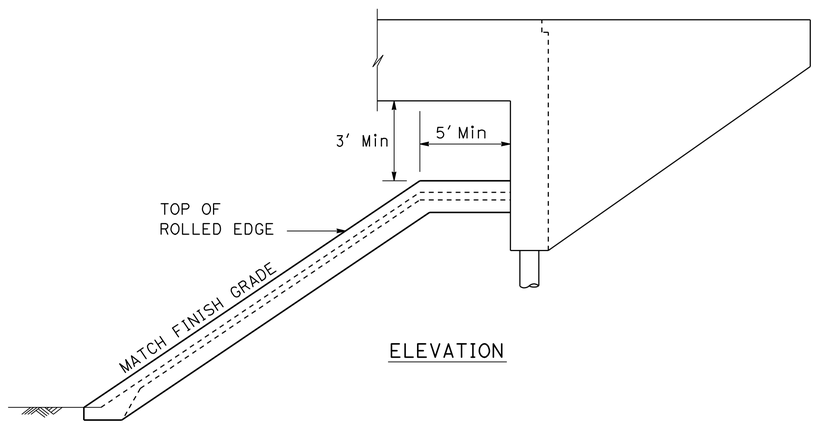

ELEVATION

SLOPE PAVING AT BENCH
(ALL LOCATIONS)

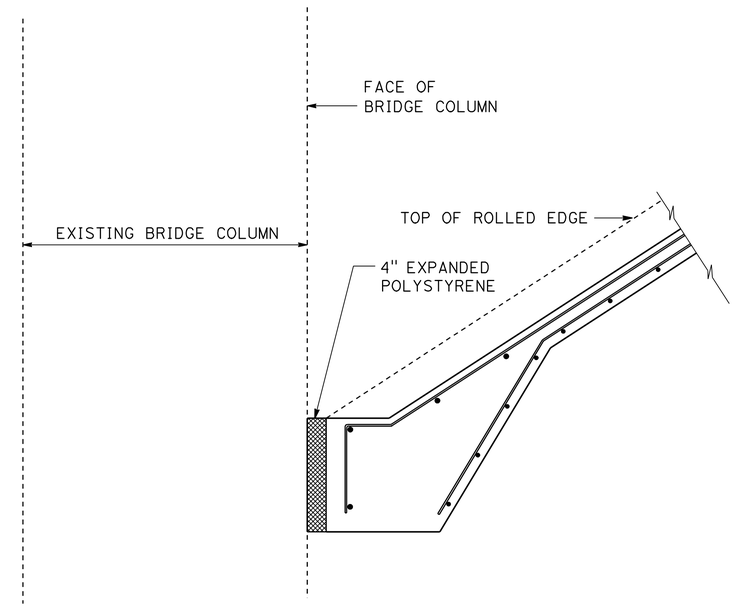

SLOPE PAVING AT COLUMN

NOTE: SEE CONCRETE SLOPE PAVING DETAILS FOR MORE INFORMATION.

SLOPE PAVING AT COLUMN

Loc	DESCRIPTION	NB	SB
8	"G" St OC	X	
9	"H" St OC	X	X
10	"I" St OC	X	X
11	"K" St OC	X	
12	Rte 132/99 Sep	X	X

CONSTRUCTION DETAILS
NO SCALE

C-2

STATE OF CALIFORNIA - DEPARTMENT OF TRANSPORTATION
Caltrans® DESIGN

FUNCTIONAL SUPERVISOR: CAROLINE REYES
CALCULATED-DESIGNED BY: STEVE LAWRENCE
CHECKED BY: PATRICIA TECZON
REVISED BY: SL
DATE REVISED: 04/03/12

LAST REVISION 00-00-00
DATE PLOTTED => 14-AUG-2012
TIME PLOTTED => 09:17

Dist	COUNTY	ROUTE	POST MILES TOTAL PROJECT	SHEET No.	TOTAL SHEETS
10	Sta	99	R2.3/R20.2	6	36

Patricia L. Teczon 5/18/12
REGISTERED CIVIL ENGINEER DATE

5/29/12
PLANS APPROVAL DATE

REGISTERED PROFESSIONAL ENGINEER Patricia Teczon No. 37294 Exp. 6/30/14 CIVIL STATE OF CALIFORNIA

THE STATE OF CALIFORNIA OR ITS OFFICERS OR AGENTS SHALL NOT BE RESPONSIBLE FOR THE ACCURACY OR COMPLETENESS OF SCANNED COPIES OF THIS PLAN SHEET.

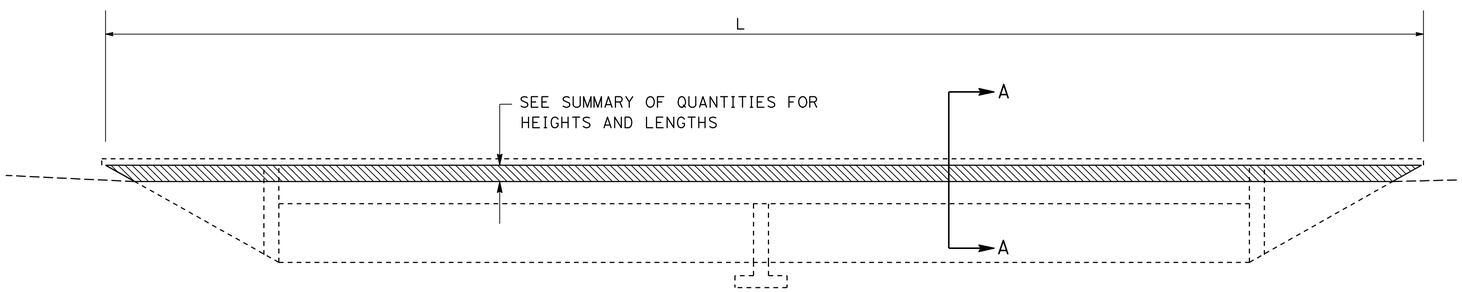

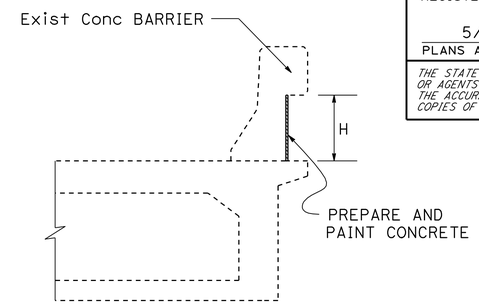

SECTION A-A

PREPARE AND PAINT CONCRETE

OVERCROSSING RECESSED AREAS

Loc	PM	DESCRIPTION
1	R2.29	LINWOOD AVE OC
2	R4.01	CANAL Dr OC
3	R7.81	KEYES Rd OC
4	R11.30	PINE St OC FACING NB ROUTE 99
5	R13.26	HATCH Rd OC FACING NB ROUTE 99
7	R15.37	SIERRA Dr OC
8	R15.66	"G" St OC
9	R15.75	"H" St OC
10	R15.85	"I" St OC
11	R16.03	"K" St OC
12	R16.12	ROUTE 132/99 Sep
13	R16.82	KANSAS Ave OC
14	R17.51	WOODLAND Ave OC
15	M18.52	CARPENTER/ BRIGGSMORE Rd OC
16	R20.22	BECKWITH Rd OC

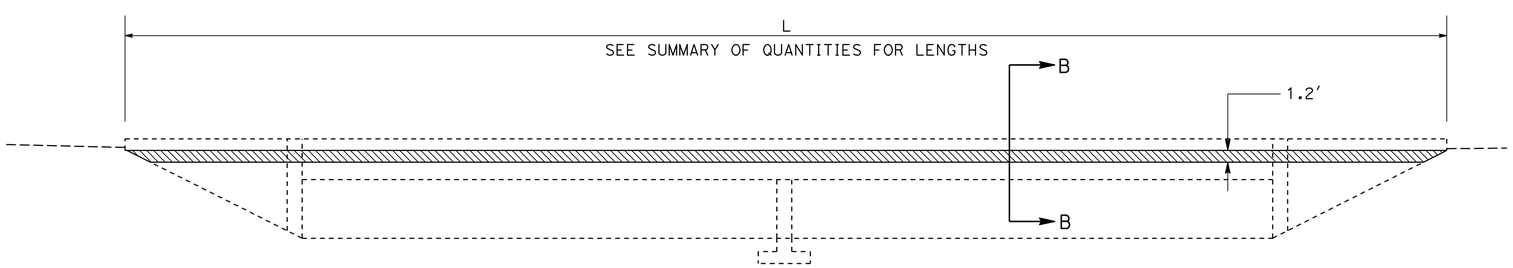

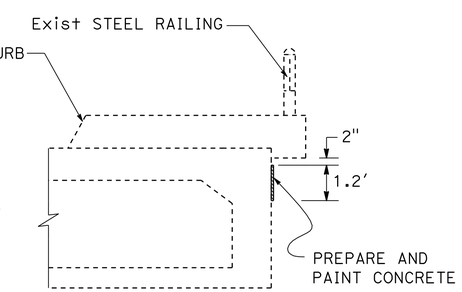

SECTION B-B

PREPARE AND PAINT CONCRETE

OVERCROSSING

Loc	PM	DESCRIPTION
4	R11.30	PINE St OC FACING SB ROUTE 99
5	R13.26	HATCH Rd OC FACING SB ROUTE 99
6	R14.47	CROWS LANDING Rd OC

CONSTRUCTION DETAILS

NO SCALE

C-3

STATE OF CALIFORNIA - DEPARTMENT OF TRANSPORTATION
Caltrans DESIGN

FUNCTIONAL SUPERVISOR: CAROLINE REYES
CALCULATED-DESIGNED BY: STEVE LAWRENCE
CHECKED BY: PATRICIA TECZON
REVISED BY: SL
DATE REVISED: 03/22/12

LAST REVISION 00-00-00
DATE PLOTTED => 14-AUG-2012
TIME PLOTTED => 09:17

Dist	COUNTY	ROUTE	POST MILES TOTAL PROJECT	SHEET No.	TOTAL SHEETS
10	Sta	99	R2.3/R20.2	7	36

LICENSED LANDSCAPE ARCHITECT

5/29/12
PLANS APPROVAL DATE

LICENSED LANDSCAPE ARCHITECT William Duttera No. 4442 Signature 09/30/12 Renewal Date 05/21/12 Date STATE OF CALIFORNIA

THE STATE OF CALIFORNIA OR ITS OFFICERS OR AGENTS SHALL NOT BE RESPONSIBLE FOR THE ACCURACY OR COMPLETENESS OF SCANNED COPIES OF THIS PLAN SHEET.

NOTES: (THIS SHEET ONLY)

1. SPACE EQUALLY ABOVE AND BELOW CONCRETE PAINT PATTERN.
2. SEE SHEET Q-1 FOR PREPARE AND PAINT CONCRETE DIMENSIONS.
3. SEE SHEET C-3 FOR PREPARE AND PAINT CONCRETE, OVERCROSSING RECESSED AREAS DETAILS.
4. SEE SHEET C-3 FOR PREPARE AND PAINT CONCRETE, OVERCROSSING DETAILS.

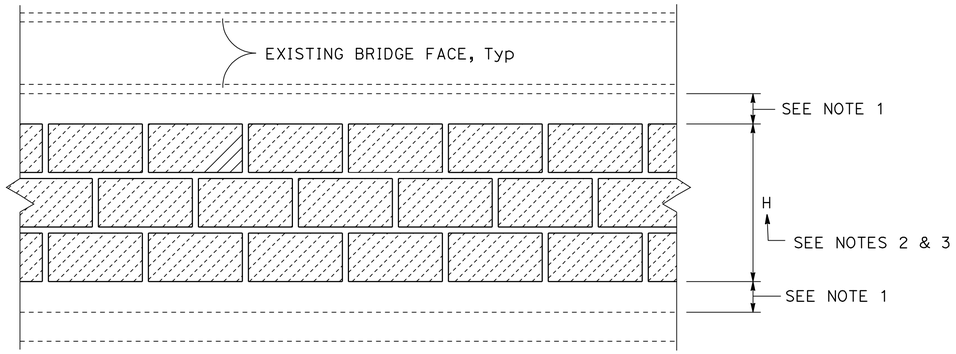

ELEVATION
CONCRETE PAINT PATTERN LAYOUT
OVERCROSSINGS WITH RECESSED AREAS

Loc	PM	DESCRIPTION
3	R7.81	KEYES Rd OC FACING SB TRAFFIC
4	R11.30	PINE St OC FACING NB Rte 99
5	R13.26	HATCH Rd OC FACING NB Rte 99
7	R15.37	SIERRA Dr OC
8	R15.66	"G" St OC
9	R15.75	"H" St OC
10	R15.85	"I" St OC
11	R16.03	"K" St OC
12	R16.12	ROUTE 132/99 Sep
13	R16.82	KANSAS Ave OC
14	R17.51	WOODLAND Ave OC FACING SB TRAFFIC

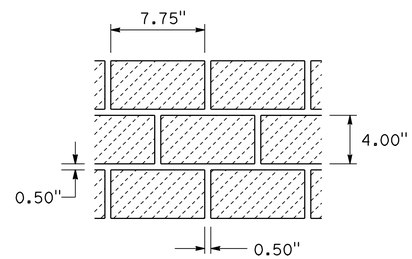

TYPICAL RUNNING BOND
STENCIL PATTERN DIMENSIONS

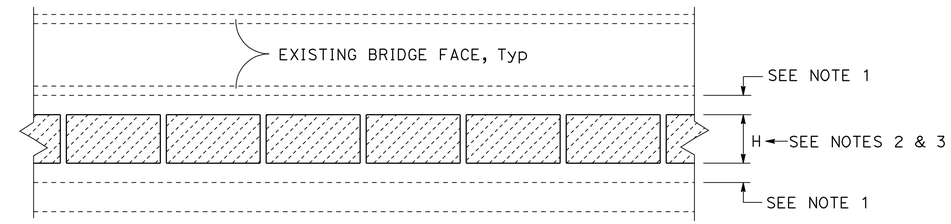

ELEVATION
CONCRETE PAINT PATTERN LAYOUT
OVERCROSSINGS WITH RECESSED AREAS

Loc	PM	DESCRIPTION
1	R2.29	LINWOOD Ave OC
2	R4.01	CANAL Dr OC

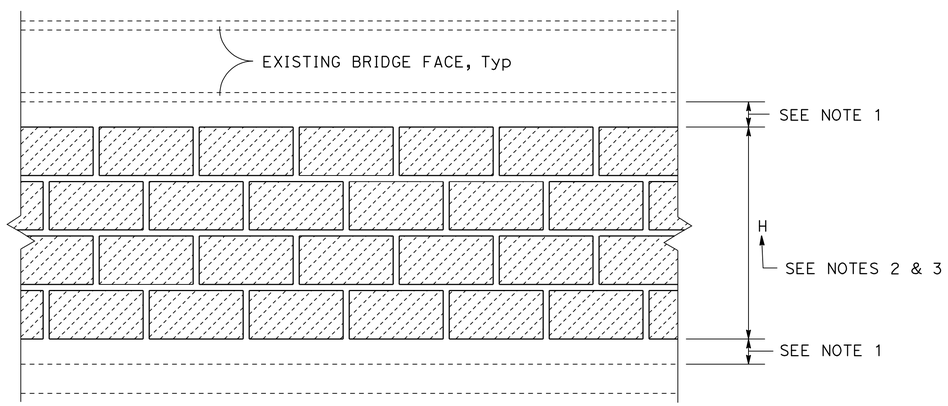

ELEVATION
CONCRETE PAINT PATTERN LAYOUT
OVERCROSSINGS WITH RECESSED AREAS

Loc	PM	DESCRIPTION
3	R7.81	KEYES Rd OC FACING NB TRAFFIC
14	R17.51	WOODLAND Ave OC FACING NB TRAFFIC
15	M18.52	CARPENTER/ BRIGGSMORE Rd OC
16	R20.22	BECKWITH Rd OC

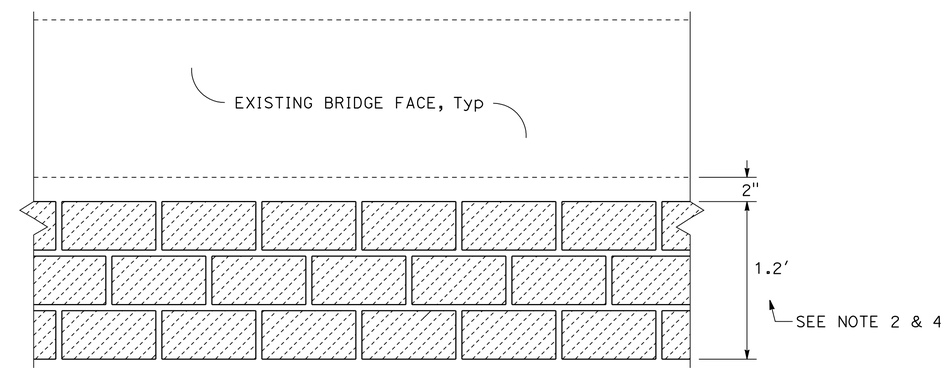

ELEVATION
CONCRETE PAINT PATTERN LAYOUT
OVERCROSSINGS

Loc	PM	DESCRIPTION
4	R11.30	PINE St OC FACING SB Rte 99
5	R13.26	HATCH Rd OC FACING SB Rte 99
6	R14.47	CROWS LANDING Rd OC

CONSTRUCTION DETAILS

NO SCALE

C-4

STATE OF CALIFORNIA - DEPARTMENT OF TRANSPORTATION
Caltrans® LANDSCAPE ARCHITECTURE
SENIOR LANDSCAPE ARCHITECT BRAD COLE
CALCULATED-DESIGNED BY BILL DUTTERA
CHECKED BY GUS ESCUTIA
REVISED BY BD
DATE REVISED 05/01/12

LAST REVISION 03-09-12
DATE PLOTTED => 14-AUG-2012
TIME PLOTTED => 09:17

Dist	COUNTY	ROUTE	POST MILES TOTAL PROJECT	SHEET No.	TOTAL SHEETS
10	Sta	99	R2.3/R20.2	8	36

Patricia L. Teczon 5/18/12
REGISTERED CIVIL ENGINEER DATE

5/29/12
PLANS APPROVAL DATE

REGISTERED PROFESSIONAL ENGINEER Patricia Teczon No. 37294 Exp. 6/30/14 CIVIL STATE OF CALIFORNIA

THE STATE OF CALIFORNIA OR ITS OFFICERS OR AGENTS SHALL NOT BE RESPONSIBLE FOR THE ACCURACY OR COMPLETENESS OF SCANNED COPIES OF THIS PLAN SHEET.

NOTE:

FOR ACCURATE RIGHT OF WAY DATA, CONTACT
RIGHT OF WAY ENGINEERING AT THE DISTRICT OFFICE.

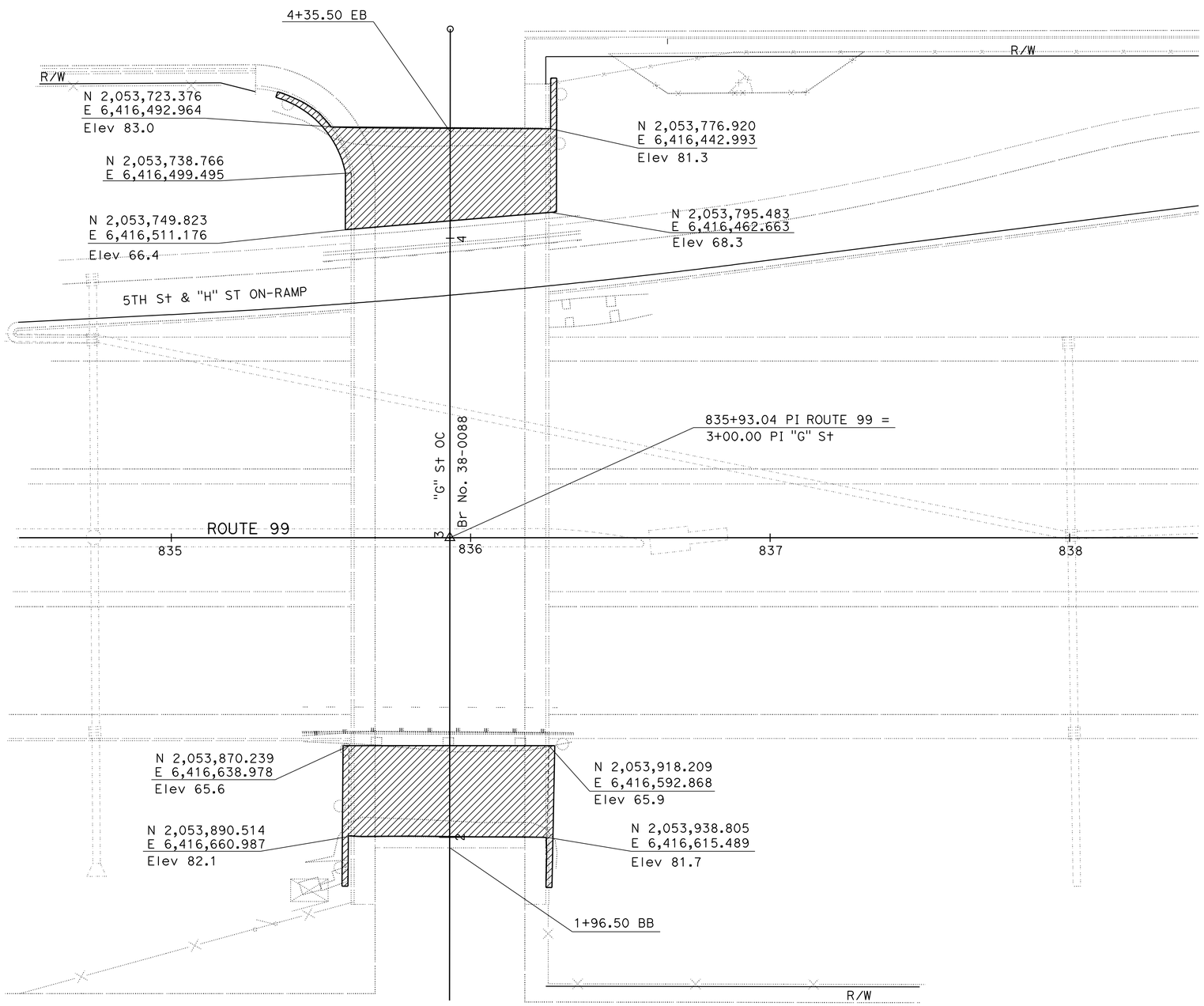

LOCATION 8
PM R15.66

EXISTING UTILITY FACILITIES HAVE NOT BEEN PLOTTED ON PORTIONS OF THESE PLANS

CONSTRUCTION DETAILS

SCALE: 1" = 20'

C-5

STATE OF CALIFORNIA - DEPARTMENT OF TRANSPORTATION
Caltrans® **DESIGN**

FUNCTIONAL SUPERVISOR: CAROLINE REYES
CALCULATED-DESIGNED BY: STEVE LAWRENCE
CHECKED BY: PATRICIA TECZON
REVISED BY: SL
DATE REVISED: 05/01/12

LAST REVISION 00-00-00
DATE PLOTTED => 14-AUG-2012
TIME PLOTTED => 09:17

Dist	COUNTY	ROUTE	POST MILES TOTAL PROJECT	SHEET No.	TOTAL SHEETS
10	Sta	99	R2.3/R20.2	9	36

Patricia L. Teczon 5/18/12
REGISTERED CIVIL ENGINEER DATE

5/29/12
PLANS APPROVAL DATE

REGISTERED PROFESSIONAL ENGINEER Patricia Teczon No. 37294 Exp. 6/30/14 CIVIL STATE OF CALIFORNIA

THE STATE OF CALIFORNIA OR ITS OFFICERS OR AGENTS SHALL NOT BE RESPONSIBLE FOR THE ACCURACY OR COMPLETENESS OF SCANNED COPIES OF THIS PLAN SHEET.

NOTE:

FOR ACCURATE RIGHT OF WAY DATA, CONTACT RIGHT OF WAY ENGINEERING AT THE DISTRICT OFFICE.

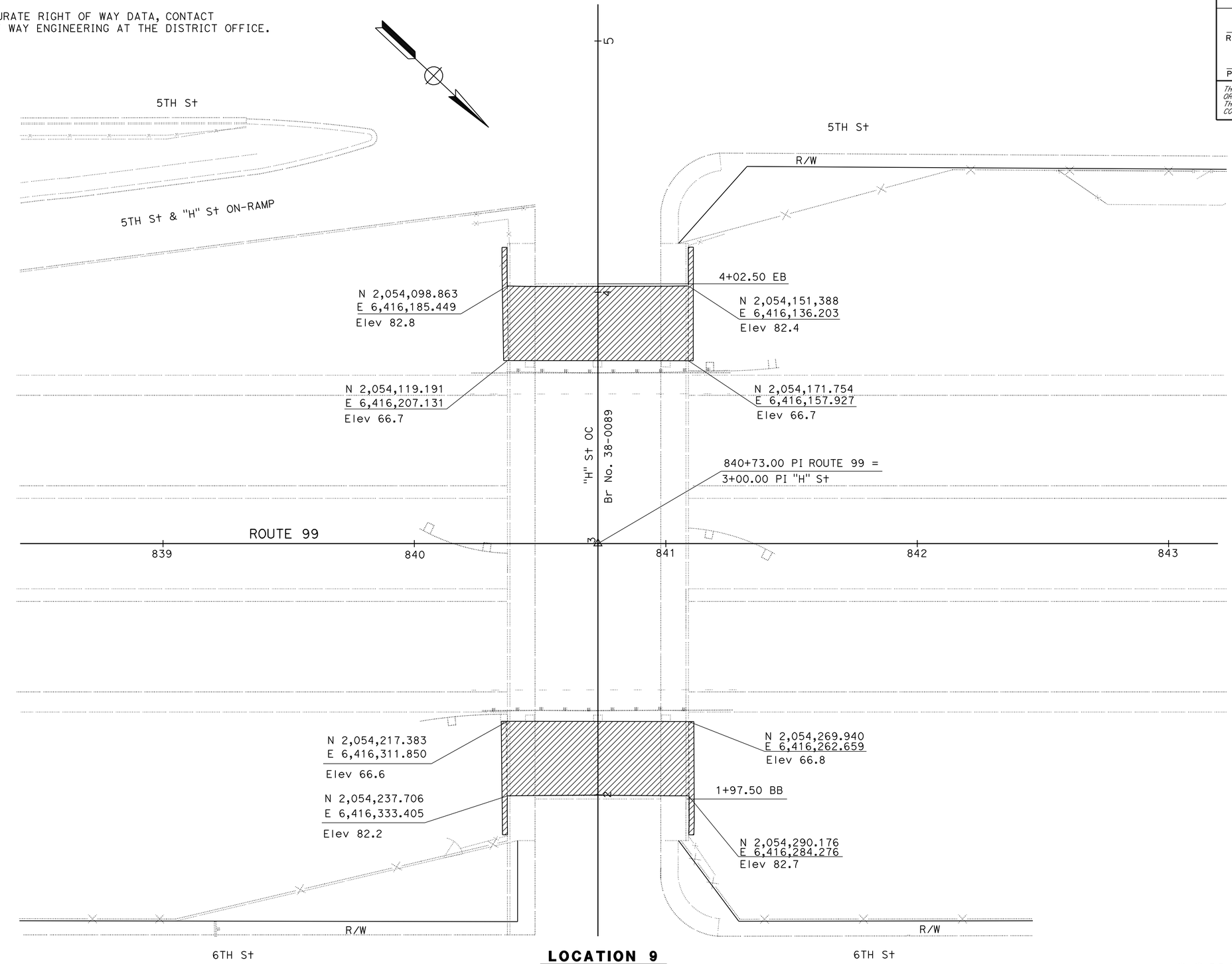

LOCATION 9
PM R15.75

EXISTING UTILITY FACILITIES HAVE NOT BEEN PLOTTED ON PORTIONS OF THESE PLANS

CONSTRUCTION DETAILS

SCALE: 1" = 20'

C-6

REVISED BY	SL
DATE REVISED	05/01/12
STEVE LAWRENCE	
PATRICIA TECZON	
CALCULATED-DESIGNED BY	
CHECKED BY	
FUNCTIONAL SUPERVISOR	
CAROLINE REYES	

STATE OF CALIFORNIA - DEPARTMENT OF TRANSPORTATION
Caltrans
DESIGN

LAST REVISION 00-00-00
DATE PLOTTED => 14-AUG-2012
TIME PLOTTED => 09:17

Dist	COUNTY	ROUTE	POST MILES TOTAL PROJECT	SHEET No.	TOTAL SHEETS
10	Sta	99	R2.3/R20.2	10	36

Patricia L. Teczon 5/18/12
REGISTERED CIVIL ENGINEER DATE

5/29/12
PLANS APPROVAL DATE

REGISTERED PROFESSIONAL ENGINEER Patricia Teczon No. 37294 Exp. 6/30/14 CIVIL STATE OF CALIFORNIA

THE STATE OF CALIFORNIA OR ITS OFFICERS OR AGENTS SHALL NOT BE RESPONSIBLE FOR THE ACCURACY OR COMPLETENESS OF SCANNED COPIES OF THIS PLAN SHEET.

NOTE:

FOR ACCURATE RIGHT OF WAY DATA, CONTACT RIGHT OF WAY ENGINEERING AT THE DISTRICT OFFICE.

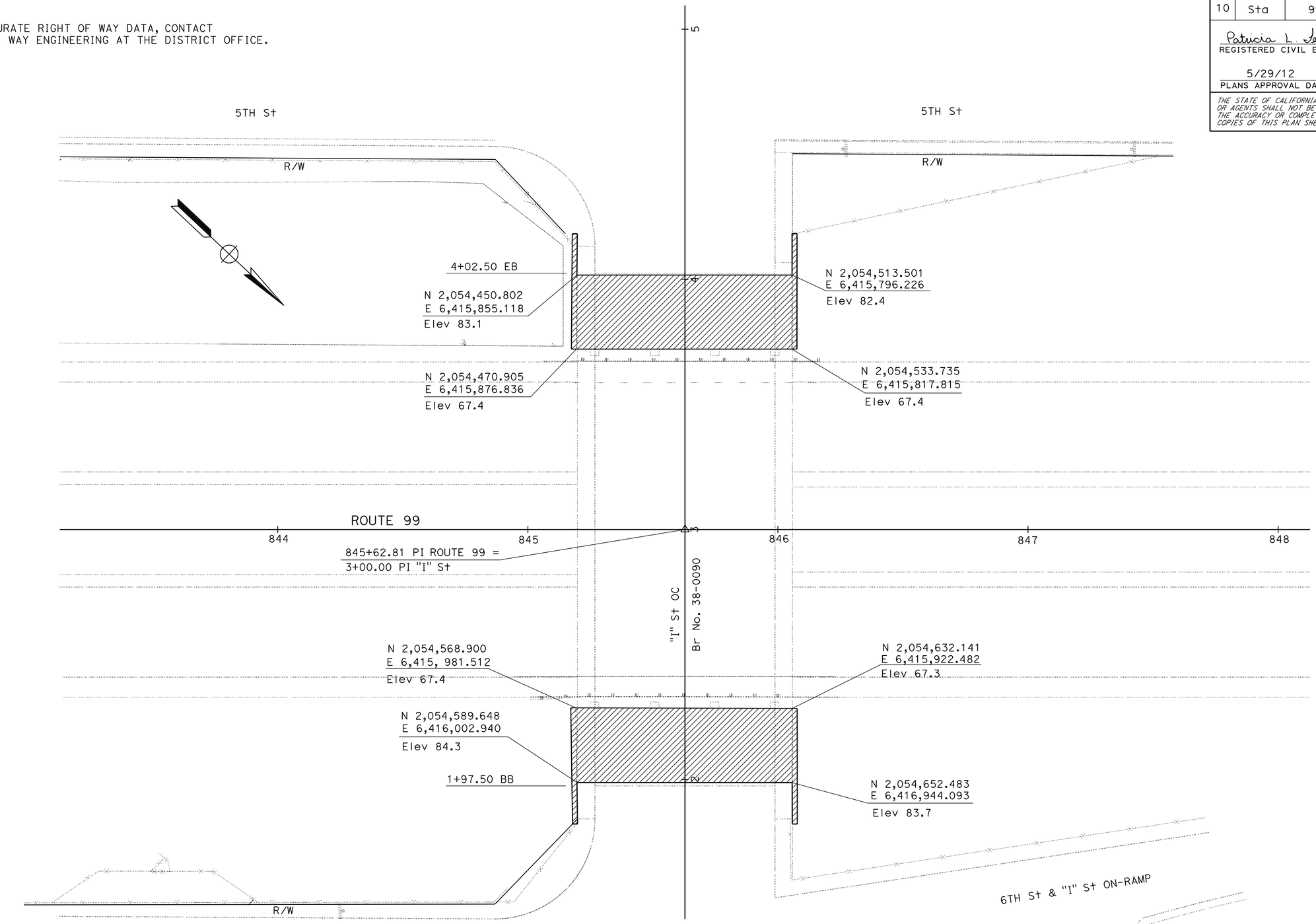

LOCATION 10
PM R15.85

EXISTING UTILITY FACILITIES HAVE NOT BEEN PLOTTED ON PORTIONS OF THESE PLANS

CONSTRUCTION DETAILS

SCALE: 1" = 20'

C-7

REVISED BY	DATE REVISED
SL	05/01/12

STEVE LAWRENCE — PATRICIA TECZON

CALCULATED-DESIGNED BY — CHECKED BY

FUNCTIONAL SUPERVISOR — CAROLINE REYES

STATE OF CALIFORNIA - DEPARTMENT OF TRANSPORTATION

Caltrans® **DESIGN**

LAST REVISION 00-00-00 | DATE PLOTTED => 14-AUG-2012 | TIME PLOTTED => 09:17

Dist	COUNTY	ROUTE	POST MILES TOTAL PROJECT	SHEET No.	TOTAL SHEETS
10	Sta	99	R2.3/R20.2	11	36

Patricia L. Teczon 5/18/12
REGISTERED CIVIL ENGINEER DATE

5/29/12
PLANS APPROVAL DATE

REGISTERED PROFESSIONAL ENGINEER Patricia Teczon No. 37294 Exp 6/30/14 CIVIL STATE OF CALIFORNIA

THE STATE OF CALIFORNIA OR ITS OFFICERS OR AGENTS SHALL NOT BE RESPONSIBLE FOR THE ACCURACY OR COMPLETENESS OF SCANNED COPIES OF THIS PLAN SHEET.

NOTE:

FOR ACCURATE RIGHT OF WAY DATA, CONTACT
RIGHT OF WAY ENGINEERING AT THE DISTRICT OFFICE.

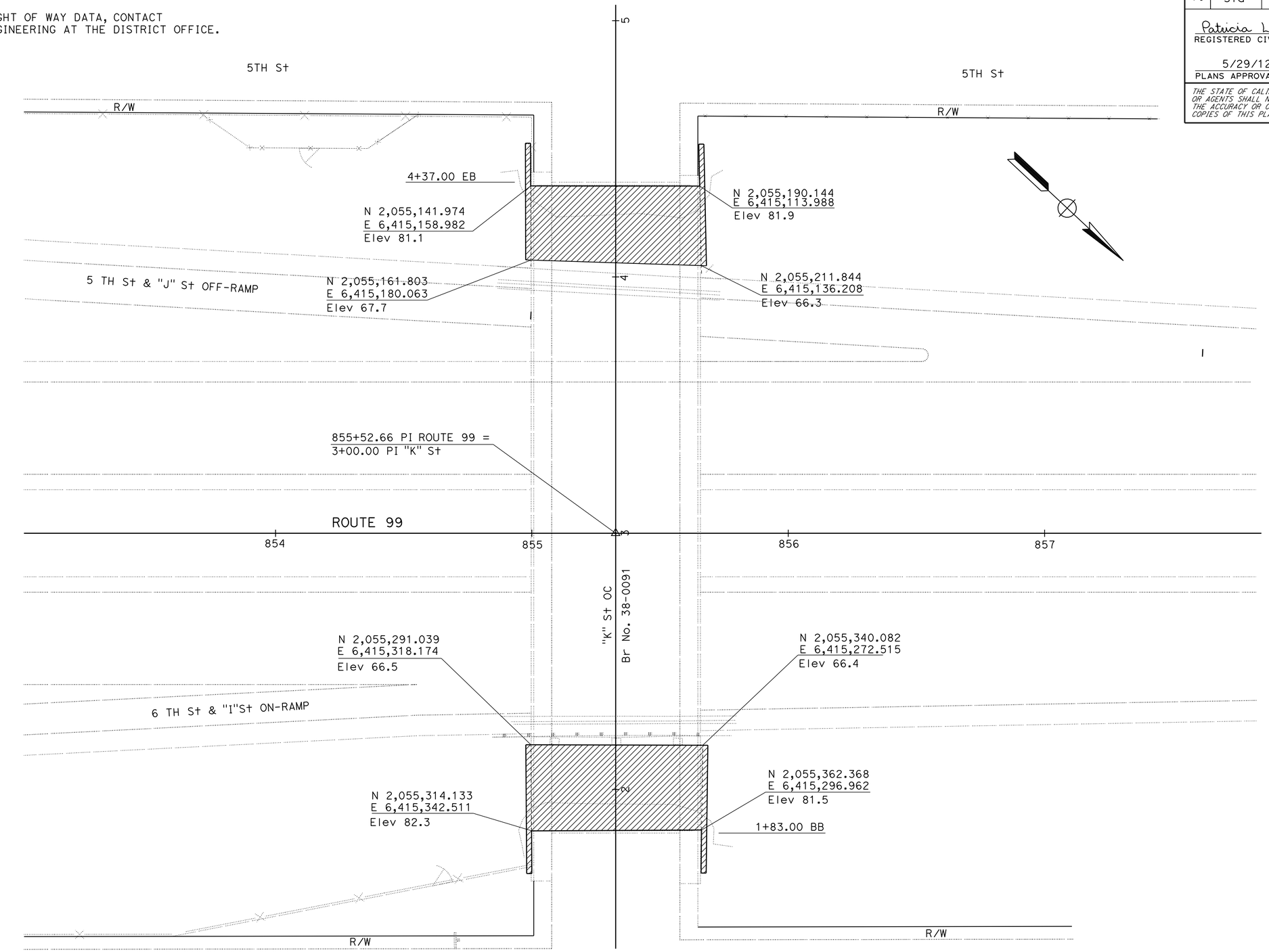

LOCATION 11
PM R16.03

EXISTING UTILITY FACILITIES HAVE NOT BEEN PLOTTED ON PORTIONS OF THESE PLANS

CONSTRUCTION DETAILS

SCALE: 1" = 20'

C-8

STATE OF CALIFORNIA - DEPARTMENT OF TRANSPORTATION
Caltrans
DESIGN

FUNCTIONAL SUPERVISOR: CAROLINE REYES
CALCULATED-DESIGNED BY: STEVE LAWRENCE
CHECKED BY: PATRICIA TECZON
REVISED BY: SL
DATE REVISED: 05/01/12

LAST REVISION: 00-00-00
DATE PLOTTED => 14-AUG-2012
TIME PLOTTED => 09:17

Dist	COUNTY	ROUTE	POST MILES TOTAL PROJECT	SHEET No.	TOTAL SHEETS
10	Sta	99	R2.3/R20.2	12	36

Patricia L. Teczon 5/18/12
REGISTERED CIVIL ENGINEER DATE

5/29/12
PLANS APPROVAL DATE

REGISTERED PROFESSIONAL ENGINEER Patricia Teczon No. 37294 Exp 6/30/14 CIVIL STATE OF CALIFORNIA

THE STATE OF CALIFORNIA OR ITS OFFICERS OR AGENTS SHALL NOT BE RESPONSIBLE FOR THE ACCURACY OR COMPLETENESS OF SCANNED COPIES OF THIS PLAN SHEET.

NOTE:

FOR ACCURATE RIGHT OF WAY DATA, CONTACT
RIGHT OF WAY ENGINEERING AT THE DISTRICT OFFICE.

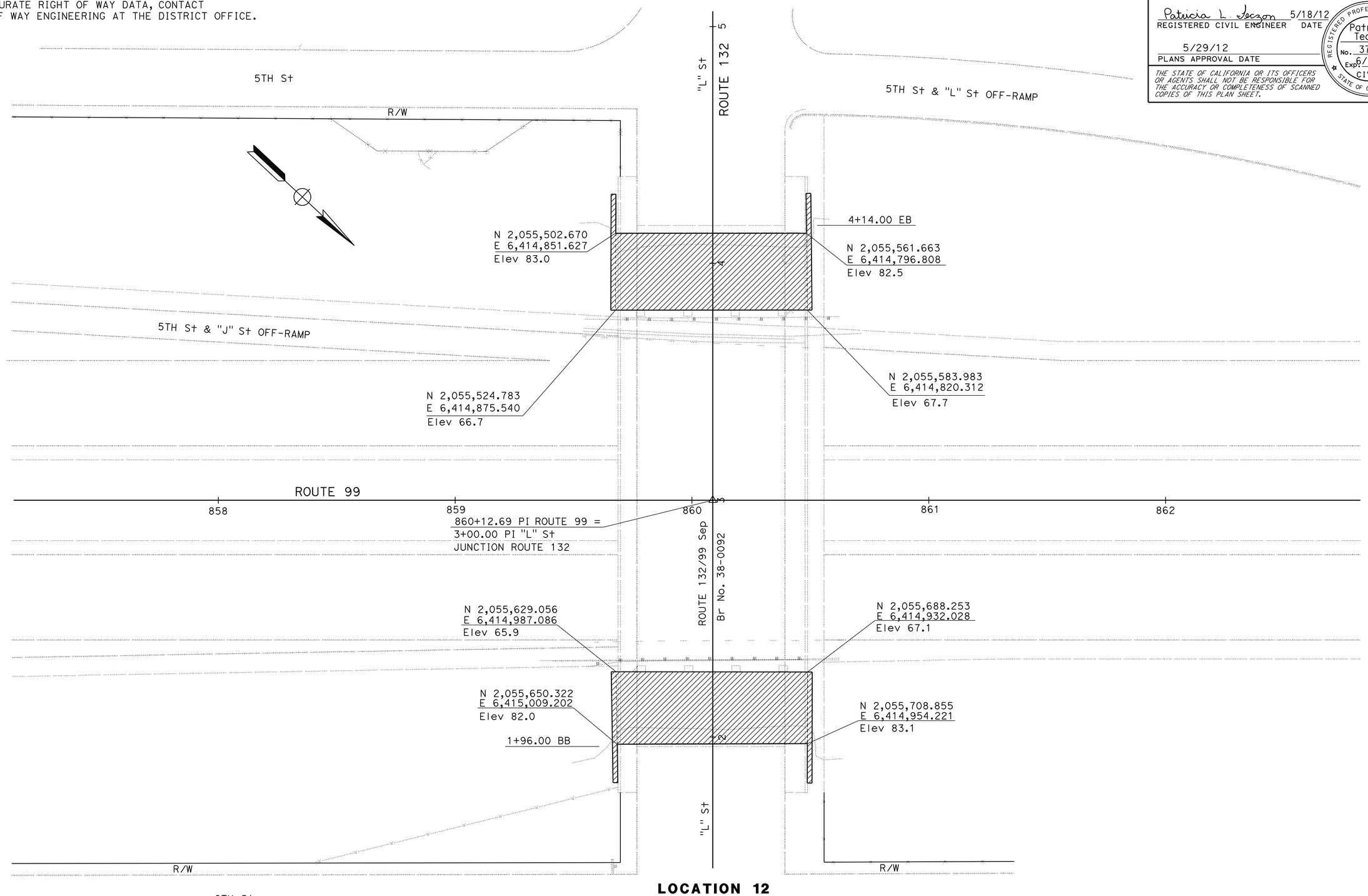

LOCATION 12
PM R16.12

EXISTING UTILITY FACILITIES HAVE NOT BEEN PLOTTED ON PORTIONS OF THESE PLANS

CONSTRUCTION DETAILS

SCALE: 1" = 20'

C-9

REVISED BY	DATE REVISED
SL	05/01/12

STEVE LAWRENCE — PATRICIA TECZON — CALCULATED-DESIGNED BY — CHECKED BY

FUNCTIONAL SUPERVISOR: CAROLINE REYES

STATE OF CALIFORNIA - DEPARTMENT OF TRANSPORTATION
Caltrans® DESIGN

LAST REVISION 00-00-00 | DATE PLOTTED => 14-AUG-2012 | TIME PLOTTED => 09:17

Dist	COUNTY	ROUTE	POST MILES TOTAL PROJECT	SHEET No.	TOTAL SHEETS
10	Sta	99	R2.3/R20.2	13	36

LICENSED LANDSCAPE ARCHITECT

5/29/12
PLANS APPROVAL DATE

LICENSED LANDSCAPE ARCHITECT
William Duttera No. 4442
Signature
09/30/12
Renewal Date
05/21/12
Date
STATE OF CALIFORNIA

THE STATE OF CALIFORNIA OR ITS OFFICERS OR AGENTS SHALL NOT BE RESPONSIBLE FOR THE ACCURACY OR COMPLETENESS OF SCANNED COPIES OF THIS PLAN SHEET.

NOTES:

1. FOR ACCURATE RIGHT OF WAY DATA, CONTACT RIGHT OF WAY ENGINEERING AT THE DISTRICT OFFICE.
2. SEE SHEET LD-1 FOR PLACEMENT OF IRRIGATION CROSSOVERS AND SPRINKLER SCHEDULE.

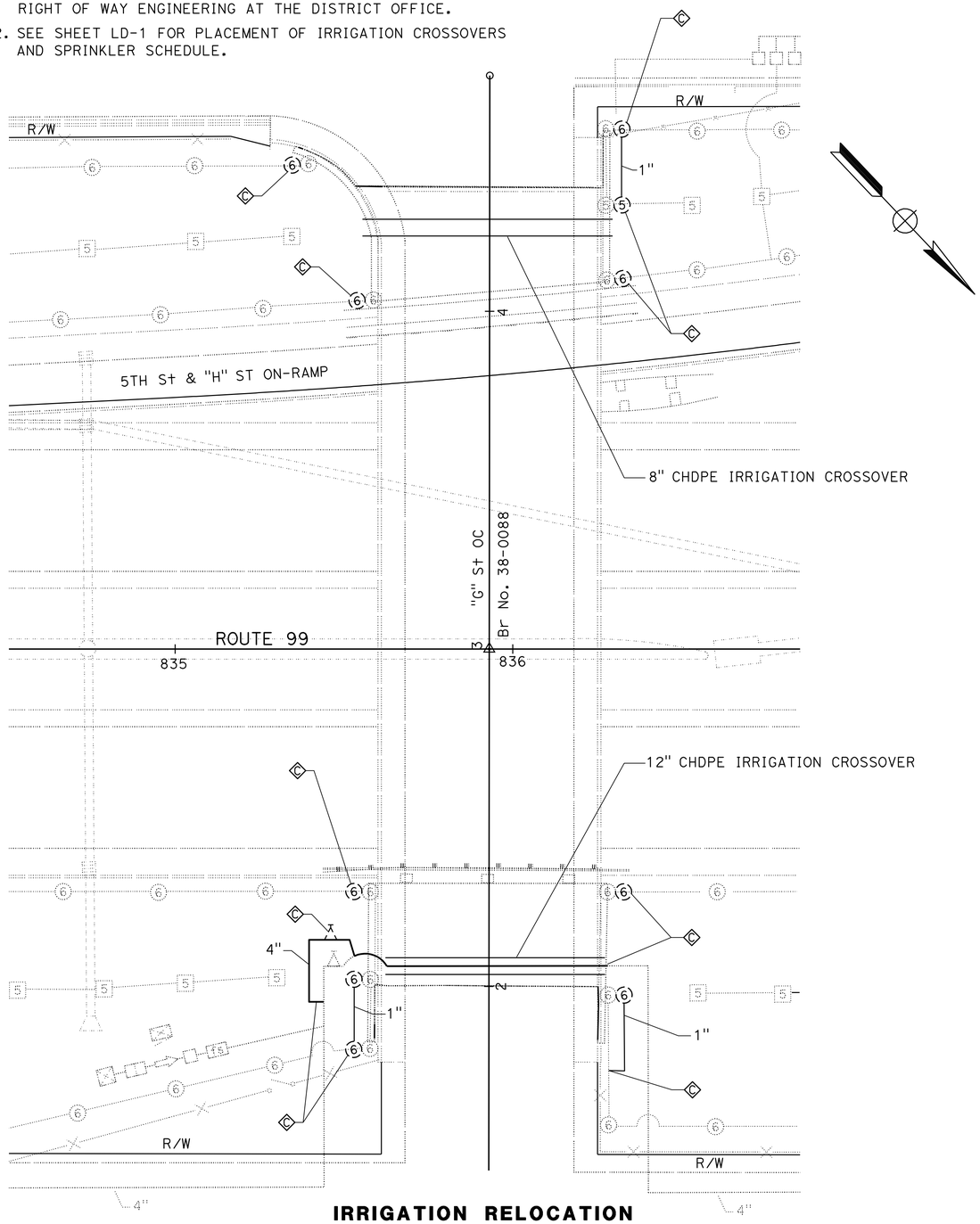

IRRIGATION RELOCATION
PM R15.66 (LOCATION 8)

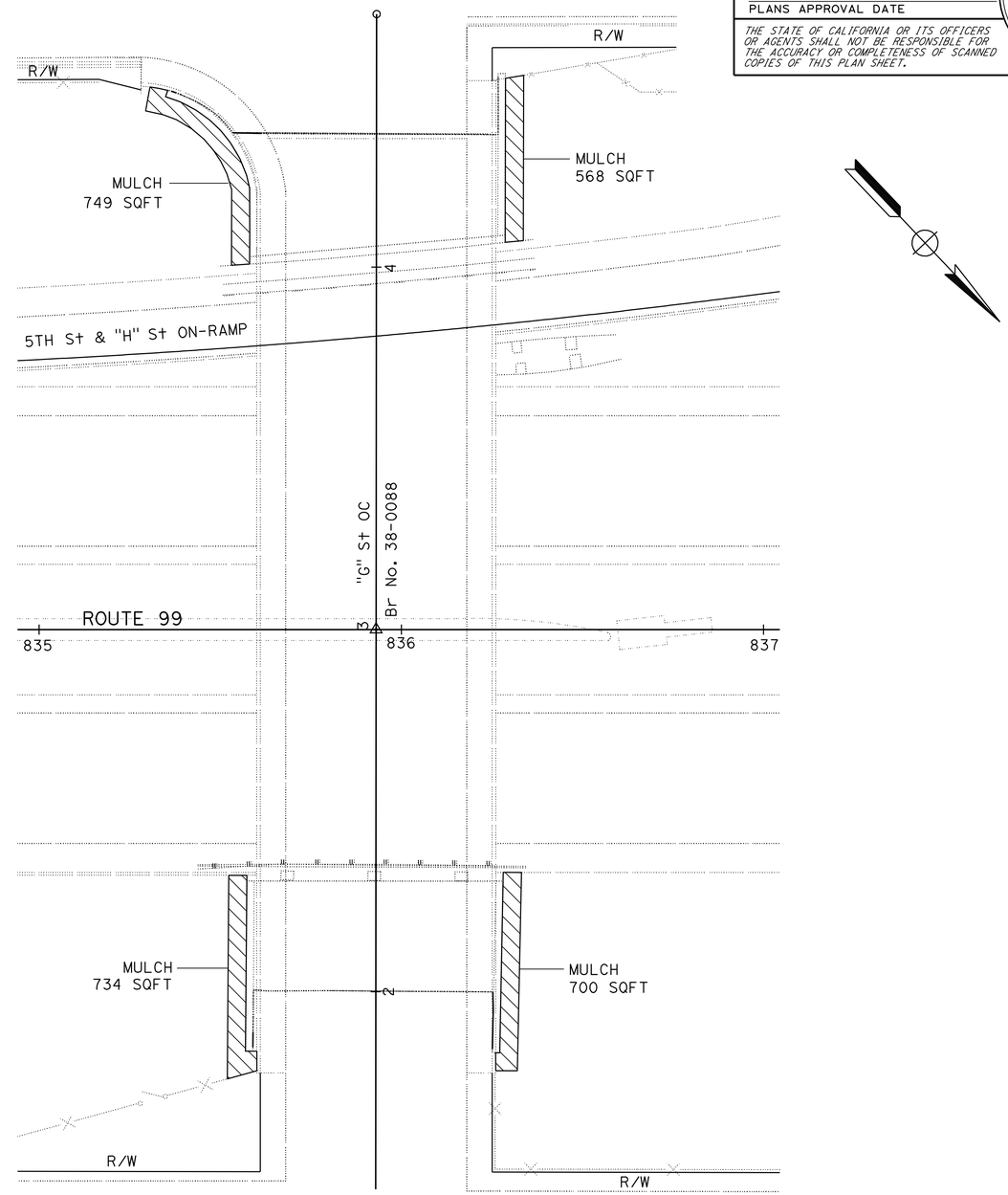

EROSION CONTROL
PM R15.66 (LOCATION 8)

EXISTING UTILITY FACILITIES HAVE NOT BEEN PLOTTED ON PORTIONS OF THESE PLANS APPROVED FOR IRRIGATION WORK ONLY

EROSION CONROL PLAN AND IRRIGATION PLAN

SCALE: 1" = 20'

EC-1

BD	05/01/12
REVISED BY	DATE REVISED
BILL DUTTERA	GUS ESCUTIA
CALCULATED-DESIGNED BY	CHECKED BY
SENIOR LANDSCAPE ARCHITECT	BRAD COLE

STATE OF CALIFORNIA - DEPARTMENT OF TRANSPORTATION
Caltrans® LANDSCAPE ARCHITECTURE

LAST REVISION 00-00-00 | DATE PLOTTED => 14-AUG-2012 | TIME PLOTTED => 09:17

Dist	COUNTY	ROUTE	POST MILES TOTAL PROJECT	SHEET No.	TOTAL SHEETS
10	Sta	99	R2.3/R20.2	14	36

LICENSED LANDSCAPE ARCHITECT

5/29/12
PLANS APPROVAL DATE

LICENSED LANDSCAPE ARCHITECT
William Duttera No. 4442
Signature
09/30/12
Renewal Date
05/21/12
Date
STATE OF CALIFORNIA

THE STATE OF CALIFORNIA OR ITS OFFICERS OR AGENTS SHALL NOT BE RESPONSIBLE FOR THE ACCURACY OR COMPLETENESS OF SCANNED COPIES OF THIS PLAN SHEET.

NOTE:

FOR ACCURATE RIGHT OF WAY DATA, CONTACT RIGHT OF WAY ENGINEERING AT THE DISTRICT OFFICE.

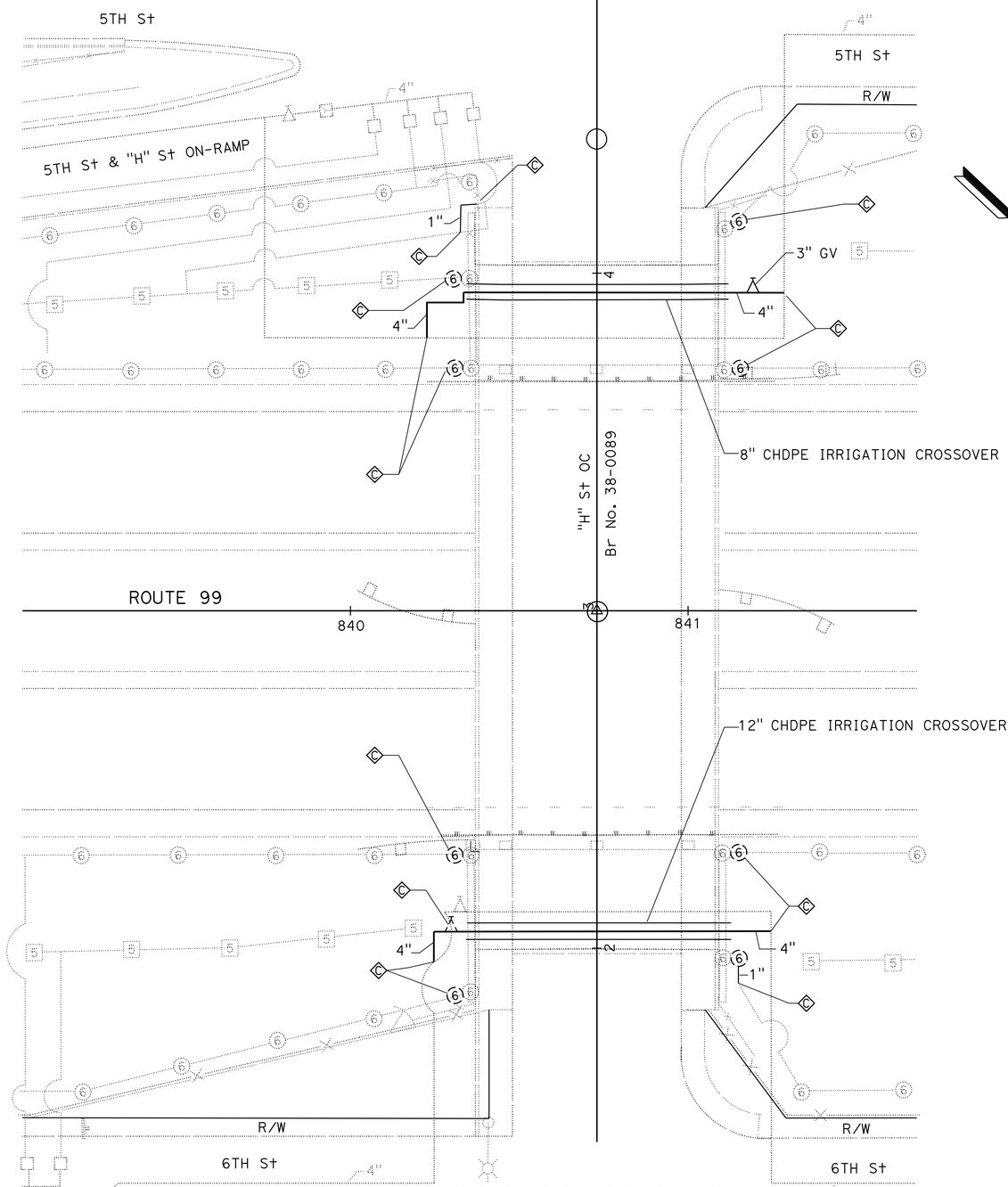

IRRIGATION RELOCATION
PM R15.75 (LOCATION 9)

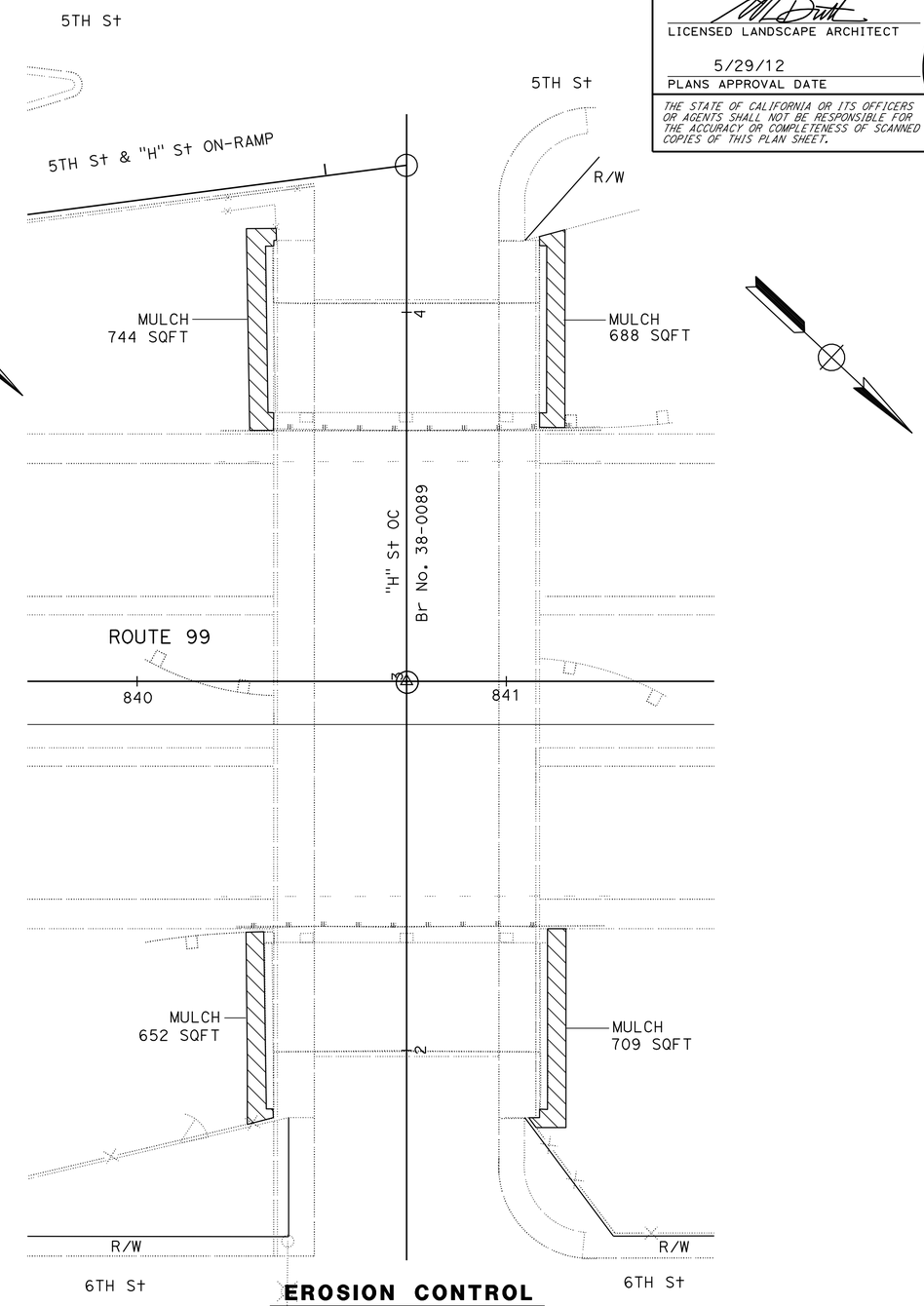

EROSION CONTROL
PM R15.75 (LOCATION 9)

EXISTING UTILITY FACILITIES HAVE NOT BEEN PLOTTED ON PORTIONS OF THESE PLANS

APPROVED FOR IRRIGATION WORK ONLY

EROSION CONTROL PLAN AND IRRIGATION PLAN

SCALE: 1" = 20'

EC-2

STATE OF CALIFORNIA - DEPARTMENT OF TRANSPORTATION
Caltrans® LANDSCAPE ARCHITECTURE

SENIOR LANDSCAPE ARCHITECT: BRAD COLE

CALCULATED-DESIGNED BY: BILL DUTTERA
CHECKED BY: GUS ESCUTIA

REVISED BY: BD
DATE REVISED: 05/01/12

LAST REVISION: 00-00-00
DATE PLOTTED => 14-AUG-2012
TIME PLOTTED => 09:17

Dist	COUNTY	ROUTE	POST MILES TOTAL PROJECT	SHEET No.	TOTAL SHEETS
10	Sta	99	R2.3/R20.2	15	36

LICENSED LANDSCAPE ARCHITECT

5/29/12
PLANS APPROVAL DATE

LICENSED LANDSCAPE ARCHITECT
William Duttera No. 4442
Signature
09/30/12
Renewal Date
05/21/12
Date
STATE OF CALIFORNIA

THE STATE OF CALIFORNIA OR ITS OFFICERS OR AGENTS SHALL NOT BE RESPONSIBLE FOR THE ACCURACY OR COMPLETENESS OF SCANNED COPIES OF THIS PLAN SHEET.

NOTE:

FOR ACCURATE RIGHT OF WAY DATA, CONTACT RIGHT OF WAY ENGINEERING AT THE DISTRICT OFFICE.

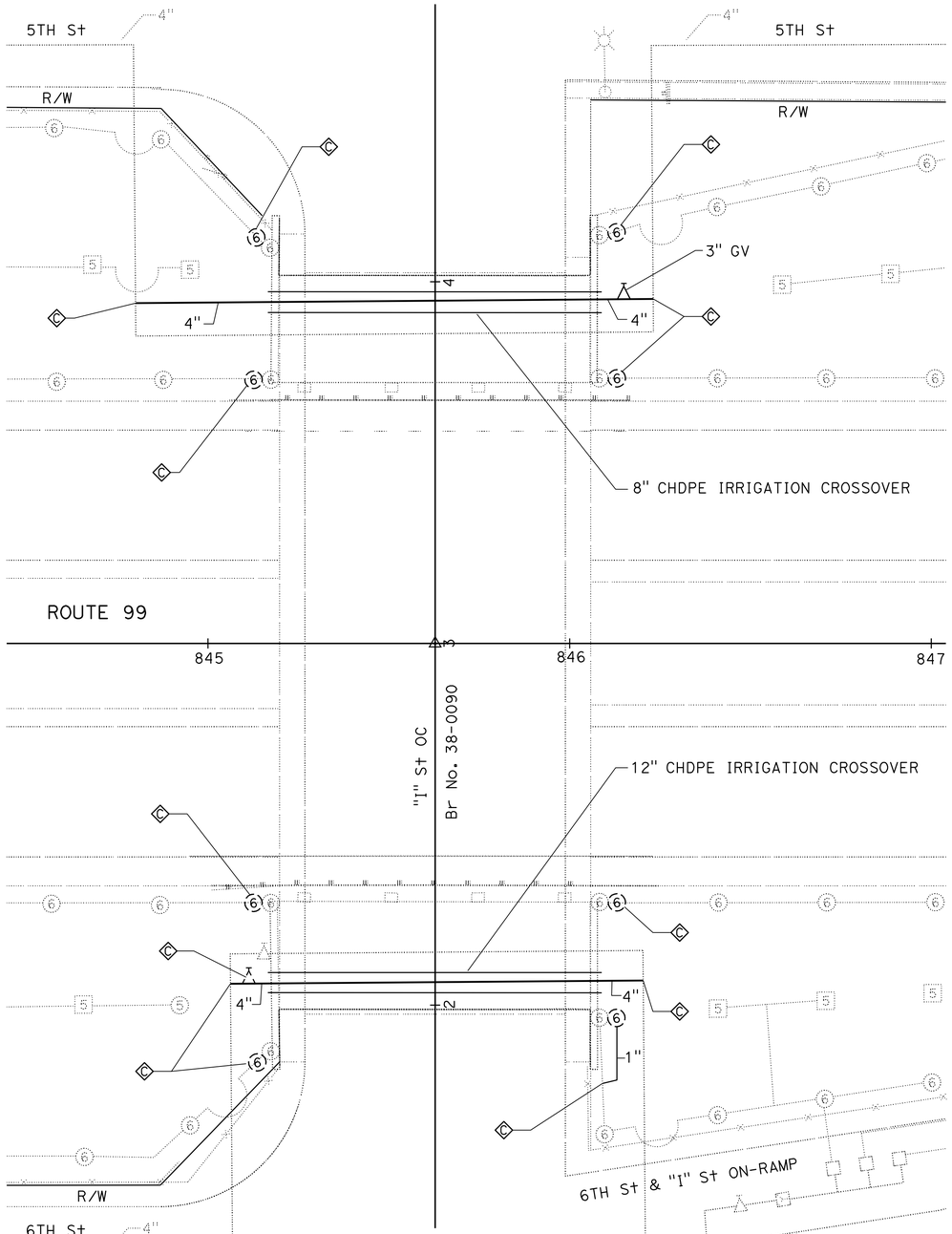

IRRIGATION RELOCATION
PM R15.85 (LOCATION 10)

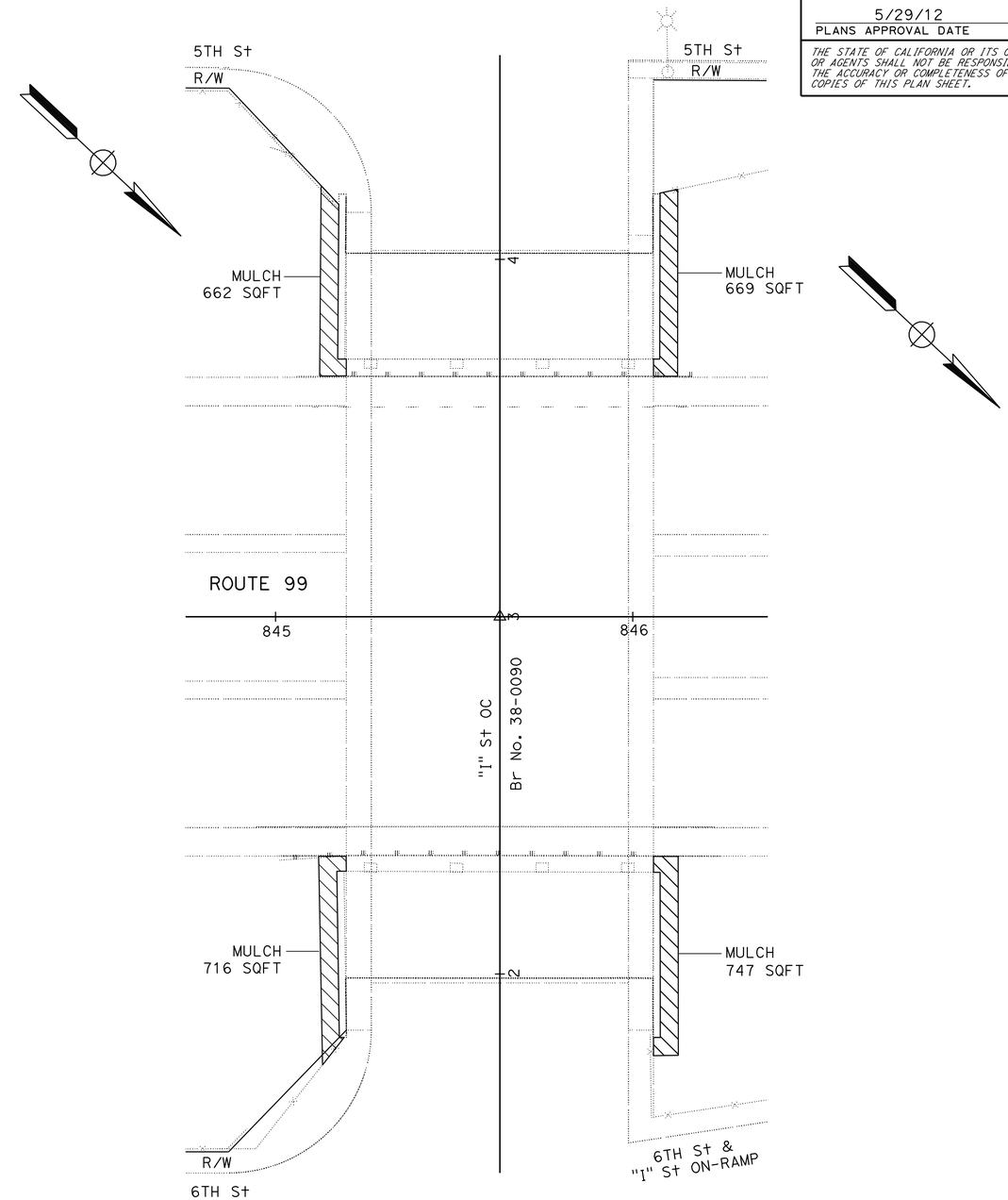

EROSION CONTROL
PM R15.85 (LOCATION 10)

EXISTING UTILITY FACILITIES HAVE NOT BEEN PLOTTED ON PORTIONS OF THESE PLANS APPROVED FOR IRRIGATION WORK ONLY

EROSION CONTROL PLAN AND IRRIGATION PLAN

SCALE: 1" = 20'

EC-3

REVISED BY	BD
DATE REVISED	05/01/12
CALCULATED-DESIGNED BY	BILL DUTTERA
CHECKED BY	GUS ESCUTIA
SENIOR LANDSCAPE ARCHITECT	BRAD COLE

STATE OF CALIFORNIA - DEPARTMENT OF TRANSPORTATION
Caltrans® LANDSCAPE ARCHITECTURE

LAST REVISION 00-00-00
DATE PLOTTED => 14-AUG-2012
TIME PLOTTED => 09:17

Dist	COUNTY	ROUTE	POST MILES TOTAL PROJECT	SHEET No.	TOTAL SHEETS
10	Sta	99	R2.3/R20.2	16	36

LICENSED LANDSCAPE ARCHITECT

5/29/12
PLANS APPROVAL DATE

LICENSED LANDSCAPE ARCHITECT
William Duttera No. 4442
Signature
09/30/12
Renewal Date
05/21/12
Date
STATE OF CALIFORNIA

THE STATE OF CALIFORNIA OR ITS OFFICERS OR AGENTS SHALL NOT BE RESPONSIBLE FOR THE ACCURACY OR COMPLETENESS OF SCANNED COPIES OF THIS PLAN SHEET.

NOTE:

FOR ACCURATE RIGHT OF WAY DATA, CONTACT
RIGHT OF WAY ENGINEERING AT THE DISTRICT OFFICE.

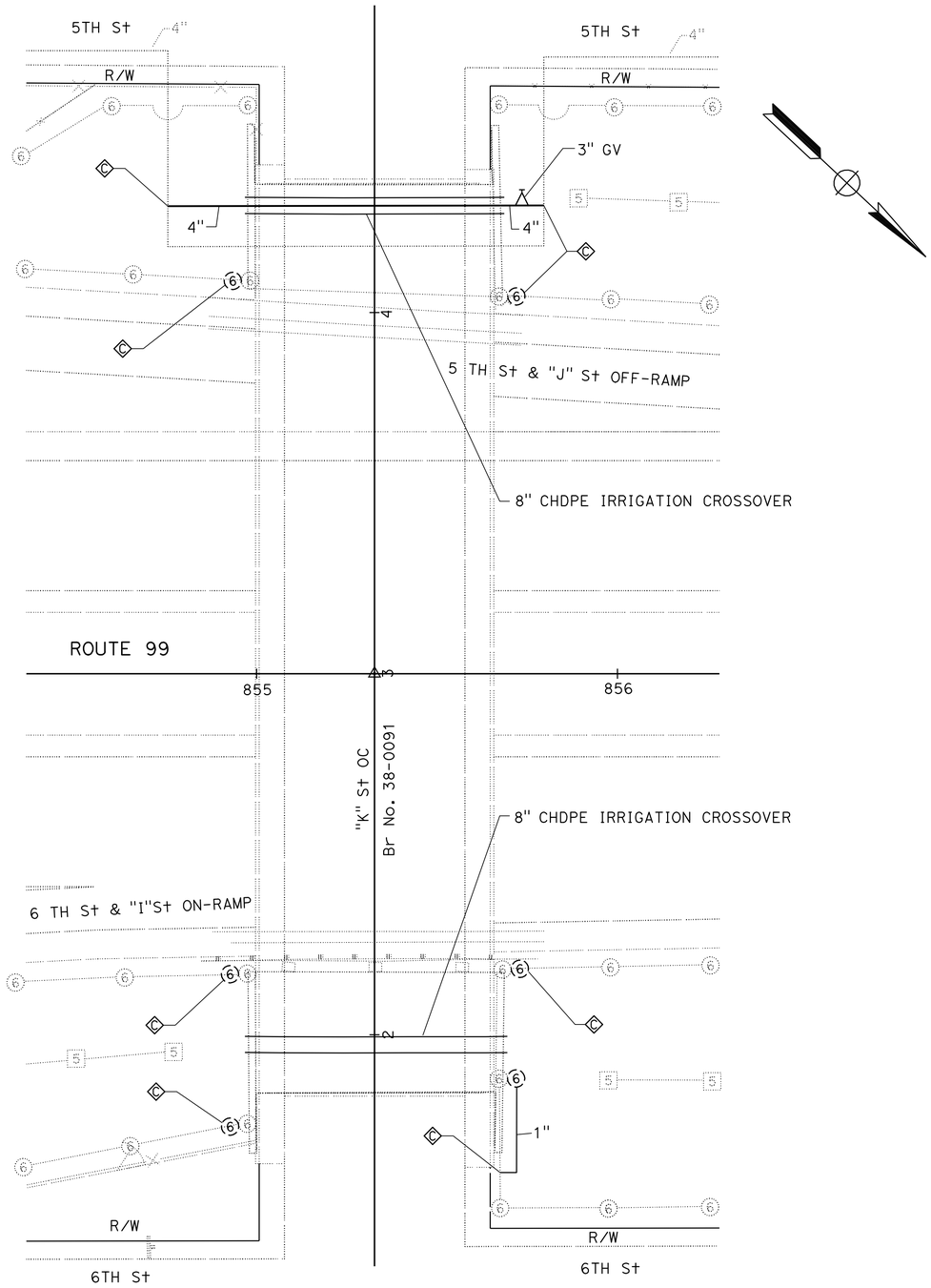

IRRIGATION RELOCATION
PM R16.03 (LOCATION 11)

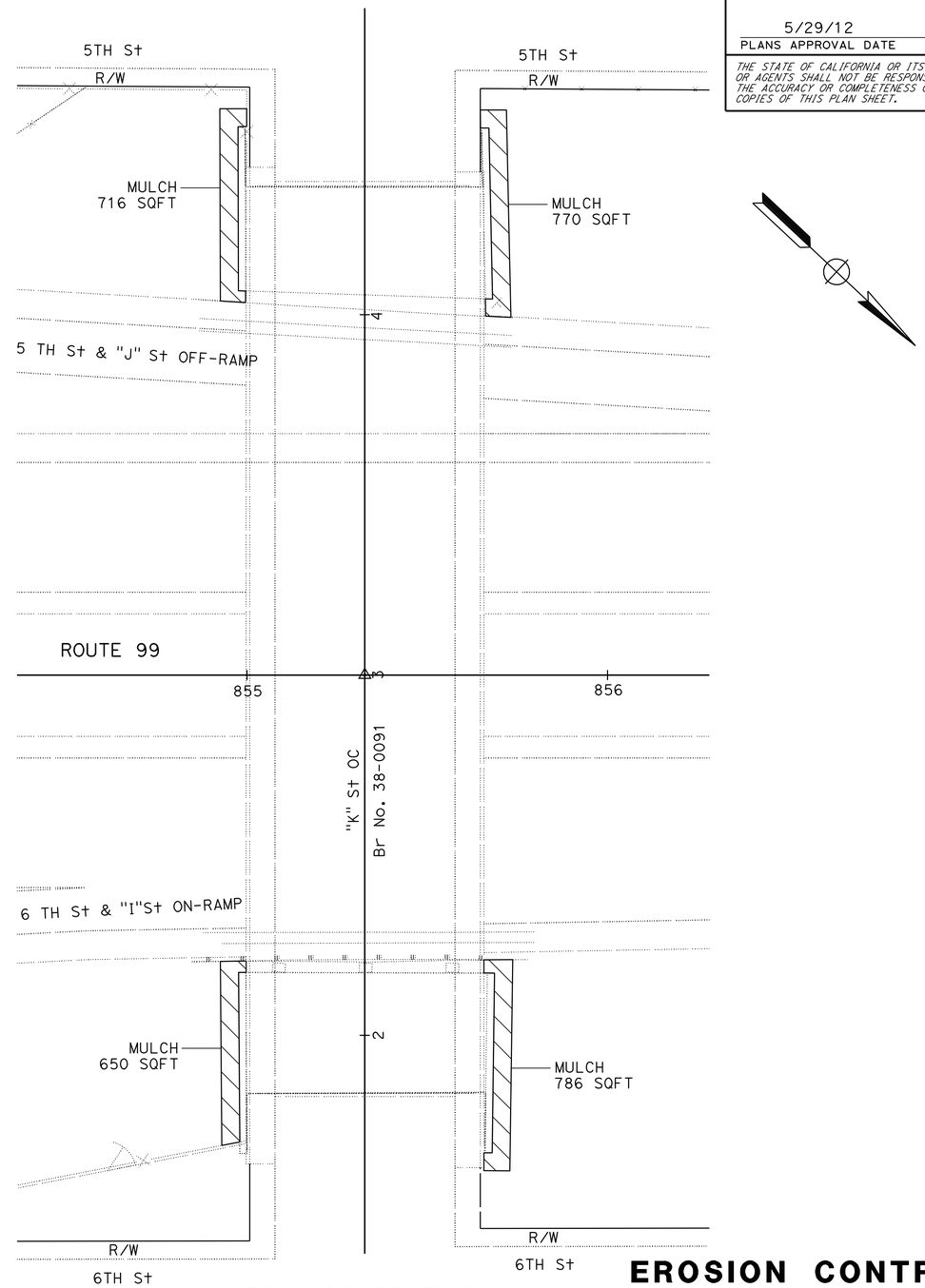

EROSION CONTROL
PM R16.03 (LOCATION 11)

EXISTING UTILITY FACILITIES HAVE NOT BEEN PLOTTED ON PORTIONS OF THESE PLANS
APPROVED FOR IRRIGATION WORK ONLY

EROSION CONTROL PLAN AND IRRIGATION PLAN

SCALE: 1" = 20'

EC-4

REVISED BY	DATE REVISED
BD	05/01/12

CALCULATED-DESIGNED BY: BILL DUTTERA
CHECKED BY: GUS ESCUTIA
SENIOR LANDSCAPE ARCHITECT: BRAD COLE

STATE OF CALIFORNIA - DEPARTMENT OF TRANSPORTATION
Caltrans® LANDSCAPE ARCHITECTURE

LAST REVISION 00-00-00
DATE PLOTTED => 14-AUG-2012
TIME PLOTTED => 09:18

Dist	COUNTY	ROUTE	POST MILES TOTAL PROJECT	SHEET No.	TOTAL SHEETS
10	Sta	99	R2.3/R20.2	17	36

LICENSED LANDSCAPE ARCHITECT

5/29/12
PLANS APPROVAL DATE

LICENSED LANDSCAPE ARCHITECT
William Duttera No. 4442
Signature
09/30/12
Renewal Date
05/21/12
Date
STATE OF CALIFORNIA

THE STATE OF CALIFORNIA OR ITS OFFICERS OR AGENTS SHALL NOT BE RESPONSIBLE FOR THE ACCURACY OR COMPLETENESS OF SCANNED COPIES OF THIS PLAN SHEET.

NOTE:

FOR ACCURATE RIGHT OF WAY DATA, CONTACT RIGHT OF WAY ENGINEERING AT THE DISTRICT OFFICE.

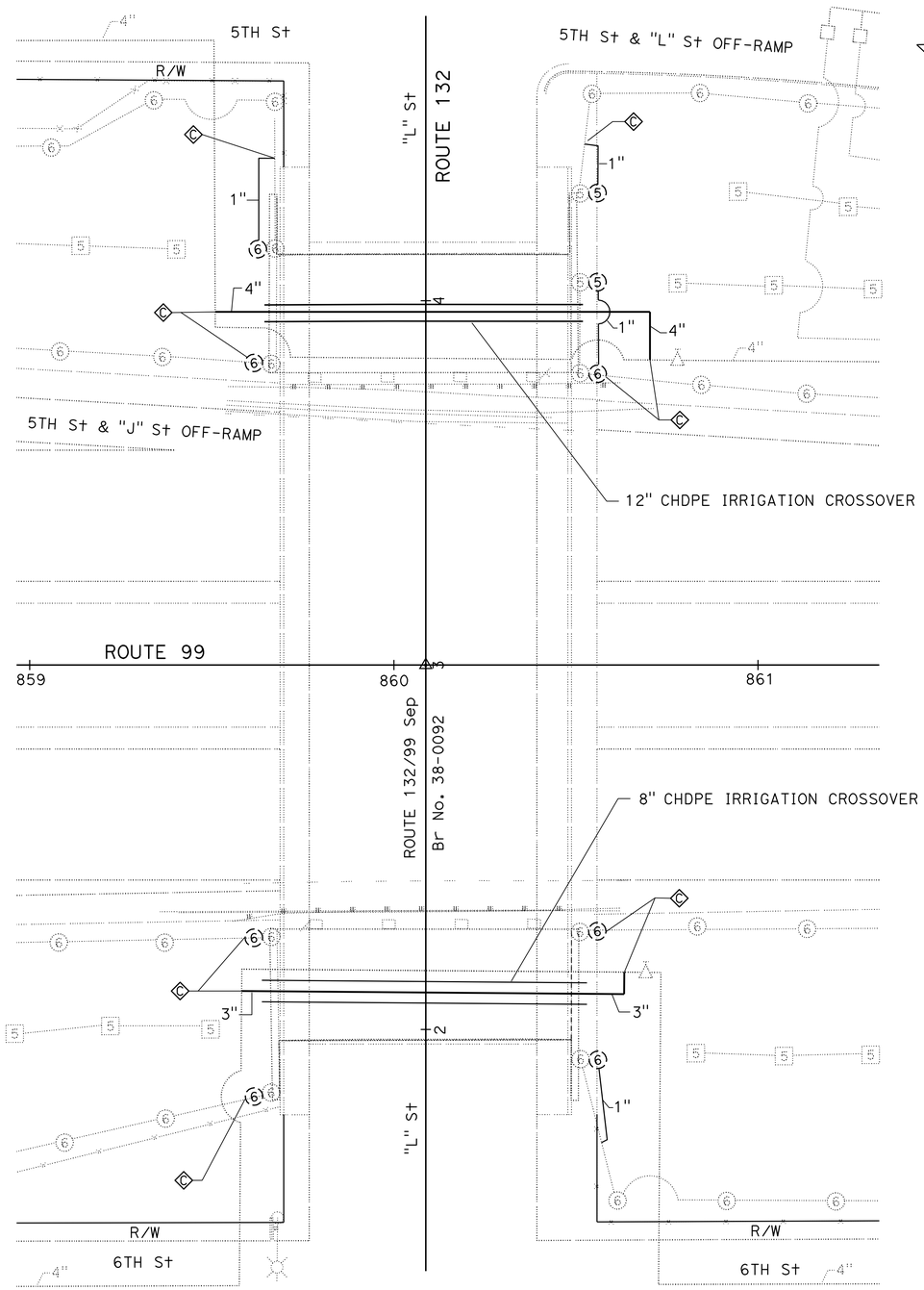

IRRIGATION RELOCATION
PM R16.12 (LOCATION 12)

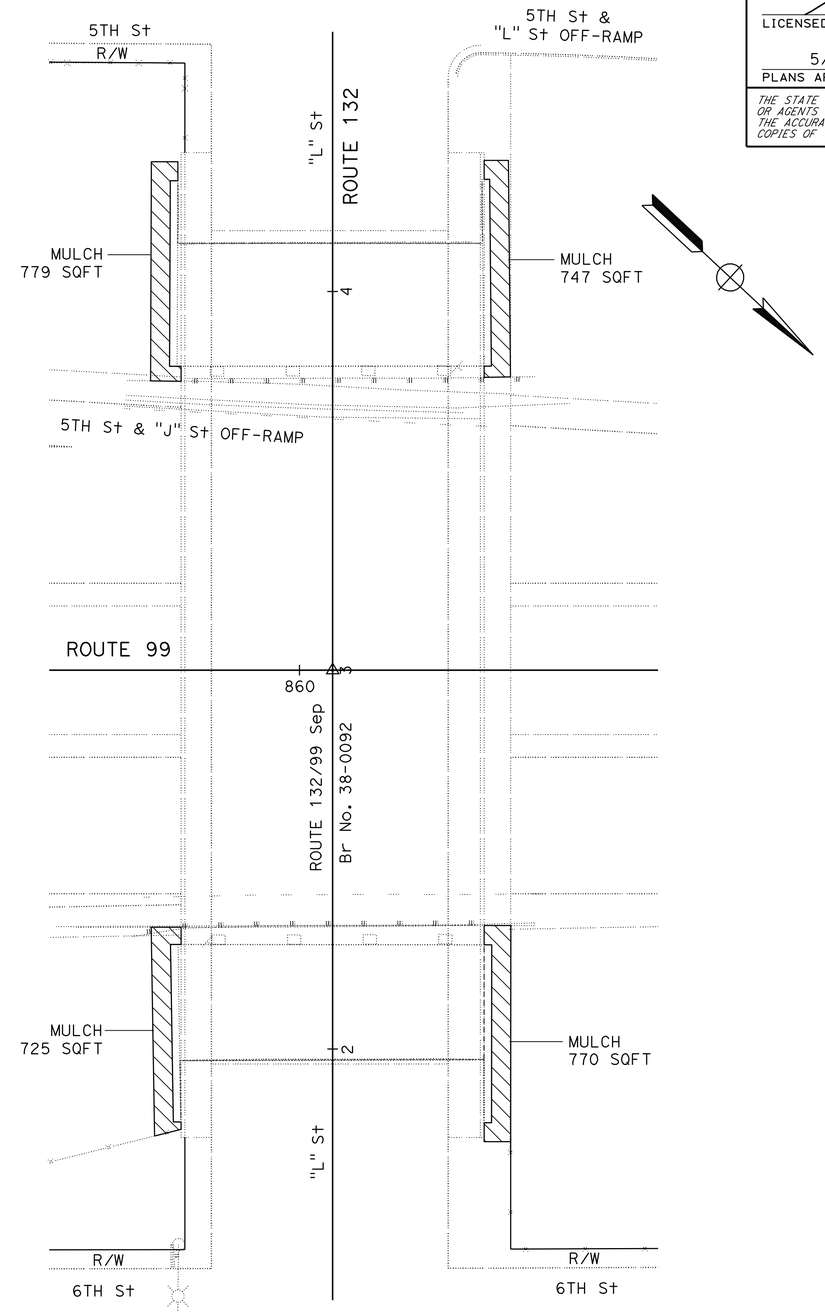

EROSION COMTROL
PM R16.12 (LOCATION 12)

EROSION CONTROL PLAN AND IRRIGATION PLAN

SCALE: 1" = 20'

EC-5

EXISTING UTILITY FACILITIES HAVE NOT BEEN PLOTTED ON PORTIONS OF THESE PLANS APPROVED FOR IRRIGATION WORK ONLY

STATE OF CALIFORNIA - DEPARTMENT OF TRANSPORTATION
Caltrans® LANDSCAPE ARCHITECTURE

SENIOR LANDSCAPE ARCHITECT: BRAD COLE
CALCULATED-DESIGNED BY: BILL DUTTERA
CHECKED BY: GUS ESCUTIA
REVISED BY: BD
DATE REVISED: 05/01/12

LAST REVISION: 00-00-00
DATE PLOTTED => 14-AUG-2012
TIME PLOTTED => 09:18

Dist	COUNTY	ROUTE	POST MILES TOTAL PROJECT	SHEET No.	TOTAL SHEETS
10	Sta	99	R2.3/R20.2	18	36

REGISTERED CIVIL ENGINEER 5/18/12 DATE

5/29/12
PLANS APPROVAL DATE

REGISTERED PROFESSIONAL ENGINEER HUE NGUYEN No. 74484 Exp. 12/31/13 CIVIL STATE OF CALIFORNIA

THE STATE OF CALIFORNIA OR ITS OFFICERS OR AGENTS SHALL NOT BE RESPONSIBLE FOR THE ACCURACY OR COMPLETENESS OF SCANNED COPIES OF THIS PLAN SHEET.

STATIONARY MOUNTED CONSTRUCTION AREA SIGNS

LEGEND:

(X) CONSTRUCTION AREA SIGN No.

SIGN	SIGN CODE FEDERAL	SIGN CODE CALIFORNIA	SIGN MESSAGE	PANEL SIZE	No. OF POST AND SIZE	No. OF SIGNS EA
(A)	G20-1		ROAD WORK NEXT 20 MILES	90" x 48"	2 - 4" x 6"	2
(B)	G20-2		END ROAD WORK	48" x 24"	1 - 4" x 6"	20
(C)	W20-1		ROAD WORK AHEAD	48" x 48"	1 - 4" x 6"	20
(D)		CPFIS	CONSTRUCTION PROJECT FUNDING INDENTIFICATION SIGN	132" x 84"	2 - 6" x 8"	2
(E)	W20-1		ROAD WORK AHEAD	36" x 36"	1 - 4" x 6"	16
(F)	G20-2		END ROAD WORK	36" x 18"	1 - 4" x 4"	15

NOTE: 1. LOCATIONS OF CONSTRUCTION AREA SIGNS SHOWN ARE APPROXIMATE EXACT SIGN LOCATIONS TO BE DETERMINED BY THE ENGINEER.

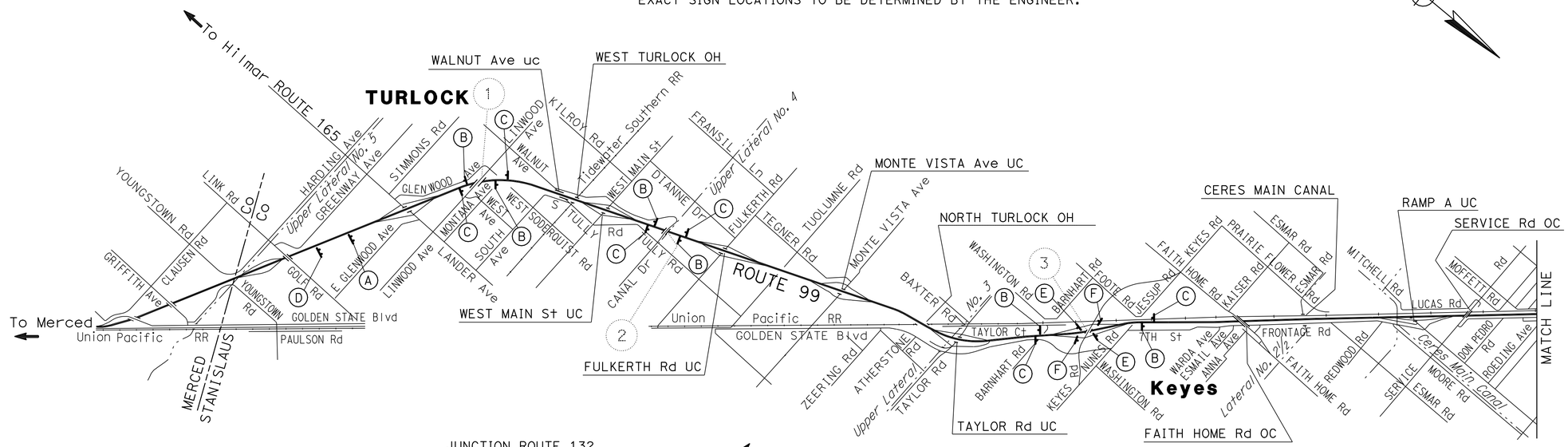

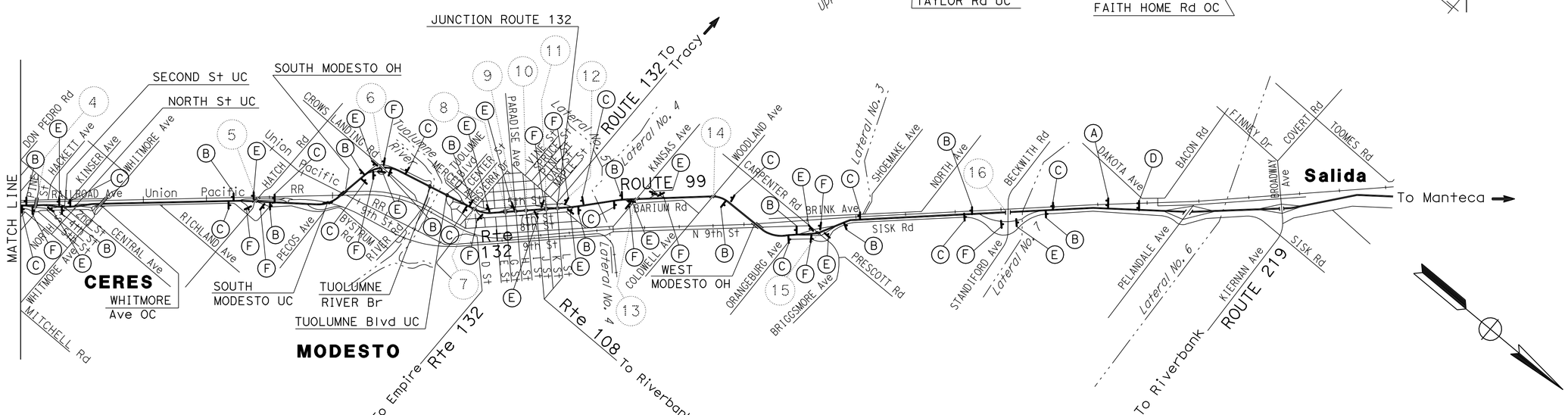

CONSTRUCTION AREA SIGNS

NO SCALE

CS-1

APPROVED FOR CONSTRUCTION AREA SIGN WORK ONLY

STATE OF CALIFORNIA - DEPARTMENT OF TRANSPORTATION
Caltrans
TRAFFIC DESIGN

FUNCTIONAL SUPERVISOR: MOHAMMED QATAMI
CALCULATED-DESIGNED BY: RAJINI TEKALKOTE
CHECKED BY: HUE H NGUYEN
REVISED BY: RT
DATE REVISED: 04/30/12

LAST REVISION 00-00-00
DATE PLOTTED => 14-AUG-2012
TIME PLOTTED => 09:18

Dist	COUNTY	ROUTE	POST MILES TOTAL PROJECT	SHEET No.	TOTAL SHEETS
10	Sta	99	R2.3/R20.2	19	36

Patricia L. Teczon 5/18/12
REGISTERED CIVIL ENGINEER DATE

5/29/12
PLANS APPROVAL DATE

REGISTERED PROFESSIONAL ENGINEER Patricia Teczon No. 37294 Exp. 6/30/14 CIVIL STATE OF CALIFORNIA

THE STATE OF CALIFORNIA OR ITS OFFICERS OR AGENTS SHALL NOT BE RESPONSIBLE FOR THE ACCURACY OR COMPLETENESS OF SCANNED COPIES OF THIS PLAN SHEET.

NOTE:

(N) NOT A SEPARATE PAY ITEM, FOR INFORMATION ONLY.

ABBREVIATION:

CHDPE - CORRUGATED HIGH DENSITY POLYETHYLENE

MULCH*

SHEET No.	MULCH	MULCH (N)
	CY	SQFT
EC-1	25.5	2751
EC-2	25.9	2793
EC-3	25.8	2794
EC-4	27.1	2922
EC-5	27.9	3021
TOTAL	132.2	

* APPLY MULCH TO A UNIFORM DEPTH OF 3 INCHES.

PREPARE AND PAINT CONCRETE

Loc	PM	DESCRIPTION	(N) LENGTH		(N) HEIGHT		PREPARE AND PAINT CONCRETE SURFACES	
			FACING SB TRAFFIC	FACING NB TRAFFIC	FACING SB TRAFFIC	FACING NB TRAFFIC	FACING SB TRAFFIC	FACING NB TRAFFIC
			Ft	Ft	Ft	Ft	SQFT	SQFT
1	R2.29	LINWOOD Ave OC	370	370	0.4	0.4	148	148
2	R4.01	CANAL Dr OC	260	260	0.4	0.4	104	104
3	R7.81	KEYES Rd OC	300	299	1.1	1.5	330	449
4	R11.30	PINE St OC	400	400	1.1	1.1	440	440
5	R13.26	HATCH Rd OC	230	230	1.1	1.1	253	253
6	R14.47	CROWS LANDING Rd OC	365	368	1.1	1.1	402	405
7	R15.37	SIERRA Dr OC	285	300	1.1	1.1	314	330
8	R15.66	"G" St OC	268	272	1.1	1.1	295	300
9	R15.75	"H" St OC	234	234	1.1	1.1	258	258
10	R15.85	"I" St OC	234	234	1.1	1.1	258	258
11	R16.03	"K" St OC	282	283	1.1	1.1	310	311
12	R16.12	ROUTE 132/99 SEPARATION	247	247	1.1	1.1	272	272
13	R16.82	KANSAS Ave OC	329	335	1.1	1.1	362	369
14	R17.51	WOODLAND Ave OC	265	266	1.1	1.5	292	399
15	M18.52	CARPENTER/BRIGGSMORE Rd OC	340	320	1.5	1.5	510	480
16	R20.22	BECKWITH Rd OC	262	261	1.5	1.5	393	392
SUBTOTAL							4,941	5,168
TOTAL							10,109	

IRRIGATION CROSSOVERS

	Loc	DESCRIPTION	SIDE L†	SIDE R†	CONDUIT TYPE (3) SIZE (INCH) 12" LENGTH (LF)	CONDUIT TYPE (3) SIZE (INCH) 8" LENGTH (LF)	(N) WATER LINE CROSSOVER SIZE (INCH)	(N) SPRINKLER CONTROL CROSSOVER SIZE (INCH)
NB	8	"G" St OC	-	X	75′	-	4"	4"
NB	9	"H" St OC	-	X	80′	-	4"	4"
NB	10	"I" St OC	-	X	94′	-	4"	4"
NB	11	"K" St OC	-	X	-	75′	4"	4"
NB	12	ROUTE 132/99 Sep	-	X	-	88′	3"	3"
SB	8	"G" St OC	X	-	-	79′	4"	4"
SB	9	"H" St OC	X	-	-	80′	4"	4"
SB	10	"I" St OC	X	-	-	94′	4"	4"
SB	11	"K" St OC	X	-	-	74′	4"	4"
SB	12	ROUTE 132/99 Sep	X	-	89′	-	4"	4"
TOTAL					338′	490′		

(X) - DENOTES REQUIREMENT

CONDUIT TYPE:

(APPLICABLE WHEN CIRCLED BELOW AND SHOWN UNDER THE 'CONDUIT TYPE' COLUMN HEADING)

1 BITUMINOUS COATED CORRUGATED STEEL PIPE (0.064 INCH THICK)

2 CORRUGATED STEEL PIPE (0.064 INCH THICK)

(3) CORRUGATED HIGH DENSITY POLYETHYLENE PIPE

4 ALTERNATIVE CONDUIT

5 WELDED STEEL PIPE

RELOCATE IRRIGATION FACILITIES

	Loc	PM	DESCRIPTION	SPRINKLER A-5 GEAR DRIVEN POP-UP PART CIRCLE	SPRINKLER A-6 GEAR DRIVEN POP-UP PART CIRCLE	GATE VALVES
			SYMBOL	(5)	(6)	
			UNIT	EA	EA	EA
NB	8	R15.66	"G" St OC	-	5	1
NB	9	R15.75	"H" St OC	-	4	1
NB	10	R15.85	"I" St OC	-	4	1
NB	11	R16.03	"K" St OC	-	4	-
NB	12	R16.12	ROUTE 132/99 Sep	-	4	-
SB	8	R15.66	"G" St OC	1	4	-
SB	9	R15.75	"H" St OC	-	4	-
SB	10	R15.85	"I" St OC	-	4	-
SB	11	R16.03	"K" St OC	-	2	-
SB	12	R16.12	ROUTE 132/99 Sep	2	3	-

SLOPE PAVING ITEMS

	PM	DESCRIPTION	ROADWAY EXCAVATION	(N) EMBANKMENT	SLOPE PAVING (CONCRETE)
			CY	CY	CY
NB	R15.66	"G" St OC	49	11	33.0
NB	R15.75	"H" St OC	107	7	32.8
NB	R15.85	"I" St OC	148	4	37.8
NB	R16.03	"K" St OC	105	3	30.0
NB	R16.12	ROUTE 132/99 Sep	112	5	37.7
SB	R15.66	"G" St OC	50	12	31.7
SB	R15.75	"H" St OC	123	5	32.7
SB	R15.85	"I" St OC	127	6	37.3
SB	R16.03	"K" St OC	75	10	32.6
SB	R16.12	ROUTE 132/99 Sep	86	8	36.3
TOTAL			982		341.9

SUMMARY OF QUANTITIES
Q-1

REVISED BY	SL
DATE REVISED	05/21/12
STEVE LAWRENCE	PATRICIA TECZON
CALCULATED-DESIGNED BY	CHECKED BY
FUNCTIONAL SUPERVISOR	CAROLINE REYES

STATE OF CALIFORNIA - DEPARTMENT OF TRANSPORTATION
Caltrans®
DESIGN

LAST REVISION 00-00-00
DATE PLOTTED => 14-AUG-2012
TIME PLOTTED => 09:18

Dist	COUNTY	ROUTE	POST MILES TOTAL PROJECT	SHEET No.	TOTAL SHEETS
10	Sta	99	R2.3/R20.2	20	36

LICENSED LANDSCAPE ARCHITECT

5/29/12
PLANS APPROVAL DATE

LICENSED LANDSCAPE ARCHITECT
William Duttera No. 3442
Signature
09/30/12
Renewal Date
05/21/12
Date
STATE OF CALIFORNIA

THE STATE OF CALIFORNIA OR ITS OFFICERS OR AGENTS SHALL NOT BE RESPONSIBLE FOR THE ACCURACY OR COMPLETENESS OF SCANNED COPIES OF THIS PLAN SHEET.

SPRINKLER SCHEDULE

SYMBOL	TYPE	DESCRIPTION	SPRAY PATTERN	OPERATING PRESSURE (psi)	PRESSURE COMPENSATING	PLUS/MINUS 5% DISCHARGE: GALLONS PER MINUTE (GPM)	PLUS/MINUS 5% DISCHARGE: GALLONS PER HOUR (GPH)	PLUS/MINUS 5%: RADIUS (ft)	PLUS/MINUS 5%: WIDTH x LENGTH (ft)	MATERIAL	INLET CONNECTION (NPT INCH)	POSITIVE-LOCKING Adj ARC STOP	BACKSPLASH PREVENTER	DIFFUSER PIN	DISTANCE CONTROL FLAP	Adj DISCHARGE	RISER: TYPE	RISER: MATERIAL: PLASTIC	RISER: MATERIAL: GALVANIZED	RISER: SIZE (IPS INCH)	RISER: HEIGHT (INCH)	RISER: FLOW SHUTOFF DEVICE	⑤ SWING JOINT (TYPE)	RISER SUPPORT	SPRINKLER PROTECTOR (TYPE)	REMARKS
⑥	A-6	GEAR DRIVEN	P	50	X	1.2	-	31	-	PL	¾	X	-	-	X	X	VI	X	-	¾	-	-	II	-	X	⑦ 12" POP-UP
⑤	A-5	GEAR DRIVEN	P	50	X	1.2	-	41	-	PL	¾	X	-	-	X	X	IV	X	-	¾	12	-	II	X	-	⑦

(X) IN BOX DENOTES REQUIREMENT

APPLICABLE WHEN CIRCLED BELOW:

1 - SEE SPECIAL PROVISIONS.
2 - IF A PRESSURE COMPENSATING DEVICE IS SPECIFIED, THE DISCHARGE AND RADII SHOWN REFLECT ITS USE.
3 - ARC STOP SHALL BE FITTED WITH A NUT AND BOLT.
4 - VINYL-COATED CAST IRON HOUSING.
⑤ - SWING JOINTS REQUIRED ADJACENT TO SHOULDERS, CURBS, SIDEWALKS, DIKES AND AS SHOWN ON PLANS.
6 - UNLESS OTHERWISE SHOWN ON PLANS.
⑦ - SPRINKLER HEAD PLACEMENT AS SHOWN ON PLANS.

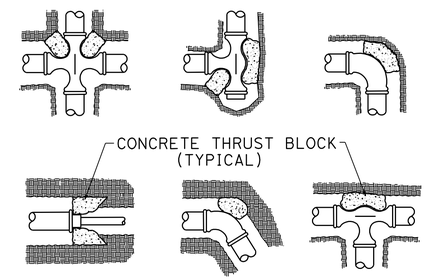

THRUST BLOCKS

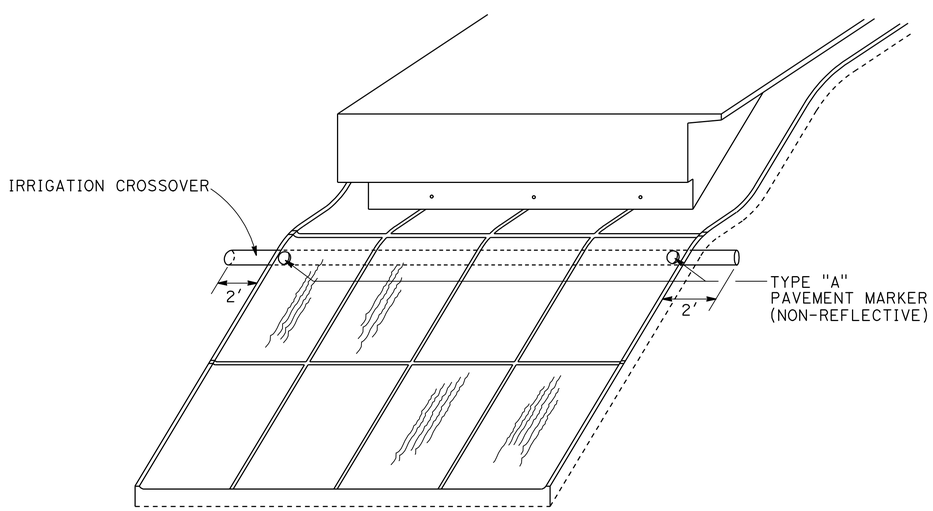

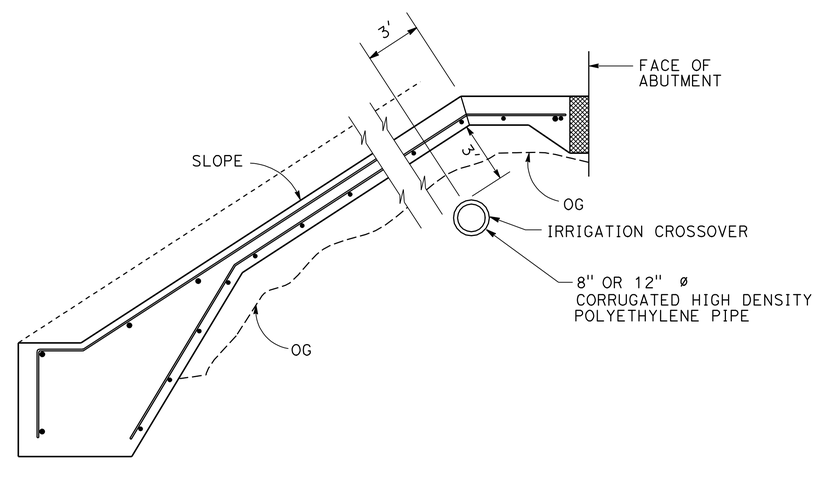

IRRIGATION CROSSOVER DETAILS

FOR MORE INFORMATION SEE CONSTRUCTION DETAILS

LANDSCAPE DETAILS

NO SCALE

LD-1

STATE OF CALIFORNIA - DEPARTMENT OF TRANSPORTATION
Caltrans® LANDSCAPE ARCHITECTURE

SENIOR LANDSCAPE ARCHITECT: BRAD COLE
CALCULATED-DESIGNED BY: BILL DUTTERA
CHECKED BY: GUS ESCUTIA
REVISED BY: BD
DATE REVISED: 05/01/12

LAST REVISION 00-00-00
DATE PLOTTED => 14-AUG-2012
TIME PLOTTED => 09:18

DIST	COUNTY	ROUTE	POST MILES TOTAL PROJECT	SHEET NO.	TOTAL SHEETS
10	Sta	99	R2.3/R20.2	21	36

LICENSED LANDSCAPE ARCHITECT

June 5, 2009
PLANS APPROVAL DATE

The State of California or its officers or agents shall not be responsible for the accuracy or completeness of electronic copies of this plan sheet.

LICENSED LANDSCAPE ARCHITECT — Gregory A. Balzer 2576 — 10-28-10 Expiration Date — 2-28-11 Renewal Date — 5-14-09 Date — STATE OF CALIFORNIA

To accompany plans dated 5/29/12

A

AB	aggregate base
ABS	acrylonitrile-butadiene-styrene
AC	asphalt concrete
Adj	adjacent/adjustable
AIC	auxiliary irrigation controller
Alt	alternative
AMEND	amendment
ARV	air release valve
AUTO	automatic
AUX	auxiliary
AVB	atmospheric vacuum breaker

B

B&B	balled and burlapped
B/B	brass/bronze
B/B/PL	brass/bronze/plastic
B/PL	brass/plastic
BFM	bonded fiber matrix
Bit Ctd	bituminous coated
BP	booster pump
BPA	backflow preventer assembly
BPAE	backflow preventer assembly in enclosure
BPE	backflow preventer enclosure
BV	ball valve

C

CAP	corrugated aluminum pipe
CARV	combination air release valve
CCA	cam coupler assembly
CEC	controller enclosure cabinet
CHDPE	corrugated high density polyethylene
CL	chain link
CNC	control and neutral conductors
Conc	concrete
Cond	conduit
CSP	corrugated steel pipe
CST	center strip
CV	check valve

D

Dia	diameter
DIP	ductile iron pipe
DN	diameter nominal

E

EA	each
Elect	electric/electrical
Elev	elevation
ENCL	enclosure
EP	edge of pavement
ES	edge of shoulder
EST	end strip
ESTB	establishment
ETW	edge of traveled way

F

F	full circle
F/P	full/part circle
FAU	filter assembly unit
FCV	flow control valve
FERT	fertilizer
FG	finished grade
FIPT	female iron pipe thread
FIS	fertilizer injector system
FL	flow line
FM	flow monitor
FS	flow sensor
Ft	foot/feet
FV	flush valve

G

GAL	Gallon(s)
Galv	galvanized
GARV	garden valve
GPH	gallons per hour
GPM	gallons per minute
GSP	galvanized steel pipe
GV	gate valve

H

H	half circle
HB	hose bib
HDPE	high density polyethylene
HP	horsepower/hinge point
HPL	high pressure line
Hwy	highway

I

IC	irrigation controller
ICC	irrigation controller(s) in controller enclosure cabinet
ID	inside diameter
In	inches
IFS	irrigation filtration system
IPS	iron pipe size
IPT	iron pipe thread
Irr	irrigation

L

L	length
LF	linear foot

M

Max	maximum
MBGR	metal beam guard railing
MCV	manual control valve
MIC	master irrigation controller
Min	minimum
MIPT	male iron pipe thread
Misc	miscellaneous
Mtl	material
MVP	maintenance vehicle pullout

N

NCN	no common name
NL	nozzle line
No.	number
NPT	national pipe thread

O

O/C	on center
OD	outside diameter
Oz	ounce

P

P	part circle
PB	pull box
PCC	portland cement concrete
PE	polyethylene
Pkt	packet
PL	plastic
PLT	plant/planting
PLT ESTB	plant establishment
PM	post mile
PR	pressure rated
PRLV	pressure relief valve
PSFM	polymer stabilized fiber matrix
PSI	pounds per square inch
PRV	pressure reducing valve
PVC	polyvinyl chloride
Pvmt	pavement

Q

Q	quarter circle
QCV	quick coupling valve

R

R	radius
RCP	reinforced concrete pipe
RCV	remote control valve
RCVM	remote control valve (master)
RCVMF	remote control valve (master) w/ flow meter
RCW	recycled/reclaimed water
RECP	rolled erosion control product
REQ	required
R/W	right of way

S

S	slip
SCC	sprinkler control conduit
SCH	schedule
SF	state-furnished
Shld	shoulder
SQFT	square foot/feet
SQYD	square yard(s)
SST	side strip
Sta	station
Std	standard
SW	sidewalk/sound wall

T

T	third circle/thread
TLS	truck loading standpipe
TQ	three quarter circle
TRM	turf reinforcement mat
TRVD	traveled
TT	two third circle
Typ	typical

U

UG	underground

V

VAU	valve assembly unit

W

W	width
W/	with
WM	water meter
WS	wye strainer
WSP	welded steel pipe
WWM	welded wire mesh

NOTE:

FOR ADDITIONAL ABBREVIATIONS, SEE STANDARD PLANS A10A AND A10B.

STATE OF CALIFORNIA
DEPARTMENT OF TRANSPORTATION

PLANTING AND IRRIGATION ABBREVIATIONS

NO SCALE

RSP H1 DATED JUNE 5, 2009 SUPERSEDES STANDARD PLAN H1
DATED MAY 1, 2006 - PAGE 201 OF THE STANDARD PLANS BOOK DATED MAY 2006.

REVISED STANDARD PLAN RSP H1

2006 REVISED STANDARD PLAN RSP H1

5-28-09

DIST	COUNTY	ROUTE	POST MILES TOTAL PROJECT	SHEET NO.	TOTAL SHEETS
10	Sta	99	R2.3/R20.2	22	36

LICENSED LANDSCAPE ARCHITECT

June 5, 2009
PLANS APPROVAL DATE

LICENSED LANDSCAPE ARCHITECT — Gregory A. Balzer — No. 2576 — Renewal Date 2-28-11 — Date 5-14-09 — STATE OF CALIFORNIA

The State of California or its officers or agents shall not be responsible for the accuracy or completeness of electronic copies of this plan sheet.

To accompany plans dated 5/29/12

EXISTING	PROPOSED	ITEM DESCRIPTION
		WATER METER (WM)
		BACKFLOW PREVENTER ASSEMBLY (BPA)
		BACKFLOW PREVENTER ASSEMBLY IN ENCLOSURE (BPAE)
		BACKFLOW PREVENTER ENCLOSURE (BPE)
		BOOSTER PUMP (BP)
		TRUCK LOADING STANDPIPE (TLS)
FS	FS	FLOW SENSOR (FS)
X	X	MASTER IRRIGATION CONTROLLER (MIC)
		AUXILIARY IRRIGATION CONTROLLER (AIC)
		IRRIGATION CONTROLLER (IC)/ IRRIGATION CONTROLLER (IC) (BATTERY) IRRIGATION CONTROLLER (IC) (SOLAR)
		IRRIGATION CONTROLLER(S) IN CONTROLLER ENCLOSURE CABINET (ICC)
		CONTROL AND NEUTRAL CONDUCTORS (CNC)
SCC	SCC	SPRINKLER CONTROL CONDUIT (SCC)
		IRRIGATION CROSSOVER
		EXTEND IRRIGATION CROSSOVER
		IRRIGATION SLEEVE
dip	DIP	DUCTILE IRON PIPE (SUPPLY LINE) (MAIN) (DIP)
		GALVANIZED STEEL PIPE (SUPPLY LINE) (MAIN) (GSP)
		GALVANIZED STEEL PIPE (SUPPLY LINE) (LATERAL) (GSP)
		PLASTIC PIPE (PR 200) (SUPPLY LINE) (MAIN)
		PLASTIC PIPE (PR 200) (SUPPLY LINE) (LATERAL)
		PLASTIC PIPE (IRRIGATION LINE)
		REMOTE CONTROL VALVE (RCV) REMOTE CONTROL VALVE (MASTER) (RCVM) REMOTE CONTROL VALVE (MASTER) W/FLOW METER (RCVMF)
		MANUAL CONTROL VALVE (MCV)
		VALVE ASSEMBLY UNIT (VAU)
		WYE STRAINER (WS)
		FILTER ASSEMBLY UNIT (FAU)
		GATE VALVE (GV)
		BALL VALVE (BV)

EXISTING	PROPOSED	ITEM DESCRIPTION
		QUICK COUPLING VALVE (QCV)
		CAM COUPLER ASSEMBLY (CCA)
		PRESSURE REDUCING VALVE (PRV)
		PRESSURE RELIEF VALVE (PRLV)
		FLOW CONTROL VALVE (FCV)
		COMBINATION AIR RELEASE VALVE (CARV)
		CHECK VALVE (CV)
		FLUSH VALVE (FV)
		NOZZLE LINE W/TURNING UNION
		IRRIGATION SYSTEM
		IRRIGATION SYSTEM TO BE REMOVED
		CHAIN LINK GATE
		QUICK COUPLING VALVE W/SPRINKLER PROTECTOR
3	3	SPRINKLER W/SPRINKLER PROTECTOR
	C	CONNECT TO EXISTING SYSTEM
		CAP
		CAP EXISTING

VALVE CODE

RCV SIZE
IRRIGATION CONTROLLER
CONTROLLER STATION
VALVE IN PARALLEL (IF APPLICABLE)
GPM
QUANTITY OF SPRINKLERS (WHEN SHOWN)

* 2½"-A-2b-40 -60

MCV SIZE
VALVE NUMBER
GPM
QUANTITY OF TYPE SPRINKLERS (WHEN SHOWN)

* 2"-3-30 -50

* VALVE CODES FOR EXISTING VALVES ARE SHOWN IN A DASHED ENCLOSURE.

STATE OF CALIFORNIA
DEPARTMENT OF TRANSPORTATION

PLANTING AND IRRIGATION SYMBOLS

NO SCALE

RSP H2 DATED JUNE 5, 2009 SUPERSEDES RSP H2 DATED MARCH 7, 2008 AND STANDARD PLAN H2 DATED MAY 1, 2006 - PAGE 202 OF THE STANDARD PLANS BOOK DATED MAY 2006.

REVISED STANDARD PLAN RSP H2

2006 REVISED STANDARD PLAN RSP H2

5-11-09

DIST	COUNTY	ROUTE	POST MILES TOTAL PROJECT	SHEET NO.	TOTAL SHEETS
10	Sta	99	R2.3/R20.2	23	36

Randell D. Hiatt
REGISTERED CIVIL ENGINEER

June 6, 2008
PLANS APPROVAL DATE

REGISTERED PROFESSIONAL ENGINEER
Randell D. Hiatt
No. C50200
Exp. 6-30-09
CIVIL
STATE OF CALIFORNIA

The State of California or its officers or agents shall not be responsible for the accuracy or completeness of electronic copies of this plan sheet.

To accompany plans dated 5/29/12

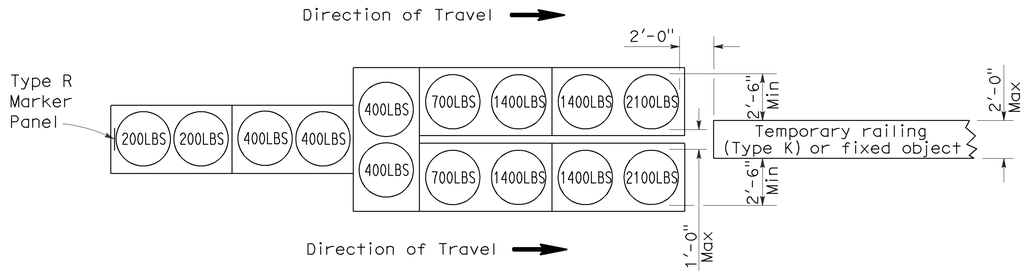

ARRAY 'TU14'

Approach speed 45 mph or more

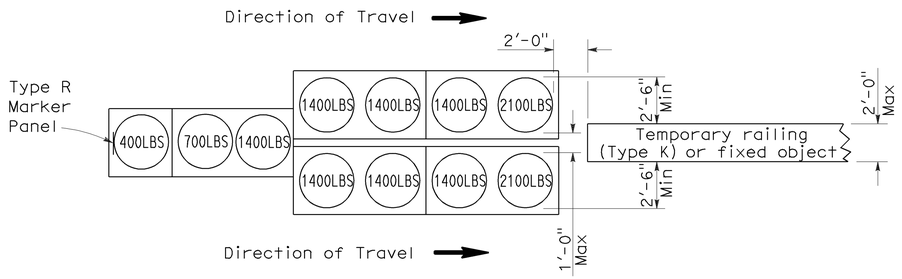

ARRAY 'TU11'

Approach speed less than 45 mph

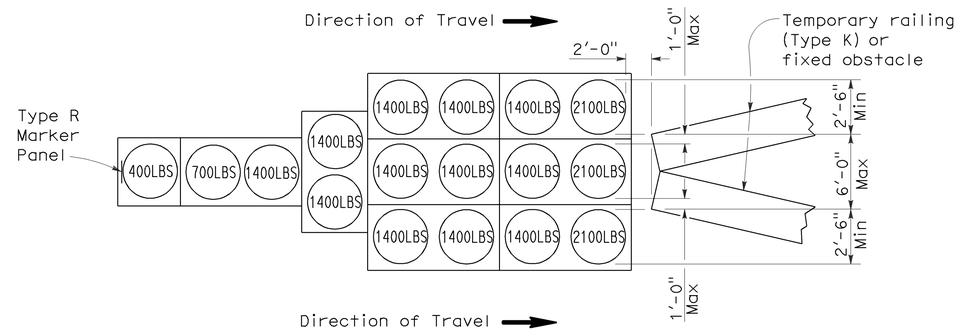

ARRAY 'TU17'

Approach speed less than 45 mph

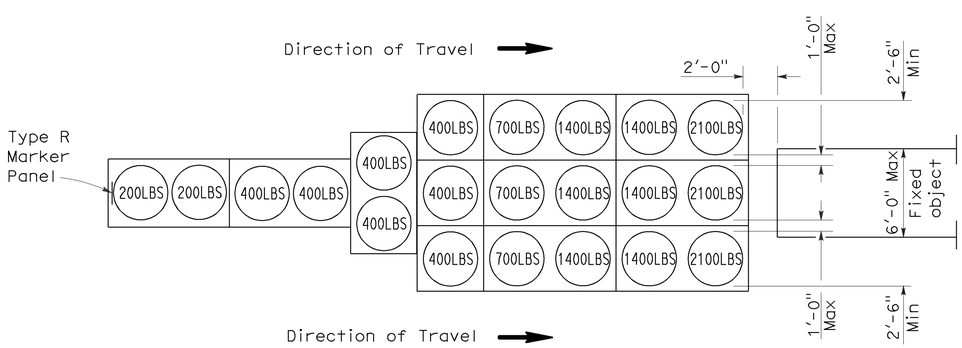

ARRAY 'TU21'

Approach speed 45 mph or more

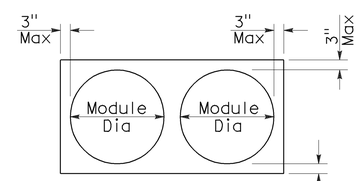

PLAN

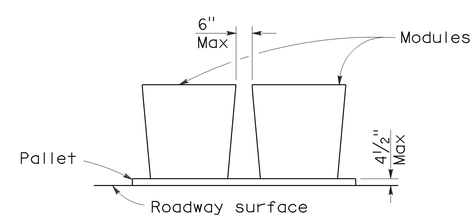

ELEVATION

CRASH CUSHION PALLET DETAIL

See Note 7

NOTES:

1. (XXX) Indicates sand filled module location and weight of sand in pounds for each module. Module spacing is based on the greater diameter of the module.
2. All sand weights are nominal.
3. Temporary crash cushion arrays shall not encroach on the traveled way.
4. Place the top of Type R marker panel 1" below the module lid.
5. Refer to Standard Plan A73B for marker details.
6. Approach speeds indicated conform to NCHRP 350 Report criteria.
7. Use of pallets is optional.

STATE OF CALIFORNIA
DEPARTMENT OF TRANSPORTATION

TEMPORARY CRASH CUSHION, SAND FILLED (UNIDIRECTIONAL)

NO SCALE

RSP T1A DATED JUNE 6, 2008 SUPERSEDES STANDARD PLAN T1A
DATED MAY 1, 2006 - PAGE 211 OF THE STANDARD PLANS BOOK DATED MAY 2006.

REVISED STANDARD PLAN RSP T1A

2006 REVISED STANDARD PLAN RSP T1A

DIST	COUNTY	ROUTE	POST MILES TOTAL PROJECT	SHEET NO.	TOTAL SHEETS
10	Sta	99	R2.3/R20.2	24	36

Randell D. Hiatt
REGISTERED CIVIL ENGINEER

June 6, 2008
PLANS APPROVAL DATE

REGISTERED PROFESSIONAL ENGINEER
Randell D. Hiatt
No. C50200
Exp. 6-30-09
CIVIL
STATE OF CALIFORNIA

The State of California or its officers or agents shall not be responsible for the accuracy or completeness of electronic copies of this plan sheet.

To accompany plans dated 5/29/12

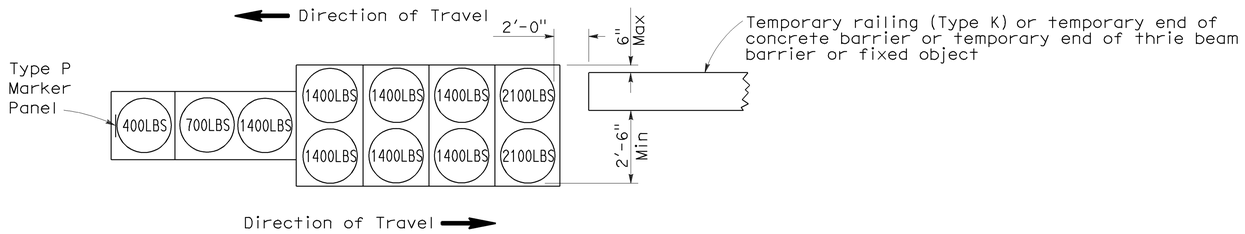

ARRAY 'TB11'

Approach speed less than 45 mph

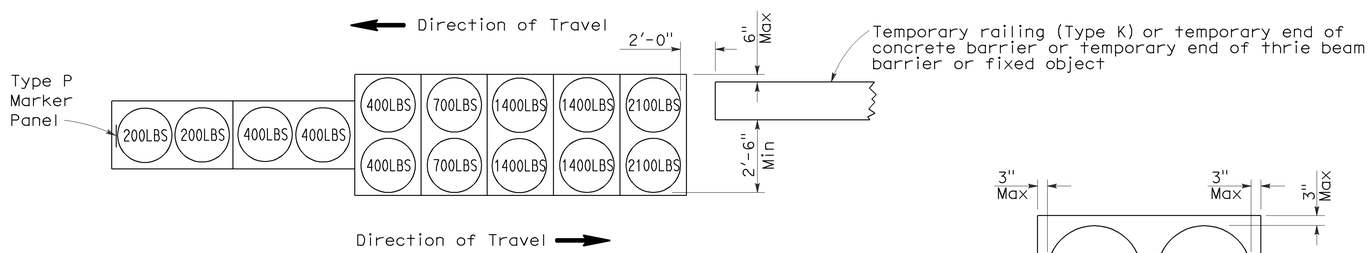

ARRAY 'TB14'

Approach speed 45 mph or more

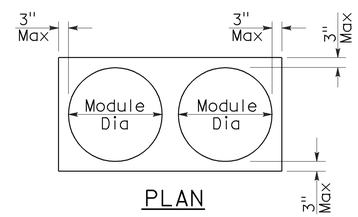

PLAN

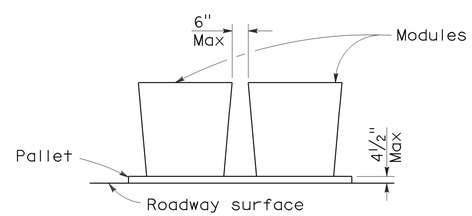

ELEVATION

CRASH CUSHION PALLET DETAIL

See Note 7

NOTES:

1. (XXX) Indicates sand filled module location and weight of sand in pounds for each module. Module spacing is based on the greater diameter of the module.
2. All sand weights are nominal.
3. Temporary crash cushion arrays shall not encroach on the traveled way.
4. Place the Type P marker panel so that the bottom of the panel rests upon the pallet.
5. Refer to Standard Plan A73B for marker details.
6. Approach speeds indicated conform to NCHRP 350 Report criteria.
7. Use of pallets is optional.

STATE OF CALIFORNIA
DEPARTMENT OF TRANSPORTATION

TEMPORARY CRASH CUSHION, SAND FILLED (BIDIRECTIONAL)

NO SCALE

RSP T1B DATED JUNE 6, 2008 SUPERSEDES STANDARD PLAN T1B
DATED MAY 1, 2006 - PAGE 212 OF THE STANDARD PLANS BOOK DATED MAY 2006.

REVISED STANDARD PLAN RSP T1B

2006 REVISED STANDARD PLAN RSP T1B

5-15-08

DIST	COUNTY	ROUTE	POST MILES TOTAL PROJECT	SHEET NO.	TOTAL SHEETS
10	Sta	99	R2.3/R20.2	25	36

Randell D. Hiatt
REGISTERED CIVIL ENGINEER

June 6, 2008
PLANS APPROVAL DATE

REGISTERED PROFESSIONAL ENGINEER
Randell D. Hiatt
No. C50200
Exp. 6-30-09
CIVIL
STATE OF CALIFORNIA

The State of California or its officers or agents shall not be responsible for the accuracy or completeness of electronic copies of this plan sheet.

To accompany plans dated 5/29/12

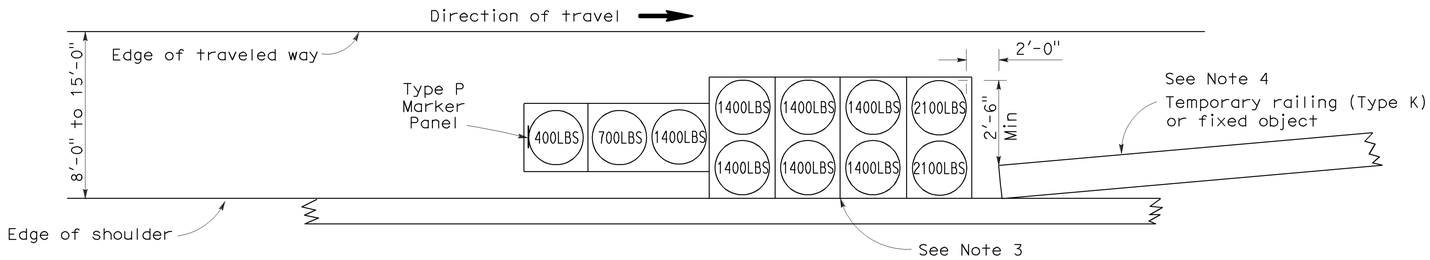

ARRAY 'TS11'

Approach speed less than 45 mph
See Note 9

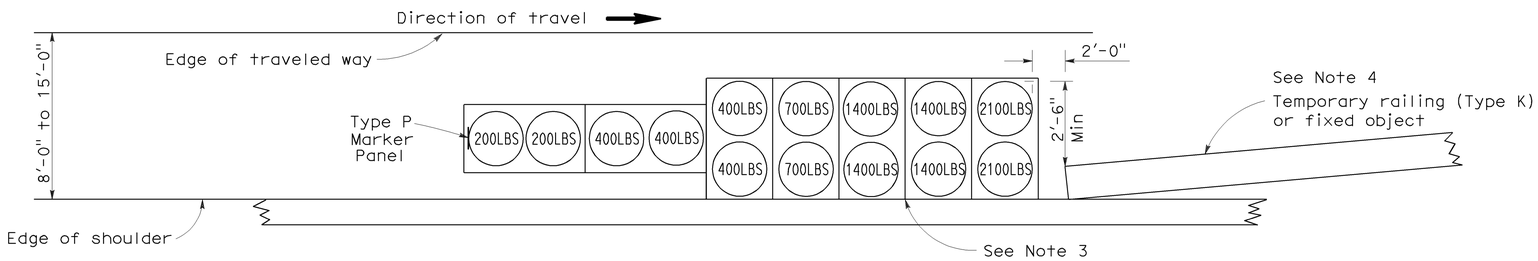

ARRAY 'TS14'

Approach speed 45 mph or more
See Note 9

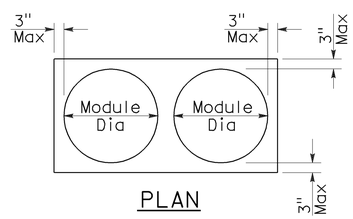

PLAN

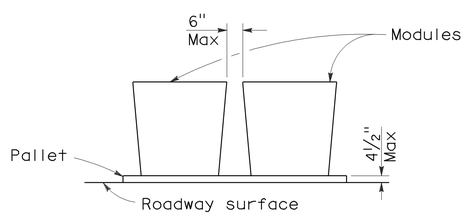

ELEVATION

CRASH CUSHION PALLET DETAIL

See Note 11

NOTES:

1. (XXX) Indicates sand filled module location and weight of sand in pounds for each module. Module spacing is based on the greater diameter of the module.
2. All sand weights are nominal.
3. The temporary crash cushion arrays shown on this plan shall be used only in locations where there will be traffic on one side of the temporary crash cushion array.
4. If the fixed object or approach end of the temporary railing is less than 15'-0" from the edge of traveled way, a temporary crash cushion is required in a construction or work zone.
5. Temporary crash cushion arrays shall not encroach on the traveled way.
6. Arrays for median shoulders shall conform to details shown on this plan for outside shoulders.
7. Place the Type P marker panel so that the bottom of the panel rests upon the pallet and faces traffic.
8. Refer to Standard Plan A73B for marker details.
9. For shoulder widths less than 8'-0", appropriate approved crash cushion protection, other than sand filled modules, shall be provided at fixed objects and at approach ends of temporary railing. The specific type of crash cushion shall be as shown on the project plans or as specified in the Special Provisions, or if not shown on the project plans or specified in the Special Provisions, shall be as approved by the Engineer.
10. Approach speeds indicated conform to NCHRP 350 Report criteria.
11. Use of pallets is optional.

STATE OF CALIFORNIA
DEPARTMENT OF TRANSPORTATION

TEMPORARY CRASH CUSHION, SAND FILLED (SHOULDER INSTALLATIONS)

NO SCALE

RSP T2 DATED JUNE 6, 2008 SUPERSEDES STANDARD PLAN T2
DATED MAY 1, 2006 - PAGE 213 OF THE STANDARD PLANS BOOK DATED MAY 2006.

REVISED STANDARD PLAN RSP T2

2006 REVISED STANDARD PLAN RSP T2

5-15-08

Dist	COUNTY	ROUTE	POST MILES TOTAL PROJECT	SHEET No.	TOTAL SHEETS
10	Sta	99	R2.3/R20.2	26	36

Randell D. Hiatt
REGISTERED CIVIL ENGINEER

May 20, 2011
PLANS APPROVAL DATE

REGISTERED PROFESSIONAL ENGINEER
Randell D. Hiatt
No. C50200
Exp. 6-30-11
CIVIL
STATE OF CALIFORNIA

The State of California or its officers or agents shall not be responsible for the accuracy or completeness of electronic copies of this plan sheet.

To accompany plans dated 5/29/12

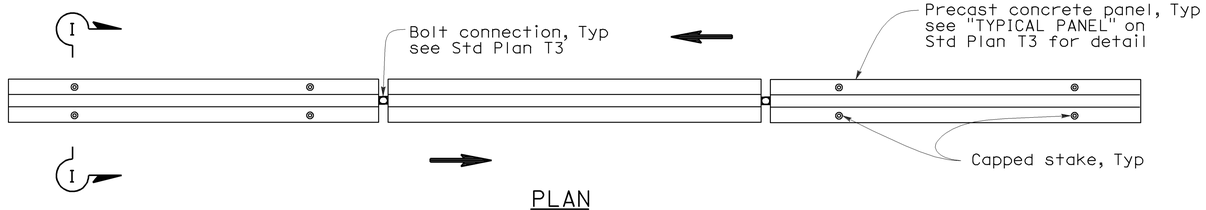

PLAN

RAILING STAKING CONFIGURATION FOR TWO-WAY TRAFFIC

See Note 1

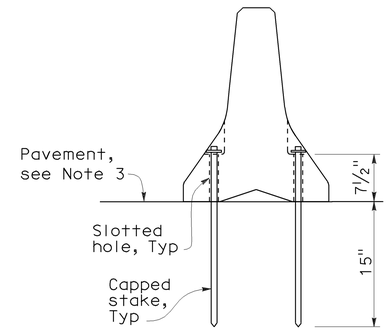

SECTION I-I

NOTES:

1. Where Type K Temporary Railing is placed as a temporary or long term barrier in two-way traffic on highways with less than 24" from the edge of traveled way, use four capped stakes per every other panel with end panels staked.
2. Where Type K Temporary Railing is placed 3" to 24" from the edge of an excavation on highways, use two capped stakes per panel along the traffic side.
3. Staked Type K Temporary Railing must be supported by at least 4" thick concrete, hot mix asphalt or existing asphalt concrete pavement.
4. The minimum yield strength for the washer must be 60,000 psi.
5. Direction of adjacent traffic indicated by ⟹.

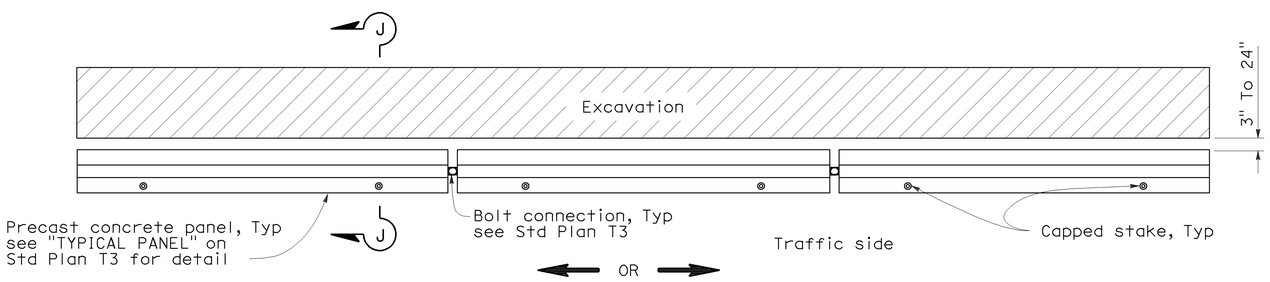

PLAN

RAILING STAKING CONFIGURATION ADJACENT TO AN EXCAVATION

See Note 2

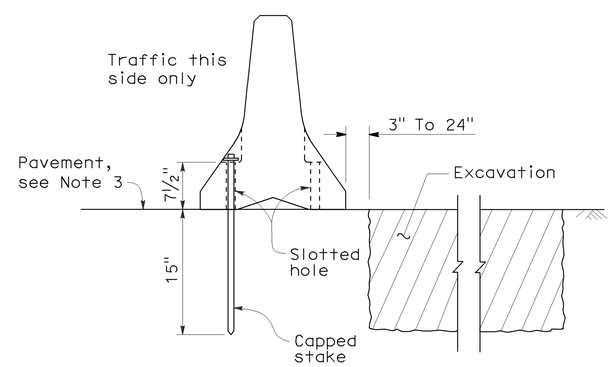

SECTION J-J

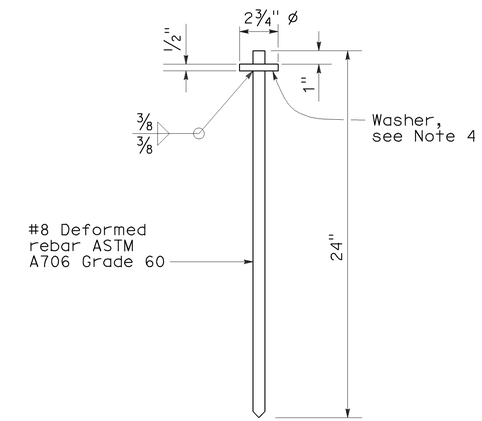

CAPPED STAKE DETAIL

STATE OF CALIFORNIA
DEPARTMENT OF TRANSPORTATION

TEMPORARY RAILING (TYPE K)

NO SCALE

NSP T3A DATED MAY 20, 2011 SUPPLEMENTS THE STANDARD PLANS BOOK DATED MAY 2006.

NEW STANDARD PLAN NSP T3A

2006 NEW STANDARD PLAN NSP T3A

DIST	COUNTY	ROUTE	POST MILES TOTAL PROJECT	SHEET NO.	TOTAL SHEETS
10	Sta	99	R2.3/R20.2	27	36

Greg W. Edwards
REGISTERED CIVIL ENGINEER

November 17, 2006
PLANS APPROVAL DATE

REGISTERED PROFESSIONAL ENGINEER
Greg W. Edwards
No. C36386
Exp. 6-30-08
CIVIL
STATE OF CALIFORNIA

The State of California or its officers or agents shall not be responsible for the accuracy or completeness of electronic copies of this plan sheet.

To accompany plans dated 5/29/12

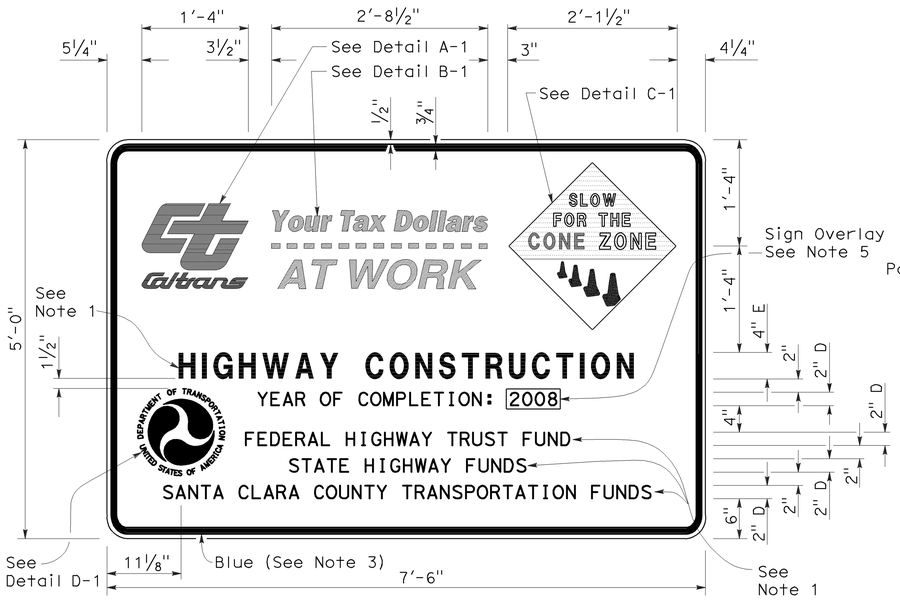

TYPE 1

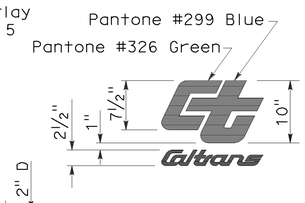

DETAIL A-1

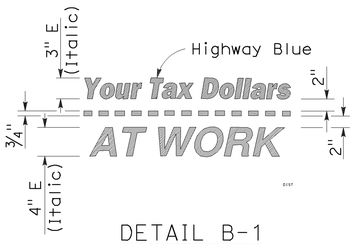

DETAIL B-1
(See Note 3)

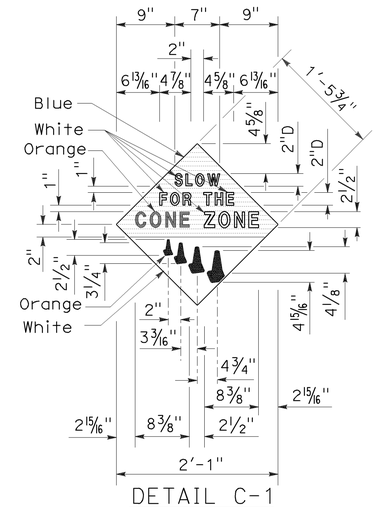

DETAIL C-1
(See Note 4)

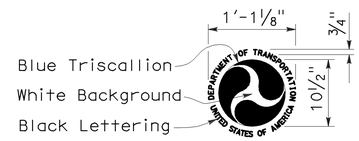

DETAIL D-1
(See Note 6)

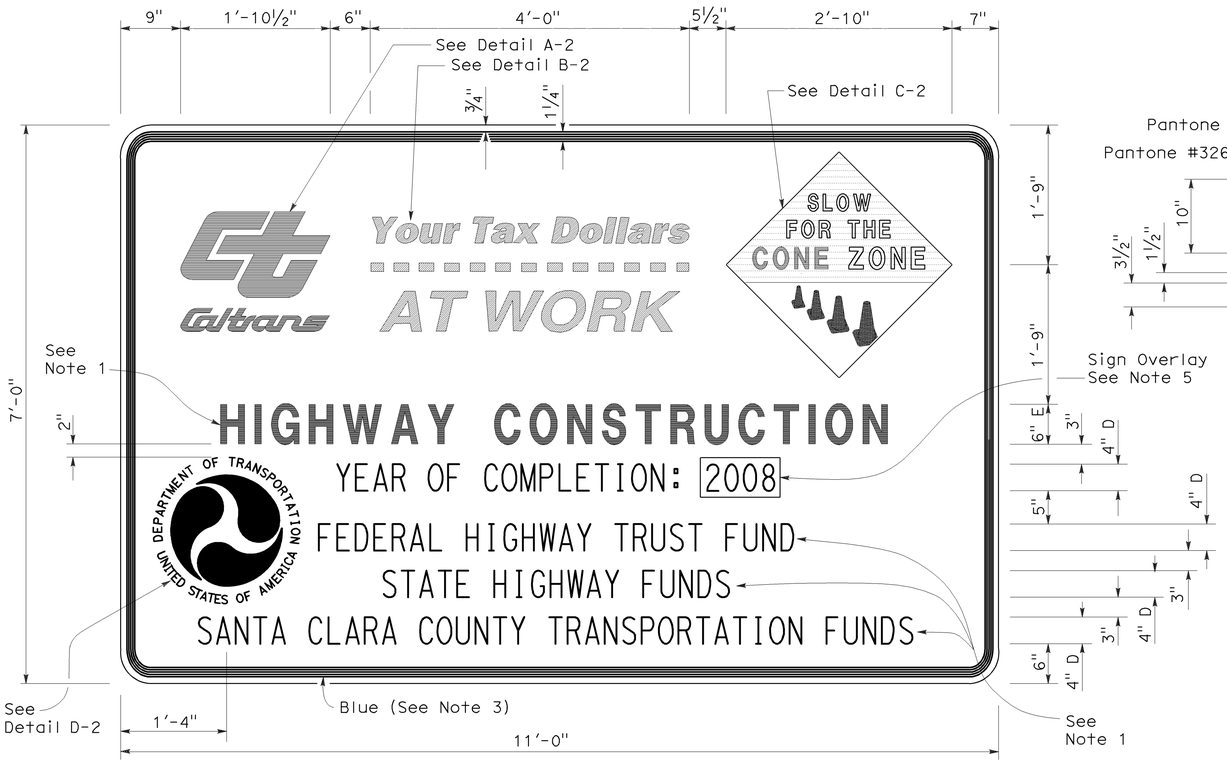

TYPE 2

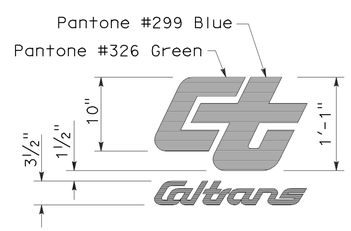

DETAIL A-2

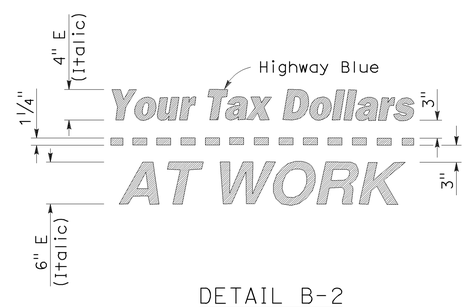

DETAIL B-2
(See Note 3)

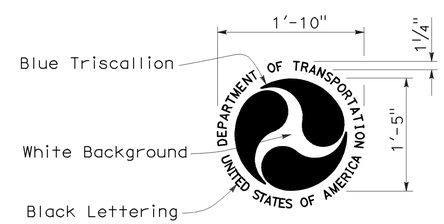

DETAIL D-2
(See Note 6)

NOTES:

1. The sign messages shown for type of project and fund types are examples only. See the Special Provisions for the applicable type of project and fund type messages to be used.
2. Except as otherwise shown, the legend of sign shall be black on a white background (non-reflective).
3. The border of the signs and details "B-1" and "B-2" shall be blue (non-reflective).
4. The diamond in details "C-1" and "C-2" shall be blue for the background of message, " SLOW FOR THE CONE ZONE", and white background for the orange cones. The color and type of font for the "SLOW FOR THE CONE ZONE" message shall be: "SLOW" white D; "FOR THE" white D; "CONE" orange Arial font; "ZONE" white Arial font.
5. Year of completion of project construction shown on the overlay is an example only. See the Special Provisions.
6. Use when the Project involves Federal Highway Trust Fund.

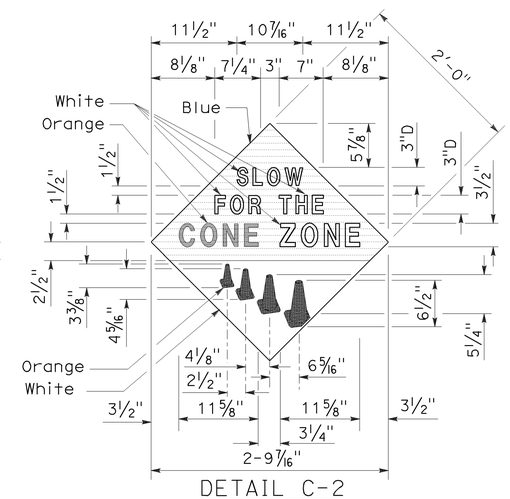

DETAIL C-2
(See Note 4)

STATE OF CALIFORNIA
DEPARTMENT OF TRANSPORTATION

CONSTRUCTION PROJECT FUNDING IDENTIFICATION SIGNS

NO SCALE

RSP T7 DATED NOVEMBER 17, 2006 SUPERSEDES STANDARD PLAN T7 DATED MAY 1, 2006 - PAGE 217 OF THE STANDARD PLANS BOOK DATED MAY 2006.

REVISED STANDARD PLAN RSP T7

2006 REVISED STANDARD PLAN RSP T7

9-7-06

DIST	COUNTY	ROUTE	POST MILES TOTAL PROJECT	SHEET No.	TOTAL SHEETS
10	STA	99	R2.3/R20.2	28	36

REGISTERED CIVIL ENGINEER — DATE 04-18-12

May 29, 2012
PLANS APPROVAL DATE

REGISTERED PROFESSIONAL ENGINEER — Jiffay Lee — No. 63599 — Exp. 09-30-12 — CIVIL — STATE OF CALIFORNIA

The State of California or its officers or agents shall not be responsible for the accuracy or completeness of electronic copies of this plan sheet.

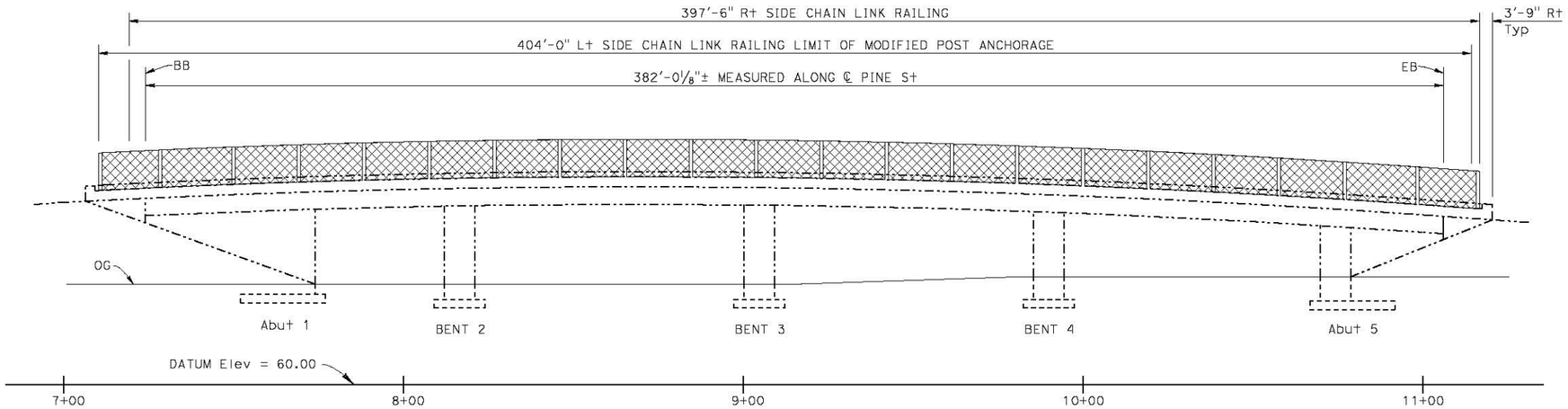

ELEVATION
1" = 20'-0"

NOTES:

1. Chain Link Rail Type 2
2. Remove existing Steel Picket Railing (4'-0"±) & construct Chain Link Railing Type 7L (MOD)

---- Indicate existing structure
—— Indicate new structure

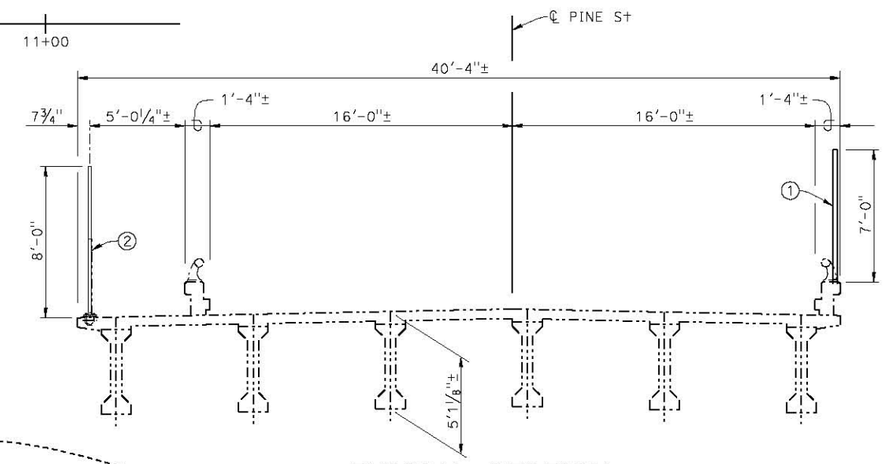

TYPICAL SECTION
1/4" = 1'-0"

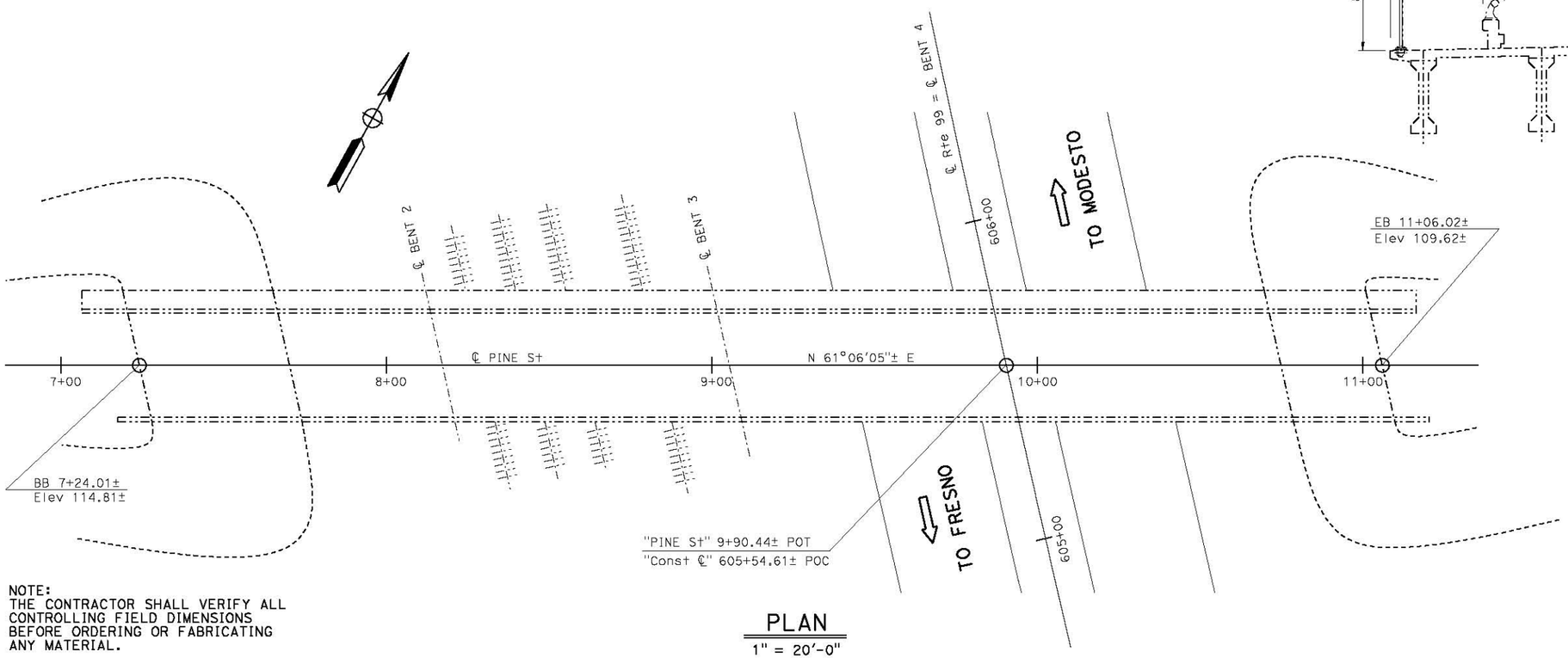

PLAN
1" = 20'-0"

NOTE:
THE CONTRACTOR SHALL VERIFY ALL CONTROLLING FIELD DIMENSIONS BEFORE ORDERING OR FABRICATING ANY MATERIAL.

INDEX TO PLANS

SHEET No.	TITLE
1.	GENERAL PLAN
2.	CHAIN LINK RAILING TYPE 2 DETAILS NO. 1
3.	CHAIN LINK RAILING TYPE 2 DETAILS NO. 2
4.	CHAIN LINK RAILING TYPE 7L (MOD) DETAILS NO. 1
5.	CHAIN LINK RAILING TYPE 7L DETAILS NO. 2
6.	MODIFIED POST ANCHORAGE DETAILS

STANDARD PLANS MAY 2006

A10A	ACRONYMS AND ABBREVIATIONS (A-L)
A10B	ACRONYMS AND ABBREVIATIONS (M-Z)
A10C	SYMBOLS (SHEET 1 OF 2)
A10D	SYMBOLS (SHEET 2 OF 2)

QUANTITES

BRIDGE REMOVAL (PORTION)	LUMP SUM
CHAIN LINK RAILING (TYPE 2)	399 LF
CHAIN LINK RAILING (TYPE 7L MODIFIED)	404 LF

DESIGN ENGINEER

	BY	CHECKED				
DESIGN	J. Lee	H. Fang	LOAD & RESISTANCE FACTOR DESIGN			
DETAILS	J. Yang	H. Fang	LAYOUT	J. Lee	H. Fang	
QUANTITIES	J. Lee	H. Fang	SPECIFICATIONS	D. Klein	PLANS AND SPECS COMPARED D. Klein	

ORIGINAL SCALE IN INCHES FOR REDUCED PLANS 0 1 2 3

STATE OF CALIFORNIA
DEPARTMENT OF TRANSPORTATION

DIVISION OF ENGINEERING SERVICES
STRUCTURE DESIGN
DESIGN BRANCH 2

BRIDGE NO. 38-0074
POST MILE R11.3

PINE STREET OVERCROSSING
GENERAL PLAN

UNIT: 3577
PROJECT NUMBER & PHASE: 100020094
CONTRACT NO.: 10-0S7801

DISREGARD PRINTS BEARING EARLIER REVISION DATES → 01-26-12

REVISION DATES				SHEET	OF
01-26-12				1	6

FILE => 38-0074-a-gp_gp-.dgn

USERNAME => s136468 DATE PLOTTED => 26-JUL-2012 TIME PLOTTED => 14:15

STRUCTURES DESIGN GENERAL PLAN SHEET (ENGLISH) (REV.09-01-10)

DIST	COUNTY	ROUTE	POST MILES TOTAL PROJECT	SHEET No.	TOTAL SHEETS
10	STA	99	R2.3/R20.2	29	36

REGISTERED CIVIL ENGINEER 04-18-12 DATE

May 29, 2012
PLANS APPROVAL DATE

REGISTERED PROFESSIONAL ENGINEER
Tillat Satter
No. 42892
Exp. 03-30-14
CIVIL
STATE OF CALIFORNIA

The State of California or its officers or agents shall not be responsible for the accuracy or completeness of electronic copies of this plan sheet.

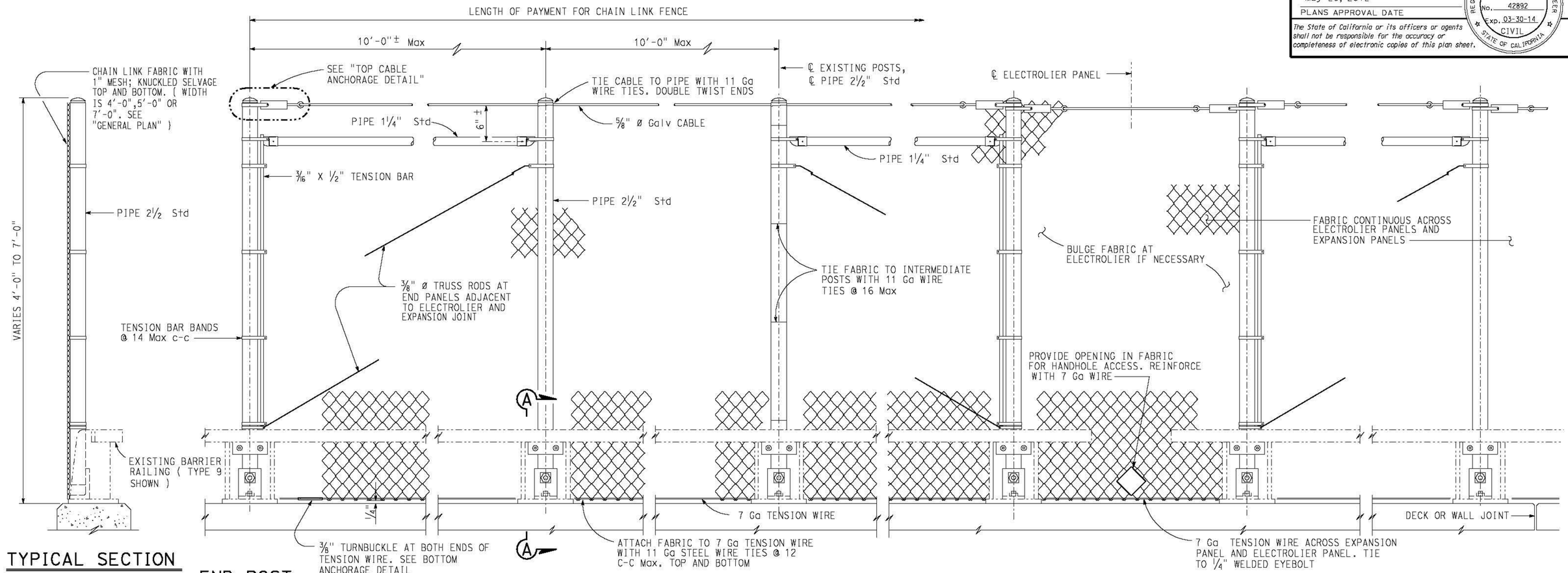

TYPICAL SECTION
1" = 1'-0"

END POST

INTERMEDIATE PANEL

ELECTROLIER PANEL

EXPANSION JOINT
(SIMILAR TO ELECTROLIER PANEL)

ELEVATION
1" = 1'-0"

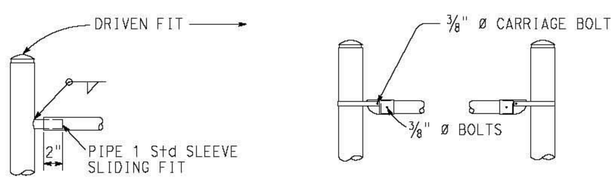

TYPICAL DETAILS

ALTERNATIVE DETAILS

END BRACE DETAILS

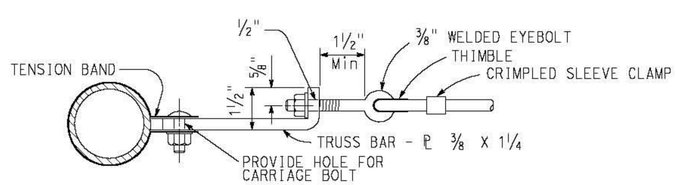

TOP CABLE ANCHORAGE DETAIL

NOTES:

1. Posts shall be vertical.
2. Railing shall conform to horizontal and vertical alignment.
3. When rail is on slope,place fabric parallel to post
4. Alternative details may be submitted by the contractor for engineer approval.
5. Provide thimbles at all cable loops.
6. Peen all ⅜" ø bolts.
7. See "General Plan" for end post location.
8. Replace existing bolt with 1" x 4" bolt.
9. At intermediate posts only. Contractor has the option of either ⅛" x 2" strap or ¼" anchor plate with eyebolt.

NOTE:
THE CONTRACTOR SHALL VERIFY ALL CONTROLLING FIELD DIMENSIONS BEFORE ORDERING OR FABRICATING ANY MATERIAL.

STANDARD DRAWING
FILE NO. xs16-140-1
APPROVAL DATE July 2011

STATE OF CALIFORNIA
DEPARTMENT OF TRANSPORTATION

DIVISION OF ENGINEERING SERVICES

BRIDGE NO. 38-0074
POST MILE R11.3

PINE STREET OVERCROSSING
CHAIN LINK RAILING TYPE 2
DETAILS NO. 1

DS OSD 2147A (ENGLISH STANDARD DRAWING "XS" BORDER REV. (02-02-11)

ORIGINAL SCALE IN INCHES FOR REDUCED PLANS 0 1 2 3

UNIT: 3577
PROJECT NUMBER & PHASE: 1000020094
CONTRACT NO.: 10-0S7801

DISREGARD PRINTS BEARING EARLIER REVISION DATES
REVISION DATES 12-29-11
SHEET 2 OF 6

FILE => 38-0074-x-xs16-140-1-.dgn

USERNAME => s136468 DATE PLOTTED => 26-JUL-2012 TIME PLOTTED => 14:15

DIST	COUNTY	ROUTE	POST MILES TOTAL PROJECT	SHEET No.	TOTAL SHEETS
10	STA	99	R2.3/R20.2	30	36

REGISTERED CIVIL ENGINEER 04-18-12 DATE

May 29, 2012
PLANS APPROVAL DATE

REGISTERED PROFESSIONAL ENGINEER Tillat Satter No. 42892 Exp. 03-30-14 CIVIL STATE OF CALIFORNIA

The State of California or its officers or agents shall not be responsible for the accuracy or completeness of electronic copies of this plan sheet.

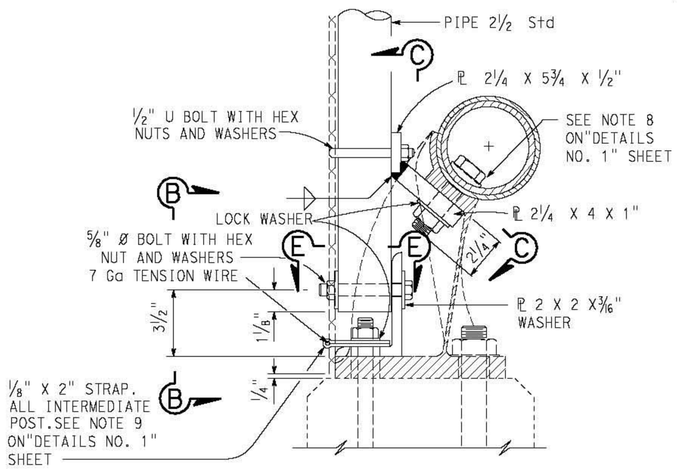

SECTION A-A
(SINGLE PIPE RAIL)

NOTE: Details similar to Single Pipe Rail; except as noted

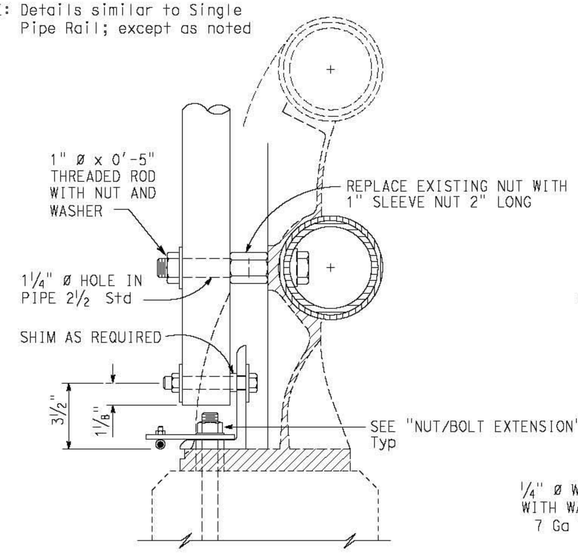

SECTION A-A
(DOUBLE PIPE RAIL)

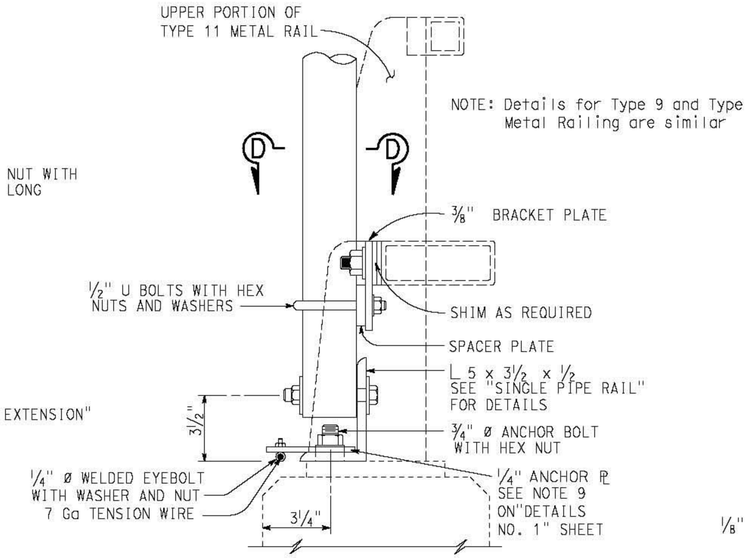

SECTION A-A
(TUBE RAIL)

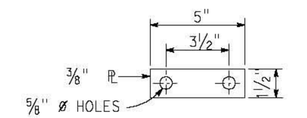

SPACER PLATE

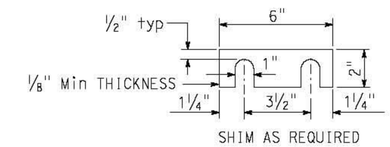

RAILING SHIM DETAIL

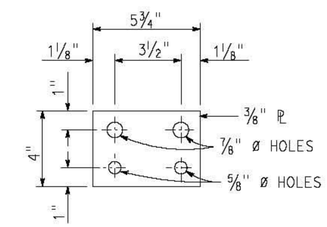

BRACKET PLATE

ATTACHMENT DETAILS

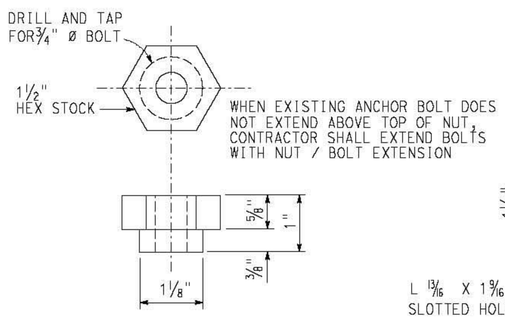

NUT/BOLT EXTENSION

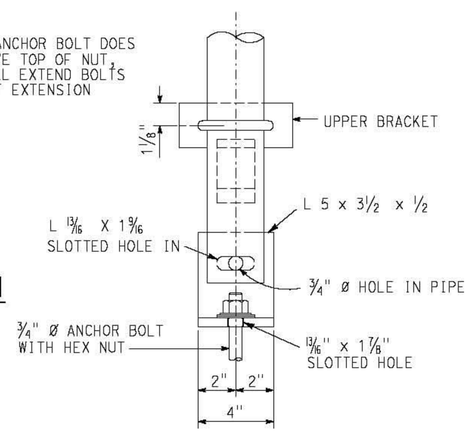

VIEW B-B

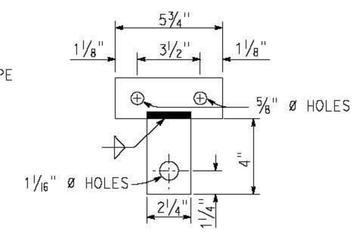

VIEW C-C
(DEVELOPED VIEW OF UPPER BRACKET)

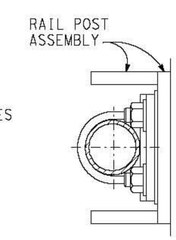

VIEW D-D

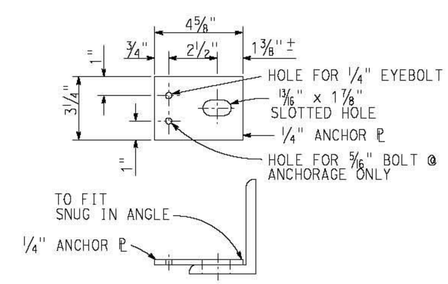

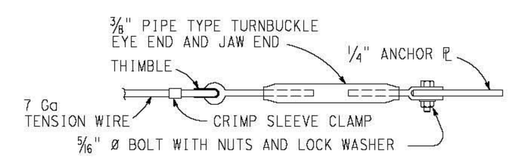

BOTTOM ANCHORAGE DETAIL

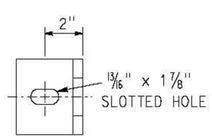

SECTION E-E

NOTE:
THE CONTRACTOR SHALL VERIFY ALL CONTROLLING FIELD DIMENSIONS BEFORE ORDERING OR FABRICATING ANY MATERIAL.

NO SCALE

PINE STREET OVERCROSSING
CHAIN LINK RAILING TYPE 2
DETAILS NO. 2

STANDARD DRAWING
FILE NO. xs16-140-2
APPROVAL DATE July 2011

STATE OF CALIFORNIA DEPARTMENT OF TRANSPORTATION
DIVISION OF ENGINEERING SERVICES
BRIDGE NO. 38-0074
POST MILE R11.3

DS OSD 2147A (ENGLISH STANDARD DRAWING "XS" BORDER REV. (02-02-11)
ORIGINAL SCALE IN INCHES FOR REDUCED PLANS 0 1 2 3
UNIT: 3577
PROJECT NUMBER & PHASE: 1000020094
CONTRACT NO.: 10-0S7801
DISREGARD PRINTS BEARING EARLIER REVISION DATES
REVISION DATES 12-29-11
SHEET 3 OF 6
FILE => 38-0074-K-xs16-140-2-.dgn
USERNAME => s136468 DATE PLOTTED => 26-JUL-2012 TIME PLOTTED => 14:16

DIST	COUNTY	ROUTE	POST MILES TOTAL PROJECT	SHEET No.	TOTAL SHEETS
10	STA	99	R2.3/R20.2	31	36

REGISTERED CIVIL ENGINEER 04-18-12 DATE

May 29, 2012
PLANS APPROVAL DATE

REGISTERED PROFESSIONAL ENGINEER Tillat Satter No. 42892 Exp. 03-30-14 CIVIL STATE OF CALIFORNIA

The State of California or its officers or agents shall not be responsible for the accuracy or completeness of electronic copies of this plan sheet.

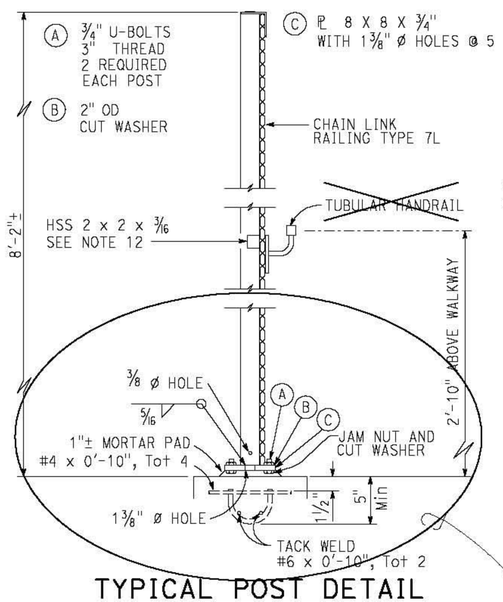

TYPICAL POST DETAIL

1½" = 1'-0"

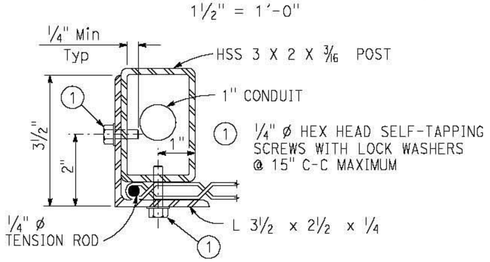

SECTION E-E

6" = 1'-0"

NOTE: Holes (For self-tapping screws) in end post shall be drilled before conduits are in place

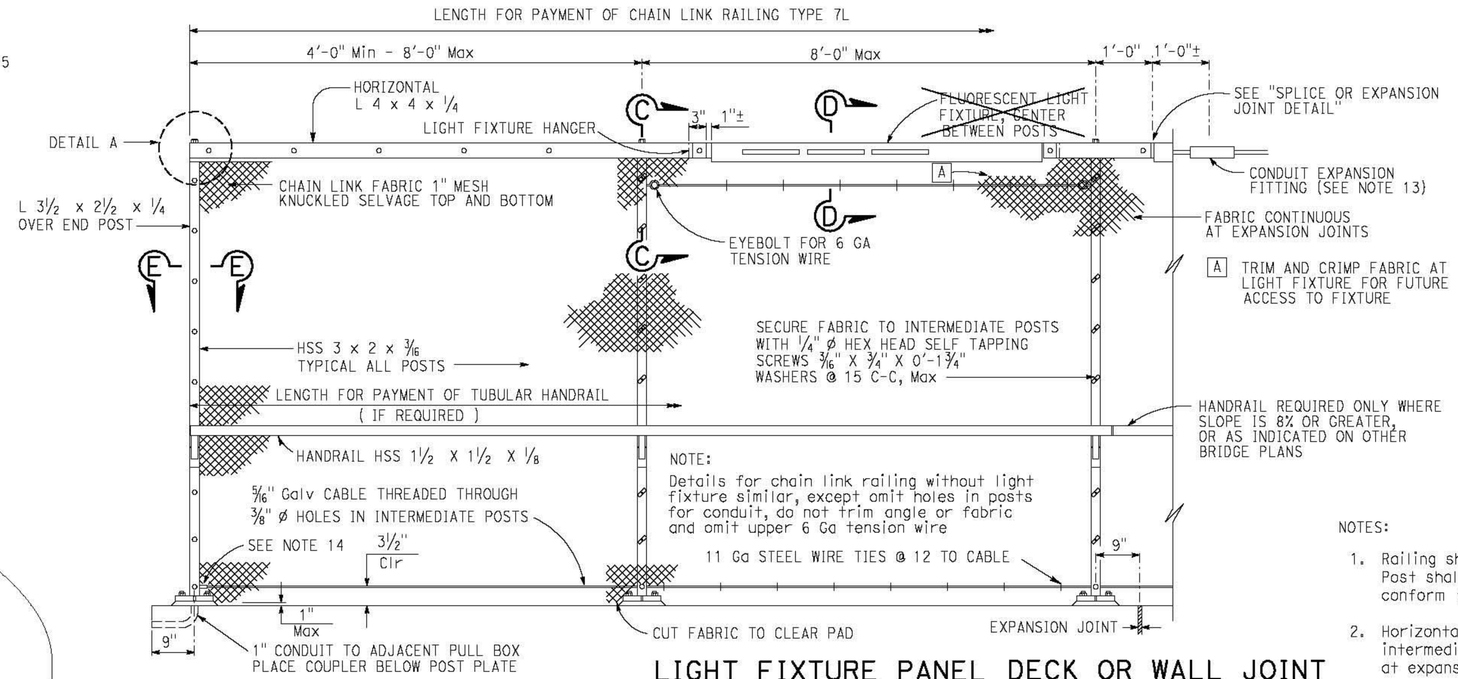

END POST

LIGHT FIXTURE PANEL

DECK OR WALL JOINT

ELEVATION

¾" = 1'-0"

USE EXISTING ¾" U-BOLTS TO ATTACH NEW CHAIN LINK RAILING POST, SEE "MODIFIED POST ANCHORAGE DETAILS" SHEET

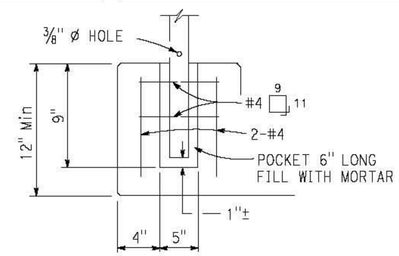

ALTERNATIVE ANCHORAGE DETAIL

1½" = 1'-0"

MAY BE USED WHEN THICKNESS OF CONCRETE IS 1'-0" OR MORE
NOT TO BE USED WHEN POST CONTAINS ELECTRICAL CONDUIT

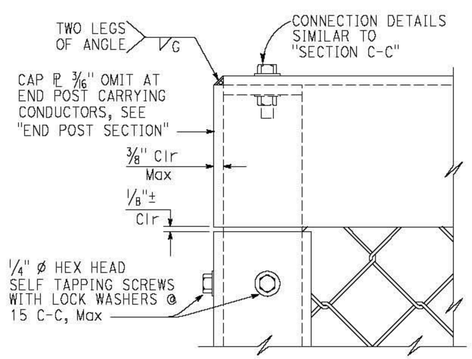

DETAIL A

6" = 1'-0"

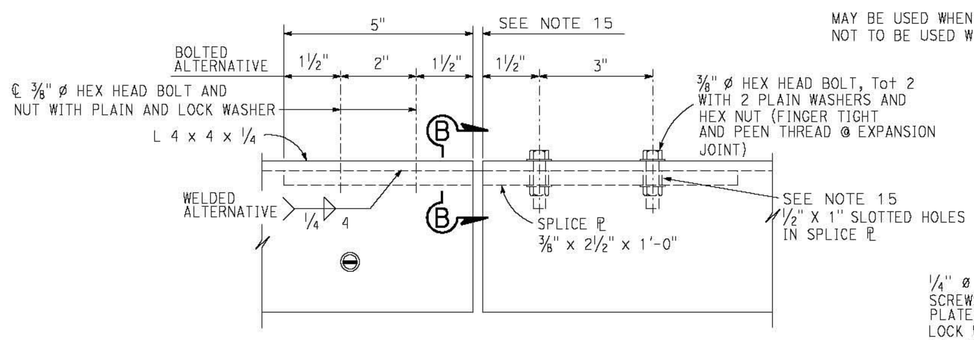

SPLICE OR EXPANSION JOINT DETAIL

6" = 1'-0"

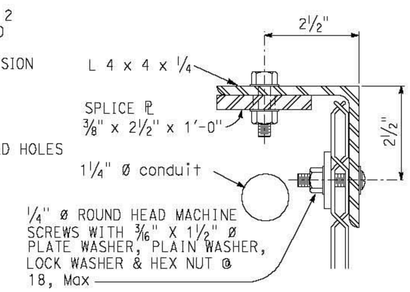

SECTION B-B

6" = 1'-0"

NOTES:

1. Railing shall conform to horizontal and vertical alignment. Post shall be vertical. Horizontal angle shall be bent to conform to horizontal alignment if radius is 150'-0" or less
2. Horizontal angle shall be continuous over not less than two intermediate posts, except that a shorter length is permitted at expansion joints and other rail discontinuities
3. When railing is placed on curved horizontal alignment with radius of 150'-0" or less, drill ½" x 3" deep hole in slab and set in epoxy adhesives ⅜" ø welded eyebolt for 5/16" cable to limit the midordinate distance between the 5/16" cable and curve to be 1" maximum
4. Place fabric parallel to slope
5. Alternative details may be submitted by the Contractor for Engineer's approval
6. Provide thimbles at all cable loops
7. ~~See "PEDESTRIAN OVERCROSSING FLUORESCENT LIGHTING FIXTURE" for details not shown.~~
8. Handrail tube continuous over two or more supports
9. Peen all exposed bolts
10. ~~Electrical details for corner post are similar to those shown. Fabric to be trimmed and crimped around handhole.~~
11. Conduit holes in posts will vary with slope of structure
12. HSS 2 x 2 x 3/16, required for curves with radius of 150'-0" or less. Bend to conform to curve
13. Conduit expansion fitting to be required at deck or wall expansion joints with movement ratings greater than 1"
14. Anchor 5/16" galvanized cable at end post with ½" ø stud socket assembly or ½" ø welded eyebolt and crimped sleeve clamp. Provide 1½" minimum take-up at each anchorage.
15. Expansion joint same dimension as expansion joint in deck or wall. Increase slotted hole length and splice ℙ length correspondingly.

REVISED STANDARD DRAWING

FILE NO. xs16-210-1

APPROVAL DATE July 2011

STATE OF CALIFORNIA DEPARTMENT OF TRANSPORTATION

DIVISION OF ENGINEERING SERVICES

BRIDGE NO. 38-0074

POST MILE R11.3

PINE STREET OVERCROSSING

CHAIN LINK RAILING TYPE 7L (MOD)

DETAILS NO. 1

DS OSD 2147A (ENGLISH STANDARD DRAWING "XS" BORDER REV. (02-02-11)

ORIGINAL SCALE IN INCHES FOR REDUCED PLANS 0 1 2 3

UNIT: 3577
PROJECT NUMBER & PHASE: 1000020094
CONTRACT NO.: 10-0S7801

DISREGARD PRINTS BEARING EARLIER REVISION DATES

REVISION DATES 12-29-11

SHEET 4 OF 6

FILE => 38-0074-x-xs16-210-1-.dgn

USERNAME => s136468 DATE PLOTTED => 26-JUL-2012 TIME PLOTTED => 14:16

DIST	COUNTY	ROUTE	POST MILES TOTAL PROJECT	SHEET No.	TOTAL SHEETS
10	STA	99	R2.3/R20.2	32	36

REGISTERED CIVIL ENGINEER 04-18-12 DATE

May 29, 2012
PLANS APPROVAL DATE

REGISTERED PROFESSIONAL ENGINEER Tillat Satter No. 42892 Exp. 03-30-14 CIVIL STATE OF CALIFORNIA

The State of California or its officers or agents shall not be responsible for the accuracy or completeness of electronic copies of this plan sheet.

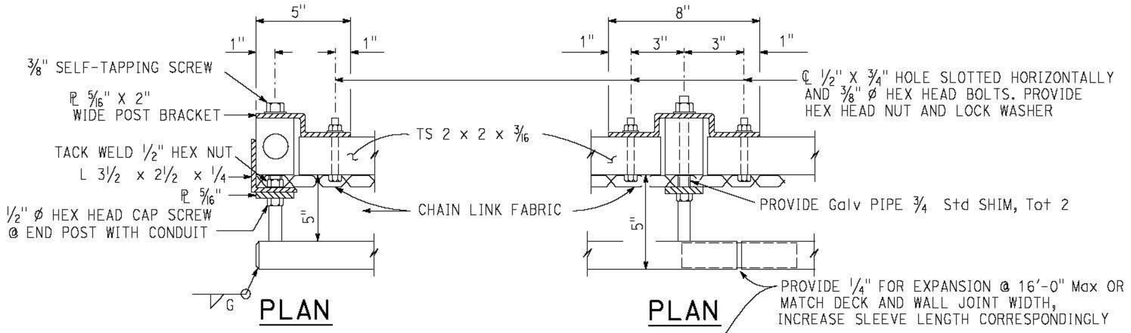

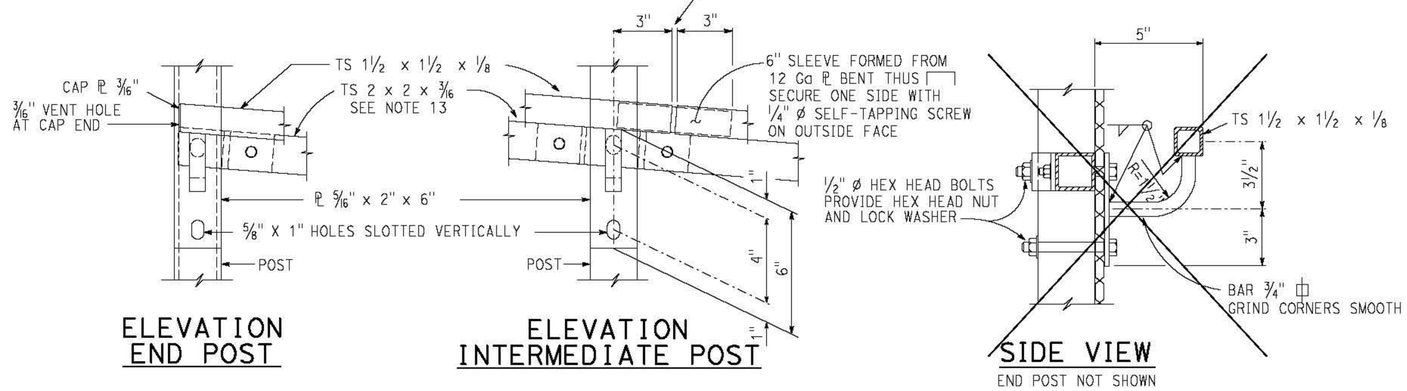

TUBULAR HANDRAIL BRACKET DETAILS

3" = 1'-0"

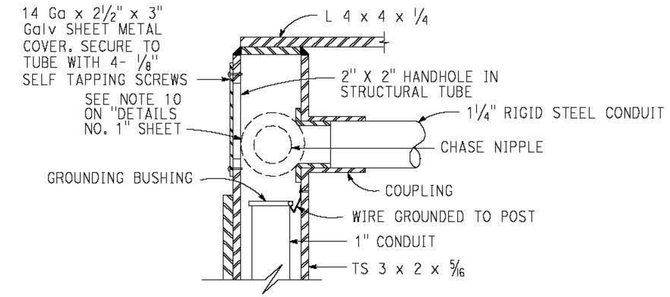

END POST SECTION

6" = 1'-0"

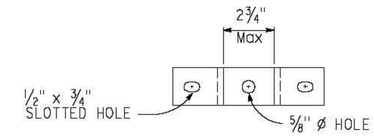

POST BRACKET

3" = 1'-0"

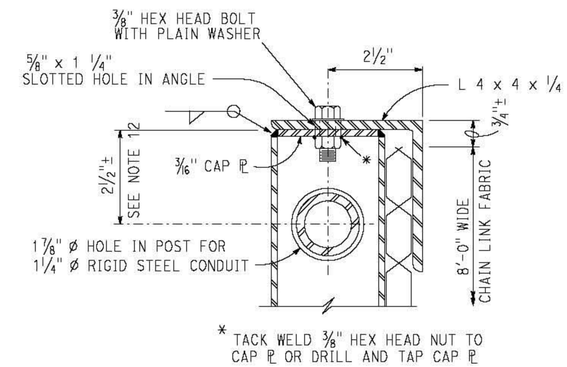

SECTION C-C

6" = 1'-0"

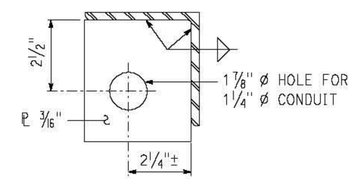

LIGHT FIXTURE HANGER

6" = 1'-0"

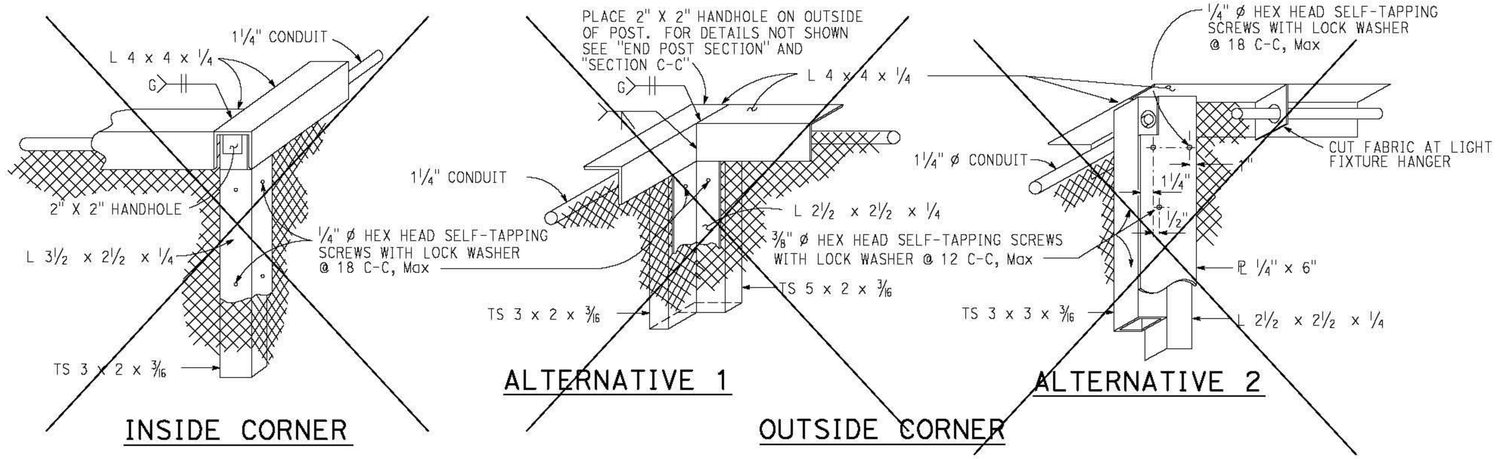

CORNER POST DETAILS

1 1/2" = 1'-0"

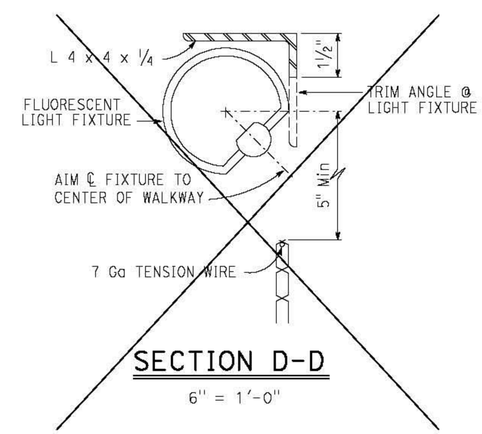

SECTION D-D

6" = 1'-0"

REVISED STANDARD DRAWING

FILE NO. xs16-210-2

APPROVAL DATE July 2011

STATE OF CALIFORNIA DEPARTMENT OF TRANSPORTATION

DIVISION OF ENGINEERING SERVICES

BRIDGE NO. 38-0074

POST MILE R11.3

PINE STREET OVERCROSSING

CHAIN LINK RAILING TYPE 7L (MOD)

DETAILS NO. 2

DS OSD 2147A (ENGLISH STANDARD DRAWING "XS" BORDER REV. (02-02-11)

ORIGINAL SCALE IN INCHES FOR REDUCED PLANS 0 1 2 3

UNIT: 3577
PROJECT NUMBER & PHASE: 1000020094
CONTRACT NO.: 10-0S7801

DISREGARD PRINTS BEARING EARLIER REVISION DATES

REVISION DATES 12-29-11

SHEET 5 OF 6

FILE => 38-0074-x-xs16-210-2.dgn

USERNAME => s136468 DATE PLOTTED => 26-JUL-2012 TIME PLOTTED => 14:16

DIST	COUNTY	ROUTE	POST MILES TOTAL PROJECT	SHEET No.	TOTAL SHEETS
10	STA	99	R2.3/R20.2	33	36

REGISTERED CIVIL ENGINEER — DATE 04-18-12

May 29, 2012
PLANS APPROVAL DATE

REGISTERED PROFESSIONAL ENGINEER — Jiffay Lee — No. 63599 — Exp. 09-30-12 — CIVIL — STATE OF CALIFORNIA

The State of California or its officers or agents shall not be responsible for the accuracy or completeness of electronic copies of this plan sheet.

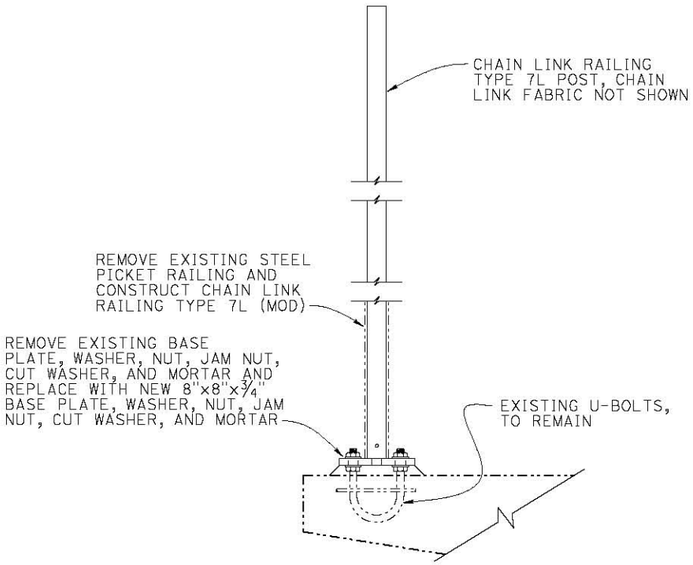

TYPICAL POST ANCHORAGE DETAIL

3" = 1'-0"

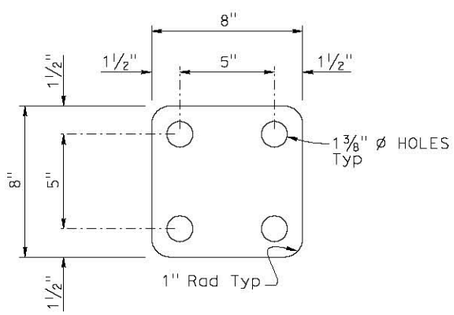

TOP BASE PLATE

3" = 1'-0"

NOTE:
THE CONTRACTOR SHALL VERIFY ALL CONTROLLING FIELD DIMENSIONS BEFORE ORDERING OR FABRICATING ANY MATERIAL.

NOTES:

1. All fabricated metal to be galvanized.
2. The new posts to be installed on the existing post base, as shown in "TYPICAL POST ANCHORAGE DETAIL".
3. For details not shown, see "CHAIN LINK RAILING TYPE 7L (MOD)" sheet

GENERAL NOTES (LOAD AND RESISTANCE FACTOR DESIGN)

DESIGN: AASHTO LRFD Bridge Design Specifications, Fourth Edition with Caltrans amendments (May 2006). Apply to Alternative Post Ancherage only.

Misc STEEL: Commercial quality or better weldable steel.

DESIGN	BY J. Lee	CHECKED H. Fang
DETAILS	BY J. Yang	CHECKED H. Fang
QUANTITIES	BY X	CHECKED X

STATE OF CALIFORNIA DEPARTMENT OF TRANSPORTATION

DIVISION OF ENGINEERING SERVICES STRUCTURE DESIGN DESIGN BRANCH 2

BRIDGE NO. 38-0074
POST MILE R11.3

PINE STREET OVERCROSSING
MODIFIED POST ANCHORAGE DETAILS

STRUCTURES DESIGN DETAIL SHEET (ENGLISH) (REV. 09-01-10)

ORIGINAL SCALE IN INCHES FOR REDUCED PLANS 0 1 2 3

UNIT: 3577
PROJECT NUMBER & PHASE: 100020094
CONTRACT NO.: 10-0S7801

DISREGARD PRINTS BEARING EARLIER REVISION DATES → 01-20-12

REVISION DATES | SHEET 6 | OF 6

FILE => 38-0074-y-alt-anch_detail-.dgn

USERNAME => s136468 DATE PLOTTED => 26-JUL-2012 TIME PLOTTED => 14:16

DIST	COUNTY	ROUTE	POST MILES TOTAL PROJECT	SHEET No.	TOTAL SHEETS
10	STA	99	R2.3/20.2	34	36

REGISTERED CIVIL ENGINEER — DATE 04-18-12

May 29, 2012
PLANS APPROVAL DATE

REGISTERED PROFESSIONAL ENGINEER — Jiffay Lee — No. 63599 — Exp. 09-30-12 — CIVIL — STATE OF CALIFORNIA

The State of California or its officers or agents shall not be responsible for the accuracy or completeness of electronic copies of this plan sheet.

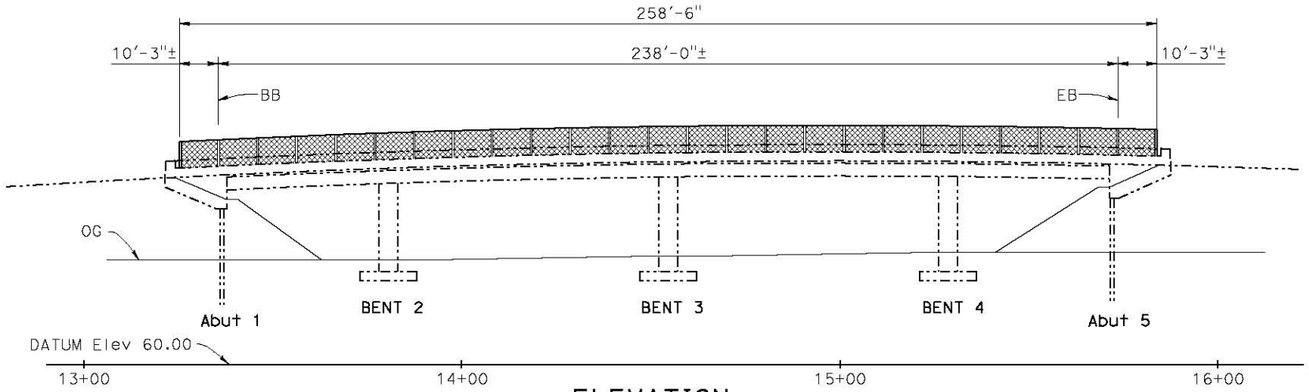

ELEVATION
1" = 20'-0"

QUANTITES

CHAIN LINK RAILING (TYPE 2)	518	LF

NOTES:

1. Chain Link Railing Type 2
- - - - Indicates existing structure
——— Indicates new structure

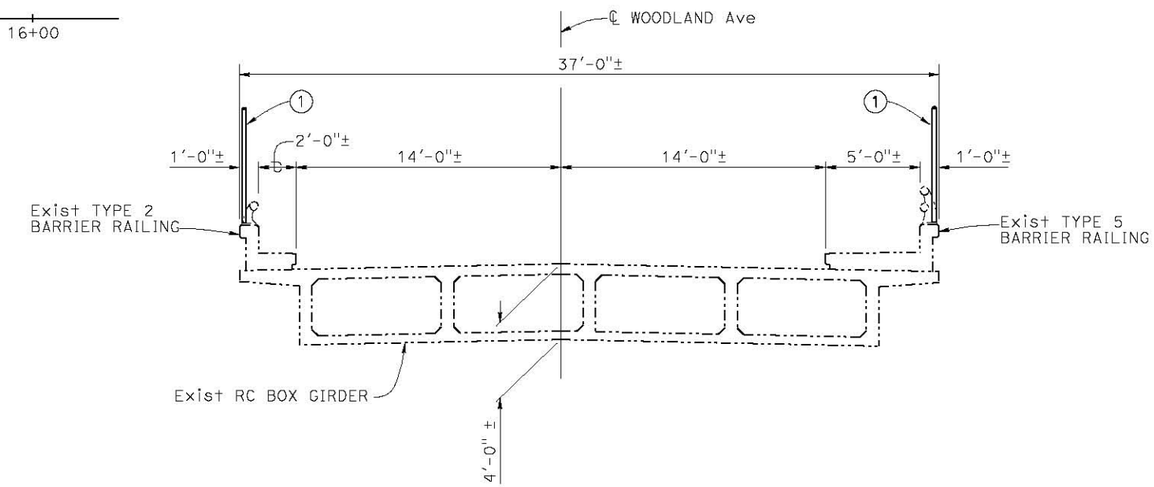

TYPICAL SECTION
¼" = 1'-0"

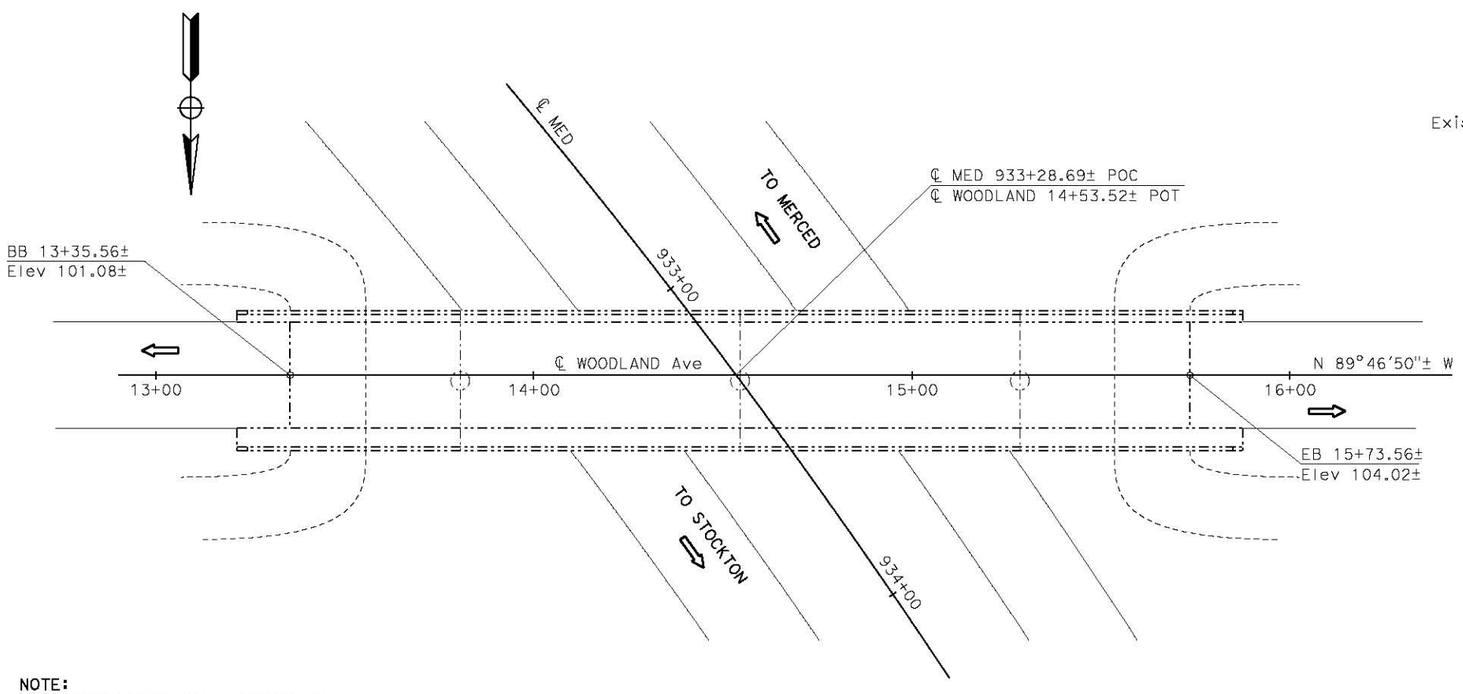

PLAN
1" = 20'-0"

NOTE:
THE CONTRACTOR SHALL VERIFY ALL CONTROLLING FIELD DIMENSIONS BEFORE ORDERING OR FABRICATING ANY MATERIAL.

INDEX TO PLANS

SHEET No.	TITLE
1.	GENERAL PLAN
2.	CHAIN LINK RAILING TYPE 2 - SHEET 1 OF 2
3.	CHAIN LINK RAILING TYPE 2 - SHEET 2 OF 2

STANDARD PLANS MAY 2006

A10A	ACRONYMS AND ABBREVIATIONS (A-L)
A10B	ACRONYMS AND ABBREVIATIONS (M-Z)
A10C	SYMBOLS (SHEET 1 OF 2)
A10D	SYMBOLS (SHEET 2 OF 2)

STANDARD PLAN SHEET NO.
DETAIL NO.

DESIGN ENGINEER

	BY	CHECKED			
DESIGN	J. Lee	H. Fang	LOAD & RESISTANCE FACTOR DESIGN		
DETAILS	J. Yang	H. Fang	LAYOUT	J. Lee	F. Hang
QUANTITIES	J. Lee	H. Fang	SPECIFICATIONS	D. Klein	D. Klein

ORIGINAL SCALE IN INCHES FOR REDUCED PLANS 0 1 2 3

STATE OF CALIFORNIA
DEPARTMENT OF TRANSPORTATION

DIVISION OF ENGINEERING SERVICES
STRUCTURE DESIGN
DESIGN BRANCH 2

BRIDGE NO. 38-0087
POST MILE R17.51

WOODLAND AVENUE OVERCROSSING
GENERAL PLAN

UNIT: 2577
PROJECT NUMBER & PHASE: 1000020094
CONTRACT NO.: 10-0S7801

DISREGARD PRINTS BEARING EARLIER REVISION DATES → 12-29-11

REVISION DATES | SHEET 1 | OF 3

FILE => 38-0087-a-gp_gp-.dgn

USERNAME => s136468 DATE PLOTTED => 26-JUL-2012 TIME PLOTTED => 14:16

STRUCTURES DESIGN GENERAL PLAN SHEET (ENGLISH) (REV.09-01-10)

DIST	COUNTY	ROUTE	POST MILES TOTAL PROJECT	SHEET No.	TOTAL SHEETS
10	STA	99	R2.3/20.2	35	36

REGISTERED CIVIL ENGINEER 04-18-12 DATE

May 29, 2012
PLANS APPROVAL DATE

REGISTERED PROFESSIONAL ENGINEER Tillat Satter No. 42892 Exp. 03-30-14 CIVIL STATE OF CALIFORNIA

The State of California or its officers or agents shall not be responsible for the accuracy or completeness of electronic copies of this plan sheet.

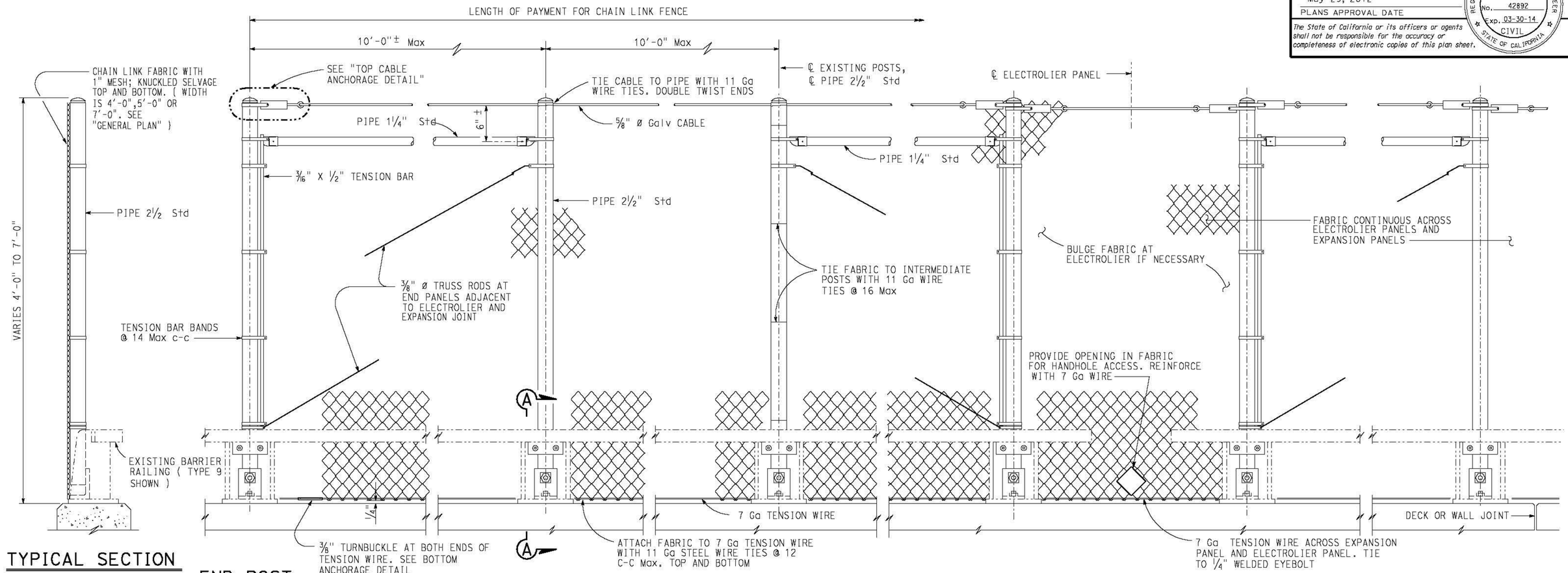

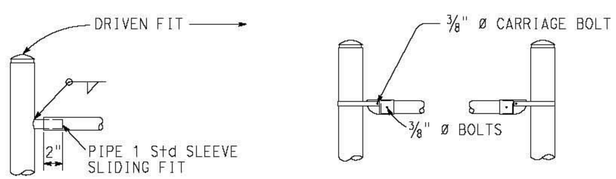

TYPICAL DETAILS ALTERNATIVE DETAILS

END BRACE DETAILS

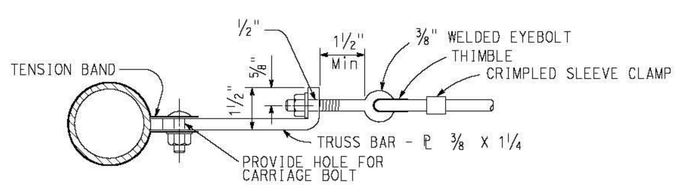

TOP CABLE ANCHORAGE DETAIL

NOTES:

1. Posts shall be vertical.
2. Railing shall conform to horizontal and vertical alignment.
3. When rail is on slope,place fabric parallel to post
4. Alternative details may be submitted by the contractor for engineer approval.
5. Provide thimbles at all cable loops.
6. Peen all ⅜" ø bolts.
7. See "General Plan" for end post location.
8. Replace existing bolt with 1" x 4" bolt.
9. At intermediate posts only. Contractor has the option of either ⅛" x 2" strap or ¼" anchor plate with eyebolt.

NOTE:
THE CONTRACTOR SHALL VERIFY ALL CONTROLLING FIELD DIMENSIONS BEFORE ORDERING OR FABRICATING ANY MATERIAL.

WOODLAND AVENUE OVERCROSSING

CHAIN LINK RAILING TYPE 2

DETAILS NO. 1

STANDARD DRAWING
FILE NO. **xs16-140-1**
APPROVAL DATE July 2011

STATE OF CALIFORNIA DEPARTMENT OF TRANSPORTATION

DIVISION OF ENGINEERING SERVICES

BRIDGE NO. 380087
POST MILE R17.51

DS OSD 2147A (ENGLISH STANDARD DRAWING "XS" BORDER REV. (02-02-11)

ORIGINAL SCALE IN INCHES FOR REDUCED PLANS 0 1 2 3

UNIT: 3577
PROJECT NUMBER & PHASE: 1000020094
CONTRACT NO.: 10-0S7801

DISREGARD PRINTS BEARING EARLIER REVISION DATES

REVISION DATES 12-29-11

SHEET 2 OF 3

FILE => 38-0087-x-xs16-140-1-.dgn

USERNAME => s136468 DATE PLOTTED => 26-JUL-2012 TIME PLOTTED => 14:16

DIST	COUNTY	ROUTE	POST MILES TOTAL PROJECT	SHEET No.	TOTAL SHEETS
10	STA	99	R2.3/20.2	36	36

REGISTERED CIVIL ENGINEER 04-18-12 DATE

May 29, 2012
PLANS APPROVAL DATE

REGISTERED PROFESSIONAL ENGINEER Tillat Satter No. 42892 Exp. 03-30-14 CIVIL STATE OF CALIFORNIA

The State of California or its officers or agents shall not be responsible for the accuracy or completeness of electronic copies of this plan sheet.

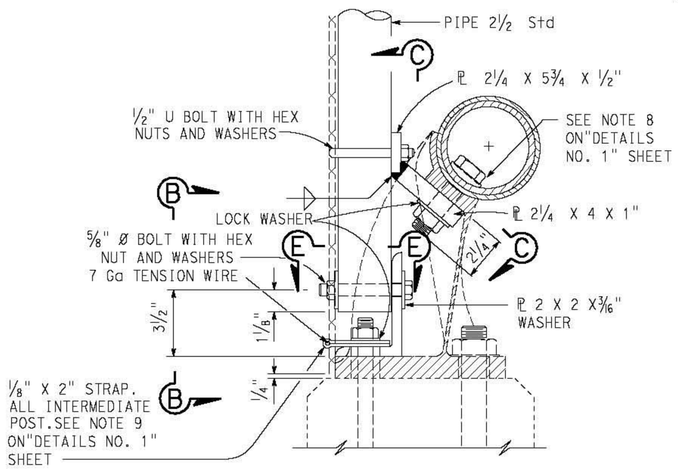

SECTION A-A

(SINGLE PIPE RAIL)

NOTE: Details similar to Single Pipe Rail; except as noted

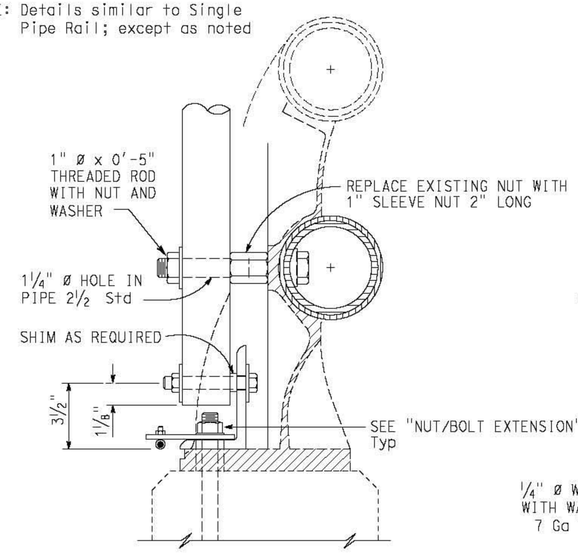

SECTION A-A

(DOUBLE PIPE RAIL)

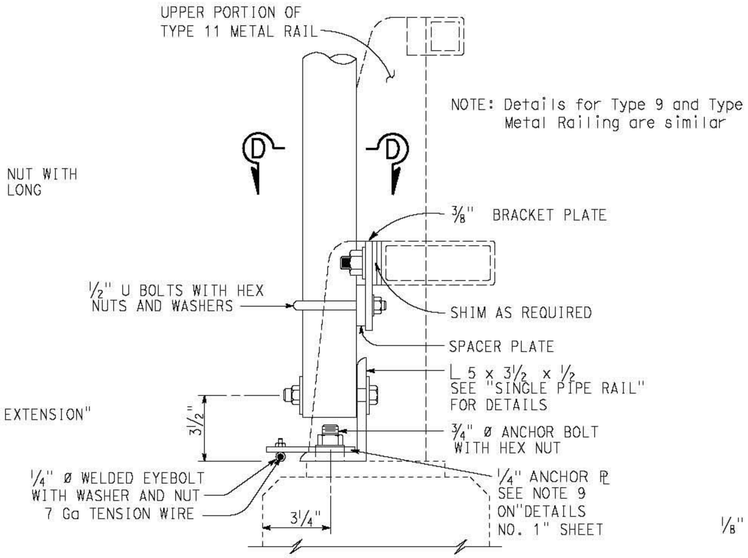

SECTION A-A

(TUBE RAIL)

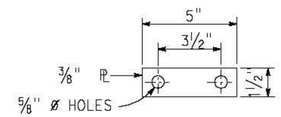

SPACER PLATE

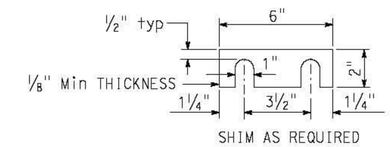

RAILING SHIM DETAIL

ATTACHMENT DETAILS

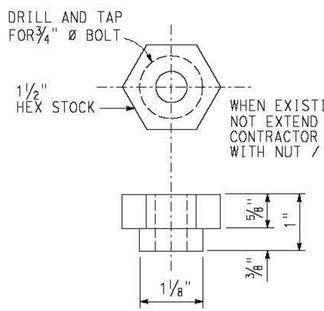

NUT/BOLT EXTENSION

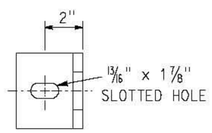

SECTION E-E

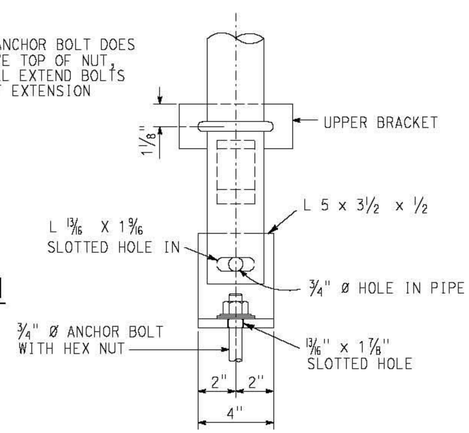

VIEW B-B

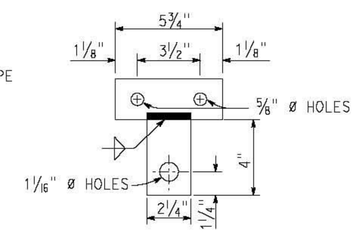

VIEW C-C

(DEVELOPED VIEW OF UPPER BRACKET)

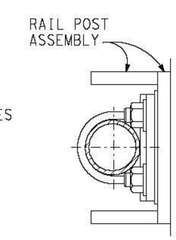

VIEW D-D

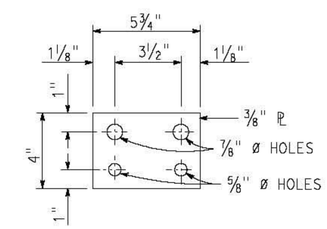

BRACKET PLATE

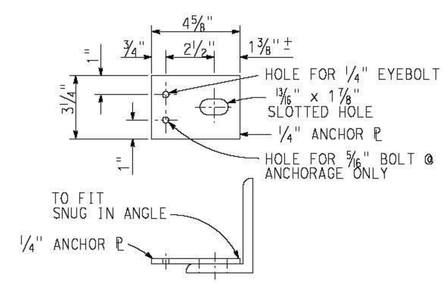

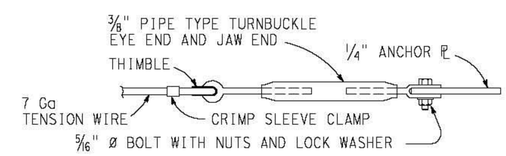

BOTTOM ANCHORAGE DETAIL

NOTE:
THE CONTRACTOR SHALL VERIFY ALL CONTROLLING FIELD DIMENSIONS BEFORE ORDERING OR FABRICATING ANY MATERIAL.

NO SCALE

WOODLAND AVENUE OVERCROSSING

CHAIN LINK RAILING TYPE 2

DETAILS NO. 2

STANDARD DRAWING

FILE NO. **xs16-140-2**

APPROVAL DATE July 2011

STATE OF **CALIFORNIA** DEPARTMENT OF TRANSPORTATION

DIVISION OF ENGINEERING SERVICES

BRIDGE NO. 38-0087

POST MILE R17.51

DS OSD 2147A (ENGLISH STANDARD DRAWING "XS" BORDER REV. (02-02-11)

ORIGINAL SCALE IN INCHES FOR REDUCED PLANS 0 1 2 3

UNIT: 3577
PROJECT NUMBER & PHASE: 1000020094
CONTRACT NO.: 10-0S7801

DISREGARD PRINTS BEARING EARLIER REVISION DATES

REVISION DATES 12-29-11

SHEET 3 OF 3

FILE => 38-0087-x-xs16-140-2-.dgn

USERNAME => s136468 DATE PLOTTED => 26-JUL-2012 TIME PLOTTED => 14:16