Dist	COUNTY	ROUTE	POST MILES TOTAL PROJECT	SHEET No.	TOTAL SHEETS
09	Mno	395	118.7/119.6	1	139

ACHSNH-P395(237)E

STATE OF CALIFORNIA
DEPARTMENT OF TRANSPORTATION

PROJECT PLANS FOR CONSTRUCTION ON
STATE HIGHWAY
IN MONO COUNTY
NEAR TOPAZ
FROM 1.8 MILES NORTH OF ROUTE 89
TO 0.5 MILE SOUTH OF NEVADA STATE LINE

TO BE SUPPLEMENTED BY STANDARD PLANS DATED MAY 2006

INDEX OF PLANS

SHEET No.	DESCRIPTION
1	TITLE AND LOCATION MAP
2	TYPICAL CROSS SECTIONS
3-11	LAYOUTS
12-14	PROFILES AND SUPERELEVATION DIAGRAM
15-32	CONSTRUCTION DETAILS
33-34	EROSION CONTROL PLAN, DETAILS AND QUANTITIES
35-36	CONTOUR GRADING
37-44	DRAINAGE PLANS, PROFILES, DETAILS AND QUANTITIES
45	CONSTRUCTION AREA SIGNS
46-51	STAGE CONSTRUCTION PLANS, DETAILS AND QUANTITIES
52-74	TRAFFIC HANDLING PLAN, DETAILS AND QUANTITIES
75-78	PAVEMENT DELINEATION PLAN, DETAILS AND QUANTITIES
79-81	SIGN PLAN, DETAILS AND QUANTITIES
82	SUMMARY OF QUANTITIES
83-102	REVISED AND NEW STANDARD PLANS

STRUCTURE PLANS

103-121	RETAINING WALL A
122-139	RETAINING WALL B

THE STANDARD PLANS LIST APPLICABLE TO THIS CONTRACT IS INCLUDED IN THE NOTICE TO BIDDERS AND SPECIAL PROVISIONS BOOK.

LOCATION MAP

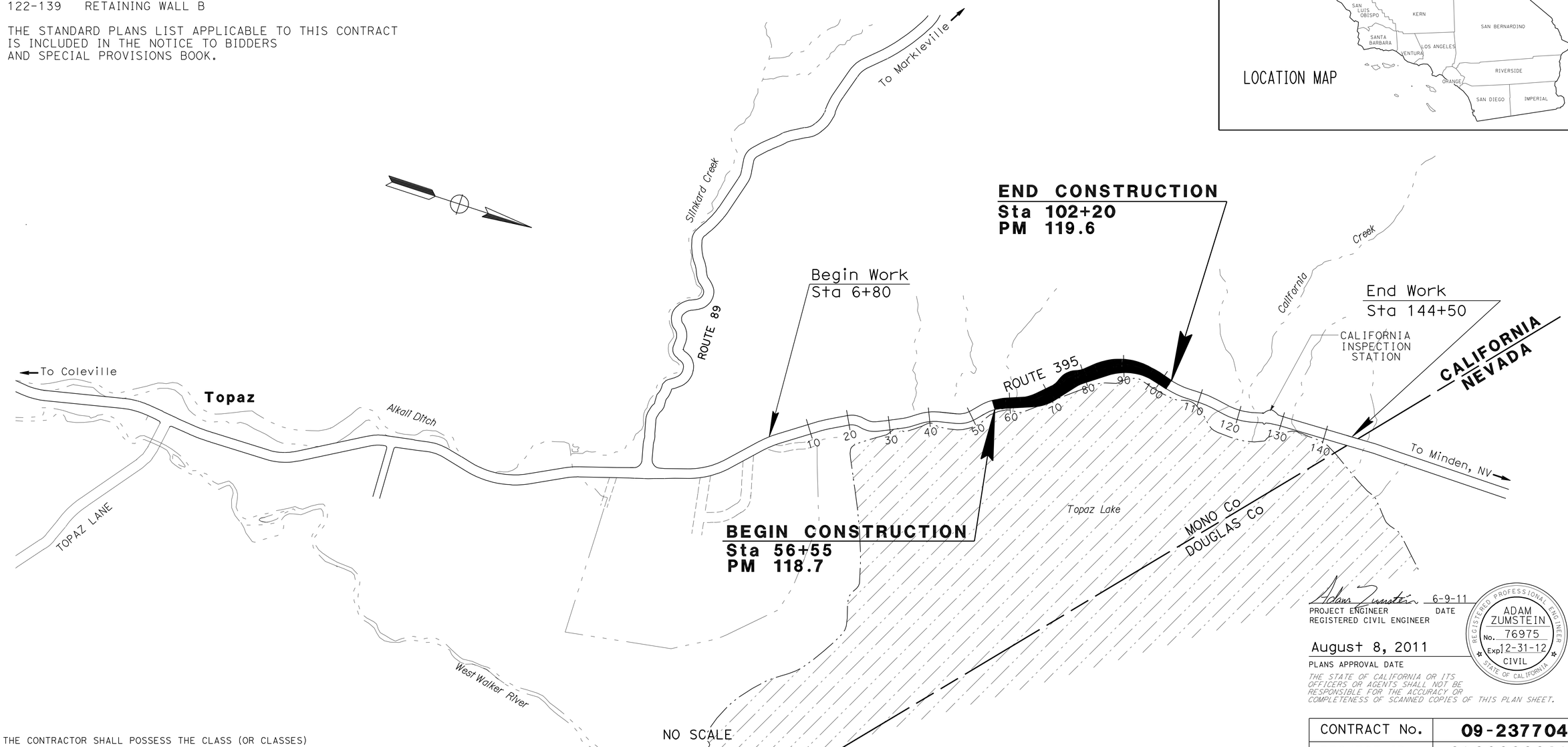

PROJECT MANAGER CEDRIK ZEMITIS

DESIGN ENGINEER ADAM ZUMSTEIN

Adam Zumstein 6-9-11
PROJECT ENGINEER DATE
REGISTERED CIVIL ENGINEER

August 8, 2011
PLANS APPROVAL DATE

REGISTERED PROFESSIONAL ENGINEER ADAM ZUMSTEIN No. 76975 Exp. 12-31-12 CIVIL STATE OF CALIFORNIA

THE STATE OF CALIFORNIA OR ITS OFFICERS OR AGENTS SHALL NOT BE RESPONSIBLE FOR THE ACCURACY OR COMPLETENESS OF SCANNED COPIES OF THIS PLAN SHEET.

THE CONTRACTOR SHALL POSSESS THE CLASS (OR CLASSES) OF LICENSE AS SPECIFIED IN THE "NOTICE TO BIDDERS."

CONTRACT No.	09-237704
PROJECT ID	0900000038

LAST REVISION 06-27-11

DATE PLOTTED => 17-OCT-2011
TIME PLOTTED => 05:36

Dist	COUNTY	ROUTE	POST MILES TOTAL PROJECT	SHEET No.	TOTAL SHEETS
09	Mno	395	118.7/119.6	2	139

REGISTERED CIVIL ENGINEER 6-8-11 DATE

8-8-11
PLANS APPROVAL DATE

REGISTERED PROFESSIONAL ENGINEER ADAM ZUMSTEIN No. 76975 Exp. 12-31-12 CIVIL STATE OF CALIFORNIA

THE STATE OF CALIFORNIA OR ITS OFFICERS OR AGENTS SHALL NOT BE RESPONSIBLE FOR THE ACCURACY OR COMPLETENESS OF SCANNED COPIES OF THIS PLAN SHEET.

NOTES:
1. DIMENSIONS OF THE PAVEMENT STRUCTURES (STRUCTURAL SECTION) ARE SUBJECT TO THE TOLERANCES SPECIFIED IN THE STANDARD SPECIFICATIONS.
2. SUPERELEVATIONS ARE SHOWN ON THE SUPER ELEVATION DIAGRAM.
3. TEMPORARY ROADWAY BASE AND PAVING TO REMAIN IN PLACE. SEE STAGE 2 PLANS, TRAFFIC HANDLING AND DETOUR PLANS, AND TRAFFIC HANDLING DETAILS FOR ADDITIONAL DETAILS.

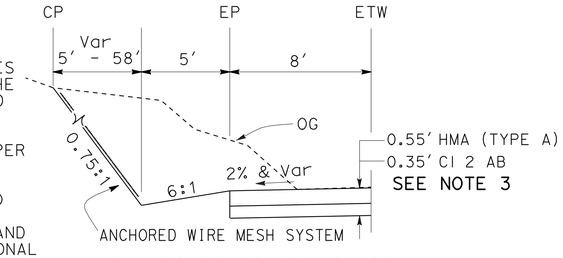

Sta 80+00 TO Sta 84+90

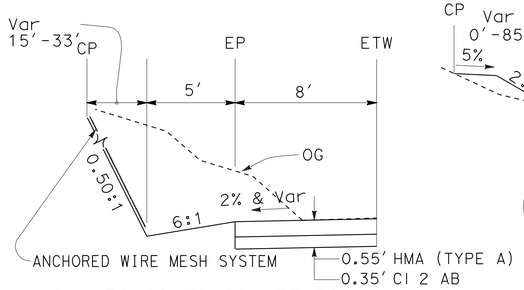

Sta 71+60 TO Sta 75+90 SEE NOTE 3

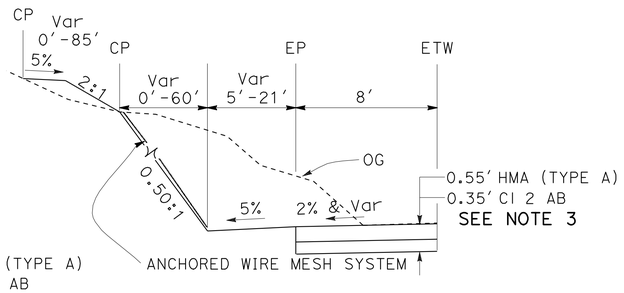

Sta 66+60 TO Sta 71+60

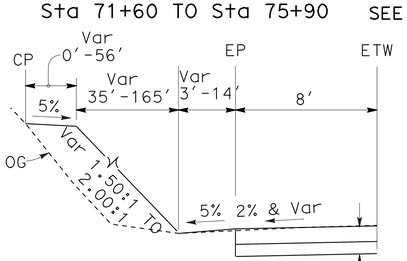

Sta 65+00 TO Sta 66+60 SEE NOTE 3

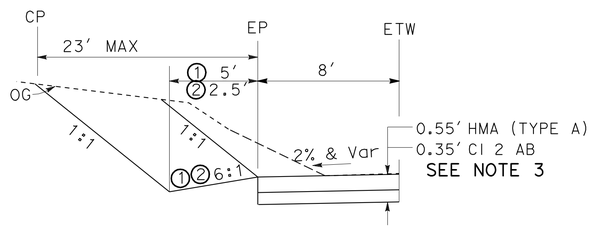

①Sta 59+20 TO Sta 60+90
Sta 64+20 TO Sta 65+00
②Sta 94+90 TO STA 100+90

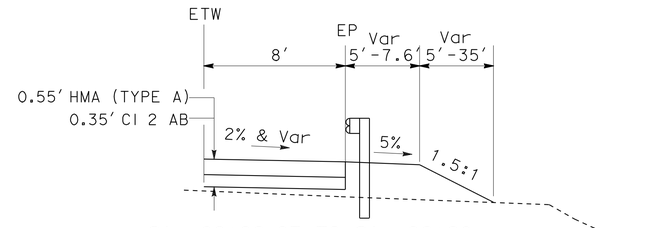

Sta 89+99.87 TO Sta 96+20

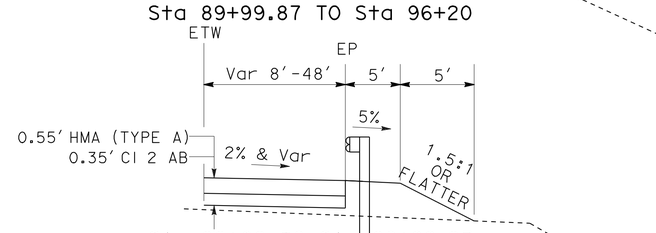

Sta 88+08 TO Sta 89+99.87

DESIGN DESIGNATION (ROUTE 395)

2012 ADT = 4000 D = 60.10%
2032 ADT = 4420 T = 10.8%
DHV = 490 V = 55 MPH
TI_{20} = 10.5

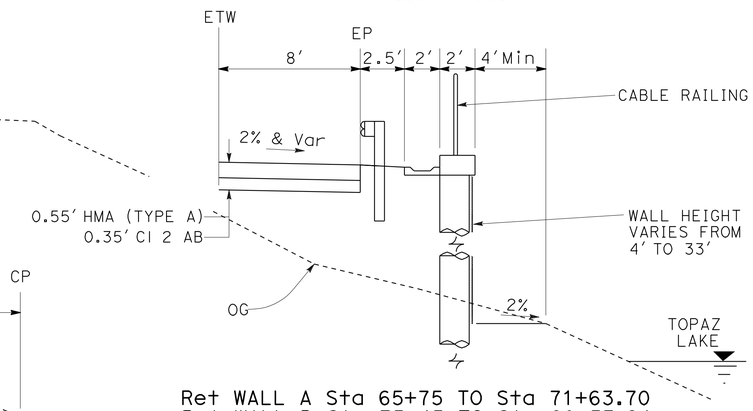

Ret WALL A Sta 65+75 TO Sta 71+63.70
Ret WALL B Sta 75+45 TO Sta 80+53.64
(SEE STRUCTURES PLANS FOR DETAILS)

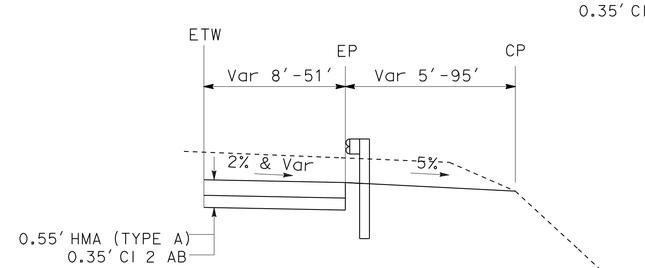

Sta 71+63.70 TO Sta 75+45
Sta 80+53.64 TO Sta 82+10
Sta 96+20 TO Sta 99+70

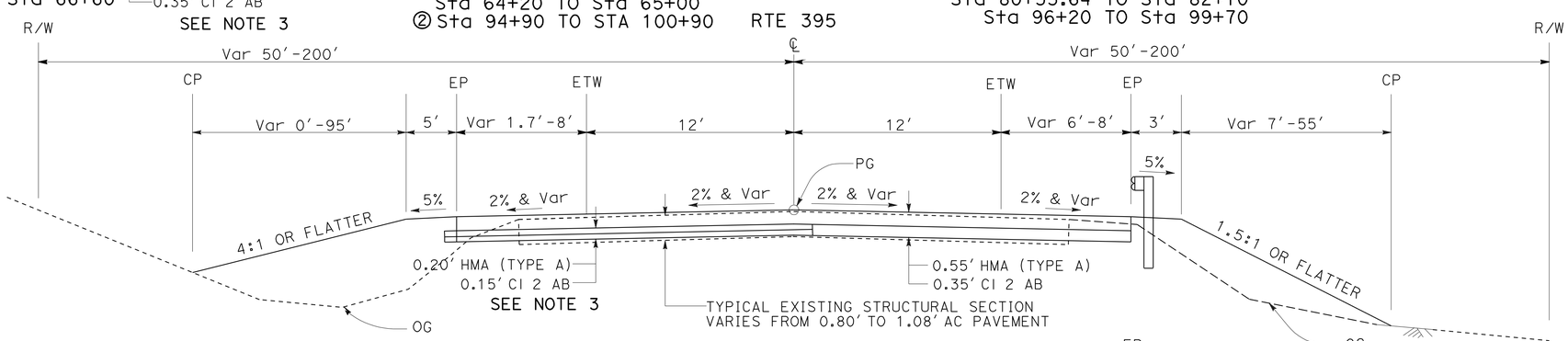

Sta 59+00 to Sta 102+19.94

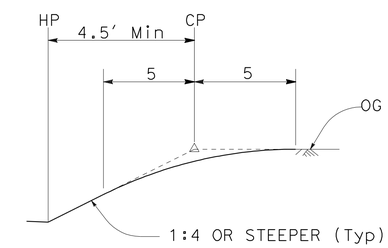

SLOPE ROUNDING DETAIL

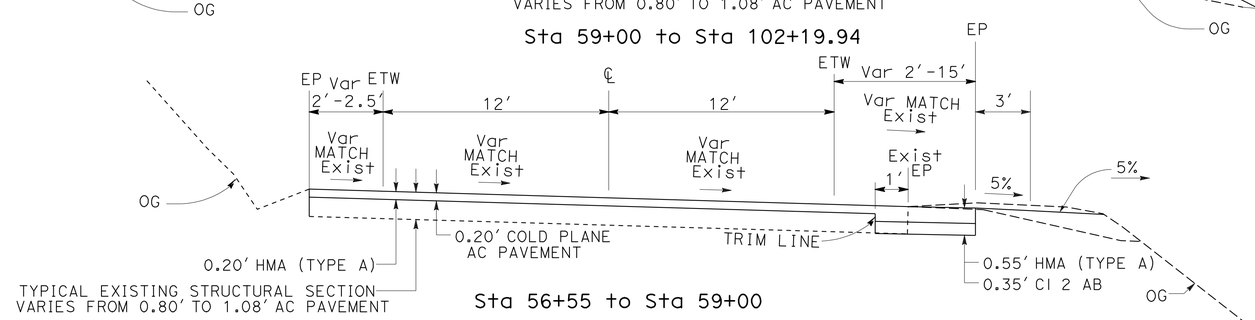

Sta 56+55 to Sta 59+00

ROUTE 395

TYPICAL CROSS SECTIONS X-1

NO SCALE

STATE OF CALIFORNIA - DEPARTMENT OF TRANSPORTATION
Caltrans® DESIGN

FUNCTIONAL SUPERVISOR: STEPHEN WINZENREAD
CALCULATED-DESIGNED BY: ADAM ZUMSTEIN
CHECKED BY: STEPHEN WINZENREAD
REVISED BY
DATE REVISED

LAST REVISION 06-27-11
DATE PLOTTED => 15-AUG-2011
TIME PLOTTED => 07:07

Dist	COUNTY	ROUTE	POST MILES TOTAL PROJECT	SHEET No.	TOTAL SHEETS
09	Mno	395	118.7/119.6	3	139

REGISTERED CIVIL ENGINEER 6-8-11 DATE

8-8-11
PLANS APPROVAL DATE

REGISTERED PROFESSIONAL ENGINEER ADAM ZUMSTEIN No. 76975 Exp. 12-31-12 CIVIL STATE OF CALIFORNIA

THE STATE OF CALIFORNIA OR ITS OFFICERS OR AGENTS SHALL NOT BE RESPONSIBLE FOR THE ACCURACY OR COMPLETENESS OF SCANNED COPIES OF THIS PLAN SHEET.

LEGEND:

- ANCHORED WIRE MESH SYSTEM
- TEMPORARY REINFORCED SILT FENCE
- DRAINAGE SYSTEM No.
- DRAINAGE UNIT No.
- ROCK SLOPE PROTECTION

ABBREVIATIONS:

AFTS- ALTERNATIVE FLARED TERMINAL SYSTEM

NOTES:

1. REMOVE ALL EXISTING MBGR 58+40.00 TO 102+20.489.
2. FIBER OPTIC LINE TO BE RELOCATED OUTSIDE OF RIGHT OF WAY BY OTHERS PRIOR TO CONSTRUCTION.
3. ABANDONED UNDERGROUND UTILITIES MAY EXIST.
4. TEMPORARY FENCE MAY BE ADJUSTED PER RECOMENDATIONS OF ENGINEER.
5. Max HISTORIC WATER ELEVATION 5,005′ ABOVE SEA LEVEL NGVD29.
6. FOR COMPLETE RIGHT OF WAY DATA, SEE RIGHT OF WAY RECORD MAPS AT DISTRICT OFFICE.

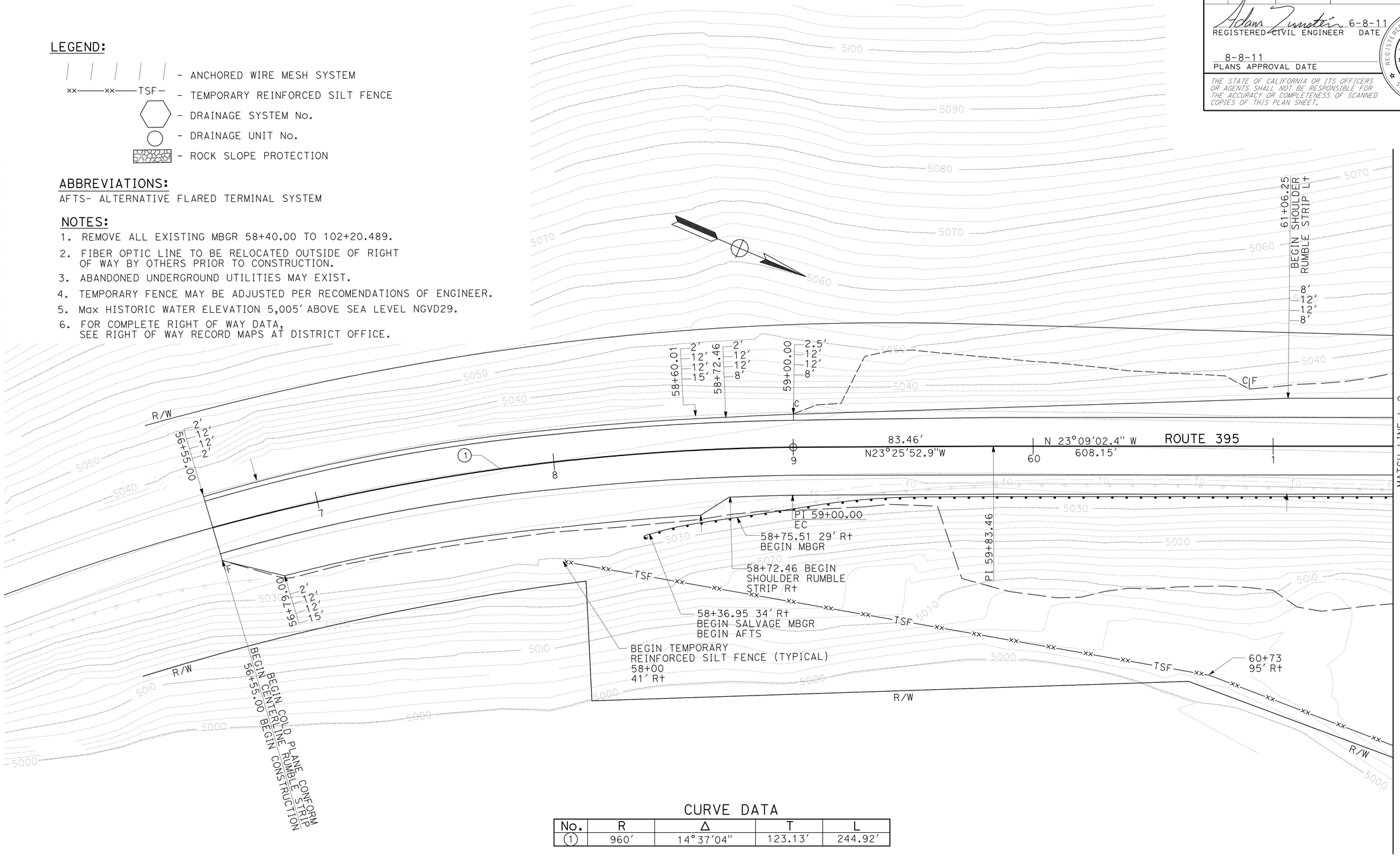

CURVE DATA

No.	R	Δ	T	L
1	960′	14°37′04"	123.13′	244.92′

LAYOUT

SCALE: 1" = 20′

L-1

REVISED BY	DATE REVISED

CALCULATED-DESIGNED BY: ADAM ZUMSTEIN
CHECKED BY: STEPHEN WINZENREAD
FUNCTIONAL SUPERVISOR: STEPHEN WINZENREAD

STATE OF CALIFORNIA - DEPARTMENT OF TRANSPORTATION
Caltrans
DESIGN

LAST REVISION 06-15-11
DATE PLOTTED => 15-AUG-2011
TIME PLOTTED => 07:07

Dist	COUNTY	ROUTE	POST MILES TOTAL PROJECT	SHEET No.	TOTAL SHEETS
09	Mno	395	118.7/119.6	4	139

REGISTERED CIVIL ENGINEER 6-8-11 DATE

8-8-11
PLANS APPROVAL DATE

REGISTERED PROFESSIONAL ENGINEER ADAM ZUMSTEIN No. 76975 Exp 12-31-12 CIVIL STATE OF CALIFORNIA

THE STATE OF CALIFORNIA OR ITS OFFICERS OR AGENTS SHALL NOT BE RESPONSIBLE FOR THE ACCURACY OR COMPLETENESS OF SCANNED COPIES OF THIS PLAN SHEET.

NOTE:

FOR ACCURATE RIGHT OF WAY DATA, CONTACT RIGHT OF WAY ENGINEERING AT THE DISTRICT OFFICE.

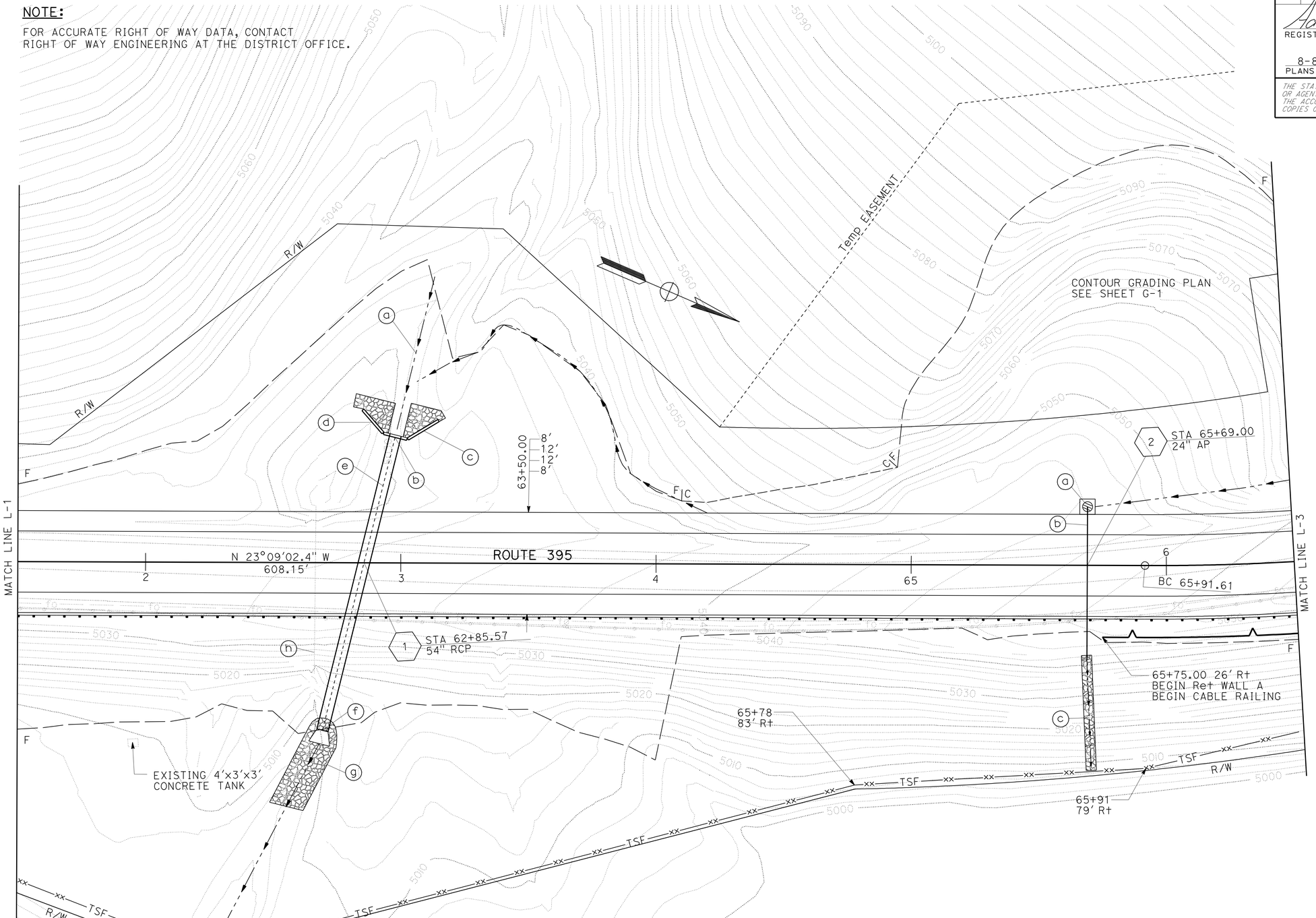

LAYOUT

SCALE: 1" = 20'

L-2

STATE OF CALIFORNIA - DEPARTMENT OF TRANSPORTATION
Caltrans
DESIGN

FUNCTIONAL SUPERVISOR: STEPHEN WINZENREAD
CALCULATED-DESIGNED BY: ADAM ZUMSTEIN
CHECKED BY: STEPHEN WINZENREAD
REVISED BY
DATE REVISED

LAST REVISION DATE PLOTTED => 15-AUG-2011
06-27-11 TIME PLOTTED => 07:07

Dist	COUNTY	ROUTE	POST MILES TOTAL PROJECT	SHEET No.	TOTAL SHEETS
09	Mno	395	118.7/119.6	5	139

Adam Zumstein 6-8-11
REGISTERED CIVIL ENGINEER DATE

8-8-11
PLANS APPROVAL DATE

REGISTERED PROFESSIONAL ENGINEER
ADAM ZUMSTEIN
No. 76975
Exp. 12-31-12
CIVIL
STATE OF CALIFORNIA

THE STATE OF CALIFORNIA OR ITS OFFICERS OR AGENTS SHALL NOT BE RESPONSIBLE FOR THE ACCURACY OR COMPLETENESS OF SCANNED COPIES OF THIS PLAN SHEET.

NOTE:

FOR ACCURATE RIGHT OF WAY DATA, CONTACT RIGHT OF WAY ENGINEERING AT THE DISTRICT OFFICE.

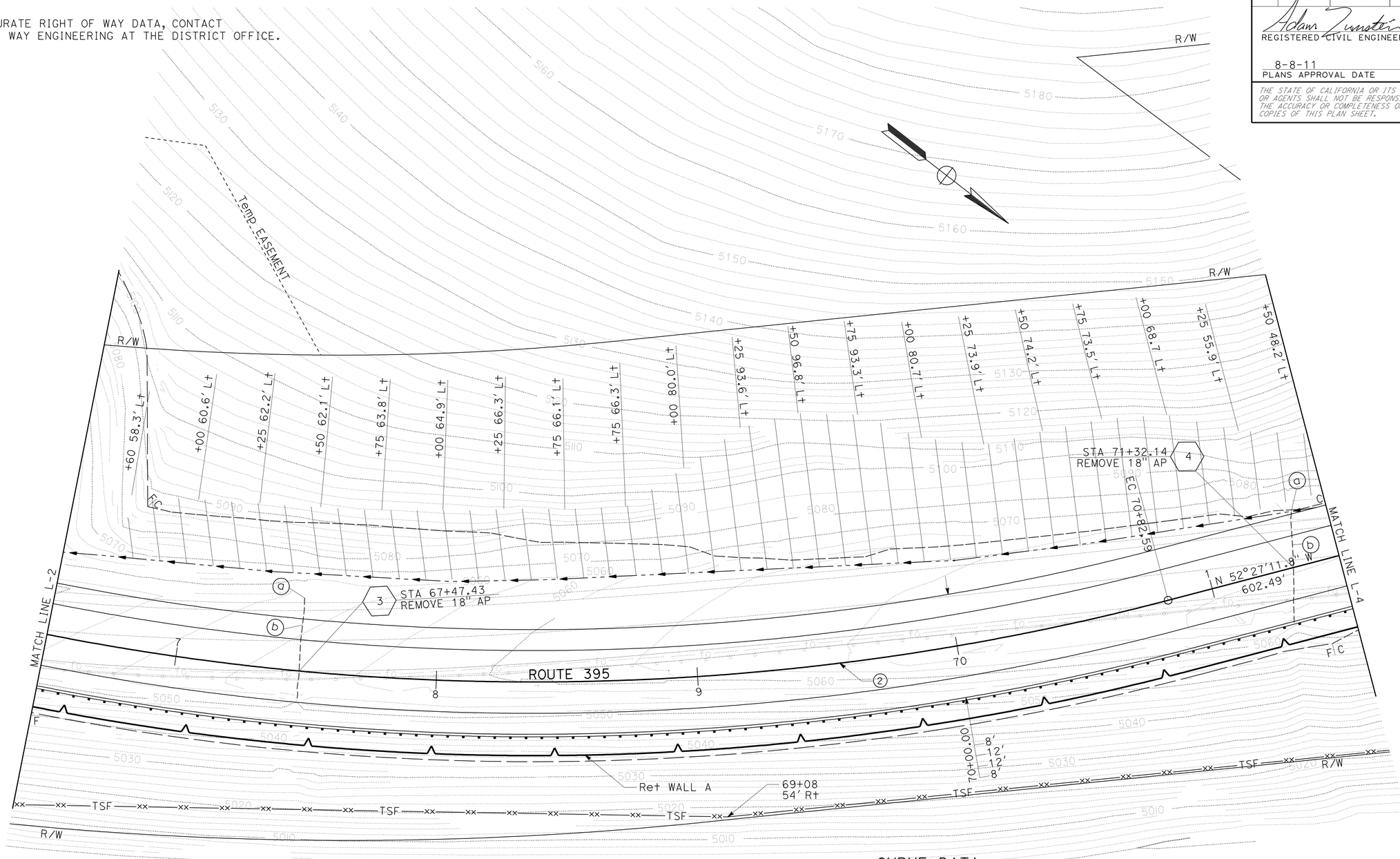

CURVE DATA

No.	R	Δ	T	L
2	960.00'	29°18'09"	250.98'	490.97'

LAYOUT

SCALE: 1" = 20' **L-3**

STATE OF CALIFORNIA - DEPARTMENT OF TRANSPORTATION
Caltrans
DESIGN

FUNCTIONAL SUPERVISOR: STEPHEN WINZENREAD
CALCULATED-DESIGNED BY: ADAM ZUMSTEIN
CHECKED BY: STEPHEN WINZENREAD
REVISED BY
DATE REVISED

LAST REVISION 06-27-11
DATE PLOTTED => 15-AUG-2011
TIME PLOTTED => 09:38

Dist	COUNTY	ROUTE	POST MILES TOTAL PROJECT	SHEET No.	TOTAL SHEETS
09	Mno	395	118.7/119.6	6	139

REGISTERED CIVIL ENGINEER 6-8-11 DATE

8-8-11
PLANS APPROVAL DATE

REGISTERED PROFESSIONAL ENGINEER ADAM ZUMSTEIN No. 76975 Exp. 12-31-12 CIVIL STATE OF CALIFORNIA

THE STATE OF CALIFORNIA OR ITS OFFICERS OR AGENTS SHALL NOT BE RESPONSIBLE FOR THE ACCURACY OR COMPLETENESS OF SCANNED COPIES OF THIS PLAN SHEET.

NOTE:

FOR ACCURATE RIGHT OF WAY DATA, CONTACT RIGHT OF WAY ENGINEERING AT THE DISTRICT OFFICE.

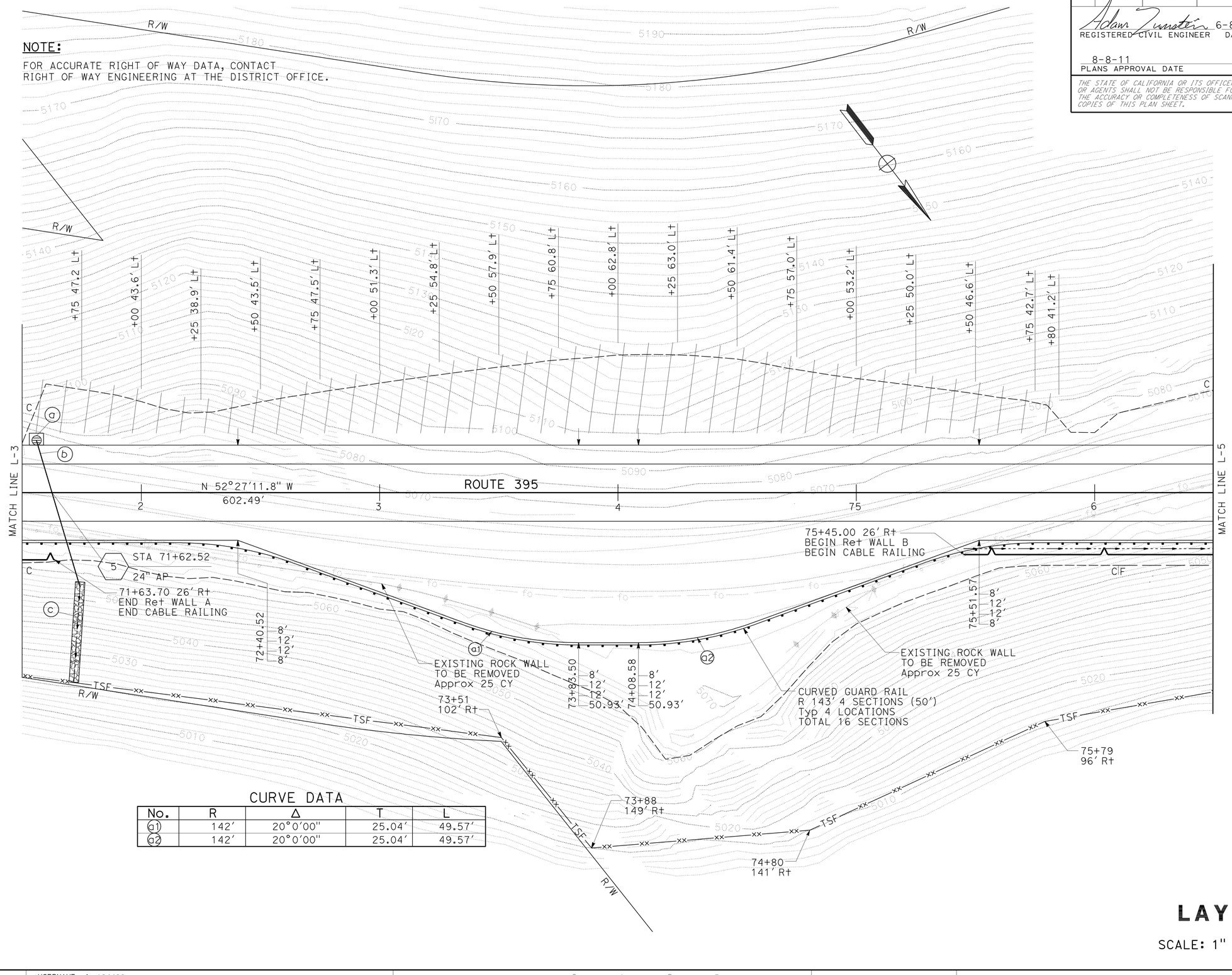

CURVE DATA

No.	R	Δ	T	L
a1	142'	20°0'00"	25.04'	49.57'
a2	142'	20°0'00"	25.04'	49.57'

LAYOUT

SCALE: 1" = 20' **L-4**

LAST REVISION	06-15-11
DATE PLOTTED =>	15-AUG-2011
TIME PLOTTED =>	09:38

STATE OF CALIFORNIA - DEPARTMENT OF TRANSPORTATION
Caltrans®
DESIGN

FUNCTIONAL SUPERVISOR: STEPHEN WINZENREAD

CALCULATED-DESIGNED BY: ADAM ZUMSTEIN
CHECKED BY: STEPHEN WINZENREAD

REVISED BY
DATE REVISED

Dist	COUNTY	ROUTE	POST MILES TOTAL PROJECT	SHEET No.	TOTAL SHEETS
09	Mno	395	118.7/119.6	7	139

REGISTERED CIVIL ENGINEER 6-8-11 DATE

8-8-11
PLANS APPROVAL DATE

REGISTERED PROFESSIONAL ENGINEER ADAM ZUMSTEIN No. 76975 Exp. 12-31-12 CIVIL STATE OF CALIFORNIA

THE STATE OF CALIFORNIA OR ITS OFFICERS OR AGENTS SHALL NOT BE RESPONSIBLE FOR THE ACCURACY OR COMPLETENESS OF SCANNED COPIES OF THIS PLAN SHEET.

NOTE:

FOR ACCURATE RIGHT OF WAY DATA, CONTACT RIGHT OF WAY ENGINEERING AT THE DISTRICT OFFICE.

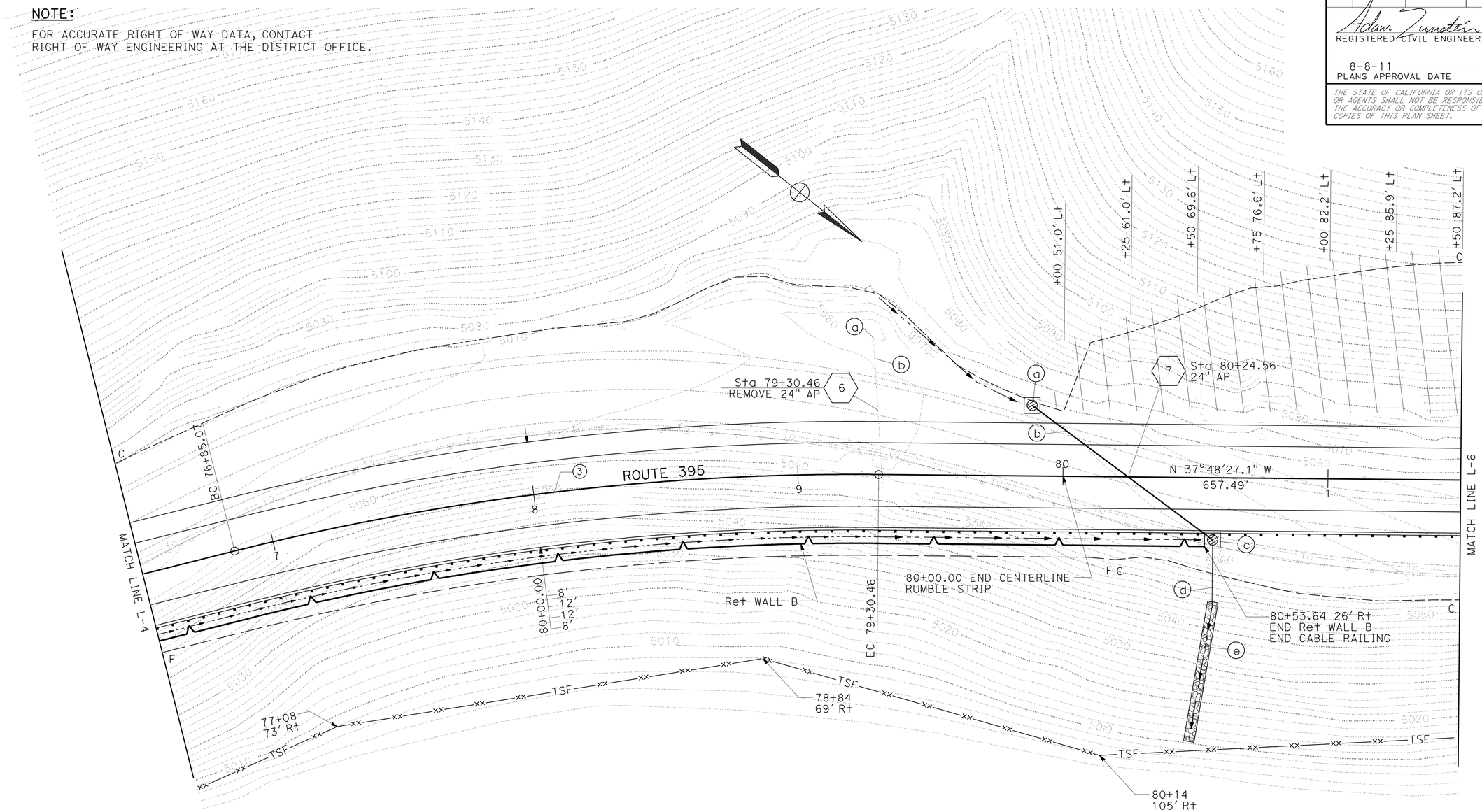

CURVE DATA

No.	R	Δ	T	L
3	960.03'	14°38'43"	123.37'	245.39'

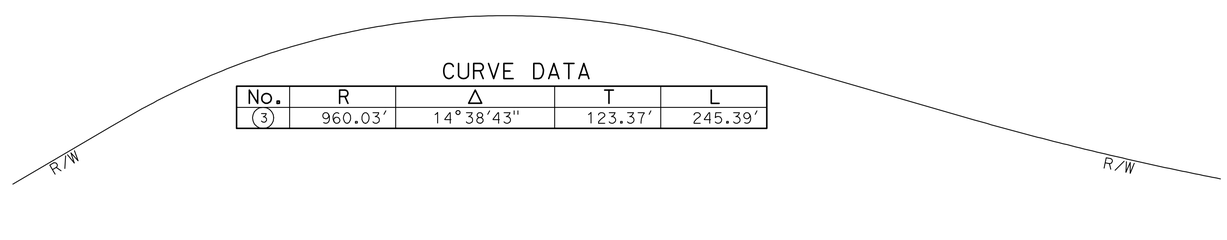

LAYOUT

SCALE: 1" = 20'

L-5

STATE OF CALIFORNIA - DEPARTMENT OF TRANSPORTATION

Caltrans

DESIGN

FUNCTIONAL SUPERVISOR: STEPHEN WINZENREAD

CALCULATED-DESIGNED BY: ADAM ZUMSTEIN

CHECKED BY: STEPHEN WINZENREAD

REVISED BY

DATE REVISED

LAST REVISION 06-08-11

DATE PLOTTED => 15-AUG-2011
TIME PLOTTED => 09:38

Dist	COUNTY	ROUTE	POST MILES TOTAL PROJECT	SHEET No.	TOTAL SHEETS
09	Mno	395	118.7/119.6	8	139

REGISTERED CIVIL ENGINEER 6-8-11 DATE

8-8-11
PLANS APPROVAL DATE

REGISTERED PROFESSIONAL ENGINEER
ADAM ZUMSTEIN
No. 76975
Exp. 12-31-12
CIVIL
STATE OF CALIFORNIA

THE STATE OF CALIFORNIA OR ITS OFFICERS OR AGENTS SHALL NOT BE RESPONSIBLE FOR THE ACCURACY OR COMPLETENESS OF SCANNED COPIES OF THIS PLAN SHEET.

NOTE:

FOR ACCURATE RIGHT OF WAY DATA, CONTACT RIGHT OF WAY ENGINEERING AT THE DISTRICT OFFICE.

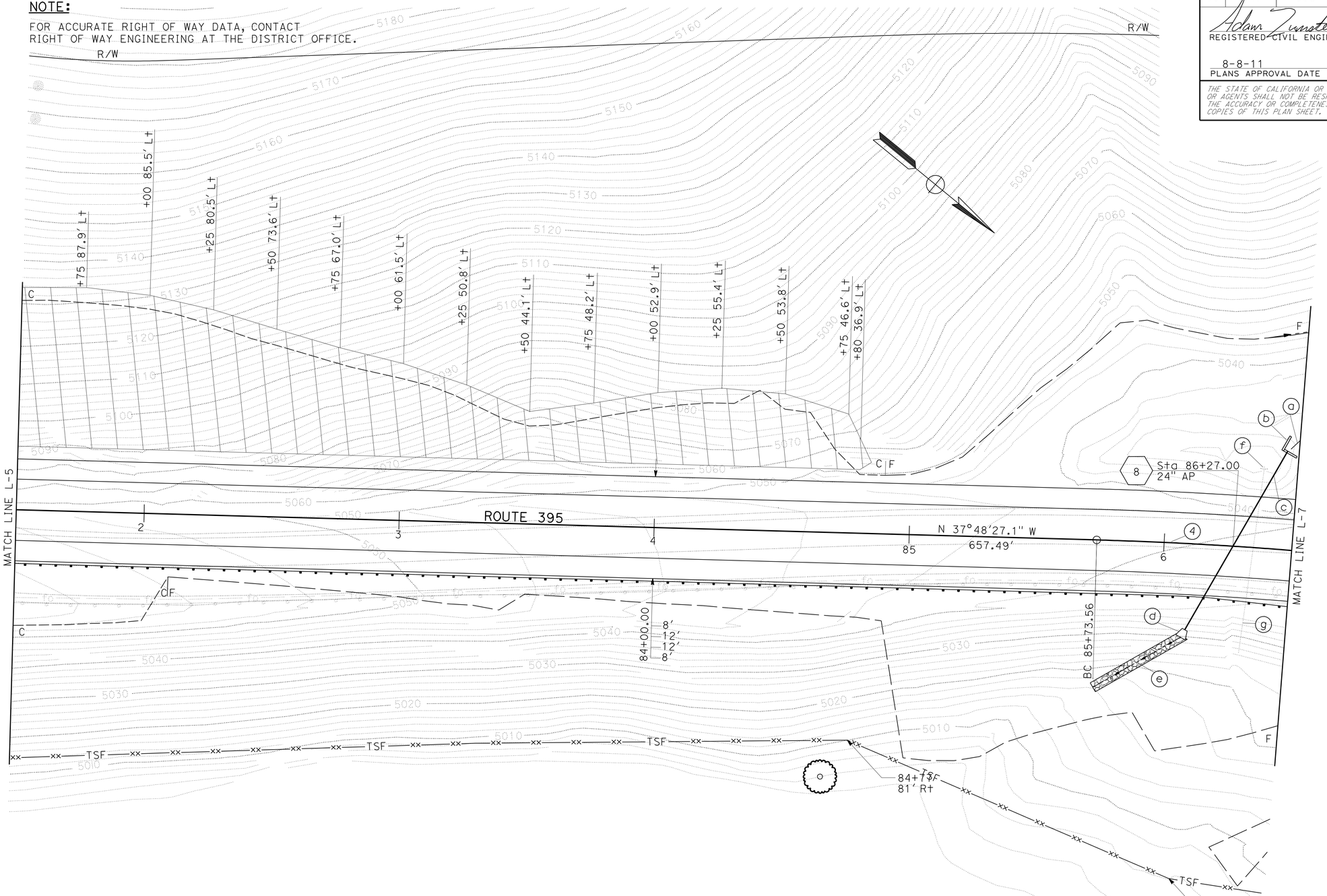

LAYOUT

SCALE: 1" = 20'

L-6

REVISED BY	DATE REVISED

CALCULATED-DESIGNED BY	CHECKED BY
ADAM ZUMSTEIN	STEPHEN WINZENREAD

FUNCTIONAL SUPERVISOR: STEPHEN WINZENREAD

STATE OF CALIFORNIA - DEPARTMENT OF TRANSPORTATION

Caltrans

DESIGN

LAST REVISION 06-15-11 | DATE PLOTTED => 15-AUG-2011 | TIME PLOTTED => 07:07

Dist	COUNTY	ROUTE	POST MILES TOTAL PROJECT	SHEET No.	TOTAL SHEETS
09	Mno	395	118.7/119.6	9	139

Adam Zumstein 6-8-11
REGISTERED CIVIL ENGINEER DATE

8-8-11
PLANS APPROVAL DATE

REGISTERED PROFESSIONAL ENGINEER
ADAM ZUMSTEIN
No. 76975
Exp. 12-31-12
CIVIL
STATE OF CALIFORNIA

THE STATE OF CALIFORNIA OR ITS OFFICERS OR AGENTS SHALL NOT BE RESPONSIBLE FOR THE ACCURACY OR COMPLETENESS OF SCANNED COPIES OF THIS PLAN SHEET.

NOTE:

FOR ACCURATE RIGHT OF WAY DATA, CONTACT RIGHT OF WAY ENGINEERING AT THE DISTRICT OFFICE.

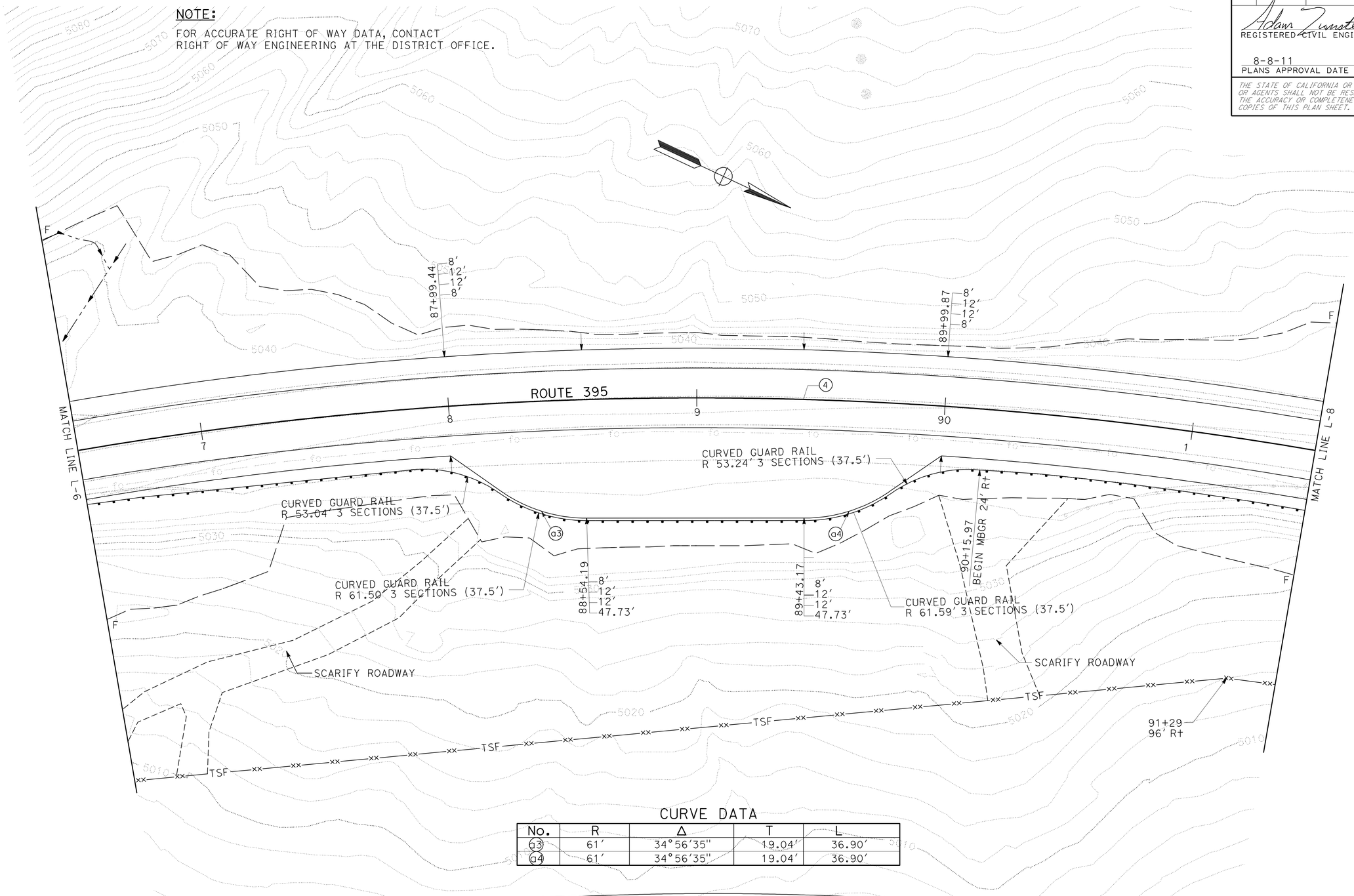

CURVE DATA

No.	R	Δ	T	L
a3	61′	34°56′35"	19.04′	36.90′
a4	61′	34°56′35"	19.04′	36.90′

LAYOUT

SCALE: 1" = 20′

L-7

STATE OF CALIFORNIA - DEPARTMENT OF TRANSPORTATION
Caltrans
DESIGN

FUNCTIONAL SUPERVISOR: STEPHEN WINZENREAD
CALCULATED-DESIGNED BY: ADAM ZUMSTEIN
CHECKED BY: STEPHEN WINZENREAD
REVISED BY
DATE REVISED

LAST REVISION 06-15-11
DATE PLOTTED => 15-AUG-2011
TIME PLOTTED => 07:07

Dist	COUNTY	ROUTE	POST MILES TOTAL PROJECT	SHEET No.	TOTAL SHEETS
09	Mno	395	118.7/119.6	10	139

Adam Zumstein 6-8-11
REGISTERED CIVIL ENGINEER DATE

8-8-11
PLANS APPROVAL DATE

REGISTERED PROFESSIONAL ENGINEER
ADAM ZUMSTEIN
No. 76975
Exp. 12-31-12
CIVIL
STATE OF CALIFORNIA

THE STATE OF CALIFORNIA OR ITS OFFICERS OR AGENTS SHALL NOT BE RESPONSIBLE FOR THE ACCURACY OR COMPLETENESS OF SCANNED COPIES OF THIS PLAN SHEET.

NOTE:

FOR ACCURATE RIGHT OF WAY DATA, CONTACT RIGHT OF WAY ENGINEERING AT THE DISTRICT OFFICE.

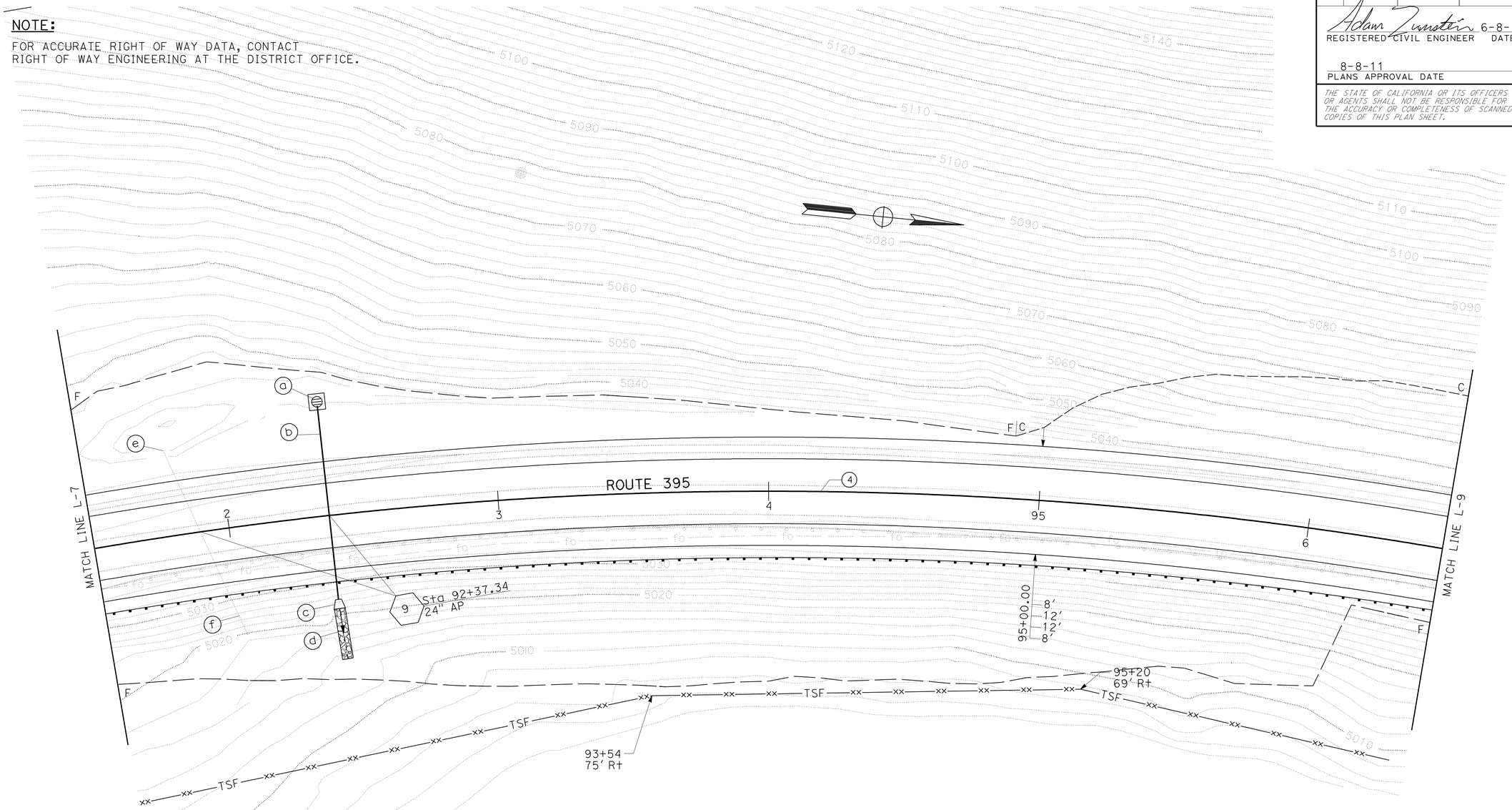

CURVE DATA

No.	R	Δ	T	L
4	1450.00'	52°33'26"	715.96'	1330.08'

LAYOUT

SCALE: 1" = 20'

L-8

STATE OF CALIFORNIA - DEPARTMENT OF TRANSPORTATION
Caltrans
DESIGN

FUNCTIONAL SUPERVISOR: STEPHEN WINZENREAD
CALCULATED-DESIGNED BY: ADAM ZUMSTEIN
CHECKED BY: STEPHEN WINZENREAD
REVISED BY
DATE REVISED

LAST REVISION 06-15-11
DATE PLOTTED => 15-AUG-2011
TIME PLOTTED => 07:07

Dist	COUNTY	ROUTE	POST MILES TOTAL PROJECT	SHEET No.	TOTAL SHEETS
09	Mno	395	118.7/119.6	11	139

REGISTERED CIVIL ENGINEER 6-8-11 DATE

8-8-11
PLANS APPROVAL DATE

REGISTERED PROFESSIONAL ENGINEER ADAM ZUMSTEIN No. 76975 Exp. 12-31-12 CIVIL STATE OF CALIFORNIA

THE STATE OF CALIFORNIA OR ITS OFFICERS OR AGENTS SHALL NOT BE RESPONSIBLE FOR THE ACCURACY OR COMPLETENESS OF SCANNED COPIES OF THIS PLAN SHEET.

NOTE:

FOR ACCURATE RIGHT OF WAY DATA, CONTACT RIGHT OF WAY ENGINEERING AT THE DISTRICT OFFICE.

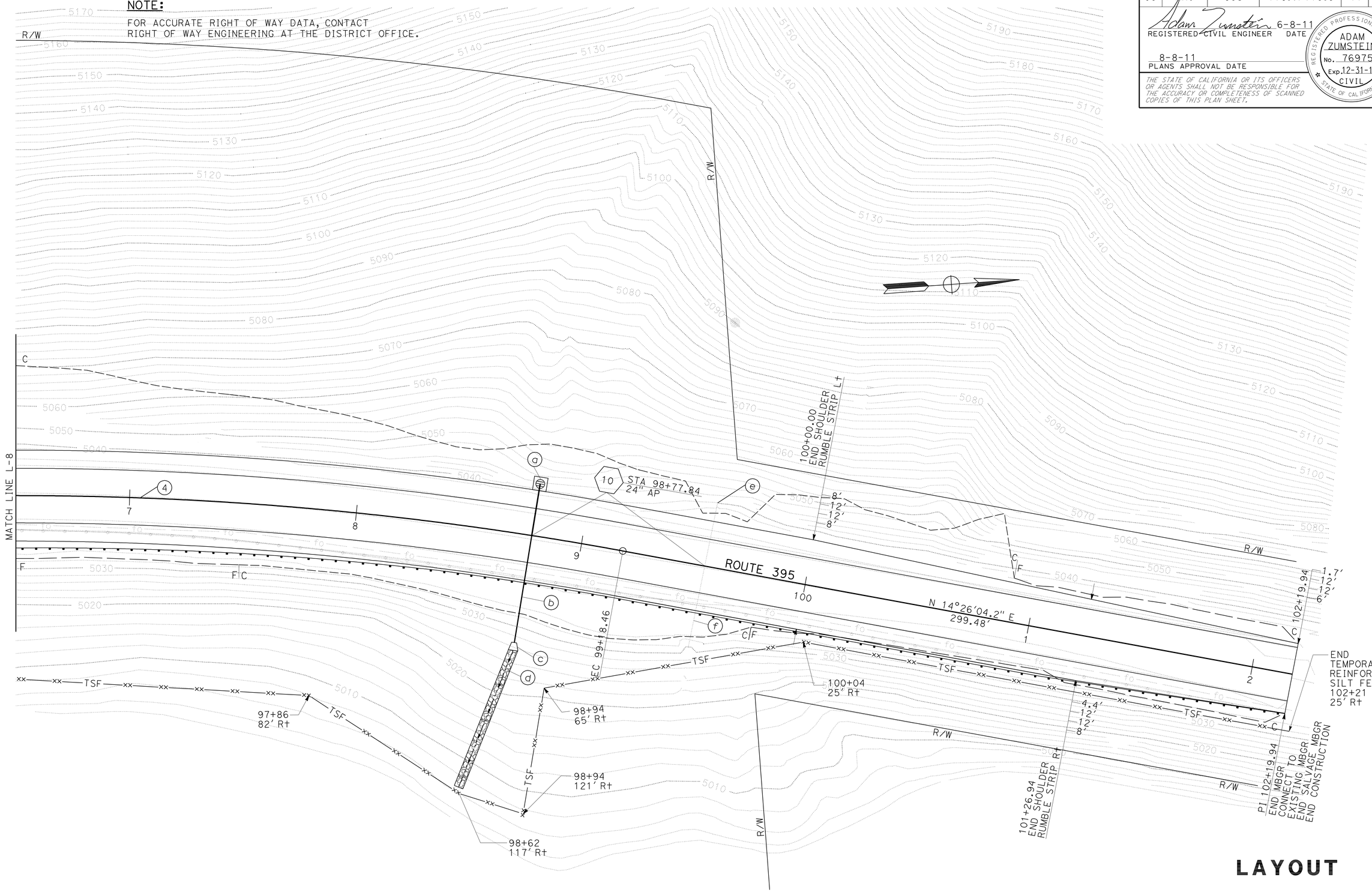

LAYOUT

SCALE: 1" = 20'

L-9

STATE OF CALIFORNIA - DEPARTMENT OF TRANSPORTATION

Caltrans

DESIGN

FUNCTIONAL SUPERVISOR: STEPHEN WINZENREAD

CALCULATED-DESIGNED BY: ADAM ZUMSTEIN

CHECKED BY: STEPHEN WINZENREAD

REVISED BY

DATE REVISED

LAST REVISION 06-15-11

DATE PLOTTED => 15-AUG-2011

TIME PLOTTED => 07:07

Dist	COUNTY	ROUTE	POST MILES TOTAL PROJECT	SHEET No.	TOTAL SHEETS
09	Mno	395	118.7/119.6	12	139

Adam Zumstein 6-8-11
REGISTERED CIVIL ENGINEER DATE

8-8-11
PLANS APPROVAL DATE

REGISTERED PROFESSIONAL ENGINEER
ADAM ZUMSTEIN
No. 76975
Exp. 12-31-12
CIVIL
STATE OF CALIFORNIA

THE STATE OF CALIFORNIA OR ITS OFFICERS OR AGENTS SHALL NOT BE RESPONSIBLE FOR THE ACCURACY OR COMPLETENESS OF SCANNED COPIES OF THIS PLAN SHEET.

NOTES:

1. ALL ELEVATIONS ARE BASED ON NGVD 1929.
2. Exc QUANTITIES ON PROFILE SHEETS INCLUDE ROCK Exc AND ROAD Exc QUANTITIES.

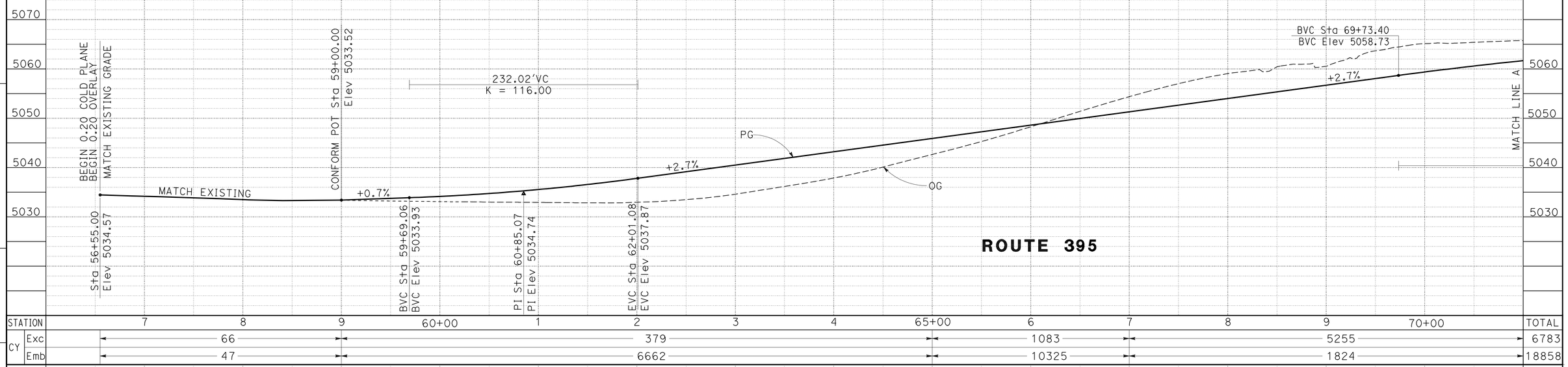

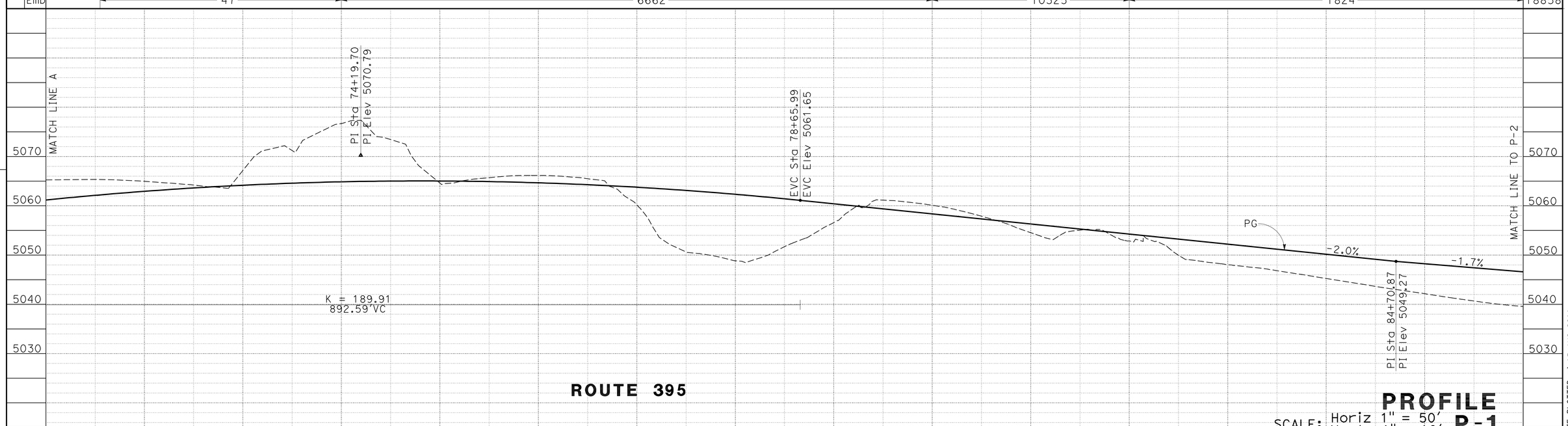

SCALE: Horiz 1" = 50' Vert 1" = 10'

PROFILE P-1

REVISED BY | DATE REVISED
MICHAEL COLLINS | ADAM ZUMSTEIN
CALCULATED-DESIGNED BY | CHECKED BY
FUNCTIONAL SUPERVISOR: STEPHEN WINZENREAD
STATE OF CALIFORNIA - DEPARTMENT OF TRANSPORTATION
DESIGN
Caltrans

LAST REVISION 06-27-11
DATE PLOTTED => 15-AUG-2011
TIME PLOTTED => 07:07

Dist	COUNTY	ROUTE	POST MILES TOTAL PROJECT	SHEET No.	TOTAL SHEETS
09	Mno	395	118.7/119.6	13	139

REGISTERED CIVIL ENGINEER 6-8-11 DATE

8-8-11
PLANS APPROVAL DATE

REGISTERED PROFESSIONAL ENGINEER ADAM ZUMSTEIN No. 76975 Exp 12-31-12 CIVIL STATE OF CALIFORNIA

THE STATE OF CALIFORNIA OR ITS OFFICERS OR AGENTS SHALL NOT BE RESPONSIBLE FOR THE ACCURACY OR COMPLETENESS OF SCANNED COPIES OF THIS PLAN SHEET.

STATION	7	8	9	90+00	1	2	3	4	95+00	6	7	8	9	100+00	TOTAL
CY Exc	301							4831							5132
CY Emb	10320							1074							11394

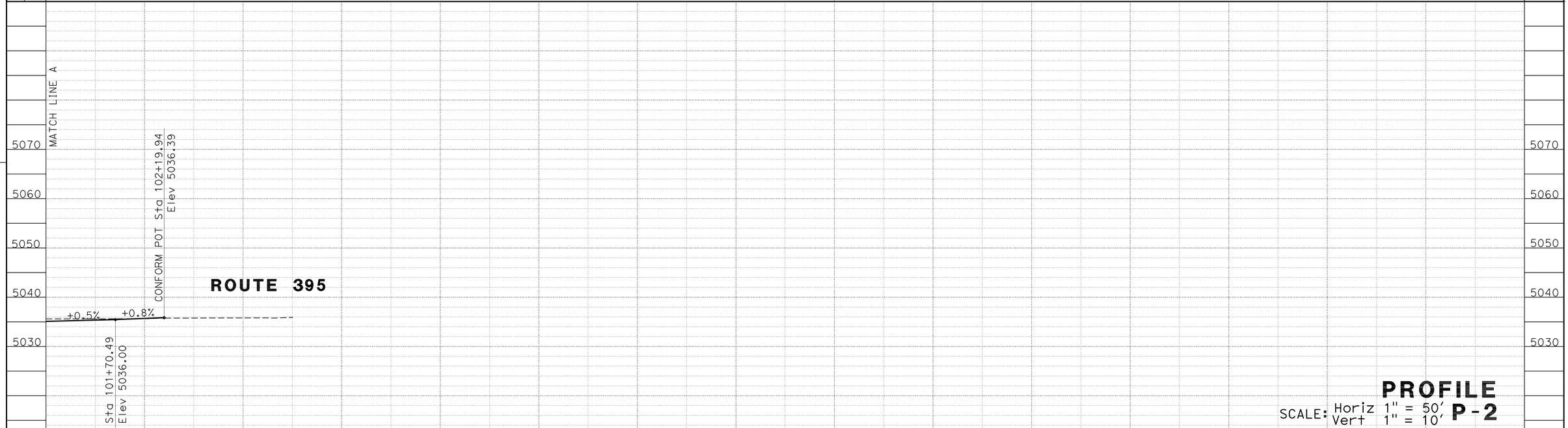

STATION	102+00	TOTAL
CY Exc	160	160
CY Emb	10	10

PROFILE

SCALE: Horiz 1" = 50' Vert 1" = 10'

P-2

STATE OF CALIFORNIA - DEPARTMENT OF TRANSPORTATION

DESIGN

Caltrans

FUNCTIONAL SUPERVISOR: STEPHEN WINZENREAD

CALCULATED-DESIGNED BY: MICHAEL COLLINS

CHECKED BY: ADAM ZUMSTEIN

REVISED BY

DATE REVISED

LAST REVISION 06-08-11

DATE PLOTTED => 15-AUG-2011

TIME PLOTTED => 07:08

Dist	COUNTY	ROUTE	POST MILES TOTAL PROJECT	SHEET No.	TOTAL SHEETS
09	Mno	395	118.7/119.6	14	139

REGISTERED CIVIL ENGINEER 6-8-11 DATE

8-8-11
PLANS APPROVAL DATE

REGISTERED PROFESSIONAL ENGINEER ADAM ZUMSTEIN No. 76975 Exp 12-31-12 CIVIL STATE OF CALIFORNIA

THE STATE OF CALIFORNIA OR ITS OFFICERS OR AGENTS SHALL NOT BE RESPONSIBLE FOR THE ACCURACY OR COMPLETENESS OF SCANNED COPIES OF THIS PLAN SHEET.

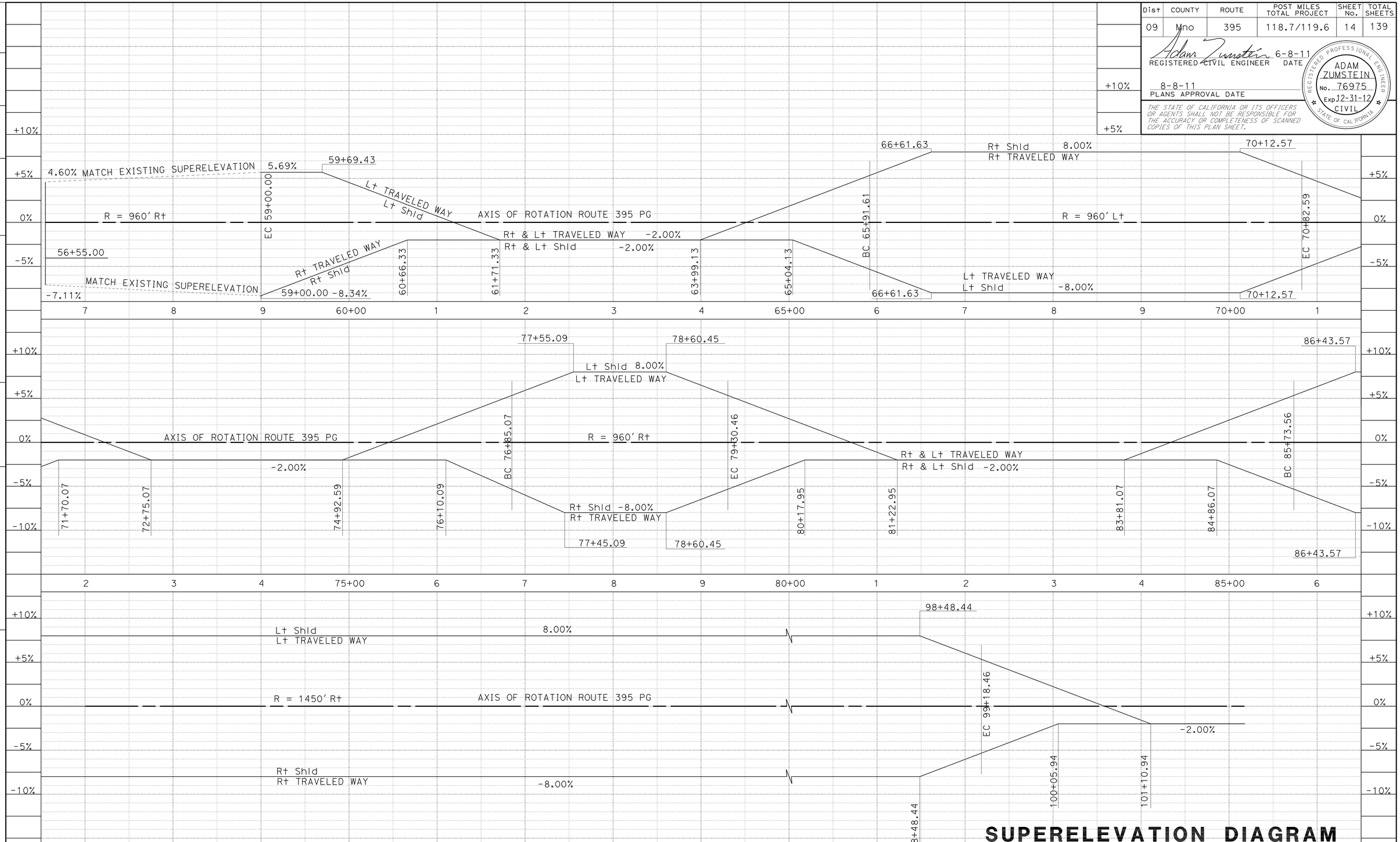

SUPERELEVATION DIAGRAM

SCALE: 1" = 20'

SE-1

STATE OF CALIFORNIA - DEPARTMENT OF TRANSPORTATION

DESIGN

Caltrans

FUNCTIONAL SUPERVISOR: STEPHEN WINZENREAD

CALCULATED-DESIGNED BY: ADAM ZUMSTEIN

CHECKED BY: MICHAEL COLLINS

REVISED BY | DATE REVISED

LAST REVISION 06-08-11 | DATE PLOTTED => 15-AUG-2011 | TIME PLOTTED => 07:08

Dist	COUNTY	ROUTE	POST MILES TOTAL PROJECT	SHEET No.	TOTAL SHEETS
09	Mno	395	118.7/119.6	15	139

Adam Zumstein 6-8-11
REGISTERED CIVIL ENGINEER DATE

8-8-11
PLANS APPROVAL DATE

REGISTERED PROFESSIONAL ENGINEER
ADAM ZUMSTEIN
No. 76975
Exp 12-31-12
CIVIL
STATE OF CALIFORNIA

THE STATE OF CALIFORNIA OR ITS OFFICERS OR AGENTS SHALL NOT BE RESPONSIBLE FOR THE ACCURACY OR COMPLETENESS OF SCANNED COPIES OF THIS PLAN SHEET.

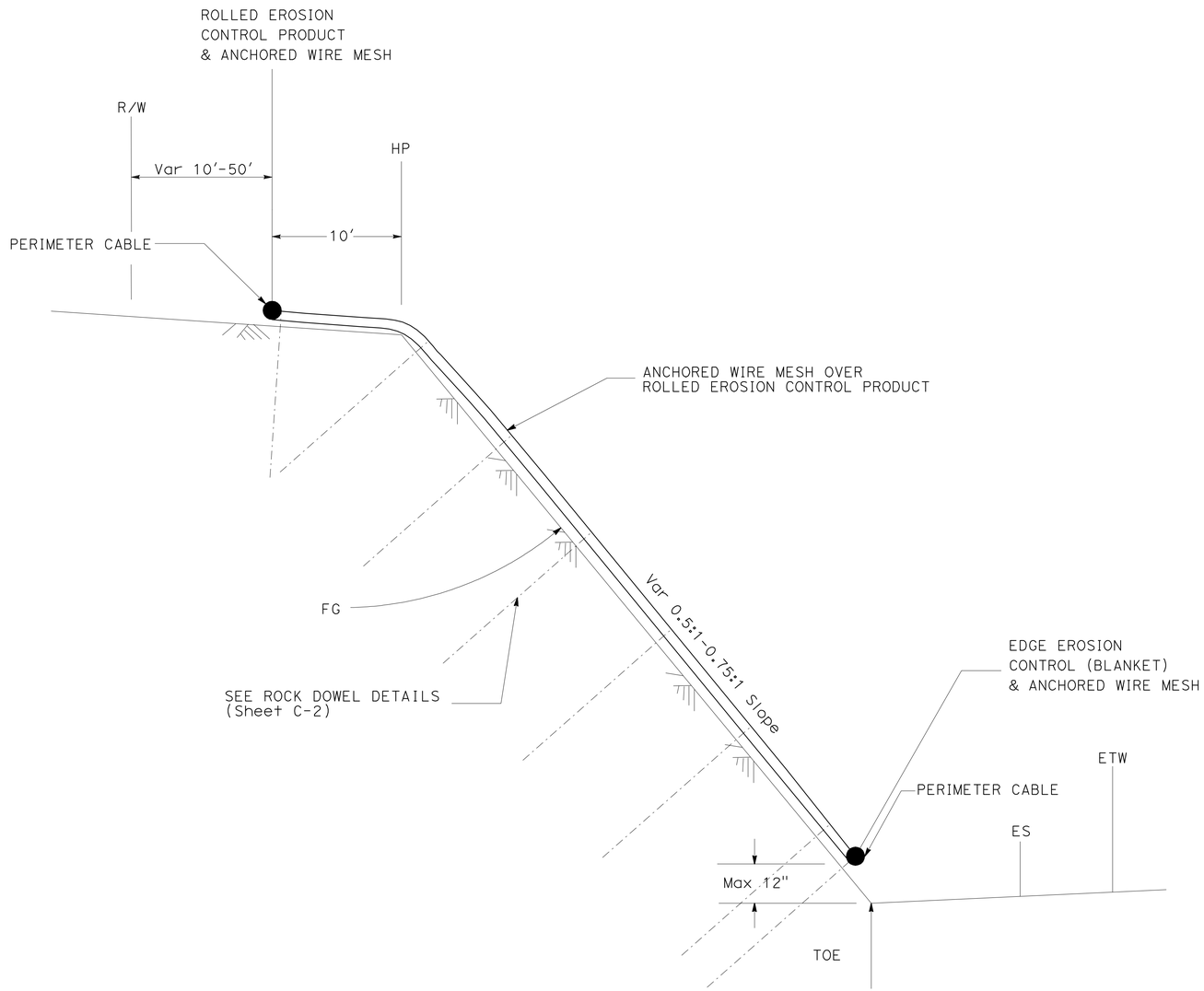

ANCHORED WIRE MESH TYPICAL CROSS SECTION

Sta 66+60 TO Sta 75+90 Sta 80+10 TO Sta 84+90

CONSTRUCTION DETAILS

NO SCALE

C-1

STATE OF CALIFORNIA - DEPARTMENT OF TRANSPORTATION
Caltrans®
DESIGN

FUNCTIONAL SUPERVISOR: STEPHEN WINZENREAD
CALCULATED-DESIGNED BY: MICHAEL COLLINS
CHECKED BY: R. STEVE MILLER
REVISED BY
DATE REVISED

LAST REVISION 06-08-11
DATE PLOTTED => 15-AUG-2011
TIME PLOTTED => 07:49

Dist	COUNTY	ROUTE	POST MILES TOTAL PROJECT	SHEET No.	TOTAL SHEETS
09	Mno	395	118.7/119.6	16	139

Adam Zumstein 6-8-11
REGISTERED CIVIL ENGINEER DATE

8-8-11
PLANS APPROVAL DATE

REGISTERED PROFESSIONAL ENGINEER ADAM ZUMSTEIN No. 76975 Exp. 12-31-12 CIVIL STATE OF CALIFORNIA

THE STATE OF CALIFORNIA OR ITS OFFICERS OR AGENTS SHALL NOT BE RESPONSIBLE FOR THE ACCURACY OR COMPLETENESS OF SCANNED COPIES OF THIS PLAN SHEET.

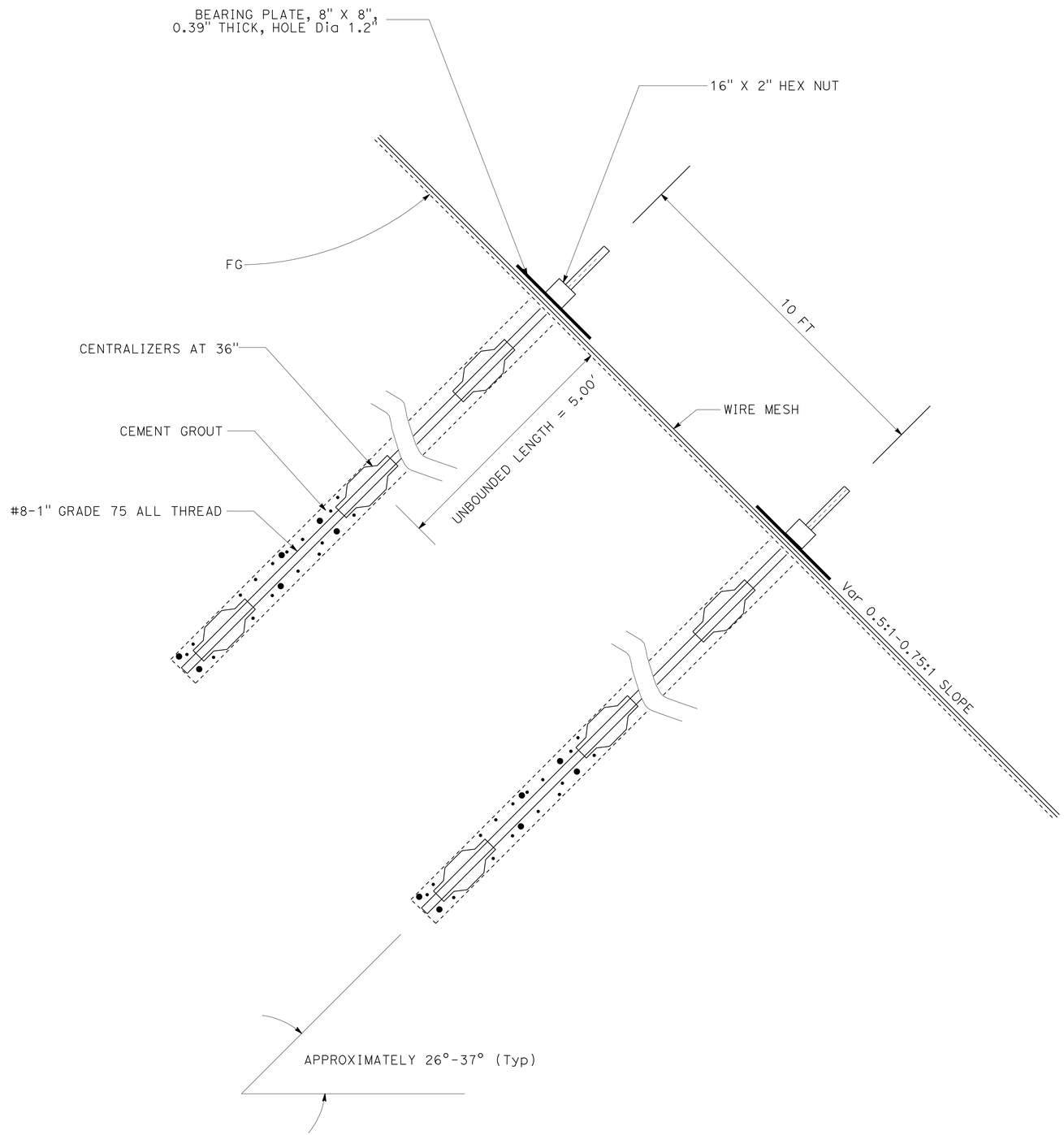

ROCK DOWEL SECTION DETAIL

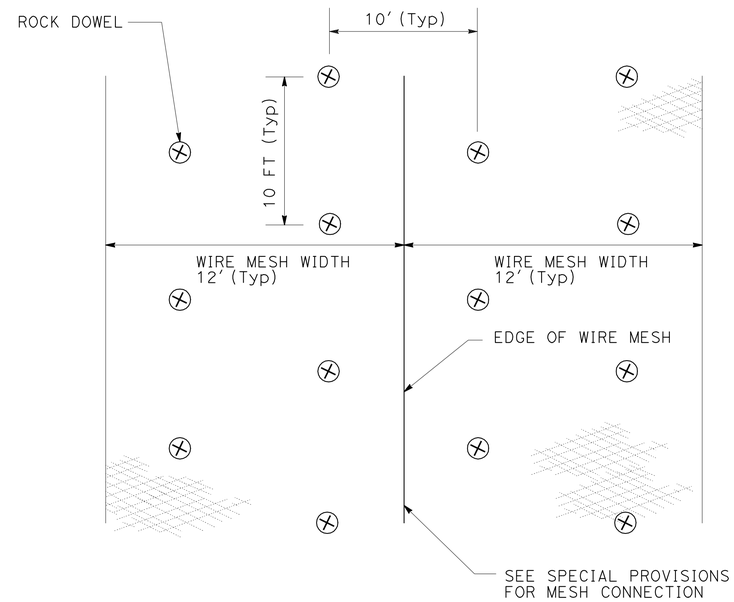

PLAN

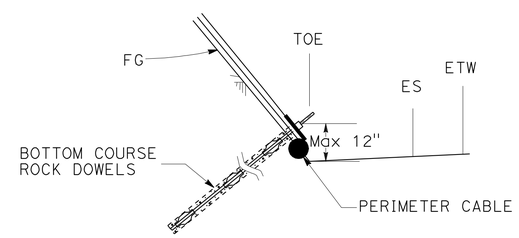

BOTTOM COURSE ROCK DOWEL SECTION DETAIL

CONSTRUCTION DETAILS

NO SCALE

C-2

STATE OF CALIFORNIA - DEPARTMENT OF TRANSPORTATION
Caltrans®
DESIGN

FUNCTIONAL SUPERVISOR: STEPHEN WINZENREAD
CALCULATED-DESIGNED BY: MICHAEL COLLINS
CHECKED BY: R. STEVE MILLER
REVISED BY
DATE REVISED

LAST REVISION 06-08-11
DATE PLOTTED => 15-AUG-2011
TIME PLOTTED => 07:49

Dist	COUNTY	ROUTE	POST MILES TOTAL PROJECT	SHEET No.	TOTAL SHEETS
09	Mno	395	118.7/119.6	17	139

REGISTERED CIVIL ENGINEER 6-8-11 DATE

8-8-11
PLANS APPROVAL DATE

REGISTERED PROFESSIONAL ENGINEER ADAM ZUMSTEIN No. 76975 Exp. 12-31-12 CIVIL STATE OF CALIFORNIA

THE STATE OF CALIFORNIA OR ITS OFFICERS OR AGENTS SHALL NOT BE RESPONSIBLE FOR THE ACCURACY OR COMPLETENESS OF SCANNED COPIES OF THIS PLAN SHEET.

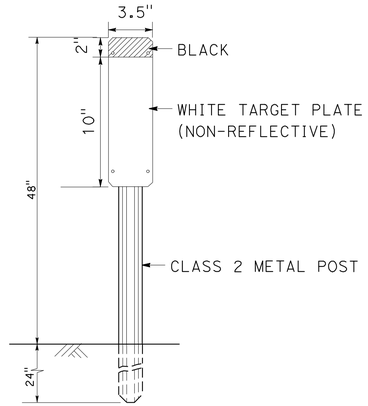

MARKER (CULVERT) PLATE AND POST DETAIL

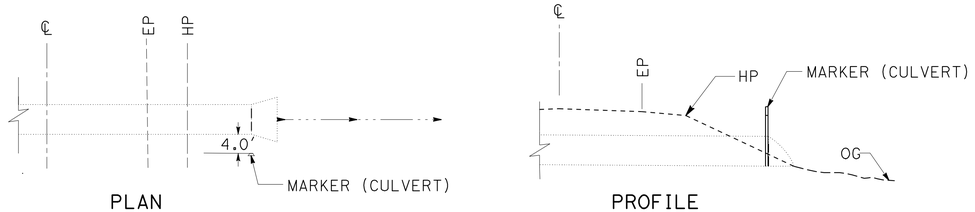

TYPICAL MARKER (CULVERT) PLACEMENT

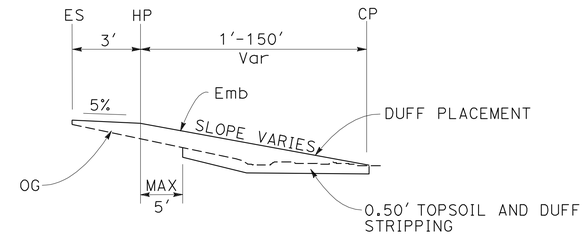

TYPICAL TOPSOIL AND DUFF STRIPPING DETAIL

NOTE: FOR TOPSOIL AND DUFF STRIPPING QUANTITIES, SEE SHEET Q-1.

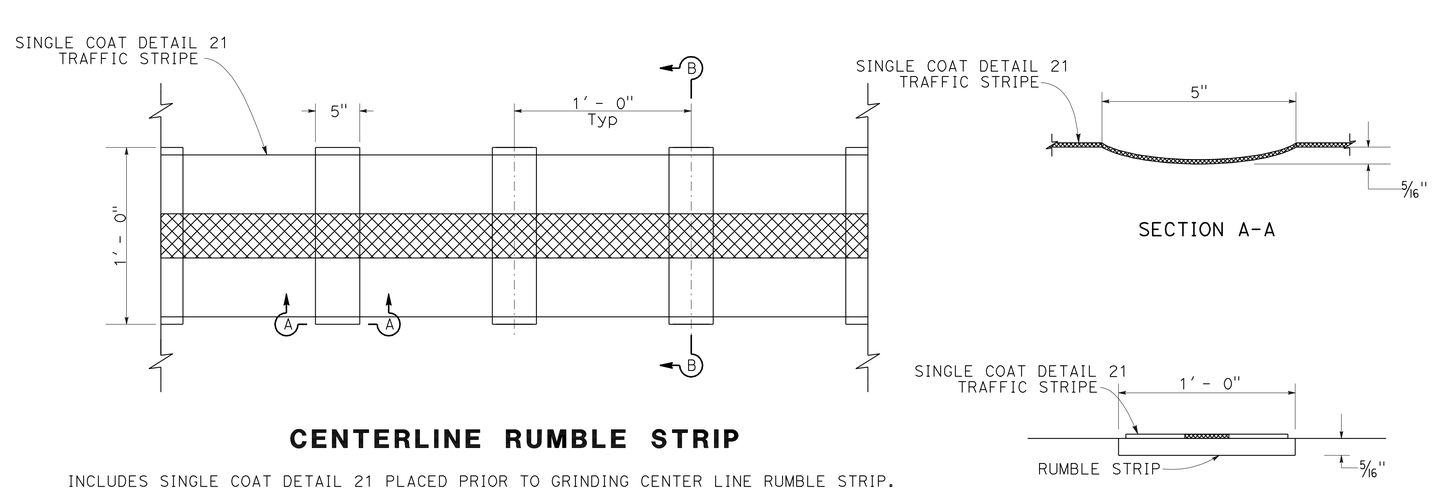

CENTERLINE RUMBLE STRIP

INCLUDES SINGLE COAT DETAIL 21 PLACED PRIOR TO GRINDING CENTER LINE RUMBLE STRIP.

CONSTRUCTION DETAILS

NO SCALE

C-3

STATE OF CALIFORNIA - DEPARTMENT OF TRANSPORTATION
Caltrans®
DESIGN

FUNCTIONAL SUPERVISOR: STEPHEN WINZENREAD

CALCULATED-DESIGNED BY: ADAM ZUMSTEIN
CHECKED BY: STEPHEN WINZENREAD

REVISED BY | DATE REVISED

LAST REVISION 06-16-11 | DATE PLOTTED => 15-AUG-2011 | TIME PLOTTED => 07:54

Dist	COUNTY	ROUTE	POST MILES TOTAL PROJECT	SHEET No.	TOTAL SHEETS
09	Mno	395	118.7/119.6	18	139

REGISTERED CIVIL ENGINEER 6-8-11 DATE

8-8-11
PLANS APPROVAL DATE

REGISTERED PROFESSIONAL ENGINEER ADAM ZUMSTEIN No. 76975 Exp. 12-31-12 CIVIL STATE OF CALIFORNIA

THE STATE OF CALIFORNIA OR ITS OFFICERS OR AGENTS SHALL NOT BE RESPONSIBLE FOR THE ACCURACY OR COMPLETENESS OF SCANNED COPIES OF THIS PLAN SHEET.

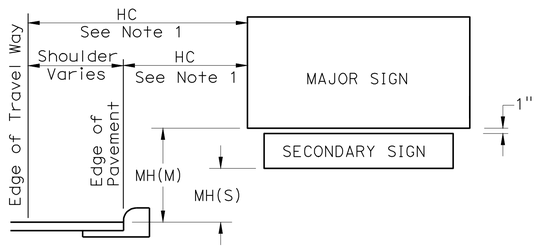

SIGN LOCATION (GENERAL)

	Single Signs	Double Signs
Freeways And Expressways	7′	8′ (M) 5′ (S)
Commercial, Residential Curb and Gutter	7′	7′ (M) 6′ (S)
Rural Roads And Interchange Ramps	7′	7′ (M) 6′ (S)
Freeway Entrance Assembly	2′	2′ (S)
Chevrons & One Way	4′	N/A

(M) MAJOR SIGN (S) SECONDARY SIGN

MINIMUM MOUNTING HEIGHTS (MH)

NOTES:

1. HORIZONTAL CLEARANCE (HC) SHOULD NOT BE LESS THAN 6′ FROM THE EDGE OF PAVEMENT. IF NO SHOULDER, HC SHOULD NOT BE LESS THAN 12′ FROM THE EDGE OF TRAVEL WAY. IN URBAN AREAS, A LESSER CLEARANCE MAY BE USED WHERE NECESSARY.
2. FOR SIGN PANEL BRACING DETAILS, SEE T-31.1.4.
3. ALL SIGN SUPPORTS SHALL BE OF BREAKAWAY DESIGN.
4. FOR DOUBLE POST BRACES SUPPORTS, MAINTAIN HC CLEAR ZONE WIDTH MAXIMUM OF 30′, EXCEPT WHEN PROTECTED BY GUARDRAIL OR BARRIER RAIL. FOR CLEAR ZONE WIDTHS, REFER TO AASHTO ROADSIDE DESIGN GUIDE CURRENT EDITION.
5. SIGN ISLAND REQUIRED WHEN H 15′, OR SIGN SLOPE IS STEEPER THAN 6:1, OR WHEN REQUIRED IN CONTRACT PLANS.
6. SEE SHEET T-31.1.6 FOR SIGN ISLAND CONSTRUCTION.
7. FOR SIGN POSTS, SEE POST SELECTION CHARTS ON SHEET T-31.1.2.
8. FOR MATERIALS NOT DIRECTLY SPECIFIED, SEE STANDARD SPECIFICATIONS AND SPECIAL PROVISIONS.
9. SIGN PANELS TO BE ALUMINUM SHEET CONSTRUCTION.
10. PREPAINT THE EXPOSED PORTION OF FASTENING HARDWARE ON THE FACE OF THE SIGN PANELS WITH BAKED ENAMEL TO MATCH THE SIGN FACE.

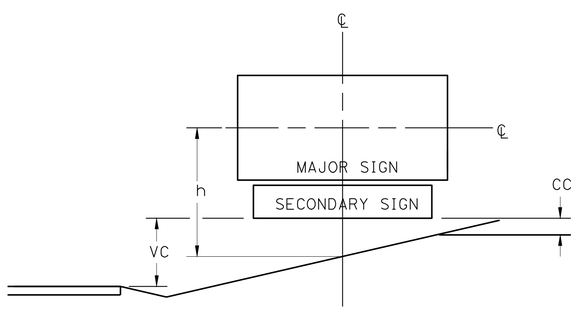

SIGN IN EXCAVATION

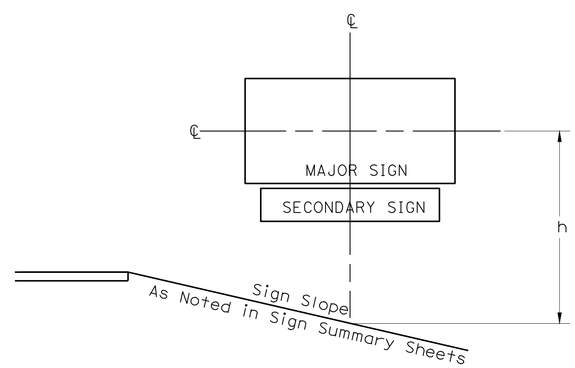

SIGN IN EMBANKMENT

Minimum Corner Clearance(CC)= 1′
Maximum Vertical Clearance(VC) for Single Sign= 10′, Double Sign= 11′
Maximum h=15′
Special Design May Be Necessary If Given Limits Are Exceeded

NEVADA DEPARTMENT OF TRANSPORTATION
ROADSIDE SIGNS GENERAL SIGN LOCATION

Signed Original On File | T-31.1.1 (627)
CHIEF SAFETY/TRAFFIC ENGR. | ADOPTED 8/69 | REVISION 9/04

T-32

ROADSIDE SIGN DETAILS FOR PLACEMENT OF SIGNS IN NEVADA
NEVADA STANDARD PLAN T-31.1.1

CONSTRUCTION DETAILS
NO SCALE
C-4

STATE OF CALIFORNIA - DEPARTMENT OF TRANSPORTATION
Caltrans® DESIGN
FUNCTIONAL SUPERVISOR: STEPHEN WINZENREAD
CALCULATED-DESIGNED BY: ADAM ZUMSTEIN
CHECKED BY: STEPHEN WINZENREAD
REVISED BY / DATE REVISED

LAST REVISION 06-08-11
DATE PLOTTED => 15-AUG-2011
TIME PLOTTED => 07:49

Dist	COUNTY	ROUTE	POST MILES TOTAL PROJECT	SHEET No.	TOTAL SHEETS
09	Mno	395	118.7/119.6	19	139

Adam Zumstein 6-8-11
REGISTERED CIVIL ENGINEER DATE

8-8-11
PLANS APPROVAL DATE

REGISTERED PROFESSIONAL ENGINEER ADAM ZUMSTEIN No. 76975 Exp. 12-31-12 CIVIL STATE OF CALIFORNIA

THE STATE OF CALIFORNIA OR ITS OFFICERS OR AGENTS SHALL NOT BE RESPONSIBLE FOR THE ACCURACY OR COMPLETENESS OF SCANNED COPIES OF THIS PLAN SHEET.

POST SELECTION CHART

SIGN AREA(a) (SQFT)	h(FT)					
	0′≤h<8′	8′≤h<10′	10′≤h<12′	12′≤h<14′	14′≤h<15′	15′≤h<17′
0≤a< 6.5	A	A	A	A	A	B
6.5≤a<8.5	A	A	A	B	B	C
8.5≤a<11	A	A	B	C	C	C
11≤a<13	A	B	C	C	C	D
13 ≤a<15	A	C	C	D	D	D
15≤a< 17	B	C	C	D	D	F
17≤a<19.5	C	C	D	D	D	F
19.5≤a<21.5	C	C	D	E	F	F
21.5≤a<23.5	C	C	D	E	F	F
23.5 ≤a<43	C	C	E	E	F	F
43≤a<70	E	E	E	E	F	F
70≤a<140	E	E	E	E	F	F
140≤a<200	E	E	E	F	F	F

POST SELECTION CHART

POST TYPE	DESCRIPTION	REFERENCE SHEET
A	2½" Square Metal Post (12 Gage)-Single Post	T-31.2.1
B	2½" Square Metal Post (10 Gage)-Single Post	T-31.2.1
C	Single Post Unbraced 3" Dia Round Metal Post	T-31.3.1 thru T-31.3.2
D	Double Post Unbraced 3" Dia Round Metal Post	T-31.3.1 thru T-31.3.2
E	Double Post Braced (See Note 3) Post-3" Dia Round Metal Post Brace-3" Dia Round Metal Post	T-31.4.1 thru T-31.4.3
F	Special Design: Contact Traffic Engineering	

T-33

NOTES:

1. SIGN AREA IS TOTAL OF MAJOR & SECONDARY SIGNS.
2. ALTERNATE POSTS MUST BE APPROVED BY TRAFFIC ENGINEERING.
3. FOR DOUBLE POST BRACED SUPPORTS, MAINTAIN HC > CLEAR ZONE WIDTH MAXIMUM OF 30′, EXCEPT WHEN PROTECTED BY GUARDRAIL OR BARRIER RAIL. FOR CLEAR ZONE WIDTHS, REFER TO AASHTO ROADSIDE DESIGN GUIDE CURRENT EDITION.

NEVADA DEPARTMENT OF TRANSPORTATION
ROADSIDE SIGNS GENERAL POST SELECTION CHARTS

Signed Original On File	T-31.1.2	(627)
CHIEF SAFETY/TRAFFIC ENGR.	ADOPTED 7/96	REVISION 12/04

ROADSIDE SIGN DETAILS FOR PLACEMENT OF SIGNS IN NEVADA
NEVADA STANDARD PLAN T-31.1.2

CONSTRUCTION DETAILS
NO SCALE
C-5

STATE OF CALIFORNIA - DEPARTMENT OF TRANSPORTATION
Caltrans® DESIGN

FUNCTIONAL SUPERVISOR: STEPHEN WINZENREAD
CALCULATED-DESIGNED BY: ADAM ZUMSTEIN
CHECKED BY: STEPHEN WINZENREAD
REVISED BY
DATE REVISED

LAST REVISION 06-08-11 | DATE PLOTTED => 15-AUG-2011 | TIME PLOTTED => 07:50

Dist	COUNTY	ROUTE	POST MILES TOTAL PROJECT	SHEET No.	TOTAL SHEETS
09	Mno	395	118.7/119.6	20	139

Adam Zumstein 6-8-11
REGISTERED CIVIL ENGINEER DATE

8-8-11
PLANS APPROVAL DATE

REGISTERED PROFESSIONAL ENGINEER ADAM ZUMSTEIN No. 76975 Exp. 12-31-12 CIVIL STATE OF CALIFORNIA

THE STATE OF CALIFORNIA OR ITS OFFICERS OR AGENTS SHALL NOT BE RESPONSIBLE FOR THE ACCURACY OR COMPLETENESS OF SCANNED COPIES OF THIS PLAN SHEET.

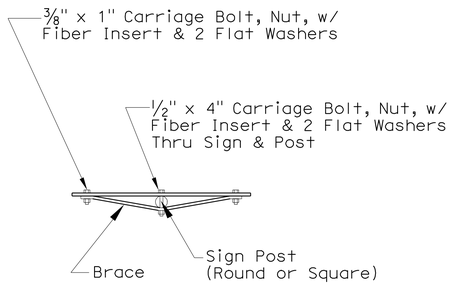

TOP VIEW (ALL PANELS)

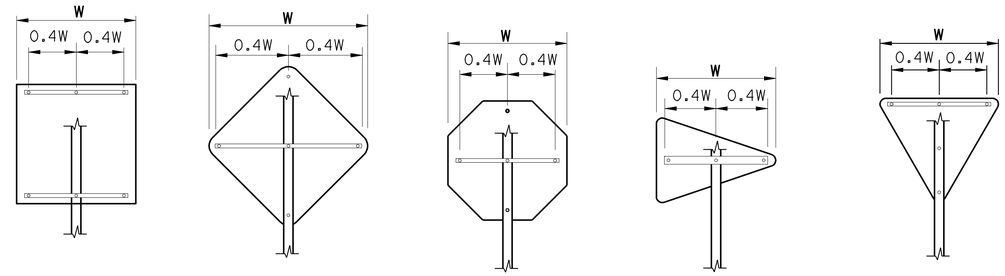

TYPICAL SINGLE PANEL BRACING

NOTES:

1. BRACE(S) REQUIRED IF W>18". INSTALL AS SHOWN.
2. BRACE: 3/8" x 1 1/4" ALUMINUM ALLOY.
3. COST FOR BRACING IS INCLUDED IN SIGN.

TYPICAL MULTIPLE PANEL BRACING

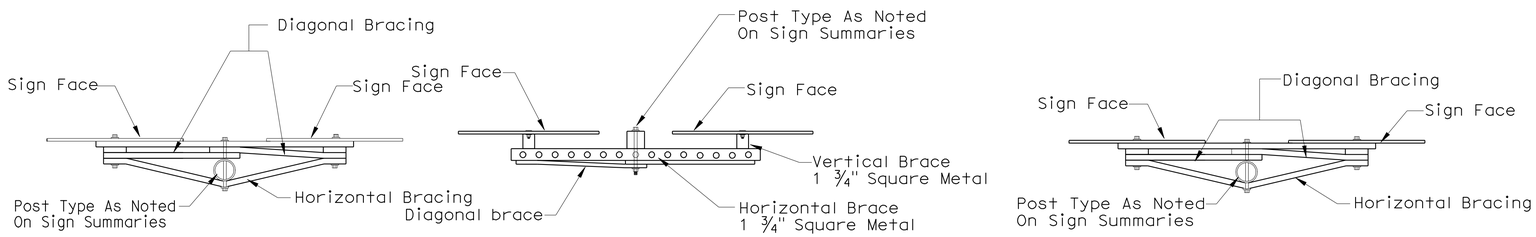

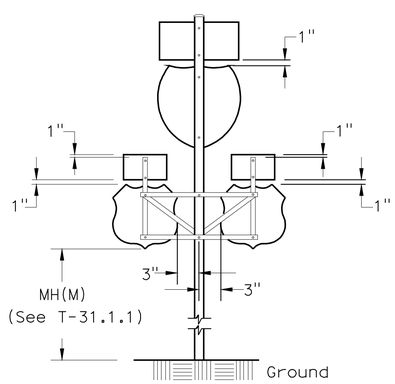

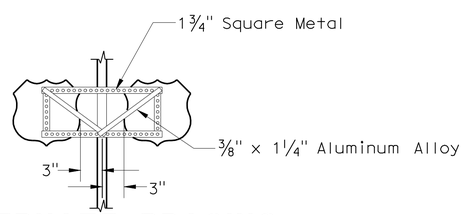

ALTERNATE BRACING SQUARE METAL POST

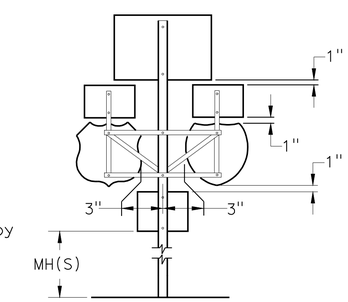

TYPICAL FREEWAY ENTRANCE

TYPICAL ROUTE MARKER ASSEMBLY

T-34

NEVADA DEPARTMENT OF TRANSPORTATION
ROADSIDE SIGNS GENERAL SIGN PANEL BRACING

Signed Original On File	T-31.1.3	(627)
CHIEF SAFETY/TRAFFIC ENGR.	ADOPTED 7/96	REVISION 12/04

ROADSIDE SIGN DETAILS FOR PLACEMENT OF SIGNS IN NEVADA
NEVADA STANDARD PLAN T-31.1.3

CONSTRUCTION DETAILS
NO SCALE
C-6

STATE OF CALIFORNIA - DEPARTMENT OF TRANSPORTATION
Caltrans® **DESIGN**

FUNCTIONAL SUPERVISOR: STEPHEN WINZENREAD
CALCULATED-DESIGNED BY: ADAM ZUMSTEIN
CHECKED BY: STEPHEN WINZENREAD
REVISED BY
DATE REVISED

LAST REVISION 06-08-11 DATE PLOTTED => 15-AUG-2011 TIME PLOTTED => 07:50

Dist	COUNTY	ROUTE	POST MILES TOTAL PROJECT	SHEET No.	TOTAL SHEETS
09	Mno	395	118.7/119.6	21	139

REGISTERED CIVIL ENGINEER 6-8-11 DATE

8-8-11
PLANS APPROVAL DATE

REGISTERED PROFESSIONAL ENGINEER ADAM ZUMSTEIN No. 76975 Exp. 12-31-12 CIVIL STATE OF CALIFORNIA

THE STATE OF CALIFORNIA OR ITS OFFICERS OR AGENTS SHALL NOT BE RESPONSIBLE FOR THE ACCURACY OR COMPLETENESS OF SCANNED COPIES OF THIS PLAN SHEET.

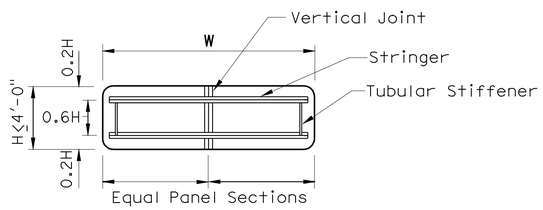

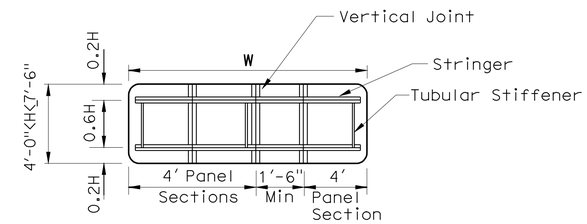

2 STRINGER MOUNTING

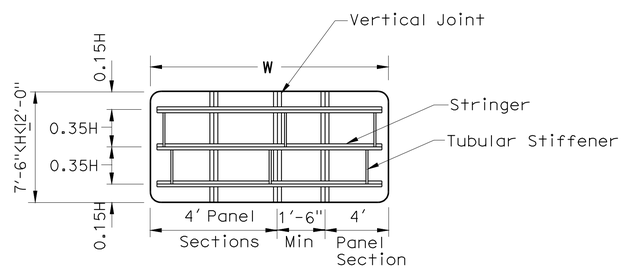

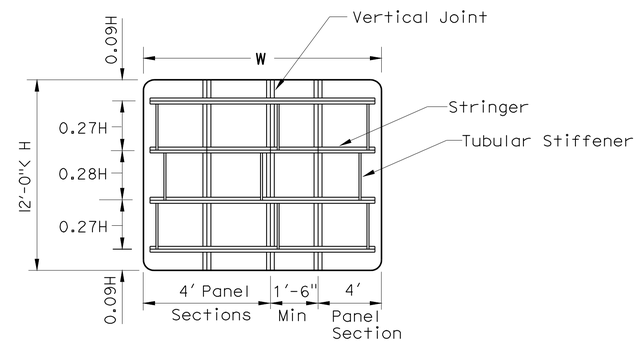

SUB PANEL ASSEMBLY & Z BAR BRACING

3 STRINGER MOUNTING

4 STRINGER MOUNTING

NOTE:

To obtain desired panel width, Max of 2 Panels May Be Cut Less Than 4', (1'-6" Min Each)

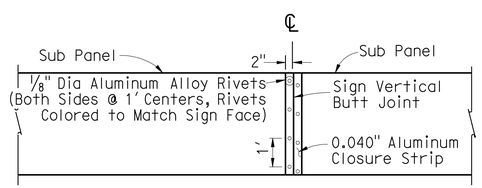

VERTICAL JOINT CLOSURE STRIP

NOTES:

1. STRINGERS: 3" × 2 11/16" × 1/4" OR 2 11/16" × 2 11/16 × 1/4" ALUMINUM ALLOY Z-BAR.
2. STRINGERS REQUIRED ON ALL SIGNS REQUIRING MULTIPLE POSTS.
3. TUBULAR STIFFENERS REQUIRED WHEN W>10'.
4. COST FOR BRACING IS INCLUDED IN SIGN.
5. ONE VERTICAL JOINT IF W EXCEEDS 12'. TWO VERTICAL JOINTS IF W EXCEEDS 24'.
6. FOR ALTERNATE STEEL TUBE BRACING, SEE STANDARD PLAN T-31.1.5.

NEVADA DEPARTMENT OF TRANSPORTATION
ROADSIDE SIGNS GENERAL SIGN PANEL BRACING

Signed Original On File	T-31.1.4 (627)	
CHIEF SAFETY/TRAFFIC ENGR.	ADOPTED 8/69	REVISION 10/04

T-35

ROADSIDE SIGN DETAILS FOR PLACEMENT OF SIGNS IN NEVADA
NEVADA STANDARD PLAN T-31.1.4

CONSTRUCTION DETAILS
NO SCALE C-7

STATE OF CALIFORNIA - DEPARTMENT OF TRANSPORTATION
Caltrans DESIGN

FUNCTIONAL SUPERVISOR: STEPHEN WINZENREAD
CALCULATED-DESIGNED BY: ADAM ZUMSTEIN
CHECKED BY: STEPHEN WINZENREAD
REVISED BY
DATE REVISED

LAST REVISION DATE PLOTTED => 15-AUG-2011
TIME PLOTTED => 07:50
06-08-11

Dist	COUNTY	ROUTE	POST MILES TOTAL PROJECT	SHEET No.	TOTAL SHEETS
09	Mno	395	118.7/119.6	22	139

Adam Zumstein 6-8-11
REGISTERED CIVIL ENGINEER DATE

8-8-11
PLANS APPROVAL DATE

REGISTERED PROFESSIONAL ENGINEER ADAM ZUMSTEIN No. 76975 Exp 12-31-12 CIVIL STATE OF CALIFORNIA

THE STATE OF CALIFORNIA OR ITS OFFICERS OR AGENTS SHALL NOT BE RESPONSIBLE FOR THE ACCURACY OR COMPLETENESS OF SCANNED COPIES OF THIS PLAN SHEET.

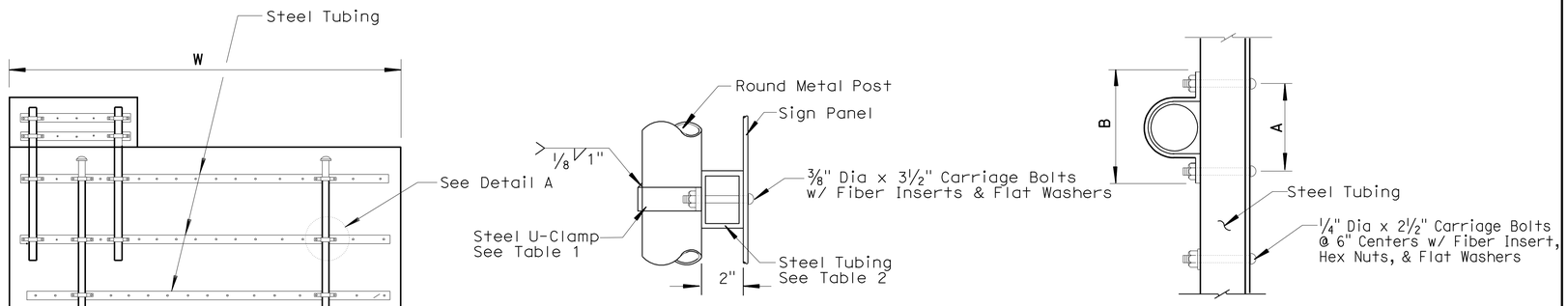

DETAIL A

STEEL TUBE BRACING ON ROUND METAL POSTS

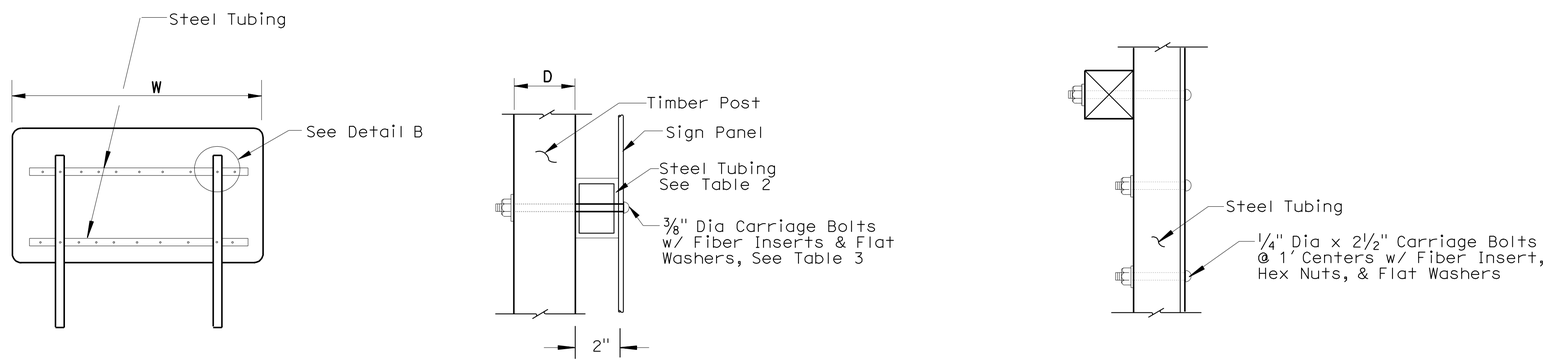

DETAIL B

STEEL TUBE BRACING ON WOOD POSTS

NOTES:

1. FOR SUB-PANEL ASSEMBLY, & VERTICAL JOINT CLOSURE STRIP DETAILS, SEE STANDARD PLAN T-31.1.4.

TABLE 1
(Clamp Sizes)

PIPE Dia	O.D.	A	B	CLAMP STOCK
3" Nom.	3 1/2"	5 3/16"	6 13/16"	1/4" x 1 1/2"

TABLE 2
(Tubing Size)

SIGN WIDTH (W)	TUBING SIZE
24' or Less	3"x2"x 3/16"
24' to 28'	4"x2"x 3/16"

TABLE 3

POST SIZE	"D"	BOLT SIZE
4" x 4"	3 1/2"	3/8" Dia x 6 1/4"
4" x 6"	5 1/2"	3/8" Dia x 6 1/4"
6" x 6"	5 1/2"	3/8" Dia x 8 1/4"
6" x 8"	7 1/2"	3/8" Dia x 10 1/4"

NEVADA DEPARTMENT OF TRANSPORTATION
ROADSIDE SIGNS GENERAL SIGN PANEL BRACING

Signed Original On File	T-31.1.5	(627)
CHIEF SAFETY/TRAFFIC ENGR.	ADOPTED 8/82	REVISION 8/98

T-36

ROADSIDE SIGN DETAILS FOR PLACEMENT OF SIGNS IN NEVADA
NEVADA STANDARD PLAN T-31.1.5

CONSTRUCTION DETAILS
NO SCALE
C-8

STATE OF CALIFORNIA - DEPARTMENT OF TRANSPORTATION
Caltrans® **DESIGN**

FUNCTIONAL SUPERVISOR: STEPHEN WINZENREAD
CALCULATED-DESIGNED BY: ADAM ZUMSTEIN
CHECKED BY: STEPHEN WINZENREAD
REVISED BY
DATE REVISED

LAST REVISION 06-08-11
DATE PLOTTED => 15-AUG-2011
TIME PLOTTED => 07:50

Dist	COUNTY	ROUTE	POST MILES TOTAL PROJECT	SHEET No.	TOTAL SHEETS
09	Mno	395	118.7/119.6	23	139

REGISTERED CIVIL ENGINEER 6-8-11 DATE

8-8-11
PLANS APPROVAL DATE

REGISTERED PROFESSIONAL ENGINEER ADAM ZUMSTEIN No. 76975 Exp 12-31-12 CIVIL STATE OF CALIFORNIA

THE STATE OF CALIFORNIA OR ITS OFFICERS OR AGENTS SHALL NOT BE RESPONSIBLE FOR THE ACCURACY OR COMPLETENESS OF SCANNED COPIES OF THIS PLAN SHEET.

T-37

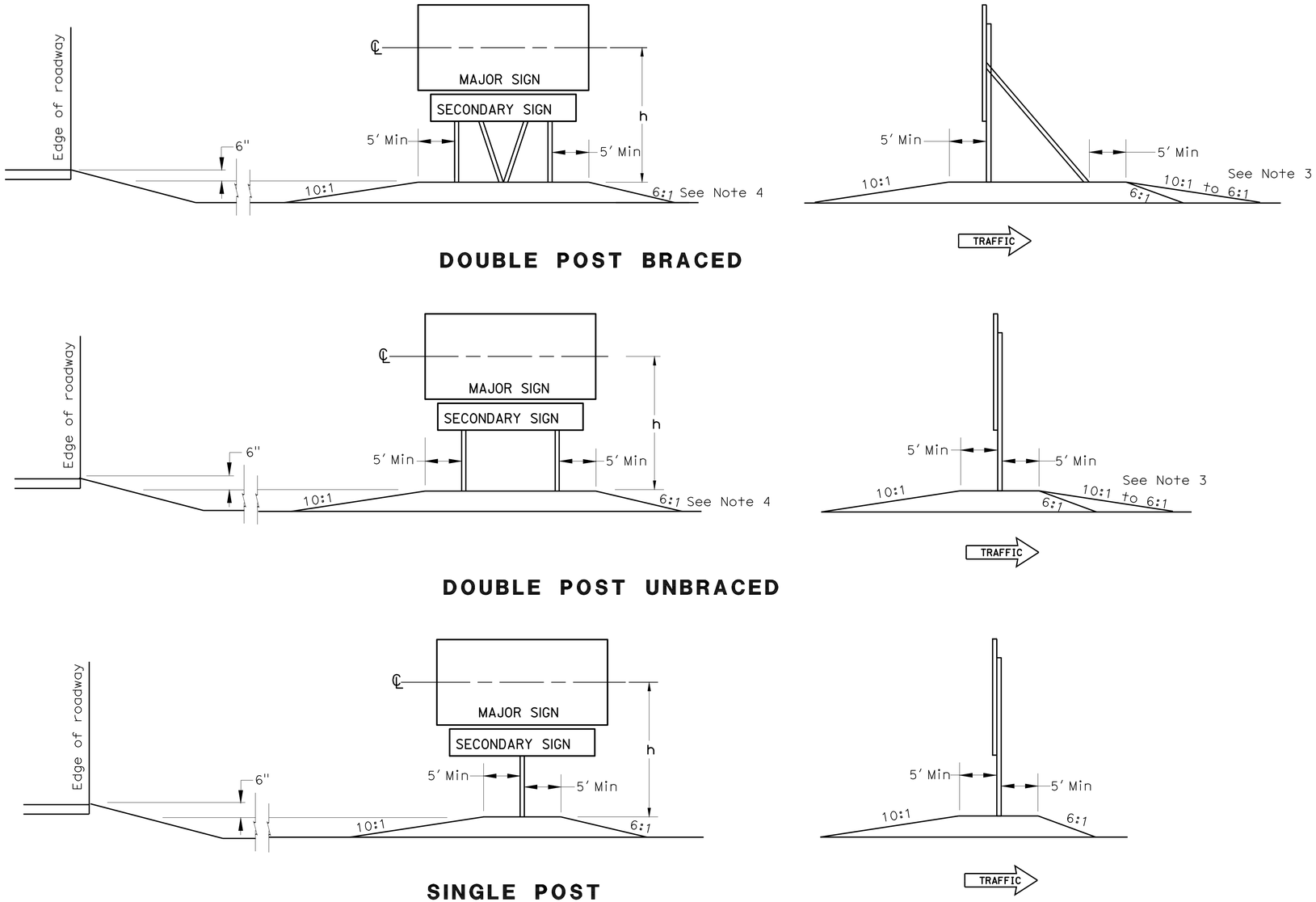

NOTES:

1. SIGN ISLANDS TO BE COMPACTED TO 95%.
2. PAYMENT FOR SIGN ISLAND WILL BE AS NOTED IN CONTRACT PLANS AND SPECIAL PROVISIONS.
3. UNDIVIDED ROUTES USE 10:1. ALL DIVIDED ROUTES USE 6:1.
4. USE 2:1 Max FOR NARROW RIGHT-OF-WAYS OR 6:1 PREFERRED FOR ALL OTHERS.

NEVADA DEPARTMENT OF TRANSPORTATION

ROADSIDE SIGNS GENERAL SIGN ISLANDS

Signed Original On File	T-31.1.6	(627)
CHIEF SAFETY/TRAFFIC ENGR.	ADOPTED 10/68	REVISION 6/00

ROADSIDE SIGN DETAILS FOR PLACEMENT OF SIGNS IN NEVADA
NEVADA STANDARD PLAN T-31.1.6

CONSTRUCTION DETAILS
NO SCALE

C-9

STATE OF CALIFORNIA - DEPARTMENT OF TRANSPORTATION
Caltrans®
DESIGN

FUNCTIONAL SUPERVISOR: STEPHEN WINZENREAD

CALCULATED-DESIGNED BY: ADAM ZUMSTEIN
CHECKED BY: STEPHEN WINZENREAD

REVISED BY
DATE REVISED

LAST REVISION 06-08-11
DATE PLOTTED => 15-AUG-2011
TIME PLOTTED => 07:50

Dist	COUNTY	ROUTE	POST MILES TOTAL PROJECT	SHEET No.	TOTAL SHEETS
09	Mno	395	118.7/119.6	24	139

REGISTERED ~~CIVIL~~ ENGINEER 6-8-11 DATE

8-8-11
PLANS APPROVAL DATE

REGISTERED PROFESSIONAL ENGINEER ADAM ZUMSTEIN No. 76975 Exp. 12-31-12 CIVIL STATE OF CALIFORNIA

THE STATE OF CALIFORNIA OR ITS OFFICERS OR AGENTS SHALL NOT BE RESPONSIBLE FOR THE ACCURACY OR COMPLETENESS OF SCANNED COPIES OF THIS PLAN SHEET.

NOTES:

1. FOOTINGS TO BE DRILLED HOLES AS SHOWN, & FILLED WITH CLASS A OR CLASS AA CONCRETE.
2. ANCHOR POST INCLUDED IN COST OF SIGN POST.
3. FOR DETAILS ON SIGN LOCATION, POST TYPE, PANEL BRACING, AND SIGN ISLANDS, SEE STANDARD PLAN T-31.1.1 THRU T-31.1.6.

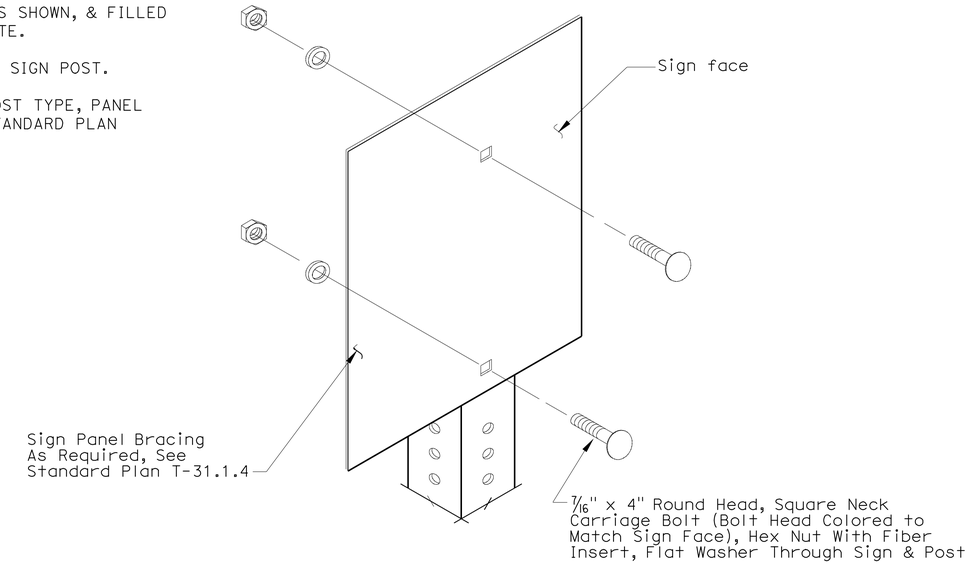

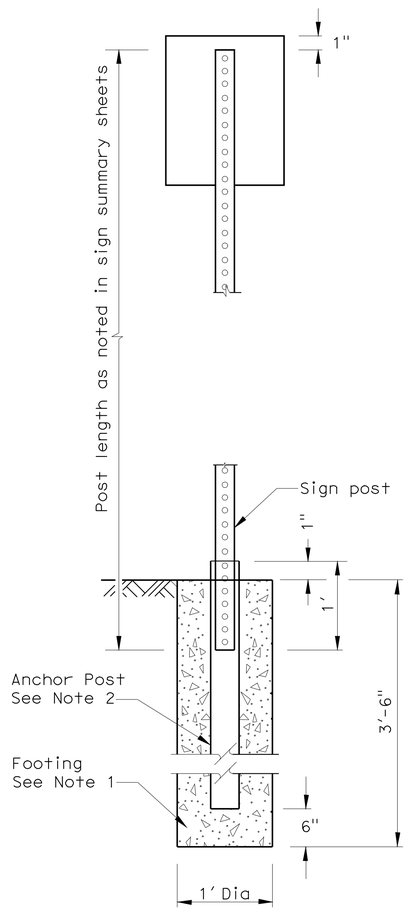

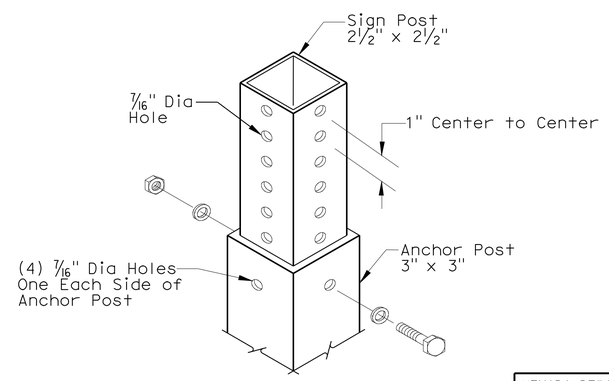

NEVADA DEPARTMENT OF TRANSPORTATION

ROADSIDE SIGNS SQUARE METAL POSTS

Signed Original On File	T-31.2.1	(627)
CHIEF SAFETY/TRAFFIC ENGR.	ADOPTED 8/98	REVISION

T-38

ROADSIDE SIGN DETAILS FOR PLACEMENT OF SIGNS IN NEVADA
NEVADA STANDARD PLAN T-31.2.1

CONSTRUCTION DETAILS
NO SCALE **C-10**

STATE OF CALIFORNIA - DEPARTMENT OF TRANSPORTATION
Caltrans® **DESIGN**

FUNCTIONAL SUPERVISOR: STEPHEN WINZENREAD
CALCULATED-DESIGNED BY: ADAM ZUMSTEIN
CHECKED BY: STEPHEN WINZENREAD
REVISED BY / DATE REVISED

LAST REVISION 06-08-11 | DATE PLOTTED => 15-AUG-2011 | TIME PLOTTED => 07:50

Dist	COUNTY	ROUTE	POST MILES TOTAL PROJECT	SHEET No.	TOTAL SHEETS
09	Mno	395	118.7/119.6	25	139

REGISTERED CIVIL ENGINEER 6-8-11 DATE

8-8-11
PLANS APPROVAL DATE

REGISTERED PROFESSIONAL ENGINEER ADAM ZUMSTEIN No. 76975 Exp. 12-31-12 CIVIL STATE OF CALIFORNIA

THE STATE OF CALIFORNIA OR ITS OFFICERS OR AGENTS SHALL NOT BE RESPONSIBLE FOR THE ACCURACY OR COMPLETENESS OF SCANNED COPIES OF THIS PLAN SHEET.

T-39

NOTES:

1. ANCHOR POST INCLUDED IN COST OF SIGN POST.
2. FOR DETAILS ON SIGN LOCATION, POST TYPE, PANEL BRACING, AND SIGN ISLANDS, SEE STANDARD PLAN T-31.1.1 THRU T-31.1.6.
3. INNER POSTS ARE THOSE CLOSEST TO ROADWAY, AND THE OUTER POSTS ARE THOSE FARTHEST AWAY.

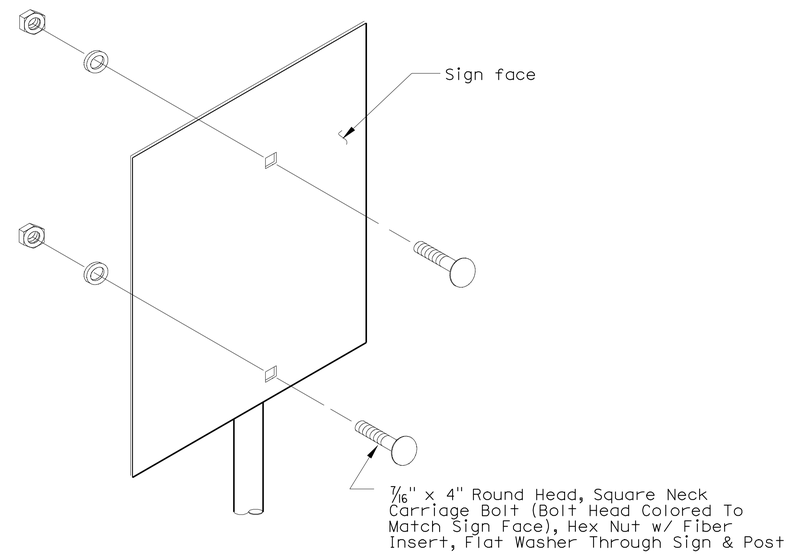

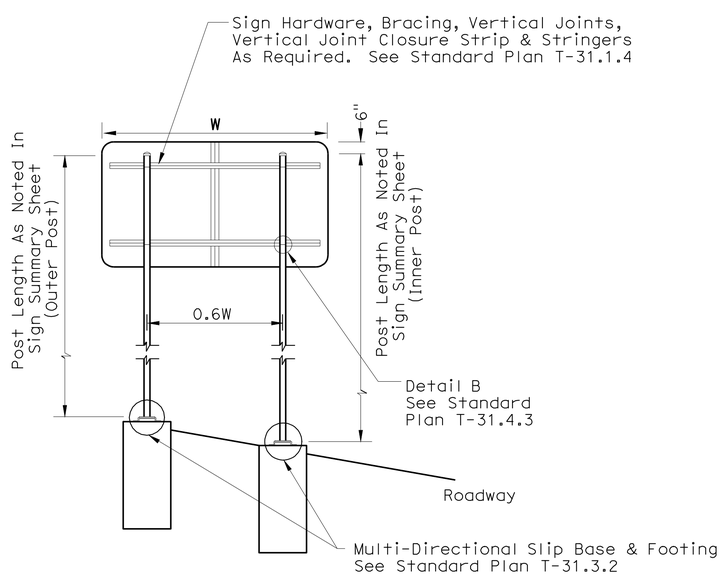

DOUBLE POST UNBRACED

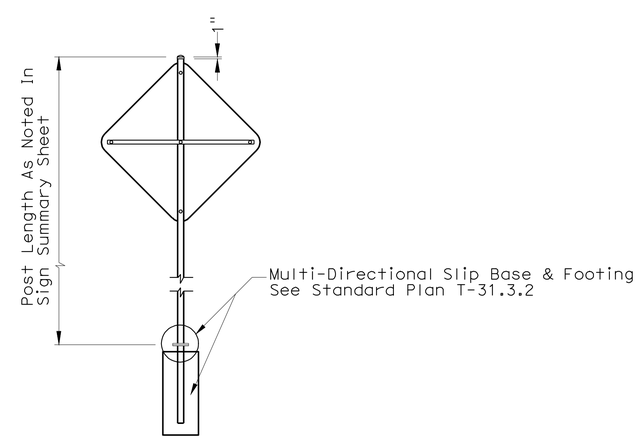

SINGLE POST

NEVADA DEPARTMENT OF TRANSPORTATION

ROADSIDE SIGNS ROUND METAL POSTS UNBRACED

Signed Original On File	T-31.3.1	(627)
CHIEF SAFETY/TRAFFIC ENGR.	ADOPTED 8/98	REVISION

ROADSIDE SIGN DETAILS FOR PLACEMENT OF SIGNS IN NEVADA
NEVADA STANDARD PLAN T-31.3.1

CONSTRUCTION DETAILS
NO SCALE **C-11**

STATE OF CALIFORNIA - DEPARTMENT OF TRANSPORTATION
Caltrans® **DESIGN**

FUNCTIONAL SUPERVISOR: STEPHEN WINZENREAD
CALCULATED-DESIGNED BY: ADAM ZUMSTEIN
CHECKED BY: STEPHEN WINZENREAD
REVISED BY
DATE REVISED

LAST REVISION 06-08-11
DATE PLOTTED => 15-AUG-2011
TIME PLOTTED => 06:56

Dist	COUNTY	ROUTE	POST MILES TOTAL PROJECT	SHEET No.	TOTAL SHEETS
09	Mno	395	118.7/119.6	26	139

REGISTERED CIVIL ENGINEER 6-8-11 DATE

8-8-11
PLANS APPROVAL DATE

REGISTERED PROFESSIONAL ENGINEER ADAM ZUMSTEIN No. 76975 Exp. 12-31-12 CIVIL STATE OF CALIFORNIA

THE STATE OF CALIFORNIA OR ITS OFFICERS OR AGENTS SHALL NOT BE RESPONSIBLE FOR THE ACCURACY OR COMPLETENESS OF SCANNED COPIES OF THIS PLAN SHEET.

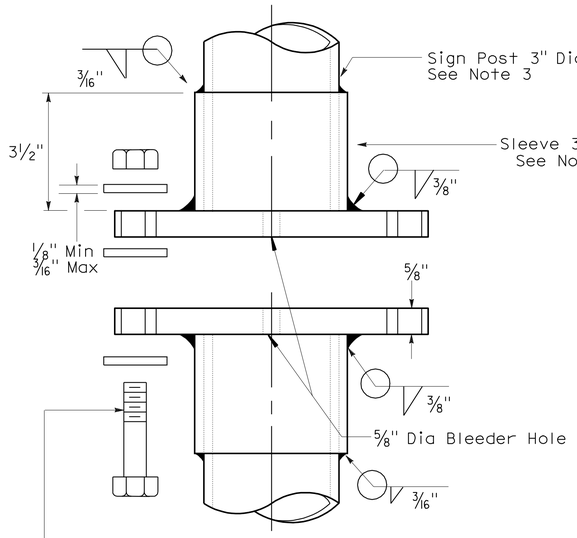

ASSEMBLY ELEVATION VIEW

5/8"-11 x 3 1/8" Bolt, Type 1 ASTM A 325 or Type 1 ASTM A 449 (Grade 5); Each With Three USS Through Hardened Washers ASTM F 436 Type 1; And One Nylon Insert Stop Nut ASTM A 563 DH. All Items Shall Be Galvanized As Per Manufacturer's Specifications.Torque Within the Range of 24-29 Ft-Lb. See BOLT DETAIL below.

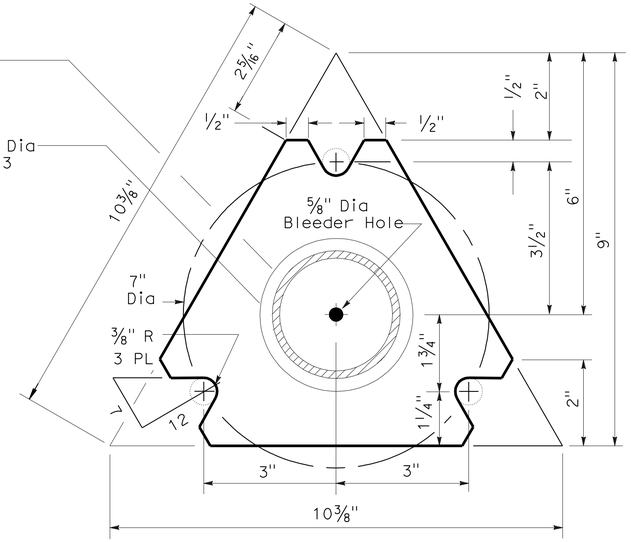

PLAN VIEW
TOP/BOTTOM PLATE

Plate Thickness = 5/8"

n = A Typical Manufacturer's Identification

Type 1 ASTM A449
5/8" x 3 1/8" Bolt

Type 1 ASTM A325
5/8" x 3 1/8" Bolt

TOP VIEW
BOLT DETAIL

T-40

NOTES:

1. ALL PARTS AND HARDWARE SHALL BE GALVANIZED AS PER SECTION 715 OF THE NEVADA DOT STANDARD SPECIFICATIONS, EXCEPT AS NOTED.
2. MULTI-DIRECTIONAL SLIP BASES ARE NOT REQUIRED BEHIND CONCRETE BARRIER RAIL OR BEHIND GUARDRAIL WHERE THE SIGN POST IS GREATER THAN 2'-6" FROM THE BACK SIDE OF THE GUARDRAIL POST.
3. USE STANDARD WEIGHT PIPE FOR SIGN POST AND SLEEVE. SEE ASTM A 53.
4. FOR DETAILS ON SIGN LOCATION, POST TYPE, PANEL BRACING, AND SIGN ISLANDS, SEE STANDARD PLAN T-31.1.1 THRU T-31.1.6.

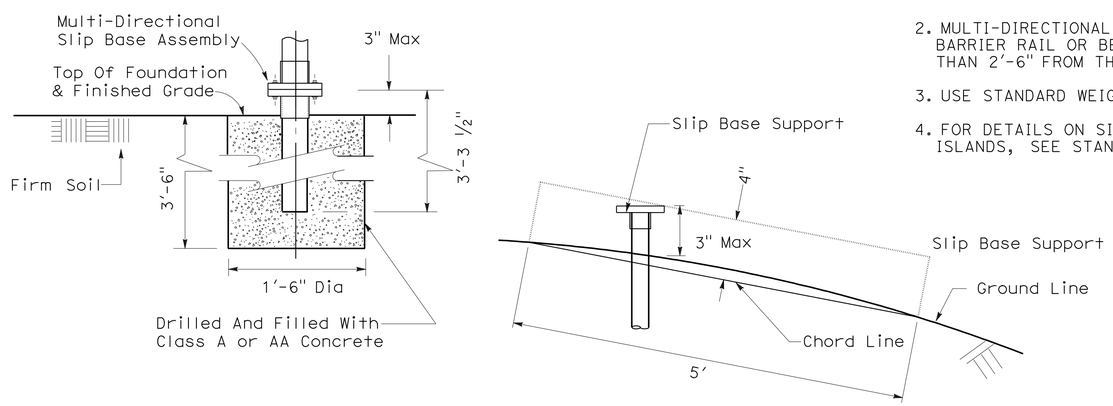

FOOTING DETAIL

NEVADA DEPARTMENT OF TRANSPORTATION
ROADSIDE SIGNS
ROUND METAL POSTS
MULTI-DIRECTIONAL
SLIP BASE

Signed Original On File	T-31.3.2	(627,715)
CHIEF SAFETY/TRAFFIC ENGR.	ADOPTED 7/96	REVISION 9/00

ROADSIDE SIGN DETAILS FOR PLACEMENT OF SIGNS IN NEVADA
NEVADA STANDARD PLAN T-31.3.2

CONSTRUCTION DETAILS
NO SCALE **C-12**

STATE OF CALIFORNIA - DEPARTMENT OF TRANSPORTATION
Caltrans® DESIGN

CALCULATED-DESIGNED BY	ADAM ZUMSTEIN	REVISED BY	FUNCTIONAL SUPERVISOR
CHECKED BY	STEPHEN WINZENREAD	DATE REVISED	STEPHEN WINZENREAD

LAST REVISION 06-08-11 | DATE PLOTTED => 15-AUG-2011 | TIME PLOTTED => 06:56

Dist	COUNTY	ROUTE	POST MILES TOTAL PROJECT	SHEET No.	TOTAL SHEETS
09	Mno	395	118.7/119.6	27	139

Adam Zumstein 6-8-11
REGISTERED CIVIL ENGINEER DATE

8-8-11
PLANS APPROVAL DATE

REGISTERED PROFESSIONAL ENGINEER ADAM ZUMSTEIN No. 76975 Exp. 12-31-12 CIVIL STATE OF CALIFORNIA

THE STATE OF CALIFORNIA OR ITS OFFICERS OR AGENTS SHALL NOT BE RESPONSIBLE FOR THE ACCURACY OR COMPLETENESS OF SCANNED COPIES OF THIS PLAN SHEET.

T-41

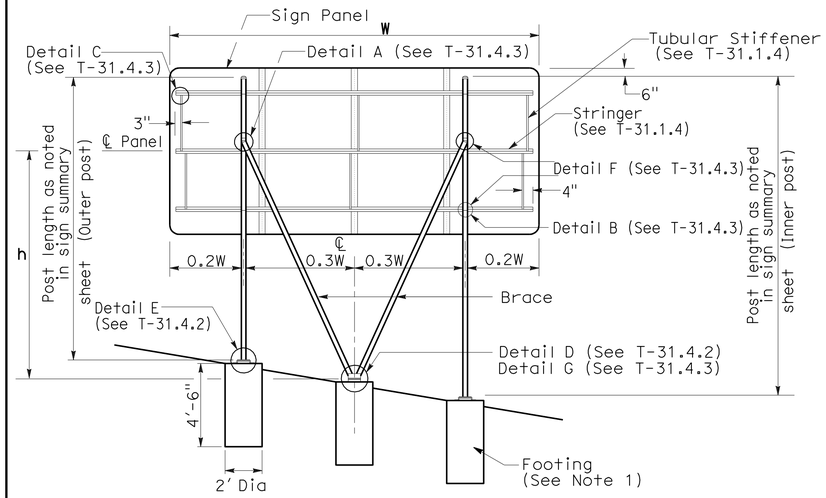

SINGLE SIGN

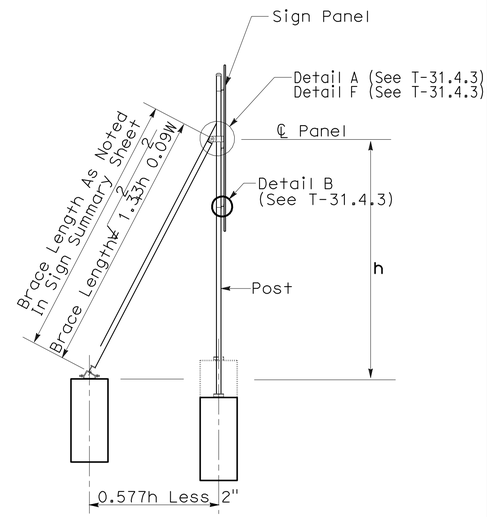

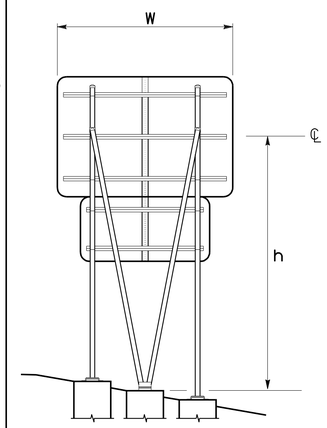

DOUBLE SIGN

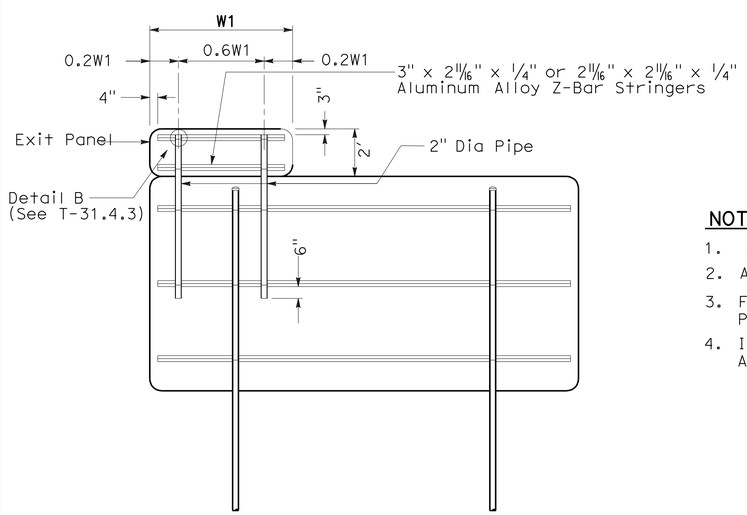

EXIT PANEL ATTACHMENT

NOTES:

1. FOOTINGS TO BE DRILLED HOLES AS SHOWN, & FILLED WITH CLASS A OR CLASS AA CONCRETE.
2. ANCHOR POST & BRACING INCLUDED IN COST OF SIGN POST.
3. FOR DETAILS ON SIGN LOCATION, POST TYPE, PANEL BRACING, AND SIGN ISLANDS, SEE STANDARD PLANS T-31.1.1 THRU T-31.1.6.
4. INNER POSTS ARE THOSE CLOSEST TO THE ROADWAY, AND THE OUTER POSTS ARE THOSE FARTHEST AWAY.

NEVADA DEPARTMENT OF TRANSPORTATION

ROADSIDE SIGNS ROUND METAL POSTS BRACED

Signed Original On File	T-31.4.1	(627)
CHIEF SAFETY/TRAFFIC ENGR.	ADOPTED 8/98	REVISION

ROADSIDE SIGN DETAILS FOR PLACEMENT OF SIGNS IN NEVADA
NEVADA STANDARD PLAN T-31.4.1

CONSTRUCTION DETAILS
NO SCALE **C-13**

STATE OF CALIFORNIA - DEPARTMENT OF TRANSPORTATION
Caltrans® **DESIGN**

FUNCTIONAL SUPERVISOR: STEPHEN WINZENREAD
CALCULATED-DESIGNED BY: ADAM ZUMSTEIN
CHECKED BY: STEPHEN WINZENREAD
REVISED BY / DATE REVISED

LAST REVISION 06-08-11
DATE PLOTTED => 15-AUG-2011
TIME PLOTTED => 06:56

Dist	COUNTY	ROUTE	POST MILES TOTAL PROJECT	SHEET No.	TOTAL SHEETS
09	Mno	395	118.7/119.6	28	139

Adam Zumstein 6-8-11
REGISTERED CIVIL ENGINEER DATE

8-8-11
PLANS APPROVAL DATE

REGISTERED PROFESSIONAL ENGINEER ADAM ZUMSTEIN No. 76975 Exp. 12-31-12 CIVIL STATE OF CALIFORNIA

THE STATE OF CALIFORNIA OR ITS OFFICERS OR AGENTS SHALL NOT BE RESPONSIBLE FOR THE ACCURACY OR COMPLETENESS OF SCANNED COPIES OF THIS PLAN SHEET.

T-42

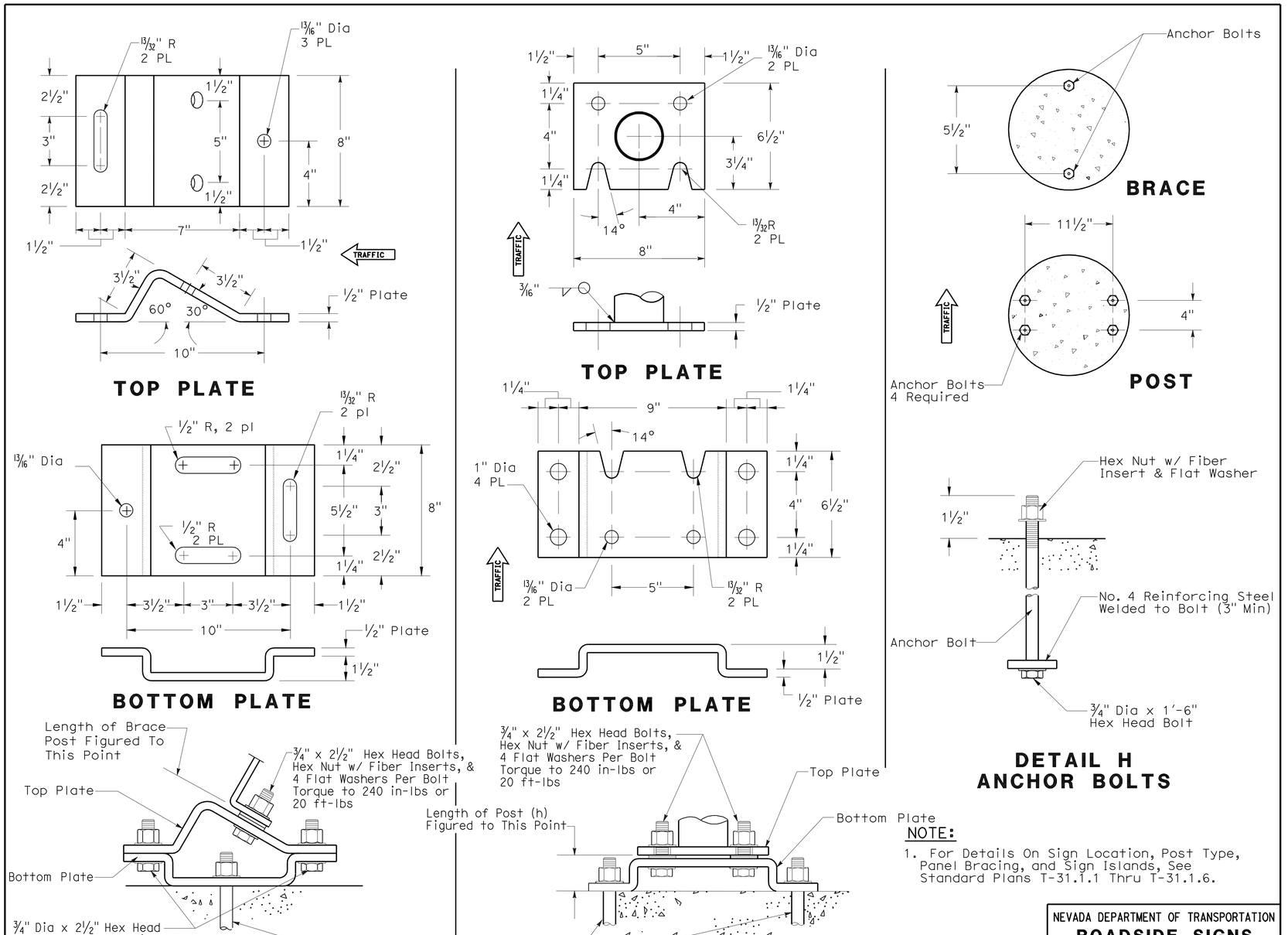

NOTE:

1. For Details On Sign Location, Post Type, Panel Bracing, and Sign Islands, See Standard Plans T-31.1.1 Thru T-31.1.6.

NEVADA DEPARTMENT OF TRANSPORTATION
ROADSIDE SIGNS ROUND METAL POSTS BRACED

Signed Original On File	T-31.4.2	(627)
CHIEF SAFETY/TRAFFIC Engr	ADOPTED 8/98	REVISION

ROADSIDE SIGN DETAILS FOR PLACEMENT OF SIGNS IN NEVADA
NEVADA STANDARD PLAN T-31.4.2

CONSTRUCTION DETAILS
NO SCALE **C-14**

STATE OF CALIFORNIA - DEPARTMENT OF TRANSPORTATION
Caltrans® **DESIGN**

FUNCTIONAL SUPERVISOR	STEPHEN WINZENREAD
CALCULATED-DESIGNED BY	ADAM ZUMSTEIN
CHECKED BY	STEPHEN WINZENREAD
REVISED BY	
DATE REVISED	

LAST REVISION 06-08-11 | DATE PLOTTED => 15-AUG-2011 | TIME PLOTTED => 06:56

Dist	COUNTY	ROUTE	POST MILES TOTAL PROJECT	SHEET No.	TOTAL SHEETS
09	Mno	395	118.7/119.6	29	139

Adam Zumstein 6-8-11
REGISTERED CIVIL ENGINEER DATE

8-8-11
PLANS APPROVAL DATE

REGISTERED PROFESSIONAL ENGINEER ADAM ZUMSTEIN No. 76975 Exp. 12-31-12 CIVIL STATE OF CALIFORNIA

THE STATE OF CALIFORNIA OR ITS OFFICERS OR AGENTS SHALL NOT BE RESPONSIBLE FOR THE ACCURACY OR COMPLETENESS OF SCANNED COPIES OF THIS PLAN SHEET.

T-43

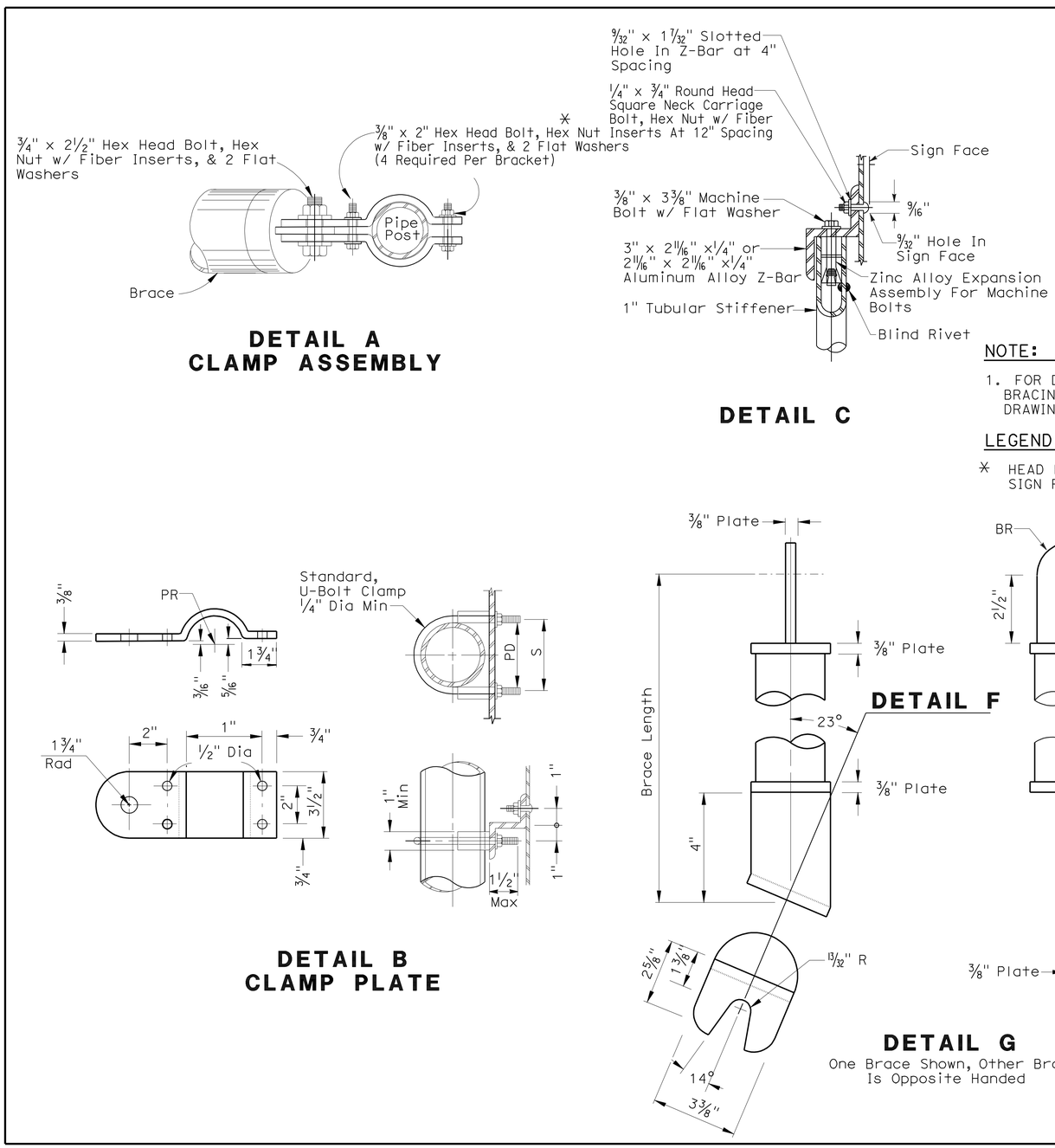

POST Nom. Dia	PR	PD	S
1"	21/32"	1 5/16"	1 9/16"
2"	1 3/16"	2 3/8"	2 5/8"
3"	1 3/4"	3 1/2"	3 3/4"

NOTE:

1. FOR DETAILS ON SIGN LOCATION, POST TYPE, PANEL BRACING, AND SIGN ISLANDS, SEE STANDARD PLAN DRAWINGS T-31.1.1 THRU T-31.1.6.

LEGEND:

* HEAD PRE-PAINTED WITH BAKED ENAMEL TO MATCH SIGN FACE.

NEVADA DEPARTMENT OF TRANSPORTATION
ROADSIDE SIGNS ROUND METAL POSTS BRACED

Signed Original On File	T-31.4.3	(627)
CHIEF SAFETY/TRAFFIC ENGR.	ADOPTED 8/98	REVISION

ROADSIDE SIGN DETAILS FOR PLACEMENT OF SIGNS IN NEVADA
NEVADA STANDARD PLAN T-31.4.3

CONSTRUCTION DETAILS
NO SCALE **C-15**

STATE OF CALIFORNIA - DEPARTMENT OF TRANSPORTATION
Caltrans® **DESIGN**
FUNCTIONAL SUPERVISOR: STEPHEN WINZENREAD
CALCULATED-DESIGNED BY: ADAM ZUMSTEIN
CHECKED BY: STEPHEN WINZENREAD
REVISED BY / DATE REVISED

LAST REVISION 06-08-11 | DATE PLOTTED => 15-AUG-2011 | TIME PLOTTED => 06:56

Dist	COUNTY	ROUTE	POST MILES TOTAL PROJECT	SHEET No.	TOTAL SHEETS
09	Mno	395	118.7/119.6	30	139

Adam Zumstein 6-8-11
REGISTERED CIVIL ENGINEER DATE

8-8-11
PLANS APPROVAL DATE

REGISTERED PROFESSIONAL ENGINEER ADAM ZUMSTEIN No. 76975 Exp. 12-31-12 CIVIL STATE OF CALIFORNIA

THE STATE OF CALIFORNIA OR ITS OFFICERS OR AGENTS SHALL NOT BE RESPONSIBLE FOR THE ACCURACY OR COMPLETENESS OF SCANNED COPIES OF THIS PLAN SHEET.

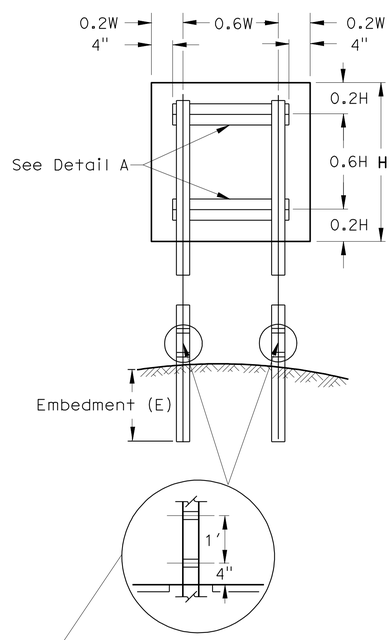

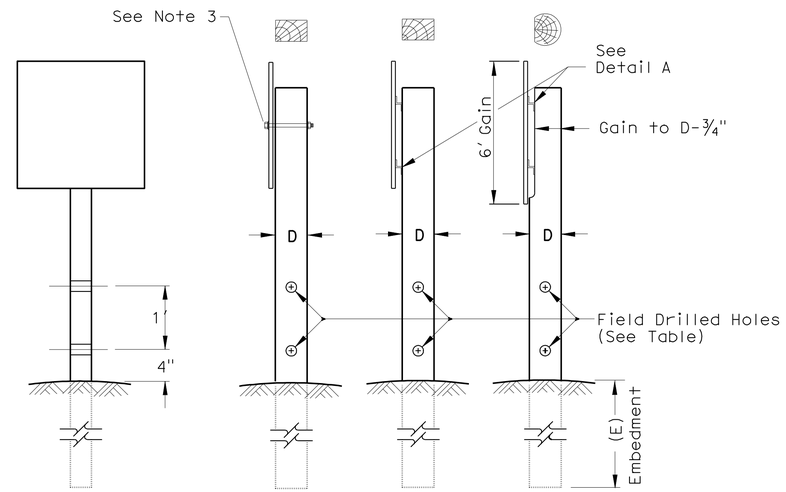

SIGN POST EMBEDMENTS	
4" x 4" = 3'	4" x 6" = 4'
6" x 6" = 5'	6" x 8" = 6'

RECTANGULAR TIMBER POST SELECTION

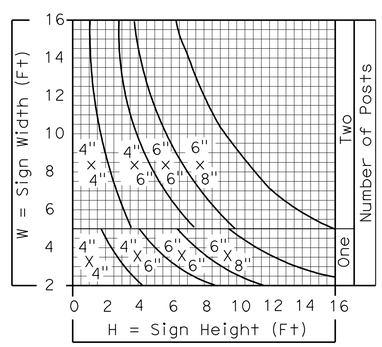

TABLE of HOLE DIAMETERS		
Post Size(D)	< 4" x 4" or 4" Dia	> 4" x 4" or 4" Dia
Hole Dia	No Hole	2"

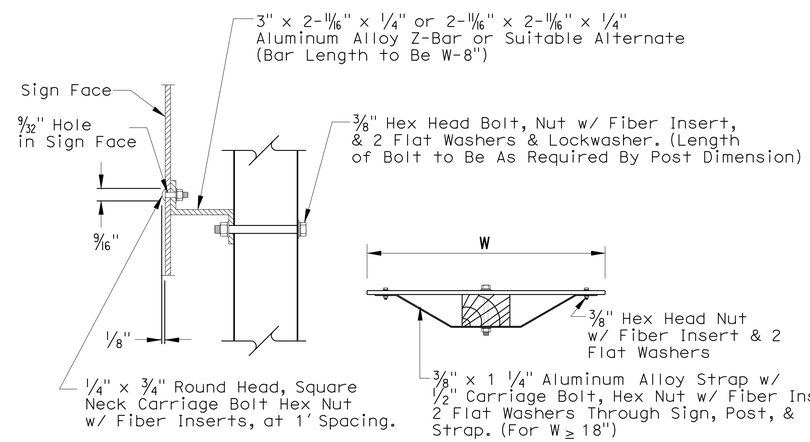

DETAIL A

NOTES:

1. ALL POSTS WITH CROSS SECTIONAL AREA LARGER THAN 4" x 4" ARE TO BE DRILLED AS SHOWN.
2. FOR DETAILS ON SIGN LOCATION, POST TYPE, PANEL BRACING, AND SIGN ISLANDS, SEE STANDARD PLANS T-31.1.1 THRU T-31.1.6.
3. Z-BARS WILL BE USED ON ALL SIGNS REQUIRING TWO POSTS.
4. FOR DOUBLE POST INSTALLATIONS, INNER POSTS ARE THOSE CLOSEST TO ROADWAY, AND OUTER POSTS ARE THOSE FARTHEST AWAY.

NEVADA DEPARTMENT OF TRANSPORTATION
ROADSIDE SIGNS TIMBER GENERAL

Signed Original On File	T-31.5.1	(627)
CHIEF SAFETY/TRAFFIC ENGR.	ADOPTED 8/98	REVISION 2/04

T-44

ROADSIDE SIGN DETAILS FOR PLACEMENT OF SIGNS IN NEVADA
NEVADA STANDARD PLAN T-31.5.1

CONSTRUCTION DETAILS
NO SCALE

C-16

STATE OF CALIFORNIA - DEPARTMENT OF TRANSPORTATION
Caltrans® DESIGN

FUNCTIONAL SUPERVISOR: STEPHEN WINZENREAD
CALCULATED-DESIGNED BY: ADAM ZUMSTEIN
CHECKED BY: STEPHEN WINZENREAD
REVISED BY
DATE REVISED

LAST REVISION 06-08-11
DATE PLOTTED => 15-AUG-2011
TIME PLOTTED => 06:57

Dist	COUNTY	ROUTE	POST MILES TOTAL PROJECT	SHEET No.	TOTAL SHEETS
09	Mno	395	118.7/119.6	31	139

REGISTERED CIVIL ENGINEER 6-8-11 DATE

8-8-11
PLANS APPROVAL DATE

REGISTERED PROFESSIONAL ENGINEER ADAM ZUMSTEIN No. 76975 Exp. 12-31-12 CIVIL STATE OF CALIFORNIA

THE STATE OF CALIFORNIA OR ITS OFFICERS OR AGENTS SHALL NOT BE RESPONSIBLE FOR THE ACCURACY OR COMPLETENESS OF SCANNED COPIES OF THIS PLAN SHEET.

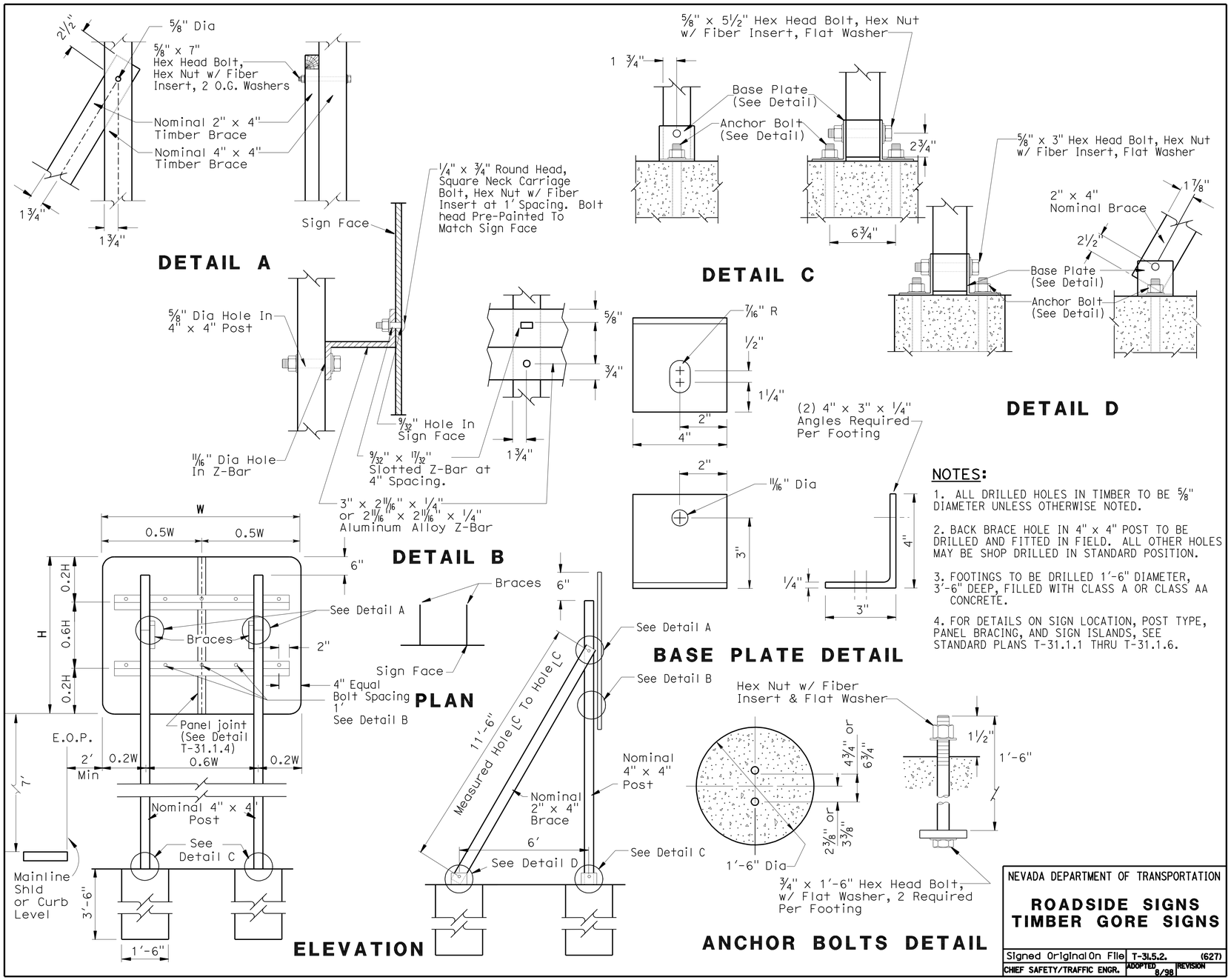

NOTES:

1. ALL DRILLED HOLES IN TIMBER TO BE 5/8" DIAMETER UNLESS OTHERWISE NOTED.
2. BACK BRACE HOLE IN 4" x 4" POST TO BE DRILLED AND FITTED IN FIELD. ALL OTHER HOLES MAY BE SHOP DRILLED IN STANDARD POSITION.
3. FOOTINGS TO BE DRILLED 1'-6" DIAMETER, 3'-6" DEEP, FILLED WITH CLASS A OR CLASS AA CONCRETE.
4. FOR DETAILS ON SIGN LOCATION, POST TYPE, PANEL BRACING, AND SIGN ISLANDS, SEE STANDARD PLANS T-31.1.1 THRU T-31.1.6.

NEVADA DEPARTMENT OF TRANSPORTATION

ROADSIDE SIGNS TIMBER GORE SIGNS

Signed Original On File	T-31.5.2.	(627)
CHIEF SAFETY/TRAFFIC ENGR.	ADOPTED 8/98	REVISION

ROADSIDE SIGN DETAILS FOR PLACEMENT OF SIGNS IN NEVADA
NEVADA STANDARD PLAN T-31.5.2

CONSTRUCTION DETAILS
NO SCALE **C-17**

STATE OF CALIFORNIA - DEPARTMENT OF TRANSPORTATION
Caltrans® **DESIGN**
FUNCTIONAL SUPERVISOR STEPHEN WINZENREAD
CALCULATED-DESIGNED BY ADAM ZUMSTEIN
CHECKED BY STEPHEN WINZENREAD
REVISED BY
DATE REVISED

LAST REVISION 06-08-11 DATE PLOTTED => 15-AUG-2011 TIME PLOTTED => 06:57

Dist	COUNTY	ROUTE	POST MILES TOTAL PROJECT	SHEET No.	TOTAL SHEETS
09	Mno	395	118.7/119.6	32	139

Adam Zumstein 6-8-11
REGISTERED CIVIL ENGINEER DATE

8-8-11
PLANS APPROVAL DATE

REGISTERED PROFESSIONAL ENGINEER ADAM ZUMSTEIN No. 76975 Exp. 12-31-12 CIVIL STATE OF CALIFORNIA

THE STATE OF CALIFORNIA OR ITS OFFICERS OR AGENTS SHALL NOT BE RESPONSIBLE FOR THE ACCURACY OR COMPLETENESS OF SCANNED COPIES OF THIS PLAN SHEET.

T-46

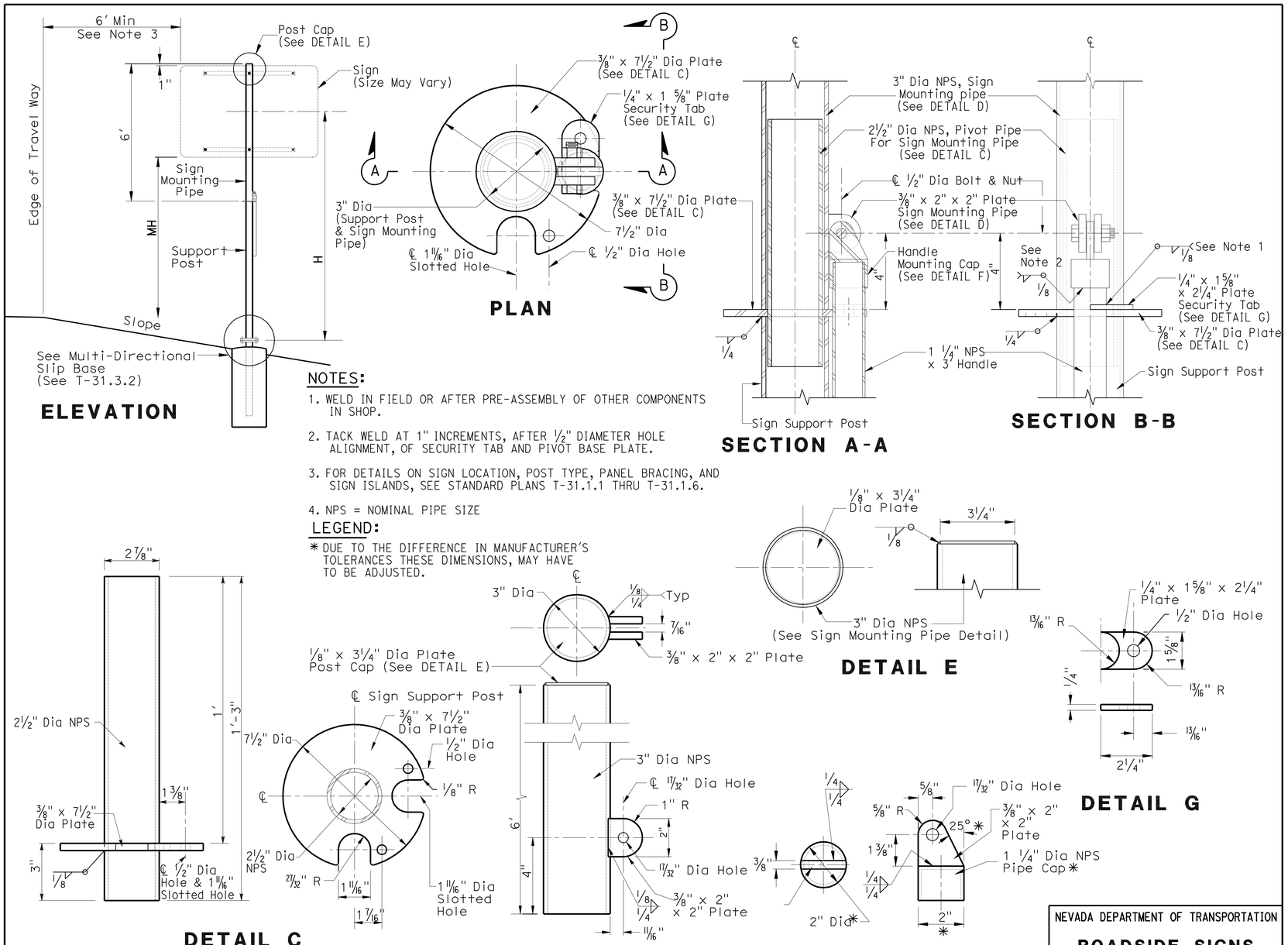

NOTES:

1. WELD IN FIELD OR AFTER PRE-ASSEMBLY OF OTHER COMPONENTS IN SHOP.
2. TACK WELD AT 1" INCREMENTS, AFTER 1/2" DIAMETER HOLE ALIGNMENT, OF SECURITY TAB AND PIVOT BASE PLATE.
3. FOR DETAILS ON SIGN LOCATION, POST TYPE, PANEL BRACING, AND SIGN ISLANDS, SEE STANDARD PLANS T-31.1.1 THRU T-31.1.6.
4. NPS = NOMINAL PIPE SIZE

LEGEND:

* DUE TO THE DIFFERENCE IN MANUFACTURER'S TOLERANCES THESE DIMENSIONS, MAY HAVE TO BE ADJUSTED.

NEVADA DEPARTMENT OF TRANSPORTATION

ROADSIDE SIGNS SPECIAL PIVOT POST

Signed Original On File	T-31.6.1	(627)
CHIEF SAFETY/TRAFFIC ENGR.	ADOPTED 8/98	REVISION

ROADSIDE SIGN DETAILS FOR PLACEMENT OF SIGNS IN NEVADA
NEVADA STANDARD PLAN T-31.6.1

CONSTRUCTION DETAILS
NO SCALE **C-18**

STATE OF CALIFORNIA - DEPARTMENT OF TRANSPORTATION
Caltrans® **DESIGN**
FUNCTIONAL SUPERVISOR: STEPHEN WINZENREAD
CALCULATED-DESIGNED BY: ADAM ZUMSTEIN
CHECKED BY: STEPHEN WINZENREAD
REVISED BY / DATE REVISED

LAST REVISION 06-08-11 | DATE PLOTTED => 15-AUG-2011 | TIME PLOTTED => 06:57

Dist	COUNTY	ROUTE	POST MILES TOTAL PROJECT	SHEET No.	TOTAL SHEETS
09	Mno	395	118.7/119.6	33	139

REGISTERED CIVIL ENGINEER 6-8-11 DATE

8-8-11
PLANS APPROVAL DATE

REGISTERED PROFESSIONAL ENGINEER ADAM ZUMSTEIN No. 76975 Exp. 12-31-12 CIVIL STATE OF CALIFORNIA

THE STATE OF CALIFORNIA OR ITS OFFICERS OR AGENTS SHALL NOT BE RESPONSIBLE FOR THE ACCURACY OR COMPLETENESS OF SCANNED COPIES OF THIS PLAN SHEET.

LEGEND:

- TYPE 1 EROSION CONTROL
- TYPE 2 EROSION CONTROL
- TYPE 3 EROSION CONTROL

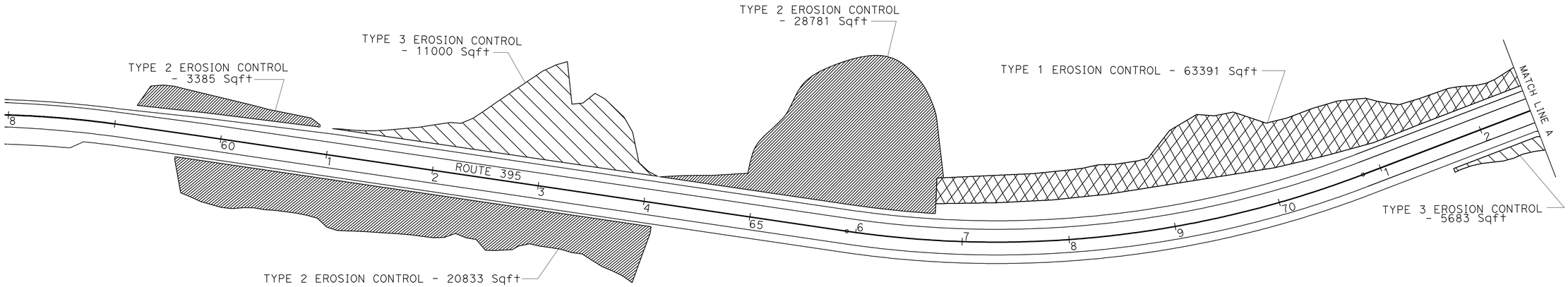

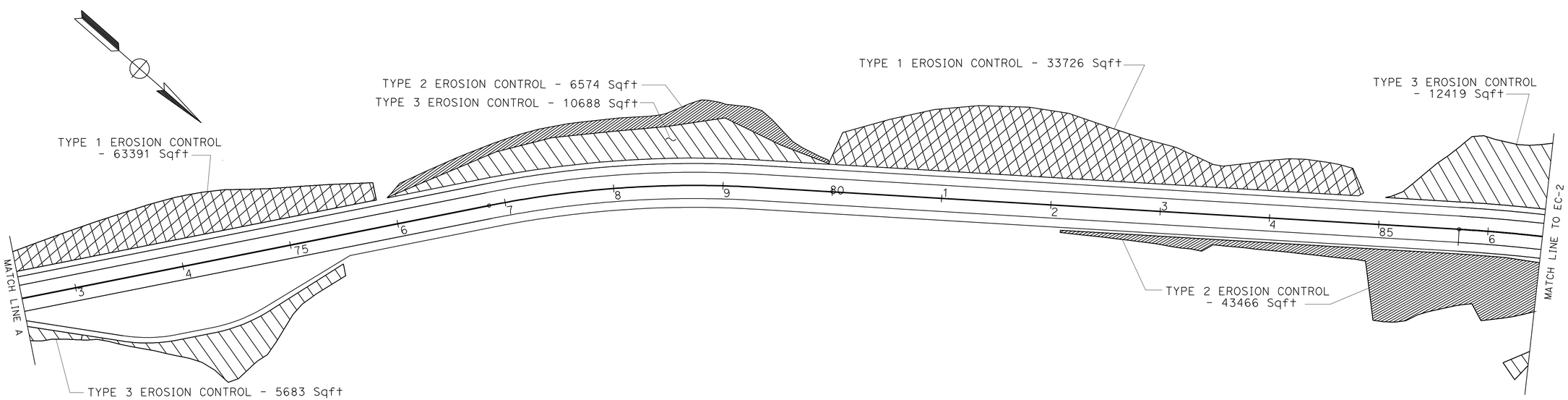

THIS PLAN ACCURATE FOR EROSION CONTROL WORK ONLY

EROSION CONTROL PLAN EC-1

SCALE 1" = 50'

STATE OF CALIFORNIA - DEPARTMENT OF TRANSPORTATION
Caltrans® DESIGN

FUNCTIONAL SUPERVISOR: STEPHEN WINZENREAD
CALCULATED-DESIGNED BY: ADAM ZUMSTEIN
CHECKED BY: STEPHEN WINZENREAD
REVISED BY / DATE REVISED

LAST REVISION 06-16-11 | DATE PLOTTED => 15-AUG-2011 | TIME PLOTTED => 08:19

Dist	COUNTY	ROUTE	POST MILES TOTAL PROJECT	SHEET No.	TOTAL SHEETS
09	Mno	395	118.7/119.6	34	139

REGISTERED CIVIL ENGINEER 6-8-11 DATE

8-8-11
PLANS APPROVAL DATE

REGISTERED PROFESSIONAL ENGINEER
ADAM ZUMSTEIN
No. 76975
Exp. 12-31-12
CIVIL
STATE OF CALIFORNIA

THE STATE OF CALIFORNIA OR ITS OFFICERS OR AGENTS SHALL NOT BE RESPONSIBLE FOR THE ACCURACY OR COMPLETENESS OF SCANNED COPIES OF THIS PLAN SHEET.

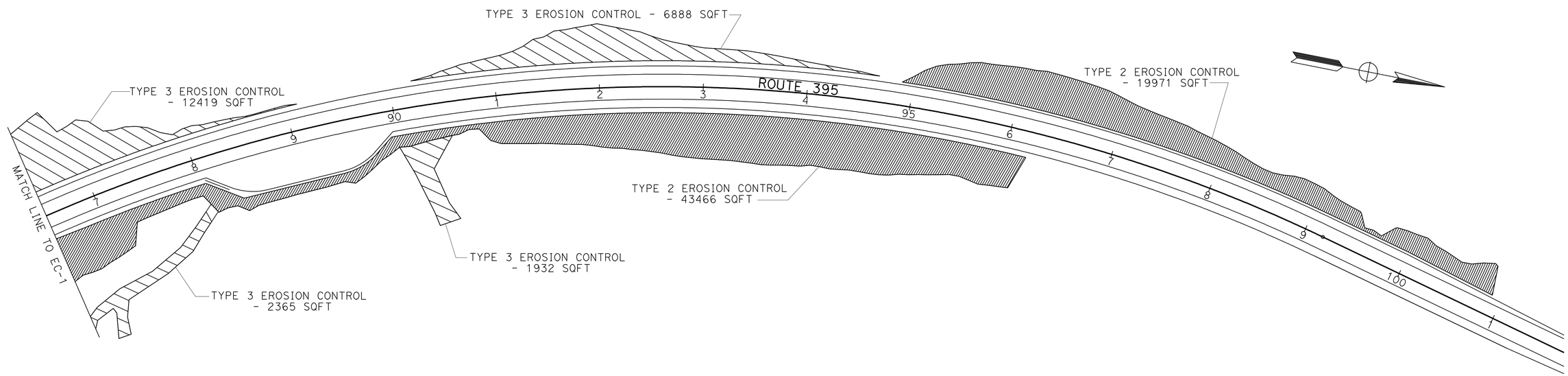

THIS PLAN ACCURATE FOR EROSION CONTROL WORK ONLY

EROSION CONTROL PLAN
SCALE:1"=50'
EC-2

STATE OF CALIFORNIA - DEPARTMENT OF TRANSPORTATION
Caltrans
DESIGN

FUNCTIONAL SUPERVISOR: STEPHEN WINZENREAD
CALCULATED-DESIGNED BY: ADAM ZUMSTEIN
CHECKED BY: STEPHEN WINZENREAD
REVISED BY
DATE REVISED

LAST REVISION 06-27-11
DATE PLOTTED => 15-AUG-2011
TIME PLOTTED => 08:19

Dist	COUNTY	ROUTE	POST MILES TOTAL PROJECT	SHEET No.	TOTAL SHEETS
09	Mno	395	118.7/119.6	35	139

Adam Zumstein 6-8-11
REGISTERED CIVIL ENGINEER DATE

8-8-11
PLANS APPROVAL DATE

REGISTERED PROFESSIONAL ENGINEER ADAM ZUMSTEIN No. 76975 Exp 12-31-12 CIVIL STATE OF CALIFORNIA

THE STATE OF CALIFORNIA OR ITS OFFICERS OR AGENTS SHALL NOT BE RESPONSIBLE FOR THE ACCURACY OR COMPLETENESS OF SCANNED COPIES OF THIS PLAN SHEET.

NOTES: FILL EXISTING CUT TO MATCH SURROUNDING SLOPE
THIS PLAN ACCURATE FOR CONTOUR GRADING WORK ONLY

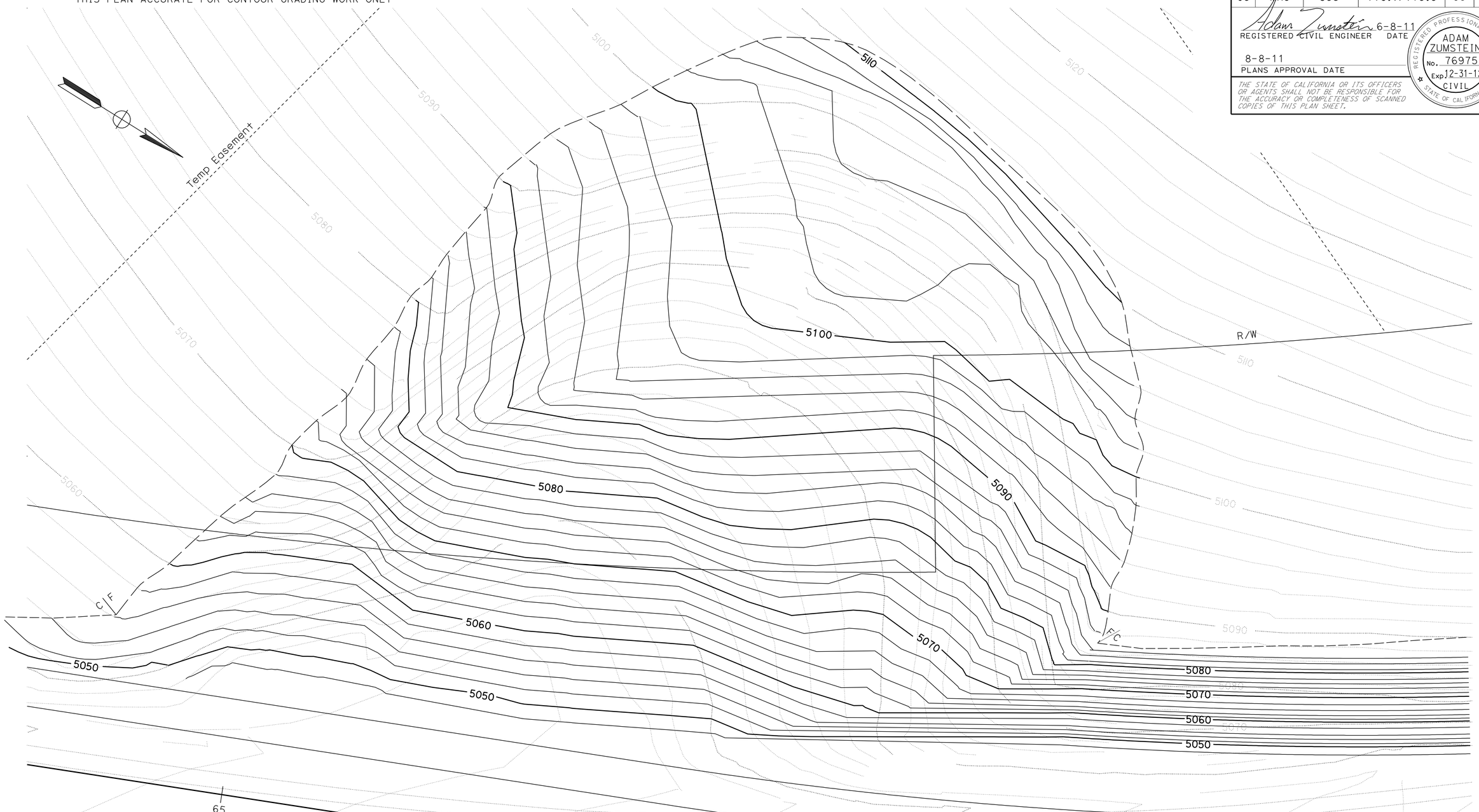

THIS PLAN ACCURATE FOR CONTOUR GRADING WORK ONLY

CONTOUR GRADING

SCALE:1"=10' **G-1**

STATE OF CALIFORNIA - DEPARTMENT OF TRANSPORTATION
Caltrans® **DESIGN**

FUNCTIONAL SUPERVISOR: STEPHEN WINZENREAD
CALCULATED-DESIGNED BY: ADAM ZUMSTEIN
CHECKED BY: STEPHEN WINZENREAD
REVISED BY
DATE REVISED

LAST REVISION DATE PLOTTED => 15-AUG-2011
TIME PLOTTED => 08:19
06-27-11

Dist	COUNTY	ROUTE	POST MILES TOTAL PROJECT	SHEET No.	TOTAL SHEETS
09	Mno	395	118.7/119.6	36	139

Adam Zumstein 6-8-11
REGISTERED CIVIL ENGINEER DATE

8-8-11
PLANS APPROVAL DATE

REGISTERED PROFESSIONAL ENGINEER
ADAM ZUMSTEIN
No. 76975
Exp. 12-31-12
CIVIL
STATE OF CALIFORNIA

THE STATE OF CALIFORNIA OR ITS OFFICERS OR AGENTS SHALL NOT BE RESPONSIBLE FOR THE ACCURACY OR COMPLETENESS OF SCANNED COPIES OF THIS PLAN SHEET.

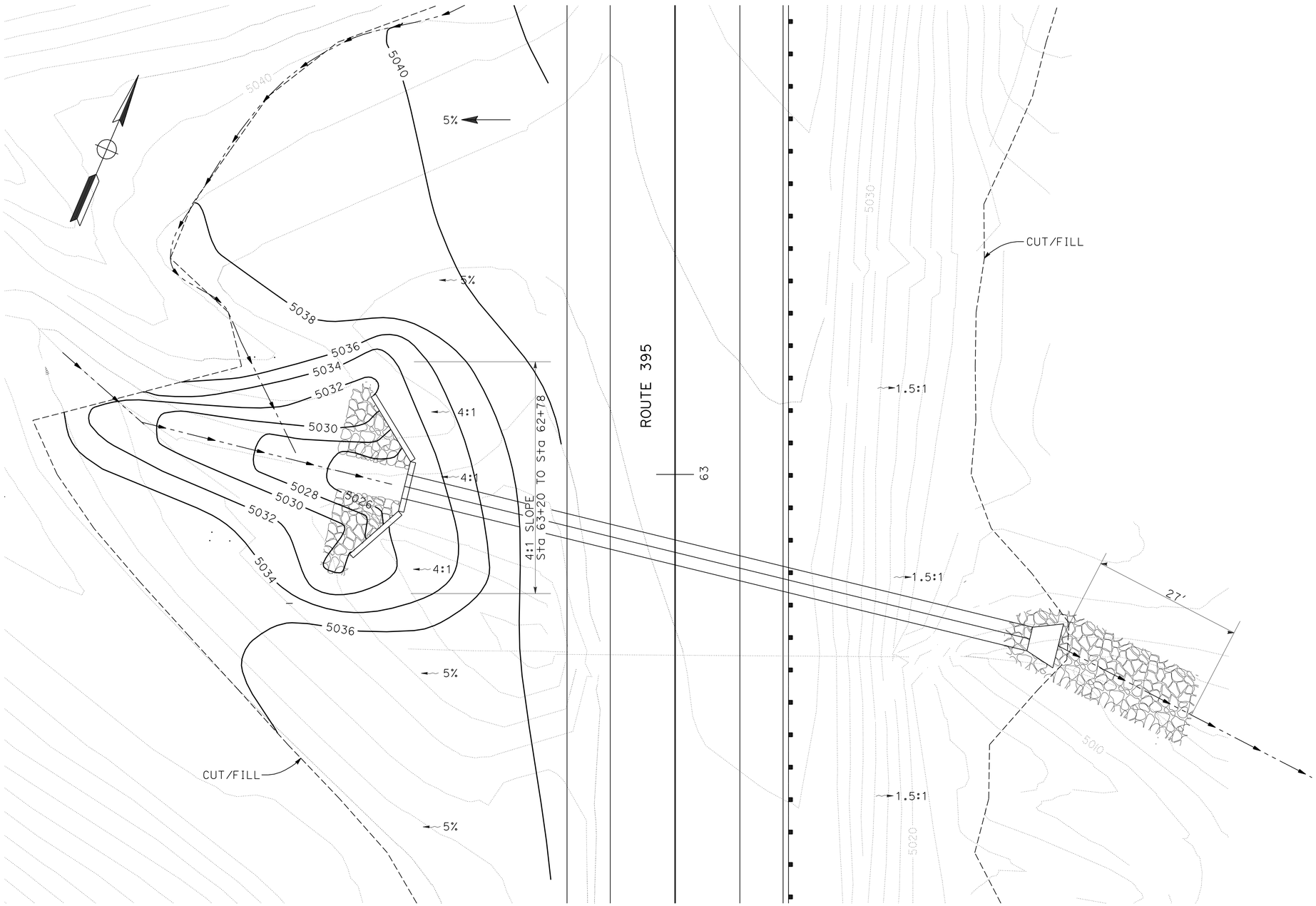

DRAINAGE SYSTEM 1

THIS PLAN ACCURATE FOR CONTOUR GRADING WORK ONLY.

CONTOUR GRADING

SCALE: 1"=20' **G-2**

STATE OF CALIFORNIA - DEPARTMENT OF TRANSPORTATION
Caltrans
DESIGN

FUNCTIONAL SUPERVISOR: STEPHEN WINZENREAD
CALCULATED-DESIGNED BY: TONY SYMANOVICH
CHECKED BY: ADAM ZUMSTEIN
REVISED BY
DATE REVISED

LAST REVISION DATE PLOTTED => 15-AUG-2011
TIME PLOTTED => 08:19
06-08-11

Dist	COUNTY	ROUTE	POST MILES TOTAL PROJECT	SHEET No.	TOTAL SHEETS
09	Mno	395	118.7/119.6	37	139

REGISTERED CIVIL ENGINEER 6-8-11 DATE

8-8-11
PLANS APPROVAL DATE

REGISTERED PROFESSIONAL ENGINEER ADAM ZUMSTEIN No. 76975 Exp 12-31-12 CIVIL STATE OF CALIFORNIA

THE STATE OF CALIFORNIA OR ITS OFFICERS OR AGENTS SHALL NOT BE RESPONSIBLE FOR THE ACCURACY OR COMPLETENESS OF SCANNED COPIES OF THIS PLAN SHEET.

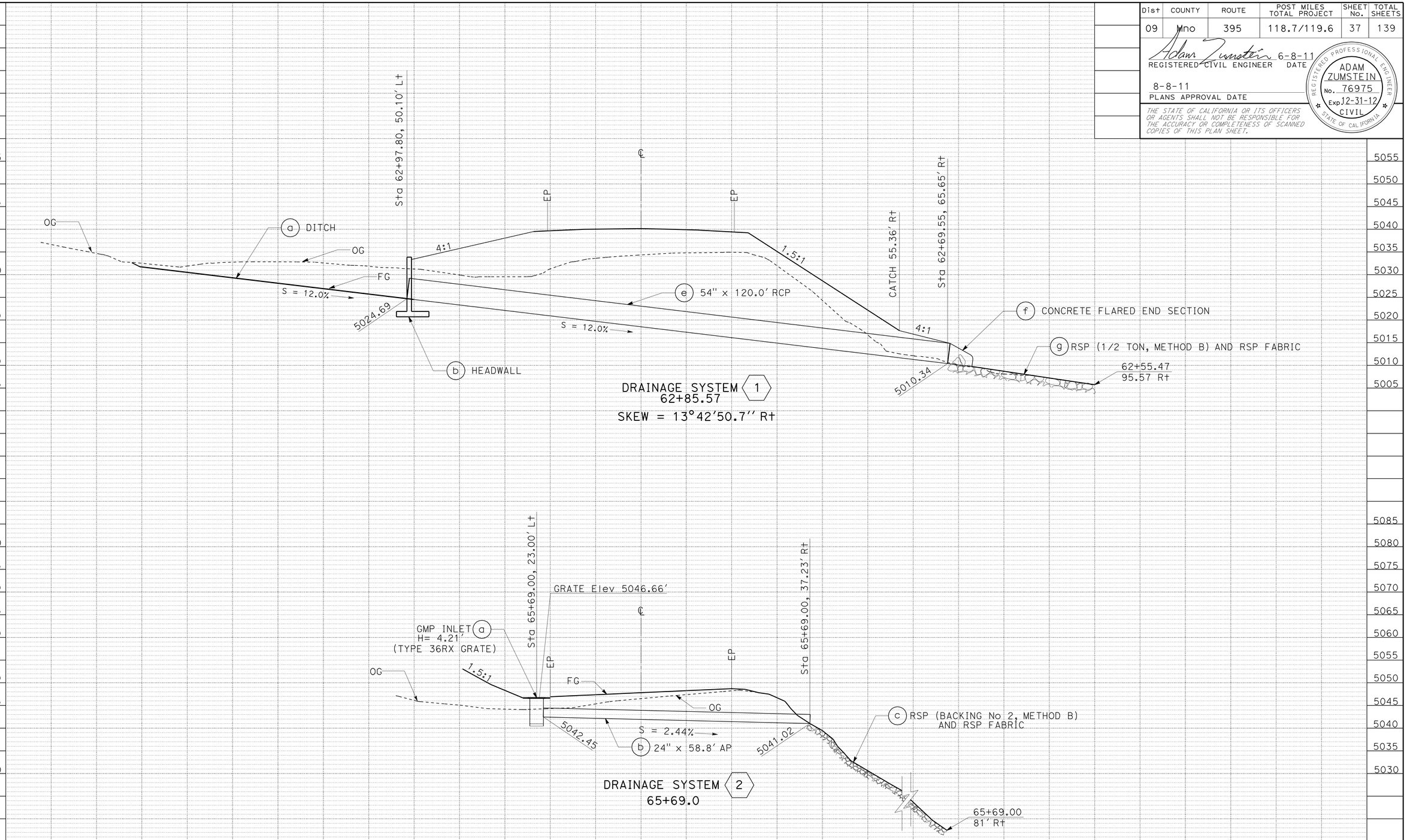

THIS PLAN ACCURATE FOR DRAINAGE WORK ONLY.

DRAINAGE PROFILE

SCALE: Horiz 1:10
Vert 1:10

DP-1

STATE OF CALIFORNIA - DEPARTMENT OF TRANSPORTATION
Caltrans
DESIGN

FUNCTIONAL SUPERVISOR: STEPHEN WINZENREAD
CALCULATED-DESIGNED BY: TONY SYMANOVICH
CHECKED BY: ADAM ZUMSTEIN
REVISED BY
DATE REVISED

LAST REVISION 06-16-11 DATE PLOTTED =>
TIME PLOTTED =>

Dist	COUNTY	ROUTE	POST MILES TOTAL PROJECT	SHEET No.	TOTAL SHEETS
09	Mno	395	118.7/119.6	38	139

REGISTERED CIVIL ENGINEER 6-8-11 DATE

8-8-11
PLANS APPROVAL DATE

REGISTERED PROFESSIONAL ENGINEER ADAM ZUMSTEIN No. 76975 Exp 12-31-12 CIVIL STATE OF CALIFORNIA

THE STATE OF CALIFORNIA OR ITS OFFICERS OR AGENTS SHALL NOT BE REAPONSIBLE FOR THE ACCURACY OR COMPLETENESS OF SCANNED COPIES OF THIS PLAN SHEET.

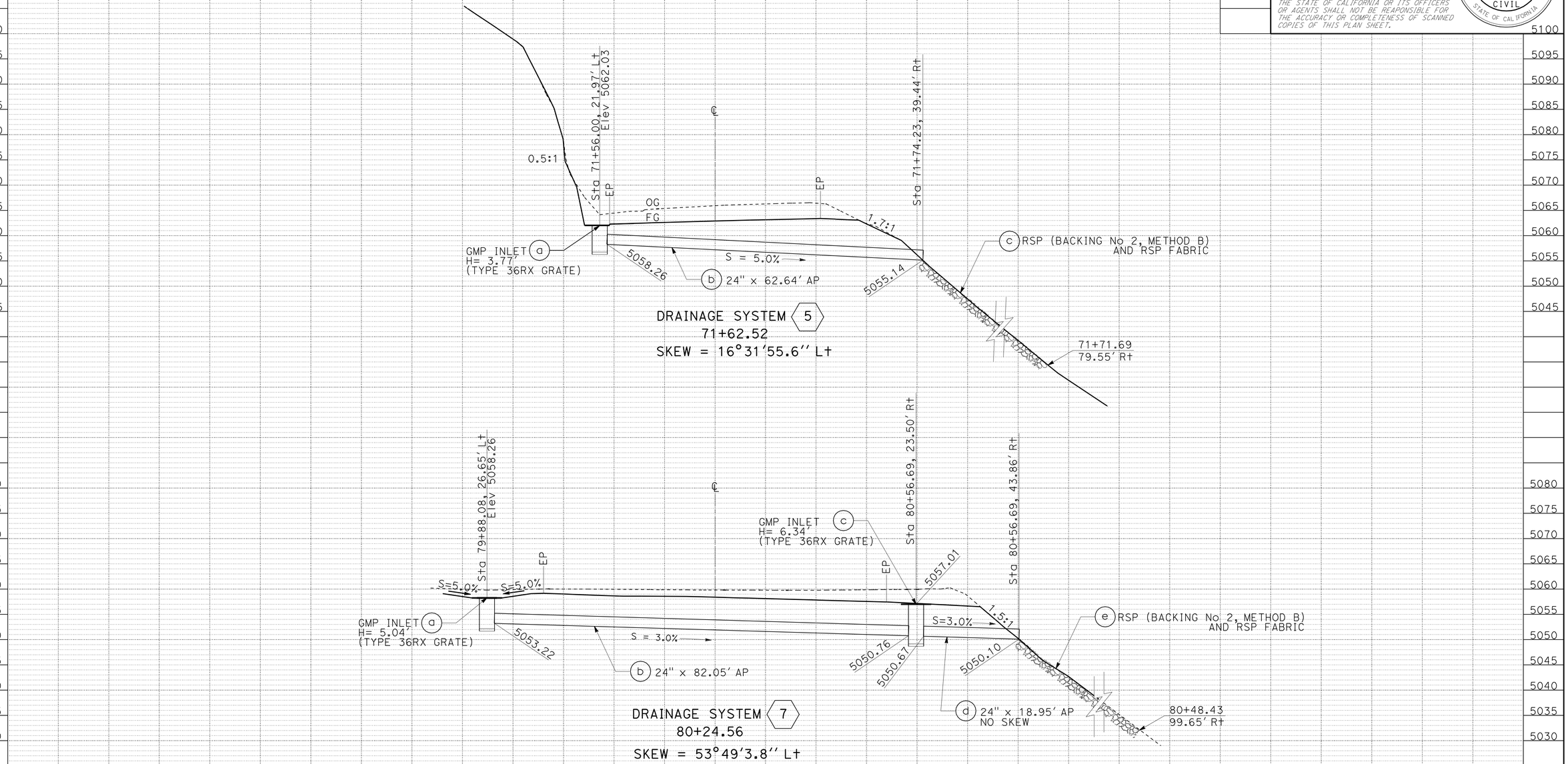

THIS PLAN ACCURATE FOR DRAINAGE WORK ONLY.

DRAINAGE PROFILE

SCALE: Horiz 1:10
Vert 1:10

DP-2

STATE OF CALIFORNIA - DEPARTMENT OF TRANAPORTATION
Caltrans®
DESIGN

FUNCTIONAL SUPERVISOR: STEPHEN WINZENREAD
CALCULATED-DESIGNED BY: TONY SYMANOVICH
CHECKED BY: ADAM ZUMSTEIN
REVISED BY
DATE REVISED

LAST REVISION DATE PLOTTED => 15-AUG-2011
06-16-11 TIME PLOTTED => 08:19

Dist	COUNTY	ROUTE	POST MILES TOTAL PROJECT	SHEET No.	TOTAL SHEETS
09	Mno	395	118.7/119.6	39	139

REGISTERED CIVIL ENGINEER 6-8-11 DATE

8-8-11
PLANS APPROVAL DATE

REGISTERED PROFESSIONAL ENGINEER ADAM ZUMSTEIN No. 76975 Exp 12-31-12 CIVIL STATE OF CALIFORNIA

THE STATE OF CALIFORNIA OR ITS OFFICERS OR AGENTS SHALL NOT BE RESPONSIBLE FOR THE ACCURACY OR COMPLETENESS OF SCANNED COPIES OF THIS PLAN SHEET.

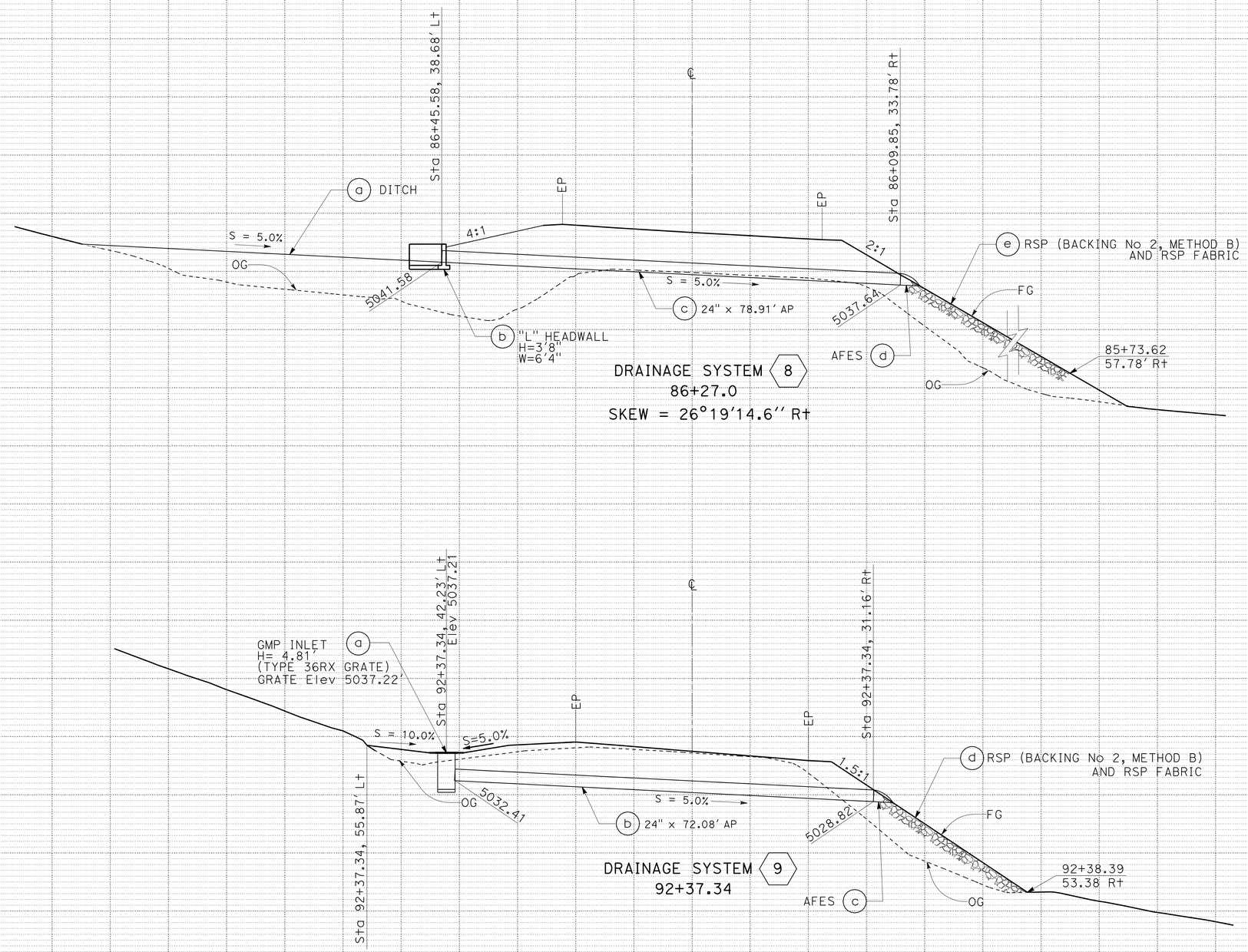

THIS PLAN ACCURATE FOR DRAINAGE WORK ONLY.

DRAINAGE PROFILE

SCALE: Horiz 1:10
Vert 1:10

DP-3

REVISED BY | DATE REVISED
TONY SYMANOVICH | ADAM ZUMSTEIN
CALCULATED-DESIGNED BY | CHECKED BY
FUNCTIONAL SUPERVISOR: STEPHEN WINZENREAD

STATE OF CALIFORNIA - DEPARTMENT OF TRANSPORTATION
Caltrans
DESIGN

LAST REVISION 06-16-11 | DATE PLOTTED => 15-AUG-2011 | TIME PLOTTED => 08:19

Dist	COUNTY	ROUTE	POST MILES TOTAL PROJECT	SHEET No.	TOTAL SHEETS
09	Mno	395	118.7/119.6	40	139

Adam Zumstein 6-8-11
REGISTERED CIVIL ENGINEER DATE

8-8-11
PLANS APPROVAL DATE

REGISTERED PROFESSIONAL ENGINEER
ADAM ZUMSTEIN
No. 76975
Exp. 12-31-12
CIVIL
STATE OF CALIFORNIA

THE STATE OF CALIFORNIA OR ITS OFFICERS OR AGENTS SHALL NOT BE RESPONSIBLE FOR THE ACCURACY OR COMPLETENESS OF SCANNED COPIES OF THIS PLAN SHEET.

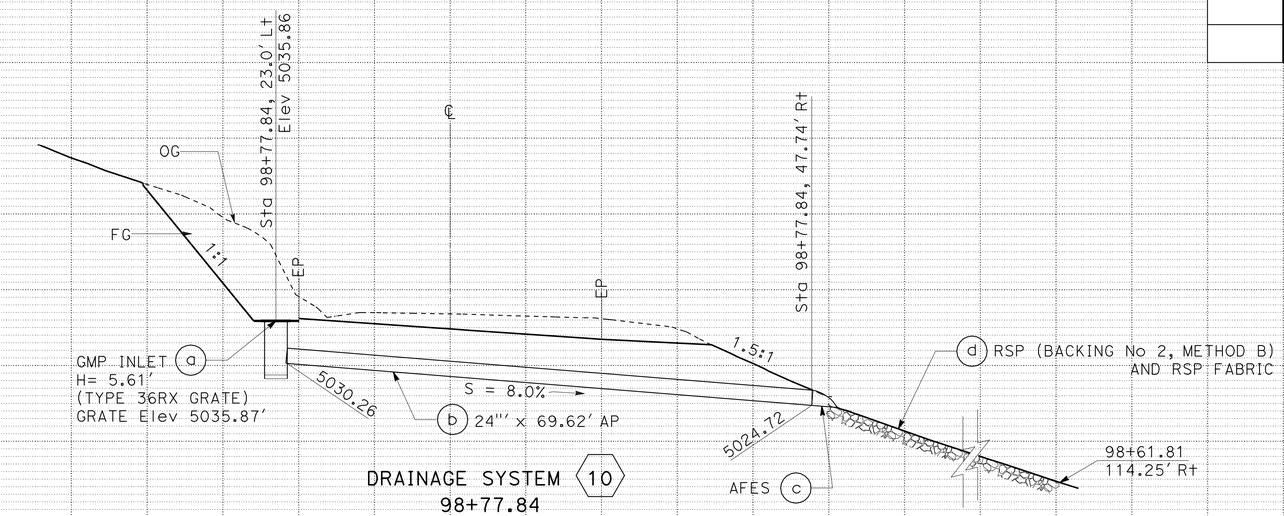

DRAINAGE SYSTEM (10)
98+77.84

THIS PLAN ACCURATE FOR DRAINAGE WORK ONLY.

DRAINAGE PROFILE

SCALE: Horiz 1:10
Vert 1:10

DP-4

STATE OF CALIFORNIA - DEPARTMENT OF TRANSPORTATION
Caltrans®
DESIGN

FUNCTIONAL SUPERVISOR: STEPHEN WINZENREAD
CALCULATED-DESIGNED BY: TONY SYMANOVICH
CHECKED BY: ADAM ZUMSTEIN
REVISED BY
DATE REVISED

LAST REVISION 06-16-11
DATE PLOTTED => 15-AUG-2011
TIME PLOTTED => 08:20

Dist	COUNTY	ROUTE	POST MILES TOTAL PROJECT	SHEET No.	TOTAL SHEETS
09	Mno	395	118.7/119.6	41	139

REGISTERED CIVIL ENGINEER 6-8-11 DATE

8-8-11
PLANS APPROVAL DATE

REGISTERED PROFESSIONAL ENGINEER ADAM ZUMSTEIN No. 76975 Exp 12-31-12 CIVIL STATE OF CALIFORNIA

THE STATE OF CALIFORNIA OR ITS OFFICERS OR AGENTS SHALL NOT BE RESPONSIBLE FOR THE ACCURACY OR COMPLETENESS OF SCANNED COPIES OF THIS PLAN SHEET.

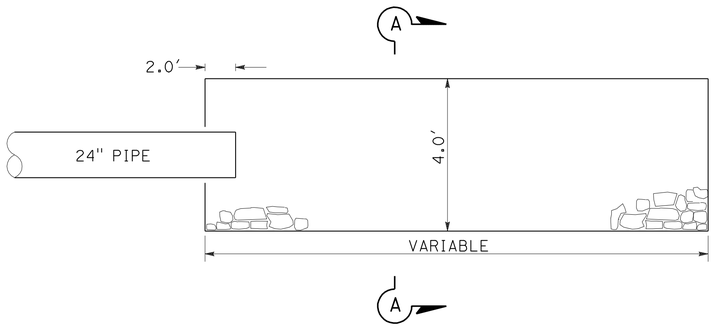

PLAN
TYPICAL OUTLET ENERGY DISSIPATOR

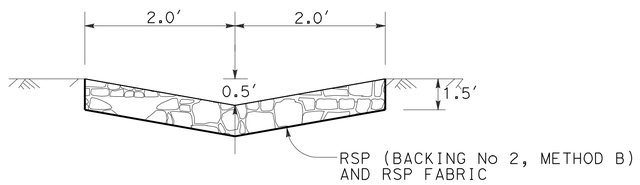

SECTION A-A
TYPICAL OUTLET ENERGY DISSIPATOR

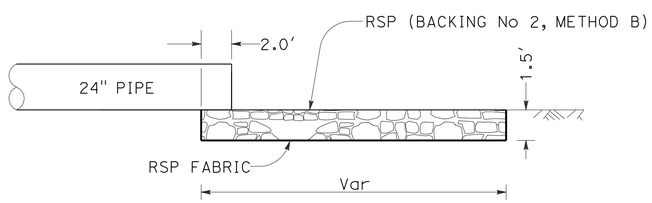

PROFILE
TYPICAL OUTLET ENERGY DISSIPATOR

2 5 7 8 9 10

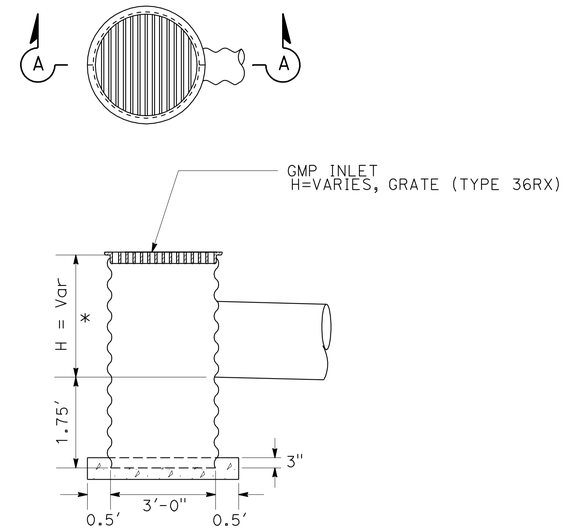

* SEE DRAINAGE PROFILE SHEETS FOR DIMENSION

SECTION A-A
TYPICAL GMP INLET

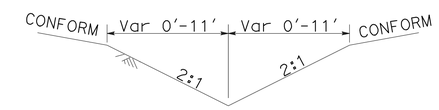

DITCH a

DRAINAGE SYSTEM 8

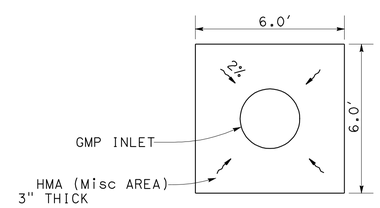

HMA APRON DETAIL
DRAINAGE SYSTEMS

2 7 9 10

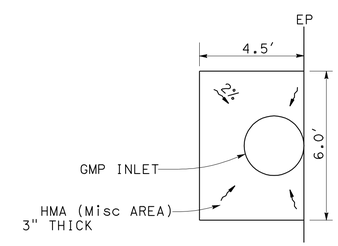

HMA APRON DETAIL
DRAINAGE SYSTEM

5

THIS PLAN ACCURATE FOR DRAINAGE WORK ONLY.

DRAINAGE DETAILS
NO SCALE **DD-1**

STATE OF CALIFORNIA - DEPARTMENT OF TRANSPORTATION
Caltrans DESIGN

FUNCTIONAL SUPERVISOR: STEPHEN WINZENREAD
CALCULATED-DESIGNED BY: TONY SYMANOVICH
CHECKED BY: ADAM ZUMSTEIN
REVISED BY
DATE REVISED

LAST REVISION 06-27-11
DATE PLOTTED => 15-AUG-2011
TIME PLOTTED => 08:20

Dist	COUNTY	ROUTE	POST MILES TOTAL PROJECT	SHEET No.	TOTAL SHEETS
09	Mno	395	118.7/119.6	42	139

REGISTERED CIVIL ENGINEER 6-8-11 DATE

8-8-11
PLANS APPROVAL DATE

REGISTERED PROFESSIONAL ENGINEER ADAM ZUMSTEIN No. 76975 Exp. 12-31-12 CIVIL STATE OF CALIFORNIA

THE STATE OF CALIFORNIA OR ITS OFFICERS OR AGENTS SHALL NOT BE RESPONSIBLE FOR THE ACCURACY OR COMPLETENESS OF SCANNED COPIES OF THIS PLAN SHEET.

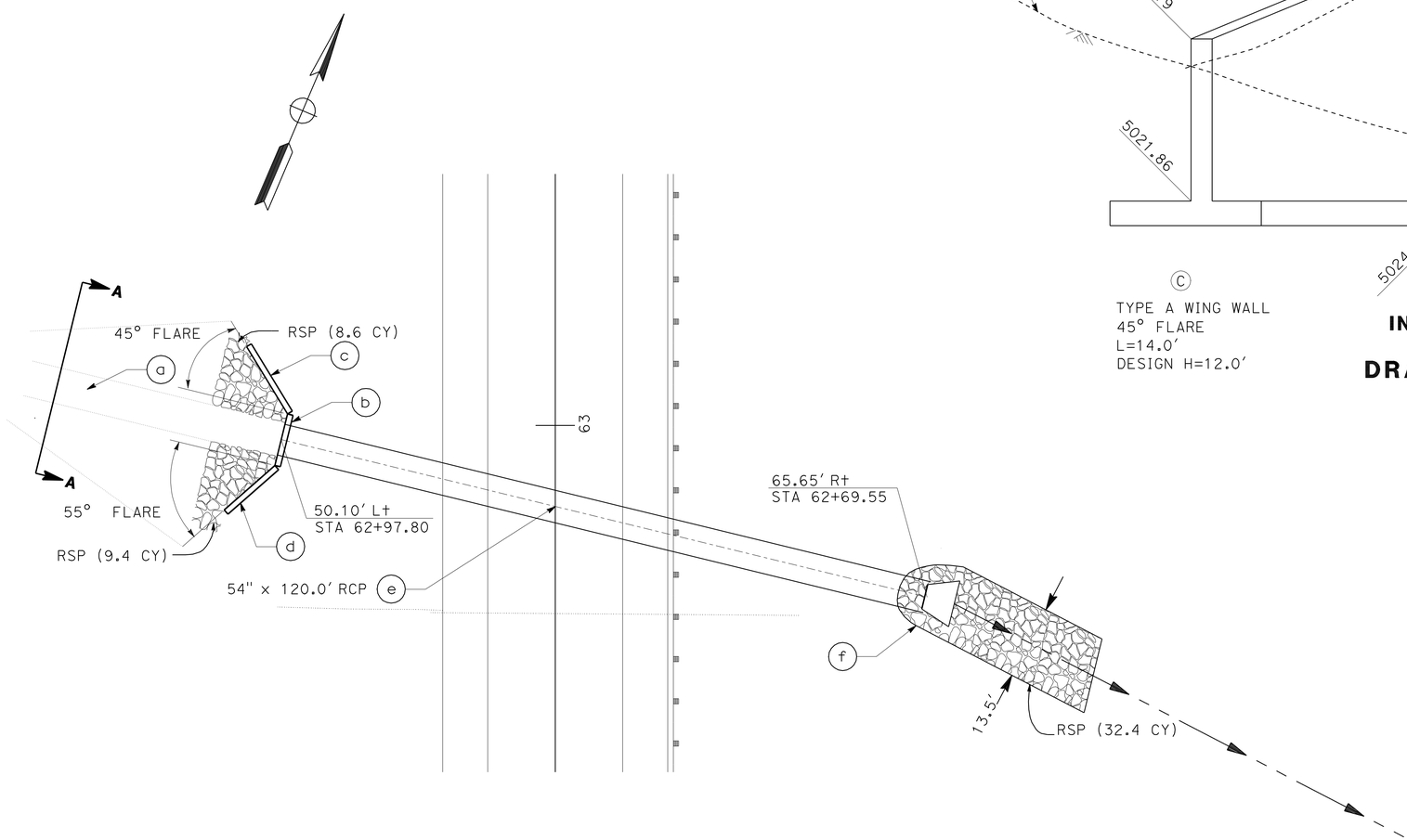

DRAINAGE SYSTEM 1

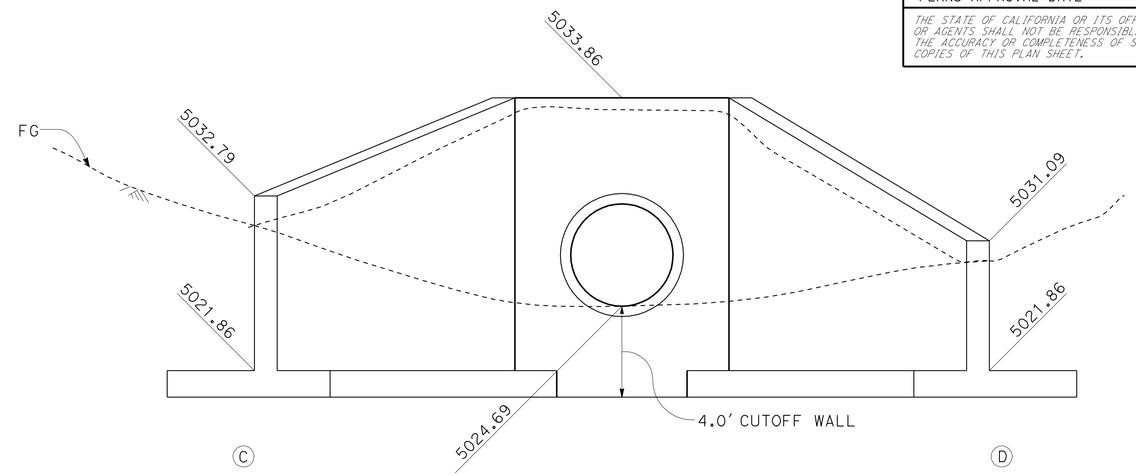

C
TYPE A WING WALL
45° FLARE
L=14.0′
DESIGN H=12.0′

INLET END ELEVATION

DRAINAGE SYSTEM 1

D
TYPE A WING WALL
55° FLARE
L=12.0′
DESIGN H=12.0′

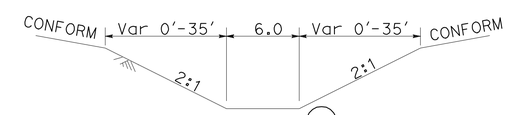

DITCH (a) SECTION A-A

DRAINAGE SYSTEM 1

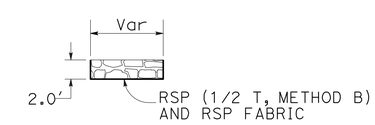

RSP DETAIL

DRAINAGE SYSTEM 1

THIS PLAN ACCURATE FOR DRAINAGE WORK ONLY.

DRAINAGE DETAILS
NO SCALE **DD-2**

STATE OF CALIFORNIA - DEPARTMENT OF TRANSPORTATION
Caltrans® **DESIGN**
FUNCTIONAL SUPERVISOR: STEPHEN WINZENREAD
CALCULATED-DESIGNED BY: ADAM ZUMSTEIN
CHECKED BY: TONY SYMANOVICH
REVISED BY
DATE REVISED

LAST REVISION 06-27-11
DATE PLOTTED => 15-AUG-2011
TIME PLOTTED => 08:20

Dist	COUNTY	ROUTE	POST MILES TOTAL PROJECT	SHEET No.	TOTAL SHEETS
09	Mno	395	118.7/119.6	43	139

REGISTERED CIVIL ENGINEER Adam Zumstein 6-8-11 DATE

8-8-11
PLANS APPROVAL DATE

REGISTERED PROFESSIONAL ENGINEER ADAM ZUMSTEIN No. 76975 Exp. 12-31-12 CIVIL STATE OF CALIFORNIA

THE STATE OF CALIFORNIA OR ITS OFFICERS OR AGENTS SHALL NOT BE RESPONSIBLE FOR THE ACCURACY OR COMPLETENESS OF SCANNED COPIES OF THIS PLAN SHEET.

NOTES:
(N) - NOT A SEPARATE PAY ITEM, FOR INFORMATION ONLY.

ALTERNATIVE PIPE CULVERTS
ALLOWABLE PIPE MATERIAL

DESIGNATION	RCP SIZE (in)	CSP SIZE (in)	CSP THICK (in)	CSP BIT CTD
24" APC PIPE	24"	24"	0.109"	NO

*JOINT TYPES ARE STANDARD

DRAINAGE QUANTITIES

⬡ DRAINAGE SYSTEM No.	○ DRAINAGE UNIT	ABANDON CULVERT LF	REMOVE CULVERT (N) LF	REMOVE INLET (N) EA	DITCH EXCAVATION CY	SAND BACKFILL CY	24" ALTERNATIVE PIPE CULVERT LF	54" REINFORCED CONCRETE PIPE LF	24" ALTERNATIVE FLARED END SECTION EA	54" CONCRETE FLARED END SECTION EA	MINOR CONCRETE (MINOR STRUCTURE) CY	BAR REINFORCING STEEL (N) LB	36" CORRUGATED STEEL PIPE INLET (.138" THICK) LF	HMA (Misc AREAS) HMA (TYPE A) * TON	HMA (Misc AREAS) PLACE HMA (Misc AREA) SQYD	MISC IRON AND STEEL LB	CABLE RAILING ** LF	RSP (1/2 TON, METHOD B) CY	RSP (BACKING No 2, METHOD B) CY	RSP FABRIC SQYD	HEIGHT OF INLET (H) FT	DESCRIPTION	STATION	SHEET No.	⬡ DRAINAGE SYSTEM No.	○ DRAINAGE UNIT
1	a				50																	DITCH		G-2	1	a
	b										3.60	637					34.1					INLET HEADWALL	62+97.80 50.10 Lt	DP-1		b
	c										10.47	924						8.6		12.9		INLET WINGWALL - Lt		DD-2		c
	d										8.82	758						9.4		14.1		INLET WINGWALL - Rt				d
	e							120.0														54" RCP	62+85.57			e
	f									1												CONCRETE FLARED END SECTION	62+69.55 65.65 Rt			f
	g																	32.4		48.6		RSP - OUTLET		G-2		g
	h	65.5				38.89																Exist 4'x4' BOX	62+66.54			h
2	a												5.96	0.52	3.2	215					4.21	GMP INLET	65+69.00 23.00 Lt	DP-1	2	a
	b						58.80															24" AP	65+69.00			b
	c																		12.0	24.1		RSP - OUTLET ENERGY DISSIPATOR				c
3	a			1																		Exist INLET	67+47.00		3	a
	b		39.5																			Exist 18" CMP	67+47.43			b
4	a			1																		Exist INLET	71+36.60		4	a
	b		42.3																			Exist 18" CMP	71+32.14			b
5	a												5.52	0.36	2.2	215					3.77	GMP INLET	71+56.00 21.97 Lt	DP-2	5	a
	b						62.64															24" AP	71+62.52			b
	c																		11.3	22.5		RSP - OUTLET ENERGY DISSIPATOR				c
6	a			1																		Exist INLET	79+54.48		6	a
	b		55.0																			Exist 18" CMP	79+44.49			b
7	a												6.79	0.52	3.2	215					5.04	GMP INLET	79+88.08 26.65 Lt	DP-2	7	a
	b						82.05															24" AP	80+24.56			b
	c												8.09	0.52	3.2	215					6.34	GMP INLET	80+56.69 23.50 Rt			c
	d						18.95															24" AP				d
	e																		14.2	28.5		RSP - OUTLET ENERGY DISSIPATOR				e
Sht Tot		65.5	136.8	3	50	38.89	222.44	120.0	0	1	22.89	2319	26.36	1.92	11.8	860	34.1	50.4	37.5	150.7						

* THIS ITEM INCLUDED IN HMA QUANTITY ON SHEET Q-1
** THIS ITEM INCLUDED IN CABLE RAILING QUANTITY ON SHEET Q-1

DRAINAGE QUANTITIES
NO SCALE **DQ-1**

REVISED BY | DATE REVISED
TONY SYMANOVICH | ADAM ZUMSTEIN
CALCULATED-DESIGNED BY | CHECKED BY
FUNCTIONAL SUPERVISOR
STEPHEN WINZENREAD
STATE OF CALIFORNIA - DEPARTMENT OF TRANSPORTATION
Caltrans DESIGN

LAST REVISION 06-27-11 | DATE PLOTTED => 15-AUG-2011 | TIME PLOTTED => 08:20

Dist	COUNTY	ROUTE	POST MILES TOTAL PROJECT	SHEET No.	TOTAL SHEETS
09	Mno	395	118.7/119.6	44	139

REGISTERED CIVIL ENGINEER 6-8-11 DATE

8-8-11
PLANS APPROVAL DATE

REGISTERED PROFESSIONAL ENGINEER ADAM ZUMSTEIN No. 76975 Exp 12-31-12 CIVIL STATE OF CALIFORNIA

THE STATE OF CALIFORNIA OR ITS OFFICERS OR AGENTS SHALL NOT BE RESPONSIBLE FOR THE ACCURACY OR COMPLETENESS OF SCANNED COPIES OF THIS PLAN SHEET.

DRAINAGE QUANTITIES

DRAINAGE SYSTEM No.	DRAINAGE UNIT	ABANDON CULVERT	REMOVE CULVERT (N)	REMOVE INLET (N)	DITCH EXCAVATION	SAND BACKFILL	24" ALTERNATIVE PIPE CULVERT	54" REINFORCED CONCRETE PIPE	24" ALTERNATIVE FLARED END SECTION	54" CONCRETE FLARED END SECTION	MINOR CONCRETE (MINOR STRUCTURE)	BAR REINFORCING STEEL (N)	36" CORRUGATED STEEL PIPE INLET (.138" THICK)	HMA (Misc AREAS) HMA (TYPE A) *	HMA (Misc AREAS) PLACE HMA (Misc AREAS)	MISC IRON AND STEEL	CABLE RAILING **	RSP (1/2 TON, METHOD B)	RSP (BACKING No. 2, METHOD B)	RSP FABRIC	HEIGHT OF INLET (H)	DESCRIPTION	STATION	SHEET No.	DRAINAGE SYSTEM No.	DRAINAGE UNIT
		LF	LF	EA	CY	CY	LF	LF	EA	EA	CY	LB	LF	TON	SQYD	LB	LF	CY	CY	SQYD	FT					
8	a																					DITCH	86+45	DP-3	8	a
	b										1.74	110					11.1					L-SHAPED HEADWALL	86+45.58 38.68 Lt			b
	c						78.91															24" AP	86+27.00			c
	d								1													AFES	86+09.85 33.78 Rt			d
	e																		10.9	21.8		RSP - OUTLET ENERGY DISSIPATOR				e
	f			1																		Exist HEADWALL	86+37.35			f
	g	72.8				8.46																Exist 24" PIPE	86+32.09			g
9	a												6.56	0.52	3.2	215					4.81	GMP INLET	92+37.34 42.23 Lt	DP-3	9	a
	b						72.08															24" AP	92+37.34			b
	c								1													AFES	92+37.34 31.16 Rt			c
	d																		5.0	10.0		RSP - OUTLET ENERGY DISSIPATOR				d
	e			1																		Exist INLET	91+81.07			e
	f	74.8				4.89																Exist 18" PIPE	91+88.97			f
10	a												7.36	0.52	3.2	215					5.61	GMP INLET	98+77.84 23.0 Lt	DP-4	10	a
	b						69.62															24" AP	98+77.84			b
	c								1													AFES	98+77.84 41.73 Rt			c
	d																		17.3	34.6		RSP - OUTLET ENERGY DISSIPATOR				d
	e			1																		Exist INLET				e
	f		50.8																			Exist 18" PIPE	99+55.5			f
Sht Tot		147.6	50.8	3	0	13.35	220.61	0	3	0	1.74	110	13.92	1.04	6.4	430	11.1	0	33.2	66.4						
DQ-1 Tot		65.5	136.8	3	50	38.89	222.44	120.0	0	1	22.89	2319	26.36	1.92	11.8	860	34.1	50.4	37.5	150.7						
TOTAL		213.1			50	52.24	444.00	120.0	3	1	24.63		40.28	2.96	18.2	1290	45.2	50.4	70.7	217.1						

* THIS ITEM INCLUDED IN HMA QUANTITY ON SHEET Q-1
** THIS ITEM INCLUDED IN CABLE RAILING QUANTITY ON SHEET Q-1

(N) NOT A SEPERATE PAY ITEM, FOR INFORMATION ONLY.

DRAINAGE QUANTITIES
NO SCALE **DQ-2**

STATE OF CALIFORNIA - DEPARTMENT OF TRANSPORTATION
Caltrans® DESIGN

FUNCTIONAL SUPERVISOR: STEPHEN WINZENREAD
CALCULATED-DESIGNED BY: ADAM ZUMSTEIN
CHECKED BY: TONY SYMANOVICH
REVISED BY
DATE REVISED

LAST REVISION 06-16-11
DATE PLOTTED => 15-AUG-2011
TIME PLOTTED => 08:20

Dist	COUNTY	ROUTE	POST MILES TOTAL PROJECT	SHEET No.	TOTAL SHEETS
09	Mno	395	118.7/119.6	45	139

REGISTERED CIVIL ENGINEER 6-8-11 DATE

8-8-11
PLANS APPROVAL DATE

REGISTERED PROFESSIONAL ENGINEER STEPHEN WINZENREAD No. 64274 Exp. 6-30-11 CIVIL STATE OF CALIFORNIA

THE STATE OF CALIFORNIA OR ITS OFFICERS OR AGENTS SHALL NOT BE RESPONSIBLE FOR THE ACCURACY OR COMPLETENESS OF SCANNED COPIES OF THIS PLAN SHEET.

NOTES:

1. LOCATION AND POSITION OF CONSTRUCTION AREA SIGNS AND PORTABLE CHANGEABLE MESSAGE SIGNS ARE APPROXIMATE. EXACT LOCATION TO BE DETERMINED BY THE ENGINEER.
2. ALTERNATE MESSAGES MUST BE APPROVED BY THE ENGINEER.
3. MESSAGE MAY BE ALTERED BY THE ENGINEER.
4. SEE TRAFFIC HANDLING AND DETOUR PLANS FOR ADDITIONAL CONSTRUCTION AREA SIGNS, PORTABLE FLASHING BEACONS, AND CHANGEABLE MESSAGE SIGNS.
5. WHEN CONSTRUCTION OPERATIONS ARE NOT ACTIVELY IN PROGRESS, PORTABLE CHANGEABLE MESSAGE SIGNS SHALL NOT DISPLAY A MESSAGE UNLESS DIRECTED BY THE ENGINEER.
6. MESSAGE ON THE CHANGEABLE MESSAGE SIGN SHALL BE COORDINATED THROUGH THE CALTRANS DISPATCH CENTER.
7. FOR ADDITIONAL CHANGEABLE MESSAGE SIGN AND PORTABLE CHANGEABLE MESSAGE SIGN PLACEMENTS AND MESSAGING SEE TRAFFIC HANDLING AND DETOUR PLANS.

LEGEND:

(X) - PLACEMENT TYPE

- CONSTRUCTION AREA SIGNS (ONE POST)

- PORTABLE CHANGEABLE MESSAGE SIGN

- PORTABLE FLASHING BEACON

- Exist CHANGEABLE MESSAGE SIGN (CMS)

ABBREVIATIONS:

PCMS - PORTABLE CHANGEABLE MESSAGE SIGN
CMS - CHANGEABLE MESSAGE SIGN

(A) ROAD WORK AHEAD — W20-1, 48" x 48", ON 6" x 6" POST

(B) END ROAD WORK — G20-2, 36" x 18", 4" x 4" POSTS

(C) TRAFFIC FINES DOUBLED IN CONSTRUCTION ZONES — C40, 108" x 42", ON 4" x 6" POSTS

STATIONARY MOUNTED CONSTRUCTION AREA SIGNS

PLACEMENT TYPE	NUMBER OF POSTS AND SIZE	NUMBER OF SIGNS
(A)	1 - 4" x 6"	2
(B)	1 - 4" x 4"	2
(C)	2 - 4" x 6"	2

PORTABLE FLASHING BEACON *

EA
2

* SEE NOTE 4. THIS QUANTITY INCLUDED IN TOTAL ON THQ-6.

EXISTING CHANGEABLE MESSAGE SIGN

MESSAGING FOR REVERSIBLE TRAFFIC CONTROL	
FIRST FRAME	SECOND FRAME
PREPARE TO STOP	EXPECT 20 MIN DELAYS

PORTABLE CHANGEABLE MESSAGE SIGN 1

MESSAGING FOR REVERSIBLE TRAFFIC CONTROL		
FIRST PHASE	SECOND PHASE	THIRD PHASE
ROAD WORK 1 MILE AHEAD	PREPARE TO STOP	EXPECT 20 MIN DELAYS
MESSAGING FOR STAGE 1 NIGHTLY CLOSURES		
FIRST PHASE	SECOND PHASE	THIRD PHASE
US 395 CLOSED 2500 FT	US 395 CLOSED 7PM - 7AM	DETOUR USE SB 395 TO RTE 182

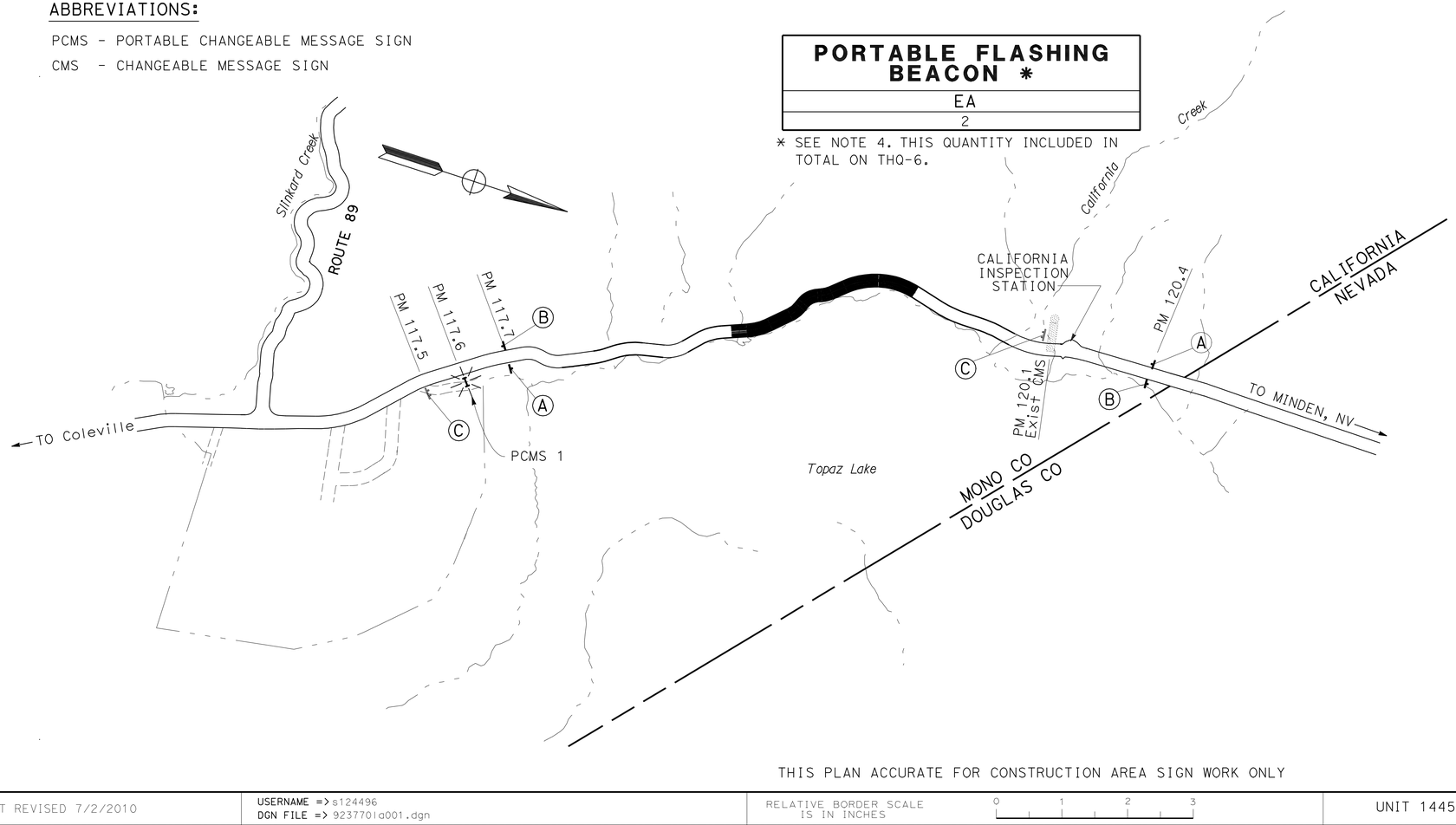

THIS PLAN ACCURATE FOR CONSTRUCTION AREA SIGN WORK ONLY

CONSTRUCTION AREA SIGNS
NO SCALE
CS-1

STATE OF CALIFORNIA - DEPARTMENT OF TRANSPORTATION
Caltrans DESIGN

FUNCTIONAL SUPERVISOR: RORY QUINCE
CALCULATED-DESIGNED BY: ADAM ZUMSTEIN
CHECKED BY: STEPHEN WINZENREAD
REVISED BY
DATE REVISED

LAST REVISION 06-08-11
DATE PLOTTED => 15-AUG-2011
TIME PLOTTED => 08:20

Dist	COUNTY	ROUTE	POST MILES TOTAL PROJECT	SHEET No.	TOTAL SHEETS
09	Mno	395	118.7/119.6	46	139

Adam Zumstein 6-8-11
REGISTERED CIVIL ENGINEER DATE

8-8-11
PLANS APPROVAL DATE

REGISTERED PROFESSIONAL ENGINEER
ADAM ZUMSTEIN
No. 76975
Exp. 12-31-12
CIVIL
STATE OF CALIFORNIA

THE STATE OF CALIFORNIA OR ITS OFFICERS OR AGENTS SHALL NOT BE RESPONSIBLE FOR THE ACCURACY OR COMPLETENESS OF SCANNED COPIES OF THIS PLAN SHEET.

LEGEND:

- CONSTRUCT THIS STAGE TO FINISH GRADE
- CONSTRUCT THIS STAGE TO 0.90' BELOW FINISH GRADE
- CONSTRUCT TEMPORARY ROADWAY TO 0.55' BELOW FINISH GRADE
- CONSTRUCT THIS STAGE TO 0.55' BELOW FINISH GRADE

STAGE 1

1. INSTALL TEMPORARY REINFORCED SILT FENCE AND OTHER WATER POLLUTION CONTROL MEASURES.
2. INSTALL STAGE 1 TRAFFIC HANDLING AND DETOUR PLAN.
3. INSTALL DRAINAGE SYSTEMS AND CONSTRUCT ROADWAY TO 0.90' BELOW FINISHED GRADE FROM Sta 59+00.00 TO Sta 76+19.19 AND FROM Sta 79+13.99 TO Sta 102+19.94.
4. REMOVE STAGE 1 TRAFFIC HANDLING AND DETOUR PLAN.

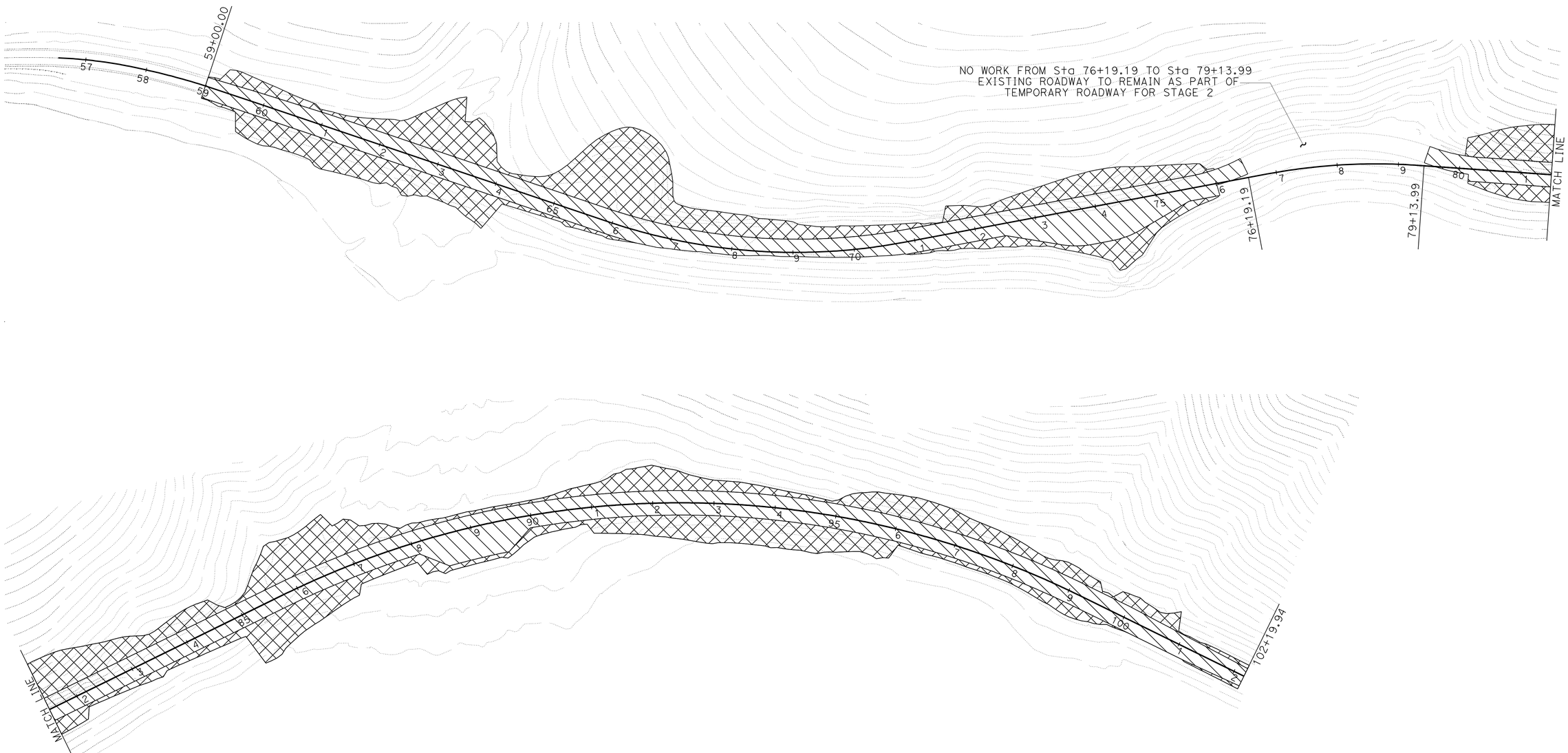

STAGE 1
STAGE CONSTRUCTION
NO SCALE

SC-1

REVISED BY	DATE REVISED
ADAM ZUMSTEIN	STEPHEN WINZENREAD
CALCULATED-DESIGNED BY	CHECKED BY
FUNCTIONAL SUPERVISOR	STEPHEN WINZENREAD

STATE OF CALIFORNIA - DEPARTMENT OF TRANSPORTATION
Caltrans
DESIGN

LAST REVISION 06-08-11
DATE PLOTTED => 15-AUG-2011
TIME PLOTTED => 08:20

Dist	COUNTY	ROUTE	POST MILES TOTAL PROJECT	SHEET No.	TOTAL SHEETS
09	Mno	395	118.7/119.6	47	139

Adam Zumstein 6-8-11
REGISTERED CIVIL ENGINEER DATE

8-8-11
PLANS APPROVAL DATE

REGISTERED PROFESSIONAL ENGINEER
ADAM ZUMSTEIN
No. 76975
Exp. 12-31-12
CIVIL
STATE OF CALIFORNIA

THE STATE OF CALIFORNIA OR ITS OFFICERS OR AGENTS SHALL NOT BE RESPONSIBLE FOR THE ACCURACY OR COMPLETENESS OF SCANNED COPIES OF THIS PLAN SHEET.

STAGE 2

1. CONSTRUCT TEMPORARY TRAVERSE PAVEMENT TRANSITION FROM 59+00 TO 60+10 AND 101+09.94 TO 102+19.94, AND CONSTRUCT TEMPORARY ROADWAY AND BASE TO FINAL BASE ELEVATION FROM Sta 60+10 TO Sta 60+86.19, "STAGE 2" Sta 1060+86.19 TO "STAGE 2" Sta 1076+46.47, Sta 1079+49.81 TO Sta 1084+51.99, AND Sta 84+42.65 TO Sta 101+09.94.
2. INSTALL "STAGE 2" TRAFFIC HANDLING AND DETOUR PLAN.
3. FINISH DRAINAGE SYSTEMS, INSTALL ANCHORED WIRE MESH SYSTEM AND EROSION CONTROL AND CONSTRUCT RETAINING WALLS.

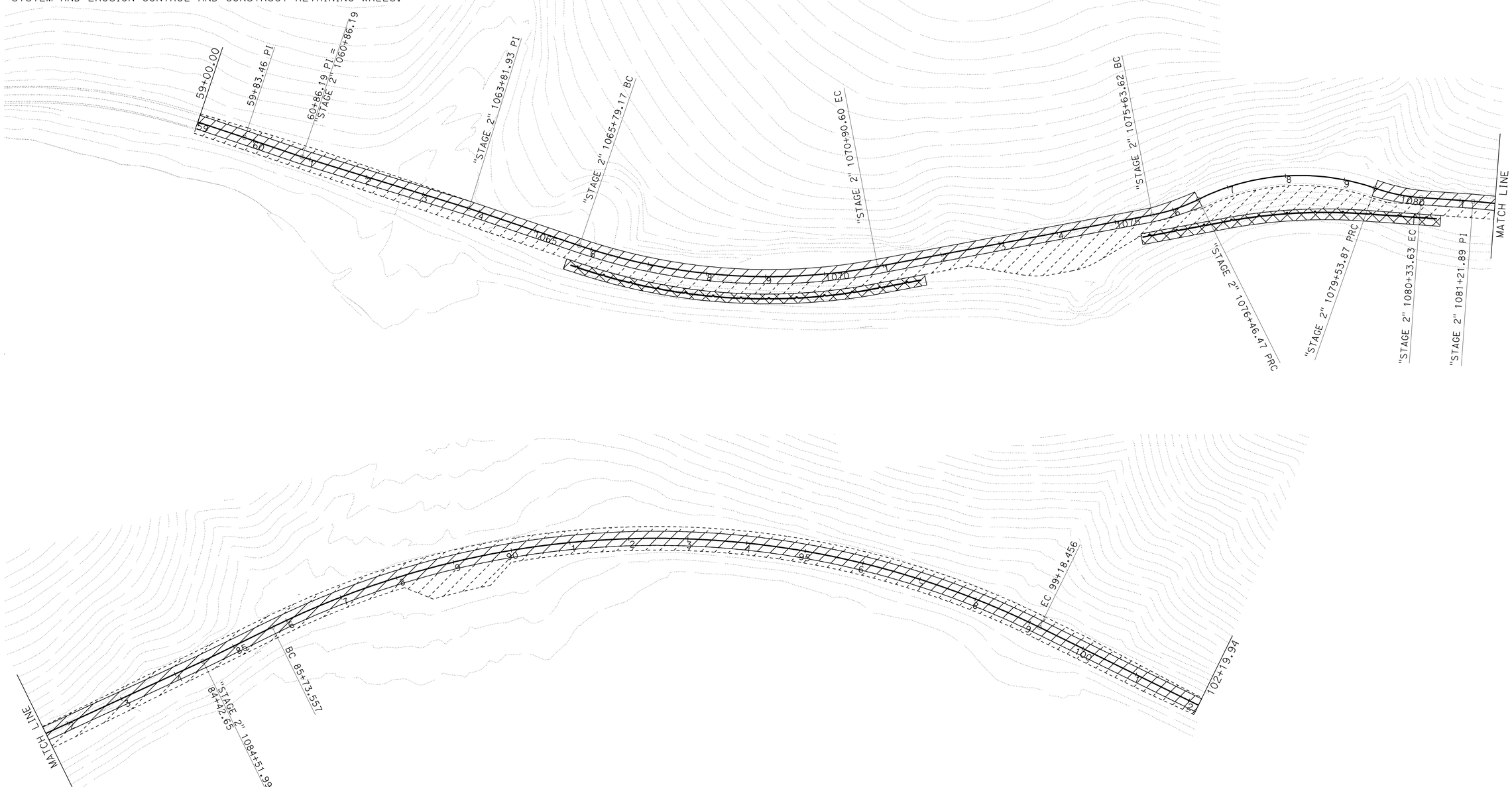

STAGE 2
STAGE CONSTRUCTION
NO SCALE **SC-2**

STATE OF CALIFORNIA - DEPARTMENT OF TRANSPORTATION
Caltrans® **DESIGN**

FUNCTIONAL SUPERVISOR: STEPHEN WINZENREAD
CALCULATED-DESIGNED BY: ADAM ZUMSTEIN
CHECKED BY: STEPHEN WINZENREAD
REVISED BY
DATE REVISED

LAST REVISION 06-08-11
DATE PLOTTED => 15-AUG-2011
TIME PLOTTED => 08:20

Dist	COUNTY	ROUTE	POST MILES TOTAL PROJECT	SHEET No.	TOTAL SHEETS
09	Mno	395	118.7/119.6	48	139

Adam Zumstein 6-8-11
REGISTERED CIVIL ENGINEER DATE

8-8-11
PLANS APPROVAL DATE

REGISTERED PROFESSIONAL ENGINEER
ADAM ZUMSTEIN
No. 76975
Exp. 12-31-12
CIVIL
STATE OF CALIFORNIA

THE STATE OF CALIFORNIA OR ITS OFFICERS OR AGENTS SHALL NOT BE RESPONSIBLE FOR THE ACCURACY OR COMPLETENESS OF SCANNED COPIES OF THIS PLAN SHEET.

STAGE 3

1. REMOVE TEMPORARY ROADWAY TRANSITIONS AND REMAINING PORTION OF EXISTING PAVEMENT FROM STAGE 2 STA 1074+25.72 TO STAGE 2 STA 1080+78.32.
2. REMOVE TEMPORARY TRANSVERSE PAVEMENT TRANSITIONS FROM STA 59+00 TO 60+10 AND FROM STA 101+10 TO 102+19.94.
3. COLD PLANE EXISTING AC PAVEMENT FROM STA 56+55.00 TO 59+00.00.
4. REMOVE STAGE 2 TRAFFIC HANDLING AND DETOUR, CONSTRUCT ROADWAY TO FINISH GRADE AND INSTALL GUARD RAILING.
5. REMOVE TEMPORARY TRAFFIC STRIPE FROM STA 102+19.94 TO 107+60.00, INSTALL FINAL SIGNS AND STRIPING, AND FINISH EROSION CONTROL.

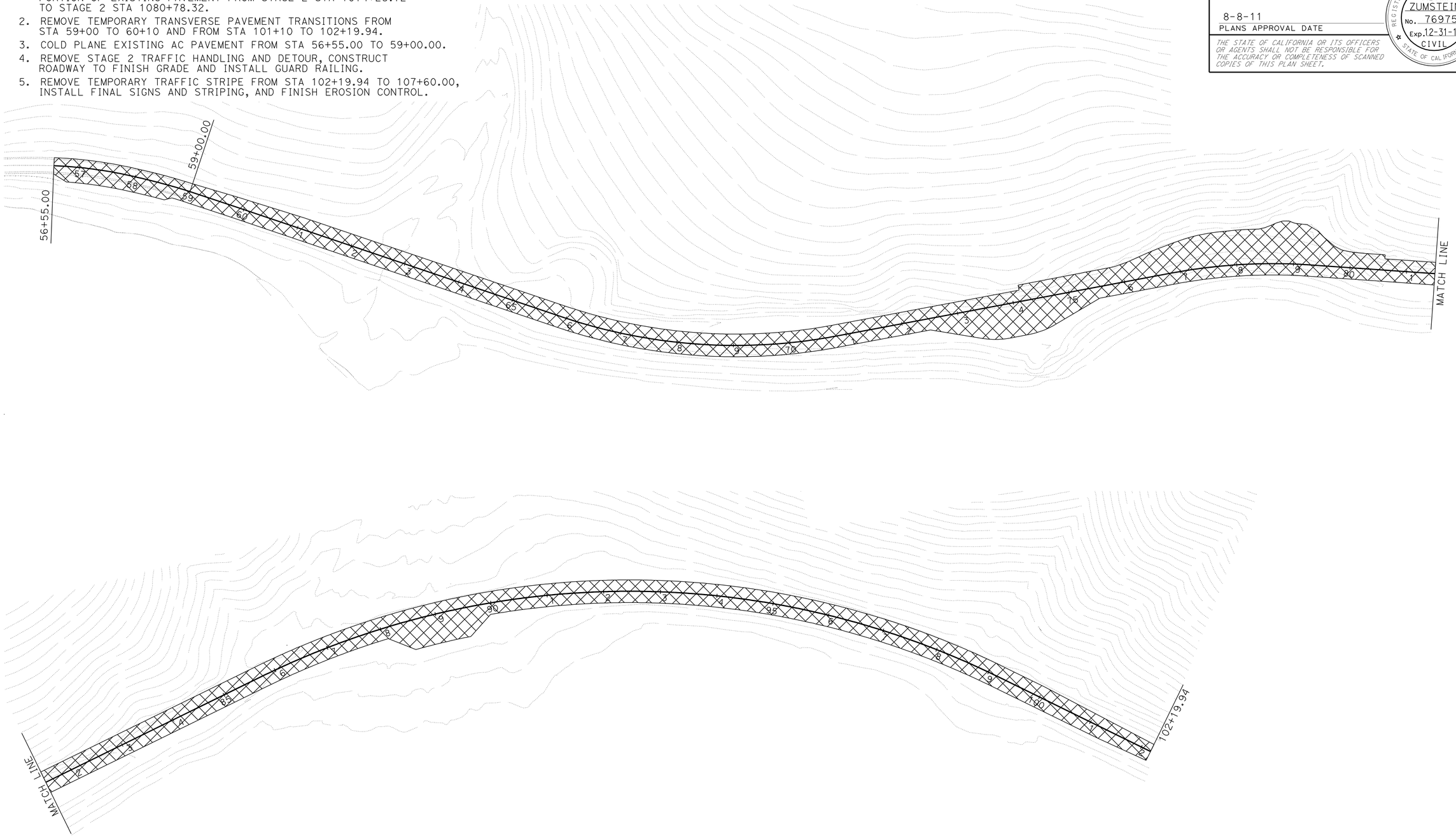

STAGE 3
STAGE CONSTRUCTION
NO SCALE **SC-3**

STATE OF CALIFORNIA - DEPARTMENT OF TRANSPORTATION
Caltrans® **DESIGN**

FUNCTIONAL SUPERVISOR: STEPHEN WINZENREAD
CALCULATED-DESIGNED BY: ADAM ZUMSTEIN
CHECKED BY: STEPHEN WINZENREAD
REVISED BY
DATE REVISED

LAST REVISION 06-08-11
DATE PLOTTED => 15-AUG-2011
TIME PLOTTED => 08:20

Dist	COUNTY	ROUTE	POST MILES TOTAL PROJECT	SHEET No.	TOTAL SHEETS
09	Mno	395	118.7/119.6	49	139

REGISTERED CIVIL ENGINEER 5-25-11 DATE

8-8-11
PLANS APPROVAL DATE

REGISTERED PROFESSIONAL ENGINEER STEPHEN WINZENREAD No. 64274 Exp. 6-30-13 CIVIL STATE OF CALIFORNIA

THE STATE OF CALIFORNIA OR ITS OFFICERS OR AGENTS SHALL NOT BE RESPONSIBLE FOR THE ACCURACY OR COMPLETENESS OF SCANNED COPIES OF THIS PLAN SHEET.

NOTES:

1. CONE SPACING:
   50 FEET Max
   25 FEET Max IN TAPERS
2. TEMPORARY ROADWAY BASE AND PAVING TO REMAIN IN PLACE AND BECOME PART OF FINAL STRUCTUAL SECTION. SEE TYPICAL CROSS SECTION ON SHEET X-1.
3. EXISTING ROADWAY FROM Sta 76+19.19 TO Sta 79+13.99 TO REMAIN IN PLACE AS PART OF TEMPORARY ROADWAY FOR STAGE 2.
4. FOR STAGE 3 RELOCATE TEMPORARY RAILING (TYPE K) RIGHT 21 FEET FROM CENTERLINE OF ROUTE 395 TO FACE OF PROPOSED GUARD RAILING (2' Min HINGE POINT TO BACK FACE OF RAILING). REMOVE TEMPORARY RAILING (TYPE K) AS GUARD RAILING IS INSTALLED.

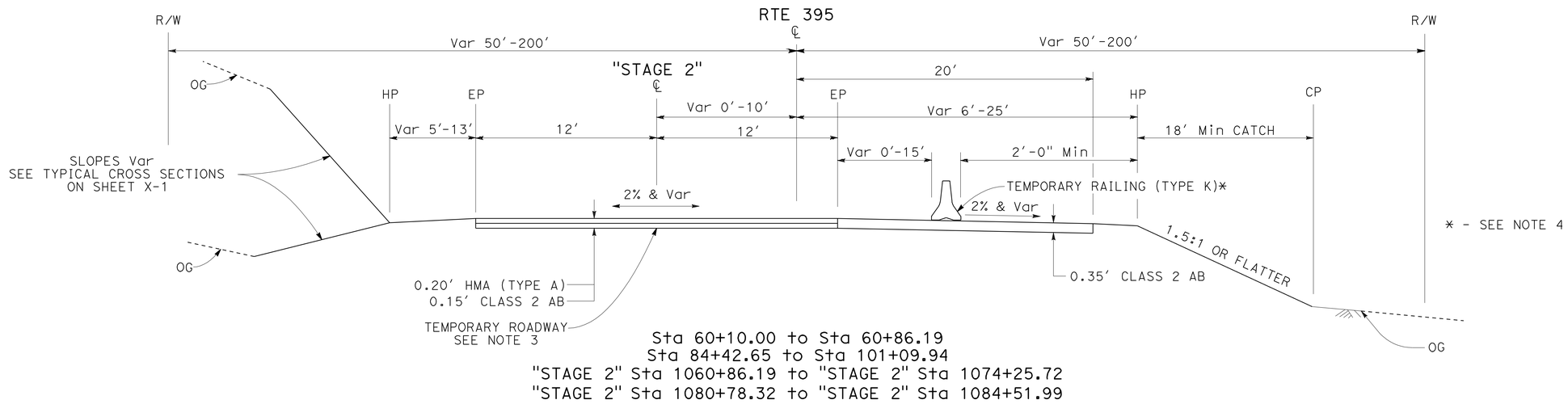

Sta 60+10.00 to Sta 60+86.19
Sta 84+42.65 to Sta 101+09.94
"STAGE 2" Sta 1060+86.19 to "STAGE 2" Sta 1074+25.72
"STAGE 2" Sta 1080+78.32 to "STAGE 2" Sta 1084+51.99

STAGE 2 TEMPORARY ROADWAY TYPICAL CROSS SECTIONS

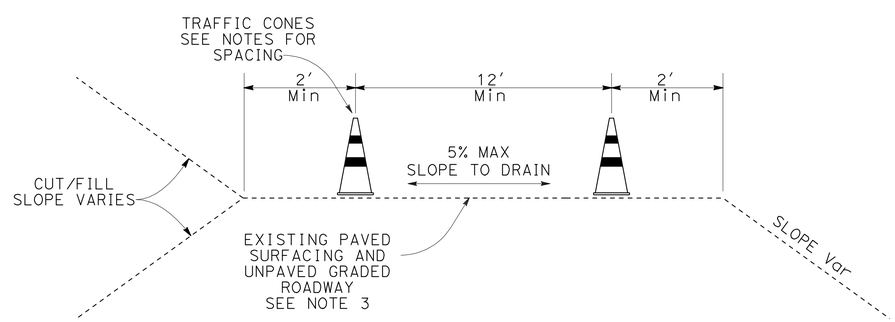

Sta 59+00.00 to Sta 76+19.19
Sta 79+13.99 to Sta 102+19.94

STAGE 1 TYPICAL CROSS SECTION

STAGE CONSTRUCTION DETAILS

NO SCALE

SCD-1

STATE OF CALIFORNIA - DEPARTMENT OF TRANSPORTATION
Caltrans
DESIGN

FUNCTIONAL SUPERVISOR: RORY QUINCE

CALCULATED-DESIGNED BY: STEPHEN WINZENREAD
CHECKED BY: ADAM ZUMSTEIN

REVISED BY
DATE REVISED

LAST REVISION DATE PLOTTED => 15-AUG-2011
06-07-11 TIME PLOTTED => 08:20

Dist	COUNTY	ROUTE	POST MILES TOTAL PROJECT	SHEET No.	TOTAL SHEETS
09	Mno	395	118.7/119.6	50	139

REGISTERED CIVIL ENGINEER 5-25-11 DATE

8-8-11
PLANS APPROVAL DATE

REGISTERED PROFESSIONAL ENGINEER STEPHEN WINZENREAD No. 64274 Exp 6-30-13 CIVIL STATE OF CALIFORNIA

THE STATE OF CALIFORNIA OR ITS OFFICERS OR AGENTS SHALL NOT BE RESPONSIBLE FOR THE ACCURACY OR COMPLETENESS OF SCANNED COPIES OF THIS PLAN SHEET.

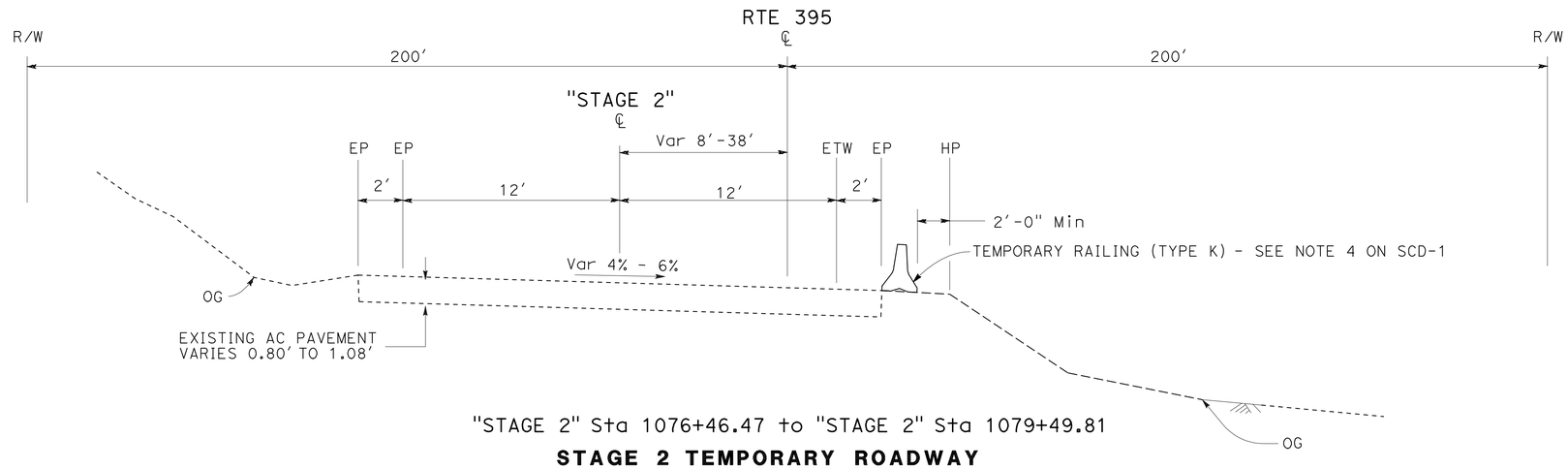

"STAGE 2" Sta 1076+46.47 to "STAGE 2" Sta 1079+49.81

STAGE 2 TEMPORARY ROADWAY
TYPICAL CROSS SECTIONS

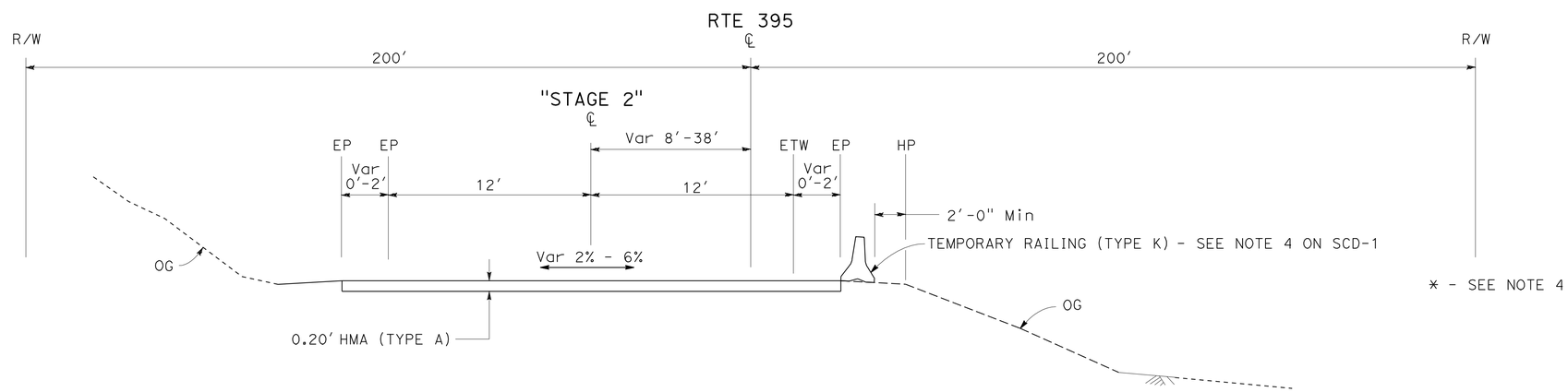

"STAGE 2" Sta 1074+25.72 to "STAGE 2" Sta 1076+46.47
"STAGE 2" Sta 1079+49.81 to "STAGE 2" Sta 1080+78.32

STAGE 2 TEMPORARY ROADWAY TRANSITIONS
TYPICAL CROSS SECTIONS

STAGE CONSTRUCTION DETAILS
NO SCALE

SCD-2

STATE OF CALIFORNIA - DEPARTMENT OF TRANSPORTATION
Caltrans® DESIGN

FUNCTIONAL SUPERVISOR: RORY QUINCE
CALCULATED-DESIGNED BY: STEPHEN WINZENREAD
CHECKED BY: ADAM ZUMSTEIN
REVISED BY / DATE REVISED

LAST REVISION 06-07-11
DATE PLOTTED => 15-AUG-2011
TIME PLOTTED => 08:20

Dist	COUNTY	ROUTE	POST MILES TOTAL PROJECT	SHEET No.	TOTAL SHEETS
09	Mno	395	118.7/119.6	51	139

REGISTERED CIVIL ENGINEER 5-25-11 DATE

8-8-11
PLANS APPROVAL DATE

REGISTERED PROFESSIONAL ENGINEER STEPHEN WINZENREAD No. 64274 Exp 6-30-13 CIVIL STATE OF CALIFORNIA

THE STATE OF CALIFORNIA OR ITS OFFICERS OR AGENTS SHALL NOT BE RESPONSIBLE FOR THE ACCURACY OR COMPLETENESS OF SCANNED COPIES OF THIS PLAN SHEET.

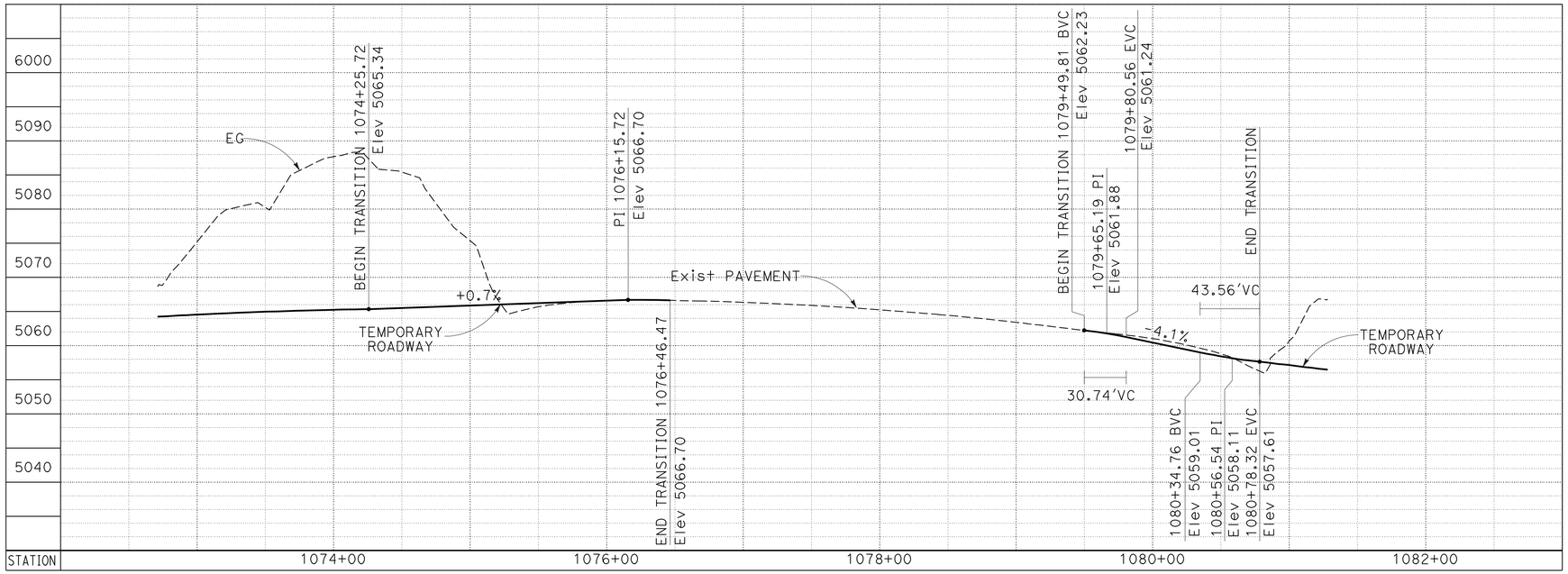

STAGE 2 TEMPORARY ROADWAY TRANSITION PROFILE

H 1":50'
V 1":10'

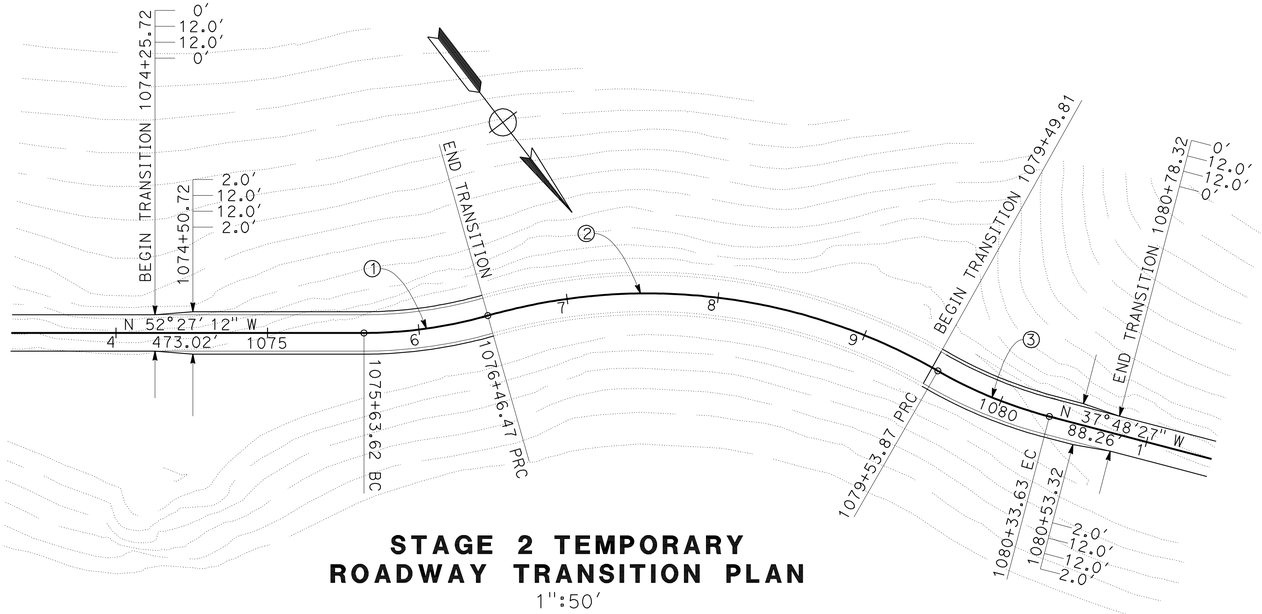

STAGE 2 TEMPORARY ROADWAY TRANSITION PLAN

1":50'

CURVE DATA

No.	R	Δ	T	L
1	300.00'	15°49'25"	41.69'	82.85'
2	384.96'	45°45'07"	162.42'	307.40'
3	300.00'	15°14'02"	40.12'	79.76'

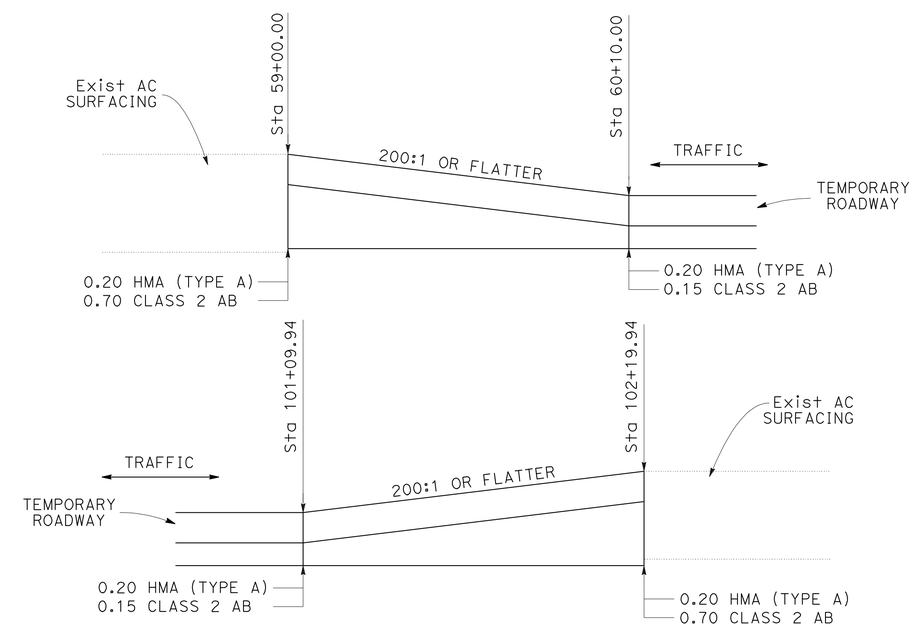

STAGE 2 TEMPORARY TRANSVERSE PAVEMENT TRANSITIONS

STAGE CONSTRUCTION DETAILS
NO SCALE

SCD-3

STATE OF CALIFORNIA - DEPARTMENT OF TRANSPORTATION
Caltrans®
DESIGN

FUNCTIONAL SUPERVISOR: RORY QUINCE
CALCULATED-DESIGNED BY: STEPHEN WINZENREAD
CHECKED BY: ADAM ZUMSTEIN
REVISED BY
DATE REVISED

LAST REVISION 06-07-11
DATE PLOTTED => 15-AUG-2011
TIME PLOTTED => 08:21

Dist	COUNTY	ROUTE	POST MILES TOTAL PROJECT	SHEET No.	TOTAL SHEETS
09	Mno	395	118.7/119.6	52	139

REGISTERED CIVIL ENGINEER 5-25-11 DATE

8-8-11
PLANS APPROVAL DATE

REGISTERED PROFESSIONAL ENGINEER STEPHEN WINZENREAD No. 64274 Exp. 6-30-13 CIVIL STATE OF CALIFORNIA

THE STATE OF CALIFORNIA OR ITS OFFICERS OR AGENTS SHALL NOT BE RESPONSIBLE FOR THE ACCURACY OR COMPLETENESS OF SCANNED COPIES OF THIS PLAN SHEET.

NOTES:

1. SEE CONSTRUCTION DETAILS C-4 THROUGH C-18 FOR ROADSIDE SIGN DETAILS FOR PLACEMENT OF SIGNS IN NEVADA.
2. SEE CONSTRUCTION AREA SIGN SHEET FOR ADDITIONAL CONSTRUCTION AREA SIGNS, PORTABLE FLASHING BEACONS, AND CHANGEABLE MESSAGE SIGNS.
3. UNLESS OTHERWISE NOTED, STAGE 1 TRAFFIC HANDLING AND DETOUR SIGNS SHALL BE COVERED OR TURNED AWAY FROM TRAFFIC WHEN FULL HIGHWAY CLOSURE IS NOT IN EFFECT (7 AM TO 7 PM).
4. PORTABLE CHANGEABLE MESSAGE SIGN LOCATIONS TO BE CONFIRMED BY THE ENGINEER BEFORE THE ACTUAL CLOSURE.
5. ALTERNATE MESSAGES FOR CHANGEABLE MESSAGE SIGNS MUST BE APPROVED BY THE ENGINEER.
6. MESSAGE MAY BE ALTERED BY THE ENGINEER.
7. PCMS 5 SHALL CONSIST OF ONLY 2 PHASES OF MESSAGES. CHANGES TO MESSAGING ON PCMS 4 MUST BE APPROVED BY THE ENGINEER AND THE NEVADA DEPARTMENT OF TRANSPORTATION ENCROACHMENT PERMITS OFFICE.
8. MESSAGES ON THE DYNAMIC MESSAGE SIGN SHALL BE COORDINATED THROUGH THE NEVADA DEPARTMENT OF TRANSPORTATION OPERATIONS OFFICE.
9. MESSAGES ON THE EXISTING CHANGEABLE MESSAGE SIGN AT PM 120.1 SHALL BE COORDINATED THROUGH THE CALTRANS DISPATCH CENTER.
10. FOR ADDITIONAL CHANGEABLE MESSAGE SIGN AND PORTABLE CHANGEABLE MESSAGE SIGN PLACEMENT AND MESSAGING SEE CONSTRUCTION AREA SIGNS SHEET.

LEGEND:

- CHANNELIZER
  SPACING:
  50 FEET Max ON TANGENT
  25 FEET Max IN TAPERS AND LANE SHIFTS
- TEMPORARY RAILING (TYPE K)
- CONSTRUCTION AREA SIGNS
- PORTABLE CHANGEABLE MESSAGE SIGN (PCMS)
- TYPE III BARRICADE
- EXISTING CHANGEABLE MESSAGE SIGN (CMS) OR DYNAMIC MESSAGE SIGN (DMS)
- PORTABLE FLASHING BEACON
- XX - SIGN NUMBER
- XX Temp - TEMPORARY TRAFFIC STRIPE DETAIL

ABBREVIATIONS:

PCMS - PORTABLE CHANGEABLE MESSAGE SIGN
CMS - CHANGEABLE MESSAGE SIGN
DMS - DYNAMIC MESSAGE SIGN
NV - NEVADA

THIS PLAN ACCURATE FOR TRAFFIC HANDLING AND DETOUR WORK ONLY

TRAFFIC HANDLING AND DETOUR PLAN
NO SCALE

TH-1

STATE OF CALIFORNIA - DEPARTMENT OF TRANSPORTATION
Caltrans DESIGN

FUNCTIONAL SUPERVISOR: RORY QUINCE
CALCULATED-DESIGNED BY: STEPHEN WINZENREAD
CHECKED BY: ADAM ZUMSTEIN
REVISED BY
DATE REVISED

LAST REVISION 06-16-11
DATE PLOTTED => 15-AUG-2011
TIME PLOTTED => 08:21

Dist	COUNTY	ROUTE	POST MILES TOTAL PROJECT	SHEET No.	TOTAL SHEETS
09	Mno	395	118.7/119.6	53	139

REGISTERED CIVIL ENGINEER 5-25-11 DATE

8-8-11
PLANS APPROVAL DATE

REGISTERED PROFESSIONAL ENGINEER STEPHEN WINZENREAD No. 64274 Exp. 6-30-13 CIVIL STATE OF CALIFORNIA

THE STATE OF CALIFORNIA OR ITS OFFICERS OR AGENTS SHALL NOT BE RESPONSIBLE FOR THE ACCURACY OR COMPLETENESS OF SCANNED COPIES OF THIS PLAN SHEET.

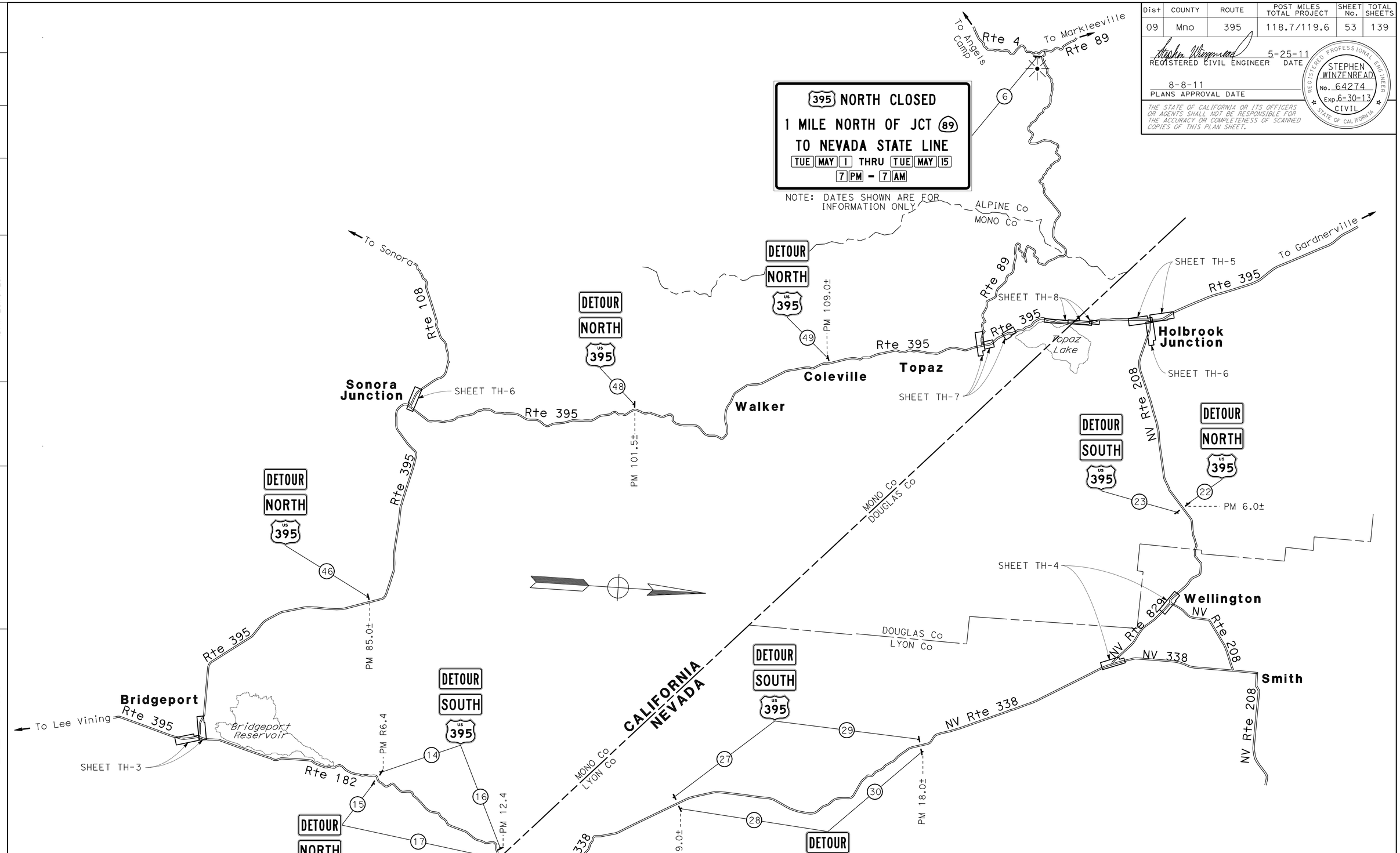

THIS PLAN ACCURATE FOR TRAFFIC HANDLING AND DETOUR WORK ONLY

STAGE 1
TRAFFIC HANDLING AND DETOUR PLAN
NO SCALE

TH-2

REVISED BY	DATE REVISED

CALCULATED-DESIGNED BY: STEPHEN WINZENREAD
CHECKED BY: ADAM ZUMSTEIN
FUNCTIONAL SUPERVISOR: RORY QUINCE

STATE OF CALIFORNIA - DEPARTMENT OF TRANSPORTATION
Caltrans
DESIGN

LAST REVISION 06-07-11
DATE PLOTTED => 15-AUG-2011
TIME PLOTTED => 08:21

Dist	COUNTY	ROUTE	POST MILES TOTAL PROJECT	SHEET No.	TOTAL SHEETS
09	Mno	395	118.7/119.6	54	139

REGISTERED CIVIL ENGINEER 5-25-11 DATE

8-8-11
PLANS APPROVAL DATE

REGISTERED PROFESSIONAL ENGINEER
STEPHEN WINZENREAD
No. 64274
Exp. 6-30-13
CIVIL
STATE OF CALIFORNIA

THE STATE OF CALIFORNIA OR ITS OFFICERS OR AGENTS SHALL NOT BE RESPONSIBLE FOR THE ACCURACY OR COMPLETENESS OF SCANNED COPIES OF THIS PLAN SHEET.

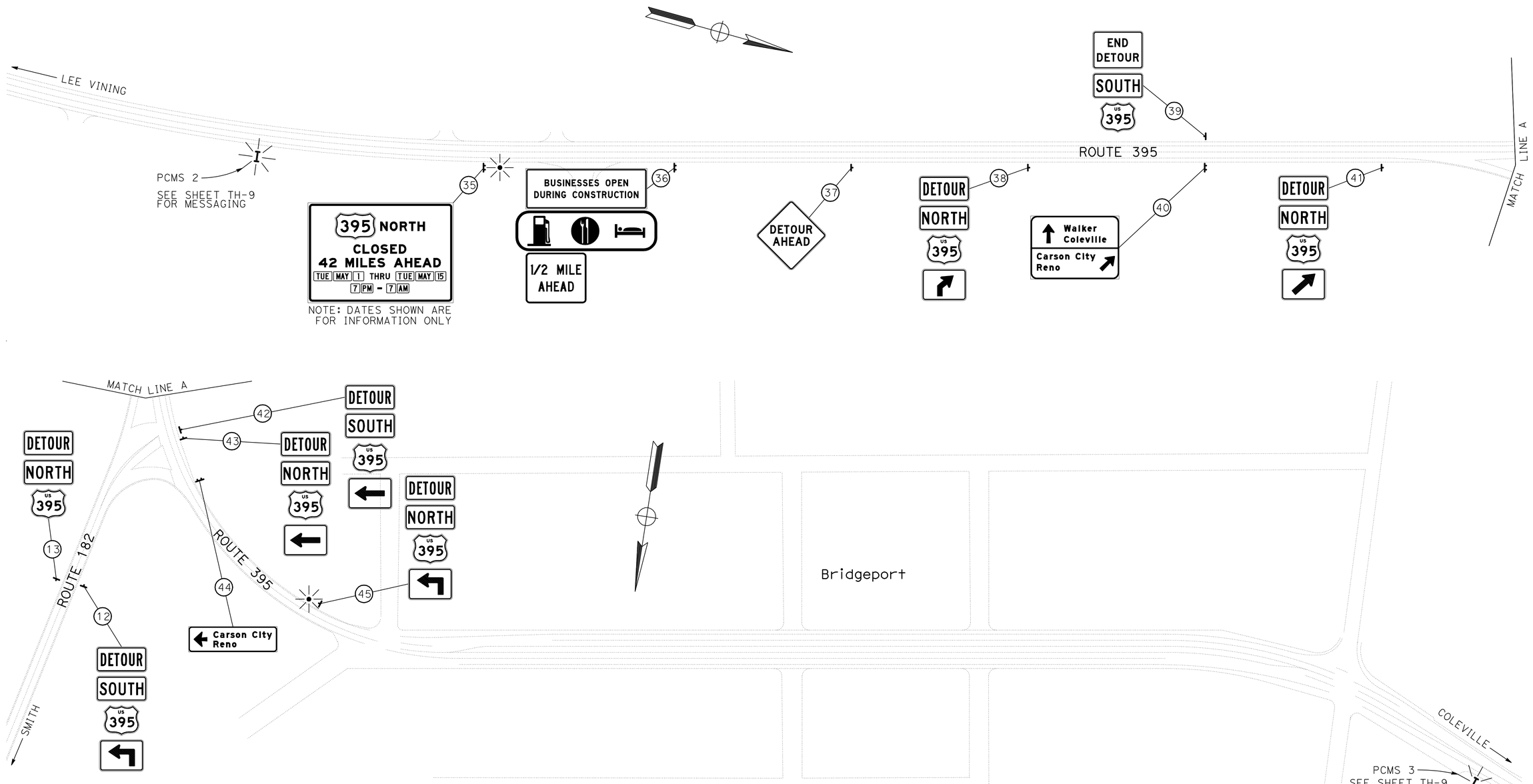

STAGE 1
TRAFFIC HANDLING AND DETOUR PLAN
SCALE 1"=100'

TH-3

THIS PLAN ACCURATE FOR TRAFFIC HANDLING AND DETOUR WORK ONLY

STATE OF CALIFORNIA - DEPARTMENT OF TRANSPORTATION
Caltrans
DESIGN

FUNCTIONAL SUPERVISOR: RORY QUINCE

CALCULATED-DESIGNED BY: STEPHEN WINZENREAD
CHECKED BY: ADAM ZUMSTEIN

REVISED BY
DATE REVISED

LAST REVISION 06-07-11
DATE PLOTTED => 15-AUG-2011
TIME PLOTTED => 08:21

Dist	COUNTY	ROUTE	POST MILES TOTAL PROJECT	SHEET No.	TOTAL SHEETS
09	Mno	395	118.7/119.6	55	139

REGISTERED CIVIL ENGINEER 5-25-11 DATE

8-8-11
PLANS APPROVAL DATE

REGISTERED PROFESSIONAL ENGINEER STEPHEN WINZENREAD No. 64274 Exp. 6-30-13 CIVIL STATE OF CALIFORNIA

THE STATE OF CALIFORNIA OR ITS OFFICERS OR AGENTS SHALL NOT BE RESPONSIBLE FOR THE ACCURACY OR COMPLETENESS OF SCANNED COPIES OF THIS PLAN SHEET.

NOTE:
SEE CONSTRUCTION DETAILS C-4 THROUGH C-18 FOR ROADSIDE SIGN DETAILS FOR PLACEMENT OF SIGNS IN NEVADA.

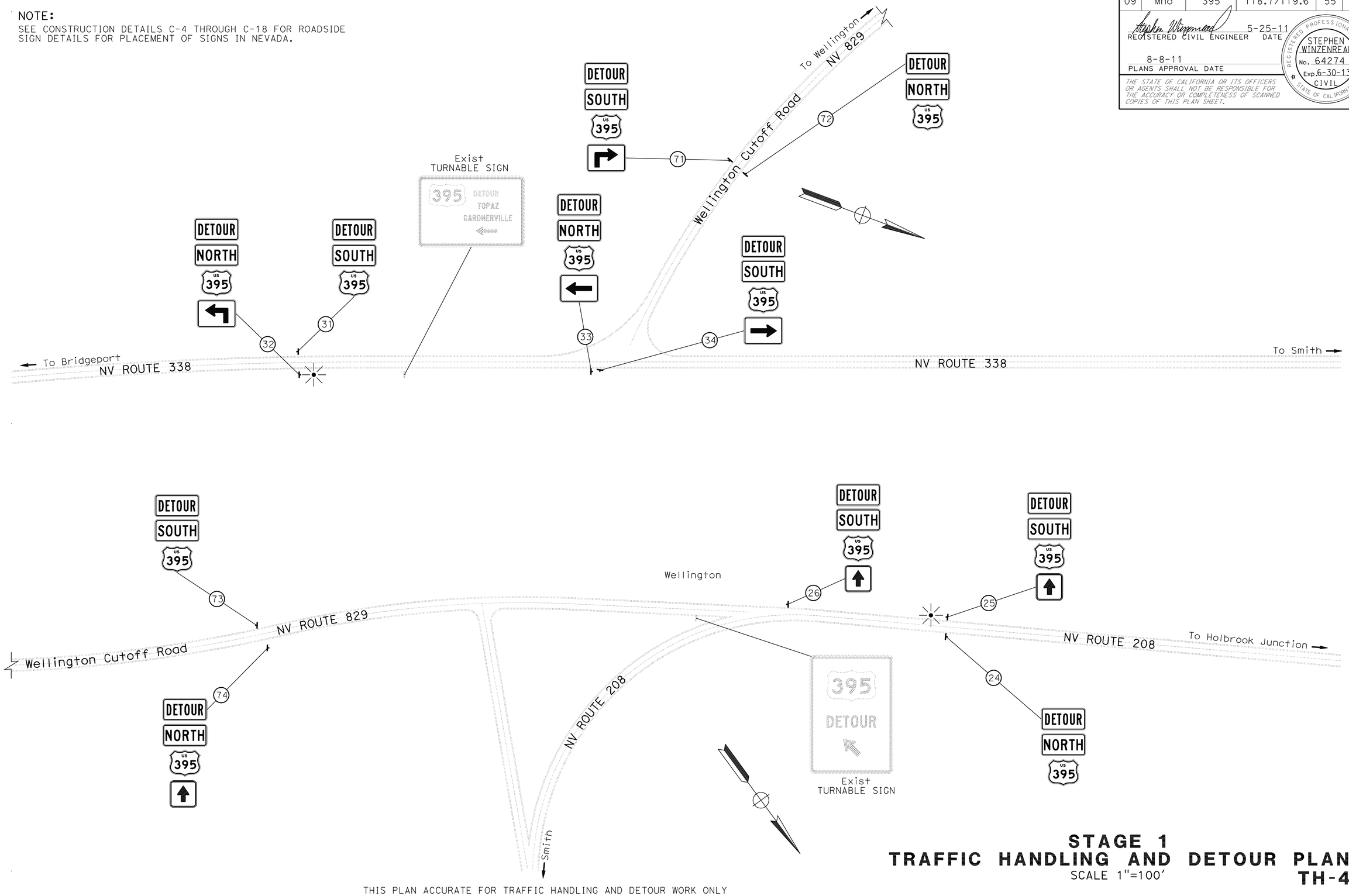

THIS PLAN ACCURATE FOR TRAFFIC HANDLING AND DETOUR WORK ONLY

STAGE 1
TRAFFIC HANDLING AND DETOUR PLAN
SCALE 1"=100'

TH-4

STATE OF CALIFORNIA - DEPARTMENT OF TRANSPORTATION
Caltrans® DESIGN

FUNCTIONAL SUPERVISOR: RORY QUINCE
CALCULATED-DESIGNED BY: STEPHEN WINZENREAD
CHECKED BY: ADAM ZUMSTEIN
REVISED BY
DATE REVISED

LAST REVISION 06-16-11
DATE PLOTTED => 15-AUG-2011
TIME PLOTTED => 08:22

Dist	COUNTY	ROUTE	POST MILES TOTAL PROJECT	SHEET No.	TOTAL SHEETS
09	Mno	395	118.7/119.6	56	139

REGISTERED CIVIL ENGINEER 5-25-11 DATE

8-8-11
PLANS APPROVAL DATE

REGISTERED PROFESSIONAL ENGINEER STEPHEN WINZENREAD No. 64274 Exp. 6-30-13 CIVIL STATE OF CALIFORNIA

THE STATE OF CALIFORNIA OR ITS OFFICERS OR AGENTS SHALL NOT BE RESPONSIBLE FOR THE ACCURACY OR COMPLETENESS OF SCANNED COPIES OF THIS PLAN SHEET.

NOTE:
SEE CONSTRUCTION DETAILS C-4 THROUGH C-18 FOR ROADSIDE SIGN DETAILS FOR PLACEMENT OF SIGNS IN NEVADA.

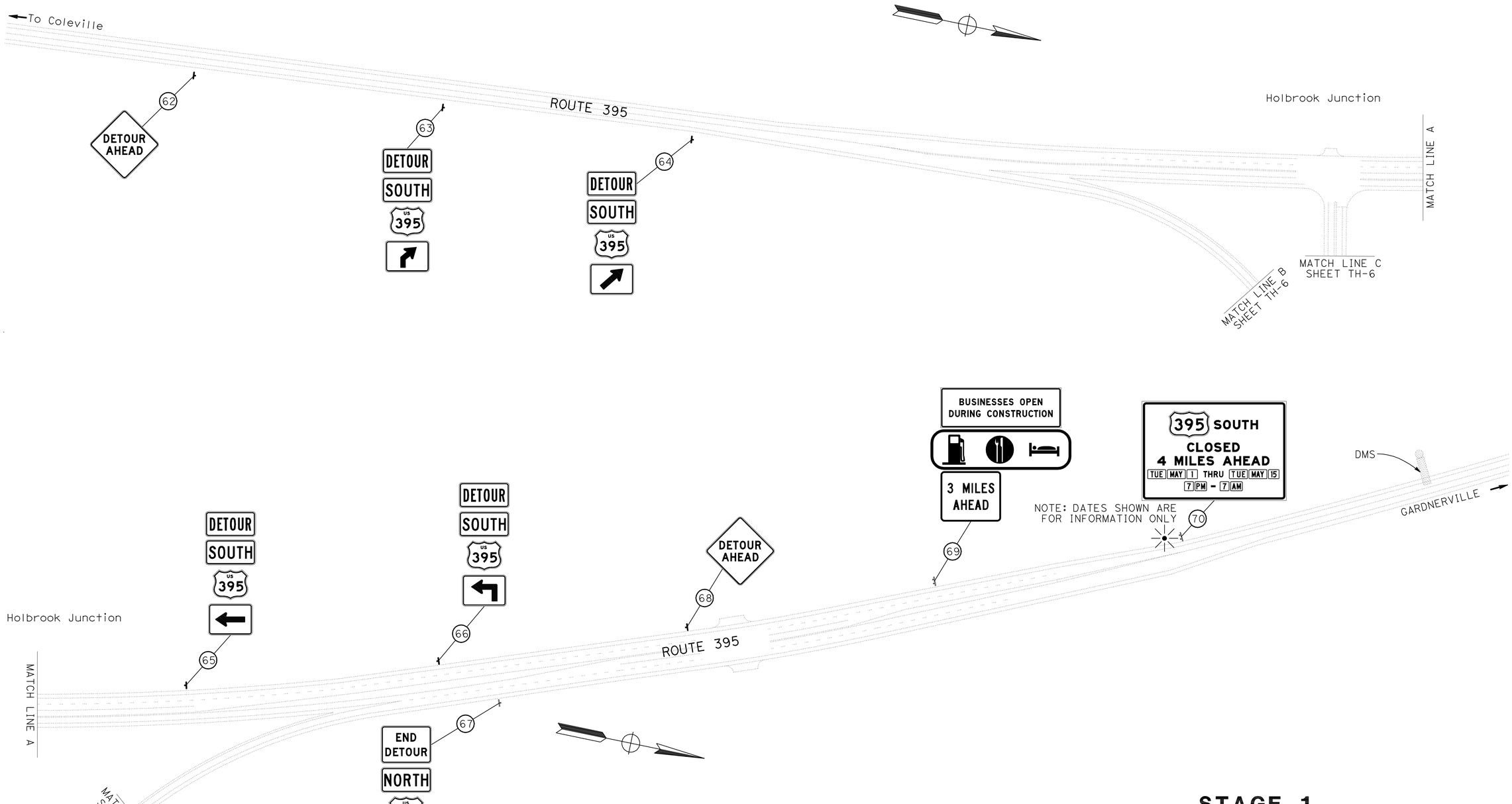

THIS PLAN ACCURATE FOR TRAFFIC HANDLING AND DETOUR WORK ONLY

STAGE 1
TRAFFIC HANDLING AND DETOUR PLAN
SCALE 1"=100'

TH-5

STATE OF CALIFORNIA - DEPARTMENT OF TRANSPORTATION
Caltrans® DESIGN

FUNCTIONAL SUPERVISOR: RORY QUINCE
CALCULATED-DESIGNED BY: ADAM ZUMSTEIN
CHECKED BY
REVISED BY
DATE REVISED

LAST REVISION 06-16-11
DATE PLOTTED => 15-AUG-2011
TIME PLOTTED => 08:22

Dist	COUNTY	ROUTE	POST MILES TOTAL PROJECT	SHEET No.	TOTAL SHEETS
09	Mno	395	118.7/119.6	57	139

REGISTERED CIVIL ENGINEER 5-25-11 DATE

8-8-11
PLANS APPROVAL DATE

REGISTERED PROFESSIONAL ENGINEER STEPHEN WINZENREAD No. 64274 Exp. 6-30-13 CIVIL STATE OF CALIFORNIA

THE STATE OF CALIFORNIA OR ITS OFFICERS OR AGENTS SHALL NOT BE RESPONSIBLE FOR THE ACCURACY OR COMPLETENESS OF SCANNED COPIES OF THIS PLAN SHEET.

NOTE:
SEE CONSTRUCTION DETAILS C-4 THROUGH C-18 FOR ROADSIDE SIGN DETAILS FOR PLACEMENT OF SIGNS IN NEVADA.

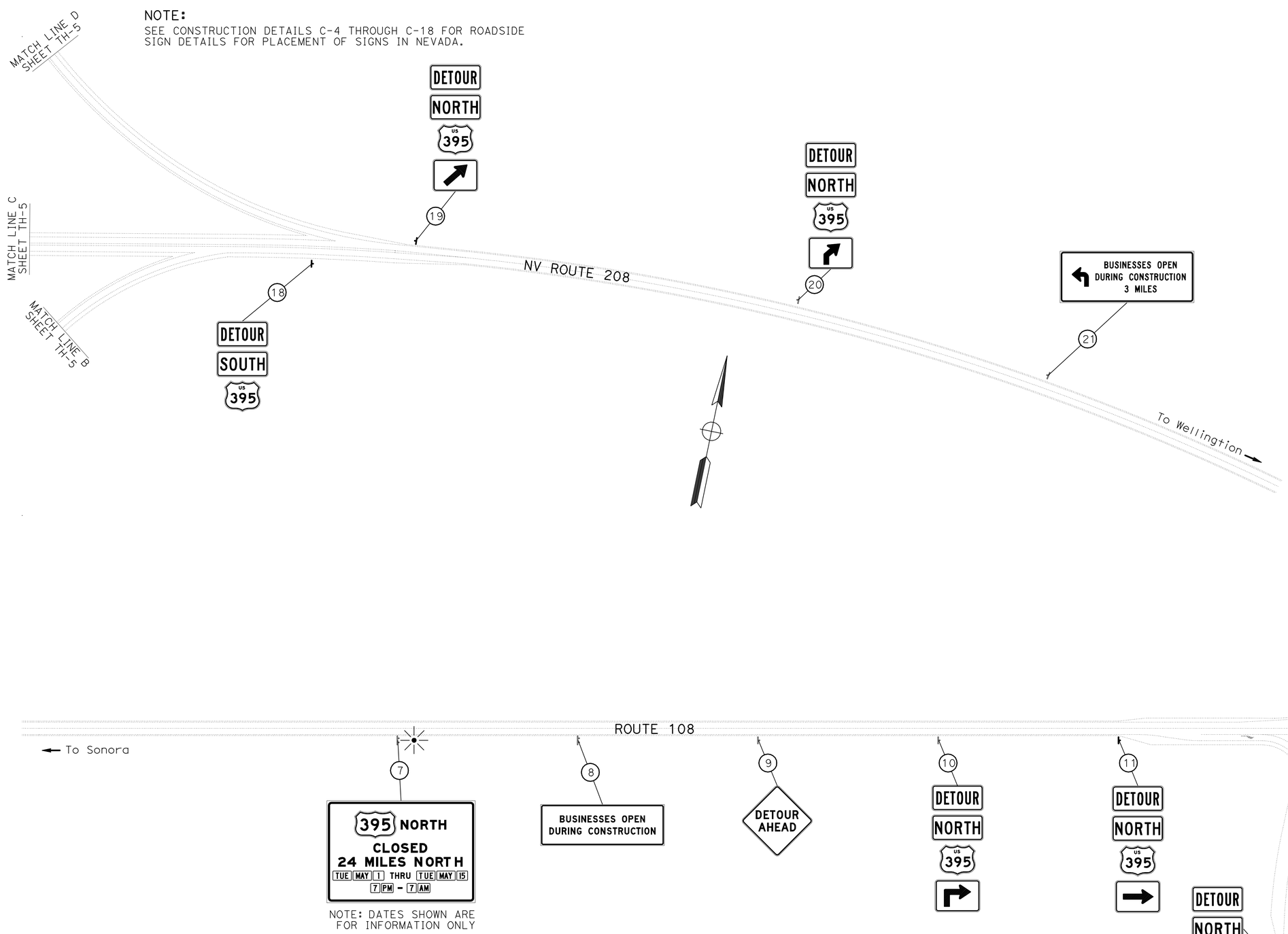

STAGE 1
TRAFFIC HANDLING AND DETOUR PLAN
SCALE 1"=100'

TH-6

THIS PLAN ACCURATE FOR TRAFFIC HANDLING AND DETOUR WORK ONLY

STATE OF CALIFORNIA - DEPARTMENT OF TRANSPORTATION
Caltrans® DESIGN

FUNCTIONAL SUPERVISOR: RORY QUINCE
CALCULATED-DESIGNED BY: STEPHEN WINZENREAD
CHECKED BY: ADAM ZUMSTEIN
REVISED BY / DATE REVISED

LAST REVISION 06-16-11
DATE PLOTTED => 15-AUG-2011
TIME PLOTTED => 08:22

Dist	COUNTY	ROUTE	POST MILES TOTAL PROJECT	SHEET No.	TOTAL SHEETS
09	Mno	395	118.7/119.6	58	139

REGISTERED CIVIL ENGINEER 5-25-11 DATE

8-8-11
PLANS APPROVAL DATE

REGISTERED PROFESSIONAL ENGINEER STEPHEN WINZENREAD No. 64274 Exp. 6-30-13 CIVIL STATE OF CALIFORNIA

THE STATE OF CALIFORNIA OR ITS OFFICERS OR AGENTS SHALL NOT BE RESPONSIBLE FOR THE ACCURACY OR COMPLETENESS OF SCANNED COPIES OF THIS PLAN SHEET.

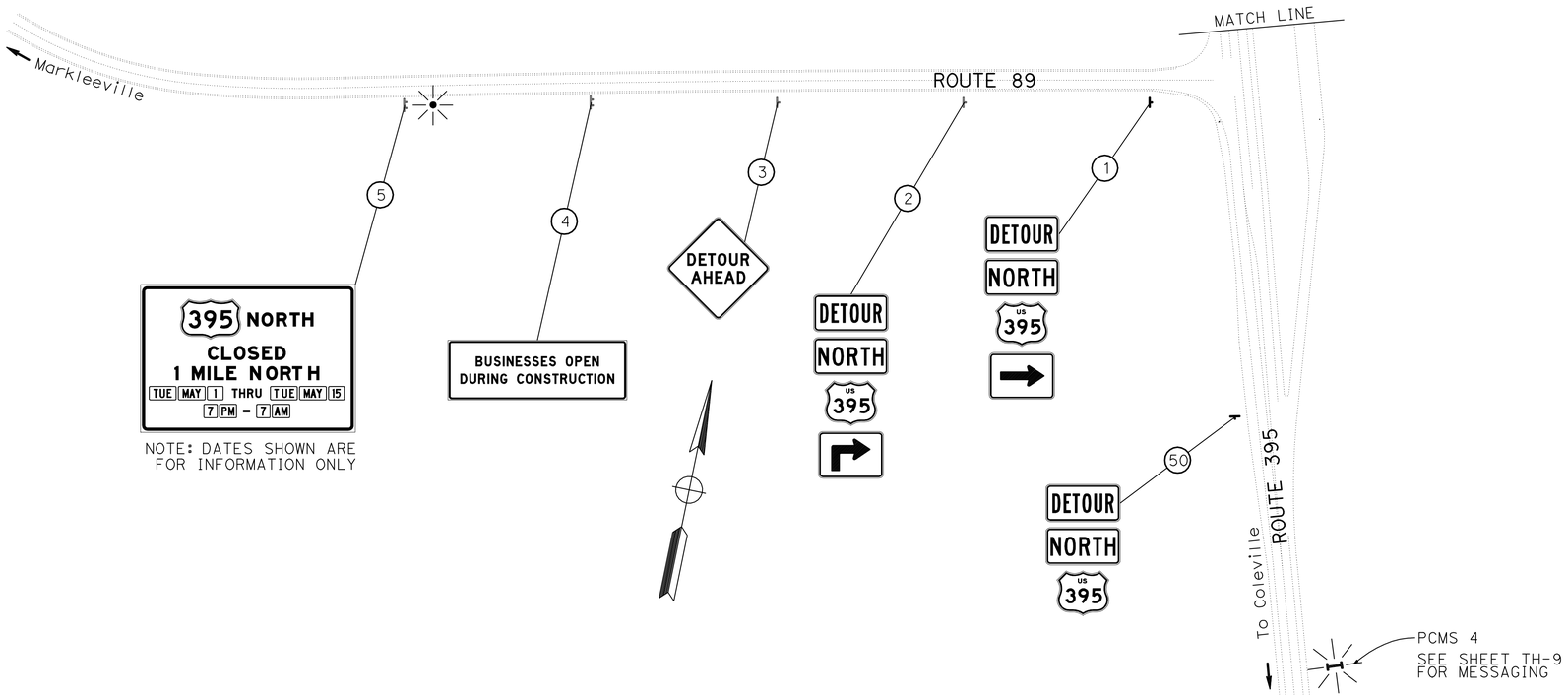

NOTE: DATES SHOWN ARE FOR INFORMATION ONLY

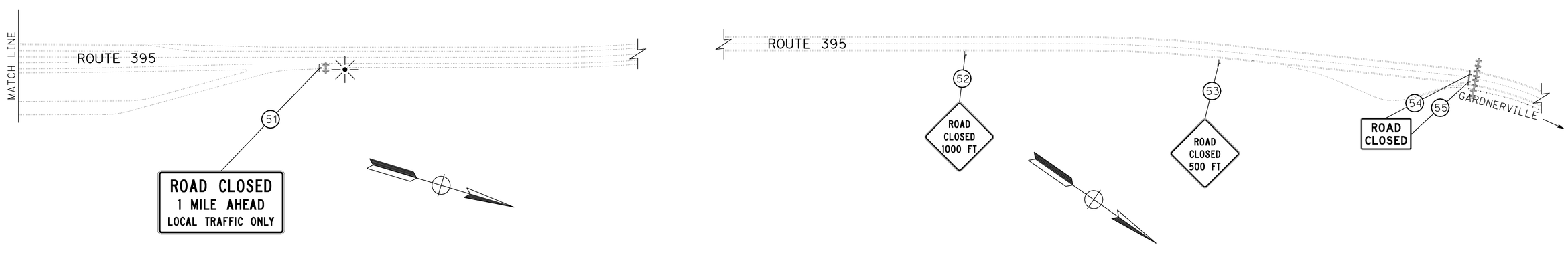

STAGE 1
TRAFFIC HANDLING AND DETOUR PLAN
SCALE 1"=100'

TH-7

THIS PLAN ACCURATE FOR TRAFFIC HANDLING AND DETOUR WORK ONLY

STATE OF CALIFORNIA - DEPARTMENT OF TRANSPORTATION
Caltrans
DESIGN

FUNCTIONAL SUPERVISOR: RORY QUINCE
CALCULATED-DESIGNED BY: STEPHEN WINZENREAD
CHECKED BY: ADAM ZUMSTEIN
REVISED BY
DATE REVISED

LAST REVISION 06-07-11
DATE PLOTTED => 15-AUG-2011
TIME PLOTTED => 08:22

Dist	COUNTY	ROUTE	POST MILES TOTAL PROJECT	SHEET No.	TOTAL SHEETS
09	Mno	395	118.7/119.6	59	139

REGISTERED CIVIL ENGINEER 5-25-11 DATE

8-8-11
PLANS APPROVAL DATE

REGISTERED PROFESSIONAL ENGINEER STEPHEN WINZENREAD No. 64274 Exp. 6-30-13 CIVIL STATE OF CALIFORNIA

THE STATE OF CALIFORNIA OR ITS OFFICERS OR AGENTS SHALL NOT BE RESPONSIBLE FOR THE ACCURACY OR COMPLETENESS OF SCANNED COPIES OF THIS PLAN SHEET.

NOTE:
SEE CONSTRUCTION DETAILS C-4 THROUGH C-18 FOR ROADSIDE SIGN DETAILS FOR PLACEMENT OF SIGNS IN NEVADA.

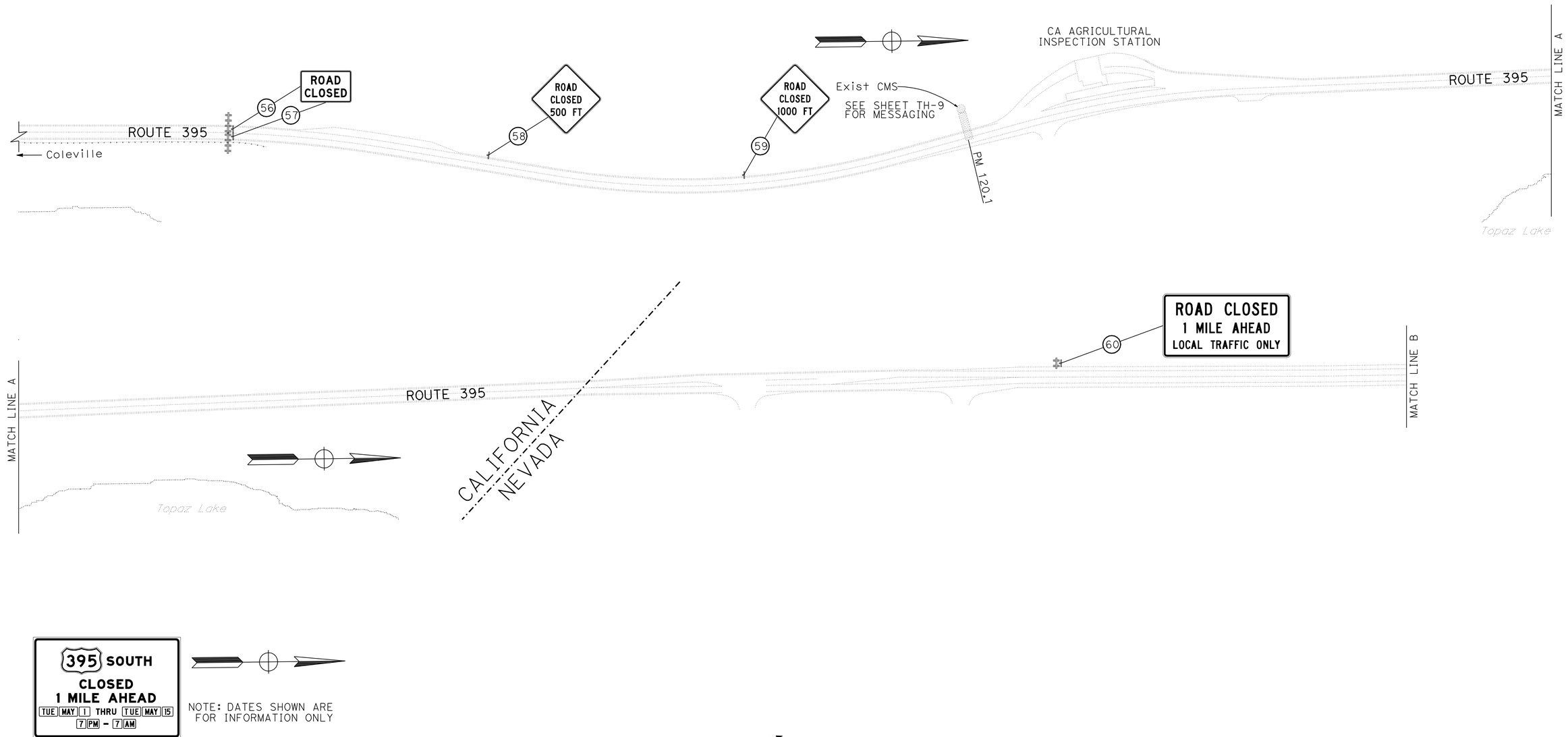

THIS PLAN ACCURATE FOR TRAFFIC HANDLING AND DETOUR WORK ONLY

STAGE 1
TRAFFIC HANDLING AND DETOUR PLAN
SCALE 1"=100'

TH-8

STATE OF CALIFORNIA - DEPARTMENT OF TRANSPORTATION
Caltrans DESIGN

FUNCTIONAL SUPERVISOR: RORY QUINCE
CALCULATED-DESIGNED BY: STEPHEN WINZENREAD
CHECKED BY: ADAM ZUMSTEIN
REVISED BY
DATE REVISED

LAST REVISION 06-16-11
DATE PLOTTED => 15-AUG-2011
TIME PLOTTED => 08:22

Dist	COUNTY	ROUTE	POST MILES TOTAL PROJECT	SHEET No.	TOTAL SHEETS
09	Mno	395	118.7/119.6	60	139

REGISTERED CIVIL ENGINEER 5-25-11 DATE

8-8-11
PLANS APPROVAL DATE

REGISTERED PROFESSIONAL ENGINEER STEPHEN WINZENREAD No. 64274 Exp. 6-30-13 CIVIL STATE OF CALIFORNIA

THE STATE OF CALIFORNIA OR ITS OFFICERS OR AGENTS SHALL NOT BE RESPONSIBLE FOR THE ACCURACY OR COMPLETENESS OF SCANNED COPIES OF THIS PLAN SHEET.

PORTABLE CHANGEABLE MESSAGE SIGN 2

MESSAGING FOR NIGHTLY CLOSURES		
FIRST PHASE	SECOND PHASE	THIRD PHASE
US 395 CLOSED 42 MI AHD	US 395 CLOSED 7PM - 7AM	FOLLOW DETOUR
MESSAGING FOR DAYTIME TRAFFIC CONTROL		
FIRST PHASE	SECOND PHASE	THIRD PHASE
ROAD WORK 43 MILES AHEAD	EXPECT 20 MIN DELAYS	HWY CLOSED 42 MI AHD 7PM - 7AM

PORTABLE CHANGEABLE MESSAGE SIGN 3

MESSAGING FOR NIGHTLY CLOSURES		
FIRST PHASE	SECOND PHASE	THIRD PHASE
US 395 CLOSED 41 MI AHD	US 395 CLOSED 7PM - 7AM	DETOUR USE SB 395 TO RTE 182
MESSAGING FOR DAYTIME TRAFFIC CONTROL		
FIRST PHASE	SECOND PHASE	THIRD PHASE
ROAD WORK 42 MILES AHEAD	EXPECT 20 MIN DELAYS	HWY CLOSED 42 MI AHD 7PM - 7AM

PORTABLE CHANGEABLE MESSAGE SIGN 4

MESSAGING FOR NIGHTLY CLOSURES		
FIRST PHASE	SECOND PHASE	THIRD PHASE
US 395 CLOSED 1 MI AHD	US 395 CLOSED 7PM - 7AM	DETOUR USE SB 395 TO RTE 182
MESSAGING FOR DAYTIME TRAFFIC CONTROL		
FIRST PHASE	SECOND PHASE	THIRD PHASE
ROAD WORK 1 MILE AHEAD	EXPECT 20 MIN DELAYS	HWY CLOSED 1 MI AHD 7PM - 7AM

PORTABLE CHANGEABLE MESSAGE SIGN 5*

MESSAGING FOR NIGHTLY CLOSURES	
FIRST PHASE	SECOND PHASE
US 395 CLOSED 7PM - 7AM	DETOUR USE NB 395 TO NV 208
MESSAGING FOR DAYTIME TRAFFIC CONTROL	
FIRST PHASE	SECOND PHASE
ROAD WORK 1 MILE AHEAD	EXPECT 20 MIN DELAYS

*SEE NOTE 7 ON SHEET TH-1

EXISTING CHANGEABLE MESSAGE SIGN*

MESSAGING FOR NIGHTLY CLOSURES	
FIRST PHASE	SECOND PHASE
US 395 CLOSED 7PM - 7AM	DETOUR USE NB 395 TO NV 208
MESSAGING FOR DAYTIME TRAFFIC CONTROL	
FIRST PHASE	SECOND PHASE
ROAD WORK 1 MILE AHEAD	EXPECT 20 MIN DELAYS

*SEE NOTE 9 ON SHEET TH-1

EXISTING DYNAMIC MESSAGE SIGN*

MESSAGING FOR NIGHTLY CLOSURES	
FIRST PHASE	SECOND PHASE
US 395 CLOSED 7PM TO 7AM-DETOUR USE SB 395 TO NV 208	US 395 CLOSED 4 MI AHD-DETOUR USE SB 395 TO NV 208
MESSAGING FOR DAYTIME TRAFFIC CONTROL	
FIRST PHASE	SECOND PHASE
ROAD WORK 4 MILES AHEAD-EXPECT 20 MINUTE DELAYS	ROAD WORK 4 MILES AHEAD- HWY CLOSED FROM 7PM TO 7AM

*SEE NOTE 8 ON SHEET TH-1

STAGE 1 PCMS, CMS, AND DMS MESSAGING

SEE NOTES ON SHEET TH-1

THIS PLAN ACCURATE FOR TRAFFIC HANDLING AND DETOUR WORK ONLY

STAGE 1 TRAFFIC HANDLING AND DETOUR PLAN

NO SCALE

TH-9

STATE OF CALIFORNIA - DEPARTMENT OF TRANSPORTATION
Caltrans DESIGN

FUNCTIONAL SUPERVISOR: RORY QUINCE
CALCULATED-DESIGNED BY: STEPHEN WINZENREAD
CHECKED BY: ADAM ZUMSTEIN
REVISED BY
DATE REVISED

LAST REVISION 06-07-11
DATE PLOTTED => 15-AUG-2011
TIME PLOTTED => 08:48

Dist	COUNTY	ROUTE	POST MILES TOTAL PROJECT	SHEET No.	TOTAL SHEETS
09	Mno	395	118.7/119.6	61	139

REGISTERED CIVIL ENGINEER 5-25-11 DATE

8-8-11
PLANS APPROVAL DATE

REGISTERED PROFESSIONAL ENGINEER
STEPHEN WINZENREAD
No. 64274
Exp. 6-30-13
CIVIL
STATE OF CALIFORNIA

THE STATE OF CALIFORNIA OR ITS OFFICERS OR AGENTS SHALL NOT BE RESPONSIBLE FOR THE ACCURACY OR COMPLETENESS OF SCANNED COPIES OF THIS PLAN SHEET.

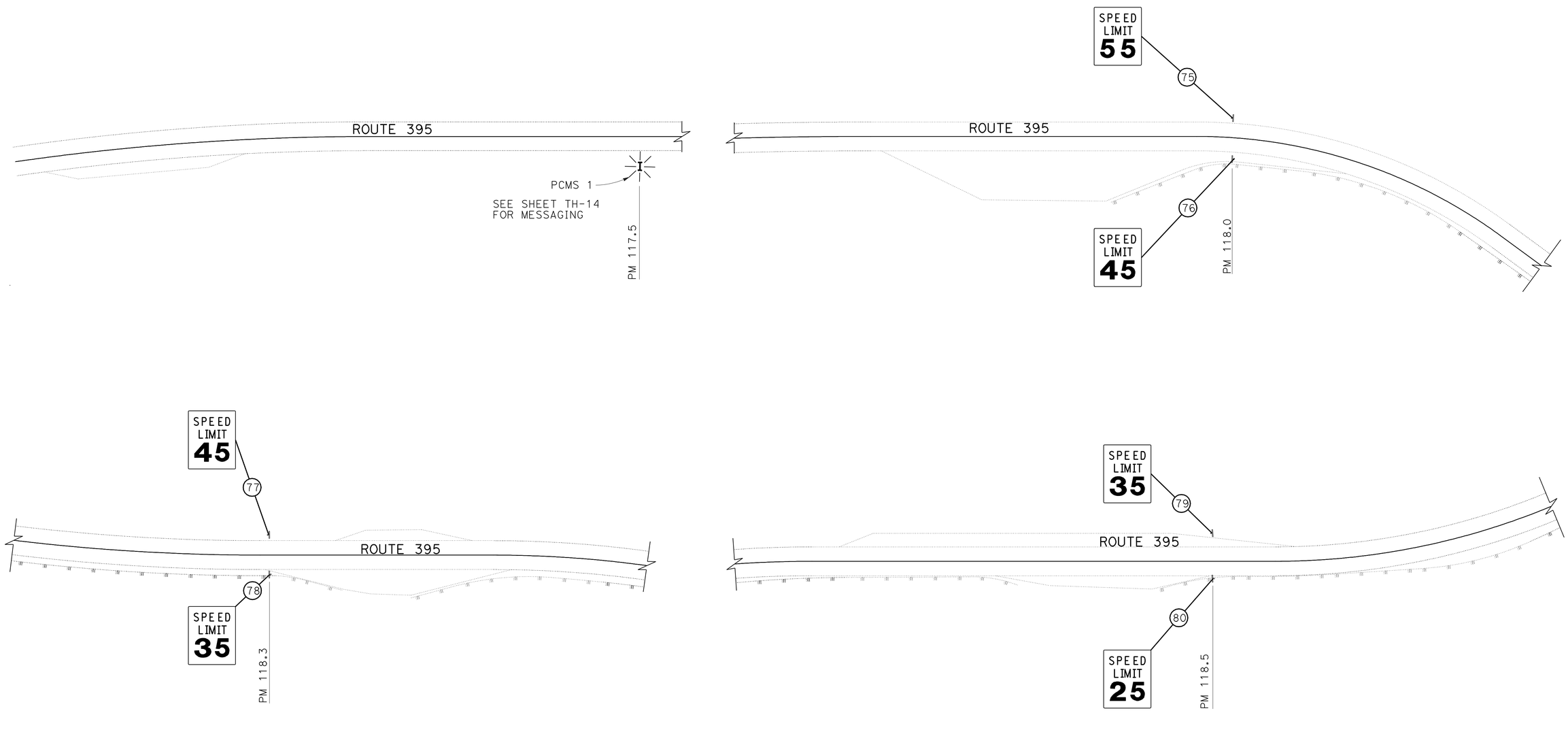

STAGE 2
TRAFFIC HANDLING AND DETOUR PLAN

SCALE 1" = 50'

TH-10

THIS PLAN ACCURATE FOR TRAFFIC HANDLING AND DETOUR WORK ONLY

STATE OF CALIFORNIA - DEPARTMENT OF TRANSPORTATION
Caltrans®
DESIGN

FUNCTIONAL SUPERVISOR: RORY QUINCE

CALCULATED-DESIGNED BY: STEPHEN WINZENREAD
CHECKED BY: ADAM ZUMSTEIN

REVISED BY
DATE REVISED

LAST REVISION 06-07-11
DATE PLOTTED => 15-AUG-2011
TIME PLOTTED => 08:48

Dist	COUNTY	ROUTE	POST MILES TOTAL PROJECT	SHEET No.	TOTAL SHEETS
09	Mno	395	118.7/119.6	62	139

Stephen Winzenread 5-25-11
REGISTERED CIVIL ENGINEER DATE

8-8-11
PLANS APPROVAL DATE

REGISTERED PROFESSIONAL ENGINEER
STEPHEN WINZENREAD
No. 64274
Exp. 6-30-13
CIVIL
STATE OF CALIFORNIA

THE STATE OF CALIFORNIA OR ITS OFFICERS OR AGENTS SHALL NOT BE RESPONSIBLE FOR THE ACCURACY OR COMPLETENESS OF SCANNED COPIES OF THIS PLAN SHEET.

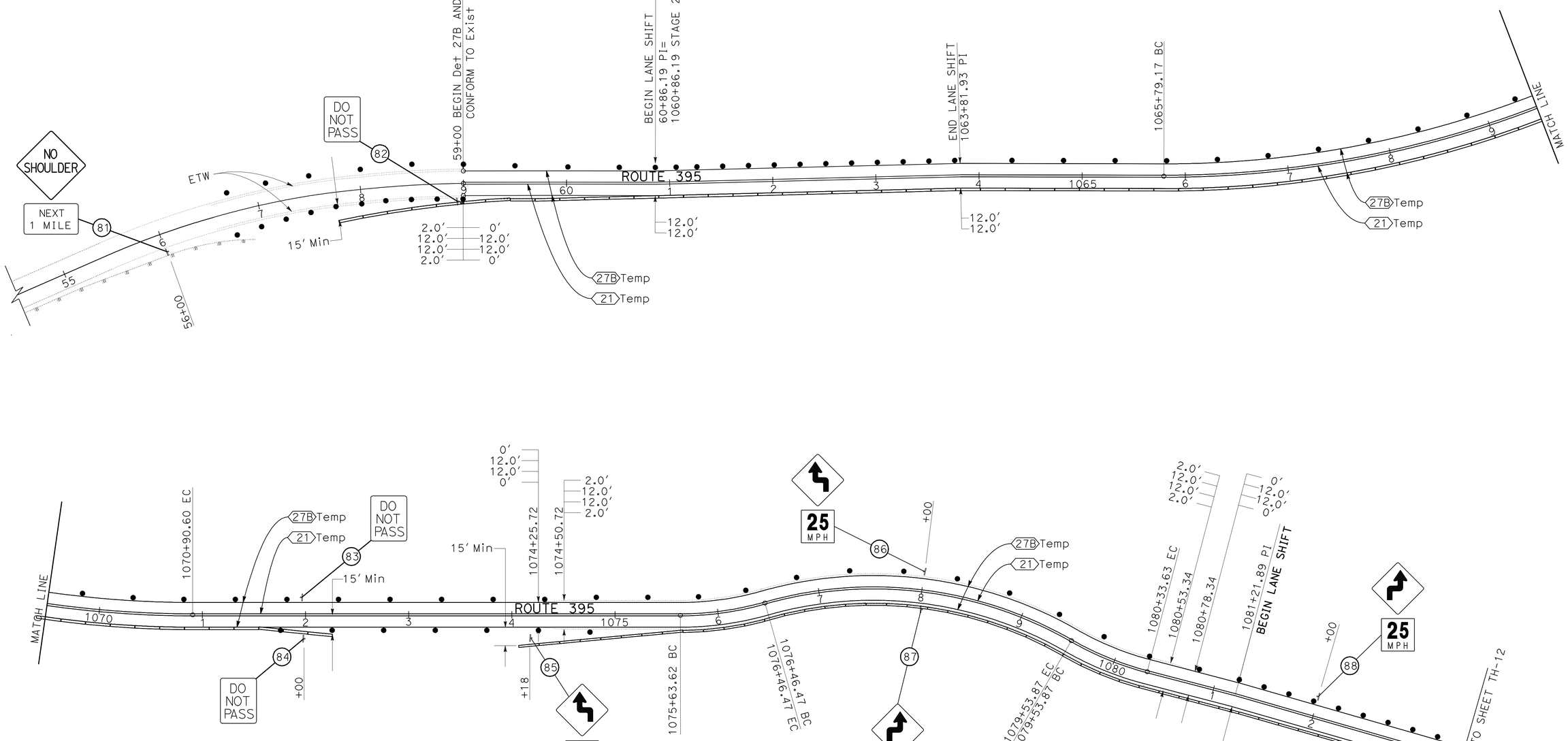

STAGE 2
TRAFFIC HANDLING AND DETOUR PLAN
SCALE 1" = 50'

TH-11

THIS PLAN ACCURATE FOR TRAFFIC HANDLING AND DETOUR WORK ONLY

STATE OF CALIFORNIA - DEPARTMENT OF TRANSPORTATION
Caltrans
DESIGN

FUNCTIONAL SUPERVISOR: RORY QUINCE
CALCULATED-DESIGNED BY: STEPHEN WINZENREAD
CHECKED BY: ADAM ZUMSTEIN
REVISED BY
DATE REVISED

LAST REVISION 06-07-11
DATE PLOTTED => 15-AUG-2011
TIME PLOTTED => 08:48

Dist	COUNTY	ROUTE	POST MILES TOTAL PROJECT	SHEET No.	TOTAL SHEETS
09	Mno	395	118.7/119.6	63	139

REGISTERED CIVIL ENGINEER 5-25-11 DATE

8-8-11
PLANS APPROVAL DATE

REGISTERED PROFESSIONAL ENGINEER
STEPHEN WINZENREAD
No. 64274
Exp. 6-30-13
CIVIL
STATE OF CALIFORNIA

THE STATE OF CALIFORNIA OR ITS OFFICERS OR AGENTS SHALL NOT BE RESPONSIBLE FOR THE ACCURACY OR COMPLETENESS OF SCANNED COPIES OF THIS PLAN SHEET.

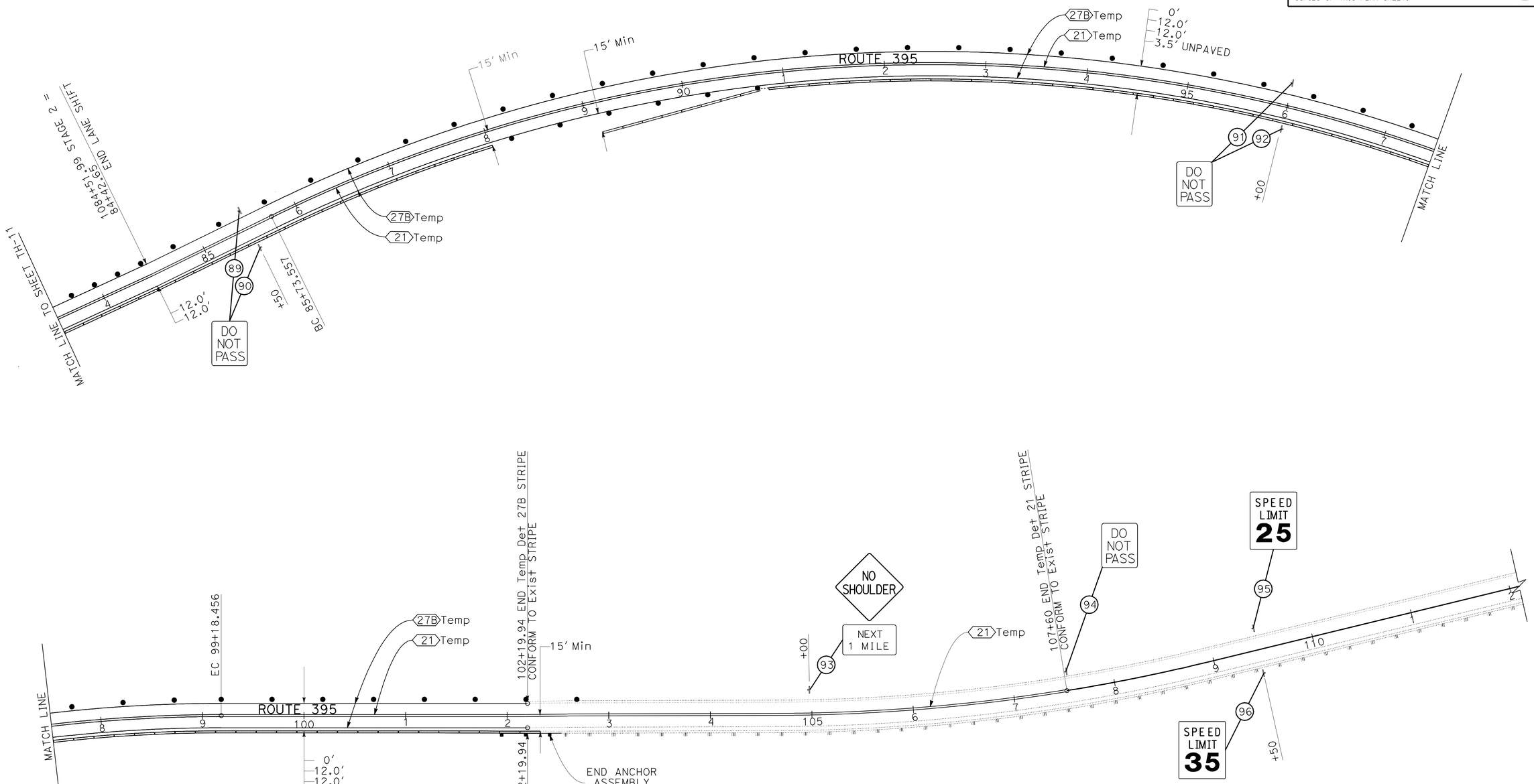

STAGE 2
TRAFFIC HANDLING AND DETOUR PLAN
SCALE 1" = 50'

TH-12

THIS PLAN ACCURATE FOR TRAFFIC HANDLING AND DETOUR WORK ONLY

STATE OF CALIFORNIA - DEPARTMENT OF TRANSPORTATION
Caltrans
DESIGN

FUNCTIONAL SUPERVISOR: RORY QUINCE
CALCULATED-DESIGNED BY: STEPHEN WINZENREAD
CHECKED BY: ADAM ZUMSTEIN
REVISED BY
DATE REVISED

LAST REVISION 06-07-11
DATE PLOTTED => 15-AUG-2011
TIME PLOTTED => 08:48

Dist	COUNTY	ROUTE	POST MILES TOTAL PROJECT	SHEET No.	TOTAL SHEETS
09	Mno	395	118.7/119.6	64	139

REGISTERED CIVIL ENGINEER 5-25-11 DATE

8-8-11
PLANS APPROVAL DATE

REGISTERED PROFESSIONAL ENGINEER
STEPHEN WINZENREAD
No. 64274
Exp. 6-30-13
CIVIL
STATE OF CALIFORNIA

THE STATE OF CALIFORNIA OR ITS OFFICERS OR AGENTS SHALL NOT BE RESPONSIBLE FOR THE ACCURACY OR COMPLETENESS OF SCANNED COPIES OF THIS PLAN SHEET.

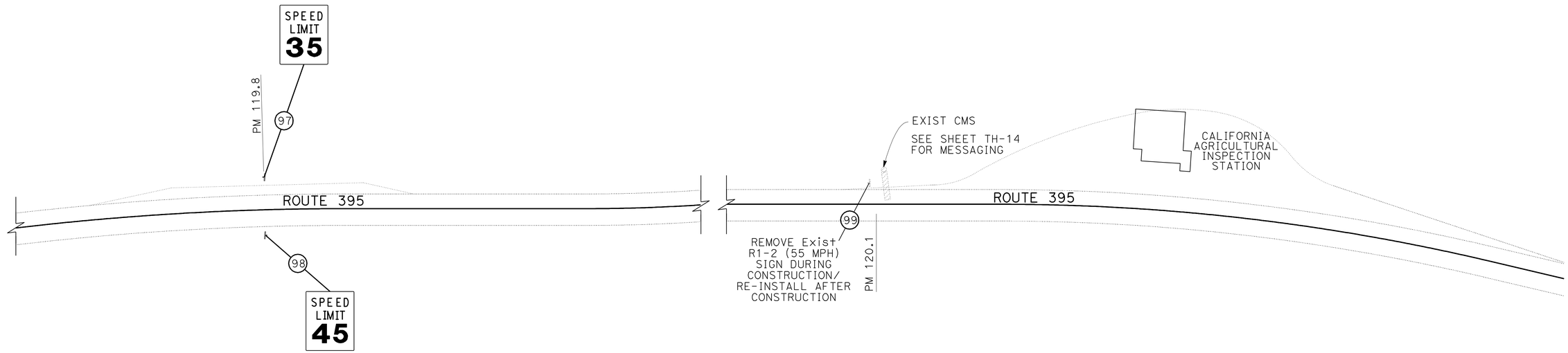

THIS PLAN ACCURATE FOR TRAFFIC HANDLING AND DETOUR WORK ONLY

STAGE 2
TRAFFIC HANDLING AND DETOUR PLAN
SCALE 1" = 50'

TH-13

STATE OF CALIFORNIA - DEPARTMENT OF TRANSPORTATION
Caltrans® DESIGN

FUNCTIONAL SUPERVISOR: RORY QUINCE

CALCULATED-DESIGNED BY: STEPHEN WINZENREAD
CHECKED BY: ADAM ZUMSTEIN

REVISED BY
DATE REVISED

LAST REVISION 06-07-11
DATE PLOTTED => 15-AUG-2011
TIME PLOTTED => 08:48

Dist	COUNTY	ROUTE	POST MILES TOTAL PROJECT	SHEET No.	TOTAL SHEETS
09	Mno	395	118.7/119.6	65	139

REGISTERED CIVIL ENGINEER 5-25-11 DATE

8-8-11
PLANS APPROVAL DATE

REGISTERED PROFESSIONAL ENGINEER STEPHEN WINZENREAD No. 64274 Exp. 6-30-13 CIVIL STATE OF CALIFORNIA

THE STATE OF CALIFORNIA OR ITS OFFICERS OR AGENTS SHALL NOT BE RESPONSIBLE FOR THE ACCURACY OR COMPLETENESS OF SCANNED COPIES OF THIS PLAN SHEET.

PORTABLE CHANGEABLE MESSAGE SIGN 1		
STAGE 2 MESSAGING FOR 2-LANE, 2-WAY TRAFFIC		
FIRST PHASE	SECOND PHASE	THIRD PHASE
NO SHOULDER AHEAD	REDUCE SPEED	25 MPH ZONE AHEAD

PORTABLE CHANGEABLE MESSAGE SIGN 1		
MESSAGING FOR REVERSIBLE TRAFFIC CONTROL		
FIRST PHASE	SECOND PHASE	THIRD PHASE
ROAD WORK 1 MILE AHEAD	PREPARE TO STOP	EXPECT 20 MIN DELAYS

EXISTING CHANGEABLE MESSAGE SIGN	
STAGE 2 MESSAGING FOR 2-LANE, 2-WAY TRAFFIC	
FIRST PHASE	SECOND PHASE
NO SHOULDER AHEAD REDUCE SPEED	25 MPH ZONE AHEAD

CHANGEABLE MESSAGE SIGN	
MESSAGING FOR REVERSIBLE TRAFFIC CONTROL	
FIRST PHASE	SECOND PHASE
PREPARE TO STOP	EXPECT 20 MIN DELAYS

STAGE 2 PCMS, AND CMS MESSAGING

SEE NOTES ON SHEET TH-1

THIS PLAN ACCURATE FOR TRAFFIC HANDLING AND DETOUR WORK ONLY

STAGE 2
TRAFFIC HANDLING AND DETOUR PLAN
NO SCALE

TH-14

STATE OF CALIFORNIA - DEPARTMENT OF TRANSPORTATION
Caltrans DESIGN

FUNCTIONAL SUPERVISOR: RORY QUINCE
CALCULATED-DESIGNED BY: STEPHEN WINZENREAD
CHECKED BY: ADAM ZUMSTEIN
REVISED BY
DATE REVISED

LAST REVISION 06-07-11 DATE PLOTTED => 15-AUG-2011 TIME PLOTTED => 08:48

Dist	COUNTY	ROUTE	POST MILES TOTAL PROJECT	SHEET No.	TOTAL SHEETS
09	Mno	395	118.7/119.6	66	139

REGISTERED CIVIL ENGINEER 5-25-11 DATE

8-8-11
PLANS APPROVAL DATE

REGISTERED PROFESSIONAL ENGINEER STEPHEN WINZENREAD No. 64274 Exp. 6-30-13 CIVIL STATE OF CALIFORNIA

THE STATE OF CALIFORNIA OR ITS OFFICERS OR AGENTS SHALL NOT BE RESPONSIBLE FOR THE ACCURACY OR COMPLETENESS OF SCANNED COPIES OF THIS PLAN SHEET.

NOTES:
1. DAY OF WEEK AND DATE PLAQUES ON SIGNS 5, 6, 7, 35, 61 AND 70 MAY VARY.
2. SEE CONSTRUCTION DETAILS C-4 THROUGH C-18 FOR ROADSIDE SIGN DETIALS FOR PLACEMENT OF SIGNS IN NEVADA.

1.5" Radius, 0.625" Border, 0.375" Indent, Black on Orange; [BUSINESSES OPEN] 4D; [DURING CONSTRUCTION] 4D;

STAGE 1 SIGN NUMBERS 4, 8, 36, 69
CS-BUSINESS

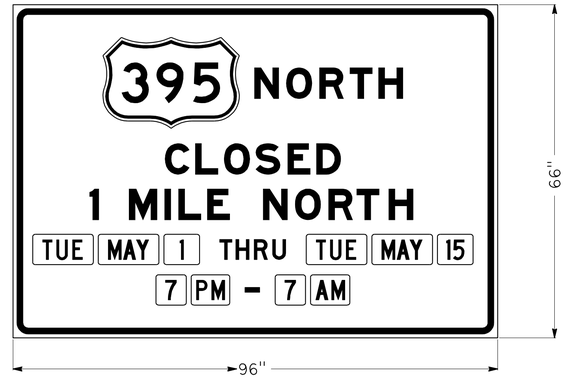

3.0" Radius, 1.25" Border, 0.75" Indent, Black on Orange; [NORTH] 6E Mod; [CLOSED] 6E Mod; [1 MILE NORTH] 6E Mod; [THRU] 4D; [-] 4E. US 395 ROUTE SHIELD SEE CALIFORNIA GUIDE (G) SIGN SPECS G26-1 FOR 8" NUMERALS. DAY, MONTH AND TIME PLAQUES SEE CALIFORNIA SPECIAL TEMPORARY TRAFFIC CONTROL (SC) SIGN SPECS SC6A AND SC6B.

STAGE 1 SIGN NUMBER 5
SC6-4 MOD (CA)

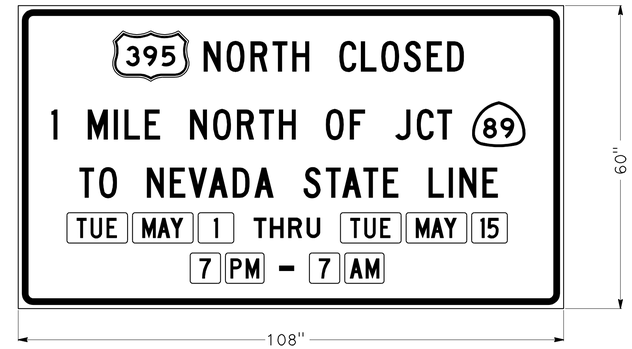

3.0" Radius, 1.25" Border, 0.75" Indent, Black on Orange; [NORTH CLOSED] 6C; [1 MILE NORTH OF JCT] 6C; [TO NEVADA STATE LINE] 6C; [THRU] 4D; [-] 4E; US 395 AND SR 89 ROUTE SHIELDS SEE CALIFORNIA GUIDE (G) SIGN SPECS G26-1 AND G28-1 FOR 4" NUMERALS. DAY, MONTH AND TIME PLAQUES SEE CALIFORNIA SPECIAL TEMPORARY TRAFFIC CONTROL (SC) SIGN SPECS SC6A AND SC6B.

STAGE 1 SIGN NUMBER 6
SC6-4 MOD (CA)

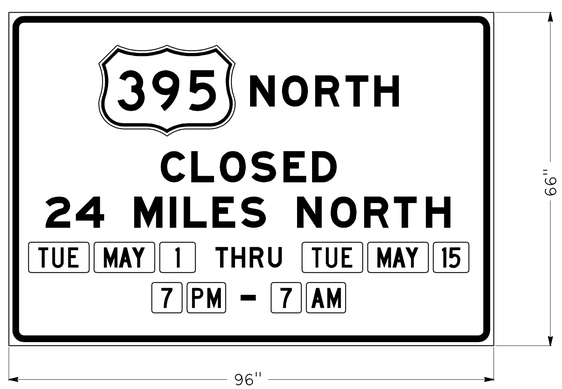

3.0" Radius, 1.25" Border, 0.75" Indent, Black on Orange; [NORTH] 6E Mod; [CLOSED] 6E Mod; [24 MILES NORTH] 6E Mod; [THRU] 4D; [-] 4E. US 395 ROUTE SHIELD SEE CALIFORNIA GUIDE (G) SIGN SPECS G26-1 FOR 8" NUMERALS. DAY, MONTH AND TIME PLAQUES SEE CALIFORNIA SPECIAL TEMPORARY TRAFFIC CONTROL (SC) SIGN SPECS SC6A AND SC6B.

STAGE 1 SIGN NUMBER 7
SC6-4 MOD (CA)

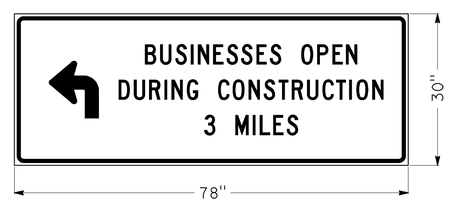

1.875" Radius, 0.75" Border, 0.5" Indent, Black on Orange; 90 Deg Advanced Turn Arrow 9.8" X 11.3"; [BUSINESSES OPEN] 4C; [DURING CONSTRUCTION] 4C; [3 MILES] 4C;

STAGE 1 SIGN NUMBER 21
CS-BUSINESS

THIS PLAN ACCURATE FOR TRAFFIC HANDLING AND DETOUR WORK ONLY

STAGE 1
TRAFFIC HANDLING AND DETOUR DETAILS
NO SCALE

THD-1

STATE OF CALIFORNIA - DEPARTMENT OF TRANSPORTATION
Caltrans® DESIGN

FUNCTIONAL SUPERVISOR: RORY QUINCE
CALCULATED-DESIGNED BY: STEPHEN WINZENREAD
CHECKED BY: ADAM ZUMSTEIN
REVISED BY
DATE REVISED

LAST REVISION 06-16-11
DATE PLOTTED => 15-AUG-2011
TIME PLOTTED => 08:48

Dist	COUNTY	ROUTE	POST MILES TOTAL PROJECT	SHEET No.	TOTAL SHEETS
09	Mno	395	118.7/119.6	67	139

REGISTERED CIVIL ENGINEER 5-25-11 DATE

8-8-11
PLANS APPROVAL DATE

REGISTERED PROFESSIONAL ENGINEER STEPHEN WINZENREAD No. 64274 Exp. 6-30-13 CIVIL STATE OF CALIFORNIA

THE STATE OF CALIFORNIA OR ITS OFFICERS OR AGENTS SHALL NOT BE RESPONSIBLE FOR THE ACCURACY OR COMPLETENESS OF SCANNED COPIES OF THIS PLAN SHEET.

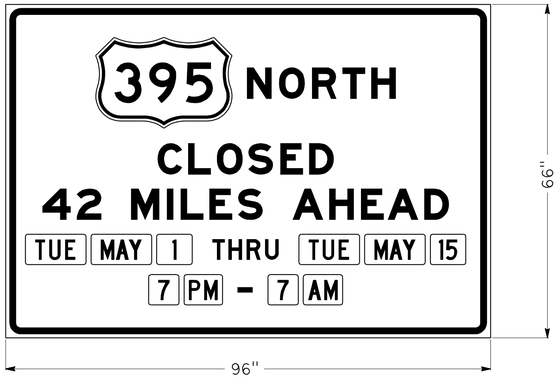

3.0" Radius, 1.25" Border, 0.75" Indent, Black on Orange; [NORTH] 6E Mod; [CLOSED] 6E Mod; [42 MILES AHEAD] 6E Mod; [THRU] 4D; [-] 4E. US 395 ROUTE SHIELD SEE CALIFORNIA GUIDE (G) SIGN SPECS G26-1 FOR 8" NUMERALS. DAY, MONTH AND TIME PLAQUES SEE CALIFORNIA SPECIAL TEMPORARY TRAFFIC CONTROL (SC) SIGN SPECS SC6A AND SC6B.

STAGE 1 SIGN NUMBER 35
SC6-4 MOD (CA)

6.0" Radius, 1.25" Border, Black on Orange; Arrows: 6CAP-2LV - 18.3" 90°, 6CAP-1L - 12.8" 45°; [Walker] 6E Mod; [Coleville] 6E Mod; [Carson City] 6E Mod; [Reno] E Mod;

STAGE 1 SIGN NUMBER 40
G8-10 MOD (CA)

3.0" Radius, 1.0" Border, Black on Orange; Arrow 6CAP-2LH - 12.8" 180°; [Carson City] 6E Mod; [Reno] 6E Mod;

STAGE 1 SIGN NUMBER 44
G8-4 (CA)

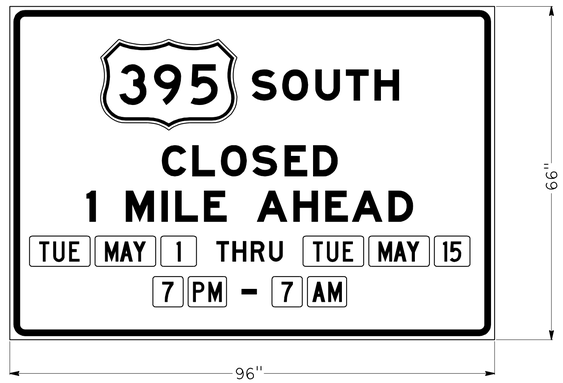

3.0" Radius, 1.25" Border, 0.75" Indent, Black on Orange; [SOUTH] E Mod; [CLOSED] E Mod; [1 MILE AHEAD] E Mod; [THRU] 4D; [-] 4E. US 395 ROUTE SHIELD SEE CALIFORNIA GUIDE (G) SIGN SPECS G26-1 FOR 8" NUMERALS. DAY, MONTH AND TIME PLAQUES SEE CALIFORNIA SPECIAL TEMPORARY TRAFFIC CONTROL (SC) SIGN SPECS SC6A AND SC6B.

STAGE 1 SIGN NUMBER 61
SC6-4 MOD (CA)

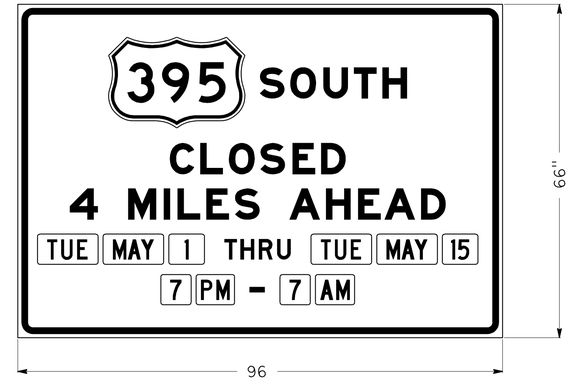

3.0" Radius, 1.25" Border, 0.75" Indent, Black on Orange; [SOUTH] 6E Mod; [CLOSED] 6E Mod; [4 MILES AHEAD] 6E Mod; [THRU] 4D; [-] 4E; US 395 ROUTE SHIELD SEE CALIFORNIA GUIDE (G) SIGN SPECS G26-1 FOR 8" NUMERALS. DAY, MONTH AND TIME PLAQUES SEE CALIFORNIA SPECIAL TEMPORARY TRAFFIC CONTROL (SC) SIGN SPECS SC6A AND SC6B.

STAGE 1 SIGN NUMBER 70
SC6-4 MOD (CA)

STAGE 1
TRAFFIC HANDLING AND DETOUR DETAILS
NO SCALE

THD-2

THIS PLAN ACCURATE FOR TRAFFIC HANDLING AND DETOUR WORK ONLY

STATE OF CALIFORNIA - DEPARTMENT OF TRANSPORTATION
Caltrans® DESIGN

FUNCTIONAL SUPERVISOR: RORY QUINCE
CALCULATED-DESIGNED BY: STEPHEN WINZENREAD
CHECKED BY: ADAM ZUMSTEIN
REVISED BY / DATE REVISED

LAST REVISION 06-16-11 | DATE PLOTTED => 15-AUG-2011 | TIME PLOTTED => 08:48

Dist	COUNTY	ROUTE	POST MILES TOTAL PROJECT	SHEET No.	TOTAL SHEETS
09	Mno	395	118.7/119.6	68	139

REGISTERED CIVIL ENGINEER 5-25-11 DATE

8-8-11
PLANS APPROVAL DATE

REGISTERED PROFESSIONAL ENGINEER STEPHEN WINZENREAD No. 64274 Exp. 6-30-13 CIVIL STATE OF CALIFORNIA

THE STATE OF CALIFORNIA OR ITS OFFICERS OR AGENTS SHALL NOT BE RESPONSIBLE FOR THE ACCURACY OR COMPLETENESS OF SCANNED COPIES OF THIS PLAN SHEET.

NOTES:

1. REMOVE EXISTING METAL BEAM GUARD RAILING TO THE NEAREST JOINT.
2. ATTACH END ANCHOR ASSEMBLY (TYPE SFT) TO EXIST GUARD RAILING. END ANCHOR SHALL BE INSTALLED BEHIND TEMPORARY RAILING (TYPE K).
3. END OF TEMPORARY RAILING (TYPE K) SHALL BE A MINIMUM OF 15 FEET FROM THE CENTERLINE OF THE HIGHWAY.
4. REMOVE END ANCHOR ASSEMBLY PRIOR TO INSTALLATION OF METAL BEAM GUARD RAILING IN STAGE 3.

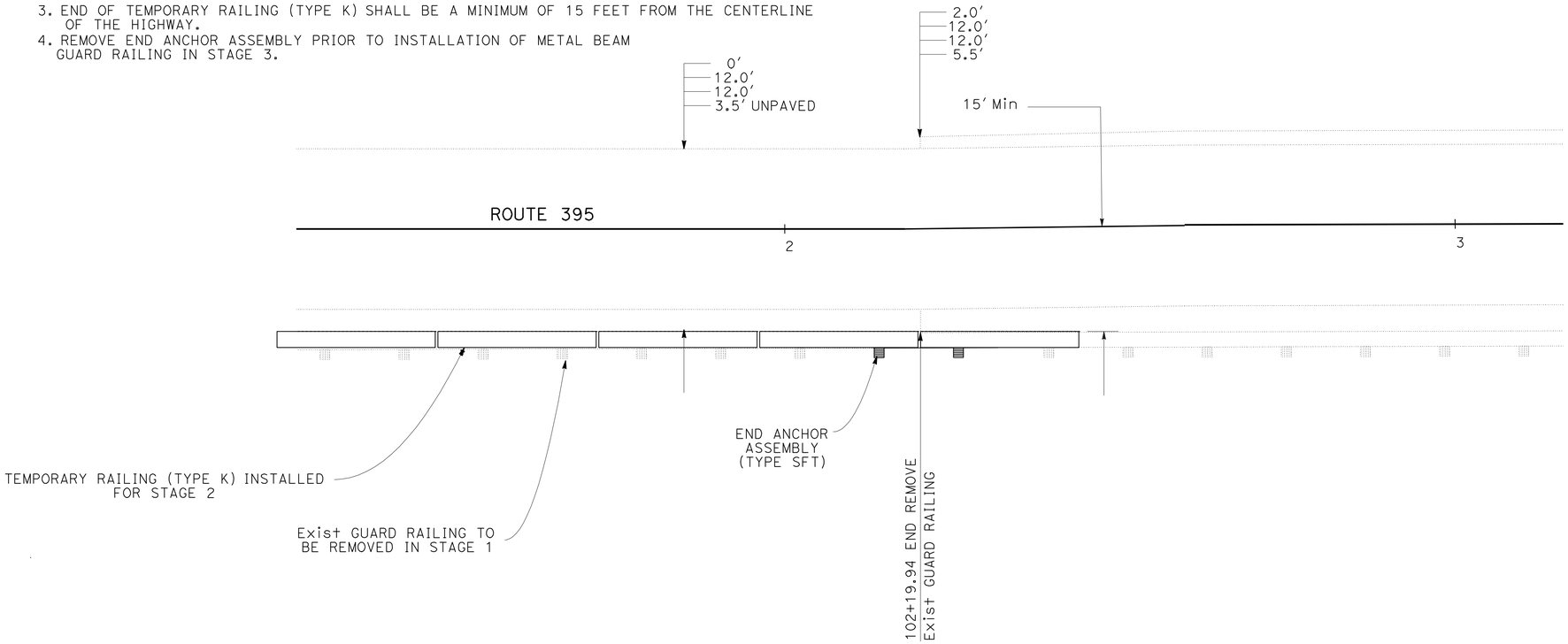

STAGE 2 TEMPORARY RAILING (TYPE K) PLACEMENT

THIS PLAN ACCURATE FOR TRAFFIC HANDLING AND DETOUR WORK ONLY

STAGE 2
TRAFFIC HANDLING AND DETOUR DETAILS
NO SCALE

THD-3

STATE OF CALIFORNIA - DEPARTMENT OF TRANSPORTATION
Caltrans
DESIGN

FUNCTIONAL SUPERVISOR: RORY QUINCE

CALCULATED-DESIGNED BY: STEPHEN WINZENREAD
CHECKED BY: STEPHEN WINZENREAD

REVISED BY
DATE REVISED

LAST REVISION 06-07-11 | DATE PLOTTED => 15-AUG-2011 | TIME PLOTTED => 08:48

Dist	COUNTY	ROUTE	POST MILES TOTAL PROJECT	SHEET No.	TOTAL SHEETS
09	Mno	395	118.7/119.6	69	139

REGISTERED CIVIL ENGINEER 5-25-11 DATE

8-8-11
PLANS APPROVAL DATE

REGISTERED PROFESSIONAL ENGINEER STEPHEN WINZENREAD No. 64274 Exp. 6-30-13 CIVIL STATE OF CALIFORNIA

THE STATE OF CALIFORNIA OR ITS OFFICERS OR AGENTS SHALL NOT BE RESPONSIBLE FOR THE ACCURACY OR COMPLETENESS OF SCANNED COPIES OF THIS PLAN SHEET.

NOTE:
SEE CONSTRUCTION DETAILS C-4 THROUGH C-18 FOR ROADSIDE SIGN DETAILS FOR PLACEMENT OF SIGNS IN NEVADA.

STAGE 1 TRAFFIC HANDLING AND DETOUR SIGN SUMMARY

SHEET NUMBER	SIGN NUMBER	STATE	COUNTY	ROUTE	STATION/ PM	LEFT	RIGHT	SIGN PANEL CODE	SIGN PANEL MESSAGE	SIGN PANEL SIZE (L x D)	SIGN PANEL BACKGROUND SHEETING COLOR	SIGN PANEL LEGEND SHEETING COLOR	POSTS ONE POST	POSTS TWO POST	POSTS TURNABLE METAL	POSTS SPECIAL PIVOT	POSTS SIZE (L x D)	CONSTRUCTION AREA SIGNS (LEFT IN PLACE)	FNBT	FSBT	FEBT	FWBT	COMMENTS
TH-7	1	CA	Mono	89	0.02	X		M4-8	DETOUR	24" x 12"	FLORESCENT ORANGE	BLACK			X					X			
								M3-1	NORTH	24" x 12"	WHITE	BLACK											
								G26-2 (CA)	395	28" x 24"	WHITE	BLACK											
								M6-1	-->	21" x 15"	WHITE	BLACK											
TH-7	2	CA	Mono	89	0.07	X		M4-8	DETOUR	24" x 12"	FLORESCENT ORANGE	BLACK			X					X			
								M3-1	NORTH	24" x 12"	WHITE	BLACK											
								G26-2 (CA)	395	28" x 24"	WHITE	BLACK											
								M5-1	┌>	21" x 15"	WHITE	BLACK											
TH-7	3	CA	Mono	89	0.11	X		W20-2	DETOUR AHEAD	48" x 48"	FLORESCENT ORANGE	BLACK			X					X			
TH-7	4	CA	Mono	89	0.16	X		CS-BUSINESSES	BUSINESSES OPEN	72" x 24"	FLORESCENT ORANGE	BLACK		X			4" x 4"			X			DO NOT COVER
TH-7	5	CA	Mono	89	0.20	X		SC6-4 MOD (CA)	395 NORTH CLOSED	96" x 66"	FLORESCENT ORANGE	BLACK		X			6" x 6"			X			DO NOT COVER
TH-2	6	CA	Alpine	89	9.90	X		SC6-4 MOD (CA)	395 NORTH CLOSED	108" x 60"	FLORESCENT ORANGE	BLACK		X			6" x 6"			X			DO NOT COVER
TH-6	7	CA	Mono	108	14.81		X	SC6-4 MOD (CA)	395 NORTH CLOSED	96" x 66"	FLORESCENT ORANGE	BLACK		X			6" x 6"				X		DO NOT COVER
TH-6	8	CA	Mono	108	14.87		X	CS-BUSINESSES	BUSINESSES OPEN	72" x 24"	FLORESCENT ORANGE	BLACK		X			4" x 4"				X		DO NOT COVER
TH-6	9	CA	Mono	108	14.94		X	W20-2	DETOUR AHEAD	48" x 48"	FLORESCENT ORANGE	BLACK			X						X		
TH-6	10	CA	Mono	108	15.00		X	M4-8	DETOUR	24" x 12"	FLORESCENT ORANGE	BLACK			X						X		
								M3-1	NORTH	24" x 12"	WHITE	BLACK											
								G26-2 (CA)	395	28" x 24"	WHITE	BLACK											
								M5-1	┌>	21" x 15"	WHITE	BLACK											
TH-6	11	CA	Mono	108	15.07		X	M4-8	DETOUR	24" x 12"	FLORESCENT ORANGE	BLACK			X						X		
								M3-1	NORTH	24" x 12"	WHITE	BLACK											
								G26-2 (CA)	395	28" x 24"	WHITE	BLACK											
								M6-1	-->	21" x 15"	WHITE	BLACK											
TH-3	12	CA	Mono	182	0.07	X		M4-8	DETOUR	24" x 12"	FLORESCENT ORANGE	BLACK			X			X		X			
								M3-3	SOUTH	24" x 12"	WHITE	BLACK											
								G26-2 (CA)	395	28" x 24"	WHITE	BLACK											
								M5-1	<┐	21" x 15"	WHITE	BLACK											
TH-3	13	CA	Mono	182	0.07		X	M4-8	DETOUR	24" x 12"	FLORESCENT ORANGE	BLACK			X			X	X				
								M3-1	NORTH	24" x 12"	WHITE	BLACK											
								G26-2 (CA)	395	28" x 24"	WHITE	BLACK											
TH-2	14	CA	Mono	182	R6.4	X		M4-8	DETOUR	24" x 12"	FLORESCENT ORANGE	BLACK			X			X		X			
								M3-3	SOUTH	24" x 12"	WHITE	BLACK											
								G26-2 (CA)	395	28" x 24"	WHITE	BLACK											
TH-2	15	CA	Mono	182	R6.4		X	M4-8	DETOUR	24" x 12"	FLORESCENT ORANGE	BLACK			X			X	X				
								M3-1	NORTH	24" x 12"	WHITE	BLACK											
								G26-2 (CA)	395	28" x 24"	WHITE	BLACK											
TH-2	16	CA	Mono	182	12.4	X		M4-8	DETOUR	24" x 12"	FLORESCENT ORANGE	BLACK			X			X		X			
								M3-3	SOUTH	24" x 12"	WHITE	BLACK											
								G26-2 (CA)	395	28" x 24"	WHITE	BLACK											
TH-2	17	CA	Mono	182	12.6		X	M4-8	DETOUR	24" x 12"	FLORESCENT ORANGE	BLACK			X			X	X				
								M3-1	NORTH	24" x 12"	WHITE	BLACK											
								G26-2 (CA)	395	28" x 24"	WHITE	BLACK											
TH-6	18	NV	Douglas	208	0.13		X	M4-8	DETOUR	24" x 12"	FLORESCENT ORANGE	BLACK				X		X			X		SEE NOTE
								M3-3	SOUTH	24" x 12"	WHITE	BLACK											
								G26-2 (CA)	395	28" x 24"	WHITE	BLACK											
TH-6	19	NV	Douglas	208	0.17	X		M4-8	DETOUR	24" x 12"	FLORESCENT ORANGE	BLACK				X		X				X	SEE NOTE
								M3-1	NORTH	24" x 12"	WHITE	BLACK											
								G26-2 (CA)	395	28" x 24"	WHITE	BLACK											
								M6-2	<-┐	21" x 15"	WHITE	BLACK											

STAGE CONSTRUCTION, TRAFFIC HANDLING AND DETOUR QUANTITIES

NO SCALE

THQ-1

STATE OF CALIFORNIA - DEPARTMENT OF TRANSPORTATION
Caltrans®
DESIGN

FUNCTIONAL SUPERVISOR: RORY QUINCE
CALCULATED-DESIGNED BY: STEPHEN WINZENREAD
CHECKED BY: ADAM ZUMSTEIN
REVISED BY
DATE REVISED

LAST REVISION 06-16-11
DATE PLOTTED => 15-AUG-2011
TIME PLOTTED => 08:49

Dist	COUNTY	ROUTE	POST MILES TOTAL PROJECT	SHEET No.	TOTAL SHEETS
09	Mno	395	118.7/119.6	70	139

REGISTERED CIVIL ENGINEER 5-25-11 DATE

8-8-11
PLANS APPROVAL DATE

REGISTERED PROFESSIONAL ENGINEER STEPHEN WINZENREAD No. 64274 Exp. 6-30-13 CIVIL STATE OF CALIFORNIA

THE STATE OF CALIFORNIA OR ITS OFFICERS OR AGENTS SHALL NOT BE RESPONSIBLE FOR THE ACCURACY OR COMPLETENESS OF SCANNED COPIES OF THIS PLAN SHEET.

STAGE 1 TRAFFIC HANDLING AND DETOUR SIGN SUMMARY

SHEET NUMBER	SIGN NUMBER	STATE	COUNTY	ROUTE	STATION/ PM	LEFT	RIGHT	SIGN PANEL CODE	SIGN PANEL MESSAGE	SIGN PANEL SIZE (L x D)	SIGN PANEL BACKGROUND SHEETING COLOR	SIGN PANEL LEGEND SHEETING COLOR	POSTS ONE POST	POSTS TWO POST	POSTS TURNABLE METAL	POSTS SPECIAL PIVOT	POSTS SIZE (L x D)	CONSTRUCTION AREA SIGNS (LEFT IN PLACE)	FNBT	FSBT	FEBT	FWBT	COMMENTS
TH-6	20	NV	DOUGLAS	208	0.30	X		M4-8	DETOUR	24" x 12"	FLORESCENT ORANGE	BLACK				X		X				X	SEE NOTE ON THQ-1
								M3-1	NORTH	24" x 12"	WHITE	BLACK											
								G26-2 (CA)	395	28" x 24"	WHITE	BLACK											
								M5-2	┌	21" x 15"	WHITE	BLACK											
TH-6	21	NV	DOUGLAS	208	0.40	X		CS-BUSINESSES	<┐ BUSINESSES OPEN	78" x 30"	FLORESCENT ORANGE	BLACK		X			4" x 6"				X		SEE NOTE ON THQ-1
TH-2	22	NV	DOUGLAS	208	6.00	X		M4-8	DETOUR	24" x 12"	FLORESCENT ORANGE	BLACK				X		X				X	SEE NOTE ON THQ-1
								M3-1	NORTH	24" x 12"	WHITE	BLACK											
								G26-2 (CA)	395	28" x 24"	WHITE	BLACK											
TH-2	23	NV	DOUGLAS	208	6.00		X	M4-8	DETOUR	24" x 12"	FLORESCENT ORANGE	BLACK				X		X			X		SEE NOTE ON THQ-1
								M3-3	SOUTH	24" x 12"	WHITE	BLACK											
								G26-2 (CA)	395	28" x 24"	WHITE	BLACK											
TH-4	24	NV	LYON	208	2.13	X		M4-8	DETOUR	24" x 12"	FLORESCENT ORANGE	BLACK				X		X				X	SEE NOTE ON THQ-1
								M3-1	NORTH	24" x 12"	WHITE	BLACK											
								G26-2 (CA)	395	28" x 24"	WHITE	BLACK											
TH-4	25	NV	LYON	208	2.13		X	M4-8	DETOUR	24" x 12"	FLORESCENT ORANGE	BLACK				X		X			X		REMOVE BEACON AT END STAGE 1, SEE NOTE ON THQ-1
								M3-3	SOUTH	24 "x 12"	WHITE	BLACK											
								G26-2 (CA)	395	28" x 24"	WHITE	BLACK											
								M6-3	↑	21" x 15"	WHITE	BLACK											
TH-4	26	NV	LYON	208	2.23		X	M4-8	DETOUR	24" x 12"	FLORESCENT ORANGE	BLACK				X		X			X		SEE NOTE ON THQ-1
								M3-3	SOUTH	24" x 12"	WHITE	BLACK											
								G26-2 (CA)	395	28" x 24"	WHITE	BLACK											
								M6-3	↑	21" x 15"	WHITE	BLACK											
TH-2	27	NV	LYON	338	9.00	X		M4-8	DETOUR	24" x 12"	FLORESCENT ORANGE	BLACK				X		X		X			SEE NOTE ON THQ-1
								M3-3	SOUTH	24" x 12"	WHITE	BLACK											
								G26-2 (CA)	395	28" x 24"	WHITE	BLACK											
TH-2	28	NV	LYON	338	9.00		X	M4-8	DETOUR	24" x 12"	FLORESCENT ORANGE	BLACK				X		X	X				SEE NOTE ON THQ-1
								M3-1	NORTH	24" x 12"	WHITE	BLACK											
								G26-2 (CA)	395	28" x 24"	WHITE	BLACK											
TH-2	29	NV	LYON	338	18.00	X		M4-8	DETOUR	24" x 12"	FLORESCENT ORANGE	BLACK				X		X		X			SEE NOTE ON THQ-1
								M3-3	SOUTH	24" x 12"	WHITE	BLACK											
								G26-2 (CA)	395	28" x 24"	WHITE	BLACK											
TH-2	30	NV	LYON	338	18.00		X	M4-8	DETOUR	24" x 12"	FLORESCENT ORANGE	BLACK				X		X	X				SEE NOTE ON THQ-1
								M3-1	NORTH	24" x 12"	WHITE	BLACK											
								G26-2 (CA)	395	28" x 24"	WHITE	BLACK											
TH-4	31	NV	LYON	338	26.36	X		M4-8	DETOUR	24" x 12"	FLORESCENT ORANGE	BLACK				X		X		X			SEE NOTE ON THQ-1
								M3-3	SOUTH	24" x 12"	WHITE	BLACK											
								G26-2 (CA)	395	28" x 24"	WHITE	BLACK											
TH-4	32	NV	LYON	338	26.36		X	M4-8	DETOUR	24" x 12"	FLORESCENT ORANGE	BLACK				X		X	X				REMOVE BEACON AT END STAGE 1, SEE NOTE ON THQ-1
								M3-1	NORTH	24" x 12"	WHITE	BLACK											
								G26-2 (CA)	395	28" x 24"	WHITE	BLACK											
								M5-1	<┐	21" x 15"	WHITE	BLACK											
TH-4	33	NV	LYON	338	26.50		X	M4-8	DETOUR	24" x 12"	FLORESCENT ORANGE	BLACK				X		X	X				SEE NOTE ON THQ-1
								M3-1	NORTH	24" x 12"	WHITE	BLACK											
								G26-2 (CA)	395	28" x 24"	WHITE	BLACK											
								M6-1	<--	21" x 15"	WHITE	BLACK											

STAGE CONSTRUCTION, TRAFFIC HANDLING AND DETOUR QUANTITIES THQ-2

STATE OF CALIFORNIA - DEPARTMENT OF TRANSPORTATION
Caltrans® DESIGN

FUNCTIONAL SUPERVISOR: RORY QUINCE
CALCULATED-DESIGNED BY: STEPHEN WINZENREAD
CHECKED BY: ADAM ZUMSTEIN
REVISED BY / DATE REVISED

LAST REVISION 06-07-11
DATE PLOTTED => 15-AUG-2011
TIME PLOTTED => 08:49

Dist	COUNTY	ROUTE	POST MILES TOTAL PROJECT	SHEET No.	TOTAL SHEETS
09	Mno	395	118.7/119.6	71	139

REGISTERED CIVIL ENGINEER 5-25-11 DATE

8-8-11
PLANS APPROVAL DATE

REGISTERED PROFESSIONAL ENGINEER STEPHEN WINZENREAD No. 64274 Exp. 6-30-13 CIVIL STATE OF CALIFORNIA

THE STATE OF CALIFORNIA OR ITS OFFICERS OR AGENTS SHALL NOT BE RESPONSIBLE FOR THE ACCURACY OR COMPLETENESS OF SCANNED COPIES OF THIS PLAN SHEET.

NOTE:
SEE CONSTRUCTION DETAILS C-4 THROUGH C-12 FOR ROADSIDE SIGN DETIALS FOR PLACEMENT OF SIGNS IN NEVADA.

STAGE 1 TRAFFIC HANDLING AND DETOUR SIGN SUMMARY

SHEET NUMBER	SIGN NUMBER	STATE	COUNTY	ROUTE	STATION/ PM	LEFT	RIGHT	SIGN PANEL CODE	SIGN PANEL MESSAGE	SIGN PANEL SIZE (L x D)	BACKGROUND SHEETING COLOR	LEGEND SHEETING COLOR	POSTS ONE POST	POSTS TWO POST	POSTS TURNABLE METAL	POSTS SPECIAL PIVOT	POSTS SIZE (L x D)	CONSTRUCTION AREA SIGNS (LEFT IN PLACE)	FNBT	FSBT	FEBT	FWBT	COMMENTS
TH-4	34	NV	LYON	338	26.50		X	M4-8	DETOUR	24" x 12"	FLORESCENT ORANGE	BLACK				X		X		X			SEE NOTE ON THQ-1
								M3-3	SOUTH	24" x 12"	WHITE	BLACK											
								G26-2 (CA)	395	28" x 24"	WHITE	BLACK											
								M6-1	-->	21" x 15"	WHITE	BLACK											
TH-3	35	CA	Mono	395	75.90		X	SC6-4 MOD (CA)	395 NORTH CLOSED	96" x 66"	FLORESCENT ORANGE	BLACK		X			6" x 6"		X				DO NOT COVER
TH-3	36	CA	Mono	395	75.97		X	CS-BUSINESSES	BUSINESSES OPEN	72" x 24"	FLORESCENT ORANGE	BLACK		X			6" x 6"		X				DO NOT COVER
								D9-18a	GAS/FOOD/LODGING SYMBOLS	84" x 24"	BLUE	WHITE							X				
								W34A (CA) MOD	½ MILE AHEAD	36" x 30"	BLUE	WHITE							X				
TH-3	37	CA	Mono	395	76.03		X	W20-2	DETOUR AHEAD	48" x 48"	FLORESCENT ORANGE	BLACK			X			X	X				
TH-3	38	CA	Mono	395	76.10		X	M4-8	DETOUR	24" x 12"	FLORESCENT ORANGE	BLACK			X			X	X				
								M3-1	NORTH	24" x 12"	WHITE	BLACK											
								G26-2 (CA)	395	28" x 24"	WHITE	BLACK											
								M5-2	⌐	21" x 15"	WHITE	BLACK											
TH-3	39	CA	Mono	395	76.16	X		M4-8a	END DETOUR	24" x 18"	FLORESCENT ORANGE	BLACK			X			X		X			
								M3-3	SOUTH	24" x 12"	WHITE	BLACK											
								G26-2 (CA)	395	28" x 24"	WHITE	BLACK											
TH-3	40	CA	Mono	395	76.16		X	G8-10 MOD (CA)	WALKER/COLEVILLE CARSON CITY/RENO	84" x 60"	FLORESCENT ORANGE	BLACK		X			6" x 6"		X				
TH-3	41	CA	Mono	395	76.23		X	M4-8	DETOUR	24" x 12"	FLORESCENT ORANGE	BLACK			X			X	X				
								M3-1	NORTH	24" x 12"	WHITE	BLACK											
								G26-2 (CA)	395	28" x 24"	WHITE	BLACK											
								M6-2	⌐	21" x 15"	WHITE	BLACK											
TH-3	42	CA	Mono	395	76.30	X		M4-8	DETOUR	24" x 12"	FLORESCENT ORANGE	BLACK			X			X		X			
								M3-3	SOUTH	24" x 12"	WHITE	BLACK											
								G26-2 (CA)	395	28" x 24"	WHITE	BLACK											
								M6-1	<--	21" x 15"	WHITE	BLACK											
TH-3	43	CA	Mono	395	76.30	X		M4-8	DETOUR	24" x 12"	FLORESCENT ORANGE	BLACK			X			X		X			
								M3-1	NORTH	24" x 12"	WHITE	BLACK											
								G26-2 (CA)	395	28" x 24"	WHITE	BLACK											
								M6-1	<--	21" x 15"	WHITE	BLACK											
TH-3	44	CA	Mono	395	76.32	X		G8-4 (CA)	<-- CARSON CITY/RENO	84" x 24"	FLORESCENT ORANGE	BLACK		X			4" x 4"			X			
TH-3	45	CA	Mono	395	76.40	X		M4-8	DETOUR	24" x 12"	FLORESCENT ORANGE	BLACK			X			X		X			REMOVE BEACON AT END STAGE 1
								M3-1	NORTH	24" x 12"	WHITE	BLACK											
								G26-2 (CA)	395	28" x 24"	WHITE	BLACK											
								M5-1	<⌐	21" x 15"	WHITE	BLACK											
TH-2	46	CA	Mono	395	85.00	X		M4-8	DETOUR	24" x 12"	FLORESCENT ORANGE	BLACK			X					X			
								M3-1	NORTH	24" x 12"	WHITE	BLACK											
								G26-2 (CA)	395	28" x 24"	WHITE	BLACK											
TH-6	47	CA	Mono	395	85.00	X		M4-8	DETOUR	24" x 12"	FLORESCENT ORANGE	BLACK			X					X			
								M3-1	NORTH	24" x 12"	WHITE	BLACK											
								G26-2 (CA)	395	28" x 24"	WHITE	BLACK											
TH-2	48	CA	Mono	395	101.50	X		M4-8	DETOUR	24" x 12"	FLORESCENT ORANGE	BLACK			X					X			
								M3-1	NORTH	24" x 12"	WHITE	BLACK											
								G26-2 (CA)	395	28" x 24"	WHITE	BLACK											
TH-2	49	CA	Mono	395	109.00	X		M4-8	DETOUR	24" x 12"	FLORESCENT ORANGE	BLACK			X					X			
								M3-1	NORTH	24" x 12"	WHITE	BLACK											
								G26-2 (CA)	395	28" x 24"	WHITE	BLACK											
TH-7	50	CA	Mono	395	116.90	X		M4-8	DETOUR	24" x 12"	FLORESCENT ORANGE	BLACK			X					X			
								M3-1	NORTH	24" x 12"	WHITE	BLACK											
								G26-2 (CA)	395	28" x 24"	WHITE	BLACK											

STAGE CONSTRUCTION, TRAFFIC HANDLING AND DETOUR QUANTITIES THQ-3

STATE OF CALIFORNIA - DEPARTMENT OF TRANSPORTATION
Caltrans® DESIGN

FUNCTIONAL SUPERVISOR: RORY QUINCE
CALCULATED-DESIGNED BY: STEPHEN WINZENREAD
CHECKED BY: ADAM ZUMSTEIN
REVISED BY / DATE REVISED

LAST REVISION 06-21-11 DATE PLOTTED => 15-AUG-2011 TIME PLOTTED => 08:49

Dist	COUNTY	ROUTE	POST MILES TOTAL PROJECT	SHEET No.	TOTAL SHEETS
09	Mno	395	118.7/119.6	72	139

REGISTERED CIVIL ENGINEER 5-25-11 DATE

8-8-11
PLANS APPROVAL DATE

REGISTERED PROFESSIONAL ENGINEER STEPHEN WINZENREAD No. 64274 Exp. 6-30-13 CIVIL STATE OF CALIFORNIA

THE STATE OF CALIFORNIA OR ITS OFFICERS OR AGENTS SHALL NOT BE RESPONSIBLE FOR THE ACCURACY OR COMPLETENESS OF SCANNED COPIES OF THIS PLAN SHEET.

STAGE 1 TRAFFIC HANDLING AND DETOUR SIGN SUMMARY

SHEET NUMBER	SIGN NUMBER	STATE	COUNTY	ROUTE	STATION/ PM	LEFT	RIGHT	SIGN PANEL CODE	SIGN PANEL MESSAGE	SIGN PANEL SIZE (L x D)	SIGN PANEL BACKGROUND SHEETING COLOR	SIGN PANEL LEGEND SHEETING COLOR	POSTS ONE POST	POSTS TWO POST	POSTS TURNABLE METAL	POSTS SPECIAL PIVOT	POSTS SIZE (L x D)	CONSTRUCTION AREA SIGNS (LEFT IN PLACE)	FNBT	FSBT	FEBT	FWBT	COMMENTS
TH-7	51	CA	Mono	395	117.10		X	R11-3a	ROAD CLOSED 1 MILE AHEAD	60" x 30"	WHITE	BLACK							X				ON TYPE 3 BARRICADE
TH-7	52	CA	Mono	395	117.80		X	W20-3	ROAD CLOSED 1000 FT	48" x 48"	FLORESCENT ORANGE	BLACK	X				4" x 6"		X				
TH-7	53	CA	Mono	395	117.90		X	W20-3	ROAD CLOSED 500 FT	48" x 48"	FLORESCENT ORANGE	BLACK	X				4" x 6"		X				
TH-7	54	CA	Mono	395	118.00		X	R11-2	ROAD CLOSED	48" x 30"	WHITE	BLACK							X				ON TYPE 3 BARRICADE
TH-7	55	CA	Mono	395	118.00		X	R11-2	ROAD CLOSED	48" x 30"	WHITE	BLACK							X				ON TYPE 3 BARRICADE
TH-8	56	CA	Mono	395	119.75	X		R11-2	ROAD CLOSED	48" x 30"	WHITE	BLACK								X			ON TYPE 3 BARRICADE
TH-8	57	CA	Mono	395	119.75		X	R11-2	ROAD CLOSED	48" x 30"	WHITE	BLACK								X			ON TYPE 3 BARRICADE
TH-8	58	CA	Mono	395	119.85	X		W20-3	ROAD CLOSED 500 FT	48" x 48"	FLORESCENT ORANGE	BLACK	X				4" x 6"			X			
TH-8	59	CA	Mono	395	119.95	X		W20-3	ROAD CLOSED 1000 FT	48" x 48"	FLORESCENT ORANGE	BLACK	X				4" x 6"			X			
TH-8	60	NV	Douglas	395	0.30	X		R11-3a	ROAD CLOSED 1 MILE AHEAD	60" x 30"	WHITE	BLACK								X			ON TYPE 3 BARRICADE
TH-8	61	NV	Douglas	395	0.35	X		SC6-4 MOD (CA)	395 SOUTH CLOSED	96" x 66"	FLORESCENT ORANGE	BLACK		X			6" x 6"			X			SEE NOTE ON SHEET THQ-1, DO NOT COVER
TH-5	62	NV	Douglas	395	2.37		X	W20-2	DETOUR AHEAD	48" x 48"	FLORESCENT ORANGE	BLACK				X		X	X				SEE NOTE ON SHEET THQ-1
TH-5	63	NV	Douglas	395	2.47		X	M4-8	DETOUR	24" x 12"	FLORESCENT ORANGE	BLACK				X		X	X				SEE NOTE ON SHEET THQ-1
								M3-3	SOUTH	24" x 12"	WHITE	BLACK											
								G26-2 (CA)	395	28" x 24"	WHITE	BLACK											
								M5-2	┌	21" x 15"	WHITE	BLACK											
TH-5	64	NV	Douglas	395	2.57		X	M4-8	DETOUR	24" x 12"	FLORESCENT ORANGE	BLACK				X		X	X				SEE NOTE ON SHEET THQ-1
								M3-3	SOUTH	24" x 12"	WHITE	BLACK											
								G26-2 (CA)	395	28" x 24"	WHITE	BLACK											
								M6-2	┌	21" x 15"	WHITE	BLACK											
TH-5	65	NV	Douglas	395	2.90	X		M4-8	DETOUR	24" x 12"	FLORESCENT ORANGE	BLACK				X		X		X			SEE NOTE ON SHEET THQ-1
								M3-3	SOUTH	24" x 12"	WHITE	BLACK											
								G26-2 (CA)	395	28" x 24"	WHITE	BLACK											
								M6-1	<--	21" x 15"	WHITE	BLACK											
TH-5	66	NV	Douglas	395	3.00	X		M4-8	DETOUR	24" x 12"	FLORESCENT ORANGE	BLACK				X		X		X			SEE NOTE ON SHEET THQ-1
								M3-3	SOUTH	24" x 12"	WHITE	BLACK											
								G26-2 (CA)	395	28" x 24"	WHITE	BLACK											
								M5-1	<┐	21" x 15"	WHITE	BLACK											
TH-5	67	NV	Douglas	395	3.02		X	M4-8a	END DETOUR	24" x 18"	FLORESCENT ORANGE	BLACK				X		X	X				SEE NOTE ON SHEET THQ-1
								M3-1	NORTH	24" x 12"	WHITE	BLACK											
								G26-2 (CA)	395	28" x 24"	WHITE	BLACK											
TH-5	68	NV	Douglas	395	3.10	X		W20-2	DETOUR AHEAD	48" x 48"	FLORESCENT ORANGE	BLACK				X		X		X			SEE NOTE ON SHEET THQ-1
TH-5	69	NV	Douglas	395	3.20	X		CS-BUSINESSES	BUSINESSES OPEN	72" x 24"	FLORESCENT ORANGE	BLACK		X			6" x 6"			X			SEE NOTE ON SHEET THQ-1
								D9-18b	GAS/FOOD/LODGING SYMBOLS	84" x 24"	BLUE	WHITE								X			
								W34A (CA) MOD	3 MILES AHEAD	36" x 30"	BLUE	WHITE								X			
TH-5	70	NV	Douglas	395	3.30	X		SC6-4 MOD (CA)	395 SOUTH CLOSED	96" x 66"	FLORESCENT ORANGE	BLACK		X			6" x 6"			X			SEE NOTE ON SHEET THQ-1, DO NOT COVER
TH-4	71	NV	Lyon	829	0.10	X		M4-8	DETOUR	24" x 12"	FLORESCENT ORANGE	BLACK				X		X		X			SEE NOTE ON SHEET THQ-1
								M3-3	SOUTH	24" x 12"	WHITE	BLACK											
								G26-2 (CA)	395	28" x 24"	WHITE	BLACK											
								M5-1	┌>	21" x 15"	WHITE	BLACK											
TH-4	72	NV	Lyon	829	0.10		X	M4-8	DETOUR	24" x 12"	FLORESCENT ORANGE	BLACK				X		X	X				SEE NOTE ON SHEET THQ-1
								M3-1	NORTH	24" x 12"	WHITE	BLACK											
								G26-2 (CA)	395	28" x 24"	WHITE	BLACK											
TH-4	73	NV	Lyon	829	2.90	X		M4-8	DETOUR	24" x 12"	FLORESCENT ORANGE	BLACK				X		X		X			SEE NOTE ON SHEET THQ-1
								M3-3	SOUTH	24" x 12"	WHITE	BLACK											
								G26-2 (CA)	395	28" x 24"	WHITE	BLACK											
TH-4	74	NV	Lyon	829	2.90		X	M4-8	DETOUR	24" x 12"	FLORESCENT ORANGE	BLACK				X		X	X				SEE NOTE ON SHEET THQ-1
								M3-1	NORTH	24" x 12"	WHITE	BLACK											
								G26-2 (CA)	395	28" x 24"	WHITE	BLACK											
								M6-3	↑	21" x 15"	WHITE	BLACK											

STAGE CONSTRUCTION, TRAFFIC HANDLING AND DETOUR QUANTITIES THQ-4

STATE OF CALIFORNIA - DEPARTMENT OF TRANSPORTATION
Caltrans® DESIGN

FUNCTIONAL SUPERVISOR: RORY QUINCE
CALCULATED-DESIGNED BY: STEPHEN WINZENREAD
CHECKED BY: ADAM ZUMSTEIN
REVISED BY / DATE REVISED

LAST REVISION 06-21-11 | DATE PLOTTED => 15-AUG-2011 | TIME PLOTTED => 08:49

Dist	COUNTY	ROUTE	POST MILES TOTAL PROJECT	SHEET No.	TOTAL SHEETS
09	Mno	395	118.7/119.6	73	139

REGISTERED CIVIL ENGINEER 5-25-11 DATE

8-8-11
PLANS APPROVAL DATE

REGISTERED PROFESSIONAL ENGINEER STEPHEN WINZENREAD No. 64274 Exp. 6-30-13 CIVIL STATE OF CALIFORNIA

THE STATE OF CALIFORNIA OR ITS OFFICERS OR AGENTS SHALL NOT BE RESPONSIBLE FOR THE ACCURACY OR COMPLETENESS OF SCANNED COPIES OF THIS PLAN SHEET.

STAGE 2 TRAFFIC HANDLING AND DETOUR SIGN SUMMARY

SHEET NUMBER	SIGN NUMBER	STATION/ PM	LEFT	RIGHT	SIGN PANEL CODE	SIGN PANEL MESSAGE	SIGN PANEL SIZE (L x D)	SIGN PANEL BACKGROUND SHEETING COLOR	SIGN PANEL LEGEND SHEETING COLOR	POSTS ONE POST	POSTS TWO POST	POSTS SIZE (L x D)	FNBT	FSBT	FEBT	FWBT	COMMENTS
TH-10	75	118.0	X		R2-1	SPEED LIMIT 55	36" x 48"	WHITE	BLACK	X		4" x 6"		X			
TH-10	76	118.0		X	R2-1	SPEED LIMIT 45	36" x 48"	WHITE	BLACK	X		4" x 6"	X				
TH-10	77	118.3	X		R2-1	SPEED LIMIT 45	36" x 48"	WHITE	BLACK	X		4" x 6"		X			
TH-10	78	118.3		X	R2-1	SPEED LIMIT 35	36" x 48"	WHITE	BLACK	X		4" x 6"	X				
TH-10	79	118.5	X		R2-1	SPEED LIMIT 35	36" x 48"	WHITE	BLACK	X		4" x 6"		X			
TH-10	80	118.5		X	R2-1	SPEED LIMIT 25	36" x 48"	WHITE	BLACK	X		4" x 6"	X				
TH-11	81	56+00		X	C31A (CA)	NO SHOULDER	48" x 48"	FLORESCENT ORANGE	BLACK	X		4" x 6"	X				
					W7-3a	NEXT 1 MILE	18" x 24"	FLORESCENT ORANGE	BLACK								
TH-11	82	59+00		X	R4-1	DO NOT PASS	36" x 48"	WHITE	BLACK	X		4" x 6"	X				
TH-11	83	1072+00	X		R4-1	DO NOT PASS	36" x 48"	WHITE	BLACK	X		4" x 6"		X			
TH-11	84	1072+00		X	R4-1	DO NOT PASS	36" x 48"	WHITE	BLACK	X		4" x 6"	X				
TH-11	85	1074+18		X	W1-3	CURVE SYMBOL	48" x 48"	FLORESCENT ORANGE	BLACK	X		4" x 6"	X				
					W13-1	25 MPH	24" x 24"	FLORESCENT ORANGE	BLACK								
TH-11	86	1078+00	X		W1-3	CURVE SYMBOL	48" x 48"	FLORESCENT ORANGE	BLACK	X		4" x 6"		X			
					W13-1	25 MPH	24" x 24"	FLORESCENT ORANGE	BLACK								
TH-11	87	1078+00		X	W1-3	CURVE SYMBOL	48" x 48"	FLORESCENT ORANGE	BLACK	X		4" x 6"	X				
					W13-1	25 MPH	24" x 24"	FLORESCENT ORANGE	BLACK								
TH-11	88	1082+00	X		W1-3	CURVE SYMBOL	48" x 48"	FLORESCENT ORANGE	BLACK	X		4" x 6"		X			
					W13-1	25 MPH	24" x 24"	FLORESCENT ORANGE	BLACK								
TH-12	89	85+50	X		R4-1	DO NOT PASS	48" x 48"	WHITE	BLACK	X		4" x 6"		X			
TH-12	90	85+50		X	R4-1	DO NOT PASS	48" x 48"	WHITE	BLACK	X		4" x 6"	X				
TH-12	91	96+00	X		R4-1	DO NOT PASS	48" x 48"	WHITE	BLACK	X		4" x 6"		X			
TH-12	92	96+00		X	R4-1	DO NOT PASS	48" x 48"	WHITE	BLACK	X		4" x 6"	X				
TH-12	93	105+00	X		C31A (CA)	NO SHOULDER	48" x 48"	FLORESCENT ORANGE	BLACK	X		4" x 6"		X			
					W7-3a	NEXT 1 MILE	18" x 24"	FLORESCENT ORANGE	BLACK								
TH-12	94	107+60	X		R4-1	DO NOT PASS	48" x 48"	WHITE	BLACK	X		4" x 6"		X			
TH-12	95	109+50	X		R2-1	SPEED LIMIT 25	36" x 48"	WHITE	BLACK	X		4" x 6"		X			
TH-12	96	109+50		X	R2-1	SPEED LIMIT 35	36" x 48"	WHITE	BLACK	X		4" x 6"	X				
TH-12	97	119.8	X		R2-1	SPEED LIMIT 35	36" x 48"	WHITE	BLACK	X		4" x 6"		X			
TH-12	98	119.8		X	R2-1	SPEED LIMIT 45	36" x 48"	WHITE	BLACK	X		4" x 6"	X				
TH-13	99	120.1	X		R2-1 (EXIST)	SPEED LIMIT 55	36" x 48"	WHITE	BLACK					X			REMOVE DURING CONSTRUCTION/RE-INSTALL AFTER CONSTRUCTION

STAGE CONSTRUCTION, TRAFFIC HANDLING AND DETOUR QUANTITIES THQ-5

STATE OF CALIFORNIA - DEPARTMENT OF TRANSPORTATION
Caltrans DESIGN

FUNCTIONAL SUPERVISOR: RORY QUINCE
CALCULATED-DESIGNED BY: ADAM ZUMSTEIN
CHECKED BY: STEPHEN WINZENREAD
REVISED BY / DATE REVISED

LAST REVISION 06-07-11 | DATE PLOTTED => 15-AUG-2011 | TIME PLOTTED => 08:49

Dist	COUNTY	ROUTE	POST MILES TOTAL PROJECT	SHEET No.	TOTAL SHEETS
09	Mno	395	118.7/119.6	74	139

REGISTERED CIVIL ENGINEER 5-25-11 DATE

8-8-11
PLANS APPROVAL DATE

REGISTERED PROFESSIONAL ENGINEER STEPHEN WINZENREAD No. 64274 Exp. 6-30-13 CIVIL STATE OF CALIFORNIA

THE STATE OF CALIFORNIA OR ITS OFFICERS OR AGENTS SHALL NOT BE RESPONSIBLE FOR THE ACCURACY OR COMPLETENESS OF SCANNED COPIES OF THIS PLAN SHEET.

PORTABLE FLASHING BEACON

STAGE	STATE	COUNTY	ROUTE	POST MILE	L†	R†	EA	
1	CA	MONO	89	0.20	X		1	
1	CA	Alp	89	9.9	X		1	
1	CA	MONO	108	14.81		X	1	
1	NV	LYON	208	2.13		X	1	
1	CA	MONO	395	75.90		X	1	
1	CA	MONO	395	76.40	X		1	
1	NV	LYON	338	26.36	X		1	
1	CA	MONO	395	117.10		X	1	
1	NV	DOUGLAS	395	0.35			1	
1	NV	DOUGLAS	395	3.30	X		1	
ALL	CA	MONO	395	117.70		X	1	SEE CS-1
ALL	CA	MONO	395	120.40	X		1	SEE CS-1
TOTAL							12	

TYPE III BARRICADE

STAGE	STATE	ROUTE	POST MILE	L†	R†	EA
1	CA	395	117.10		X	1
1	CA	395	118.00	X	X	4
1	CA	395	119.75	X	X	4
1	NV	395	0.30	X		1
TOTAL						10

TEMPORARY ROADWAY QUANTITIES

STAGE	STATION TO STATION	HMA (TYPE A)*	CLASS 2 AB*	END ANCHOR ASSEMBLY (TYPE SFT)	SALVAGE GUARD RAILING*	COMMENTS
		TON	CY	EA	LF	
2	59+00 - 60+86.19	67	25			
2	1060+86.19 - 1076+46.47	562	208			
2	1079+49.82 - 1084+51.99	181	67			
2	84+42.65 - 102+20	640	237			
2	102+20 - 102+33			1		
3	102+20 - 102+33				12.5	REMOVAL OF END ANCHOR ASSEMBLY (TYPE SFT)
SUBTOTAL		1450	537	1	12.5	

*HMA (TYPE A) AND CLASS 2 AB FOR TEMPORARY ROADWAY, AND SALVAGE GUARD RAILING ARE INCLUDED IN ROADWAY QUANTITIES ON SHEET Q-1.

TEMPORARY RAILING (TYPE K)

STAGE	STATION TO STATION	L†	R†	LF
2	57+66 - 60+86		X	320
2	1060+86 - 1072+26		X	1140
2	1074+12 - 1084+52		X	1040
2	84+43 - 88+03		X	360
2	89+13 - 102+33		X	1320
3	57+66 - 73+06		X	1540
3	74+80 - 88+00		X	1320
3	89+13 - 102+33		X	1320
TOTAL				8360

TEMPORARY TRAFFIC STRIPE (PAINT)

STAGE	STATION TO STATION	L†	R†	DETAIL 21	DETAIL 27B
				LF	LF
2	59+00 - 60+86	X	X	186	372
2	1060+86 - 1084+52	X	X	2366	4732
2	84+43 - 102+20	X	X	1777	3554
2	102+20 - 107+60	X	X	540	
SUBTOTAL				4869	8658
TOTAL				13527	

CHANNELIZER (SURFACE MOUNTED)

STAGE	STATION TO STATION	L†	R†	EA	COMMENTS
2	56+70 - 60+86	X	X	20	
2	1060+86 - 1063+82	X		12	LANE SHIFT
2	1063+82 - 1071+32	X		15	
2	1071+32 - 1074+82	X	X	14	
2	1074+82 - 1081+22	X		13	
2	1081+22 - 1084+52	X		13	LANE SHIFT
2	84+43 - 87+73	X		7	
2	87+73 - 90+73	X	X	12	
2	90+73 - 102+73	X		24	
TOTAL				130	

REMOVE PAINTED TRAFFIC STRIPE

STAGE	STATION TO STATION	DETAIL 21
		LF
3	102+20 - 107+60	540
2	102+20 - 107+60	540
TOTAL		1080

STAGE CONSTRUCTION, TRAFFIC HANDLING AND DETOUR QUANTITIES THQ-6

STATE OF CALIFORNIA - DEPARTMENT OF TRANSPORTATION
Caltrans DESIGN

FUNCTIONAL SUPERVISOR: RORY QUINCE
CALCULATED-DESIGNED BY: STEPHEN WINZENREAD
CHECKED BY: ADAM ZUMSTEIN
REVISED BY / DATE REVISED

LAST REVISION 06-16-11
DATE PLOTTED => 15-AUG-2011
TIME PLOTTED => 08:49

Dist	COUNTY	ROUTE	POST MILES TOTAL PROJECT	SHEET No.	TOTAL SHEETS
09	Mno	395	118.7/119.6	75	139

6-1-11
REGISTERED CIVIL ENGINEER DATE

8-8-11
PLANS APPROVAL DATE

REGISTERED PROFESSIONAL ENGINEER
DONNA HOLLAND
No. 64205
Exp 6-30-13
CIVIL
STATE OF CALIFORNIA

THE STATE OF CALIFORNIA OR ITS OFFICERS OR AGENTS SHALL NOT BE RESPONSIBLE FOR THE ACCURACY OR COMPLETENESS OF SCANNED COPIES OF THIS PLAN SHEET.

NOTES:

1. THIS PLAN ACCURATE FOR PAVEMENT DELINEATION AND SIGNS ONLY.
2. DETAIL 22 TRAFFIC STRIPE SHALL BE PLACED ON PREVIOUSLY GROUND CENTERLINE RUMBLE STRIP. FOR CENTERLINE RUMBLE STRIP GRIND DETAIL SEE SHEET C-3.

LEGEND:

- IE - DELINEATOR
- IL - OBJECT MARKER
- IMM - MILEPOST MARKER
- - ROADSIDE SIGN (ONE POST)
- - ROADSIDE SIGN (TWO POST)
- - ROADSIDE SIGN NUMBER
- - STRIPING DETAIL

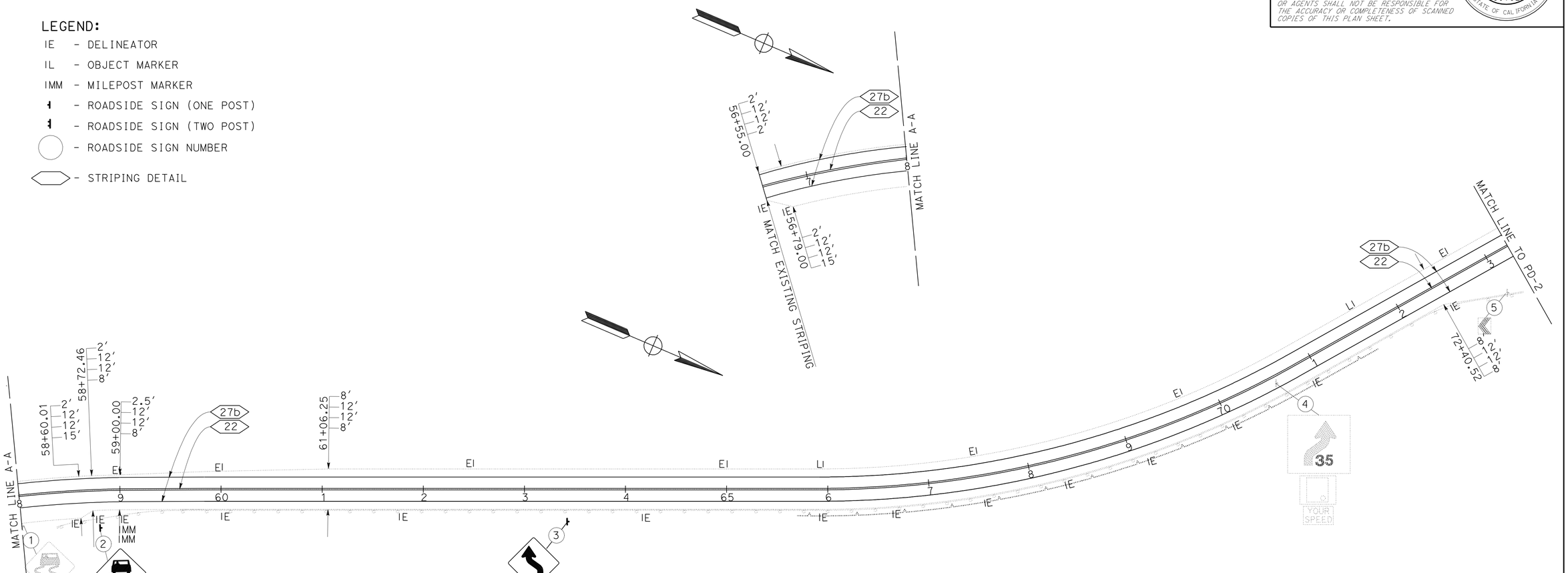

PAVEMENT DELINEATION AND SIGN PLAN
SCALE 1" = 50'

PD-1

STATE OF CALIFORNIA - DEPARTMENT OF TRANSPORTATION
Caltrans® TRAFFIC OPERATIONS

FUNCTIONAL SUPERVISOR: TERRY ERLWEIN
CALCULATED-DESIGNED BY: JOEL NASH
CHECKED BY: DONNA HOLLAND
REVISED BY
DATE REVISED

LAST REVISION 06-21-11
DATE PLOTTED => 15-AUG-2011
TIME PLOTTED => 08:49

Dist	COUNTY	ROUTE	POST MILES TOTAL PROJECT	SHEET No.	TOTAL SHEETS
09	Mno	395	118.7/119.6	76	139

6-1-11
REGISTERED CIVIL ENGINEER DATE

8-8-11
PLANS APPROVAL DATE

REGISTERED PROFESSIONAL ENGINEER
DONNA HOLLAND
No. 64205
Exp 6-30-13
CIVIL
STATE OF CALIFORNIA

THE STATE OF CALIFORNIA OR ITS OFFICERS OR AGENTS SHALL NOT BE RESPONSIBLE FOR THE ACCURACY OR COMPLETENESS OF SCANNED COPIES OF THIS PLAN SHEET.

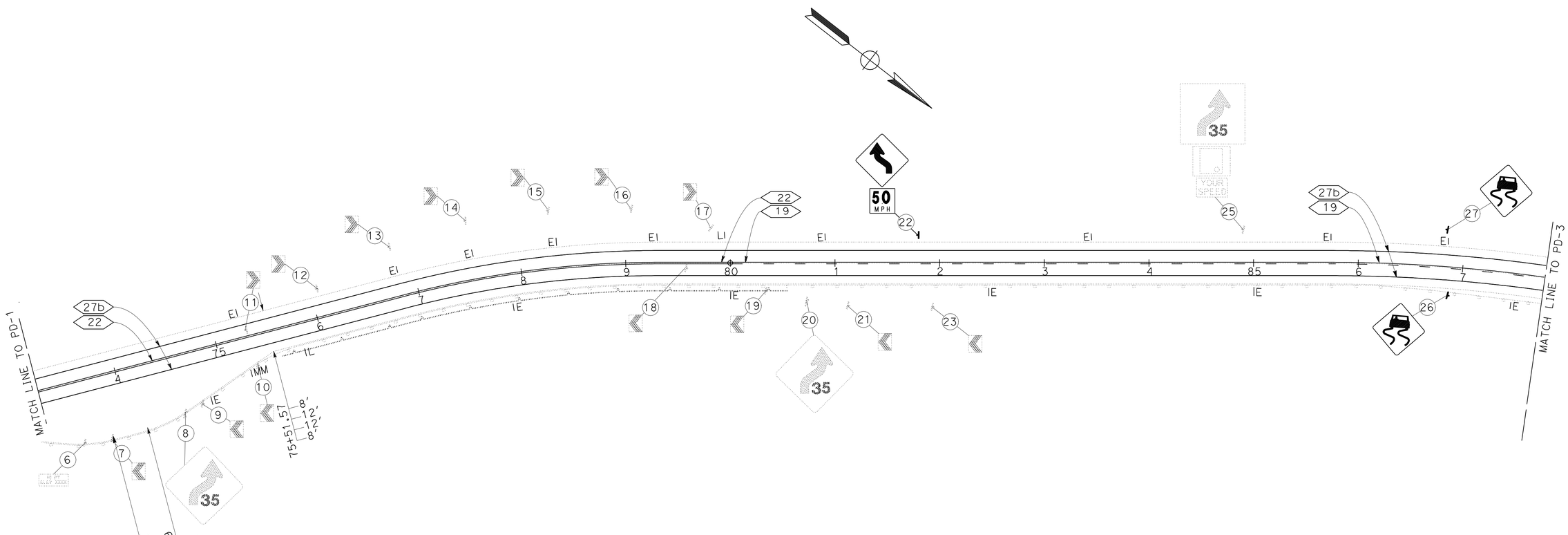

NOTE: THIS PLAN ACCURATE FOR PAVEMENT DELINEATION AND SIGNS ONLY.

PAVEMENT DELINEATION AND SIGN PLAN

SCALE 1" = 50'

PD-2

STATE OF CALIFORNIA - DEPARTMENT OF TRANSPORTATION
Caltrans® TRAFFIC OPERATIONS

FUNCTIONAL SUPERVISOR: TERRY ERLWEIN
CALCULATED-DESIGNED BY: JOEL NASH
CHECKED BY: DONNA HOLLAND
REVISED BY
DATE REVISED

LAST REVISION 06-21-11
DATE PLOTTED => 15-AUG-2011
TIME PLOTTED => 08:49

Dist	COUNTY	ROUTE	POST MILES TOTAL PROJECT	SHEET No.	TOTAL SHEETS
09	Mno	395	118.7/119.6	77	139

6-1-11
REGISTERED CIVIL ENGINEER DATE

8-8-11
PLANS APPROVAL DATE

REGISTERED PROFESSIONAL ENGINEER
DONNA HOLLAND
No. 64205
Exp 6-30-13
CIVIL
STATE OF CALIFORNIA

THE STATE OF CALIFORNIA OR ITS OFFICERS OR AGENTS SHALL NOT BE RESPONSIBLE FOR THE ACCURACY OR COMPLETENESS OF SCANNED COPIES OF THIS PLAN SHEET.

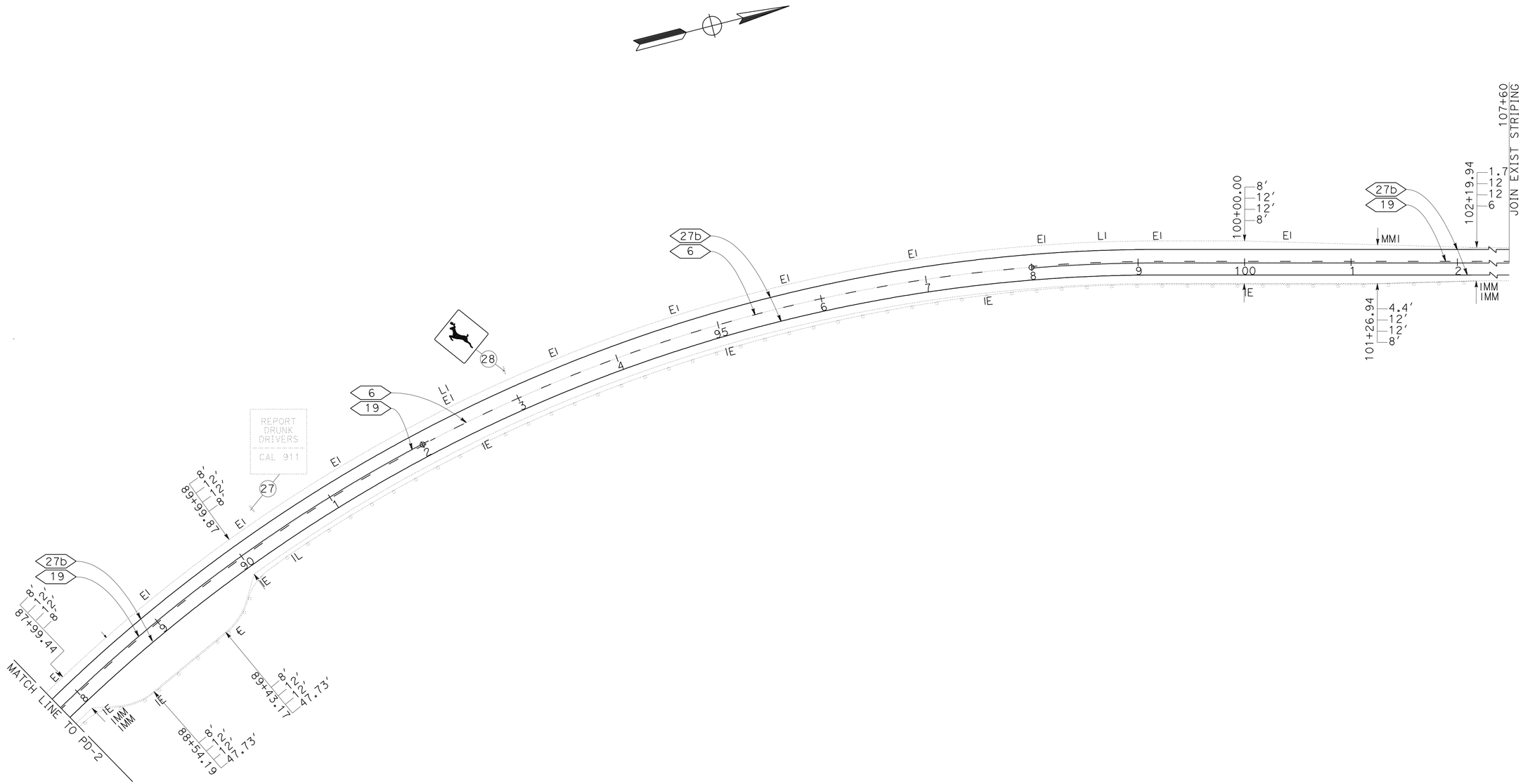

NOTE: THIS PLAN ACCURATE FOR PAVEMENT DELINEATION AND SIGNS ONLY.

PAVEMENT DELINEATION AND SIGN PLAN

SCALE 1" = 50'

PD-3

STATE OF CALIFORNIA - DEPARTMENT OF TRANSPORTATION
Caltrans® TRAFFIC OPERATIONS

FUNCTIONAL SUPERVISOR: TERRY ERLWEIN
CALCULATED-DESIGNED BY: JOEL NASH
CHECKED BY: DONNA HOLLAND
REVISED BY
DATE REVISED

LAST REVISION 06-21-11
DATE PLOTTED => 15-AUG-2011
TIME PLOTTED => 08:49

Dist	COUNTY	ROUTE	POST MILES TOTAL PROJECT	SHEET No.	TOTAL SHEETS
09	Mno	395	118.7/119.6	78	139

6-1-11
REGISTERED CIVIL ENGINEER DATE

8-8-11
PLANS APPROVAL DATE

REGISTERED PROFESSIONAL ENGINEER DONNA HOLLAND No. 64205 Exp 6-30-13 CIVIL STATE OF CALIFORNIA

THE STATE OF CALIFORNIA OR ITS OFFICERS OR AGENTS SHALL NOT BE RESPONSIBLE FOR THE ACCURACY OR COMPLETENESS OF SCANNED COPIES OF THIS PLAN SHEET.

NOTES:

1. THIS PLAN ACCURATE FOR PAVEMENT DELINATION WORK ONLY.
2. DETAIL 22 TRAFFIC STRIPE SHALL BE PLACED ON PREVIOUSLY GROUND CENTERLINE RUMBLE STRIP. FOR CENTERLINE RUMBLE STRIP GRIND DETAIL SEE SHEET C-3.

DELINEATORS (CLASS 2)

STA	L†	R†	DELINEATOR (CLASS 2) TYPE E EA	REMARKS
56+55		X	1	
56+79		X	1	
58+60		X	1	
58+72		X	1	
59+00	X	X	2	
60+00	X	X	2	
61+81		X	1	
62+50	X		1	
64+27		X	1	
65+00	X		1	
65+91		X	1	
66+73		X	1	
67+50	X		1	
67+55		X	1	
68+37		X	1	
69+19		X	1	
69+75	X		1	
70+01		X	1	
70+83		X	1	
72+47		X	1	
72+75	X		1	
74+93		X	1	
75+21	X		1	
76+85	X		1	
77+67	X		1	
77+93		X	1	
78+49	X		1	
79+31	X		1	
80+00		X	1	
80+95	X		1	
82+50		X	1	
83+41	X		1	
85+00		X	1	
85+74	X		1	
86+86	X		1	
87+50		X	1	
87+98	X		1	
88+05		X	1	
88+50		X	1	
89+10	X		1	
89+45		X	1	
90+00		X	1	
90+22	X		1	
91+34	X		1	
92+46	X		1	
92+50		X	1	
93+58	X		1	
94+70	X		1	
95+00		X	1	
95+82	X		1	
96+94	X		1	
97+50		X	1	
98+06	X		1	
99+18	X		1	
100+00		X	1	
100+42	X		1	
TOTAL			58	

PAINT TRAFFIC STRIPE (2-COAT) AND PAVEMENT MARKERS (RETROREFLECTIVE-RECESSED)

STATION TO STATION (LOCATION)			LENGTH (N)	DETAIL No. 6	19	22	27B	PAVEMENT MARKERS (RETROREFLECTIVE-RECESSED) TYPE D	TYPE H
			LF	LF	LF	LF	LF	EA	EA
54+00	-	80+00	2600			2600	5200	216	
80+00	-	92+00	1200		1200		2400	26	52
92+00	-	98+00	600	600			1200	13	
98+00	-	107+60	960		960		1920	20	40
SUBTOTAL				600	2160	2600	10720	275	92
TOTAL				16,080				367	

(N) - NOT A SEPARATE PAY ITEM, FOR INFORMATION ONLY.

OBJECT MARKER TYPE L-2

STATION	L†	R†	EA
58+75		X	1
65+69	X		1
71+62	X		1
75+77		X	1
79+89	X		1
90+16		X	1
92+37	X		1
98+77	X		1
TOTAL			8

REMOVE MARKERS AND DELINEATORS

STATION TO STATION	REMOVE DELINEATORS EA	REMOVE MARKERS EA
58+00 TO 102+00	58	16
TOTAL	58	16

MILEPOST MARKER

STATION	L†	R†	MILEPOST MARKER EA	MESSAGE
59+00		X	1	395 Mno 118.694 Bk
59+00		X	1	395 Mno R118.694 Ahd
75+15		X	1	395 Mno R119.00
101+55	X		1	395 Mno R119.50
102+18		X	1	395 Mno R119.512 Bk
102+18		X	1	395 Mno 119.515 Ahd
TOTAL			6	

PAVEMENT DELINEATION QUANTITIES

NO SCALE

PDQ-1

STATE OF CALIFORNIA - DEPARTMENT OF TRANSPORTATION
Caltrans® TRAFFIC OPERATIONS

FUNCTIONAL SUPERVISOR: TERRY ERLWEIN
CALCULATED-DESIGNED BY: JOEL NASH
CHECKED BY: DONNA HOLLAND
REVISED BY / DATE REVISED

LAST REVISION 06-21-11
DATE PLOTTED => 17-AUG-2011
TIME PLOTTED => 05:55

Dist	COUNTY	ROUTE	POST MILES TOTAL PROJECT	SHEET No.	TOTAL SHEETS
09	Mno	395	118.7/119.6	79	139

6-1-11
REGISTERED CIVIL ENGINEER DATE

8-8-11
PLANS APPROVAL DATE

REGISTERED PROFESSIONAL ENGINEER DONNA HOLLAND No. 64205 Exp 6-30-13 CIVIL STATE OF CALIFORNIA

THE STATE OF CALIFORNIA OR ITS OFFICERS OR AGENTS SHALL NOT BE RESPONSIBLE FOR THE ACCURACY OR COMPLETENESS OF SCANNED COPIES OF THIS PLAN SHEET.

NOTES:

1. EXACT LOCATION OF SIGN SHALL BE DETERMINED BY THE ENGINEER.
2. ALL PARTS SHALL BE PAINTED WITH ONE COAT OF RUST RESISTANT PRIMER AND TWO COATS OF YELLOW GLOSS ENAMEL.
3. HARDWARE TO BE SUPPLIED BY THE CONTRACTOR.
4. STANDARD 1/8" PIPE FITTING TO BE SUPPLIED BY THE CONTRACTOR (GREASE ZERK).
5. DRILL 1/2" HOLES AS NECESSARY TO MOUNT SIGN PANEL TO FRAME.
6. DRILL 5/8" HOLE THROUGH PIPE, INSERT REBAR CENTERED ON PIPE, AND POUR CONCRETE FOUNDATION.

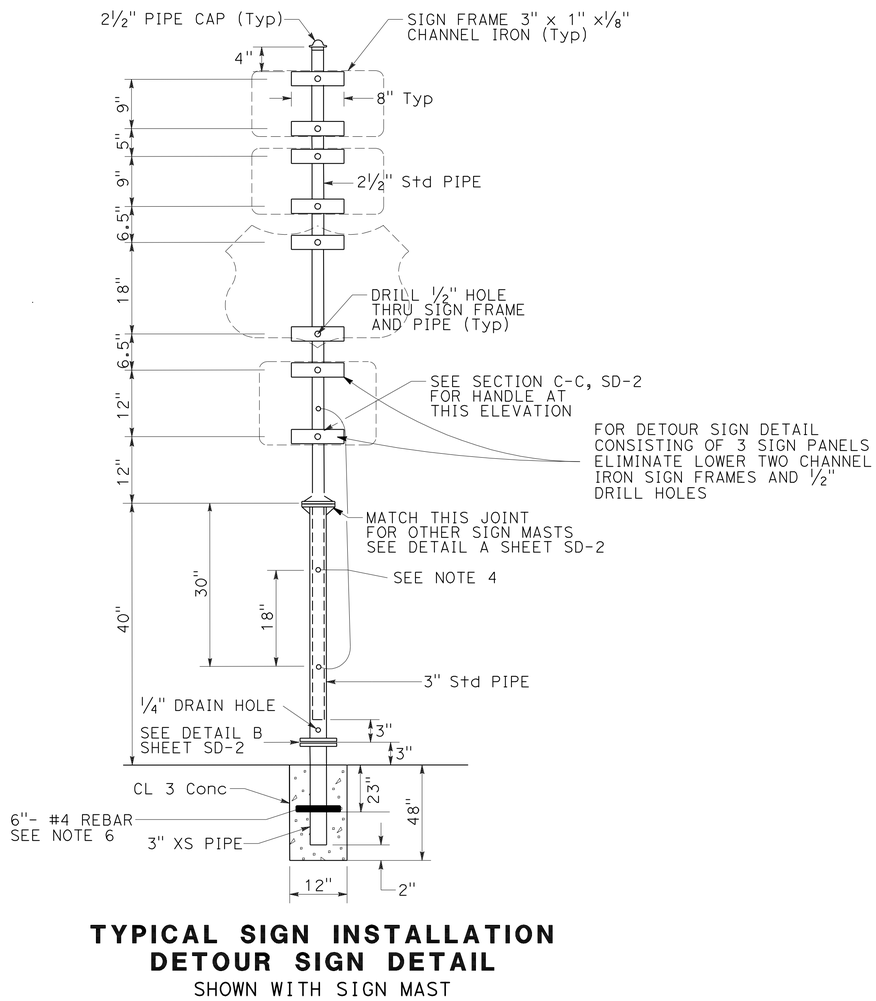

TYPICAL SIGN INSTALLATION DETOUR SIGN DETAIL
SHOWN WITH SIGN MAST

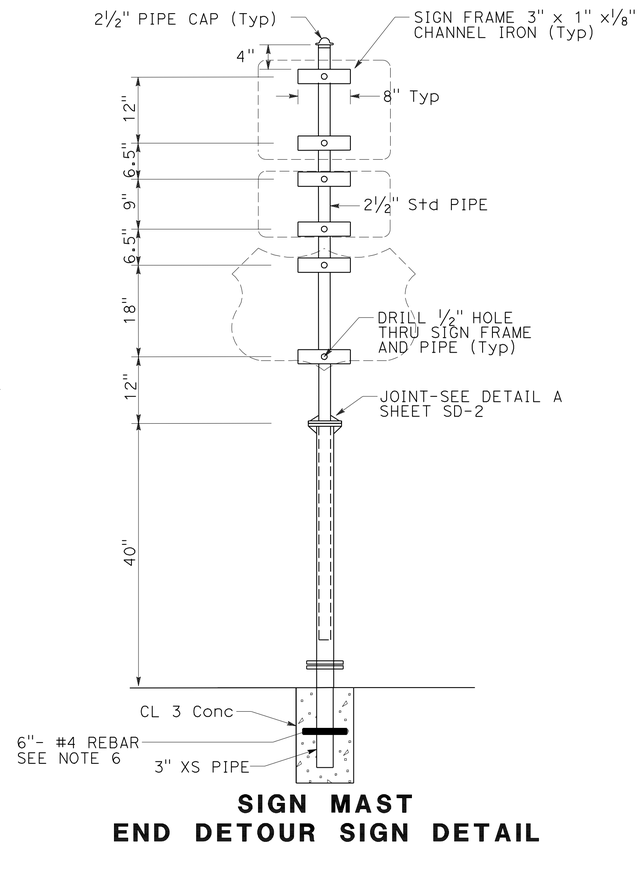

SIGN MAST
END DETOUR SIGN DETAIL

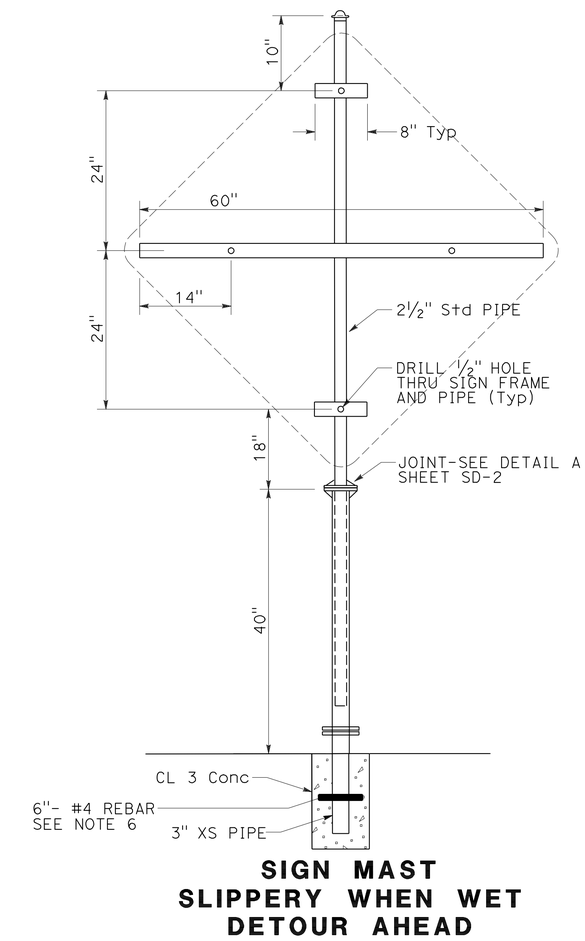

SIGN MAST
SLIPPERY WHEN WET
DETOUR AHEAD

SIGN DETAILS
NO SCALE **SD-1**

STATE OF CALIFORNIA - DEPARTMENT OF TRANSPORTATION
Caltrans® TRAFFIC OPERATIONS

FUNCTIONAL SUPERVISOR: TERRY ERLWEIN
CALCULATED-DESIGNED BY: JOEL NASH
CHECKED BY: DONNA HOLLAND
REVISED BY
DATE REVISED

LAST REVISION 06-28-11
DATE PLOTTED => 15-AUG-2011
TIME PLOTTED => 08:49

Dist	COUNTY	ROUTE	POST MILES TOTAL PROJECT	SHEET No.	TOTAL SHEETS
09	Mno	395	118.7/119.6	80	139

6-1-11
REGISTERED CIVIL ENGINEER DATE

8-8-11
PLANS APPROVAL DATE

REGISTERED PROFESSIONAL ENGINEER
DONNA HOLLAND
No. 64205
Exp. 6-30-13
CIVIL
STATE OF CALIFORNIA

THE STATE OF CALIFORNIA OR ITS OFFICERS OR AGENTS SHALL NOT BE RESPONSIBLE FOR THE ACCURACY OR COMPLETENESS OF SCANNED COPIES OF THIS PLAN SHEET.

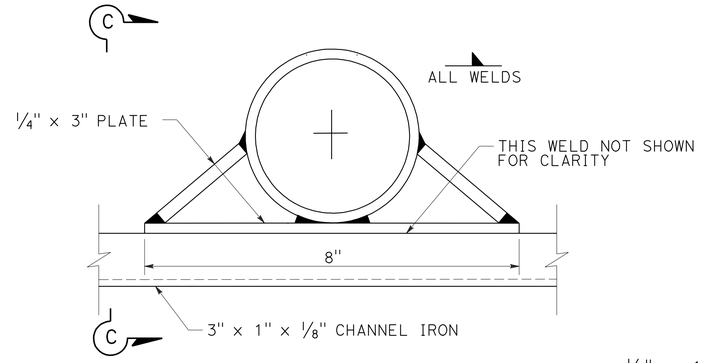

SIGN FRAME DETAIL (Typ)

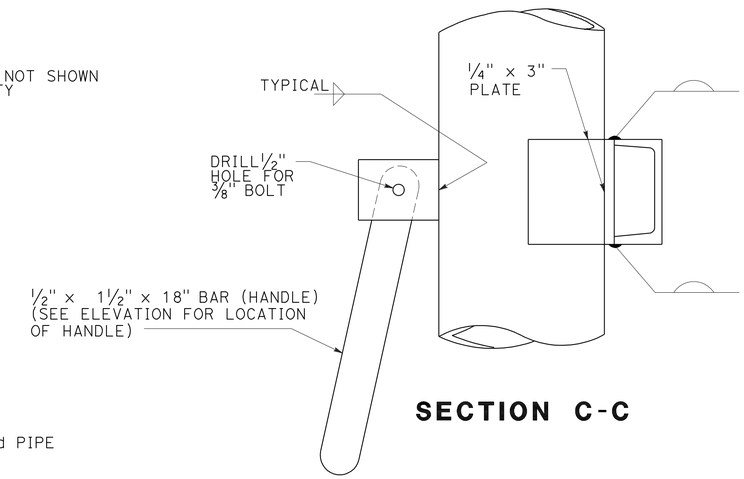

SECTION C-C

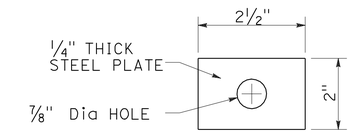

PLATE WASHER

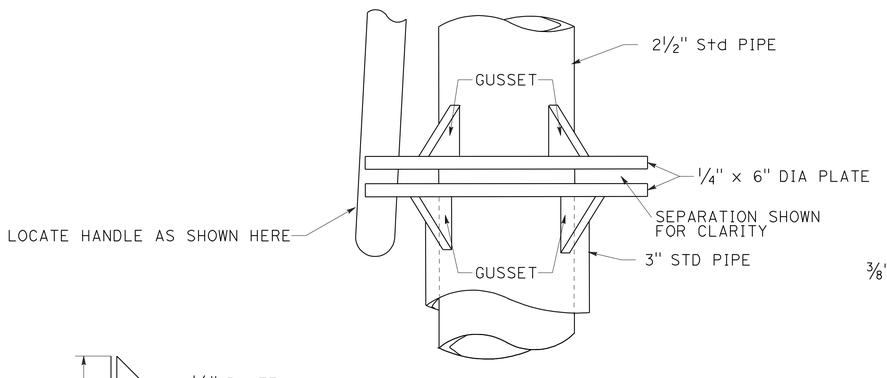

ELEVATION

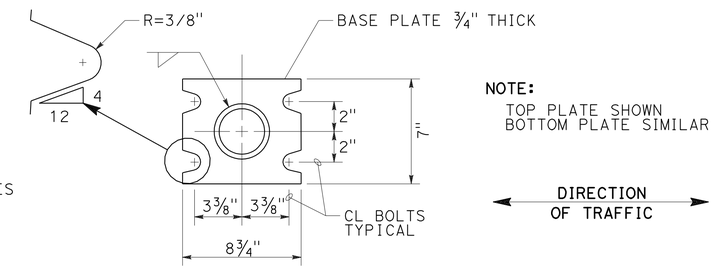

NOTE:
TOP PLATE SHOWN
BOTTOM PLATE SIMILAR

DIRECTION OF TRAFFIC

SECTION B-B BREAKAWAY PLATE

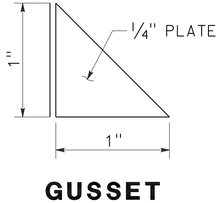

GUSSET

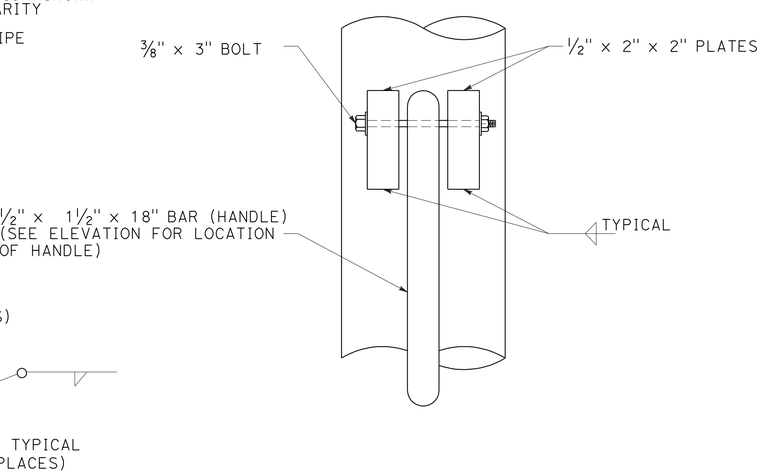

HANDLE DETAIL

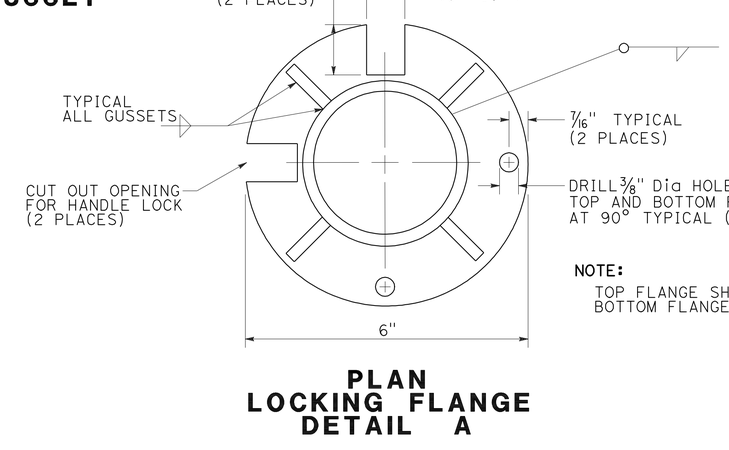

NOTE:
TOP FLANGE SHOWN
BOTTOM FLANGE SIMILAR

PLAN LOCKING FLANGE DETAIL A

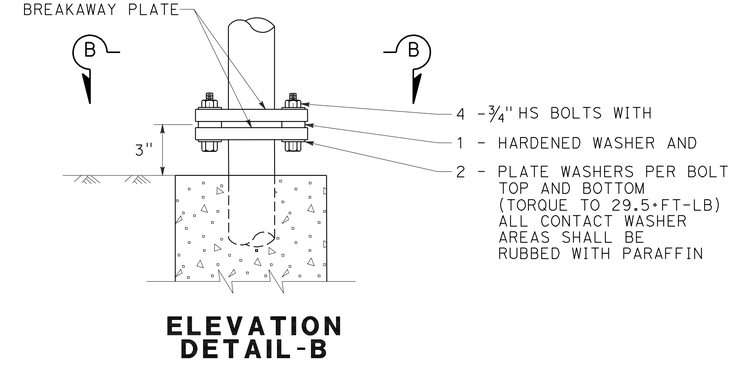

ELEVATION DETAIL-B

SIGN DETAILS
NO SCALE **SD-2**

STATE OF CALIFORNIA - DEPARTMENT OF TRANSPORTATION
Caltrans® TRAFFIC OPERATIONS

FUNCTIONAL SUPERVISOR: TERRY ERLWEIN
CALCULATED-DESIGNED BY: JOEL NASH
CHECKED BY: DONNA HOLLAND
REVISED BY
DATE REVISED

LAST REVISION 06-07-11
DATE PLOTTED => 15-AUG-2011
TIME PLOTTED => 08:56

Dist	COUNTY	ROUTE	POST MILES TOTAL PROJECT	SHEET No.	TOTAL SHEETS
09	Mno	395	118.7/119.6	81	139

REGISTERED CIVIL ENGINEER 6-1-11 DATE

8-8-11
PLANS APPROVAL DATE

REGISTERED PROFESSIONAL ENGINEER DONNA HOLLAND No. 64205 Exp 6-30-13 CIVIL STATE OF CALIFORNIA

THE STATE OF CALIFORNIA OR ITS OFFICERS OR AGENTS SHALL NOT BE RESPONSIBLE FOR THE ACCURACY OR COMPLETENESS OF SCANNED COPIES OF THIS PLAN SHEET.

NOTES:
1. EXACT LOCATION OF ROADSIDE SIGNS TO BE DETERMINED BY THE ENGINEER.
2. EXISTING SIGN PANELS AND TURNABLE SIGN MASTS AND STEEL PORTION OF FOUNDATION TO BE REMOVED SHALL BE SALVAGED AS NOTED.
3. SIGN PANELS SHALL BE SALVAGED AS NOTED.
4. VEHICLE SPEED FEEDBACK SIGNS AND ALL ASSOCIATED ELECTRONICS INCLUDING SOLAR PANELS SHALL BE SALVAGED.

SIGN SUMMARY

SIGN NUMBER	STATION	LEFT	RIGHT	CODE	MESSAGE	SIZE (L X D) INCHxINCH	REMOVE ROADSIDE SIGN EA	RESET ROADSIDE SIGN EA	ROADSIDE SIGN (ONE POST) EA	ROADSIDE SIGN (TURNABLE METAL POST) EA	FURNISH SINGLE SHEET ALUMINUM SIGN 0.063"-UNFRAMED SQFT	FURNISH SINGLE SHEET ALUMINUM SIGN 0.080"-UNFRAMED SQFT	SINGLE FACED	DOUBLE FACED	SIGN MATERIALS BACKGROUND SHEETING COLOR	SIGN MATERIALS BACKGROUND RETROREFLECTIVE ASTM TYPE	SIGN MATERIALS LEGEND SHEETING COLOR	SIGN MATERIALS LEGEND RETROREFLECTIVE ASTM TYPE	SIGN MATERIALS GRAFFITI FILM STANDARD	SIGN MATERIALS GRAFFITI FILM PREMIUM	POSTS SIZE INCHxINCH	FNBT	FSBT	FEBT	FWBT	REMARK
1	58+00		X	W8-5	SLIPPERY WHEN WET	-	1															X				SALVAGE
2	58+80		X	W8-5	SLIPPERY WHEN WET	48"x48"				1		16.00	X		YELLOW	III	BLACK		X		TURNABLE	X				
3	63+40		X	W1-4L	REVERSE CURVE LEFT RIGHT	36"x36"			1		9.00		X		YELLOW	III	BLACK		X		4" x 6"	X				
				W13-1	50 MPH	24"x24"					4.00		X		YELLOW	III	BLACK		X			X				
4	70+55		X	W4-19 (CA)	VEHICLE SPEED FEEDBACK SIGN		1															X				SALVAGE
5	73+00		X	W1-8	CHEVRON		1															X	X			
6	73+56		X	G16 (CA)	HI PT ELEV		1															X				
7	73+80		X	W1-8	CHEVRON		1															X	X			
8	74+47		X	W4-21 (CA)	REVERSE CURVE 35		1															X				SALVAGE
9	74+70		X	W1-8	CHEVRON		1															X	X			
10	75+30		X	W1-8	CHEVRON		1															X	X			
11	75+30	X		W1-8	CHEVRON		1															X	X			
12	76+05	X		W1-8	CHEVRON		1															X	X			
13	76+80	X		W1-8	CHEVRON		1															X	X			
14	77+55	X		W1-8	CHEVRON		1															X	X			
15	78+35	X		W1-8	CHEVRON		1															X	X			
16	79+08	X		W1-8	CHEVRON		1															X	X			
17	79+58		X	W1-8	CHEVRON		1															X	X			
18	79+80	X		W1-8	CHEVRON		1															X	X			
19	80+30		X	W1-8	CHEVRON		1															X	X			
20	80+68		X	W4-21 (CA)	REVERSE CURVE 35		1																X			SALVAGE
21	81+10		X	W1-8	CHEVRON		1															X	X			
22	81+80	X		W1-4L	REVERSE CURVE LEFT RIGHT	36"x36"			1		9.00		X		YELLOW	III	BLACK		X		4" x 6"		X			
				W13-1	50 MPH	24"x24"					4.00		X		YELLOW	III	BLACK		X				X			
23	81+90		X	W1-8	CHEVRON		1															X	X			
24	85+00	X		W4-19 (CA)	VEHICLE SPEED FEEDBACK SIGN		1																X			SALVAGE
25	86+90		X	W8-5	SLIPPERY WHEN WET	48"x48"	1			1		16.00	X		YELLOW	III	BLACK		X		TURNABLE	X				SALVAGE
26	86+90	X		W8-5	SLIPPERY WHEN WET	48"x48"	1			1		16.00	X		YELLOW	III	BLACK		X		TURNABLE		X			SALVAGE
27	90+30	X		G81	REPORT DUI			1															X			
28	93+00	X		W11-3	DEER	36"x36"	1		1		9.00				YELLOW	III	BLACK		X		4" x 6"		X			
						TOTAL	24	1	3	3	35.00	48.00														

SIGN QUANTITIES
NO SCALE **SQ-1**

REVISED BY | DATE REVISED
JOEL NASH | DONNA HOLLAND
CALCULATED-DESIGNED BY | CHECKED BY
FUNCTIONAL SUPERVISOR: TERRY ERLWEIN
STATE OF CALIFORNIA - DEPARTMENT OF TRANSPORTATION
Caltrans® TRAFFIC OPERATIONS

LAST REVISION 06-07-11 | DATE PLOTTED => 15-AUG-2011 | TIME PLOTTED => 08:56

Dist	COUNTY	ROUTE	POST MILES TOTAL PROJECT	SHEET No.	TOTAL SHEETS
09	Mno	395	118.7/119.6	82	139

REGISTERED CIVIL ENGINEER 6-8-11 DATE

8-8-11
PLANS APPROVAL DATE

REGISTERED PROFESSIONAL ENGINEER ADAM ZUMSTEIN No. 76975 Exp. 12-31-12 CIVIL STATE OF CALIFORNIA

THE STATE OF CALIFORNIA OR ITS OFFICERS OR AGENTS SHALL NOT BE RESPONSIBLE FOR THE ACCURACY OR COMPLETENESS OF SCANNED COPIES OF THIS PLAN SHEET.

ROADWAY QUANTITIES

STATION TO STATION/ LOCATION	ROADWAY EXCAVATION*	ROCK EXCAVATION*	HMA (TYPE A)	COLD PLANE AC PAVEMENT	EMBANKMENT	CLASS 2 AB	ROCK SLOPE SCALING	TEMPORARY REINFORCED SILT FENCE
	CY	CY	TON	SQYD	CY (N)	CY	SQFT	LF
56+55 TO 102+20	41361	1040	9735	703	40212	1867		4491
66+60 TO 75+80							63391	
80+00 TO 84+80							33726	
HMA (Misc AREA)			3					
TOTAL	41361	1040	9738	703		1867	97116	4491

* - ROAD EXCAVATION AND ROCK EXCAVATION CAN BE USED AS EMBANKMENT.
(N) - NOT A SEPARATE PAY ITEM, FOR INFORMATION ONLY.

METAL BEAM GUARD RAILING

STATION TO STATION	L+	R+	SALVAGE MBGR	METAL BEAM GUARD RAILING (STEEL POST)	ALTERNATIVE FLARED TERMINAL SYSTEM
			LF	LF	EACH
58+36.95 TO 120+19.94		X	3839	4387.5	1
TOTAL			3839	4387.5	1

RUMBLE STRIP

LOCATION			LENGTH (N)	SHOULDER RUMBLE STRIP		CENTERLINE RUMBLE STRIP
				L+	R+	
STATION	TO	STATION	LF	STA	STA	STA
56+55	-	58+72	217			2.17
58+72	-	61+06	234		2.34	2.34
61+06	-	80+00	1894	18.94	18.94	18.94
80+00	-	100+00	2000	20.00	20.00	
100+00	-	101+27	127		1.27	
SUBTOTAL				38.94	42.55	23.45
TOTAL				81.49		23.68

N) - NOT A SEPARATE PAY ITEM, FOR INFORMATION ONLY.

REMOVE BASE AND SURFACING

STATION TO STATION	CY (N)
59+00 TO 66+30	869
80+60 TO 93+50	1925
101+80 TO 102+20	48

(N) - NOT A SEPARATE PAY ITEM.
FOR INFORMATION ONLY.

TOP SOIL AND DUFF STRIPPING

STATION TO STATION	DIRECTION		AREA SQ YDS (N)
	L+	R+	
59+60 TO 64+10		X	2429
59+16 TO 66+80	X		5473
84+84 TO 87+00		X	1280
84+84 TO 88+00	X		1856
90+85 TO 99+90		X	3069
90+75 TO 99+45	X		3188

(N) - NOT A SEPARATE PAY ITEM, FOR INFORMATION ONLY

EROSION CONTROL

STATION TO STATION	L+	R+	MOVE-IN/MOVE-OUT (EROSION CONTROL)	EROSION CONTROL (HYDROSEED)	ROLLED EROSION CONTROL PRODUCT (BLANKET)	ANCHORED WIRE MESH SYSTEM	ROCK DOWELS	DUFF	EROSION CONTROL (DRY SEED)	EROSION CONTROL (PUNCHED STRAW)
			EA	SQFT	SQFT	SQFT	EA	SQYD	SQFT	SQFT
56+55 TO 102+20	X	X	3							
59+00 TO 60+80	X				3385			376	3385	
60+80 TO 64+00	X							1222		11000
64+00 TO 66+80	X				28781			3198	28781	
66+60 TO 75+80	X			63391	63391	63391	592			
76+00 TO 80+00	X				6574			1918	6574	10688
80+00 TO 84+80	X			33726	33726	33726	350			
85+00 TO 89+20	X							1380		12419
90+20 TO 94+60	X							765		6888
94+80 TO 101+00	X				19971			2219	19971	
59+80 TO 64+10		X			20833			2315	20833	
71+50 TO 75+60		X						631		5683
82+00 TO 96+20		X			43466			5308	43466	4297
TOTAL			3	97117	220127	97117	942	19332	123010	50975

MARKERS (CULVERT)

STATION	L+	R+	EA
62+96		X	1
62+72	X		1
65+69	X	X	2
71+71	X	X	2
80+57	X	X	2
86+41		X	1
86+10	X		1
92+37	X	X	2
98+78	X	X	2
TOTAL			14

CABLE RAILING

STATION TO STATION/ LOCATION	LF	COMMENTS
DRAINAGE STRUCTURES	45.2	TOTAL FROM SHEET DQ-2
RET WALL A & B	1104	TOTAL FROM STRUCTURES
TOTAL	1149.2	

TEMPORARY WATER POLLUTION CONTROL ITEMS*

ITEM	QUANTITY	UNITS
Temp FIBER ROLL	500	LF
Temp CONSTRUCTION ENTRANCE	2	EA
Temp DRAINAGE INLET PROTECTION	9	EA
Temp CHECK DAM	50	LF

*LOCATIONS SHALL BE DIRECTED BY THE ENGINEER.

TACK COAT

	SQYD (N)	TONS
HMA BETWEEN LIFTS	20828	2.6
EXISTING PAVEMENT	10548	1.8
COLD PLANED PAVEMENT	773	0.2
Total		4.6

N) - NOT A SEPARATE PAY ITEM, FOR INFORMATION ONLY.

SUMMARY OF QUANTITIES

NO SCALE

Q-1

REVISED BY | DATE REVISED
ADAM ZUMSTEIN | STEPHEN WINZENREAD
CALCULATED-DESIGNED BY | CHECKED BY
FUNCTIONAL SUPERVISOR: STEPHEN WINZENREAD
STATE OF CALIFORNIA - DEPARTMENT OF TRANSPORTATION
Caltrans® DESIGN

LAST REVISION 06-16-11 | DATE PLOTTED => 15-AUG-2011 | TIME PLOTTED => 08:56

DIST	COUNTY	ROUTE	POST MILES TOTAL PROJECT	SHEET NO.	TOTAL SHEETS
09	Mno	395	118.7/119.6	83	139

REGISTERED CIVIL ENGINEER

November 17, 2006
PLANS APPROVAL DATE

REGISTERED PROFESSIONAL ENGINEER Dallas Forester No. C37765 Exp. 12-31-06 CIVIL STATE OF CALIFORNIA

The State of California or its officers or agents shall not be responsible for the accuracy or completeness of electronic copies of this plan sheet.

To accompany plans dated 8-8-11

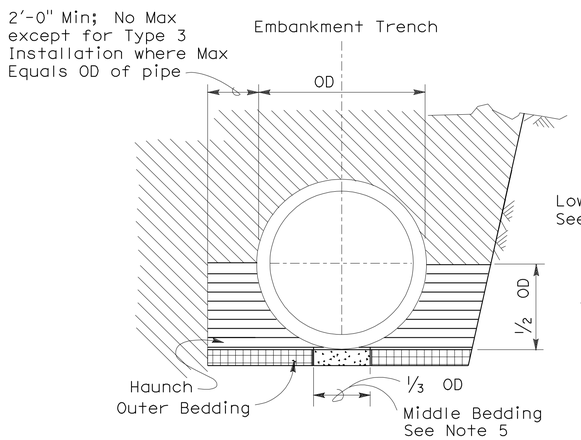

BACKFILL

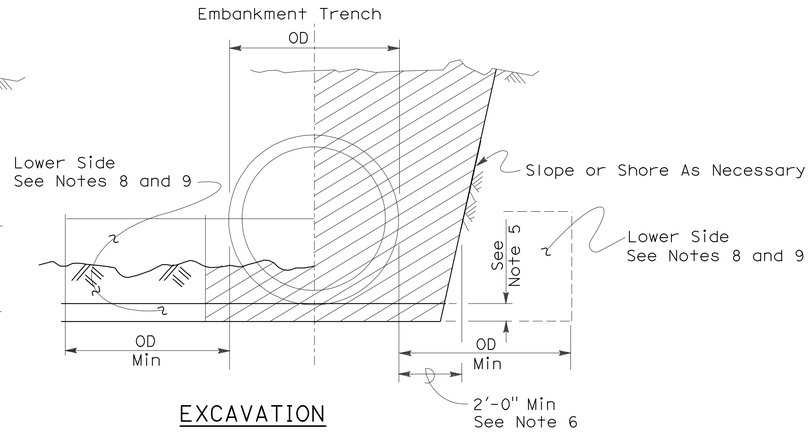

EXCAVATION

Roadway Embankment

Structure Backfill (Culvert) See Note 6

Structure Backfill (Culvert) See Note 6

Loose Backfill

Excavation Structure (Culvert)

TYPE 1 INSTALLATION:

The haunch and outer bedding shall be compacted to a minimum 90 percent relative compaction. In addition, the minimum sand equivalent in these areas shall be 30 and the maximum percentage passing the 75 μm sieve size shall be 12.

TYPE 2 INSTALLATION:

The haunch and outer bedding shall be compacted to a minimum 90 percent relative compaction. In addition, the minimum sand equivalent in these areas shall be 25.

TYPE 3 INSTALLATION:

The haunch and outer bedding shall be compacted to a minimum 85 percent relative compaction. 90 percent relative compaction will be required where the fill over the pipe is less than 4'-0" or 1/2 OD.

NOTES:

1. Unless otherwise shown on the plans or specified in the special provision, the Contractor shall have the option of selecting the class of RCP and the type of installation to be used, provided the height of cover does not exceed the value shown for the RCP selected.
   Example: 24" RCP culvert with maximum cover of 19'-0" the options are:
   a) Class III or stronger with Installation Type 1.
   b) Class III Special or stronger with Installation Type 2.
   c) Class IV Special or stronger with Installation Type 3.
   Cover is defined as the maximum vertical distance from top of the pipe to finished grade within the length of any given culvert.
2. The class of RCP and Installation Type selected shall be the same throughout the length of any given culvert.
3. The "length of any culvert" is defined as the culvert between:
   a) Successive drainage structure (inlets, junction boxes, headwalls, etc.).
   b) A drainage structure and the inlet or outlet end of the culvert.
   c) The inlet and outlet end of the culvert when there are no intervening drainage structures.
4. Oval and arch shaped RCP shall not be used.
5. 1/25 OD Min, not less than 3".
6. Slurry cement backfill may be substituted for backfill in the outer bedding and haunch areas. If slurry is used the outer and middle beddings shall be omitted. Prior to installation the soil under the middle 1/3 of the outside diameter of the pipe shall be softened by scarifying or other means to a minimum depth of 1/25 OD, but not less than 3". Where slurry cement backfill is used clear distance to trench wall may be reduced as set forth in Section 19-3.062 of the Standard Specifications.
7. Backfill shall be placed full width of excavation except where dimensions are shown for backfill width or thickness. Dimensions shown are minimums.
8. Lower side shall be suitable material as determined by the Engineer. Otherwise it shall be considered unsuitable as set forth in Section 19-2.02 of the Standard Specifications. See Note 9.
9. Where the pipe is placed in a trench, if the trench walls are sloped at 5 vertical to 1 horizontal or steeper for at least 90 percent of the trench height or up to not less than 12" from the grading plane, the firmness of the soil in the lower side need not be considered.
10. Non-reinforced precast concrete pipe sizes 3'-0" or smaller may be placed under installation Types 1, 2 or 3.

INSTALLATION TYPE 1

MINIMUM CLASS AND D-LOAD	COVER	
	108" Dia AND SMALLER	OVER 108" Dia
Class II 1000D	14.9'	12.9'
Class III 1350D	15.0' - 20.9'	13.0' - 18.9'
Class III Special 1700D	21.0' - 26.9'	19.0' - 24.9'
Class IV 2000D	27.0' - 31.9'	25.0' - 29.9'
Class IV Special 2500D	32.0' - 40.9'	30.0' - 38.9'
Class V 3000D	41.0' - 49.9'	39.0' - 46.9'
Class V Special 3600D	50.0' - 59.0'	47.0' - 58.0'

INSTALLATION TYPE 2

MINIMUM CLASS AND D-LOAD	COVER
Class II 1000D	9.9'
Class III 1350D	10.0'- 14.9'
Class III Special 1700D	15.0' - 19.9'
Class IV 2000D	20.0' - 24.9'
Class IV Special 2500D	25.0' - 31.9'
Class V 3000D	32.0' - 38.9'
Class V Special 3600D	39.0' - 47.0'

INSTALLATION TYPE 3

MINIMUM CLASS AND D-LOAD	COVER	
	48" Dia AND SMALLER	OVER 48" Dia
Class II 1000D	7.9'	5.9'
Class III 1350D	8.0' - 10.9'	6.0' - 8.9'
Class III Special 1700D	11.0' - 14.9'	9.0' - 12.9'
Class IV 2000D	15.0' - 17.9'	13.0' - 15.9'
Class IV Special 2500D	18.0' - 21.9'	16.0' - 19.9'
Class V 3000D	22.0' - 26.9'	20.0' - 24.9'
Class V Special 3600D	30.0' - 33.0'	25.0' - 31.0'

STATE OF CALIFORNIA
DEPARTMENT OF TRANSPORTATION

EXCAVATION AND BACKFILL CONCRETE PIPE CULVERTS

NO SCALE

RSP A62DA DATED NOVEMBER 17, 2006 SUPERSEDES STANDARD PLAN A62DA DATED MAY 1, 2006 - PAGE 20 OF THE STANDARD PLANS BOOK DATED MAY 2006.

REVISED STANDARD PLAN RSP A62DA

2006 REVISED STANDARD PLAN RSP A62DA

10-26-06

Dist	COUNTY	ROUTE	POST MILES TOTAL PROJECT	SHEET No.	TOTAL SHEETS
09	Mno	395	118.7/119.6	84	139

Randell D. Hiatt
REGISTERED CIVIL ENGINEER

May 20, 2011
PLANS APPROVAL DATE

REGISTERED PROFESSIONAL ENGINEER Randell D. Hiatt No. C50200 Exp. 6-30-11 CIVIL STATE OF CALIFORNIA

The State of California or its officers or agents shall not be responsible for the accuracy or completeness of electronic copies of this plan sheet.

To accompany plans dated 8-8-11

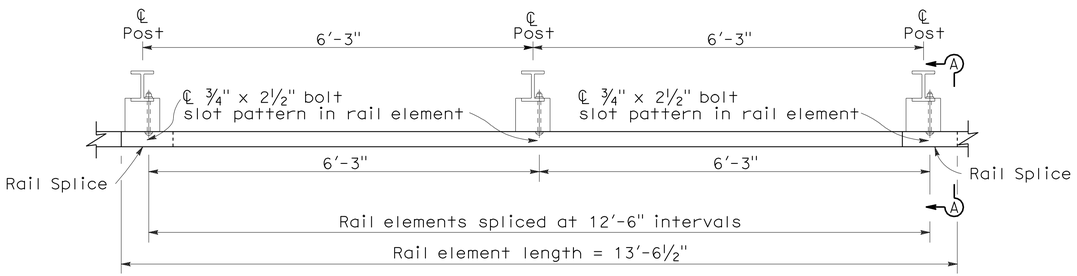

PLAN

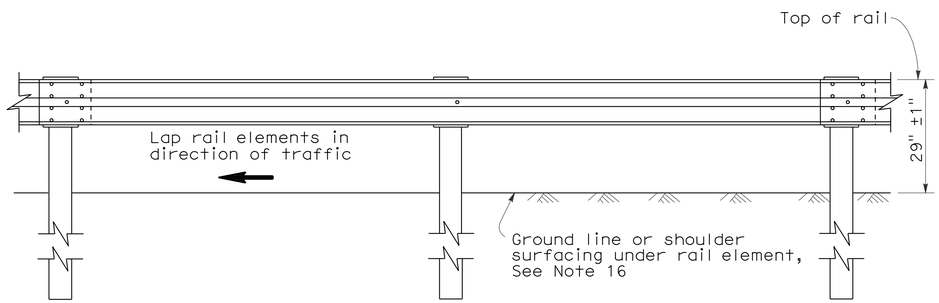

ELEVATION

METAL BEAM GUARD RAILING WITH STEEL POSTS AND NOTCHED WOOD OR NOTCHED RECYCLED PLASTIC BLOCKS

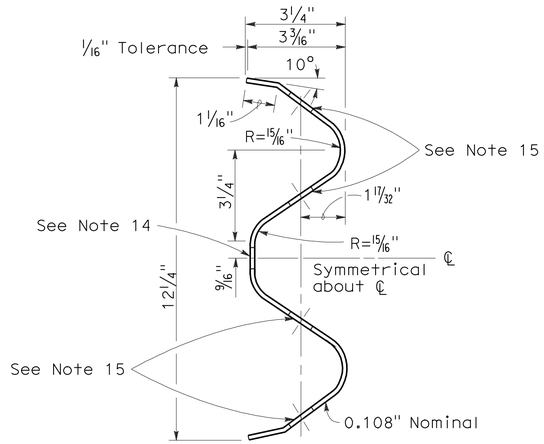

SECTION THRU RAIL ELEMENT

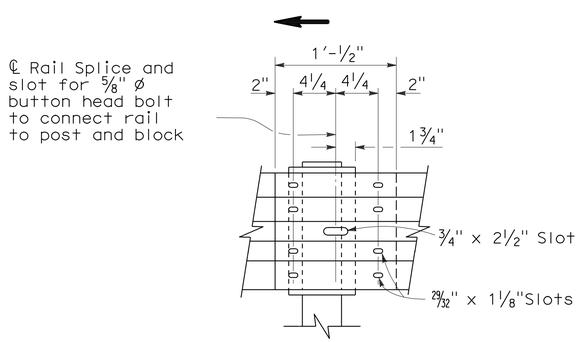

ELEVATION

RAIL ELEMENT SPLICE DETAIL

a) Connect the over lapped end of the rail elements with ⅝" ø x 1⅜" button head oval shoulder splice bolts inserted into the 29⁄₃₂" x 1⅛" slots and bolted together with ⅝" ø recessed hex nuts. Recess of hex nut points toward rail element. A total of 8 bolts and nuts are to be used at each rail splice connection.

b) The ends of the rail elements are to be overlapped in the direction of traffic (see details).

c) Where end cap is to be attached to the end of a rail element, a total of 4 of the above described splice bolts and nuts are to be used.

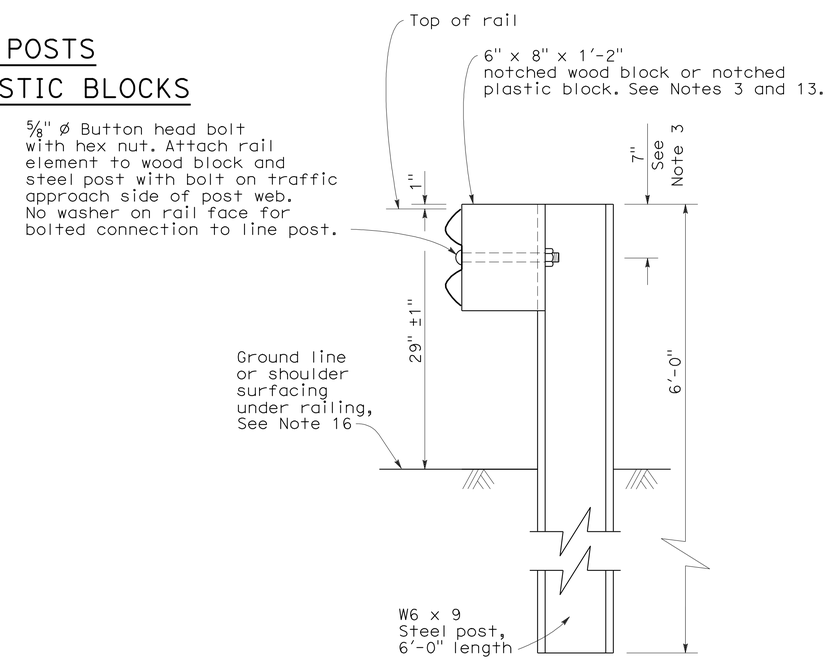

SECTION A-A

TYPICAL STEEL LINE POST INSTALLATION

See Note 4

NOTES:

1. For details of wood post installations, see Standard Plan A77A1.
2. For details of standard hardware used to construct guard railing, see Standard Plan A77B1.
3. For details of steel posts and notched wood blocks used to construct guard railing, see Standard Plan A77C2.
4. For additional installation details, see Standard Plan A77C3.
5. Guard railing post spacing to be 6'-3" center to center, except as otherwise noted.
6. For guard railing typical layouts, see the A77E, A77F and A77G Series of Standard Plans.
7. For terminal system end treatment details, see the A77L Series of Standard Plans. To connect railing to terminal system end treatment, transition the top of railing height at a ratio of 120:1 to terminal system end treatment height plus one 12'-6" standard railing section at the transitioned height for a horizontal connection to the end treatment.
8. For guard railing end anchor details, see Standard Plans A77H1 and A77I2.
9. For details of guard railing transition to bridge railing, see Standard Plan A77J4.
10. For additional details of guard railing connection to bridge railings, see Standard Plans A77J1, A77J2 and A77K1.
11. For dike positioning and guard railing delineation details, see Standard Plan A77C4.
12. Direction of adjacent traffic indicated by → .
13. Notched face of block faces steel post.
14. Slotted hole for bolted connection of rail element to block and post. See "Section Thru Rail Element".
15. Slotted holes for splice bolts to overlap ends of rail element. See "Section Thru Rail Element".
16. Install posts in soil.

STATE OF CALIFORNIA
DEPARTMENT OF TRANSPORTATION

METAL BEAM GUARD RAILING STANDARD RAILING SECTION (STEEL POST WITH NOTCHED WOOD OR NOTCHED RECYCLED PLASTIC BLOCK)

NO SCALE

RSP A77A2 DATED MAY 20, 2011 SUPERSEDES STANDARD PLAN A77A2 DATED MAY 1, 2006 - PAGE 42 OF THE STANDARD PLANS BOOK DATED MAY 2006.

REVISED STANDARD PLAN RSP A77A2

2006 REVISED STANDARD PLAN RSP A77A2

5-4-11

To accompany plans dated 8-8-11

Dist	COUNTY	ROUTE	POST MILES TOTAL PROJECT	SHEET No.	TOTAL SHEETS
09	Mno	395	118.7/119.6	85	139

Randell D. Hiatt
REGISTERED CIVIL ENGINEER

May 20, 2011
PLANS APPROVAL DATE

REGISTERED PROFESSIONAL ENGINEER
Randell D. Hiatt
No. C50200
Exp. 6-30-11
CIVIL
STATE OF CALIFORNIA

The State of California or its officers or agents shall not be responsible for the accuracy or completeness of electronic copies of this plan sheet.

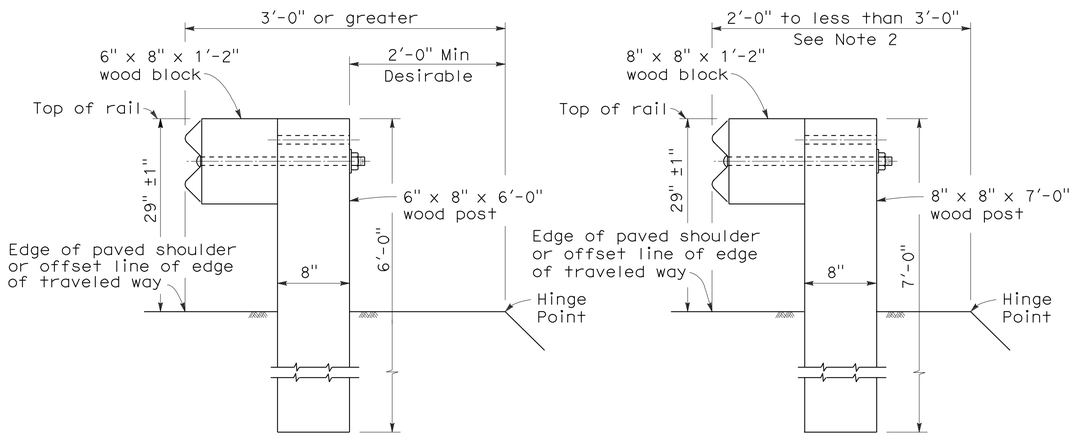

DETAIL A
TYPICAL ROADWAY INSTALLATION
See Note 1

DETAIL B
NARROW ROADWAY INSTALLATION
See Note 1

POST EMBEDMENT

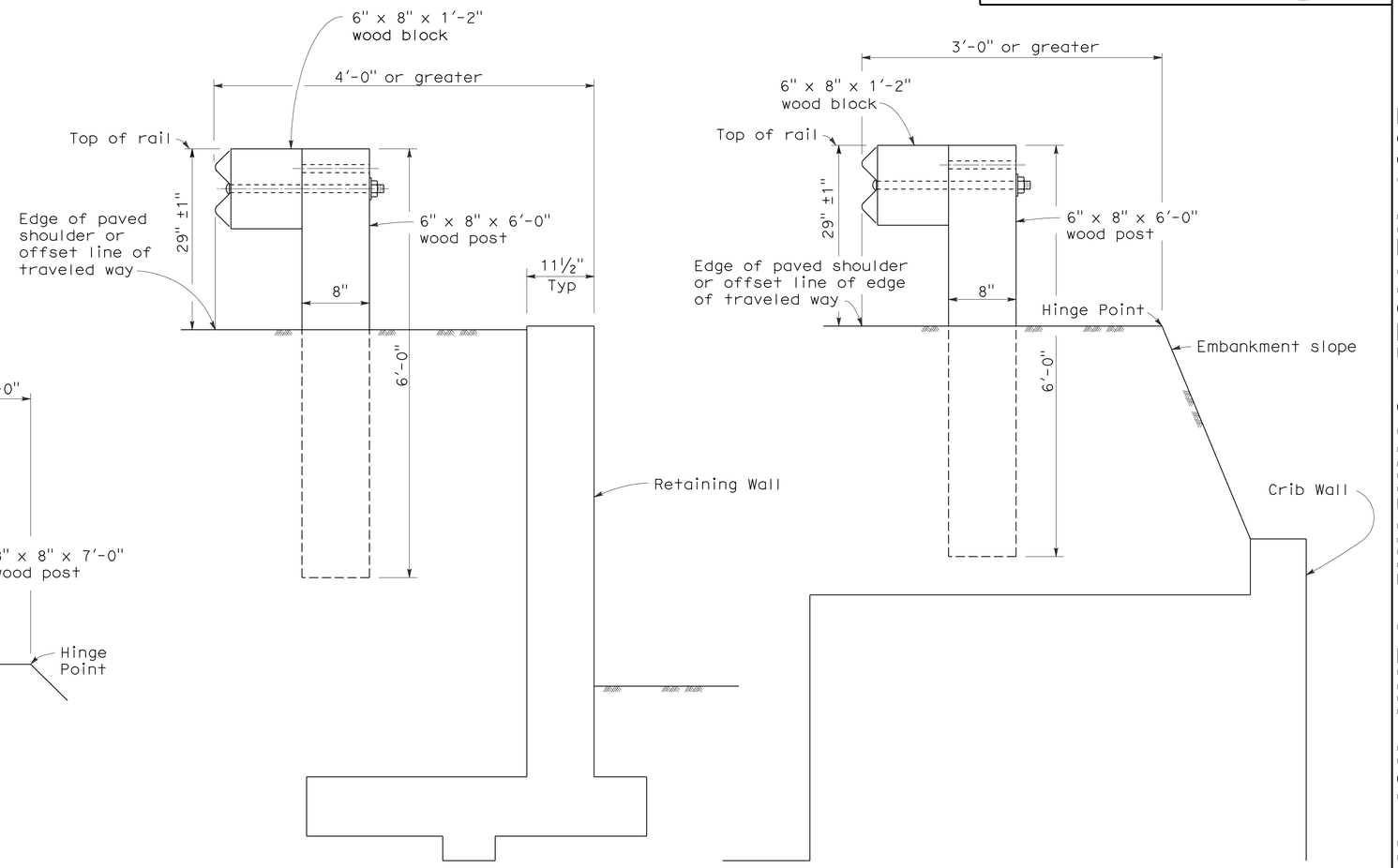

DETAIL C

DETAIL D

INSTALLATION AT EARTH RETAINING WALLS

NOTES:

1. These installation details also applicable to steel line post installations. For Detail A, C, and D, where steel line post installations are constructed, W6 x 9 steel post, 6'-0" in length, with 6" x 8" x 1'-2" notched wood blocks or notched recycled plastic blocks are to be used in place of the size of wood post and wood block shown. For Detail B, where steel line post installations are constructed, W6 x 9 steel post, 7'-0" in length, with 6" x 8" x 1'-2" notched wood blocks or notched recycled plastic blocks are to be used in place of the size of wood post and wood block shown. For additional installation details, see Standard Plans A77A1 and A77A2.
2. Where the distance between the face of the rail and the hinge point is less than 2'-0", see the Project Plans for special details.
3. For dike positioning with guard railing installations, see Standard Plan A77C4.

STATE OF CALIFORNIA
DEPARTMENT OF TRANSPORTATION

METAL BEAM GUARD RAILING TYPICAL LINE POST EMBEDMENT AND HINGE POINT OFFSET DETAILS

NO SCALE

RSP A77C3 DATED MAY 20, 2011 SUPERSEDES STANDARD PLAN A77C3
DATED MAY 1, 2006 - PAGE 46 OF THE STANDARD PLANS BOOK DATED MAY 2006.

REVISED STANDARD PLAN RSP A77C3

2006 REVISED STANDARD PLAN RSP A77C3

3-10-11

DIST	COUNTY	ROUTE	POST MILES TOTAL PROJECT	SHEET NO.	TOTAL SHEETS
09	Mno	395	118.7/119.6	86	139

Randell D. Hiatt
REGISTERED CIVIL ENGINEER

June 6, 2008
PLANS APPROVAL DATE

REGISTERED PROFESSIONAL ENGINEER Randell D. Hiatt No. C50200 Exp. 6-30-09 CIVIL STATE OF CALIFORNIA

The State of California or its officers or agents shall not be responsible for the accuracy or completeness of electronic copies of this plan sheet.

To accompany plans dated 8-8-11

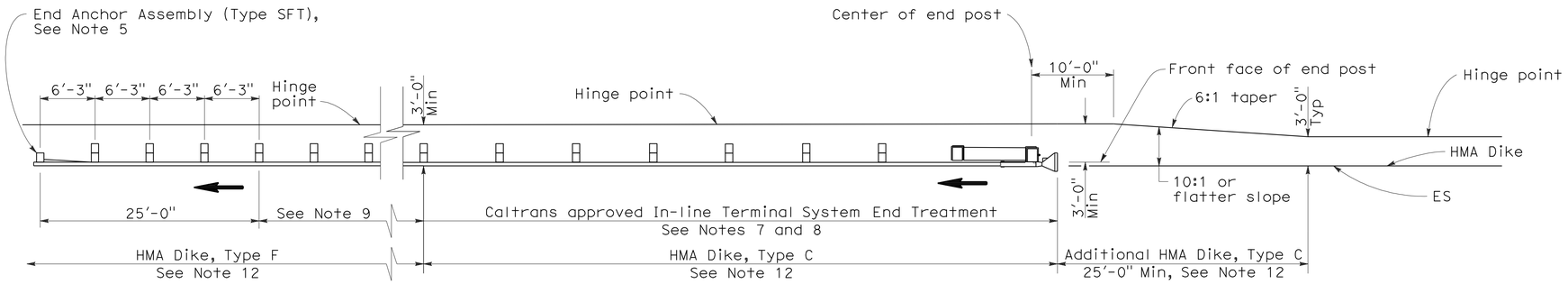

TYPE 11A LAYOUT

(EMBANKMENT GUARD INSTALLATION WITH IN-LINE END TREATMENT AT TRAFFIC APPROACH END OF RAILING)
See Note 6

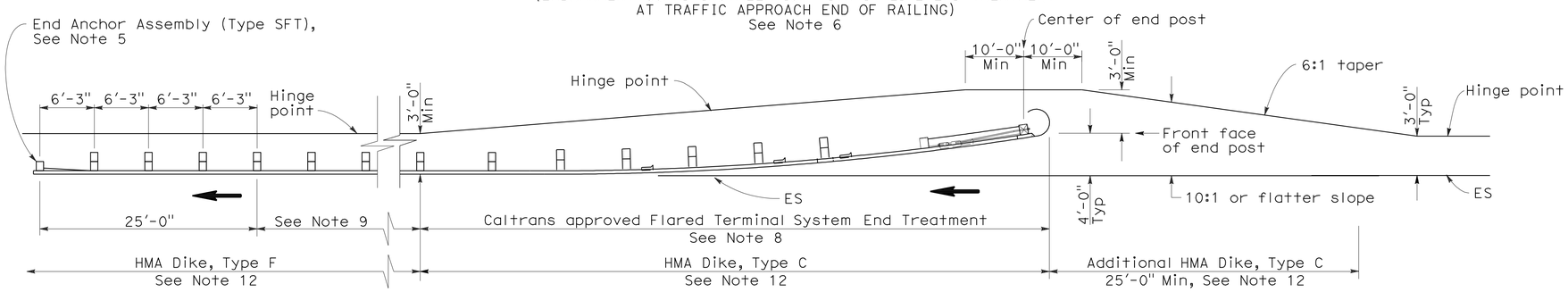

TYPE 11B LAYOUT

(EMBANKMENT GUARD RAILING INSTALLATION WITH FLARED END TREATMENT AT TRAFFIC APPROACH END OF RAILING)
See Note 6

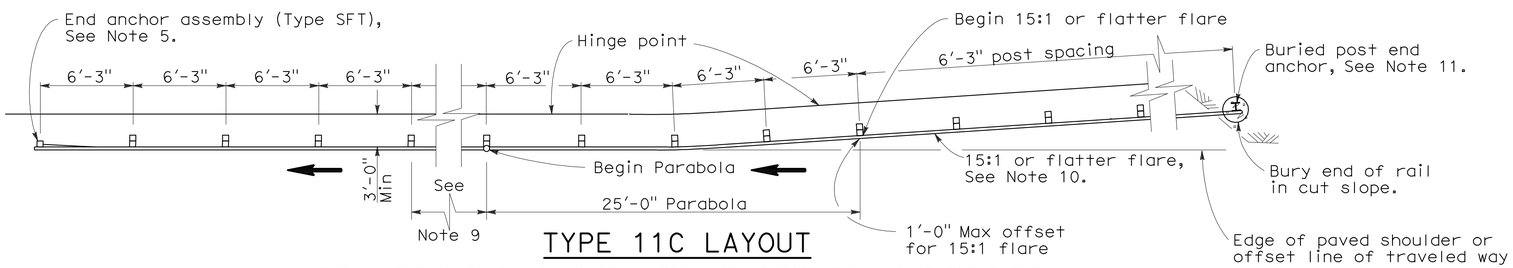

TYPE 11C LAYOUT

(EMBANKMENT GUARD RAILING INSTALLATION WITH BURIED END ANCHOR TREATMENT AT TRAFFIC APPROACH END OF RAILING)
See Notes 6 and 12

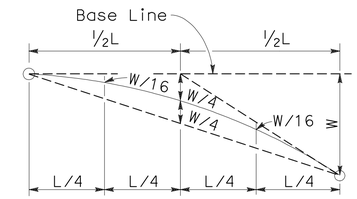

TYPICAL PARABOLIC LAYOUT

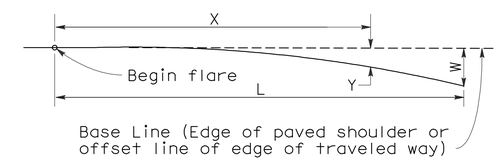

$$Y = \frac{WX^2}{L^2}$$

Y = Offset from base line
W = Maximum offset
X = Distance along base line
L = Length of flare

PARABOLIC FLARE OFFSETS

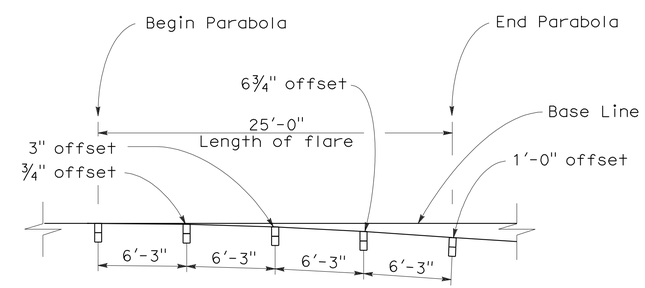

TYPICAL FLARE OFFSETS FOR 1 FOOT MAX END OFFSET

NOTES:

1. Line post, blocks and hardware to be used are shown on Standard Plans A77A1, A77A2, A77B1, A77C1, and A77C2.
2. Guard rail post spacing to be 6'-3" center to center, except as otherwise noted.
3. Except as noted, line posts are 6" x 8" x 6'-0" wood with 6" x 8" x 1'-2" wood blocks. W6 x 9 steel posts, 6'-0" in length, with 6" x 8" x 1'-2" notched wood blocks or recycled plastic blocks may be used for 6" x 8" x 6'-0" wood post with 6" x 8" x 1'-2" wood blocks where applicable and when specified.
4. Direction of adjacent traffic indicated by ⟶.
5. For End Anchor Assembly (Type SFT) details, see Standard Plan A77H1.
6. Layout Types 11A, 11B or 11C are typically used where guard railing is recommended to shield embankment slopes and a crashworthy end treatment is required for only one direction of traffic.
7. In-line Terminal System End Treatments are used where site conditions will not accommodate a flared end treatment.
8. The type of terminal system end treatment to be used will be shown on the Project Plans.
9. Dependent on site conditions (embankment height and side slope), construction of additional guard railing (length equal to multiples of 12'-6" with 6'-3" post spacing) may be advisable.
10. The 15:1 or flatter flare used with buried end anchors is based on the edge of the paved shoulder or offset line of edge of the traveled way. The length of guard railing within the 15:1 or flatter flare is based on site conditions and should be a length equal to multiples of 12'-6".
11. For details of the buried post end anchor used with Type 11C Layout, see Standard Plan A77I2.
12. Where placement of dike is required with guard railing installations, see Revised Standard Plan RSP A77C4 for dike positioning details.

STATE OF CALIFORNIA
DEPARTMENT OF TRANSPORTATION

METAL BEAM GUARD RAILING TYPICAL LAYOUTS FOR EMBANKMENTS

NO SCALE

RSP A77E1 DATED JUNE 6, 2008 SUPERSEDES STANDARD PLAN A77E1
DATED MAY 1, 2006 - PAGE 48 OF THE STANDARD PLANS BOOK DATED MAY 2006.

REVISED STANDARD PLAN RSP A77E1

2006 REVISED STANDARD PLAN RSP A77E1

12-10-07

DIST	COUNTY	ROUTE	POST MILES TOTAL PROJECT	SHEET NO.	TOTAL SHEETS
09	Mno	395	118.7/119.6	87	139

Randell D. Hiatt
REGISTERED CIVIL ENGINEER

June 6, 2008
PLANS APPROVAL DATE

REGISTERED PROFESSIONAL ENGINEER
Randell D. Hiatt
No. C50200
Exp. 6-30-09
CIVIL
STATE OF CALIFORNIA

The State of California or its officers or agents shall not be responsible for the accuracy or completeness of electronic copies of this plan sheet.

To accompany plans dated 8-8-11

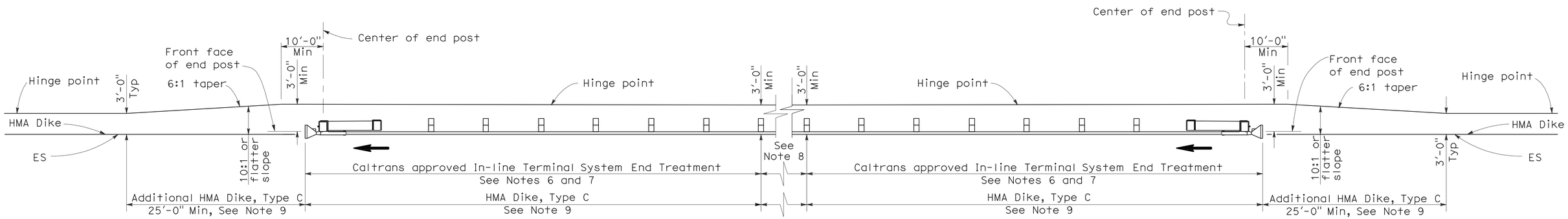

TYPE 11D LAYOUT

(EMBANKMENT GUARD RAILING INSTALLATION WITH
IN-LINE END TREATMENT AT EACH END OF RAILING)
See Note 5

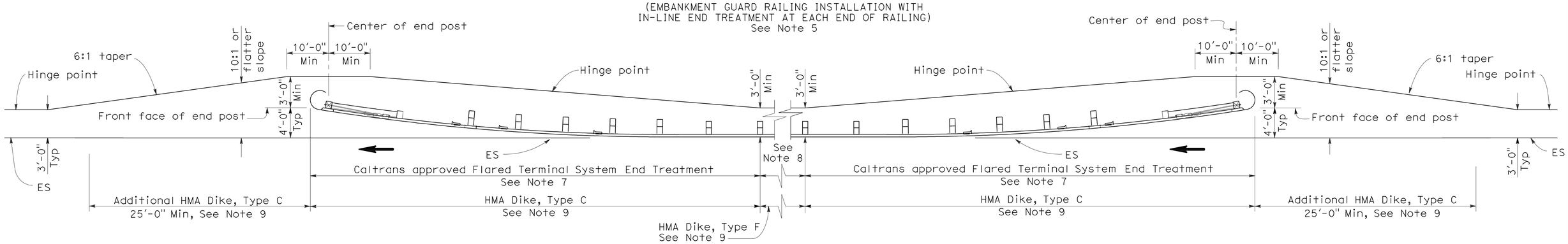

TYPE 11E LAYOUT

(EMBANKMENT GUARD RAILING INSTALLATION WITH
FLARED END TREATMENT AT EACH END OF RAILING)
See Note 5

NOTES:

1. Line post, blocks and hardware to be used are shown on Standard Plans A77A1, A77A2, A77B1, A77C1 and A77C2.
2. Guard rail post spacing to be 6'-3" center to center, except as otherwise noted.
3. Except as noted, line posts are 6" x 8" x 6'-0" wood with 6" x 8" x 1'-2" wood blocks, W6 x 9 steel posts, 6'-0" in length, with 6" x 8" x 1'-2" notched wood blocks or plastic blocks may be used for 6" x 8" x 6'-0" wood post with 6" x 8" x 1'-2" wood blocks where applicable and when specified.
4. Direction of adjacent traffic indicated by ⟶.
5. Layout Types 11D through 11L, shown on the A77E Series of Revised Standard Plans, are typically used where guard railing is recommended to shield embankment slopes and a crashworthy end treatment is required for both directions of traffic.
6. In-line Terminal System End Treatments are used where site conditions will not accommodate a flared end treatment.
7. The type of terminal system end treatment to be used will be shown on the Project Plans.
8. Dependent on site conditions (embankment height and side slope), construction of additional guard railing (length equal to multiples of 12'-6" with 6'-3" post spacing) may be advisable.
9. Where placement of dike is required with guard railing installations, see Revised Standard Plan RSP A77C4 for dike positioning details.

STATE OF CALIFORNIA
DEPARTMENT OF TRANSPORTATION

METAL BEAM GUARD RAILING TYPICAL LAYOUTS FOR EMBANKMENTS

NO SCALE

RSP A77E2 DATED JUNE 6, 2008 SUPERSEDES STANDARD PLAN A77E2
DATED MAY 1, 2006 - PAGE 49 OF THE STANDARD PLANS BOOK DATED MAY 2006.

REVISED STANDARD PLAN RSP A77E2

2006 REVISED STANDARD PLAN RSP A77E2

12-10-07

Dist	COUNTY	ROUTE	POST MILES TOTAL PROJECT	SHEET No.	TOTAL SHEETS
09	Mno	395	118.7/119.6	88	139

Randell D. Hiatt
REGISTERED CIVIL ENGINEER

May 20, 2011
PLANS APPROVAL DATE

REGISTERED PROFESSIONAL ENGINEER
Randell D. Hiatt
No. C50200
Exp. 6-30-11
CIVIL
STATE OF CALIFORNIA

The State of California or its officers or agents shall not be responsible for the accuracy or completeness of electronic copies of this plan sheet.

To accompany plans dated 8-8-11

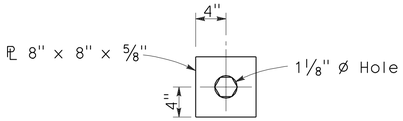

DETAIL A
CABLE CONNECTION END PLATE

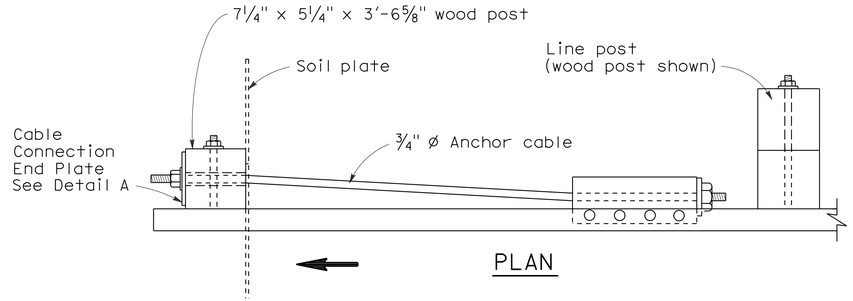

PLAN

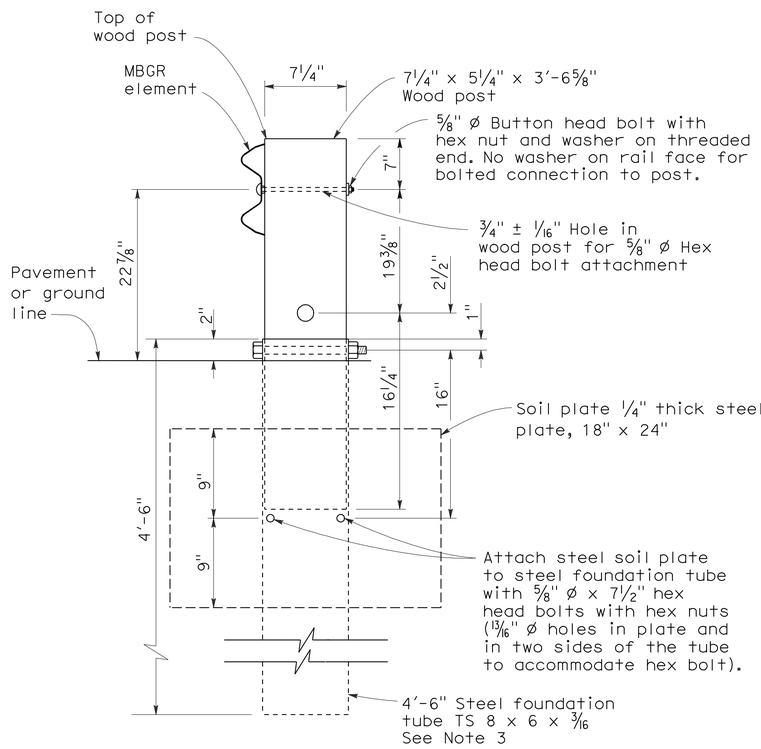

SECTION A-A

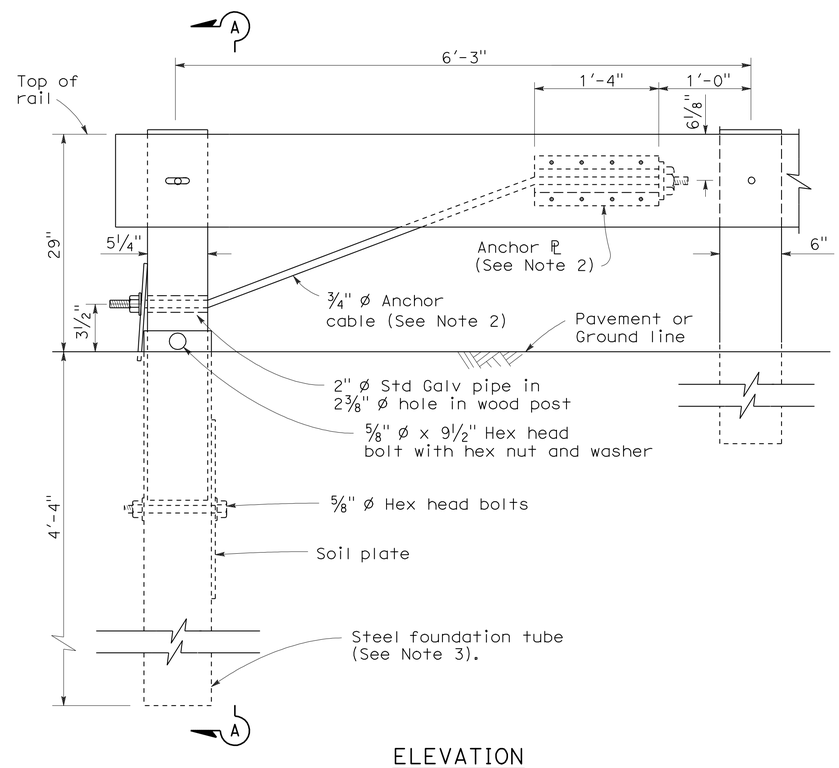

ELEVATION
END ANCHOR ASSEMBLY (TYPE SFT)

See Note 1

NOTES:

1. See the A77E, A77F and A77G series of Standard Plans for typical use of End Anchor Assembly (Type SFT).
2. For details of the anchor plate and 3/4" cable, see Standard Plan A77H3.
3. A 6'-0" length steel foundation tube, TS 8 x 6 x 3/16, without a soil plate, may be furnished and installed in place of the 4'-6" length steel foundation tube and soil plate shown. Minimum embedment of the 6'-0" length tube shall be 5'-9". A 5/8" ø hex head bolt and nut shall be installed in the hole in the 6'-0" length tube to keep the wood post from dropping into the tube.
4. Direction of traffic indicated by ⟹.
5. Install line post, steel foundation tube and soil plate in soil.

STATE OF CALIFORNIA
DEPARTMENT OF TRANSPORTATION

METAL RAILING END ANCHOR ASSEMBLY (TYPE SFT)

NO SCALE

RSP A77H1 DATED MAY 20, 2011 SUPERSEDES STANDARD PLAN A77H1
DATED MAY 1, 2006 - PAGE 67 OF THE STANDARD PLANS BOOK DATED MAY 2006.

REVISED STANDARD PLAN RSP A77H1

2006 REVISED STANDARD PLAN RSP A77H1

DIST	COUNTY	ROUTE	POST MILES TOTAL PROJECT	SHEET NO.	TOTAL SHEETS
09	Mno	395	118.7/119.6	89	139

REGISTERED CIVIL ENGINEER

June 5, 2009
PLANS APPROVAL DATE

REGISTERED PROFESSIONAL ENGINEER Glenn DeCou No. C34547 Exp. 9-30-09 CIVIL STATE OF CALIFORNIA

The State of California or its officers or agents shall not be responsible for the accuracy or completeness of electronic copies of this plan sheet.

To accompany plans dated 8-8-11

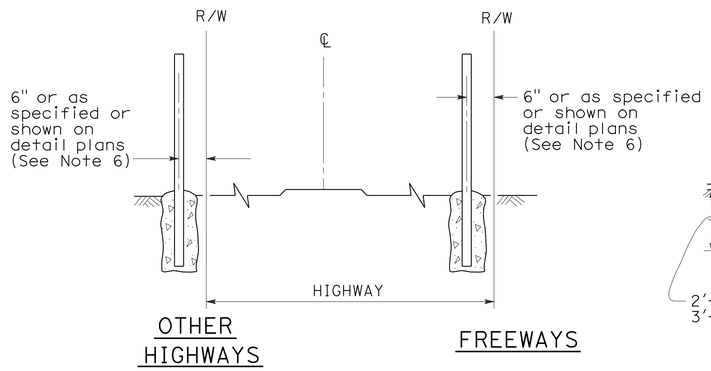

FENCE LOCATION

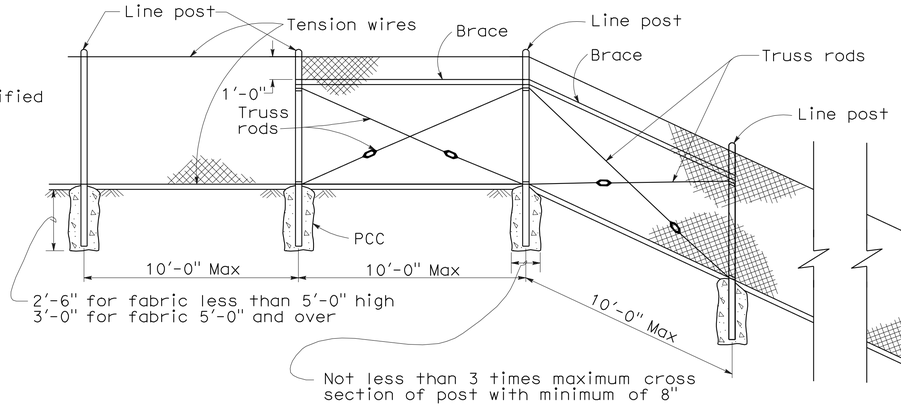

CHAIN LINK FENCE ON SHARP BREAK IN GRADE

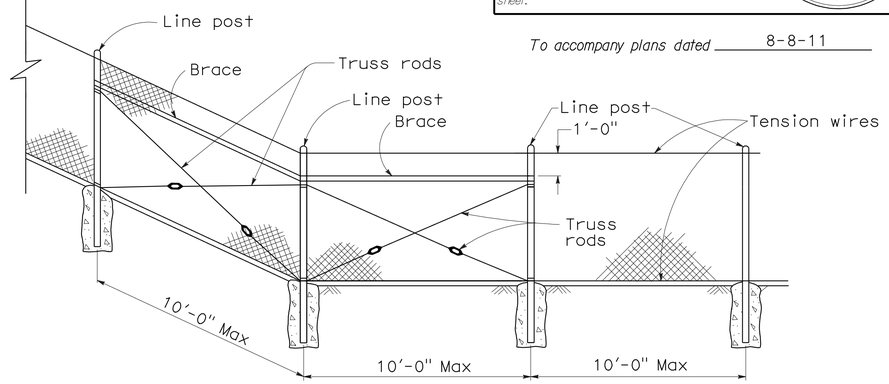

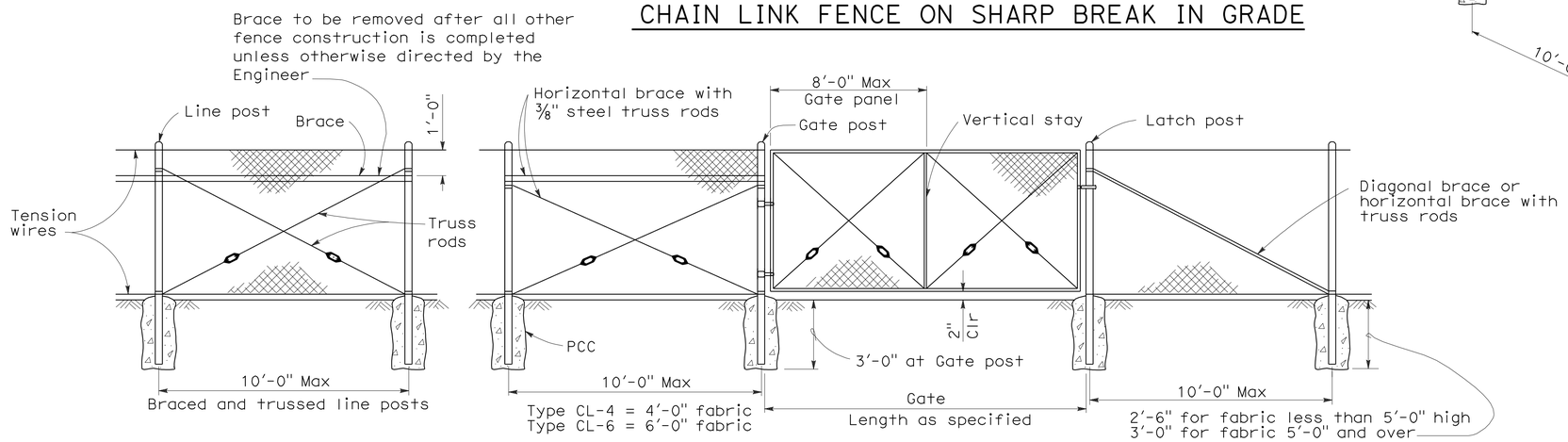

CHAIN LINK GATE INSTALLATION

GATE POST			
FENCE HEIGHT	GATE WIDTHS	NOMINAL ID	WEIGHT PER FOOT
6'-0" and Less	Up thru 6'-0"	2½"	4.95 LB
	Over 6'-0" thru 12'-0"	4"	10.79 LB
	Over 12'-0" thru 18'-0"	5"	14.62 LB
	Over 18'-0" to 24'-0" Max	6"	18.97 LB
Over 6'-0"	Up thru 6'-0"	3"	7.58 LB
	Over 6'-0" thru 12'-0"	5"	14.62 LB
	Over 12'-0" thru 18'-0"	6"	18.97 LB
	Over 18'-0" to 24'-0" Max	8"	28.55 LB

Above post dimensions and weights are minimums. Larger sizes may be used on approval of the Engineer.

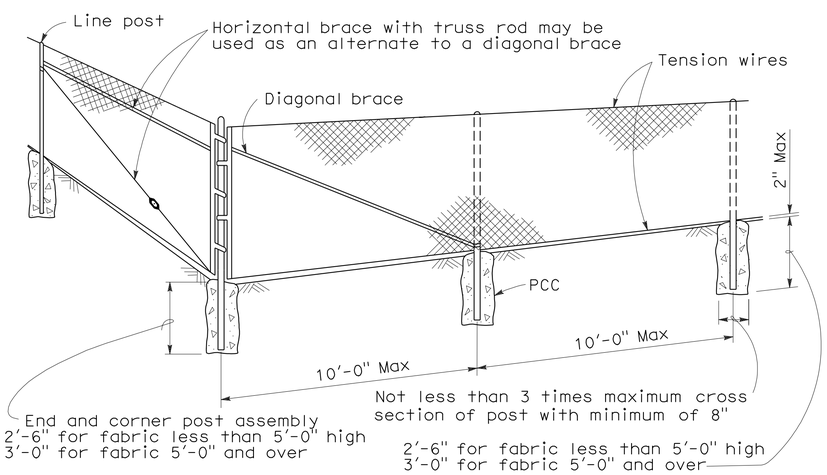

CORNER POST

NOTES:

1. The below table shows examples of post and brace sections which may comply with the Specifications.
2. Sections shown in the tables must also comply with the strength requirements and other provisions of the Specifications.
3. Other sections which comply with the strength requirements and other provisions of the Specifications may be used on approval of the Engineer.
4. Options exercised shall be uniform on any one project.
5. Dimensions shown are nominal.
6. Offset to be 2'-0" at monument locations, measured at right angles to R/W lines. Taper to achieve offset to be at least 20'-0" long.

TYPICAL MEMBER DIMENSIONS (See Notes)											
FENCE HEIGHT	LINE POSTS			END, LATCH & CORNER POSTS			BRACES				
	ROUND ID	H	ROLL FORMED	ROUND ID	ROLL FORMED		ROUND ID	H	ROLL FORMED		
6' & less	1½"	1⅞" × 1⅝"	1⅞" × 1⅝"	2"	3½" × 3½"	2" × 1¾"	1¼"	1½" × 1 5/16"	1⅝" × 1¼"	1¾" × 1¼"	
Over 6'	2"	2¼" × 2"	2" × 1¾"	2½"	3½" × 3½"	2½" × 2½"	1¼"	1½" × 1 5/16"	1⅝" × 1¼"	1¾" × 1¼"	

STATE OF CALIFORNIA
DEPARTMENT OF TRANSPORTATION

CHAIN LINK FENCE

NO SCALE

RSP A85 DATED JUNE 5, 2009 SUPERSEDES STANDARD PLAN A85
DATED MAY 1, 2006 - PAGE 111 OF THE STANDARD PLANS BOOK DATED MAY 2006.

REVISED STANDARD PLAN RSP A85

2006 REVISED STANDARD PLAN RSP A85

5-7-09

DIST	COUNTY	ROUTE	POST MILES TOTAL PROJECT	SHEET NO.	TOTAL SHEETS
09	Mno	395	118.7/119.6	90	139

REGISTERED CIVIL ENGINEER

June 5, 2009
PLANS APPROVAL DATE

REGISTERED PROFESSIONAL ENGINEER Glenn DeCou No. C34547 Exp. 9-30-09 CIVIL STATE OF CALIFORNIA

The State of California or its officers or agents shall not be responsible for the accuracy or completeness of electronic copies of this plan sheet.

To accompany plans dated 8-8-11

NOTES:

1. H is 2'-6" for fabric less than 5'-0" high. H is 3'-0" for fabric 5'-0" and over.
2. T is not less than 3 times maximum cross section of post with minimum of 8".
3. Arms with barbed wire to be used where shown on plans.
4. See Revised Standard Plan RSP A85 for Chain Link Fencing dimensions.
5. Reinforcing must comply with ASTM A 706.
6. See Detail A on New Standard Plan NSP A86B for connection at headwall.

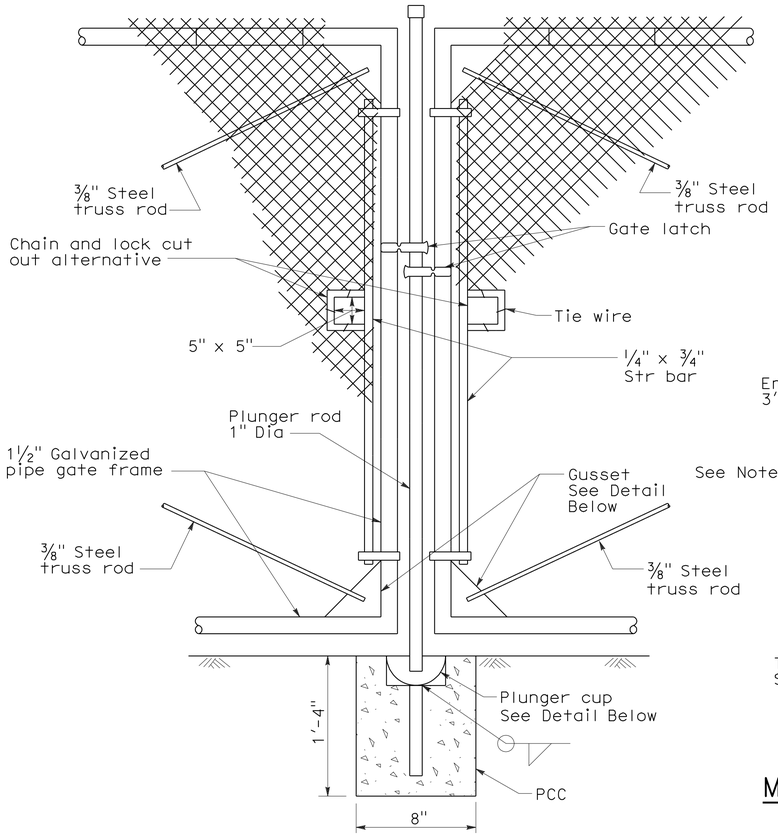

TYPICAL DOUBLE GATE REMOVABLE CENTER POST

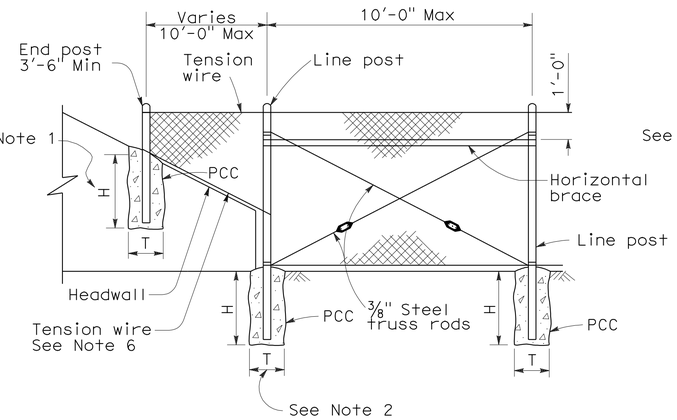

METHOD OF TYING FENCE TO HEADWALL

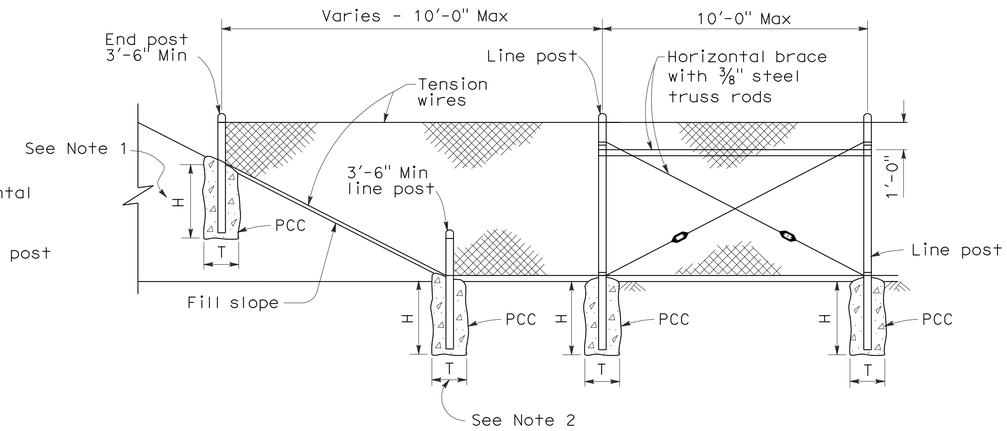

METHOD OF ERECTING FENCE FOR FILL SLOPE

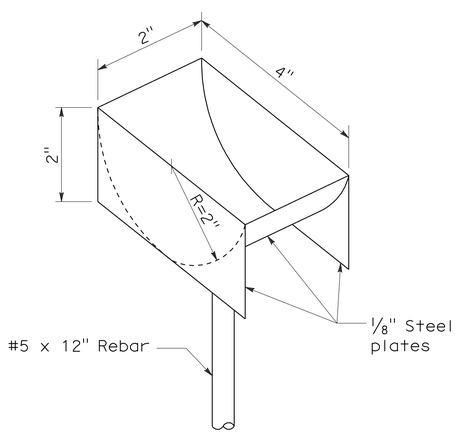

PLUNGER CUP DETAIL

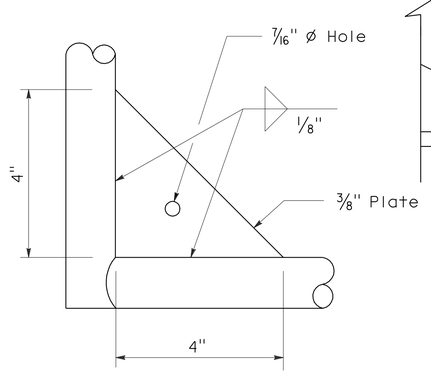

GUSSET DETAIL

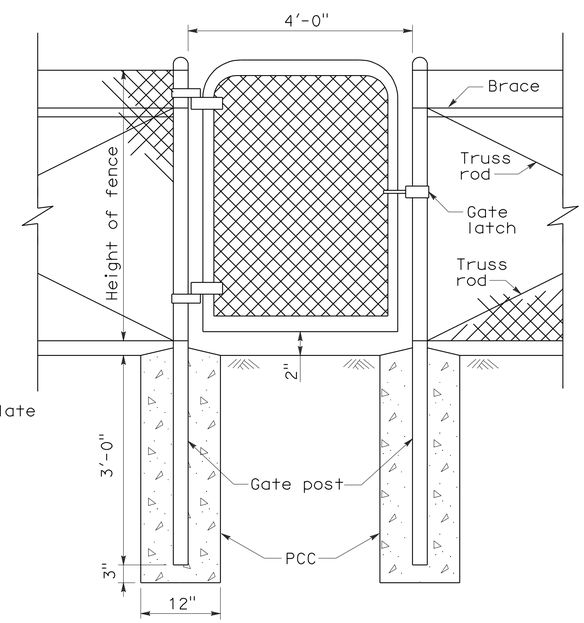

WALK GATE

POST TOP END

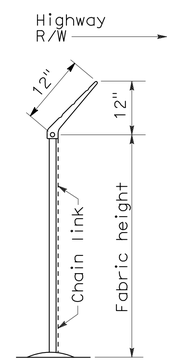

END ELEVATION

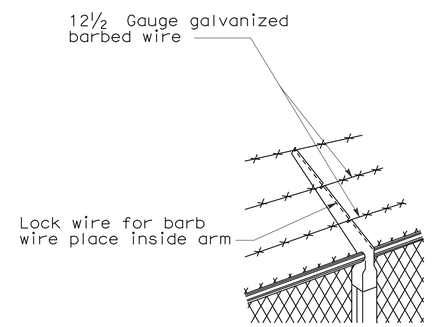

LINE POST TOP
Vertical arms when desired

BARBED WIRE POST TOP
See Note 3

STATE OF CALIFORNIA
DEPARTMENT OF TRANSPORTATION

CHAIN LINK FENCE DETAILS

NO SCALE

NSP A85A DATED JUNE 5, 2009 SUPPLEMENTS THE STANDARD PLANS BOOK DATED MAY 2006.

NEW STANDARD PLAN NSP A85A

2006 NEW STANDARD PLAN NSP A85A

5-7-09

DIST	COUNTY	ROUTE	POST MILES TOTAL PROJECT	SHEET NO.	TOTAL SHEETS
09	Mno	395	118.7/119.6	91	139

Glenn DeCou
REGISTERED CIVIL ENGINEER

June 5, 2009
PLANS APPROVAL DATE

REGISTERED PROFESSIONAL ENGINEER
Glenn DeCou
No. C34547
Exp. 9-30-09
CIVIL
STATE OF CALIFORNIA

The State of California or its officers or agents shall not be responsible for the accuracy or completeness of electronic copies of this plan sheet.

To accompany plans dated 8-8-11

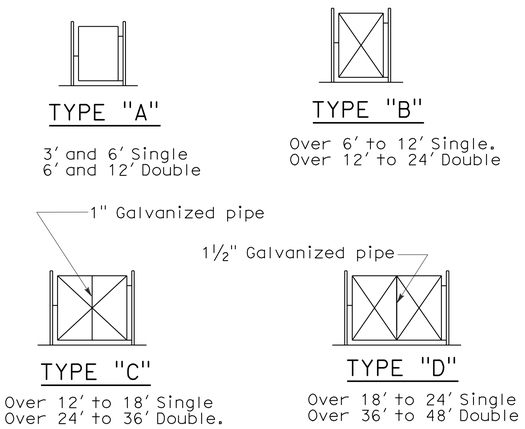

TYPICAL FRAMEWORK SHOWING NUMBER OF BAYS IN GATE

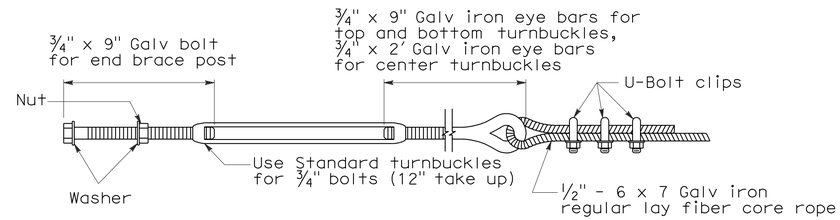

TURNBUCKLE A

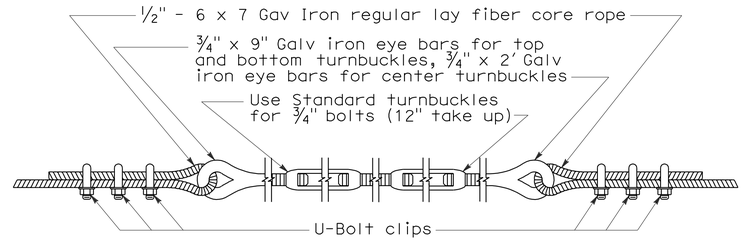

TURNBUCKLE B

NOTES:

1. All material for abutment connection to be galvanized.
2. The chain link fabric shall be replaced by barbed wire strands at 12" maximum centers between the double posts.
3. When the width of the culvert makes it necessary to anchor a post to the top of the culvert, a cast iron shoe or other device approved by the Engineer shall be used.
4. Fencing over stream and around headwall may also use Barbed Wire or Wire Mesh fencing with either wood post or steel post installation.
5. See Revised Standard Plan RSP A85 for Chain Link fence dimensions. See Standard Plan A86 for Barbed Wire and Wire Mesh fence dimensions and for wood post and steel post installation.

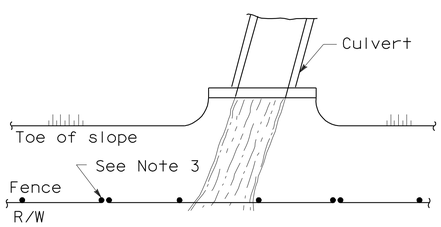

PLAN

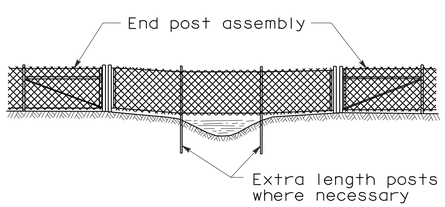

ELEVATION

INSTALLATION OVER STREAM

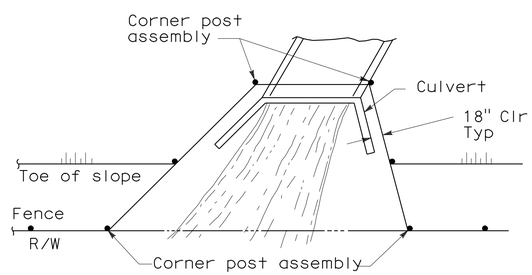

PLAN

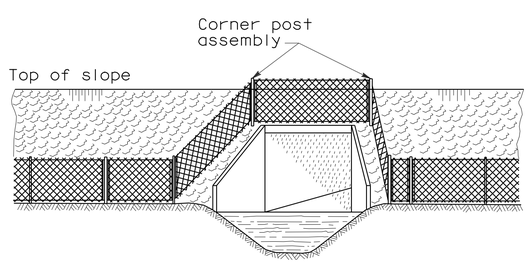

ELEVATION

INSTALLATION AROUND HEADWALL

See Note 4

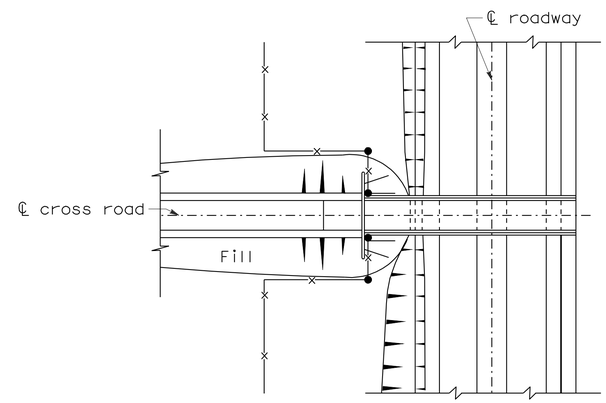

PLAN OF ROADWAY - UNDERPASS

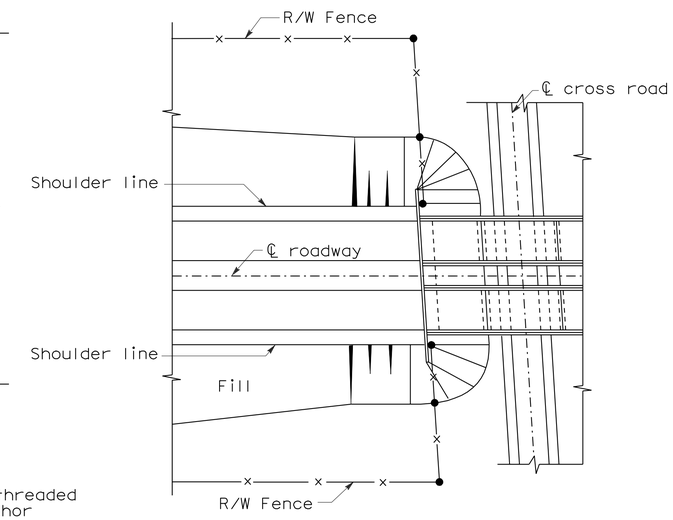

PLAN OF ROADWAY - OVERPASS

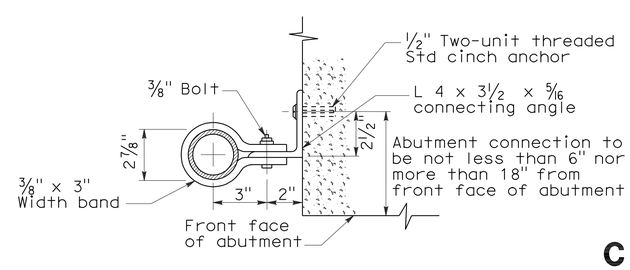

ABUTMENT CONNECTION

TYPICAL INSTALLATION AT BRIDGES

STATE OF CALIFORNIA
DEPARTMENT OF TRANSPORTATION

CHAIN LINK FENCE DETAILS

NO SCALE

NSP A85B DATED JUNE 5, 2009 SUPPLEMENTS THE STANDARD PLANS BOOK DATED MAY 2006.

NEW STANDARD PLAN NSP A85B

2006 NEW STANDARD PLAN NSP A85B

5-12-09

DIST	COUNTY	ROUTE	POST MILES TOTAL PROJECT	SHEET NO.	TOTAL SHEETS
09	Mno	395	118.7/119.6	92	139

Raymond Don Tsztoo
REGISTERED CIVIL ENGINEER

June 6, 2008
PLANS APPROVAL DATE

REGISTERED PROFESSIONAL ENGINEER
Raymond Don Tsztoo
No. C37332
Exp. 6-30-08
CIVIL
STATE OF CALIFORNIA

The State of California or its officers or agents shall not be responsible for the accuracy or completeness of electronic copies of this plan sheet.

To accompany plans dated 8-8-11

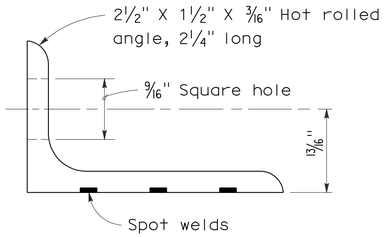

ANGLE

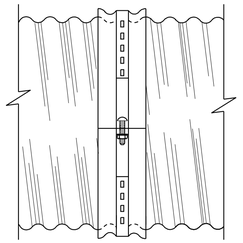

SIDE VIEW
ANGLE

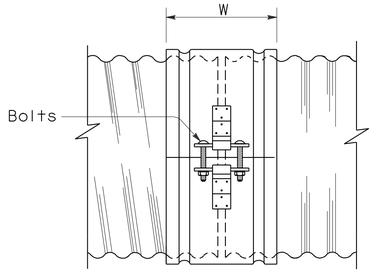

SIDE VIEW
SINGLE BAR AND STRAP

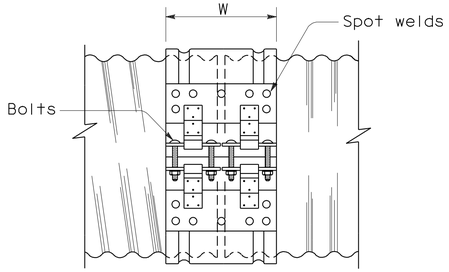

SIDE VIEW
DOUBLE BAR AND STRAP

NOTES:

1. All ferrous metal coupling band connection hardware shall be galvanized or electroplated in accordance with the Standard Specifications.
2. Dimensions and thicknesses shown are minimum.
3. Spot welds shall develop minimum required strength of strap.
4. Fillet welds of equivalent strength may be substituted for spot welds or rivets.
5. Dimension depends upon whether end condition is lips up or lips down.

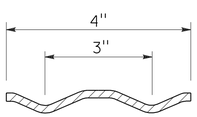

SECTION

H-4 HUGGER BAND

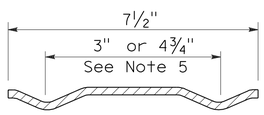

SECTION

H-7 HUGGER BAND

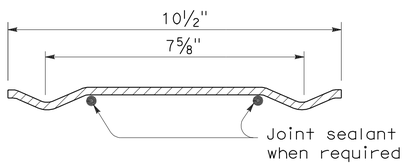

SECTION

H-10 HUGGER BAND

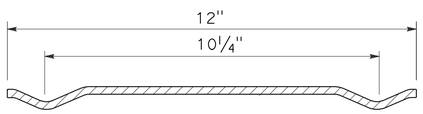

SECTION

H-12 HUGGER BAND

HUGGER COUPLING BANDS

STATE OF CALIFORNIA
DEPARTMENT OF TRANSPORTATION

CORRUGATED METAL PIPE COUPLING DETAILS No. 4 HUGGER COUPLING BANDS

NO SCALE

RSP D97D DATED JUNE 6, 2008 SUPERSEDES STANDARD PLAN D97D
DATED MAY 1, 2006 - PAGE 186 OF THE STANDARD PLANS BOOK DATED MAY 2006.

REVISED STANDARD PLAN RSP D97D

2006 REVISED STANDARD PLAN RSP D97D

3-24-08

DIST	COUNTY	ROUTE	POST MILES TOTAL PROJECT	SHEET NO.	TOTAL SHEETS
09	Mno	395	118.7/119.6	93	139

Raymond Don Tsztoo
REGISTERED CIVIL ENGINEER

June 6, 2008
PLANS APPROVAL DATE

REGISTERED PROFESSIONAL ENGINEER Raymond Don Tsztoo No. C37332 Exp. 6-30-08 CIVIL STATE OF CALIFORNIA

The State of California or its officers or agents shall not be responsible for the accuracy or completeness of electronic copies of this plan sheet.

ANNULAR AND HELICAL PROFILE

COUPLING TYPE	PIPE CORRUGATION	PIPE SIZE	W OR A	PIPE WALL THICKNESS CSP	PIPE WALL THICKNESS CAP	BAND THICKNESS CSP	BAND THICKNESS CAP	BAR AND STRAP (CSP ONLY) STRAP THICKNESS	BOLTS Dia	BAR Dia	BAR YIELD STRENGTH	ANGLE DIMENSIONS CSP	ANGLE DIMENSIONS CAP	BOLTS (No.- Dia) CSP	BOLTS (No.- Dia) CAP	RIVETS ANGLE TO BAND CSP	RIVETS ANGLE TO BAND CAP	SPOT WELDS ANGLE TO BAND CSP
TWO PIECE INTEGRAL FLANGE	1½′ × ¼"	6"-10"	7"	0.052"-0.079"	0.048"-0.060"	0.052"	0.060"							2-⅜"	2-⅜"			
		12"-18"	7"	0.052"-0.079"		0.064"								2-½"				
	2⅔" × ½"	12"-24"	7"	0.052"-0.079"	0.060"-0.105"	0.064"	0.060"							2-½"	2-½"			
UNIVERSAL	2⅔" × ½"	THROUGH 36"	12"	0.052"-0.138"	0.060"-0.135"	0.052"	0.060"					2" × 2" × 3/16"	2" × 2" × 3/16"	3-½"	3-½"	3-⅜"	3-⅜"	3-½"
		42"-60"	12"	0.052"-0.168"	0.075"-0.164"	0.052"	0.060"					2" × 2" × 3/16"	2" × 2" × 3/16"	3-½"	3-½"	3-⅜"	3-⅜"	5-½"
		THROUGH 72"	12"	0.052"-0.168"	0.164"	0.052"	0.105"	0.079"	½"	⅞"	32 ksi	2" × 2" × 3/16"	2" × 2" × 3/16"	3-½"	3-½"	3-⅜"	3-⅜"	5-½"
		78"-84"	16¼"	0.168"		0.079"		DOUBLE 0.079"	½"	⅞"	32 ksi							
ANNULAR	2⅔" × ½"	THROUGH 36"	7"	0.064"-0.138"	0.060"-0.135"	0.052"	0.060"	0.079"	½"	⅞"	32 ksi	2" × 2" × 3/16"	2" × 2" × 3/16"	2-½"	2-½"	3-⅜"	3-⅜"	3-½"
		42"-72"	12"	0.064"-0.168"	0.075"-0.164"	0.052"	0.105"	0.079"	½"	⅞"	32 ksi	2" × 2" × 3/16"	2" × 2" × 3/16"	3-½"	3-½"	3-⅜"	3-⅜"	5-½"
		78"-84"	12"	0.168"		0.079"		0.109"	½"	⅞"	45 ksi	2" × 2" × 3/16"		3-½"		3-⅜"		5-½"
	3" × 1"	48"-90"	14"	0.064"-0.109"		0.052"		0.079"	½"	⅞"	32 ksi	2" × 2" × 3/16"		3-½"		3-⅜"		5-½"
		96"-120"	14"	0.079"-0.109"		0.052"		0.109"	½"	⅞"	45 ksi	2" × 2" × 3/16"		3-½"		4-⅜"		
		42"-108"	14"		0.060"-0.135"		0.060"						2" × 2" × 3/16"		3-½"		3-⅜"	
HELICAL	2⅔" × ½"	THROUGH 36"	12"	0.052"-0.138"	0.060"-0.135"	0.052"	0.060"	0.079"	½"	⅞"	32 ksi	2" × 2" × 3/16"	2" × 2" × 3/16"	3-½"	3-½"	3-⅜"	3-⅜"	3-½"
		42"-72"	12"	0.052"-0.168"	0.075"-0.164"	0.052"	0.060"	0.079"	½"	⅞"	32 ksi	2" × 2" × 3/16"	2" × 2" × 3/16"	3-½"	3-½"	3-⅜"	3-⅜"	5-½"
		78"-84"	12"	0.168"		0.079"		0.109"	½"	⅞"	45 ksi	2" × 2" × 3/16"		3-½"		3-⅜"		5-½"
	3" × 1"	48"-90"	14"	0.064"-0.109"		0.052"		0.079"	½"	⅞"	32 ksi	2" × 2" × 3/16"		3-½"		3-⅜"		5-½"
		96"-120"	14"	0.079"-0.109"		0.052"		0.109"	½"	⅞"	45 ksi	2" × 2" × 3/16"		3-½"		4-⅜"		
		42"-108"	14"		0.060"-0.135"		0.060"						2" × 2" × 3/16"		3-½"		3-⅜"	
HUGGER	2⅔" × ½" REROLLED END	12"-54"	4"	0.052"-0.109"		0.052"						2½" × 1½" × 3/16"	2½" × 1½" × 3/16"	1-½"				3-½"
		60"-66"	4"	0.109"		0.064"						2½" × 1½" × 3/16"	2½" × 1½" × 3/16"	1-½"				3-½"
		36"-48"	4"	0.138"		0.064"						2½" × 1½" × 3/16"	2½" × 1½" × 3/16"	1-½"				3-½"
		THROUGH 72"	10½"	0.052"-0.168"		0.052"		0.079"	½"	⅞"	32 ksi							
		78"-84"	10½"	0.168"		0.079"		0.109"	½"	⅞"	45 ksi							
	3" × 1" REROLLED END	48"-90"	10½"	0.064"-0.109"		0.052"		0.079"	½"	⅞"	32 ksi							
		96"-120"	10½"	0.079"-0.109"		0.052"		0.109"	½"	⅞"	45 ksi							
	5" × 1" REROLLED END	48"-66"	7½"	0.064"-0.109"		0.064"		0.079"	½"	⅞"	32 ksi	2½" × 1½" × 3/16"	2½" × 1½" × 3/16"	1-½"				3-½"
		72"-90"	7½"	0.064"-0.079"		0.064"		0.079"	½"	⅞"	32 ksi	2½" × 1½" × 3/16"	2½" × 1½" × 3/16"	1-½"				3-½"
		48"-90"	7½"	0.064"-0.138"		0.064"		0.079"	½"	⅞"	32 ksi							
		48"-120"	12" SEE	0.064"-0.109"		0.064"		0.079"	½"	⅞"	32 ksi							
		48"-84"	12" NOTE	0.138"		0.064"		0.079"	½"	⅞"	32 ksi							
		90"-120"	12" 11	0.138"		0.064"		DOUBLE 0.079"	½"	⅞"	32 ksi							

SPIRAL RIB PROFILE

COUPLING TYPE	PIPE CORRUGATION	PIPE SIZE	W	PIPE WALL THICKNESS SSRP	PIPE WALL THICKNESS ASRP	BAND THICKNESS SSRP	BAND THICKNESS ASRP	BAR AND STRAP (SSRP ONLY) STRAP THICKNESS	BOLTS Dia	BAR Dia	BAR YIELD STRENGTH	ANGLE DIMENSIONS SSRP	ANGLE DIMENSIONS ASRP	BOLTS (No.- Dia) SSRP	BOLTS (No.- Dia) ASRP	RIVETS ANGLE TO BAND SSRP	RIVETS ANGLE TO BAND ASRP	SPOT WELDS ANGLE TO BAND SSRP
ANNULAR	2⅔" × ½" * REROLLED END	24"-36"	12"	0.064"-0.109"	0.060"-0.105"	0.052"	0.060"	0.079"	½"	⅞"	32 ksi	2" × 2" × 3/16"	2" × 2" × 3/16"	3-½"	3-½"	3-⅜"	3-⅜"	5-½"
		42"-60"	12"	0.064"-0.109"	0.075"-0.105"	0.052"	0.105"	0.079"	½"	⅞"	32 ksi	2" × 2" × 3/16"	2" × 2" × 3/16"	3-½"	3-½"	3-⅜"	3-⅜"	5-½"
		66"-72"	12"	0.064"-0.109"		0.052"		0.079"	½"	⅞"	32 ksi	2" × 2" × 3/16"	2" × 2" × 3/16"	3-½"	3-½"	3-⅜"	3-⅜"	5-½"
		78"-114"	12"	0.079"-0.109"		0.079"		0.109"	½"	⅞"	45 ksi	2" × 2" × 3/16"	2" × 2" × 3/16"	3-½"	3-½"	3-⅜"	3-⅜"	5-½"
HUGGER	2⅔" × ½" * REROLLED END	24"-72"	10½"	0.064"-0.109"		0.052"		0.079"	½"	⅞"	32 ksi							
		78"-84"	10½"	0.109"		0.079"		0.109"	½"	⅞"	45 ksi							

* See Note 14.

14. All profiles of Spiral Rib Pipe (¾" × ¾" ribs at 7½" pitch and ¾" × 1" ribs at 11½" pitch in both steel and aluminum and ¾" × 1" ribs at 8½" pitch in steel only) shall be manufactured with rerolled ends. Corrugation profile of the rerolled ends shall be 2⅔" × ½" annual corrugations with a minimum of two full corrugations at each end.

NOTES:

To accompany plans dated 8-8-11

1. All ferrous metal coupling band connection hardware shall be galvanized or electroplated in accordance with the Standard Specifications.
2. For helically corrugated coupling bands, the connection angles may be oriented parallel to the pipe axis, provided connecting holes are slotted lengthwise sufficiently to allow adjustment for the helix angle.
3. Tension strap may be connected to band with either spot welds or fillet welds that develop minimum required strength of strap.
4. Use 1¼" gage line dimension on attached angle leg for rivets and spot welds.
5. Band thickness shall not be less than:
   a. 3 standard thicknesses lighter than the thickness of the pipe for Corrugated Steel Pipe.
   b. 2 standard thicknesses lighter than the thickness of the pipe and in no case lighter than 0.060" for Corrugated Aluminum Pipe.
6. Dimensions, thicknesses and strengths shown are minimum.
7. For pipe arches use same width band as for round pipe of equal periphery.
8. Fillet welds of equivalent strenght may be substituted for spot welds or rivets.
9. Spot welds shall develop minimum required strength of strap.
10. Pipe with rerolled ends having at least two 2⅔" × ½" annular corrugations at each end with or without an upturned flange may be connected with any of the annular coupling bands shown for pipe of the same diameter and wall thickness and having 2⅔" × ½" corrugations.
11. In the case of H-12 huggerbands, two piece bands are required for diameters through 96" and three piece bands are required for diameters 102" through 120".
12. Two piece bands are required for pipes greater than 42" diameter.
13. The 2¼" × 2" × 0.109" thick galvanized die-formed angle connector may be used in lieu of the 2" × 2" × 3/16" angle connector for standard joints only on pipes through 72" diameter.

STATE OF CALIFORNIA
DEPARTMENT OF TRANSPORTATION

CORRUGATED METAL PIPE COUPLING DETAILS No. 5 STANDARD JOINT

NO SCALE

RSP D97E DATED JUNE 6, 2008 SUPERSEDES STANDARD PLAN D97E
DATED MAY 1, 2006 - PAGE 187 OF THE STANDARD PLANS BOOK DATED MAY 2006.

REVISED STANDARD PLAN RSP D97E

2006 REVISED STANDARD PLAN RSP D97E

4-2-08

DIST	COUNTY	ROUTE	POST MILES TOTAL PROJECT	SHEET NO.	TOTAL SHEETS
09	Mno	395	118.7/119.6	94	139

LICENSED LANDSCAPE ARCHITECT

June 5, 2009
PLANS APPROVAL DATE

The State of California or its officers or agents shall not be responsible for the accuracy or completeness of electronic copies of this plan sheet.

LICENSED LANDSCAPE ARCHITECT — Gregory A. Balzer — 6-9-09 Signature — 2-28-11 Renewal Date — 5-14-09 Date — STATE OF CALIFORNIA

To accompany plans dated 8-8-11

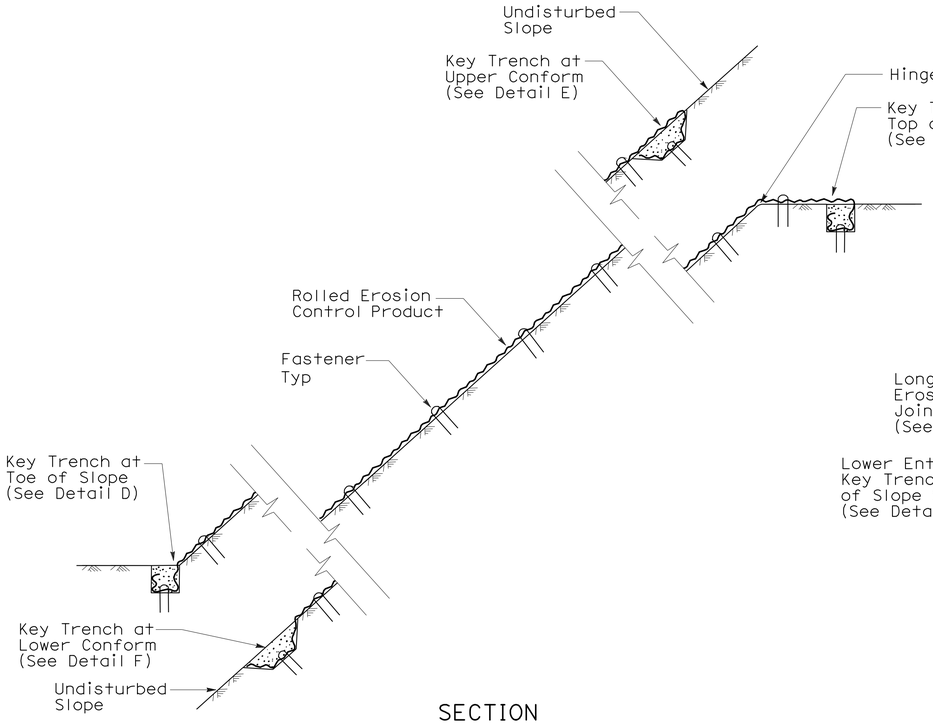

SECTION

ROLLED EROSION CONTROL PRODUCT ON SLOPE WITH VARIOUS KEY ENTRENCHMENTS

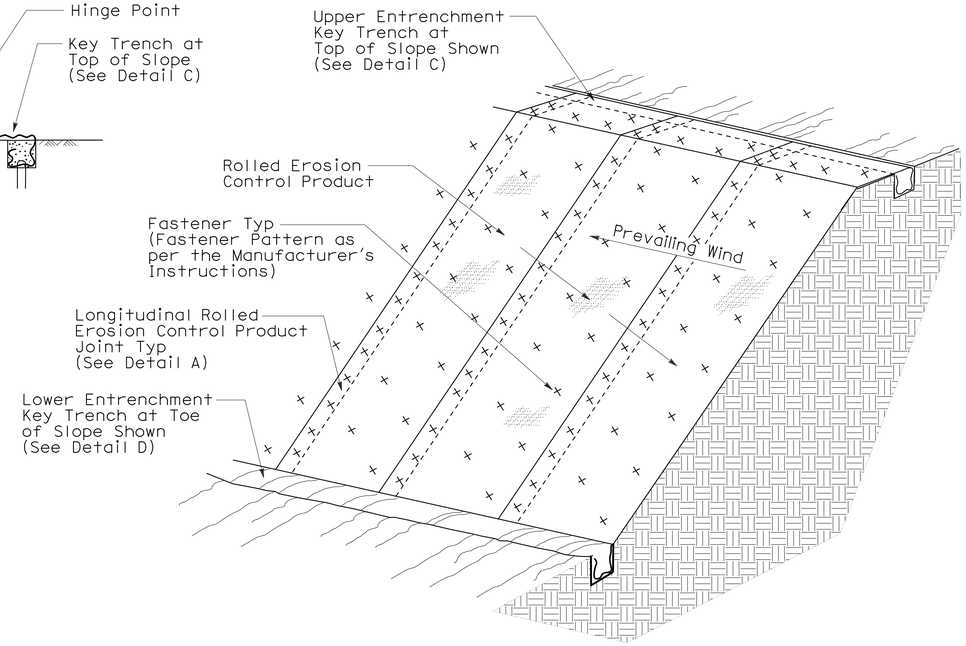

ISOMETRIC

ROLLED EROSION CONTROL PRODUCT ON SLOPE

NOTE:

1. Fiber Roll/Compost Sock shown for reference purposes only.
2. If transverse rolled erosion control product joints are required on slopes, see Detail B.

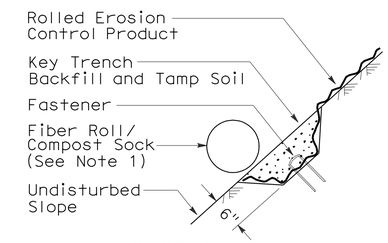

SECTION

DETAIL F
KEY TRENCH AT LOWER CONFORM

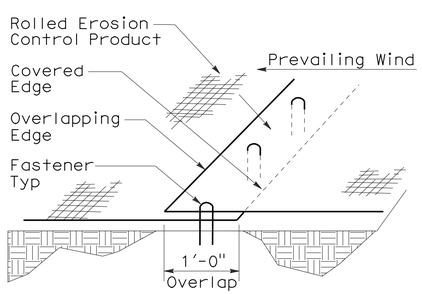

PERSPECTIVE

DETAIL A
LONGITUDINAL ROLLED EROSION CONTROL PRODUCT JOINT

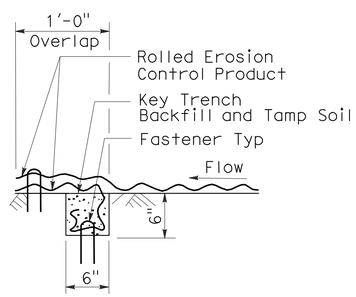

SECTION

DETAIL B
TRANSVERSE ROLLED EROSION CONTROL PRODUCT JOINT

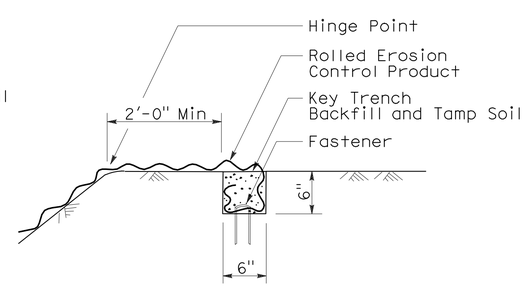

SECTION

DETAIL C
KEY TRENCH AT TOP OF SLOPE

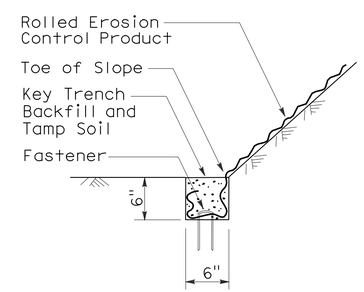

SECTION

DETAIL D
KEY TRENCH AT TOE OF SLOPE

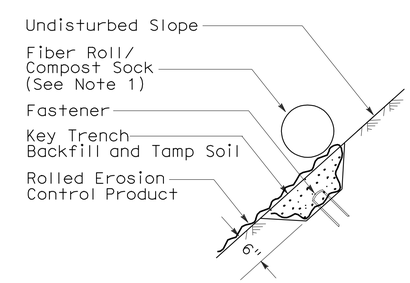

SECTION

DETAIL E
KEY TRENCH AT UPPER CONFORM

STATE OF CALIFORNIA
DEPARTMENT OF TRANSPORTATION

ROLLED EROSION CONTROL PRODUCT

NO SCALE

NSP H53 DATED JUNE 5, 2009 SUPPLEMENTS
THE STANDARD PLANS BOOK DATED MAY 2006.

NEW STANDARD PLAN NSP H53

2006 NEW STANDARD PLAN NSP H53

3-4-09

DIST	COUNTY	ROUTE	POST MILES TOTAL PROJECT	SHEET NO.	TOTAL SHEETS
09	Mno	395	118.7/119.6	95	139

Randell D. Hiatt
REGISTERED CIVIL ENGINEER

June 6, 2008
PLANS APPROVAL DATE

REGISTERED PROFESSIONAL ENGINEER
Randell D. Hiatt
No. C50200
Exp. 6-30-09
CIVIL
STATE OF CALIFORNIA

The State of California or its officers or agents shall not be responsible for the accuracy or completeness of electronic copies of this plan sheet.

To accompany plans dated 8-8-11

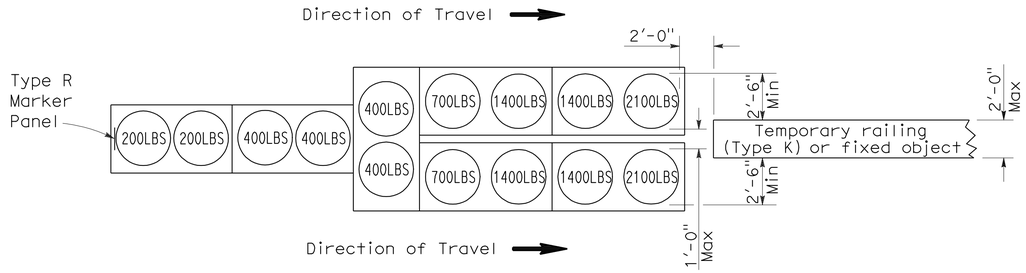

ARRAY 'TU14'

Approach speed 45 mph or more

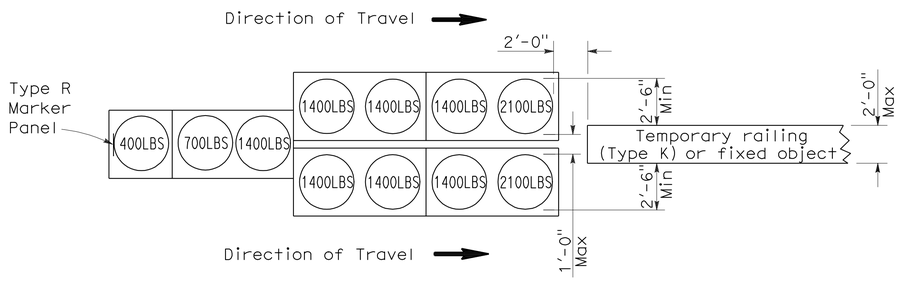

ARRAY 'TU11'

Approach speed less than 45 mph

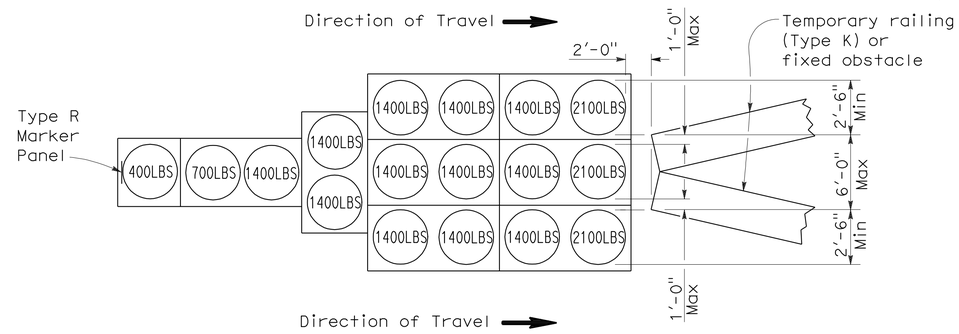

ARRAY 'TU17'

Approach speed less than 45 mph

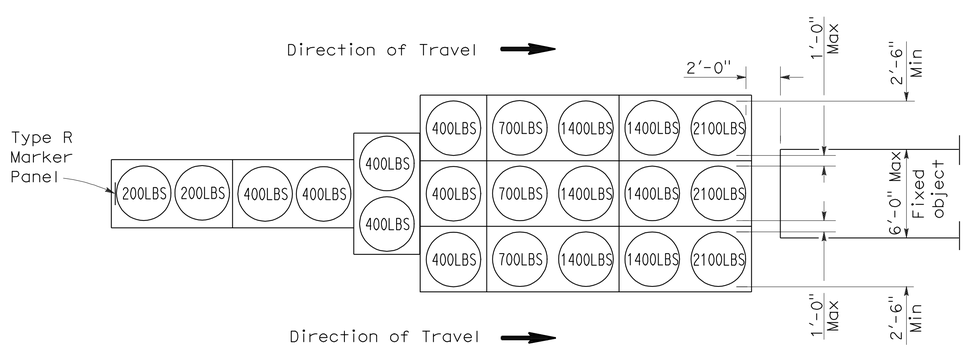

ARRAY 'TU21'

Approach speed 45 mph or more

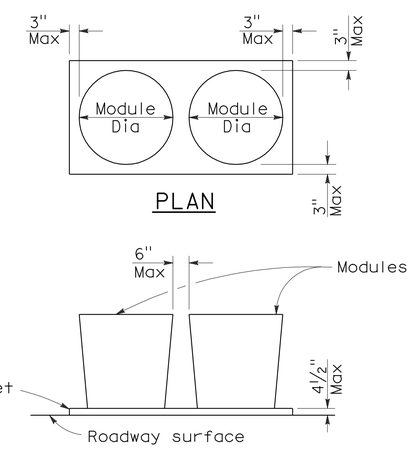

ELEVATION

CRASH CUSHION PALLET DETAIL

See Note 7

NOTES:

1. (XXX) Indicates sand filled module location and weight of sand in pounds for each module. Module spacing is based on the greater diameter of the module.
2. All sand weights are nominal.
3. Temporary crash cushion arrays shall not encroach on the traveled way.
4. Place the top of Type R marker panel 1" below the module lid.
5. Refer to Standard Plan A73B for marker details.
6. Approach speeds indicated conform to NCHRP 350 Report criteria.
7. Use of pallets is optional.

STATE OF CALIFORNIA
DEPARTMENT OF TRANSPORTATION

TEMPORARY CRASH CUSHION, SAND FILLED (UNIDIRECTIONAL)

NO SCALE

RSP T1A DATED JUNE 6, 2008 SUPERSEDES STANDARD PLAN T1A
DATED MAY 1, 2006 - PAGE 211 OF THE STANDARD PLANS BOOK DATED MAY 2006.

REVISED STANDARD PLAN RSP T1A

2006 REVISED STANDARD PLAN RSP T1A

5-15-08

DIST	COUNTY	ROUTE	POST MILES TOTAL PROJECT	SHEET NO.	TOTAL SHEETS
09	Mno	395	118.7/119.6	96	139

Randell D. Hiatt
REGISTERED CIVIL ENGINEER

June 6, 2008
PLANS APPROVAL DATE

REGISTERED PROFESSIONAL ENGINEER
Randell D. Hiatt
No. C50200
Exp. 6-30-09
CIVIL
STATE OF CALIFORNIA

The State of California or its officers or agents shall not be responsible for the accuracy or completeness of electronic copies of this plan sheet.

To accompany plans dated 8-8-11

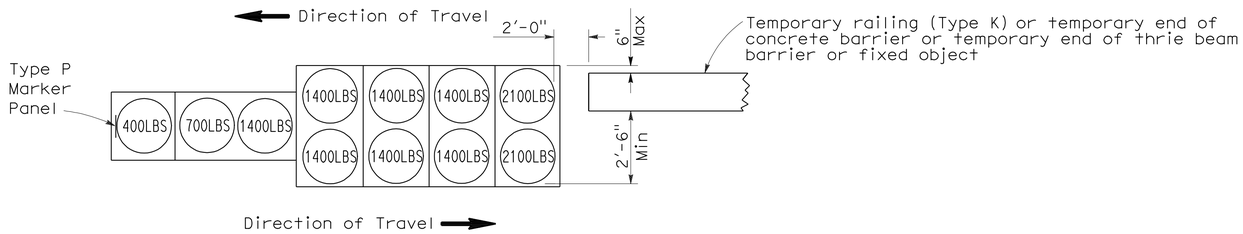

ARRAY 'TB11'

Approach speed less than 45 mph

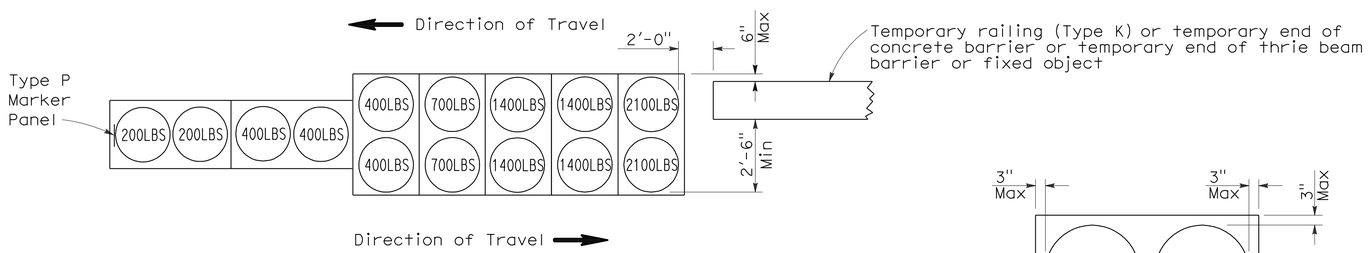

ARRAY 'TB14'

Approach speed 45 mph or more

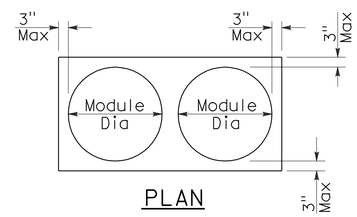

PLAN

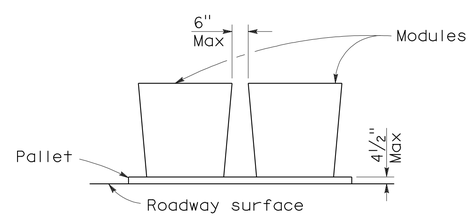

ELEVATION

CRASH CUSHION PALLET DETAIL

See Note 7

NOTES:

1. (XXX) Indicates sand filled module location and weight of sand in pounds for each module. Module spacing is based on the greater diameter of the module.
2. All sand weights are nominal.
3. Temporary crash cushion arrays shall not encroach on the traveled way.
4. Place the Type P marker panel so that the bottom of the panel rests upon the pallet.
5. Refer to Standard Plan A73B for marker details.
6. Approach speeds indicated conform to NCHRP 350 Report criteria.
7. Use of pallets is optional.

STATE OF CALIFORNIA
DEPARTMENT OF TRANSPORTATION

TEMPORARY CRASH CUSHION, SAND FILLED (BIDIRECTIONAL)

NO SCALE

RSP T1B DATED JUNE 6, 2008 SUPERSEDES STANDARD PLAN T1B
DATED MAY 1, 2006 - PAGE 212 OF THE STANDARD PLANS BOOK DATED MAY 2006.

REVISED STANDARD PLAN RSP T1B

2006 REVISED STANDARD PLAN RSP T1B

5-15-08

DIST	COUNTY	ROUTE	POST MILES TOTAL PROJECT	SHEET NO.	TOTAL SHEETS
09	Mno	395	118.7/119.6	97	139

Randell D. Hiatt
REGISTERED CIVIL ENGINEER

June 6, 2008
PLANS APPROVAL DATE

REGISTERED PROFESSIONAL ENGINEER
Randell D. Hiatt
No. C50200
Exp. 6-30-09
CIVIL
STATE OF CALIFORNIA

The State of California or its officers or agents shall not be responsible for the accuracy or completeness of electronic copies of this plan sheet.

To accompany plans dated 8-8-11

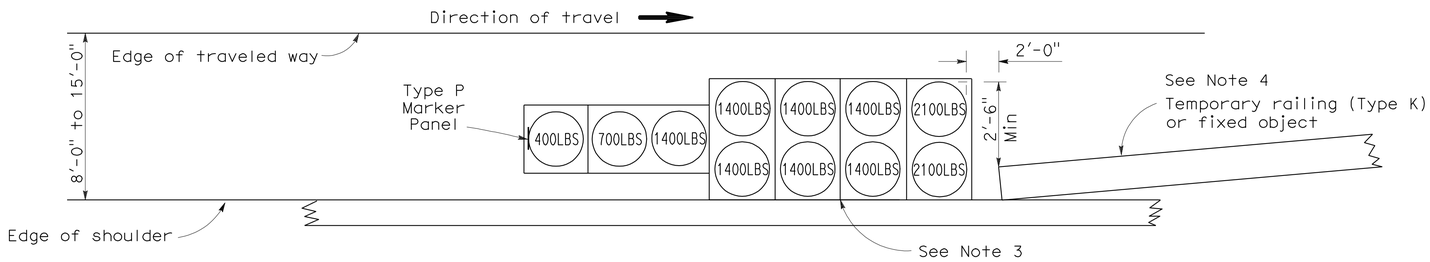

ARRAY 'TS11'

Approach speed less than 45 mph
See Note 9

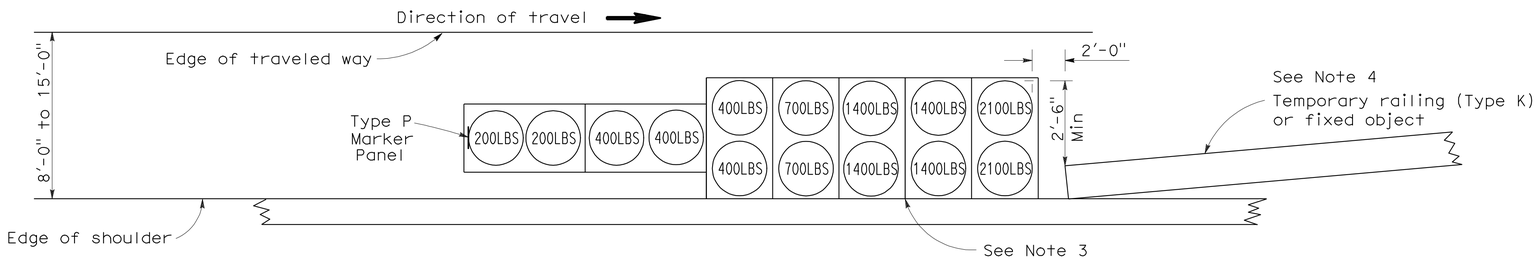

ARRAY 'TS14'

Approach speed 45 mph or more
See Note 9

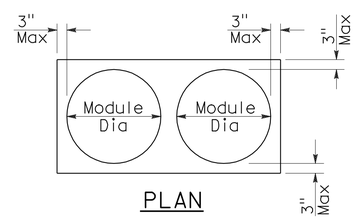

PLAN

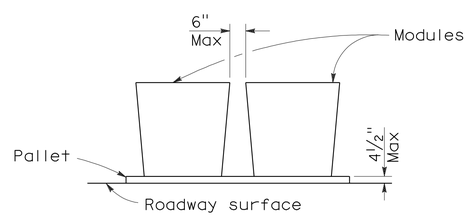

ELEVATION

CRASH CUSHION PALLET DETAIL

See Note 11

NOTES:

1. (XXX) Indicates sand filled module location and weight of sand in pounds for each module. Module spacing is based on the greater diameter of the module.
2. All sand weights are nominal.
3. The temporary crash cushion arrays shown on this plan shall be used only in locations where there will be traffic on one side of the temporary crash cushion array.
4. If the fixed object or approach end of the temporary railing is less than 15'-0" from the edge of traveled way, a temporary crash cushion is required in a construction or work zone.
5. Temporary crash cushion arrays shall not encroach on the traveled way.
6. Arrays for median shoulders shall conform to details shown on this plan for outside shoulders.
7. Place the Type P marker panel so that the bottom of the panel rests upon the pallet and faces traffic.
8. Refer to Standard Plan A73B for marker details.
9. For shoulder widths less than 8'-0", appropriate approved crash cushion protection, other than sand filled modules, shall be provided at fixed objects and at approach ends of temporary railing. The specific type of crash cushion shall be as shown on the project plans or as specified in the Special Provisions, or if not shown on the project plans or specified in the Special Provisions, shall be as approved by the Engineer.
10. Approach speeds indicated conform to NCHRP 350 Report criteria.
11. Use of pallets is optional.

STATE OF CALIFORNIA
DEPARTMENT OF TRANSPORTATION

TEMPORARY CRASH CUSHION, SAND FILLED (SHOULDER INSTALLATIONS)

NO SCALE

RSP T2 DATED JUNE 6, 2008 SUPERSEDES STANDARD PLAN T2
DATED MAY 1, 2006 - PAGE 213 OF THE STANDARD PLANS BOOK DATED MAY 2006.

REVISED STANDARD PLAN RSP T2

2006 REVISED STANDARD PLAN RSP T2

Dist	COUNTY	ROUTE	POST MILES TOTAL PROJECT	SHEET No.	TOTAL SHEETS
09	Mno	395	118.7/119.6	98	139

Randell D. Hiatt
REGISTERED CIVIL ENGINEER

May 20, 2011
PLANS APPROVAL DATE

REGISTERED PROFESSIONAL ENGINEER
Randell D. Hiatt
No. C50200
Exp. 6-30-11
CIVIL
STATE OF CALIFORNIA

The State of California or its officers or agents shall not be responsible for the accuracy or completeness of electronic copies of this plan sheet.

To accompany plans dated 8-8-11

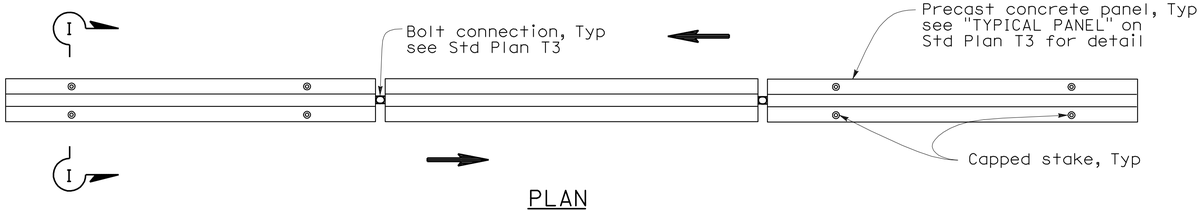

PLAN

RAILING STAKING CONFIGURATION FOR TWO-WAY TRAFFIC

See Note 1

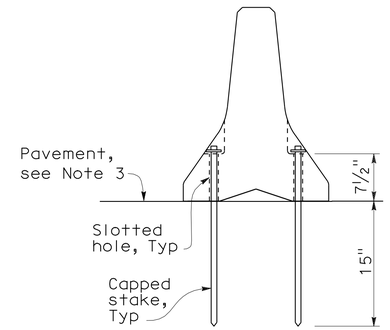

SECTION I-I

NOTES:

1. Where Type K Temporary Railing is placed as a temporary or long term barrier in two-way traffic on highways with less than 24" from the edge of traveled way, use four capped stakes per every other panel with end panels staked.
2. Where Type K Temporary Railing is placed 3" to 24" from the edge of an excavation on highways, use two capped stakes per panel along the traffic side.
3. Staked Type K Temporary Railing must be supported by at least 4" thick concrete, hot mix asphalt or existing asphalt concrete pavement.
4. The minimum yield strength for the washer must be 60,000 psi.
5. Direction of adjacent traffic indicated by ⟹.

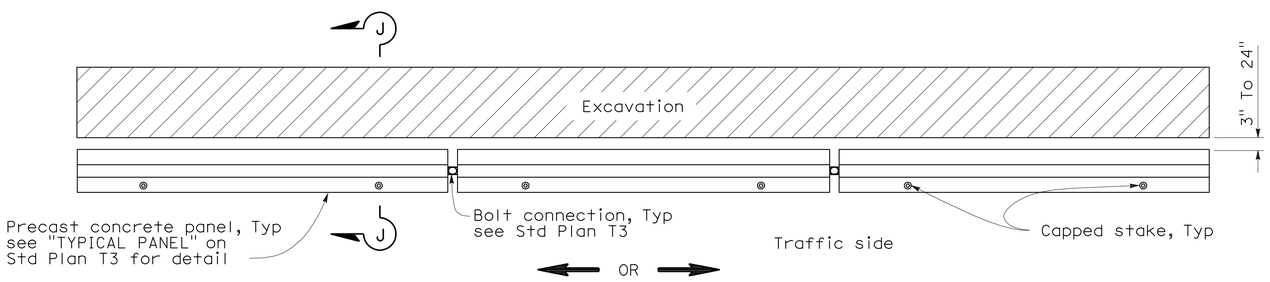

PLAN

RAILING STAKING CONFIGURATION ADJACENT TO AN EXCAVATION

See Note 2

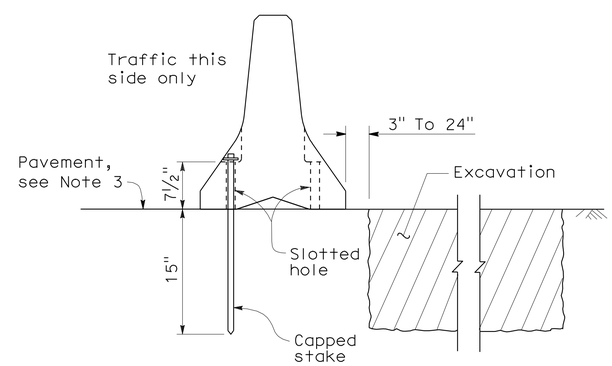

SECTION J-J

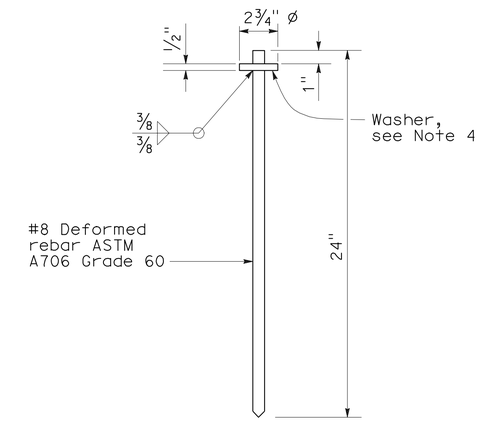

CAPPED STAKE DETAIL

STATE OF CALIFORNIA
DEPARTMENT OF TRANSPORTATION

TEMPORARY RAILING (TYPE K)

NO SCALE

NSP T3A DATED MAY 20, 2011 SUPPLEMENTS
THE STANDARD PLANS BOOK DATED MAY 2006.

NEW STANDARD PLAN NSP T3A

2006 NEW STANDARD PLAN NSP T3A

DIST	COUNTY	ROUTE	POST MILES TOTAL PROJECT	SHEET NO.	TOTAL SHEETS
09	Mno	395	118.7/119.6	99	139

REGISTERED CIVIL ENGINEER

November 17, 2006
PLANS APPROVAL DATE

REGISTERED PROFESSIONAL ENGINEER
Greg W. Edwards
No. C36386
Exp. 6-30-08
CIVIL
STATE OF CALIFORNIA

The State of California or its officers or agents shall not be responsible for the accuracy or completeness of electronic copies of this plan sheet.

To accompany plans dated 8-8-11

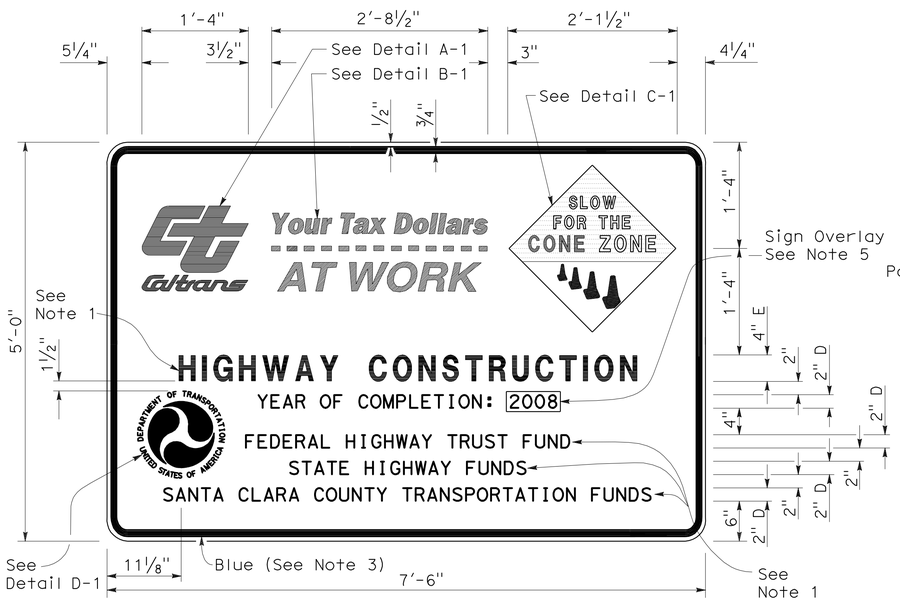

TYPE 1

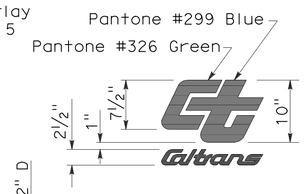

DETAIL A-1

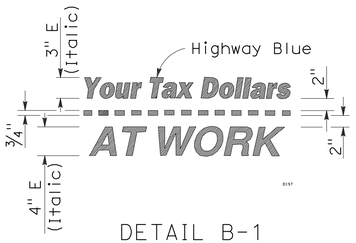

DETAIL B-1
(See Note 3)

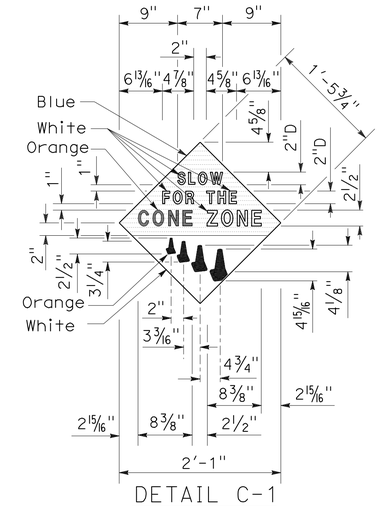

DETAIL C-1
(See Note 4)

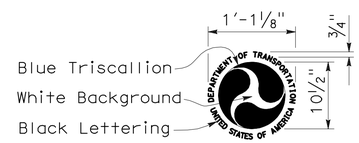

DETAIL D-1
(See Note 6)

NOTES:

1. The sign messages shown for type of project and fund types are examples only. See the Special Provisions for the applicable type of project and fund type messages to be used.
2. Except as otherwise shown, the legend of sign shall be black on a white background (non-reflective).
3. The border of the signs and details "B-1" and "B-2" shall be blue (non-reflective).
4. The diamond in details "C-1" and "C-2" shall be blue for the background of message, " SLOW FOR THE CONE ZONE", and white background for the orange cones. The color and type of font for the "SLOW FOR THE CONE ZONE" message shall be: "SLOW" white D; "FOR THE" white D; "CONE" orange Arial font; "ZONE" white Arial font.
5. Year of completion of project construction shown on the overlay is an example only. See the Special Provisions.
6. Use when the Project involves Federal Highway Trust Fund.

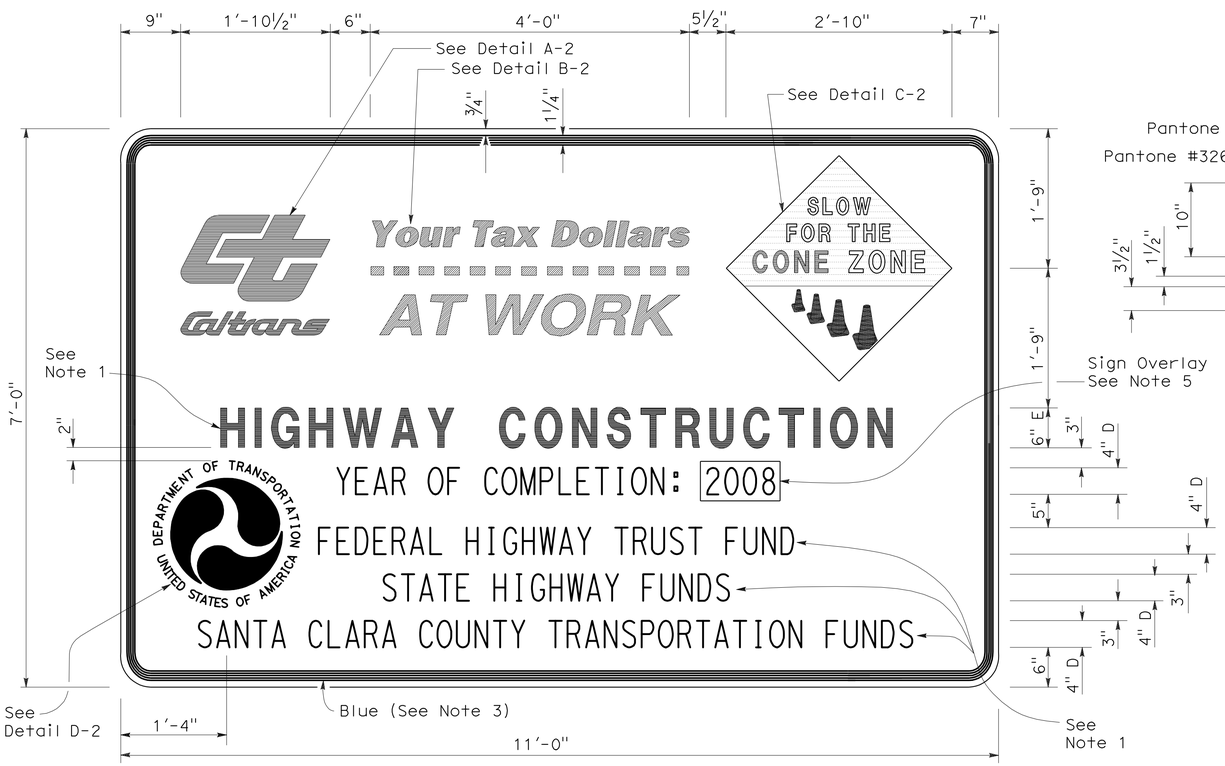

TYPE 2

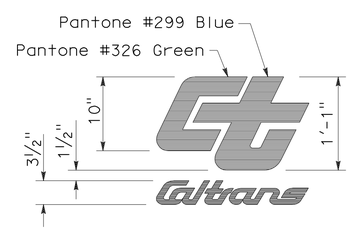

DETAIL A-2

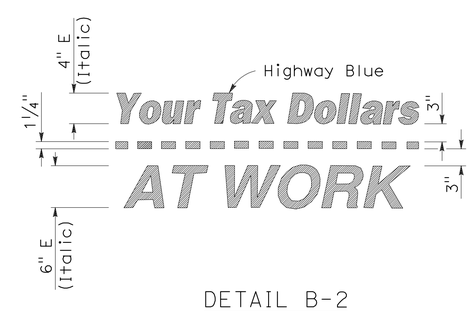

DETAIL B-2
(See Note 3)

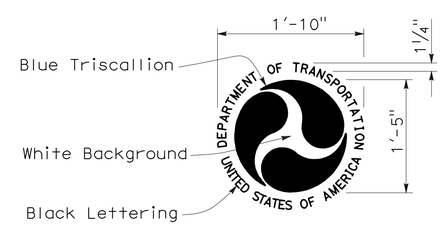

DETAIL D-2
(See Note 6)

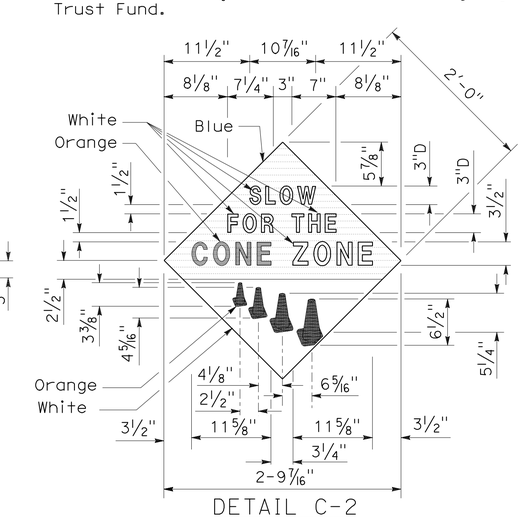

DETAIL C-2
(See Note 4)

STATE OF CALIFORNIA
DEPARTMENT OF TRANSPORTATION

CONSTRUCTION PROJECT FUNDING IDENTIFICATION SIGNS

NO SCALE

RSP T7 DATED NOVEMBER 17, 2006 SUPERSEDES STANDARD PLAN T7
DATED MAY 1, 2006 - PAGE 217 OF THE STANDARD PLANS BOOK DATED MAY 2006.

REVISED STANDARD PLAN RSP T7

2006 REVISED STANDARD PLAN RSP T7

9-7-06

DIST	COUNTY	ROUTE	POST MILES TOTAL PROJECT	SHEET NO.	TOTAL SHEETS
09	Mno	395	118.7/119.6	100	139

LICENSED LANDSCAPE ARCHITECT

April 3, 2009
PLANS APPROVAL DATE

LICENSED LANDSCAPE ARCHITECT — Robert B. Schott — 3025 — Signature — 11-30-10 Renewal Date — 2-25-09 Date — STATE OF CALIFORNIA

The State of California or its officers or agents shall not be responsible for the accuracy or completeness of electronic copies of this plan sheet.

To accompany plans dated 8-8-11

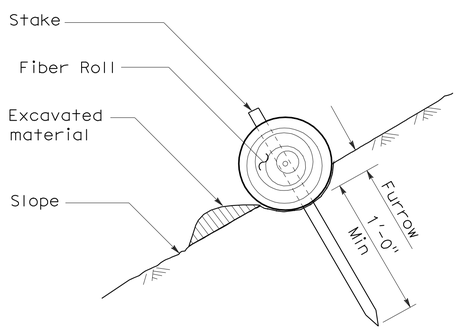

SECTION

TEMPORARY FIBER ROLL (TYPE 1)

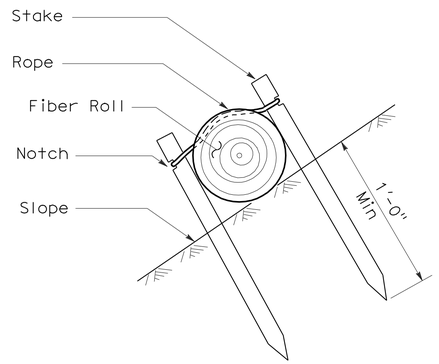

SECTION

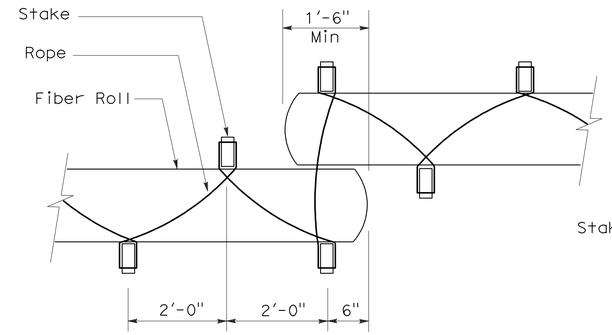

PLAN

TEMPORARY FIBER ROLL (TYPE 2)

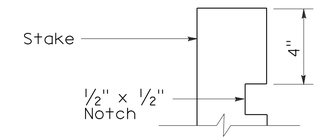

ELEVATION

STAKE NOTCH DETAIL

NOTES:

1. Temporary fiber roll spacing varies depending upon slope inclination.
2. Installations shown in the perspectives are for slope inclination of 10:1 and steeper.

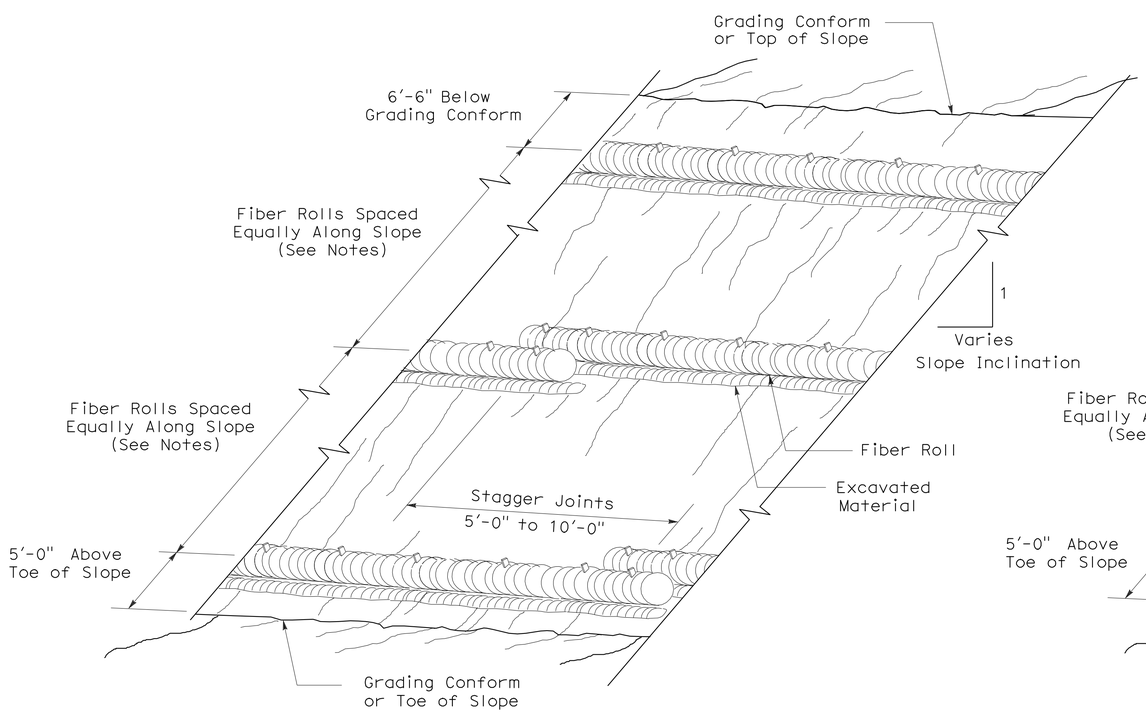

PERSPECTIVE

TEMPORARY FIBER ROLL (TYPE 1)

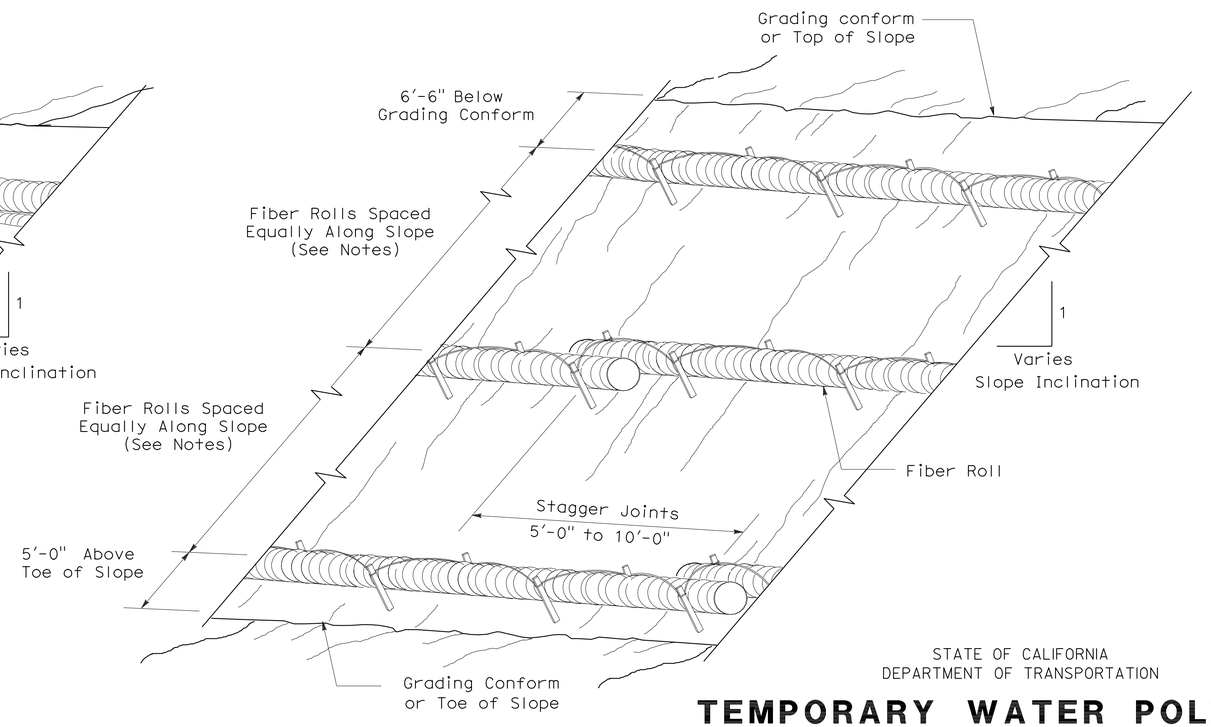

PERSPECTIVE

TEMPORARY FIBER ROLL (TYPE 2)

STATE OF CALIFORNIA
DEPARTMENT OF TRANSPORTATION

TEMPORARY WATER POLLUTION CONTROL DETAILS (TEMPORARY FIBER ROLL)

NO SCALE

RSP T56 DATED APRIL 3, 2009 SUPERSEDES STANDARD PLAN T56
DATED MAY 1, 2006 - PAGE 232 OF THE STANDARD PLANS BOOK DATED MAY 2006.

REVISED STANDARD PLAN RSP T56

2006 REVISED STANDARD PLAN RSP T56

2-23-09