ACNH-ACBRNH-P099(533)E

Dist	COUNTY	ROUTE	POST MILES TOTAL PROJECT	SHEET No.	TOTAL SHEETS
06	Tul	99	2.9/3.3	1	128

STATE OF CALIFORNIA
DEPARTMENT OF TRANSPORTATION

PROJECT PLANS FOR CONSTRUCTION ON
STATE HIGHWAY

IN TULARE COUNTY NEAR EARLIMART FROM 0.2 MILE SOUTH TO 0.2 MILE NORTH OF AVENUE 24 UNDERCROSSING

TO BE SUPPLEMENTED BY STANDARD PLANS DATED MAY 2006

INDEX OF PLANS

SHEET No.	DESCRIPTION
1	TITLE AND LOCATION MAP
2-5	TYPICAL CROSS SECTIONS
6-8	LAYOUTS
9	PROFILES
10-17	CONSTRUCTION DETAILS
18	UTILITY PLANS
19	CONSTRUCTION AREA SIGNS
20-55	STAGE CONSTRUCTION
56-69	TRAFFIC HANDLING PLANS
70-72	PAVEMENT DELINEATION PLANS
73-75	SIGN PLANS
76-78	SUMMARY OF QUANTITIES
79-81	HIGHWAY PLANTING
82-83	ELECTRICAL PLANS
84-110	REVISED AND NEW STANDARD PLANS

STRUCTURE PLANS

111-128 AVENUE 24 UNDERCROSSING (REPLACE) Br No. 46-0268

THE STANDARD PLANS LIST APPLICABLE TO THIS CONTRACT IS INCLUDED IN THE NOTICE TO BIDDERS AND SPECIAL PROVISIONS BOOK.

LOCATION MAP

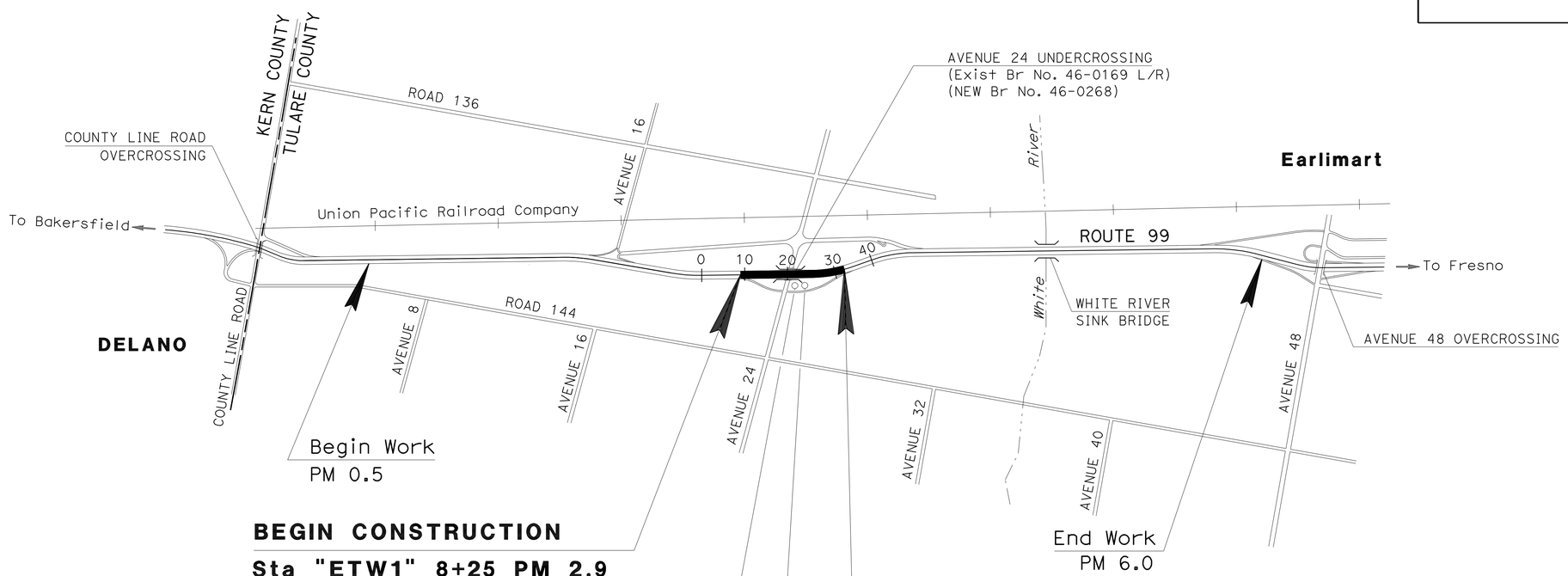

NO SCALE

THE CONTRACTOR SHALL POSSESS THE CLASS (OR CLASSES) OF LICENSE AS SPECIFIED IN THE "NOTICE TO BIDDERS."

PROJECT MANAGER: PHILLIP SANCHEZ
DESIGN ENGINEER: ALI R. ALQATAMI

A Ahmad 03-11-10
PROJECT ENGINEER DATE
REGISTERED CIVIL ENGINEER

REGISTERED PROFESSIONAL ENGINEER
AHMAD K. AHMAD
No. 69064
Exp. 6-30-10
CIVIL
STATE OF CALIFORNIA

April 5, 2010
PLANS APPROVAL DATE

THE STATE OF CALIFORNIA OR ITS OFFICERS OR AGENTS SHALL NOT BE RESPONSIBLE FOR THE ACCURACY OR COMPLETENESS OF SCANNED COPIES OF THIS PLAN SHEET.

LAST REVISION 03-11-10
DATE PLOTTED => 10-MAY-2010
TIME PLOTTED => 13:51

CONTRACT No. 06-471904

Dist	COUNTY	ROUTE	POST MILES TOTAL PROJECT	SHEET No.	TOTAL SHEETS
06	Tul	99	2.9/3.3	2	128

A Ahmad 03-11-10
REGISTERED CIVIL ENGINEER DATE

4-5-10
PLANS APPROVAL DATE

REGISTERED PROFESSIONAL ENGINEER AHMAD K. AHMAD No. 69064 Exp. 6-30-10 CIVIL STATE OF CALIFORNIA

THE STATE OF CALIFORNIA OR ITS OFFICERS OR AGENTS SHALL NOT BE RESPONSIBLE FOR THE ACCURACY OR COMPLETENESS OF SCANNED COPIES OF THIS PLAN SHEET.

NOTES:

1. DIMENSIONS OF THE PAVEMENT STRUCTURES (STRUCTURAL SECTIONS) ARE SUBJECT TO TOLERANCES SPECIFIED IN THE STANDARD SPECIFICATIONS.
2. SUPERELEVATION AS SHOWN OR AS DIRECTED BY THE ENGINEER.
3. FOR LOCATIONS AND QUANTITIES OF COLD PLANE AC Pvmt, HMA (TYPE A), PCC REPLACEMENT WITH JPCP, HMAB (TYPE A), AND CI 2 AB, SEE SUMMARY OF QUANTITIES SHEETS.
4. FOR LOCATIONS AND TYPE OF HMA DIKE SEE LAYOUT SHEETS, AND SUMMARY OF QUANTITIES SHEETS.
5. FOR LOCATIONS AND LIMITS OF MBGR AND RECONSTRUCT STBB (STEEL POST) SEE LAYOUT SHEETS, AND SUMMARY OF QUANTITIES SHEETS.
6. FOR LOCATIONS AND LIMITS OF OLEANDER REMOVAL SEE LAYOUTS, AND SUMMARY OF QUANTITIES SHEETS.

ABBREVIATIONS:

HMA - HOT MIX ASPHALT
RHMA - RUBBERIZED HOT MIX ASPHALT
HMAB - HOT MIX ASPHALT BASE

DESIGN DESIGNATION

2009 ADT = 46,000 D = 67%
2029 ADT = 72,500 T = 13%
2029 DHV = 9,400 V = 70 mph
TI = 16 TRUCKS= 28% OF ADT

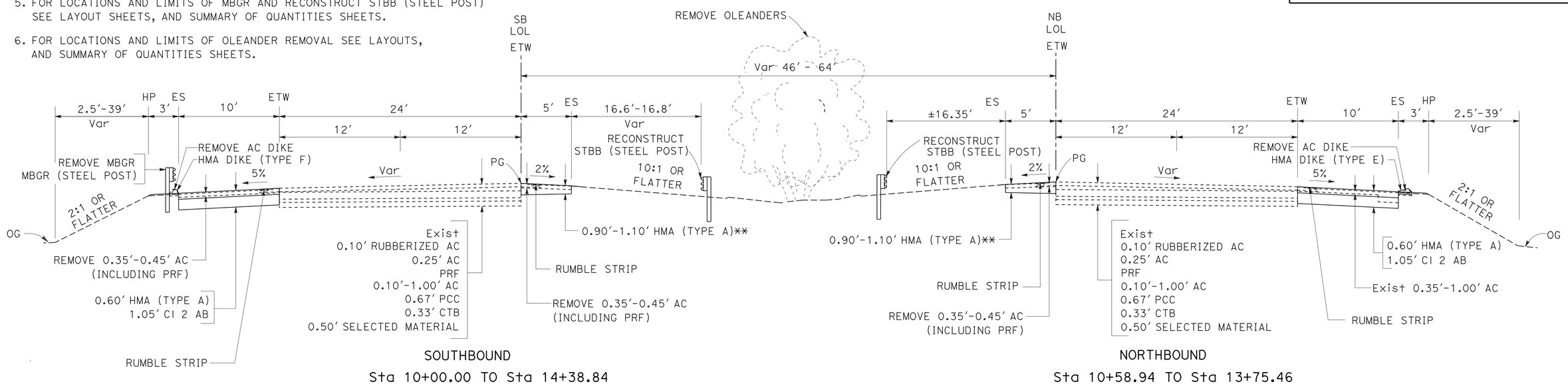

ROUTE 99

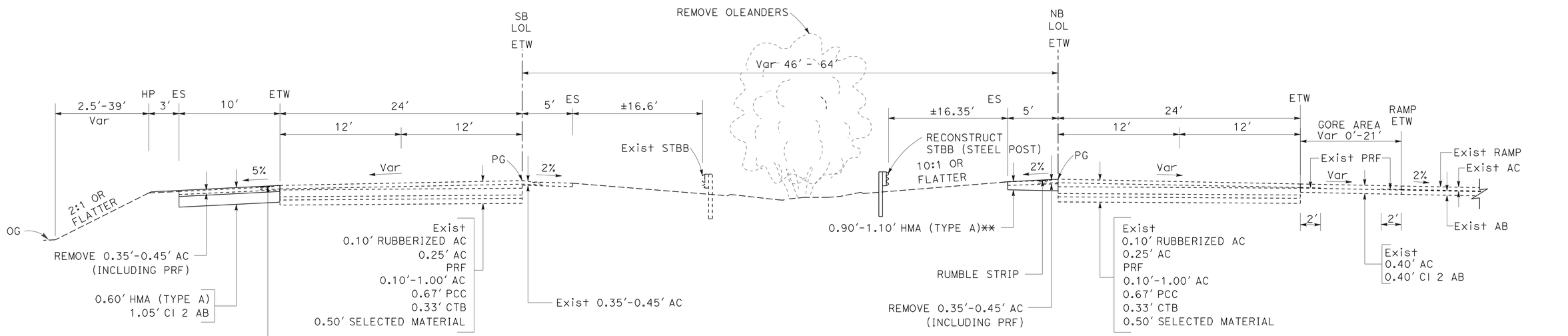

ROUTE 99

** 0.15'-0.35' COLD PLANE AC Pvmt BUILT IN STAGE 1, PHASE 2 OR IN STAGE 3, PHASE 1 AND PLACE 0.15' HMA (TYPE A) AT THE END OF STAGE 4, BEFORE INSTALL SHOULDER RUMBLE STRIP. DIMENSIONS ARE AFTER THE FINAL COLD PLANE AND OVERLAY (SEE CONSTRUCTION DETAILS).

TYPICAL CROSS SECTIONS

NO SCALE

X-1

REVISED BY | DATE REVISED
RANJIT K MONDAL | AHMAD K AHMAD
CALCULATED-DESIGNED BY | CHECKED BY
FUNCTIONAL SUPERVISOR: ALI ALQATAMI
STATE OF CALIFORNIA - DEPARTMENT OF TRANSPORTATION
Caltrans® DESIGN

LAST REVISION 03-11-10 | DATE PLOTTED => 06-APR-2010 | TIME PLOTTED => 14:00

Dist	COUNTY	ROUTE	POST MILES TOTAL PROJECT	SHEET No.	TOTAL SHEETS
06	Tul	99	2.9/3.3	3	128

A Ahmad 03-11-10
REGISTERED CIVIL ENGINEER DATE

4-5-10
PLANS APPROVAL DATE

REGISTERED PROFESSIONAL ENGINEER
AHMAD K. AHMAD
No. 69064
Exp. 6-30-10
CIVIL
STATE OF CALIFORNIA

THE STATE OF CALIFORNIA OR ITS OFFICERS OR AGENTS SHALL NOT BE RESPONSIBLE FOR THE ACCURACY OR COMPLETENESS OF SCANNED COPIES OF THIS PLAN SHEET.

NOTES:

BRIDGE APPROACH SLAB LOCATIONS:

SB ROUTE 99: Sta 19+67.61 TO Sta 19+77.61
Sta 21+17.65 TO Sta 21+27.65

NB ROUTE 99: Sta 19+00.64 TO Sta 19+10.64
Sta 20+50.64 TO Sta 20+60.64

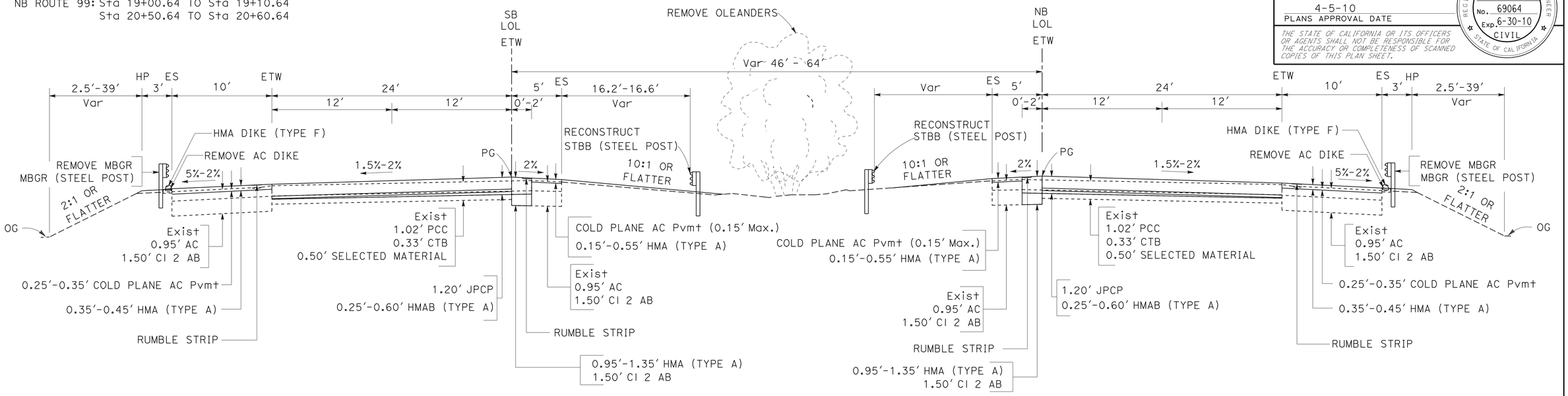

SOUTHBOUND

Sta 17+69.76 TO Sta 19+67.61
Sta 21+27.65 TO Sta 23+47.72

ROUTE 99

NORTHBOUND

Sta 16+51.60 TO Sta 19+00.64
Sta 20+60.64 TO Sta 23+36.41

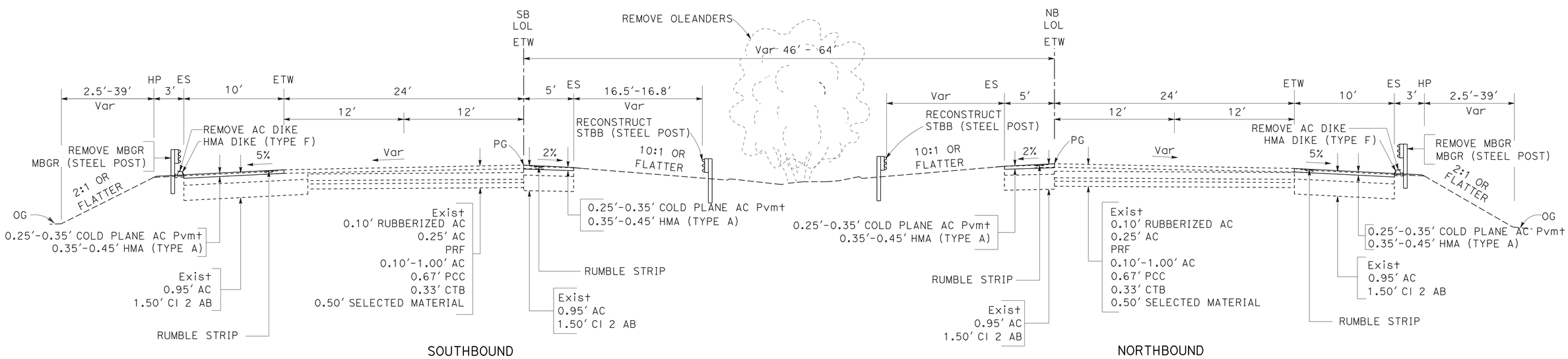

SOUTHBOUND

Sta 14+38.84 TO Sta 17+69.76
Sta 23+47.72 TO Sta 26+79.48

ROUTE 99

NORTHBOUND

Sta 13+75.46 TO Sta 16+51.60
Sta 23+36.41 TO Sta 25+97.12

** 0.15'-0.35' COLD PLANE AC Pvmt BUILT IN STAGE 1, PHASE 2 OR IN STAGE 3, PHASE 1 AND PLACE 0.15' HMA (TYPE A) AT THE END OF STAGE 4, BEFORE INSTALL SHOULDER RUMBLE STRIP. DIMENSIONS ARE AFTER THE FINAL COLD PLANE AND OVERLAY (SEE CONSTRUCTION DETAILS).

TYPICAL CROSS SECTIONS

NO SCALE

X-2

REVISED BY | DATE REVISED
RANJIT K MONDAL | AHMAD K AHMAD
CALCULATED-DESIGNED BY | CHECKED BY
FUNCTIONAL SUPERVISOR: ALI ALQATAMI

STATE OF CALIFORNIA - DEPARTMENT OF TRANSPORTATION
Caltrans
DESIGN

LAST REVISION 03-11-10 | DATE PLOTTED => 06-APR-2010 | TIME PLOTTED => 14:00

Dist	COUNTY	ROUTE	POST MILES TOTAL PROJECT	SHEET No.	TOTAL SHEETS
06	Tul	99	2.9/3.3	4	128

A Ahmad 03-11-10
REGISTERED CIVIL ENGINEER DATE

4-5-10
PLANS APPROVAL DATE

REGISTERED PROFESSIONAL ENGINEER
AHMAD K. AHMAD
No. 69064
Exp. 6-30-10
CIVIL
STATE OF CALIFORNIA

THE STATE OF CALIFORNIA OR ITS OFFICERS OR AGENTS SHALL NOT BE RESPONSIBLE FOR THE ACCURACY OR COMPLETENESS OF SCANNED COPIES OF THIS PLAN SHEET.

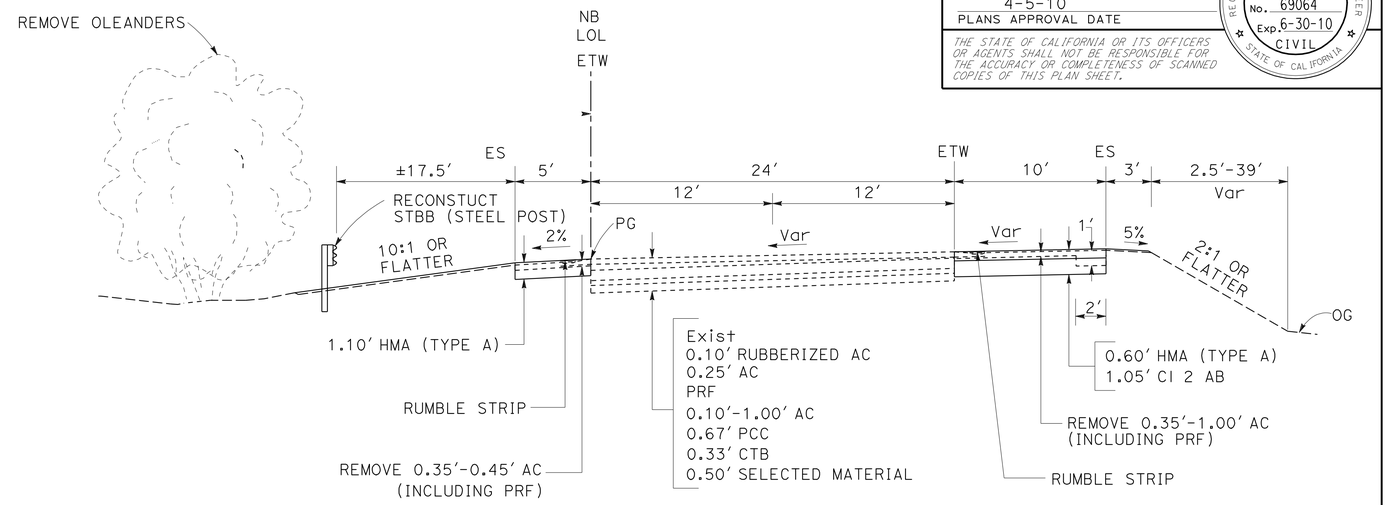

NORTHBOUND
Sta 28+21.13 TO Sta 30+39.15

ROUTE 99

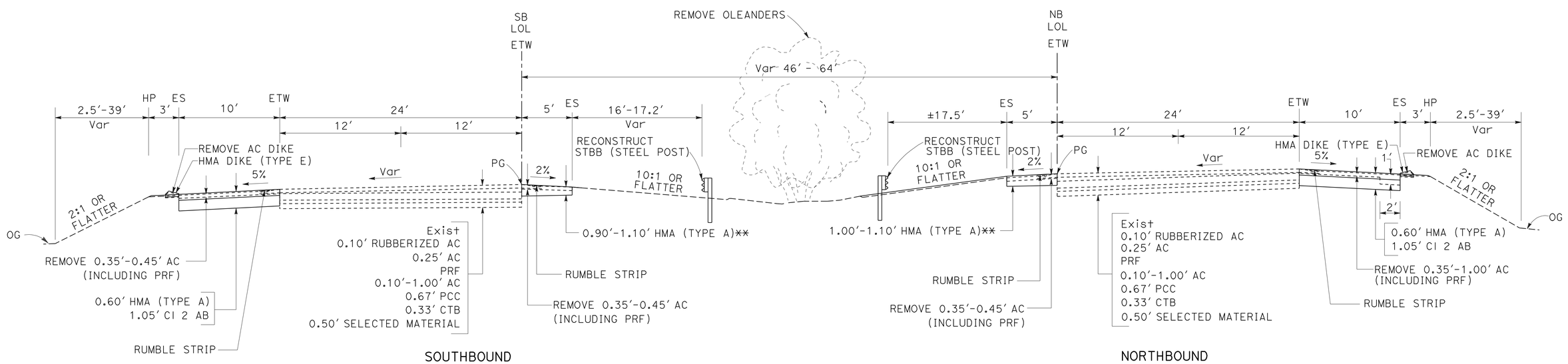

SOUTHBOUND
Sta 26+79.48 TO Sta 31+86.45

NORTHBOUND
Sta 25+97.12 TO Sta 28+21.13

ROUTE 99

** 0.15′-0.35′ COLD PLANE AC Pvmt BUILT IN STAGE 1, PHASE 2 OR IN STAGE 3, PHASE 1 AND PLACE 0.15′ HMA (TYPE A) AT THE END OF STAGE 4, BEFORE INSTALL SHOULDER RUMBLE STRIP. DIMENSIONS ARE AFTER THE FINAL COLD PLANE AND OVERLAY (SEE CONSTRUCTION DETAILS).

TYPICAL CROSS SECTIONS

NO SCALE

X-3

STATE OF CALIFORNIA - DEPARTMENT OF TRANSPORTATION
Caltrans®
DESIGN

FUNCTIONAL SUPERVISOR: ALI ALQATAMI
CALCULATED-DESIGNED BY: RANJIT K MONDAL
CHECKED BY: AHMAD K AHMAD
REVISED BY
DATE REVISED

LAST REVISION 03-11-10
DATE PLOTTED => 06-APR-2010
TIME PLOTTED => 14:01

Dist	COUNTY	ROUTE	POST MILES TOTAL PROJECT	SHEET No.	TOTAL SHEETS
06	Tul	99	2.9/3.3	5	128

A Ahmad 03-11-10
REGISTERED CIVIL ENGINEER DATE

4-5-10
PLANS APPROVAL DATE

REGISTERED PROFESSIONAL ENGINEER
AHMAD K. AHMAD
No. 69064
Exp. 6-30-10
CIVIL
STATE OF CALIFORNIA

THE STATE OF CALIFORNIA OR ITS OFFICERS OR AGENTS SHALL NOT BE RESPONSIBLE FOR THE ACCURACY OR COMPLETENESS OF SCANNED COPIES OF THIS PLAN SHEET.

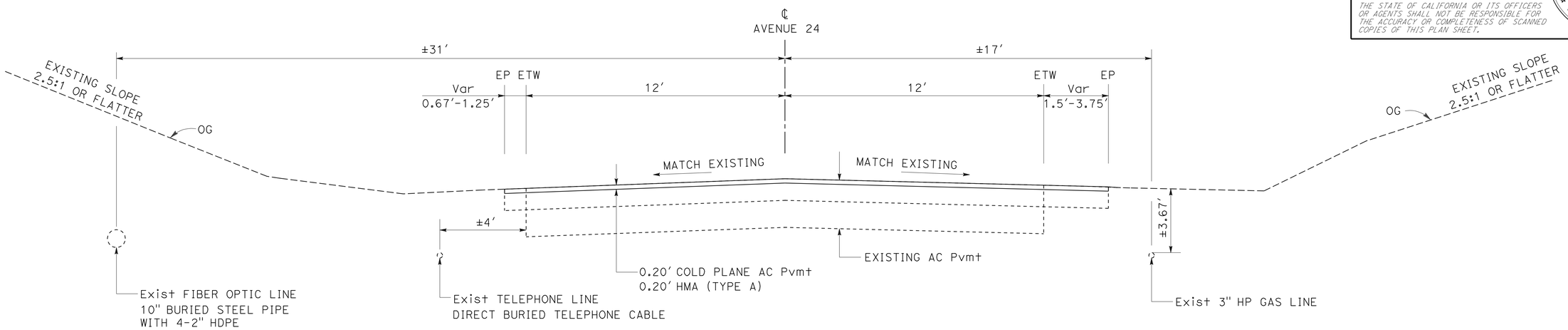

WESTBOUND
Sta 10+00.00 TO Sta 12+00.00

EASTBOUND
Sta 10+00.00 TO Sta 12+00.00

AVENUE 24

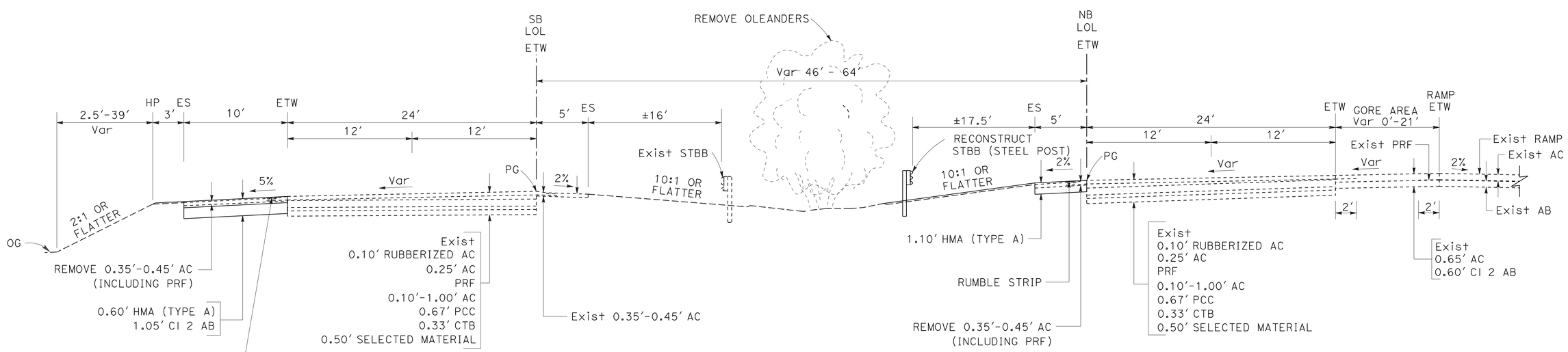

SOUTHBOUND
Sta 31+86.45 TO Sta 33+61.45

NORTHBOUND
Sta 30+39.15 TO Sta 32+29.24

ROUTE 99

TYPICAL CROSS SECTIONS

NO SCALE

X-4

STATE OF CALIFORNIA - DEPARTMENT OF TRANSPORTATION
Caltrans® DESIGN

FUNCTIONAL SUPERVISOR: ALI ALQATAMI
CALCULATED-DESIGNED BY: RANJIT K MONDAL
CHECKED BY: AHMAD K AHMAD
REVISED BY
DATE REVISED

LAST REVISION 03-11-10
DATE PLOTTED => 06-APR-2010
TIME PLOTTED => 14:01

Dist	COUNTY	ROUTE	POST MILES TOTAL PROJECT	SHEET No.	TOTAL SHEETS
06	Tul	99	2.9/3.3	6	128

A Ahmad 03-11-10
REGISTERED CIVIL ENGINEER DATE

4-5-10
PLANS APPROVAL DATE

REGISTERED PROFESSIONAL ENGINEER AHMAD K. AHMAD No. 69064 Exp. 6-30-10 CIVIL STATE OF CALIFORNIA

THE STATE OF CALIFORNIA OR ITS OFFICERS OR AGENTS SHALL NOT BE RESPONSIBLE FOR THE ACCURACY OR COMPLETENESS OF SCANNED COPIES OF THIS PLAN SHEET.

LEGEND

- DIRECTION OF TRAVEL
- SHOULDER CONSTRUCTION
- REMOVE EXISTING PCC PAVEMENT AND REPLACE WITH JPCP

NOTES:

1. FOR ACCURATE RIGHT OF WAY AND ACCESS DATA, CONTACT RIGHT OF WAY ENGINERING AT THE DISTRICT OFFICE.
2. FOR BRIDGE BARRIER CONNECTION DETAILS SEE STANDARD PLAN.

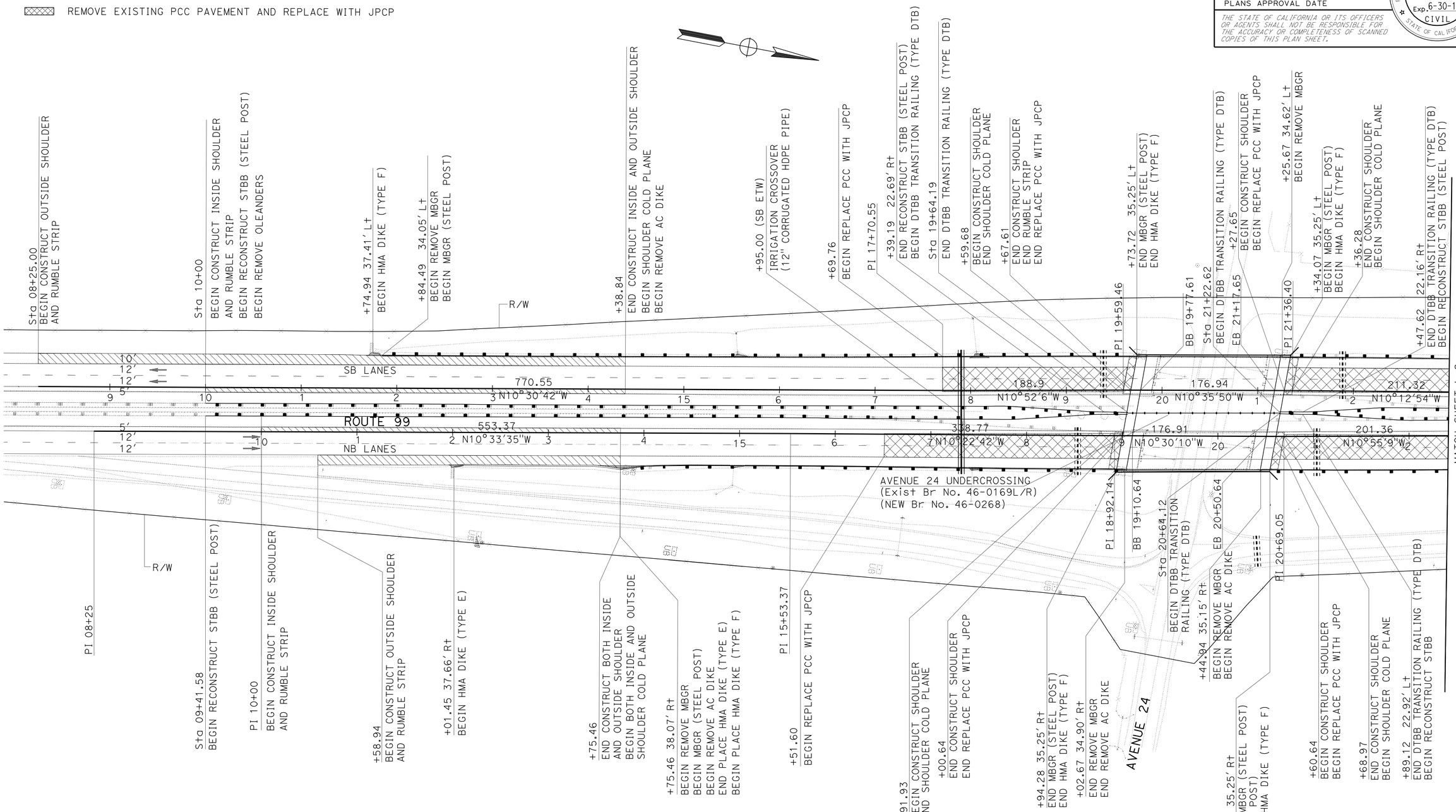

LAYOUT

SCALE: 1" = 50'

L-1

REVISED BY	DATE REVISED
RANJIT K MONDAL	
AHMAD K AHMAD	

CALCULATED-DESIGNED BY
CHECKED BY

FUNCTIONAL SUPERVISOR
ALI ALQATAMI

STATE OF CALIFORNIA - DEPARTMENT OF TRANSPORTATION
Caltrans®
DESIGN

LAST REVISION 03-11-10
DATE PLOTTED => 06-APR-2010
TIME PLOTTED => 14:01

Dist	COUNTY	ROUTE	POST MILES TOTAL PROJECT	SHEET No.	TOTAL SHEETS
06	Tul	99	2.9/3.3	7	128

A Ahmad 03-11-10
REGISTERED CIVIL ENGINEER DATE

4-5-10
PLANS APPROVAL DATE

REGISTERED PROFESSIONAL ENGINEER
AHMAD K. AHMAD
No. 69064
Exp. 6-30-10
CIVIL
STATE OF CALIFORNIA

THE STATE OF CALIFORNIA OR ITS OFFICERS OR AGENTS SHALL NOT BE RESPONSIBLE FOR THE ACCURACY OR COMPLETENESS OF SCANNED COPIES OF THIS PLAN SHEET.

NOTE: FOR ACCURATE RIGHT OF WAY AND ACCESS DATA, CONTACT RIGHT OF WAY ENGINEERING AT THE DISTRICT OFFICE.

CURVE DATA

No.	R	Δ	T	L
1	3977.00	5°7'31"	178.00	355.76
2	3976.62	6°22'50"	221.65	442.85

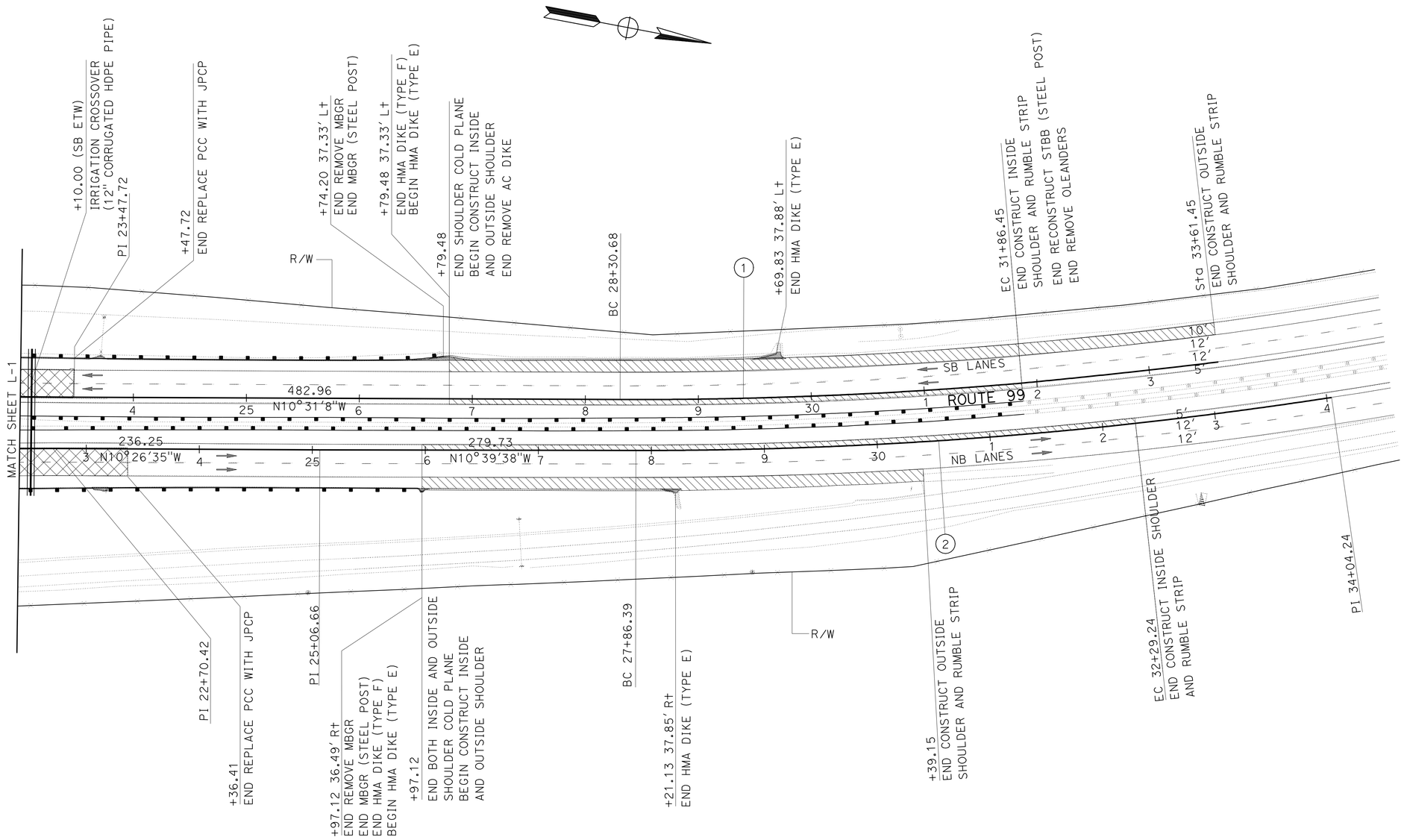

LAYOUT

SCALE: 1" = 50'

L-2

REVISED BY	DATE REVISED

CALCULATED-DESIGNED BY	RANJIT K MONDAL
CHECKED BY	AHMAD K AHMAD
FUNCTIONAL SUPERVISOR	ALI ALQATAMI

STATE OF CALIFORNIA - DEPARTMENT OF TRANSPORTATION
Caltrans
DESIGN

LAST REVISION 03-11-10
DATE PLOTTED => 06-APR-2010
TIME PLOTTED => 14:01

Dist	COUNTY	ROUTE	POST MILES TOTAL PROJECT	SHEET No.	TOTAL SHEETS
06	Tul	99	2.9/3.3	8	128

A Ahmad 03-11-10
REGISTERED CIVIL ENGINEER DATE

4-5-10
PLANS APPROVAL DATE

REGISTERED PROFESSIONAL ENGINEER
AHMAD K. AHMAD
No. 69064
Exp. 6-30-10
CIVIL
STATE OF CALIFORNIA

THE STATE OF CALIFORNIA OR ITS OFFICERS OR AGENTS SHALL NOT BE RESPONSIBLE FOR THE ACCURACY OR COMPLETENESS OF SCANNED COPIES OF THIS PLAN SHEET.

NOTE:

1. FOR ACCURATE RIGHT OF WAY AND ACCESS DATA, CONTACT RIGHT OF WAY ENGINEERING AT THE DISTRICT OFFICE.

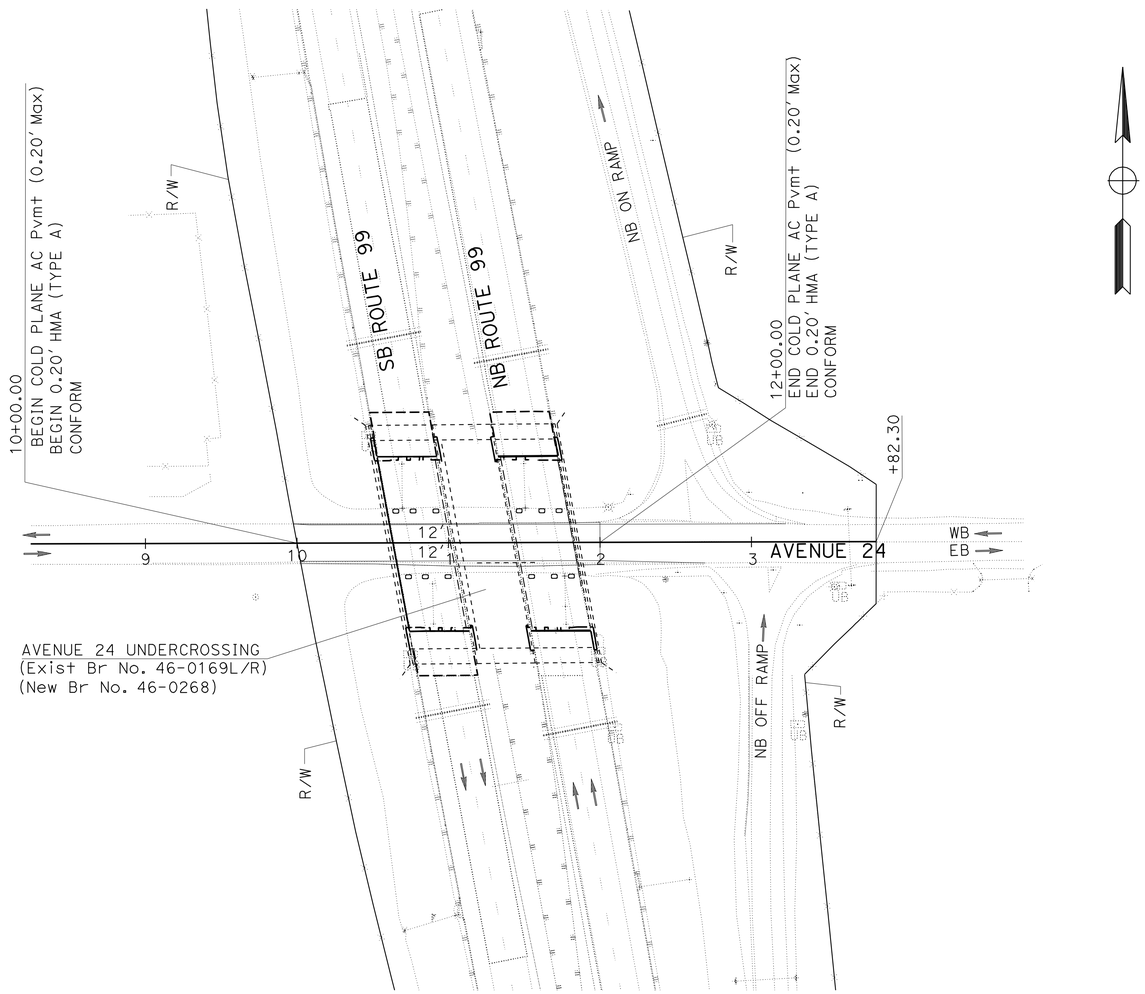

LAYOUT

SCALE: 1" = 50'

L-3

STATE OF CALIFORNIA - DEPARTMENT OF TRANSPORTATION
Caltrans
DESIGN

FUNCTIONAL SUPERVISOR: ALI ALQATAMI
CALCULATED-DESIGNED BY: RANJIT K MONDAL
CHECKED BY: AHMAD K AHMAD
REVISED BY
DATE REVISED

LAST REVISION 03-11-10 | DATE PLOTTED => 06-APR-2010 | TIME PLOTTED => 14:01

Dist	COUNTY	ROUTE	POST MILES TOTAL PROJECT	SHEET No.	TOTAL SHEETS
06	Tul	99	2.9/3.3	9	128

A Ahmad 03-11-10
REGISTERED CIVIL ENGINEER DATE

4-5-10
PLANS APPROVAL DATE

REGISTERED PROFESSIONAL ENGINEER AHMAD K. AHMAD No. 69064 Exp. 6-30-10 CIVIL STATE OF CALIFORNIA

THE STATE OF CALIFORNIA OR ITS OFFICERS OR AGENTS SHALL NOT BE RESPONSIBLE FOR THE ACCURACY OR COMPLETENESS OF SCANNED COPIES OF THIS PLAN SHEET.

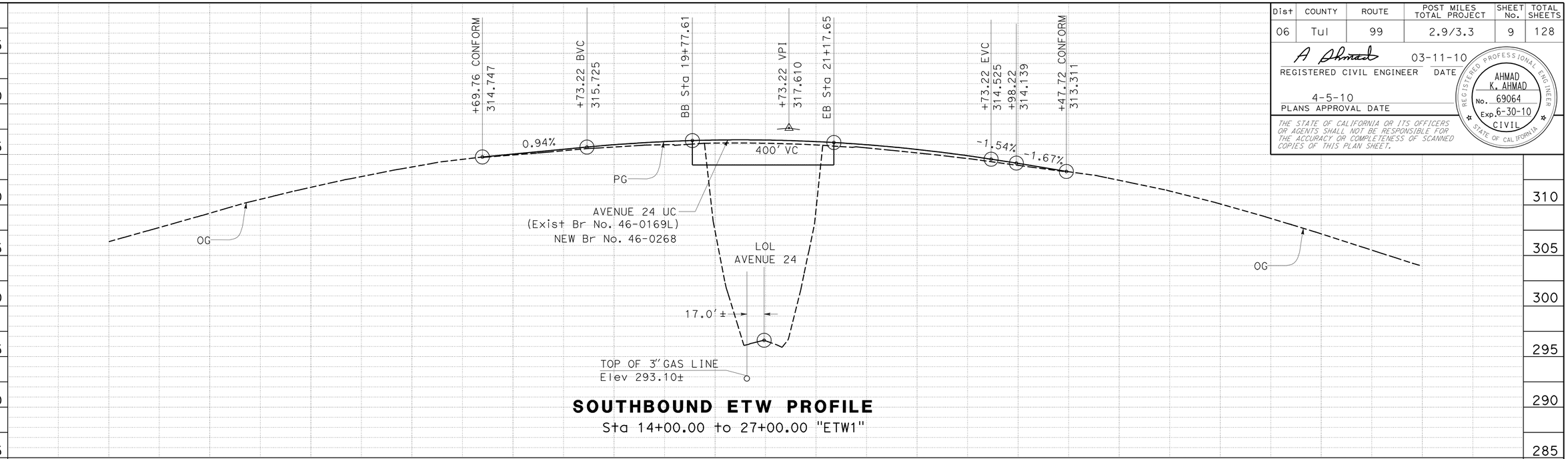

SOUTHBOUND ETW PROFILE

Sta 14+00.00 to 27+00.00 "ETW1"

STATION	4	15	6	7	8	9	20	1	2	3	4	25	6	7	TOTAL
CY Exc															
CY Emb															

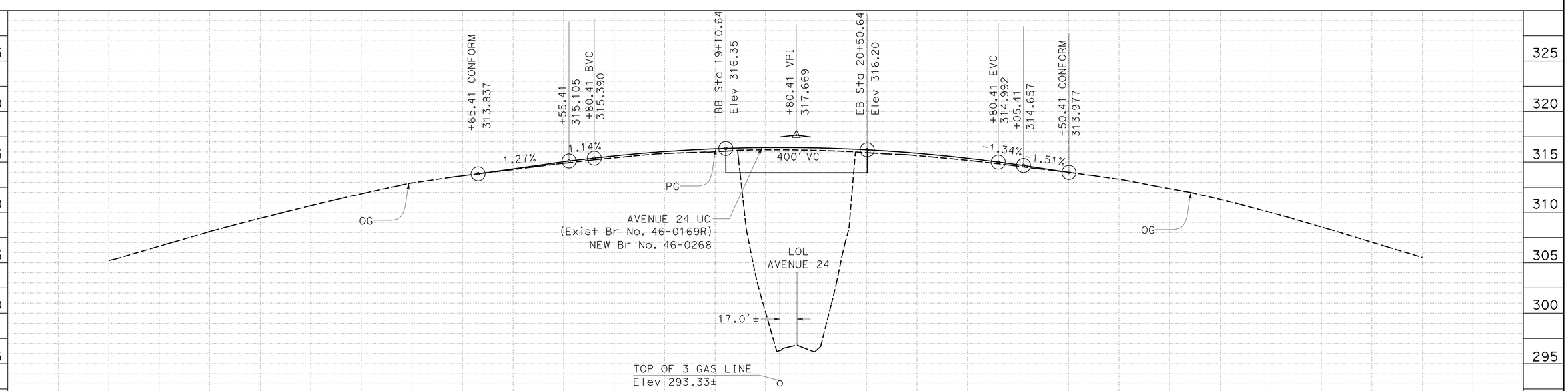

NORTHBOUND ETW PROFILE

Sta 13+00.00 to 26+00.00 "ETW2"

SCALE: Horiz 1" = 50'
Vert 1" = 5'

PROFILE

P-1

STATION	3	4	15	6	7	8	9	20	1	2	3	4	25	6	TOTAL
CY Exc															
CY Emb															

REVISED BY | DATE REVISED
RANJIT K MONDAL | AHMAD K AHMAD
CALCULATED-DESIGNED BY | CHECKED BY
FUNCTIONAL SUPERVISOR
ALI ALQATAMI

STATE OF CALIFORNIA - DEPARTMENT OF TRANSPORTATION
Caltrans
DESIGN

LAST REVISION 03-11-10
DATE PLOTTED => 06-APR-2010
TIME PLOTTED => 14:01

Dist	COUNTY	ROUTE	POST MILES TOTAL PROJECT	SHEET No.	TOTAL SHEETS
06	Tul	99	2.9/3.3	10	128

A Ahmad 03-11-10
REGISTERED CIVIL ENGINEER DATE

4-5-10
PLANS APPROVAL DATE

REGISTERED PROFESSIONAL ENGINEER AHMAD K. AHMAD No. 69064 Exp. 6-30-10 CIVIL STATE OF CALIFORNIA

THE STATE OF CALIFORNIA OR ITS OFFICERS OR AGENTS SHALL NOT BE RESPONSIBLE FOR THE ACCURACY OR COMPLETENESS OF SCANNED COPIES OF THIS PLAN SHEET.

NOTES:

1. FOR LENGTH OF JPCP REPLACEMENT, SEE LAYOUT SHEETS
2. SEE CONSTRUCTION DETAILS SHEET C-6 FOR ADDITIONAL INFORMATION.

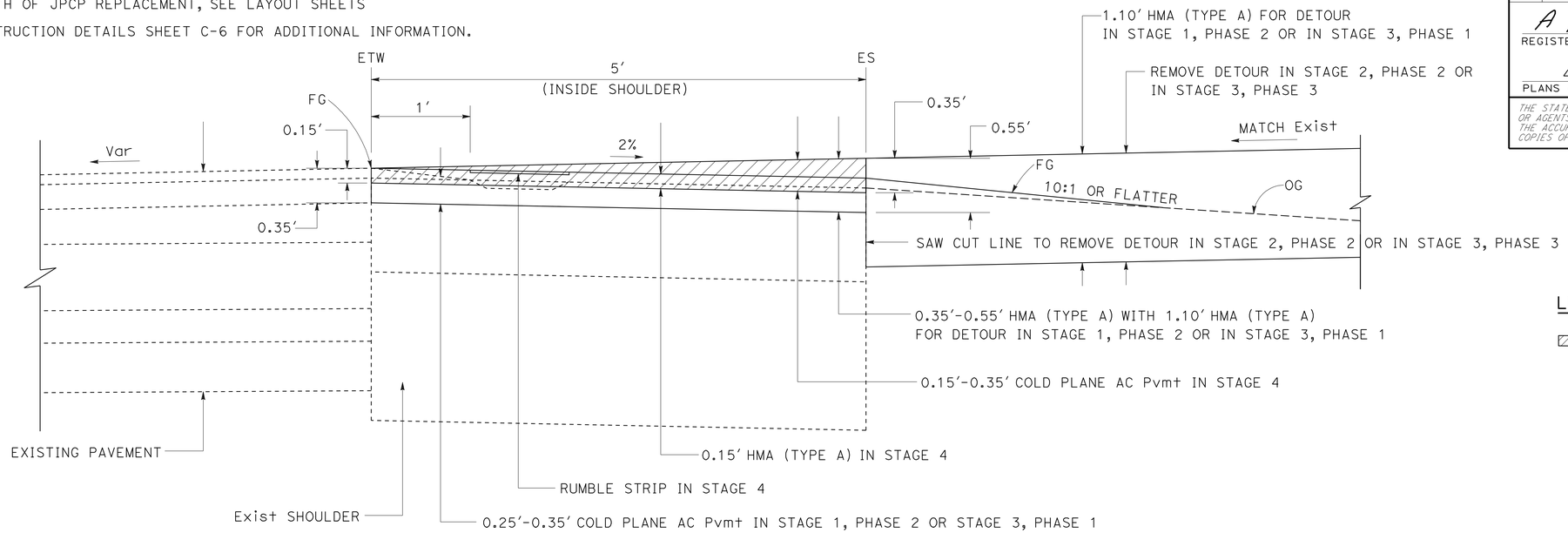

LEGEND

COLD PLANE AC Pvmt

TYPICAL INSIDE SHOULDER

SB ROUTE 99 Sta 14+38.84 TO Sta 17+69.76
SB ROUTE 99 Sta 23+47.72 TO Sta 26+79.48
NB ROUTE 99 Sta 13+75.46 TO Sta 16+51.60
NB ROUTE 99 Sta 23+36.41 TO Sta 25+97.12

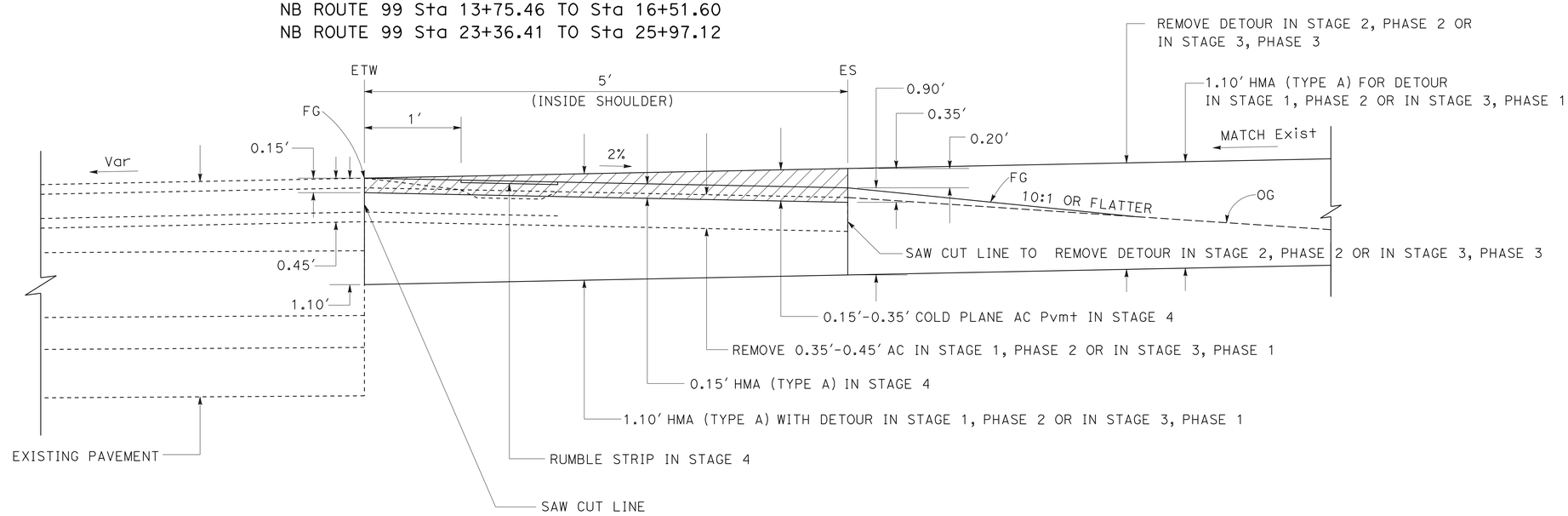

TYPICAL INSIDE SHOULDER

SB ROUTE 99 Sta 10+00.00 TO Sta 14+38.84
SB ROUTE 99 Sta 26+79.48 TO Sta 31+86.45
NB ROUTE 99 Sta 10+00.00 TO Sta 13+75.46

CONSTRUCTION DETAILS

NO SCALE

C-1

STATE OF CALIFORNIA - DEPARTMENT OF TRANSPORTATION
Caltrans® DESIGN

FUNCTIONAL SUPERVISOR: ALI ALQATAMI
CALCULATED-DESIGNED BY: RANJIT K MONDAL
CHECKED BY: AHMAD K AHMAD
REVISED BY / DATE REVISED

LAST REVISION 03-11-10 | DATE PLOTTED => 06-APR-2010 | TIME PLOTTED => 14:01

Dist	COUNTY	ROUTE	POST MILES TOTAL PROJECT	SHEET No.	TOTAL SHEETS
06	Tul	99	2.9/3.3	11	128

A Ahmad 03-11-10
REGISTERED CIVIL ENGINEER DATE

4-5-10
PLANS APPROVAL DATE

REGISTERED PROFESSIONAL ENGINEER AHMAD K. AHMAD No. 69064 Exp. 6-30-10 CIVIL STATE OF CALIFORNIA

THE STATE OF CALIFORNIA OR ITS OFFICERS OR AGENTS SHALL NOT BE RESPONSIBLE FOR THE ACCURACY OR COMPLETENESS OF SCANNED COPIES OF THIS PLAN SHEET.

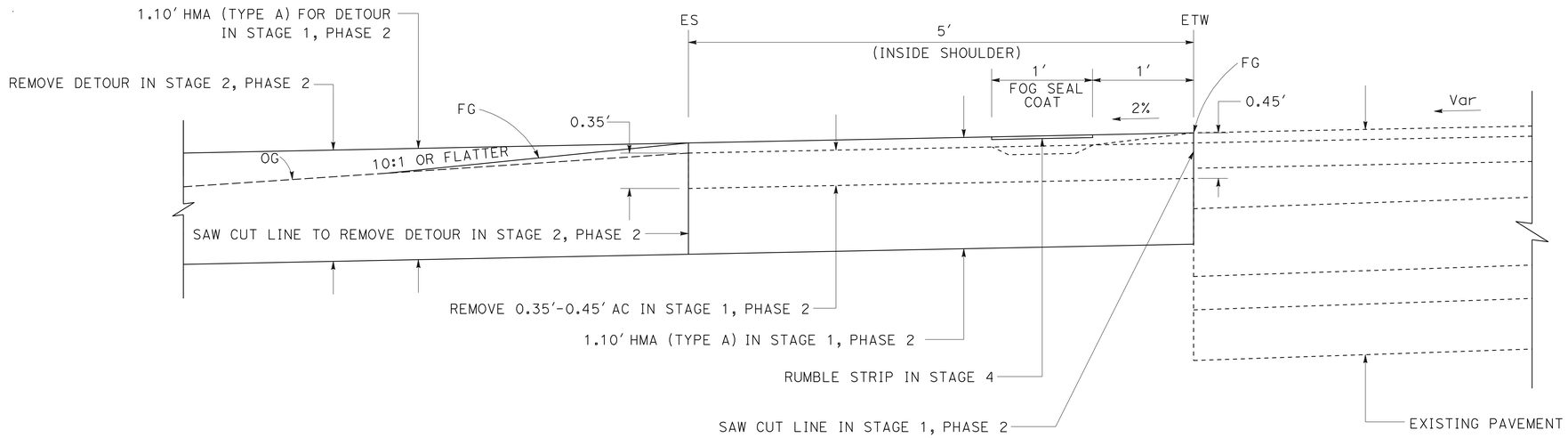

TYPICAL INSIDE SHOULDER

NB ROUTE 99 Sta 28+21.13 TO Sta 32+29.24

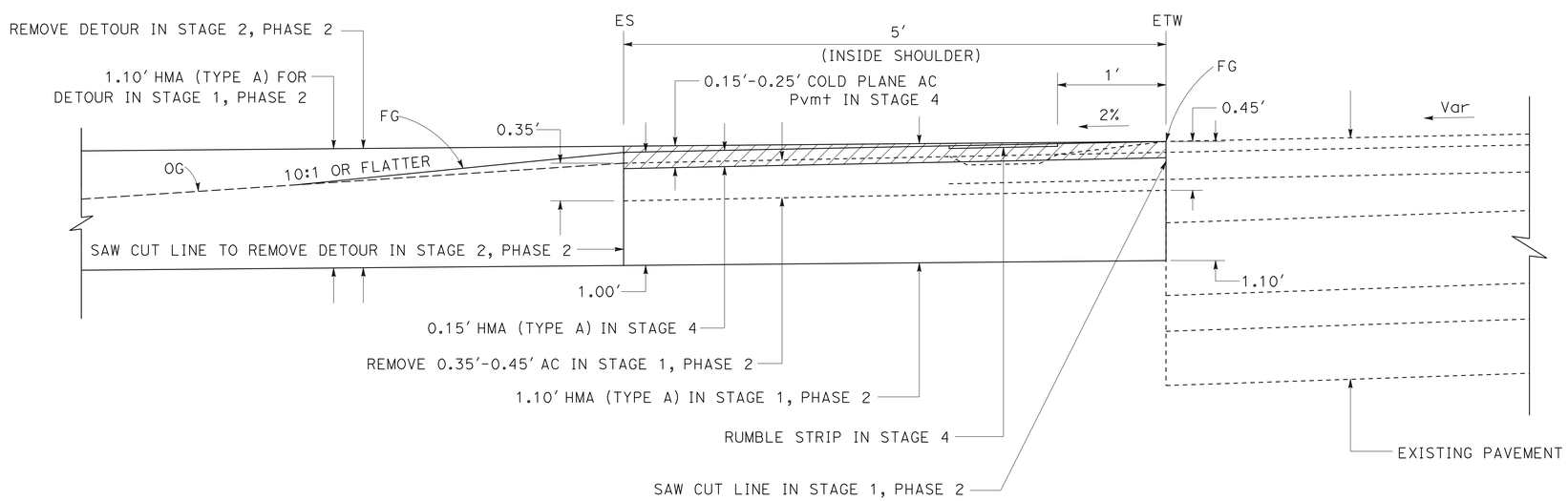

TYPICAL INSIDE SHOULDER

NB ROUTE 99 Sta 25+97.12 TO Sta 28+21.13

CONSTRUCTION DETAILS

NO SCALE

C-2

REVISED BY | DATE REVISED
RANJIT K MONDAL | AHMAD K AHMAD
CALCULATED-DESIGNED BY | CHECKED BY
FUNCTIONAL SUPERVISOR: ALI ALQATAMI

STATE OF CALIFORNIA - DEPARTMENT OF TRANSPORTATION
Caltrans®
DESIGN

LAST REVISION 03-11-10 | DATE PLOTTED => 06-APR-2010 | TIME PLOTTED => 14:01

Dist	COUNTY	ROUTE	POST MILES TOTAL PROJECT	SHEET No.	TOTAL SHEETS
06	Tul	99	2.9/3.3	12	128

A Ahmad 03-11-10
REGISTERED CIVIL ENGINEER DATE

4-5-10
PLANS APPROVAL DATE

REGISTERED PROFESSIONAL ENGINEER
AHMAD K. AHMAD
No. 69064
Exp. 6-30-10
CIVIL
STATE OF CALIFORNIA

THE STATE OF CALIFORNIA OR ITS OFFICERS OR AGENTS SHALL NOT BE RESPONSIBLE FOR THE ACCURACY OR COMPLETENESS OF SCANNED COPIES OF THIS PLAN SHEET.

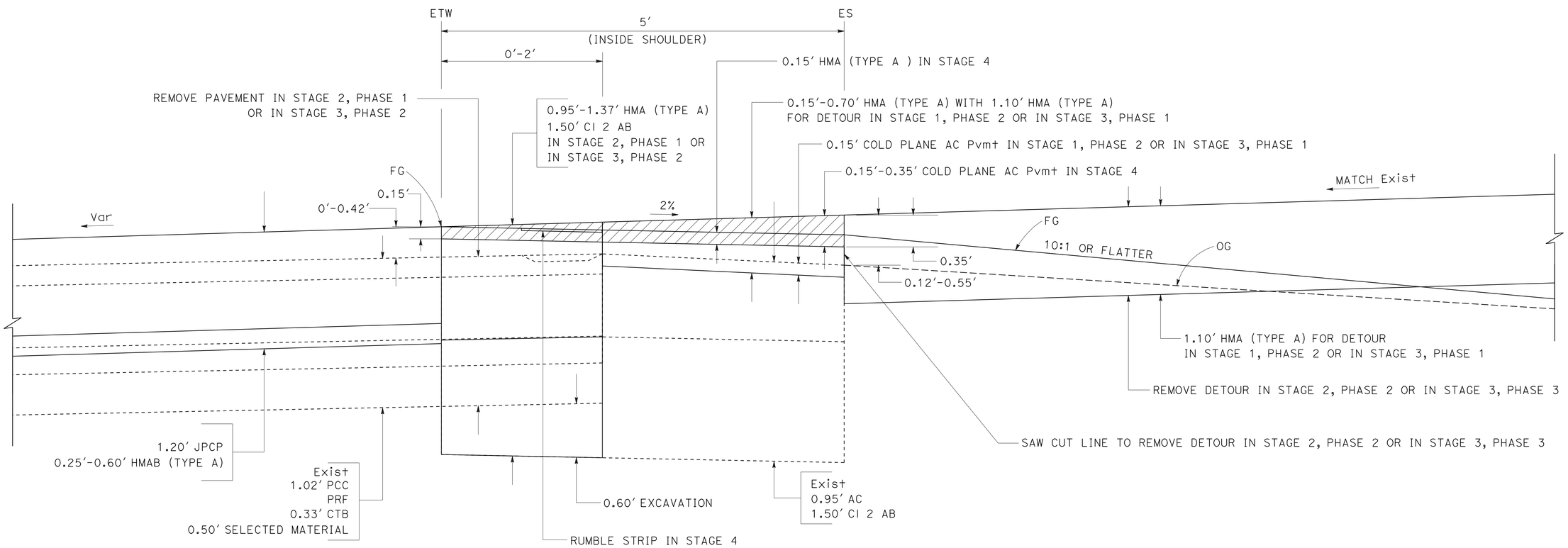

TYPICAL INSIDE SHOULDER

SB ROUTE 99 Sta 17+69.76 TO Sta 19+67.61
SB ROUTE 99 Sta 21+27.65 TO Sta 23+47.72
NB ROUTE 99 Sta 16+51.60 TO Sta 19+00.64
NB ROUTE 99 Sta 20+68.97 TO Sta 23+36.41

CONSTRUCTION DETAILS

NO SCALE

C-3

STATE OF CALIFORNIA - DEPARTMENT OF TRANSPORTATION
Caltrans
DESIGN

FUNCTIONAL SUPERVISOR: ALI ALQATAMI
CALCULATED-DESIGNED BY: AHMAD K AHMAD
CHECKED BY: RANJIT K MONDAL
REVISED BY
DATE REVISED

LAST REVISION 03-11-10
DATE PLOTTED => 06-APR-2010
TIME PLOTTED => 14:01

Dist	COUNTY	ROUTE	POST MILES TOTAL PROJECT	SHEET No.	TOTAL SHEETS
06	Tul	99	2.9/3.3	13	128

A Ahmad 03-11-10
REGISTERED CIVIL ENGINEER DATE

4-5-10
PLANS APPROVAL DATE

REGISTERED PROFESSIONAL ENGINEER
AHMAD K. AHMAD
No. 69064
Exp. 6-30-10
CIVIL
STATE OF CALIFORNIA

THE STATE OF CALIFORNIA OR ITS OFFICERS OR AGENTS SHALL NOT BE RESPONSIBLE FOR THE ACCURACY OR COMPLETENESS OF SCANNED COPIES OF THIS PLAN SHEET.

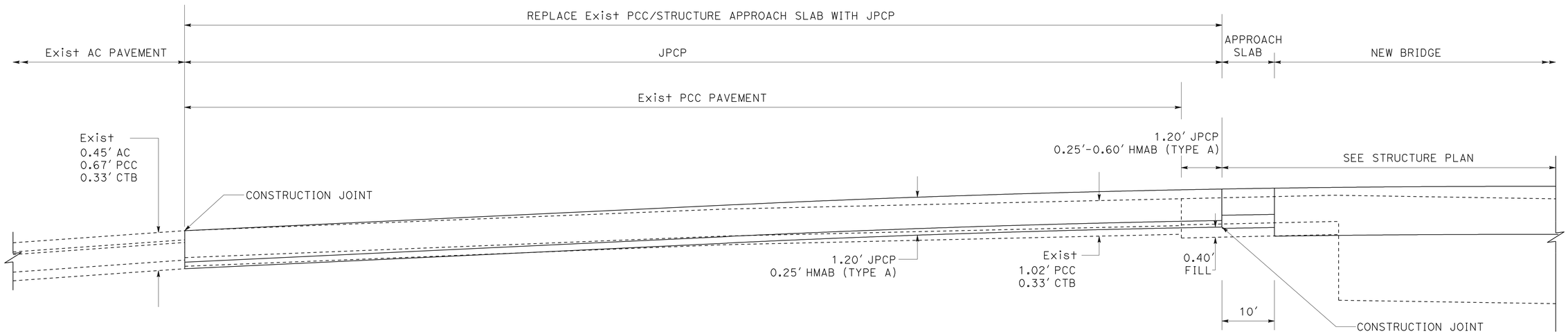

TYPICAL TRANSITION AND PCC REPLACEMENT WITH JPCP AT BRIDGE APPROACH

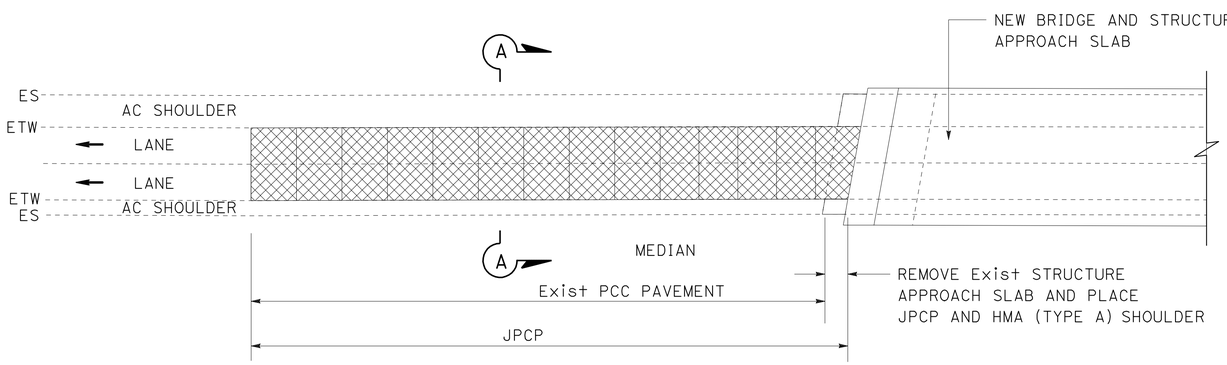

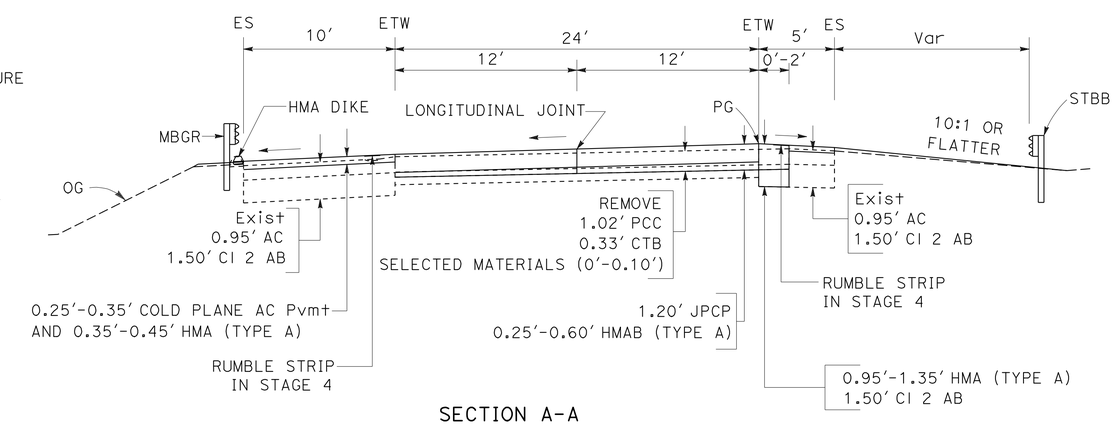

SECTION A-A

TYPICAL PCC PAVEMENT REPLACEMENT WITH JPCP AT BRIDGE APPROACH

CONSTRUCTION DETAILS

NO SCALE

C-4

REVISED BY | DATE REVISED
RANJIT K MONDAL | AHMAD K AHMAD
CALCULATED-DESIGNED BY | CHECKED BY
FUNCTIONAL SUPERVISOR
ALI ALQATAMI
STATE OF CALIFORNIA - DEPARTMENT OF TRANSPORTATION
Caltrans®
DESIGN

LAST REVISION 03-11-10 | DATE PLOTTED => 06-APR-2010 | TIME PLOTTED => 14:02

Dist	COUNTY	ROUTE	POST MILES TOTAL PROJECT	SHEET No.	TOTAL SHEETS
06	Tul	99	2.9/3.3	14	128

A Ahmad 03-11-10
REGISTERED CIVIL ENGINEER DATE

4-5-10
PLANS APPROVAL DATE

REGISTERED PROFESSIONAL ENGINEER AHMAD K. AHMAD No. 69064 Exp. 6-30-10 CIVIL STATE OF CALIFORNIA

THE STATE OF CALIFORNIA OR ITS OFFICERS OR AGENTS SHALL NOT BE RESPONSIBLE FOR THE ACCURACY OR COMPLETENESS OF SCANNED COPIES OF THIS PLAN SHEET.

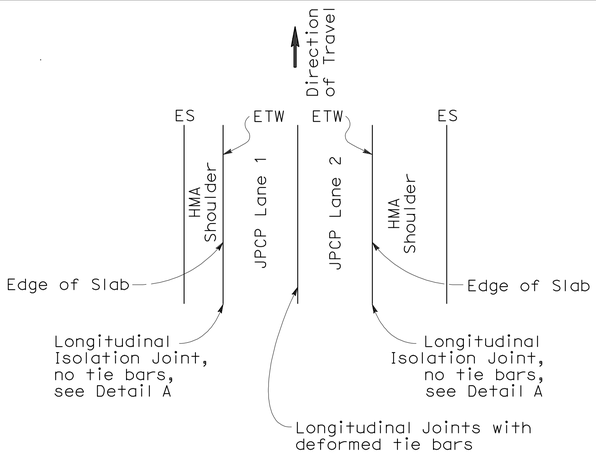

LANE SCHEMATICS PLAN

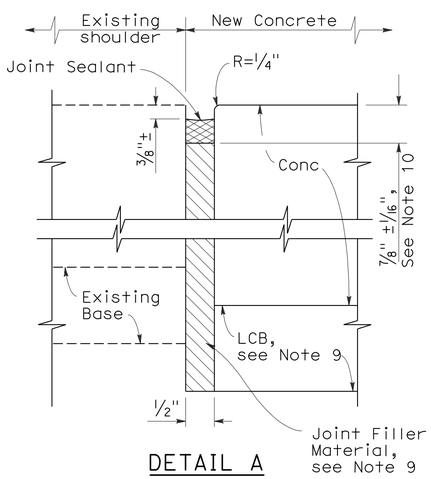

DETAIL A

ISOLATION JOINT

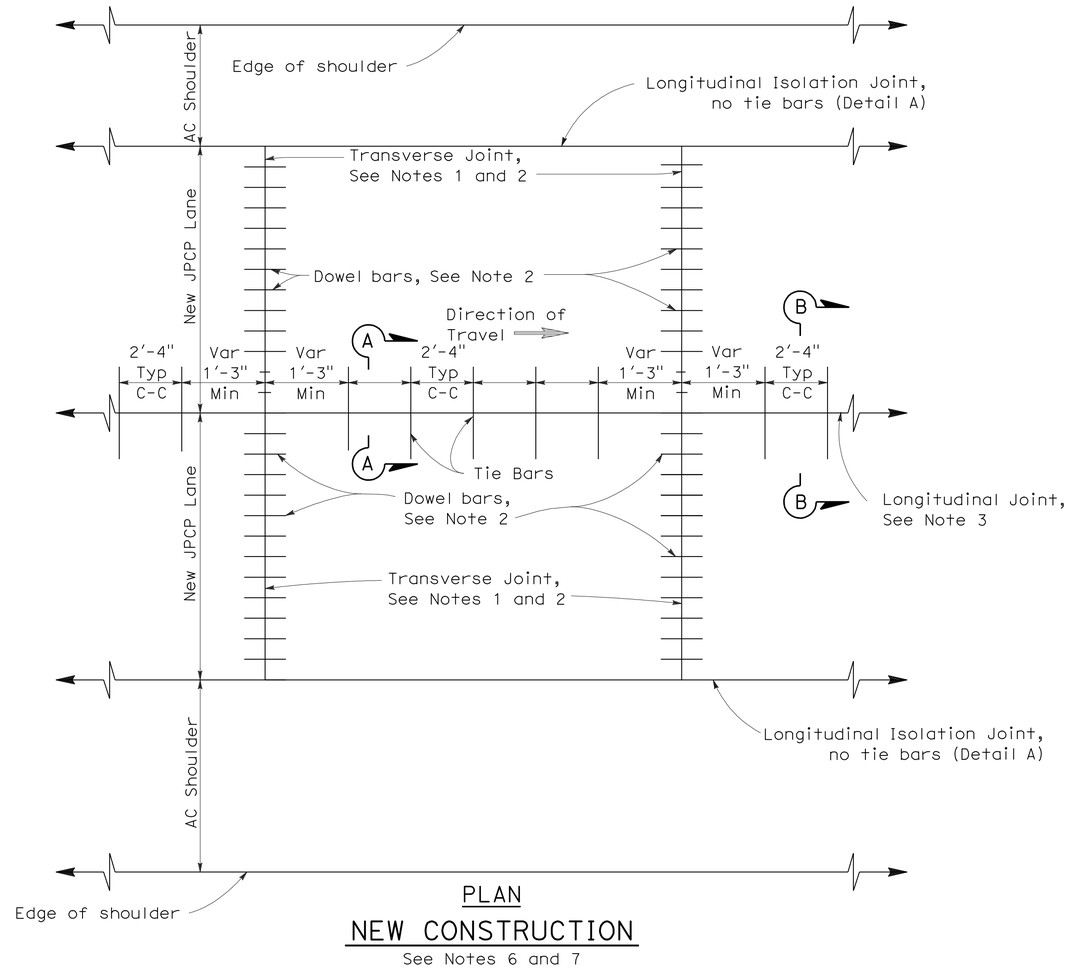

PLAN

NEW CONSTRUCTION

See Notes 6 and 7

NOTES:

1. Transverse joints shall be constructed at right angles to the longitudinal pavement joints in new jointed plain concrete pavement and spaced at successive repeated intervals of 12′, 15′, 13′ and 14′.
2. For transverse joint and dowel bar details not shown, See Revised Standard Plan RSP P10.
3. Construct longitudinal contraction joints as shown in Section A-A when more than one lane or shoulder widths are placed at one time. If constructing one lane at a time, use longitudinal construction joint, as shown in Section B-B.
4. For additional longitudinal joint details, see Revised Standard Plan RSP P18.
5. If fresh concrete is placed adjacent to existing concrete, the top corner of the new hardened concrete does not need to be rounded to the 1/4" radius as shown.
6. Joint spacing patterns do not apply to intersections.
7. Details can also apply to inside widening.
8. Dowel bars may be omitted from shoulders when the shoulder cross slope is not the same as the adjacent traffic lane.
9. Where Lean Concrete Base is not used as base material, the joint filler material used for the longitudinal isolation joint shall only extend to the bottom of the new concrete slab. See Detail A.
10. Use 5/8" ±1/16" dimension for silicone sealant.

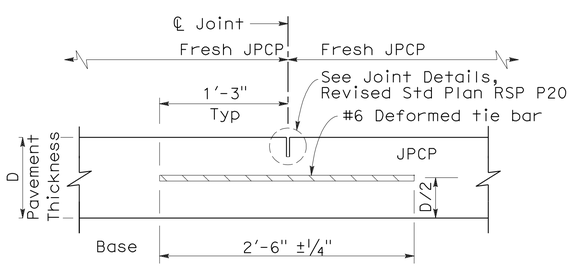

SECTION A-A

LONGITUDINAL CONTRACTION JOINT

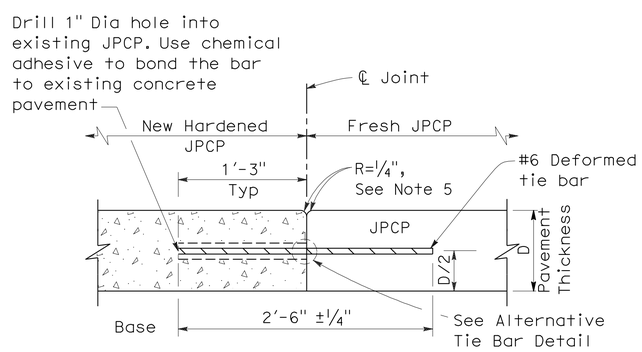

SECTION B-B

LONGITUDINAL CONSTRUCTION JOINT

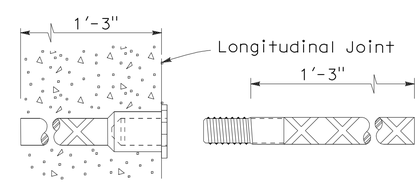

ALTERNATIVE TIE BAR SPLICE DETAIL

(Splice Coupler)

TIE BAR DETAILS

JOINTED PLAIN CONCRETE PAVEMENT

CONSTRUCTION DETAILS

NO SCALE

C-5

STATE OF CALIFORNIA - DEPARTMENT OF TRANSPORTATION
DESIGN
Caltrans
FUNCTIONAL SUPERVISOR: ALI ALQATAMI
CALCULATED-DESIGNED BY: RANJIT K MONDAL
CHECKED BY: AHMAD K AHMAD
REVISED BY
DATE REVISED

LAST REVISION 03-11-10 | DATE PLOTTED => 06-APR-2010 | TIME PLOTTED => 14:02

Dist	COUNTY	ROUTE	POST MILES TOTAL PROJECT	SHEET No.	TOTAL SHEETS
06	Tul	99	2.9/3.3	15	128

A Ahmad 03-11-10
REGISTERED CIVIL ENGINEER DATE

4-5-10
PLANS APPROVAL DATE

REGISTERED PROFESSIONAL ENGINEER AHMAD K. AHMAD No. 69064 Exp. 6-30-10 CIVIL STATE OF CALIFORNIA

THE STATE OF CALIFORNIA OR ITS OFFICERS OR AGENTS SHALL NOT BE RESPONSIBLE FOR THE ACCURACY OR COMPLETENESS OF SCANNED COPIES OF THIS PLAN SHEET.

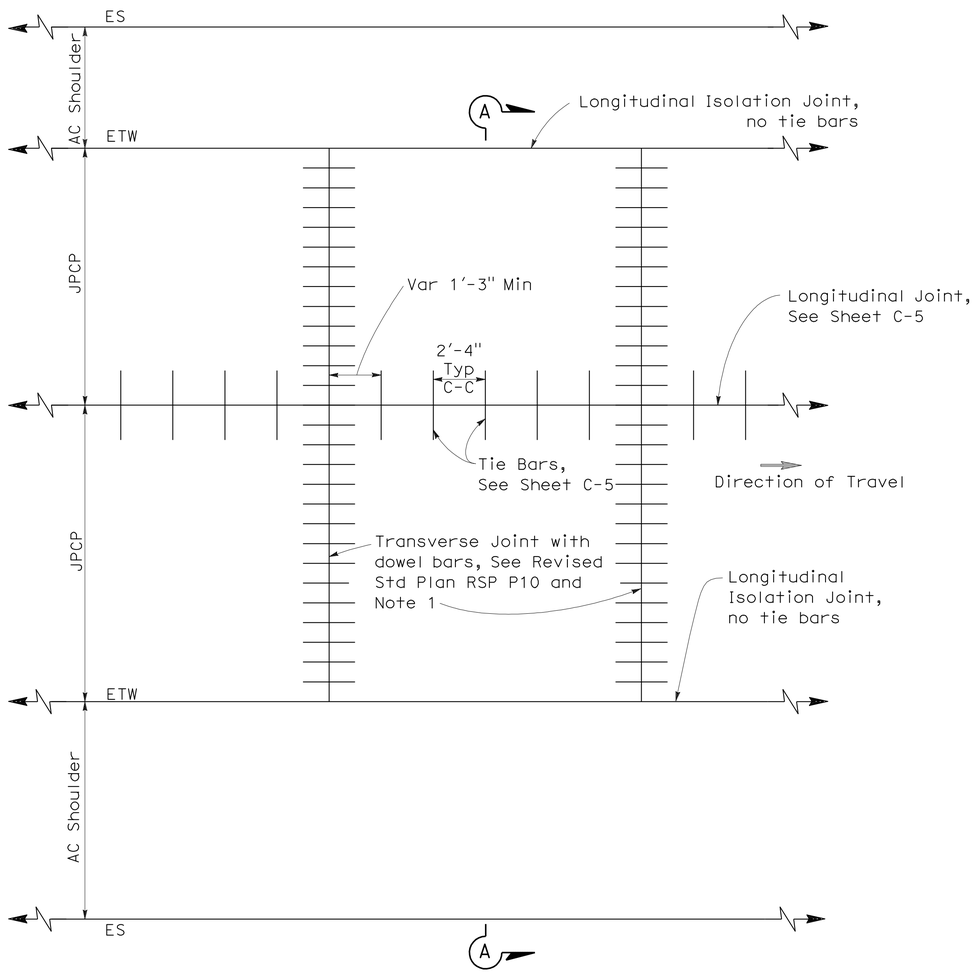

PLAN
NEW CONSTRUCTION

ABBREVIATIONS:

HMA - HOT MIX ASPHALT

NOTES:

1. Transverse joints shall be constructed at right angles to the longitudinal pavement joints in new Jointed Plain Concrete Pavement and spaced at successive repeated intervals of 12', 15', 13' and 14'.
2. For locations of rumble strips, see project plans. For rumble strip details not shown, see Standard Plans A40A and A40B.
3. Joint spacing patterns do not apply to intersections.

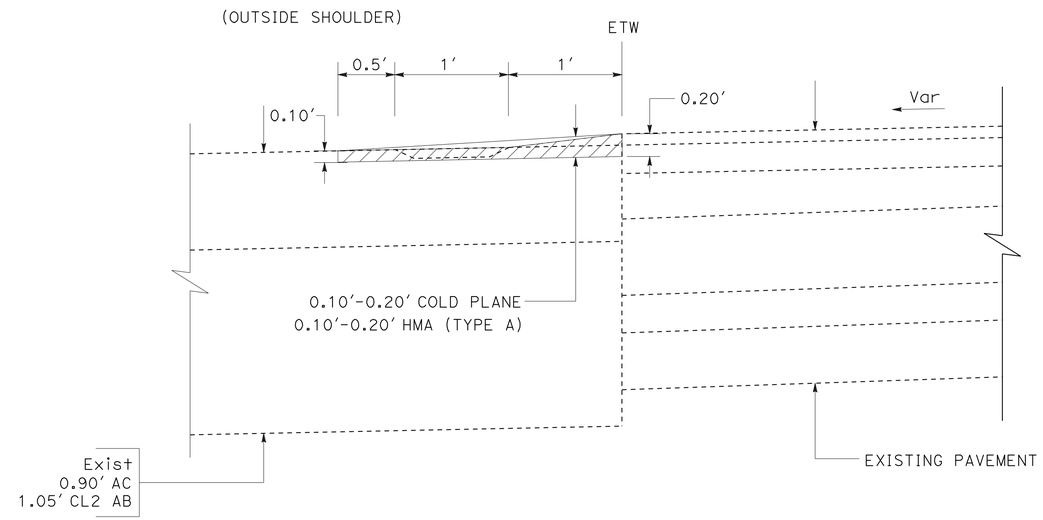

TYPICAL OUTSIDE SHOULDER COLD PLANE AND OVERLAY TO REMOVE RUMBLE STRIP IN STAGE 1, PHASE 1

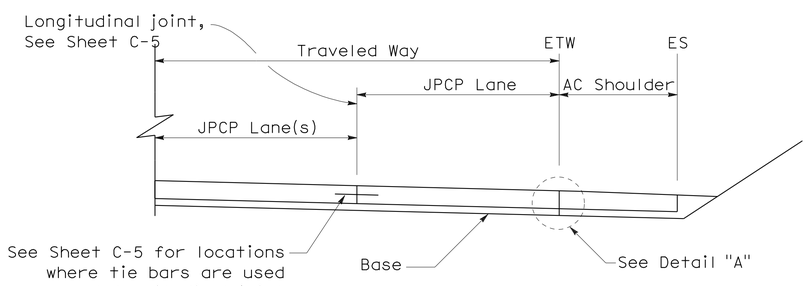

SECTION A-A

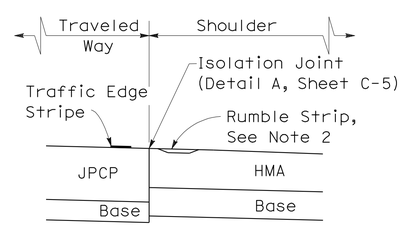

DETAIL "A"

JOINTED PLAIN CONCRETE PAVEMENT DETAILS

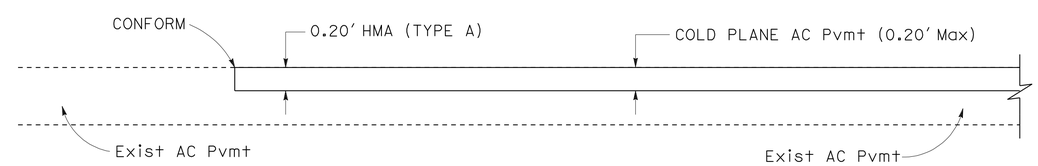

LONGITUDINAL TRANSITION DETAIL AT AVENUE 24

AT Sta 10+00 AND Sta 12+00

CONSTRUCTION DETAILS

NO SCALE

C-6

STATE OF CALIFORNIA - DEPARTMENT OF TRANSPORTATION
Caltrans®
DESIGN

FUNCTIONAL SUPERVISOR: ALI ALQATAMI
CALCULATED-DESIGNED BY: RANJIT K MONDAL
CHECKED BY: AHMAD K AHMAD
REVISED BY
DATE REVISED

LAST REVISION 03-11-10 | DATE PLOTTED => 06-APR-2010 | TIME PLOTTED => 14:02

Dist	COUNTY	ROUTE	POST MILES TOTAL PROJECT	SHEET No.	TOTAL SHEETS
06	Tul	99	2.9/3.3	16	128

A Ahmad 03-11-10
REGISTERED CIVIL ENGINEER DATE

4-5-10
PLANS APPROVAL DATE

REGISTERED PROFESSIONAL ENGINEER
AHMAD K. AHMAD
No. 69064
Exp. 6-30-10
CIVIL
STATE OF CALIFORNIA

THE STATE OF CALIFORNIA OR ITS OFFICERS OR AGENTS SHALL NOT BE RESPONSIBLE FOR THE ACCURACY OR COMPLETENESS OF SCANNED COPIES OF THIS PLAN SHEET.

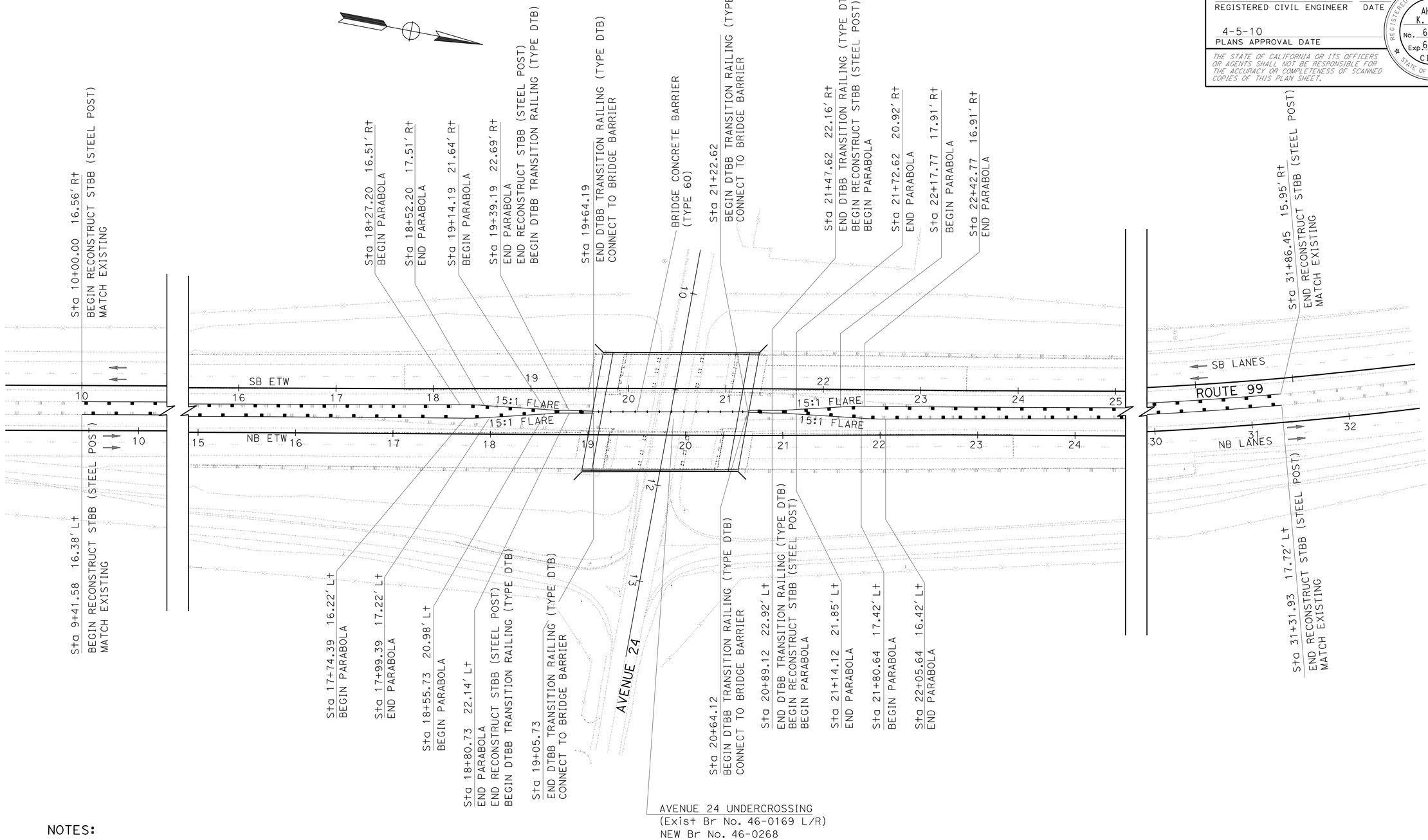

NOTES:

FOR DOUBLE THRIE BEAM BARRIER TRANSITION RAILING (TYPE DTB) AND BRIDGE BARRIER CONNECTION DETAILS SEE STANDARD PLAN.

CONSTRUCTION DETAILS (MEDIAN THRIE BEAM BARRIER)

NO SCALE

C-7

REVISED BY	DATE REVISED

CALCULATED-DESIGNED BY: RANJIT K MONDAL
CHECKED BY: AHMAD K AHMAD
FUNCTIONAL SUPERVISOR: ALI ALQATAMI

STATE OF CALIFORNIA - DEPARTMENT OF TRANSPORTATION
Caltrans®
DESIGN

LAST REVISION 03-11-10 | DATE PLOTTED => 07-APR-2010 | TIME PLOTTED => 05:55

Dist	COUNTY	ROUTE	POST MILES TOTAL PROJECT	SHEET No.	TOTAL SHEETS
06	Tul	99	2.9/3.3	17	128

LICENSED LANDSCAPE ARCHITECT

4-5-10
PLANS APPROVAL DATE

LICENSED LANDSCAPE ARCHITECT
RICHARD B. COLE No. 2128
06/30/10 EXPIRATION
02/08/10 DATE
STATE OF CALIFORNIA

THE STATE OF CALIFORNIA OR ITS OFFICERS OR AGENTS SHALL NOT BE RESPONSIBLE FOR THE ACCURACY OR COMPLETENESS OF SCANNED COPIES OF THIS PLAN SHEET.

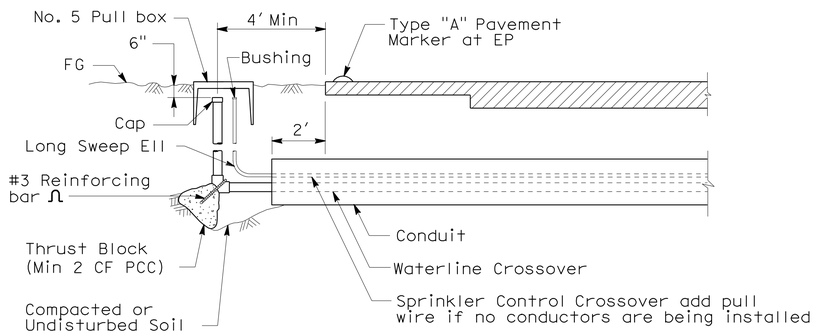

SECTION

IRRIGATION CROSSOVER

IRRIGATION CROSSOVERS

LOCATION		SIDE		CONDUIT TYPE (3)		(N) WATER LINE CROSSOVER	(N) SPRINKLER CONTROL CROSSOVER
LINE	STATION	R†	L†	SIZE (INCH) 12	00	SIZE (INCH)	SIZE (INCH)
				LENGTH (LF)			
SB ETW	17+95.00		X	38.0		4	2
SB ETW	17+95.00	X		84.2		4	2
SB ETW	23+10.00		X	38.0		4	2
SB ETW	23+10.00	X		83.8		4	2
TOTAL				244.0			

(N) - NOT A SEPARATE PAY ITEM FOR INFORMATION ONLY
X - DENOTES REQUIREMENT

CONDUIT TYPE
(Applicable when circled below and shown under the 'CONDUIT TYPE' column heading)

1 BITUMINOUS COATED CORRUGATED STEEL PIPE (0.064 INCH THICK)
2 CORRUGATED STEEL PIPE (0.064 INCH THICK)
3 CORRUGATED HIGH DENSITY POLYETHYLENE PIPE
4 ALTERNATIVE CONDUIT

CONSTRUCTION DETAILS

NO SCALE

C-8

STATE OF CALIFORNIA - DEPARTMENT OF TRANSPORTATION
Caltrans LANDSCAPE ARCHITECTURE

FUNCTIONAL SUPERVISOR: ELBERT COX
CALCULATED-DESIGNED BY: RICK COLE
CHECKED BY: CHARLES LARUE
REVISED BY
DATE REVISED

LAST REVISION 03-11-10
DATE PLOTTED => 06-APR-2010
TIME PLOTTED => 14:02

Dist	COUNTY	ROUTE	POST MILES TOTAL PROJECT	SHEET No.	TOTAL SHEETS
06	Tul	99	2.9/3.3	18	128

A Ahmad 03-11-10
REGISTERED CIVIL ENGINEER DATE

4-5-10
PLANS APPROVAL DATE

REGISTERED PROFESSIONAL ENGINEER
AHMAD K. AHMAD
No. 69064
Exp. 6-30-10
CIVIL
STATE OF CALIFORNIA

THE STATE OF CALIFORNIA OR ITS OFFICERS OR AGENTS SHALL NOT BE RESPONSIBLE FOR THE ACCURACY OR COMPLETENESS OF SCANNED COPIES OF THIS PLAN SHEET.

NOTES:

1. LOCATIONS OF UTILITY FACILITIES SHOWN ON THESE PLANS ARE APPROXIMATE AND SHALL BE VERIFIED BY THE CONTRACTOR PRIOR TO CONSTRUCTION.
2. ALL UTILITIES SHOWN ARE EXISTING UNLESS OTHERWISE NOTED.
3. UTILITY OWNERSHIP ON THIS PROJECT:

   GAS- SOUTHERN CALIFORNIA GAS CO
   ELECTRIC- SOUTHERN CALIFORNIA EDISON CO
   TELEPHONE- PACIFIC BELL/PACIFIC TELEPHONE COMPANY
   FIBER OPTICS- GST TELECOM CALIFORNIA, INC
   STORM DRAIN- CALTRANS
   WATER- DELANO-EARLIMART IRRIGATION DISTRICT

LEGEND

- POTHOLING LOCATION
- EXISTING ROADWAY FEATURES
- BOX, UTILITY
- PEDESTAL TELEPHONE
- STREET LIGHT
- POWER POLE
- (1) POTHOLE NUMBER

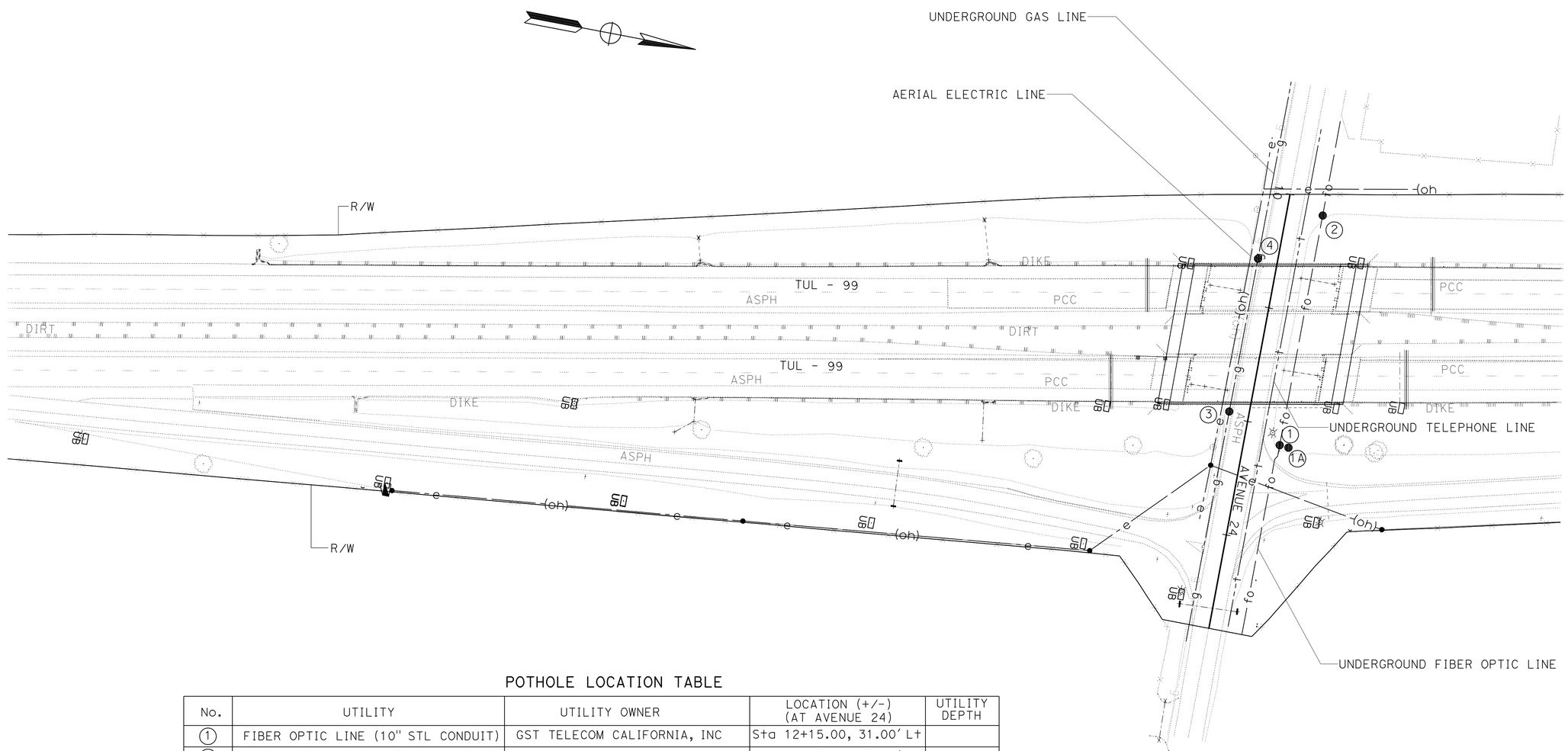

POTHOLE LOCATION TABLE

No.	UTILITY	UTILITY OWNER	LOCATION (+/-) (AT AVENUE 24)	UTILITY DEPTH
1	FIBER OPTIC LINE (10" STL CONDUIT)	GST TELECOM CALIFORNIA, INC	Sta 12+15.00, 31.00' Lt	
1A	FIBER OPTIC LINE (10" STL CONDUIT)	GST TELECOM CALIFORNIA, INC	Sta 12+15.00, 33.00' Lt	
2	FIBER OPTIC LINE (10" STL CONDUIT)	GST TELECOM CALIFORNIA, INC	Sta 10+12.85, 29.33' Lt	6.17
3	HP GAS LINE (3" STL CONDUIT)	SOUTHERN CALIFORNIA GAS CO	Sta 11+94.45, 18.17' Rt	3.67
4	HP GAS LINE (3" STL CONDUIT)	SOUTHERN CALIFORNIA GAS CO	Sta 10+59.87, 16.58' Rt	3.17
	TELEPHONE LINE (DIRECT BURIED)	PACIFIC BELL	Sta 11+95.00, 16.00' Lt	3.00
	TELEPHONE LINE (DIRECT BURIED)	PACIFIC BELL	Sta 10+50.00, 16.00' Lt	3.00

THIS PLAN ACCURATE FOR UTILITY INFORMATION ONLY

UTILITY PLAN

SCALE: 1" = 50' **U-1**

STATE OF CALIFORNIA - DEPARTMENT OF TRANSPORTATION
Caltrans® DESIGN
FUNCTIONAL SUPERVISOR: ALI ALQATAMI
RANJIT K MONDAL / AHMAD K AHMAD
CALCULATED-DESIGNED BY / CHECKED BY
REVISED BY / DATE REVISED

LAST REVISION 03-11-10
DATE PLOTTED => 07-APR-2010
TIME PLOTTED => 05:55

Dist	COUNTY	ROUTE	POST MILES TOTAL PROJECT	SHEET No.	TOTAL SHEETS
06	Tul	99	2.9/3.3	19	128

Hassan Taha 03/10/10
REGISTERED CIVIL ENGINEER DATE

4-5-10
PLANS APPROVAL DATE

REGISTERED PROFESSIONAL ENGINEER HASSAN M. TAHA No. 60130 Exp 06/30/10 CIVIL STATE OF CALIFORNIA

THE STATE OF CALIFORNIA OR ITS OFFICERS OR AGENTS SHALL NOT BE RESPONSIBLE FOR THE ACCURACY OR COMPLETENESS OF SCANNED COPIES OF THIS PLAN SHEET.

STATIONARY MOUNTED CONSTRUCTION AREA SIGNS

SIGN No.	SIGN CODE	SIGN MESSAGE	PANEL SIZE	No. OF POST AND SIZE	No. OF SIGNS
A	W20-1	ROAD WORK AHEAD	60" x 60"	2 - 4" x 6"	4
B	G20-2	END ROAD WORK	48" x 24"	1 - 4" x 6"	4
C	C40(CA)	TRAFFIC FINES DOUBLED IN WORK ZONES	144" x 60"	2 - 6" x 6"	2
D	W20-1	ROAD WORK AHEAD	48" x 48"	1 - 6" x 6"	2
C1	C40A (CA)	TRAFFIC FINES DOUBLED IN WORK ZONES	48" x 48"	1 - 6" x 6"	2
A60	W3-5 (60MPH)	60 MPH SPEED LIMIT AHEAD (SYMBOL)	48" x 48"	1 - 6" x 6"	4
B60	R2-1 (60MPH)	60 MPH SPEED LIMIT	48" x 60"	1 - 6" x 6"	4
A55	W3-5 (55MPH)	55 MPH SPEED LIMIT AHEAD (SYMBOL)	48" x 48"	1 - 6" x 6"	4
B55	R2-1 (55MPH)	55 MPH SPEED LIMIT	48" x 60"	1 - 6" x 6"	4
C55	R3(CA) (55MPH)	END SPEED LIMIT	48" x 60"	1 - 6" x 6"	4

NOTES:

1. LOCATIONS OF CONSTRUCTION AREA SIGNS SHOWN ARE APPROXIMATE, EXACT LOCATIONS TO BE DETERMINED BY THE ENGINEER.
2. FOR SIGN "C40 (CA)" (TRAFFIC FINES DOUBLED IN CONSTRUCTION ZONE), ALL LETTERS SHALL BE BLACK ON WHITE BACKGROUND.
3. COVER CONFLICTING SIGNING.

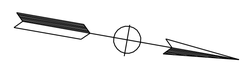

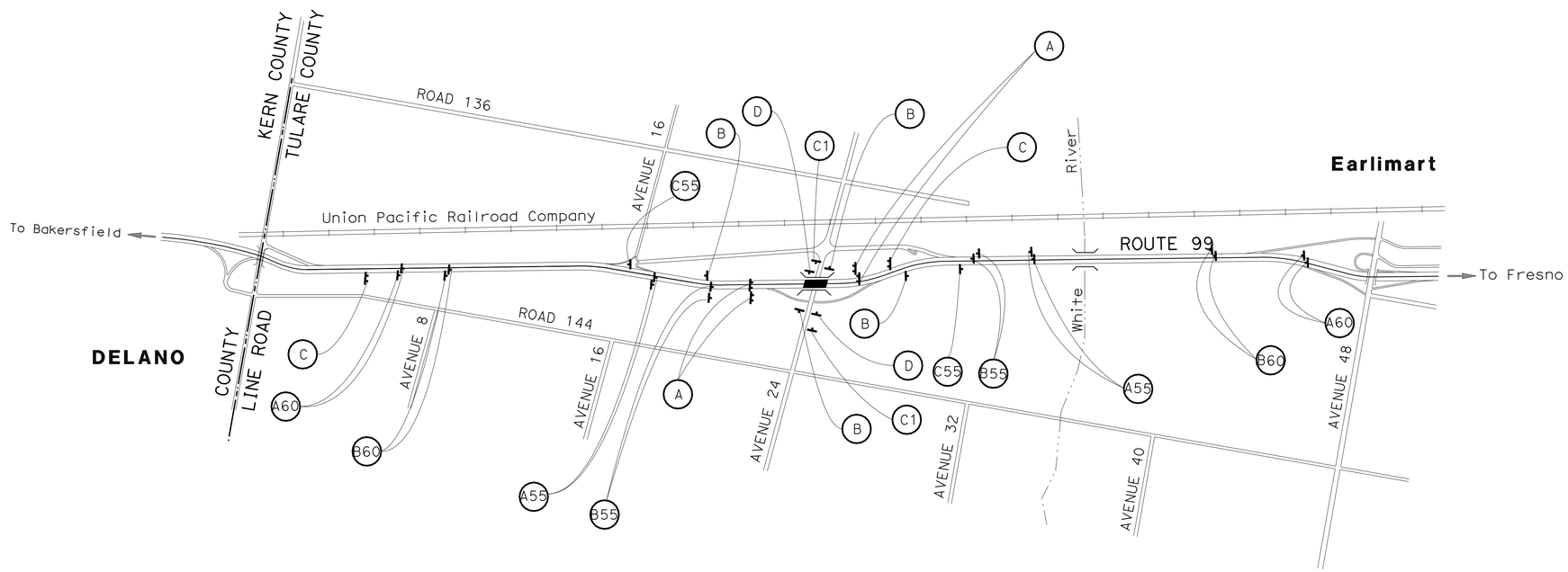

THIS PLAN ACCURATE FOR CONSTRUCTION AREA SIGN WORK ONLY.

CONSTRUCTION AREA SIGNS

NO SCALE

CS-1

STATE OF CALIFORNIA - DEPARTMENT OF TRANSPORTATION
Caltrans
TRAFFIC DESIGN
FUNCTIONAL SUPERVISOR: MOHAMMED QATAMI
CALCULATED-DESIGNED BY: MUNIR ASSAF
CHECKED BY: HASSAN TAHA
REVISED BY
DATE REVISED

LAST REVISION 03-10-10 | DATE PLOTTED => 06-APR-2010 | TIME PLOTTED => 14:02

Dist	COUNTY	ROUTE	POST MILES TOTAL PROJECT	SHEET No.	TOTAL SHEETS
06	Tul	99	2.9/3.3	20	128

A Ahmad 03-11-10
REGISTERED CIVIL ENGINEER DATE

4-5-10
PLANS APPROVAL DATE

REGISTERED PROFESSIONAL ENGINEER AHMAD K. AHMAD No. 69064 Exp. 6-30-10 CIVIL STATE OF CALIFORNIA

THE STATE OF CALIFORNIA OR ITS OFFICERS OR AGENTS SHALL NOT BE RESPONSIBLE FOR THE ACCURACY OR COMPLETENESS OF SCANNED COPIES OF THIS PLAN SHEET.

LEGEND

- CONSTRUCTION THIS STAGE
- DIRECTION OF TRAVEL
- REMOVE TEMPORARY HMA PAVEMENT/SHOULDER
- PCC PAVEMENT REPLACEMENT

STAGE 1, PHASE 1 WORK

1. REMOVE AND CONSTRUCT OUTSIDE SHOULDERS FOR BOTH SOUTHBOUND AND NORTHBOUND OF ROUTE 99.
2. COLD PLANE EXISTING OUTSIDE SHOULDER RUMBLE STRIP AND REPAVE TO MATCH EXISTING.
3. TEMPORARY STRIPING FOR BOTH SOUTHBOUND AND NORTHBOUND LANES OF ROUTE 99.

NOTE:

1. STAGE 1, PHASE 1 WILL BE CONSTRUCTED UNDER TRAFFIC CONTROL.
2. FOR ALL STRIPING AND TEMPORARY RAILING (TYPE K) SEE TRAFFIC PLAN.
3. NEW STRUCTURAL SECTION FOR OUTSIDE SHOULDER: 0.60′ HMA (TYPE A) AND 1.05′ Cl 2 AB.

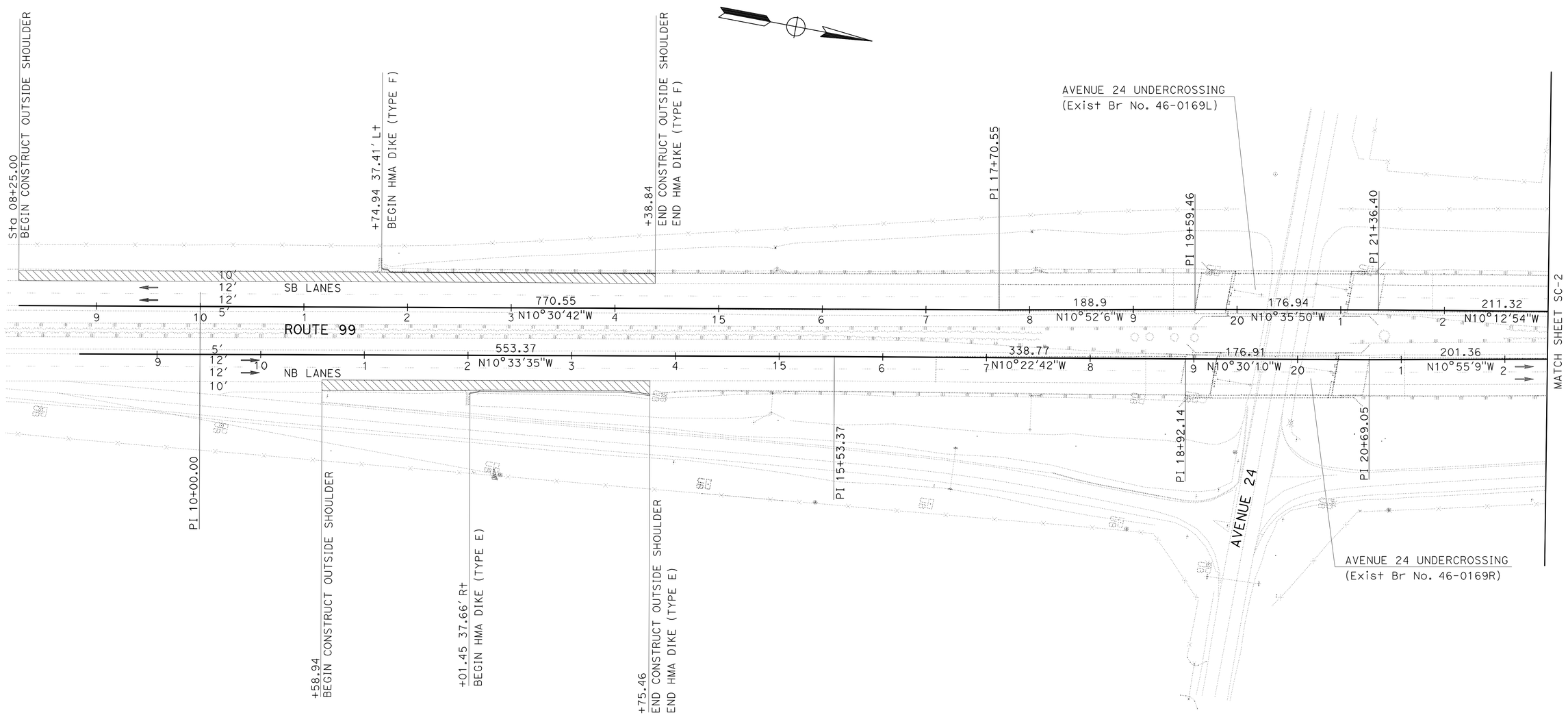

STAGE CONSTRUCTION

(STAGE 1, PHASE 1)

SCALE: 1" = 50′ **SC-1**

THIS PLAN ACCURATE FOR STAGE CONSTRUCTION WORKS ONLY

STATE OF CALIFORNIA - DEPARTMENT OF TRANSPORTATION
Caltrans
DESIGN

FUNCTIONAL SUPERVISOR: ALI ALQATAMI
CALCULATED-DESIGNED BY: RANJIT K MONDAL
CHECKED BY: AHMAD K AHMAD
REVISED BY
DATE REVISED

LAST REVISION 03-11-10 | DATE PLOTTED => 07-APR-2010 | TIME PLOTTED => 05:56

Dist	COUNTY	ROUTE	POST MILES TOTAL PROJECT	SHEET No.	TOTAL SHEETS
06	Tul	99	2.9/3.3	21	128

A Ahmad 03-11-10
REGISTERED CIVIL ENGINEER DATE

4-5-10
PLANS APPROVAL DATE

REGISTERED PROFESSIONAL ENGINEER
AHMAD
K. AHMAD
No. 69064
Exp. 6-30-10
CIVIL
STATE OF CALIFORNIA

THE STATE OF CALIFORNIA OR ITS OFFICERS OR AGENTS SHALL NOT BE RESPONSIBLE FOR THE ACCURACY OR COMPLETENESS OF SCANNED COPIES OF THIS PLAN SHEET.

CURVE DATA

No.	R	Δ	T	L
1	3977.00′	5°7′31"	178.00′	355.76′
2	3976.62′	6°22′50"	221.65′	442.85′

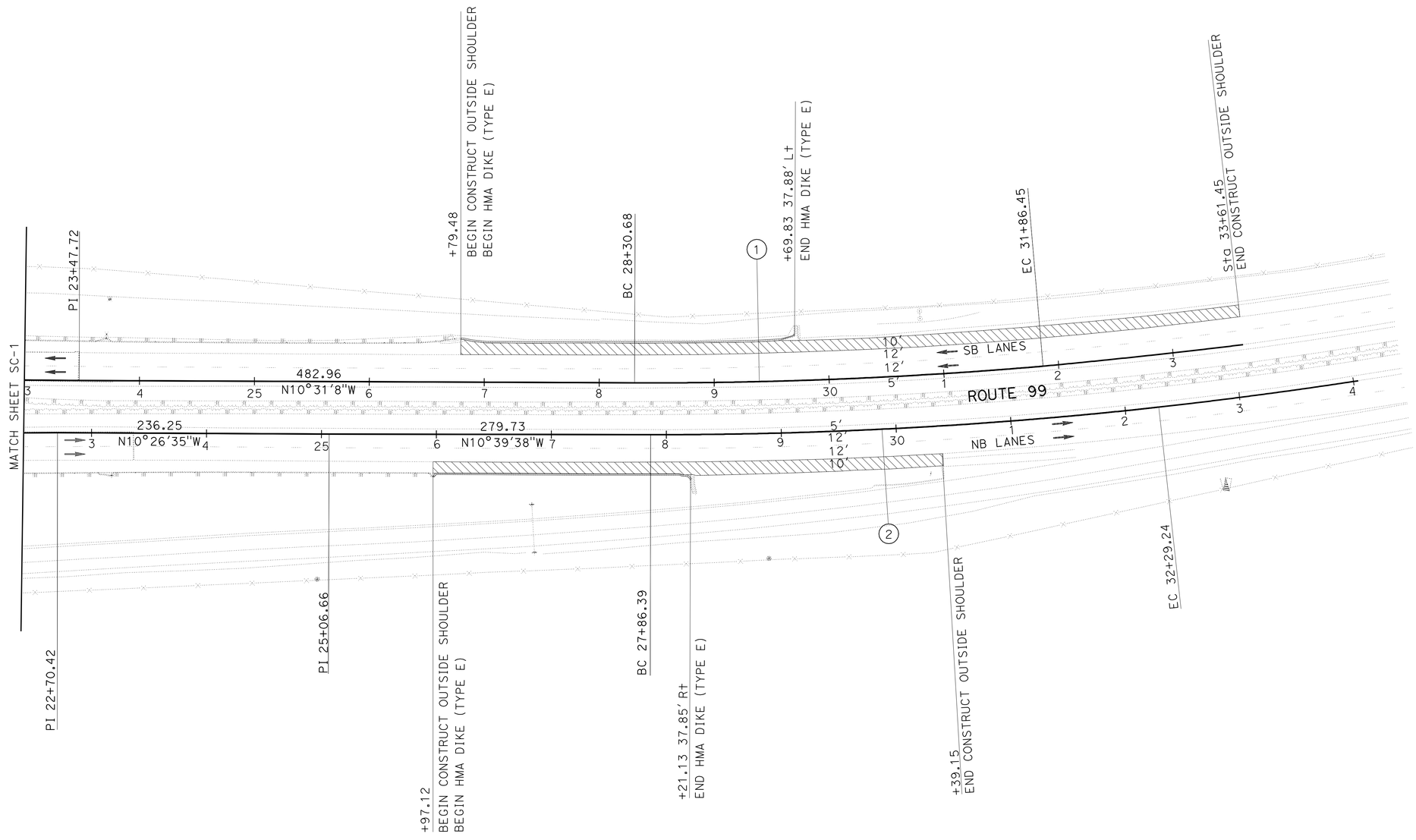

STAGE CONSTRUCTION

(STAGE 1, PHASE 1)

THIS PLAN ACCURATE FOR STAGE CONSTRUCTION WORKS ONLY

SCALE: 1" = 50′ **SC-2**

STATE OF CALIFORNIA - DEPARTMENT OF TRANSPORTATION
Caltrans®
DESIGN

FUNCTIONAL SUPERVISOR: ALI ALQATAMI
CALCULATED-DESIGNED BY: RANJIT K MONDAL
CHECKED BY: AHMAD K AHMAD
REVISED BY
DATE REVISED

LAST REVISION 03-11-10
DATE PLOTTED => 06-APR-2010
TIME PLOTTED => 14:03

Dist	COUNTY	ROUTE	POST MILES TOTAL PROJECT	SHEET No.	TOTAL SHEETS
06	Tul	99	2.9/3.3	22	128

A Ahmad 03-11-10
REGISTERED CIVIL ENGINEER DATE

4-5-10
PLANS APPROVAL DATE

REGISTERED PROFESSIONAL ENGINEER
AHMAD K. AHMAD
No. 69064
Exp. 6-30-10
CIVIL
STATE OF CALIFORNIA

THE STATE OF CALIFORNIA OR ITS OFFICERS OR AGENTS SHALL NOT BE RESPONSIBLE FOR THE ACCURACY OR COMPLETENESS OF SCANNED COPIES OF THIS PLAN SHEET.

STAGE 1, PHASE 2 WORK

1. REMOVE STBB AND OLEANDERS IN MEDIAN.
2. CONSTRUCT MEDIAN BRIDGE.
3. CONSTRUCT MEDIAN APPROACHES FOR NB ROUTE 99 DETOUR.
4. STRIPING FOR NB DETOUR TO BE FINISHED AT THE END OF STAGE 1B AND BEFORE START STAGE 2 CONSTRUCTION.
5. SEE SHEET SC-5 AND SC-6 FOR ALIGNMENT DATA OF NORTHBOUND ROUTE 99 DETOUR.

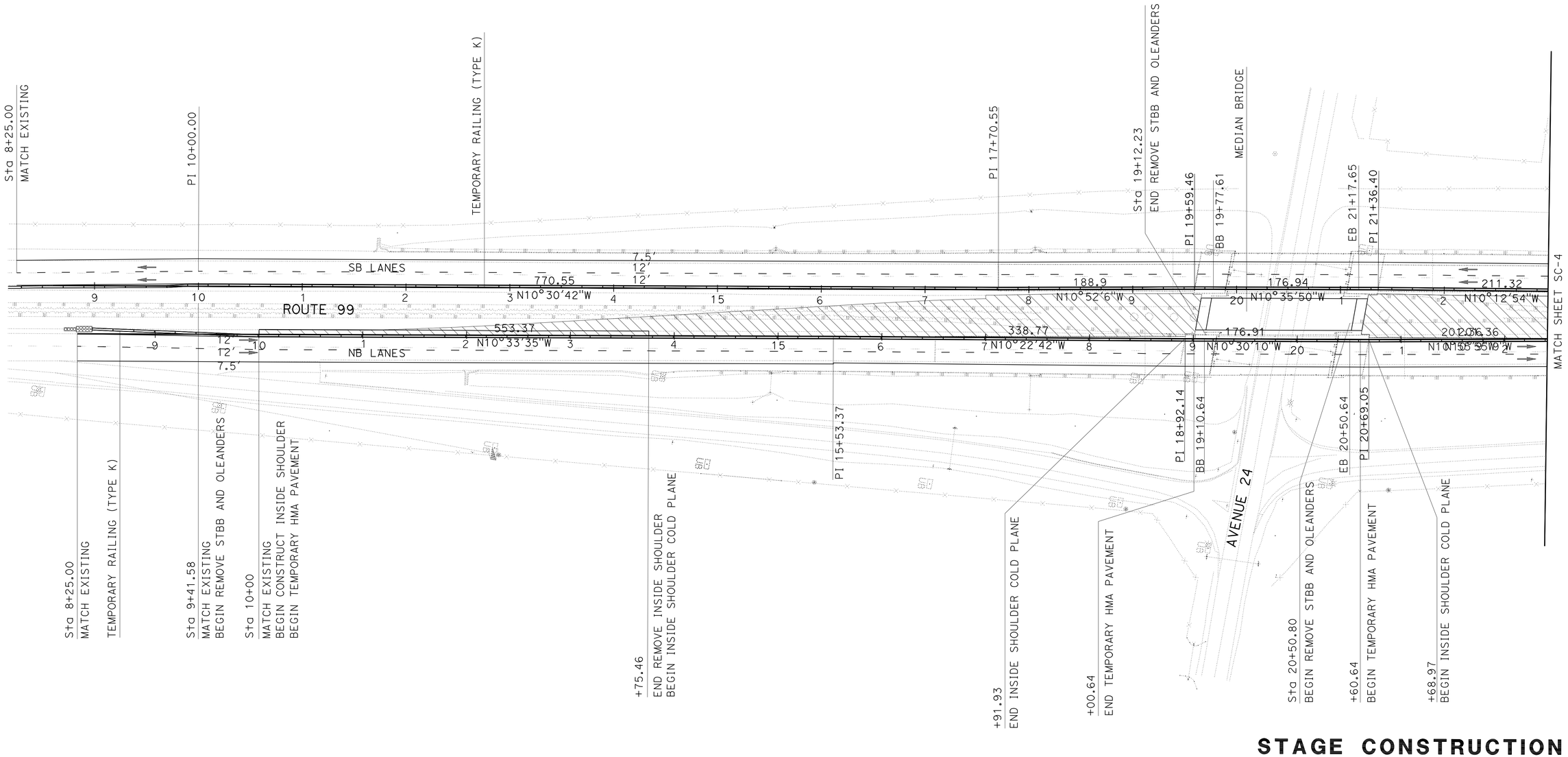

STAGE CONSTRUCTION
(STAGE 1, PHASE 2)

SCALE: 1" = 50'

SC-3

THIS PLAN ACCURATE FOR STAGE CONSTRUCTION WORKS ONLY

STATE OF CALIFORNIA - DEPARTMENT OF TRANSPORTATION
Caltrans
DESIGN

FUNCTIONAL SUPERVISOR: ALI ALQATAMI
CALCULATED-DESIGNED BY: RANJIT K MONDAL
CHECKED BY: AHMAD K AHMAD
REVISED BY
DATE REVISED

LAST REVISION 03-11-10
DATE PLOTTED => 07-APR-2010
TIME PLOTTED => 06:06

Dist	COUNTY	ROUTE	POST MILES TOTAL PROJECT	SHEET No.	TOTAL SHEETS
06	Tul	99	2.9/3.3	23	128

A Ahmad 03-11-10
REGISTERED CIVIL ENGINEER DATE

4-5-10
PLANS APPROVAL DATE

REGISTERED PROFESSIONAL ENGINEER
AHMAD K. AHMAD
No. 69064
Exp. 6-30-10
CIVIL
STATE OF CALIFORNIA

THE STATE OF CALIFORNIA OR ITS OFFICERS OR AGENTS SHALL NOT BE RESPONSIBLE FOR THE ACCURACY OR COMPLETENESS OF SCANNED COPIES OF THIS PLAN SHEET.

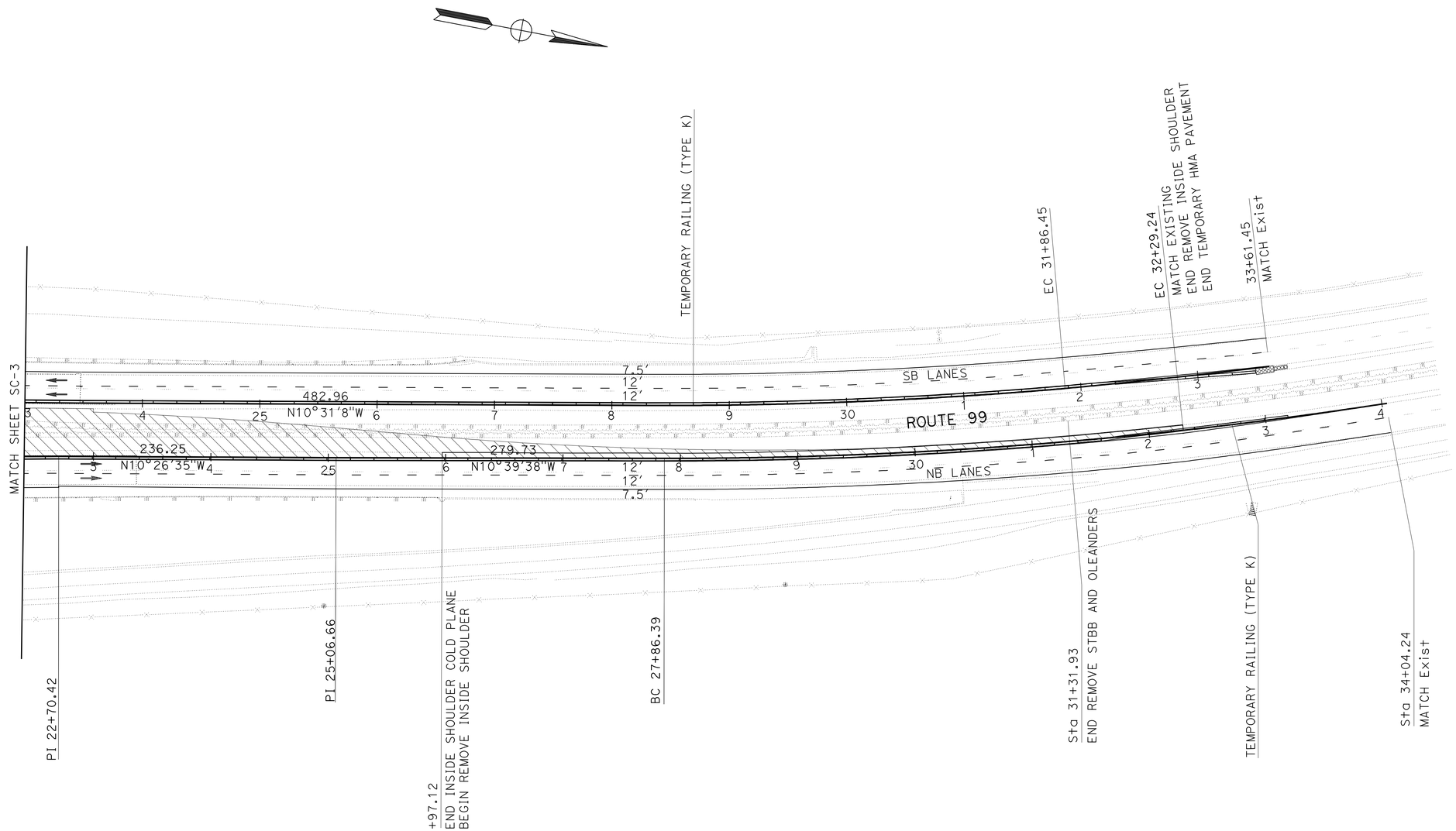

STAGE CONSTRUCTION
(STAGE 1, PHASE 2)

SCALE: 1" = 50' **SC-4**

THIS PLAN ACCURATE FOR STAGE CONSTRUCTION WORKS ONLY

STATE OF CALIFORNIA - DEPARTMENT OF TRANSPORTATION
Caltrans
DESIGN

FUNCTIONAL SUPERVISOR: ALI ALQATAMI
CALCULATED-DESIGNED BY: RANJIT K MONDAL
CHECKED BY: AHMAD K AHMAD
REVISED BY
DATE REVISED

LAST REVISION 03-11-10
DATE PLOTTED => 07-APR-2010
TIME PLOTTED => 06:07

Dist	COUNTY	ROUTE	POST MILES TOTAL PROJECT	SHEET No.	TOTAL SHEETS
06	Tul	99	2.9/3.3	24	128

A Ahmad 03-11-10
REGISTERED CIVIL ENGINEER DATE

4-5-10
PLANS APPROVAL DATE

REGISTERED PROFESSIONAL ENGINEER AHMAD K. AHMAD No. 69064 Exp. 6-30-10 CIVIL STATE OF CALIFORNIA

THE STATE OF CALIFORNIA OR ITS OFFICERS OR AGENTS SHALL NOT BE RESPONSIBLE FOR THE ACCURACY OR COMPLETENESS OF SCANNED COPIES OF THIS PLAN SHEET.

STAGE 2, PHASE 1 WORK

1. CONSTRUCT NB BRIDGE AND NB LANES.
2. NB OUTSIDE SHOULDER COLD PLANE AND OVERLAY.
3. REPLACE NB AC DIKE AND MBGR.

CURVE DATA

No.	R	Δ	T	L
7	4498.65′	3°12′48″	126.21′	252.35′
8	4000.00′	3°19′19″	115.99′	231.91′
9	3800.00′	5°36′12″	185.96′	371.62′

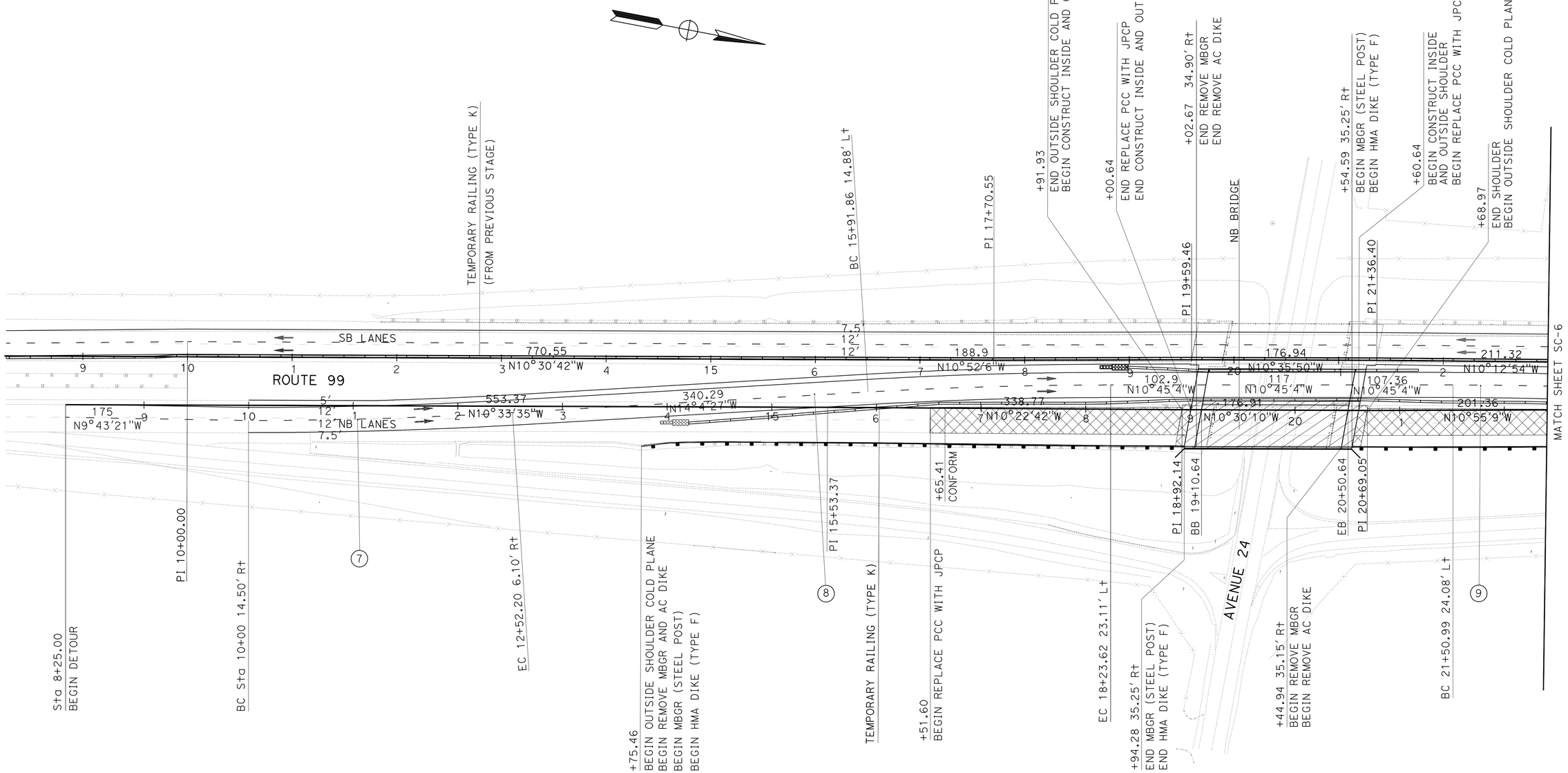

STAGE CONSTRUCTION
(STAGE 2, PHASE 1)

SCALE: 1″ = 50′ **SC-5**

THIS PLAN ACCURATE FOR STAGE CONSTRUCTION WORKS ONLY

STATE OF CALIFORNIA - DEPARTMENT OF TRANSPORTATION
Caltrans®
DESIGN

FUNCTIONAL SUPERVISOR: ALI ALQATAMI
CALCULATED-DESIGNED BY: AHMAD K AHMAD
CHECKED BY
REVISED BY: RANJIT K MONDAL
DATE REVISED

LAST REVISION 03-11-10
DATE PLOTTED => 07-APR-2010
TIME PLOTTED => 05:56

Dist	COUNTY	ROUTE	POST MILES TOTAL PROJECT	SHEET No.	TOTAL SHEETS
06	Tul	99	2.9/3.3	25	128

A Ahmad 03-11-10
REGISTERED CIVIL ENGINEER DATE

4-5-10
PLANS APPROVAL DATE

REGISTERED PROFESSIONAL ENGINEER
AHMAD K. AHMAD
No. 69064
Exp. 6-30-10
CIVIL
STATE OF CALIFORNIA

THE STATE OF CALIFORNIA OR ITS OFFICERS OR AGENTS SHALL NOT BE RESPONSIBLE FOR THE ACCURACY OR COMPLETENESS OF SCANNED COPIES OF THIS PLAN SHEET.

CURVE DATA

No.	R	Δ	T	L
9	3800.00′	5°36′12″	185.96′	371.62′
10	3310.00′	11°55′12″	345.56′	688.62′
11	5544.52′	1°48′41″	87.65′	175.28′

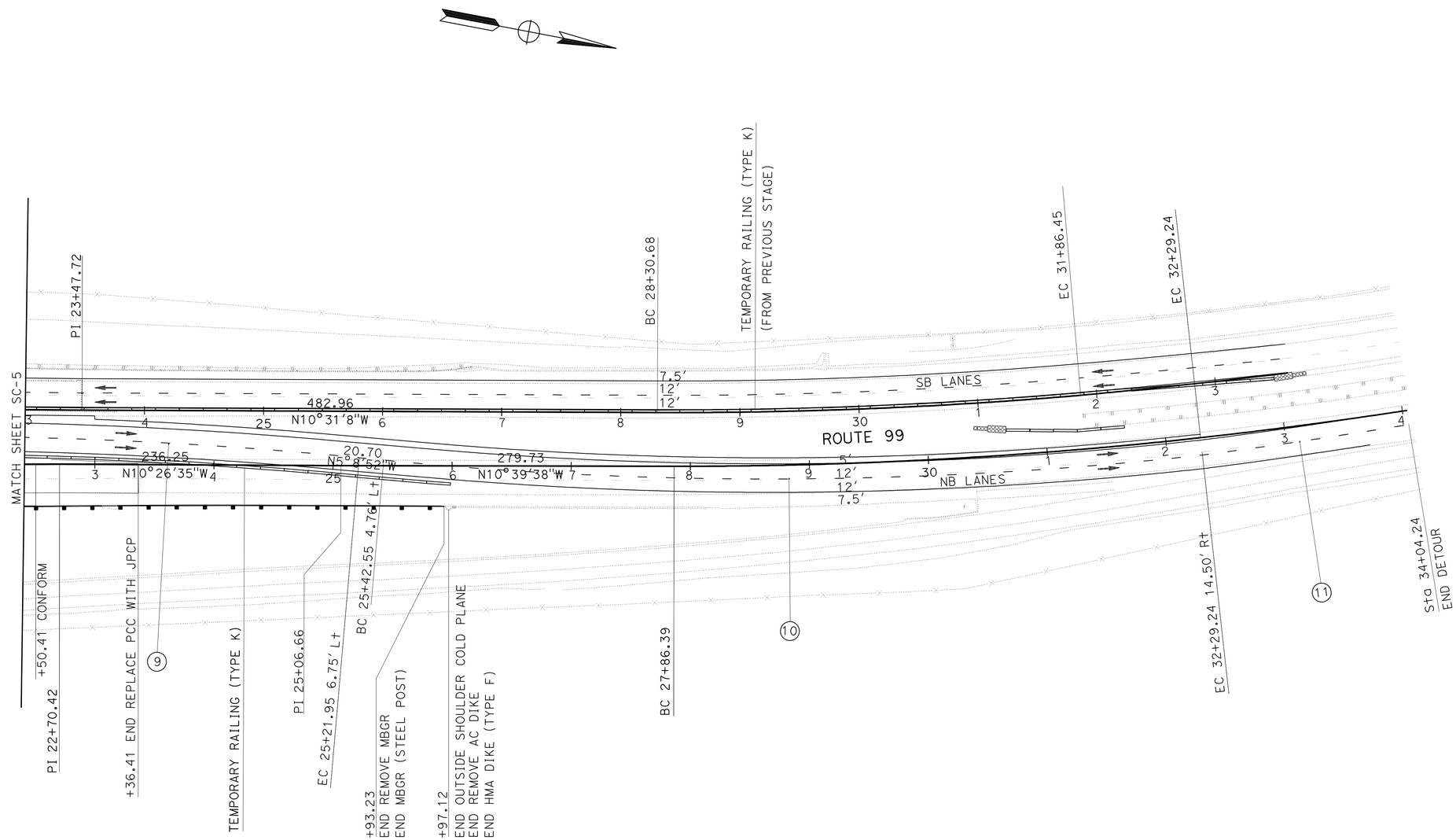

STAGE CONSTRUCTION
(STAGE 2, PHASE 1)

SCALE: 1″ = 50′ **SC-6**

THIS PLAN ACCURATE FOR STAGE CONSTRUCTION WORKS ONLY

REVISED BY	DATE REVISED

CALCULATED-DESIGNED BY	RANJIT K MONDAL
CHECKED BY	AHMAD K AHMAD
FUNCTIONAL SUPERVISOR	ALI ALQATAMI

STATE OF CALIFORNIA - DEPARTMENT OF TRANSPORTATION
Caltrans
DESIGN

LAST REVISION 03-11-10 | DATE PLOTTED => 06-APR-2010 | TIME PLOTTED => 14:03

Dist	COUNTY	ROUTE	POST MILES TOTAL PROJECT	SHEET No.	TOTAL SHEETS
06	Tul	99	2.9/3.3	26	128

A Ahmad 03-11-10
REGISTERED CIVIL ENGINEER DATE

4-5-10
PLANS APPROVAL DATE

REGISTERED PROFESSIONAL ENGINEER AHMAD K. AHMAD No. 69064 Exp. 6-30-10 CIVIL STATE OF CALIFORNIA

THE STATE OF CALIFORNIA OR ITS OFFICERS OR AGENTS SHALL NOT BE RESPONSIBLE FOR THE ACCURACY OR COMPLETENESS OF SCANNED COPIES OF THIS PLAN SHEET.

STAGE 2, PHASE 2 WORK

1. REMOVE TEMPORARY HMA PAVEMENT OF NB ROUTE 99 DETOUR.

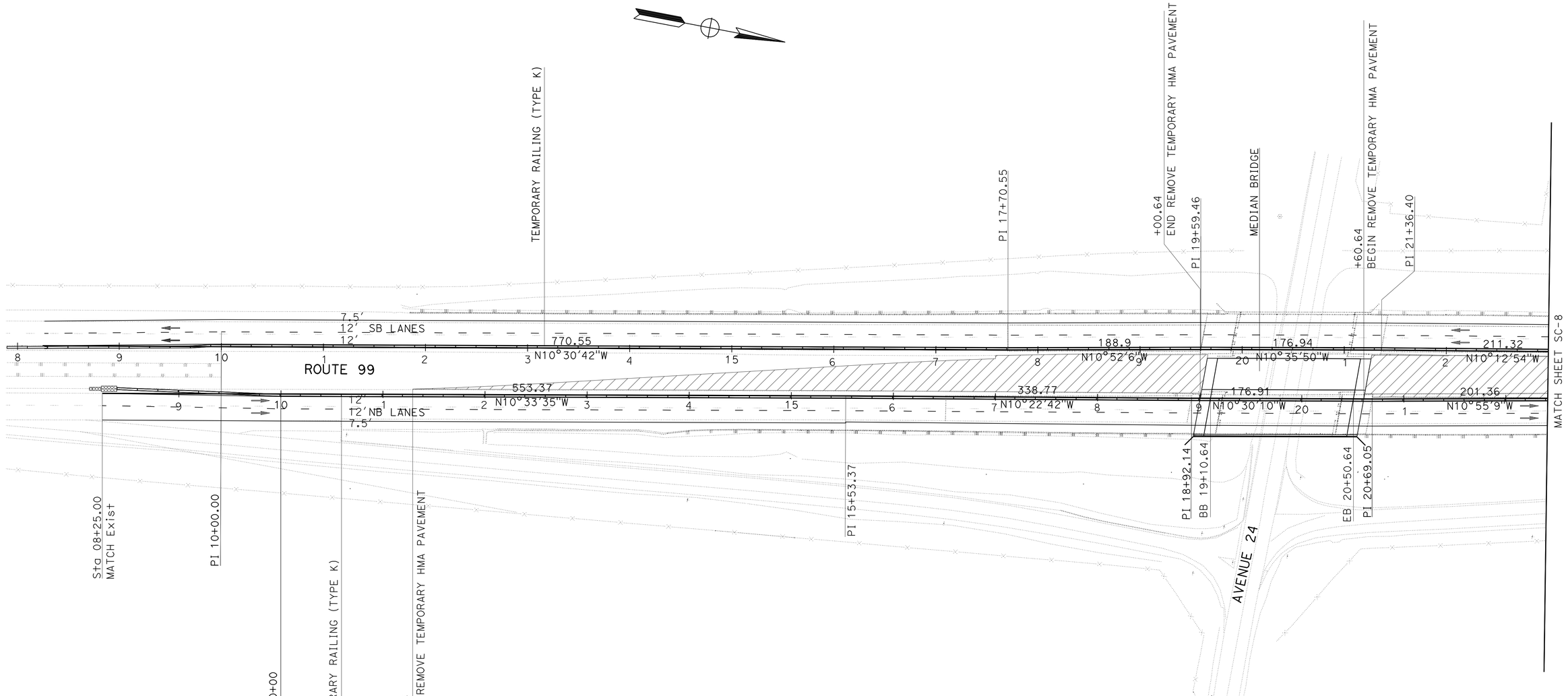

STAGE CONSTRUCTION

(STAGE 2, PHASE 2)

SCALE: 1" = 50' **SC-7**

THIS PLAN ACCURATE FOR STAGE CONSTRUCTION WORKS ONLY

STATE OF CALIFORNIA - DEPARTMENT OF TRANSPORTATION
Caltrans®
DESIGN

FUNCTIONAL SUPERVISOR: ALI ALQATAMI

CALCULATED-DESIGNED BY: RANJIT K MONDAL
CHECKED BY: AHMAD K AHMAD

REVISED BY
DATE REVISED

LAST REVISION 03-11-10
DATE PLOTTED => 07-APR-2010
TIME PLOTTED => 05:56

Dist	COUNTY	ROUTE	POST MILES TOTAL PROJECT	SHEET No.	TOTAL SHEETS
06	Tul	99	2.9/3.3	27	128

A Ahmad 03-11-10
REGISTERED CIVIL ENGINEER DATE

4-5-10
PLANS APPROVAL DATE

REGISTERED PROFESSIONAL ENGINEER
AHMAD K. AHMAD
No. 69064
Exp. 6-30-10
CIVIL
STATE OF CALIFORNIA

THE STATE OF CALIFORNIA OR ITS OFFICERS OR AGENTS SHALL NOT BE RESPONSIBLE FOR THE ACCURACY OR COMPLETENESS OF SCANNED COPIES OF THIS PLAN SHEET.

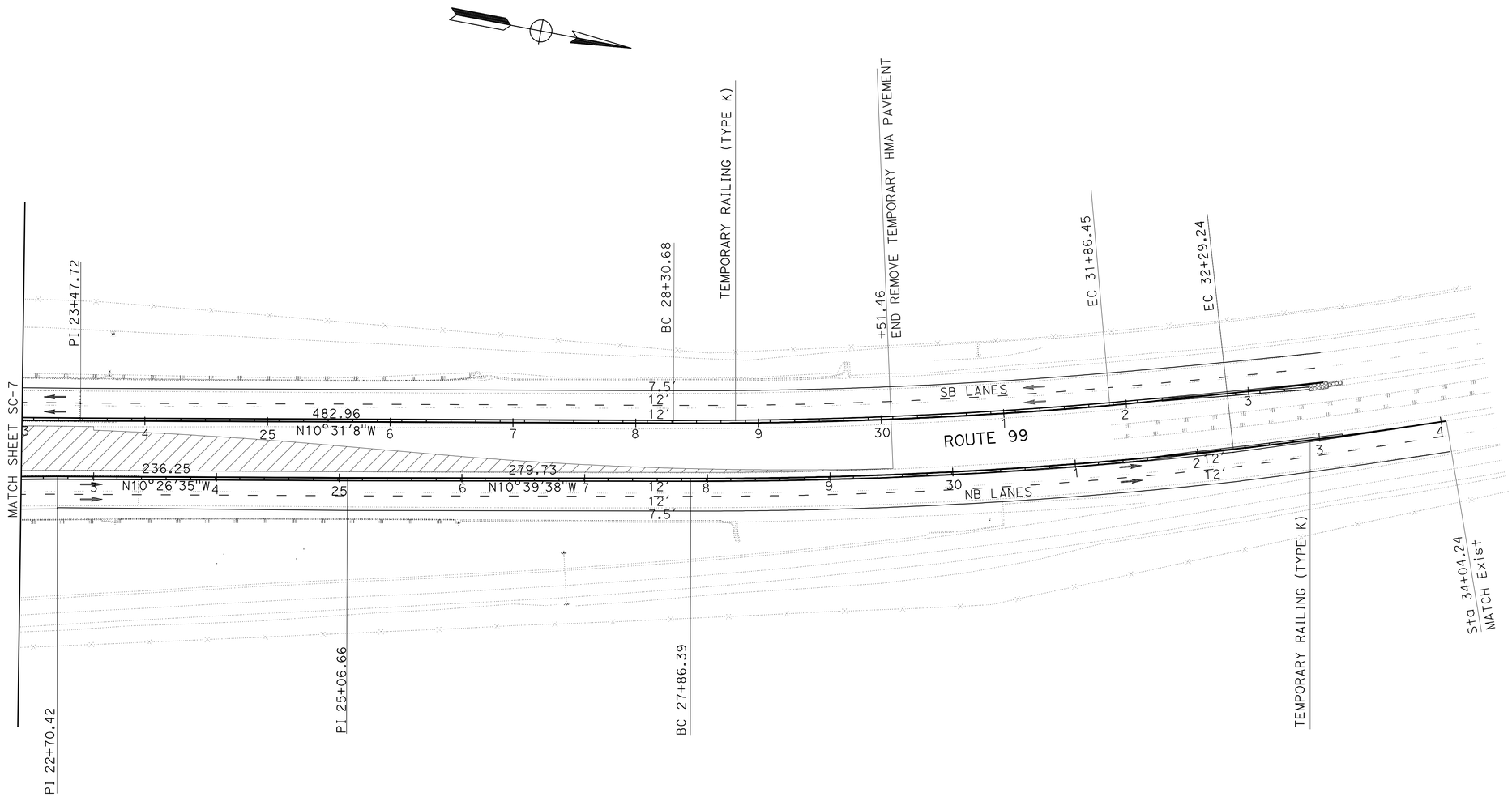

STAGE CONSTRUCTION

(STAGE 2, PHASE 2)

SCALE: 1" = 50′ **SC-8**

THIS PLAN ACCURATE FOR STAGE CONSTRUCTION WORKS ONLY

REVISED BY	DATE REVISED

CALCULATED-DESIGNED BY: RANJIT K MONDAL
CHECKED BY: AHMAD K AHMAD
FUNCTIONAL SUPERVISOR: ALI ALQATAMI

STATE OF CALIFORNIA - DEPARTMENT OF TRANSPORTATION
Caltrans
DESIGN

LAST REVISION 03-11-10 | DATE PLOTTED => 06-APR-2010 | TIME PLOTTED => 13:56

Dist	COUNTY	ROUTE	POST MILES TOTAL PROJECT	SHEET No.	TOTAL SHEETS
06	Tul	99	2.9/3.3	28	128

A Ahmad 03-11-10
REGISTERED CIVIL ENGINEER DATE

4-5-10
PLANS APPROVAL DATE

REGISTERED PROFESSIONAL ENGINEER AHMAD K. AHMAD No. 69064 Exp. 6-30-10 CIVIL STATE OF CALIFORNIA

THE STATE OF CALIFORNIA OR ITS OFFICERS OR AGENTS SHALL NOT BE RESPONSIBLE FOR THE ACCURACY OR COMPLETENESS OF SCANNED COPIES OF THIS PLAN SHEET.

STAGE 3, PHASE 1 WORK

1. CONSTRUCT MEDIAN APPROACHES WITH TEMPORARY HMA PAVEMENT FOR SB ROUTE 99 DETOUR.
2. STRIPING FOR SB DETOUR TO BE FINISHED AT THE END OF STAGE 3, PHASE 1 AND BEFORE START STAGE 3, PHASE 2 CONSTRUCTION.
3. SEE SHEET SC-11 AND SC-12 FOR ALIGNMENT DATA OF SOUTHBOUND ROUTE 99 DETOUR.

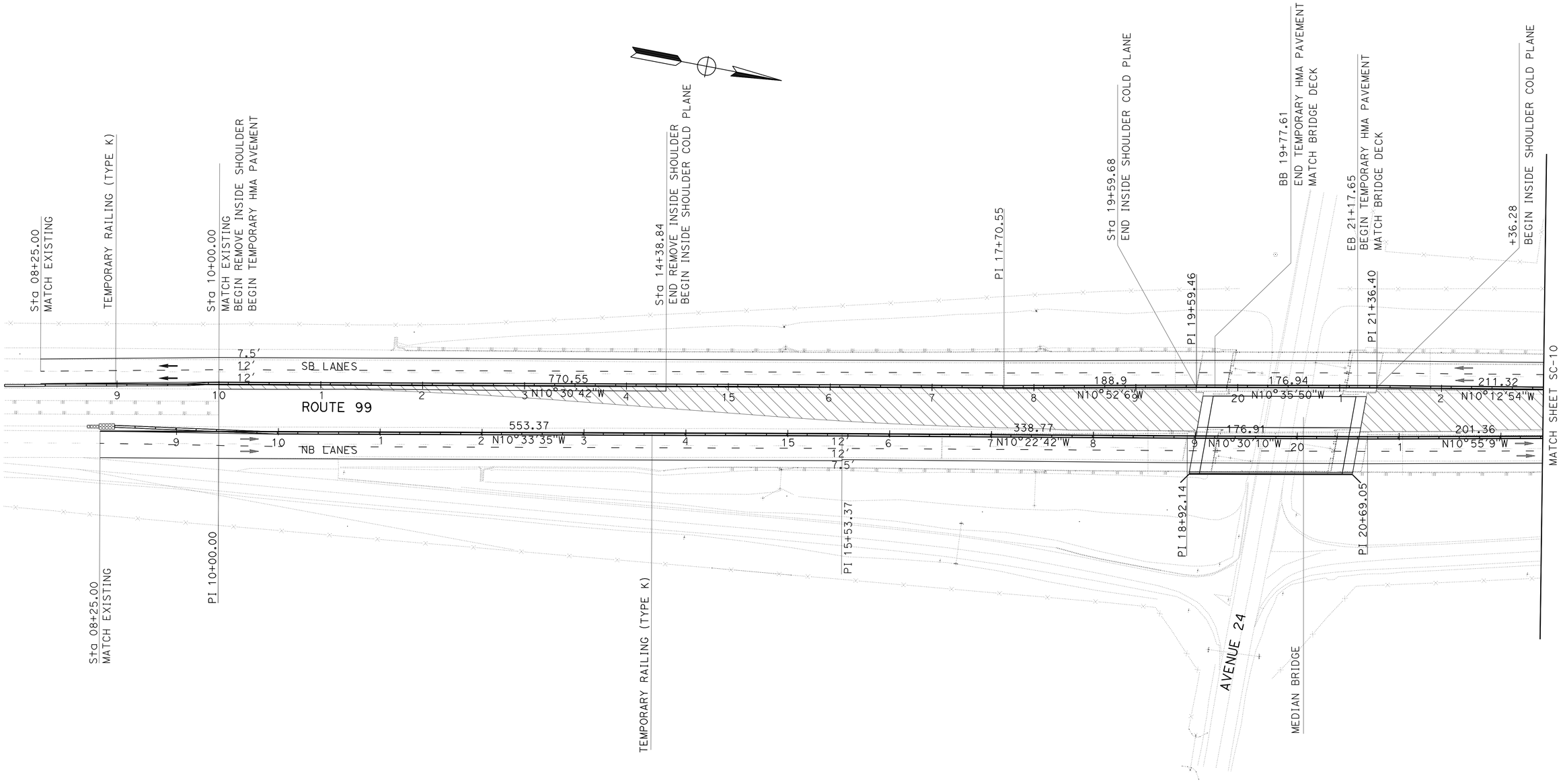

STAGE CONSTRUCTION
(STAGE 3, PHASE 1)

SCALE: 1" = 50'

SC-9

THIS PLAN ACCURATE FOR STAGE CONSTRUCTION WORKS ONLY

STATE OF CALIFORNIA - DEPARTMENT OF TRANSPORTATION
Caltrans
DESIGN

FUNCTIONAL SUPERVISOR: ALI ALQATAMI
CALCULATED-DESIGNED BY: RANJIT K MONDAL
CHECKED BY: AHMAD K AHMAD
REVISED BY
DATE REVISED

LAST REVISION 03-11-10 | DATE PLOTTED => 07-APR-2010 | TIME PLOTTED => 06:12

Dist	COUNTY	ROUTE	POST MILES TOTAL PROJECT	SHEET No.	TOTAL SHEETS
06	Tul	99	2.9/3.3	29	128

A Ahmad 03-11-10
REGISTERED CIVIL ENGINEER DATE

4-5-10
PLANS APPROVAL DATE

REGISTERED PROFESSIONAL ENGINEER
AHMAD K. AHMAD
No. 69064
Exp. 6-30-10
CIVIL
STATE OF CALIFORNIA

THE STATE OF CALIFORNIA OR ITS OFFICERS OR AGENTS SHALL NOT BE RESPONSIBLE FOR THE ACCURACY OR COMPLETENESS OF SCANNED COPIES OF THIS PLAN SHEET.

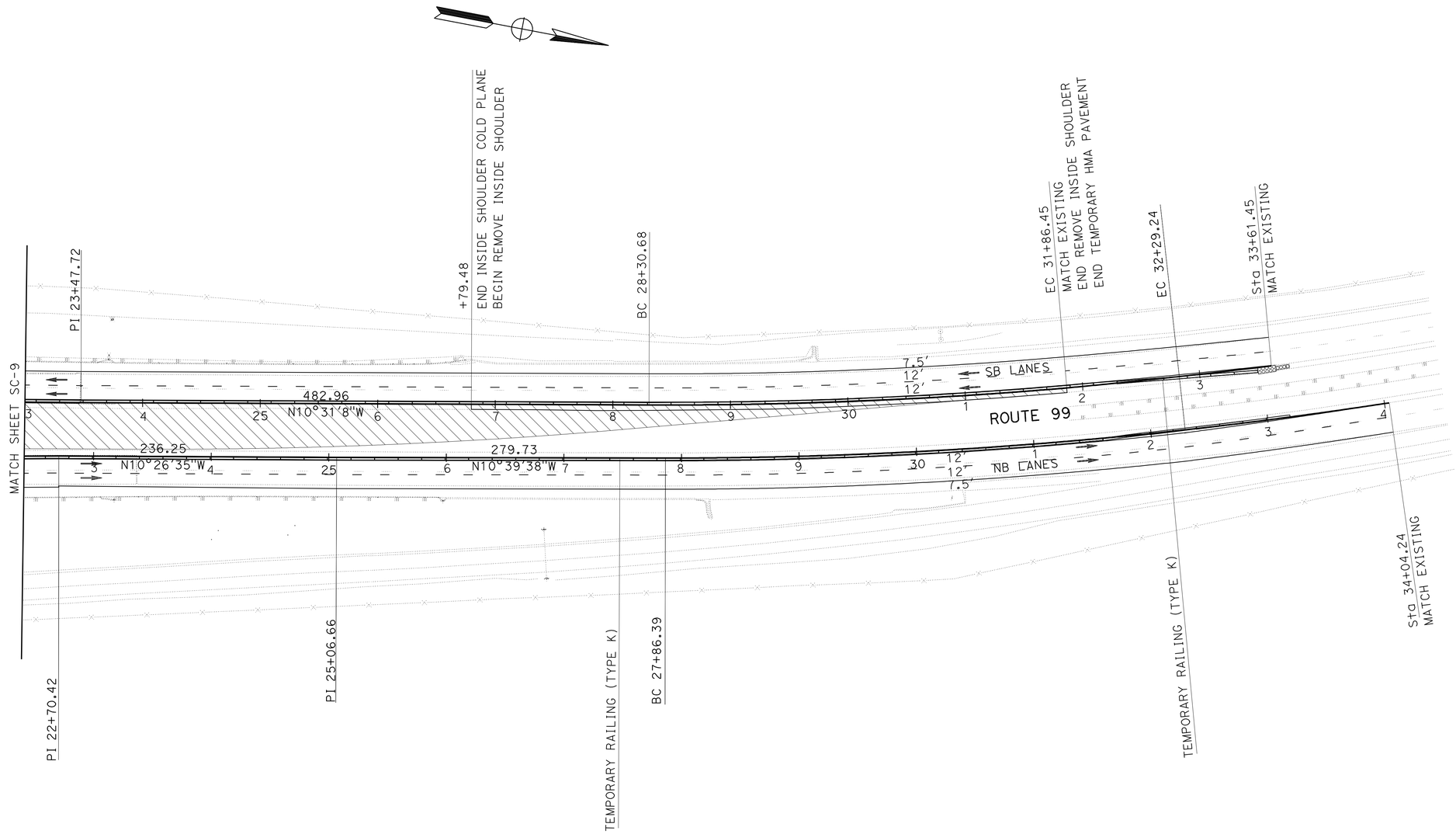

STAGE CONSTRUCTION

(STAGE 3, PHASE 1)

SCALE: 1" = 50′ **SC-10**

THIS PLAN ACCURATE FOR STAGE CONSTRUCTION WORKS ONLY

STATE OF CALIFORNIA - DEPARTMENT OF TRANSPORTATION
Caltrans
DESIGN

FUNCTIONAL SUPERVISOR: ALI ALQATAMI
CALCULATED-DESIGNED BY: RANJIT K MONDAL
CHECKED BY: AHMAD K AHMAD
REVISED BY
DATE REVISED

LAST REVISION 03-11-10
DATE PLOTTED => 07-APR-2010
TIME PLOTTED => 06:12

Dist	COUNTY	ROUTE	POST MILES TOTAL PROJECT	SHEET No.	TOTAL SHEETS
06	Tul	99	2.9/3.3	30	128

A Ahmad 03-11-10
REGISTERED CIVIL ENGINEER DATE

4-5-10
PLANS APPROVAL DATE

REGISTERED PROFESSIONAL ENGINEER AHMAD K. AHMAD No. 69064 Exp. 6-30-10 CIVIL STATE OF CALIFORNIA

THE STATE OF CALIFORNIA OR ITS OFFICERS OR AGENTS SHALL NOT BE RESPONSIBLE FOR THE ACCURACY OR COMPLETENESS OF SCANNED COPIES OF THIS PLAN SHEET.

STAGE 3, PHASE 2 WORK

1. CONSTRUCT SB BRIDGE AND SB LANES.
2. SB OUTSIDE SHOULDER COLD PLANE AND OVERLAY.
3. REPLACE SB AC DIKE AND MBGR.

CURVE DATA

No.	R	Δ	T	L
3	4400.00′	4°5′03"	156.89′	313.64′
4	4400.00′	4°19′25"	166.09′	332.02′

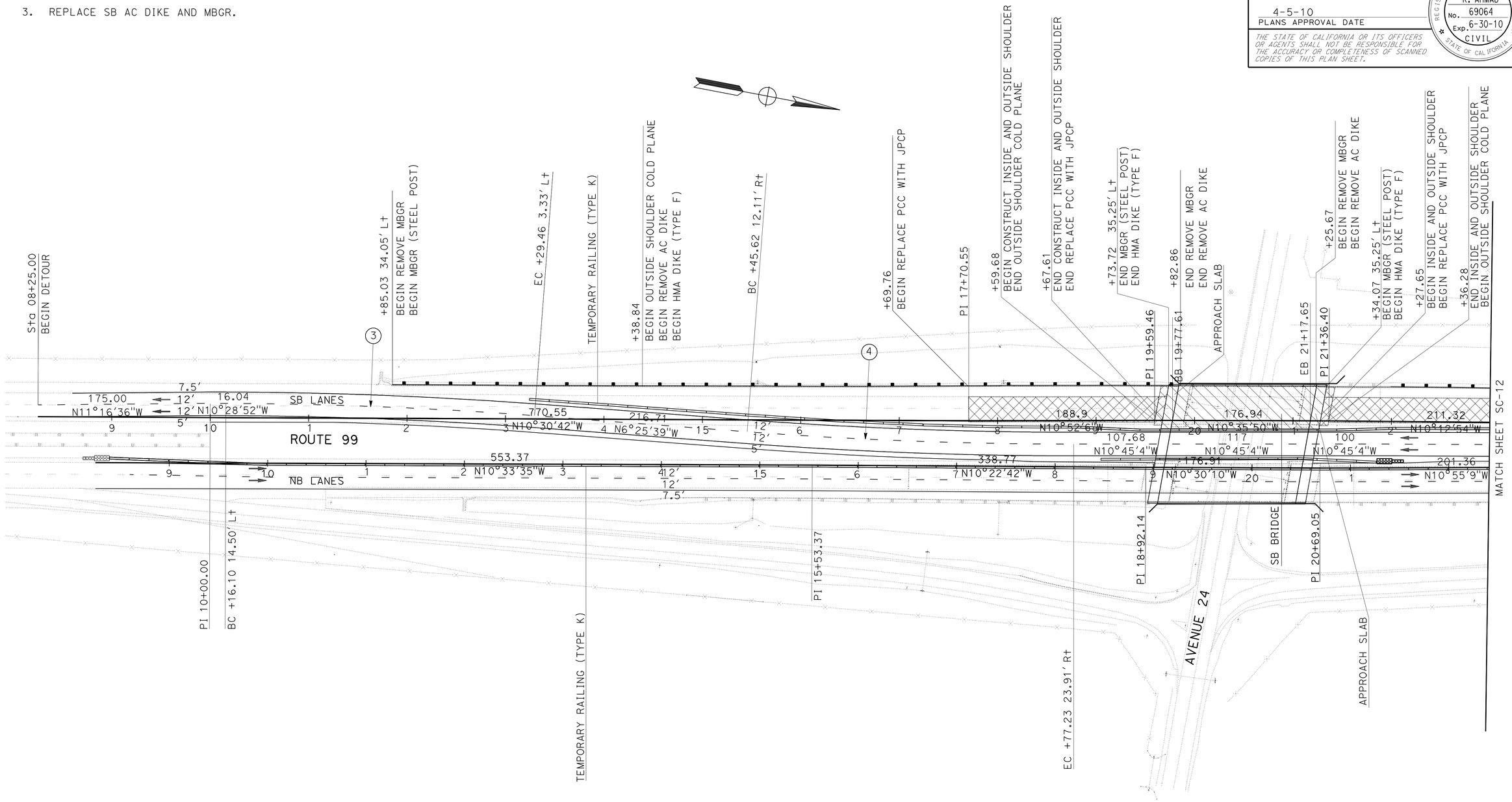

STAGE CONSTRUCTION
(STAGE 3, PHASE 2)

SCALE: 1" = 50′ **SC-11**

THIS PLAN ACCURATE FOR STAGE CONSTRUCTION WORKS ONLY

STATE OF CALIFORNIA - DEPARTMENT OF TRANSPORTATION
Caltrans
DESIGN

FUNCTIONAL SUPERVISOR: ALI ALQATAMI
CALCULATED-DESIGNED BY: RANJIT K MONDAL
CHECKED BY: AHMAD K AHMAD
REVISED BY
DATE REVISED

LAST REVISION 03-11-10
DATE PLOTTED => 07-APR-2010
TIME PLOTTED => 09:56

Dist	COUNTY	ROUTE	POST MILES TOTAL PROJECT	SHEET No.	TOTAL SHEETS
06	Tul	99	2.9/3.3	31	128

A Ahmad 03-11-10
REGISTERED CIVIL ENGINEER DATE

4-5-10
PLANS APPROVAL DATE

REGISTERED PROFESSIONAL ENGINEER
AHMAD K. AHMAD
No. 69064
Exp. 6-30-10
CIVIL
STATE OF CALIFORNIA

THE STATE OF CALIFORNIA OR ITS OFFICERS OR AGENTS SHALL NOT BE RESPONSIBLE FOR THE ACCURACY OR COMPLETENESS OF SCANNED COPIES OF THIS PLAN SHEET.

CURVE DATA

No.	R	Δ	T	L
5	4500.00′	5°13′50″	205.55′	410.82′
6	7751.96′	1°17′36″	87.50′	175.00′

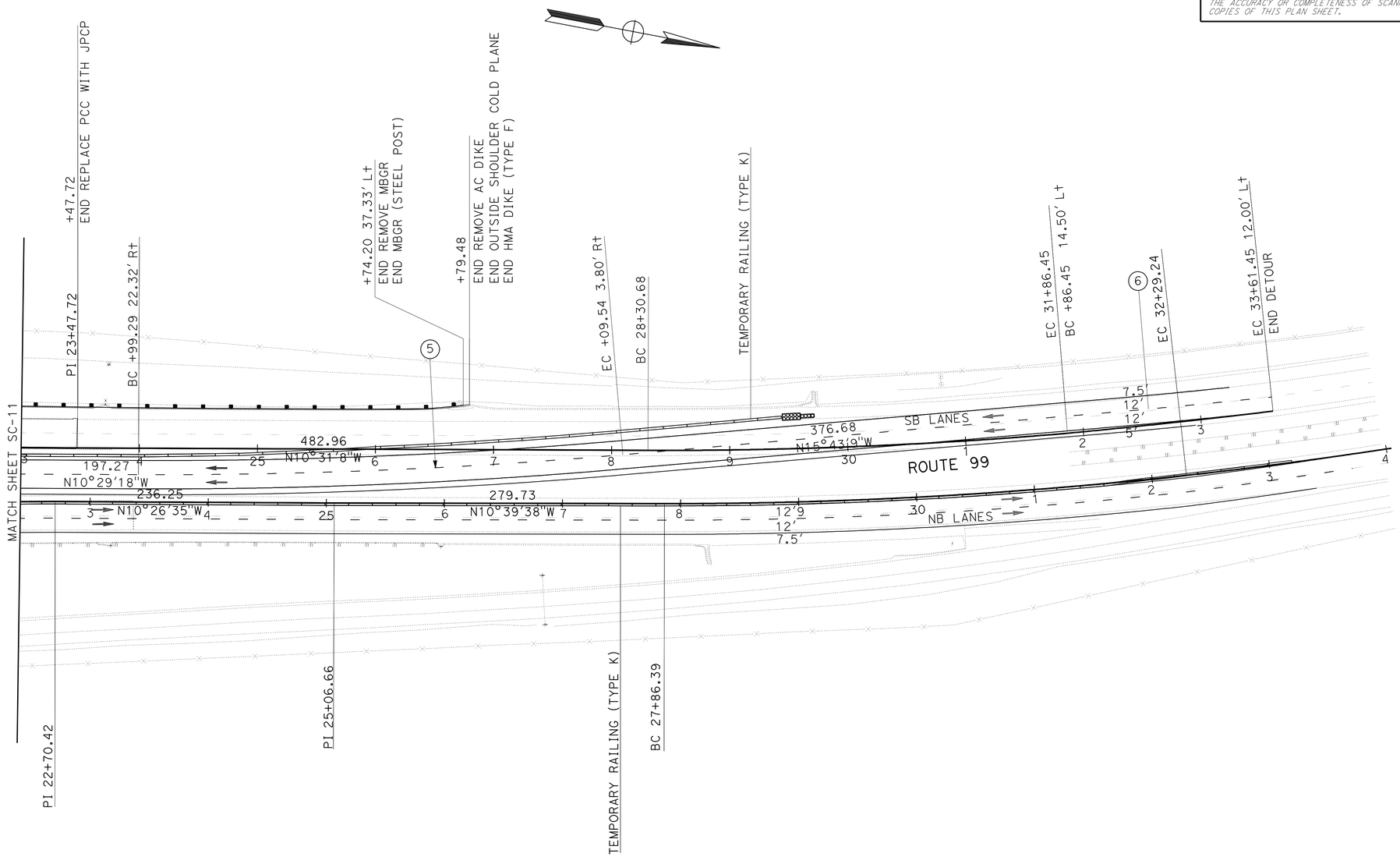

STAGE CONSTRUCTION
(STAGE 3, PHASE 2)

SCALE: 1″ = 50′ **SC-12**

THIS PLAN ACCURATE FOR STAGE CONSTRUCTION WORKS ONLY

STATE OF CALIFORNIA - DEPARTMENT OF TRANSPORTATION
Caltrans
DESIGN

FUNCTIONAL SUPERVISOR: ALI ALQATAMI
CALCULATED-DESIGNED BY: RANJIT K MONDAL
CHECKED BY: AHMAD K AHMAD
REVISED BY
DATE REVISED

LAST REVISION 03-11-10
DATE PLOTTED => 06-APR-2010
TIME PLOTTED => 13:56

Dist	COUNTY	ROUTE	POST MILES TOTAL PROJECT	SHEET No.	TOTAL SHEETS
06	Tul	99	2.9/3.3	32	128

A Ahmad 03-11-10
REGISTERED CIVIL ENGINEER DATE

4-5-10
PLANS APPROVAL DATE

REGISTERED PROFESSIONAL ENGINEER
AHMAD K. AHMAD
No. 69064
Exp. 6-30-10
CIVIL
STATE OF CALIFORNIA

THE STATE OF CALIFORNIA OR ITS OFFICERS OR AGENTS SHALL NOT BE RESPONSIBLE FOR THE ACCURACY OR COMPLETENESS OF SCANNED COPIES OF THIS PLAN SHEET.

STAGE 3, PHASE 3 WORK

1. REMOVE TEMPORARY HMA PAVEMENT OF SB ROUTE 99 DETOUR

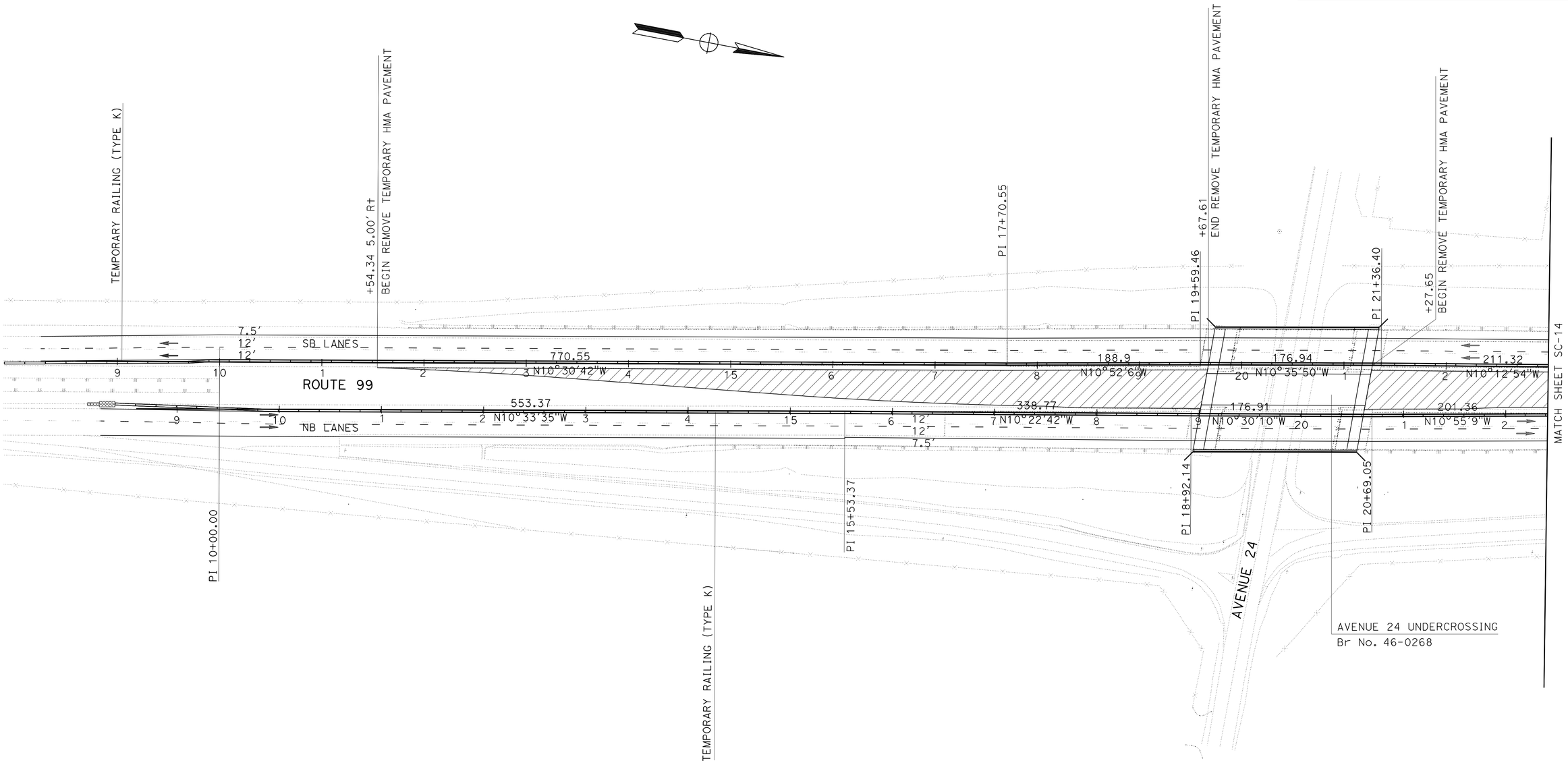

STAGE CONSTRUCTION
(STAGE 3, PHASE 3)

SCALE: 1" = 50' **SC-13**

THIS PLAN ACCURATE FOR STAGE CONSTRUCTION WORKS ONLY

STATE OF CALIFORNIA - DEPARTMENT OF TRANSPORTATION
Caltrans® DESIGN

FUNCTIONAL SUPERVISOR: ALI ALQATAMI
CALCULATED-DESIGNED BY: RANJIT K MONDAL
CHECKED BY: AHMAD K AHMAD
REVISED BY
DATE REVISED

LAST REVISION 03-11-10
DATE PLOTTED => 07-APR-2010
TIME PLOTTED => 05:56

Dist	COUNTY	ROUTE	POST MILES TOTAL PROJECT	SHEET No.	TOTAL SHEETS
06	Tul	99	2.9/3.3	33	128

A Ahmad 03-11-10
REGISTERED CIVIL ENGINEER DATE

4-5-10
PLANS APPROVAL DATE

REGISTERED PROFESSIONAL ENGINEER
AHMAD
K. AHMAD
No. 69064
Exp. 6-30-10
CIVIL
STATE OF CALIFORNIA

THE STATE OF CALIFORNIA OR ITS OFFICERS OR AGENTS SHALL NOT BE RESPONSIBLE FOR THE ACCURACY OR COMPLETENESS OF SCANNED COPIES OF THIS PLAN SHEET.

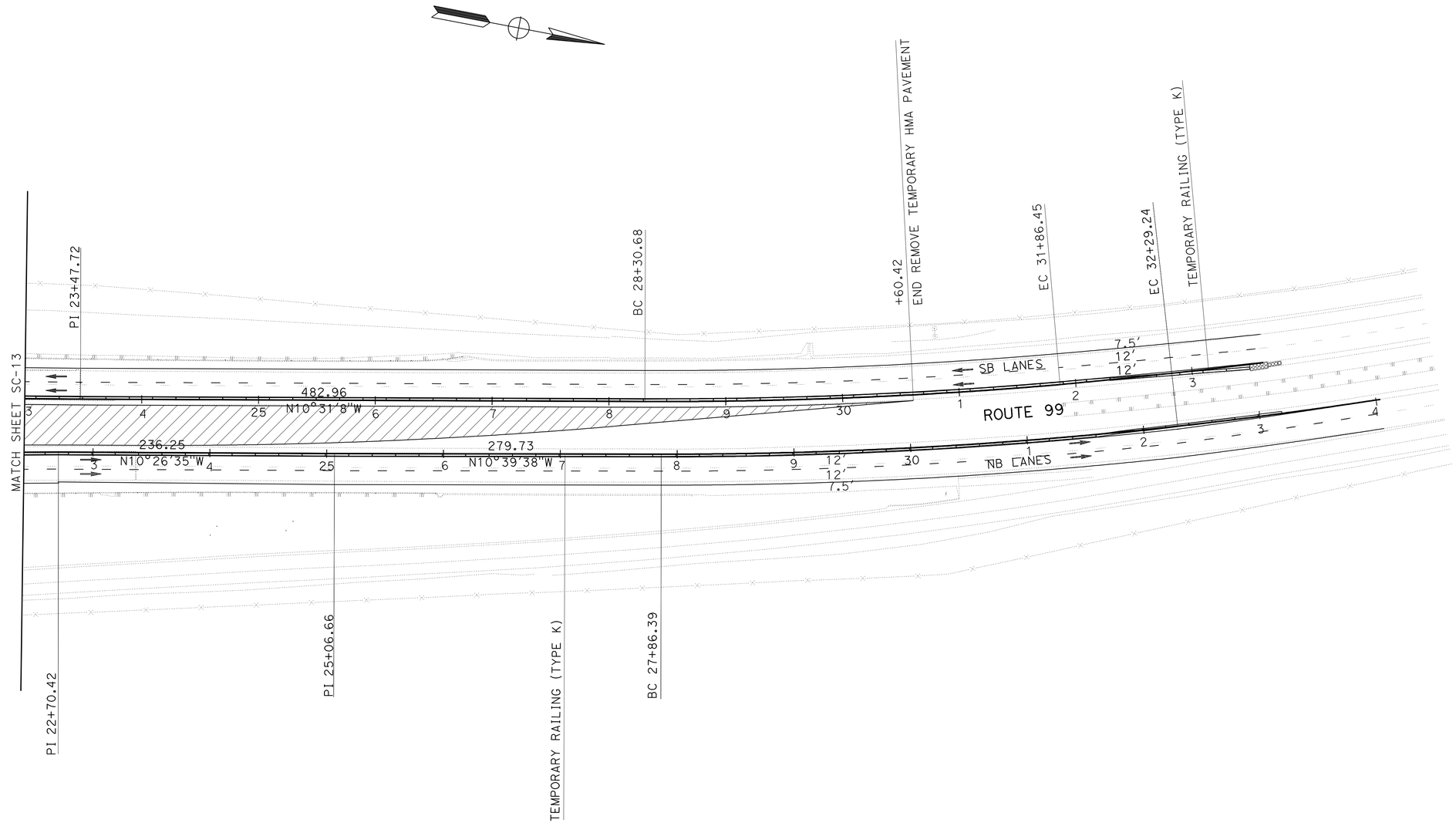

STAGE CONSTRUCTION

(STAGE 3, PHASE 3)

SCALE: 1" = 50' **SC-14**

THIS PLAN ACCURATE FOR STAGE CONSTRUCTION WORKS ONLY

STATE OF CALIFORNIA - DEPARTMENT OF TRANSPORTATION
Caltrans
DESIGN

FUNCTIONAL SUPERVISOR: ALI ALQATAMI
CALCULATED-DESIGNED BY: RANJIT K MONDAL
CHECKED BY: AHMAD K AHMAD
REVISED BY
DATE REVISED

LAST REVISION 03-11-10
DATE PLOTTED => 06-APR-2010
TIME PLOTTED => 13:56

Dist	COUNTY	ROUTE	POST MILES TOTAL PROJECT	SHEET No.	TOTAL SHEETS
06	Tul	99	2.9/3.3	34	128

A Ahmad 03-11-10
REGISTERED CIVIL ENGINEER DATE

4-5-10
PLANS APPROVAL DATE

REGISTERED PROFESSIONAL ENGINEER
AHMAD K. AHMAD
No. 69064
Exp. 6-30-10
CIVIL
STATE OF CALIFORNIA

THE STATE OF CALIFORNIA OR ITS OFFICERS OR AGENTS SHALL NOT BE RESPONSIBLE FOR THE ACCURACY OR COMPLETENESS OF SCANNED COPIES OF THIS PLAN SHEET.

STAGE 4 WORK

1. PLACE RUMBLE STRIP FOR MEDIAN SHOULDERS AND TBB IN MEDIAN.
2. PLACE RUMBLE STRIP FOR OUTER SHOULDERS AT THE END OF STAGE 4.
3. PERMANENT STRIPING AT THE END OF STAGE 4.

NOTES:

1. FOR COMPLETE RIGHT OF WAY AND ACCURATE ACCESS DATA, SEE RIGHT OF WAY RECORD MAPS AT DISTRICT OFFICE.
2. FOR BRIDGE BARRIER CONNECTION DETAILS SEE STANDARD PLAN.
3. FOR SHOULDER RUMBLE STRIP SEE STANDARD PLAN A40B.
4. ALL UTILITIES SHOWN ARE EXISTING UNLESS OTHERWISE NOTED.
5. SEE CONSTRUCTION DETAILS SHEET C-7 FOR MEDIAN THRIE BEAM BARRIER.

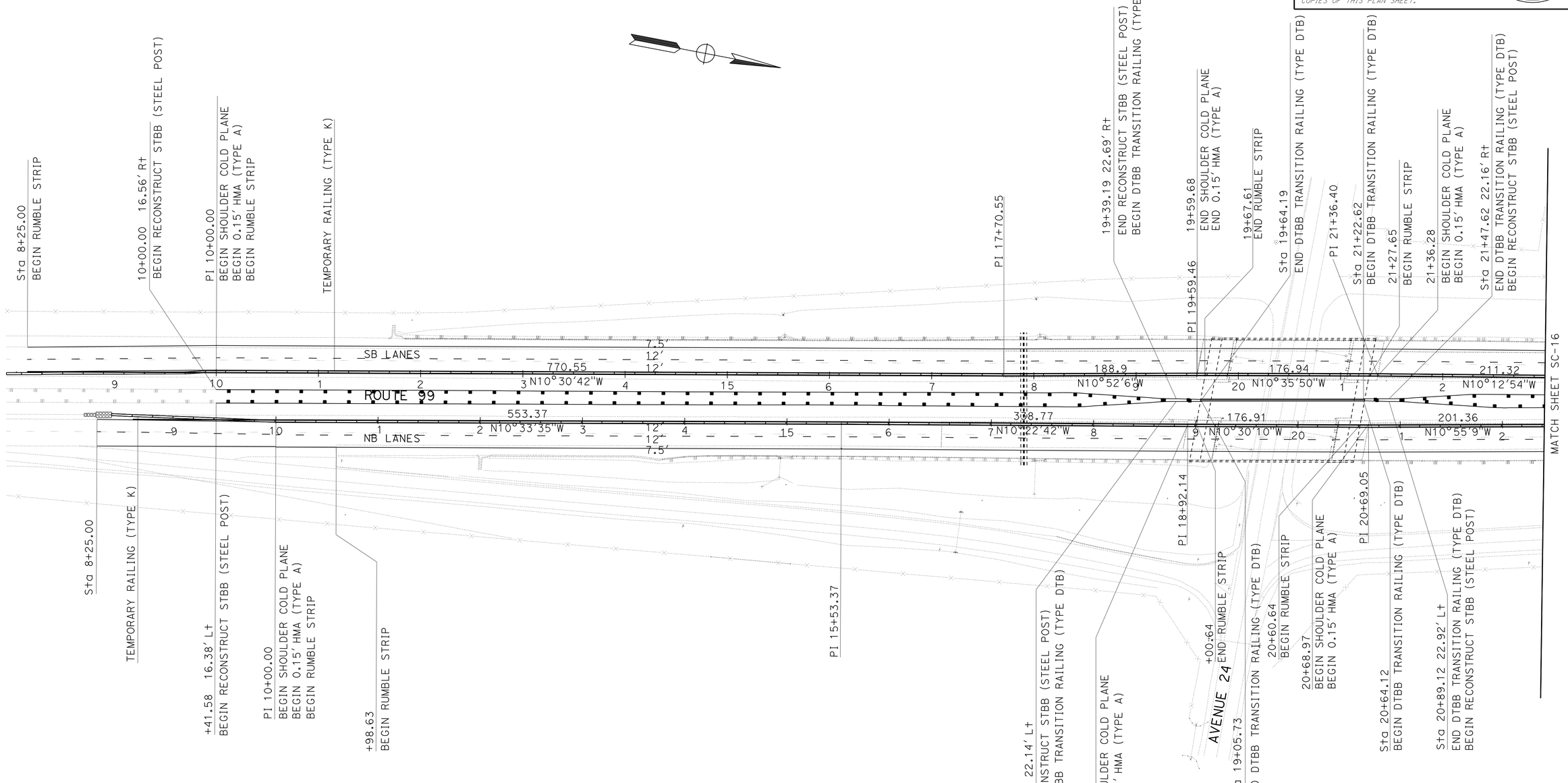

STAGE CONSTRUCTION
(STAGE 4)

SCALE: 1" = 50'

SC-15

THIS PLAN ACCURATE FOR STAGE CONSTRUCTION WORKS ONLY

REVISED BY	DATE REVISED
RANJIT K MONDAL	AHMAD K AHMAD

CALCULATED-DESIGNED BY
CHECKED BY

FUNCTIONAL SUPERVISOR
ALI ALQATAMI

STATE OF CALIFORNIA - DEPARTMENT OF TRANSPORTATION
Caltrans
DESIGN

LAST REVISION 03-11-10
DATE PLOTTED => 06-APR-2010
TIME PLOTTED => 13:56

Dist	COUNTY	ROUTE	POST MILES TOTAL PROJECT	SHEET No.	TOTAL SHEETS
06	Tul	99	2.9/3.3	35	128

A Ahmad 03-11-10
REGISTERED CIVIL ENGINEER DATE

4-5-10
PLANS APPROVAL DATE

REGISTERED PROFESSIONAL ENGINEER
AHMAD K. AHMAD
No. 69064
Exp. 6-30-10
CIVIL
STATE OF CALIFORNIA

THE STATE OF CALIFORNIA OR ITS OFFICERS OR AGENTS SHALL NOT BE RESPONSIBLE FOR THE ACCURACY OR COMPLETENESS OF SCANNED COPIES OF THIS PLAN SHEET.

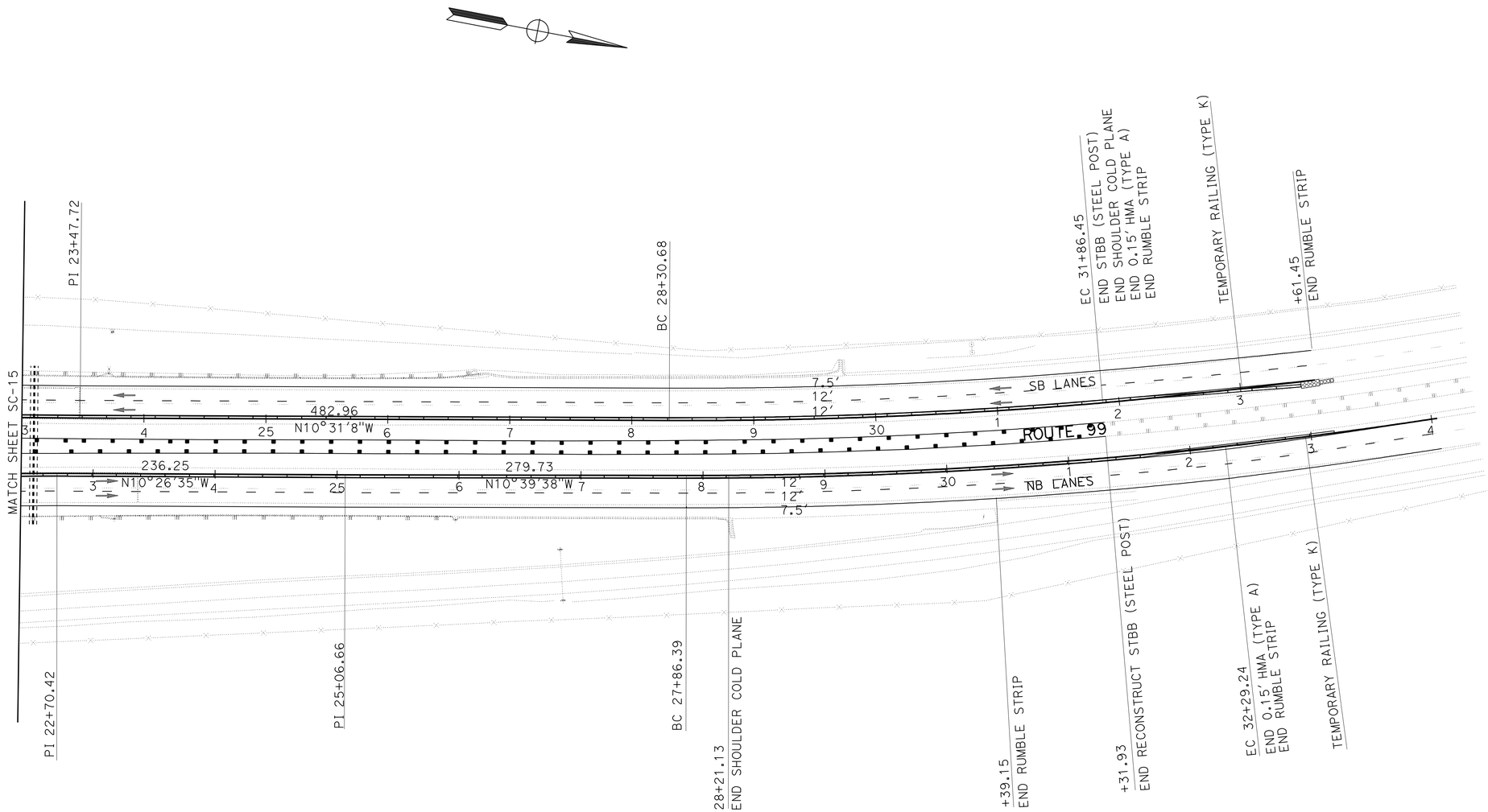

STAGE CONSTRUCTION
(STAGE 4)

SCALE: 1" = 50'

SC-16

THIS PLAN ACCURATE FOR STAGE CONSTRUCTION WORKS ONLY

STATE OF CALIFORNIA - DEPARTMENT OF TRANSPORTATION
Caltrans
DESIGN

FUNCTIONAL SUPERVISOR: ALI ALQATAMI
CALCULATED-DESIGNED BY: RANJIT K MONDAL
CHECKED BY: AHMAD K AHMAD
REVISED BY
DATE REVISED

LAST REVISION 03-11-10
DATE PLOTTED => 06-APR-2010
TIME PLOTTED => 13:57

Dist	COUNTY	ROUTE	POST MILES TOTAL PROJECT	SHEET No.	TOTAL SHEETS
06	Tul	99	2.9/3.3	36	128

A Ahmad 03-11-10
REGISTERED CIVIL ENGINEER DATE

4-5-10
PLANS APPROVAL DATE

REGISTERED PROFESSIONAL ENGINEER
AHMAD K. AHMAD
No. 69064
Exp. 6-30-10
CIVIL
STATE OF CALIFORNIA

THE STATE OF CALIFORNIA OR ITS OFFICERS OR AGENTS SHALL NOT BE RESPONSIBLE FOR THE ACCURACY OR COMPLETENESS OF SCANNED COPIES OF THIS PLAN SHEET.

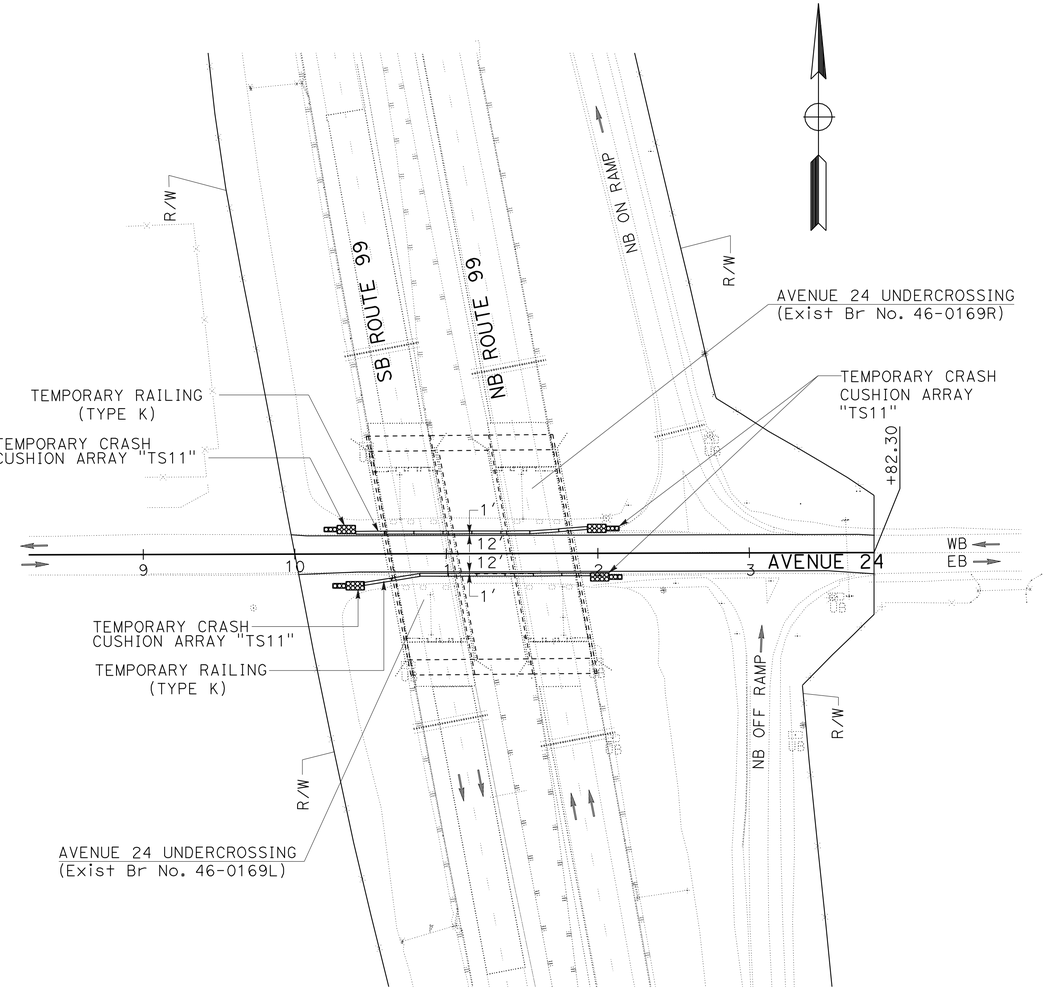

STAGE 1

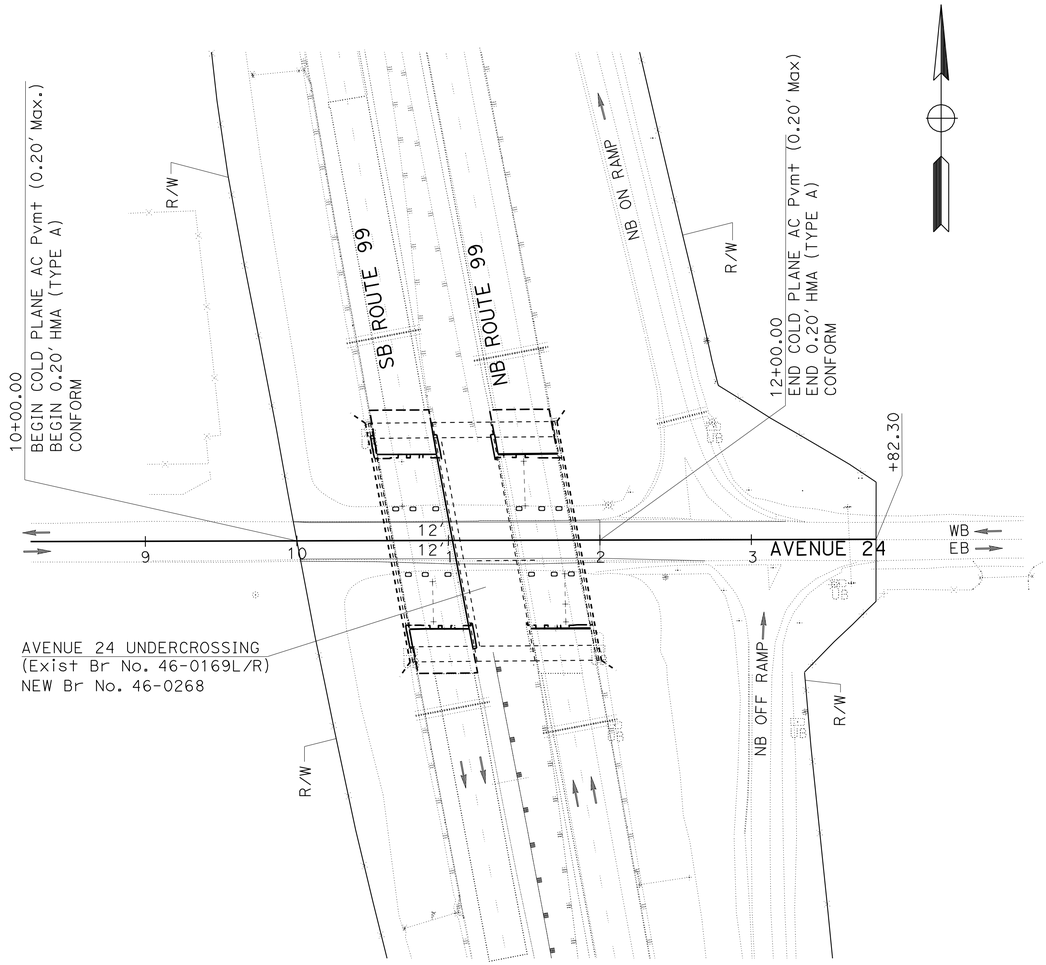

STAGE 2

NOTES:

1. STAGE 1: FALSEWORK, AND CONSTRUCTION WORKS OF THE BRIDGES.
2. STAGE 2: COLD PLANE AND OVERLAY OF AVENUE 24.
3. DETOUR SHOULD BE USED FOR COMPLETE CLOSURE OF AVENUE 24.
4. TRAFFIC CONTROL WILL BE USED FOR STAGE 1 AND STAGE 2.

THIS PLAN ACCURATE FOR STAGE CONSTRUCTION WORKS ONLY

STAGE CONSTRUCTION (AVENUE 24)

SCALE: 1" = 50'

SC-17

REVISED BY	DATE REVISED

CALCULATED-DESIGNED BY: RANJIT K MONDAL
CHECKED BY: AHMAD K AHMAD

FUNCTIONAL SUPERVISOR: ALI ALQATAMI

STATE OF CALIFORNIA - DEPARTMENT OF TRANSPORTATION
Caltrans
DESIGN

LAST REVISION 03-11-10 | DATE PLOTTED => 06-APR-2010 | TIME PLOTTED => 13:57

Dist	COUNTY	ROUTE	POST MILES TOTAL PROJECT	SHEET No.	TOTAL SHEETS
06	Tul	99	2.9/3.3	37	128

A Ahmad 03-11-10
REGISTERED CIVIL ENGINEER DATE

4-5-10
PLANS APPROVAL DATE

REGISTERED PROFESSIONAL ENGINEER AHMAD K. AHMAD No. 69064 Exp. 6-30-10 CIVIL STATE OF CALIFORNIA

THE STATE OF CALIFORNIA OR ITS OFFICERS OR AGENTS SHALL NOT BE RESPONSIBLE FOR THE ACCURACY OR COMPLETENESS OF SCANNED COPIES OF THIS PLAN SHEET.

NOTES:

1. DIMENSIONS OF THE PAVEMENT STRUCTURES (STRUCTURAL SECTIONS) ARE SUBJECT TO TOLERANCES SPECIFIED IN THE STANDARD SPECIFICATIONS.
2. SUPERELEVATION AS SHOWN OR AS DIRECTED BY THE ENGINEER.
3. VERTICAL PROFILE CORRECTION DUE TO CHANGE IN CROSS SLOPE AT AND NEAR THE BRIDGE IN STAGE 2, PHASE 1 FOR NB TRAFFIC OF ROUTE 99 FROM Sta 16+65.41 TO Sta 19+10.64 AND Sta 20+50.64 TO Sta 22+50.41. PCC PAVEMENT REPLACEMENT WITH JPCP AND SLOPE CORRECTION FROM Sta 16+51.60 TO Sta 19+00.64 AND Sta 20+60.64 TO Sta 23+36.41.
4. VERTICAL PROFILE CORRECTION DUE TO CHANGE IN CROSS SLOPE AT AND NEAR THE BRIDGE IN STAGE 3, PHASE 2, FOR SB TRAFFIC OF ROUTE 99 FROM Sta 17+69.76 TO Sta 19+77.61 AND Sta 21+17.65 TO Sta 23+47.72. PCC PAVEMENT REPLACEMENT WITH JPCP AND SLOPE CORRECTION FROM Sta 17+69.76 TO Sta 19+67.61 AND Sta 21+27.65 TO Sta 23+47.72.
5. FOR LIMITS OF OUTSIDE SHOULDERS REMOVAL IN STAGE 1, PHASE 1 SEE LAYOUT SHEETS AND STAGE CONSTRUCTION SHEETS.
6. FOR LOCATIONS, DIMENSIONS, AND QUANTITIES OF COLD PLANE AC PAVEMENT AND OVERLAY WITH HMA (TYPE A) SEE SUMMARY OF QUANTITIES SHEET.
7. FOR LOCATIONS AND TYPES OF HMA DIKE, STBB, AND MBGR SEE LAYOUT SHEETS AND SUMMARY OF QUANTITIES SHEET.
8. FOR LIMITS OF OLEANDER REMOVAL SEE LAYOUT SHEETS.
9. TEMPORARY LANE STRIPING IN STAGE CONSTRUCTION WILL BE REMOVED AND THERMOPLASTIC LANE STRIPING WOULD BE INSTALLED AT THE END OF STAGE 4.
10. FOR LOCATION OF TEMPORARY RAILING (TYPE K), SEE TRAFFIC PLANS.

* FOR LIMITS AND LOCATIONS SEE LAYOUT SHEETS AND SUMMARY OF QUANTITIES SHEET.

** TEMPORARY TRAFFIC LANE, AND TEMPORARY STRIPPING WILL BE REMOVED AT THE END OF STAGE 4.

LEGEND

DIRECTION OF TRAVEL

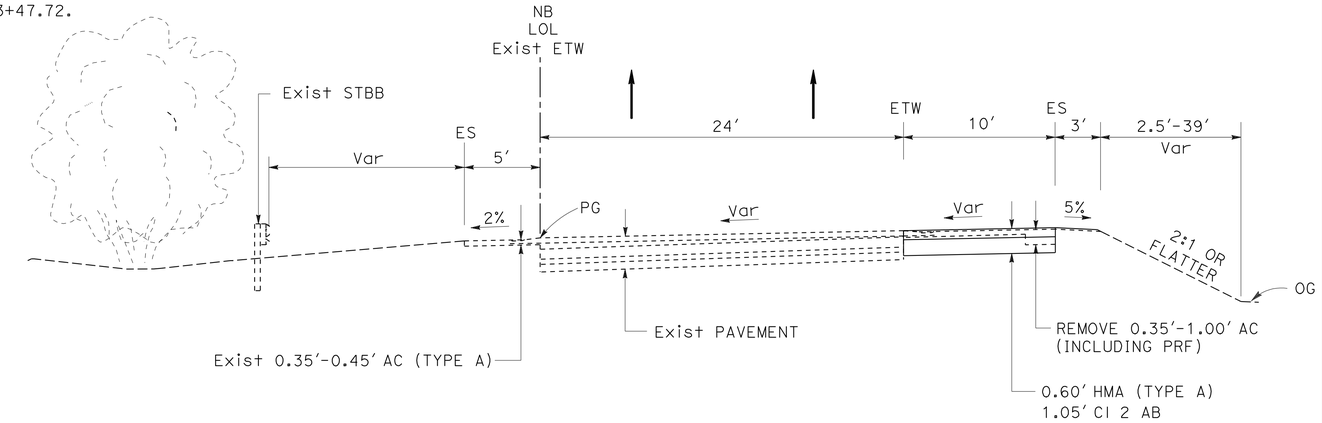

NORTHBOUND
Sta 28+21.13 TO Sta 30+39.15

ROUTE 99
STAGE 1, PHASE 1

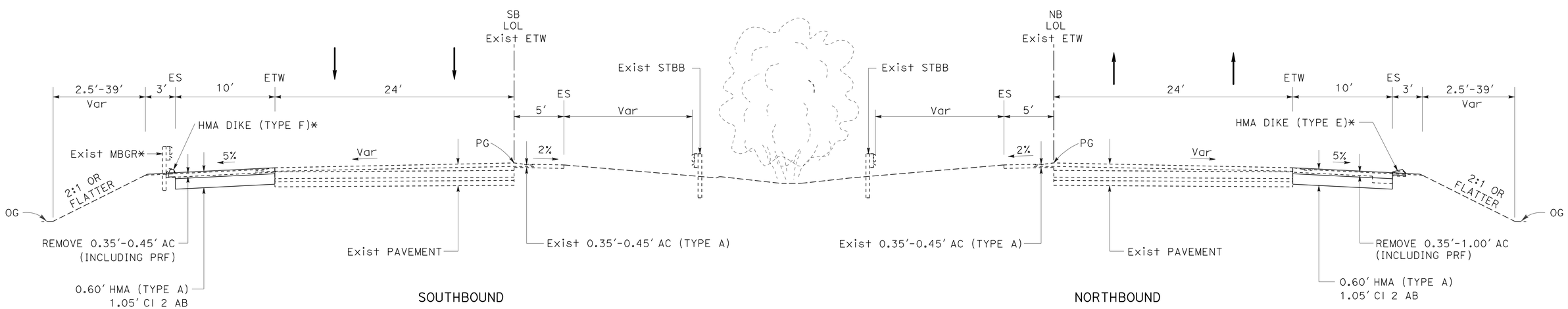

SOUTHBOUND
Sta 08+60.00 TO Sta 14+38.84
Sta 26+79.48 TO Sta 33+26.45

NORTHBOUND
Sta 10+58.94 TO Sta 13+75.46
Sta 25+97.12 TO Sta 28+21.13

ROUTE 99
STAGE 1, PHASE 1

STAGE CONSTRUCTION DETAILS (TYPICAL CROSS SECTIONS)

NO SCALE

SCD-1

STATE OF CALIFORNIA - DEPARTMENT OF TRANSPORTATION
Caltrans® DESIGN

FUNCTIONAL SUPERVISOR: ALI ALQATAMI
CALCULATED-DESIGNED BY: RANJIT K MONDAL
CHECKED BY: AHMAD K AHMAD
REVISED BY
DATE REVISED

LAST REVISION 03-11-10
DATE PLOTTED => 06-APR-2010
TIME PLOTTED => 13:57

Dist	COUNTY	ROUTE	POST MILES TOTAL PROJECT	SHEET No.	TOTAL SHEETS
06	Tul	99	2.9/3.3	38	128

A Ahmad 03-11-10
REGISTERED CIVIL ENGINEER DATE

4-5-10
PLANS APPROVAL DATE

REGISTERED PROFESSIONAL ENGINEER AHMAD K. AHMAD No. 69064 Exp. 6-30-10 CIVIL STATE OF CALIFORNIA

THE STATE OF CALIFORNIA OR ITS OFFICERS OR AGENTS SHALL NOT BE RESPONSIBLE FOR THE ACCURACY OR COMPLETENESS OF SCANNED COPIES OF THIS PLAN SHEET.

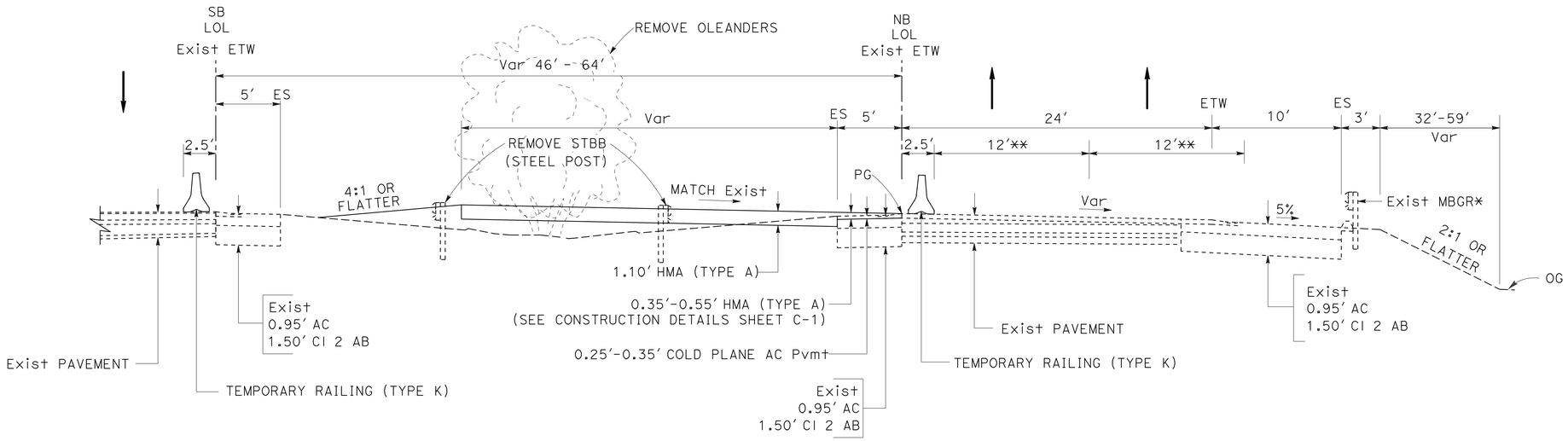

SOUTHBOUND

NORTHBOUND

Sta 13+75.46 TO Sta 16+51.60
Sta 23+36.41 TO Sta 25+97.12

ROUTE 99
STAGE 1, PHASE 2

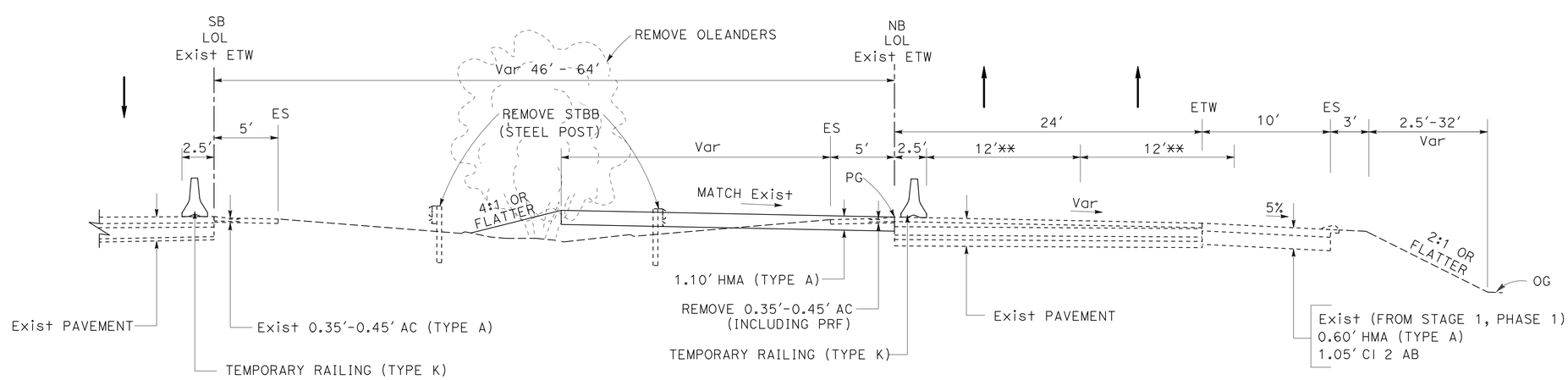

SOUTHBOUND

NORTHBOUND

Sta 10+00.00 TO Sta 13+75.46

ROUTE 99
STAGE 1, PHASE 2

STAGE CONSTRUCTION DETAILS (TYPICAL CROSS SECTIONS)

NO SCALE

SCD-2

STATE OF CALIFORNIA - DEPARTMENT OF TRANSPORTATION
Caltrans®
DESIGN

FUNCTIONAL SUPERVISOR: ALI ALQATAMI
CALCULATED-DESIGNED BY: RANJIT K MONDAL
CHECKED BY: AHMAD K AHMAD
REVISED BY
DATE REVISED

LAST REVISION 03-11-10
DATE PLOTTED => 06-APR-2010
TIME PLOTTED => 13:57

Dist	COUNTY	ROUTE	POST MILES TOTAL PROJECT	SHEET No.	TOTAL SHEETS
06	Tul	99	2.9/3.3	39	128

A Ahmad 03-11-10
REGISTERED CIVIL ENGINEER DATE

4-5-10
PLANS APPROVAL DATE

REGISTERED PROFESSIONAL ENGINEER AHMAD K. AHMAD No. 69064 Exp. 6-30-10 CIVIL STATE OF CALIFORNIA

THE STATE OF CALIFORNIA OR ITS OFFICERS OR AGENTS SHALL NOT BE RESPONSIBLE FOR THE ACCURACY OR COMPLETENESS OF SCANNED COPIES OF THIS PLAN SHEET.

* FOR LIMITS AND LOCATIONS SEE LAYOUT SHEETS, AND SUMMARY OF QUANTITIES SHEET.
** TEMPORARY TRAFFIC LANE, TEMPORARY STRIPPING WILL BE REMOVED AT THE END OF STAGE 4.

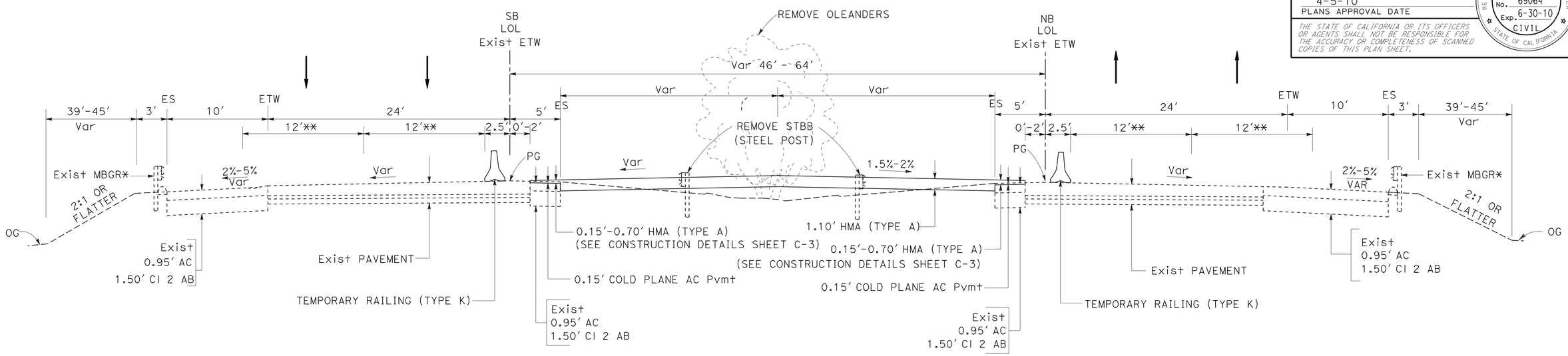

SOUTHBOUND
Sta 18+81.00 TO Sta 19+59.68
Sta 21+36.28 TO Sta 22+15.00

NORTHBOUND
Sta 18+26.44 TO Sta 18+91.93
Sta 20+68.97 TO Sta 21+43.66

ROUTE 99
STAGE 1, PHASE 2

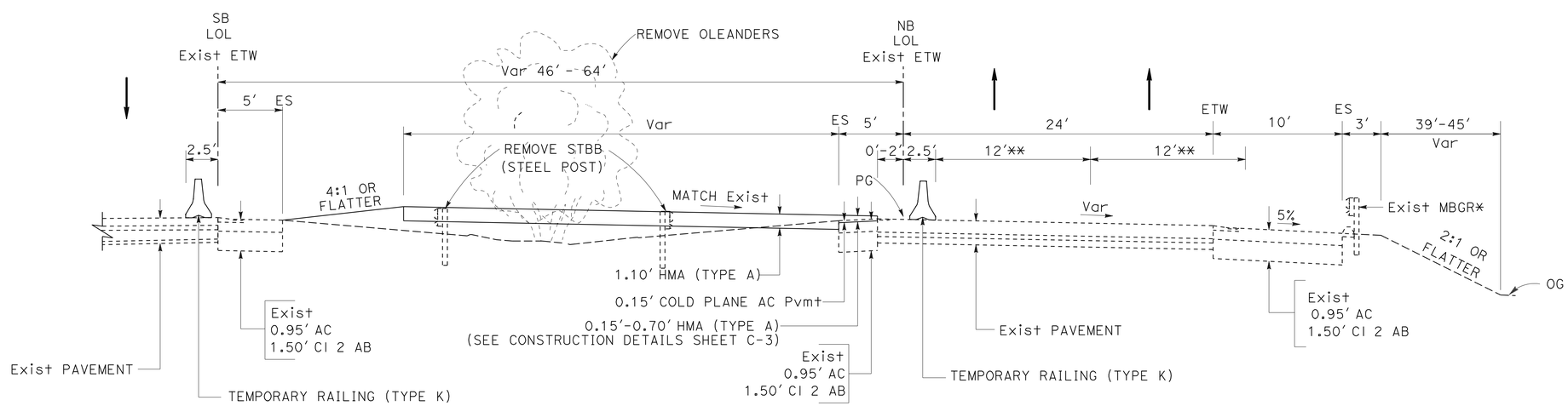

SOUTHBOUND

NORTHBOUND
Sta 16+51.60 TO Sta 18+26.44
Sta 21+43.66 TO Sta 23+36.41

ROUTE 99
STAGE 1, PHASE 2

STAGE CONSTRUCTION DETAILS (TYPICAL CROSS SECTIONS)

NO SCALE

SCD-3

STATE OF CALIFORNIA - DEPARTMENT OF TRANSPORTATION
Caltrans®
DESIGN
FUNCTIONAL SUPERVISOR: ALI ALQATAMI
CALCULATED-DESIGNED BY: AHMAD K AHMAD
CHECKED BY: RANJIT K MONDAL
REVISED BY
DATE REVISED

LAST REVISION 03-11-10
DATE PLOTTED => 06-APR-2010
TIME PLOTTED => 13:57

Dist	COUNTY	ROUTE	POST MILES TOTAL PROJECT	SHEET No.	TOTAL SHEETS
06	Tul	99	2.9/3.3	40	128

A Ahmad 03-11-10
REGISTERED CIVIL ENGINEER DATE

4-5-10
PLANS APPROVAL DATE

REGISTERED PROFESSIONAL ENGINEER AHMAD K. AHMAD No. 69064 Exp. 6-30-10 CIVIL STATE OF CALIFORNIA

THE STATE OF CALIFORNIA OR ITS OFFICERS OR AGENTS SHALL NOT BE RESPONSIBLE FOR THE ACCURACY OR COMPLETENESS OF SCANNED COPIES OF THIS PLAN SHEET.

* FOR LIMITS AND LOCATIONS SEE LAYOUT SHEETS, AND SUMMARY OF QUANTITIES SHEET.
** TEMPORARY TRAFFIC LANE, TEMPORARY STRIPPING WILL BE REMOVED AT THE END OF STAGE 4.

NOTE: BRIDGE APPROACH SLAB LOCATIONS-
SB ROUTE 99: Sta 19+67.61 TO Sta 19+77.61
Sta 21+17.65 TO Sta 21+27.65
NB ROUTE 99: Sta 19+00.64 TO Sta 19+10.64
Sta 20+50.64 TO Sta 20+60.64

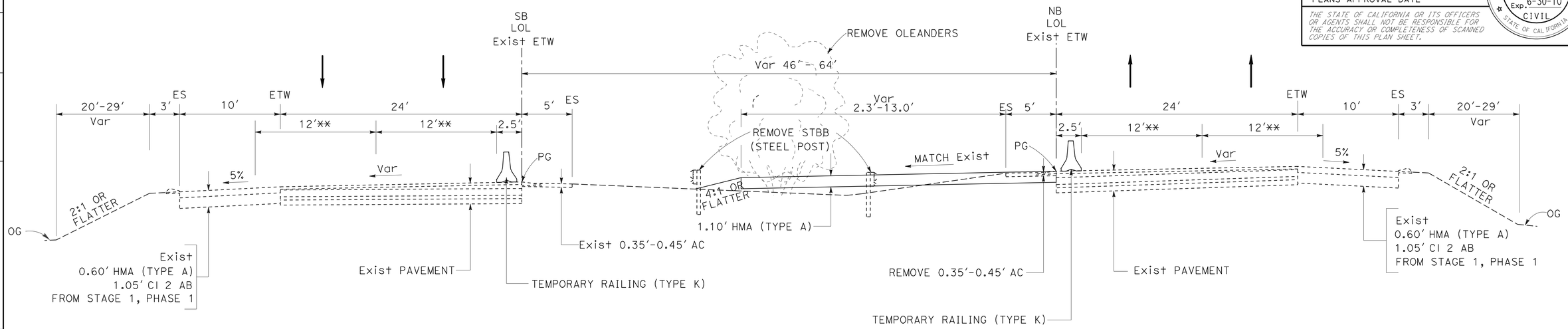

SOUTHBOUND
Sta 26+79.48 TO Sta 31+86.45

NORTHBOUND
Sta 25+97.12 TO Sta 28+21.13

ROUTE 99
STAGE 1, PHASE 2

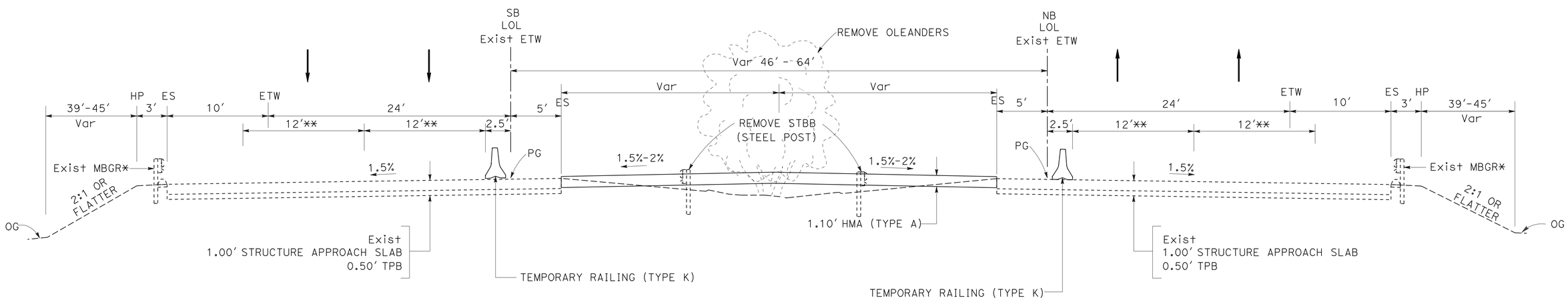

SOUTHBOUND
Sta 19+59.68 TO Sta 19+67.61
Sta 21+27.65 TO Sta 21+36.28

NORTHBOUND
Sta 18+91.93 TO Sta 19+00.64
Sta 20+60.64 TO Sta 20+68.97

ROUTE 99
STAGE 1, PHASE 2

STAGE CONSTRUCTION DETAILS (TYPICAL CROSS SECTIONS)

NO SCALE

SCD-4

STATE OF CALIFORNIA - DEPARTMENT OF TRANSPORTATION
Caltrans® DESIGN
FUNCTIONAL SUPERVISOR: ALI ALQATAMI
CALCULATED-DESIGNED BY: RANJIT K MONDAL
CHECKED BY: AHMAD K AHMAD
REVISED BY / DATE REVISED

LAST REVISION 03-11-10
DATE PLOTTED => 06-APR-2010
TIME PLOTTED => 13:57

Dist	COUNTY	ROUTE	POST MILES TOTAL PROJECT	SHEET No.	TOTAL SHEETS
06	Tul	99	2.9/3.3	41	128

A Ahmad 03-11-10
REGISTERED CIVIL ENGINEER DATE

4-5-10
PLANS APPROVAL DATE

REGISTERED PROFESSIONAL ENGINEER AHMAD K. AHMAD No. 69064 Exp. 6-30-10 CIVIL STATE OF CALIFORNIA

THE STATE OF CALIFORNIA OR ITS OFFICERS OR AGENTS SHALL NOT BE RESPONSIBLE FOR THE ACCURACY OR COMPLETENESS OF SCANNED COPIES OF THIS PLAN SHEET.

* FOR LIMITS AND LOCATIONS SEE LAYOUT SHEETS, AND SUMMARY OF QUANTITIES SHEET.
** TEMPORARY TRAFFIC LANE, TEMPORARY STRIPPING WILL BE REMOVED AT THE END OF STAGE 4.

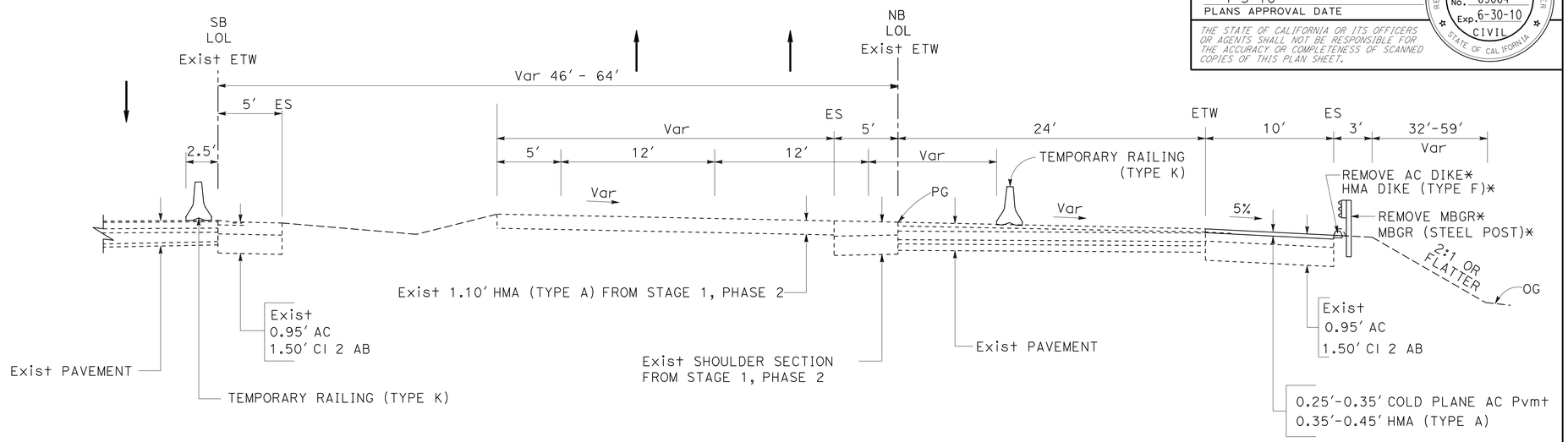

SOUTHBOUND

NORTHBOUND

Sta 13+75.46 TO Sta 16+51.60
Sta 23+36.41 TO Sta 25+97.12

ROUTE 99
STAGE 2, PHASE 1

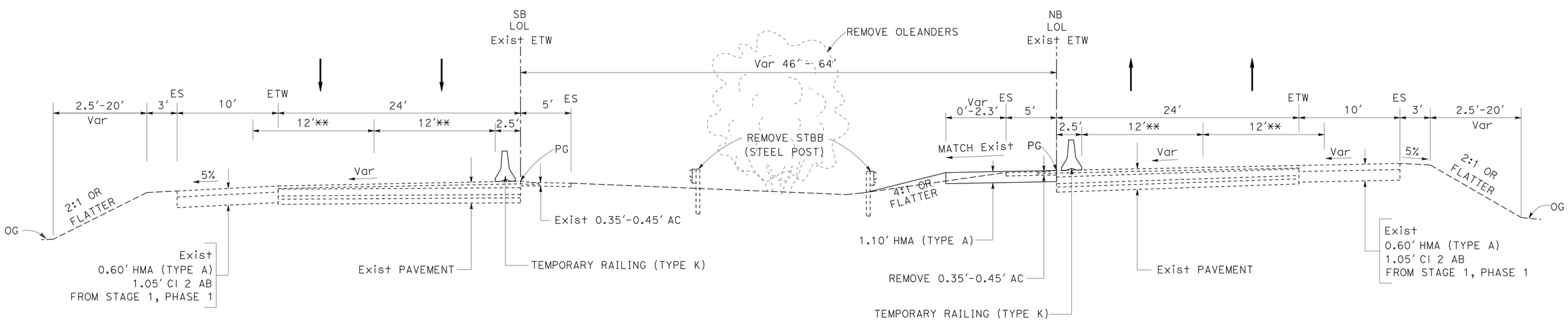

SOUTHBOUND
Sta 31+86.45 TO Sta 33+26.45

NORTHBOUND
Sta 28+21.13 TO Sta 32+29.24

ROUTE 99
STAGE 1, PHASE 2

STAGE CONSTRUCTION DETAILS (TYPICAL CROSS SECTIONS)

NO SCALE

SCD-5

STATE OF CALIFORNIA - DEPARTMENT OF TRANSPORTATION
Caltrans® DESIGN
FUNCTIONAL SUPERVISOR: ALI ALQATAMI
CALCULATED-DESIGNED BY: RANJIT K MONDAL
CHECKED BY: AHMAD K AHMAD
REVISED BY
DATE REVISED

LAST REVISION 03-11-10 | DATE PLOTTED => 06-APR-2010 | TIME PLOTTED => 13:57

Dist	COUNTY	ROUTE	POST MILES TOTAL PROJECT	SHEET No.	TOTAL SHEETS
06	Tul	99	2.9/3.3	42	128

REGISTERED CIVIL ENGINEER 03-11-10 DATE

4-5-10
PLANS APPROVAL DATE

REGISTERED PROFESSIONAL ENGINEER AHMAD K. AHMAD No. 69064 Exp. 6-30-10 CIVIL STATE OF CALIFORNIA

THE STATE OF CALIFORNIA OR ITS OFFICERS OR AGENTS SHALL NOT BE RESPONSIBLE FOR THE ACCURACY OR COMPLETENESS OF SCANNED COPIES OF THIS PLAN SHEET.

* FOR LIMITS AND LOCATIONS SEE LAYOUT SHEETS, AND SUMMARY OF QUANTITIES SHEET.
** TEMPORARY TRAFFIC LANE, TEMPORARY STRIPPING WILL BE REMOVED AT THE END OF STAGE 4.

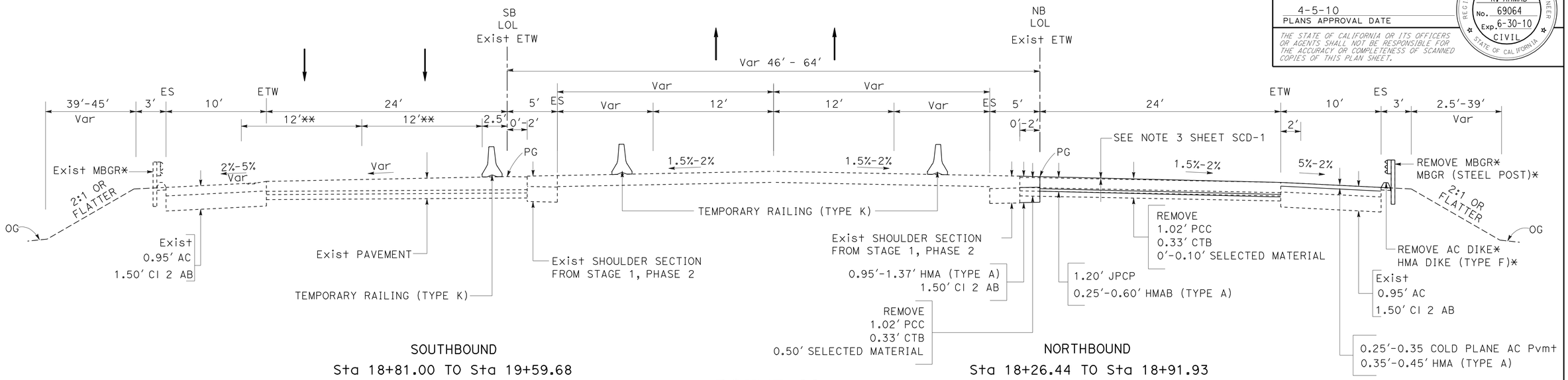

SOUTHBOUND

Sta 18+81.00 TO Sta 19+59.68
Sta 21+36.28 TO Sta 22+15.00

NORTHBOUND

Sta 18+26.44 TO Sta 18+91.93
Sta 20+68.97 TO Sta 21+43.66

ROUTE 99
STAGE 2, PHASE 1

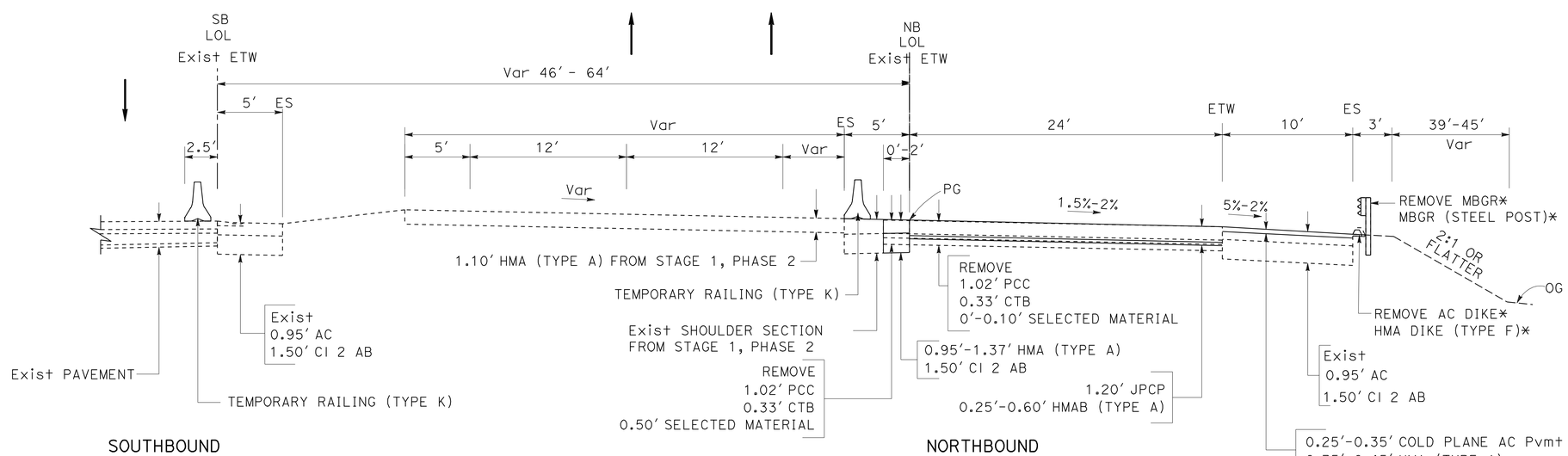

SOUTHBOUND

NORTHBOUND

Sta 16+51.60 TO Sta 18+26.44
Sta 21+43.66 TO Sta 23+36.41

ROUTE 99
STAGE 2, PHASE 1

STAGE CONSTRUCTION DETAILS (TYPICAL CROSS SECTIONS)

NO SCALE

SCD-6

STATE OF CALIFORNIA - DEPARTMENT OF TRANSPORTATION
Caltrans®
DESIGN

FUNCTIONAL SUPERVISOR: ALI ALQATAMI
CALCULATED-DESIGNED BY: AHMAD K AHMAD
CHECKED BY
REVISED BY: RANJIT K MONDAL
DATE REVISED

LAST REVISION 03-11-10
DATE PLOTTED => 06-APR-2010
TIME PLOTTED => 13:54

Dist	COUNTY	ROUTE	POST MILES TOTAL PROJECT	SHEET No.	TOTAL SHEETS
06	Tul	99	2.9/3.3	43	128

REGISTERED CIVIL ENGINEER 03-11-10 DATE

4-5-10
PLANS APPROVAL DATE

REGISTERED PROFESSIONAL ENGINEER AHMAD K. AHMAD No. 69064 Exp. 6-30-10 CIVIL STATE OF CALIFORNIA

THE STATE OF CALIFORNIA OR ITS OFFICERS OR AGENTS SHALL NOT BE RESPONSIBLE FOR THE ACCURACY OR COMPLETENESS OF SCANNED COPIES OF THIS PLAN SHEET.

* FOR LIMITS AND LOCATIONS SEE LAYOUT SHEETS, AND SUMMARY OF QUANTITIES SHEET.
** TEMPORARY TRAFFIC LANE, TEMPORARY STRIPPING WILL BE REMOVED AT THE END OF STAGE 4.

NOTE: BRIDGE APPROACH SLAB LOCATIONS-
SB ROUTE 99: Sta 19+67.61 TO Sta 19+77.61
Sta 21+17.65 TO Sta 21+27.65
NB ROUTE 99: Sta 19+00.64 TO Sta 19+10.64
Sta 20+50.64 TO Sta 20+60.64

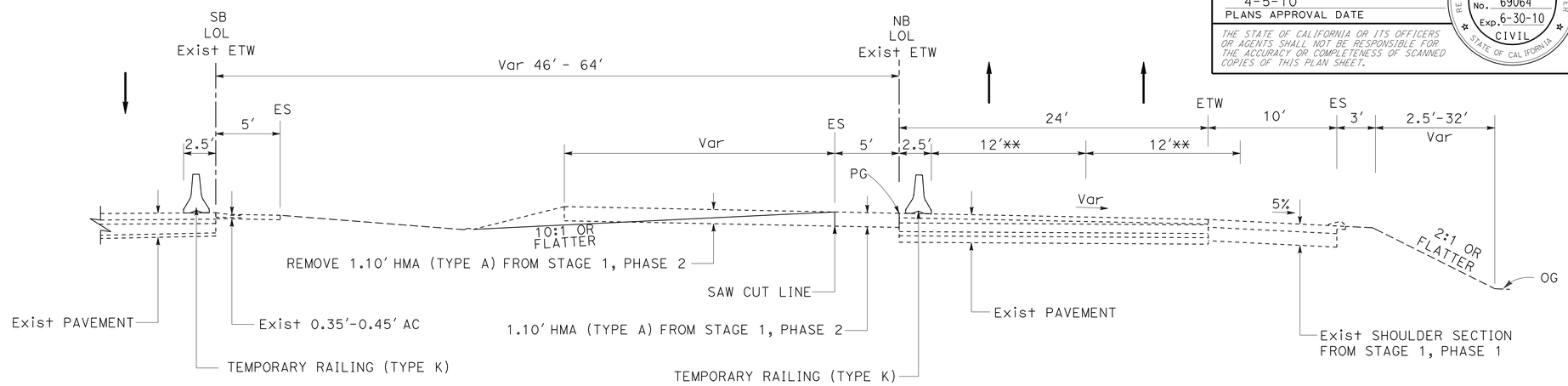

SOUTHBOUND

NORTHBOUND
Sta 11+29.13 TO Sta 13+75.46

ROUTE 99
STAGE 2, PHASE 2

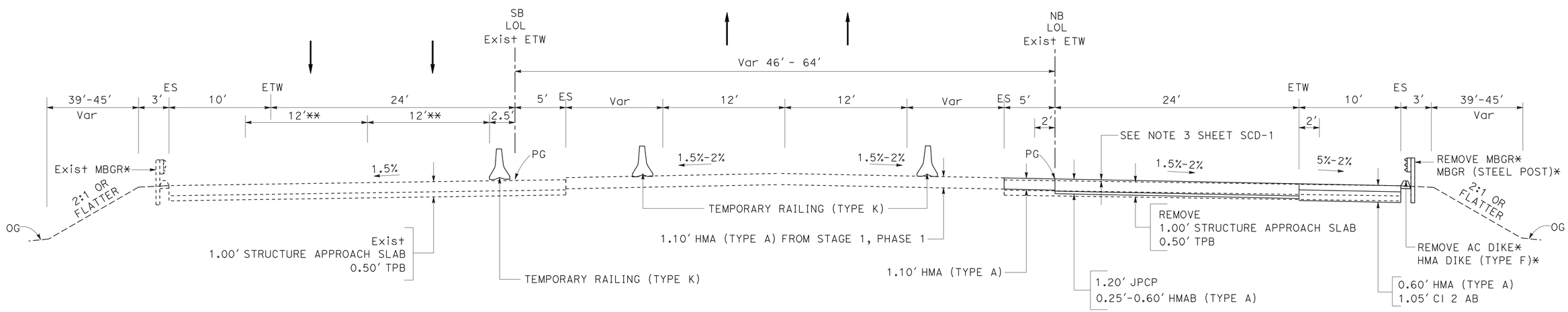

SOUTHBOUND
Sta 19+59.68 TO Sta 19+67.61
Sta 21+27.65 TO Sta 21+36.28

NORTHBOUND
Sta 18+91.93 TO Sta 19+00.64
Sta 20+60.64 TO Sta 20+68.97

ROUTE 99
STAGE 2, PHASE 1

STAGE CONSTRUCTION DETAILS (TYPICAL CROSS SECTIONS)

NO SCALE

SCD-7

REVISED BY | DATE REVISED
RANJIT K MONDAL | AHMAD K AHMAD
CALCULATED-DESIGNED BY | CHECKED BY
FUNCTIONAL SUPERVISOR: ALI ALQATAMI
STATE OF CALIFORNIA - DEPARTMENT OF TRANSPORTATION
Caltrans® DESIGN

LAST REVISION 03-11-10 | DATE PLOTTED => 06-APR-2010 | TIME PLOTTED => 13:54

Dist	COUNTY	ROUTE	POST MILES TOTAL PROJECT	SHEET No.	TOTAL SHEETS
06	Tul	99	2.9/3.3	44	128

A Ahmad 03-11-10
REGISTERED CIVIL ENGINEER DATE

4-5-10
PLANS APPROVAL DATE

REGISTERED PROFESSIONAL ENGINEER AHMAD K. AHMAD No. 69064 Exp. 6-30-10 CIVIL STATE OF CALIFORNIA

THE STATE OF CALIFORNIA OR ITS OFFICERS OR AGENTS SHALL NOT BE RESPONSIBLE FOR THE ACCURACY OR COMPLETENESS OF SCANNED COPIES OF THIS PLAN SHEET.

* FOR LIMITS AND LOCATIONS SEE LAYOUT SHEETS, AND SUMMARY OF QUANTITIES SHEET.
** TEMPORARY TRAFFIC LANE, TEMPORARY STRIPPING WILL BE REMOVED AT THE END OF STAGE 4.

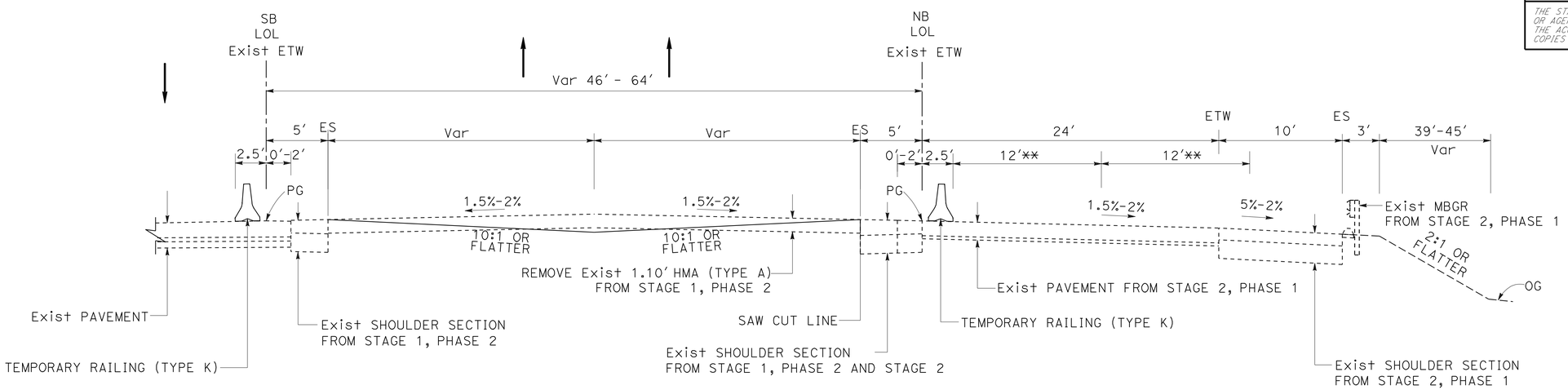

SOUTHBOUND

NORTHBOUND

Sta 18+26.44 TO Sta 18+91.93
Sta 20+68.97 TO Sta 21+43.66

ROUTE 99
STAGE 2, PHASE 2

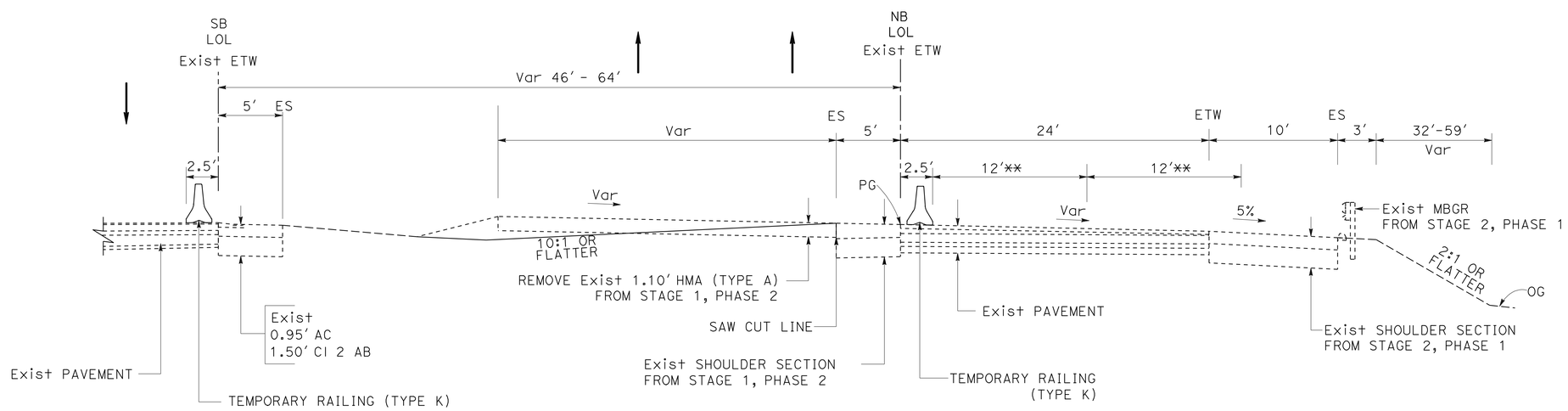

SOUTHBOUND

NORTHBOUND

Sta 13+75.46 TO Sta 18+26.44
Sta 21+43.66 TO Sta 25+97.12

ROUTE 99
STAGE 2, PHASE 2

STAGE CONSTRUCTION DETAILS (TYPICAL CROSS SECTIONS)

NO SCALE

SCD-8

STATE OF CALIFORNIA - DEPARTMENT OF TRANSPORTATION
Caltrans®
DESIGN
FUNCTIONAL SUPERVISOR: ALI ALQATAMI
CALCULATED-DESIGNED BY: AHMAD K AHMAD
CHECKED BY
REVISED BY: RANJIT K MONDAL
DATE REVISED

LAST REVISION 03-11-10 | DATE PLOTTED => 06-APR-2010 | TIME PLOTTED => 13:54

Dist	COUNTY	ROUTE	POST MILES TOTAL PROJECT	SHEET No.	TOTAL SHEETS
06	Tul	99	2.9/3.3	45	128

A Ahmad 03-11-10
REGISTERED CIVIL ENGINEER DATE

4-5-10
PLANS APPROVAL DATE

REGISTERED PROFESSIONAL ENGINEER AHMAD K. AHMAD No. 69064 Exp. 6-30-10 CIVIL STATE OF CALIFORNIA

THE STATE OF CALIFORNIA OR ITS OFFICERS OR AGENTS SHALL NOT BE RESPONSIBLE FOR THE ACCURACY OR COMPLETENESS OF SCANNED COPIES OF THIS PLAN SHEET.

* FOR LIMITS AND LOCATIONS SEE LAYOUT SHEETS, AND SUMMARY OF QUANTITIES SHEET.
** TEMPORARY TRAFFIC LANE, TEMPORARY STRIPPING WILL BE REMOVED AT THE END OF STAGE 4.

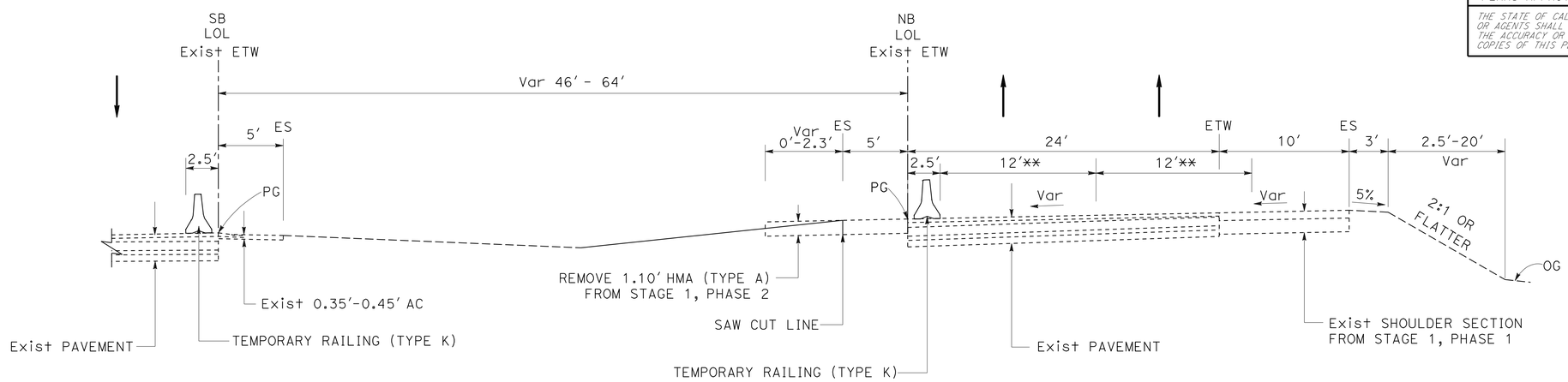

SOUTHBOUND
Sta 31+86.45 TO Sta 33+61.45

NORTHBOUND
Sta 28+21.13 TO Sta 32+29.24

ROUTE 99
STAGE 2, PHASE 2

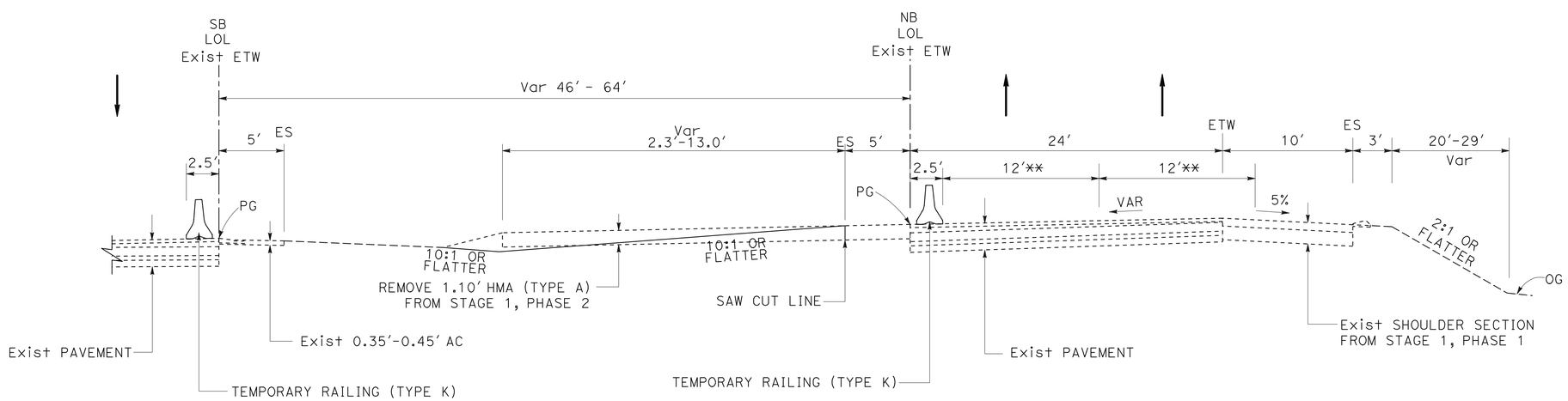

SOUTHBOUND
Sta 26+79.48 TO Sta 31+86.45

NORTHBOUND
Sta 25+97.12 TO Sta 28+21.13

ROUTE 99
STAGE 2, PHASE 2

STAGE CONSTRUCTION DETAILS (TYPICAL CROSS SECTIONS)

SCD-9

REVISED BY | DATE REVISED
RANJIT K MONDAL | AHMAD K AHMAD
CALCULATED-DESIGNED BY | CHECKED BY
FUNCTIONAL SUPERVISOR: ALI ALQATAMI

STATE OF CALIFORNIA - DEPARTMENT OF TRANSPORTATION
Caltrans®
DESIGN

LAST REVISION 03-11-10 | DATE PLOTTED => 06-APR-2010 | TIME PLOTTED => 13:54

Dist	COUNTY	ROUTE	POST MILES TOTAL PROJECT	SHEET No.	TOTAL SHEETS
06	Tul	99	2.9/3.3	46	128

A Ahmad 03-11-10
REGISTERED CIVIL ENGINEER DATE

4-5-10
PLANS APPROVAL DATE

REGISTERED PROFESSIONAL ENGINEER AHMAD K. AHMAD No. 69064 Exp. 6-30-10 CIVIL STATE OF CALIFORNIA

THE STATE OF CALIFORNIA OR ITS OFFICERS OR AGENTS SHALL NOT BE RESPONSIBLE FOR THE ACCURACY OR COMPLETENESS OF SCANNED COPIES OF THIS PLAN SHEET.

* FOR LIMITS AND LOCATIONS SEE LAYOUT SHEETS, AND SUMMARY OF QUANTITIES SHEET.
** TEMPORARY TRAFFIC LANE, TEMPORARY STRIPPING WILL BE REMOVED AT THE END OF STAGE 4.

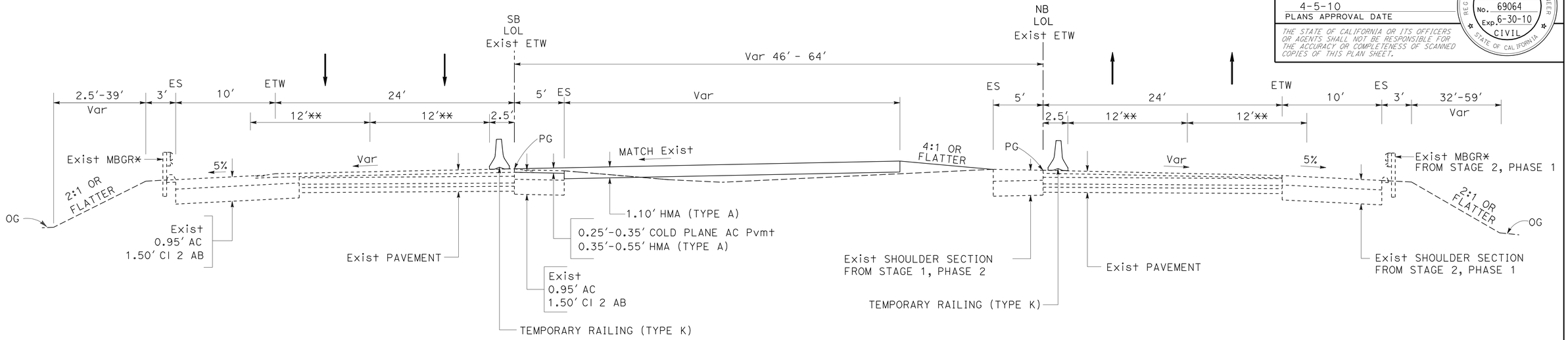

SOUTHBOUND

Sta 14+38.84 TO Sta 17+69.76
Sta 23+47.72 TO Sta 26+79.48

NORTHBOUND

Sta 13+75.46 TO Sta 16+51.60
Sta 23+36.41 TO Sta 25+97.12

ROUTE 99
STAGE 3, PHASE 1

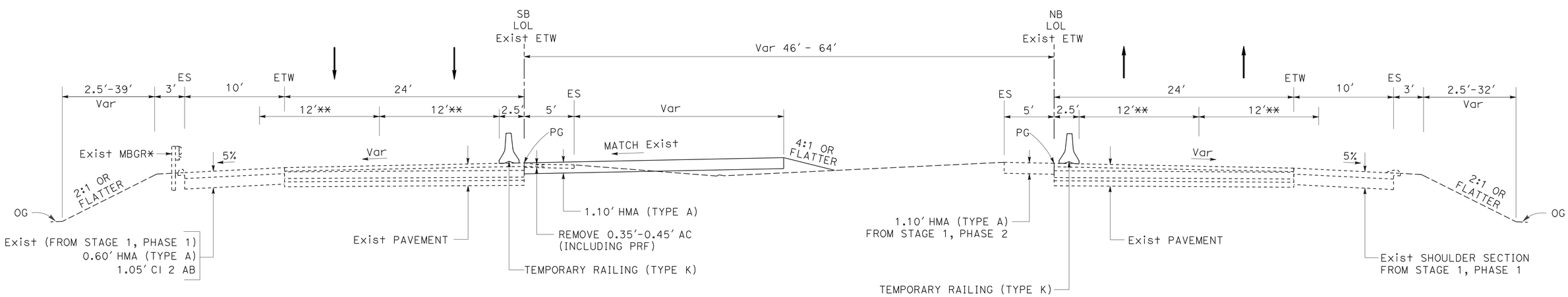

SOUTHBOUND

Sta 10+00.00 TO Sta 14+38.84
Sta 26+79.48 TO Sta 31+86.45

NORTHBOUND

Sta 10+00 TO Sta 13+75.46
Sta 25+97.12 TO Sta 28+21.13

ROUTE 99
STAGE 3, PHASE 1

STAGE CONSTRUCTION DETAILS (TYPICAL CROSS SECTIONS)

NO SCALE

SCD-10

REVISED BY | DATE REVISED
RANJIT K MONDAL | AHMAD K AHMAD
CALCULATED-DESIGNED BY | CHECKED BY
FUNCTIONAL SUPERVISOR
ALI ALQATAMI

STATE OF CALIFORNIA - DEPARTMENT OF TRANSPORTATION
Caltrans
DESIGN

LAST REVISION 03-11-10 | DATE PLOTTED => 06-APR-2010 | TIME PLOTTED => 13:54

Dist	COUNTY	ROUTE	POST MILES TOTAL PROJECT	SHEET No.	TOTAL SHEETS
06	Tul	99	2.9/3.3	47	128

A Ahmad 03-11-10
REGISTERED CIVIL ENGINEER DATE

4-5-10
PLANS APPROVAL DATE

REGISTERED PROFESSIONAL ENGINEER AHMAD K. AHMAD No. 69064 Exp. 6-30-10 CIVIL STATE OF CALIFORNIA

THE STATE OF CALIFORNIA OR ITS OFFICERS OR AGENTS SHALL NOT BE RESPONSIBLE FOR THE ACCURACY OR COMPLETENESS OF SCANNED COPIES OF THIS PLAN SHEET.

* FOR LIMITS AND LOCATIONS SEE LAYOUT SHEETS, AND SUMMARY OF QUANTITIES SHEET.
** TEMPORARY TRAFFIC LANE, TEMPORARY STRIPPING WILL BE REMOVED AT THE END OF STAGE 4.

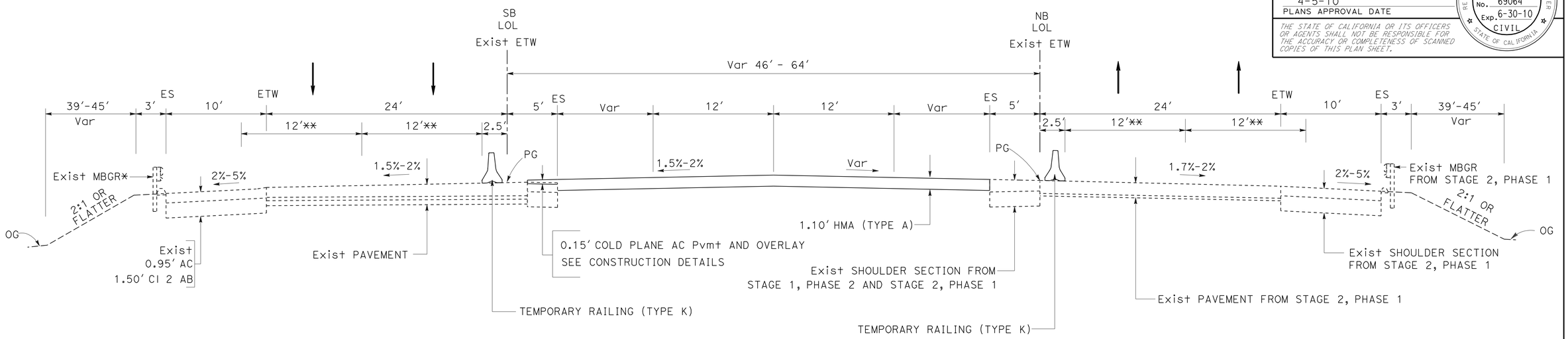

SOUTHBOUND
Sta 18+81.00 TO Sta 19+59.68
Sta 21+36.28 TO Sta 22+15.00

NORTHBOUND
Sta 18+26.44 TO Sta 18+91.93
Sta 20+68.97 TO Sta 21+43.66

ROUTE 99
STAGE 3, PHASE 1

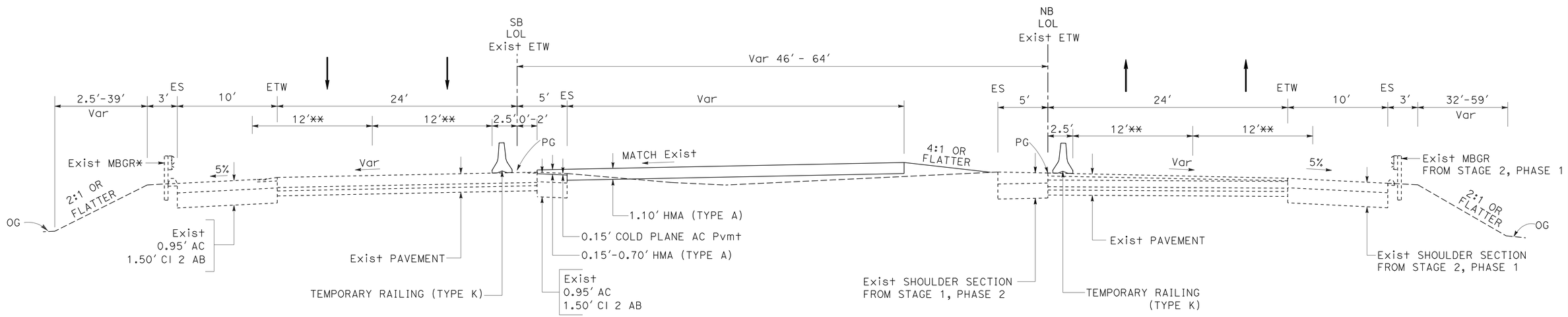

SOUTHBOUND
Sta 17+69.76 TO Sta 18+81.00
Sta 22+15.00 TO Sta 23+47.72

NORTHBOUND
Sta 16+51.60 TO Sta 18+26.44
Sta 21+43.66 TO Sta 23+36.41

ROUTE 99
STAGE 3, PHASE 1

STAGE CONSTRUCTION DETAILS (TYPICAL CROSS SECTIONS)

NO SCALE

SCD-11

STATE OF CALIFORNIA - DEPARTMENT OF TRANSPORTATION
Caltrans®
DESIGN
FUNCTIONAL SUPERVISOR: ALI ALQATAMI
CALCULATED-DESIGNED BY: RANJIT K MONDAL
CHECKED BY: AHMAD K AHMAD
REVISED BY
DATE REVISED

LAST REVISION 03-11-10
DATE PLOTTED => 06-APR-2010
TIME PLOTTED => 14:19

Dist	COUNTY	ROUTE	POST MILES TOTAL PROJECT	SHEET No.	TOTAL SHEETS
06	Tul	99	2.9/3.3	48	128

A Ahmad 03-11-10
REGISTERED CIVIL ENGINEER DATE

4-5-10
PLANS APPROVAL DATE

REGISTERED PROFESSIONAL ENGINEER AHMAD K. AHMAD No. 69064 Exp. 6-30-10 CIVIL STATE OF CALIFORNIA

THE STATE OF CALIFORNIA OR ITS OFFICERS OR AGENTS SHALL NOT BE RESPONSIBLE FOR THE ACCURACY OR COMPLETENESS OF SCANNED COPIES OF THIS PLAN SHEET.

* FOR LIMITS AND LOCATIONS SEE LAYOUT SHEETS, AND SUMMARY OF QUANTITIES SHEET.
** TEMPORARY TRAFFIC LANE, TEMPORARY STRIPPING WILL BE REMOVED AT THE END OF STAGE 4.

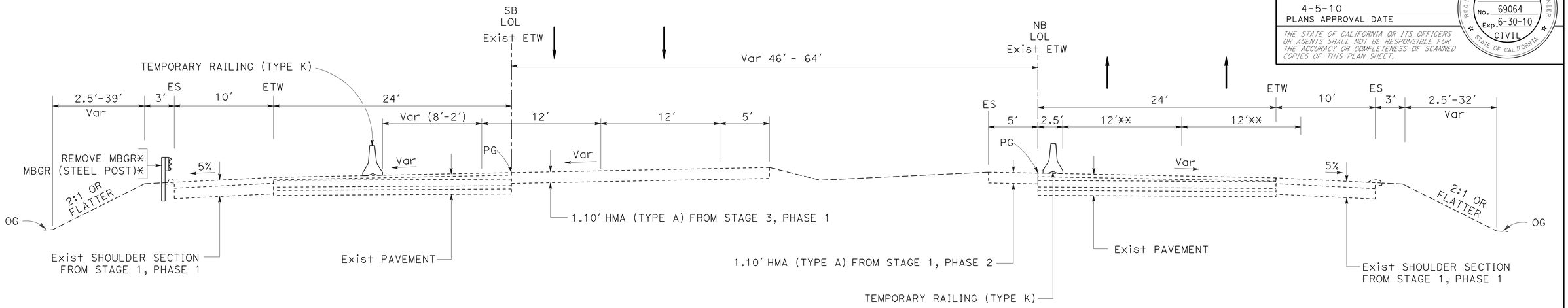

SOUTHBOUND

Sta 10+00.00 TO Sta 14+38.84
Sta 26+79.48 TO Sta 31+86.45

NORTHBOUND

Sta 10+00 TO Sta 13+75.46
Sta 25+97.12 TO Sta 28+21.13

ROUTE 99
STAGE 3, PHASE 2

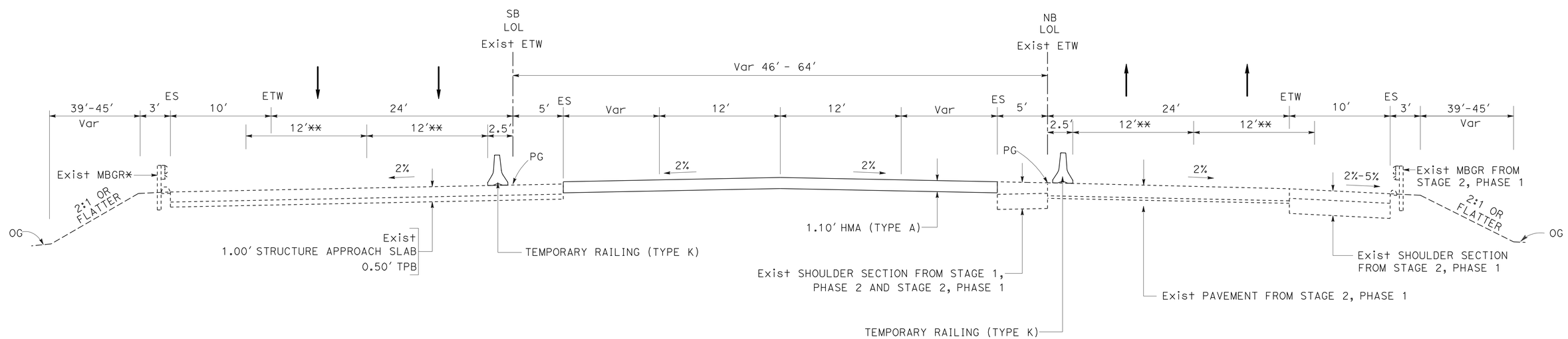

SOUTHBOUND

Sta 19+59.68 TO Sta 19+67.61
Sta 21+27.65 TO Sta 21+36.28

NORTHBOUND

Sta 18+91.93 TO Sta 19+00.64
Sta 20+60.64 TO Sta 20+68.97

ROUTE 99
STAGE 3, PHASE 1

STAGE CONSTRUCTION DETAILS (TYPICAL CROSS SECTIONS)

NO SCALE

SCD-12

STATE OF CALIFORNIA - DEPARTMENT OF TRANSPORTATION
Caltrans® DESIGN

FUNCTIONAL SUPERVISOR: ALI ALQATAMI
CALCULATED-DESIGNED BY: RANJIT K MONDAL
CHECKED BY: AHMAD K AHMAD
REVISED BY / DATE REVISED

LAST REVISION 03-11-10 | DATE PLOTTED => 06-APR-2010 | TIME PLOTTED => 14:04

Dist	COUNTY	ROUTE	POST MILES TOTAL PROJECT	SHEET No.	TOTAL SHEETS
06	Tul	99	2.9/3.3	49	128

A Ahmad 03-11-10
REGISTERED CIVIL ENGINEER DATE

4-5-10
PLANS APPROVAL DATE

REGISTERED PROFESSIONAL ENGINEER AHMAD K. AHMAD No. 69064 Exp. 6-30-10 CIVIL STATE OF CALIFORNIA

THE STATE OF CALIFORNIA OR ITS OFFICERS OR AGENTS SHALL NOT BE RESPONSIBLE FOR THE ACCURACY OR COMPLETENESS OF SCANNED COPIES OF THIS PLAN SHEET.

* FOR LIMITS AND LOCATIONS SEE LAYOUT SHEETS, AND SUMMARY OF QUANTITIES SHEET.
** TEMPORARY TRAFFIC LANE, TEMPORARY STRIPPING WILL BE REMOVED AT THE END OF STAGE 4.

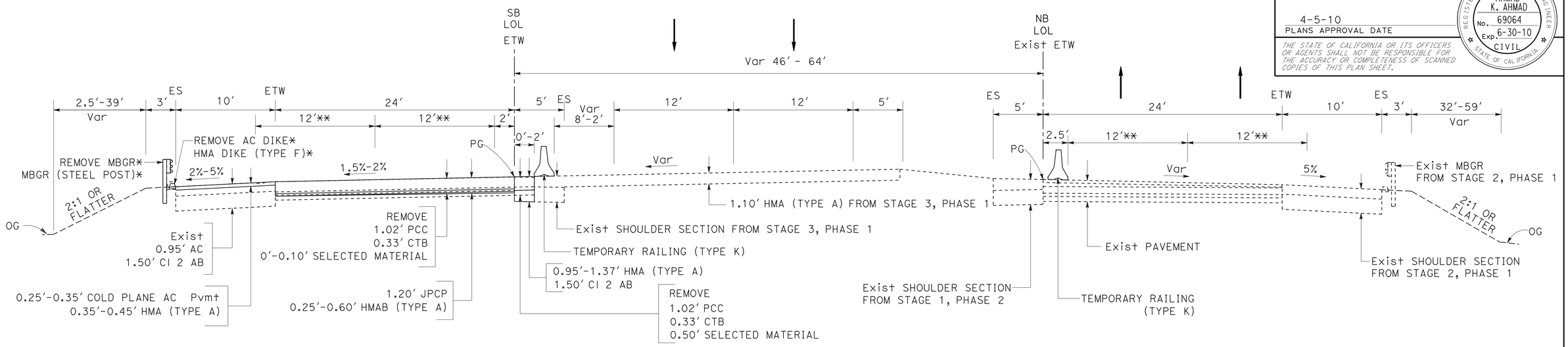

SOUTHBOUND
Sta 17+69.76 TO Sta 18+81.00
Sta 22+15.00 TO Sta 23+47.72

NORTHBOUND
Sta 16+51.60 TO Sta 18+26.44
Sta 21+43.66 TO Sta 23+36.41

ROUTE 99
STAGE 3, PHASE 2

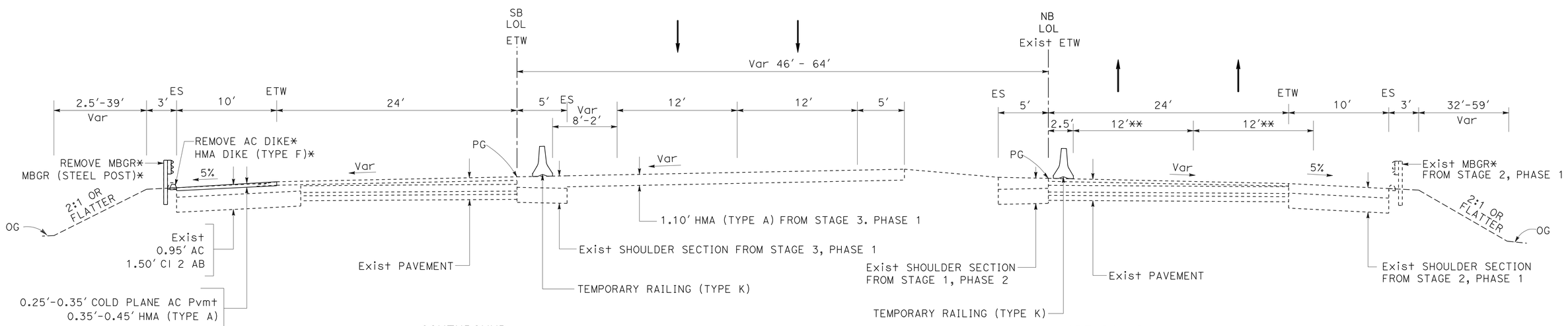

SOUTHBOUND
Sta 14+38.84 TO Sta 17+69.76
Sta 23+47.72 TO Sta 26+79.48

NORTHBOUND
Sta 13+75.46 TO Sta 16+51.60
Sta 23+36.41 TO Sta 25+97.12

ROUTE 99
STAGE 3, PHASE 2

STAGE CONSTRUCTION DETAILS (TYPICAL CROSS SECTIONS)

NO SCALE

SCD-13

STATE OF CALIFORNIA - DEPARTMENT OF TRANSPORTATION
Caltrans
DESIGN
FUNCTIONAL SUPERVISOR: ALI ALQATAMI
CALCULATED-DESIGNED BY: RANJIT K MONDAL
CHECKED BY: AHMAD K AHMAD
REVISED BY
DATE REVISED

LAST REVISION 03-11-10 | DATE PLOTTED => 06-APR-2010 | TIME PLOTTED => 14:05

Dist	COUNTY	ROUTE	POST MILES TOTAL PROJECT	SHEET No.	TOTAL SHEETS
06	Tul	99	2.9/3.3	50	128

A Ahmad 03-11-10
REGISTERED CIVIL ENGINEER DATE

4-5-10
PLANS APPROVAL DATE

REGISTERED PROFESSIONAL ENGINEER AHMAD K. AHMAD No. 69064 Exp. 6-30-10 CIVIL STATE OF CALIFORNIA

THE STATE OF CALIFORNIA OR ITS OFFICERS OR AGENTS SHALL NOT BE RESPONSIBLE FOR THE ACCURACY OR COMPLETENESS OF SCANNED COPIES OF THIS PLAN SHEET.

* FOR LIMITS AND LOCATIONS SEE LAYOUT SHEETS, AND SUMMARY OF QUANTITIES SHEET.
** TEMPORARY TRAFFIC LANE, TEMPORARY STRIPPING WILL BE REMOVED AT THE END OF STAGE 4.

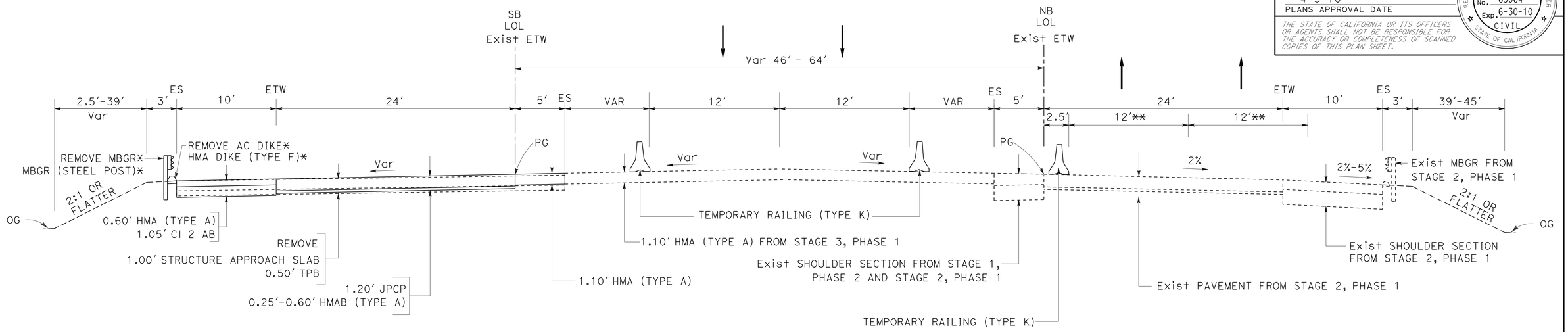

SOUTHBOUND
Sta 19+59.68 TO Sta 19+67.61
Sta 21+27.65 TO Sta 21+36.28

NORTHBOUND
Sta 18+91.93 TO Sta 19+00.64
Sta 20+60.64 TO Sta 20+68.97

ROUTE 99
STAGE 3, PHASE 2

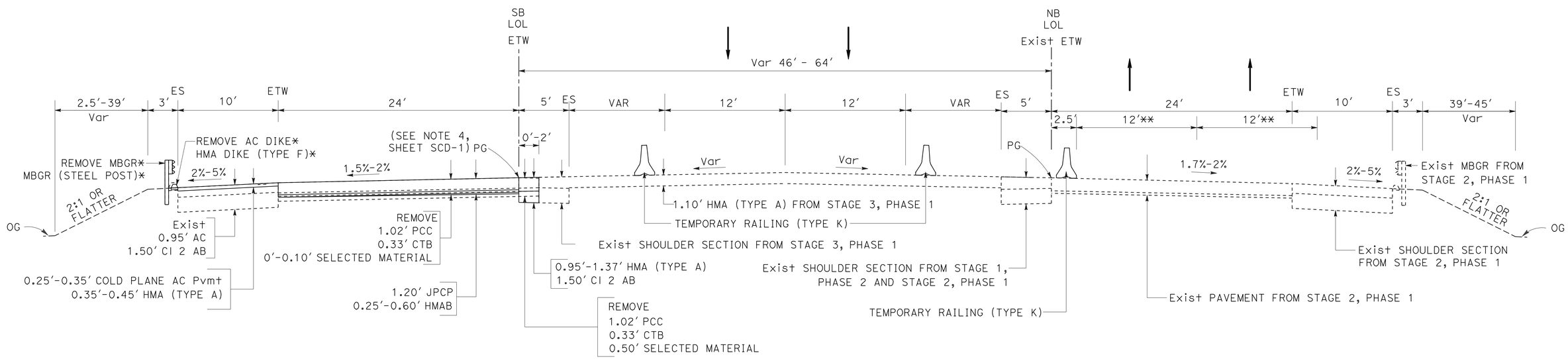

SOUTHBOUND
Sta 18+81.00 TO Sta 19+59.68
Sta 21+36.28 TO Sta 22+15.00

NORTHBOUND
Sta 18+26.44 TO Sta 18+91.93
Sta 20+68.97 TO Sta 21+43.66

ROUTE 99
STAGE 3, PHASE 2

STAGE CONSTRUCTION DETAILS (TYPICAL CROSS SECTIONS)

NO SCALE

SCD-14

STATE OF CALIFORNIA - DEPARTMENT OF TRANSPORTATION
Caltrans® DESIGN
FUNCTIONAL SUPERVISOR: ALI ALQATAMI
CALCULATED-DESIGNED BY: RANJIT K MONDAL
CHECKED BY: AHMAD K AHMAD
REVISED BY
DATE REVISED

LAST REVISION 03-11-10
DATE PLOTTED => 06-APR-2010
TIME PLOTTED => 14:05

Dist	COUNTY	ROUTE	POST MILES TOTAL PROJECT	SHEET No.	TOTAL SHEETS
06	Tul	99	2.9/3.3	51	128

A Ahmad 03-11-10
REGISTERED CIVIL ENGINEER DATE

4-5-10
PLANS APPROVAL DATE

REGISTERED PROFESSIONAL ENGINEER AHMAD K. AHMAD No. 69064 Exp. 6-30-10 CIVIL STATE OF CALIFORNIA

THE STATE OF CALIFORNIA OR ITS OFFICERS OR AGENTS SHALL NOT BE RESPONSIBLE FOR THE ACCURACY OR COMPLETENESS OF SCANNED COPIES OF THIS PLAN SHEET.

* FOR LIMITS AND LOCATIONS SEE LAYOUT SHEETS, AND SUMMARY OF QUANTITIES SHEET.
** TEMPORARY TRAFFIC LANE, TEMPORARY STRIPPING WILL BE REMOVED AT THE END OF STAGE 4.

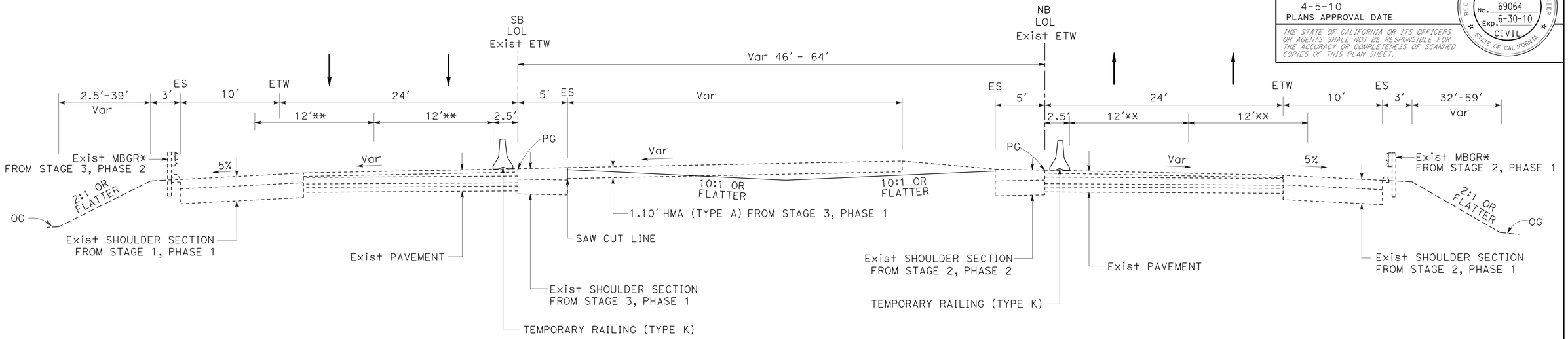

SOUTHBOUND

Sta 14+38.84 TO Sta 17+69.76
Sta 23+47.72 TO Sta 26+79.48

NORTHBOUND

Sta 13+75.46 TO Sta 16+51.60
Sta 23+36.41 TO Sta 25+97.12

ROUTE 99
STAGE 3, PHASE 3

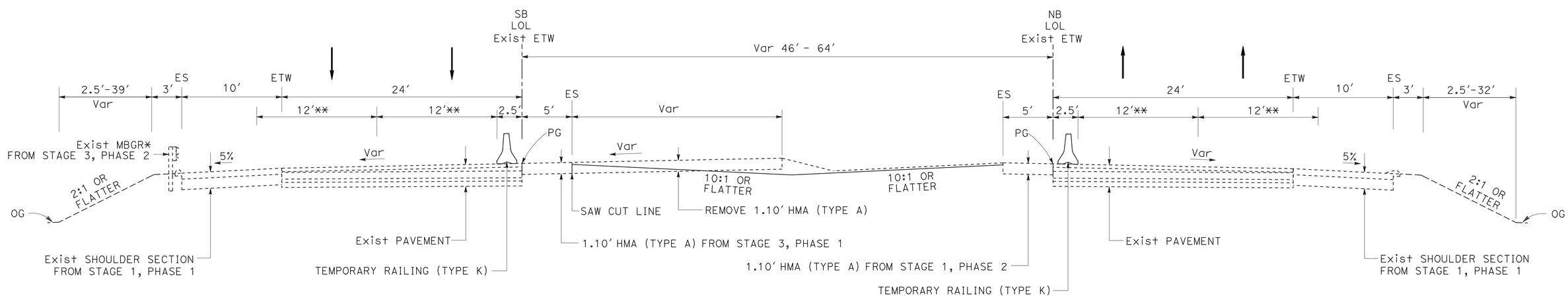

SOUTHBOUND

Sta 11+54.34 TO Sta 14+38.84
Sta 26+79.48 TO Sta 30+60.42

NORTHBOUND

Sta 10+00 TO Sta 13+75.46
Sta 25+97.12 TO Sta 28+21.13

ROUTE 99
STAGE 3, PHASE 3

STAGE CONSTRUCTION DETAILS (TYPICAL CROSS SECTIONS)

NO SCALE

SCD-15

REVISED BY | DATE REVISED
RANJIT K MONDAL | AHMAD K AHMAD
CALCULATED-DESIGNED BY | CHECKED BY
FUNCTIONAL SUPERVISOR: ALI ALQATAMI
STATE OF CALIFORNIA - DEPARTMENT OF TRANSPORTATION
Caltrans® DESIGN

LAST REVISION 03-11-10 | DATE PLOTTED => 06-APR-2010 | TIME PLOTTED => 14:05

Dist	COUNTY	ROUTE	POST MILES TOTAL PROJECT	SHEET No.	TOTAL SHEETS
06	Tul	99	2.9/3.3	52	128

REGISTERED CIVIL ENGINEER 03-11-10 DATE

4-5-10
PLANS APPROVAL DATE

REGISTERED PROFESSIONAL ENGINEER AHMAD K. AHMAD No. 69064 Exp. 6-30-10 CIVIL STATE OF CALIFORNIA

THE STATE OF CALIFORNIA OR ITS OFFICERS OR AGENTS SHALL NOT BE RESPONSIBLE FOR THE ACCURACY OR COMPLETENESS OF SCANNED COPIES OF THIS PLAN SHEET.

* FOR LIMITS AND LOCATIONS SEE LAYOUT SHEETS, AND SUMMARY OF QUANTITIES SHEET.

** TEMPORARY TRAFFIC LANE, TEMPORARY STRIPPING WILL BE REMOVED AT THE END OF STAGE 4.

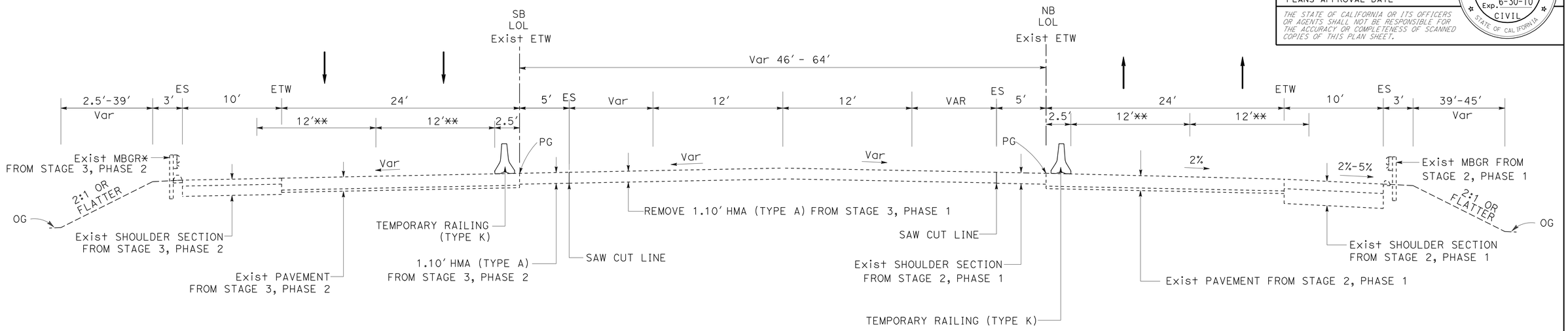

SOUTHBOUND

Sta 19+59.68 TO Sta 19+67.61
Sta 21+27.65 TO Sta 21+36.28

NORTHBOUND

Sta 18+91.93 TO Sta 19+00.64
Sta 20+60.64 TO Sta 20+68.97

ROUTE 99
STAGE 3, PHASE 3

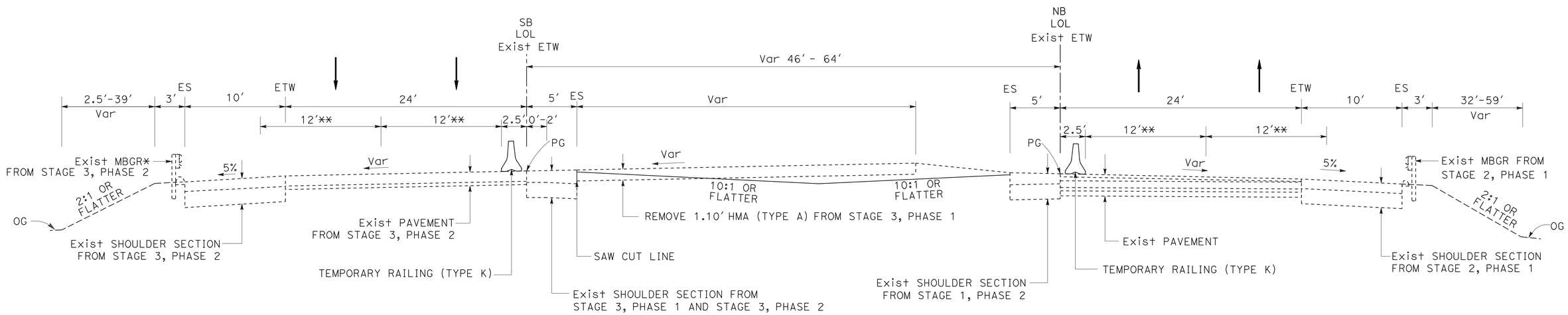

SOUTHBOUND

Sta 17+69.76 TO Sta 19+59.68
Sta 21+36.28 TO Sta 23+47.72

NORTHBOUND

Sta 16+51.60 TO Sta 18+91.93
Sta 20+68.97 TO Sta 23+36.41

ROUTE 99
STAGE 3, PHASE 3

STAGE CONSTRUCTION DETAILS (TYPICAL CROSS SECTIONS)

NO SCALE

SCD-16

STATE OF CALIFORNIA - DEPARTMENT OF TRANSPORTATION
Caltrans®
DESIGN

FUNCTIONAL SUPERVISOR: ALI ALQATAMI
CALCULATED-DESIGNED BY: AHMAD K AHMAD
CHECKED BY: RANJIT K MONDAL
REVISED BY
DATE REVISED

LAST REVISION 03-11-10
DATE PLOTTED => 06-APR-2010
TIME PLOTTED => 14:05

Dist	COUNTY	ROUTE	POST MILES TOTAL PROJECT	SHEET No.	TOTAL SHEETS
06	Tul	99	2.9/3.3	53	128

A Ahmad 03-11-10
REGISTERED CIVIL ENGINEER DATE

4-5-10
PLANS APPROVAL DATE

REGISTERED PROFESSIONAL ENGINEER AHMAD K. AHMAD No. 69064 Exp. 6-30-10 CIVIL STATE OF CALIFORNIA

THE STATE OF CALIFORNIA OR ITS OFFICERS OR AGENTS SHALL NOT BE RESPONSIBLE FOR THE ACCURACY OR COMPLETENESS OF SCANNED COPIES OF THIS PLAN SHEET.

* FOR LIMITS AND LOCATIONS SEE LAYOUT SHEETS, AND SUMMARY OF QUANTITIES SHEET.
** TEMPORARY TRAFFIC LANE, TEMPORARY STRIPPING WILL BE REMOVED AT THE END OF STAGE 4.

NOTE: BRIDGE APPROACH SLAB LOCATIONS-
SB ROUTE 99: Sta 19+67.61 TO Sta 19+77.61
Sta 21+17.65 TO Sta 21+27.65
NB ROUTE 99: Sta 19+00.64 TO Sta 19+10.64
Sta 20+50.64 TO Sta 20+60.64

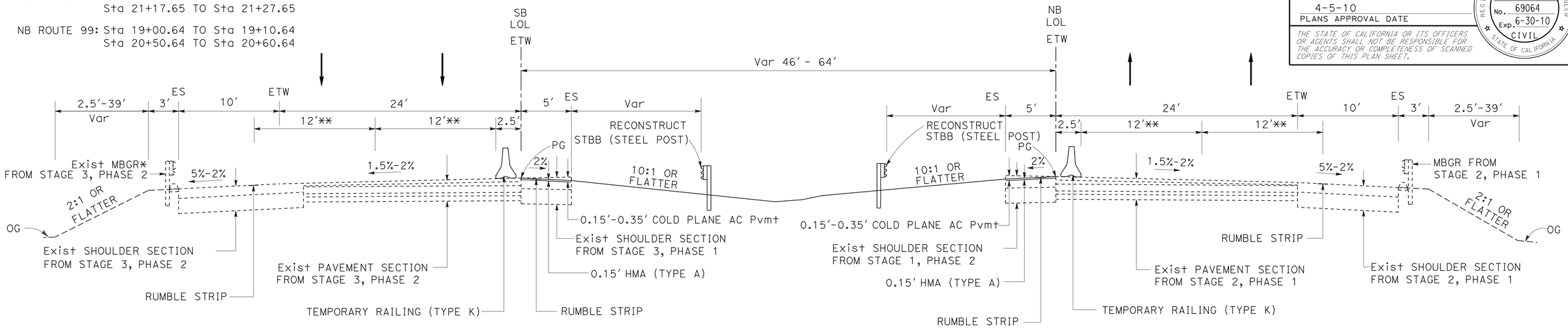

SOUTHBOUND
Sta 14+38.84 TO Sta 19+77.61
Sta 21+17.65 TO Sta 26+79.48

NORTHBOUND
Sta 13+75.46 TO Sta 19+10.64
Sta 20+50.64 TO Sta 25+97.12

ROUTE 99
STAGE 4

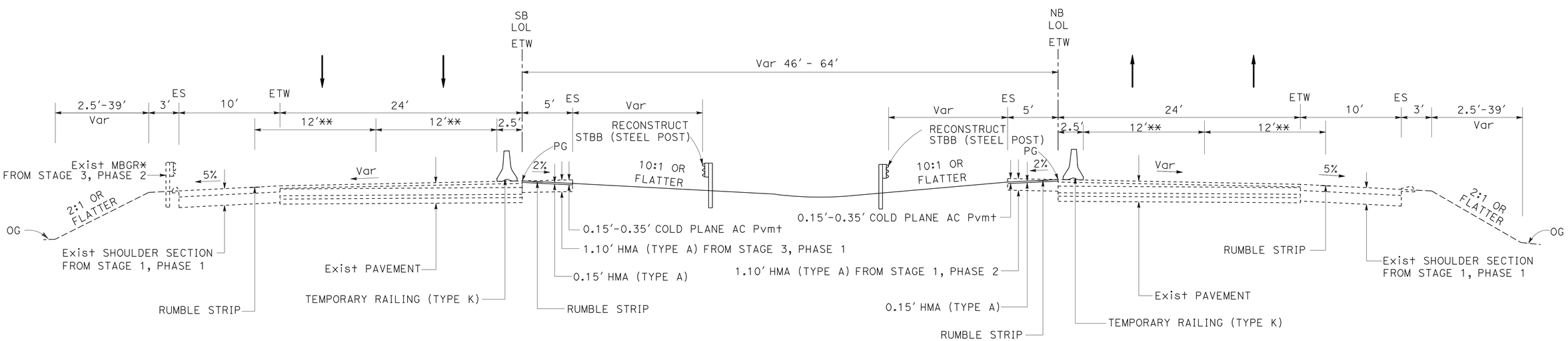

SOUTHBOUND
Sta 08+25.00 TO Sta 14+38.84
Sta 26+79.48 TO Sta 31+86.45

NORTHBOUND
Sta 10+00 TO Sta 13+75.46

ROUTE 99
STAGE 4

STAGE CONSTRUCTION DETAILS (TYPICAL CROSS SECTIONS)

NO SCALE

SCD-17

STATE OF CALIFORNIA - DEPARTMENT OF TRANSPORTATION
Caltrans® DESIGN
FUNCTIONAL SUPERVISOR: ALI ALQATAMI
CALCULATED-DESIGNED BY: RANJIT K MONDAL
CHECKED BY: AHMAD K AHMAD
REVISED BY / DATE REVISED

LAST REVISION 03-11-10
DATE PLOTTED => 06-APR-2010
TIME PLOTTED => 14:05

Dist	COUNTY	ROUTE	POST MILES TOTAL PROJECT	SHEET No.	TOTAL SHEETS
06	Tul	99	2.9/3.3	54	128

A Ahmad 03-11-10
REGISTERED CIVIL ENGINEER DATE

4-5-10
PLANS APPROVAL DATE

REGISTERED PROFESSIONAL ENGINEER AHMAD K. AHMAD No. 69064 Exp. 6-30-10 CIVIL STATE OF CALIFORNIA

THE STATE OF CALIFORNIA OR ITS OFFICERS OR AGENTS SHALL NOT BE RESPONSIBLE FOR THE ACCURACY OR COMPLETENESS OF SCANNED COPIES OF THIS PLAN SHEET.

* FOR LIMITS AND LOCATIONS SEE LAYOUT SHEETS, AND SUMMARY OF QUANTITIES SHEET.
** TEMPORARY TRAFFIC LANE, TEMPORARY STRIPPING WILL BE REMOVED AT THE END OF STAGE 4.

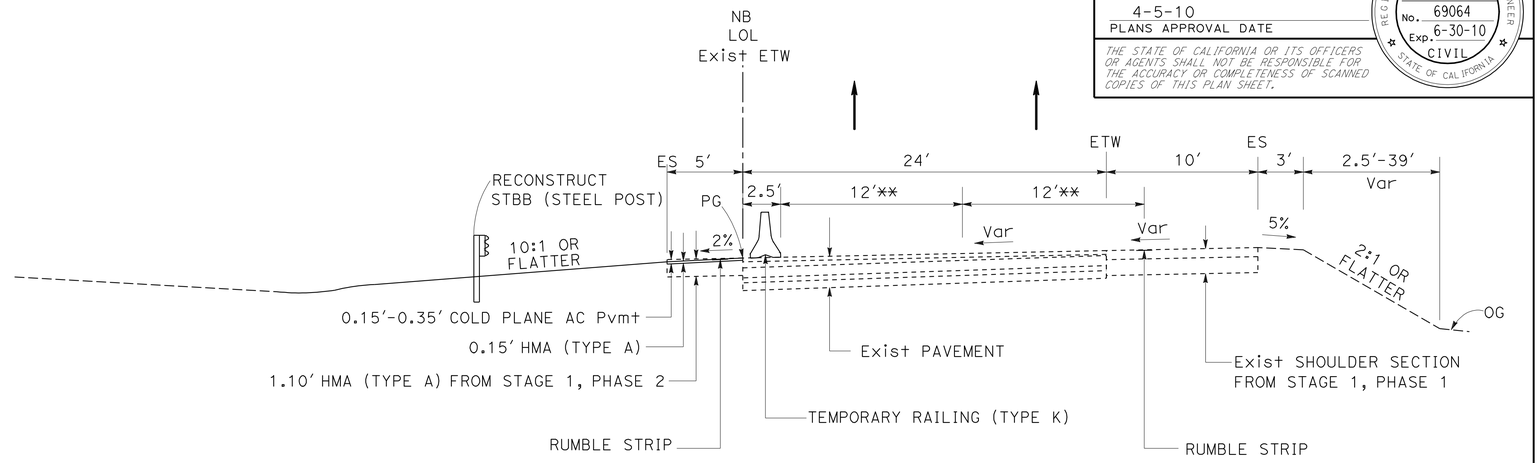

NORTHBOUND
Sta 28+21.13 TO Sta 32+29.24

ROUTE 99
STAGE 4

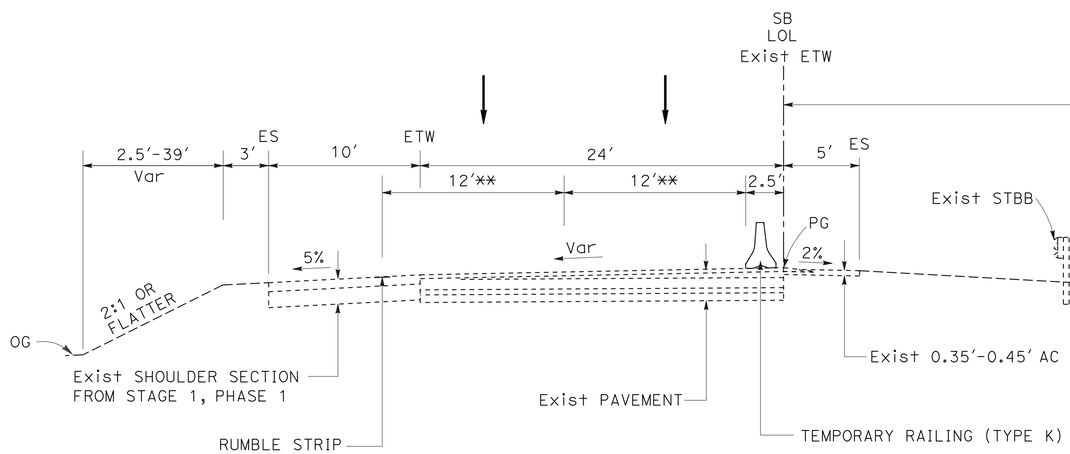

SOUTHBOUND
Sta 31+86.45 TO Sta 33+61.45

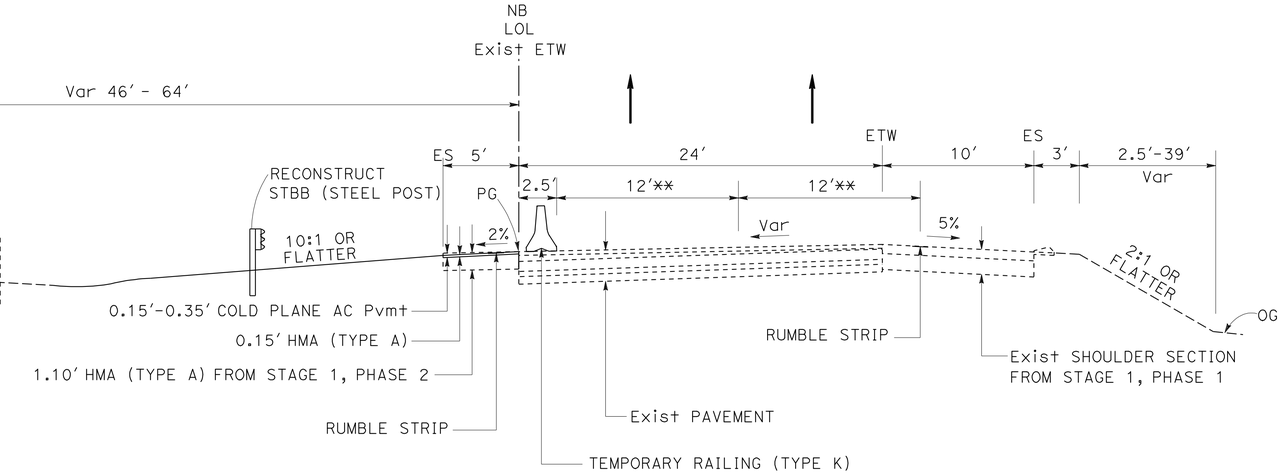

NORTHBOUND
Sta 25+97.12 TO Sta 28+21.13

ROUTE 99
STAGE 4

STAGE CONSTRUCTION DETAILS (TYPICAL CROSS SECTIONS)

NO SCALE

SCD-18

STATE OF CALIFORNIA - DEPARTMENT OF TRANSPORTATION
Caltrans®
DESIGN

FUNCTIONAL SUPERVISOR: ALI ALQATAMI
CALCULATED-DESIGNED BY: RANJIT K MONDAL
CHECKED BY: AHMAD K AHMAD
REVISED BY
DATE REVISED

LAST REVISION 03-11-10
DATE PLOTTED => 06-APR-2010
TIME PLOTTED => 14:05

Dist	COUNTY	ROUTE	POST MILES TOTAL PROJECT	SHEET No.	TOTAL SHEETS
06	Tul	99	2.9/3.3	55	128

A Ahmad 03-11-10
REGISTERED CIVIL ENGINEER DATE

4-5-10
PLANS APPROVAL DATE

REGISTERED PROFESSIONAL ENGINEER
AHMAD K. AHMAD
No. 69064
Exp. 6-30-10
CIVIL
STATE OF CALIFORNIA

THE STATE OF CALIFORNIA OR ITS OFFICERS OR AGENTS SHALL NOT BE RESPONSIBLE FOR THE ACCURACY OR COMPLETENESS OF SCANNED COPIES OF THIS PLAN SHEET.

NOTES:

1. COLD PLANE AC Pvmt AND OVERLAY OF AVENUE 24 WILL BE CONSTRUCTED UNDER TRAFFIC CONTROL.
2. LOCATIONS OF UTILITY FACILITIES SHOWN ARE APPROXIMATE AND SHALL BE VARIFIED BY THE CONTRACTOR PRIOR TO CONSTRUCTION.

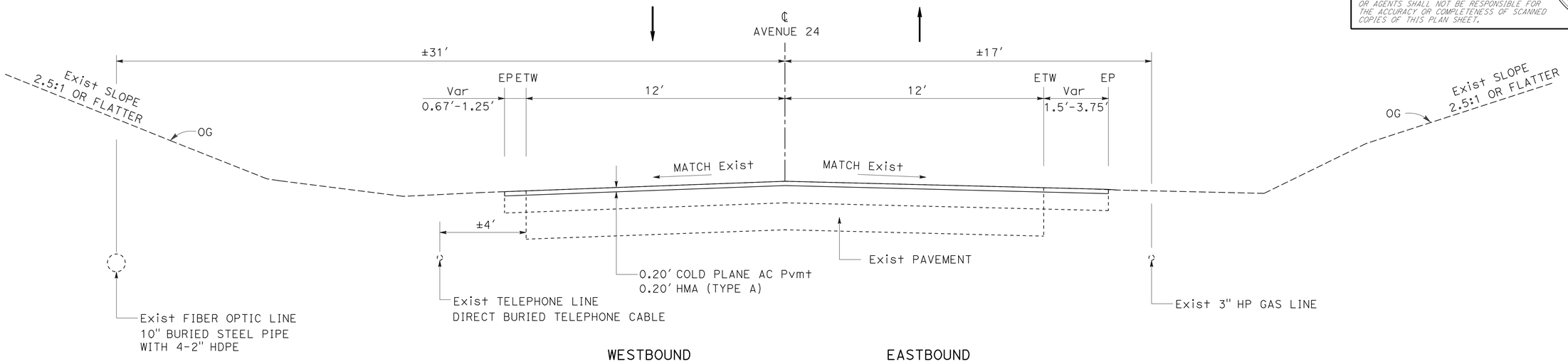

AVENUE 24
STAGE 2
Sta 10+00.00 TO Sta 12+00.00

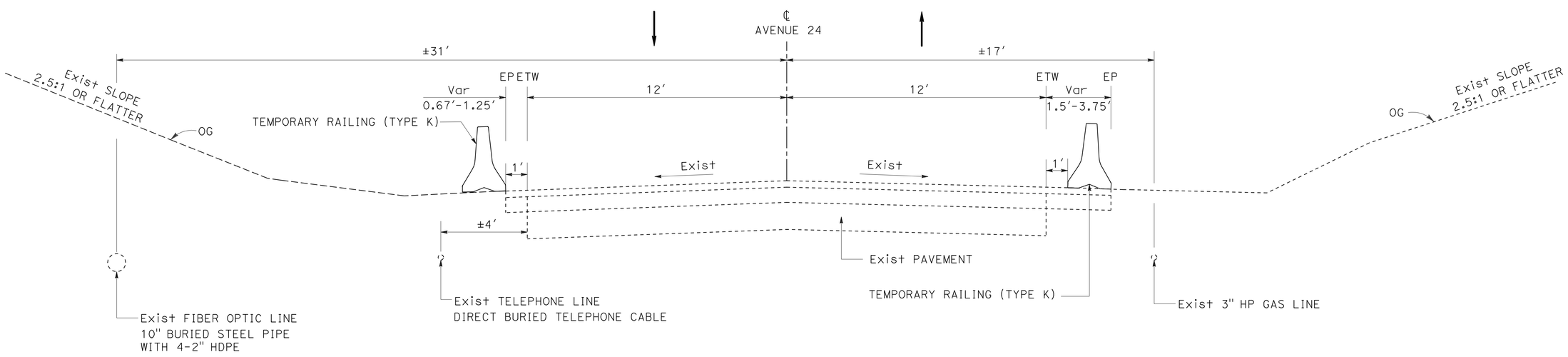

AVENUE 24
STAGE 1
Sta 10+00.00 TO Sta 12+00.00

STAGE CONSTRUCTION DETAILS (TYPICAL CROSS SECTIONS)

NO SCALE

SCD-19

STATE OF CALIFORNIA - DEPARTMENT OF TRANSPORTATION
Caltrans
DESIGN

FUNCTIONAL SUPERVISOR: ALI ALQATAMI
CALCULATED-DESIGNED BY: AHMAD K AHMAD
CHECKED BY
REVISED BY: RANJIT K MONDAL
DATE REVISED

LAST REVISION 03-11-10 | DATE PLOTTED => 06-APR-2010 | TIME PLOTTED => 14:05

Dist	COUNTY	ROUTE	POST MILES TOTAL PROJECT	SHEET No.	TOTAL SHEETS
06	Tul	99	2.9/3.3	56	128

REGISTERED CIVIL ENGINEER 03/10/10 DATE

4-5-10
PLANS APPROVAL DATE

REGISTERED PROFESSIONAL ENGINEER HASSAN M. TAHA No. 60130 Exp 06/30/10 CIVIL STATE OF CALIFORNIA

THE STATE OF CALIFORNIA OR ITS OFFICERS OR AGENTS SHALL NOT BE RESPONSIBLE FOR THE ACCURACY OR COMPLETENESS OF SCANNED COPIES OF THIS PLAN SHEET.

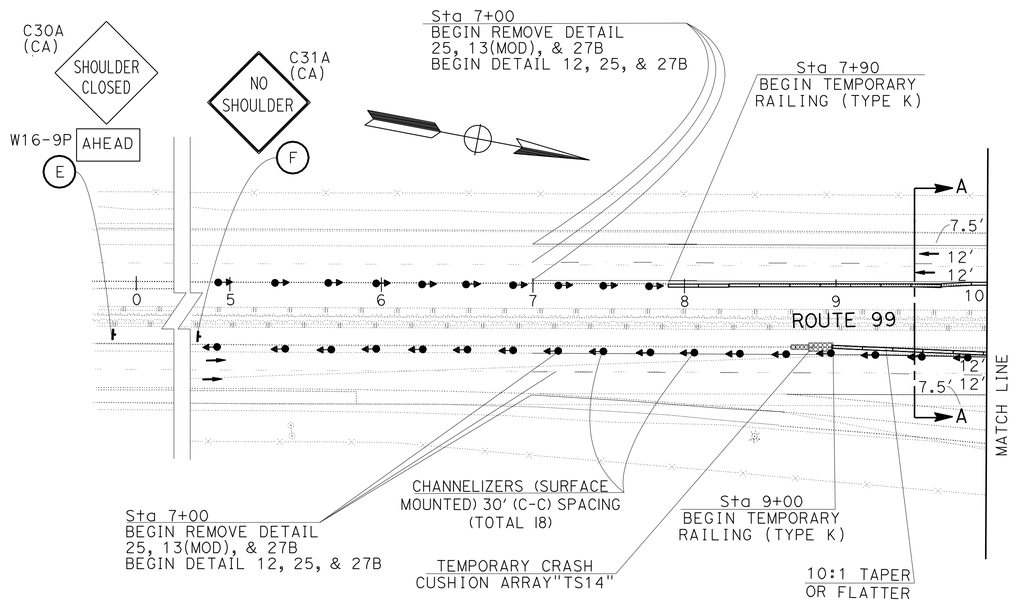

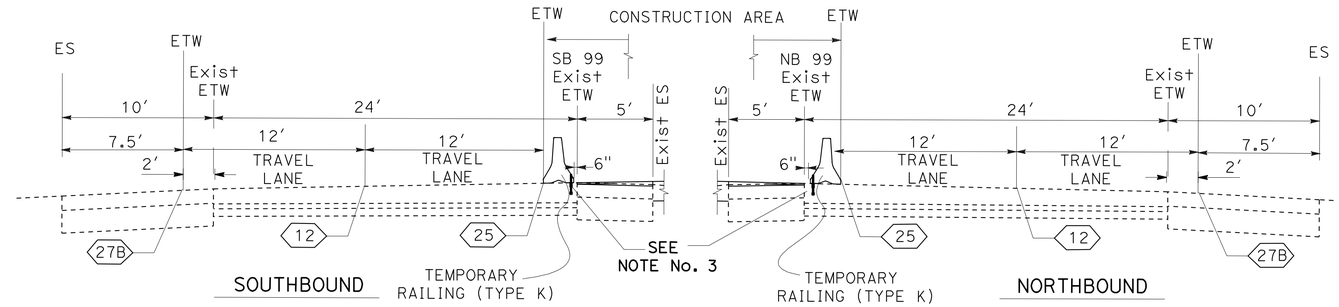

SECTION A-A

ROUTE 99
STAGE 1
(PHASE 2)
NO SCALE

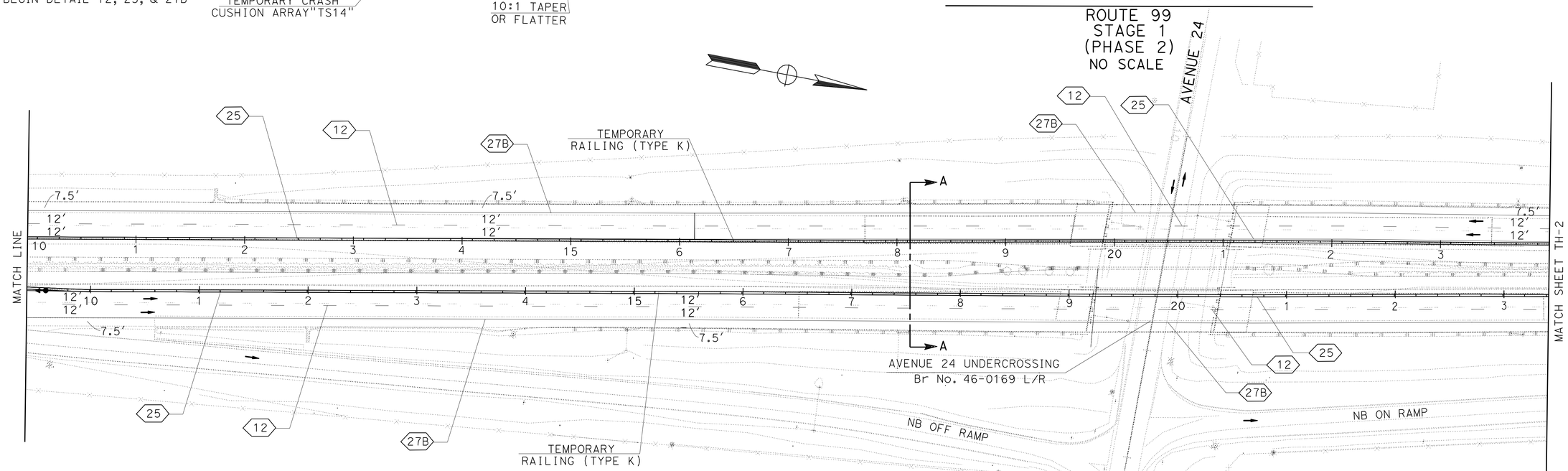

LEGEND

- DIRECTION OF TRAFFIC OR DIRECTION OF DETOUR
- TEMPORARY RAILING (TYPE K)
- CHANNELIZER (SURFACE MOUNTED)/ (SOIL EMBEDDED)
- (C-C) CENTER TO CENTER
- Temp CRASH CUSHION
- XX TEMPORARY TRAFFIC STRIPE DETAIL No.
- CONSTRUCTION AREA SIGN (ONE POST/ TWO POST)
- X TRAFFIC HANDLING CONSTRUCTION AREA SIGNS No.

NOTES:

1. LOCATIONS OF CONSTRUCTION AREA SIGNS SHOWN ARE APPROXIMATE, EXACT LOCATIONS TO BE DETERMINED BY THE ENGINEER.
2. FOR ADDITIONAL STATIONARY MOUNTED CONSTRUCTION AREA SIGNS SEE CS-1 SHEET.
3. REFER TO SHEET T3 OF THE STANDARD PLANS FOR PINING CONDITIONS & DETAILS OF THE TEMPORARY RAILING TYPE K.
4. FOR ADDITIONAL SIGN SPECIFICATIONS REFER TO CALIFORNIA MUTCD (MANUAL ON UNIFORMED TRAFFIC CONTROL DEVICES). (CA) INDICATES STANDARD CALIFORNIA SIGN.
5. EXISTING UTILITIES ARE NOT SHOWN ON THESE PLANS, THE CONTRACTOR SHALL VERIFY LOCATIONS OF EXISTING UTILITIES AND ADJUST SIGN LOCATION PER THE DETERMINATION OF THE ENGINEER.

TRAFFIC HANDLING PLAN
STAGE 1 (PHASE 2)

SCALE: 1" = 50'

TH-1

THIS PLAN IS ACCURATE FOR TRAFFIC HANDLING ONLY

REVISED BY	DATE REVISED
MUNIR ASSAF	HASSAN TAHA
CALCULATED-DESIGNED BY	CHECKED BY
FUNCTIONAL SUPERVISOR	MOHAMMED QATAMI

STATE OF CALIFORNIA - DEPARTMENT OF TRANSPORTATION
Caltrans
TRAFFIC DESIGN

LAST REVISION 03-10-10 | DATE PLOTTED => 06-APR-2010 | TIME PLOTTED => 14:05

Dist	COUNTY	ROUTE	POST MILES TOTAL PROJECT	SHEET No.	TOTAL SHEETS
06	Tul	99	2.9/3.3	57	128

REGISTERED CIVIL ENGINEER 03/10/10 DATE

4-5-10
PLANS APPROVAL DATE

REGISTERED PROFESSIONAL ENGINEER HASSAN M. TAHA No. 60130 Exp 06/30/10 CIVIL STATE OF CALIFORNIA

THE STATE OF CALIFORNIA OR ITS OFFICERS OR AGENTS SHALL NOT BE RESPONSIBLE FOR THE ACCURACY OR COMPLETENESS OF SCANNED COPIES OF THIS PLAN SHEET.

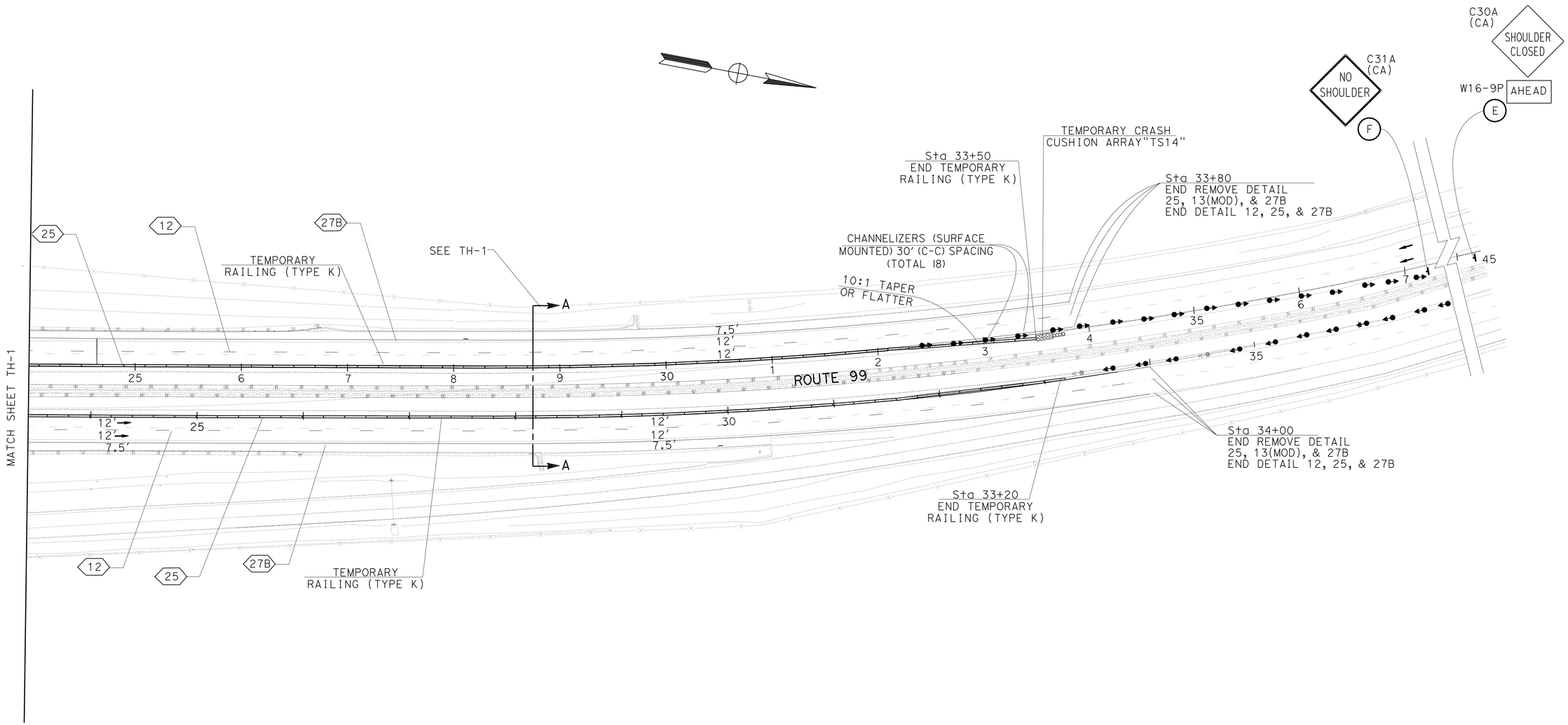

TRAFFIC HANDLING PLAN

STAGE 1 (PHASE 2)

SCALE: 1" = 50'

TH-2

THIS PLAN IS ACCURATE FOR TRAFFIC HANDLING ONLY

STATE OF CALIFORNIA - DEPARTMENT OF TRANSPORTATION
Caltrans
TRAFFIC DESIGN

FUNCTIONAL SUPERVISOR: MOHAMMED QATAMI

MUNIR ASSAF — REVISED BY
HASSAN TAHA — DATE REVISED

CALCULATED-DESIGNED BY
CHECKED BY

LAST REVISION 03-10-10 | DATE PLOTTED => 06-APR-2010 | TIME PLOTTED => 14:06

Dist	COUNTY	ROUTE	POST MILES TOTAL PROJECT	SHEET No.	TOTAL SHEETS
06	Tul	99	2.9/3.3	58	128

REGISTERED CIVIL ENGINEER 03/10/10 DATE

4-5-10
PLANS APPROVAL DATE

REGISTERED PROFESSIONAL ENGINEER HASSAN M. TAHA No. 60130 Exp 06/30/10 CIVIL STATE OF CALIFORNIA

THE STATE OF CALIFORNIA OR ITS OFFICERS OR AGENTS SHALL NOT BE RESPONSIBLE FOR THE ACCURACY OR COMPLETENESS OF SCANNED COPIES OF THIS PLAN SHEET.

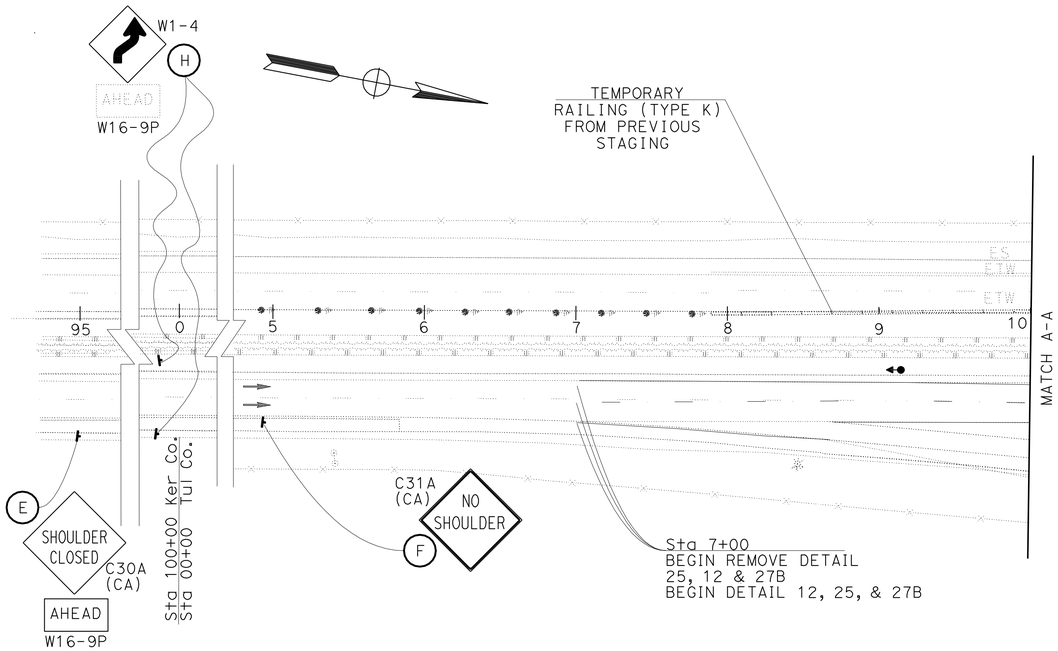

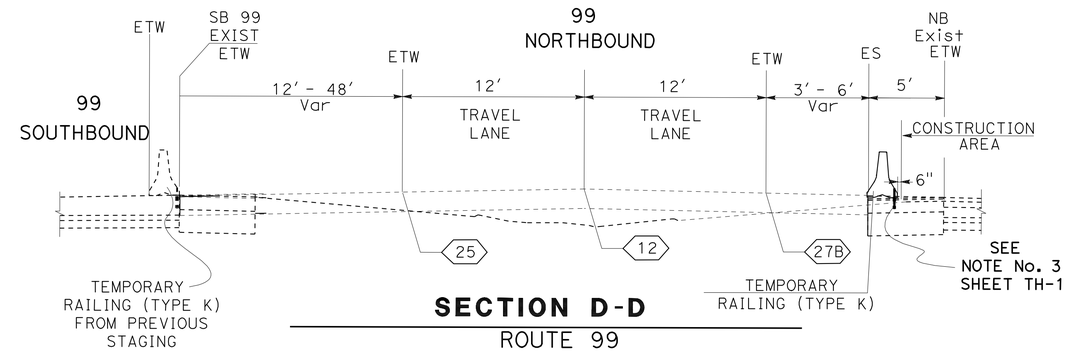

SECTION D-D

ROUTE 99
STAGE 2
PHASE 1
NO SCALE

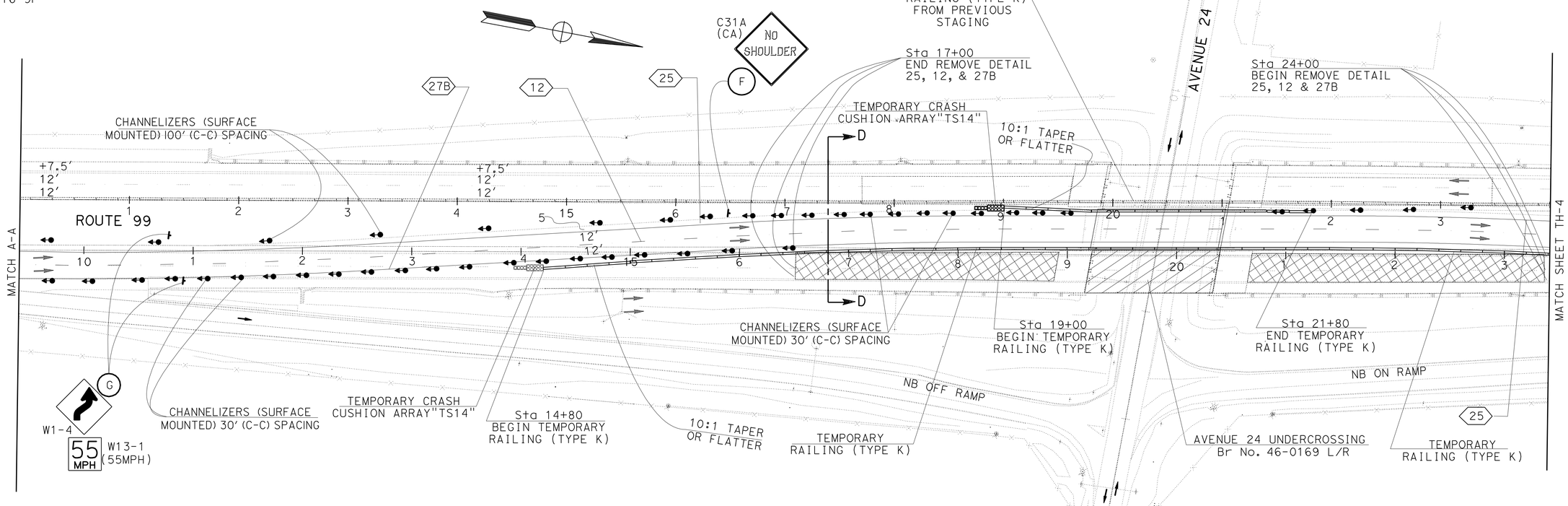

TRAFFIC HANDLING PLAN

STAGE 2 (PHASE 1)

SCALE: 1" = 50′

TH-3

THIS PLAN IS ACCURATE FOR TRAFFIC HANDLING ONLY

STATE OF CALIFORNIA - DEPARTMENT OF TRANSPORTATION
Caltrans
TRAFFIC DESIGN

FUNCTIONAL SUPERVISOR: MOHAMMED QATAMI

CALCULATED-DESIGNED BY: MUNIR ASSAF
CHECKED BY: HASSAN TAHA

REVISED BY | DATE REVISED

LAST REVISION 03-10-10 | DATE PLOTTED => 07-APR-2010 | TIME PLOTTED => 05:56

Dist	COUNTY	ROUTE	POST MILES TOTAL PROJECT	SHEET No.	TOTAL SHEETS
06	Tul	99	2.9/3.3	59	128

Hassan Taha 03/10/10
REGISTERED CIVIL ENGINEER DATE

4-5-10
PLANS APPROVAL DATE

REGISTERED PROFESSIONAL ENGINEER
HASSAN M. TAHA
No. 60130
Exp 06/30/10
CIVIL
STATE OF CALIFORNIA

THE STATE OF CALIFORNIA OR ITS OFFICERS OR AGENTS SHALL NOT BE RESPONSIBLE FOR THE ACCURACY OR COMPLETENESS OF SCANNED COPIES OF THIS PLAN SHEET.

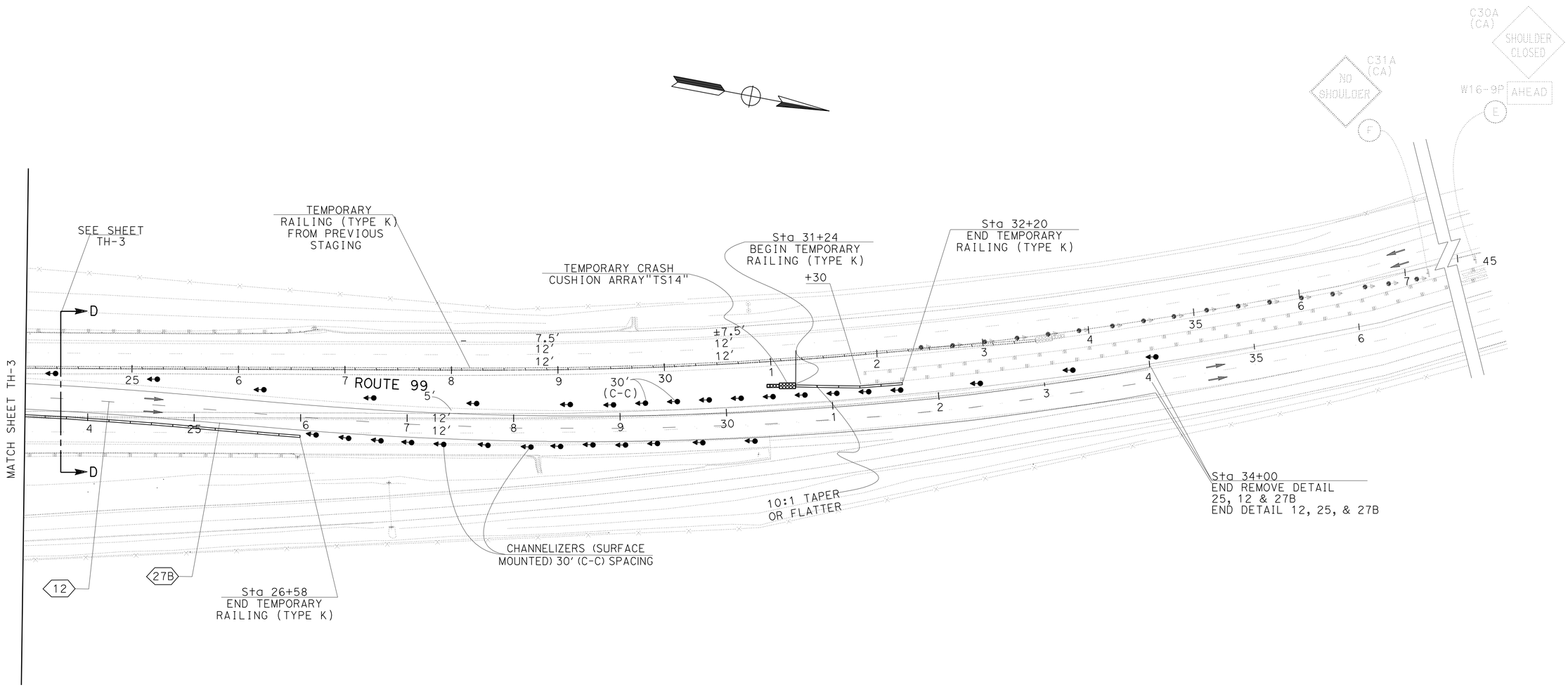

TRAFFIC HANDLING PLAN

STAGE 2 (PHASE 1)

SCALE: 1" = 50'

TH-4

THIS PLAN IS ACCURATE FOR TRAFFIC HANDLING ONLY

STATE OF CALIFORNIA - DEPARTMENT OF TRANSPORTATION
Caltrans
TRAFFIC DESIGN

FUNCTIONAL SUPERVISOR: MOHAMMED QATAMI
CALCULATED-DESIGNED BY: MUNIR ASSAF
CHECKED BY: HASSAN TAHA
REVISED BY
DATE REVISED

LAST REVISION 03-10-10
DATE PLOTTED => 06-APR-2010
TIME PLOTTED => 14:06

Dist	COUNTY	ROUTE	POST MILES TOTAL PROJECT	SHEET No.	TOTAL SHEETS
06	Tul	99	2.9/3.3	60	128

Hassan Taha 03/10/10
REGISTERED CIVIL ENGINEER DATE

4-5-10
PLANS APPROVAL DATE

REGISTERED PROFESSIONAL ENGINEER HASSAN M. TAHA No. 60130 Exp 06/30/10 CIVIL STATE OF CALIFORNIA

THE STATE OF CALIFORNIA OR ITS OFFICERS OR AGENTS SHALL NOT BE RESPONSIBLE FOR THE ACCURACY OR COMPLETENESS OF SCANNED COPIES OF THIS PLAN SHEET.

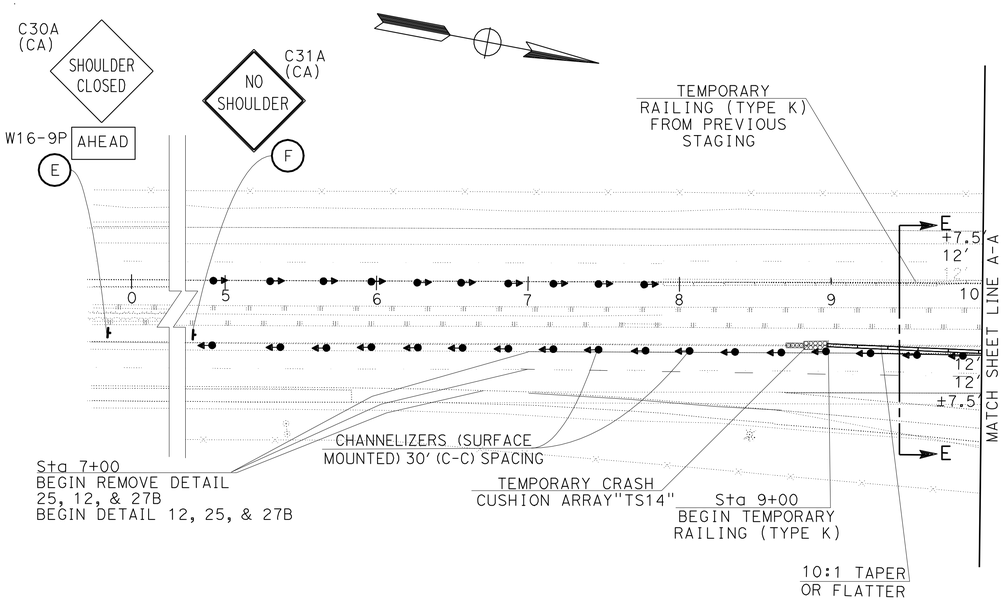

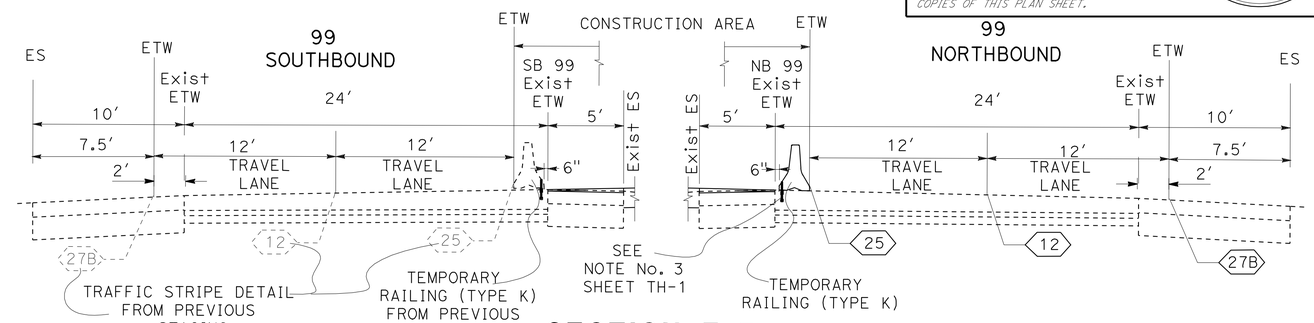

NO SCALE

SECTION E-E

ROUTE 99
STAGE 2 (PHASE 2) & STAGE 3 (PHASE 1)

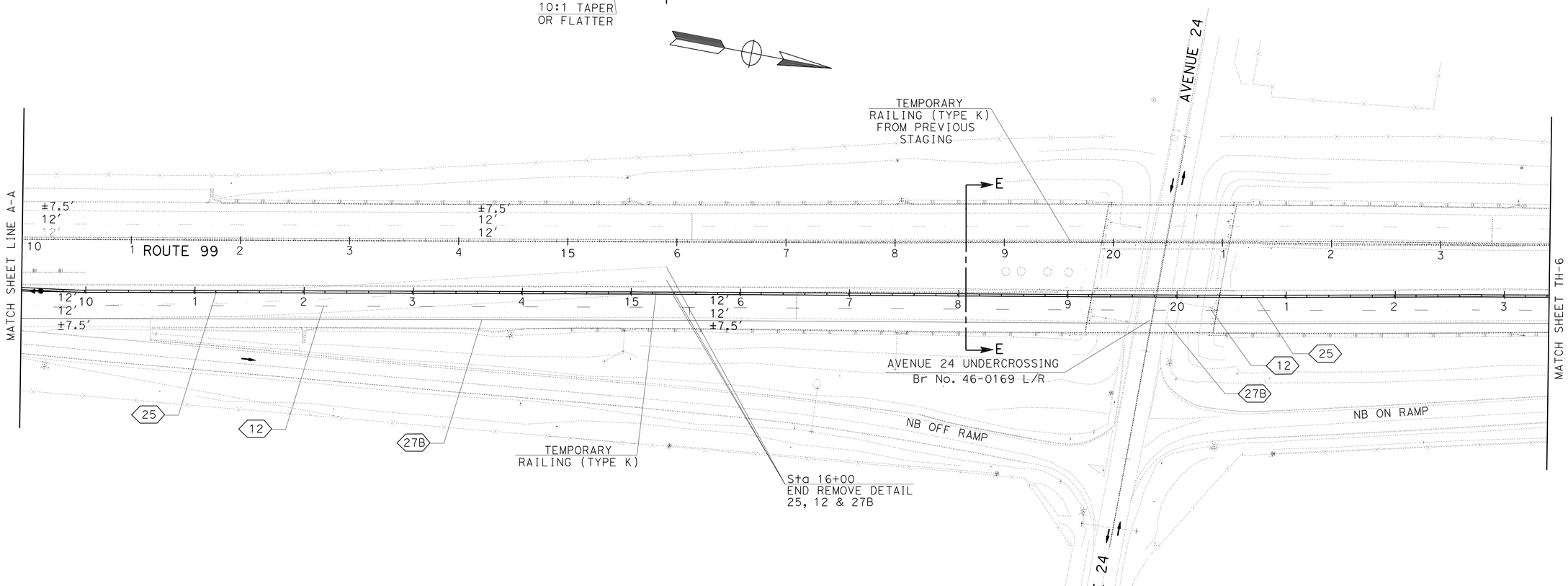

TRAFFIC HANDLING PLAN

STAGE 2 (PHASE 2) & STAGE 3 (PHASE 1)

SCALE: 1" = 50'

TH-5

THIS PLAN IS ACCURATE FOR TRAFFIC HANDLING ONLY

STATE OF CALIFORNIA - DEPARTMENT OF TRANSPORTATION
Caltrans
TRAFFIC DESIGN

FUNCTIONAL SUPERVISOR: MOHAMMED QATAMI
CALCULATED-DESIGNED BY: MUNIR ASSAF
CHECKED BY: HASSAN TAHA
REVISED BY
DATE REVISED

LAST REVISION DATE PLOTTED => 07-APR-2010
TIME PLOTTED => 05:56
03-10-10

Dist	COUNTY	ROUTE	POST MILES TOTAL PROJECT	SHEET No.	TOTAL SHEETS
06	Tul	99	2.9/3.3	61	128

Hassan Taha 03/10/10
REGISTERED CIVIL ENGINEER DATE

4-5-10
PLANS APPROVAL DATE

REGISTERED PROFESSIONAL ENGINEER
HASSAN M. TAHA
No. 60130
Exp 06/30/10
CIVIL
STATE OF CALIFORNIA

THE STATE OF CALIFORNIA OR ITS OFFICERS OR AGENTS SHALL NOT BE RESPONSIBLE FOR THE ACCURACY OR COMPLETENESS OF SCANNED COPIES OF THIS PLAN SHEET.

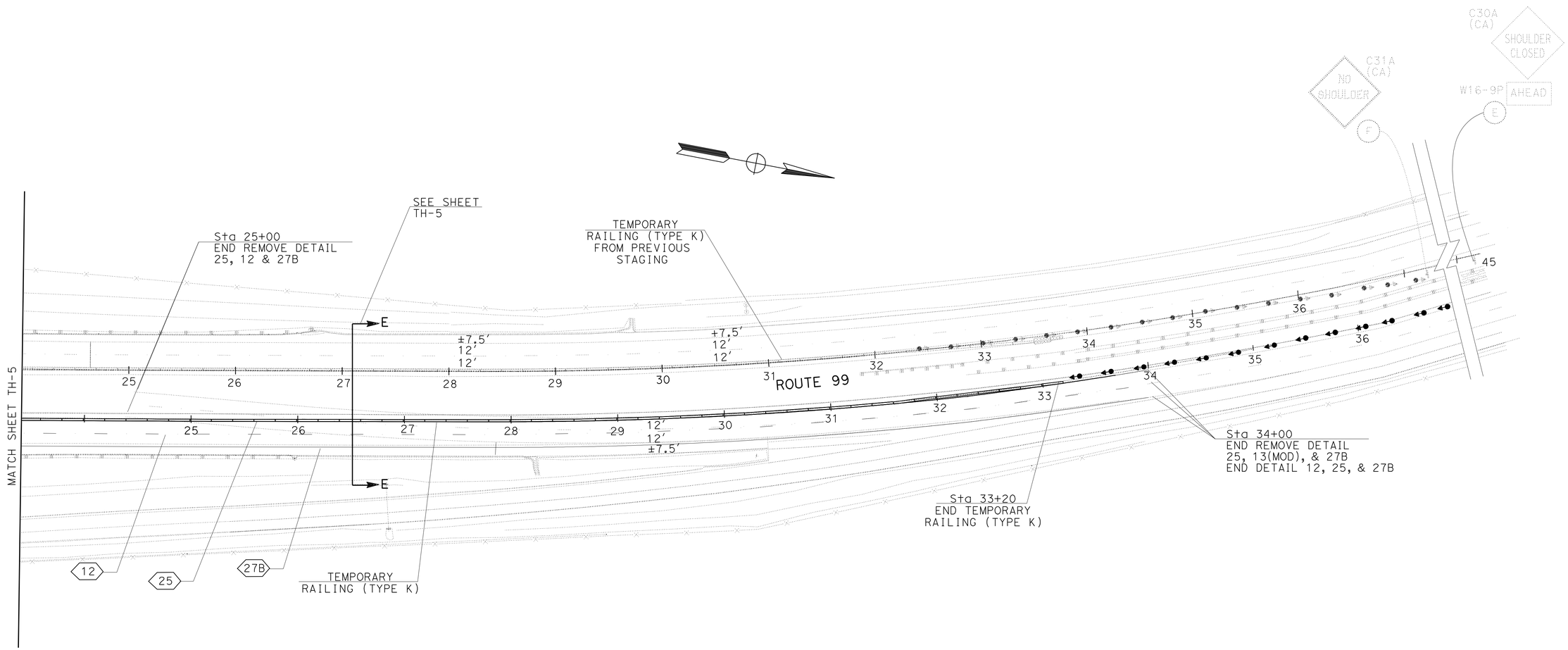

TRAFFIC HANDLING PLAN

STAGE 2 (PHASE 2) & STAGE 3 (PHASE 1)

SCALE: 1" = 50′

TH-6

THIS PLAN IS ACCURATE FOR TRAFFIC HANDLING ONLY

STATE OF CALIFORNIA - DEPARTMENT OF TRANSPORTATION
Caltrans
TRAFFIC DESIGN

FUNCTIONAL SUPERVISOR: MOHAMMED QATAMI
MUNIR ASSAF
HASSAN TAHA
REVISED BY
DATE REVISED
CALCULATED-DESIGNED BY
CHECKED BY

LAST REVISION 03-10-10
DATE PLOTTED => 07-APR-2010
TIME PLOTTED => 05:56

Dist	COUNTY	ROUTE	POST MILES TOTAL PROJECT	SHEET No.	TOTAL SHEETS
06	Tul	99	2.9/3.3	62	128

Hassan Taha 03/10/10
REGISTERED CIVIL ENGINEER DATE

4-5-10
PLANS APPROVAL DATE

REGISTERED PROFESSIONAL ENGINEER HASSAN M. TAHA No. 60130 Exp 06/30/10 CIVIL STATE OF CALIFORNIA

THE STATE OF CALIFORNIA OR ITS OFFICERS OR AGENTS SHALL NOT BE RESPONSIBLE FOR THE ACCURACY OR COMPLETENESS OF SCANNED COPIES OF THIS PLAN SHEET.

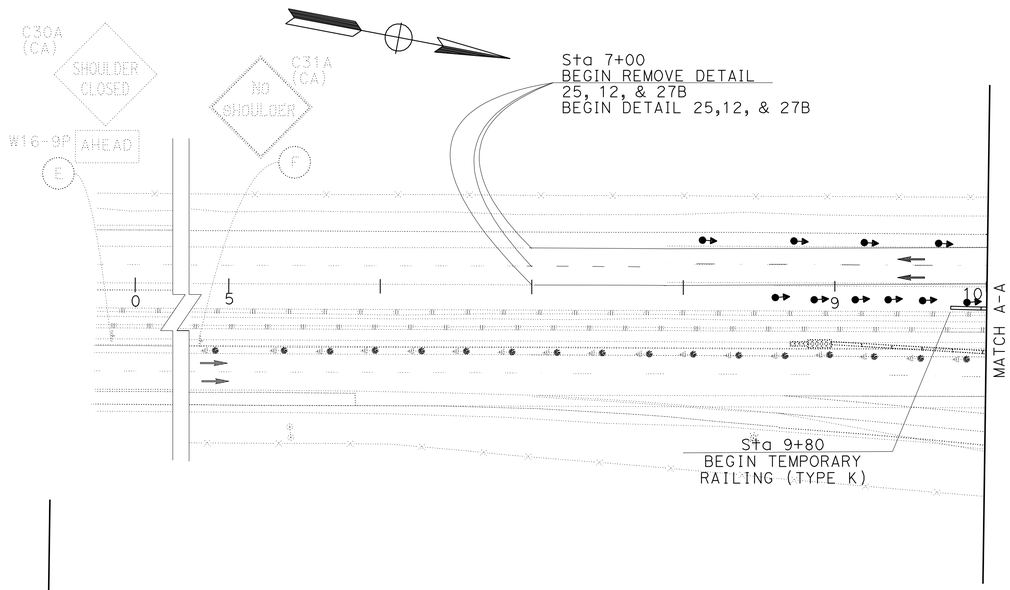

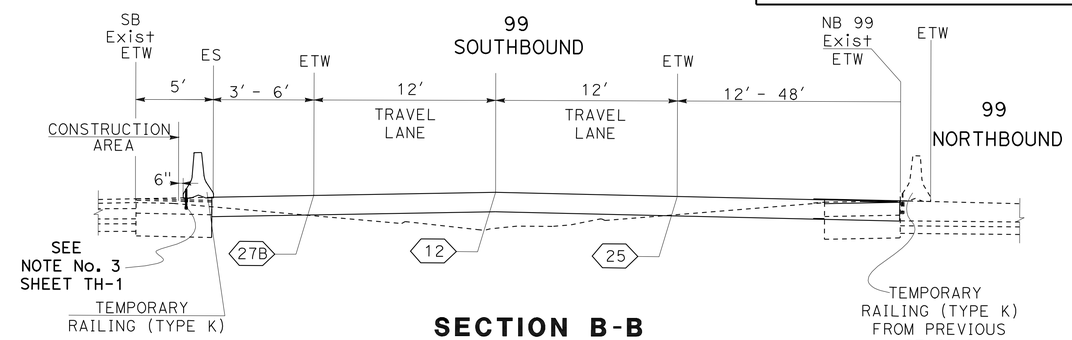

SECTION B-B

ROUTE 99
STAGE 3 (PHASE 2)

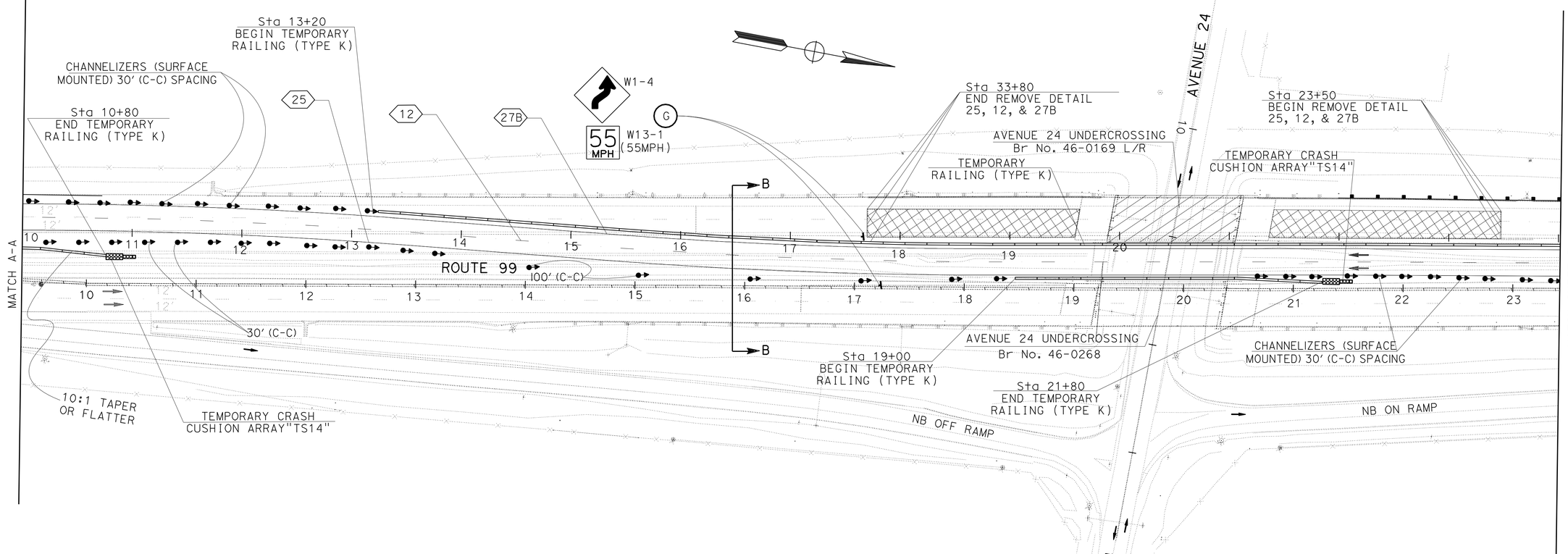

TRAFFIC HANDLING PLAN

STAGE 3 (PHASE 2)

SCALE: 1" = 50′ **TH-7**

THIS PLAN IS ACCURATE FOR TRAFFIC HANDLING ONLY

STATE OF CALIFORNIA - DEPARTMENT OF TRANSPORTATION
Caltrans
TRAFFIC DESIGN

FUNCTIONAL SUPERVISOR: MOHAMMED QATAMI
CALCULATED-DESIGNED BY: MUNIR ASSAF
CHECKED BY: HASSAN TAHA
REVISED BY
DATE REVISED

LAST REVISION 03-10-10
DATE PLOTTED => 06-APR-2010
TIME PLOTTED => 14:06

Dist	COUNTY	ROUTE	POST MILES TOTAL PROJECT	SHEET No.	TOTAL SHEETS
06	Tul	99	2.9/3.3	63	128

Hassan Taha 03/10/10
REGISTERED CIVIL ENGINEER DATE

4-5-10
PLANS APPROVAL DATE

REGISTERED PROFESSIONAL ENGINEER
HASSAN M. TAHA
No. 60130
Exp 06/30/10
CIVIL
STATE OF CALIFORNIA

THE STATE OF CALIFORNIA OR ITS OFFICERS OR AGENTS SHALL NOT BE RESPONSIBLE FOR THE ACCURACY OR COMPLETENESS OF SCANNED COPIES OF THIS PLAN SHEET.

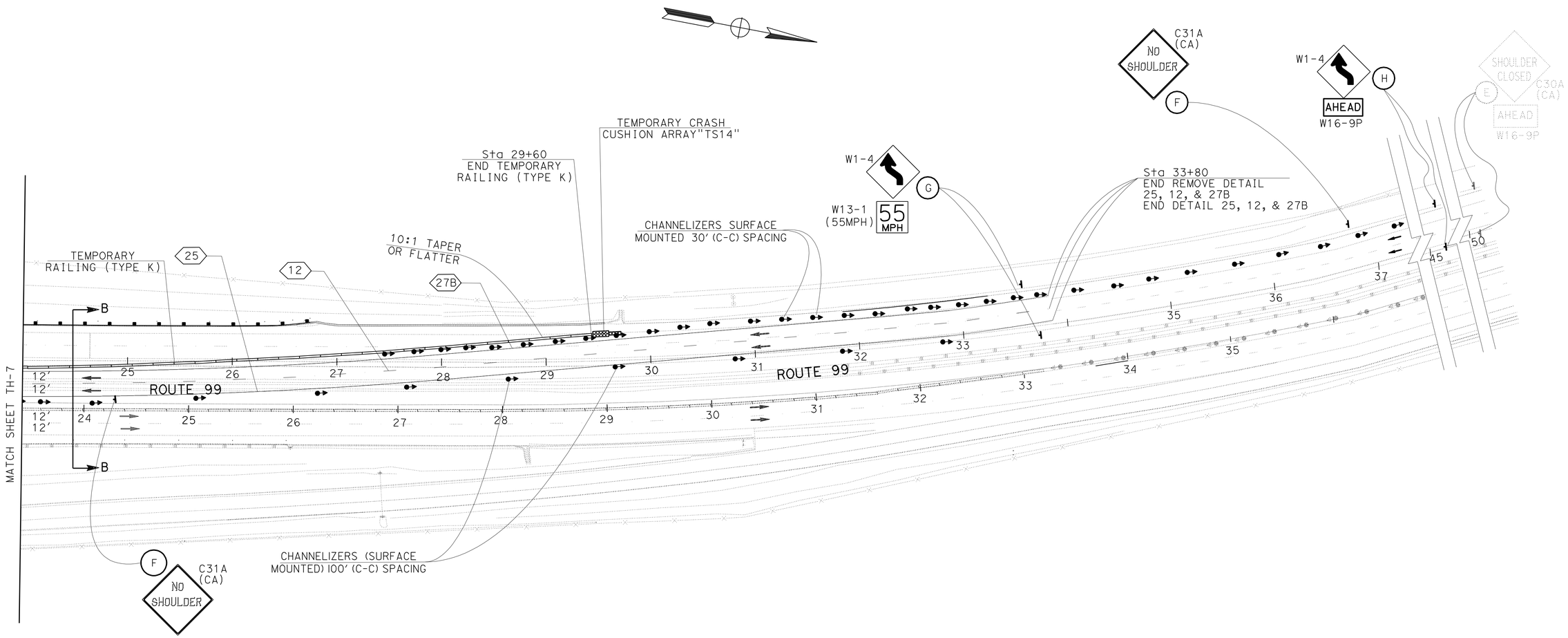

TRAFFIC HANDLING PLAN

STAGE 3 (PHASE 2)

SCALE: 1" = 50'

TH-8

THIS PLAN IS ACCURATE FOR TRAFFIC HANDLING ONLY

STATE OF CALIFORNIA - DEPARTMENT OF TRANSPORTATION
Caltrans®
TRAFFIC DESIGN

FUNCTIONAL SUPERVISOR: MOHAMMED QATAMI
CALCULATED-DESIGNED BY: MUNIR ASSAF
CHECKED BY: HASSAN TAHA
REVISED BY
DATE REVISED

LAST REVISION 03-10-10
DATE PLOTTED => 06-APR-2010
TIME PLOTTED => 14:06

BORDER LAST REVISED 4/11/2008
RELATIVE BORDER SCALE IS IN INCHES 0 1 2 3
USERNAME => trlim
DGN FILE => 647190md008.dgn
CU 06386
EA 471901

Dist	COUNTY	ROUTE	POST MILES TOTAL PROJECT	SHEET No.	TOTAL SHEETS
06	Tul	99	2.9/3.3	64	128

REGISTERED CIVIL ENGINEER 03/10/10 DATE

4-5-10
PLANS APPROVAL DATE

REGISTERED PROFESSIONAL ENGINEER HASSAN M. TAHA No. 60130 Exp 06/30/10 CIVIL STATE OF CALIFORNIA

THE STATE OF CALIFORNIA OR ITS OFFICERS OR AGENTS SHALL NOT BE RESPONSIBLE FOR THE ACCURACY OR COMPLETENESS OF SCANNED COPIES OF THIS PLAN SHEET.

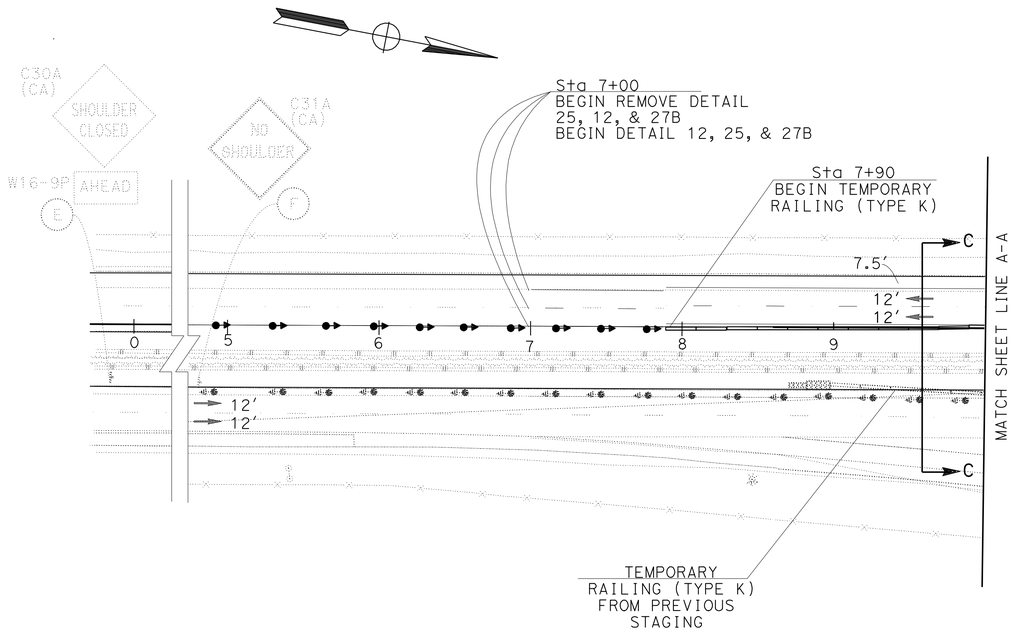

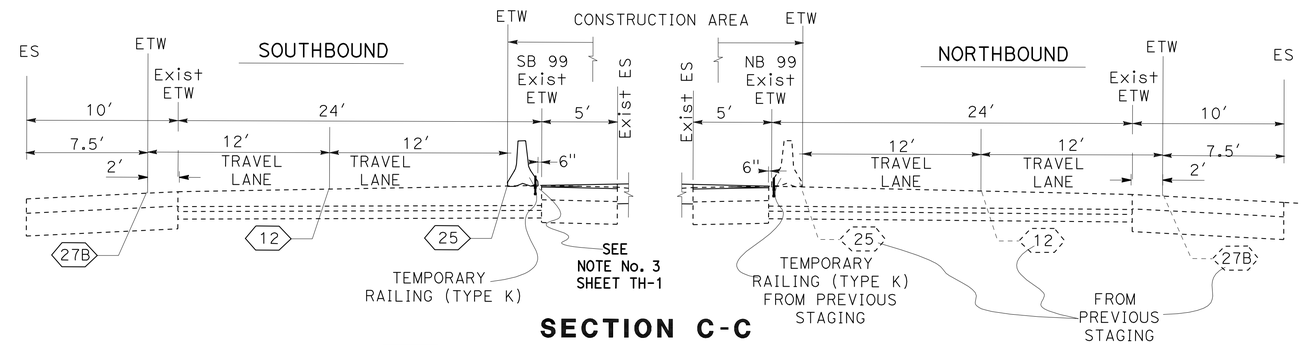

SECTION C-C

NO SCALE

ROUTE 99
STAGE 3 (PHASE 3) & STAGE 4

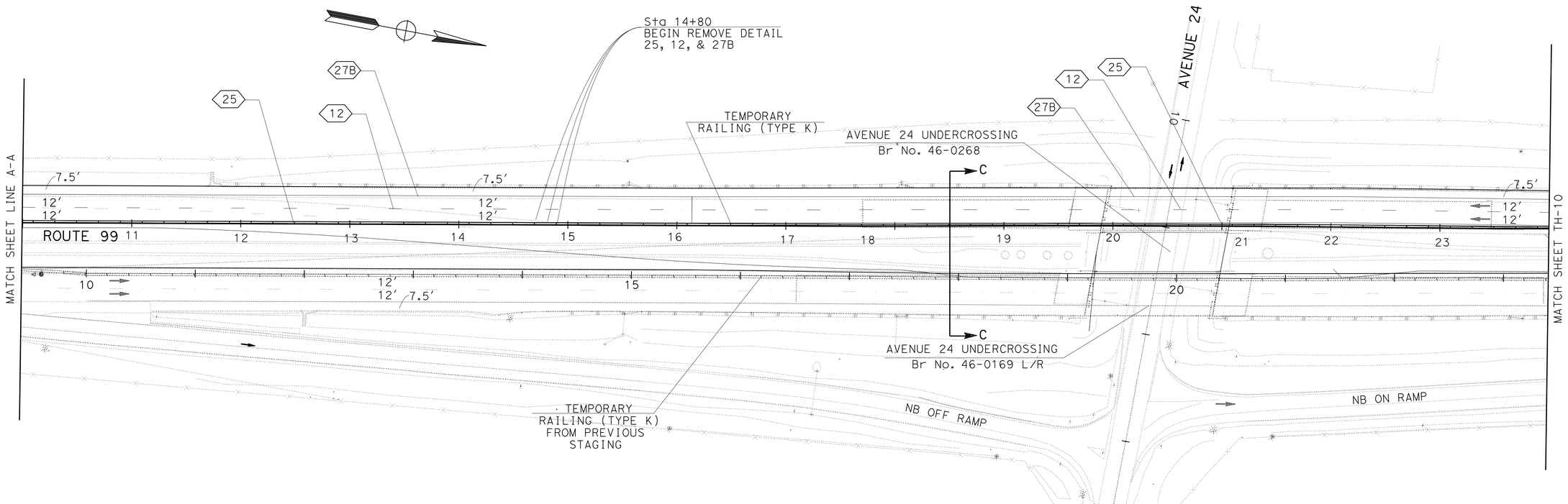

TRAFFIC HANDLING PLAN
STAGE 3 (PHASE 3) & STAGE 4

SCALE: 1" = 50′

TH-9

THIS PLAN IS ACCURATE FOR TRAFFIC HANDLING ONLY

STATE OF CALIFORNIA - DEPARTMENT OF TRANSPORTATION
Caltrans®
TRAFFIC DESIGN

FUNCTIONAL SUPERVISOR: MOHAMMED QATAMI
CALCULATED-DESIGNED BY: MUNIR ASSAF
CHECKED BY: HASSAN TAHA
REVISED BY
DATE REVISED

LAST REVISION 03-10-10
DATE PLOTTED => 06-APR-2010
TIME PLOTTED => 14:06

Dist	COUNTY	ROUTE	POST MILES TOTAL PROJECT	SHEET No.	TOTAL SHEETS
06	Tul	99	2.9/3.3	65	128

Hassan Taha 03/10/10
REGISTERED CIVIL ENGINEER DATE

4-5-10
PLANS APPROVAL DATE

REGISTERED PROFESSIONAL ENGINEER
HASSAN M. TAHA
No. 60130
Exp 06/30/10
CIVIL
STATE OF CALIFORNIA

THE STATE OF CALIFORNIA OR ITS OFFICERS OR AGENTS SHALL NOT BE RESPONSIBLE FOR THE ACCURACY OR COMPLETENESS OF SCANNED COPIES OF THIS PLAN SHEET.

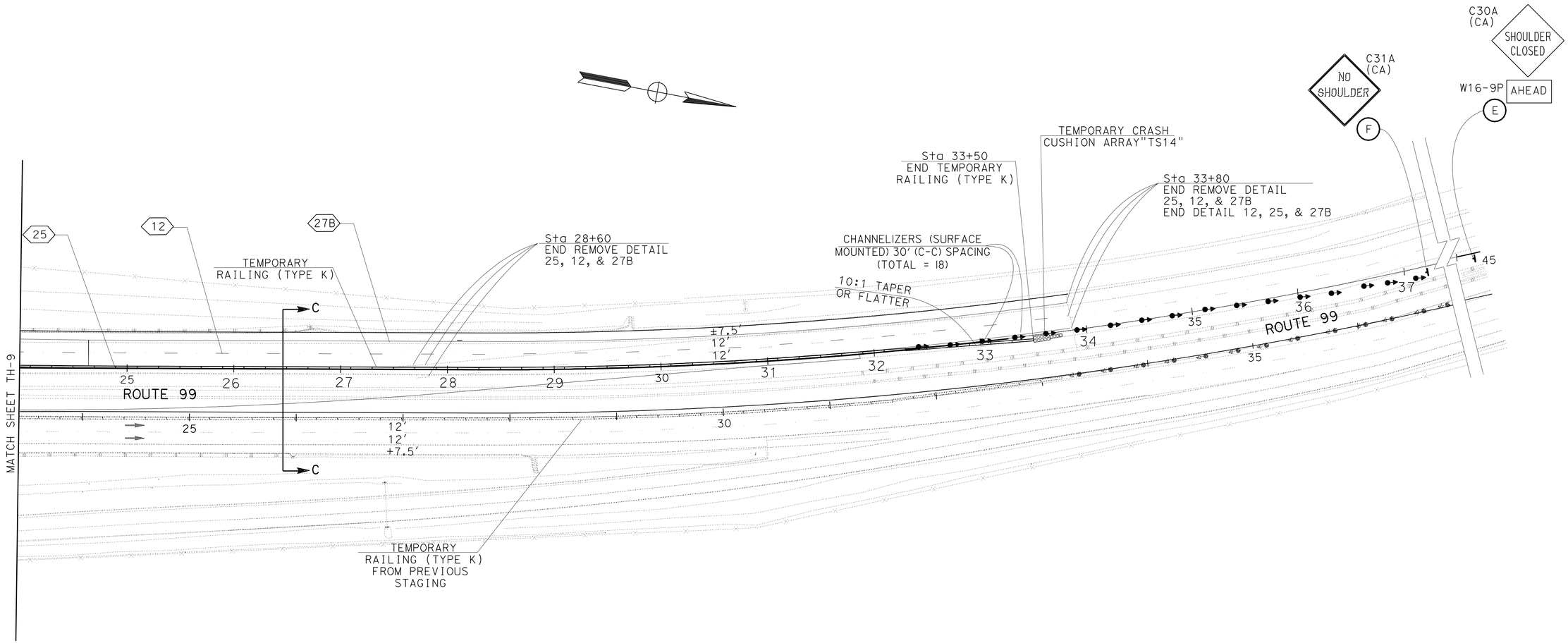

TRAFFIC HANDLING PLAN
STAGE 3 (PHASE 3) & STAGE 4

SCALE: 1" = 50'

TH-10

THIS PLAN IS ACCURATE FOR TRAFFIC HANDLING ONLY

STATE OF CALIFORNIA - DEPARTMENT OF TRANSPORTATION
Caltrans®
TRAFFIC DESIGN

FUNCTIONAL SUPERVISOR: MOHAMMED QATAMI
CALCULATED-DESIGNED BY: MUNIR ASSAF
CHECKED BY: HASSAN TAHA
REVISED BY
DATE REVISED

LAST REVISION 03-10-10
DATE PLOTTED => 06-APR-2010
TIME PLOTTED => 14:07

Dist	COUNTY	ROUTE	POST MILES TOTAL PROJECT	SHEET No.	TOTAL SHEETS
06	Tul	99	2.9/3.3	66	128

Hassan Taha 03/10/10
REGISTERED CIVIL ENGINEER DATE

4-5-10
PLANS APPROVAL DATE

REGISTERED PROFESSIONAL ENGINEER HASSAN M. TAHA No. 60130 Exp 06/30/10 CIVIL STATE OF CALIFORNIA

THE STATE OF CALIFORNIA OR ITS OFFICERS OR AGENTS SHALL NOT BE RESPONSIBLE FOR THE ACCURACY OR COMPLETENESS OF SCANNED COPIES OF THIS PLAN SHEET.

NOTES:

INSTALL SIGN # J (W12-2) THROUGHOUT FALSEWORK PLACEMENT AND THROUGHOUT TEMPORARY VERTICAL CLEARANCE REDUCTION

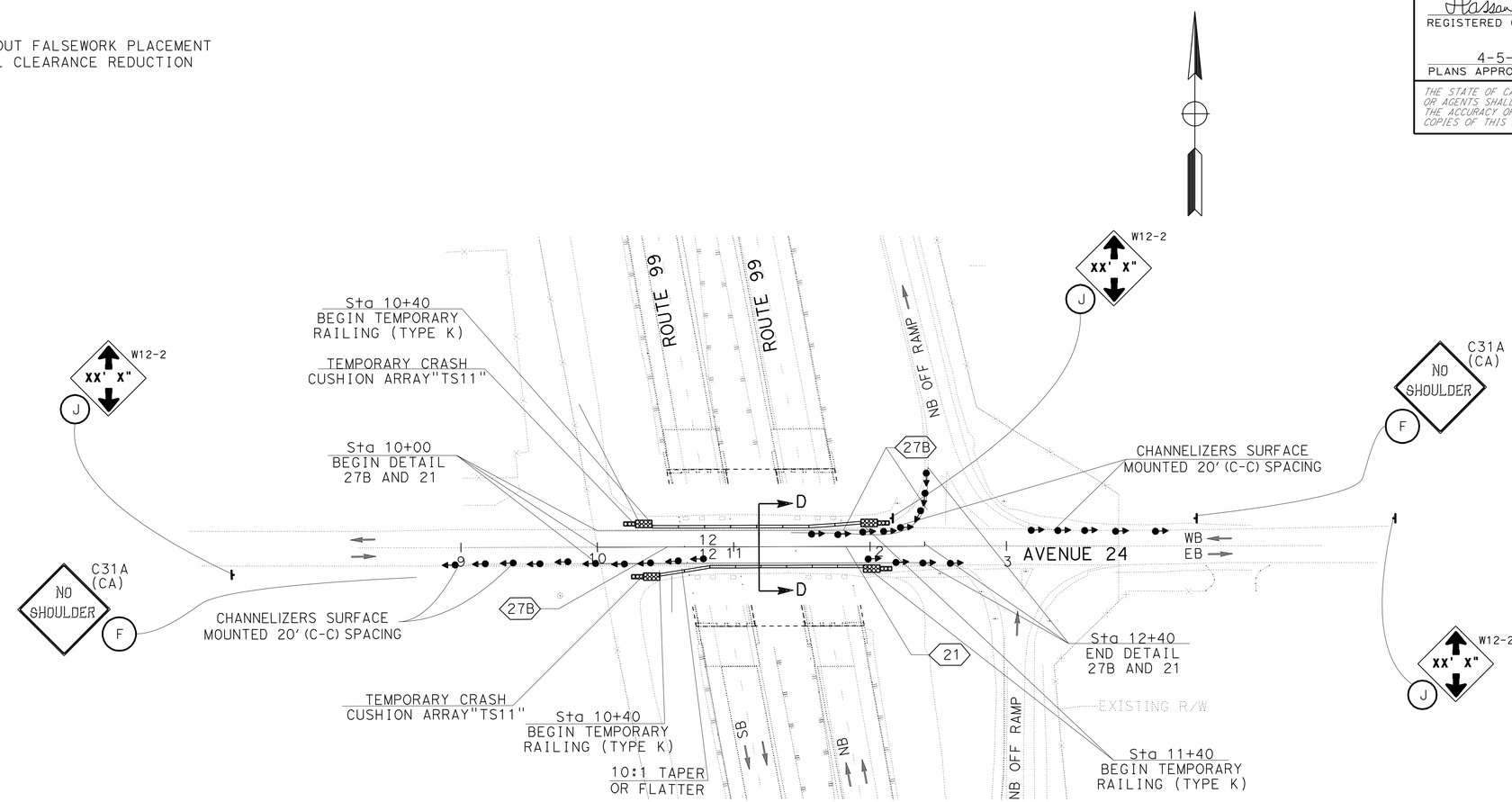

STAGE 1

AVENUE 24

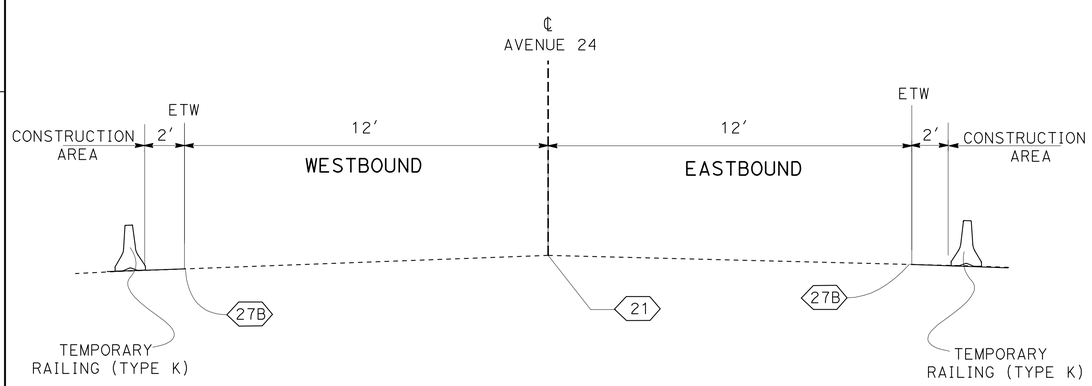

SECTION D-D

AVENUE 24

NO SCALE

TRAFFIC HANDLING PLAN (AVENUE 24)

SCALE: 1" = 50'

TH-11

STATE OF CALIFORNIA - DEPARTMENT OF TRANSPORTATION
Caltrans
TRAFFIC DESIGN

FUNCTIONAL SUPERVISOR: MOHAMMED QATAMI
CALCULATED-DESIGNED BY: MUNIR ASSAF
CHECKED BY: HASSAN TAHA
REVISED BY
DATE REVISED

LAST REVISION 03-10-10 | DATE PLOTTED => 06-APR-2010 | TIME PLOTTED => 14:07

Dist	COUNTY	ROUTE	POST MILES TOTAL PROJECT	SHEET No.	TOTAL SHEETS
06	Tul	99	2.9/3.3	67	128

REGISTERED CIVIL ENGINEER 03/10/10 DATE

4-5-10
PLANS APPROVAL DATE

REGISTERED PROFESSIONAL ENGINEER HASSAN M. TAHA No. 60130 Exp. 06/30/10 CIVIL STATE OF CALIFORNIA

THE STATE OF CALIFORNIA OR ITS OFFICERS OR AGENTS SHALL NOT BE RESPONSIBLE FOR THE ACCURACY OR COMPLETENESS OF SCANNED COPIES OF THIS PLAN SHEET.

LEGEND:

- CONSTRUCTION AREA SIGN
- (X) TRAFFIC HANDLING/ CONSTRUCTION AREA SIGNS No.
- – TYPE III BARRICADE
- → DIRECTION OF THE TRAFFIC

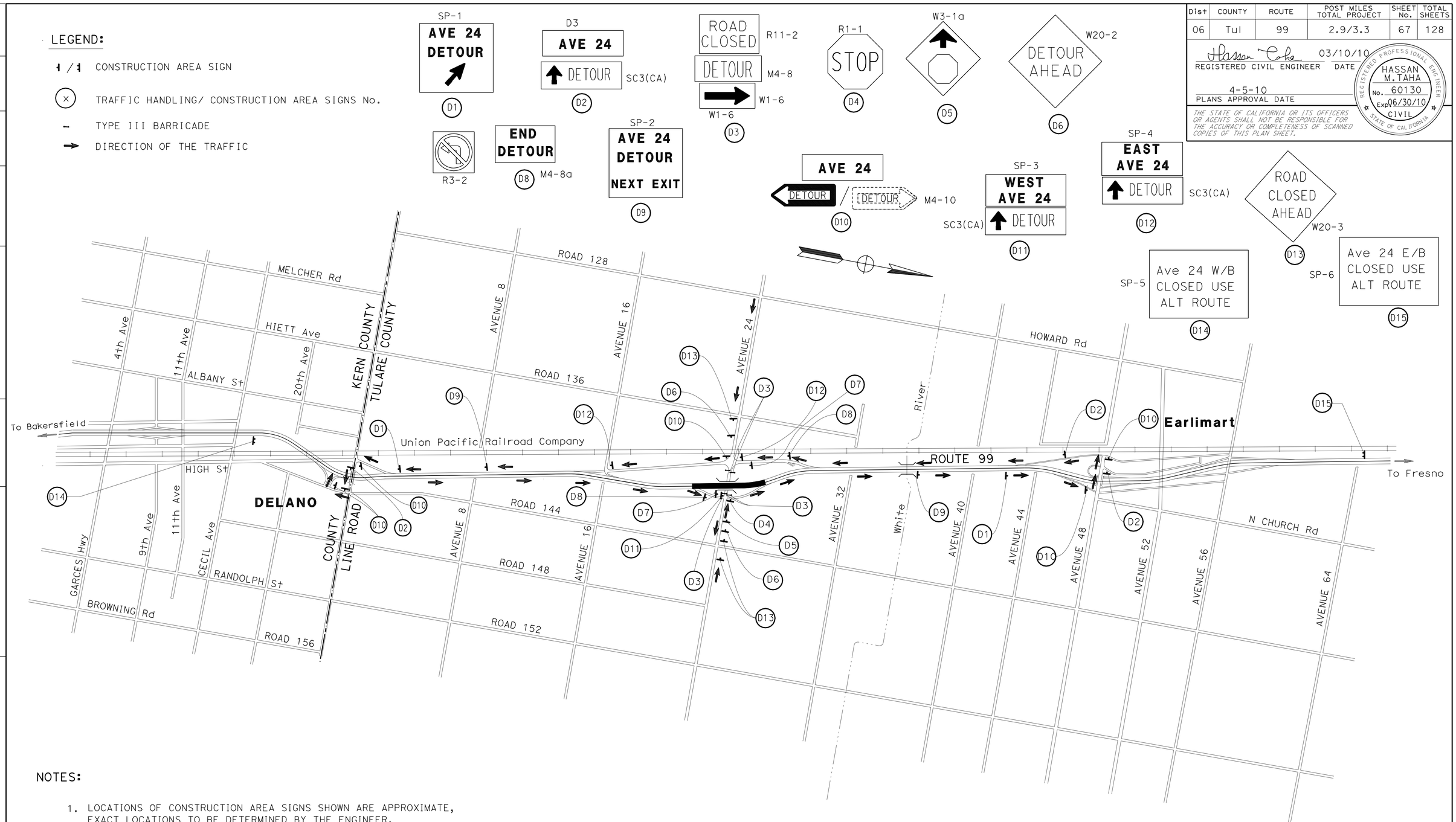

NOTES:

1. LOCATIONS OF CONSTRUCTION AREA SIGNS SHOWN ARE APPROXIMATE, EXACT LOCATIONS TO BE DETERMINED BY THE ENGINEER.
2. FOR ADDITIONAL LANE CLOSURE REQUIREMENTS REFER TO STANDARD PLANS.
3. REFER TO THE LANE CLOSURE CHARTS OF THE SPECIAL PROVISION FOR ROADWAY CLOSURE REQUIREMENTS.

TRAFFIC HANDLING PLAN

(AVENUE 24 TEMPORARY DETOUR)

NO SCALE

TH-12

STATE OF CALIFORNIA - DEPARTMENT OF TRANSPORTATION
Caltrans
TRAFFIC DESIGN

FUNCTIONAL SUPERVISOR: MOHAMMED QATAMI
CALCULATED-DESIGNED BY: MUNIR ASSAF
CHECKED BY: HASSAN TAHA
REVISED BY / DATE REVISED

LAST REVISION 03-10-10 | DATE PLOTTED => 06-APR-2010 | TIME PLOTTED => 14:07

Dist	COUNTY	ROUTE	POST MILES TOTAL PROJECT	SHEET No.	TOTAL SHEETS
06	Tul	99	2.9/3.3	68	128

Hassan Taha 03/10/10
REGISTERED CIVIL ENGINEER DATE

4-5-10
PLANS APPROVAL DATE

REGISTERED PROFESSIONAL ENGINEER HASSAN M. TAHA No. 60130 Exp 06/30/10 CIVIL STATE OF CALIFORNIA

THE STATE OF CALIFORNIA OR ITS OFFICERS OR AGENTS SHALL NOT BE RESPONSIBLE FOR THE ACCURACY OR COMPLETENESS OF SCANNED COPIES OF THIS PLAN SHEET.

PAVEMENT DELINEATION QUANTITIES (TRAFFIC HANDLING)

SHEET No.	LOCATION				DIRECTION	DETAIL No.	TEMPORARY PAVEMENT MARKER TYPE G	TEMPORARY PAVEMENT MARKER TYPE H	REMOVE PAVEMENT MARKER	TEMPORARY TRAFFIC STRIPE (PAINT) (4")	REMOVE THERMOPLASTIC TRAFFIC STRIPE	REMOVE PAINTED TRAFFIC STRIPE
							EA	EA	EA	LF	LF	LF
TH-1 TO TH-2	Sta 7+00	TO	Sta 34+00	ROUTE 99	NB	27B				2700	2700	2700
	Sta 7+00	TO	Sta 34+00	ROUTE 99	NB	12	57		57	2700		675
	Sta 7+00	TO	Sta 34+00	ROUTE 99	NB	25		57	114	2700	2700	2700
	Sta 7+00	TO	Sta 34+00	ROUTE 99	NB	13M			283		675	
	Sta 7+00	TO	Sta 33+80	ROUTE 99	SB	27B				2680	2680	2680
	Sta 7+00	TO	Sta 33+80	ROUTE 99	SB	12	57		57	2680		670
	Sta 7+00	TO	Sta 33+80	ROUTE 99	SB	25		57	114	2680	2680	2680
	Sta 7+00	TO	Sta 33+80	ROUTE 99	SB	13M			281		675	
TH-3 TO TH-4	Sta 7+00	TO	Sta 34+00	ROUTE 99	NB	27		57	57	5400		5400
	Sta 7+00	TO	Sta 34+00	ROUTE 99	NB	12	57		57	2700		675
	Sta 7+00	TO	Sta 34+00	ROUTE 99	NB	25		57	57	2700		2700
TH-5 TO TH-6	Sta 7+00	TO	Sta 34+00	ROUTE 99	NB	27		57	57	5400		5400
	Sta 7+00	TO	Sta 34+00	ROUTE 99	NB	12	57		57	2700		675
	Sta 7+00	TO	Sta 34+00	ROUTE 99	NB	25		57	57	2700		2700
TH-7 TO TH-8	Sta 7+00	TO	Sta 33+80	ROUTE 99	SB	27B				2680		2680
	Sta 7+00	TO	Sta 33+80	ROUTE 99	SB	12	57		57	2680		670
	Sta 7+00	TO	Sta 33+80	ROUTE 99	SB	25		57	57	2680		2680
TH-9 TO TH-10	Sta 7+00	TO	Sta 33+80	ROUTE 99	SB	27B				2680		2680
	Sta 7+00	TO	Sta 33+80	ROUTE 99	SB	12	57		57	2680		670
	Sta 7+00	TO	Sta 33+80	ROUTE 99	SB	25		57	57	2680		2680
	Sta 14+80	TO	Sta 28+60	ROUTE 99	SB	27B				1380		1380
	Sta 14+80	TO	Sta 28+60	ROUTE 99	SB	12	30		30	1380		345
	Sta 14+80	TO	Sta 28+60	ROUTE 99	SB	25		30	30	1380		1380
TH-11	Sta 10+00		Sta 12+40	Ave 24		21						
	Sta 10+00		Sta 12+40	Ave 24		27B						
	Sta 10+00		Sta 12+40	Ave 24		27B						
	SUBTOTAL						372	486	1536	57960	12110	44820
	TOTAL						858		1536	57960	12110	44820

TEMPORARY RAILING (TYPE K)

SHEET No.	DIRECTION	LOCATION	LF
TH-1 TO TH-2	NB	Sta 9+00 TO 33+20	2420
	SB	Sta 7+90 TO 33+50	2560
TH-3 TO TH-4	NB	Sta 14+80 TO 26+00	1120
	NB	Sta 19+00 TO 20+80	180
	NB	Sta 31+20 TO 32+20	100
TH-5 TO TH-6	NB	Sta 9+00 TO 33+20	2420
TH-7 TO TH-8	SB	Sta 9+80 TO 10+80	100
	SB	Sta 13+20 TO 29+60	1640
	SB	Sta 19+00 TO 21+80	280
TH-9 TO TH-10	NB	Sta 7+90 TO 33+50	2560
TH-11	EB	Sta 10+40 TO 11+40	100
	WB	Sta 10+40 TO 11+40	100
TOTAL			13580

CHANNELIZER (SURFACE MOUNTED)

SHEET No.	EA
TH-1	29
TH-2	30
TH-3	48
TH-4	29
TH-5	28
TH-6	13
TH-7	51
TH-8	42
TH-9	10
TH-10	18
TH-11	27
TOTAL	325

TEMPORARY CRASH CUSHION MODULE

SHEET No.	TYPE	EA
TH-1 TO TH-2	TS14	28
TH-3 TO TH-4	TS14	42
TH-5 TO TH-6	TS14	14
TH-7 TO TH-8	TS14	42
TH-9 TO TH-10	TS14	14
TH-11	TS11	44
TOTAL		184

TRAFFIC HANDLING QUANTITIES

THQ-1

STATE OF CALIFORNIA - DEPARTMENT OF TRANSPORTATION
Caltrans
TRAFFIC DESIGN

FUNCTIONAL SUPERVISOR: MOHAMMED QATAMI
CALCULATED-DESIGNED BY: MUNIR ASSAF
CHECKED BY: HASSAN TAHA
REVISED BY
DATE REVISED

LAST REVISION 03-10-10
DATE PLOTTED => 06-APR-2010
TIME PLOTTED => 14:07

Dist	COUNTY	ROUTE	POST MILES TOTAL PROJECT	SHEET No.	TOTAL SHEETS
06	Tul	99	2.9/3.3	69	128

Hassan Taha 03/10/10
REGISTERED CIVIL ENGINEER DATE

4-5-10
PLANS APPROVAL DATE

REGISTERED PROFESSIONAL ENGINEER HASSAN M. TAHA No. 60130 Exp 06/30/10 CIVIL STATE OF CALIFORNIA

THE STATE OF CALIFORNIA OR ITS OFFICERS OR AGENTS SHALL NOT BE RESPONSIBLE FOR THE ACCURACY OR COMPLETENESS OF SCANNED COPIES OF THIS PLAN SHEET.

STATIONARY MOUNTED CONSTRUCTION AREA SIGNS

SHEET No.	SIGN No.	SIGN CODE	PANEL SIZE (IN)	No. OF POST AND SIZE (IN)	DESCRIPTION	No. OF SIGNS
TH-1, TH-2,TH-8, TH-10, TH-3	E	C30A(CA)	48" X 48"	1 - 6" X 6"	SHOULDER WORK	7
		W16-9P	48" X 30"		AHEAD	
TH-1, TH-2,TH-8, TH-10, TH-11	F	C31A(CA)	48" X 48"	1 - 6" X 6"	NO SHOULDER	9
TH-7, TH-8, TH-3	G	W1-4	48" X 48"	1 - 6" X 6"	REVERSE CURVE (SYMBOL)	6
		W13-1	24" X 24"		SPEED LIMIT 25	
TH-4, TH-7	H	W1-4	48" X 48"	1 - 6" X 6"	REVERSE CURVE (SYMBOL)	4
		W16-9P	48" X 30"		AHEAD	
TH-11	J	W12-2	48" X 48"	1 - 6" X 6"	MINIMUM CLEARANCE	3

NOTES: FOR ADDITIONAL CONSTRUCTION AREA SIGNS SEE SHEET CS-1

PORTABLE CONSTRUCTION AREA SIGNS

SIGN No.	SIGN CODE	SIGN MESSAGE	PANEL SIZE (IN)	SIGN MOUNTING	No. OF SIGNS
D1		AVE 24 DETOUR	48" x 48"	PORTABLE	
D2		AVE 24	48" x 18"	PORTABLE	2
	SC3 (CA)	DETOUR AHEAD	36" x 12"	PORTABLE	3
D3	R11-2	ROAD CLOSED		PORTABLE	5
	M4-8	DETOUR		PORTABLE	1
	W1-6	ARROW		PORTABLE	1
D4	R1-1	STOP		PORTABLE	1
D5	W3-1	STOP AHEAD		PORTABLE	1
D6	W20-2	DETOUR AHEAD		PORTABLE	2
D7	R3-2	NO LEFT TURN		PORTABLE	2
D8	M4-8	END DETOUR		PORTABLE	2
D9		AVE 24 DETOUR NEXT EXIT	78" x 48"	PORTABLE	2
D10	M4-8	AVE 24	48" x 18"	PORTABLE	6
	M4-8	DETOUR ARROW		PORTABLE	6
D11		WEST AVE 24	48" x 24"	PORTABLE	1
	SC3(CA)	DETOUR AHEAD		PORTABLE	1
D12		EAST AVE 24	48" x 24"	PORTABLE	2
	SC3(CA)	DETOUR AHEAD		PORTABLE	2
D13	W20-3	ROAD CLOSED AHEAD		PORTABLE	3
D14		AVE 24 W/B CLOSED USE ALT ROUTE	90" x 48"	PORTABLE	1
D15		AVE 24 E/B CLOSED USE ALT ROUTE	90" x 48"	PORTABLE	1

TRAFFIC HANDLING QUANTITIES

THQ-2

STATE OF CALIFORNIA - DEPARTMENT OF TRANSPORTATION
Caltrans
TRAFFIC DESIGN

FUNCTIONAL SUPERVISOR: MOHAMMED QATAMI
CALCULATED-DESIGNED BY: MUNIR ASSAF
CHECKED BY: HASSAN TAHA
REVISED BY
DATE REVISED

LAST REVISION 03-10-10
DATE PLOTTED => 06-APR-2010
TIME PLOTTED => 14:07

Dist	COUNTY	ROUTE	POST MILES TOTAL PROJECT	SHEET No.	TOTAL SHEETS
06	Tul	99	2.9/3.3	70	128

REGISTERED CIVIL ENGINEER 03/10/10 DATE

4-5-10
PLANS APPROVAL DATE

REGISTERED PROFESSIONAL ENGINEER HASSAN M. TAHA No. 60130 Exp. 06/30/10 CIVIL STATE OF CALIFORNIA

THE STATE OF CALIFORNIA OR ITS OFFICERS OR AGENTS SHALL NOT BE RESPONSIBLE FOR THE ACCURACY OR COMPLETENESS OF SCANNED COPIES OF THIS PLAN SHEET.

LEGEND

- XX — TRAFFIC STRIPE PAVEMENT DELINEATION DETAIL NUMBER
- CHANGE OF TRAFFIC STRIPING DETAIL
- ROADSIDE SIGN (WITH NUMBER)
- RELOCATE ROADSIDE SIGN
- REMOVE ROADSIDE SIGN
- OBJECT MARKER (TYPE K, P , L-1...)
- DELINEATORS (CLASS 1,TYPE F)
- XX — ROADSIDE SIGN NUMBER
- XX — OVERHEAD SIGN STRUCTURE NUMBER

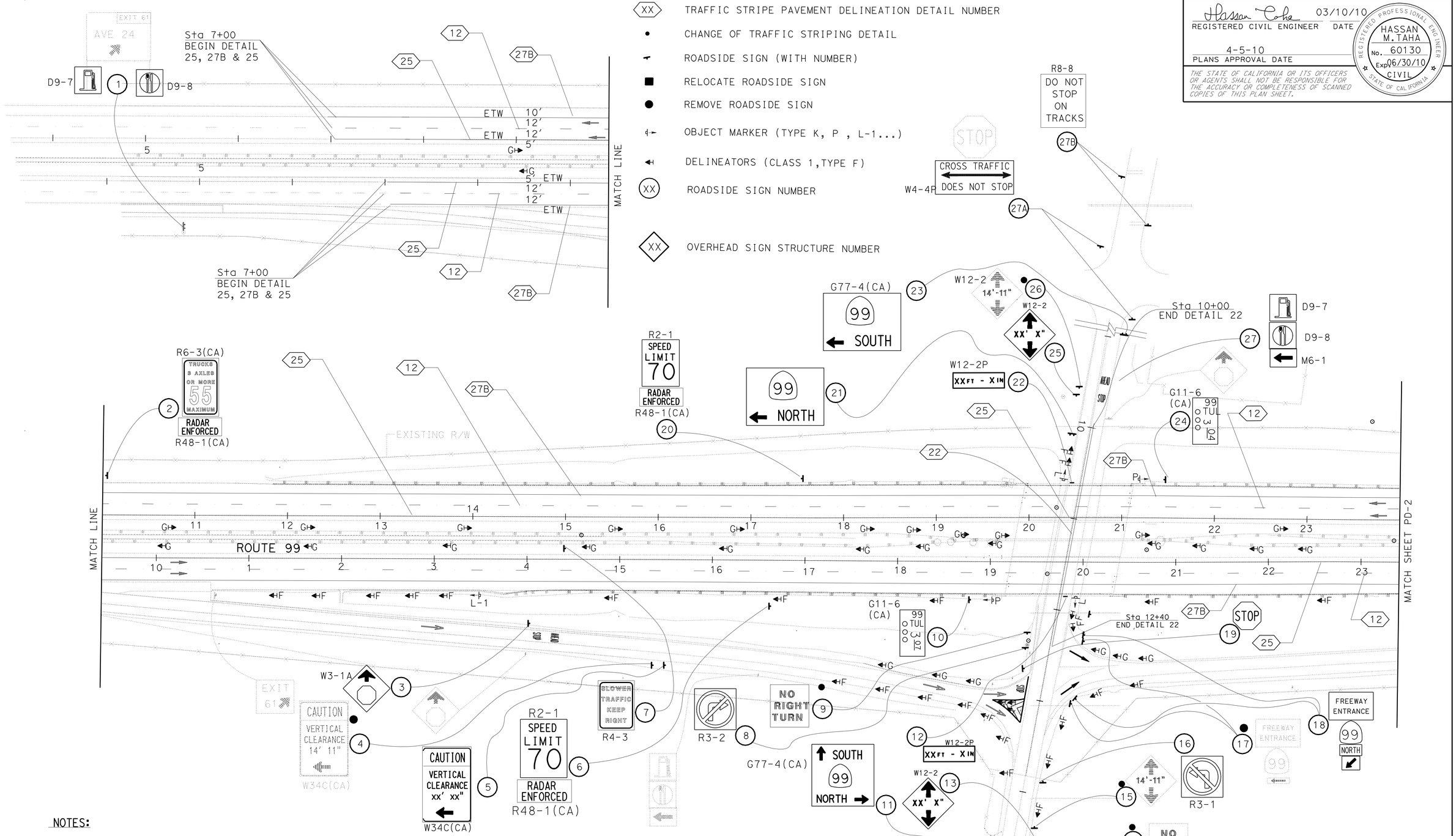

NOTES:

1. SIGN LOCATIONS SHOWN ARE APPROXIMATE. EXACT LOCATIONS TO BE DETERMINED BY THE ENGINEER.
2. FOR ADDITIONAL SIGNS DETAILS REFER TO THE CALIFORNIA M U T C D (MANUAL ON UNIFORMED TRAFFIC CONTROL DEVICES).

PAVEMENT DELINEATION PLAN

SCALE: 1" = 50'

PD-1

THIS PLAN IS ACCURATE FOR PAVEMENT DELINEATION AND SIGN WORK ONLY

STATE OF CALIFORNIA - DEPARTMENT OF TRANSPORTATION
Caltrans
TRAFFIC DESIGN

FUNCTIONAL SUPERVISOR: MOHAMMED QATAMI
CALCULATED-DESIGNED BY: MUNIR ASSAF
CHECKED BY: HASSAN TAHA
REVISED BY
DATE REVISED

LAST REVISION 03-10-10
DATE PLOTTED => 06-APR-2010
TIME PLOTTED => 14:07

Dist	COUNTY	ROUTE	POST MILES TOTAL PROJECT	SHEET No.	TOTAL SHEETS
06	Tul	99	2.9/3.3	71	128

Hassan Taha 03/10/10
REGISTERED CIVIL ENGINEER DATE

4-5-10
PLANS APPROVAL DATE

REGISTERED PROFESSIONAL ENGINEER
HASSAN M. TAHA
No. 60130
Exp 06/30/10
CIVIL
STATE OF CALIFORNIA

THE STATE OF CALIFORNIA OR ITS OFFICERS OR AGENTS SHALL NOT BE RESPONSIBLE FOR THE ACCURACY OR COMPLETENESS OF SCANNED COPIES OF THIS PLAN SHEET.

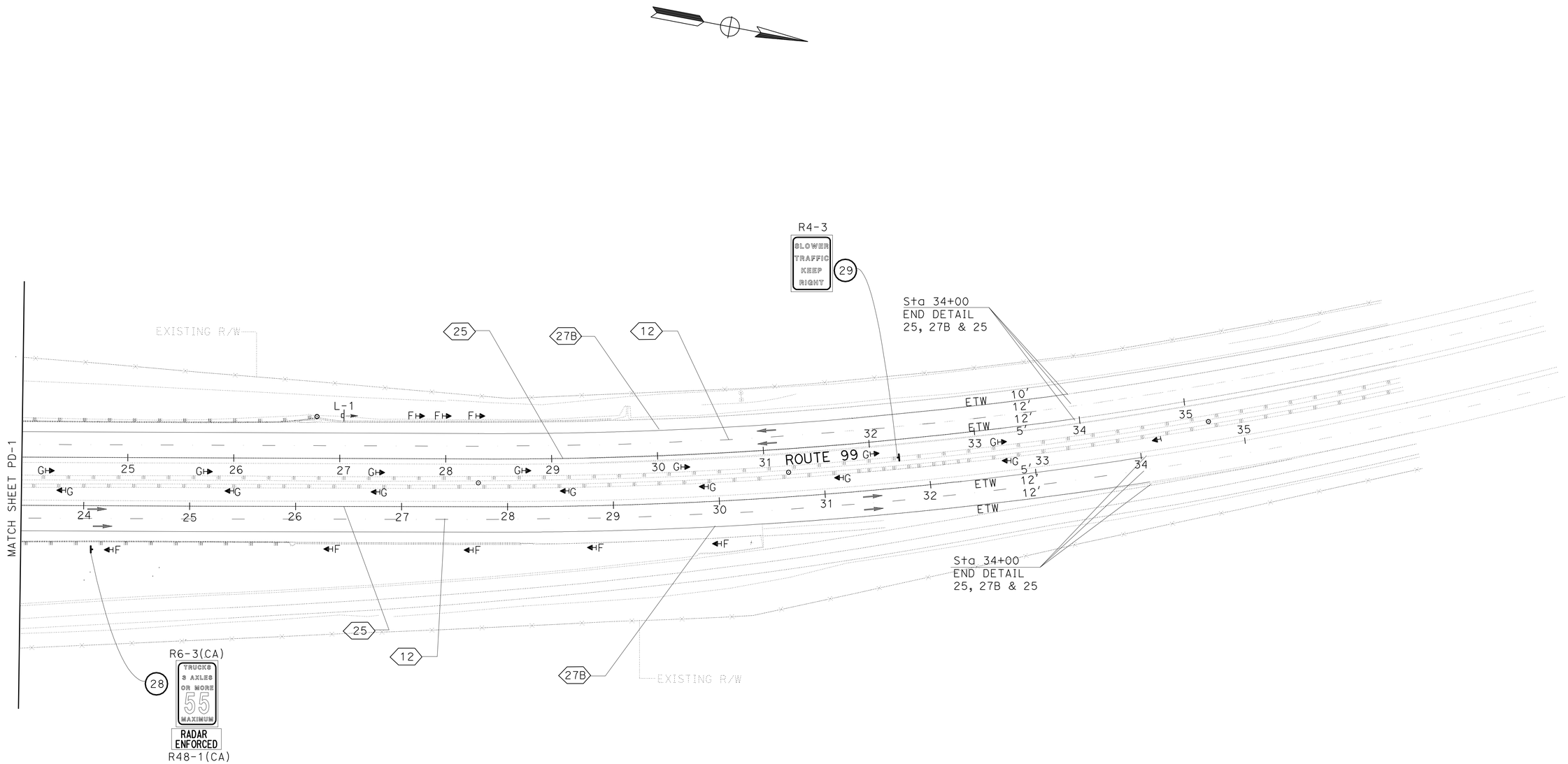

PAVEMENT DELINEATION PLAN

SCALE: 1" = 50'

PD-2

THIS PLAN IS ACCURATE FOR PAVEMENT DELINEATION AND SIGN WORK ONLY

STATE OF CALIFORNIA - DEPARTMENT OF TRANSPORTATION
Caltrans
TRAFFIC DESIGN

FUNCTIONAL SUPERVISOR: MOHAMMED QATAMI

CALCULATED-DESIGNED BY: MUNIR ASSAF
CHECKED BY: HASSAN TAHA

REVISED BY
DATE REVISED

LAST REVISION 03-10-10
DATE PLOTTED => 06-APR-2010
TIME PLOTTED => 14:07

Dist	COUNTY	ROUTE	POST MILES TOTAL PROJECT	SHEET No.	TOTAL SHEETS
06	Tul	99	2.9/3.3	72	128

Hassan Taha 03/10/10
REGISTERED CIVIL ENGINEER DATE

4-5-10
PLANS APPROVAL DATE

REGISTERED PROFESSIONAL ENGINEER HASSAN M. TAHA No. 60130 Exp 06/30/10 CIVIL STATE OF CALIFORNIA

THE STATE OF CALIFORNIA OR ITS OFFICERS OR AGENTS SHALL NOT BE RESPONSIBLE FOR THE ACCURACY OR COMPLETENESS OF SCANNED COPIES OF THIS PLAN SHEET.

PAVEMENT DELINEATION QUANTITIES

	LOCATION	DIRECTION	DETAIL No.	PAVEMENT MARKER (RETROREFLECTIVE) TYPE D	TYPE G	TYPE H	4" THERMOPLASTIC TRAFFIC STRIPE	4" THERMOPLASTIC TRAFFIC STRIPE (BROKEN 36-12)	THERMOPLASTIC PAVEMENT MARKING	
				EA	EA	EA	LF	LF	DESCRIPTION	SQFT
PD-1 TO PD-2	Sta 7+00 TO Sta 34+00 ROUTE 99	NB	27B				2700		(4) ARROW TYPE V	132
	Sta 7+00 TO Sta 34+00 ROUTE 99	NB	12		57			2700	(4) ARROW TYPE I	62
	Sta 7+00 TO Sta 34+00 ROUTE 99	NB	25			57	2700		STOP, AHEAD	53
PD-1 TO PD-2	Sta 7+00 TO Sta 34+00 ROUTE 99	SB	27B				2700			
	Sta 7+00 TO Sta 34+00 ROUTE 99	SB	12		57			2700		
	Sta 7+00 TO Sta 34+00 ROUTE 99	SB	25			57	2700			
	Sta10+00 TO Sta 12+40 Ave 24	WB/EB	22	22				480	STOP, AHEAD	53
	SUBTOTAL			22	114	114	10,800	5880		300
	TOTAL			250			10,800	5880		300

PAVEMENT DELINEATION QUANTITIES

PDQ-1

STATE OF CALIFORNIA - DEPARTMENT OF TRANSPORTATION
Caltrans® TRAFFIC DESIGN

FUNCTIONAL SUPERVISOR: MOHAMMED QATAMI
CALCULATED-DESIGNED BY: MUNIR ASSAF
CHECKED BY: HASSAN TAHA
REVISED BY
DATE REVISED

LAST REVISION 03-10-10
DATE PLOTTED => 06-APR-2010
TIME PLOTTED => 14:07

Dist	COUNTY	ROUTE	POST MILES TOTAL PROJECT	SHEET No.	TOTAL SHEETS
06	Tul	99	2.9/3.3	73	128

REGISTERED CIVIL ENGINEER 03/10/10 DATE

4-5-10
PLANS APPROVAL DATE

REGISTERED PROFESSIONAL ENGINEER HASSAN M. TAHA No. 60130 Exp 06/30/10 CIVIL STATE OF CALIFORNIA

THE STATE OF CALIFORNIA OR ITS OFFICERS OR AGENTS SHALL NOT BE RESPONSIBLE FOR THE ACCURACY OR COMPLETENESS OF SCANNED COPIES OF THIS PLAN SHEET.

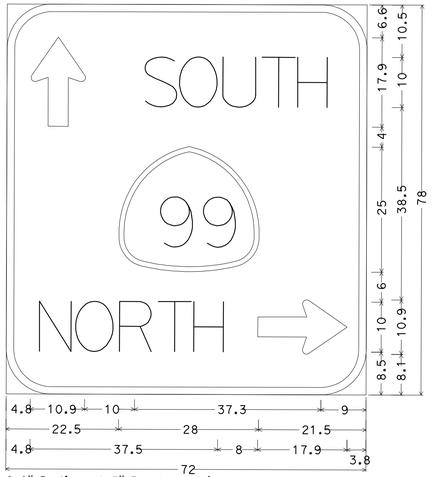

9.0" Radius, 1.5" Border, White on Green;
Standard Arrow Custom 17.9" X 10.9" 90{;
[SOUTH] D 50} spacing; [NORTH] D 50} spacing;
Standard Arrow Custom 17.9" X 10.9" 0{;
Table of distances between letter and object lefts.

4.8	⇧ 20.9	S 7.6	O 8.3	U 7.6	T 7.0	H 6.8	9.0

22.5	99 28.0	21.5

4.8	N 7.9	O 8.3	R 7.6	T 7.0	H 14.8	⇨ 17.8	3.8

SIGN No. 11

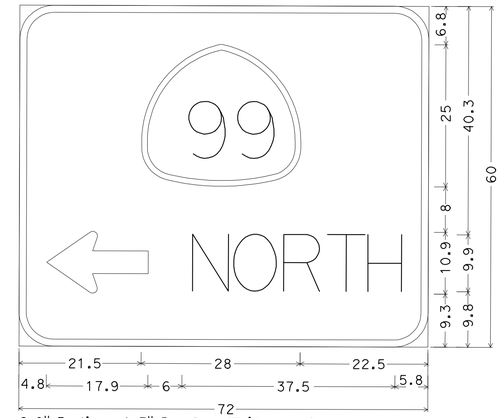

6.0" Radius, 1.3" Border, White on Green;
Standard Arrow Custom 17.9" X 10.9" 180{;
[NORTH] D 50} spacing;
Table of distances between letter and object lefts.

21.5	99 28.0	22.5

4.8	⇦ 23.9	N 7.9	O 8.1	R 7.8	T 7.0	H 6.8	5.8

SIGN No. 23

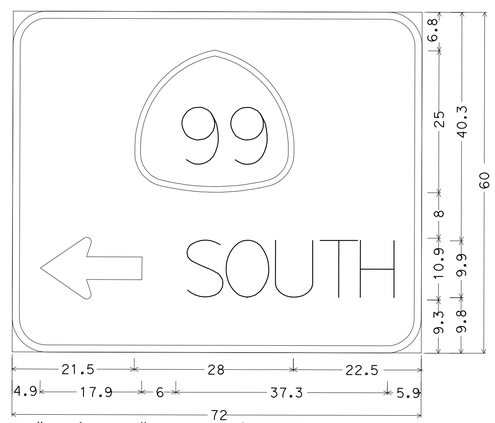

6.0" Radius, 1.3" Border, White on Green;
Standard Arrow Custom 17.9" X 10.9" 180{;
[SOUTH] D 50} spacing;
Table of distances between letter and object lefts.

21.5	99 28.0	22.5

4.9	⇦ 23.9	S 7.6	O 8.3	U 7.6	T 7.0	H 6.8	5.9

SIGN No. 21

SIGN DETAILS

SD-1

STATE OF CALIFORNIA - DEPARTMENT OF TRANSPORTATION
Caltrans® TRAFFIC DESIGN

FUNCTIONAL SUPERVISOR: MOHAMMED QATAMI
CALCULATED-DESIGNED BY: MUNIR ASSAF
CHECKED BY: HASSAN TAHA
REVISED BY
DATE REVISED

LAST REVISION 03-10-10
DATE PLOTTED => 06-APR-2010
TIME PLOTTED => 14:05

Dist	COUNTY	ROUTE	POST MILES TOTAL PROJECT	SHEET No.	TOTAL SHEETS
06	Tul	99	2.9/3.3	74	128

Hassan Taha 03/10/10
REGISTERED CIVIL ENGINEER DATE

4-5-10
PLANS APPROVAL DATE

REGISTERED PROFESSIONAL ENGINEER HASSAN M. TAHA No. 60130 Exp. 06/30/10 CIVIL STATE OF CALIFORNIA

THE STATE OF CALIFORNIA OR ITS OFFICERS OR AGENTS SHALL NOT BE RESPONSIBLE FOR THE ACCURACY OR COMPLETENESS OF SCANNED COPIES OF THIS PLAN SHEET.

ROADSIDE SIGN QUANTITIES

SHEET No.	SIGN No.	SIGN CODE	SIGN MESSAGE	No. OF POST AND POST SIZE	PANEL SIZE Horiz x Vert	SINGLE FACED	DOUBLE FACED	BACKGROUND SHEETING COLOR	BACKGROUND RETROREFLECTIVITY ASTM TYPE	LEGEND COLOR	LEGEND RETROREFLECTIVITY ASTM TYPE	PROTECTIVE OVERLAY STANDARD FILM	PROTECTIVE OVERLAY PREMIUM FILM	FURNISH SINGLE SHEET ALUMINUM SIGN (0.08" UNFRAMED) SQFT	FURNISH SINGLE SHEET ALUMINUM SIGN (0.063" UNFRAMED) SQFT	REMOVE ROADSIDE SIGN EA	ROADSIDE SIGN-ONE POST EA	INSTALL ROADSIDE SIGN PANEL ON EXISTING POST EA	ROADSIDE SIGN-TWO POST EA
PD-1	1	D9-7	GAS STATION		30" x 30"	x		WHITE	VIII	BLUE	Ix		x		6.25			1	
		D9-8	FOOD SERVICE		30" x 30"	x		WHITE	VIII	BLUE	Ix		x		6.25			1	
	2	R6-3(CA)	TRUCKS, 3-AXLES OR MORE 55 MAX	6" x 6"	48" x 60"	x		WHITE	VIII	BLACK			x	20			1		
		R48-1(CA)	RADAR ENFORCED		48" x 24"	x		WHITE	VIII	BLACK				8					
	3	W3-1A	STOP AHEAD	6" x 6"	48" x 48"	x		YELLOW	VIII	RED	Ix		x	20			1		
	4	W34C(CA)														1			
	5	W34C(CA)	CAUTION, VERTICAL CLEARANCE xx'-xx"	6" x 6"	36" x 54"	x		YELLOW	VIII	BLACK	Ix		x				1		
	6	R2-1	SPEED LIMIT	6" x 6"	48" x 60"	x		WHITE	VIII	BLACK				20			1		
		R48-1(CA)	RADAR ENFORCED		48" x 24"	x		WHITE	VIII	BLACK				8					
	7	R4-3	SLOWER TRAFFIC KEEP RIGHT	6" x 6"	48" x 60"	x		WHITE	VIII	BLACK				20			1		
	8	R3-2	NO RIGHT TURN SYMBOL	6" x 6"	48" x 48"	x		WHITE	VIII	BLACK/ RED	Ix		x	16			1		
	9	R16B(CA)	NO RIGHT TURN													1			
	10	G11-6	99, TUL xx-xx	4" x 4"	24" x 12"	x		WHITE	VIII	BLACK					2		1		
	11	G77-4(CA)	99, NORTH, SOUTH AND ARROWS	6" x 6"	72" x 78"	x		GREEN	VIII	WHITE	Ix		x	39					1
	12	W12-2P	VERTICAL CLEARANCE xx'-xx"		78" x 24"	x		YELLOW	VIII	BLACK	Ix		x	13					
	13	W12-2	VERTICAL CLEARANCE xx'-xx"	6" x 6"	48" x 48"	x		YELLOW	VIII	BLACK	Ix			16			1		
	14	R16B(CA)	NO RIGHT TURN													1			
	15	W12-2	VERTICAL CLEARANCE xx'-xx"													1			
	16	R3-1	NO LEFT TURN SYMBOL	6" x 6"	48" x 48"	x		WHITE	VIII	BLACK/ RED	Ix		x	16			1		
	17	G92(CA), G28(CA) &G33(CA)														2			
	18	G92(CA),	FREEWAY ENTRANCE	6" x 6"	48" x 30"	x		GREEN	VIII	WHITE	Ix		x		10		2		
		G28(CA),	SHIELD 99		31" x 30"	x		GREEN	VIII	WHITE	Ix		x		6.5				
		G47(CA)	NORTH		30" x 15"	x		GREEN	VIII	WHITE	Ix		x		3.2				
		G44(CA)/ G43(CA)	ARROW		21" x 15"	x		GREEN	VIII	WHITE	Ix		x		2.2				
	19	R1-1	STOP	4" x 6"	36" x 36"	x		RED	VIII	WHITE	Ix				9		1		
	20	R2-1	SPEED LIMIT	6" x 6"	48" x 60"	x		WHITE	VIII	BLACK				20			1		
		R48-1(CA)	RADAR ENFORCED		48" x 24"			WHITE	VIII	BLACK				8					
	21	G77-4(CA)	99, NORTH, AND ARROWS	6" x 6"	72" x 60"	x		GREEN	VIII	WHITE	Ix		x	30					1
	22	W12-2P	VERTICAL CLEARANCE xx'-xx"		78" x 24"	x		YELLOW	VIII	BLACK	Ix		x	13					
	23	G77-4(CA)	99, SOUTH, AND ARROWS	6" x 6"	72" x 60"	x		GREEN	VIII	WHITE	Ix		x	30					1
										SUBTOTAL				297	45.40	6	13	2	3

SIGN QUANTITIES

SQ-1

STATE OF CALIFORNIA - DEPARTMENT OF TRANSPORTATION
Caltrans® TRAFFIC DESIGN

FUNCTIONAL SUPERVISOR: MOHAMMED QATAMI
CALCULATED-DESIGNED BY: MUNIR ASSAF
CHECKED BY: HASSAN TAHA
REVISED BY
DATE REVISED

LAST REVISION 03-10-10
DATE PLOTTED => 06-APR-2010
TIME PLOTTED => 14:05

Dist	COUNTY	ROUTE	POST MILES TOTAL PROJECT	SHEET No.	TOTAL SHEETS
06	Tul	99	2.9/3.3	75	128

Hassan Taha 03/10/10
REGISTERED CIVIL ENGINEER DATE

4-5-10
PLANS APPROVAL DATE

REGISTERED PROFESSIONAL ENGINEER HASSAN M. TAHA No. 60130 Exp 06/30/10 CIVIL STATE OF CALIFORNIA

THE STATE OF CALIFORNIA OR ITS OFFICERS OR AGENTS SHALL NOT BE RESPONSIBLE FOR THE ACCURACY OR COMPLETENESS OF SCANNED COPIES OF THIS PLAN SHEET.

ROADSIDE SIGN QUANTITIES

SHEET No.	SIGN No.	SIGN CODE	SIGN MESSAGE	No. OF POST AND POST SIZE	PANEL SIZE Horiz X Vert	SIGN MATERIAL: SINGLE FACED	DOUBLE FACED	BACKGROUND: SHEETING COLOR	RETROREFLECTIVITY ASTM TYPE	LEGEND: COLOR	RETROREFLECTIVITY ASTM TYPE	PROTECTIVE OVERLAY: STANDARD FILM	PREMIUM FILM	FURNISH SINGLE SHEET ALUMINUM SIGN (0.08" UNFRAMED) SQFT	FURNISH SINGLE SHEET ALUMINUM SIGN (0.063" UNFRAMED) SQFT	REMOVE ROADSIDE SIGN EA	ROADSIDE SIGN-ONE POST EA	INSTALL ROADSIDE SIGN PANEL ON EXISTING POST EA	ROADSIDE SIGN-TWO POST EA
PD-1	24	G11-6	99, TUL XX-XX	4" X 4"	24" X 12"	X		WHITE	VIII	BLACK			X		2		1		
	25	W12-2	VERTICAL CLEARANCE XX'-XX"	6" X 6"	48" X 48"	X		YELLOW	VIII	BLACK			X	16			1		
	26	W12-2	VERTICAL CLEARANCE XX'-XX"													1			
	27	D9-7	GAS STATION	6" X 6"	30" X 30"	X		BLUE	VIII	WHITE	IX		X		6.25		1		
		D9-8	FOOD SERVICE			X		BLUE	VIII	WHITE	IX		X		6.25				
		M6-1	ARROW		21" X 15"	X		BLUE	VIII	WHITE	IX		X		2.2				
	27A	W4-4P	CROSS TRAFFIC DOES NOT STOP (ARROW)		30" X 24"	X		YELLOW	VIII	BLACK			X		5			2	
	27B	R8-8	DO NOT STOP ON TRACKS	4" X 6"	36" X 48"	X		WHITE	VIII	BLACK			X	12			2		
PD-2	28	R6-3(CA)	TRUCKS, 3-AXLES OR MORE 55 MAX	6" X 6"	48" X 60"	X		WHITE	VIII	BLACK			X	20			1		
		R48-1(CA)	RADAR ENFORCED		48" X 24"	X		WHITE	VIII	BLACK			X	8					
	29	R4-3	SLOWER TRAFFIC KEEP RIGHT	6" X 6"	48" X 60"	X		WHITE	VIII	BLACK				20			1		
	SUB TOLTAL SHEET SQ-1													297	45.40	6	13	2	3
	TOTAL													373	67.10	7	20	4	3

DELINEATORS AND MARKERS

SHEET No.	DELINEATOR (CLASS 1) TYPE (F)	TYPE (G)	OBJECT MARKER TYPE (L-1)	TYPE (P)
	EA	EA	EA	EA
PD-1	26	31	3	2
PD-1	8	15	1	
SUBTOTAL	34	46	4	2
TOTAL	80		6	

SIGN QUANTITIES

SQ-2

REVISED BY | DATE REVISED
MUNIR ASSAF | HASSAN TAHA
CALCULATED-DESIGNED BY | CHECKED BY
FUNCTIONAL SUPERVISOR: MOHAMMED QATAMI
STATE OF CALIFORNIA - DEPARTMENT OF TRANSPORTATION
Caltrans® TRAFFIC DESIGN

LAST REVISION 03-10-10 | DATE PLOTTED => 06-APR-2010 | TIME PLOTTED => 14:05

Dist	COUNTY	ROUTE	POST MILES TOTAL PROJECT	SHEET No.	TOTAL SHEETS
06	Tul	99	2.9/3.3	76	128

A Ahmad 03-11-10
REGISTERED CIVIL ENGINEER DATE

4-5-10
PLANS APPROVAL DATE

REGISTERED PROFESSIONAL ENGINEER AHMAD K. AHMAD No. 69064 Exp. 6-30-10 CIVIL STATE OF CALIFORNIA

THE STATE OF CALIFORNIA OR ITS OFFICERS OR AGENTS SHALL NOT BE RESPONSIBLE FOR THE ACCURACY OR COMPLETENESS OF SCANNED COPIES OF THIS PLAN SHEET.

EARTHWORK

STAGE	LOCATION	STATION TO STATION	Rdwy Exc	Rdwy Emb	IMPORTED BORROW
			CY	CY(N)	CY
STAGE 1, PHASE 2 & STAGE 2, PHASE 1	NB DETOUR AND NB SHOULDERS	10+00.00 TO 32+29.25	1,281	256	
STAGE 2, PHASE 2	NB DETOUR REMOVAL	10+00.00 TO 32+29.25	256	383	165
STAGE 3, PHASE 1 & STAGE 3, PHASE 2	SB DETOUR AND SB SHOULDERS	08+25.00 TO 33+61.45	1,590	338	
STAGE 3, PHASE 3	SB DETOUR REMOVAL	11+54.34 TO 30+60.42	338	350	63
		TOTAL	3,465		228

(N) NOT A SEPARATE PAY ITEM, FOR INFORMATION ONLY

TACK COAT

LOCATION	LOCATION/ DIRECTION	STATION TO STATION	TON
STATE ROUTE 99 TRAVELWAY	SB	11+54.34 TO 30+60.42	10.4
	NB	11+29.13 TO 29+51.46	
NEW AND REPLACE SHOULDER	SB	08+25.00 TO 33+61.45	3.4
	NB	10+00.00 TO 32+29.24	
INSIDE SHOULDER ADJACENT TO JPCP	SB	17+69.76 TO 23+47.72	0.2
	NB	16+51.60 TO 23+36.41	
COLD PLANE REPLACEMENT		14+38.84 TO 26+88.83	3.1
	AVENUE 24	10+00.00 TO 12+00.00	
RUMBLE STRIP COLD PLANE AND OVERLAY	SB	14+38.84 TO 26+79.48	0.2
	NB	13+75.46 TO 25+97.12	
		TOTAL	17.3

HOT MIX ASPHALT DIKE

SIDE	STATION TO STATION	REMOVE AC DIKE	PLACE HOT MIX ASPHALT DIKE (TYPE F)	PLACE HOT MIX ASPHALT DIKE (TYPE E)	HOT MIX ASPHALT
		LF	LF	LF	TON
L+	11+74.94 TO 14+38.84		263.9		3.7
	14+38.84 TO 19+73.72	534.9	534.9		7.5
	19+73.72 TO 19+82.86	9.1			
	21+25.67 TO 21+34.07	8.4			
	21+34.07 TO 26+79.48	545.4	545.4		7.7
	26+79.48 TO 29+69.83			290.4	8.0
R+	12+01.45 TO 13+75.46			174.0	4.8
	13+75.46 TO 18+94.28	518.8	518.8		7.3
	18+94.28 TO 19+02.67	8.4			
	20+44.94 TO 20+54.59	9.7			
	20+54.59 TO 25+97.12	542.5	542.5		7.6
	25+97.12 TO 28+21.13			224.0	6.2
	TOTAL	2177.2	2405.5	688.4	52.8 **

** QUANTITY INCLUDED IN HOT MIX ASPHALT TABLE

HOT MIX ASPHALT (TYPE A)

DESCRIPTION	HOT MIX ASPHALT
	TON
STATE ROUTE 99 DETOUR	6,762.8
SHOULDER COLD PLANE AND OVERLAY	1,367.0
INSIDE SHOULDER ADJACENT TO JPCP	100.7
NEW AND REPLACE SHOULDER	1,847.2
HOT MIX ASPHALT DIKES	52.8
HMA OVERSIDE DRAINS	16.0
HOT MIX ASPHALT BASE	781.0
TOTAL	10,927.5

HOT MIX ASPHALT BASE

LOCATION	STATION TO STATION	HOT MIX ASPHALT (TYPE A) (N)
		TON
SB JPCP AREA	17+69.76 TO 19+67.61	164.5
SB JPCP AREA	21+27.65 TO 23+47.72	182.9
NB JPCP AREA	16+51.60 TO 19+00.64	206.2
NB JPCP AREA	20+60.64 TO 23+36.41	227.4
	TOTAL	781.0

(N) NOT A SEPARATE PAY ITEM, QUANTITY INCLUDED IN HMA (TYPE A) TABLE

CLASS 2 AGGREGATE BASE

LOCATION	STATION TO STATION	CY
SB OUTSIDE SHOULDER	08+25.00 TO 14+38.84	238.7
SB OUTSIDE SHOULDER	19+59.68 TO 19+67.61	3.1
SB OUTSIDE SHOULDER	21+27.65 TO 21+36.28	3.4
SB OUTSIDE SHOULDER	26+79.48 TO 33+61.45	265.2
NB OUTSIDE SHOULDER	10+58.94 TO 13+75.46	123.1
NB OUTSIDE SHOULDER	18+91.93 TO 19+00.64	3.4
NB OUTSIDE SHOULDER	20+60.64 TO 20+68.97	3.2
NB OUTSIDE SHOULDER	25+97.12 TO 30+39.15	171.9
SB INSIDE SHOULDER	17+69.76 TO 19+67.61	14.5
SB INSIDE SHOULDER	21+27.65 TO 23+47.72	12.7
NB INSIDE SHOULDER	16+51.60 TO 19+00.64	18.7
NB INSIDE SHOULDER	20+60.64 TO 23+36.41	15.4
	TOTAL	873.3

REMOVE EXISTING CONCRETE PAVEMENT

DIRECTION	STATION TO STATION	REMOVE CONCRETE Pvm+		REMOVE CTB (N)*	REMOVE SELECTED MATERIAL (N)*	REMOVE TPB (N)*
		TRAVELLED WAY	STRUCTURE APPROACH SLAB			
		CY	CY	CY	CY	CY
SB	17+69.76 TO 19+59.68	184.1		59.6	3.0	
SB	19+59.68 TO 19+67.61		11.4			5.7
SB	21+27.65 TO 21+36.28		12.2			6.1
SB	21+36.28 TO 23+47.72	199.6		64.6	3.2	
NB	16+51.60 TO 18+91.93	229.0		74.1	3.7	
NB	18+91.93 TO 19+00.64		12.3			6.2
NB	20+60.64 TO 20+68.97		11.7			5.9
NB	20+68.97 TO 23+36.41	255.0		82.5	4.1	
	TOTAL	915.3		280.8	14.0	23.9

(N) NOT A SEPARATE PAY ITEM, FOR INFORMATION ONLY.

(N)* NOT A SEPARATE PAY ITEM, QUANTITY INCLUDED IN EARTHWORK.

JOINTED PLAIN CONCRETE PAVEMENT

DIRECTION	STATION TO STATION	LENGTH (N)	WIDTH (N)	DEPTH (N)	GRIND Exist CONCRETE PAVEMENT	JPCP	TIE BAR (N)	DOWEL BAR (N)	SEAL ISOLATION JOINT	SEAL PAVEMENT JOINT
		LF	LF	LF	SQYD	CY	EA	LF	LF	LF
SB	17+69.76 TO 19+67.61	197.7	24.0	1.2	546.7	218.7	85	504.0	443.4	557.7
SB	21+27.65 TO 23+47.72	219.9	24.0	1.2	598.1	239.2	95	684.0	487.8	627.9
NB	16+51.60 TO 19+00.64	248.9	24.0	1.2	673.0	269.2	105	756.0	545.8	628.9
NB	20+60.64 TO 23+36.41	275.6	24.0	1.2	754.3	301.7	115	864.0	599.2	803.6
				TOTAL	2572.1	1028.8			2076.2	2618.1

(N) NOT A SEPARATE PAY ITEM, FOR INFORMATION ONLY.

SUMMARY OF QUANTITIES

Q-1

REVISED BY | DATE REVISED
RANJIT K MONDAL | AHMAD K AHMAD
CALCULATED-DESIGNED BY | CHECKED BY
FUNCTIONAL SUPERVISOR: ALI ALQATAMI
STATE OF CALIFORNIA - DEPARTMENT OF TRANSPORTATION
DESIGN
Caltrans

LAST REVISION 03-11-10 | DATE PLOTTED => 06-APR-2010 | TIME PLOTTED => 14:05

Dist	COUNTY	ROUTE	POST MILES TOTAL PROJECT	SHEET No.	TOTAL SHEETS
06	Tul	99	2.9/3.3	77	128

A Ahmad 03-11-10
REGISTERED CIVIL ENGINEER DATE

4-5-10
PLANS APPROVAL DATE

REGISTERED PROFESSIONAL ENGINEER AHMAD K. AHMAD No. 69064 Exp. 6-30-10 CIVIL STATE OF CALIFORNIA

THE STATE OF CALIFORNIA OR ITS OFFICERS OR AGENTS SHALL NOT BE RESPONSIBLE FOR THE ACCURACY OR COMPLETENESS OF SCANNED COPIES OF THIS PLAN SHEET.

METAL BEAM GUARD RAILING

STATION TO STATION	DIRECTION	LOCATION	LAYOUT TYPE (N)	REMOVE MBGR (WOOD POST)	MBGR (STEEL POST)	TRANSITION RAILING (TYPE WB)	ALTERNATIVE FLARED TERMINAL SYSTEM	END ANCHOR ASSEMBLY (TYPE SFT)
				LF	LF	EA	EA	EA
11+84.49 TO 19+73.72	SB	SOUTH END OF AVENUE 24 UC Br # 46-0169L	12DD	789.2	714.2			1
19+73.72 TO 19+82.86	SB	SOUTH END OF AVENUE 24 UC Br # 46-0169L	12DD	9.1				
21+25.67 TO 21+34.07	SB	NORTH END OF AVENUE 24 UC Br # 46-0169L	12B	8.4				
21+34.07 TO 26+74.20	SB	NORTH END OF AVENUE 24 UC Br # 46-0169L	12B	540.1	465.1	1	1	
13+75.46 TO 18+94.28	NB	SOUTH END OF AVENUE 24 UC Br # 46-0169R	12B	518.8	443.8	1	1	
18+94.28 TO 19+02.67	NB	SOUTH END OF AVENUE 24 UC Br # 46-0169R	12B	8.4				
20+44.94 TO 20+54.59	NB	NORTH END OF AVENUE 24 UC Br # 46-0169R	12DD	9.7				
20+54.59 TO 25+97.12	NB	NORTH END OF AVENUE 24 UC Br # 46-0169R	12DD	542.5	467.5			1
			TOTAL	2,426.2	2,090.6	2	2	2

(N) NOT A SEPARATE PAY ITEM, FOR INFORMATION ONLY.

THRIE BEAM BARRIER

STATION TO STATION	DIRECTION	SIDE (IN MEDIAN)	Exist BARRIER TYPE (N)	Exist SINGLE THRIE BEAM BARRIER TO BE REMOVED AND RECONSTRUCTED (N)	REMOVE TRANSITION RAILING (TYPE STB) (N)	REMOVE END ANCHOR ASSEMBLY (TYPE SFT) (N)	REMOVE CONCRETE ANCHOR (N)	RECONSTRUCT SINGLE THRIE BEAM BARRIER (STEEL POST)	TRANSITION RAILING TYPE (DTB)
				LF	EA	EA	EA	LF	LF
10+00 TO 19+70.49	SB	Rt	STBB	970.5		1	1		
21+25.67 TO 31+86.45	SB	Rt	STBB	1,060.8	1				
9+41.58 TO 19+12.23	NB	Lt	STBB	970.7	1				
20+50.80 TO 31+31.93	NB	Lt	STBB	1,081.1		1	1		
10+00.00 TO 19+39.19	SB	Rt	STBB					939.2	
19+39.19 TO 19+64.19	SB	Rt	STBB						1
21+22.62 TO 21+47.62	SB	Rt	STBB						
21+47.62 TO 31+86.45	SB	Rt	STBB					1,038.8	
09+41.58 TO 18+80.73	NB	Lt	STBB					939.2	
18+80.73 TO 19+05.73	NB	Lt	STBB						1
20+64.12 TO 20+89.12	NB	Lt	STBB						
20+89.12 TO 31+31.93	NB	Lt	STBB					1,042.8	
			TOTAL	4,083.1	2	2	2	3,960.0	2

(N) NOT A SEPARATE PAY ITEM, FOR INFORMATION ONLY.

RUMBLE STRIP

DIRECTION	STATION TO STATION	SIDE	RUMBLE STRIP
			STA
SB Rte 99	08+60.00 TO 19+67.61	Lt	11.1
SB Rte 99	21+27.65 TO 33+26.45	Lt	12.0
SB Rte 99	10+00.00 TO 19+67.61	Rt	9.7
SB Rte 99	21+27.65 TO 31+86.45	Rt	10.6
NB Rte 99	10+00.00 TO 19+00.64	Lt	9.0
NB Rte 99	20+60.64 TO 32+29.24	Lt	11.7
NB Rte 99	10+58.94 TO 19+00.64	Rt	8.4
NB Rte 99	20+60.64 TO 30+39.15	Rt	9.8
		TOTAL	82.3

SURVEY MONUMENT

POINT NAME	LOCATION	DESCRIPTION	SURVEY MONUMENT
			EA
CP#603	11′ SOUTH OF EP OF EAST BOUND AVENUE 24 AND 5′ WEST OF Exist POWER POLE AT A DEPTH 0.8′ BELOW GROUND	1" IRON PIPE WITH RCTP	1
#204	3′ EAST OF EP OF NORTH BOUND LANE AND 0.4′ DOWN (PM 3.1)	1" PIPE WITH RED PLUG	1
#205	6′ WEST OF EP OF NORTH BOUND LANE (IN MEDIAN) (PM 3.2)	BRASS CAP IN CONCRETE	1
		TOTAL	3

TEMPORARY FIBER ROLL

DIRECTION	STATION TO STATION	LOCATION *	TEMPORARY FIBER ROLL
			LF
SB Rte 99	17+10.00 TO 20+25.00	55′ Lt, EMBANKMENT SLOPE	315.0
		70′ Lt, EMBANKMENT SLOPE	315.0
SB Rte 99	20+95.00 TO 24+05.00	55′ Lt, EMBANKMENT SLOPE	310.0
		70′ Lt, EMBANKMENT SLOPE	310.0
NB Rte 99	16+40.00 TO 19+50.00	55′ Lt, EMBANKMENT SLOPE	310.0
		70′ Lt, EMBANKMENT SLOPE	310.0
NB Rte 99	20+00.00 TO 23+15.00	55′ Lt, EMBANKMENT SLOPE	315.0
		70′ Lt, EMBANKMENT SLOPE	315.0
Ave 24	10+00.00 TO 12+75.00	20′ Lt, EMBANKMENT SLOPE	275.0
		30′ Lt, EMBANKMENT SLOPE	275.0
Ave 24	10+00.00 TO 12+25.00	20′ Lt, EMBANKMENT SLOPE	225.0
		30′ Lt, EMBANKMENT SLOPE	225.0
		TOTAL	3500.0

* EXACT LOCATION TO BE DETERMINED BY THE ENGINEER

Temp FENCE (TYPE ESA)

DIRECTION	STATION	LOCATION	Temp FENCE (TYPE ESA)
			LF
NB Rte 99	15+00.00	62.0′ Rt	50.0
NB Rte 99	16+91.00	76.3′ Rt	50.0
NB Rte 99	17+86.00	85.0′ Rt	50.0
NB Rte 99	18+74.00	73.0′ Rt	50.0
NB Rte 99	20+54.00	71.5′ Rt	50.0
NB Rte 99	20+83.40	78.5′ Rt	50.0
NB Rte 99	23+74.00	66.0′ Rt	50.0
NB Rte 99	24+06.00	64.0′ Rt	50.0
NB Rte 99	24+71.00	60.6′ Rt	50.0
		TOTAL	450.0

ABANDON PIPELINE

DIRECTION	STATION	ABADON PIPELINE
		LF
SB Rte 99	19+38.70	50.0
SB Rte 99	21+88.76	50.0
NB Rte 99	18+53.50	50.0
NB Rte 99	21+03.57	50.0
	TOTAL	200.0

Temp CONSTRUCTION ENTRANCE

DESCRIPTION	Temp CONSTRUCTION ENTRANCE
	EA
STAGE 1, PHASE 2*	2
STAGE 2, PHASE 1*	1
STAGE 3, PHASE 2*	1
TOTAL	4

* EXACT LOCATION TO BE DETERMINED BY THE ENGINEER

SUMMARY OF QUANTITIES

Q-2

STATE OF CALIFORNIA - DEPARTMENT OF TRANSPORTATION
Caltrans DESIGN
FUNCTIONAL SUPERVISOR: ALI ALQATAMI
CALCULATED-DESIGNED BY: AHMAD K AHMAD
CHECKED BY
REVISED BY: RANJIT K MONDAL
DATE REVISED

LAST REVISION 03-11-10 | DATE PLOTTED => 06-APR-2010 | TIME PLOTTED => 14:05

Dist	COUNTY	ROUTE	POST MILES TOTAL PROJECT	SHEET No.	TOTAL SHEETS
06	Tul	99	2.9/3.3	78	128

A Ahmad 03-11-10
REGISTERED CIVIL ENGINEER DATE

4-5-10
PLANS APPROVAL DATE

REGISTERED PROFESSIONAL ENGINEER AHMAD K. AHMAD No. 69064 Exp. 6-30-10 CIVIL STATE OF CALIFORNIA

THE STATE OF CALIFORNIA OR ITS OFFICERS OR AGENTS SHALL NOT BE RESPONSIBLE FOR THE ACCURACY OR COMPLETENESS OF SCANNED COPIES OF THIS PLAN SHEET.

COLD PLANE ASPHALT CONCRETE PAVEMENT

STAGE	DIRECTION	LOCATION	STATION* FROM	STATION* TO	LENGTH (N)	WIDTH (N)	COLD PLANE THICKNESS	COLD PLANE AC Pvmt	HOT MIX ASPHALT DEPTH (N)	HOT MIX ASPHALT (TYPE A) (**)
								SQYD		TON
STAGE 1 PHASE 1	SB Rte 99	OUTSIDE SHOULDER	14+38.84	19+59.68	520.8′	2.5′	0.20′ TO 0.10′	144.7	0.20′ TO 0.10′	15.4
	SB Rte 99	OUTSIDE SHOULDER	21+36.28	26+79.48	543.2′	2.5′	0.20′ TO 0.10′	150.9	0.20′ TO 0.10′	16.0
	NB Rte 99	OUTSIDE SHOULDER	13+75.46	18+91.93	516.5′	2.5′	0.20′ TO 0.10′	143.5	0.20′ TO 0.10′	15.3
	NB Rte 99	OUTSIDE SHOULDER	20+68.97	25+97.12	528.2′	2.5′	0.20′ TO 0.10′	146.7	0.20′ TO 0.10′	15.6
STAGE 1 PHASE 2	SB Rte 99	INSIDE SHOULDER	14+38.84	17+69.76	330.9′	5.0′	0.25′ TO 0.35′	183.8	0.35′ TO 0.55′	58.6
	SB Rte 99	INSIDE SHOULDER	17+69.76	19+59.68	189.9′	3.6′	0.15′	29.0	0.15′ TO 0.70′	9.2
	NB Rte 99	INSIDE SHOULDER	21+27.65	23+47.72	220.1′	4.0′	0.15′	25.3	0.15′ TO 0.70′	8.1
	NB Rte 99	INSIDE SHOULDER	23+47.72	26+79.48	331.8′	5.0′	0.25′ TO 0.35′	184.3	0.35′ TO 0.55′	58.8
STAGE 2 PHASE 1	SB Rte 99	OUTSIDE SHOULDER	14+38.84	19+59.68	520.8′	10.5′	0.25′ TO 0.35′	604.8	0.35′ TO 0.45′	171.4
	SB Rte 99	OUTSIDE SHOULDER	21+27.81	26+79.48	551.7′	10.5′	0.25′ TO 0.35′	637.5	0.35′ TO 0.45′	180.7
STAGE 3 PHASE 1	NB Rte 99	INSIDE SHOULDER	13+75.46	16+51.60	276.1′	5.0′	0.25′ TO 0.35′	153.4	0.35′ TO 0.55′	48.9
	NB Rte 99	INSIDE SHOULDER	16+51.60	18+91.93	240.3′	3.6′	0.15′	95.9	0.15′ TO 0.70′	30.6
	NB Rte 99	INSIDE SHOULDER	20+68.97	23+36.41	267.4′	3.7′	0.15′	109.9	0.15′ TO 0.70′	35.1
	NB Rte 99	INSIDE SHOULDER	23+36.41	25+97.12	260.7′	5.0′	0.25′ TO 0.35′	144.8	0.35′ TO 0.55′	46.2
STAGE 3 PHASE 2	NB Rte 99	OUTSIDE SHOULDER	13+75.46	18+91.93	516.5′	10.5′	0.25′ TO 0.35′	605.4	0.35′ TO 0.45′	171.6
	NB Rte 99	OUTSIDE SHOULDER	20+68.97	25+97.12	528.2′	10.9′	0.25′ TO 0.35′	636.7	0.35′ TO 0.45′	180.5
STAGE 4	SB Rte 99	INSIDE SHOULDER	10+00.00	19+67.61	967.6′	5.0′	0.15′ TO 0.35′	537.5	0.15′	57.1
	SB Rte 99	INSIDE SHOULDER	21+27.65	31+86.45	1,058.8′	5.0′	0.15′ TO 0.35′	588.1	0.15′	62.5
	NB Rte 99	INSIDE SHOULDER	10+00.00	19+00.64	900.6′	5.0′	0.15′ TO 0.35′	500.3	0.15′	53.2
	NB Rte 99	INSIDE SHOULDER	20+60.64	25+97.12	536.5′	5.0′	0.15′ TO 0.35′	298.0	0.15′	31.7
	NB Rte 99	INSIDE SHOULDER	25+97.12	28+21.13	224.0′	5.0′	0.15′ TO 0.25′	124.5	0.15′	13.2
AVENUE 24 STAGE 2	EB Ave 24	TRAVELED WAY	10+00.00	12+00.00	200.0′	14.7′	0.20′	326.7	0.20′	46.3
	WB Ave 24	TRAVELED WAY	10+00.00	12+00.00	200.0′	13.0′	0.20′	288.9	0.20′	41.0
							TOTAL	6 660.9		1 367.0

(N) NOT A SEPARATE PAY ITEM, FOR INFORMATION ONLY
* EXACT LOCATIONS TO BE DETERMINED BY THE ENGINEER.
**QUANTITY INCLUDED IN HOT MIX ASPHALT

REMOVE ASPHALT CONCRETE SURFACING

DIRECTION	STATION TO STATION	LOCATION/DESCRIPTION	AREA (N)	DEPTH (N)	REMOVE AC SURFACING
			SQFT		CY
SB Rte 99	11+54.34 TO 19+67.61	DETOUR IN MEDIAN, SOUTH END OF AVENUE 24 UC Br	18 422	1.10′	750.5
SB Rte 99	21+27.65 TO 30+60.42	DETOUR IN MEDIAN, NORTH END OF AVENUE 24 UC Br	23 817	1.10′	970.3
NB Rte 99	11+29.13 TO 19+00.64	DETOUR IN MEDIAN, SOUTH END OF AVENUE 24 UC Br	16 450	1.10′	670.2
NB Rte 99	20+60.64 TO 29+51.46	DETOUR IN MEDIAN, NORTH END OF AVENUE 24 UC Br	17 270	1.10′	703.6
				TOTAL	3094.6

(N) NOT A SEPARATE PAY ITEM, FOR INFORMATION ONLY.

EROSION CONTROL

DIRECTION	DESCRIPTION: COMPOST BLANKET (CY)	HYDROSEED (SQFT)	ROLLED EROSION CONTROL PRODUCT (BLANKET) (SQFT)
SOUTHBOUND	10.75	13,113	3618
NORTHBOUND	21.3	27,095	3978
MEDIAN	55.0	69,826	———
TOTAL	87.0	110,034	7596

DRAINAGE QUANTITIES

DIRECTION/ LOCATION	STATION*	SIDE (LEFT/ RIGHT)	REMOVE DOWNDRAIN	12" CSP DOWNDRAIN (0.079" THICK)	HMA OVERSIDE DRAINS: HMA (Misc Area)	HMA** (TYPE A)	12" ENTRANCE TAPER
			EA	LF	SQYD	TON	EA
SOUTHBOUND ROUTE 99	11+74.94	LEFT			2.6	0.78	
	15+56.02	LEFT			3.2	0.87	
	18+06.23	LEFT			5.3	1.44	
	23+71.08	LEFT			2.4	0.70	
	26+70.95	LEFT	1	50			1
	26+79.48	LEFT			10.1	2.70	
	29+72.45	LEFT			9.0	2.40	
NORTHBOUND ROUTE 99	12+00.00	RIGHT			2.6	0.72	
	13+75.46	RIGHT			7.7	2.10	
	14+93.80	RIGHT			1.8	0.51	
	17+43.64	RIGHT			3.9	1.05	
	23+17.18	RIGHT			4.3	1.17	
	25+97.12	RIGHT			1.8	0.51	
	28+21.91	RIGHT			4.3	1.05	
TOTAL			1	50	59	16	1

* EXACT LOCATIONS TO BE DETERMINED BY THE ENGINEER.
** QUANTITY INCLUDED IN HOT MIX ASPHALT

SUMMARY OF QUANTITIES

Q-3

REVISED BY | DATE REVISED
RANJIT K MONDAL | AHMAD K AHMAD
CALCULATED-DESIGNED BY | CHECKED BY
FUNCTIONAL SUPERVISOR: ALI ALQATAMI
STATE OF CALIFORNIA - DEPARTMENT OF TRANSPORTATION
Caltrans DESIGN

LAST REVISION 03-11-10 | DATE PLOTTED => 06-APR-2010 | TIME PLOTTED => 14:05

Dist	COUNTY	ROUTE	POST MILES TOTAL PROJECT	SHEET No.	TOTAL SHEETS
06	Tul	99	2.9/3.3	79	128

LICENSED LANDSCAPE ARCHITECT

4-5-10
PLANS APPROVAL DATE

RICHARD B. COLE No. 3125 LICENSED LANDSCAPE ARCHITECT STATE OF CALIFORNIA
EXPIRATION DATE 06/30/10
REGISTERED DATE 02/08/10
DATE

THE STATE OF CALIFORNIA OR ITS OFFICERS OR AGENTS SHALL NOT BE RESPONSIBLE FOR THE ACCURACY OR COMPLETENESS OF SCANNED COPIES OF THIS PLAN SHEET.

ABBREVIATIONS

AMEND — amendment
B & B — balled and burlapped
Dia — diameter
EA — each
LB — pound
Oz — ounce
Ft — foot/feet
SQFT — square feet
SQYD — square yard
CF — cubic feet
Max — maximum
Min — minimum
NCN — no common name
No. — number
Pkt — packet
PLT ESTB - plant establishment
Pvmt — pavement
R/W — right of way
SF — state furnished
TRVD — traveled

LEGEND

SYMBOL	ITEM DESCRIPTION
	EXISTING TREES TO REMAIN

PLANT LIST AND PLANTING SPECIFICATIONS

PLANT GROUP	PLANT No.	SYMBOL	BOTANICAL NAME	COMMON NAME	SIZE	QUANTITY EACH	HOLE SIZE (INCH) Dia	HOLE SIZE (INCH) DEPTH	BASIN TYPE	IRON SULFATE ①	SOIL AMEND ①	COMMERCIAL FERTILIZER ① PLANTING	COMMERCIAL FERTILIZER ① PLT ESTB	BASIN MULCH	STAKING	PLANTING LIMITS MINIMUM DISTANCE (Ft) FROM TRVD WAY	Pvmt	FENCE	WALL	PAVED DITCH	EARTH DITCH	ON CENTER (Ft)	REMARKS
I	1		Quercus wislizenii	Interior Live Oak	POT ⑩	18	⑧	②	2	-	1 CF	-	-	5 CF	-	30	-	15	15	10	10	-	⑨
	2		Platanus acerifolia	London Plane Tree	POT ⑩	24	⑧	②	2	-	1 CF	-	-	5 CF	-	30	-	20	20	10	12	-	⑨
	3		Quercus lobata	Valley Oak	POT ⑩	23	⑧	②	2	-	1 CF	-	-	5 CF	-	30	-	20	20	20	22	-	⑨

APPLICABLE WHEN CIRCLED:

① - Quantities shown are "per plant" unless shown as SQFT or SQYD application rates.
② - Sufficient to receive root ball.
3 - Does not apply to mulch areas.
4 - As shown on plans.
5 - Unless otherwise shown on plans.
6 - See detail.
7 - See Special Provisions.
⑧ - Three Times root ball
⑨ - Foliage Protector
⑩ - POT T4, 4" SQ x 14", 180 CU IN

NOTE:
Underlined portions of botanical name indicate abbreviations used on Planting Plans.

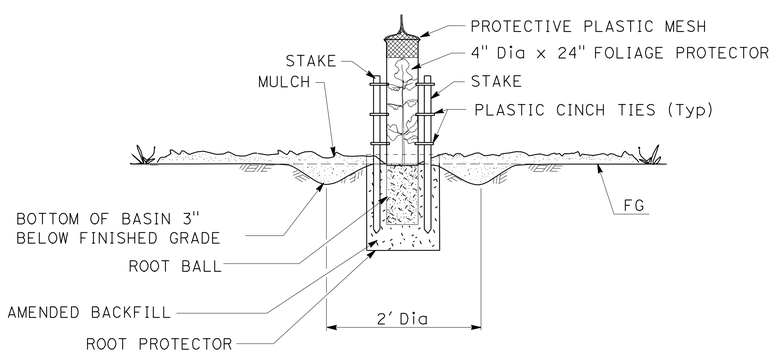

SECTION

OAK PLANTING DETAIL

MULCH

DESCRIPTION	QUANTITY (CY)
AREA	1061
BASIN	12.2
TOTAL	1073.2

REVISED BY | DATE REVISED
RICK COLE | CHARLES LARUE
CALCULATED-DESIGNED BY | CHECKED BY
SENIOR LANDSCAPE ARCHITECT: ELBERT COX

STATE OF CALIFORNIA - DEPARTMENT OF TRANSPORTATION
Caltrans® LANDSCAPE ARCHITECTURE

PLANT LIST
PL-1

LAST REVISION 02-08-10 | DATE PLOTTED => 06-APR-2010 | TIME PLOTTED => 14:05

Dist	COUNTY	ROUTE	POST MILES TOTAL PROJECT	SHEET No.	TOTAL SHEETS
06	Tul	99	2.9/3.3	80	128

LICENSED LANDSCAPE ARCHITECT

4-5-10
PLANS APPROVAL DATE

LICENSED LANDSCAPE ARCHITECT
RICHARD B. COLE No. 2422
Expiration Date 06/30/10
Renewal Date 02/08/10
Date
STATE OF CALIFORNIA

THE STATE OF CALIFORNIA OR ITS OFFICERS OR AGENTS SHALL NOT BE RESPONSIBLE FOR THE ACCURACY OR COMPLETENESS OF SCANNED COPIES OF THIS PLAN SHEET.

LEGEND

SYMBOL	ITEM DESCRIPTION
	EXISTING TREES TO REMAIN
	MULCH
	HYDROSEED AND EROSION CONTROL (COMPOST BLANKET)
	ROLLED EROSION CONTROL PRODUCT (BLANKET)

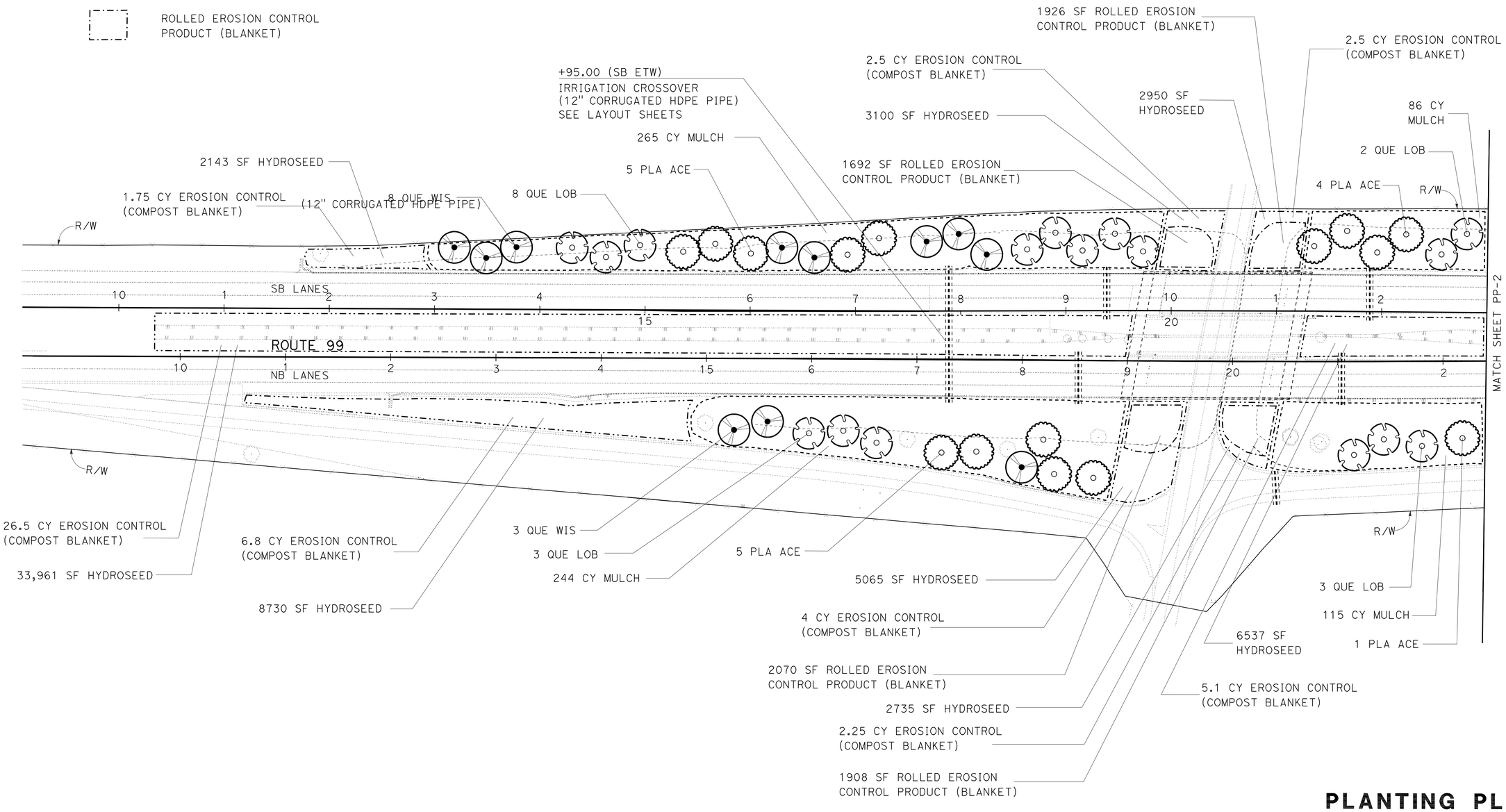

PLANTING PLAN

SCALE: 1" = 50′ **PP-1**

STATE OF CALIFORNIA - DEPARTMENT OF TRANSPORTATION
Caltrans® LANDSCAPE ARCHITECTURE

FUNCTIONAL SUPERVISOR: ELBERT COX
CALCULATED-DESIGNED BY: RICK COLE
CHECKED BY: CHARLES LARUE
REVISED BY
DATE REVISED

LAST REVISION 02-08-10
DATE PLOTTED => 06-APR-2010
TIME PLOTTED => 14:05

Dist	COUNTY	ROUTE	POST MILES TOTAL PROJECT	SHEET No.	TOTAL SHEETS
06	Tul	99	2.9/3.3	81	128

LICENSED LANDSCAPE ARCHITECT

4-5-10
PLANS APPROVAL DATE

RICHARD B. COLE No. 2128 LICENSED LANDSCAPE ARCHITECT STATE OF CALIFORNIA
06/30/10 EXPIRATION DATE
02/08/10 DATE

THE STATE OF CALIFORNIA OR ITS OFFICERS OR AGENTS SHALL NOT BE RESPONSIBLE FOR THE ACCURACY OR COMPLETENESS OF SCANNED COPIES OF THIS PLAN SHEET.

LEGEND

SYMBOL	ITEM DESCRIPTION
	EXISTING TREES TO REMAIN
	MULCH
	HYDROSEED AND EROSION CONTROL (COMPOST BLANKET)

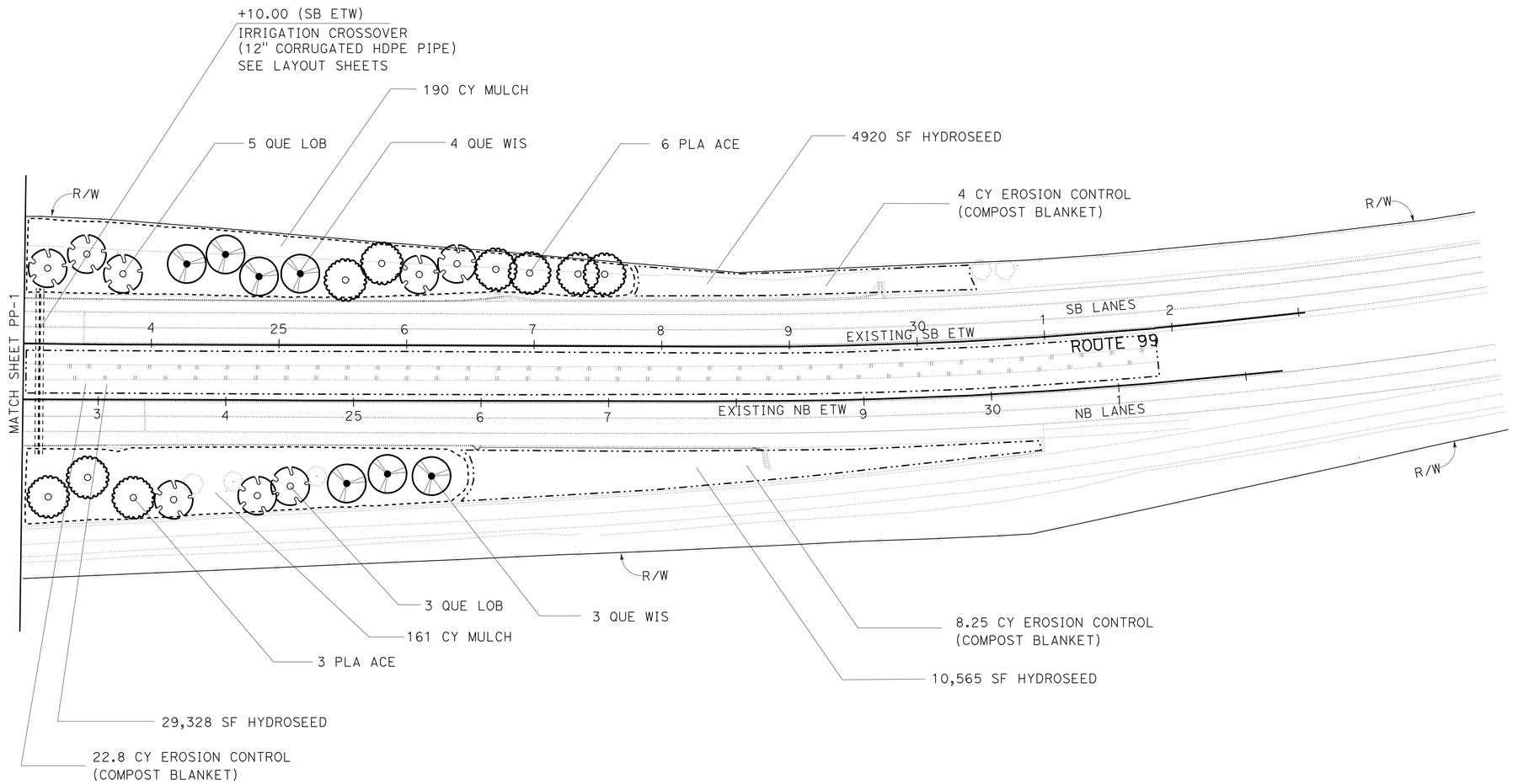

PLANTING PLAN

SCALE: 1" = 50′ **PP-2**

STATE OF CALIFORNIA - DEPARTMENT OF TRANSPORTATION
Caltrans® LANDSCAPE ARCHITECTURE

FUNCTIONAL SUPERVISOR: ELBERT COX
CALCULATED-DESIGNED BY: RICK COLE
CHECKED BY: CHARLES LARUE
REVISED BY
DATE REVISED

LAST REVISION 02-08-10
DATE PLOTTED => 06-APR-2010
TIME PLOTTED => 14:04

Dist	COUNTY	ROUTE	POST MILES TOTAL PROJECT	SHEET No.	TOTAL SHEETS
06	Tul	99	2.9/3.3	82	128

REGISTERED ELECTRICAL ENGINEER 3-10-10 DATE

PLANS APPROVAL DATE 4-5-10

REGISTERED PROFESSIONAL ENGINEER RAJPREET SINGH No. 17496 Exp. 6/30/09 ELECTRICAL STATE OF CALIFORNIA

THE STATE OF CALIFORNIA OR ITS OFFICERS OR AGENTS SHALL NOT BE RESPONSIBLE FOR THE ACCURACY OR COMPLETENESS OF ELECTRONIC COPIES OF THIS PLAN SHEET.

LEGEND: (THIS SHEET ONLY)

1 Exist 120/240 V, TYPE III-BF SERVICE EQUIPMENT ENCLOSURE WITH THE FOLLOWING CIRCUIT BREAKERS:

CTID No. 06460990002900L

AMPERES	VOLTS	POLES	NAME PLATE	METER	PHOTOELECTRIC CONTROL TYPE
100	240	4	MAIN BREAKER	2P-YES 2P-NO	——
40	240	2	HIGHWAY LIGHTING	YES	IV
*20	120	1	STRUCTURE LIGHTING	YES	** V
*15	120	1	CONTROL	YES	——
*30	120	1	TMS CABINET	YES	——

* ADD CB

** ADD TYPE V PEC

2 STATE-FURNISHED MODEL 2070 CONTROLLER ASSEMBLY FOR TMS. ADD WIRELESS MODEM.

3 TERMINATE DLC AT LOWER INPUT PANEL (TB2) IN MODEL 334 CABINET AS SHOWN IN DETAIL A ON SHEET E-2. LABEL INDUCTIVE LOOP DETECTORS AS SHOWN IN DETAIL B ON SHEET E-2.

ABBREVIATIONS:

SCE - SOUTHERN CALIFORNIA EDISON

CTID - CALTRANS IDENTIFICATION

NOTES:

1. ALL PULL BOXES SHALL BE No. 5 WITH EXTENSION UNLESS OTHERWISE NOTED.
2. FOR ACCURATE RIGHT OF WAY AND ACCESS DATA, CONTACT RIGHT OF WAY ENGINEERING AT THE DISTRICT OFFICE.

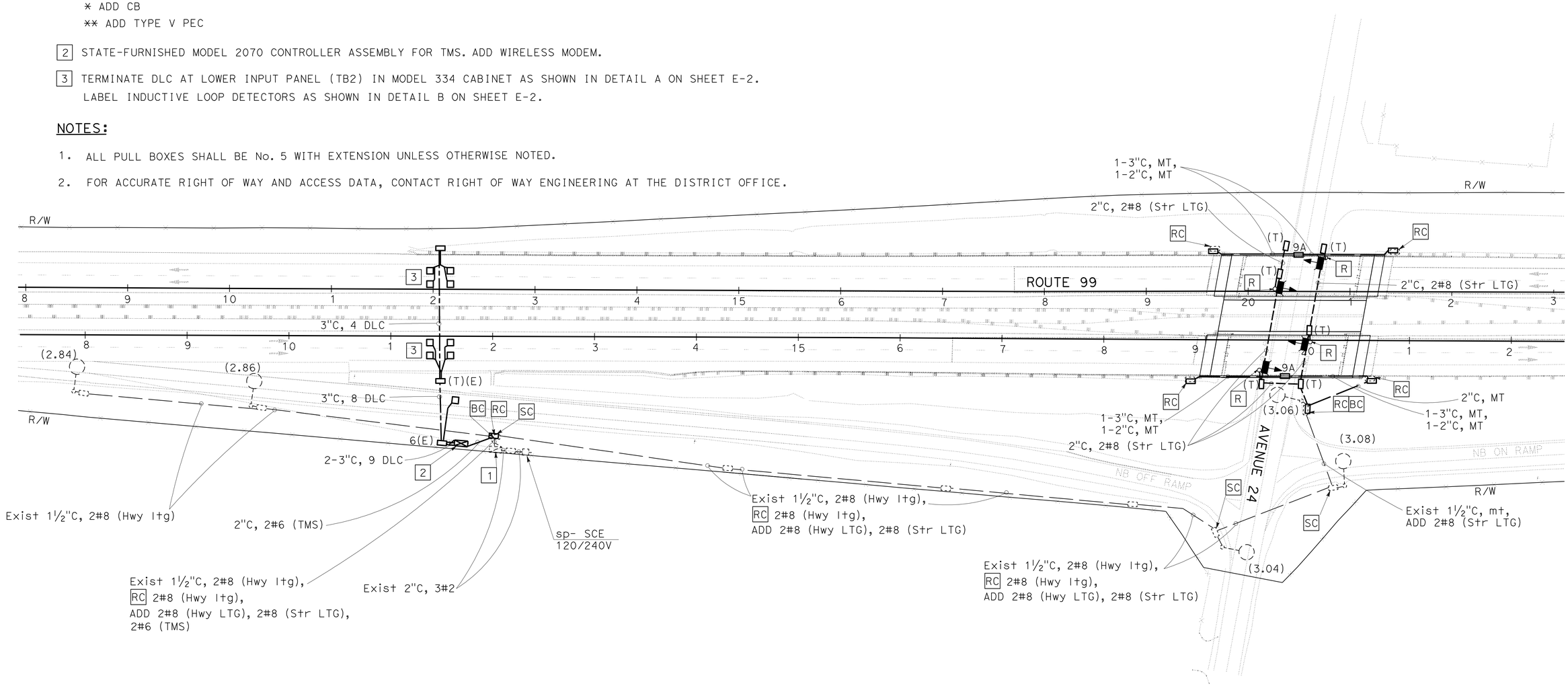

TRAFFIC MONITORING STATION LIGHTING

SCALE: 1" = 50'

E-1

THIS PLAN IS ACCURATE FOR ELECTRICAL WORK ONLY.

STATE OF CALIFORNIA - DEPARTMENT OF TRANSPORTATION

Caltrans® ELECTRICAL DESIGN

FUNCTIONAL SUPERVISOR: ALI BAKHDOUD

CALCULATED-DESIGNED BY: KARIM ABDOLLAHIAN

CHECKED BY: RAJPREET SINGH

REVISED BY / DATE REVISED

LAST REVISION 03-10-10

DATE PLOTTED => 06-APR-2010

TIME PLOTTED => 14:04

Dist	COUNTY	ROUTE	POST MILES TOTAL PROJECT	SHEET No.	TOTAL SHEETS
06	Tul	99	2.9/3.3	83	128

REGISTERED ELECTRICAL ENGINEER DATE 3-10-10

PLANS APPROVAL DATE 4-5-10

REGISTERED PROFESSIONAL ENGINEER RAJPREET SINGH No. 17496 Exp. 6/30/09 ELECTRICAL STATE OF CALIFORNIA

THE STATE OF CALIFORNIA OR ITS OFFICERS OR AGENTS SHALL NOT BE RESPONSIBLE FOR THE ACCURACY OR COMPLETENESS OF ELECTRONIC COPIES OF THIS PLAN SHEET.

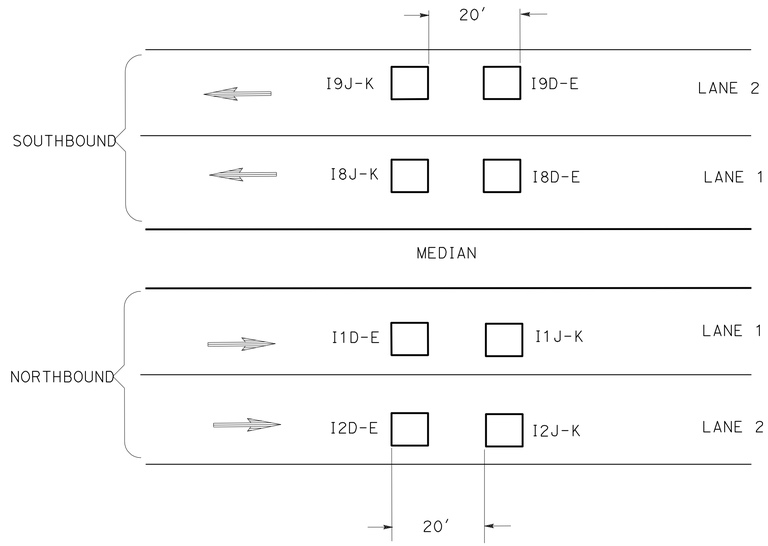

LOWER INPUT PANEL (TB2) TERMINATION

I1D-E

- INPUT PANEL (TB2)
- LANE DESIGNATION
  - 1-NORTHBOUND/EASTBOUND LANE 1
  - 2-NORTHBOUND/EASTBOUND LANE 2
  - 8-SOUTHBOUND/WESTBOUND LANE 1
  - 9-SOUTHBOUND/WESTBOUND LANE 2
- D-E -LEADING
- J-K -TRAILING

INDUCTIVE LOOP DETECTOR SENSOR TERMINATION DETAIL A

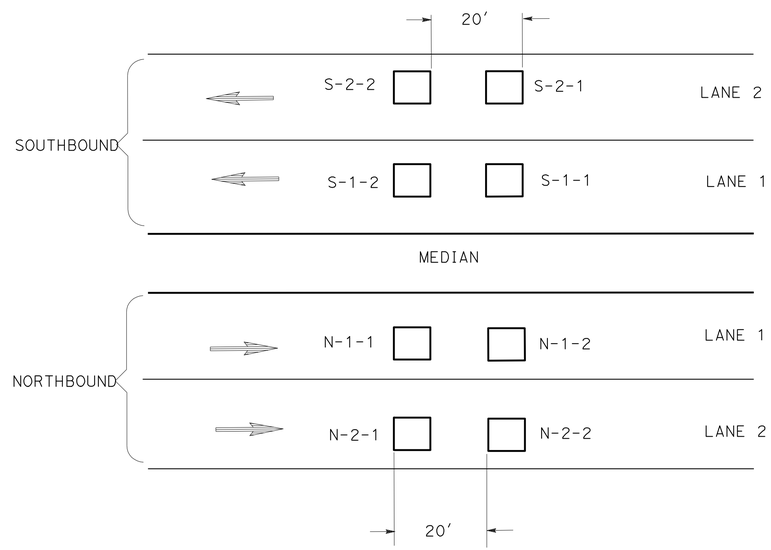

DLC IDENTIFICATION

D-L-N

- DIRECTION OF TRAFFIC
  - N - NORTHBOUND
  - S - SOUTHBOUND
  - E - EASTBOUND
  - W - WESTBOUND
- 1 - ENTERING
- 2 - LEAVING
- LANE NUMBER

INDUCTIVE LOOP DETECTOR SENSOR IDENTIFICATION DETAIL B

TRAFFIC MONITORING STATION E-2

NO SCALE

THIS PLAN IS ACCURATE FOR ELECTRICAL WORK ONLY.

STATE OF CALIFORNIA - DEPARTMENT OF TRANSPORTATION

Caltrans® ELECTRICAL DESIGN

FUNCTIONAL SUPERVISOR: ALI BAKHDOUD

CALCULATED-DESIGNED BY: KARIM ABDOLLAHIAN

CHECKED BY: RAJPREET SINGH

REVISED BY / DATE REVISED

LAST REVISION 03-10-10

DATE PLOTTED => 06-APR-2010

TIME PLOTTED => 14:05

DIST	COUNTY	ROUTE	POST MILES TOTAL PROJECT	SHEET NO.	TOTAL SHEETS
06	Tul	99	2.9/3.3	84	128

Mark S. Turner
PROFESSIONAL LAND SURVEYOR

June 30, 2006
PLANS APPROVAL DATE

LICENSED LAND SURVEYOR
Mark S. Turner
No. 6228
Exp. 3-31-08
STATE OF CALIFORNIA

The State of California or its officers or agents shall not be responsible for the accuracy or completeness of electronic copies of this plan sheet.

To accompany plans dated 4-5-10

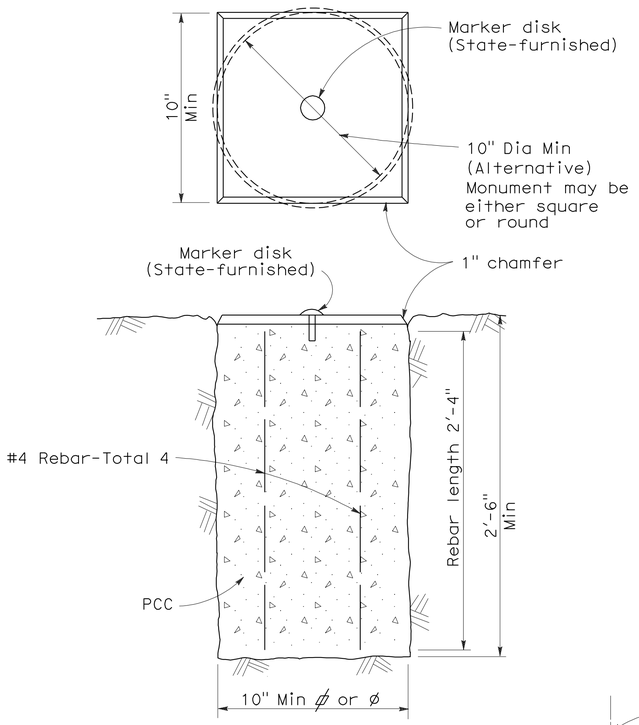

TYPE A

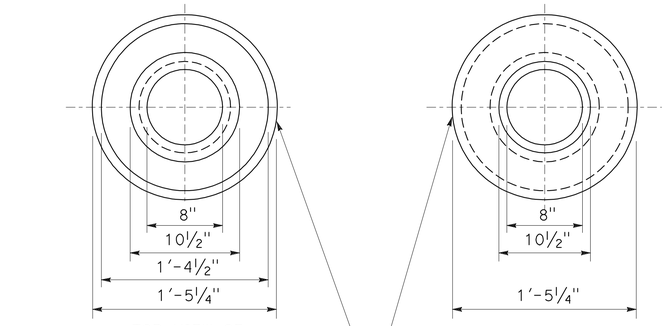

TOP VIEW OF
MONUMENT OF WELL RING

BOTTOM VIEW OF
MONUMENT OF WELL RING

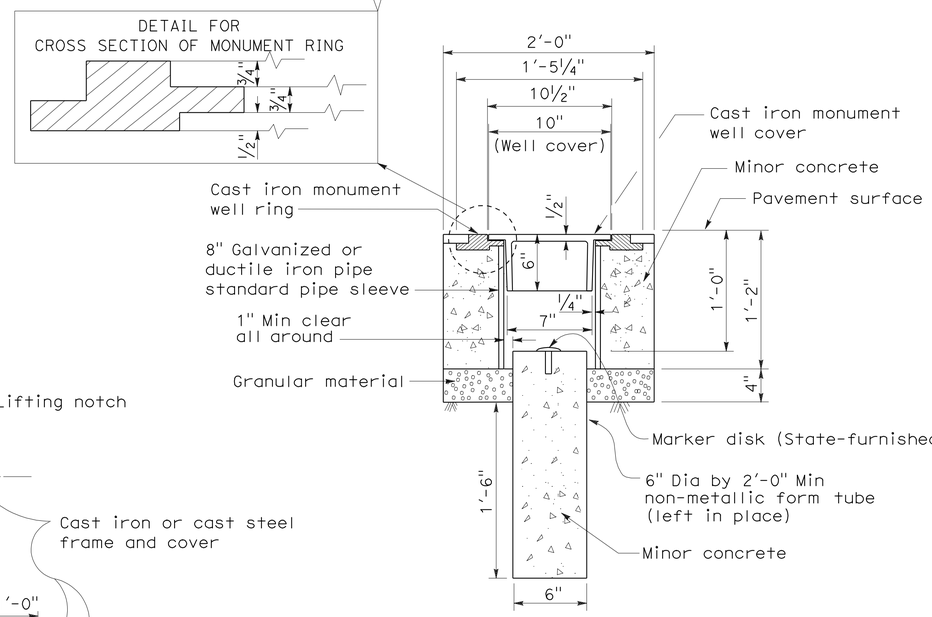

TYPE B

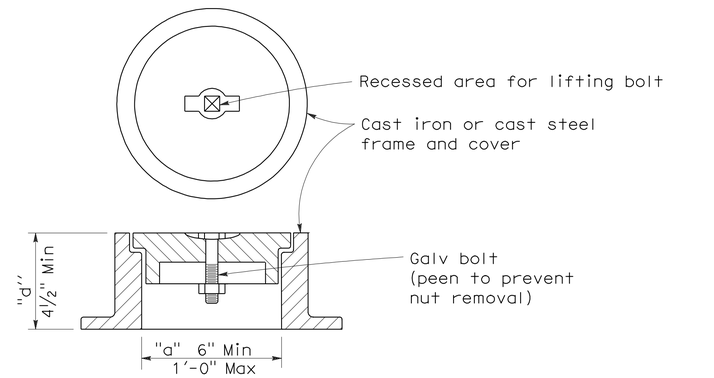

NOTES:

1. The configuration of the cast iron or cast steel frame and cover may vary from that shown.
2. Frame shall be embedded in the concrete a minimum of 3".
3. Type D monument shall be either Alternative No. 1 or Alternative No. 2 at the contractor's option.
4. All portland cement concrete shall be Class 2 or minor concrete with 1" maximum aggregate.

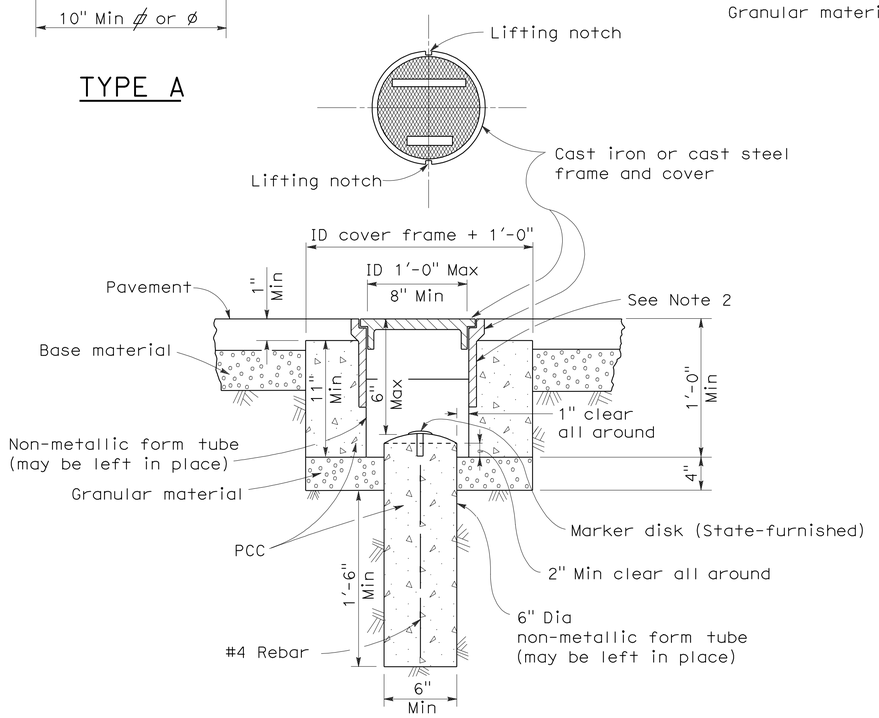

TYPE D
Alternative No. 1

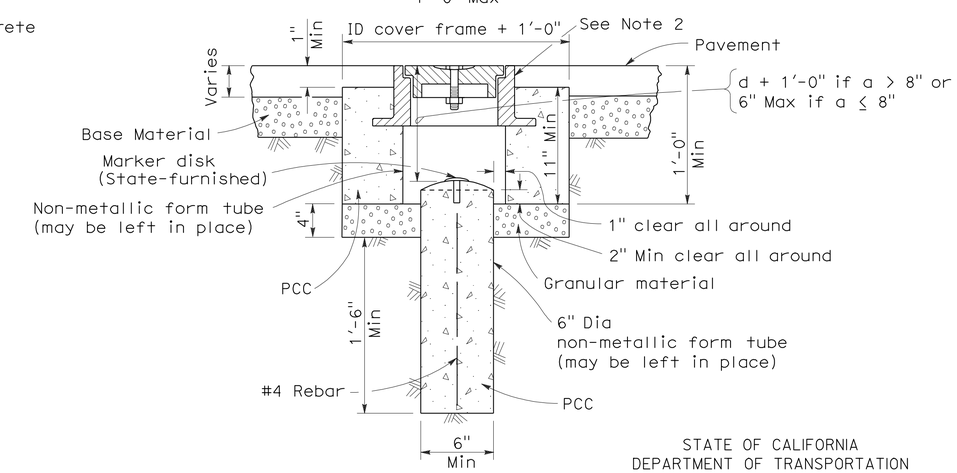

TYPE D
Alternative No. 2

STATE OF CALIFORNIA
DEPARTMENT OF TRANSPORTATION

SURVEY MONUMENTS

NO SCALE

RSP A74 DATED JUNE 30, 2006 SUPERSEDES STANDARD PLAN DATED MAY 1, 2006 - PAGE 28 OF THE STANDARD PLANS BOOK DATED MAY 2006.

REVISED STANDARD PLAN RSP A74

2006 REVISED STANDARD PLAN RSP A74

5-24-06

DIST	COUNTY	ROUTE	POST MILES TOTAL PROJECT	SHEET NO.	TOTAL SHEETS
06	Tul	99	2.9/3.3	85	128

Randell D. Hiatt
REGISTERED CIVIL ENGINEER

June 6, 2008
PLANS APPROVAL DATE

REGISTERED PROFESSIONAL ENGINEER
Randell D. Hiatt
No. C50200
Exp. 6-30-09
CIVIL
STATE OF CALIFORNIA

The State of California or its officers or agents shall not be responsible for the accuracy or completeness of electronic copies of this plan sheet.

To accompany plans dated 4-5-10

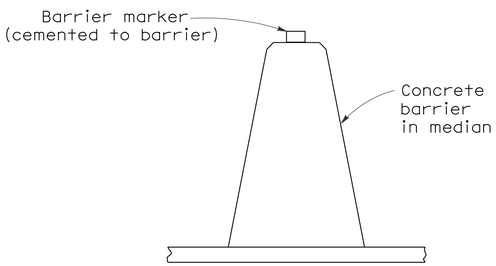

CONCRETE BARRIER TYPE 60 DELINEATION

See Notes 7 and 8

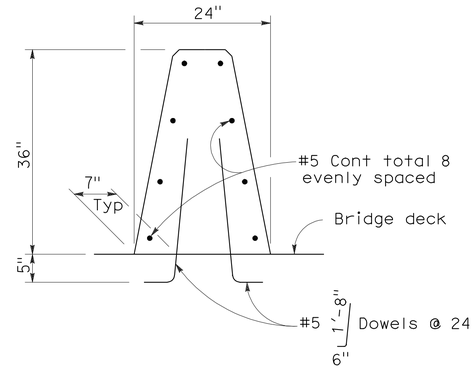

CONCRETE BARRIER TYPE 60A

Details similar to Type 60 except as noted.

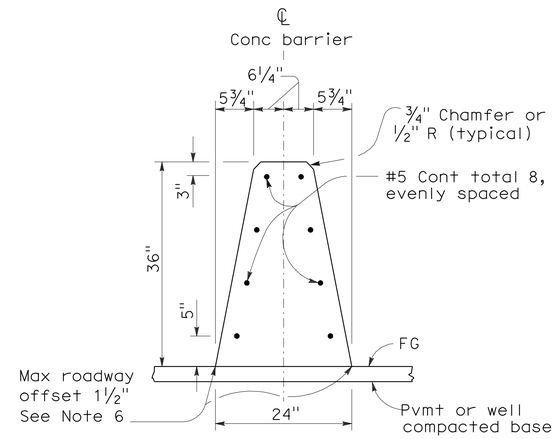

CONCRETE BARRIER TYPE 60

NOTES:

1. See Standard Plan A76B for details of Concrete Barrier Type 60 end anchors, connection to structures and transitions to Concrete Barrier Type 50 and Concrete Barrier Type 60S.
2. See Standard Plan A76C for Concrete Barrier Type 60 transitions at bridge column and sign pedestals.
3. Where glare screen is required on Concrete Barrier Type 60, use Concrete Barrier Type 60G.
4. Where the concrete barrier is added to the face of existing concrete structure, match existing weep holes.
5. Expansion joints in concrete barrier shall be located at all deck, pavement and principal wall joints. Expansion joint filler material shall be the same size as joint or ½" minimum.
6. Where roadway offset is greater than 1½", see Concrete Barrier Type 60C.
7. Barrier delineation to be used when required by the Special Provisions.
8. Spacing of barrier markers to match spacing of raised pavement markers on the adjacent median edgeline pavement delineation.
9. Reinforcing stirrup not required for roadway offsets less than 1'-0".
10. For roadway surfaces offset greater than 1½" to 3", no rebars required. For roadway surfaces offset greater than 3" to 8" use two #4 rebars at 3" above the lower roadway surface. For roadway surfaces offset greater than 8" to 12", use two #4 rebars at 3" above the lower roadway surface and two #4 rebars at 8" above the lower roadway surface. For roadway surfaces offset greater than 12" to 36", use two #4 rebars at 3" above the lower roadway surface and two #4 rebars at every 8" increment vertical spacing above the first two #4 rebars.

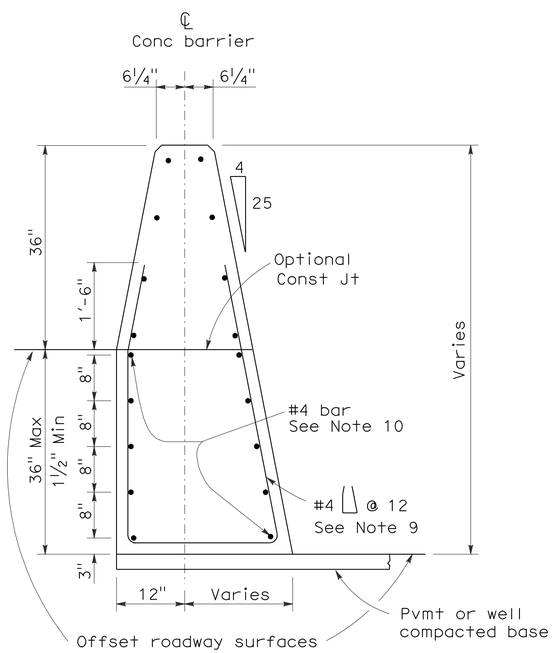

CONCRETE BARRIER TYPE 60C

Details similar to Type 60 except as noted.
Concrete barrier end anchor when necessary.
36" roadway surfaces offset shown.

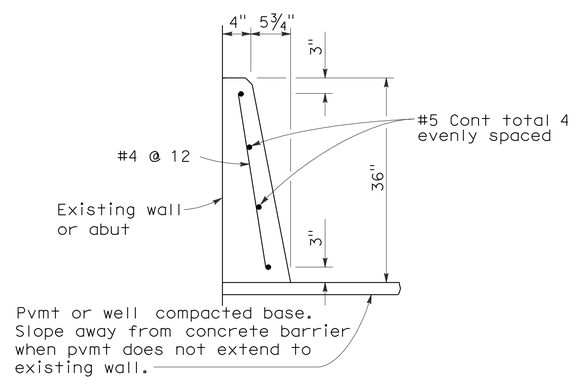

CONCRETE BARRIER TYPE 60D

STATE OF CALIFORNIA
DEPARTMENT OF TRANSPORTATION

CONCRETE BARRIER TYPE 60

NO SCALE

RSP A76A DATED JUNE 6, 2008 SUPERSEDES STANDARD PLAN A76A
DATED MAY 1, 2006 - PAGE 29 OF THE STANDARD PLANS BOOK DATED MAY 2006.

REVISED STANDARD PLAN RSP A76A

2006 REVISED STANDARD PLAN RSP A76A

DIST	COUNTY	ROUTE	POST MILES TOTAL PROJECT	SHEET NO.	TOTAL SHEETS
06	Tul	99	2.9/3.3	86	128

Randell D. Hiatt
REGISTERED CIVIL ENGINEER

June 6, 2008
PLANS APPROVAL DATE

REGISTERED PROFESSIONAL ENGINEER
Randell D. Hiatt
No. C50200
Exp. 6-30-09
CIVIL
STATE OF CALIFORNIA

The State of California or its officers or agents shall not be responsible for the accuracy or completeness of electronic copies of this plan sheet.

To accompany plans dated 4-5-10

NOTES:

1. When necessary to place dike in front of face of guard railing, only Type C dike may be used. For dike details, see Standard Plan A87B.
2. For standard railing post embedment, see Standard Plans A77C3.
3. Guard railing delineation to be used where shown on the Project Plans.
4. When dike or curb is placed under guard railing, the maximum height of the dike or curb shall be 4". Mountable dike should not be used. For dike and curb details, see Revised Standard Plans RSP A87A and Standard Plan A87B.
5. For details of typical distance between the face of rail and hinge point, see Standard Plan A77C3.

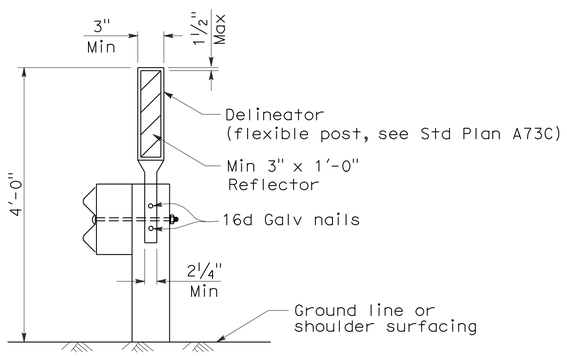

GUARD RAILING DELINEATION

See Note 3

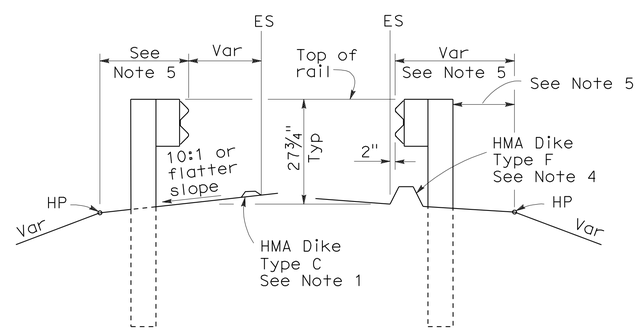

DIKE POSITIONING

See Note 1

STATE OF CALIFORNIA
DEPARTMENT OF TRANSPORTATION

METAL BEAM GUARD RAILING TYPICAL RAILING DELINEATION AND DIKE POSITIONING DETAILS

NO SCALE

RSP A77C4 DATED JUNE 6, 2008 SUPERSEDES STANDARD PLAN A77C4
DATED MAY 1, 2006 - PAGE 47 OF THE STANDARD PLANS BOOK DATED MAY 2006.

REVISED STANDARD PLAN RSP A77C4

2006 REVISED STANDARD PLAN RSP A77C4

12-10-07

DIST	COUNTY	ROUTE	POST MILES TOTAL PROJECT	SHEET NO.	TOTAL SHEETS
06	Tul	99	2.9/3.3	87	128

Randell D. Hiatt
REGISTERED CIVIL ENGINEER

June 6, 2008
PLANS APPROVAL DATE

REGISTERED PROFESSIONAL ENGINEER
Randell D. Hiatt
No. C50200
Exp. 6-30-09
CIVIL
STATE OF CALIFORNIA

The State of California or its officers or agents shall not be responsible for the accuracy or completeness of electronic copies of this plan sheet.

To accompany plans dated 4-5-10

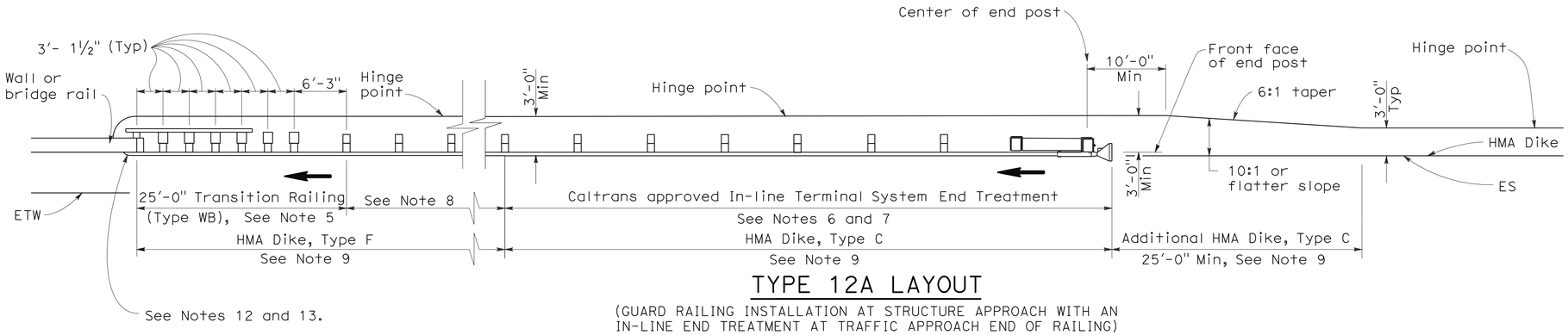

TYPE 12A LAYOUT

(GUARD RAILING INSTALLATION AT STRUCTURE APPROACH WITH AN IN-LINE END TREATMENT AT TRAFFIC APPROACH END OF RAILING)
See Notes 10

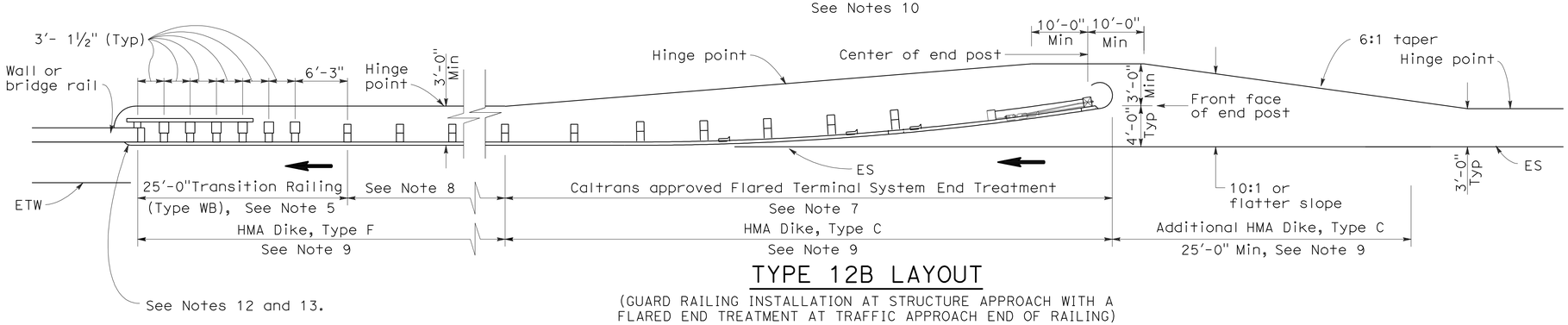

TYPE 12B LAYOUT

(GUARD RAILING INSTALLATION AT STRUCTURE APPROACH WITH A FLARED END TREATMENT AT TRAFFIC APPROACH END OF RAILING)
See Notes 10

NOTES:

1. Line post, blocks and hardware to be used are shown on Standard Plans A77A1, A77A2, A77B1, A77C1 and A77C2.
2. Guard rail post spacing to be 6'-3" center to center, except as otherwise noted.
3. Except as noted, line posts are 6" x 8" x 6'-0" wood with 6" x 8" x 1'-2" wood blocks. W6 x 9 steel posts, 6'-0" in length, with 6" x 8" x 1'-2" notched wood blocks or plastic blocks may be used for 6" x 8" x 6'-0" wood posts with 6" x 8" x 1'-2" wood blocks where applicable and when specified.
4. Direction of adjacent traffic indicated by ➡.
5. For Transition Railing (Type WB) details for Types 12A and 12B Layouts, see Standard Plan A77J4.
6. In-line Terminal System End Treatments are used where site conditions will not accommodate a flared end treatment.
7. The type of terminal system end treatment to be used will be shown on the Project Plans.
8. Dependent on site conditions (embankment height, side slopes, or other fixed objects), it may be advisable to construct additional guard railing (a length equal to multiples of 12'-6" with 6'-3" post spacing) between the transition railing and end treatment.
9. Where placement of dike is required with guard railing installations, see Revised Standard Plan RSP A77C4 for dike positioning details.
10. Type 12A or Type 12B Layouts are typically used:
    a. To the right of approaching traffic, at the end of a structure, on two-lane conventional highway where the roadbed width across the structure is less than 40 feet.
    b. To the left of approaching traffic, at the end of a structure, on two-lane conventional highway where the roadbed width across the structure is less than 40 feet.
    c. To the right of approaching traffic at the end of each structure on multilane freeways or expressways with separate adjacent or parallel bridges.
    d. To the right of approaching traffic at the end of the structure on multilane freeways or expressways with decked median on the bridge.
11. See Revised Standard Plan RSP A77F3 for typical layout used left of approaching traffic at the ends of each structure on multilane freeways or expressways with separate adjacent or parallel bridges.
12. For additional details of typical connections to bridge rail, see Connection Detail AA on Revised Standard Plans RSP A77J1 and RSP A77J2 and Connection Detail FF on Standard Plans A77K1 and A77K2.
13. For additional details of a typical connection to walls or abutments, see Standard Plan A77J3.

STATE OF CALIFORNIA
DEPARTMENT OF TRANSPORTATION

METAL BEAM GUARD RAILING TYPICAL LAYOUTS FOR STRUCTURE APPROACH

NO SCALE

RSP A77F1 DATED JUNE 6, 2008 SUPERSEDES STANDARD PLAN A77F1
DATED MAY 1, 2006 - PAGE 54 OF THE STANDARD PLANS BOOK DATED MAY 2006.

REVISED STANDARD PLAN RSP A77F1

2006 REVISED STANDARD PLAN RSP A77F1

12-10-07

DIST	COUNTY	ROUTE	POST MILES TOTAL PROJECT	SHEET NO.	TOTAL SHEETS
06	Tul	99	2.9/3.3	88	128

Randell D. Hiatt
REGISTERED CIVIL ENGINEER

June 5, 2009
PLANS APPROVAL DATE

REGISTERED PROFESSIONAL ENGINEER
Randell D. Hiatt
No. C50200
Exp. 6-30-09
CIVIL
STATE OF CALIFORNIA

The State of California or its officers or agents shall not be responsible for the accuracy or completeness of electronic copies of this plan sheet.

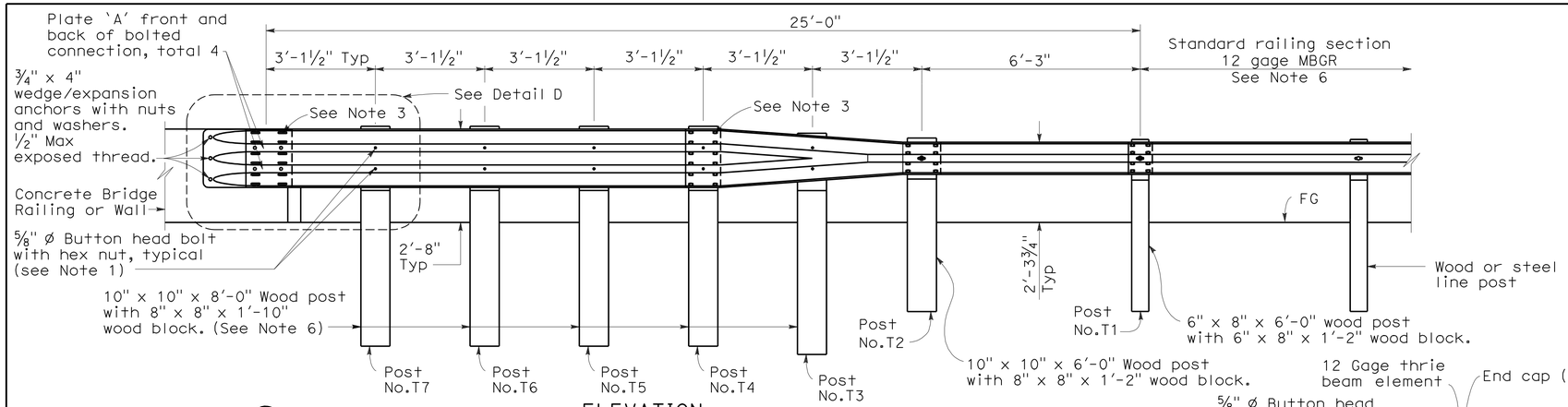

ELEVATION

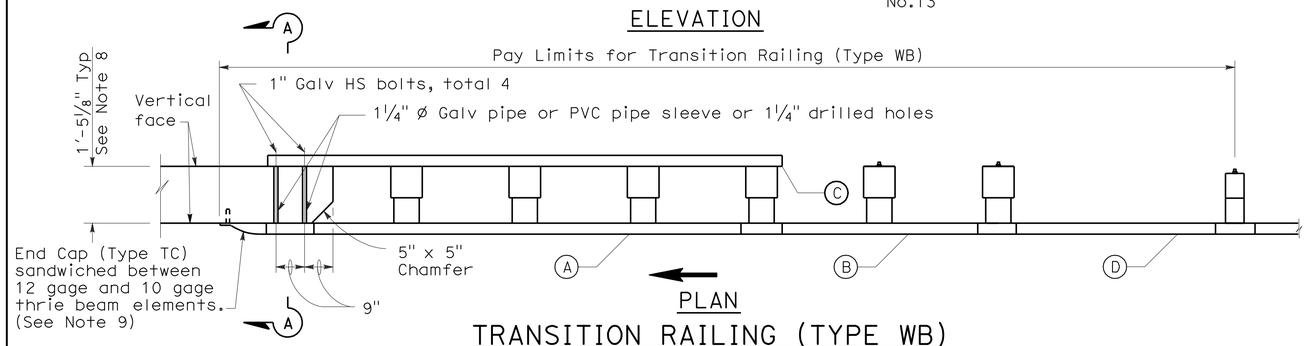

PLAN

TRANSITION RAILING (TYPE WB)

(No Blockout Attachment)

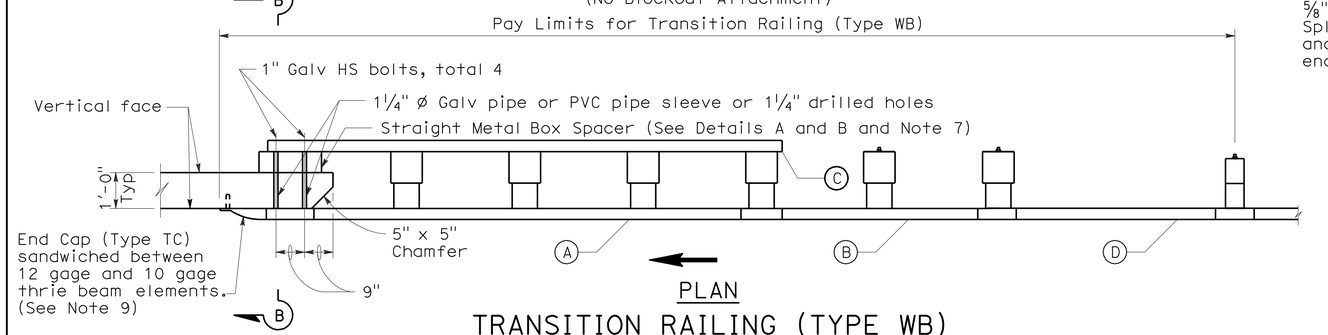

PLAN

TRANSITION RAILING (TYPE WB)

(Blockout Attachment)

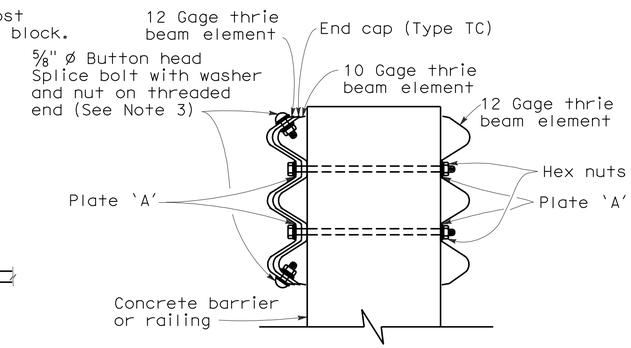

SECTION A-A

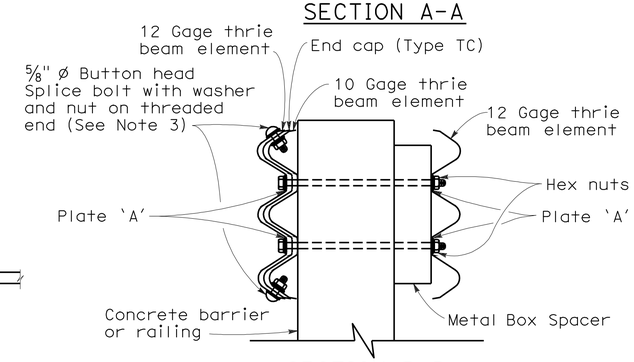

SECTION B-B

LEGEND

(A) Nested thrie beam elements (one 12 gage element nested over one 10 gage element).

(B) One 10 gage "W" beam to thrie beam element.

(C) One 12 gage thrie beam element.

(D) One 10 gage "W" beam rail element (7'-3½" length)

10 gage = 0.135" thick

12 gage = 0.108" thick

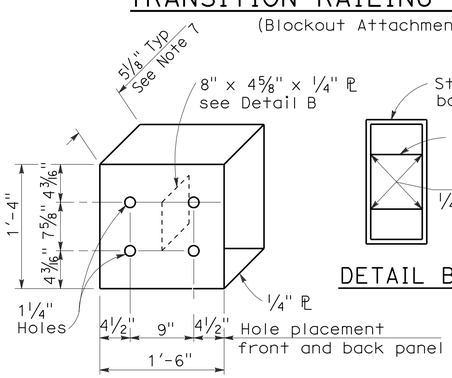

DETAIL A

STRAIGHT METAL BOX SPACER

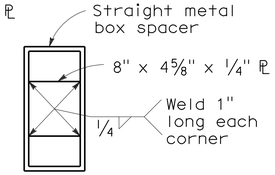

DETAIL B

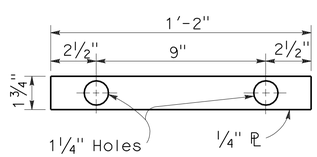

DETAIL C

PLATE 'A'

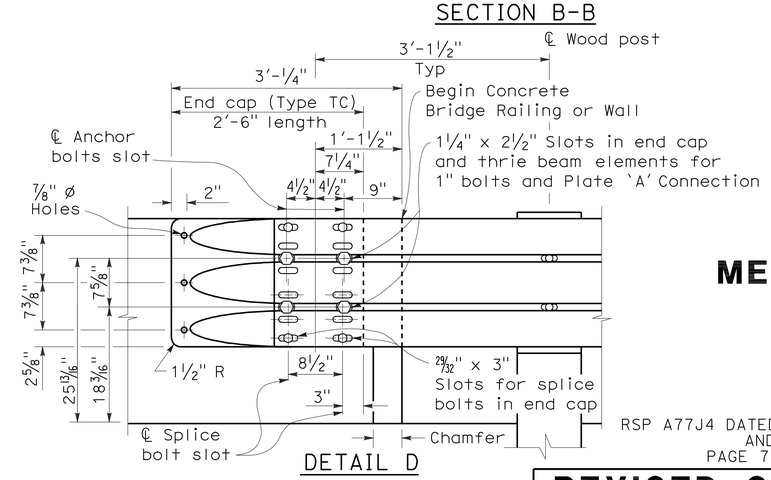

DETAIL D

NOTES:

To accompany plans dated 4-5-10

1. Use 5/8 " ø Button head bolts and hex nuts for connections to posts. No washer on rail face for bolted connections to post.
2. The nested rail elements, end cap, and 'W' beam to thrie beam element may be spliced together prior to bolting the elements to the wood post and concrete barrier or railing.
3. Exterior splice bolt holes for rail element splices at Post No.T4 and the connection to the concrete barrier or railing shall be the standard 29/32 " x 1 1/8 " slot size. Interior splice bolt holes at these locations may be increased up to 1 1/4 " ø. Only the top 2 and the bottom 2 splice bolts with washers and nuts are required for rail splices at Post No.T4 and the connection to the concrete barrier or railing.
4. Direction of adjacent traffic indicated by →.
5. The top elevation of Post Nos.T2 through T7 shall not project more than 1" above the top elevation of the rail element.
6. Typically, the railing connected to Transition Railing (Type WB) will be either standard railing section of metal beam guard railing or an approved Caltrans end treatment attached to Post No.T1.
7. The depth of the metal box spacer varies from the 5 1/8 " to 1 1/2 " and is dependent on the width of the concrete railing or wall. The combined dimension for the depth of the metal box spacer plus the width of railing or wall is typically 17 1/8 ". Where the space between the backside of the concrete railing or wall and the rear thrie beam element is less than 1 1/2 ", metal plates similar to Plate 'A' are to be used as spacers.
8. Where the width of the concrete railing or wall is greater than 17 1/8 ", wood blocks are to be used to fill the space created between the backside of Posts No.4 through No.7 and the rear thrie beam element. These wood blocks shall be 8" in width and 1'-2" in length. The dimension between the front thrie beam element and the rear thrie beam element is to match the width of the concrete railing or wall.
9. End cap may be installed over 12 gage and 10 gage thrie beam elements where transition railing is installed on the departure end of bridge railing.

STATE OF CALIFORNIA
DEPARTMENT OF TRANSPORTATION

METAL BEAM GUARD RAILING TRANSITION RAILING (TYPE WB)

NO SCALE

RSP A77J4 DATED JUNE 5, 2009 SUPERSEDES RSP A77J4 DATED JUNE 6, 2008 AND STANDARD PLAN A77J4 DATED MAY 1, 2006 - PAGE 75 OF THE STANDARD PLANS BOOK DATED MAY 2006.

REVISED STANDARD PLAN RSP A77J4

2006 REVISED STANDARD PLAN RSP A77J4

5-14-09

DIST	COUNTY	ROUTE	POST MILES TOTAL PROJECT	SHEET NO.	TOTAL SHEETS
06	Tul	99	2.9/3.3	89	128

Randell D. Hiatt
REGISTERED CIVIL ENGINEER

June 6, 2008
PLANS APPROVAL DATE

REGISTERED PROFESSIONAL ENGINEER
Randell D. Hiatt
No. C50200
Exp. 6-30-09
CIVIL
STATE OF CALIFORNIA

The State of California or its officers or agents shall not be responsible for the accuracy or completeness of electronic copies of this plan sheet.

To accompany plans dated 4-5-10

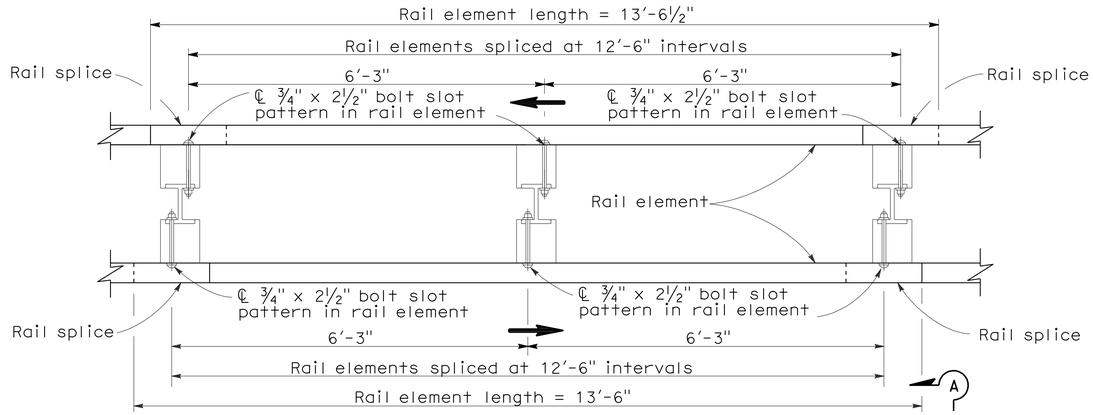

PLAN

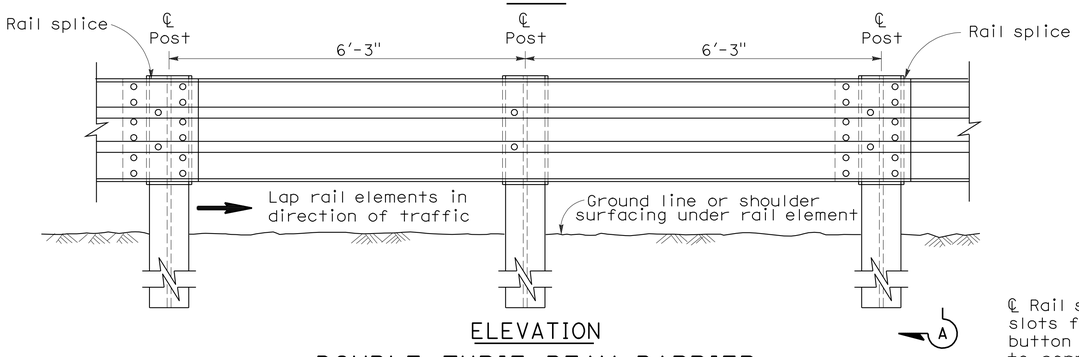

ELEVATION

DOUBLE THRIE BEAM BARRIER

(Steel post with notched wood or notched plastic blocks)
See Note 1

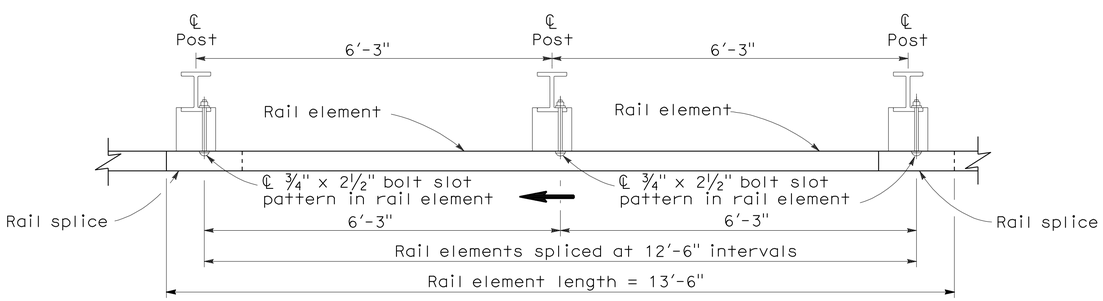

PLAN

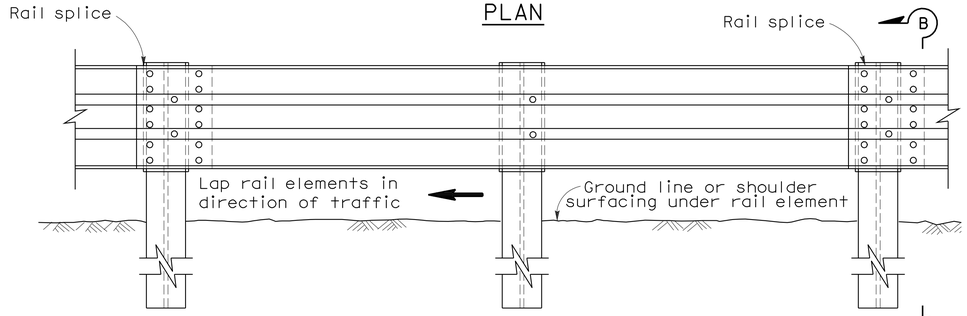

ELEVATION

SINGLE THRIE BEAM BARRIER

(Steel post with notched wood or notched plastic blocks)
See Note 1

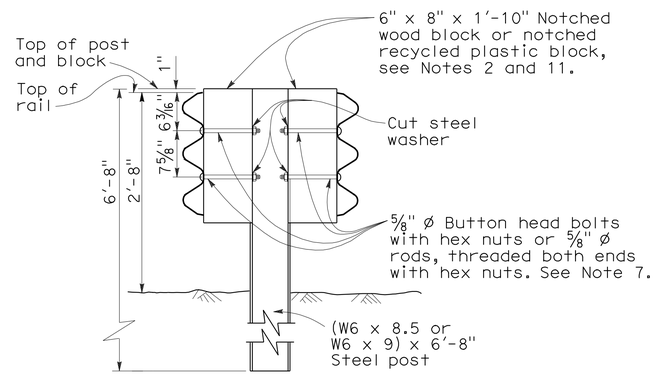

SECTION A-A

TYPICAL STEEL LINE POST INSTALLATION

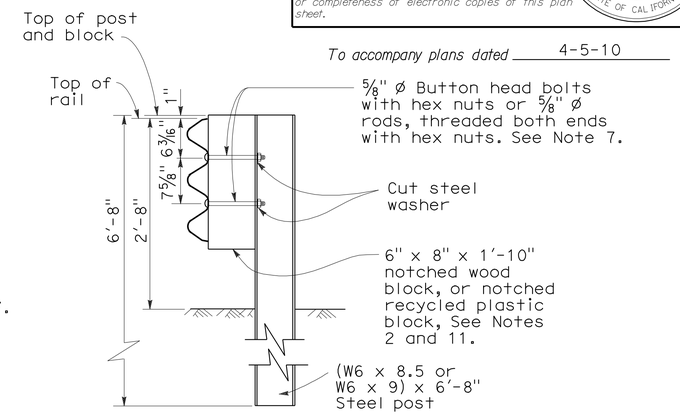

SECTION B-B

TYPICAL STEEL LINE POST INSTALLATION

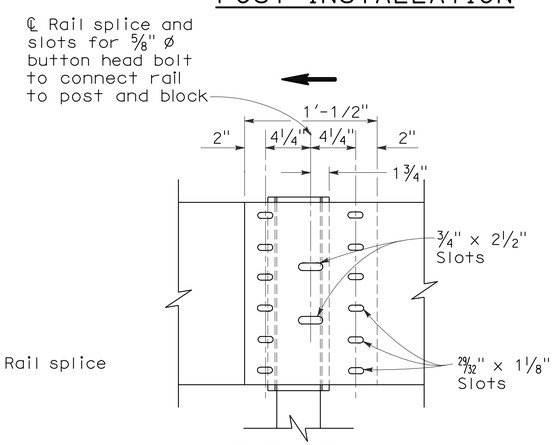

ELEVATION

RAIL ELEMENT SPLICE DETAIL

a) Connect the overlapped ends of the thrie beam rail elements with ⅝" ø x 1⅛" button head oval shoulder bolts inserted into the 29/32" x 1⅛" slots and bolted together with ⅝" ø x 1⅛" recessed hex nuts. Recess of hex nut points toward rail element. A total of 12 bolts and nuts are to be used at each rail splice connection.

b) The ends of the rail elements are to be overlapped in the direction of traffic (see details).

c) Where end cap is to be attached to the end of a rail element, a total of 4 of the above described splice bolts and nuts are to be used. Where a return cap is to be attached to the ends of rail elements, a total of 8 of the above described splice bolts and nuts are to be used.

NOTES:

1. For details of the cross section of the thrie beam rail element and details for wood post with wood block installations, see Standard Plan A78A.
2. For details of standard hardware, posts and blocks used to construct thrie beam barrier, see Revised Standard Plan RSP A78C1 and Standard Plan A78C2.
3. Thrie beam barrier post spacing to be 6'-3" center to center, except as otherwise noted.
4. Top of barrier rail to be 2'-8" above ground line or shoulder surfacing under the rail element.
5. For barrier end treatments and barrier connections, see Standard Plans A78E1, A78E2 and A78E3, Revised Standard Plans RSPs A78F1 and A78F2, Standard Plan A78G and Revised Standard Plan RSP A78H.
6. For connection to Concrete Barrier, see Revised Standard Plan RSP A78I.
7. Attach rail element to block and steel post with 2 bolts or rods on approaching traffic side of block and post web. No washer on rail face for rod or bolted connections to line post.
8. For details of thrie beam barrier on bridges, see Standard Plan A78D2. For details of thrie beam barrier at fixed objects, see Standard Plan A78D1.
9. Direction of traffic indicated by ⟶.
10. Notched face of block faces steel post.

STATE OF CALIFORNIA
DEPARTMENT OF TRANSPORTATION

THRIE BEAM BARRIER STANDARD BARRIER RAILING SECTION (STEEL POST WITH NOTCHED WOOD BLOCK OR NOTCHED RECYCLED PLASTIC BLOCK)

NO SCALE

RSP A78B DATED JUNE 6, 2008 SUPERSEDES STANDARD PLAN A78B DATED MAY 1, 2006 - PAGE 84 OF THE STANDARD PLANS BOOK DATED MAY 2006.

REVISED STANDARD PLAN RSP A78B

2006 REVISED STANDARD PLAN RSP A78B

5-14-08

DIST	COUNTY	ROUTE	POST MILES TOTAL PROJECT	SHEET No.	TOTAL SHEETS
06	Tul	99	2.9/3.3	90	128

Randell D. Hiatt
REGISTERED CIVIL ENGINEER

June 6, 2008
PLANS APPROVAL DATE

REGISTERED PROFESSIONAL ENGINEER
Randell D. Hiatt
No. C50200
Exp. 6-30-09
CIVIL
STATE OF CALIFORNIA

The State of California or its officers or agents shall not be responsible for the accuracy or completeness of electronic copies of this plan sheet.

To accompany plans dated 4-5-10

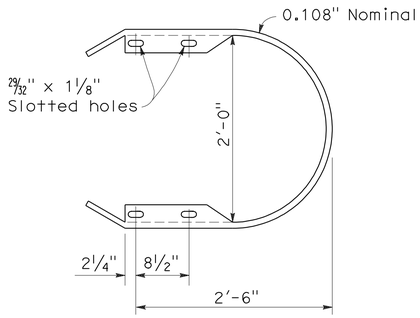

RETURN CAP
(TYPE TA)

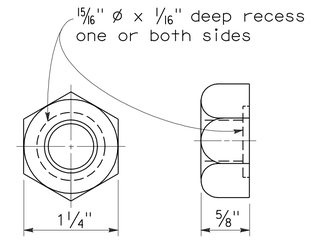

5/8" ø RECESS NUT

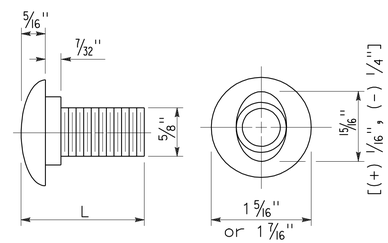

5/8" ø BUTTON HEAD BOLT

L	THREAD LENGTH
1 1/4"	full thread length
2"	full thread length
9 1/2"	4" Min thread length
18"	4" Min thread length

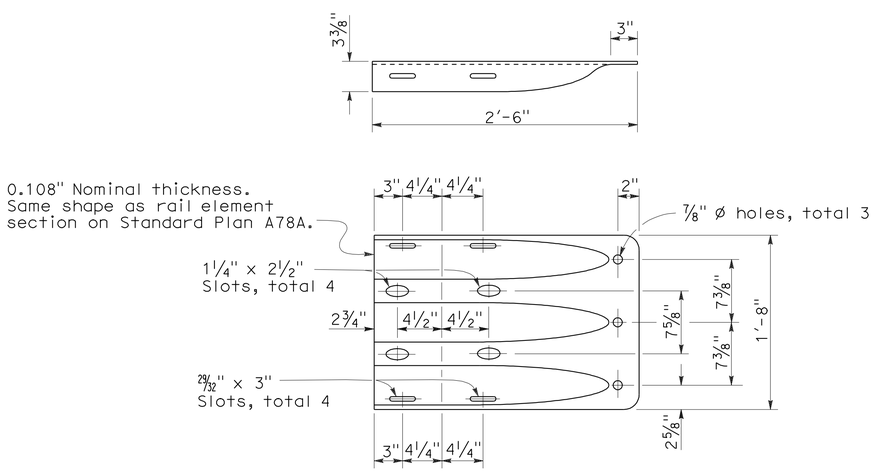

END CAP
(TYPE TC)

STATE OF CALIFORNIA
DEPARTMENT OF TRANSPORTATION

THRIE BEAM BARRIER STANDARD HARDWARE DETAILS

NO SCALE

RSP A78C1 DATED JUNE 6, 2008 SUPERSEDES STANDARD PLAN A78C1
DATED MAY 1, 2006 - PAGE 85 OF THE STANDARD PLANS BOOK DATED MAY 2006.

REVISED STANDARD PLAN RSP A78C1

2006 REVISED STANDARD PLAN RSP A78C1

4-21-08

DIST	COUNTY	ROUTE	POST MILES TOTAL PROJECT	SHEET NO.	TOTAL SHEETS
06	Tul	99	2.9/3.3	91	128

Randell D. Hiatt
REGISTERED CIVIL ENGINEER

June 6, 2008
PLANS APPROVAL DATE

REGISTERED PROFESSIONAL ENGINEER
Randell D. Hiatt
No. C50200
Exp. 6-30-09
CIVIL
STATE OF CALIFORNIA

The State of California or its officers or agents shall not be responsible for the accuracy or completeness of electronic copies of this plan sheet.

To accompany plans dated 4-5-10

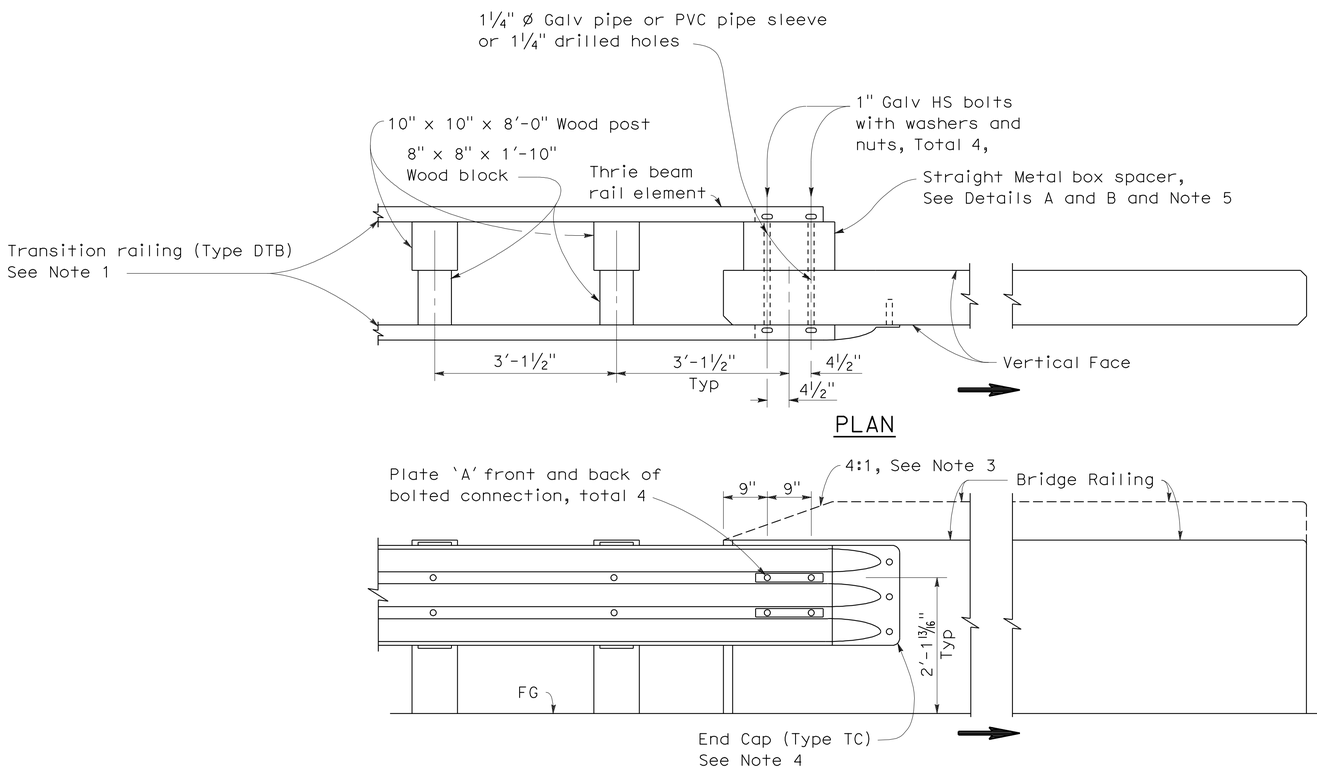

CONNECTION DETAIL 1A
See Note 2

DOUBLE THRIE BEAM BARRIER CONNECTION TO BRIDGE RAILING WITHOUT SIDEWALK

NOTES:

1. For additional details of Transition Railing (Type DTB), see Standard Plans A78K. Transition Railing (Type DTB) transitions the standard 12 gage double thrie beam barrier to a heavier gage double thrie beam railing section then to a heavier gage nested double thrie beam barrier section which then is connected to the concrete bridge railing.
2. For typical use of Connection Detail 1A, see Type 25A Connection Layout on Revised Standard Plan RSP A78H.
3. Where the height of the bridge railing exceeds the height of the thrie beam railing by more than 1" at Connection Detail 1A, taper the top of the end of the bridge railing at 4:1 to match the top elevation of the thrie beam railing.
4. For details of End Cap (Type TC), see Standard Plan A78C1.
5. See Standard Plan A78K for additional details regarding depth dimension for straight metal box spacer.
6. Direction of adjacent traffic indicated by ⟹.

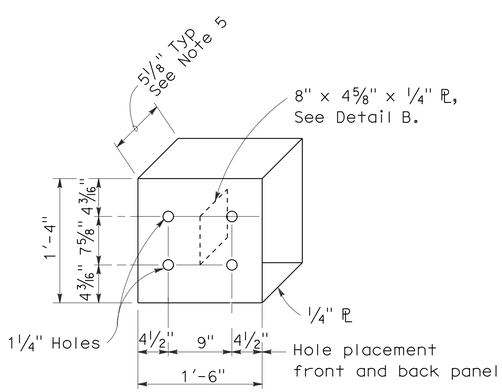

DETAIL A

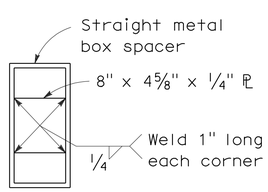

DETAIL B

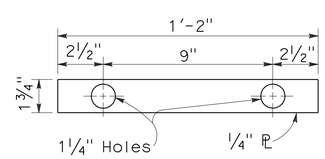

DETAIL C

STRAIGHT METAL BOX SPACER

PLATE 'A'

STATE OF CALIFORNIA
DEPARTMENT OF TRANSPORTATION

DOUBLE THRIE BEAM BARRIER CONNECTION TO BRIDGE RAILINGS WITHOUT SIDEWALKS

NO SCALE

RSP A78F1 DATED JUNE 6, 2008 SUPERSEDES STANDARD PLAN A78F1
DATED MAY 1, 2006 - PAGE 92 OF THE STANDARD PLANS BOOK DATED MAY 2006.

REVISED STANDARD PLAN RSP A78F1

2006 REVISED STANDARD PLAN RSP A78F1

12-10-07

DIST	COUNTY	ROUTE	POST MILES TOTAL PROJECT	SHEET NO.	TOTAL SHEETS
06	Tul	99	2.9/3.3	92	128

William K. Farnbach
REGISTERED CIVIL ENGINEER

May 15, 2009
PLANS APPROVAL DATE

REGISTERED PROFESSIONAL ENGINEER William K. Farnbach No. C49042 Exp. 9-30-10 CIVIL STATE OF CALIFORNIA

The State of California or its officers or agents shall not be responsible for the accuracy or completeness of electronic copies of this plan sheet.

To accompany plans dated 4-5-10

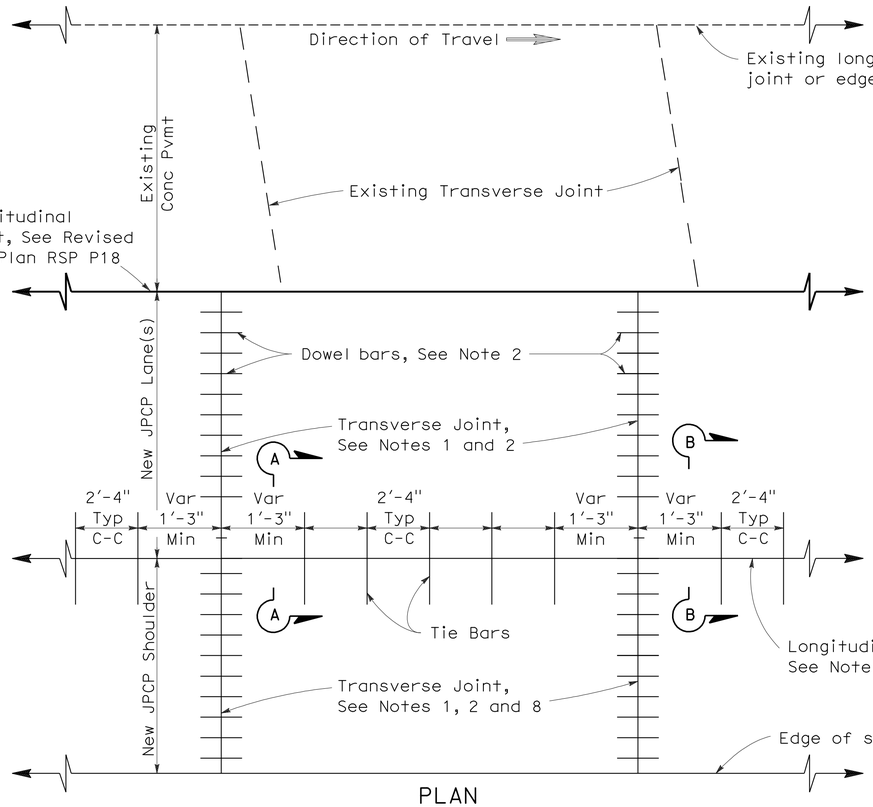

PLAN

LANE/SHOULDER ADDITION OR RECONSTRUCTION

See Notes 6 and 7

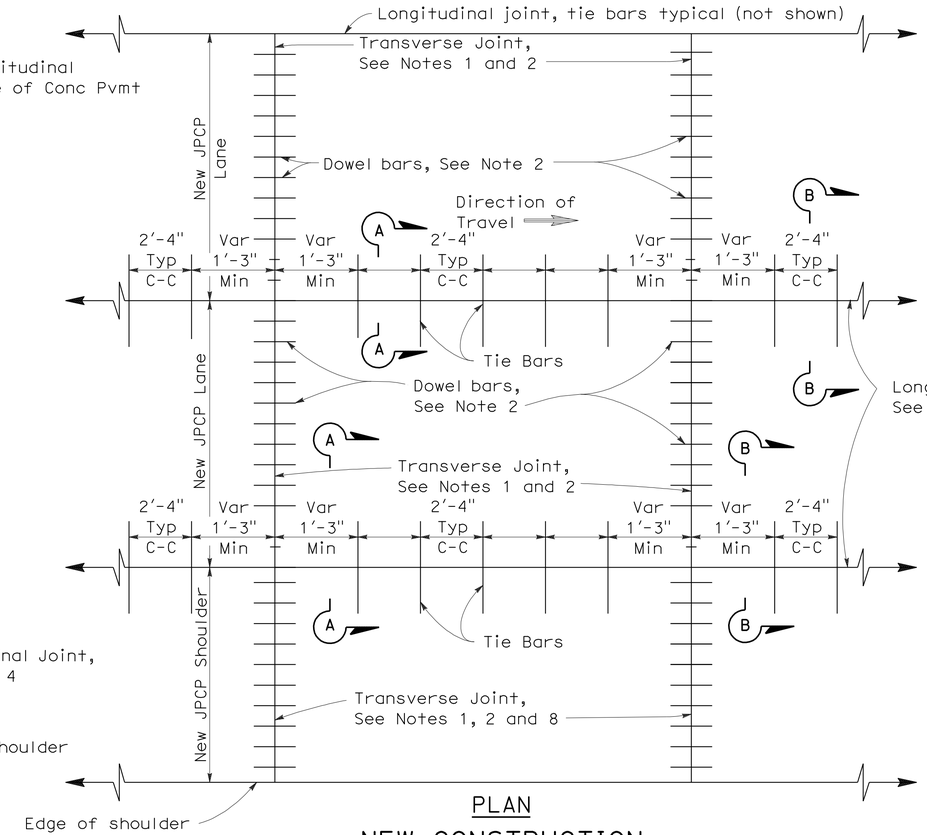

PLAN

NEW CONSTRUCTION

See Notes 6 and 7

NOTES:

1. Transverse joints shall be constructed at right angles to the longitudinal pavement joints in new jointed plain concrete pavement and spaced at successive repeated intervals of 12', 15', 13' and 14'.
2. For transverse joint and dowel bar details not shown, See Revised Standard Plan RSP P10.
3. Construct longitudinal contraction joints as shown in Section A-A when more than one lane or shoulder widths are placed at one time. If constructing one lane at a time, use longitudinal construction joint, as shown in Section B-B.
4. For additional longitudinal joint details, see Revised Standard Plan RSP P18.
5. If fresh concrete is placed adjacent to existing concrete, the top corner of the new hardened concrete does not need to be rounded to the 1/4" radius as shown.
6. Joint spacing patterns do not apply to intersections.
7. Details can also apply to inside widening.
8. Dowel bars may be omitted from shoulders when the shoulder cross slope is not the same as the adjacent traffic lane.

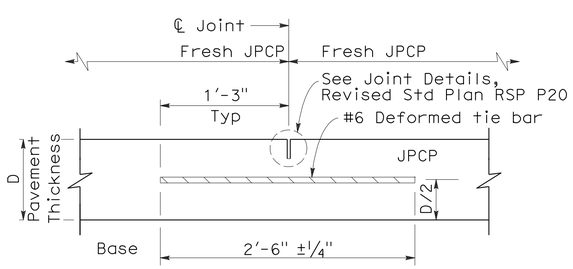

SECTION A-A

LONGITUDINAL CONTRACTION JOINT

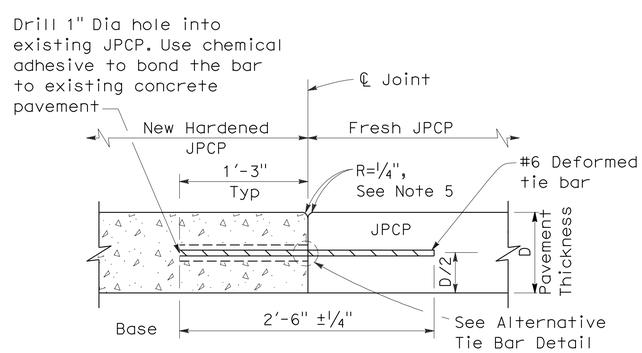

SECTION B-B

LONGITUDINAL CONSTRUCTION JOINT

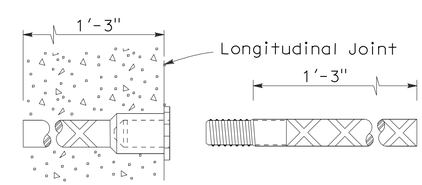

ALTERNATIVE TIE BAR SPLICE DETAIL

(Splice Coupler)

TIE BAR DETAILS

STATE OF CALIFORNIA
DEPARTMENT OF TRANSPORTATION

JOINTED PLAIN CONCRETE PAVEMENT

NO SCALE

RSP P1 DATED MAY 15, 2009 SUPERSEDES STANDARD PLAN P1
DATED MAY 1, 2006 - PAGE 119 OF THE STANDARD PLANS BOOK DATED MAY 2006.

REVISED STANDARD PLAN RSP P1

2006 REVISED STANDARD PLAN RSP P1

5-8-09

DIST	COUNTY	ROUTE	POST MILES TOTAL PROJECT	SHEET NO.	TOTAL SHEETS
06	Tul	99	2.9/3.3	93	128

William K. Farnbach
REGISTERED CIVIL ENGINEER

May 15, 2009
PLANS APPROVAL DATE

REGISTERED PROFESSIONAL ENGINEER
William K. Farnbach
No. C49042
Exp. 9-30-10
CIVIL
STATE OF CALIFORNIA

The State of California or its officers or agents shall not be responsible for the accuracy or completeness of electronic copies of this plan sheet.

To accompany plans dated 4-5-10

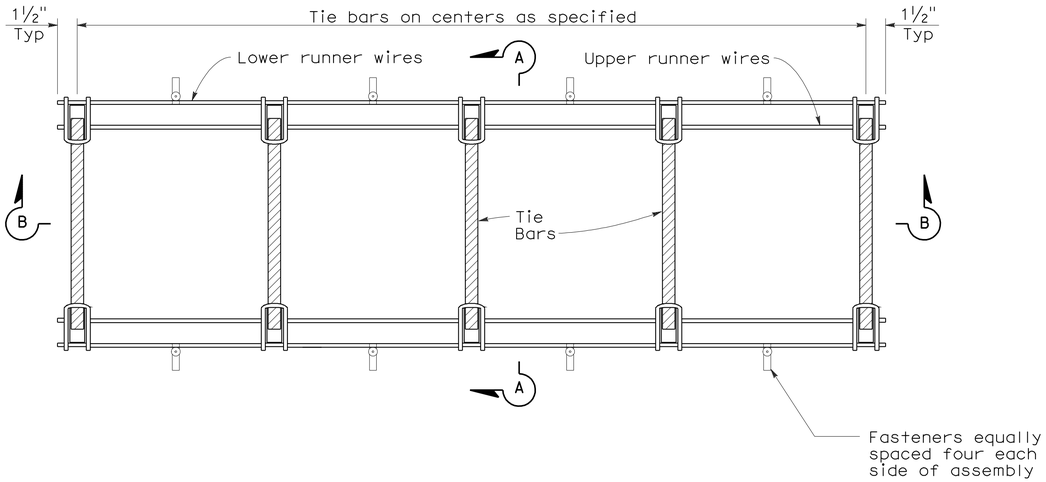

PLAN

TIE BAR BASKET

(TIE BARS AT LONGITUDINAL JOINT)
See Note 1

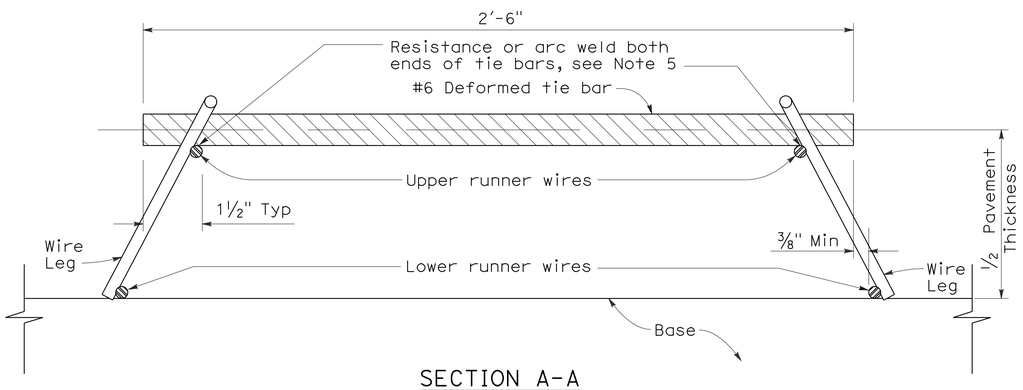

SECTION A-A

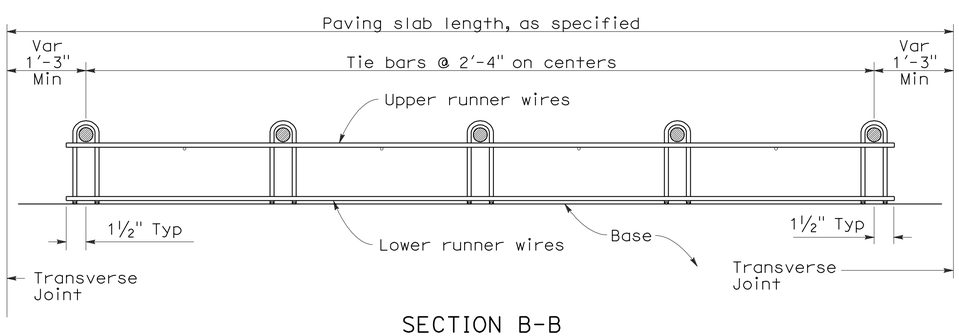

SECTION B-B
See Note 1

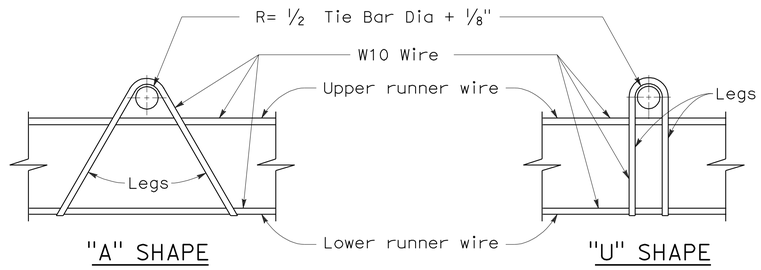

ASSEMBLY FRAME DETAILS

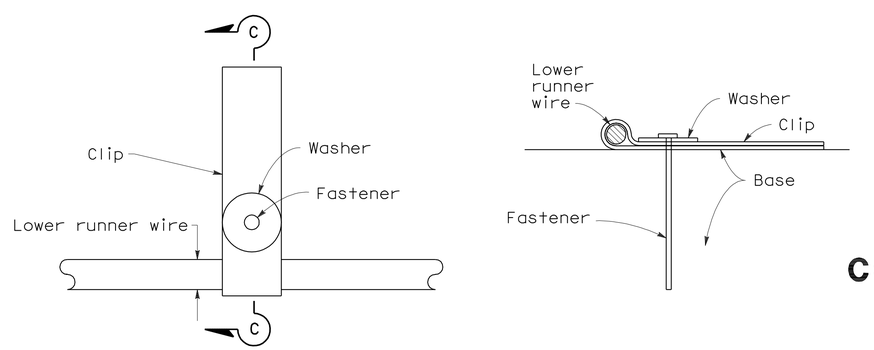

PLAN

SECTION C-C

FASTENER DETAIL

NOTES:

1. "U" frame shape assembly shown. "U" frame shape or "A" frame shape are acceptable.
2. Wire sizes shown are minimum required.
3. All wire intersections are to be resistance welded.
4. Not for use on nondoweled skewed jointed plain concrete pavement.
5. Weld may be at top or bottom of tie bar.

STATE OF CALIFORNIA
DEPARTMENT OF TRANSPORTATION

CONCRETE PAVEMENT-TIE BAR BASKET DETAILS

NO SCALE

RSP P17 DATED MAY 15, 2009 SUPERSEDES RSP P17 DATED NOVEMBER 17, 2006 AND STANDARD PLAN P17 DATED MAY 1, 2006 - PAGE 126 OF THE STANDARD PLANS BOOK DATED MAY 2006.

REVISED STANDARD PLAN RSP P17

2006 REVISED STANDARD PLAN RSP P17

5-8-09

DIST	COUNTY	ROUTE	POST MILES TOTAL PROJECT	SHEET NO.	TOTAL SHEETS
06	Tul	99	2.9/3.3	94	128

William K. Farnbach
REGISTERED CIVIL ENGINEER

May 15, 2009
PLANS APPROVAL DATE

REGISTERED PROFESSIONAL ENGINEER
William K. Farnbach
No. C49042
Exp. 9-30-10
CIVIL
STATE OF CALIFORNIA

The State of California or its officers or agents shall not be responsible for the accuracy or completeness of electronic copies of this plan sheet.

To accompany plans dated 4-5-10

2006 REVISED STANDARD PLAN RSP P20

NOTE:

1. Tie bars, dowel bars, and reinforcement are not shown in joint seal details, see Revised Standard Plans RSP P1, RSP P3, RSP P10, RSP P35, RSP P45, or RSP P46 as applicable.

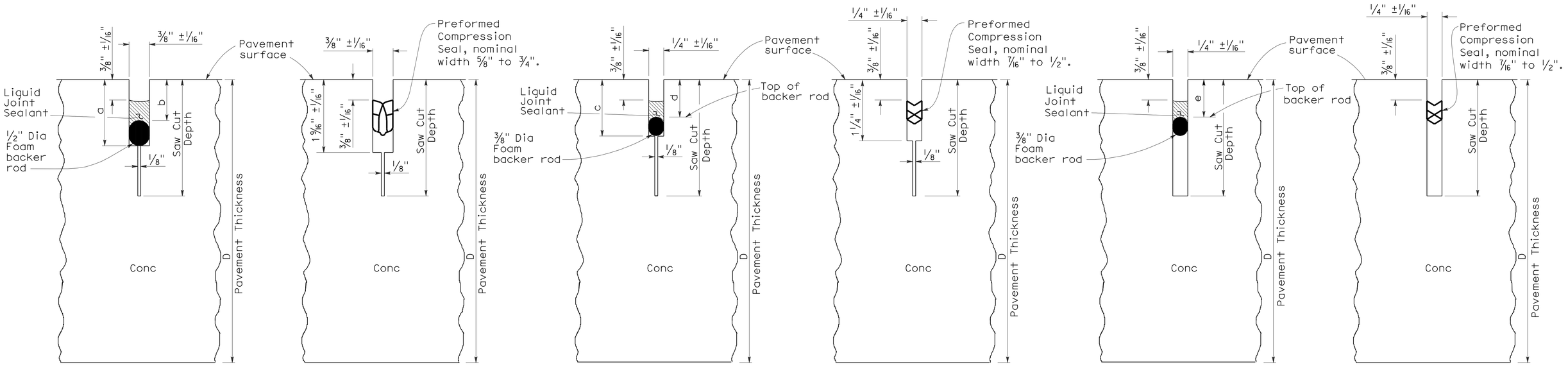

LIQUID SEALANT — COMPRESSION SEAL

TYPE A1

Transverse Contraction Joints

LIQUID SEALANT — COMPRESSION SEAL

TYPE A2

Longitudinal Contraction Joints

LIQUID SEALANT — COMPRESSION SEAL

TYPE B

Longitudinal or Transverse Contraction Joint

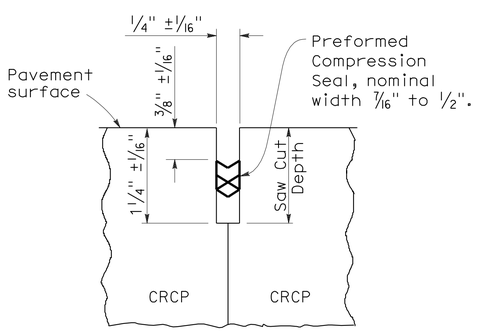

COMPRESSION SEAL

TYPE C

Transverse and Longitudinal Construction Joints (For CRCP)

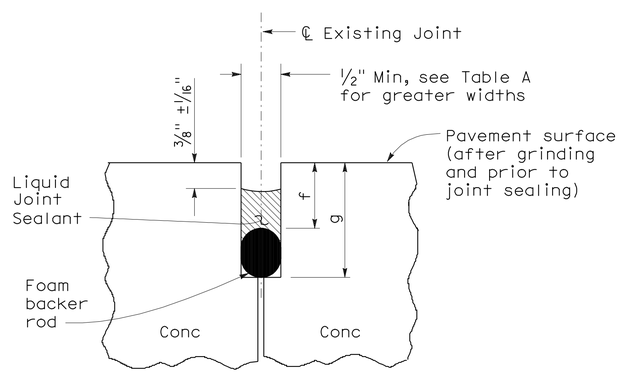

LIQUID SEALANT

TYPE R

Retrofit Transverse and Longitudinal Joints

LIQUID SEALANT RESERVOIR DEPTH

LIQUID SEALANT MATERIAL	3/8" Joint Width Type A1		1/4" Joint Width Type A2		1/4" Joint Width Type B
	DIMENSION		DIMENSION		DIMENSION
	a	b	c	d	e
SILCONE	1" ±1/16"	5/8" ±1/16"	15/16" ±1/16"	9/16" ±1/16"	9/16" ±1/16"
ASPHALT RUBBER	1 3/16" ±1/16"	3/4" ±1/16"	1 1/16" ±1/16"	11/16" ±1/16"	11/16" ±1/16"

TABLE A (TYPE R JOINT)

Sawn Joint Width	Backer Rod Diameter ± 1/16"	DIMENSION "f"	DIMENSION "g"
1"	1 5/16"	7/8"	2 1/4"
7/8"	1 3/16"	13/16"	2"
3/4"	1"	3/4"	1 3/4"
5/8"	7/8"	11/16"	1 1/2"
1/2"	11/16"	5/8"	1 1/4"

STATE OF CALIFORNIA
DEPARTMENT OF TRANSPORTATION

CONCRETE PAVEMENT-JOINT DETAILS

NO SCALE

RSP P20 DATED MAY 15, 2009 SUPERSEDES STANDARD PLAN P20 DATED MAY 1, 2006 - PAGE 128 OF THE STANDARD PLANS BOOK DATED MAY 2006.

REVISED STANDARD PLAN RSP P20

5-8-09

DIST	COUNTY	ROUTE	POST MILES TOTAL PROJECT	SHEET NO.	TOTAL SHEETS
06	Tul	99	2.9/3.3	95	128

William K. Farnbach
REGISTERED CIVIL ENGINEER

May 15, 2009
PLANS APPROVAL DATE

REGISTERED PROFESSIONAL ENGINEER
William K. Farnbach
No. C49042
Exp. 9-30-10
CIVIL
STATE OF CALIFORNIA

The State of California or its officers or agents shall not be responsible for the accuracy or completeness of electronic copies of this plan sheet.

To accompany plans dated 4-5-10

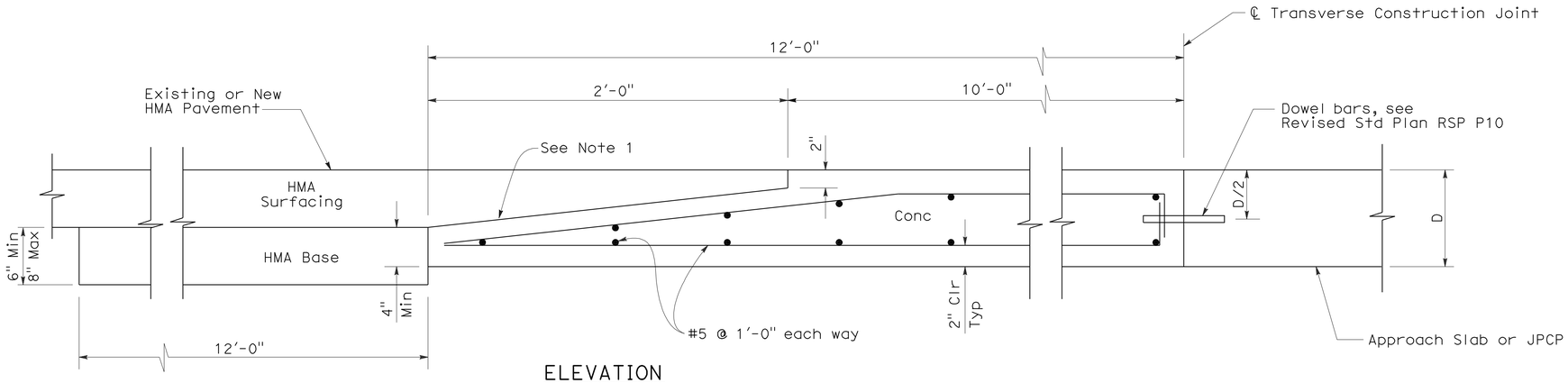

ELEVATION

CONCRETE PAVEMENT TO HOT MIXED ASPHALT PAVEMENT TRANSITION PANEL

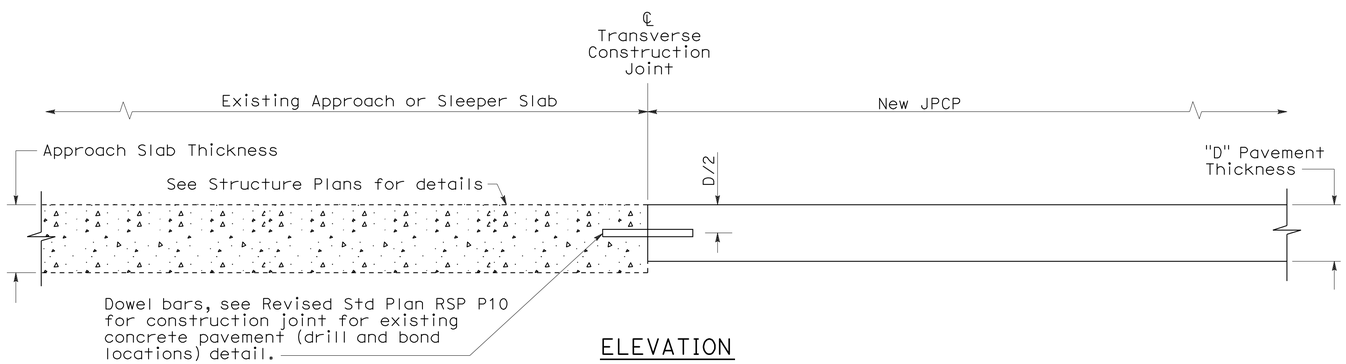

ELEVATION

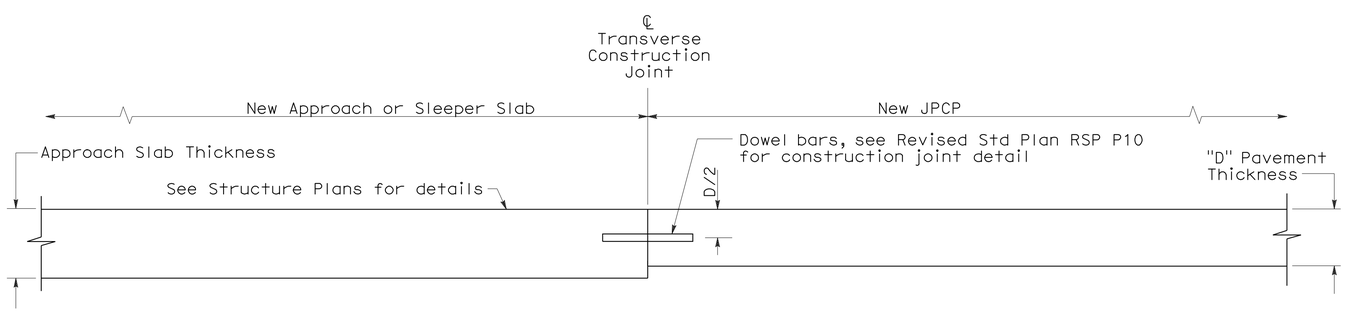

ELEVATION

CONCRETE PAVEMENT TRANSITION TO APPROACH OR SLEEPER SLAB

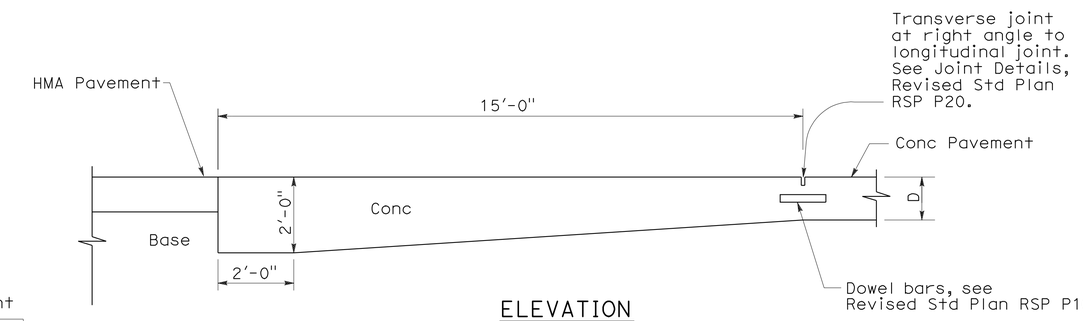

ELEVATION

PAVEMENT END ANCHOR

NOTE:

1. Heavy broom finish.

STATE OF CALIFORNIA
DEPARTMENT OF TRANSPORTATION

JOINTED PLAIN CONCRETE PAVEMENT-END PANEL PAVEMENT TRANSITIONS

NO SCALE

RSP P30 DATED MAY 15, 2009 SUPERSEDES STANDARD PLAN P30
DATED MAY 1, 2006 - PAGE 129 OF THE STANDARD PLANS BOOK DATED MAY 2006.

REVISED STANDARD PLAN RSP P30

2006 REVISED STANDARD PLAN RSP P30

5-8-09

DIST	COUNTY	ROUTE	POST MILES TOTAL PROJECT	SHEET NO.	TOTAL SHEETS
06	Tul	99	2.9/3.3	96	128

Randell D. Hiatt
REGISTERED CIVIL ENGINEER

June 6, 2008
PLANS APPROVAL DATE

REGISTERED PROFESSIONAL ENGINEER
Randell D. Hiatt
No. C50200
Exp. 6-30-09
CIVIL
STATE OF CALIFORNIA

The State of California or its officers or agents shall not be responsible for the accuracy or completeness of electronic copies of this plan sheet.

To accompany plans dated 4-5-10

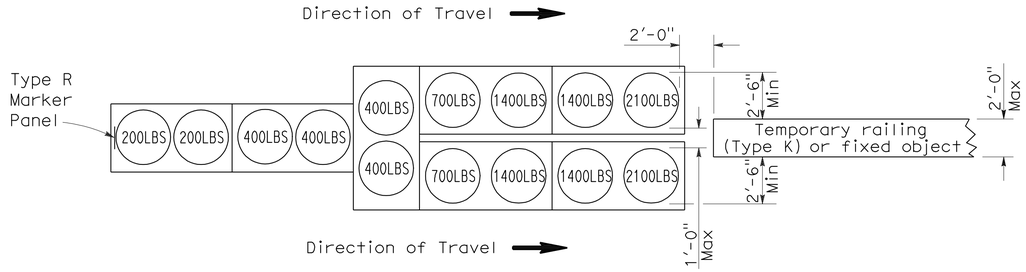

ARRAY 'TU14'

Approach speed 45 mph or more

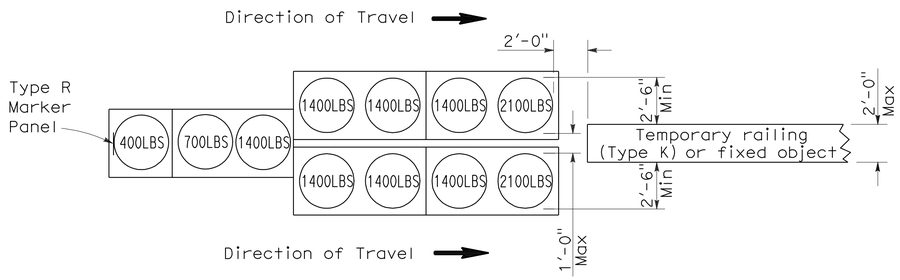

ARRAY 'TU11'

Approach speed less than 45 mph

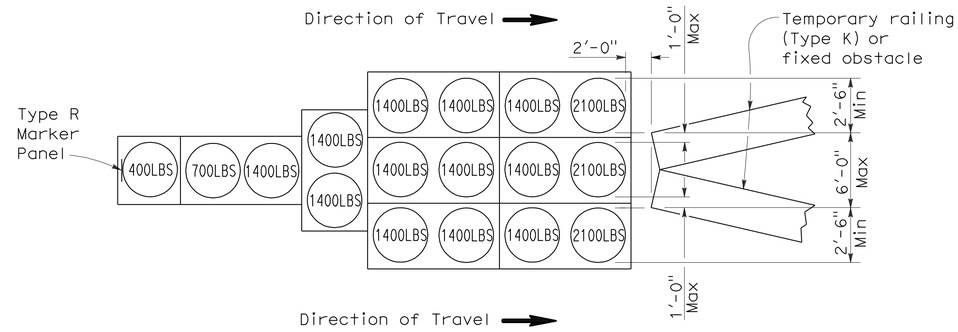

ARRAY 'TU17'

Approach speed less than 45 mph

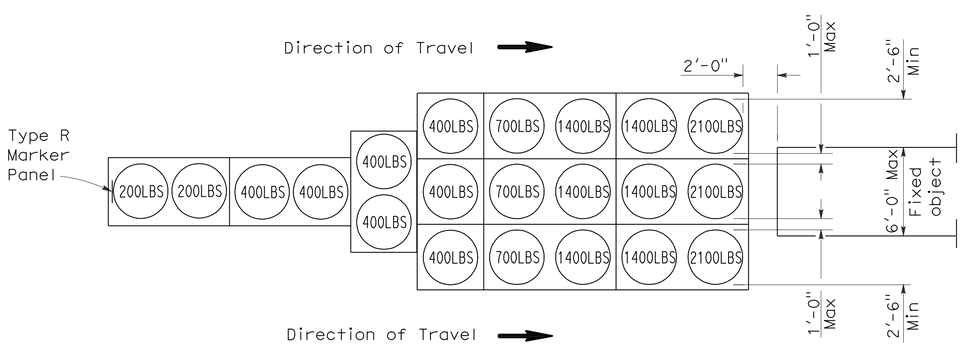

ARRAY 'TU21'

Approach speed 45 mph or more

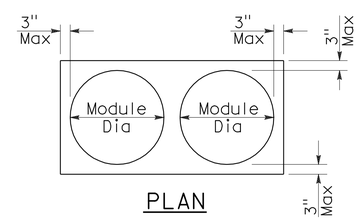

PLAN

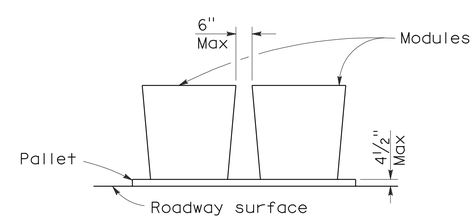

ELEVATION

CRASH CUSHION PALLET DETAIL

See Note 7

NOTES:

1. (XXX) Indicates sand filled module location and weight of sand in pounds for each module. Module spacing is based on the greater diameter of the module.
2. All sand weights are nominal.
3. Temporary crash cushion arrays shall not encroach on the traveled way.
4. Place the top of Type R marker panel 1" below the module lid.
5. Refer to Standard Plan A73B for marker details.
6. Approach speeds indicated conform to NCHRP 350 Report criteria.
7. Use of pallets is optional.

STATE OF CALIFORNIA
DEPARTMENT OF TRANSPORTATION

TEMPORARY CRASH CUSHION, SAND FILLED (UNIDIRECTIONAL)

NO SCALE

RSP T1A DATED JUNE 6, 2008 SUPERSEDES STANDARD PLAN T1A
DATED MAY 1, 2006 - PAGE 211 OF THE STANDARD PLANS BOOK DATED MAY 2006.

REVISED STANDARD PLAN RSP T1A

2006 REVISED STANDARD PLAN RSP T1A

DIST	COUNTY	ROUTE	POST MILES TOTAL PROJECT	SHEET NO.	TOTAL SHEETS
06	Tul	99	2.9/3.3	97	128

Randell D. Hiatt
REGISTERED CIVIL ENGINEER

June 6, 2008
PLANS APPROVAL DATE

REGISTERED PROFESSIONAL ENGINEER
Randell D. Hiatt
No. C50200
Exp. 6-30-09
CIVIL
STATE OF CALIFORNIA

The State of California or its officers or agents shall not be responsible for the accuracy or completeness of electronic copies of this plan sheet.

To accompany plans dated 4-5-10

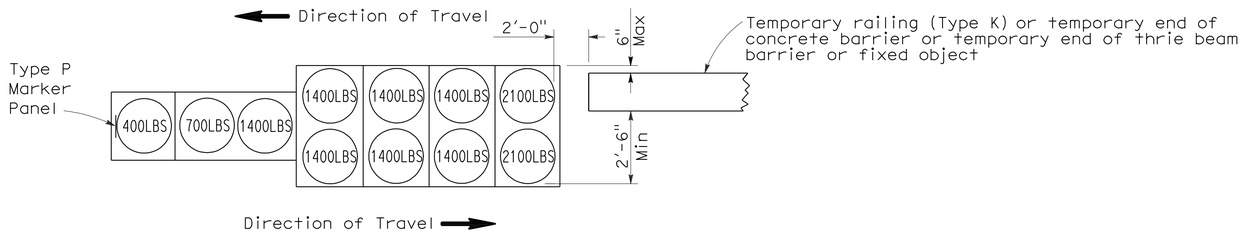

ARRAY 'TB11'

Approach speed less than 45 mph

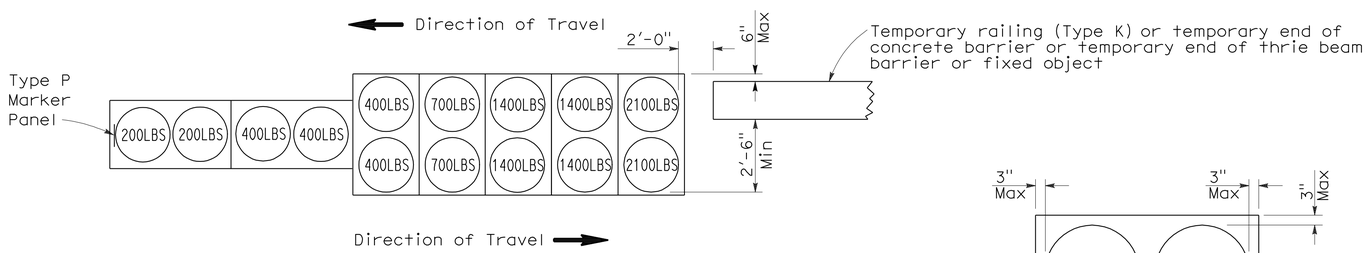

ARRAY 'TB14'

Approach speed 45 mph or more

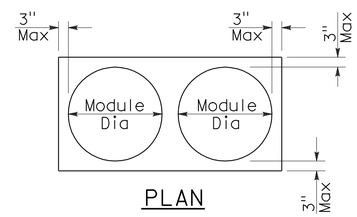

PLAN

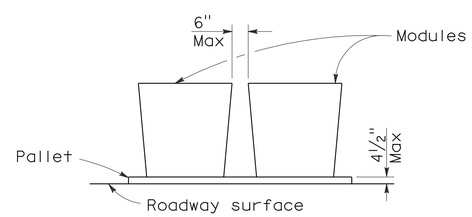

ELEVATION

CRASH CUSHION PALLET DETAIL

See Note 7

NOTES:

1. (XXX) Indicates sand filled module location and weight of sand in pounds for each module. Module spacing is based on the greater diameter of the module.
2. All sand weights are nominal.
3. Temporary crash cushion arrays shall not encroach on the traveled way.
4. Place the Type P marker panel so that the bottom of the panel rests upon the pallet.
5. Refer to Standard Plan A73B for marker details.
6. Approach speeds indicated conform to NCHRP 350 Report criteria.
7. Use of pallets is optional.

STATE OF CALIFORNIA
DEPARTMENT OF TRANSPORTATION

TEMPORARY CRASH CUSHION, SAND FILLED (BIDIRECTIONAL)

NO SCALE

RSP T1B DATED JUNE 6, 2008 SUPERSEDES STANDARD PLAN T1B
DATED MAY 1, 2006 - PAGE 212 OF THE STANDARD PLANS BOOK DATED MAY 2006.

REVISED STANDARD PLAN RSP T1B

2006 REVISED STANDARD PLAN RSP T1B

5-15-08

DIST	COUNTY	ROUTE	POST MILES TOTAL PROJECT	SHEET NO.	TOTAL SHEETS
06	Tul	99	2.9/3.3	98	128

Randell D. Hiatt
REGISTERED CIVIL ENGINEER

June 6, 2008
PLANS APPROVAL DATE

REGISTERED PROFESSIONAL ENGINEER
Randell D. Hiatt
No. C50200
Exp. 6-30-09
CIVIL
STATE OF CALIFORNIA

The State of California or its officers or agents shall not be responsible for the accuracy or completeness of electronic copies of this plan sheet.

To accompany plans dated 4-5-10

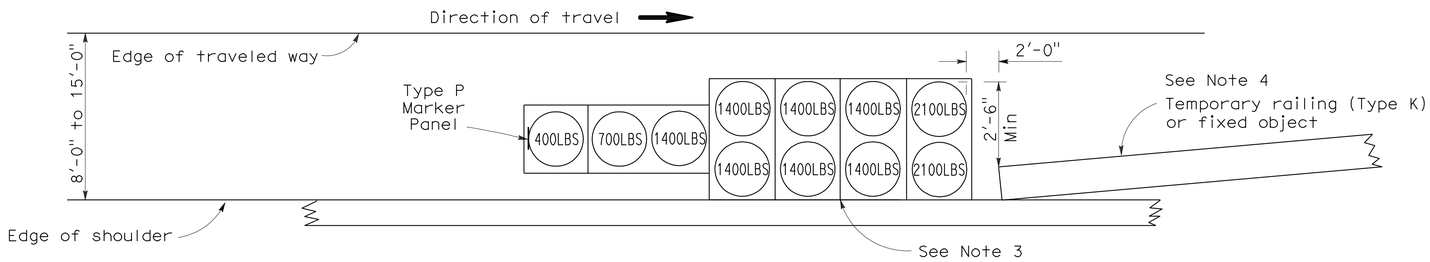

ARRAY 'TS11'

Approach speed less than 45 mph
See Note 9

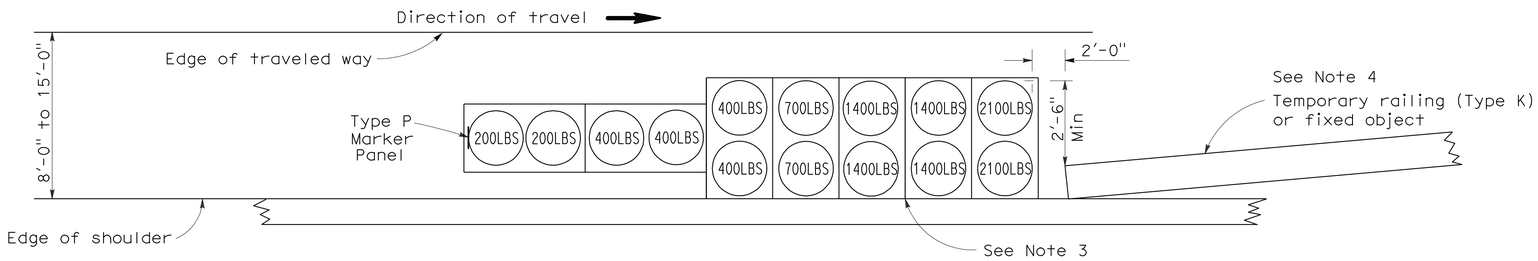

ARRAY 'TS14'

Approach speed 45 mph or more
See Note 9

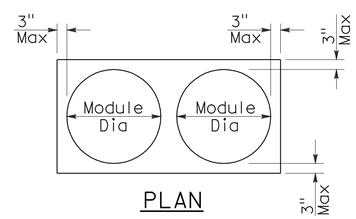

PLAN

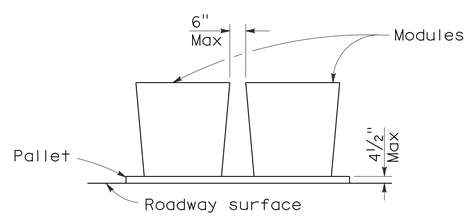

ELEVATION

CRASH CUSHION PALLET DETAIL

See Note 11

NOTES:

1. (XXX) Indicates sand filled module location and weight of sand in pounds for each module. Module spacing is based on the greater diameter of the module.
2. All sand weights are nominal.
3. The temporary crash cushion arrays shown on this plan shall be used only in locations where there will be traffic on one side of the temporary crash cushion array.
4. If the fixed object or approach end of the temporary railing is less than 15'-0" from the edge of traveled way, a temporary crash cushion is required in a construction or work zone.
5. Temporary crash cushion arrays shall not encroach on the traveled way.
6. Arrays for median shoulders shall conform to details shown on this plan for outside shoulders.
7. Place the Type P marker panel so that the bottom of the panel rests upon the pallet and faces traffic.
8. Refer to Standard Plan A73B for marker details.
9. For shoulder widths less than 8'-0", appropriate approved crash cushion protection, other than sand filled modules, shall be provided at fixed objects and at approach ends of temporary railing. The specific type of crash cushion shall be as shown on the project plans or as specified in the Special Provisions, or if not shown on the project plans or specified in the Special Provisions, shall be as approved by the Engineer.
10. Approach speeds indicated conform to NCHRP 350 Report criteria.
11. Use of pallets is optional.

STATE OF CALIFORNIA
DEPARTMENT OF TRANSPORTATION

TEMPORARY CRASH CUSHION, SAND FILLED (SHOULDER INSTALLATIONS)

NO SCALE

RSP T2 DATED JUNE 6, 2008 SUPERSEDES STANDARD PLAN T2
DATED MAY 1, 2006 - PAGE 213 OF THE STANDARD PLANS BOOK DATED MAY 2006.

REVISED STANDARD PLAN RSP T2

2006 REVISED STANDARD PLAN RSP T2

5-15-08

DIST	COUNTY	ROUTE	POST MILES TOTAL PROJECT	SHEET NO.	TOTAL SHEETS
06	Tul	99	2.9/3.3	99	128

REGISTERED CIVIL ENGINEER

November 17, 2006
PLANS APPROVAL DATE

REGISTERED PROFESSIONAL ENGINEER — Greg W. Edwards — No. C36386 — Exp. 6-30-08 — CIVIL — STATE OF CALIFORNIA

The State of California or its officers or agents shall not be responsible for the accuracy or completeness of electronic copies of this plan sheet.

To accompany plans dated 4-5-10

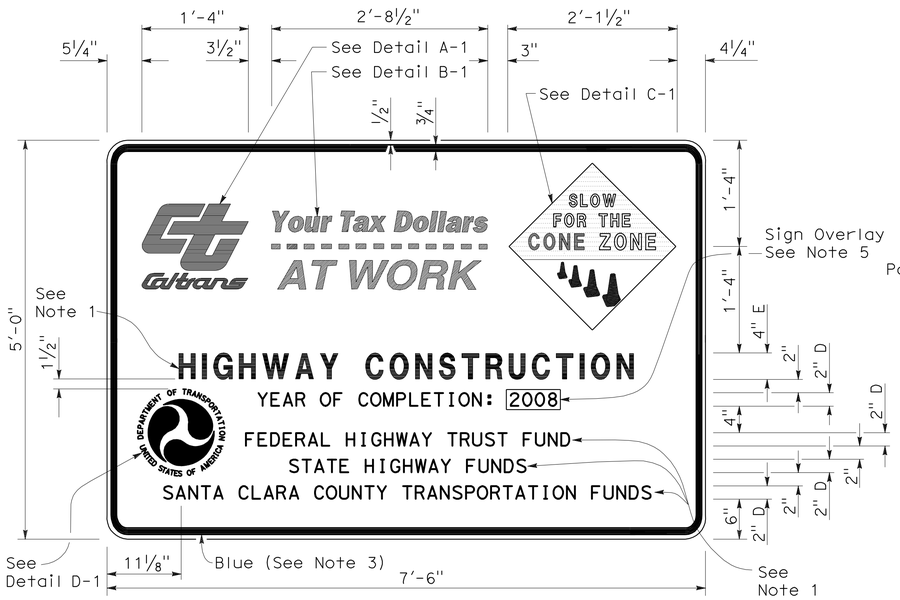

TYPE 1

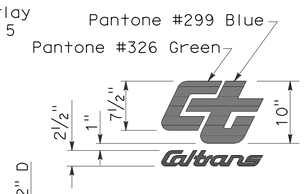

DETAIL A-1

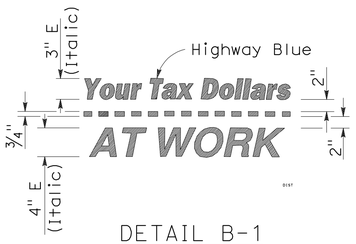

DETAIL B-1
(See Note 3)

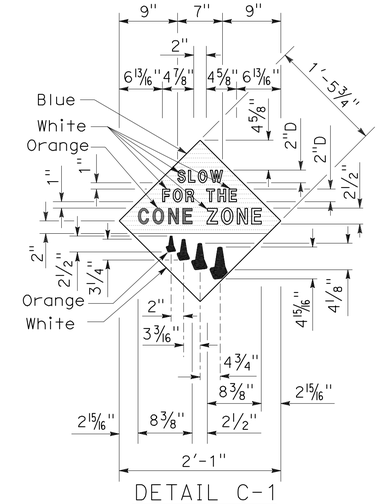

DETAIL C-1
(See Note 4)

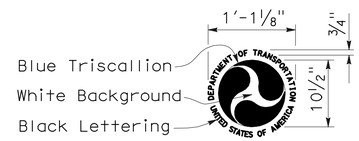

DETAIL D-1
(See Note 6)

NOTES:

1. The sign messages shown for type of project and fund types are examples only. See the Special Provisions for the applicable type of project and fund type messages to be used.
2. Except as otherwise shown, the legend of sign shall be black on a white background (non-reflective).
3. The border of the signs and details "B-1" and "B-2" shall be blue (non-reflective).
4. The diamond in details "C-1" and "C-2" shall be blue for the background of message, " SLOW FOR THE CONE ZONE", and white background for the orange cones. The color and type of font for the "SLOW FOR THE CONE ZONE" message shall be: "SLOW" white D; "FOR THE" white D; "CONE" orange Arial font; "ZONE" white Arial font.
5. Year of completion of project construction shown on the overlay is an example only. See the Special Provisions.
6. Use when the Project involves Federal Highway Trust Fund.

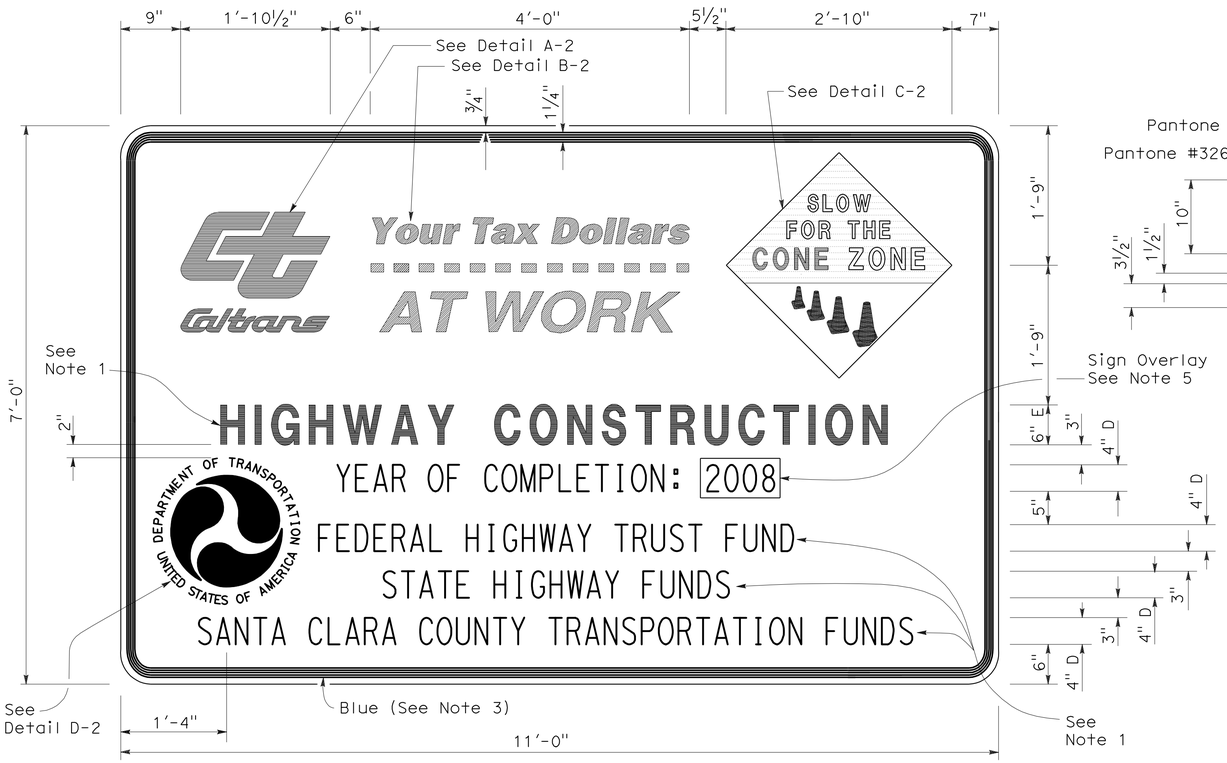

TYPE 2

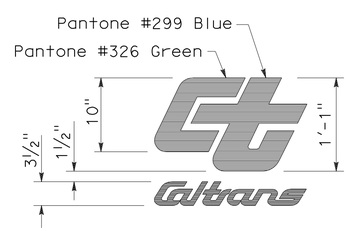

DETAIL A-2

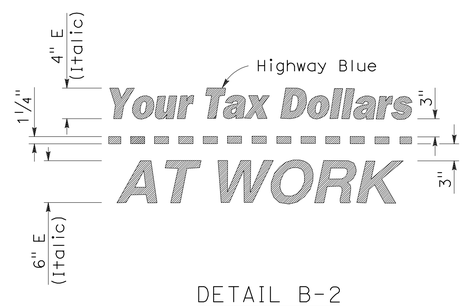

DETAIL B-2
(See Note 3)

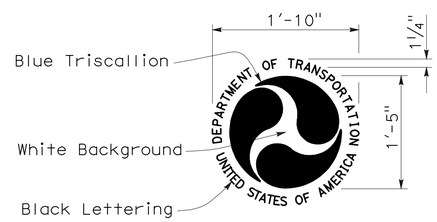

DETAIL D-2
(See Note 6)

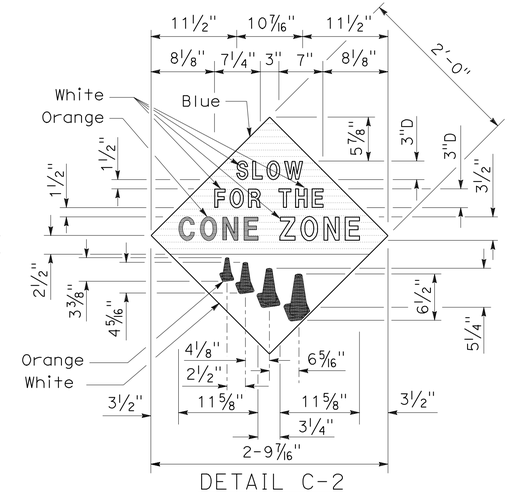

DETAIL C-2
(See Note 4)

STATE OF CALIFORNIA
DEPARTMENT OF TRANSPORTATION

CONSTRUCTION PROJECT FUNDING IDENTIFICATION SIGNS

NO SCALE

RSP T7 DATED NOVEMBER 17, 2006 SUPERSEDES STANDARD PLAN T7
DATED MAY 1, 2006 - PAGE 217 OF THE STANDARD PLANS BOOK DATED MAY 2006.

REVISED STANDARD PLAN RSP T7

2006 REVISED STANDARD PLAN RSP T7

9-7-06

DIST	COUNTY	ROUTE	POST MILES TOTAL PROJECT	SHEET NO.	TOTAL SHEETS
06	Tul	99	2.9/3.3	100	128

Robert B. Schott
LICENSED LANDSCAPE ARCHITECT

April 3, 2009
PLANS APPROVAL DATE

LICENSED LANDSCAPE ARCHITECT — Robert B. Schott — 3025 — Signature — 11-30-10 Renewal Date — 2-25-09 Date — STATE OF CALIFORNIA

The State of California or its officers or agents shall not be responsible for the accuracy or completeness of electronic copies of this plan sheet.

To accompany plans dated 4-5-10

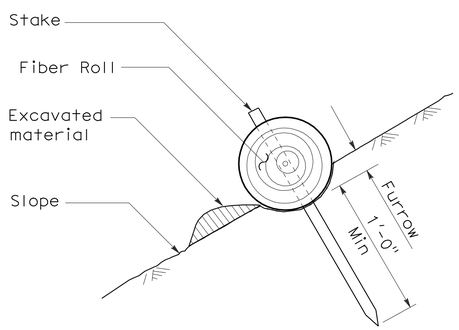

SECTION

TEMPORARY FIBER ROLL (TYPE 1)

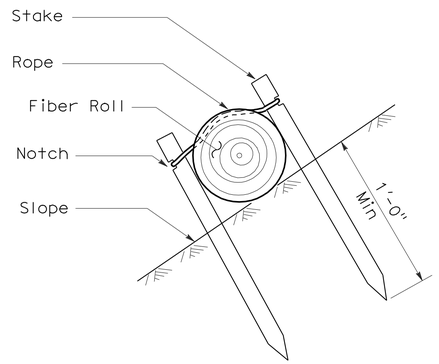

SECTION

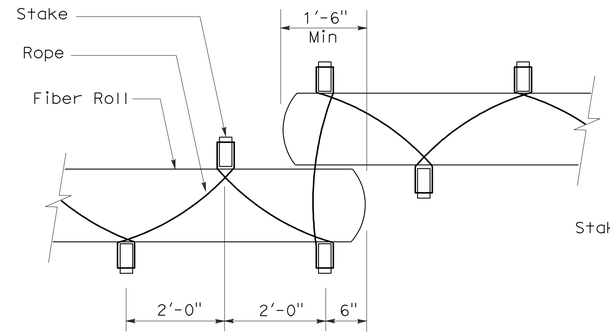

PLAN

TEMPORARY FIBER ROLL (TYPE 2)

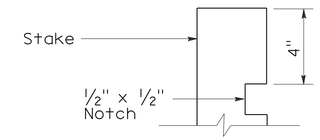

ELEVATION

STAKE NOTCH DETAIL

NOTES:

1. Temporary fiber roll spacing varies depending upon slope inclination.
2. Installations shown in the perspectives are for slope inclination of 10:1 and steeper.

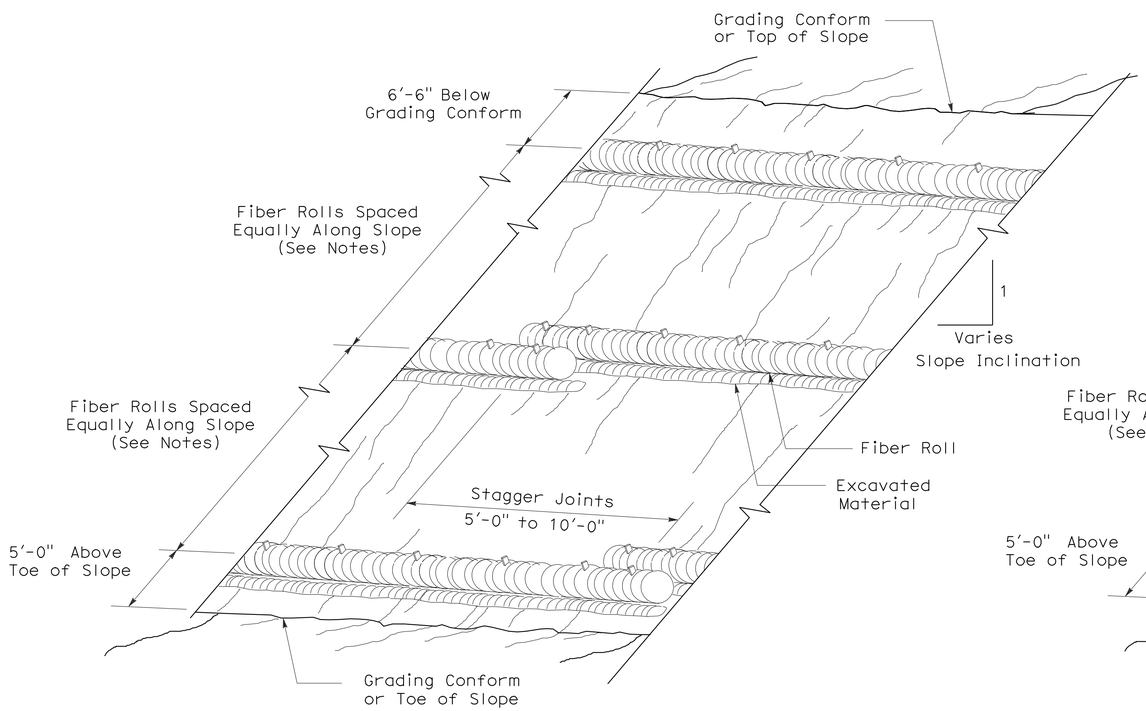

PERSPECTIVE

TEMPORARY FIBER ROLL (TYPE 1)

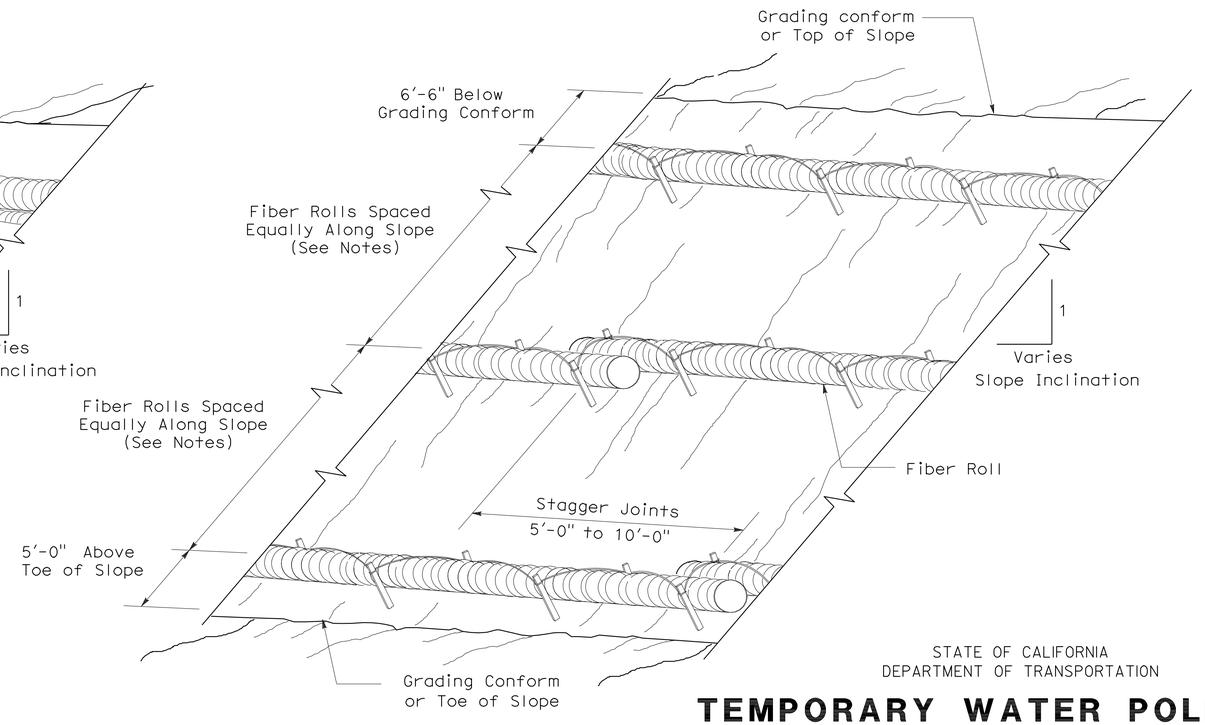

PERSPECTIVE

TEMPORARY FIBER ROLL (TYPE 2)

STATE OF CALIFORNIA
DEPARTMENT OF TRANSPORTATION

TEMPORARY WATER POLLUTION CONTROL DETAILS (TEMPORARY FIBER ROLL)

NO SCALE

RSP T56 DATED APRIL 3, 2009 SUPERSEDES STANDARD PLAN T56
DATED MAY 1, 2006 - PAGE 232 OF THE STANDARD PLANS BOOK DATED MAY 2006.

REVISED STANDARD PLAN RSP T56

2006 REVISED STANDARD PLAN RSP T56

DIST	COUNTY	ROUTE	POST MILES TOTAL PROJECT	SHEET NO.	TOTAL SHEETS
06	Tul	99	2.9/3.3	101	128

LICENSED LANDSCAPE ARCHITECT

April 3, 2009
PLANS APPROVAL DATE

LICENSED LANDSCAPE ARCHITECT
Robert B. Schott 3025
Signature
11-30-10
Renewal Date
2-25-09
Date
STATE OF CALIFORNIA

The State of California or its officers or agents shall not be responsible for the accuracy or completeness of electronic copies of this plan sheet.

To accompany plans dated 4-5-10

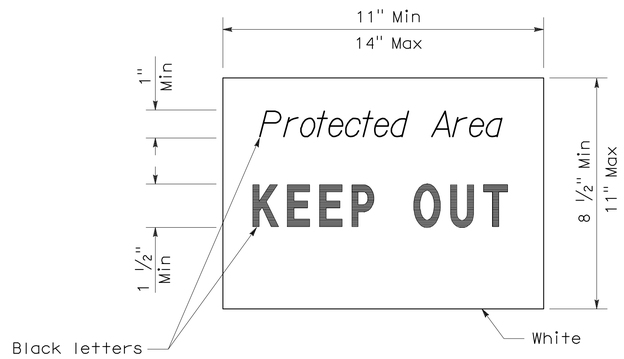

SIGN DETAIL

NOTE:

1. Temporary silt fence and temporary straw bale barrier shown for reference purposes only.

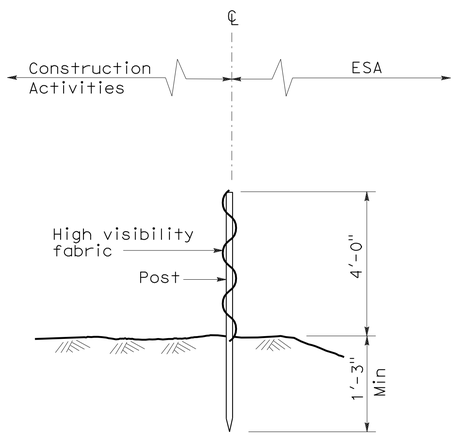

SECTION
TEMPORARY FENCE (TYPE ESA)

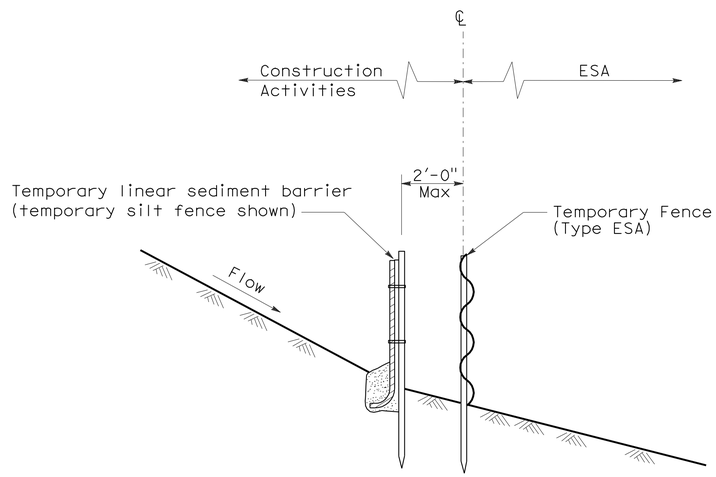

SECTION
PLACEMENT DETAIL
FOR TEMPORARY LINEAR SEDIMENT BARRIER
USED WITH TEMPORARY
FENCE (TYPE ESA)
(See Note 1)

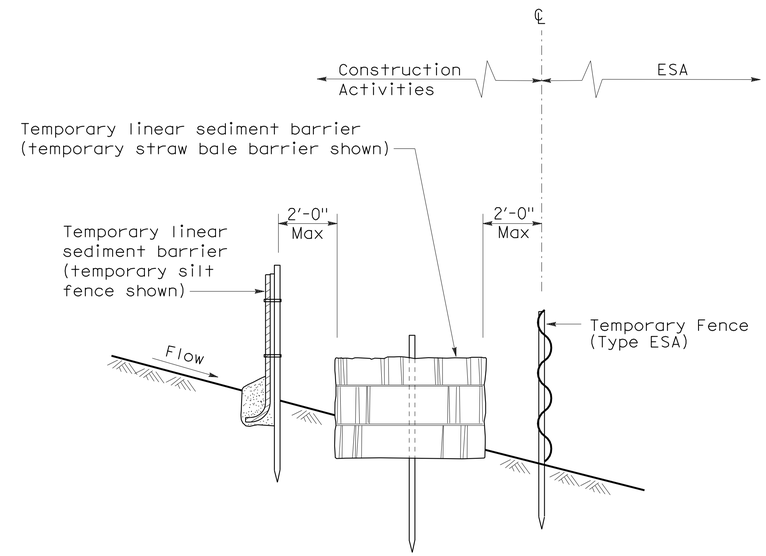

SECTION
PLACEMENT DETAIL
FOR TEMPORARY SILT FENCE
AND TEMPORARY STRAW BALE BARRIER
USED WITH TEMPORARY FENCE (TYPE ESA)
(See Note 1)

STATE OF CALIFORNIA
DEPARTMENT OF TRANSPORTATION

TEMPORARY WATER POLLUTION CONTROL DETAILS [TEMPORARY FENCE (TYPE ESA)]

NO SCALE

NSP T65 DATED APRIL 3, 2009 SUPPLEMENTS
THE STANDARD PLANS BOOK DATED MAY 2006.

NEW STANDARD PLAN NSP T65

2006 NEW STANDARD PLAN NSP T65

DIST	COUNTY	ROUTE	POST MILES TOTAL PROJECT	SHEET NO.	TOTAL SHEETS
06	Tul	99	2.9/3.3	102	128

REGISTERED CIVIL ENGINEER

October 5, 2007
PLANS APPROVAL DATE

REGISTERED PROFESSIONAL ENGINEER Efthymios Delis No. C51434 Exp. 6-30-08 CIVIL STATE OF CALIFORNIA

The State of California or its officers or agents shall not be responsible for the accuracy or completeness of electronic copies of this plan sheet.

To accompany plans dated 4-5-10

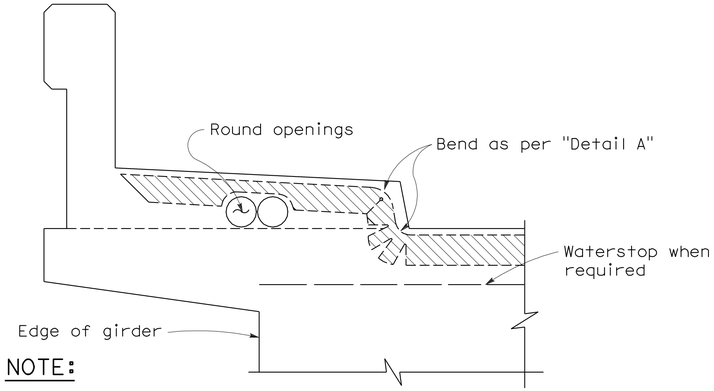

NOTE:

Type "B" seal shown. Type "A" seals to comform to the general path of seal shown, cuts for bending not required. Bend Type "A" seals 3" up into curb or barrier rail on only the low end of the seal.

CONCRETE BARRIER AND SIDEWALK

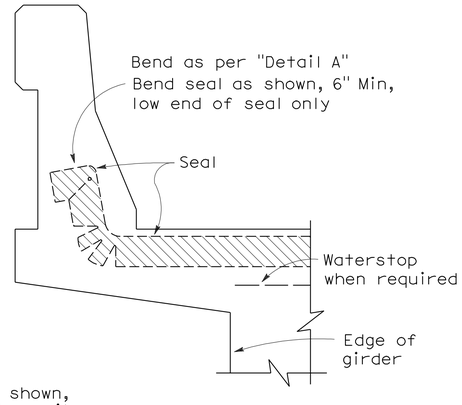

CONCRETE BARRIER

JOINT SEALS DETAILS

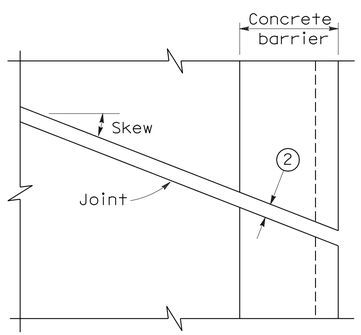

PLAN OF JOINT (SKEW ≤ 20°)

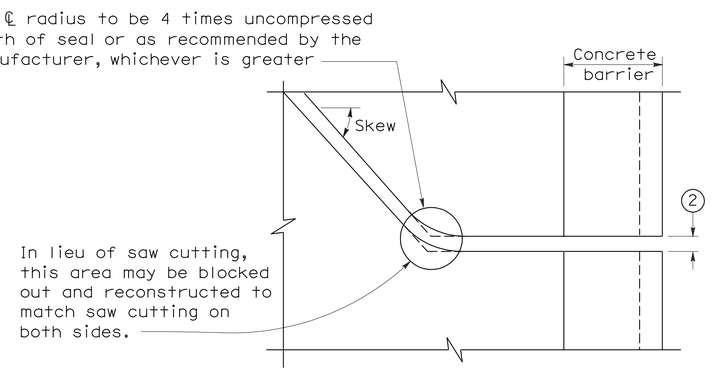

PLAN OF JOINT (SKEW > 20°)

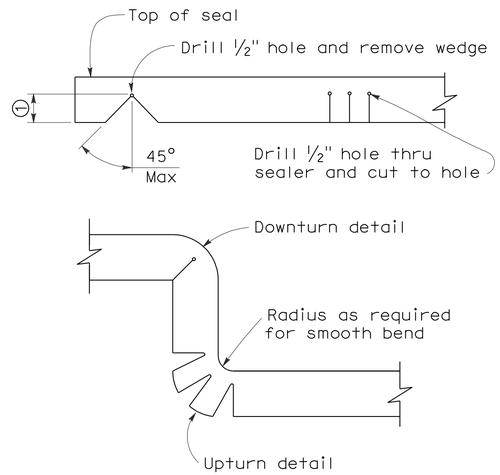

DETAIL A

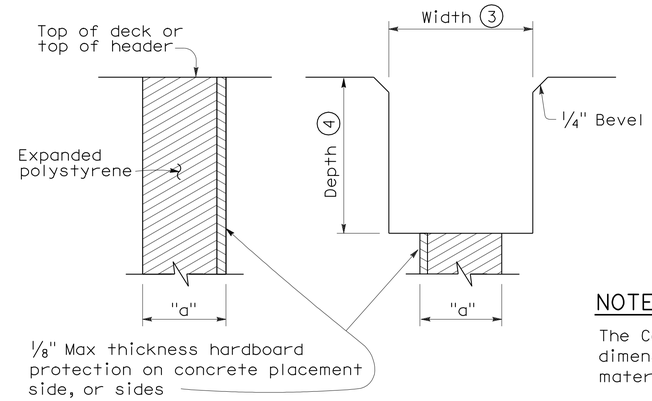

FORMING DETAIL SAWCUT DETAIL

NOTE:

The Contractor shall verify all controlling field dimensions before ordering or fabricatiing any material.

NOTES:

1. Make smooth cuts from the bottom of seal to 1½" clear of top leaving at least one complete cell between the top of the cut and top of the seal. When necessary cut back of seal to clear conduit and round openings.
2. Opening in barrier to match width of sawn deck joint.
3. Sawcut groove widths shall be as ordered by the Engineer.
4. Depth of sawcut: Type A - Depth to be 2" minimum.
   Type B - Depth to be equal to or greater than the depth of seal measured along the contact surface, when compressed to minimum width position (W_2) plus dimensions shown.
5. MR (movement rating) as shown on other plan sheets.
6. Other depths must be approved by the Engineer.

DIMENSIONS "a" OF JOINT REQUIRED

Movement Rating (MR) 5	Bridge Type	"a" Dimension Deck Concrete Placed		
		Winter	Fall-Spring	Summer
2"	All except CIP/PS	1½"	1¼"	¾"
	CIP/PS	1¼"	1"	½"
1½"	All except CIP/PS	1¼"	1"	½"
	CIP/PS	1"	¾"	½"
1"	All except CIP/PS	1"	¾"	½"
	CIP/PS	¾"	½"	½"
½"	All except CIP/PS	¾"	¾"	½"
	CIP/PS	½"	½"	½"

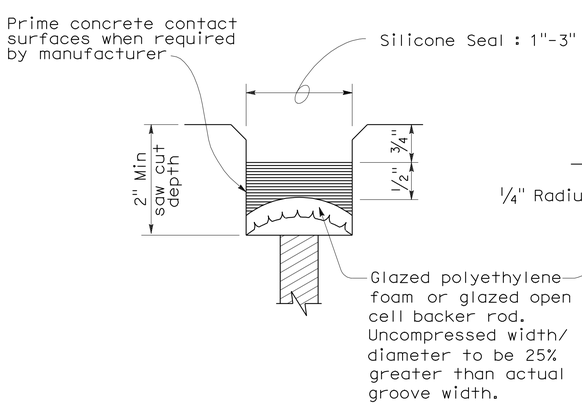

TYPE A SEAL

Movement rating : Silicone = 1" Max

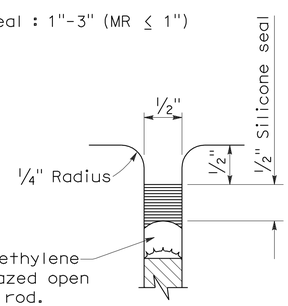

TYPE AL SEAL

Longitudinal joints only

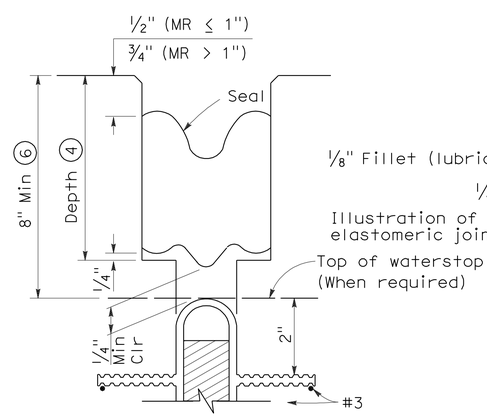

TYPE B JOINT SEAL
IN MINIMUM WIDTH POSITION (W_2)

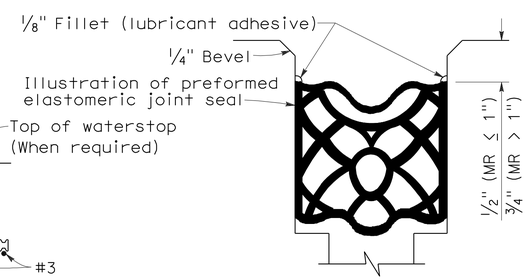

TYPE B SEAL

Movement Rating ≤ 2"

STATE OF CALIFORNIA
DEPARTMENT OF TRANSPORTATION

JOINT SEALS (MAXIMUM MOVEMENT RATING = 2")

NO SCALE

RSP B6-21 DATED OCTOBER 5, 2007 SUPERSEDES STANDARD PLAN B6-21 DATED MAY 1, 2006 - PAGE 258 OF THE STANDARD PLANS BOOK DATED MAY 2006.

REVISED STANDARD PLAN RSP B6-21

2006 REVISED STANDARD PLAN RSP B6-21

5-8-07

DIST	COUNTY	ROUTE	POST MILES TOTAL PROJECT	SHEET NO.	TOTAL SHEETS
06	Tul	99	2.9/3.3	103	128

REGISTERED ELECTRICAL ENGINEER

October 5, 2007
PLANS APPROVAL DATE

REGISTERED PROFESSIONAL ENGINEER Jeffery G. McRae No. E14512 Exp. 6-30-08 ELECTRICAL STATE OF CALIFORNIA

The State of California or its officers or agents shall not be responsible for the accuracy or completeness of electronic copies of this plan sheet.

To accompany plans dated 4-5-10

ELECTROLIERS

STANDARD TYPES
15, 15D
15 STRUCTURE
21, 21D STRUCTURE
30
31
32
35
36-20A

High mast light pole

Double Arm lighting standard

Existing electrolier

Electrolier foundation (Future installation)

NOTES:

1. Luminaires shall be 310 W HPS when installed on Type 21, 21D, 30, 31, 32, 35 and 36-20A Standards, unless otherwise specified. Luminaires shall be 200 W HPS when installed on other type standards or poles, unless otherwise specified.
2. Luminaires shall be the cutoff type, ANSI Type III medium cutoff lighting distribution, unless otherwise specified.
3. Variations noted adjacent to symbol on project plans.

Electrolier (see project notes or project plans)

Luminaire on wood pole

STANDARD NOTES:

- AB — Abandon. If applied to conduit, remove conductors.
- BC — Install pull box in existing conduit run.
- BP — Pedestrian barricade, type as indicated on plan.
- CB — Install conduit into existing pull box.
- CC — Connect new and existing conduit. Remove existing conductors and install conductors as indicated.
- CF — Conduit to remain for future use. Remove conductors. Install pull wire or rope.
- DH — Detector handhole.
- FA — Foundation to be abandoned.
- IS — Install sign on signal mast arm.
- NS — No slip base on standard.
- PEC — Photoelectric control.
- PEU — Photoelectric unit.
- RC — Equipment or material to be removed and become the property of the Contractor.
- RE — Remove electrolier, fuses and ballast. Tape ends of conductors.
- RL — Relocate equipment.
- RR — Remove and reuse equipment.
- RS — Remove and salvage equipment.
- SC — Splice new to existing conductors.
- SD — Service disconnect.
- SF — Standard to remain for future use. Remove luminaire, pole conductors, fuses and ballast.
- TSP — Telephone service point.

ABBREVIATIONS AND EQUIPMENT DESIGNATIONS

PROPOSED	EXISTING	
BBS	bbs	Battery backup system
BC	bc	Bolt circle
C	C	Conduit
CCTV	cctv	Closed circuit television
CKT	ckt	Circuit
CMS	cms	Changeable message sign
DLC	dlc	Loop detector lead-in cable
EMS	ems	Extinguishable message sign
EVC	evc	Emergency vehicle cable
EVD	evd	Emergency vehicle detector
FB	fb	Flashing beacon
FBCA	fbca	Flashing beacon control assembly
FBS	fbs	Flashing beacon with slip base
FO	fo	Fiber optic
G	G	Ground (Equipment Grounding Conductor)
GFCI	GFCI	Ground fault circuit interrupt
HAR	har	Highway advisory radio
HEX	hex	Hexagonal
HPS	hps	High pressure sodium
IISNS	iisns	Internally illuminated street name sign
ISL	isl	Induction sign lighting
LED	led	Light emitting diode
LMA	lma	Luminaire mast arm
LPS	lps	Low pressure sodium
LTG	ltg	Lighting
LUM	lum	Luminaire
MAT	mat	Mast arm mounting vehicle signal faces, top attachment
MAS	mas	Mast arm mounting vehicle signal faces, side attachment
MAS-4A	mas-4A	Mast arm mounting vehicle signal faces, side attachment - 4 signal section
MAS-4B	mas-4B	
MAS-4C	mas-4C	
MAS-5A	mas-5A	Mast arm mounting vehicle signal faces, side attachment - 5 signal section
MAS-5B	mas-5B	
MC	mc	Mercury contactor
M/M	m/m	Multiple to multiple transformer
MT	mt	Conduit with pull wire or rope only
MTG	mtg	Mounting
	mv	Mercury vapor lighting fixture
N	N	Neutral (Grounded Conductor)
NC	NC	Normally closed
NO	NO	Normally open
PB	pb	Pull box
PEC	pec	Photoelectric control (Type I, II, III, IV or V as shown)
PED	ped	Pedestrian
PEU	peu	Photoelectric unit
PPB	ppb	Pedestrian push button
RL		Relocated equipment
RM	rm	Ramp metering
SB	sb	Slip base
SIC	sic	Signal interconnect cable
SIG	sig	Signal
SMA	sma	Signal mast arm
SNS	sns	Street name sign
SP	sp	Service point
TDC	tdc	Telephone demarcation cabinet
TMS	tms	Traffic monitoring station
TOS	tos	Traffic Operations System
VEH	veh	Vehicle
XFMR	xfmr	Transformer
COMM	comm	Communication
RWIS	rwis	Roadway weather information system

SOFFIT AND WALL MOUNTED LUMINAIRES

Pendant, 70 W HPS unless otherwise specified.

Flush, 70 W HPS unless otherwise specified.

Wall surface, 70 W HPS unless otherwise specified.

Existing soffit or wall luminaire to remain unmodified.

Existing soffit or wall luminaire to be modified as specified.

NOTE:

Arrow indicates "street side" of luminaire.

STATE OF CALIFORNIA
DEPARTMENT OF TRANSPORTATION

ELECTRICAL SYSTEMS (SYMBOLS AND ABBREVIATIONS)

NO SCALE

RSP ES-1A DATED OCTOBER 5, 2007 SUPERSEDES STANDARD PLAN ES-1A DATED MAY 1, 2006 - PAGE 400 OF THE STANDARD PLANS BOOK DATED MAY 2006.

REVISED STANDARD PLAN RSP ES-1A

2006 REVISED STANDARD PLAN RSP ES-1A

DIST	COUNTY	ROUTE	POST MILES TOTAL PROJECT	SHEET NO.	TOTAL SHEETS
06	Tul	99	2.9/3.3	104	128

REGISTERED ELECTRICAL ENGINEER

October 5, 2007
PLANS APPROVAL DATE

REGISTERED PROFESSIONAL ENGINEER Jeffery G. McRae No. E14512 Exp. 6-30-08 ELECTRICAL STATE OF CALIFORNIA

The State of California or its officers or agents shall not be responsible for the accuracy or completeness of electronic copies of this plan sheet.

To accompany plans dated 4-5-10

2006 REVISED STANDARD PLAN RSP ES-1B

CONDUIT

PROPOSED	EXISTING	
		Lighting Conduit, unless otherwise indicated or noted
		Traffic signal conduit
C	c	Communication conduit
T	t	Telephone conduit
F	f	Fire alarm conduit
FO	fo	Fiber optic conduit
		Conduit termination (RSP ES-9A C)
R	r	Conduit riser in/on structure or service pole

SERVICE EQUIPMENT

PROPOSED	EXISTING	
OH	oh	Overhead lines
U	U	Wood pole "U" indicates utility owned
		Pole guy with anchor
		Utility transformer - ground mounted
III		Service equipment enclosure type
		Service equipment enclosure door indicates front of enclosure
T	t	Telephone demarcation cabinet

POLE-MOUNTED SERVICE DESIGNATION

Type of installation

TYPE H SERVICE - 28'-10" ← Pole height above grade

ILLUMINATED OVERHEAD SIGN

PROPOSED	EXISTING	
		Overhead sign - Single post
		Overhead sign - Two post
		Overhead sign - Mounted on structure
		Overhead sign with electrolier

SIGNAL EQUIPMENT

PROPOSED	EXISTING	
		Pedestrian signal face
		Pedestrian push button post
		Pedestrian barricade
		Vehicle signal face (with backplate, 3-Section: red, yellow and green)
		Vehicle signal face with angle visors
PV	PV	Modifications of basic symbols: "L" indicates all non-arrow sections louvered "LG" indicates louvered green section only "PV" indicates 12" programmed visibility sections "8" indicates all 8" sections (only when specified)
		Type 15TS and Vehicle signal face
		Vehicle signal face with red, yellow and green left arrow sections
		Vehicle signal face with red and yellow sections and up green arrow
		Vehicle signal face (5 Section) with red, yellow and green sections and yellow and green right arrows
		Type 1 Standard and attached vehicle signal faces
		Standard with signal mast arm only and attached vehicle signal faces and internally illuminated street name sign
		Type 33 Standard, Left-turn vehicle signal face and sign
		Standard with luminaire and signal mast arms and attached vehicle signal faces
		Cantilever flashing beacon Type 9 Frame, with a sign unless otherwise specified or indicated
		Type 15-FBS Standard with two vehicle signal face sections with lens, backplate and visor with a sign
R	Y	Flashing beacon. One vehicle signal face section with lens, backplate and visor. "R" indicates red indication, "Y" indicates yellow indication
		Controller assembly. Door indicates front of cabinet

SIGNAL EQUIPMENT Cont

PROPOSED	EXISTING	
		Guard post
		Type 1 Standard with "Meter On" sign
		Emergency Vehicle detector

NOTES:

1. All signal sections shall be 12" unless shown otherwise.
2. Signal heads shall be provided with backplates unless shown otherwise.
3. Signal indication shall be LED.

STATE OF CALIFORNIA
DEPARTMENT OF TRANSPORTATION

ELECTRICAL SYSTEMS (SYMBOLS AND ABBREVIATIONS)

NO SCALE

RSP ES-1B DATED OCTOBER 5, 2007 SUPERCEDES STANDARD PLAN ES-1B DATED MAY 1, 2006 - PAGE 401 OF THE STANDARD PLANS BOOK DATED MAY 2006.

REVISED STANDARD PLAN RSP ES-1B

7-10-07

DIST	COUNTY	ROUTE	POST MILES TOTAL PROJECT	SHEET NO.	TOTAL SHEETS
06	Tul	99	2.9/3.3	105	128

REGISTERED ELECTRICAL ENGINEER

October 5, 2007
PLANS APPROVAL DATE

REGISTERED PROFESSIONAL ENGINEER Jeffery G. McRae No. E14512 Exp. 6-30-08 ELECTRICAL STATE OF CALIFORNIA

The State of California or its officers or agents shall not be responsible for the accuracy or completeness of electronic copies of this plan sheet.

To accompany plans dated 4-5-10

EQUIPMENT IDENTIFICATION

ILLUMINATED SIGN IDENTIFICATION NUMBER:

Sign No. 12345

10 ISL SCI 1.0

- Sign number - Place on post or structure
- Transformer rating (kVA)
- Lighting control type
- Number and type of fixtures

Do NOT place on standard or structure

ELECTROLIER OR EQUIPMENT IDENTIFICATION NUMBER:

12345 - 15'-0"

- Mast arm length, if shown. Do not place on standard or structure.
- Equipment number - Place on standard or structure. Existing equipment numbers are shown in parenthesis

CONDUIT AND CONDUCTOR IDENTIFICATION:

1½"C, 2#10, 15#14, 2 DLC

- Number and size of conductors and cables
- Size of conduit in inches

Ø1, Ø2, Ø2P, etc.	Traffic phase identification for signal faces, detectors and phase diagrams
1 2 3	Project note numbers
A B C	Equipment description, installation or item numbers
1 2 3	Conduit run numbers

SIGNAL AND LIGHTING STANDARD (TYPICAL DESIGNATION):

19A - 3 - 100

- Wind velocity = 100 mph
- Case 3 arm loading
- Standard type
- Standard Plan sheet number
- Detail number or letter

MISCELLANEOUS EQUIPMENT

PROPOSED	EXISTING	
CMS	cms	Changeable message sign
		Closed circuit television camera
		Highway advisory radio pole and antenna
EMS	ems	Extinguishable message sign
M V	m v	Detection device M = Microwave sensor V = Video image sensor

WIRING DIAGRAM LEGEND

P	Pole
CB	Circuit breaker
A	Ampere
V	Volt
M	Metered
UM	Unmetered
NB	Neutral bus
GB	Ground bus
G	Equipment grounding conductor
N	Grounded conductor (Neutral)

- External conductor
- Conductor or bus
- Tie point
- Contactor coil
- Contactor, Contact NO
- Terminal blocks
- Contactor, Contact NC
- Enclosure bond
- Grounding electrode
- Circuit breaker
- Receptacle

PULL BOXES

PROPOSED EXISTING

Pull box-No. 5 unless otherwise indicated or noted.

3 9A(21)

Pull box-Additional designations or descriptions

3	= No. 3½ pull box
5	= No. 5 pull box
6	= No. 6 pull box
7	= No. 7 (Ceiling pull box)
8	= No. 8 (Pendant soffit pull box)
9	= No. 9 pull box
9A	= No. 9A pull box

(C) = Communications pull box
(E) = Pull box with extension
(S) = Sprinkler control pull box
(21) = Anchor bolts and conduit for future installation of Type 21 Standard
(T) = Traffic pull box

VEHICLE DETECTORS

5 J 9 U

- Vehicle detector designation
- U = Upper
  L = Lower
- Slot number in input file
- Input file (I or J)
- Phase

PROPOSED EXISTING

	Type A detector loop. Outline of sawcut shown.
	Type B detector loop. Outline of sawcut shown.
	Type C detector loop. Outline of sawcut shown.
	Type D detector loop. Outline of sawcut shown.
	Type E detector loop. Outline of sawcut shown.
	Type Q detector loop. Outline of sawcut shown.
	Magnetic detector
DH dh	Detector handhole
	Microwave or video detection zone

STATE OF CALIFORNIA
DEPARTMENT OF TRANSPORTATION

ELECTRICAL SYSTEMS (SYMBOLS AND ABBREVIATIONS)

NO SCALE

RSP ES-1C DATED OCTOBER 5, 2007 SUPERCEDES STANDARD PLAN ES-1C DATED MAY 1, 2006 - PAGE 402 OF THE STANDARD PLANS BOOK DATED MAY 2006.

REVISED STANDARD PLAN RSP ES-1C

2006 REVISED STANDARD PLAN RSP ES-1C

7-10-07

DIST	COUNTY	ROUTE	POST MILES TOTAL PROJECT	SHEET NO.	TOTAL SHEETS
06	Tul	99	2.9/3.3	106	128

REGISTERED ELECTRICAL ENGINEER

October 5, 2007
PLANS APPROVAL DATE

REGISTERED PROFESSIONAL ENGINEER
Jeffery G. McRae
No. E14512
Exp. 6-30-08
ELECTRICAL
STATE OF CALIFORNIA

The State of California or its officers or agents shall not be responsible for the accuracy or completeness of electronic copies of this plan sheet.

To accompany plans dated 4-5-10

NOTES-TYPE III SERVICE EQUIPMENT ENCLOSURES:

1. Service equipment enclosure and metering equipment shall meet the requirements of the service utility. The meter area shall have a sealable, lockable, weathertight cover that can be removed without the use of tools.

2. Service equipment enclosures shall be factory wired and conform to NEMA standards.

3. Dimensions of service equipment enclosures shall meet the requirements of the service utility.

4. The dead front panels on Type III service equipment enclosures shall have a continuous stainless steel or aluminum piano hinge. The panel in front of the breakers shall be secured with a latch or captive screws. No live parts shall be mounted on the dead front panel.

5. The exterior door shall have provisions for padlocking. The padlock hole shall be a minimum diameter of 7/16".

6. Enclosures housing transformers of more than one kVA shall have effective screened ventilation louver of not less than 50 square inches. Screen shall be stainless steel No. 304, with a No. 10 size mesh. Framed screen shall be secured with at least four bolts.

7. Fasteners on the exterior of the enclosure shall be vandal-resistant and shall not be removable from the exterior. Exterior screws, nuts, bolts and washers shall be stainless steel.

8. Landing lugs for incoming service conductors shall be compatible with either copper or aluminum conductors sized to suit the conductors shown on the plan. Landing lugs shall be copper or tin-plated aluminum. Neutral bus shall be rated for 125 A and be suitable for copper or aluminum conductors unless otherwise specified. The terminal shall include but not be limited to:

   a) Incoming terminals (landing lugs)
   b) Neutral lugs
   c) Solid neutral terminal strip

9. At least 6 standard single pole circuit breaker spaces, 3/4" nominal, shall be provided for branch circuits. Circuit breaker interiors shall be copper. Interiors of enclosure shall accept plug-in or cable-in/cable-out circuit breakers.

10. Control wiring shall be 600 V, 14 stranded machine tool wire. Where subject to flexing, 19 strand wire shall be used.

11. Main bus shall be rated for 125 A and shall be tin-plated copper.

12. A plastic laminated wiring diagram shall be provided with brass mounting eyelets and attached to the inside of the enclosure and the wiring diagram shall be affixed to the interior with a UL or ETL approved method.

13. An engraved phenolic nameplate on the dead front panel indicating the function of each circuit or device shall be installed with stainless steel rivets or stainless steel screws:

    a) Adjacent to the breaker or device with character size a minimum of 1/8".

    b) At the top of the exterior door panel indicating State system number, voltage level and number of phases with character size a minimum of 3/16".

14. The plan shows the approximate location of devices within the enclosure. Components may be rearranged, however, the "working" clearances within the service equipment enclosure shall be maintained.

15. In unpaved areas a raised portland cement concrete pad 2'-0" x 4" x width of foundation shall be constructed in front of new service equipment enclosure installation. Pad shall be set to elevation of foundation.

16. Foundation shall extend 2" minimum beyond edge of service equipment enclosure.

17. Internal bus, where shown, is typical only. Alternative design of proposed service equipment enclosure shall be submitted to the Engineer for approval.

18. Plug-in circuit breakers may be mounted in the vertical or horizontal position. Cable-in/cable-out circuit breakers shall be mounted in the vertical position.

19. Type III-AF and Type III-BF service equipment enclosures shall have the meter viewing windows located on the front side of the service equipment enclosures.

20. Type III-AR and Type III-BR service equipment enclosures shall be similarly constructed as Type III-AF and Type III-BF respectively, except the meter viewing windows shall be located on the back side of the service equipment enclosures.

21. Minimum clearance shall be required for front and back of service equipment enclosure per National Electrical Code, Article 110.26, "Spaces About Electric Equipment (600 Volts, Nominal, or Less)."

STATE OF CALIFORNIA
DEPARTMENT OF TRANSPORTATION

ELECTRICAL SYSTEMS (SERVICE EQUIPMENT NOTES TYPE III SERIES)

NO SCALE

RSP ES-2C DATED OCTOBER 5, 2007 SUPERCEDES STANDARD PLAN ES-2C
DATED MAY 1, 2006 - PAGE 405 OF THE STANDARD PLANS BOOK DATED MAY 2006.

REVISED STANDARD PLAN RSP ES-2C

2006 REVISED STANDARD PLAN RSP ES-2C

DIST	COUNTY	ROUTE	POST MILES TOTAL PROJECT	SHEET NO.	TOTAL SHEETS
06	Tul	99	2.9/3.3	107	128

REGISTERED ELECTRICAL ENGINEER

October 5, 2007
PLANS APPROVAL DATE

REGISTERED PROFESSIONAL ENGINEER Jeffery G. McRae No. E14512 Exp. 6-30-08 ELECTRICAL STATE OF CALIFORNIA

The State of California or its officers or agents shall not be responsible for the accuracy or completeness of electronic copies of this plan sheet.

To accompany plans dated 4-5-10

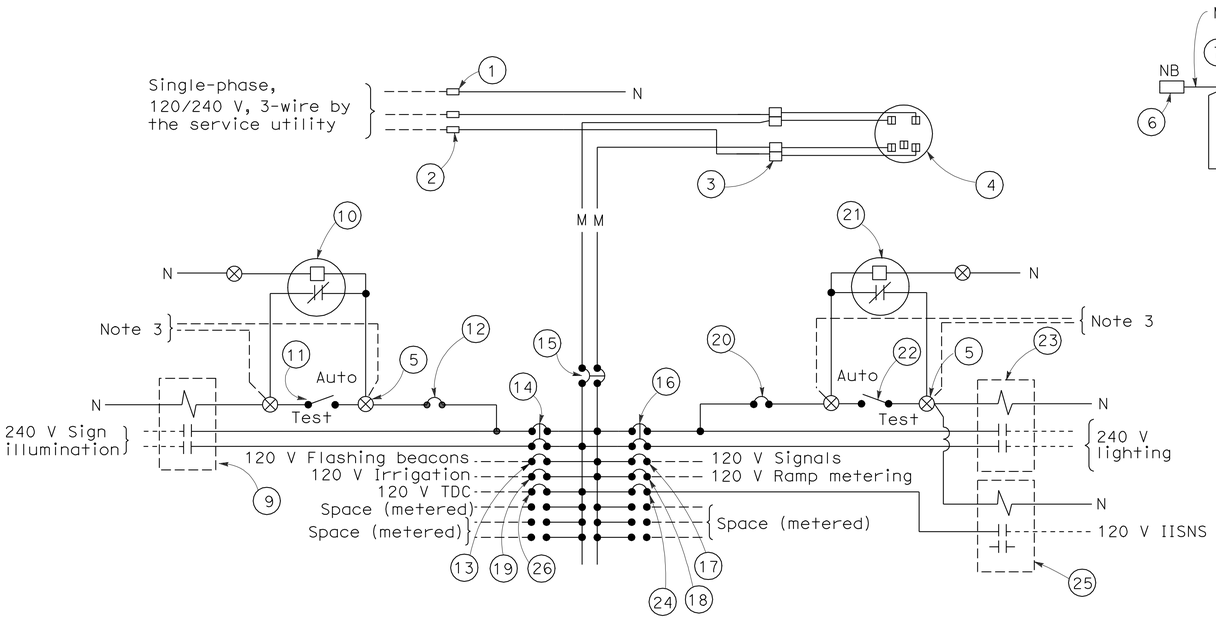

120/240 V SERVICE WIRING DIAGRAM (TYPICAL)

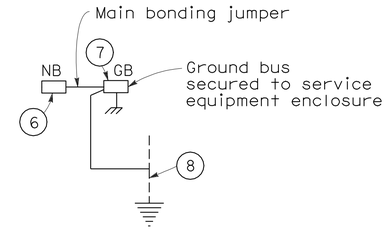

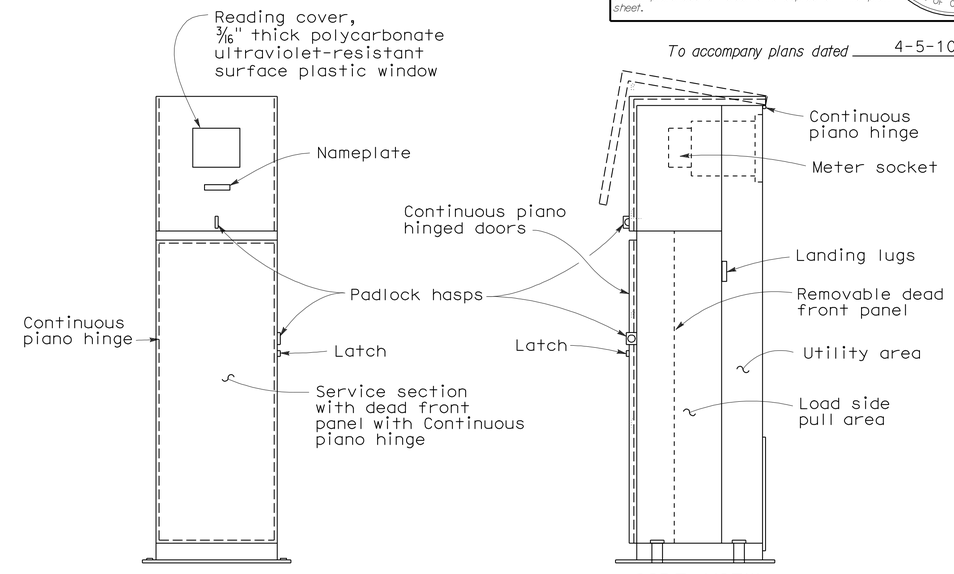

FRONT VIEW

SIDE VIEW

TYPE III-BF SERVICE EQUIPMENT ENCLOSURE WITH PROVISIONS FOR ONE 100 A METER (TYPICAL)

TYPE III-B SERVICE (120/240 V) EQUIPMENT LEGEND		
ITEM No.	COMPONENT	NAME PLATE DESCRIPTION
1	Neutral lug	
2	Landing lug (Note 6)	
3	Test bypass facility	
4	Meter socket and support	
5	Terminal blocks	
6	Neutral bus	
7	Ground bus	
8	Grounding electrode	
9	30 A, 2PNO Contactor	Sign Illumination
10	Photoelectric unit (Note 7)	
11	15 A, 1P, Test switch	Sign Illumination Test Switch
12	15 A, 120 V, 1P, CB	Sign Illumination Control
13	15 A, 120 V, 1P, CB	Flashing Beacon
14	30 A, 240 V, 2P, CB	Sign Illumination
15	100 A, 240 V, 2P, CB	Main Breaker
16	30 A, 240 V, 2P, CB	Lighting
17	50 A, 120 V, 1P, CB	Signals
18	30 A, 120 V, 1P, CB	Ramp Metering
19	20 A, 120 V, 1P, CB	Irrigation
20	15 A, 120 V, 1P, CB	Lighting Control
21	Photoelectric unit (Note 7)	
22	15 A, 1P, Test switch	Lighting Test Switch
23	60 A, 2PNO Contactor	Lighting
24	15 A, 120 V, 1P, CB	IISNS
25	30 A, 2PNO Contactor	IISNS
26	20 A, 120 V, IP, CB	Telephone Demarcation Cabinet

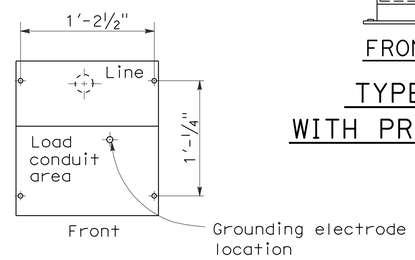

BASE FOR TYPE III-B SERVICE EQUIPMENT ENCLOSURE

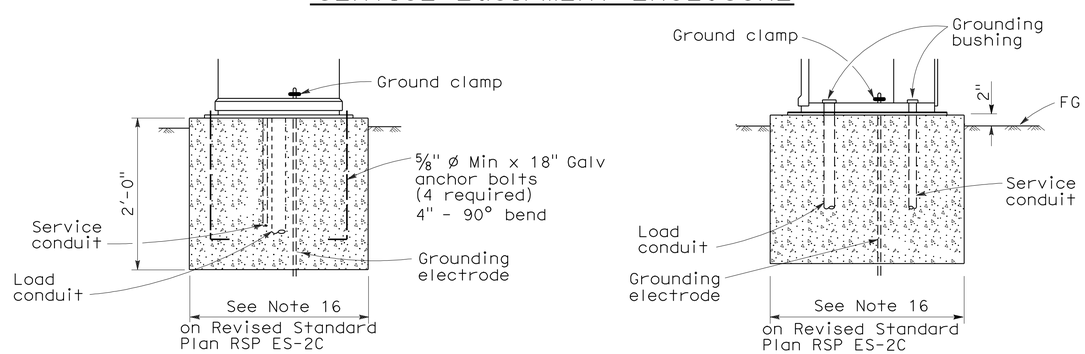

FRONT VIEW

SIDE VIEW

TYPE III-B SERVICE EQUIPMENT ENCLOSURE FOUNDATION DETAILS

NOTES: (FOR SERVICE EQUIPMENT ENCLOSURE)

1. Voltage ratings of service equipment shall conform to the service voltages indicated on the plans.
2. Unless otherwise indicated on the plans, service equipment items shall be provided for each service equipment enclosure as shown.
3. Connect to remote test switch mounted on lighting standards, sign post or structure when required.
4. Items No. 1 and 6 shall be isolated from the service equipment enclosure.
5. Meter sockets shall be 5 clip type.
6. The landing lug shall be suitable for multiple conductors.
7. Type V photoelectric control shall be used unless otherwise indicated on the plans.

STATE OF CALIFORNIA
DEPARTMENT OF TRANSPORTATION

ELECTRICAL SYSTEMS (SERVICE EQUIPMENT AND TYPICAL WIRING DIAGRAM, TYPE III-B SERIES)

NO SCALE

RSP ES-2E DATED OCTOBER 5, 2007 SUPERCEDES STANDARD PLAN ES-2E DATED MAY 1, 2006 - PAGE 407 OF THE STANDARD PLANS BOOK DATED MAY 2006.

REVISED STANDARD PLAN RSP ES-2E

2006 REVISED STANDARD PLAN RSP ES-2E

7-10-07

DIST	COUNTY	ROUTE	POST MILES TOTAL PROJECT	SHEET NO.	TOTAL SHEETS
06	Tul	99	2.9/3.3	108	128

REGISTERED ELECTRICAL ENGINEER

October 5, 2007
PLANS APPROVAL DATE

REGISTERED PROFESSIONAL ENGINEER Jeffery G. McRae No. E14512 Exp. 6-30-08 ELECTRICAL STATE OF CALIFORNIA

The State of California or its officers or agents shall not be responsible for the accuracy or completeness of electronic copies of this plan sheet.

To accompany plans dated 4-5-10

LOOP INSTALLATION PROCEDURE

1. Loops shall be centered in lanes.
2. Saw slots in pavement for loop conductors as shown in details.
3. Distance between side of loop and a lead-in saw cut from adjacent detectors shall be 2'-0" minimum. Distance between lead-in saw cuts shall be 6" minimum.
4. Bottom of saw slot shall be smooth with no sharp edges.
5. Slots shall be washed until clean, blown out and thoroughly dried before installing loop conductors.
6. Adjacent loops on the same sensor unit channel shall be wound in opposite directions.
7. Identify and tag loop circuit pairs in the pull box with loop number, start (S) and finish (F) of conductor. Identify and tag lead-in-cable with sensor number and phase.
8. Install loop conductor in slot using a 3/16" to 1/4" thick wood paddle. Hold loop conductors with wood paddles (at the bottom of the sawed slot) during sealant placement.
9. No more than 2 twisted pairs shall be installed in one sawed slot.
10. Allow additional 5'-0" of slack length of conductor for the lead-in run to pull box.
11. The additional length of each conductor for each loop shall be twisted together into a pair (6 turns per 3'-4" minimum) before being placed in the slot and conduit leading to pull box.
12. Test each loop circuit for continuity, circuit resistance and insulation resistance at the pull box before filling slots.
13. Fill slots as shown in details.
14. Splice loop conductors to lead-in-cable. Splices shall be soldered.
15. End of lead-in-cable and Type 2 loop conductor shall be waterproofed prior to installing in conduit to prevent moisture from entering the cable.
16. Lead-in-cable shall not be spliced between the pull box and the controller cabinet terminals.
17. Test each loop circuit for continuity, circuit resistance and insulation resistance at the controller cabinet location.
18. Where loop conductors are not to be spliced to a lead-in-cable, the ends of the conductors shall be taped and waterproofed with electrical insulating coating.

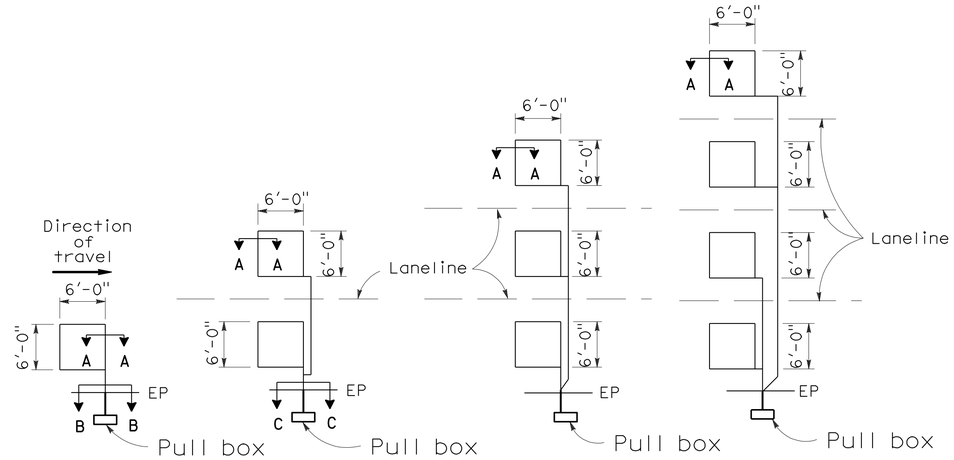

TYPE 1A INSTALLATION | TYPE 2A INSTALLATION | TYPE 3A INSTALLATION | TYPE 4A INSTALLATION

SAWCUT DETAILS

(Type A loop detector configurations illustrated)

1. 1A thru 4A = 1 Type A loop configuration in each lane.
2. 1B thru 4B = 1 Type B loop configuration in each lane.
3. 1C = 1 Type C loop configuration entering lanes as required.
4. 1D thru 4D = 1 Type D loop configuration in each lane.
5. 1E thru 4E = 1 Type E loop configuration in each lane.
6. 1Q thru 4Q = 1 Type Q loop configuration in each lane. (Use Type A, B, C, D, E or Q loop detector configurations only when specified or shown on plans)

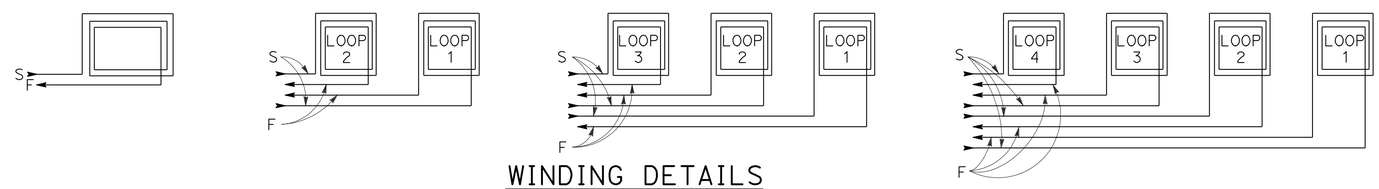

WINDING DETAILS

See Notes 6 and 7

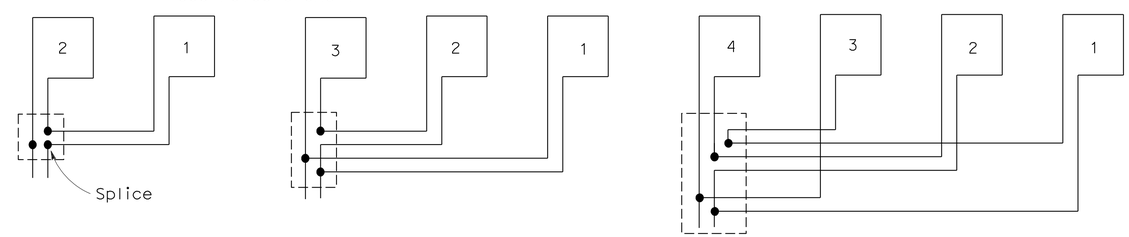

TYPICAL LOOP CONNECTIONS

(Dashed lines represent the pull box)

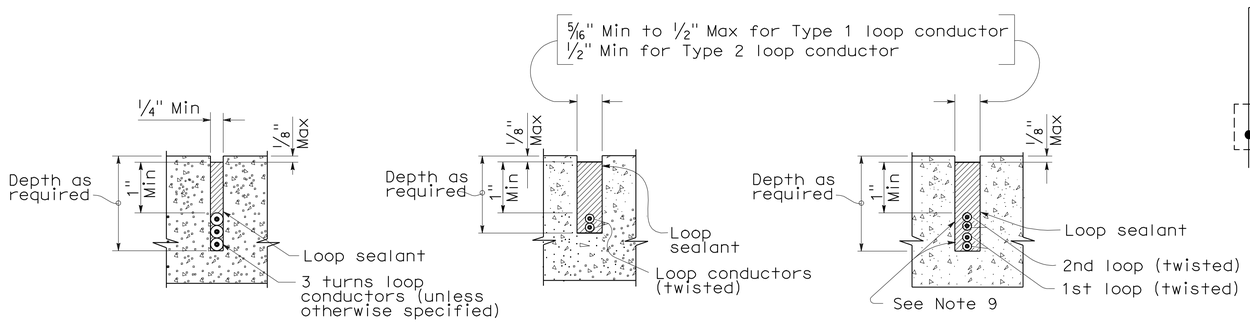

SECTION A-A | SECTION B-B | SECTION C-C

SLOT DETAILS - TYPE 1 AND TYPE 2 LOOP CONDUCTOR

STATE OF CALIFORNIA
DEPARTMENT OF TRANSPORTATION

ELECTRICAL SYSTEMS (DETECTORS)

NO SCALE

RSP ES-5A DATED OCTOBER 5, 2007 SUPERCEDES STANDARD PLAN ES-5A DATED MAY 1, 2006 - PAGE 423 OF THE STANDARD PLANS BOOK DATED MAY 2006.

REVISED STANDARD PLAN RSP ES-5A

2006 REVISED STANDARD PLAN RSP ES-5A

8-17-07

DIST	COUNTY	ROUTE	POST MILES TOTAL PROJECT	SHEET NO.	TOTAL SHEETS
06	Tul	99	2.9/3.3	109	128

REGISTERED ELECTRICAL ENGINEER

October 5, 2007
PLANS APPROVAL DATE

REGISTERED PROFESSIONAL ENGINEER
Jeffery G. McRae
No. E14512
Exp. 6-30-08
ELECTRICAL
STATE OF CALIFORNIA

The State of California or its officers or agents shall not be responsible for the accuracy or completeness of electronic copies of this plan sheet.

To accompany plans dated 4-5-10

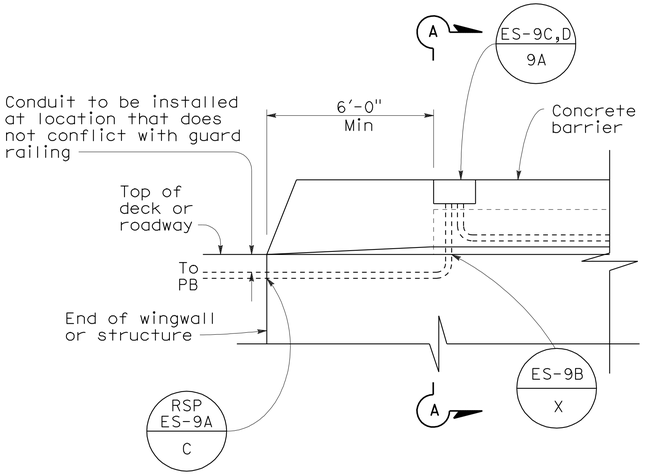

SIDEVIEW

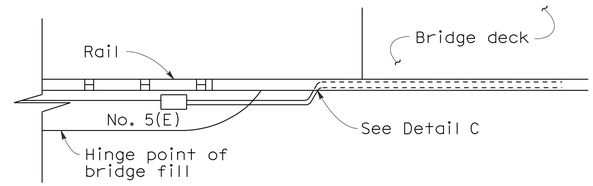

TOP VIEW

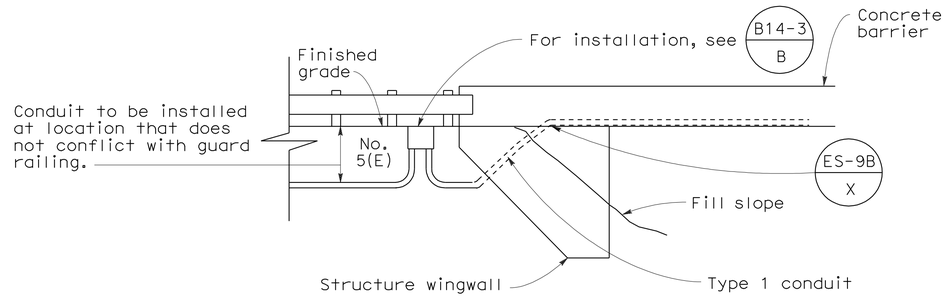

SIDE VIEW
DETAIL I
CONDUIT TERMINATION

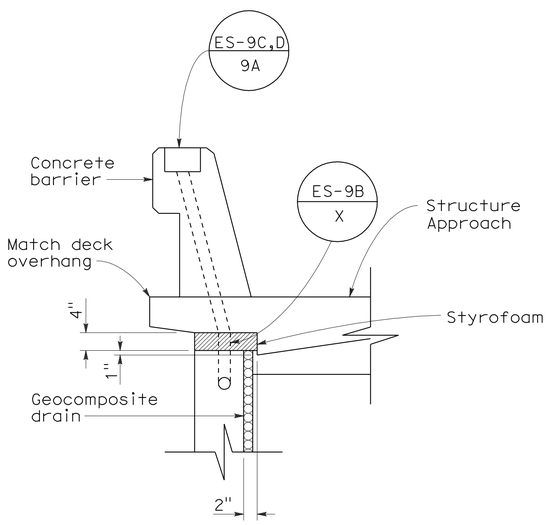

SECTION A-A

DETAIL A
CONDUIT TERMINATION

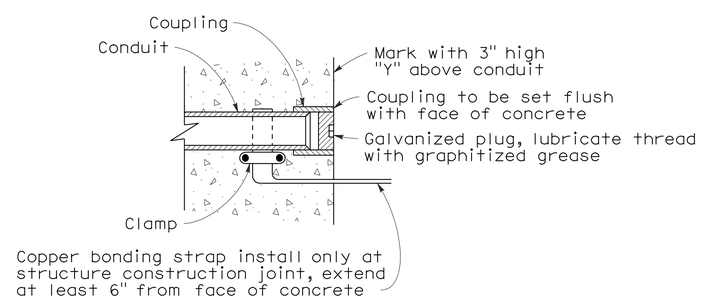

DETAIL C
CONDUIT TERMINATION

STATE OF CALIFORNIA
DEPARTMENT OF TRANSPORTATION

ELECTRICAL SYSTEMS (ELECTRICAL DETAILS STRUCTURE INSTALLATIONS)

NO SCALE

RSP ES-9A DATED OCTOBER 5, 2007 SUPERCEDES STANDARD PLAN ES-9A
DATED MAY 1, 2006 - PAGE 454 OF THE STANDARD PLANS BOOK DATED MAY 2006.

REVISED STANDARD PLAN RSP ES-9A

2006 REVISED STANDARD PLAN RSP ES-9A

7-11-07

DIST	COUNTY	ROUTE	POST MILES TOTAL PROJECT	SHEET NO.	TOTAL SHEETS
06	Tul	99	2.9/3.3	110	128

REGISTERED ELECTRICAL ENGINEER

October 5, 2007
PLANS APPROVAL DATE

The State of California or its officers or agents shall not be responsible for the accuracy or completeness of electronic copies of this plan sheet.

REGISTERED PROFESSIONAL ENGINEER Jeffery G. McRae No. E14512 Exp. 6-30-08 ELECTRICAL STATE OF CALIFORNIA

To accompany plans dated 4-5-10

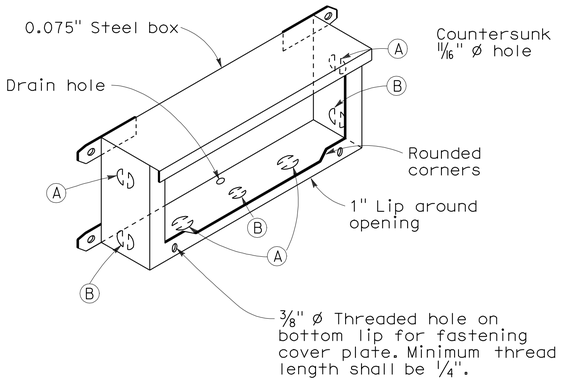

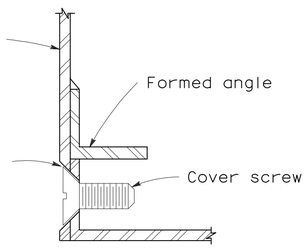

DETAIL J

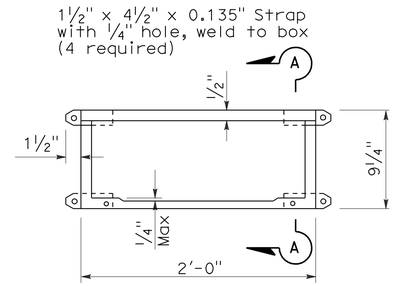

PLAN

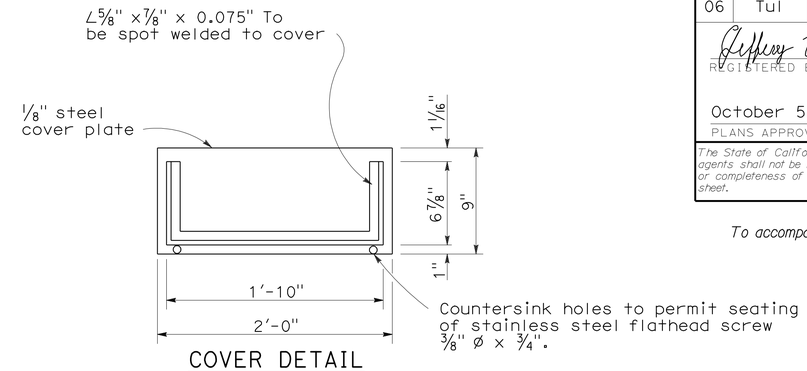

COVER DETAIL

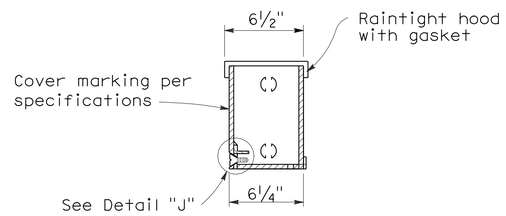

SECTION A-A

INSTALLATION NOTE:

Box shall be parallel to top of railing. Close cover box during pouring with 1/4" plywood of sufficient size to provide 1:1 chamfer on 3 sides of cover. Upper edge of plywood shall fit against lower edge of raintight hood.

No. 9 STRUCTURE PULL BOX

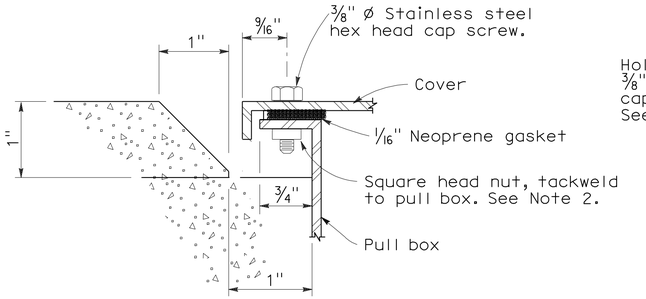

SECTION C-C

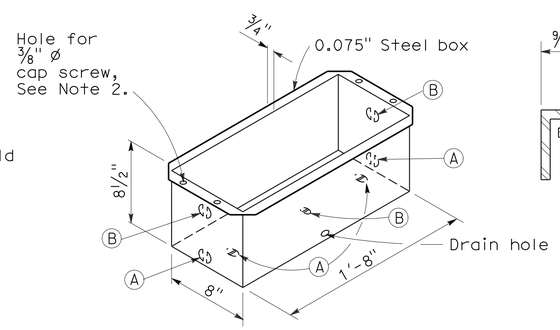

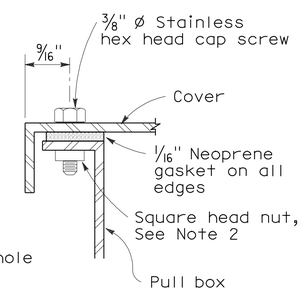

DETAIL A

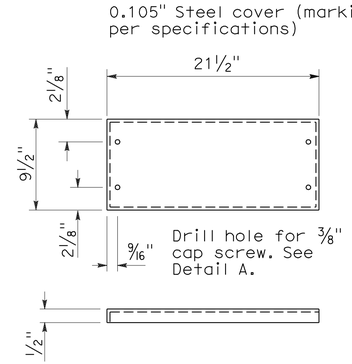

COVER DETAIL

NOTES: No. 9 and 9A Pull Box

1. Corner joints shall be lapped and secured by spot welding or riveting.
2. Where cap screws are used to attach cover to box, either of the following methods of providing adequate threading may be used:
   a. Tack weld square nut to bottom of flange (Total 4), or
   b. Tack weld a 1/4" x 5/8" x 8" bar beneath flange (Total 2).
3. Pound knockouts flat after punching.
4. Multiple size knockouts shall not be permitted.
5. Pull box covers shall be marked as shown on Standard Plan ES-8.

No. 9A STRUCTURE PULL BOX

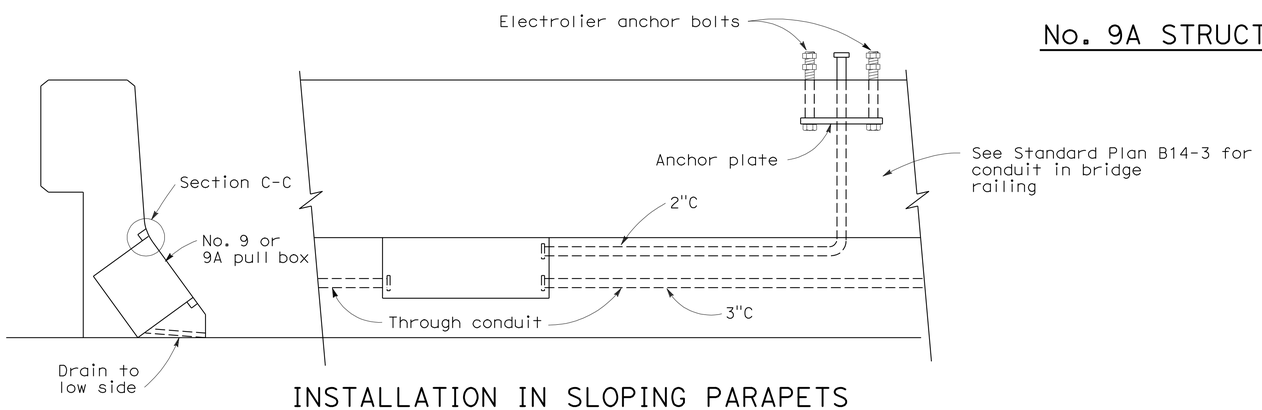

INSTALLATION IN SLOPING PARAPETS

For reinforcement in area of electrolier, see railing sheets. For electrolier anchor bolts, see Standard Plan ES-6B.

KNOCKOUT SCHEDULE
No. 9 AND 9A PULL BOX

(A) 2"C, 1 each end, 2 on bottom.

(B) 3"C, 1 each end, 1 on bottom.

STATE OF CALIFORNIA
DEPARTMENT OF TRANSPORTATION

ELECTRICAL SYSTEMS (ELECTRICAL DETAILS STRUCTURE INSTALLATIONS)

NO SCALE

RSP ES-9C DATED OCTOBER 5, 2007 SUPERCEDES STANDARD PLAN ES-9C DATED MAY 1, 2006 - PAGE 456 OF THE STANDARD PLANS BOOK DATED MAY 2006.

REVISED STANDARD PLAN RSP ES-9C

2006 REVISED STANDARD PLAN RSP ES-9C

7-26-07

DIST	COUNTY	ROUTE	POST MILES TOTAL PROJECT	SHEET No	TOTAL SHEETS
06	Tul	99	2.9/3.3	111	128

REGISTERED CIVIL ENGINEER — DATE 3/10/10

4-5-10
PLANS APPROVAL DATE

REGISTERED PROFESSIONAL ENGINEER — ISAIAS D. YALAN — No. 68269 — Exp. 9-30-2011 — CIVIL — STATE OF CALIFORNIA

The State of California or its officers or agents shall not be responsible for the accuracy or completeness of electronic copies of this plan sheet.

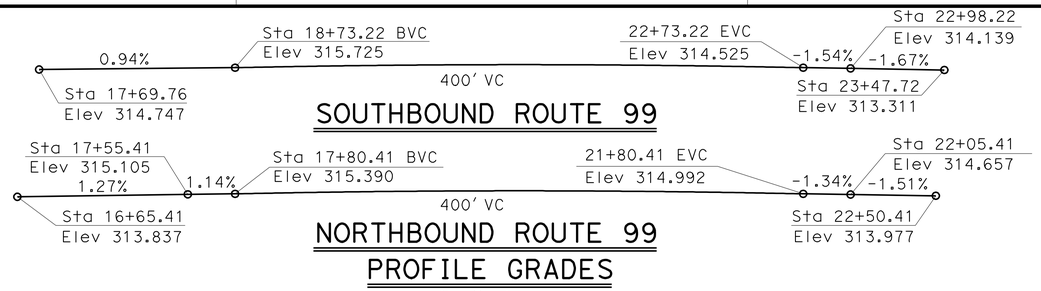

PROFILE GRADES

No Scale

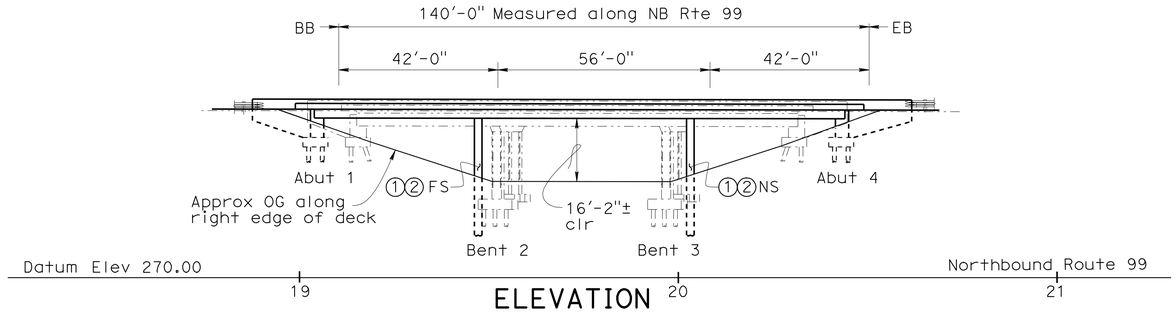

ELEVATION

1" = 20'

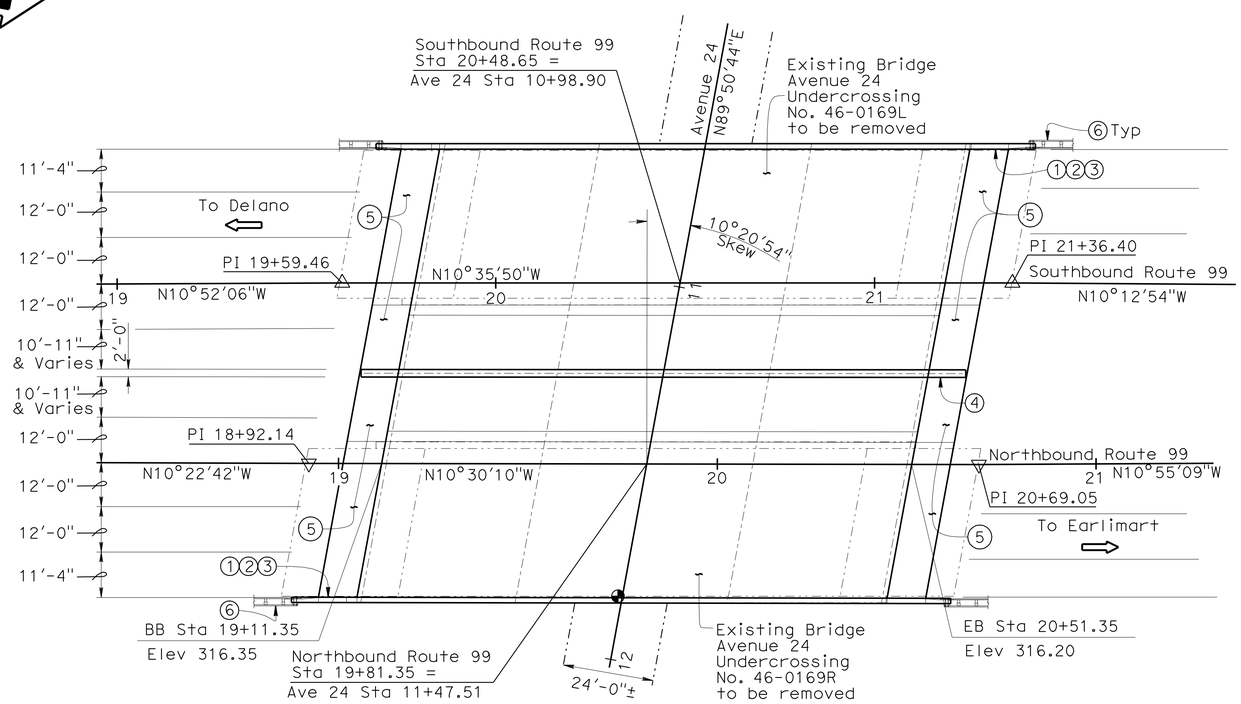

PLAN

1" = 20'

NOTE:
THE CONTRACTOR SHALL VERIFY ALL CONTROLLING FIELD DIMENSIONS BEFORE ORDERING OR FABRICATING ANY MATERIAL.

QUANTITIES

BRIDGE REMOVAL	LUMP	SUM
STRUCTURE EXCAVATION (BRIDGE)	944	CY
STRUCTURE BACKFILL (BRIDGE)	374	CY
16" CAST-IN-DRILLED-HOLE CONCRETE PILING	2,895	LF
24" CAST-IN-DRILLED-HOLE CONCRETE PILING	1,975	LF
PRESTRESSING CAST-IN-PLACE CONCRETE	LUMP	SUM
STRUCTURAL CONCRETE, BRIDGE FOOTING	145	CY
STRUCTURAL CONCRETE, BRIDGE	1,600	CY
STRUCTURAL CONCRETE, APPROACH SLAB (TYPE N MODIFIED)	90	CY
JOINT SEAL (MR 1½")	247	LF
BAR REINFORCING STEEL (BRIDGE)	469,000	LB
CONCRETE BARRIER (TYPE 60A)	160	LF
CONCRETE BARRIER (TYPE 732)	352	LF

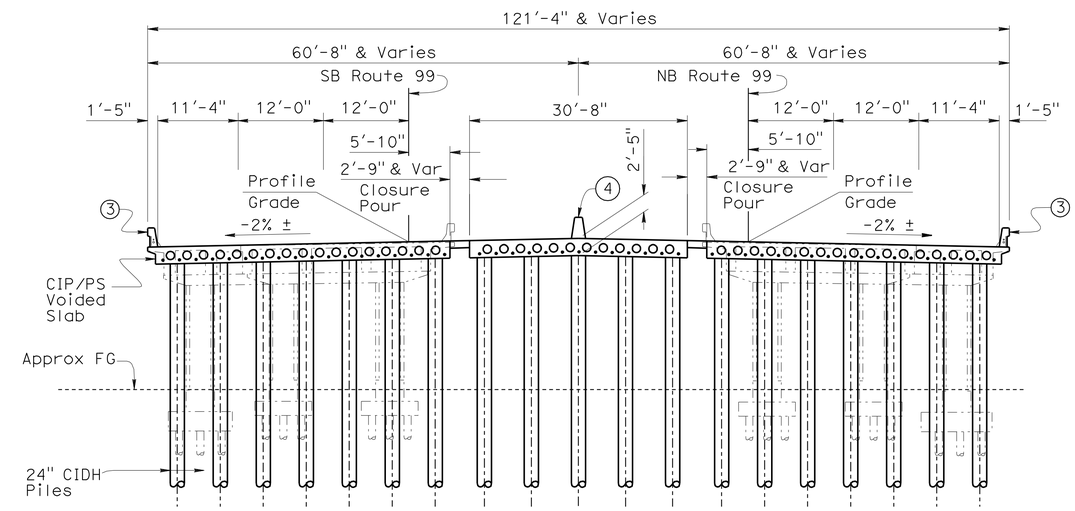

TYPICAL SECTION

3/32" = 1'-0"

LEGEND:

- Denotes new structure
- Denotes existing structure
- Denotes point of mininum vertical clearance
- (1) Paint "AVENUE 24 UNDERCROSSING"
- (2) Paint "BR NO 42-0268"
- (3) Concrete Barrier Type 732
- (4) Concrete Barrier Type 60A
- (5) Structure Approach
- (6) MBGR see "STANDARD PLANS" & "ROAD PLANS"

NOTES:

1. Concrete Barrier Type 60 to be placed after Stage 3 Construction is complete
2. For "GENERAL NOTES", "INDEX TO PLANS", "STANDARD PLANS LIST" and "PILE DATA TABLE" see "INDEX TO PLANS" sheet

Gordon Danke
DESIGN ENGINEER

	BY	CHECKED		
DESIGN	I. Yalan	C. Chuang	LOAD & RESISTANCE FACTOR DESIGN	LIVE LOADING: HL93 W/"LOW-BOY"; PERMIT DESIGN VEHICLE
DETAILS	Tim Fairall	C. Chuang	LAYOUT: I. Yalan	CHECKED C. Chuang
QUANTITIES	I. Yalan	R. Candiotti	SPECIFICATIONS: Xiahong Li	PLANS AND SPECS COMPARED Xiahong Li

ORIGINAL SCALE IN INCHES FOR REDUCED PLANS 0 1 2 3

STATE OF CALIFORNIA
DEPARTMENT OF TRANSPORTATION

DIVISION OF ENGINEERING SERVICES
STRUCTURE DESIGN
DESIGN BRANCH 9

CU 06
EA 471901

BRIDGE NO. 46-0268
POST MILE 3.06

AVENUE 24 UNDERCROSSING (REPLACE)
GENERAL PLAN

DISREGARD PRINTS BEARING EARLIER REVISION DATES

REVISION DATES: 6-25-09 7-14-09 9-15-09 10-26-09 12-14-09 2-01-10 3-08-10

SHEET 1 OF 18

STRUCTURES DESIGN GENERAL PLAN SHEET (ENGLISH) (REV.07-24-06)

FILE => 46-0268-a-gp01.dgn

USERNAME => trlenard DATE PLOTTED => 06-14-2010 TIME PLOTTED => 13:47

DIST	COUNTY	ROUTE	POST MILES TOTAL PROJECT	SHEET No	TOTAL SHEETS
06	Tul	99	2.9/3.3	112	128

REGISTERED CIVIL ENGINEER 3/10/10 DATE

4-5-10
PLANS APPROVAL DATE

REGISTERED PROFESSIONAL ENGINEER ISAIAS D. YALAN No. 68269 Exp. 9-30-2011 CIVIL STATE OF CALIFORNIA

The State of California or its officers or agents shall not be responsible for the accuracy or completeness of electronic copies of this plan sheet.

PILE DATA TABLE

Location	Pile Type	CIDH Cut-off Elev (Ft)	Nominal Resistance Per Pile		Design Tip Elevation (Ft)	Specified Tip Elevation (Ft)
			Compression (kips)	Tension (kips)		
Abut 1 - Stage 1 Center Gap Bridge	16-inch CIDH	305	124	N/A	269	269
Abut 1 - Stage 2 Right Bridge	16-inch CIDH	305	120	N/A	270	270
Abut 1 - Stage 3 Left Bridge	16-inch CIDH	305	120	N/A	268	268
Bent 2 - Stage 1 Center Gap Bridge	24-inch CIDH	296	860	N/A	240 (a) 270 (b)	240
Bent 2 - Stage 2 Right Bridge	24-inch CIDH	296	700	N/A	248 (a) 273 (b)	248
Bent 2 - Stage 3 Left Bridge	24-inch CIDH	296	700	N/A	245 (a) 270 (b)	245
Bent 3 - Stage 1 Center Gap Bridge	24-inch CIDH	295	860	N/A	238 (a) 266 (b)	238
Bent 3 - Stage 2 Right Bridge	24-inch CIDH	295	700	N/A	244 (a) 269 (b)	244
Bent 3 - Stage 3 Left Bridge	24-inch CIDH	295	700	N/A	246 (a) 270 (b)	246
Abut 4 - Stage 1 Center Gap Bridge	16-inch CIDH	305	124	N/A	265	265
Abut 4 - Stage 2 Right Bridge	16-inch CIDH	305	120	N/A	265	265
Abut 4 - Stage 3 Left Bridge	16-inch CIDH	305	120	N/A	265	265

Notes: 1) Design tip elevations are controlled by compression: (a) Strength Limit State, (b) Extreme Limit State.
2) There is no design tip elevation for Settlement.

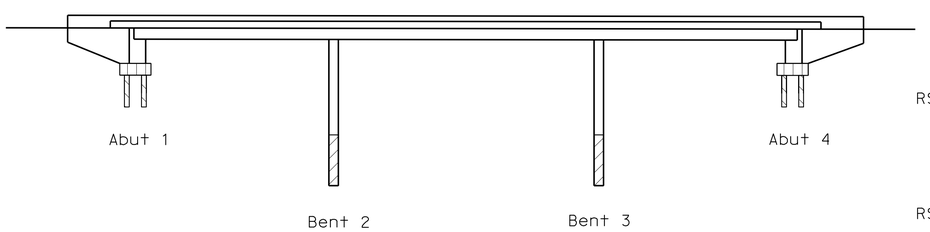

CONCRETE STRENGTH AND TYPE LIMITS

No Scale

- Structural Concrete, Bridge f'c = 4000 psi @ 28 days
- Structural Concrete, 24" Ø CIDH piles f'c = 4000 psi @ 28 days
- Structural Concrete, 16" Ø CIDH piles f'c = 4000 psi @ 28 days
- Structural Concrete, Bridge Footing

GENERAL NOTES
LOAD AND RESISTANCE FACTOR DESIGN

DESIGN:
AASHTO LRFD Bridge Design Specifications, 4th edition, 2007; except that Abutments are designed using Bridge Design Specifications ('96 AASHTO w/revisions by Caltrans).

SEISMIC DESIGN:
Caltrans Seismic Design Criteria (SDC), Version 1.4 dated June 2006

DEAD LOAD:
Includes 35 psf for future wearing surface.

LIVE LOADING:
HL93 and permit design load.

SEISMIC LOADING:
See "SITE SPECIFIC ACCELERATION RESPONSE SPECTRA CURVE"

CONCRETE:
fy = 60,000 psi
f'c = 4000 psi (Superstructure, Abutments, Columns, 24 inch Ø CIDH piles and Wingwalls
f'c = 4000 psi (16" Ø CIDH piles)
n = 8

STANDARD PLANS DATED MAY 2006

	A10A	ACRONYMS AND ABBREVIATIONS (SHEET 1 OF 2)
	A10B	ACRONYMS AND ABBREVIATIONS (SHEET 2 OF 2)
	A10C	SYMBOLS (SHEET 1 OF 2)
	A10D	SYMBOLS (SHEET 2 OF 2)
	A62C	LIMITS OF PAYMENT FOR EXCAVATION AND BACKFILL BRIDGE
RSP	A76A	CONCRETE BARRIER TYPE 60
	B0-1	BRIDGE DETAILS
	B0-13	BRIDGE DETAILS
	B0-5	BRIDGE DETAILS
	B2-3	16" AND 24" CAST-IN-DRILLED HOLE CONCRETE PILE
RSP	B6-21	JOINT SEALS (MAXIMUM MOVEMENT RATING = 2")
	B7-1	BOX GIRDER DETAILS
	B8-5	CAST-IN-PLACE PRESTRESSED GIRDER DETAILS
	B11-55	CONCRETE BARRIER TYPE 732

STANDARD PLAN SHEET No.
DETAIL No.

INDEX TO PLANS

SHEET No.	TITLE
1	GENERAL PLAN
2	INDEX TO PLANS
3	STAGE CONSTRUCTION
4	DECK CONTOURS
5	FOUNDATION PLAN
6	REMOVAL DETAILS
7	ABUTMENT 1 LAYOUT
8	ABUTMENT 4 LAYOUT
9	ABUTMENT DETAILS No. 1
10	ABUTMENT DETAILS No. 2
11	ABUTMENT DETAILS No. 3
12	BENT LAYOUT
13	COLUMN DETAILS
14	TYPICAL SECTION
15	LONGITUDINAL SECTION
16	STRUCTURE APPROACH DRAINAGE DETAILS
17	STRUCTURE APPROACH
18	LOG OF TEST BORINGS

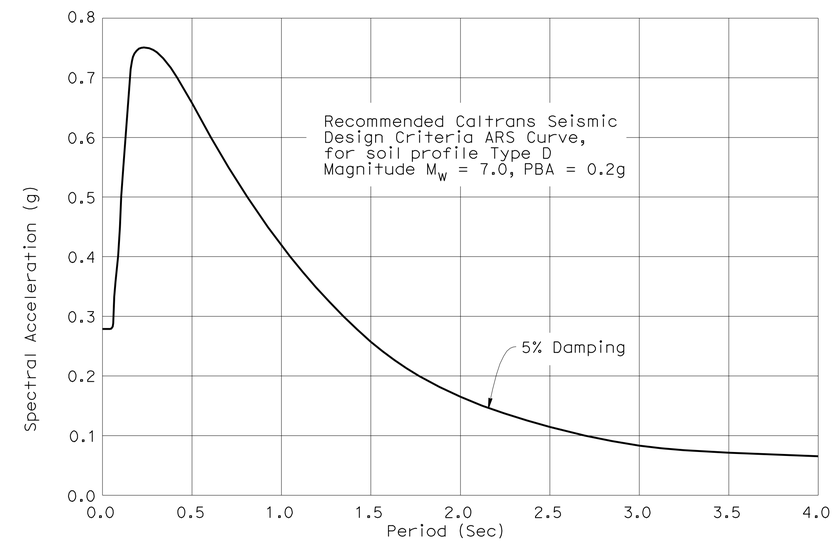

SITE SPECIFIC ACCELERATION RESPONSE SPECTRA CURVE

DESIGN	BY I. Yalan	CHECKED C. Chuang	
DETAILS	BY R. Heider/D. Elliott	CHECKED C. Chuang	
QUANTITIES	BY I. Yalan	CHECKED R. Candiotti	

STATE OF CALIFORNIA
DEPARTMENT OF TRANSPORTATION

DIVISION OF ENGINEERING SERVICES
STRUCTURE DESIGN
DESIGN BRANCH 9

BRIDGE NO. 46-0268
POST MILE 3.06

AVENUE 24 UNDERCROSSING (REPLACE)
INDEX TO PLANS

STRUCTURES DESIGN DETAIL SHEET (ENGLISH) (REV. 10/25/05)

ORIGINAL SCALE IN INCHES FOR REDUCED PLANS 0 1 2 3

CU 06
EA 471901

DISREGARD PRINTS BEARING EARLIER REVISION DATES

REVISION DATES: 10-29-09 12-10-09 1-25-10 3-08-10

SHEET 2 OF 18

FILE => 46-0268-b-itp.dgn

USERNAME => trlenard DATE PLOTTED => 06-APR-2010 TIME PLOTTED => 13:47

DIST	COUNTY	ROUTE	POST MILES TOTAL PROJECT	SHEET No	TOTAL SHEETS
06	Tul	99	2.9/3.3	113	128

REGISTERED CIVIL ENGINEER 3/10/10 DATE

4-5-10
PLANS APPROVAL DATE

REGISTERED PROFESSIONAL ENGINEER ISAIAS D. YALAN No. 68269 Exp. 9-30-2011 CIVIL STATE OF CALIFORNIA

The State of California or its officers or agents shall not be responsible for the accuracy or completeness of electronic copies of this plan sheet.

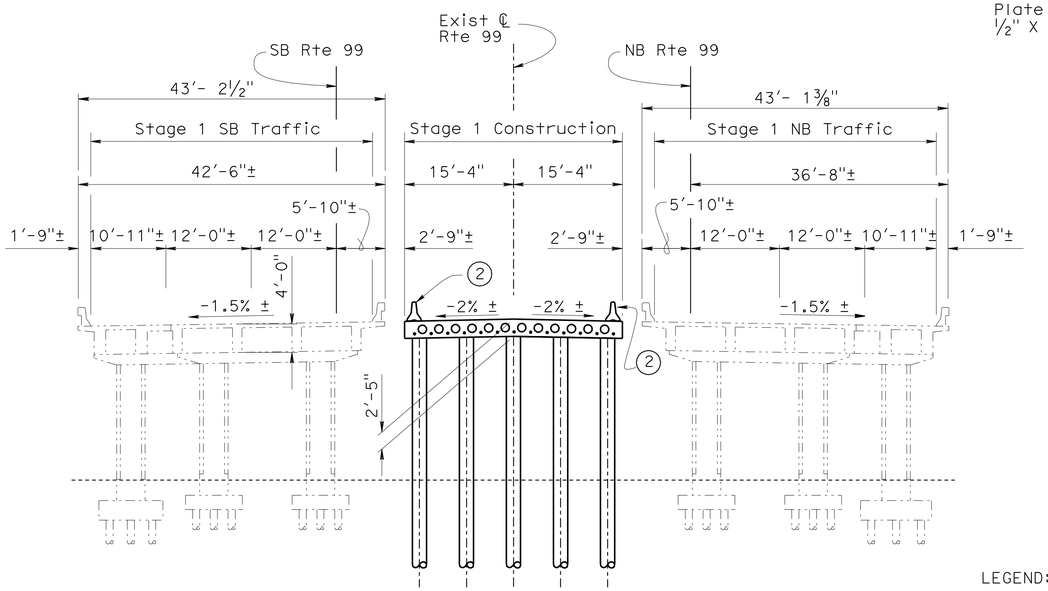

STAGE 1 CONSTRUCTION

3/32" = 1'-0"

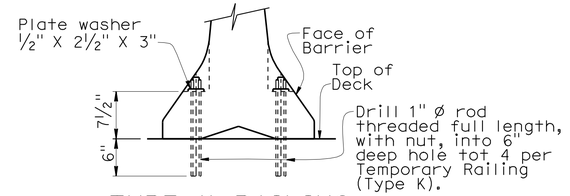

TYPE K RAILING ATTACHMENT DETAIL

1" = 1'-0"

Note:
For Details not shown see Temporary Railing (Type K)

LEGEND:

- ——— Denotes new structure
- -·-·- Denotes existing structure
- - - - Denotes previous stage
- (1) Concrete Barrier Type 732
- (2) Temporary Railing (Type K) see "ROAD PLANS"
- (3) Concrete Barrier Type 60 A

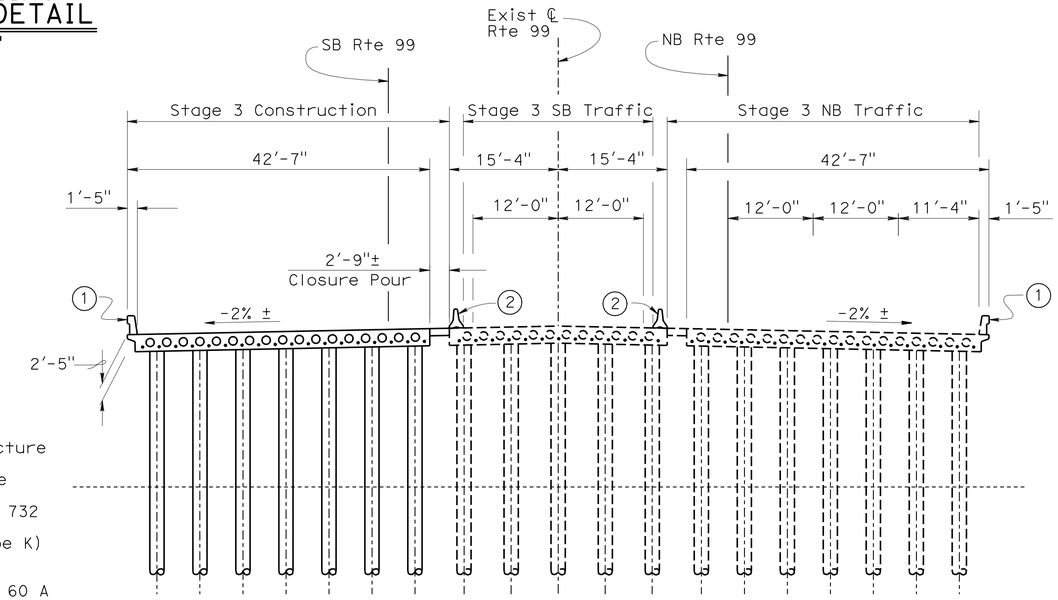

STAGE 3 CONSTRUCTION

3/32" = 1'-0"

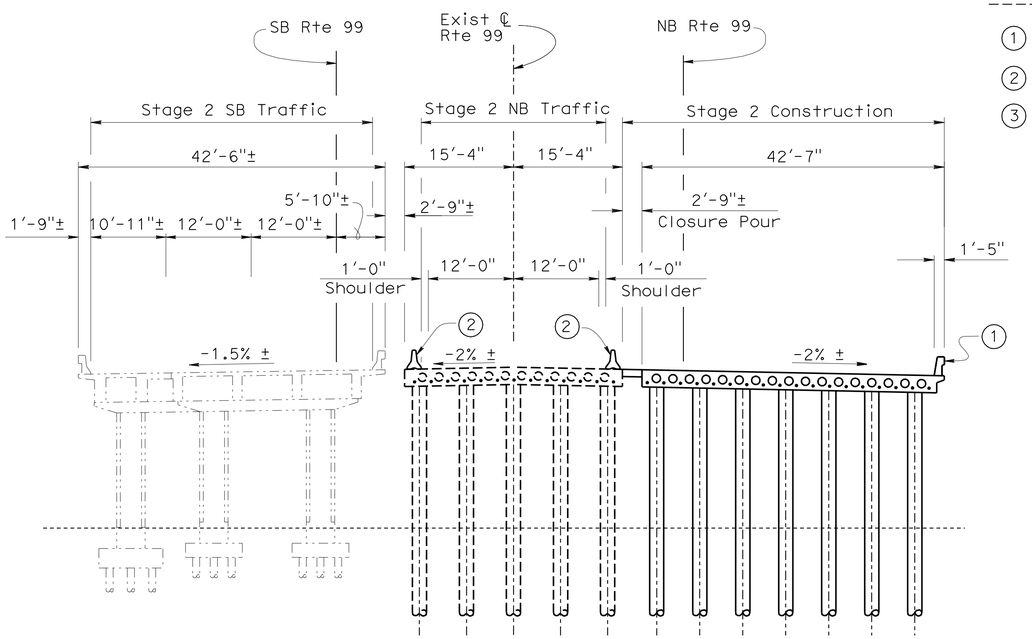

STAGE 2 CONSTRUCTION

3/32" = 1'-0"

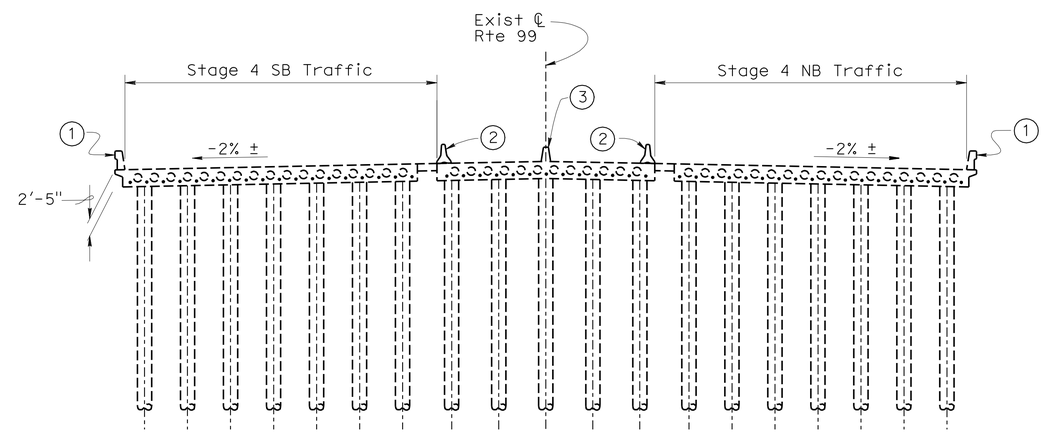

STAGE 4 CONSTRUCTION

3/32" = 1'-0"

NOTE:
THE CONTRACTOR SHALL VERIFY ALL CONTROLLING FIELD DIMENSIONS BEFORE ORDERING OR FABRICATING ANY MATERIAL.

Note:
Stage 4 Construction = Installation of (3)

	BY	CHECKED
DESIGN	I. Yalan	M. Van De Pol
DETAILS	D. Elliott/ R. Heider	M. Van De Pol
QUANTITIES	I. Yalan	R. Candiotti

STATE OF CALIFORNIA
DEPARTMENT OF TRANSPORTATION

DIVISION OF ENGINEERING SERVICES
STRUCTURE DESIGN
DESIGN BRANCH 9

BRIDGE NO. 46-0268
POST MILE 3.06

AVENUE 24 UNDERCROSSING (REPLACE)
STAGE CONSTRUCTION

STRUCTURES DESIGN DETAIL SHEET (ENGLISH) (REV. 10/25/05)

ORIGINAL SCALE IN INCHES FOR REDUCED PLANS 0 1 2 3

CU 06
EA 471901

DISREGARD PRINTS BEARING EARLIER REVISION DATES

REVISION DATES: 6-23-09 7-1-09 10-29-09 12-16-09 2-1-10 3-08-10

SHEET 3 OF 18

FILE => 46-0268-b-stgcnstn.dgn

USERNAME => trlenard DATE PLOTTED => 06-APR-2010 TIME PLOTTED => 13:47

DIST	COUNTY	ROUTE	POST MILES TOTAL PROJECT	SHEET No	TOTAL SHEETS
06	Tul	99	2.9/3.3	114	128

REGISTERED CIVIL ENGINEER 3/10/10 DATE

4-5-10
PLANS APPROVAL DATE

REGISTERED PROFESSIONAL ENGINEER ISAIAS D. YALAN No. 68269 Exp. 9-30-2011 CIVIL STATE OF CALIFORNIA

The State of California or its officers or agents shall not be responsible for the accuracy or completeness of electronic copies of this plan sheet.

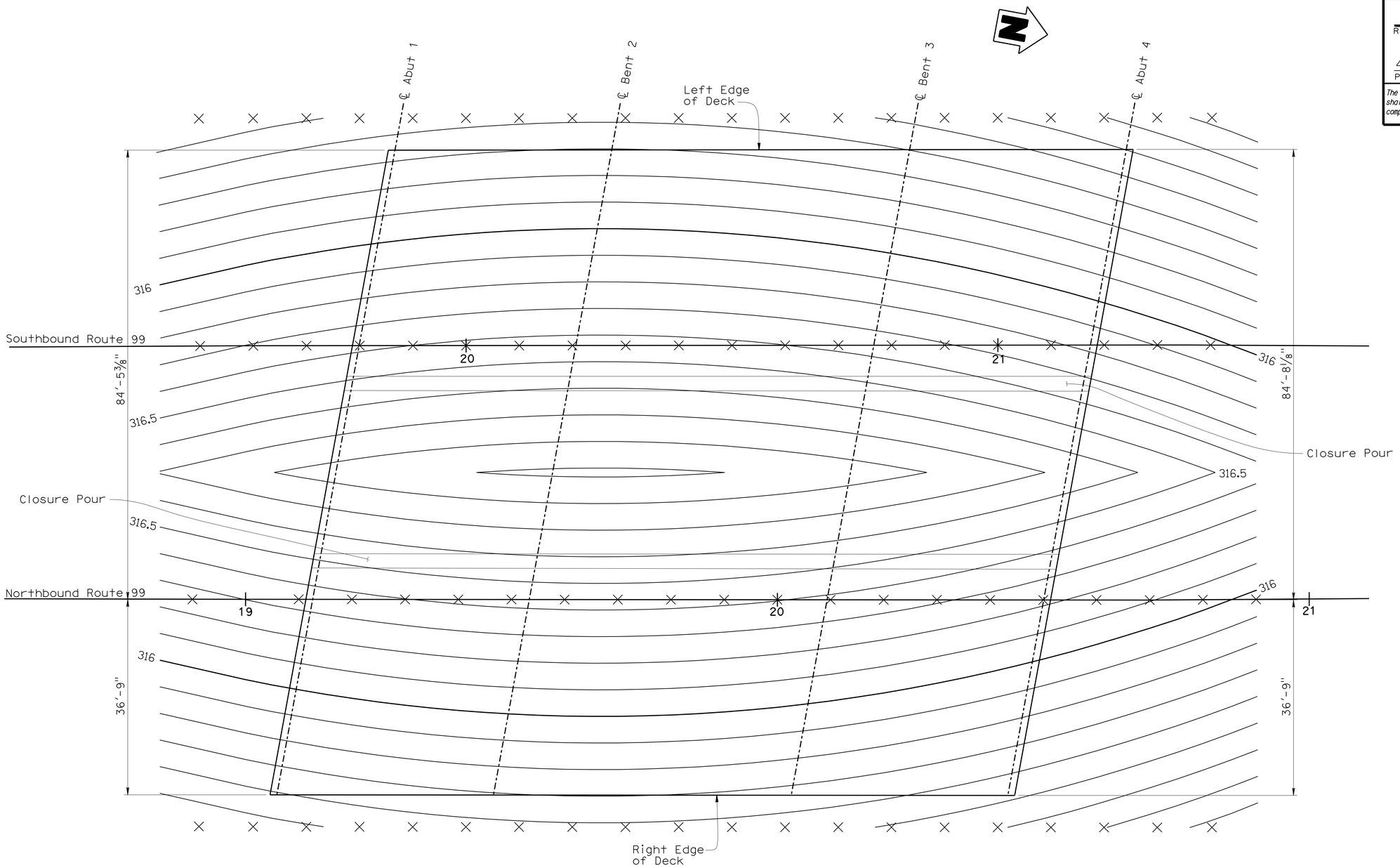

PLAN

1" = 20'

Notes:

1. Contour interval = 0.1'
2. X = 10'-0" Station interval
3. Contours do not include camber

DESIGN	BY I. Yalan	CHECKED C. Chuang	
DETAILS	BY T. Fairall	CHECKED C. Chuang	
QUANTITIES	BY I. Yalan	CHECKED R. Candiotti	

STATE OF CALIFORNIA
DEPARTMENT OF TRANSPORTATION

DIVISION OF ENGINEERING SERVICES
STRUCTURE DESIGN
DESIGN BRANCH 9

BRIDGE NO. 46-0268
POST MILE 3.06

AVENUE 24 UNDERCROSSING
DECK CONTOURS

STRUCTURES DESIGN DETAIL SHEET (ENGLISH) (REV. 10/25/05)

ORIGINAL SCALE IN INCHES FOR REDUCED PLANS 0 1 2 3

CU 06
EA 471901

DISREGARD PRINTS BEARING EARLIER REVISION DATES

REVISION DATES: 11-23-09, 12-14-09, 2-23-10, 3-08-10

SHEET 4 OF 18

FILE => 46-0268-d-dccomb.dgn

USERNAME => trlehard DATE PLOTTED => 06-APR-2010 TIME PLOTTED => 13:47

DIST	COUNTY	ROUTE	POST MILES TOTAL PROJECT	SHEET No	TOTAL SHEETS
06	Tul	99	2.9/3.3	115	128

REGISTERED CIVIL ENGINEER 3/10/10 DATE

4-5-10
PLANS APPROVAL DATE

The State of California or its officers or agents shall not be responsible for the accuracy or completeness of electronic copies of this plan sheet.

REGISTERED PROFESSIONAL ENGINEER ISAIAS D. YALAN No. 68269 Exp. 9-30-2011 CIVIL STATE OF CALIFORNIA

Bridge Location # 46-0169L (Calculated)

① - 34.85 Lt. "ETW1" Line, Sta.19+95.68, Elev.=315.61 ±
② - 3.85 Rt. "ETW1" Line, Sta.19+88.72, Elev.=316.18 ±
③ - 34.80 Lt. "ETW1" Line, Sta.21+13.01, Elev.=315.36 ±
④ - 3.80 Rt. "ETW1" Line, Sta.21+05.80, Elev.=315.96 ±

Bridge Location # 46-0169R (Calculated)

⑤ - 3.84 Lt. "ETW2" Line, Sta.19+22.92, Elev.=316.23 ±
⑥ - 34.80 Rt. "ETW2" Line, Sta.19+16.00, Elev.=315.65 ±
⑦ - 4.07 Lt. "ETW2" Line, Sta.20+40.09, Elev.=315.63 ±
⑧ - 34.82 Rt. "ETW2" Line, Sta.20+32.97, Elev.=316.09 ±

Soffit Elevations
Br # 46-0169L

1 - 311.64
2 - 311.64
3 - 311.66
4 - 311.64
5 - 311.56
6 - 311.45
7 - 312.20
8 - 312.16
9 - 312.15
10 - 312.08

Soffit Elevations
Br # 46-0169R

11 - 312.25
12 - 312.20
13 - 311.69
14 - 311.71
15 - 311.69
16 - 311.64

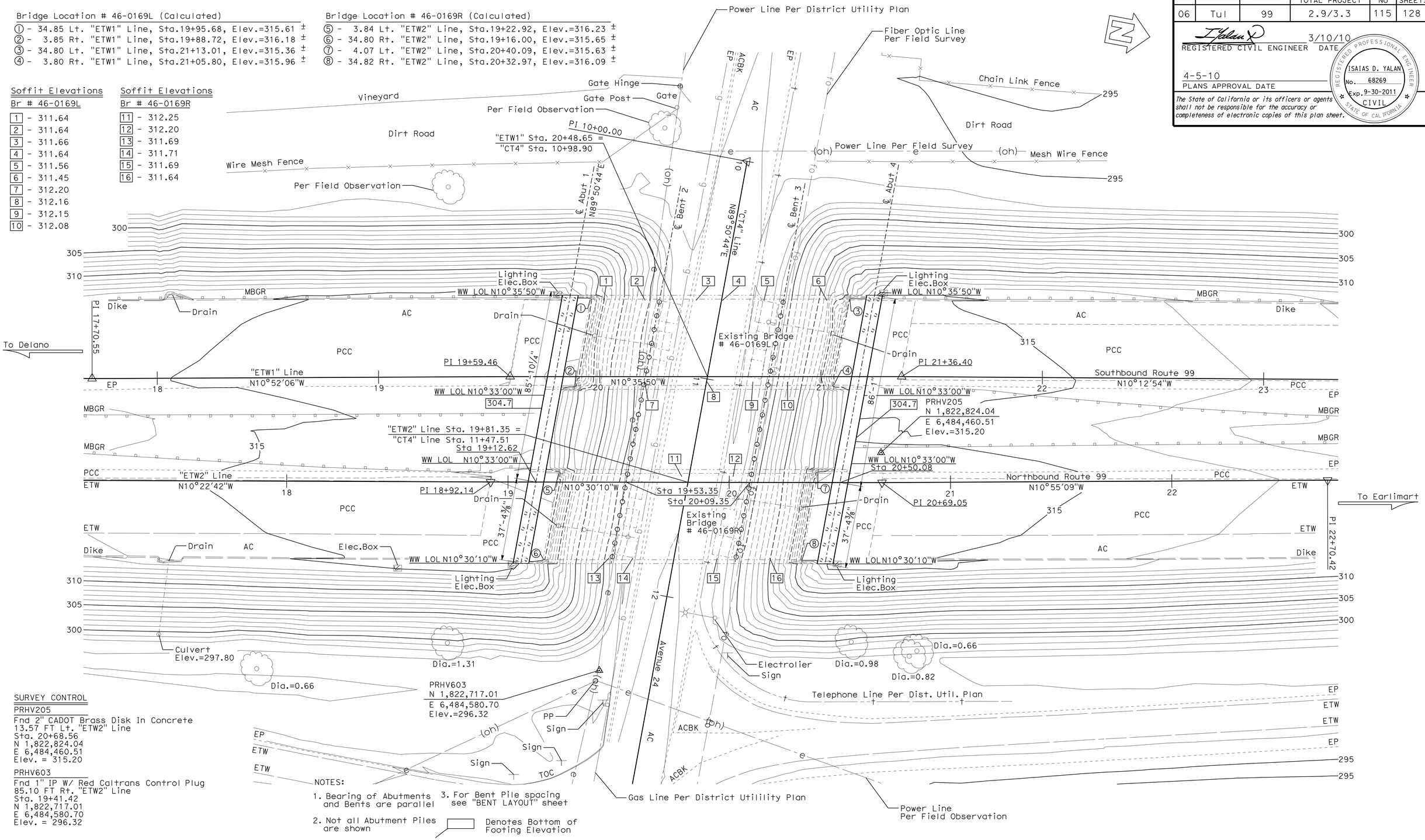

SURVEY CONTROL

PRHV205
Fnd 2" CADOT Brass Disk In Concrete
13.57 FT Lt. "ETW2" Line
Sta. 20+68.56
N 1,822,824.04
E 6,484,460.51
Elev. = 315.20

PRHV603
Fnd 1" IP W/ Red Caltrans Control Plug
85.10 FT Rt. "ETW2" Line
Sta. 19+41.42
N 1,822,717.01
E 6,484,580.70
Elev. = 296.32

NOTES:

1. Bearing of Abutments and Bents are parallel
2. Not all Abutment Piles are shown
3. For Bent Pile spacing see "BENT LAYOUT" sheet

Denotes Bottom of Footing Elevation

PRELIMINARY INVESTIGATION SECTION

SCALE	VERT.DATUM NAVD88	PHOTOGRAMMETRY AS OF: X			
1"=20'	HORZ.DATUM NAD83 (1991.35)	SURVEYED	BY District 10/2008	CHECKED	BY T.Gillett 05/2009
ALIGNMENT TIES Dist.Traverse Sheet		DRAFTED	BY J.Martinez 05/2009	CHECKED	BY L.Lew 05/2009

	BY	CHECKED
DESIGN	I. Yalan	C. Chuang
DETAILS	T. Fairall	C. Chuang
QUANTITIES	I. Yalan	R. Candiotti

STATE OF CALIFORNIA
DEPARTMENT OF TRANSPORTATION

DIVISION OF ENGINEERING SERVICES
STRUCTURE DESIGN
DESIGN BRANCH 9

BRIDGE NO. 46-0268
POST MILE 3.06

AVENUE 24 UNDERCROSSING (REPLACE)
FOUNDATION PLAN

STRUCTURES FOUNDATION PLAN SHEET (ENGLISH) (REV. 10/25/05)

ORIGINAL SCALE IN INCHES FOR REDUCED PLANS 0 1 2 3

CU 06
EA 471901

DISREGARD PRINTS BEARING EARLIER REVISION DATES

REVISION DATES: 05/28/09 01/08/10 03/10/10

SHEET 5 OF 18

FILE => 46-0268-e-fp.dgn

USERNAME => trienard DATE PLOTTED => 06-APR-2010 TIME PLOTTED => 13:47

DIST	COUNTY	ROUTE	POST MILES TOTAL PROJECT	SHEET No	TOTAL SHEETS
06	Tul	99	2.9/3.3	116	128

REGISTERED CIVIL ENGINEER — DATE 3/10/10

4-5-10
PLANS APPROVAL DATE

REGISTERED PROFESSIONAL ENGINEER — ISAIAS D. YALAN No. 68269 Exp. 9-30-2011 CIVIL — STATE OF CALIFORNIA

The State of California or its officers or agents shall not be responsible for the accuracy or completeness of electronic copies of this plan sheet.

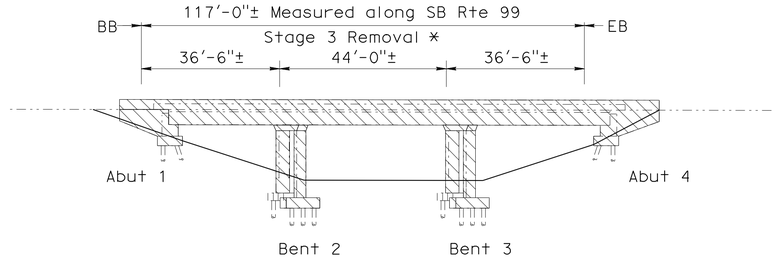

MIRRORED ELEVATION

1" = 20'

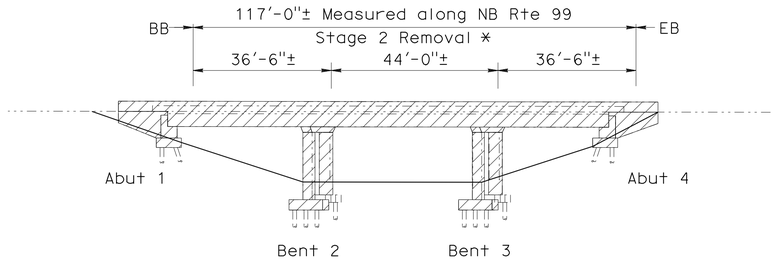

ELEVATION

1" = 20'

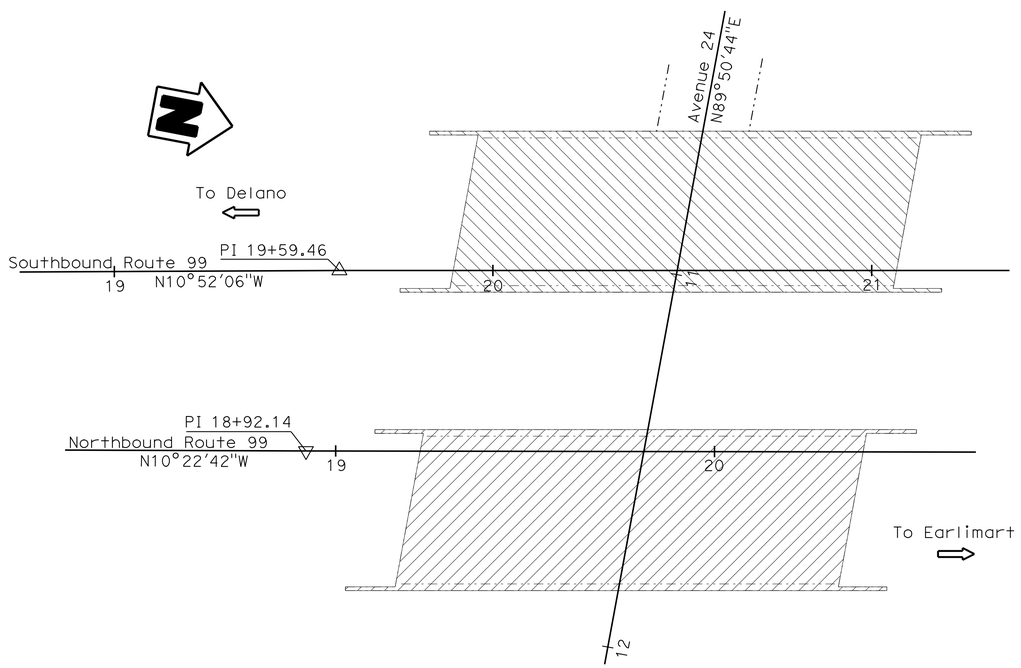

PLAN

1" = 20'

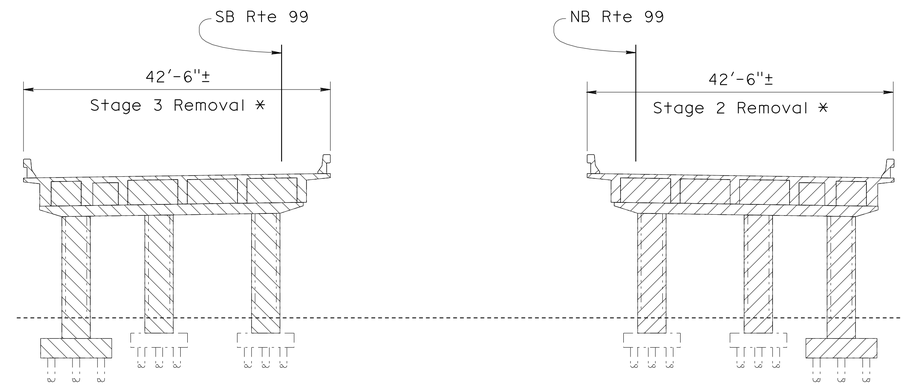

TYPICAL SECTION AT BENT 2

3/32" = 1'-0"

LEGEND:

* Stage 1 applies to construction of new bridge in the median

Denotes limits of removal of existing Avenue 24 Undercrossing bridge No. 46-0169R

Denotes limits of removal of existing Avenue 24 Undercrossing bridge No. 46-0169L

NOTE:
THE CONTRACTOR SHALL VERIFY ALL CONTROLLING FIELD DIMENSIONS BEFORE ORDERING OR FABRICATING ANY MATERIAL.

	BY	CHECKED
DESIGN	I. Yalan	C. Chuang
DETAILS	T. Fairall	C. Chuang
QUANTITIES	I. Yalan	R. Candiotti

STATE OF CALIFORNIA
DEPARTMENT OF TRANSPORTATION

DIVISION OF ENGINEERING SERVICES
STRUCTURE DESIGN
DESIGN BRANCH 9

BRIDGE NO. 46-0268
POST MILE 3.06

AVENUE 24 UNDERCROSSING (REPLACE)
REMOVAL DETAILS

STRUCTURES DESIGN DETAIL SHEET (ENGLISH) (REV. 10/25/05)

ORIGINAL SCALE IN INCHES FOR REDUCED PLANS 0 1 2 3

CU 06
EA 471901

DISREGARD PRINTS BEARING EARLIER REVISION DATES → 3-08-10 3-08-10

REVISION DATES

SHEET 6 OF 18

FILE => 46-0268-f_gremov.dgn

USERNAME => tfriehard DATE PLOTTED => 06-APR-2010 TIME PLOTTED => 13:47

DIST	COUNTY	ROUTE	POST MILES TOTAL PROJECT	SHEET No	TOTAL SHEETS
06	Tul	99	2.9/3.3	117	128

REGISTERED CIVIL ENGINEER 3/10/10 DATE

4-5-10
PLANS APPROVAL DATE

The State of California or its officers or agents shall not be responsible for the accuracy or completeness of electronic copies of this plan sheet.

REGISTERED PROFESSIONAL ENGINEER ISAIAS D. YALAN No. 68269 Exp. 9-30-2011 CIVIL STATE OF CALIFORNIA

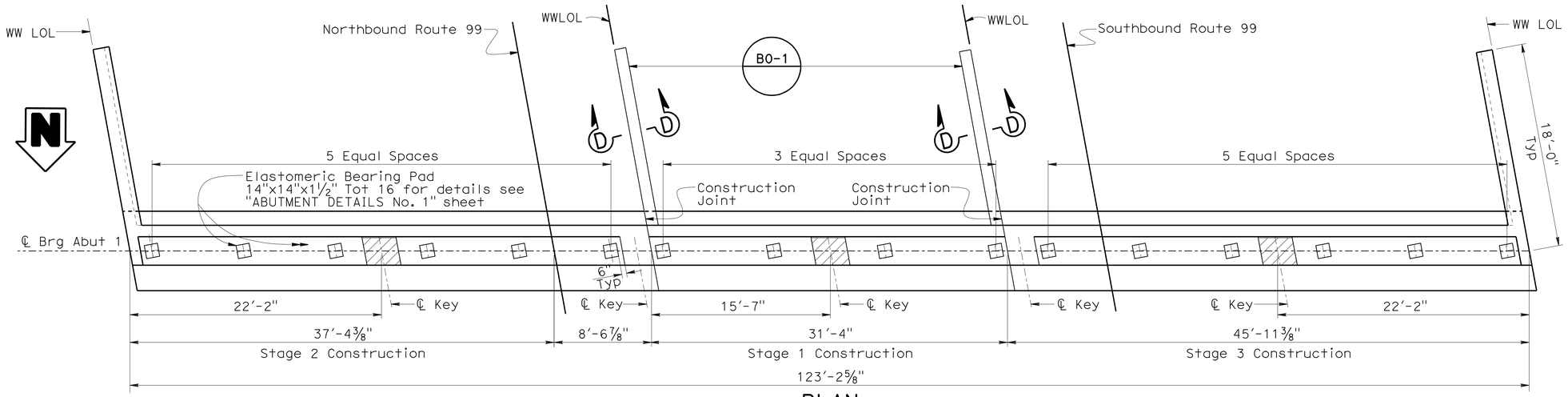

PLAN

3/16" = 1'-0"

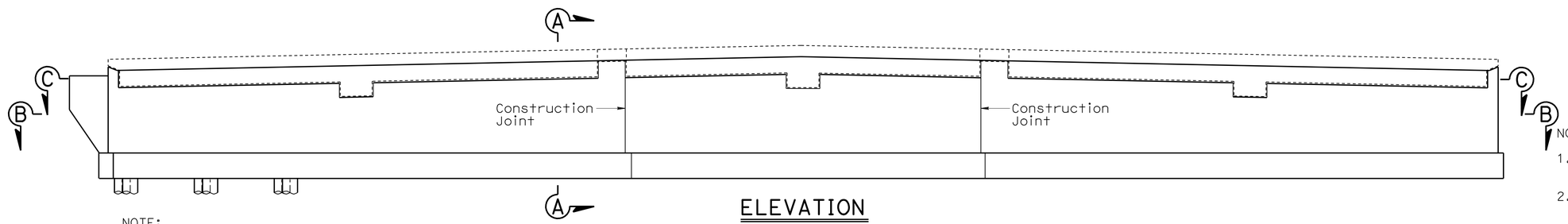

NOTE:
All piles not shown

ELEVATION

3/16" = 1'-0"

NOTES:

1. For "SECTION A-A" see "ABUTMENT DETAILS No. 1" sheet
2. For "SECTION B-B" and "SECTION C-C" see "ABUTMENT DETAILS No. 2" sheet
3. For Key Details and "SECTION D-D" see "ABUTMENT DETAILS No. 3" sheet

Denotes 16" CIDH Concrete Pile

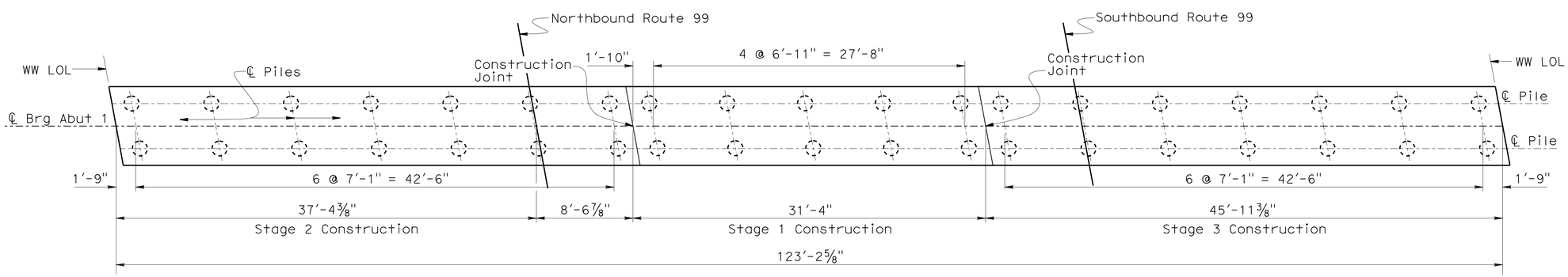

FOOTING PLAN

3/16" = 1'-0"

	BY	CHECKED
DESIGN	I. Yalan	C. Chuang
DETAILS	T. Fairall	C. Chuang
QUANTITIES	I. Yalan	R. Candiotti

STATE OF CALIFORNIA
DEPARTMENT OF TRANSPORTATION

DIVISION OF ENGINEERING SERVICES
STRUCTURE DESIGN
DESIGN BRANCH 9

BRIDGE NO. 46-0268
POST MILE 3.06

AVENUE 24 UNDERCROSSING (REPLACE)

ABUTMENT 1 LAYOUT

STRUCTURES DESIGN DETAIL SHEET (ENGLISH) (REV. 10/25/05)

ORIGINAL SCALE IN INCHES FOR REDUCED PLANS 0 1 2 3

CU 06
EA 471901

DISREGARD PRINTS BEARING EARLIER REVISION DATES

REVISION DATES: 10-29-09 12-16-09 3-08-10

SHEET 7 OF 18

FILE => 46-0268-f-a01_lo01.dgn

USERNAME => trlenard DATE PLOTTED => 06-APR-2010 TIME PLOTTED => 13:47

DIST	COUNTY	ROUTE	POST MILES TOTAL PROJECT	SHEET No	TOTAL SHEETS
06	Tul	99	2.9/3.3	118	128

REGISTERED CIVIL ENGINEER 3/10/10 DATE

4-5-10
PLANS APPROVAL DATE

The State of California or its officers or agents shall not be responsible for the accuracy or completeness of electronic copies of this plan sheet.

REGISTERED PROFESSIONAL ENGINEER ISAIAS D. YALAN No. 68269 Exp. 9-30-2011 CIVIL STATE OF CALIFORNIA

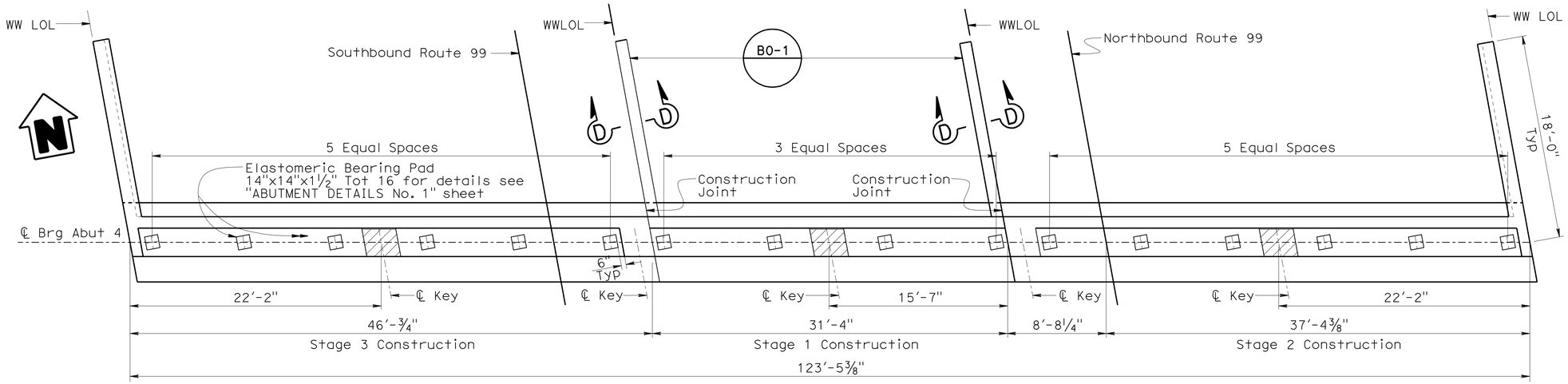

PLAN

3/16" = 1'-0"

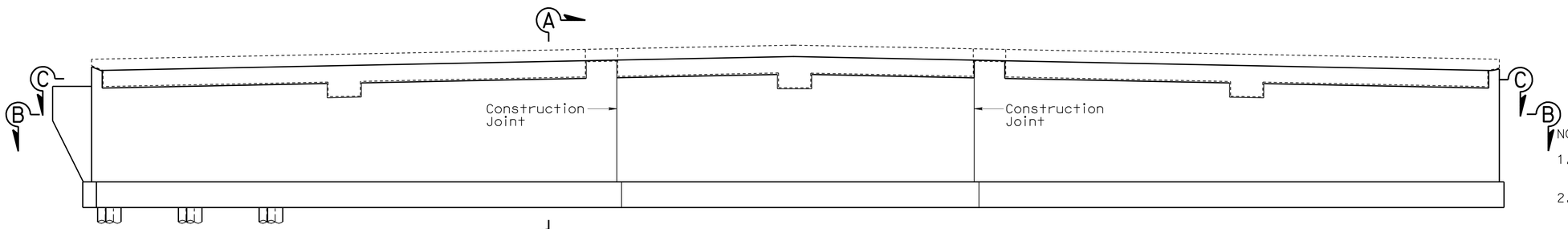

NOTE:
All piles not shown

ELEVATION

3/16" = 1'-0"

NOTES:

1. For "SECTION A-A" see "ABUTMENT DETAILS No. 1" sheet
2. For "SECTION B-B" and "SECTION C-C" see "ABUTMENT DETAILS No. 2" sheet
3. For Key Details and "SECTION D-D" see "ABUTMENT DETAILS No. 3" sheet

◌ Denotes 16" CIDH Concrete Pile

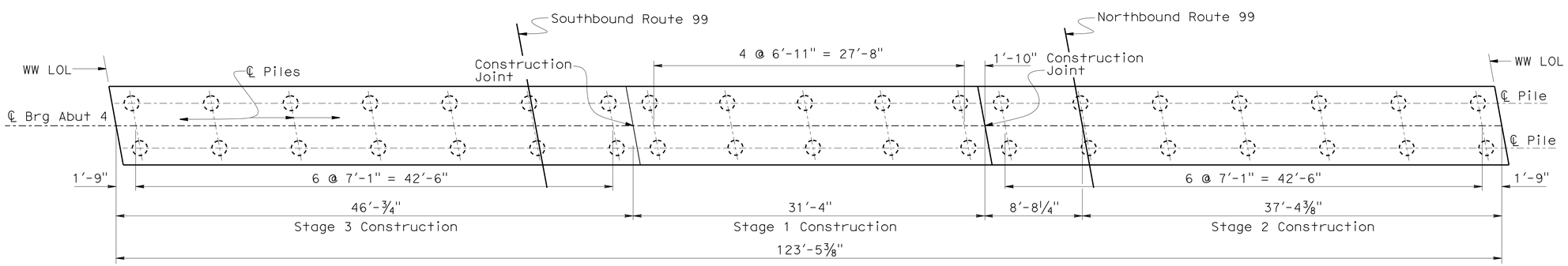

FOOTING PLAN

3/16" = 1'-0"

	BY	CHECKED
DESIGN	I. Yalan	C. Chuang
DETAILS	T. Fairall	C. Chuang
QUANTITIES	I. Yalan	R. Candiotti

STATE OF CALIFORNIA
DEPARTMENT OF TRANSPORTATION

DIVISION OF ENGINEERING SERVICES
STRUCTURE DESIGN
DESIGN BRANCH 9

BRIDGE NO. 46-0268
POST MILE 3.06

AVENUE 24 UNDERCROSSING (REPLACE)
ABUTMENT 4 LAYOUT

STRUCTURES DESIGN DETAIL SHEET (ENGLISH) (REV. 10/25/05)

ORIGINAL SCALE IN INCHES FOR REDUCED PLANS 0 1 2 3

CU 06
EA 471901

DISREGARD PRINTS BEARING EARLIER REVISION DATES

REVISION DATES: 10-29-09 12-23-09 3-08-10

SHEET 8 OF 18

FILE => 46-0268-f-a01_lo02.dgn

USERNAME => friehard DATE PLOTTED => 06-APR-2010 TIME PLOTTED => 13:48

DIST	COUNTY	ROUTE	POST MILES TOTAL PROJECT	SHEET No	TOTAL SHEETS
06	Tul	99	2.9/3.3	119	128

REGISTERED CIVIL ENGINEER — DATE 3/10/10

4-5-10
PLANS APPROVAL DATE

REGISTERED PROFESSIONAL ENGINEER — ISAIAS D. YALAN — No. 68269 — Exp. 9-30-2011 — CIVIL — STATE OF CALIFORNIA

The State of California or its officers or agents shall not be responsible for the accuracy or completeness of electronic copies of this plan sheet.

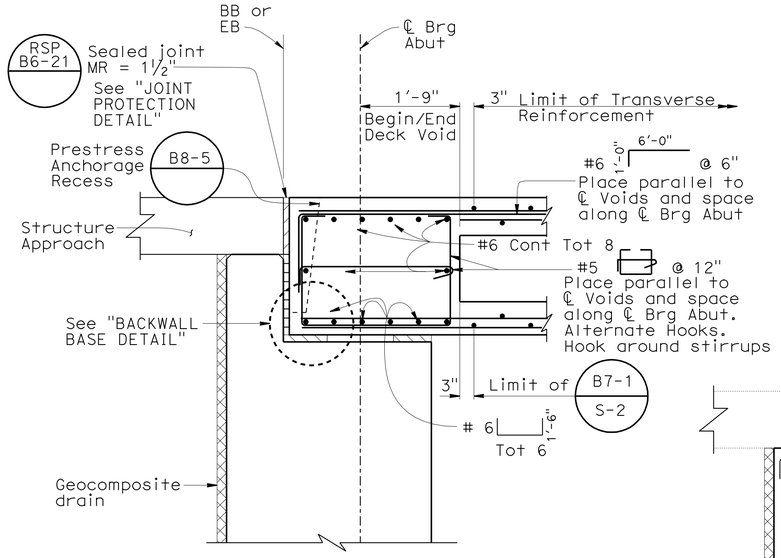

END DIAPHRAGM SECTION

¾" = 1'-0"

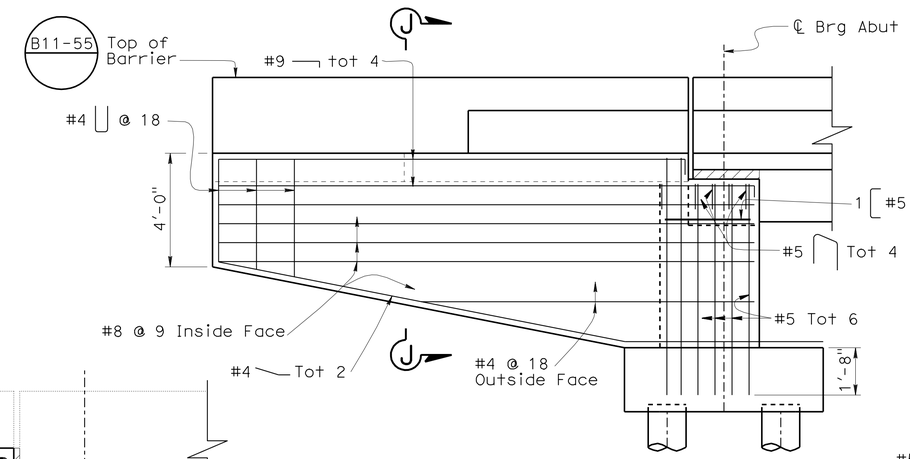

WINGWALL ELEVATION

⅜" = 1'-0"

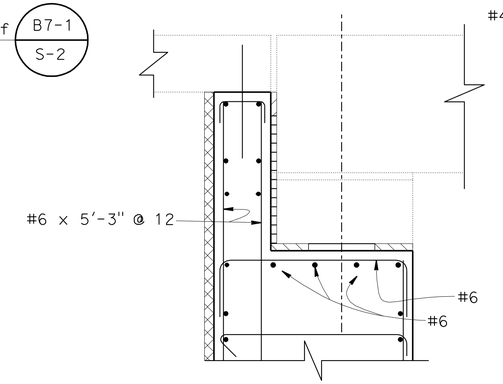

ABUTMENT SECTION AT INTERNAL KEY

¾" = 1'-0"

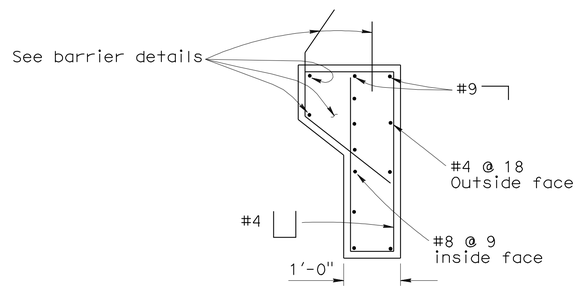

SECTION J-J

No Scale

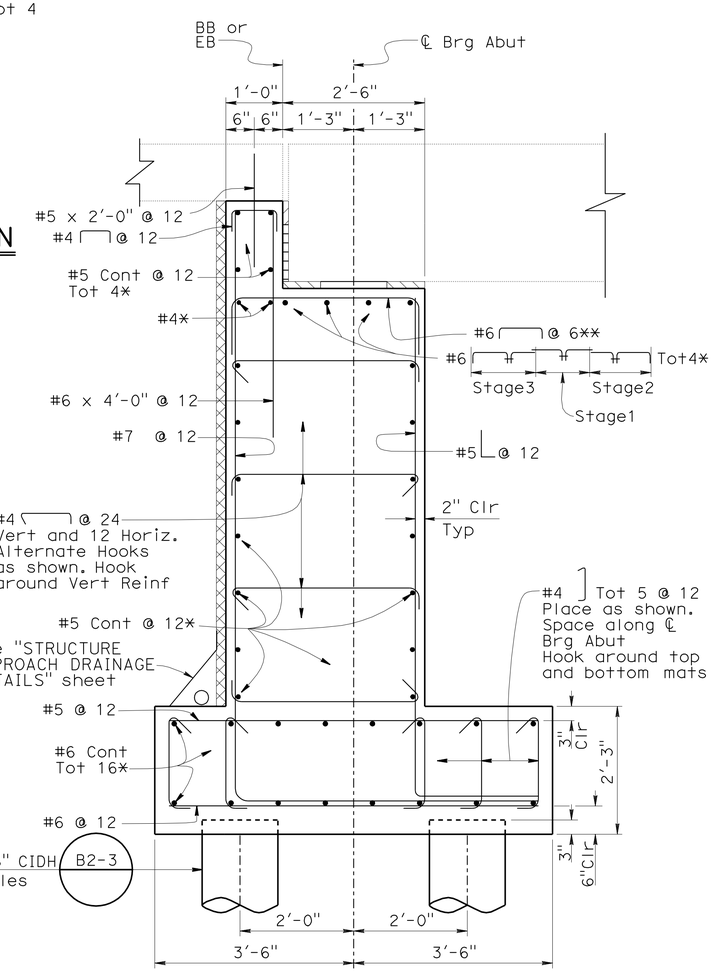

SECTION A-A

¾" = 1'-0"

Note:

For location of "SECTION A-A" see "ABUTMENT LAYOUT No. 1" and "ABUTMENT LAYOUT No. 2" sheets

* Lap splice or mechanically couple at construction joints

** Place as Shown Space along ℄ Brg Abut

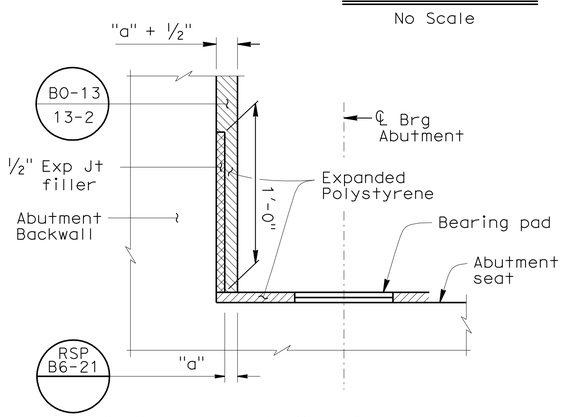

BACKWALL BASE DETAIL

NO SCALE

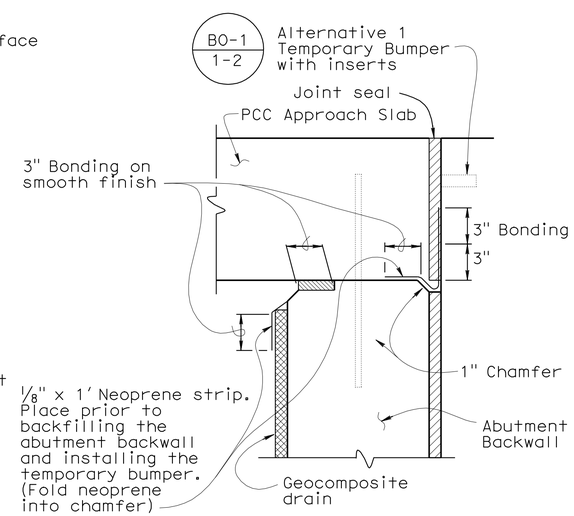

JOINT PROTECTION DETAIL

No Scale

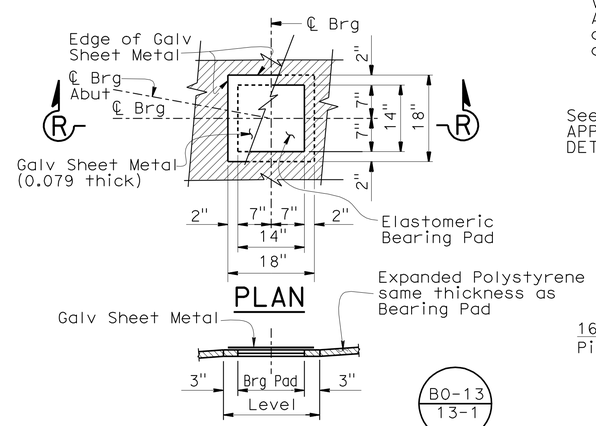

PLAN

SECTION R-R
BEARING PAD DETAIL

No Scale

Notes:

1. Coat top of Bearing Pad with silicone grease prior to placing sheet metal.
2. Details typical at all bearing pads

DESIGN	BY I. Yalan	CHECKED C. Chuang	
DETAILS	BY T. Fairall / R. Heider	CHECKED C. Chuang	
QUANTITIES	BY I. Yalan	CHECKED R. Candiotti	

STATE OF CALIFORNIA
DEPARTMENT OF TRANSPORTATION

DIVISION OF ENGINEERING SERVICES
STRUCTURE DESIGN
DESIGN BRANCH 9

BRIDGE NO. 46-0268
POST MILE 3.06

AVENUE 24 UNDERCROSSING (REPLACE)
ABUTMENT DETAILS No. 1

STRUCTURES DESIGN DETAIL SHEET (ENGLISH) (REV. 10/25/05)

ORIGINAL SCALE IN INCHES FOR REDUCED PLANS 0 1 2 3

CU 06
EA 471901

DISREGARD PRINTS BEARING EARLIER REVISION DATES 11-23-09 12-14-09 03-04-10

REVISION DATES

SHEET 9 OF 18

FILE => 46-0268-f-a01dt01.dgn

USERNAME => Trenard DATE PLOTTED => 06-APR-2010 TIME PLOTTED => 13:48

DIST	COUNTY	ROUTE	POST MILES TOTAL PROJECT	SHEET No	TOTAL SHEETS
06	Tul	99	2.9/3.3	120	128

REGISTERED CIVIL ENGINEER 3/10/10 DATE

4-5-10
PLANS APPROVAL DATE

REGISTERED PROFESSIONAL ENGINEER ISAIAS D. YALAN No. 68269 Exp. 9-30-2011 CIVIL STATE OF CALIFORNIA

The State of California or its officers or agents shall not be responsible for the accuracy or completeness of electronic copies of this plan sheet.

Notes:

1. For location of "SECTION B-B", and "SECTION C-C" see "ABUTMENT 1 LAYOUT" and "ABUTMENT 4 LAYOUT" sheets.
2. Abutment 1 shown, Abutment 4 similar
3. Mechanical connection may be used instead of Lap Splice as approved by Engineer
4. For Internal and External Key Details see "ABUTMENT DETAILS No. 3" sheet

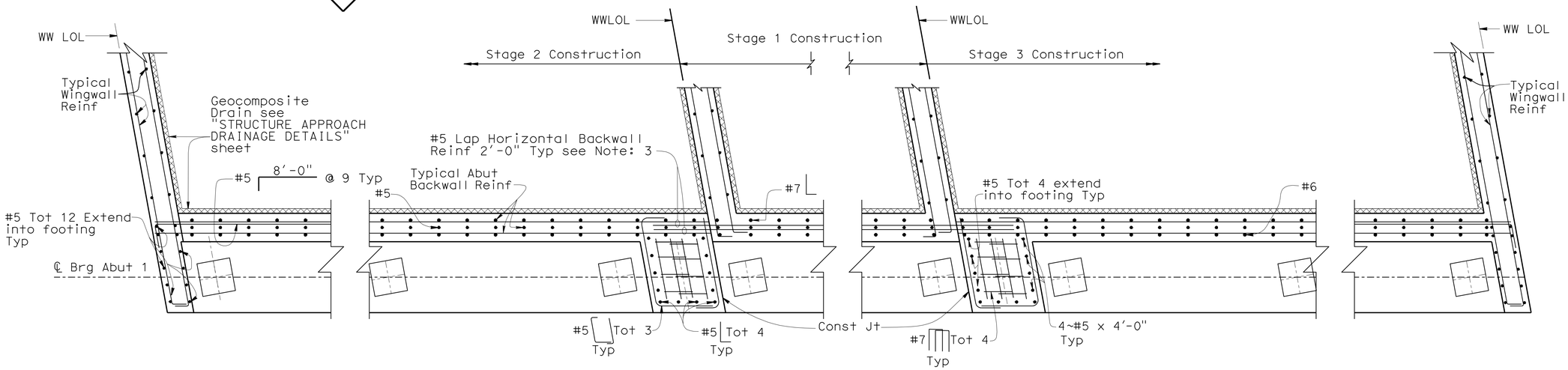

SECTION C-C

½" = 1'-0"

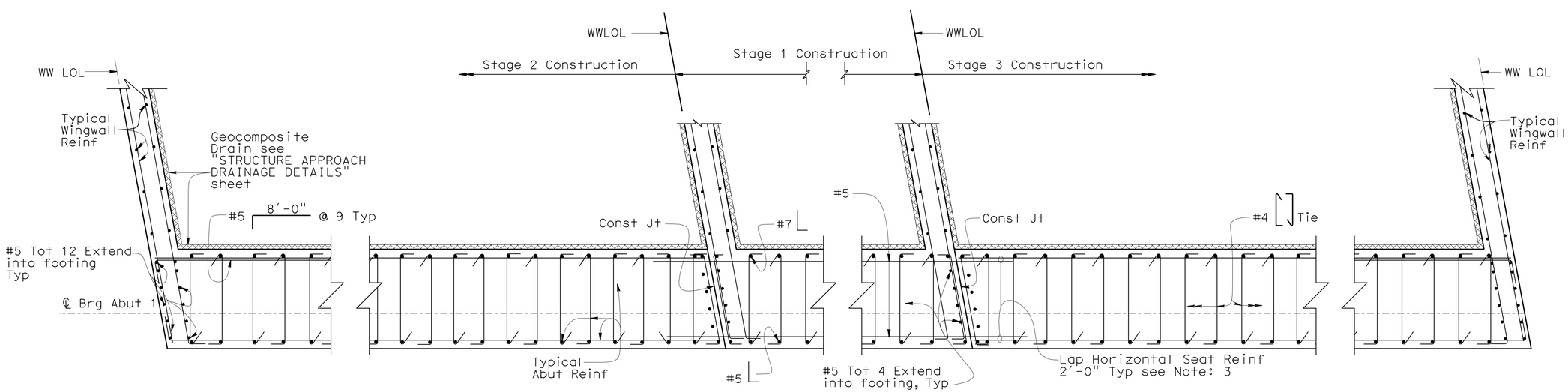

SECTION B-B

½" = 1'-0"

	BY	CHECKED
DESIGN	I. Yalan	C. Chuang
DETAILS	T. Fairall	C. Chuang
QUANTITIES	I. Yalan	R. Candiotti

STATE OF CALIFORNIA
DEPARTMENT OF TRANSPORTATION

DIVISION OF ENGINEERING SERVICES
STRUCTURE DESIGN
DESIGN BRANCH 9

BRIDGE NO. 46-0268
POST MILE 3.06

AVENUE 24 UNDERCROSSING (REPLACE)
ABUTMENT DETAILS No. 2

STRUCTURES DESIGN DETAIL SHEET (ENGLISH) (REV. 10/25/05)

ORIGINAL SCALE IN INCHES FOR REDUCED PLANS 0 1 2 3

CU 06
EA 471901

DISREGARD PRINTS BEARING EARLIER REVISION DATES

REVISION DATES: 11-23-09, 12-14-09, 12-23-09, 1-08-10, 3-08-10

SHEET 10 OF 18

FILE => 46-0268-f-a01dt02.dgn

USERNAME => trlenard DATE PLOTTED => 06-APR-2010 TIME PLOTTED => 13:48

DIST	COUNTY	ROUTE	POST MILES TOTAL PROJECT	SHEET No	TOTAL SHEETS
06	Tul	99	2.9/3.3	121	128

REGISTERED CIVIL ENGINEER 3/10/10 DATE

4-5-10
PLANS APPROVAL DATE

The State of California or its officers or agents shall not be responsible for the accuracy or completeness of electronic copies of this plan sheet.

REGISTERED PROFESSIONAL ENGINEER ISAIAS D. YALAN No. 68269 Exp. 9-30-2011 CIVIL STATE OF CALIFORNIA

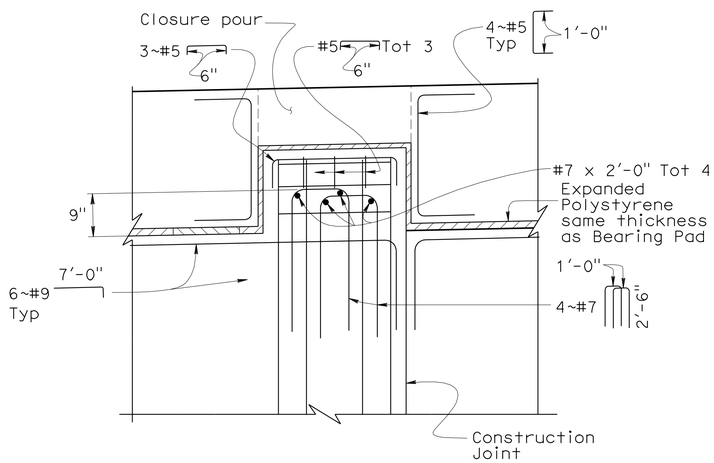

PART ELEVATION-KEY AT CONSTRUCTION JOINT

3/4" = 1'-0"

Note:

Closure pour reinforcement not shown

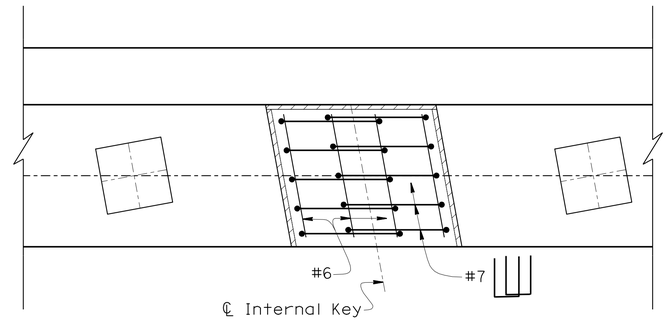

PLAN

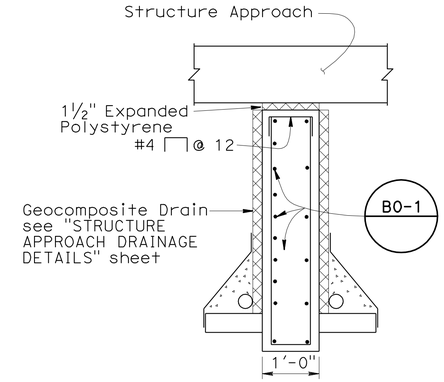

SECTION D-D

No Scale

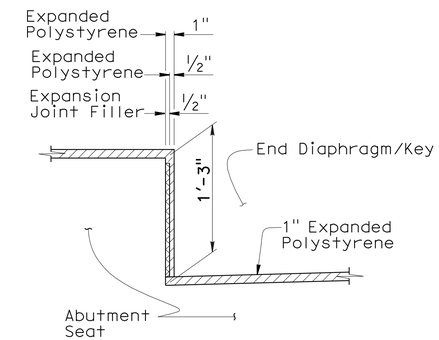

KEY BASE DETAIL

NO SCALE

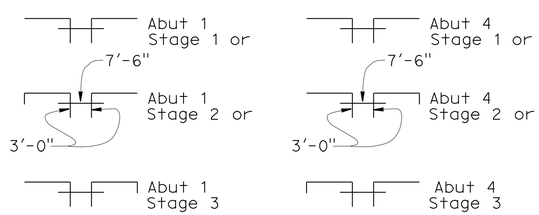

REBAR DETAIL

No Scale

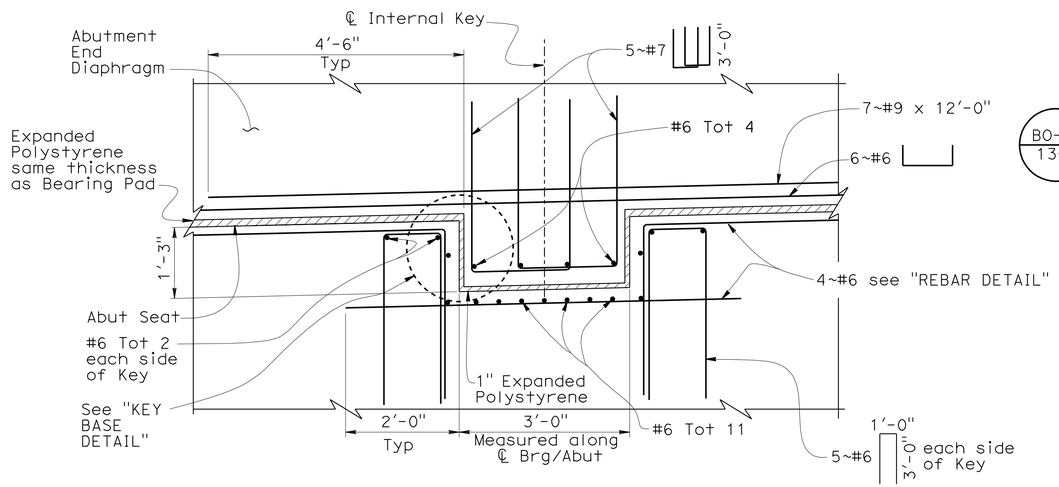

PART ELEVATION-INTERNAL KEY

3/4" = 1'-0"

Note:

For location of "INTERNAL KEY" and "SECTION D-D" see "ABUTMENT 1 LAYOUT" and "ABUTMENT 4 LAYOUT" sheets

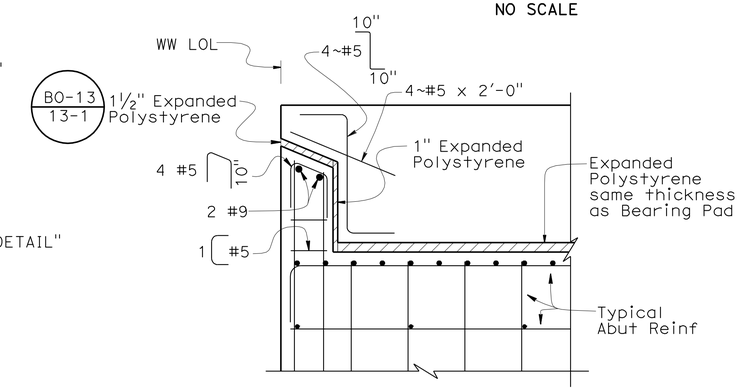

PART ELEVATION-EXTERNAL KEY

3/4" = 1'-0"

DESIGN	BY I. Yalan	CHECKED R. Candiotti	
DETAILS	BY T. Fairall	CHECKED R. Candiotti	
QUANTITIES	BY I. Yalan	CHECKED R. Candiotti	

STATE OF CALIFORNIA DEPARTMENT OF TRANSPORTATION

DIVISION OF ENGINEERING SERVICES STRUCTURE DESIGN DESIGN BRANCH 9

BRIDGE NO. 46-0268
POST MILE 3.06

AVENUE 24 UNDERCROSSING (REPLACE)
ABUTMENT DETAILS No. 3

STRUCTURES DESIGN DETAIL SHEET (ENGLISH) (REV. 10/25/05)

ORIGINAL SCALE IN INCHES FOR REDUCED PLANS 0 1 2 3

CU 06
EA 471901

DISREGARD PRINTS BEARING EARLIER REVISION DATES 11-24-09 1-06-10 3-08-10

REVISION DATES

SHEET 11 OF 18

FILE => 46-0268-f-a01dt03.dgn

USERNAME => trlenard DATE PLOTTED => 06-APR-2010 TIME PLOTTED => 13:48

DIST	COUNTY	ROUTE	POST MILES TOTAL PROJECT	SHEET No	TOTAL SHEETS
06	Tul	99	2.9/3.3	122	128

REGISTERED CIVIL ENGINEER 3/10/10 DATE

4-5-10
PLANS APPROVAL DATE

REGISTERED PROFESSIONAL ENGINEER ISAIAS D. YALAN No. 68269 Exp. 9-30-2011 CIVIL STATE OF CALIFORNIA

The State of California or its officers or agents shall not be responsible for the accuracy or completeness of electronic copies of this plan sheet.

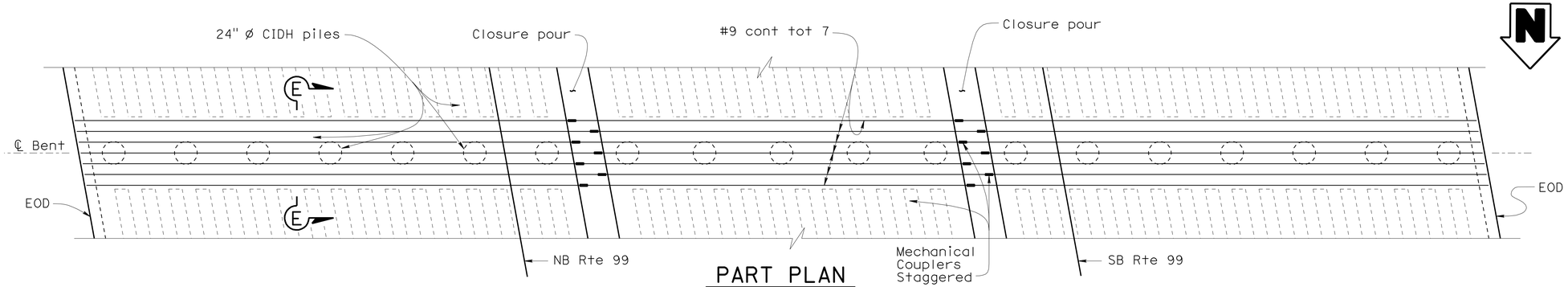

PART PLAN

3/16" = 1'-0"

Note: Only main top Reinf shown

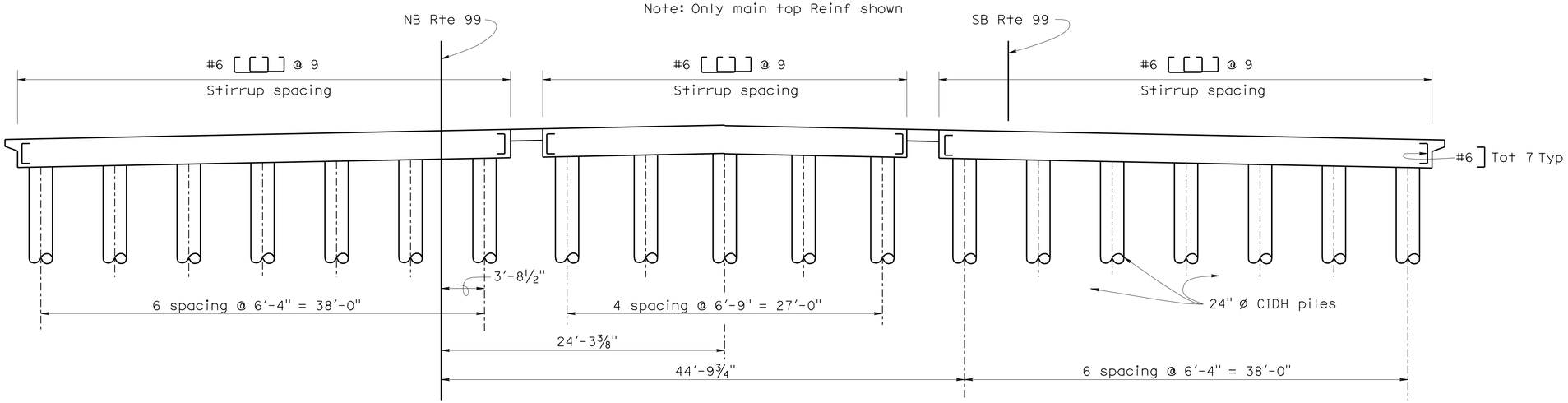

ELEVATION

3/16" = 1'-0"

Notes:

Spacing shown applies for Bent 2 and Bent 3
Spacing measured along ℄ Bent

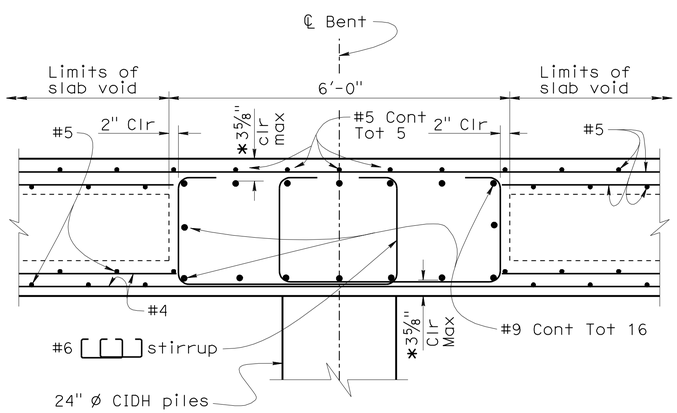

SECTION E-E

¾" = 1'-0"

Notes:

Column and main deck reinforcemt not shown. For details, see "COLUMN DETAILS" sheet.
* Clearance to main cap reinforcement. No lap splice allowed to main cap reinforcement

	BY	CHECKED
DESIGN	C. Chuang	I. Yalan
DETAILS	D. Elliott	I. Yalan
QUANTITIES	I. Yalan	R. Candiotti

STATE OF CALIFORNIA
DEPARTMENT OF TRANSPORTATION

DIVISION OF ENGINEERING SERVICES
STRUCTURE DESIGN
DESIGN BRANCH 9

BRIDGE NO. 46-0268
POST MILE 3.06

AVENUE 24 UNDERCROSSING (REPLACE)
BENT LAYOUT

STRUCTURES DESIGN DETAIL SHEET (ENGLISH) (REV. 10/25/05)

ORIGINAL SCALE IN INCHES FOR REDUCED PLANS 0 1 2 3

CU 06
EA 471901

DISREGARD PRINTS BEARING EARLIER REVISION DATES 12-18-09 3-2-10

REVISION DATES

SHEET 12 OF 18

FILE => 46-0268-h-bent_lo.dgn

USERNAME => trlenard DATE PLOTTED => 06-APR-2010 TIME PLOTTED => 13:48

DIST	COUNTY	ROUTE	POST MILES TOTAL PROJECT	SHEET No	TOTAL SHEETS
06	Tul	99	2.9/3.3	123	128

REGISTERED CIVIL ENGINEER — DATE 3/10/10

4-5-10
PLANS APPROVAL DATE

REGISTERED PROFESSIONAL ENGINEER — ISAIAS D. YALAN — No. 68269 — Exp. 9-30-2011 — CIVIL — STATE OF CALIFORNIA

The State of California or its officers or agents shall not be responsible for the accuracy or completeness of electronic copies of this plan sheet.

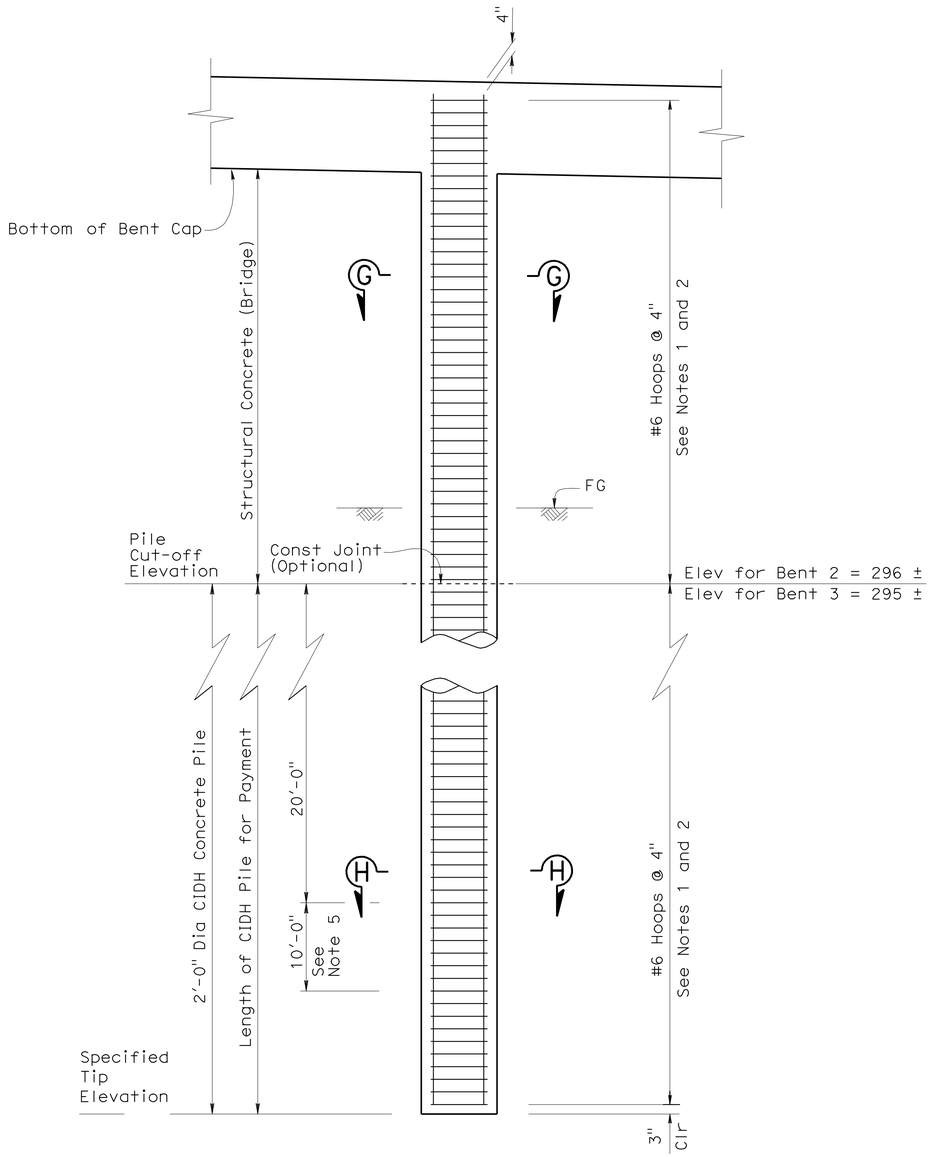

CIDH CONCRETE PILE/COLUMN

½" = 1'-0"

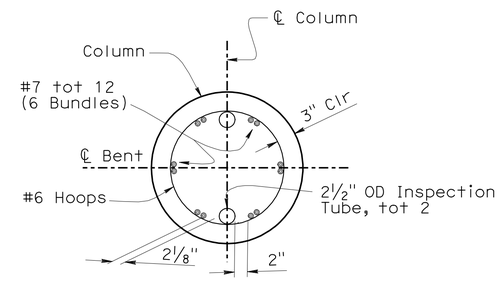

SECTION G-G

1" = 1'-0"

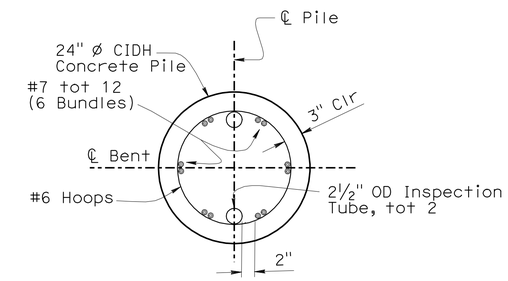

SECTION H-H

1" = 1'-0"

Notes :

1. No Splices allowed in Main Vertical Column and Pile Reinforcement
2. All Hoops shall be Ultimate Butt Spliced continous
3. For Specified Pile Tip Elevations see "INDEX TO PLANS" sheet
4. Details shown on this sheet apply to Bents 2 and 3 for Stage 1, Stage 2 and Stage 3
5. Region where main pile reinforcement may be mechanically spliced, Ultimate splices shall be used

	BY	CHECKED
DESIGN	I. Yalan	C. Chuang
DETAILS	Rania Heider	C. Chuang
QUANTITIES	I. Yalan	R. Candiotti

STATE OF CALIFORNIA
DEPARTMENT OF TRANSPORTATION

DIVISION OF ENGINEERING SERVICES
STRUCTURE DESIGN
DESIGN BRANCH 9

BRIDGE NO. 46-0268
POST MILE 3.06

AVENUE 24 UNDERCROSSING (REPLACE)
COLUMN DETAILS

STRUCTURES DESIGN DETAIL SHEET (ENGLISH) (REV. 10/25/05)

ORIGINAL SCALE IN INCHES FOR REDUCED PLANS 0 1 2 3

CU 06
EA 471901

DISREGARD PRINTS BEARING EARLIER REVISION DATES → 12-08-09 1-24-10 3-08-10

REVISION DATES

SHEET 13 OF 18

FILE => 46-0268-h-clmdet.dgn

USERNAME => trlenard DATE PLOTTED => 06-APR-2010 TIME PLOTTED => 13:48

DIST	COUNTY	ROUTE	POST MILES TOTAL PROJECT	SHEET No	TOTAL SHEETS
06	Tul	99	2.9/3.3	124	128

REGISTERED CIVIL ENGINEER — DATE 3/10/10

4-5-10
PLANS APPROVAL DATE

REGISTERED PROFESSIONAL ENGINEER — ISAIAS D. YALAN — No. 68269 — Exp. 9-30-2011 — CIVIL — STATE OF CALIFORNIA

The State of California or its officers or agents shall not be responsible for the accuracy or completeness of electronic copies of this plan sheet.

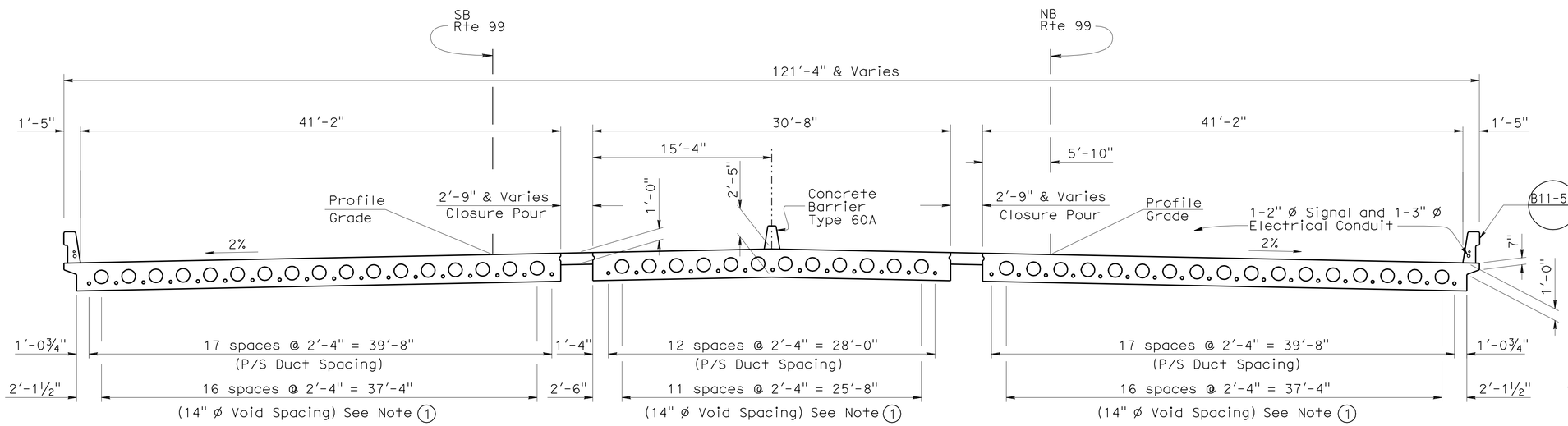

TYPICAL SECTION

3/16" = 1'

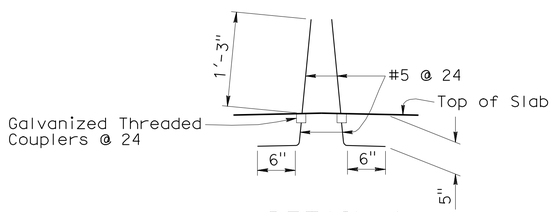

DETAIL A

1" = 1'

Legend:

* ◦ Denotes Main Bars See "DECK REINFORCEMENT" Detail

** Place Parallel to ℄ Bent & Space Along NB Rte 99 Lap Splice at Closure Pours

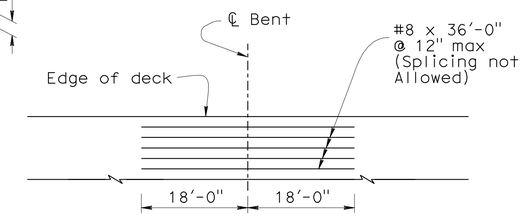

TOP REINFORCEMENT

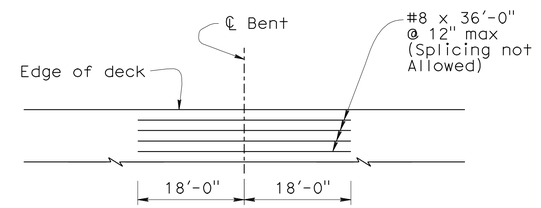

BOTTOM REINFORCEMENT

DECK REINFORCEMENT

No Scale

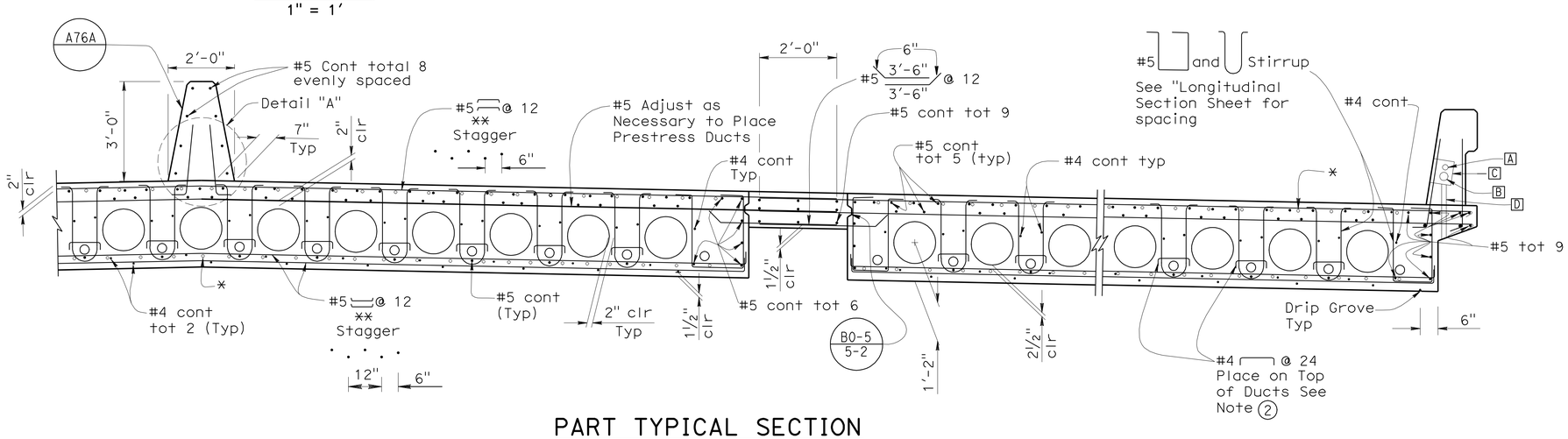

PART TYPICAL SECTION

½" = 1'

Notes:

1. Void Ø is a maximum outside diameter and includes the contractors form(s)
2. Secure PS Ducts @ ℄ Between Voids

A. 1~ 2"Ø electrical conduit, place on each Type 732 concrete barrier, see "ROAD PLANS"

B. 1~ 3"Ø electrical conduit, place on each Type 732 concrete barrier, see "ROAD PLANS"

C. For pull boxes locations and details not shown, see "ROAD PLANS"

D. 1~ 2"Ø lighting conduit, place one on each pull box

	BY	CHECKED
DESIGN	I. Yalan	M. Van De Pol
DETAILS	R. Heider	M. Van De Pol
QUANTITIES	I. Yalan	R. Candiotti

STATE OF CALIFORNIA DEPARTMENT OF TRANSPORTATION

DIVISION OF ENGINEERING SERVICES STRUCTURE DESIGN — DESIGN BRANCH 9

BRIDGE NO. 46-0268 — POST MILE 3.06

AVENUE 24 UNDERCROSSING (REPLACE)

TYPICAL SECTION

STRUCTURES DESIGN DETAIL SHEET (ENGLISH) (REV. 10/25/05)

ORIGINAL SCALE IN INCHES FOR REDUCED PLANS 0 1 2 3

CU 06
EA 471901

DISREGARD PRINTS BEARING EARLIER REVISION DATES

REVISION DATES: 11-30-09 1-5-10 1-21-10 2-9-10 3-08-10 3-11-10

SHEET 14 OF 18

FILE => 46-0268-k-ts.dgn

USERNAME => friehard DATE PLOTTED => 06-APR-2010 TIME PLOTTED => 13:48

DIST	COUNTY	ROUTE	POST MILES TOTAL PROJECT	SHEET No	TOTAL SHEETS
06	Tul	99	2.9/3.3	125	128

REGISTERED CIVIL ENGINEER 3/10/10 DATE

4-5-10
PLANS APPROVAL DATE

REGISTERED PROFESSIONAL ENGINEER ISAIAS D. YALAN No. 68269 Exp. 9-30-2011 CIVIL STATE OF CALIFORNIA

The State of California or its officers or agents shall not be responsible for the accuracy or completeness of electronic copies of this plan sheet.

PRESTRESSING NOTES

270 KSI Low Relaxation Strand:

STAGE 1

P_{jack} = 2800 kips

Anchor Set = 3/8 in

Total Number of Paths = 13

STAGE 2

P_{jack} = 3450 kips

Anchor Set = 3/8 in

Total Number of Paths = 18

STAGE 3

P_{jack} = 3450 kips

Anchor Set = 3/8 in

Total Number of Paths = 18

Concrete: f'_c = 4000 psi @ 28 days

f'_{ci} = 3500 psi @ time of stressing

Contractor shall submit elongation calculations based on initial stress at

☒ = 0.869 times jacking stress.

One end stressing shall be performed from the left end only.

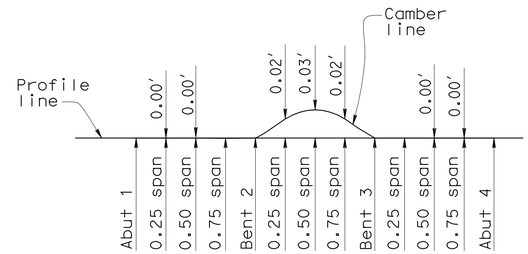

CAMBER DIAGRAM

No Scale

Does not include allowance for falsework settlement.

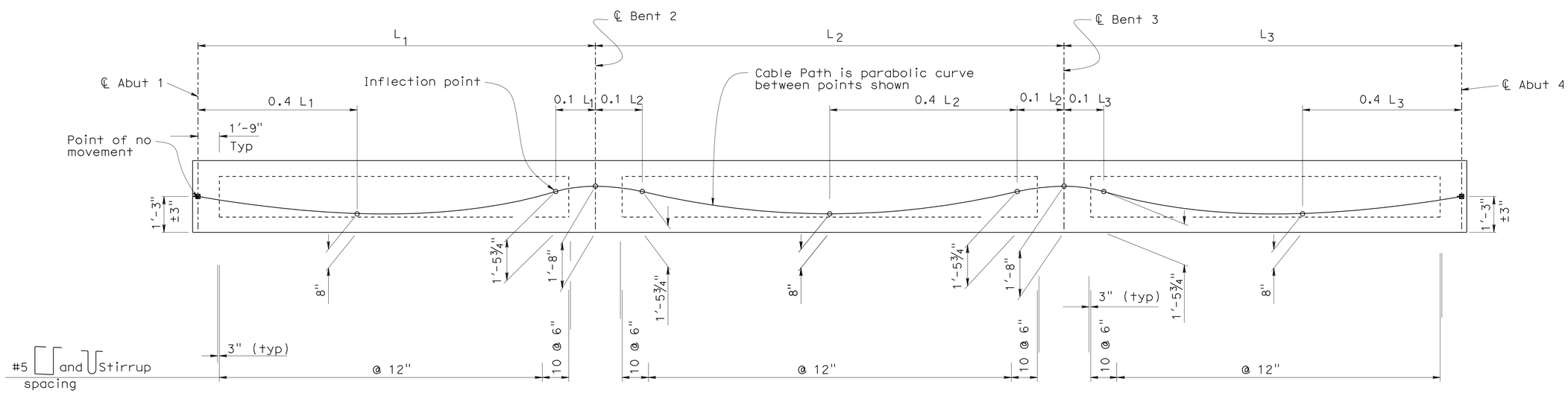

LONGITUDINAL SECTION

No Scale

DESIGN	BY I. Yalan	CHECKED C. Chuang	
DETAILS	BY Rania Heider	CHECKED C. Chuang	
QUANTITIES	BY I. Yalan	CHECKED R. Candiotti	

STATE OF CALIFORNIA
DEPARTMENT OF TRANSPORTATION

DIVISION OF ENGINEERING SERVICES
STRUCTURE DESIGN
DESIGN BRANCH 9

BRIDGE NO. 46-0268
POST MILE 3.06

AVENUE 24 UNDERCROSSING (REPLACE)
LONGITUDINAL SECTION

STRUCTURES DESIGN DETAIL SHEET (ENGLISH) (REV. 10/25/05)

ORIGINAL SCALE IN INCHES FOR REDUCED PLANS 0 1 2 3

CU 06
EA 471901

DISREGARD PRINTS BEARING EARLIER REVISION DATES

REVISION DATES: 12-01-09 3-08-10

SHEET 15 OF 18

FILE => 46-0268-1-longsec.dgn

USERNAME => trlenard DATE PLOTTED => 06-APR-2010 TIME PLOTTED => 13:48

DIST	COUNTY	ROUTE	POST MILES TOTAL PROJECT	SHEET No	TOTAL SHEETS
06	Tul	99	2.9/3.3	126	128

REGISTERED CIVIL ENGINEER 3/10/10 DATE

4-5-10
PLANS APPROVAL DATE

REGISTERED PROFESSIONAL ENGINEER ISAIAS D. YALAN No. 68269 Exp. 9-30-2011 CIVIL STATE OF CALIFORNIA

The State of California or its officers or agents shall not be responsible for the accuracy or completeness of electronic copies of this plan sheet.

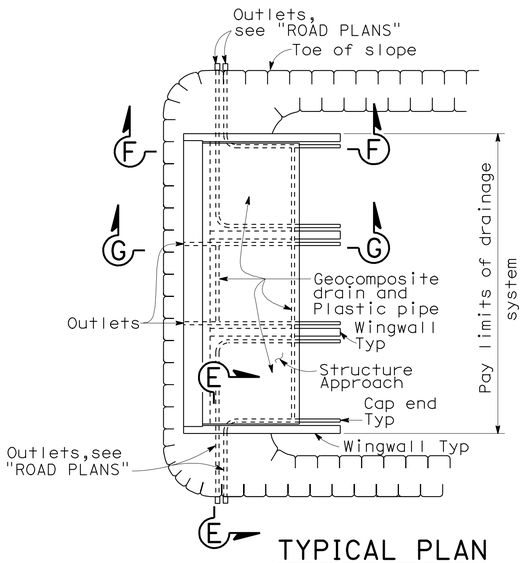

TYPICAL PLAN

No Scale

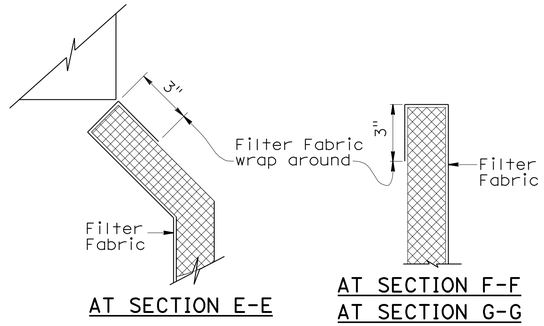

AT SECTION E-E

AT SECTION F-F
AT SECTION G-G

DETAIL A

3"= 1'-0"

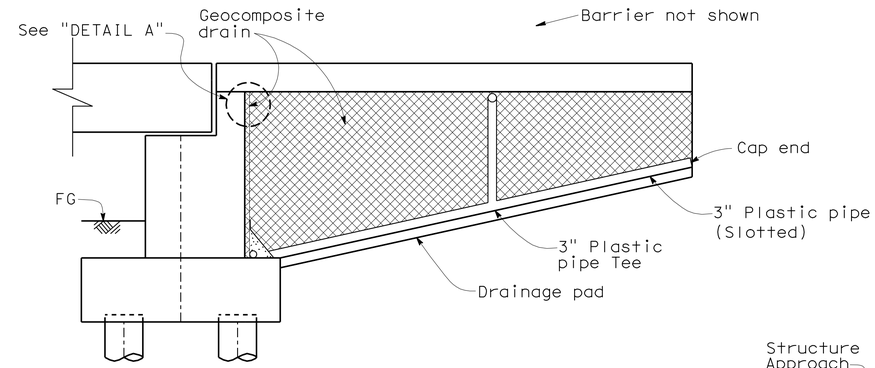

SECTION F-F

3/8" = 1'-0"

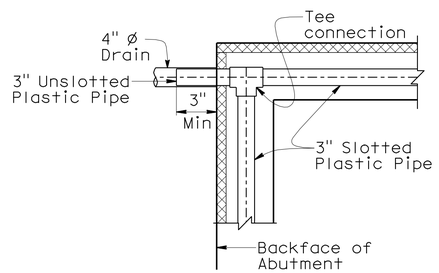

SECTION A-A

3/4" = 1'-0"

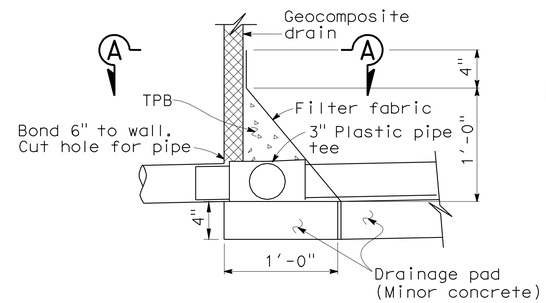

DETAIL B

1 1/2" = 1'-0"

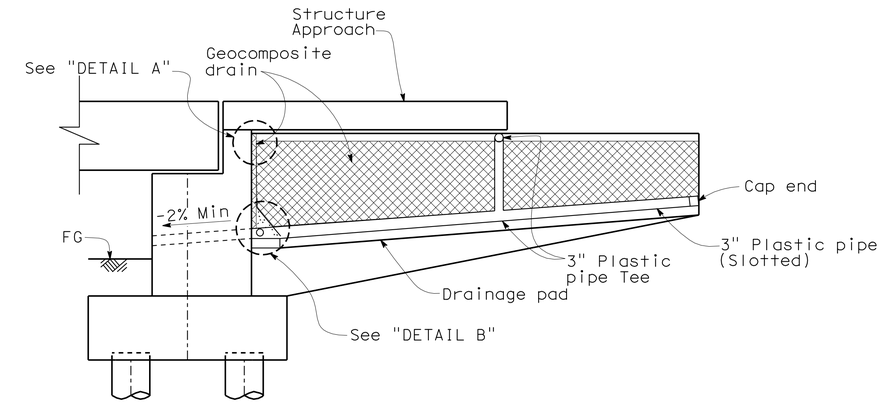

SECTION G-G

3/8" = 1'-0"

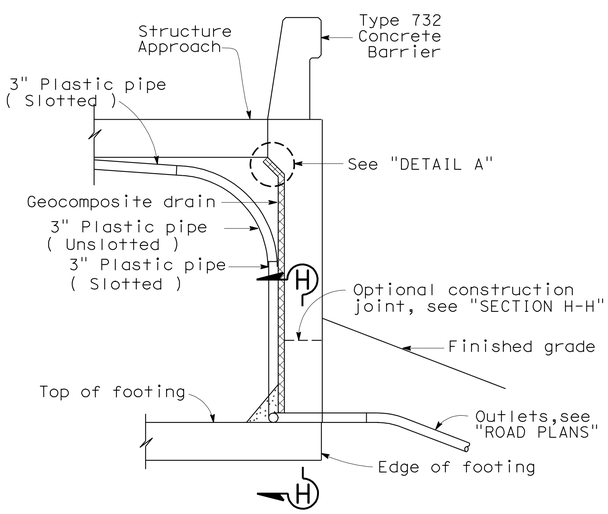

SECTION E-E

1/2 "= 1'-0"

NOTE: Bends and junctions in 3" plastic pipe are 30" radius Min

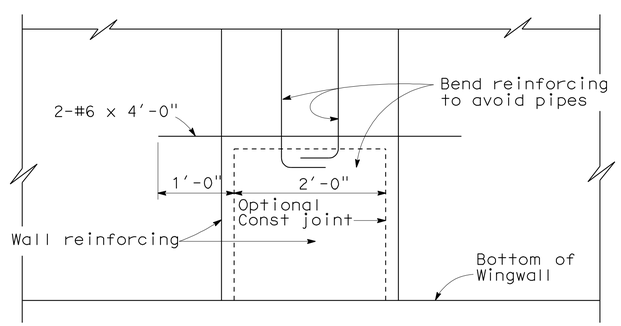

SECTION H-H

1" = 1'-0"

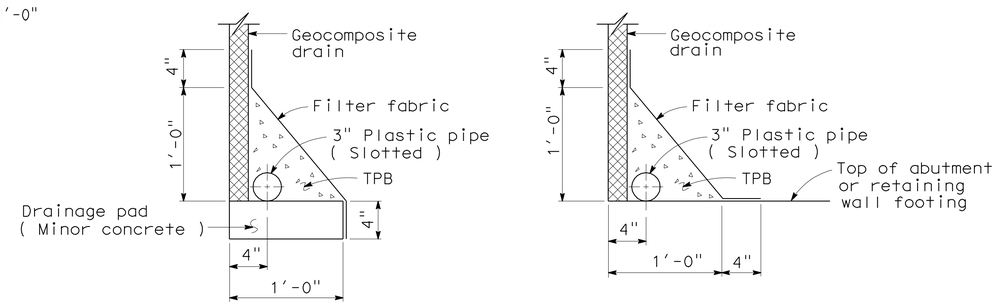

WITHOUT FOOTING

WITH FOOTING

DRAINAGE DETAILS

1 1/2" = 1'-0"

	BY	CHECKED
DESIGN	I. Yalan	R. Candiotti
DETAILS	T. Fairall	R. Candiotti
QUANTITIES	I. Yalan	R. Candiotti

STATE OF CALIFORNIA
DEPARTMENT OF TRANSPORTATION

DIVISION OF ENGINEERING SERVICES
STRUCTURE DESIGN
DESIGN BRANCH 9

BRIDGE NO. 46-0268
POST MILE 3.06

AVENUE 24 UNDERCROSSING (REPLACE)
STRUCTURE APPROACH DRAINAGE DETAILS

STRUCTURES DESIGN DETAIL SHEET (ENGLISH) (REV. 10/25/05)

ORIGINAL SCALE IN INCHES FOR REDUCED PLANS 0 1 2 3

CU 06
EA 471901

DISREGARD PRINTS BEARING EARLIER REVISION DATES

REVISION DATES: 1-11-10 1-21-10 3-08-10

SHEET 16 OF 18

FILE => 46-0268-s-sadd.dgn

USERNAME => friehard DATE PLOTTED => 06-APR-2010 TIME PLOTTED => 13:48

DIST	COUNTY	ROUTE	POST MILES TOTAL PROJECT	SHEET No	TOTAL SHEETS
06	Tul	99	2.9/3.3	127	128

REGISTERED CIVIL ENGINEER — DATE 3/10/10

4-5-10
PLANS APPROVAL DATE

REGISTERED PROFESSIONAL ENGINEER — ISAIAS D. YALAN No. 68269 Exp. 9-30-2011 CIVIL — STATE OF CALIFORNIA

The State of California or its officers or agents shall not be responsible for the accuracy or completeness of electronic copies of this plan sheet.

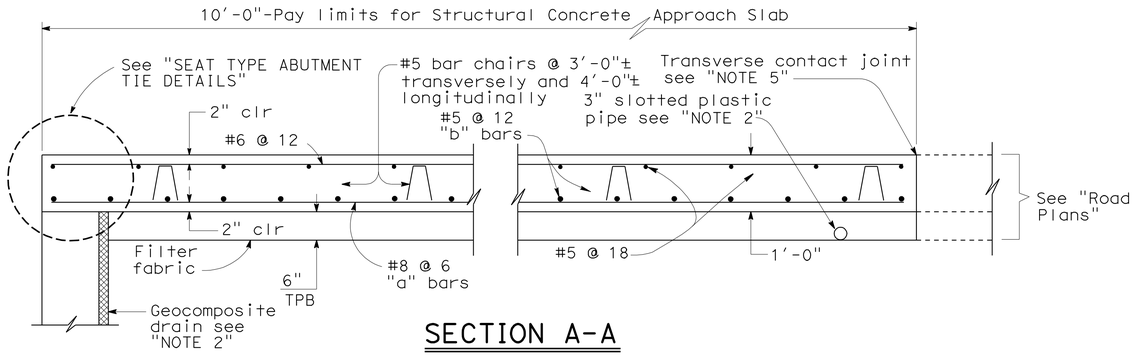

SECTION A-A

¾"= 1'-0"

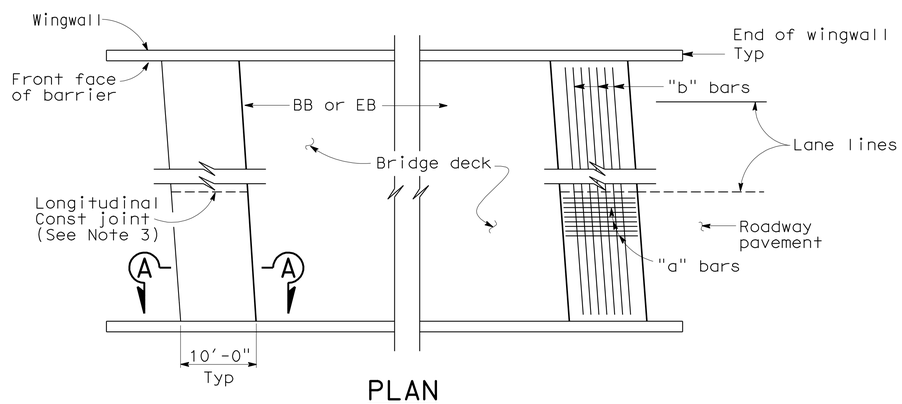

PLAN

1" = 10'

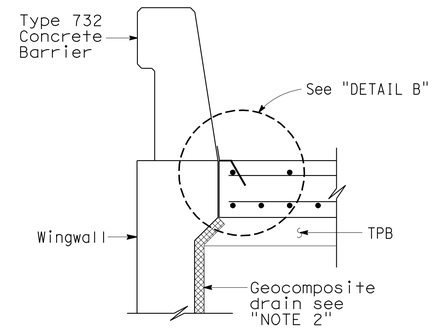

SECTION C-C

¾"= 1'-0"

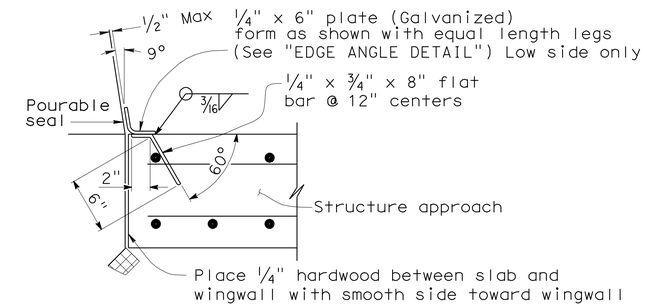

DETAIL B

1½"= 1'-0"

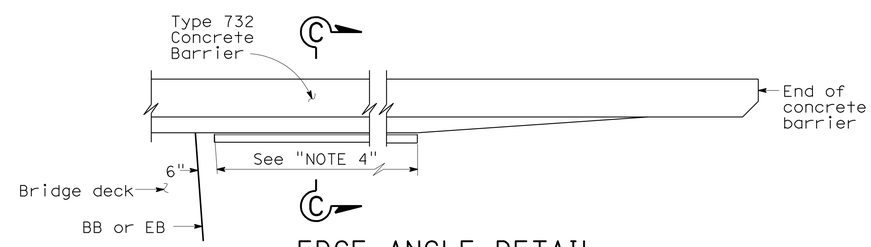

EDGE ANGLE DETAIL

½"= 1'-0"

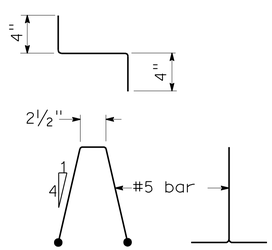

BAR CHAIR DETAIL

1½"= 1'-0"

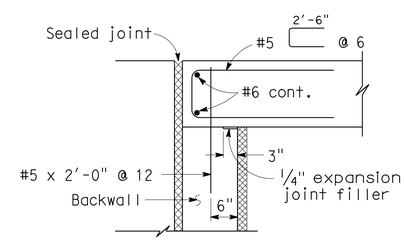

MR ≤ 2"

SEAT TYPE ABUTMENT TIE DETAILS (SEE NOTE 1)

¾"= 1'-0"

NOTES:

1. For details not shown, see "STRUCTURE PLANS." For MR ≤ 2", adjust bar reinforcement to clear a sawcut for sealed joint, when required.
2. For drainage details, see "STRUCTURE APPROACH DRAINAGE DETAILS" sheet
3. Longitudinal construction joints, when permitted by the Engineer, shall be located on lane lines.
4. End angle or plate at beginning of barrier transition, end of wingwall or end of structure approach as applicable.
5. For transverse contact joint with new PCC paving, refer to Standard Plan P10.

	BY	CHECKED
DESIGN	I. Yalan	C. Chuang
DETAILS	T. Fairall	C. Chuang
QUANTITIES	I. Yalan	R. Candiotti

STATE OF CALIFORNIA DEPARTMENT OF TRANSPORTATION

DIVISION OF ENGINEERING SERVICES STRUCTURE DESIGN DESIGN BRANCH 9

BRIDGE NO. 46-0268
POST MILE 3.06

AVENUE 24 UNDERCROSSING (REPLACE)
STRUCTURE APPROACH DETAILS

STRUCTURES DESIGN DETAIL SHEET (ENGLISH) (REV. 10/25/05)

ORIGINAL SCALE IN INCHES FOR REDUCED PLANS 0 1 2 3

CU 06
EA 471901

DISREGARD PRINTS BEARING EARLIER REVISION DATES

REVISION DATES: 1-11-10 1-19-10 3-08-10

SHEET 17 OF 18

FILE => 46-0268-s-san.dgn

USERNAME => friehard DATE PLOTTED => 06-APR-2010 TIME PLOTTED => 13:48

FED. ROAD DIST. NO.	STATE	PROJ. NO.	FISCAL YEAR	SHEET NO.	TOTAL SHEETS
2	CAL.			73	179

F1-0176(1)

DIST.	COUNTY	ROUTE	POSTMILE	EA	PROJECT ID
06	Tul	99	2.9/3.3	4A	0

99 Tul 2.9/3.3 4A 0

REGISTERED ENGINEER — CIVIL ENGINEER — STATE OF CALIFORNIA

Date August 12, 1999

To accompany plans dated 4-5-10

DIVISION OF ENGINEERING SERVICES - GEOTECHNICAL SERVICES
As-Built Log of Test Borings sheet is considered an informational document only. As such, the State of California registration seal with signature, license number and registration certificate expiration date confirm that this is a true and accurate copy of the original document. It does not attest to the accuracy or validity of the information contained in the original document. This drawing is available and presented only for the convenience of any bidder, contractor or other interested party.

DIST.	COUNTY	ROUTE	POST MILES-TOTAL PROJECT	Sheet No.	Total Sheets
06	Tul	99	2.9/3.3	128	128

PROFESSIONAL ENGINEER — DATE 03/04/10

REGISTERED PROFESSIONAL ENGINEER — Qiang Huang — No. C055671 — Exp. 12-31-10 — CIVIL — STATE OF CALIFORNIA

AVE. 24 REPLACEMENT
LOG OF TEST BORINGS

NOTE: A COPY OF THIS LOG OF TEST BORINGS IS AVAILABLE AT OFFICE OF STRUCTURE MAINTENANCE AND INVESTIGATIONS, SACRAMENTO, CALIFORNIA

CU: 06
EA: 471901

BRIDGE No. 46-0268

Sheet 18 of 18

Revisions made to this Log of Test Borings from the original 1953 Log of Test Borings are the addition of the following table and notes:

Boring	Station	Offset from C/L Ave. 24 ("CT4" Line)
B-1	11+77.5	50.0' Rt.
B-2	10+79.5	52.0' Rt.
B-3	11+67.5	23.5' Lt.
B-4	10+74.5	21.0' Lt.
B-5	11+35.0	55.0' Lt.
B-6	11+91.5	17.0' Rt.

Note:
The table shows the original boring locations based on the present project stationing and offsets.

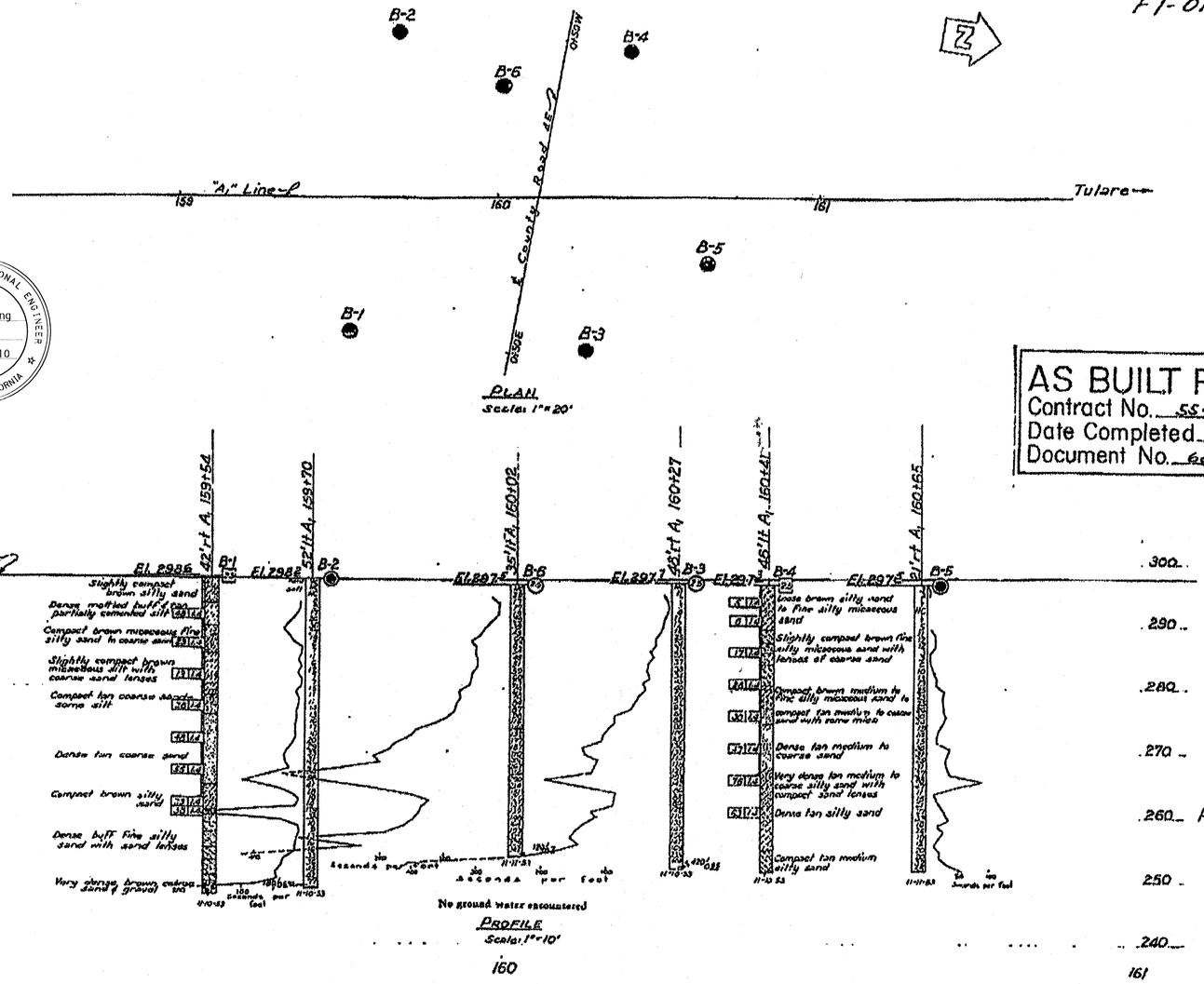

AS BUILT PLANS
Contract No. 55-6VC12
Date Completed
Document No. 60001011

AS-BUILTS
CORRECTIONS BY: 20 w.g.
DATE: 12-15-55
~~No Change This Sheet~~ wjB

Piles Drilled To An Average Tip Elevation of:
259.5 For Bents
259.4 For Abutments

BM No 16.0B
Spike on Power Pole 113' ± Rt. Sta 160+11 ± 2.4'
Elev 299.16

FIELD STUDY — DRAWN — CHECKED

CLASSIFICATION OF MATERIAL BASED ON STANDARD GRADE SIZE LIMITS

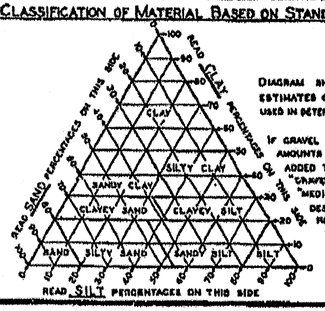

DIAGRAM SHOWING THE BASIS FOR ESTIMATES OF GRADE SIZE DISTRIBUTION USED IN DETERMINATION OF CLASS NAMES

IF GRAVEL IS PRESENT IN APPRECIABLE AMOUNTS THE TERM "GRAVELLY" MAY BE ADDED TO THE CLASS NAME, VIS. "GRAVELLY SAND". THE TERMS "COARSE", "MEDIUM" AND "FINE" WHEN USED TO DESCRIBE GRAVEL, SAND AND SILT REFER TO STANDARD GRADE SIZE LIMITS.

LEGEND OF EARTH MATERIALS

- GRAVEL
- SAND
- SILT
- CLAY
- SANDY CLAY OR CLAYEY SAND
- SANDY SILT OR SILTY SAND
- SILTY CLAY OR CLAYEY SILT
- PEAT AND/OR ORGANIC CLAY
- FILLED MATERIAL
- IGNEOUS ROCK
- SEDIMENTARY ROCK
- METAMORPHIC ROCK

LEGEND OF BORING OPERATIONS

- PLAN OF ANY BORING
- PENETROMETER
- 2.4" CONE PENETROMETER
- SAMPLER BORING (DRY)
- ROTARY BORING (WET)
- AUGER BORING (DRY)
- JET BORING
- CORE BORING
- TEST PIT

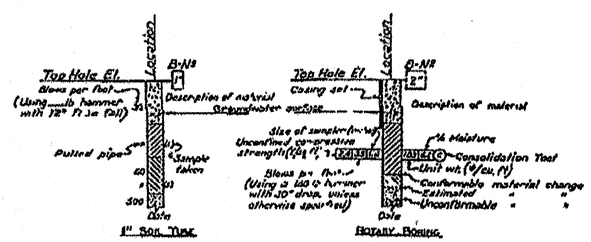

NOTES

THE CONTRACTOR'S ATTENTION IS DIRECTED TO SECTION 2, ARTICLE (c) OF THE STANDARD SPECIFICATIONS AND TO THE SPECIAL PROVISIONS ACCOMPANYING THIS SET OF PLANS. CLASSIFICATION OF EARTH MATERIAL AS SHOWN ON THIS SHEET IS BASED UPON FIELD INSPECTION AND IS NOT TO BE CONSTRUED TO IMPLY MECHANICAL ANALYSIS. PENETROMETER BORINGS HAVING A RATE OF PENETRATION MEASURED IN SECONDS PER 100' ARE DRIVEN WITH A No 2 McKIERNAN-TERRY AIR HAMMER AT 115 PSI.

STATE OF CALIFORNIA
DEPARTMENT OF PUBLIC WORKS
DIVISION OF HIGHWAYS

AVENUE 24 UNDERCROSSING

LOG OF TEST BORINGS

SCALE: As Shown	BRIDGE 46-169	FILE	DRAWING

I HEREBY CERTIFY THAT THIS IS A TRUE AND ACCURATE COPY OF THE ABOVE DOCUMENT TAKEN UNDER MY DIRECTION AND CONTROL ON THIS DATE IN SACRAMENTO, CALIFORNIA PURSUANT TO AUTHORIZATION BY THE DIRECTOR OF PUBLIC WORKS.

DATE 9/23/71 SIGNATURE [illegible] TITLE AAO II

FILENAME => 46-0268-z-1tb.tif