Dist	COUNTY	ROUTE	POST MILES TOTAL PROJECT	SHEET No.	TOTAL SHEETS
06	Fre	180	R71.8/74.5	2	235

Lawrence Michael Lowe 7-09-12
REGISTERED CIVIL ENGINEER DATE

12-10-12
PLANS APPROVAL DATE

REGISTERED PROFESSIONAL ENGINEER LAWRENCE MICHAEL LOWE No. 66753 Exp. 9/30/12 CIVIL STATE OF CALIFORNIA

THE STATE OF CALIFORNIA OR ITS OFFICERS OR AGENTS SHALL NOT BE RESPONSIBLE FOR THE ACCURACY OR COMPLETENESS OF SCANNED COPIES OF THIS PLAN SHEET.

NOTES:

1. DIMENSIONS OF THE PAVEMENT STRUCTURES (STRUCTURAL SECTIONS) ARE SUBJECT TO TOLERANCES SPECIFIED IN THE STANDARD SPECIFICATIONS.
2. SUPERELEVATIONS ARE SHOWN ON THE SUPERELEVATION DIAGRAMS.
3. FOR LOCATION OF Shld BACKING REFER TO SHEET Q-2.

ABBREVIATIONS:

OTB - OIL TREATED BASE
SH - Shld BACKING

DESIGN DESIGNATION

ADT (2019)	17,800	D	63%
ADT (2039)	43,000	T	2%
DHV	4,150	V	70 mph
ESAL	12,520,000	TI_{20}	12

STRUCTURAL SECTION:

A — 0.85′ JPCP
0.35′ LCB
0.60′ CI 2 AB

C — 0.55′ HMA
0.75′ CI 2 AB

D — 0.40′ HMA
0.45′ CI 2 AB

E — 0.30′ HMA

F — 0.30′ CI 2 AB

G — Exist 0.60′ AC

H — Exist 0.84′ JPCP
Exist 0.40′ LCB
Exist 0.60′ CI 2 AB

I — Exist 0.45′ AC
Exist 0.55′ CI 2 AB

B — Exist ROUTE 180 CORING DATA

POST MILE	THICKNESS (FT)	
	AC	OTB
72.34	0.30	
72.59	0.42	0.30
72.84	0.52	0.43
73.12	0.25	0.25
73.37	0.35	
73.62	0.30	
73.87	0.48	
74.10	0.45	
74.35	0.68	
75.20	0.85	

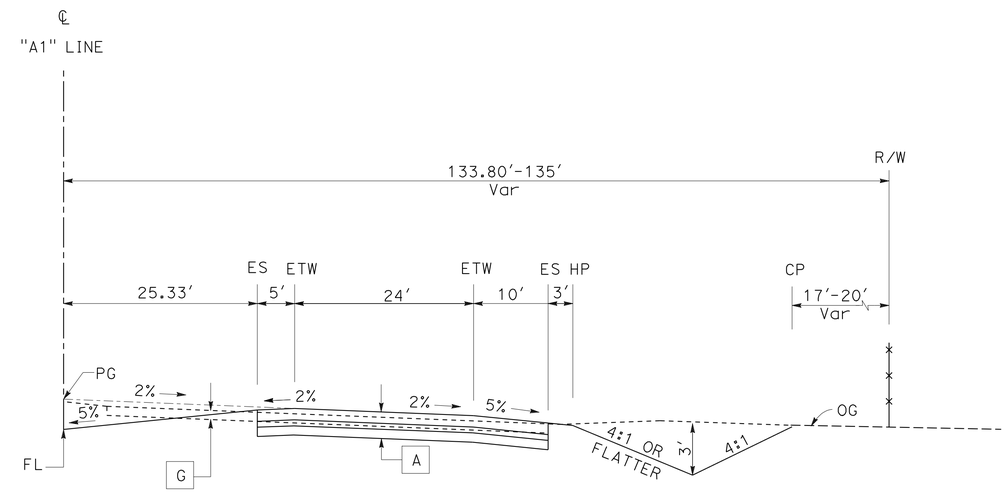

EASTBOUND

"A1" 335+14.50 TO "A1" 344+48.75

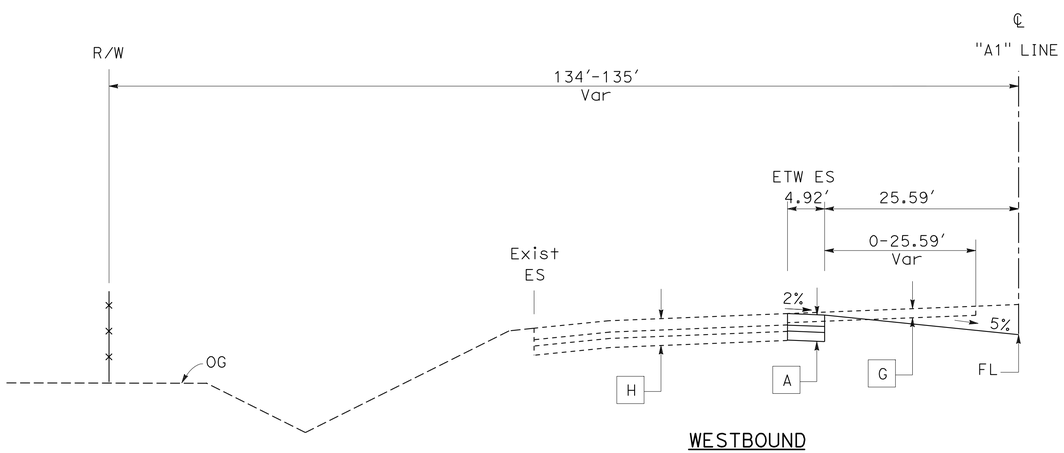

WESTBOUND

"A1" 324+81.33 TO "A1" 337+80.57

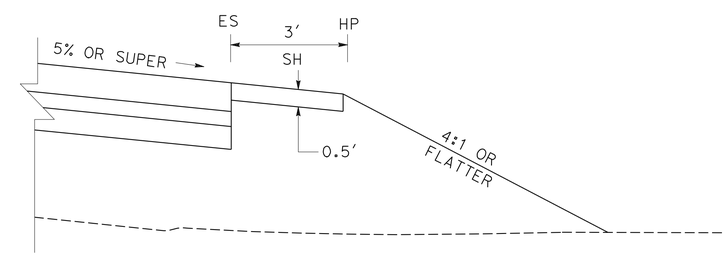

TYPICAL SHOULDER BACKING DETAIL
SEE CROSS SECTION SHEETS FOR LOCATIONS (1)

"A1" LINE
ROUTE 180

TYPICAL CROSS SECTIONS
X-1

NO SCALE

(1) **REVISED PER ADDENDUM No. 1 DATED MARCH 20, 2013**

STATE OF CALIFORNIA - DEPARTMENT OF TRANSPORTATION
Caltrans®
DESIGN

FUNCTIONAL SUPERVISOR: SANKU G. MOHAN
CALCULATED-DESIGNED BY: JOO BAEK
CHECKED BY: HARJINDER SEKHON
REVISED BY: IA
DATE REVISED: 07/09/12

LAST REVISION 07-09-12 | DATE PLOTTED => 19-MAR-2013 | TIME PLOTTED => 06:14

Dist	COUNTY	ROUTE	POST MILES TOTAL PROJECT	SHEET No.	TOTAL SHEETS
06	Fre	180	R71.8/74.5	4	235

Lawrence Michael Lowe 7-09-12
REGISTERED CIVIL ENGINEER DATE

12-10-12
PLANS APPROVAL DATE

REGISTERED PROFESSIONAL ENGINEER
LAWRENCE MICHAEL LOWE
No. 66753
Exp. 9/30/12
CIVIL
STATE OF CALIFORNIA

THE STATE OF CALIFORNIA OR ITS OFFICERS OR AGENTS SHALL NOT BE RESPONSIBLE FOR THE ACCURACY OR COMPLETENESS OF SCANNED COPIES OF THIS PLAN SHEET.

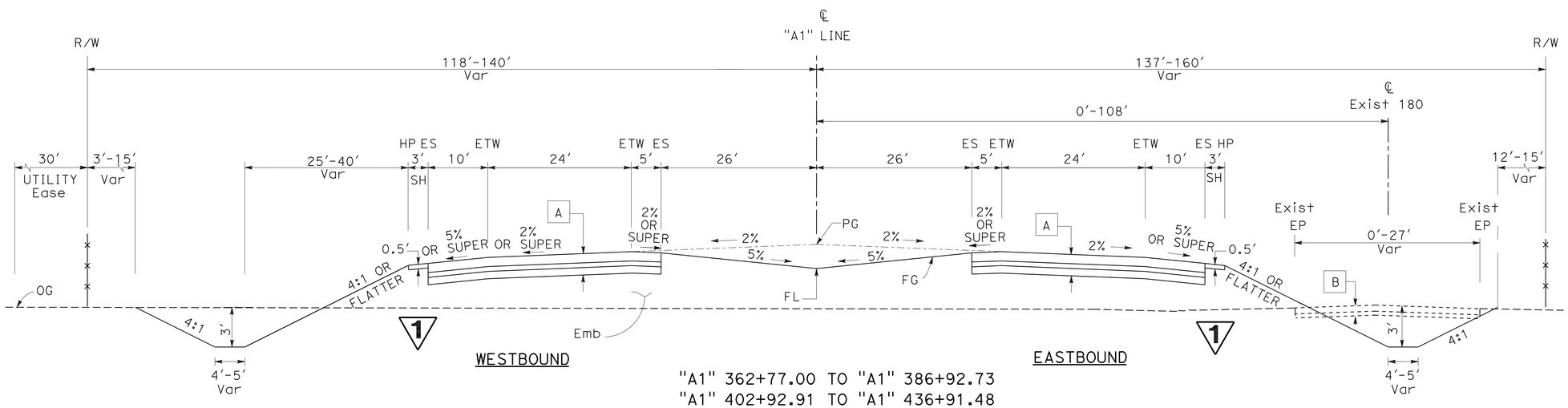

"A1" 362+77.00 TO "A1" 386+92.73
"A1" 402+92.91 TO "A1" 436+91.48

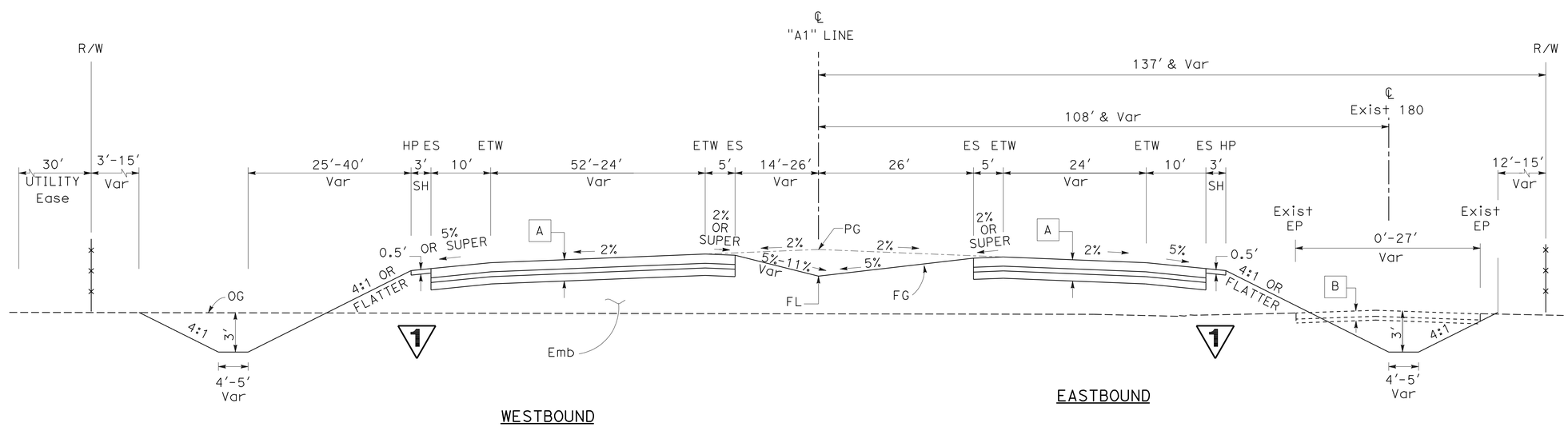

"A1" 356+12.00 TO "A1" 362+77.00
"A1" 396+29.06 TO "A1" 402+92.91

"A1" LINE
ROUTE 180

TYPICAL CROSS SECTIONS

NO SCALE

X-3

1 REVISED PER ADDENDUM No. 1 DATED MARCH 20, 2013

REVISED BY	DATE REVISED
IA	07/09/12

CALCULATED-DESIGNED BY: JOO BAEK
CHECKED BY: HARJINDER SEKHON
FUNCTIONAL SUPERVISOR: SANKU G. MOHAN

STATE OF CALIFORNIA - DEPARTMENT OF TRANSPORTATION
Caltrans®
DESIGN

LAST REVISION 07-09-12
DATE PLOTTED => 18-MAR-2013
TIME PLOTTED => 14:49

Dist	COUNTY	ROUTE	POST MILES TOTAL PROJECT	SHEET No.	TOTAL SHEETS
06	Fre	180	R71.8/74.5	5	235

Lawrence Michael Lowe 7-09-12
REGISTERED CIVIL ENGINEER DATE

12-10-12
PLANS APPROVAL DATE

REGISTERED PROFESSIONAL ENGINEER LAWRENCE MICHAEL LOWE No. 66753 Exp. 9/30/12 CIVIL STATE OF CALIFORNIA

THE STATE OF CALIFORNIA OR ITS OFFICERS OR AGENTS SHALL NOT BE RESPONSIBLE FOR THE ACCURACY OR COMPLETENESS OF SCANNED COPIES OF THIS PLAN SHEET.

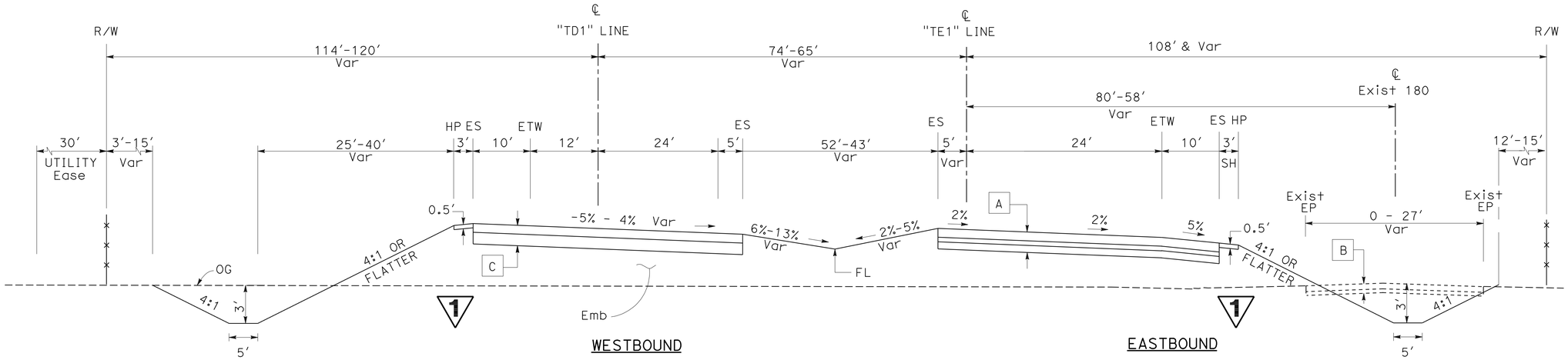

"TD1" 50+55.56 TO "TD1" 55+01.55

"A1" 436+91.48 TO "A1" 440+88.27

END TRANSITION
"A1" LINE
ROUTE 180

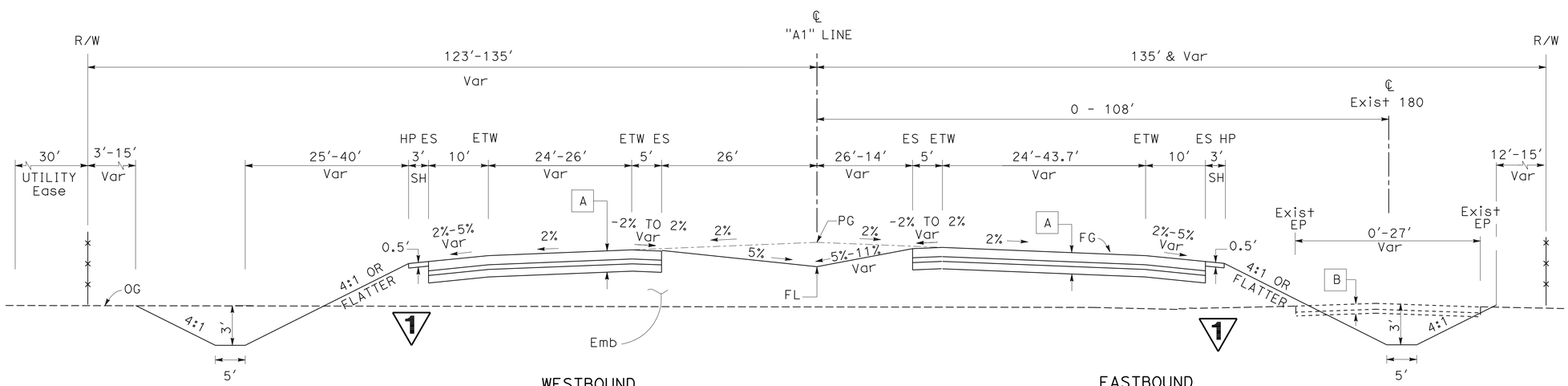

"A1" 386+92.73 TO "A1" 393+56.74

"A1" LINE
ROUTE 180

TYPICAL CROSS SECTIONS

X-4

NO SCALE

1 **REVISED PER ADDENDUM No. 1 DATED MARCH 20, 2013**

CALCULATED-DESIGNED BY	JOO BAEK	REVISED BY	IA
CHECKED BY	HARJINDER SEKHON	DATE REVISED	07/09/12
FUNCTIONAL SUPERVISOR	SANKU G. MOHAN		

STATE OF CALIFORNIA - DEPARTMENT OF TRANSPORTATION
Caltrans
DESIGN

LAST REVISION 07-11-12 | DATE PLOTTED => 18-MAR-2013 | TIME PLOTTED => 14:49

Dist	COUNTY	ROUTE	POST MILES TOTAL PROJECT	SHEET No.	TOTAL SHEETS
06	Fre	180	R71.8/74.5	12	235

Lawrence Michael Lowe 7-09-12
REGISTERED CIVIL ENGINEER DATE

12-10-12
PLANS APPROVAL DATE

REGISTERED PROFESSIONAL ENGINEER LAWRENCE MICHAEL LOWE No. 66753 Exp. 9/30/12 CIVIL STATE OF CALIFORNIA

THE STATE OF CALIFORNIA OR ITS OFFICERS OR AGENTS SHALL NOT BE RESPONSIBLE FOR THE ACCURACY OR COMPLETENESS OF SCANNED COPIES OF THIS PLAN SHEET.

NOTES:

1. FOR ACCURATE RIGHT OF WAY DATA, CONTACT RIGHT OF WAY ENGINEERING AT THE DISTRICT OFFICE.
2. EXACT LOCATIONS OF CL-6 GATE SHALL BE DETERMINED IN THE FIELD BY THE ENGINEER.

CURVE DATA

No. O	R	Δ	T	L	RP	LOCATION
8	320.00′	31°42′21"	90.87′	177.08′	BC	℄ "FR1" 10+02.28
9	320.00′	30°54′23"	88.46′	172.61′	BC	℄ "FR1" 12+62.77
16	229.66′	38°27′28"	80.11′	154.15′	BC	℄ "FR6" 38+25.01

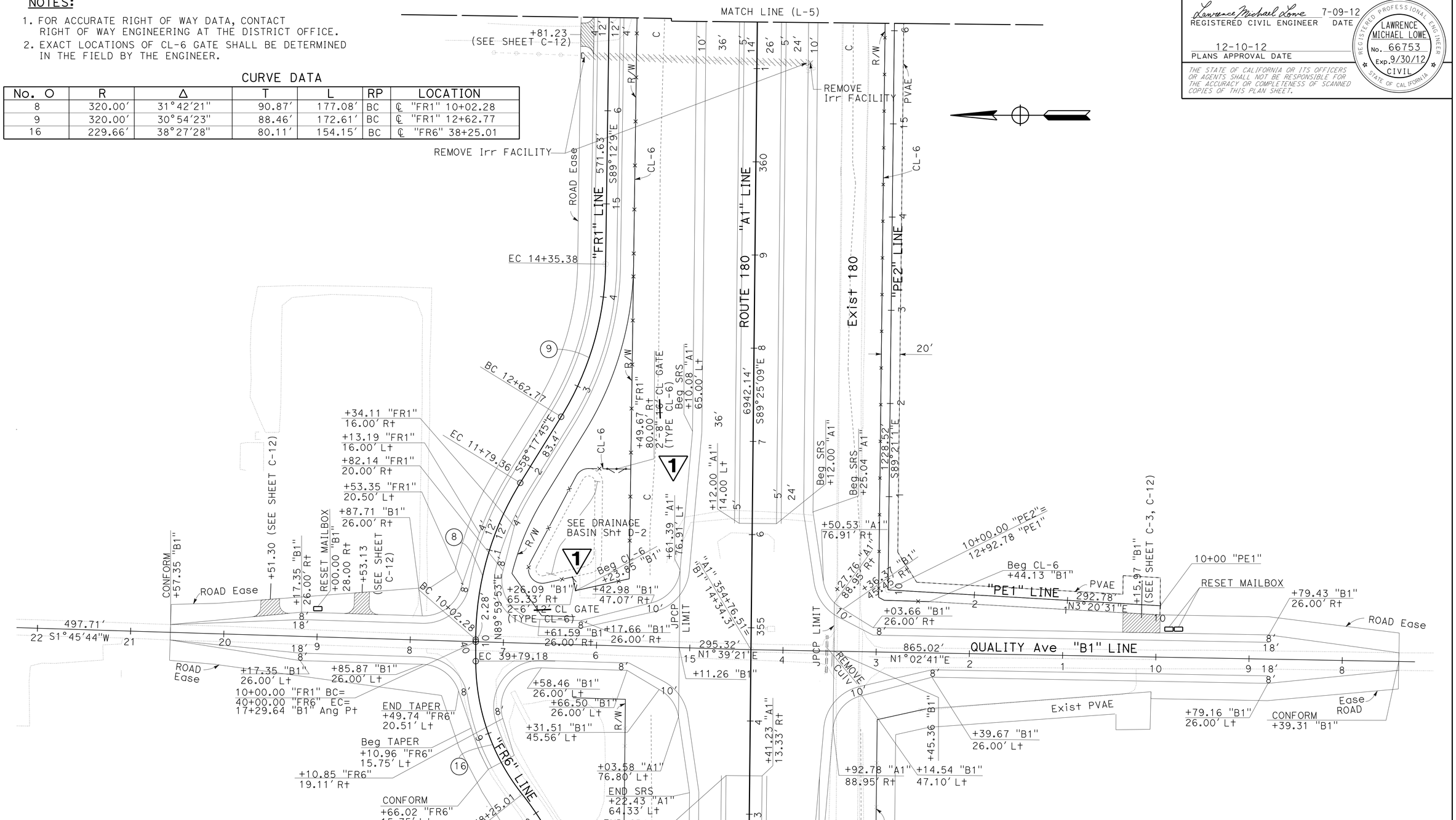

1 REVISED PER ADDENDUM No. 1 DATED MARCH 20, 2013

LAYOUT L-4

SCALE: 1" = 50′

REVISED BY	DATE REVISED
IA	07/09/12

JOO BAEK — CALCULATED-DESIGNED BY
SANKU G. MOHAN — CHECKED BY
SANKU G. MOHAN — FUNCTIONAL SUPERVISOR

STATE OF CALIFORNIA - DEPARTMENT OF TRANSPORTATION
Caltrans
DESIGN

LAST REVISION DATE PLOTTED => 18-MAR-2013
07-09-12 TIME PLOTTED => 15:07

Dist	COUNTY	ROUTE	POST MILES TOTAL PROJECT	SHEET No.	TOTAL SHEETS
06	Fre	180	R71.8/74.5	15	235

Lawrence Michael Lowe 7-09-12
REGISTERED CIVIL ENGINEER DATE

12-10-12
PLANS APPROVAL DATE

REGISTERED PROFESSIONAL ENGINEER LAWRENCE MICHAEL LOWE No. 66753 Exp. 9/30/12 CIVIL STATE OF CALIFORNIA

THE STATE OF CALIFORNIA OR ITS OFFICERS OR AGENTS SHALL NOT BE RESPONSIBLE FOR THE ACCURACY OR COMPLETENESS OF SCANNED COPIES OF THIS PLAN SHEET.

NOTES:

1. FOR ACCURATE RIGHT OF WAY DATA, CONTACT RIGHT OF WAY ENGINEERING AT THE DISTRICT OFFICE.
2. EXACT LOCATIONS OF CL-6 GATE SHALL BE DETERMINED IN THE FIELD BY THE ENGINEER.

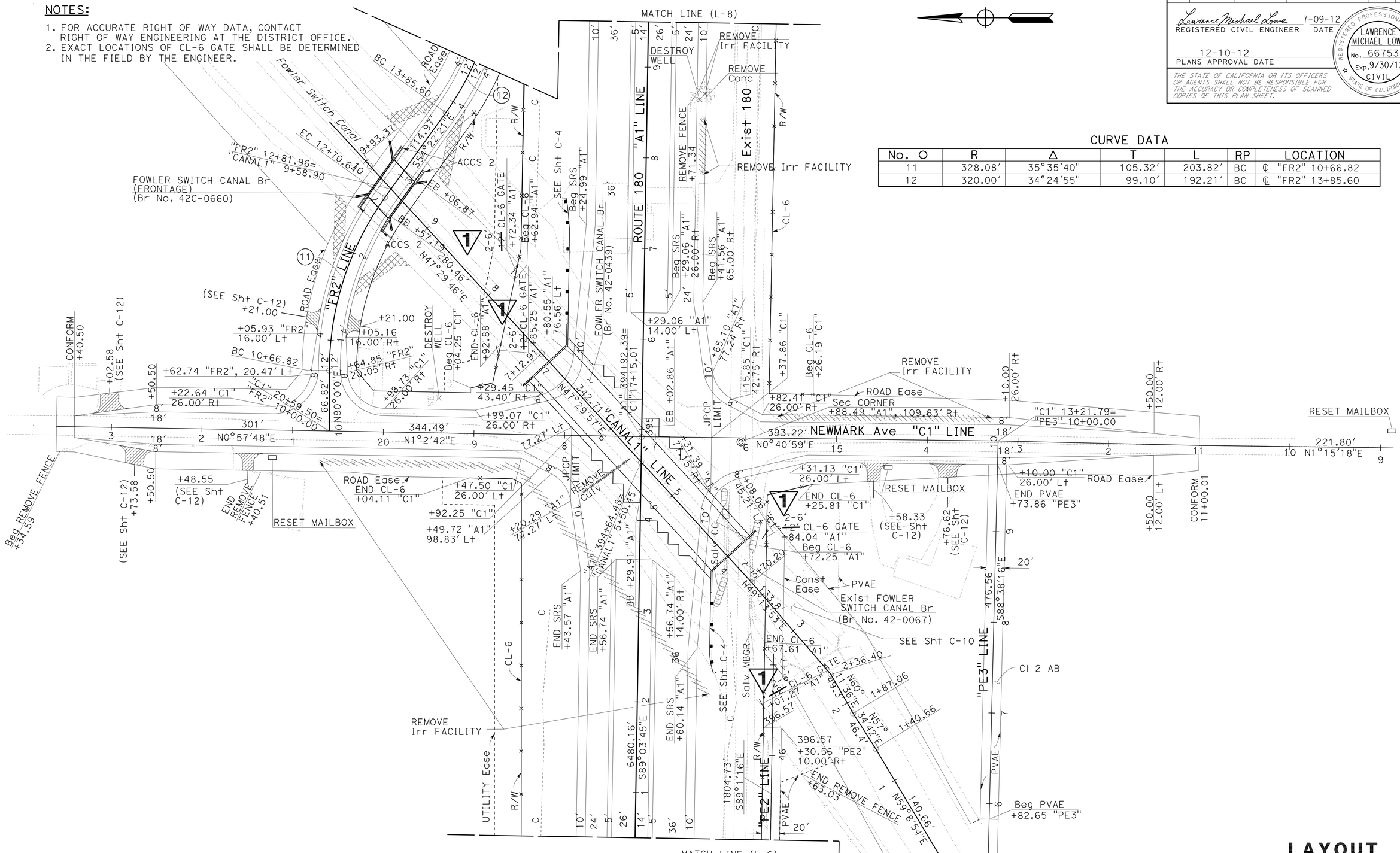

CURVE DATA

No. O	R	Δ	T	L	RP	LOCATION
11	328.08'	35°35'40"	105.32'	203.82'	BC	℄ "FR2" 10+66.82
12	320.00'	34°24'55"	99.10'	192.21'	BC	℄ "FR2" 13+85.60

1 REVISED PER ADDENDUM No. 1 DATED MARCH 20, 2013

LAYOUT L-7

SCALE: 1" = 50'

CALCULATED-DESIGNED BY	JOO BAEK	REVISED BY	IA
CHECKED BY	SANKU G. MOHAN	DATE REVISED	07/09/12
FUNCTIONAL SUPERVISOR	SANKU G. MOHAN		

STATE OF CALIFORNIA - DEPARTMENT OF TRANSPORTATION
Caltrans
DESIGN

LAST REVISION 07-09-12 | DATE PLOTTED => 19-MAR-2013 | TIME PLOTTED => 06:24

Dist	COUNTY	ROUTE	POST MILES TOTAL PROJECT	SHEET No.	TOTAL SHEETS
06	Fre	180	R71.8/74.5	102	235

REGISTERED CIVIL ENGINEER 7-09-12 DATE

12-10-12
PLANS APPROVAL DATE

REGISTERED PROFESSIONAL ENGINEER HARJINDER SEKHON No. 76396 Exp. 12-31-12 CIVIL STATE OF CALIFORNIA

THE STATE OF CALIFORNIA OR ITS OFFICERS OR AGENTS SHALL NOT BE RESPONSIBLE FOR THE ACCURACY OR COMPLETENESS OF SCANNED COPIES OF THIS PLAN SHEET.

ABBREVIATIONS:

D - OUTSIDE DIAMETER OF PIPE
B - WIDTH OF FLARED END SECTION OPENING AS SHOWN ON STD PLAN D94B

LEGEND:

ROCK SLOPE PROTECTION

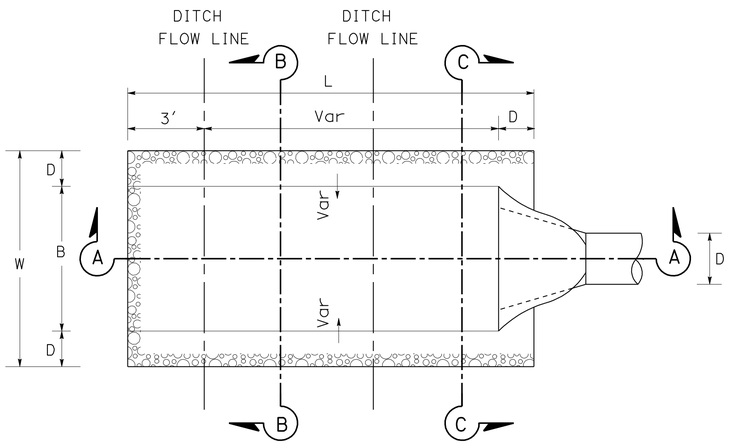

PLAN

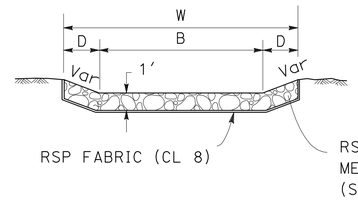

SECTION B-B

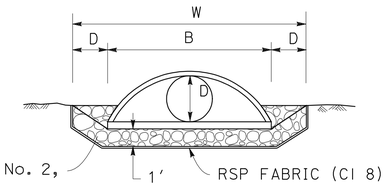

SECTION C-C

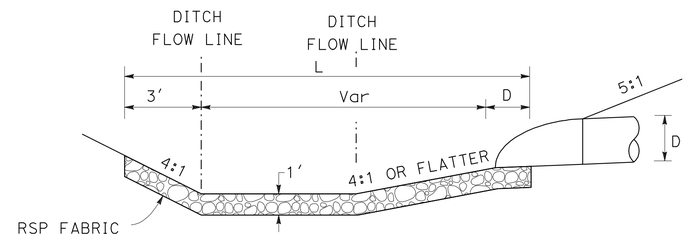

SECTION A-A
(TRAPEZOIDAL DITCH)

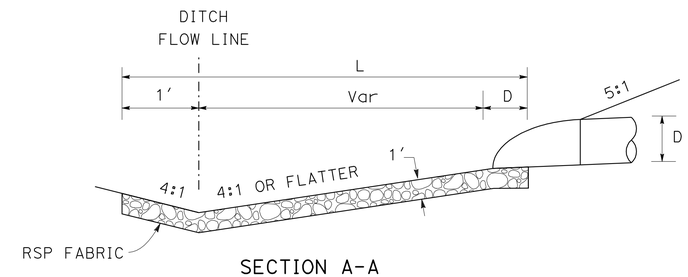

SECTION A-A
(V-SHAPE DITCH)

TABLE A 1

No.	×	D	L	W
2	f	24"	15.53′	8.46′
3	e	24"	17.79′	8.46′
3	d	24"	16.07′	8.46′
4	h	24"	16.46′	8.46′
5	d	24"	15.36′	8.46′
6	e	18"	14.93′	25.38′
6	d	18"	13.81	25.38′
7	d	18"	17.98′	8.46′
8	d	24"	17.71′	8.46′
9	e	18"	25.42	25.38′
9	d	18"	14.79	25.38′
10	d	24"	19.28′	8.46′
11	e	24"	20.99′	8.46′
11	d	24"	18.32′	8.46′
12	d	24"	23.52′	8.46′
13	e	24"	20.63′	8.46′
13	d	24"	21.79′	8.46′
14	d	24"	22.32′	8.46′
15	e	24"	25.64′	8.46′
15	d	24"	18.72′	8.46′
16	d	24"	16.29′	8.46′
17	e	24"	16.51′	8.46′
17	d	24"	16.90′	8.46′

TABLE A (CONTINUED) 1

No.	×	D	L	W
18	e	24"	21.27′	8.46′
18	d	24"	18.62′	8.46′
19	d	24"	21.89′	8.46′
20	e	24"	18.78′	8.46′
20	d	24"	18.27′	8.46′
21	d	24"	16.41′	8.46′
22	d	24"	17.99′	8.46′
23	e	24"	16.89′	8.46′
23	d	24"	16.36′	8.46′
24	d	24"	19.08′	8.46′
25	e	24"	20.51′	8.46′
25	d	24"	17.25′	8.46′
26	d	24"	22.07′	8.46′
27	d	24"	20.69′	8.46′
28	e	24"	16.43′	8.46′
28	d	24"	15.60′	8.46′
29	h	24"	14.23′	8.46′
30	d	24"	16.55′	8.46′
31	e	24"	18.54′	8.46′
31	d	24"	19.32′	8.46′
32	d	24"	19.16′	8.46′
33	d	24"	19.51′	8.46′
34	g	24"	18.83′	8.46′

TABLE A (CONTINUED) 1

No.	×	D	L	W
34	f	24"	18.75′	8.46′
35	e	18"	21.80′	6.38′
35	d	18"	12.20′	6.38′
36	e	18"	5.96′	6.38′
36	d	18"	6.06′	6.38′
37	e	18"	6.14′	6.38′
37	d	18"	6.33′	6.38′
38	e	18"	8.30′	6.38′
38	d	18"	8.20′	6.38′
39	e	18"	6.96′	6.38′
39	d	18"	7.11′	6.38′
40	e	18"	5.06′	6.38′
40	d	18"	5.22′	6.38′
41	e	18"	6.17′	6.38′
41	d	18"	6.29′	6.38′
42	e	18"	6.15′	6.38′
42	d	18"	3.85′	6.38′
43	e	18"	7.59′	6.38′
43	d	18"	5.83′	6.38′
44	e	18"	6.74′	6.38′
44	d	18"	6.97′	6.38′

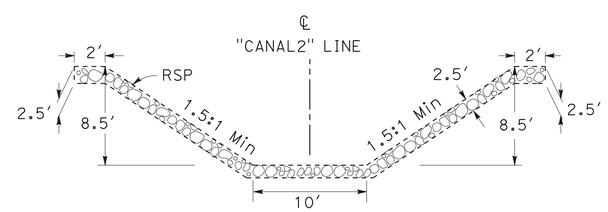

SECTION VIEW

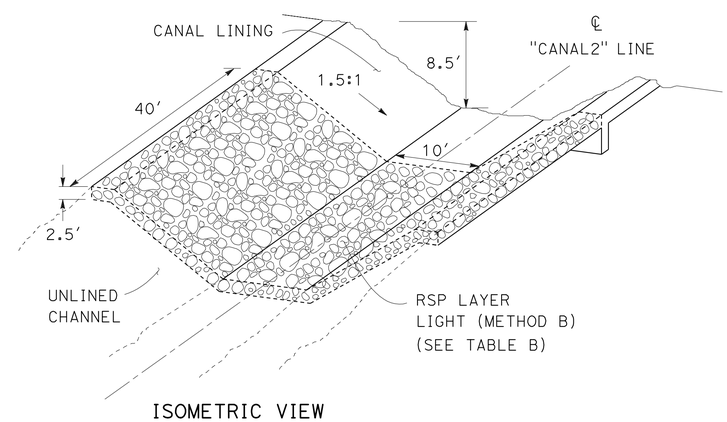

ISOMETRIC VIEW

1 **REVISED PER ADDENDUM No. 1 DATED MARCH 20, 2013**

ROCK SLOPE PROTECTION

SHORE PROTECTION
LONE TREE CANAL

DRAINAGE DETAILS

NO SCALE

DD-1

REVISED BY: IA | DATE REVISED: 04/26/12
HARJINDER SEKHON | SANKU G. MOHAN
CALCULATED-DESIGNED BY | CHECKED BY
FUNCTIONAL SUPERVISOR: SANKU G. MOHAN
STATE OF CALIFORNIA - DEPARTMENT OF TRANSPORTATION
Caltrans
DESIGN

LAST REVISION 07-09-12 | DATE PLOTTED => 19-MAR-2013 | TIME PLOTTED => 06:28

Dist	COUNTY	ROUTE	POST MILES TOTAL PROJECT	SHEET No.	TOTAL SHEETS
06	Fre	180	R71.8/74.5	105	235

REGISTERED CIVIL ENGINEER 7-09-12 DATE

12-10-12
PLANS APPROVAL DATE

REGISTERED PROFESSIONAL ENGINEER HARJINDER SEKHON No. 76396 Exp. 12-31-12 CIVIL STATE OF CALIFORNIA

THE STATE OF CALIFORNIA OR ITS OFFICERS OR AGENTS SHALL NOT BE RESPONSIBLE FOR THE ACCURACY OR COMPLETENESS OF SCANNED COPIES OF THIS PLAN SHEET.

1

DRAINAGE QUANTITIES

DRAINAGE PLAN SHEET No.	DRAINAGE SYSTEM No. ⬡	DRAINAGE UNIT ◯	DRAINAGE INLET: INLET TYPE	DRAINAGE INLET: MINOR CONCRETE (MINOR STRUCTURE) CY	DRAINAGE INLET: DESIGN H (N) LF	DRAINAGE INLET: Misc IRON & STEEL LB	RCP 18" LF	RCP 24" LF	CFES 18" EA	CFES 24" EA	PLACE HMA (Misc AREA) SQYD	CONCRETE BACKFILL CY	ROCK SLOPE PROTECTION (NO. 2, METHOD B) CY	ROCK SLOPE PROTECTION FABRIC (CLASS 8) SQYD	(N) MAXIMUM COVER LF	REMOVE INLET EA	REMOVE CULVERT LF	DESCRIPTION	STATION	DRAINAGE PLAN SHEET No.	DRAINAGE SYSTEM No. ⬡	DRAINAGE UNIT ◯
D-1	1	a														1		G1 INLET / 24", HMA APRON	Rte 180 338+91 20.00' Lt	D-1	1	a
		b															24.0	24" Exist CULVERT	a TO d			b
		c						20.4							4.0			24" RCP	a TO d			c
D-1	1	d	G1	1.33	4.7	326					13.3							G1 INLET / 24", HMA APRON	Rte 180 338+91 00.00' Lt	D-1	1	d
D-1	2	a	G1	0.89	2.7	326					13.3							G1 INLET / 24", HMA APRON	Rte 180 351+00 00.00' Lt	D-1	2	a
		b						107.2							1.1			24" RCP	a TO c			b
		c	G2	1.24	2.7	326					14.2							G2 INLET / 24", HMA APRON	Rte 180 352+10 00.00' Lt			c
		d						91.6							2.9			24" RCP	c TO e			d
		e								1								24" CFES	Rte 180 352+10 93.10' Lt			e
D-1	2	f											4.9	20.4				OUTLET PROTECTION	Rte 180 352+10 93.10' Lt	D-1	2	f
D-2	3	a								1								24" CFES	Rte 180 357+00 75.93' Lt	D-2	3	a
		b						152.7							2.9			24" RCP	a TO c			b
		c								1								24" CFES	Rte 180 357+00 76.76' Rt			c
		d											5.0	21.0				OUTLET PROTECTION	Rte 180 357+00 76.76' Rt			d
D-2	3	e											5.6	23.0				OUTLET PROTECTION	Rte 180 357+00 75.93' Lt	D-2	3	e
D-2	4	a	G1	0.84	2.5	326					13.3							G1 INLET / 24", HMA APRON	Rte 180 357+78 00.00' Lt	D-2	4	a
		b						97.5							1.1			24" RCP	a TO c			b
		c	G2	1.24	2.7	326					14.2							G2 INLET / 24", HMA APRON	Rte 180 358+78 00.00' Lt			c
		d						97.5							1.1			24" RCP	c TO e			d
		e	G1	0.84	2.5	326					13.3							G1 INLET / 24", HMA APRON	Rte 180 359+78 00.00' Lt			e
		f						73.9							2.7			24" RCP	c TO g			f
		g								1								24" CFES	Rte 180 358+78 75.40' Lt			g
D-2	4	h											5.2	21.5				OUTLET PROTECTION	Rte 180 358+78 75.40' Lt	D-2	4	h
D-2	5	a								1								24" CFES	Rte 180 361+00 75.21' Lt	D-2	5	a
		b						73.7							2.6			24" RCP	a TO c			b
		c	G1	0.84	2.5	326					13.3							G1 INLET / 24", HMA APRON	Rte 180 361+00 00.00' Lt			c
D-2	5	d											4.8	20.2				OUTLET PROTECTION	Rte 180 361+00 75.21' Lt	D-2	5	d
D-3	6	a							3									3-18" CFES	Rte 180 363+00 74.30' Lt	D-3	6	a
		b					449.1								2.6			3-18" RCP	a TO c			b
		c							3									3-18" CFES	Rte 180 363.00 75.42' Rt			c
		d											13.0	38.9				OUTLET PROTECTION	Rte 180 363.00 75.42' Rt			d
D-3	6	e											14.0	42.1				OUTLET PROTECTION	Rte 180 363+00 74.30' Lt	D-3	6	e
D-3	7	a								1								24" CFES	Rte 180 365+00 75.98' Lt	D-3	7	a
		b						74.5							2.4			24" RCP	a TO c			b
		c	G1	0.84	2.5	326					13.3							G1 INLET / 24", HMA APRON	Rte 180 365+00 00.00' Lt			c
D-3	7	d											5.6	23.2				OUTLET PROTECTION	Rte 180 365+00 75.98' Lt	D-3	7	d
D-3	8	a								1								24" CFES	Rte 180 369+00 75.22' Lt	D-3	8	a
		b						73.7				5.41			2.4			24" RCP	a TO c			b
		c	G1	0.84	2.5	326					13.3							G1 INLET / 24", HMA APRON	Rte 180 369+00 00.00' Lt			c
D-3	8	d											5.5	22.9				OUTLET PROTECTION	Rte 180 369+00 75.22' Lt	D-3	8	d
SUBTOTAL				8.90		2934	449.1	862.7	6	7	121.5	5.41	63.6	233.2		1	24.0					

1 **REVISED PER ADDENDUM No. 1 DATED MARCH 20, 2013**

DRAINAGE QUANTITIES
DQ-1

STATE OF CALIFORNIA - DEPARTMENT OF TRANSPORTATION
Caltrans
DESIGN

FUNCTIONAL SUPERVISOR: SANKU G. MOHAN
CALCULATED-DESIGNED BY: KHALID CHAOUI
CHECKED BY: HARJINDER SEKHON
REVISED BY: IA
DATE REVISED: 02/06/12

LAST REVISION 07-09-12
DATE PLOTTED => 19-MAR-2013
TIME PLOTTED => 06:33

Dist	COUNTY	ROUTE	POST MILES TOTAL PROJECT	SHEET No.	TOTAL SHEETS
06	Fre	180	R71.8/74.5	106	235

REGISTERED CIVIL ENGINEER 7-09-12 DATE

12-10-12
PLANS APPROVAL DATE

REGISTERED PROFESSIONAL ENGINEER HARJINDER SEKHON No. 76396 Exp. 12-31-12 CIVIL STATE OF CALIFORNIA

THE STATE OF CALIFORNIA OR ITS OFFICERS OR AGENTS SHALL NOT BE RESPONSIBLE FOR THE ACCURACY OR COMPLETENESS OF SCANNED COPIES OF THIS PLAN SHEET.

1

DRAINAGE QUANTITIES (CONTINUED)

DRAINAIGE PLAN SHEET No.	DRAINAGE SYSTEM No. ⬡	DRAINAGE UNIT ◯	DRAINAGE INLET: INLET TYPE	DRAINAGE INLET: MINOR CONCRETE (MINOR STRUCTURE) CY	DRAINAGE INLET: DESIGN H (N) LF	DRAINAGE INLET: Misc IRON & STEEL LB	RCP 18" LF	RCP 24" LF	CFES 18" EA	CFES 24" EA	PLACE HMA (Misc AREA) SQYD	CONCRETE BACKFILL CY	ROCK SLOPE PROTECTION (NO. 2, METHOD B) CY	ROCK SLOPE PROTECTION FABRIC (CLASS 8) SQYD	MAXIMUM COVER (N) LF	REMOVE INLET EA	REMOVE CULVERT LF	DESCRIPTION	STATION	DRAINAIGE PLAN SHEET No.	DRAINAGE SYSTEM No. ⬡	DRAINAGE UNIT ◯
D-3	9	a							3									3-18" CFES	Rte 180 371+50 74.94' Lt	D-3	9	a
		b					451.2								2.6			3-18" RCP	a TO c			b
		c							3									3-18" CFES	Rte 180 371+50 72.92' Rt			c
		d											13.9	51.1				OUTLET PROTECTION	Rte 180 371+50 72.92' Rt			d
D-3	9	e											23.9	71.7				OUTLET PROTECTION	Rte 180 371+50 74.94' Lt	D-3	9	e
D-3	10	a	G1	0.84	2.5	326					13.3							G1 INLET / 24", HMA APRON	Rte 180 374+00 00.00' Rt	D-3	10	a
		b						76.6							2.6			24" RCP	a TO c			b
		c								1								24" CFES	Rte 180 374+00 78.09' Rt			c
D-3	10	d											6.0	24.7				OUTLET PROTECTION	Rte 180 374+00 78.09' Rt	D-3	10	d
D-4	11	a								1								24" CFES	Rte 180 377+00 78.18' Lt	D-4	11	a
		b						157.5							3.3			24" RCP	a TO c			b
		c								1								24" CFES	Rte 180 377+00 79.30' Rt			c
		d											5.7	23.6				OUTLET PROTECTION	Rte 180 377+00 79.30' Rt			d
D-4	11	e											6.6	26.7				OUTLET PROTECTION	Rte 180 377+00 78.18' Lt	D-4	11	e
D-4	12	a	G1	0.84	2.5	326					13.3							G1 INLET / 24", HMA APRON	Rte 180 379+00 00.00' Rt	D-4	12	a
		b						85.2							3.4			24" RCP	a TO c			b
		c								1								24" CFES	Rte 180 379+00 86.61' Rt			c
D-4	12	d											7.4	29.7				OUTLET PROTECTION	Rte 180 379+00 86.61' Rt	D-4	12	d
D-4	13	a								1								24" CFES	Rte 180 381+50 78.55' Lt	D-4	13	a
		b						166.7							4.5			24" RCP	a TO c			b
		c								1								24" CFES	Rte 180 381+50 88.13' Rt			c
		d											6.8	27.6				OUTLET PROTECTION	Rte 180 381+50 88.13' Rt			d
D-4	13	e											6.5	26.3				OUTLET PROTECTION	Rte 180 381+50 78.55' Lt	D-4	13	e
D-4	14	a								1								24" CFES	Rte 180 384+00 81.74' Lt	D-4	14	a
		b						80.3							2.8			24" RCP	a TO c			b
		c	G1	0.84	2.5	326					13.3							G1 INLET / 24", HMA APRON	Rte 180 384+00 00.00' Lt			c
D-4	14	d											7.0	28.3				OUTLET PROTECTION	Rte 180 384+00 81.74' Lt	D-4	14	d
D-4	15	a								1								24" CFES	Rte 180 386+50 76.11' Lt	D-4	15	a
		b						156.5							2.9			24" RCP	a TO c			b
		c								1								24" CFES	Rte 180 386+50 80.42' Rt			c
		d											5.9	24.1				OUTLET PROTECTION	Rte 180 386+50 80.42' Rt			d
D-4	15	e											8.0	32.1				OUTLET PROTECTION	Rte 180 386+50 76.11' Lt	D-4	15	e
SUBTOTAL				2.52		978	451.2	722.8	6	9	39.9		97.7	365.9								

1 **REVISED PER ADDENDUM No. 1 DATED MARCH 20, 2013**

DRAINAGE QUANTITIES
DQ-2

REVISED BY: IA — DATE REVISED: 02/06/12
KHALID CHAOUI — HARJINDER SEKHON
CALCULATED-DESIGNED BY — CHECKED BY
FUNCTIONAL SUPERVISOR: SANKU G. MOHAN
STATE OF CALIFORNIA - DEPARTMENT OF TRANSPORTATION
Caltrans® DESIGN

LAST REVISION 07-09-12 — DATE PLOTTED => 18-MAR-2013 — TIME PLOTTED => 15:50

Dist	COUNTY	ROUTE	POST MILES TOTAL PROJECT	SHEET No.	TOTAL SHEETS
06	Fre	180	R71.8/74.5	107	235

REGISTERED CIVIL ENGINEER 7-09-12 DATE

12-10-12
PLANS APPROVAL DATE

REGISTERED PROFESSIONAL ENGINEER HARJINDER SEKHON No. 76396 Exp. 12-31-12 CIVIL STATE OF CALIFORNIA

THE STATE OF CALIFORNIA OR ITS OFFICERS OR AGENTS SHALL NOT BE RESPONSIBLE FOR THE ACCURACY OR COMPLETENESS OF SCANNED COPIES OF THIS PLAN SHEET.

1

DRAINAGE QUANTITIES (CONTINUED)

DRAINAIGE PLAN SHEET No.	DRAINAGE SYSTEM No. ⬡	DRAINAGE UNIT ◯	DRAINAGE INLET: INLET TYPE	DRAINAGE INLET: MINOR CONCRETE (MINOR STRUCTURE)	DRAINAGE INLET: DESIGN H (N)	DRAINAGE INLET: Misc IRON & STEEL	RCP 18"	RCP 24"	CFES 18"	CFES 24"	PLACE HMA (Misc AREA)	CONCRETE BACKFILL	ROCK SLOPE PROTECTION (NO. 2, METHOD B)	ROCK SLOPE PROTECTION FABRIC (CLASS 8)	MAXIMUM COVER (N)	REMOVE INLET	REMOVE CULVERT	DESCRIPTION	STATION	DRAINAIGE PLAN SHEET No.	DRAINAGE SYSTEM No. ⬡	DRAINAGE UNIT ◯
				CY	LF	LB	LF	LF	EA	EA	SQYD	CY	CY	SQYD	LF	EA	LF					
D-4	16	a	G1	0.84	2.5	326					13.3							G1 INLET / 24", HMA APRON	Rte 180 389+00 00.00' Rt	D-4	16	a
		b						73.4							2.5			24" RCP	a TO c			b
		c								1								24" CFES	Rte 180 389+00 74.86' Rt			c
D-4	16	d											5.1	21.3				OUTLET PROTECTION	Rte 180 389+00 74.86' Rt	D-4	16	d
D-5	17	a								1								24" CFES	Rte 180 392+00 74.65' Lt	D-5	17	a
		b						151.1							3.0			24" RCP	a TO c			b
		c								1								24" CFES	Rte 180 392+00 76.46' Rt			c
		d											5.3	22.0				OUTLET PROTECTION	Rte 180 392+00 76.46' Rt			d
D-5	17	e											5.2	21.5				OUTLET PROTECTION	Rte 180 392+00 74.65' Lt	D-5	17	e
D-5	18	a								1								24" CFES	Rte 180 398+00 87.14' Lt	D-5	18	a
		b						174.8							5.1			24" RCP	a TO c			b
		c								1								24" CFES	Rte 180 398+00 87.66' Rt			c
		d											5.8	24.0				OUTLET PROTECTION	Rte 180 398+00 87.66' Rt			d
D-5	18	e											6.7	27.0				OUTLET PROTECTION	Rte 180 398+00 87.14' Lt	D-5	18	e
D-6	19	a								1								24" CFES	Rte 180 402+00 78.67' Lt	D-6	19	a
		b						77.6							2.7			24" RCP	a TO c			b
		c	G1	0.84	2.5	326					13.3							G1 INLET / 24", HMA APRON	Rte 180 402+00 00.00' Lt			c
D-6	19	d											6.9	27.8				OUTLET PROTECTION	Rte 180 402+00 78.67' Lt	D-6	19	d
D-6	20	a								1								24" CFES	Rte 180 405+00 80.38' Lt	D-6	20	a
		b						158.0							2.9			24" RCP	a TO c			b
		c								1								24" CFES	Rte 180 405+00 77.63' Rt			c
		d											5.7	23.6				OUTLET PROTECTION	Rte 180 405+00 77.63' Rt			d
D-6	20	e											5.9	24.2				OUTLET PROTECTION	Rte 180 405+00 80.38' Lt	D-6	20	e
D-6	21	a	G1	0.84	2.5	326					13.3							G1 INLET / 24", HMA APRON	Rte 180 408+00 00.00' Rt	D-6	21	a
		b						74.1							2.4			24" RCP	a TO c			b
		c								1								24" CFES	Rte 180 408+00 75.55' Rt	D-6	21	c
D-6	21	d											5.1	21.4				OUTLET PROTECTION	Rte 180 408+00 75.55' Rt			
D-6	22	a	G1	0.84	2.5	326					13.3							G1 INLET / 24", HMA APRON	Rte 180 412+00 00.00' Rt	D-6	22	a
		b						73.9							2.4			24" RCP	a TO c			b
		c								1								24" CFES	Rte 180 412+00 75.36' Rt			c
D-6	22	d											5.6	23.2				OUTLET PROTECTION	Rte 180 412+00 75.36' Rt	D-6	22	d
SUBTOTAL				3.36		1304		782.9		10	53.2		57.3	236.0								

1 REVISED PER ADDENDUM No. 1 DATED MARCH 20, 2013

DRAINAGE QUANTITIES
DQ-3

REVISED BY	IA
DATE REVISED	02/06/12
CALCULATED-DESIGNED BY	KHALID CHAOUI
CHECKED BY	HARJINDER SEKHON
FUNCTIONAL SUPERVISOR	SANKU G. MOHAN

STATE OF CALIFORNIA - DEPARTMENT OF TRANSPORTATION
Caltrans
DESIGN

LAST REVISION 07-09-12
DATE PLOTTED => 18-MAR-2013
TIME PLOTTED => 15:33

Dist	COUNTY	ROUTE	POST MILES TOTAL PROJECT	SHEET No.	TOTAL SHEETS
06	Fre	180	R71.8/74.5	108	235

1

REGISTERED CIVIL ENGINEER 7-09-12 DATE

12-10-12
PLANS APPROVAL DATE

REGISTERED PROFESSIONAL ENGINEER HARJINDER SEKHON No. 76396 Exp. 12-31-12 CIVIL STATE OF CALIFORNIA

THE STATE OF CALIFORNIA OR ITS OFFICERS OR AGENTS SHALL NOT BE RESPONSIBLE FOR THE ACCURACY OR COMPLETENESS OF SCANNED COPIES OF THIS PLAN SHEET.

DRAINAGE QUANTITIES (CONTINUED)

DRAINAGE PLAN SHEET No.	DRAINAGE SYSTEM No. ⬡	DRAINAGE UNIT ◯	DRAINAGE INLET: INLET TYPE	DRAINAGE INLET: MINOR CONCRETE (MINOR STRUCTURE) CY	DRAINAGE INLET: DESIGN H (N) LF	DRAINAGE INLET: Misc IRON & STEEL LB	RCP 18" LF	RCP 24" LF	CFES 18" EA	CFES 24" EA	PLACE HMA (Misc AREA) SQYD	CONCRETE BACKFILL CY	ROCK SLOPE PROTECTION (NO. 2, METHOD B) CY	ROCK SLOPE PROTECTION FABRIC (CLASS 8) SQYD	MAXIMUM COVER (N) LF	REMOVE INLET EA	REMOVE CULVERT LF	DESCRIPTION	STATION	DRAINAIGE PLAN SHEET No.	DRAINAGE SYSTEM No. ⬡	DRAINAGE UNIT ◯
D-7	23	a								1								24" CFES	Rte 180 414+50 77.25' Lt	D-7	23	a
		b						153.0							3.0			24" RCP	a TO c			b
		c								1								24" CFES	Rte 180 414+50 75.77' Rt			c
		d											5.1	21.3				OUTLET PROTECTION	Rte 180 414+50 75.77' Rt			d
D-7	23	e											5.3	21.9				OUTLET PROTECTION	Rte 180 414+50 77.25' Lt	D-7	23	e
D-7	24	a								1								24" CFES	Rte 180 417+00 80.07' Lt	D-7	24	a
		b						78.6							2.5			24" RCP	a to c			b
		c	G1	0.84	2.5	326					13.3							G1 INLET / 24", HMA APRON	Rte 180 417+00 00.00' Lt			c
D-7	24	d											6.0	24.5				OUTLET PROTECTION	Rte 180 417+00 80.07' Lt	D-7	24	d
D-7	25	a								1								24" CFES	Rte 180 419+50 91.08' Lt	D-7	25	a
		b						184.0							6.1			24" RCP	a TO c			b
		c								1								24" CFES	Rte 180 419+50 92.92' Rt			c
		d											5.4	22.4				OUTLET PROTECTION	Rte 180 419+50 92.92' Rt			d
D-7	25	e											6.4	26.2				OUTLET PROTECTION	Rte 180 419+50 91.08' Lt	D-7	25	e
D-7	26	a	G1	0.84	2.5	326					13.3							G1 INLET / 24", HMA APRON	Rte 180 422+00 00.00' Lt	D-7	26	a
		b						85.5							3.2			24" RCP	a TO c			b
		c								1								24" CFES	Rte 180 422+00 86.95' Rt			c
D-7	26	d											6.9	28.0				OUTLET PROTECTION	Rte 180 422+00 86.95' Rt	D-7	26	d
D-8	27	a								1								24" CFES	Rte 180 427+00 77.48' Lt	D-8	27	a
		b						76.0							2.5			24" RCP	a to c			b
		c	G1	0.84	2.5	326					13.3							G1 INLET / 24", HMA APRON	Rte 180 427+00 00.00' Lt			c
D-8	27	d											6.5	26.4				OUTLET PROTECTION	Rte 180 427+00 77.48' Lt	D-8	27	d
D-8	28	a								1								24" CFES	Rte 180 430+00 74.73' Lt	D-8	28	a
		b						151.3							2.7			24" RCP	a TO c			b
		c								1								24" CFES	Rte 180 430+00 76.55' Rt			c
		d											4.9	20.5				OUTLET PROTECTION	Rte 180 430+00 76.55' Rt			d
D-8	28	e											5.1	21.4				OUTLET PROTECTION	Rte 180 430+00 74.73' Lt	D-8	28	e
D-8	29	a	G1	0.84	2.5	326					13.3							G1 INLET / 24", HMA APRON	Rte 180 431+29 00.00' Rt	D-8	29	a
		b						97.5							1.9			24" RCP	a TO c			b
		c	G2	1.27	2.8	326					14.2							G2 INLET / 24", HMA APRON	Rte 180 432+29 00.00' Rt			c
		d						97.5							1.9			24" RCP	c TO e			d
		e	G1	0.84	2.5	326					13.3							G1 INLET / 24", HMA APRON	Rte 180 433+29 00.00' Rt			e
		f						82.4							4.0			24" RCP	c TO g			f
		g								1								24" CFES	Rte 180 432+29 83.90' Rt			g
D-8	29	h											4.5	18.9				OUTLET PROTECTION	Rte 180 432+29 83.90' Rt	D-8	29	h
SUBTOTAL				5.47		1956		1005.8		10	80.7		56.1	231.5								

1 **REVISED PER ADDENDUM No. 1 DATED MARCH 20, 2013**

DRAINAGE QUANTITIES
DQ-4

STATE OF CALIFORNIA - DEPARTMENT OF TRANSPORTATION
Caltrans
DESIGN

FUNCTIONAL SUPERVISOR: SANKU G. MOHAN
CALCULATED-DESIGNED BY: HARJINDER SEKHON
CHECKED BY: KHALID CHAOUI
REVISED BY: IA
DATE REVISED: 02/06/12

LAST REVISION 07-09-12
DATE PLOTTED => 18-MAR-2013
TIME PLOTTED => 15:31

Dist	COUNTY	ROUTE	POST MILES TOTAL PROJECT	SHEET No.	TOTAL SHEETS
06	Fre	180	R71.8/74.5	109	235

REGISTERED CIVIL ENGINEER 7-09-12 DATE

12-10-12
PLANS APPROVAL DATE

REGISTERED PROFESSIONAL ENGINEER HARJINDER SEKHON No. 76396 Exp. 12-31-12 CIVIL STATE OF CALIFORNIA

THE STATE OF CALIFORNIA OR ITS OFFICERS OR AGENTS SHALL NOT BE RESPONSIBLE FOR THE ACCURACY OR COMPLETENESS OF SCANNED COPIES OF THIS PLAN SHEET.

1

DRAINAGE QUANTITIES (CONTINUED)

DRAINAGE PLAN SHEET No.	DRAINAGE SYSTEM No. ⬡	DRAINAGE UNIT ◯	DRAINAGE INLET: INLET TYPE	DRAINAGE INLET: MINOR CONCRETE (MINOR STRUCTURE) CY	DRAINAGE INLET: DESIGN H (N) LF	DRAINAGE INLET: Misc IRON & STEEL LB	RCP 18" LF	RCP 24" LF	CFES 18" EA	CFES 24" EA	PLACE HMA (Misc AREA) SQYD	CONCRETE BACKFILL CY	ROCK SLOPE PROTECTION (NO. 2, METHOD B) CY	ROCK SLOPE PROTECTION FABRIC (CLASS 8) SQYD	(N) MAXIMUM COVER LF	REMOVE INLET EA	REMOVE CULVERT LF	DESCRIPTION	STATION	DRAINAGE PLAN SHEET No.	DRAINAGE SYSTEM No. ⬡	DRAINAGE UNIT ◯
D-8	30	a								1								24" CFES	Rte 180 436+00 82.60' Lt	D-8	30	a
		b						81.2							3.4			24" RCP	a TO c			b
		c	G1	0.84	2.5	326					13.3							G1 INLET / 24", HMA APRON	Rte 180 436+00 00.00' Lt			c
D-8	30	d											5.2	21.6				OUTLET PROTECTION	Rte 180 436+00 82.60' Lt	D-8	30	d
D-8	31	a								1								24" CFES	"TD1" LINE 51+65 45.73' Lt	D-8	31	a
		b						163.4							4.6			24" RCP	a TO c			b
		c								1								24" CFES	"TE1" LINE 31+63 44.81' Rt			c
		d											6.1	24.8				OUTLET PROTECTION	"TE1" LINE 31+63 44.81' Rt			d
D-8	31	e											5.8	23.9				OUTLET PROTECTION	"TD1" LINE 51+65 45.73' Lt	D-8	31	e
D-9	32	a								1								24" CFES	"TD1" LINE 53+67 46.95' Lt	D-9	32	a
		b						85.6							4.5			24" RCP	a TO c			b
		c	G1	0.84	2.5	326					13.3							G1 INLET / 24", HMA APRON	"TD1" LINE 53+67 40.12' Rt			c
D-9	32	d											6.0	24.6				OUTLET PROTECTION	"TD1" LINE 53+67 46.95' Lt	D-9	32	d
D-9	33	a	G1	0.84	2.5	326					13.3							G1 INLET / 24", HMA APRON	"TE1" LINE 37+59 20.87' Lt	D-9	33	a
		b						64.0							3.1			24" RCP	a TO c			b
		c								1								24" CFES	"TE1" LINE 37+59 44.58' Rt			c
D-9	33	d											6.1	25.0				OUTLET PROTECTION	"TE1" LINE 37+59 44.58' Rt	D-9	33	d
D-9	34	a								1								24" CFES	"TD1" LINE 60+21 32.81' Lt	D-9	34	a
		b						58.1				18.42			2.0			24" RCP	a TO c			b
		c	G2	1.18	2.5	326					14.2							G2 INLET / 24", HMA APRON	"TD1" LINE 60+21 26.69' Rt			c
		d						58.5							3.9			24" RCP	c TO e			d
		e								1								24" CFES	"TE1" LINE 40+10 43.88' Rt			e
		f											5.9	24.1				OUTLET PROTECTION	"TD1" LINE 60+21 26.69' Rt			f
D-9	34	g											5.9	24.2				OUTLET PROTECTION	"TD1" LINE 60+21 32.81' Lt	D-9	34	g
D-2	35	a							1									18" CFES	"B1" LINE 16+25 65.79' Lt	D-2	35	a
		b					141.0								2.2			18" RCP	a TO c			b
		c							1									18" CFES	"B1" LINE 16+25 75.19' Rt			c
		d											2.9	13.2				OUTLET PROTECTION	"B1" LINE 16+25 75.19' Rt			d
D-2	35	e											5.1	22.2				OUTLET PROTECTION	"B1" LINE 16+25 65.79' Lt	D-2	35	e
D-2	36	a							1									18" CFES	"FR1" LINE 11+00 19.63' Lt	D-2	36	a
		b					43.6								1.3			18" RCP	a TO c			b
		c							1									18" CFES	"FR1" LINE 11+00 24.01' Rt			c
		d											1.4	7.5				OUTLET PROTECTION	"FR1" LINE 11+00 24.01' Rt			d
D-2	36	e											1.4	7.4				OUTLET PROTECTION	"FR1" LINE 11+00 19.63' Lt	D-2	36	e
SUBTOTAL				3.70		1304	184.6	510.8	4	7	54.1	18.42	51.8	218.5								

1 **REVISED PER ADDENDUM No. 1 DATED MARCH 20, 2013**

DRAINAGE QUANTITIES
DQ-5

STATE OF CALIFORNIA - DEPARTMENT OF TRANSPORTATION
Caltrans
DESIGN

FUNCTIONAL SUPERVISOR: SANKU G. MOHAN
CALCULATED-DESIGNED BY: KHALID CHAOUI
CHECKED BY: HARJINDER SEKHON
REVISED BY: IA
DATE REVISED: 02/06/12

LAST REVISION DATE PLOTTED => 18-MAR-2013
07-09-12 TIME PLOTTED => 15:26

Dist	COUNTY	ROUTE	POST MILES TOTAL PROJECT	SHEET No.	TOTAL SHEETS
06	Fre	180	R71.8/74.5	110	235

REGISTERED CIVIL ENGINEER 7-09-12 DATE

12-10-12
PLANS APPROVAL DATE

REGISTERED PROFESSIONAL ENGINEER HARJINDER SEKHON No. 76396 Exp. 12-31-12 CIVIL STATE OF CALIFORNIA

THE STATE OF CALIFORNIA OR ITS OFFICERS OR AGENTS SHALL NOT BE RESPONSIBLE FOR THE ACCURACY OR COMPLETENESS OF SCANNED COPIES OF THIS PLAN SHEET.

1

DRAINAGE QUANTITIES (CONTINUED)

DRAINAGE PLAN SHEET No.	DRAINAGE SYSTEM No. ⬡	DRAINAGE UNIT ◯	DRAINAGE INLET: INLET	DRAINAGE INLET: MINOR CONCRETE (MINOR STRUCTURE)	DRAINAGE INLET: DESIGN H (N)	DRAINAGE INLET: Misc IRON & STEEL	RCP 18"	RCP 24"	CFES 18"	CFES 24"	PLACE HMA (Misc AREA)	CONCRETE BACKFILL	ROCK SLOPE PROTECTION (NO. 2, METHOD B)	ROCK SLOPE PROTECTION FABRIC (CLASS 8)	(N) MAXIMUM COVER	REMOVE INLET	REMOVE CULVERT	DESCRIPTION	STATION	DRAINAIGE PLAN SHEET No.	DRAINAGE SYSTEM No. ⬡	DRAINAGE UNIT ◯
				CY	LF	LB	LF	LF	EA	EA	SQYD	CY	CY	SQYD	LF	EA	LF					
D-3	37	a							1									18" CFES	"FR1" LINE 21+50 19.32' L+	D-3	37	a
		b					39.3					13.07			1.0			18" RCP	a TO c			b
		c							1									18" CFES	"FR1" LINE 21+50 19.93' R+			c
		d											1.5	7.8				OUTLET PROTECTION	"FR1" LINE 21+50 19.93' R+			d
D-3	37	e											1.5	7.6				OUTLET PROTECTION	"FR1" LINE 21+50 19.32' L+	D-3	37	e
D-5	38	a							1									18" CFES	"C" LINE 19+00 31.45' L+	D-5	38	a
		b					62.5								1.9			18" RCP	a TO c			b
		c							1									18" CFES	"C" LINE 19+00 31.05' R+			c
		d											1.9	9.5				OUTLET PROTECTION	"C" LINE 19+00 31.05' R+			d
D-5	38	e											2.0	9.6				OUTLET PROTECTION	"C" LINE 19+00 31.45' L+	D-5	38	e
D-5	39	a							1									18" CFES	"FR2" LINE 11+00 20.22' L+	D-5	39	a
		b					41.7								1.3			18" RCP	a TO c			b
		c							1									18" CFES	"FR2" LINE 11+00 21.49' R+			c
		d											1.7	8.5				OUTLET PROTECTION	"FR2" LINE 11+00 21.49' R+			d
D-5	39	e											1.6	8.3				OUTLET PROTECTION	"FR2" LINE 11+00 20.22' L+	D-5	39	e
D-6	40	a							1									18" CFES	"FR2" LINE 25+00 18.99' L+	D-6	40	a
		b					38.4					13.66			1.1			18" RCP	a TO c			b
		c							1									18" CFES	"FR2" LINE 25+00 19.45' R+			c
		d											1.2	6.7				OUTLET PROTECTION	"FR2" LINE 25+00 19.45' R+			d
D-6	40	e											1.2	6.6				OUTLET PROTECTION	"FR2" LINE 25+00 18.99' L+	D-6	40	e
D-7	41	a							1									18" CFES	"FR2" LINE 29+40 21.69' L+	D-7	41	a
		b					43.8								1.6			18" RCP	a TO c			b
		c							1									18" CFES	"FR2" LINE 29+40 22.12' R+			c
		d											1.5	7.7				OUTLET PROTECTION	"FR2" LINE 29+40 22.12' R+			d
D-7	41	e											1.5	7.6				OUTLET PROTECTION	"FR2" LINE 29+40 21.69' L+	D-7	41	e
D-8	42	a							1									18" CFES	"FR3" LINE 15+50 25.83' L+	D-8	42	a
		b					49.1								8.4			18" RCP	a TO c			b
		c							1									18" CFES	"FR3" LINE 15+50 23.24' R+			c
		d											0.9	5.4				OUTLET PROTECTION	"FR3" LINE 15+50 23.24' R+			d
D-8	42	e											1.5	7.6				OUTLET PROTECTION	"FR3" LINE 15+50 25.83' L+	D-8	42	e
SUBTOTAL							274.8		12			26.73	18.0	92.9								

1 REVISED PER ADDENDUM No. 1 DATED MARCH 20, 2013

DRAINAGE QUANTITIES
DQ-6

STATE OF CALIFORNIA - DEPARTMENT OF TRANSPORTATION
Caltrans® DESIGN

FUNCTIONAL SUPERVISOR: SANKU G. MOHAN
CALCULATED-DESIGNED BY: KHALID CHAOUI
CHECKED BY: HARJINDER SEKHON
REVISED BY: IA
DATE REVISED: 02/06/12

LAST REVISION 07-09-12
DATE PLOTTED => 19-MAR-2013
TIME PLOTTED => 07:08

Dist	COUNTY	ROUTE	POST MILES TOTAL PROJECT	SHEET No.	TOTAL SHEETS
06	Fre	180	R71.8/74.5	111	235

REGISTERED CIVIL ENGINEER 7-09-12 DATE

12-10-12
PLANS APPROVAL DATE

REGISTERED PROFESSIONAL ENGINEER HARJINDER SEKHON No. 76396 Exp. 12-31-12 CIVIL STATE OF CALIFORNIA

THE STATE OF CALIFORNIA OR ITS OFFICERS OR AGENTS SHALL NOT BE RESPONSIBLE FOR THE ACCURACY OR COMPLETENESS OF SCANNED COPIES OF THIS PLAN SHEET.

1

DRAINAGE QUANTITIES (CONTINUED)

DRAINAGE PLAN SHEET No.	DRAINAGE SYSTEM No. ⬡	DRAINAGE UNIT ◯	DRAINAGE INLET: INLET TYPE	DRAINAGE INLET: MINOR CONCRETE (MINOR STRUCTURE)	DRAINAGE INLET: DESIGN H (N)	DRAINAGE INLET: Misc IRON & STEEL	RCP 18"	RCP 24"	CFES 18"	CFES 24"	PLACE HMA (Misc AREA)	CONCRETE BACKFILL	ROCK SLOPE PROTECTION (NO. 2, METHOD B)	ROCK SLOPE PROTECTION FABRIC (CLASS 8)	MAXIMUM COVER (N)	REMOVE INLET	REMOVE CULVERT	DESCRIPTION	STATION	DRAINAIGE PLAN SHEET No.	DRAINAGE SYSTEM No. ⬡	DRAINAGE UNIT ◯
				CY	LF	LB	LF	LF	EA	EA	SQYD	CY	CY	SQYD	LF	EA	LF					
D-8	43	a							1									18" CFES	"FR3" LINE 19+17 20.25' L†	D-8	43	a
		b					38.6								1.5			18" RCP	a TO c			b
		c							1									18" CFES	"FR3" LINE 19+17 20.64' R†			c
		d											1.4	7.3				OUTLET PROTECTION	"FR3" LINE 19+17 20.64' R†			d
D-8	43	e											1.8	8.9				OUTLET PROTECTION	"FR3" LINE 19+17 20.25' L†	D-8	43	e
D-8	44	a							1									18" CFES	"F1" LINE 10+50 36.68' L†	D-8	44	a
		b					71.3								2.6			18" RCP	a TO c			b
		c							1									18" CFES	"F1" LINE 10+50 34.60' R†			c
		d											1.6	8.4				OUTLET PROTECTION	"F1" LINE 10+50 34.60' R†			d
D-8	44	e											1.6	8.1				OUTLET PROTECTION	"F1" LINE 10+50 36.68' L†	D-8	44	e
SUBTOTAL							109.9		4				6.4	32.7								

DRAINAGE QUANTITIES SUMMARY

DRAINAGE SHEET No.	DRAINAGE INLET: MINOR CONCRETE (MINOR STRUCTURE)	DRAINAGE INLET: Misc IRON & STEEL	RCP 18"	RCP 24"	CFES 18"	CFES 24"	PLACE HMA (Misc AREA)	CONCRETE BACKFILL	ROCK SLOPE PROTECTION (NO. 2, METHOD B)	ROCK SLOPE PROTECTION FABRIC (CLASS 8)	REMOVE INLET	REMOVE CULVERT	DESCRIPTION
	CY	LB	LF	LF	EA	EA	SQYD	CY	CY	SQYD	EA	LF	
DQ-1	8.90	2934	449.1	862.7	6	7	121.5	5.41	63.6	233.2	1	24.0	SHEET DQ-1 SUBTOTAL
DQ-2	2.52	978	451.2	722.8	6	9	39.9		97.7	365.9			SHEET DQ-2 SUBTOTAL
DQ-3	3.36	1304		782.9		10	53.2		57.3	236.0			SHEET DQ-3 SUBTOTAL
DQ-4	5.47	1956		1005.8		10	80.7		56.1	231.5			SHEET DQ-4 SUBTOTAL
DQ-5	3.70	1304	184.6	510.8	4	7	54.1	18.42	51.8	218.5			SHEET DQ-5 SUBTOTAL
DQ-6			274.8		12			26.73	18.0	92.9			SHEET DQ-6 SUBTOTAL
DQ-7			109.9		4				6.4	32.7			SHEET DQ-7 SUBTOTAL
DQ-7, TABLE B									342.7	91.8			
TOTAL	693.6	8476	1469.6	3885.0	32	43	349.4*	50.6	693.6	1502.5	1	24.0**	TOTAL

NOTES:
* QUANTITY INCLUDED IN SUMMARY OF QUANTITIES, PLACE HOT MIX ASPHALT (Misc Area) TABLE
** QUANTITY INCLUDED IN SUMMARY OF QUANTITIES, REMOVE CULVERT TABLE

TABLE B

LOCATION	L† / R†	DEPTH	LENGTH	WIDTH	ROCK SLOPE PROTECTION (NO. 2, METHOD B)	ROCK SLOPE PROTECTION FABRIC (CLASS 8)
		LF	LF	LF	CY	SQYD
Sta 1+00.00,"CANAL2" LINE		2.5	40.00	43.42	160.81	
Sta 4+63.00,"CANAL2" LINE		2.5	40.00	43.42	160.81	
Sta 409+49.21,"A1" LINE	L†	1.0	53.00	5.00	9.81	42.8
Sta 413+89.23,"A1" LINE	L†	1.0	61.00	5.00	11.30	49.0
SUBTOTAL					342.73	91.8

1 REVISED PER ADDENDUM No. 1 DATED MARCH 30, 2013

DRAINAGE QUANTITIES DQ-7

STATE OF CALIFORNIA - DEPARTMENT OF TRANSPORTATION
Caltrans DESIGN

FUNCTIONAL SUPERVISOR: SANKU G. MOHAN
CALCULATED-DESIGNED BY: HARJINDER SEKHON
CHECKED BY
REVISED BY: IA
DATE REVISED: 02/06/12

KHALID CHAOUI

LAST REVISION 07-09-12
DATE PLOTTED => 19-MAR-2013
TIME PLOTTED => 07:39

Dist	COUNTY	ROUTE	POST MILES TOTAL PROJECT	SHEET No.	TOTAL SHEETS
06	Fre	180	R71.8/74.5	169	235

REGISTERED CIVIL ENGINEER 7-09-12 DATE

12-10-12
PLANS APPROVAL DATE

REGISTERED PROFESSIONAL ENGINEER HARJINDER SEKHON No. 76396 Exp. 12-31-12 CIVIL STATE OF CALIFORNIA

THE STATE OF CALIFORNIA OR ITS OFFICERS OR AGENTS SHALL NOT BE RESPONSIBLE FOR THE ACCURACY OR COMPLETENESS OF SCANNED COPIES OF THIS PLAN SHEET.

PAVEMENT STRUCTURES QUANTITIES SUMMARY

1

	LOCATION	JPCP	LCB	CI 2 AB	HMA
	Sta TO Sta	CY	CY	CY	TON
Rte 180 EB	334+64.50 TO 344+48.75 "A1"	1,209	498	853	
	344+48.75 TO 346+75.67 "A1"	279	115	197	
	346+75.67 TO 353+41.23 "A1"	1,280	527	904	
	353+41.23 TO 356+12.00 "A1"	457	188	323	
	356+12.00 TO 362+77.00 "A1"	889	366	627	
	362+77.00 TO 386+92.73 "A1"	2,967	1,222	2,094	
	386+92.73 TO 393+56.74 "A1"	1,090	449	770	
	393+56.74 TO 396+29.06 "A1"	261	108	185	
	396+29.06 TO 402+92.91 "A1"	909	374	641	
	402+92.91 TO 436+36.48 "A1"	4,057	1,670	2,864	
	436+36.48 TO 440+88.27 "A1"	555	228	392	
Rte 180 WB	324+81.33 TO 337+80.57 "A1"	201	83	142	
	344+48.75 TO 353+41.23 "A1"	1,153	475	815	
	353+41.23 TO 356+12.00 "A1"	405	167	286	
	366+12.00 TO 362+77.00 "A1"	1,161	478	819	
	362+77.00 TO 386+92.73 "A1"	2,966	1,221	2,094	
	386+92.73 TO 393+56.74 "A1"	897	369	633	
	393+56.74 TO 396+29.06 "A1"	186	76	131	
	396+29.06 TO 402+92.91 "A1"	1,178	486	832	
	402+92.91 TO 427+51.49 "A1"	3,020	1,243	2,131	
	427+91.58 TO 436+91.48 "A1"	1,105	455	780	
TRANSITIONS					
	34+48.95 TO 45+68.33 "TE1" EB			838	1,244
	50+55.56 TO 55+01.55 "TD1" WB			567	842
	50+55.56 TO 65+74.29 "TD1" WB			890	1,320
QUALITY Ave	7+39.31 TO 13+45.36 "B1"			532	956
	15+11.26 TO 20+57.35 "B1"			479	862
NEWMARK Ave					
	11+00.00 TO 16+37.86 "C1"			445	801
	17+92.25 TO 23+40.50 "C1"			498	895
FRONTAGE ROADS					
	10+20.00 TO 25+50.29 "FR1"			855	1,537
	10+00.00 TO 31+13.81 "FR2"			1,161	2,089
	10+00.00 TO 49+80.60 "FR3"			2,372	4,270
	8+66.02 TO 9+80.00 "FR6"			68	123
PVAE	5+82.65 TO 9+73.86 "PE3"			87	
	10+00.00 TO 12+92.78 "PE1"				156
	10+00.00 TO 46+30.56 "PE2"				1,772
	PLACE HMA (MISCELLANEOUS AREAS)				293 ~~291~~
	CHANGEABLE MESSAGE SIGN AREA				79
	Beg TRANSITION			752	615
	TEMPORARY WIDENING (SHEET SCD-2)				18.2
	TEMPORARY WIDENING (SHEET SCD-2)			5.1	32.4
	13+22.3 TO 17+75.21 "TC1"			135.3	224.2
	TOTAL	26,225	10,798	28,198	18,143

REMOVE ASPHALT CONCRETE PAVEMENT

LOCATION	STATION Beg	STATION END	CY *
Beg TRANSITION	324+81.33 "A1"	354+00.00 "A1"	995
Exist Rte 180 (KINGS CANYON Rd)	334+64.50 "A1"	354+00.00 "A1"	1,667
Exist Rte 180 (KINGS CANYON Rd)	354+00.00 "A1"	393+00.00 "A1"	2,356
Exist Rte 180 (KINGS CANYON Rd)	393+00.00 "A1"	434+00.00 "A1"	2,489
Exist Rte 180 (KINGS CANYON Rd)	434+00.00 "A1"	452+00.00 "A1"	1,084
QUALITY Ave	7+39.31 "B1"	13+18.39 "B1"	272
QUALITY Ave	13+41.83 "B1"	20+57.35 "B1"	268
NEWMARK Ave	11+00.00 "C1"	23+40.50 "C1"	656
Exist N MADSEN Ave			260
Beg TRANSITION (Temp DETOUR)	328+49.61 "A1"	337+81.00 "A1"	351

* QUANTITY INCLUDED IN ROADWAY EXCAVATION.

EARTHWORK QUANTITIES

LOCATION	ROADWAY EXCAVATION	EMBANKMENT (N)	IMPORTED BORROW
	CY	CY	CY
Rte 180 MAINLINE	54,029	90,224	-
TRANSITION WESTBOUND ("TD1")	5,880	216	-
TRANSITION EASTBOUND ("TE1")	1,800	257	-
FOWLER SWITCH CANAL ("CANAL1")	78	194	-
LONE TREE CANAL ("CANAL2")	2,337	876	-
QUALITY Ave	3,946	50	-
NEWMARK Ave	3,802	36	-
"F1"	200	300	
"BR1" (DIRT ALIGNMENT)	143	743	-
DRAINAGE BASIN	391		
EARTH BERM		994	
"FR1"	1,227	325	
"FR2"	2,856	2,368	
"FR3"	1,627	4,081	
"FR6"	113	3	
"PE1"	109		
"PE2"	589	96	
"PE3"	176	6	
STOCKPILE AT QUALITY Ave	10,928		
Beg TRANSITION	995		
Exist N MADSEN Ave	68		
Beg TRANSITION (Temp DETOUR)	351		
TOTAL	91,645	100,769	18,288

(N)-NOT A SEPARATE PAY ITEM, FOR INFORMATION ONLY.

1 REVISED PER ADDENDUM No. 1 DATED MARCH 30, 2013

SUMMARY OF QUANTITIES

Q-1

STATE OF CALIFORNIA - DEPARTMENT OF TRANSPORTATION
Caltrans
06-DESIGN

FUNCTIONAL SUPERVISOR: SANKU G. MOHAN
CALCULATED-DESIGNED BY: KEVIN T. NGUYEN
CHECKED BY: GURJOT GILL
REVISED BY: IA
DATE REVISED: 02/06/12

LAST REVISION 07-11-12
DATE PLOTTED => 19-MAR-2013
TIME PLOTTED => 07:39

Dist	COUNTY	ROUTE	POST MILES TOTAL PROJECT	SHEET No.	TOTAL SHEETS
06	Fre	180	R71.8/74.5	170	235

REGISTERED CIVIL ENGINEER 7-09-12 DATE

12-10-12
PLANS APPROVAL DATE

REGISTERED PROFESSIONAL ENGINEER HARJINDER SEKHON No. 76396 Exp. 12-31-12 CIVIL STATE OF CALIFORNIA

THE STATE OF CALIFORNIA OR ITS OFFICERS OR AGENTS SHALL NOT BE RESPONSIBLE FOR THE ACCURACY OR COMPLETENESS OF SCANNED COPIES OF THIS PLAN SHEET.

RESET MAILBOX

ADDRESS	* INTERMEDIARY LOCATION			FINAL LOCATION			
	STATION	OFFSET	EA	STATION	OFFSET	BOXES PER POST	EA
104 N QUALITY Ave	19+76.00 "B1"	32.00' R+	1	19+00.00 "B1"	28.00' R+	1	1
95 N NEWMARK Ave	21+22.00 "C1"	41.00' L+	1	21+22.00 "C1"	28.00' L+	1	1
29 S NEWMARK Ave				14+40.00 "C1"	28.00' L+	1	1
13849 E KINGS CANYON Rd #1				9+85.00 "B1"	28.00' R+		1
13849 E KINGS CANYON Rd #2				9+85.00 "B1"	28.00' R+	3	1
13849 E KINGS CANYON Rd #3				9+85.00 "B1"	28.00' R+		1
14061 E KINGS CANYON Rd				9+80.00 "B1"	28.00' R+		1
14145 E KINGS CANYON Rd				9+80.00 "B1"	28.00' R+	3	1
14351 E KINGS CANYON Rd				9+80.00 "B1"	28.00' R+		1
14693 E KINGS CANYON Rd				8+90.00 "C1"	16.00' R+		1
14661 E KINGS CANYON Rd				8+90.00 "C1"	16.00' R+	3	1
14665 E KINGS CANYON Rd				8+90.00 "C1"	16.00' R+		1
14900 E KINGS CANYON Rd				31+13.00 "FR2"	18.00' R+	1	1
14941 E KINGS CANYON Rd				10+00.00 "FR3"	18.00' L+	1	1
15161 E KINGS CANYON Rd	16+95.00 "FR3"	26.00' R+	1	16+95.00 "FR3"	18.00' R+	1	1
15229 E KINGS CANYON Rd	19+50.00 "FR3"	26.00' R+	1	19+50.00 "FR3"	18.00' R+	1	1
15335 E KINGS CANYON Rd	26+05.00 "FR3"	26.00' R+	1	26+05.00 "FR3"	18.00' R+	1	1
15471 E KINGS CANYON Rd	32+12.00 "FR3"	26.00' R+	1	32+55.00 "FR3"	18.00' R+	1	1
		TOTAL	6 (N)				18

* INTERMEDIARY LOCATIONS WILL BE TEMPORARY AND TO BE DETERMINED BY THE ENGINEER DURING STAGE CONSTRUCTION.
(N) NOT A SEPARATE PAY ITEM, FOR INFORMATION ONLY.

SHOULDER BACKING

LOCATION	STATION		TON
	Beg	End	
SR 180 EASTBOUND	356+25.04	392+60.14	395.32
SR 180 EASTBOUND	396+41.56	427+00.00	332.61
SR 180 EASTBOUND	428+50.00	432+43.20	42.76
SR 180 EASTBOUND	435+75.21	440+88.27	56.23
SR 180 WESTBOUND	357+10.08	393+43.57	395.14
SR 180 WESTBOUND	397+24.99	427+00.00	323.53
SR 180 WESTBOUND	428+50.00	436+91.48	91.51
TOTAL			1,637.10

CHAIN LINK FENCE (TYPE CL-6)

	LOCATION		LENGTH
	Beg	END	(LF)
EASTBOUND	12+44.13 "B1" 55' R+	355+34.11 "A1" 136' R+	55
	355+34.11 "A1" 136' R+	392+67.61 "A1" 139' R+	3,721
	393+72.25 "A1" 140' R+	394+30.33 "A1" 140' R+	46
	394+30.33 "A1" 140' R+	15+25.81 "C1" 50' L+	51
	15+26.19 "C1" 50' R+	395+42.06 "A1" 140' R+	49
	395+42.06 "A1" 140' R+	427+41.41 "A1" 145' R+	3,199
	427+77.50 "A1" 145' R+	433+51.54 "A1" 143' R+	574
	435+02.27 "A1" 142' R+	463+23.90 "A1" 75' R+	2,878
WESTBOUND	16+23.85 "B1" 58' R+	355+51.26 "A1" 131' L+	59
	355+51.26 "A1" 131' L+	394+38.70 "A1" 132' L+	3,890
	394+38.70 "A1" 132' L+	19+04.11 "C1" 49' L+	58
	19+04.25 "C1" 50' R+	395+92.88 "A1" 157' L+	57
	396+62.94 "A1" 143' L+	427+60.95 "A1" 140' L+	3,087
	427+97.04 "A1" 140' L+	65+00.00 "TD1" 35' L+	2,352
	DRAINAGE BASIN (BASIN A)		246
TOTAL			20,322

CHAIN LINK GATE (TYPE CL-6) 1

LOCATION	6' ~~12'~~ CL GATE (TYPE CL-6)	8' ~~16'~~ CL GATE (TYPE CL-6)
	(EA)	(EA)
16+26.09 "B1", 65' R+ (BASIN A)	~~1~~ 2	
12+49.67 "FR1", 80' R+ (BASIN A)		~~1~~ 2
392+01.27 "A1", 139' R+	~~1~~ 2	
393+84.04 "A1", 140.72' R+	~~1~~ 2	
395+85.25 "A1", 158' L+	~~1~~ 2	
396+72.34 "A1", 142' L+	~~1~~ 2	
TOTAL	~~5~~ 10	~~1~~ 2

1 REVISED PER ADDENDUM No. A1 DATED MARCH 30, 2013

SUMMARY OF QUANTITIES

Q-2

IA	07/09/12	KEVIN T. NGUYEN	GURJOT GILL
REVISED BY	DATE REVISED	CALCULATED-DESIGNED BY	CHECKED BY

FUNCTIONAL SUPERVISOR: SANKU G. MOHAN

STATE OF CALIFORNIA - DEPARTMENT OF TRANSPORTATION
Caltrans® DESIGN

LAST REVISION 07-09-12 | DATE PLOTTED => 19-MAR-2013 | TIME PLOTTED => 07:39

Dist	COUNTY	ROUTE	POST MILES TOTAL PROJECT	SHEET No.	TOTAL SHEETS
06	Fre	180	R71.8/74.5	173	235

REGISTERED CIVIL ENGINEER 7-09-12 DATE

12-10-12
PLANS APPROVAL DATE

REGISTERED PROFESSIONAL ENGINEER HARJINDER SEKHON No. 76396 Exp. 12-31-12 CIVIL STATE OF CALIFORNIA

THE STATE OF CALIFORNIA OR ITS OFFICERS OR AGENTS SHALL NOT BE RESPONSIBLE FOR THE ACCURACY OR COMPLETENESS OF SCANNED COPIES OF THIS PLAN SHEET.

REMOVE FENCE

LOCATION	OFFSET	DESCRIPTION	LF
Sta 367+87.60 TO Sta 374+19.11 "A1"	143.20' Rt	BARBED WIRE	652
Sta 374+50.87 TO Sta 386+43.51 "A1"	144.22' Rt	CHAIN LINK	1276
Sta 386+52.00 TO Sta 387+15.80 "A1"	146.82' Rt	BOARD	88
Sta 387+50.80 TO Sta 391+63.03 "A1"	142.97' Rt	WIRE MESH	501
Sta 398+71.34 "A1" (WELL)	61.00' Rt	CHAIN LINK	61
Sta 416+15.81 "A1" (ACROSS Rte 180)	Rt/Lt	CHAIN LINK	231
Sta 427+88.20 TO Sta 428+38.31 "A1"	79.00' Rt	WOOD RAIL	50
Sta 428+97.94 TO Sta 430+85.00 "A1"	83.37' Rt	WIRE MESH	187
Sta 430+41.45 TO Sta 431+76.51 "A1"	155.36' Rt	WOOD RAIL	158
Sta 431+95.44 TO Sta 439+68.76 "A1"	155.36' Rt	BARBED WIRE	778
Sta 445+14.42 TO Sta 448+71.48 "A1"	191.08' Rt	BOARD	660
Sta 461+90.90 TO Sta 463+23.90 "A1"	216.61' Rt	CHAIN LINK	388
Sta 21+34.59 TO Sta 23+40.51 "C1"	18.16' Lt	CHAIN LINK	254
		TOTAL	5284

SHOULDER RUMBLE STRIP (CONCRETE PAVEMENT, GROUND-IN INDENTATIONS)

LOCATION		STATION From	STATION To	(N) LF	Sta
WESTBOUND	INSIDE SHOULDER	324+81.33	337+80.57	1,299.24	13
	INSIDE SHOULDER	344+48.75	353+41.23	874.45	9
	INSIDE SHOULDER	362+77.00	393+56.74	3,079.74	31
	INSIDE SHOULDER	402+92.91	425+90.00	2,297.09	23
	INSIDE SHOULDER	429+50.00	433+50.00	400.00	4
	OUTSIDE SHOULDER	344+48.75	353+22.43	873.68	9
	OUTSIDE SHOULDER	357+10.08	393+43.57	3,633.49	36
	OUTSIDE SHOULDER	397+24.99	425+90.00	2,865.01	29
	OUTSIDE SHOULDER	429+50.00	436+91.48	741.48	7
EASTBOUND	INSIDE SHOULDER	334+64.50	346+75.67	1211.17	12
	INSIDE SHOULDER	356+12.00	386+92.73	3,080.73	31
	INSIDE SHOULDER	396+29.06	425+90.00	2,960.94	30
	INSIDE SHOULDER	429+50.00	433+50.00	400.00	4
	INSIDE SHOULDER	436+36.48	440+88.27	451.79	5
	OUTSIDE SHOULDER	334+64.50	348+76.03	1,411.53	14
	OUTSIDE SHOULDER	356+25.04	392+60.14	3,635.10	36
	OUTSIDE SHOULDER	396+26.00	426+90.00	3,064.00	31
	OUTSIDE SHOULDER	429+50.00	432+00.00	250.00	3
	OUTSIDE SHOULDER	436+36.48	440+88.27	451.79	5
				TOTAL	332

(N) NOT A SEPARATE PAY ITEM, FOR INFORMATION ONLY.

1 REVISED PER ADDENDUM No. 1 DATED MARCH 20, 2013

PLACE HOT MIX ASPHALT (MISCELLANEOUS AREA)

SHEET No.	STATION	LENGTH Ft	WIDTH Ft	AREA SQYD	THICKNESS Ft	HMA (TYPE A) TON	REMARKS
L-4	Sta 10+15.95, "B1" Rt	20.9	40.0	89.1	0.3	18.03	DRIVEWAY
L-4	Sta 18+53.13, "B1" Rt	24.0	16.0	46.0	0.3	9.31	DRIVEWAY
L-4	Sta 19+51.30, "B1" Rt	17.1	20.0	42.9	0.3	8.68	DRIVEWAY
L-4	Sta 16+81.23, "FR1" Lt	14.0	25.0	43.7	0.3	8.84	DRIVEWAY
L-5	Sta 24+94.92, "FR1" Rt	16.8	12.0	44.3	0.3	8.97	DRIVEWAY
L-5	Sta 25+25.19, "FR1" Rt	21.7	25.0	57.0	0.3	11.54	DRIVEWAY
L-7	Sta 13+76.62, "C1" Lt	15.5	20.0	37.9	0.3	7.67	DRIVEWAY
L-7	Sta 14+58.33, "C1" Lt	20.6	14.0	36.1	0.3	7.31	DRIVEWAY
L-7	Sta 21+48.55, "C1" Lt	19.0	12.0	30.1	0.3	6.09	DRIVEWAY
L-7	Sta 22+73.58, "C1" Lt	18.3	20.0	45.3	0.3	9.17	DRIVEWAY
L-7	Sta 23+02.58, "C1" Rt	19.7	20.0	49.0	0.3	9.92	DRIVEWAY
L-7	Sta 11+21.00, "FR2" Lt	14.0	12.0	23.2	0.3	4.69	DRIVEWAY
L-7	Sta 11+21.00, "FR2" Rt	14.0	12.0	24.0	0.3	4.85	DRIVEWAY
L-8	Sta 24+06.00, "FR2" Lt	14.0	25.0	43.7	0.3	8.84	DRIVEWAY
L-9	CUL-DE-SAC, "FR2" Lt	11.6	25.0	35.7	0.3	7.23	DRIVEWAY
L-9	CUL-DE-SAC, "FR3" Lt	13.3	25.0	40.3	0.3	8.16	DRIVEWAY
L-10	Sta 17+23.57, "FR3" Rt	14.0	12.0	23.3	0.3	4.73	DRIVEWAY
L-10	Sta 17+94.60. "FR3" Rt	14.0	12.0	23.3	0.3	4.73	DRIVEWAY
L-10	Sta 19+75.33, "FR3" Rt	14.0	12.0	43.7	0.3	8.84	DRIVEWAY
L-11	Sta 25+83.72, "FR3" Rt	14.0	12.0	23.4	0.3	4.73	DRIVEWAY
L-11	Sta 27+80.14, "FR3" Rt	14.0	25.0	44.1	0.3	8.92	DRIVEWAY
L-11	Sta 31+10.58, "FR3" Rt	14.0	12.0	24.6	0.3	4.97	DRIVEWAY
L-11	Sta 32+83.43, "FR3" Rt	14.0	12.0	23.4	0.3	4.74	DRIVEWAY
L-11	Sta 34+54.68, "FR3" Rt	14.0	25.0	45.3	0.3	9.17	DRIVEWAY
L-12	Sta 40+40.67, "FR3" Rt	14.0	25.0	45.1	0.3	9.13	DRIVEWAY
L-12	Sta 47+99.14, "FR3" Rt	14.0	25.0	43.7	0.3	8.84	DRIVEWAY
L-12	Sta 49+80.60, "FR3" Rt	26.0	25.0	71.8	0.3	14.53	DRIVEWAY
DQ-7				~~335.2~~ 349.4	0.3	~~67.88~~ 70.76	
TOTAL				~~1435.2~~ 1449.4		* ~~290.51~~ 293.39	

* QUANTITIES INCLUDED IN PAVEMENT STRUCTURES QUANTITIES SUMMARY (SEE SHEET Q-1)
* * SEE PLAN SHEET C-12

1

SUMMARY OF QUANTITIES

Q-5

STATE OF CALIFORNIA - DEPARTMENT OF TRANSPORTATION
Caltrans 06-DESIGN
FUNCTIONAL SUPERVISOR SANKU G. MOHAN
CALCULATED-DESIGNED BY KEVIN T. NGUYEN
CHECKED BY GURJOT GILL
REVISED BY IA
DATE REVISED 07/09/12

LAST REVISION 07-09-12
DATE PLOTTED => 19-MAR-2013
TIME PLOTTED => 07:04

Dist	COUNTY	ROUTE	POST MILES TOTAL PROJECT	SHEET No.	TOTAL SHEETS
06	Fre	180	R71.8/74.5	174	235

REGISTERED CIVIL ENGINEER 7-09-12 DATE

12-10-12
PLANS APPROVAL DATE

REGISTERED PROFESSIONAL ENGINEER HARJINDER SEKHON No. 76396 Exp. 12-31-12 CIVIL STATE OF CALIFORNIA

THE STATE OF CALIFORNIA OR ITS OFFICERS OR AGENTS SHALL NOT BE RESPONSIBLE FOR THE ACCURACY OR COMPLETENESS OF SCANNED COPIES OF THIS PLAN SHEET.

1

SEAL PAVEMENT JOINT

	LOCATION	TRANSVERSE JOINT	LONGITUDINAL JOINT
		LF	LF
	STATION		
Rte 180 EB	334+64.50 TO 344+48.75	2,841	2,953
	344+48.75 TO 346+75.67	655	681
	346+75.67 TO 353+92.78	4,276	4,586
	355+61.39 TO 362+77.00	2,065	2,147
	362+77.00 TO 386+92.73	6,972	7,247
	386+92.73 TO 393+56.74	2,506	2,656
	396+41.56 TO 402+92.91	1,880	1,954
	402+92.91 TO 427+43.23	7,072	7,351
	427+89.34 TO 440+88.27	3,749	3,897
Rte 180 WB	344+48.75 TO 353+92.78	2,724	2,832
	355+61.39 TO 362+77.00	2,701	2,862
	362+77.00 TO 386+92.73	6,972	7,247
	386+92.73 TO 393+56.74	1,916	1,992
	396+41.56 TO 402+92.91	2,458	2,605
	402+92.91 TO 427+43.23	7,072	7,351
	427+43.23 TO 436+91.48	2,737	2,845
	SUB-TOTAL	58,596	61,206
	TOTAL	119,802	

REMOVE IRRIGATION FACILITY

LOCATION	Dia	CONCRETE PIPE		
		IRRIGATION LINE	STAND PIPE	WATER VALVE
		LF	LF	LF
Sta 361+07.15 "A1" 185.00′ Lt TO 53.80′ Rt	8"	263		
Sta 361+07.15 "A1" 53.80′ Rt	28"		7	
Sta 367+46.28 "A1" 510.52′ Lt TO 76.58′ Rt	8"	627		
Sta 374+36.37 "A1" 157.8′ Lt TO 70.07′ Rt	8"	268		
Sta 381+12.26 "A1" 157.00′ Lt TO 71.07′ Rt	8"	269		
Sta 381+29.03 "A1" 153.04′ Lt TO 71.81′ Rt	8"	257		
Sta 387+66.88 "A1" 161.60′ Lt TO 74.20′ Rt	8"	276		
Sta 392+09.23 "A1" 77.30′ Rt TO Sta 393+97.27 "A1"	8"	131		
Sta 393+97.27 "A1" TO Sta 20+69.45 "C1" 33.77′ Lt	8"	479		
Sta 13+29.32 "C1" 24.60′ Rt TO Sta 15+65.46 "C1" 24.60′ Rt	8"	260		
Sta 397+84.26 "A1" 62.00′ Rt TO Sta 398+43.28 "A1" 62.30′ Rt	8"	69		
Sta 398+71.34 "A1" 63.80′ Rt	33"		14	
Sta 418+22.97 "A1" 162.84′ Lt TO 80.77′ Rt	8"	268		
Sta 12+50.39 "FR3" 26.00′ Lt 30.00′ Rt	8"	46		
Sta 16+38.94 "FR3" 25.16′ Lt TO 30.00′ Rt	8"	61		
Sta 434+85.54 "A1" 62.50′ Lt TO 170.46′ Rt	8"	233		
Sta 25+59.46 "FR3" 13.65′ Lt TO 30.00′ Rt	8"	44		
Sta 27+66.91 "FR3" 45.30′ Lt TO 30.00′ Rt	8"	86		
Sta 27+93.40 "FR3" 48.30′ Lt TO 30.00′ Rt	8"	79		
Sta 33+79.76 "FR3" 13.10′ Lt	24"			6
Sta 452+34.65 "A1" 163.71′ Lt TO 148.13′ Lt	8"	21		
Sta 457+95.53, 99.02′ Lt TO Sta 461+65.58 "A1"	8"	392		
Sta 461+65.58 "A1" 216.0′ Rt	8"	242		

REMOVE CULVERT

	LOCATION	Culv
		LF
L-5	367+71.00 "A1", 68.82′ Rt	32
L-7	17+28.28 "C1", 25.00′ Lt	64
L-9	415+95.92 "A1", 77.00′ Rt	33
L-9	417+98.58 "A1", 90.00′ Rt	81
L-10	13+95.76 "FR3", 38.05′ Lt	30
L-10	14+19.38 "FR3", 84.80′ Lt	55
DQ-7	338+91.00 "A1", 20.00′ Lt	24
TOTAL		319

DESTROY WELL

LOCATION	OFFSET	WELL
		EA
Sta 398+65.13 "A1"	57.95′ Rt	1
Sta 19+39.04 "C1"	38.50′ Lt	1
Sta 33+69.16 "FR3"	38.32′ Lt	2
	TOTAL	4

1 **REVISED PER ADDENDUM No. 1 DATED MARCH 20, 2013**

SUMMARY OF QUANTITIES
Q-6

REVISED BY	IA	FUNCTIONAL SUPERVISOR	SANKU G. MOHAN
DATE REVISED	07/09/12		
KEVIN T. NGUYEN		STATE OF CALIFORNIA - DEPARTMENT OF TRANSPORTATION	
GURJOT GILL		06-DESIGN	
CALCULATED-DESIGNED BY		Caltrans	
CHECKED BY			

LAST REVISION 07-09-12 | DATE PLOTTED => 19-MAR-2013 | TIME PLOTTED => 11:03