DIST	COUNTY	ROUTE	POST MILES TOTAL PROJECT	SHEET No	TOTAL SHEETS
05	SLO	46	36.6/41.2	536	595

REGISTERED CIVIL ENGINEER 8-20-09 DATE

12-7-09
PLANS APPROVAL DATE

REGISTERED PROFESSIONAL ENGINEER DON L. NGUYEN-TAN No. 57510 Exp. 12-31-09 CIVIL STATE OF CALIFORNIA

The State of California or its officers or agents shall not be responsible for the accuracy or completeness of electronic copies of this plan sheet.

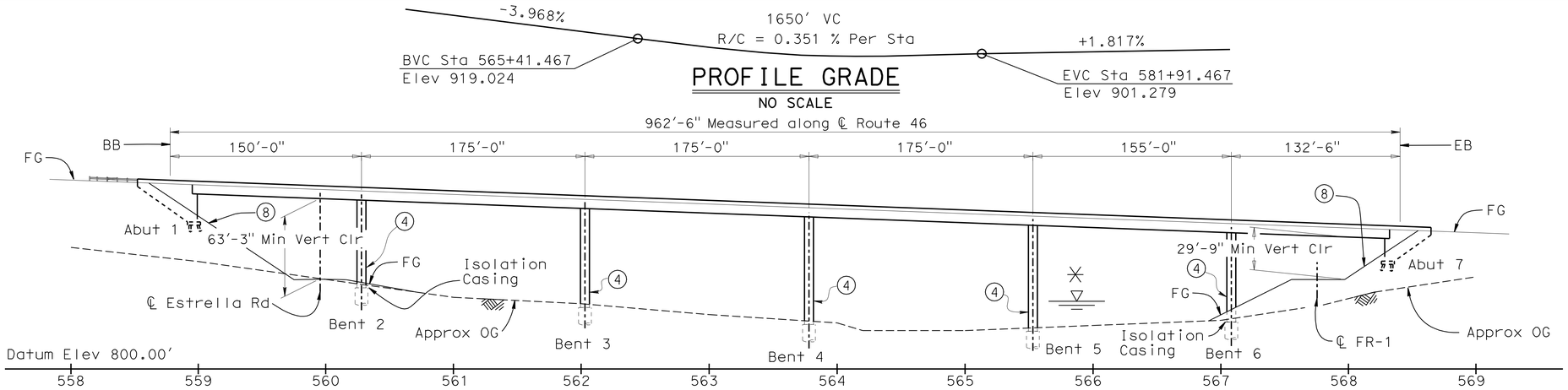

ELEVATION
1"=50'-0"

NOTES & LEGEND

Note: Not all columns shown

① Paint "Estrella River Bridge"
② Paint "Br. No. 49-0033L"
③ Paint "Br. No. 49-0033R"
④ Paint Bent Number
⑤ MBGR, see "Road Plans"
⑥ Concrete Barrier Type 732 (Mod)
⑦ Structure Approach (Type N)
⑧ Slope Paving
✳ High water elevation, see "Hydrologic Summary" on "Foundation Plan" sheet
◉ Indicates point of minimum vertical clearance

QUANTITIES

STRUCTURE EXCAVATION (BRIDGE)	1,468	CY
STRUCTURE BACKFILL (BRIDGE)	816	CY
3" SUPPLY LINE (BRIDGE)	1,024	LF
120" CAST-IN-DRILLED-HOLE CONCRETE PILING	1,769	LF
FURNISH PILING (CLASS 140) (ALTERNATIVE W)	5,558	LF
DRIVE PILE (CLASS 140) (ALTERNATIVE W)	79	EA
PRESTRESSING CAST-IN-PLACE CONCRETE	LUMP	SUM
STRUCTURAL CONCRETE, BRIDGE FOOTING	188	CY
STRUCTURAL CONCRETE, BRIDGE	9,180	CY
STRUCTURAL CONCRETE, APPROACH SLAB (TYPE N) 2	218 ~~95~~	CY
ARCHITECTURAL TEXTURE (RANDOM FIELD STONE)	3,111	SQFT
PTFE SPHERICAL BEARING	18	EA
JOINT SEAL ASSEMBLY (MR 6")	182	LF
BAR REINFORCING STEEL (BRIDGE)	4,087,996	LB
HEADED BAR REINFORCEMENT	404	EA
24" WELDED STEEL PIPE CASING (BRIDGE)	158	LF
SLOPE PAVING (EXPOSED AGGREGATE)	205	CY
ISOLATION CASING	15,266	LB
MISCELLANEOUS METAL (BRIDGE)	5,796	LB
BRIDGE DECK DRAINAGE SYSTEM	15,011	LB
CONCRETE BARRIER (TYPE 732 MODIFIED)	4,030	LF

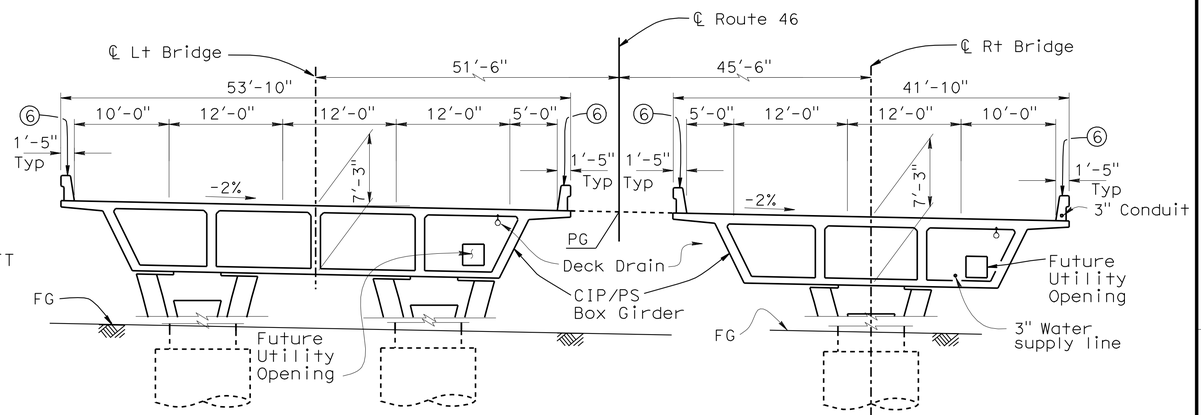

TYPICAL SECTION
⅛"=1'-0"

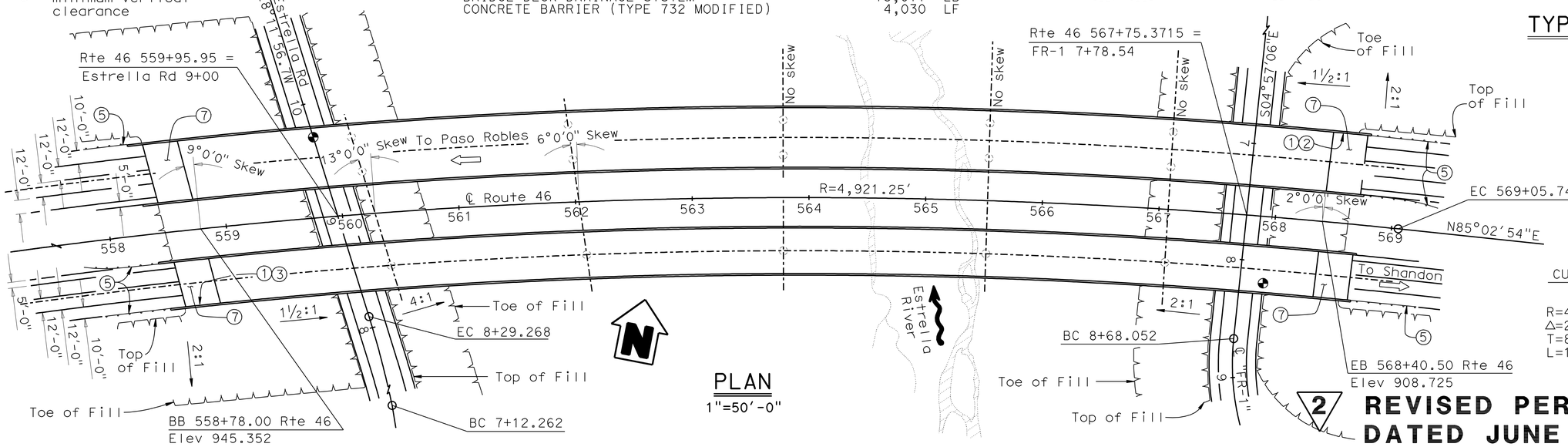

PLAN
1"=50'-0"

CURVE DATA
Rte 46
R=4,921.250'
Δ=20°05'23"
T=871.726'
L=1,725.553'

2 **REVISED PER ADDENDUM No. 2 DATED JUNE 30, 2010**

DESIGN	BY Don L. Nguyen-Tan	CHECKED Vivian Dang	LOAD & RESISTANCE FACTOR DESIGN	LIVE LOADING: HL93 W/"LOW-BOY"; PERMIT DESIGN VEHICLE	
DETAILS	BY G. Zweier / B.Jenko	CHECKED Don L. Nguyen-Tan	LAYOUT	BY George Zweier	CHECKED Don L. Nguyen-Tan
QUANTITIES	BY Chris Udarbe	CHECKED Jody McCoy	SPECIFICATIONS	BY	PLANS AND SPECS COMPARED

Fritz Hoffman
DESIGN ENGINEER

STATE OF CALIFORNIA
DEPARTMENT OF TRANSPORTATION

DIVISION OF ENGINEERING SERVICES
STRUCTURE DESIGN
DESIGN BRANCH 6

BRIDGE NO. 49-0033L/R
POST MILE 36.6/41.2

ESTRELLA RIVER BRIDGE
GENERAL PLAN

ORIGINAL SCALE IN INCHES FOR REDUCED PLANS 0 1 2 3

CU 05
EA 330721

DISREGARD PRINTS BEARING EARLIER REVISION DATES

REVISION DATES: 8-18-09 8-19-09 4-04-08 4-14-08 06-27-08 07-18-08 12-11-08 1-18-09 3-18-09 8-4-09

SHEET 1 OF 60

STRUCTURES DESIGN GENERAL PLAN SHEET (ENGLISH) (REV.07-24-06)

FILE => 49-0033-a-gplr.dgn

USERNAME => frmikest DATE PLOTTED => 30-JUN-2010 TIME PLOTTED => 06:04