FOR CONTRACT NO.: 05-0K2304

INFORMATIONAL HANDOUT

MATERIALS REPORTS

Foundation Report
January 19, 2011

INSTALLATION DETAILS FOR STATE FURNISHED BATTERY BACKUP SYSTEM

MANUFACTURER DRAWINGS

ABSORD 350 BY BARRIER SYSTEMS, INC.

QUADGUARD C.Z. BY ENERGY ABSORPTION SYSTEMS, INC.

TAU II BYB BARRIER SYSTEMS, INC.

SCI-70GM BY WORK AREA PROTECTION CORP.

**QUADGUARD WITH CONCRETE BACKUP
BY ENERGY ABSORPTION SYSTEMS, INC.**

Memorandum

Flex your power!
Be energy efficient!

To: GORDON DANKE
Design Branch Chief, Branch 9
Structure Design
Division of Engineering Services

Date: January 19, 2011

File: 05-SCr-9-PM8.0/8.8
Guardrail Upgrade
EA 05-0K2301

Attn: Rosa Candiotti

From: DEPARTMENT OF TRANSPORTATION
DIVISION OF ENGINEERING SERVICES
GEOTECHNICAL SERVICES

Subject: Foundation Report

Scope of Work

A Foundation Report (FR) is provided for a proposed Guardrail Upgrade along the northbound shoulder of Highway 9, PM 8.0/8.8, in Santa Cruz County, south of the Holiday Lane intersection (ATTACHMENT 1). The existing 410-foot metal beam guard railing (MBGR) along the northbound shoulder will be replaced by a Type 732 (Mod) or Type 27 concrete barrier. The concrete barrier will connect to an existing concrete barrier wall to the south. The new barrier will be constructed on top of either a reinforced concrete cap beam retaining wall or a viaduct that will allow four-foot wide shoulders. Both structures will be supported by 16 and 24 inch diameter Cast-in-Drilled-Hole (CIDH) piles respectively.

This report documents geotechnical subsurface conditions, including seismic Acceleration Response Spectrum analysis using the Caltrans online ARS program and site specific soil conditions. Geotechnical foundation recommendations are made for the above proposed structures based on field investigations, review of published geologic maps, previous geotechnical reports, and calculations pertinent to the foundation. Pile tip elevations are based on the loads provided by Structure Design in a Memorandum dated July 30, 2010, and documented subsurface geotechnical conditions.

This report supercedes the Preliminary Geotechnical Report dated August 19, 2002

Project Description

The proposed project is located in Santa Cruz County, on Highway 9, along a 300-foot radius curve immediately south of the intersection of Holiday Lane, PM 8.0/8.8. Within the project limits, Highway 9 is a 2-lane conventional highway which traverses mountainous terrain following the San Lorenzo River. The existing outside shoulder along this section of alignment

varies between 1.5-feet and four-feet wide and has longitudinal cracking and local subsidence from slope displacement below the highway. The MBGR extends from the existing concrete barrier at Station 13+77.98 to station 17+83.59 at Holiday Lane and is offset 1 to 3 feet from the slope hinge-point . The existing 0.5:1 to 0.75:1 slopes below the NB-lane are densely populated by mature Redwoods.

The proposed upgrade will require widening of the existing shoulder by one to four-feet, and replacement of the existing MBGR by a Type 732 concrete barrier with tubular bike railing. The new concrete barrier will be connected to an existing concrete barrier to the south and placed on top of a reinforced concrete cap beam supported by 16" diameter CIDH piles. A segment of the highway extending from stations 14+75.23 to 16+13.56 will utilize a side-hill viaduct supported by 24" CIDH piles at the bents and 16" diameter piles at the abutments. The cross slope of the northbound lane adjacent to the new wall will be modified to a maximum 6% grade, with a 2% maximum shoulder grade.

Field Investigation and Testing Program

Two rotary mud rock core borings and eight direct drive probes were advanced in August 2009, to characterize subsurface soils and rock and determine the approximate depth to bedrock along the length of the proposed project (ATTACHMENT 3). Direct drive probes were driven approximately 10 feet right of centerline between stations 14+35 to 17+85 where drill rig access was limited by overhead power lines.

The layer contacts established across the proposed construction area are estimated from geotechnical borings R-09-001 and R-09-002 and correlation of significant increases of time (seconds) to advance a 2 inch diameter point at one foot intervals. A second investigation was conducted along the slopes below the highway in November 2009 to assess the approximate depth to rock. The investigation used a whacker assisted 1-inch diameter probe limited to assessing approximate depth to refusal. Soils were characterized from one hand auger hole down to refusal in gravels at 8 feet below the slope surface. The results of these field investigations are summarized in the following section.

Laboratory Testing Program

Four soil samples were collected from near the surface and approximately 3 feet below the surface at borings R-09-001 and R-09-002 for corrosion testing. These samples were sent to the District 5 laboratory for testing of corrosive properties under the guidelines of California Test Method 643. The results are summarized under the corrosion evaluation section.

Site Geology and Subsurface Conditions

The project area is in the Santa Cruz Mountains within the Coast Ranges Geomorphic Province. The Santa Cruz Mountains are a 120 km-long, 20 km-wide mountain range that separates San

Francisco Bay and the Santa Clara Valley from the Pacific Ocean and Monterey Bay. Uplift of the Santa Cruz Mountains along folds and faults has exposed marine sandstones, mudstones, shales, and both intrusive and extrusive basaltic volcanic rocks. Rocks exposed west of the San Andreas Fault are Tertiary sedimentary and volcanic formations deposited in marine basins formed on older Salinian metamorphic and granitic bedrock. The Santa Cruz Mountains are divided by major strike-slip faults into a series of blocks that contain different stratigraphic sequences. The project area is within the Monterey Formation, locally characterized by micaceous sandy siltstone with interbedded mudstone (ATTACHMENT 2). This formation is locally overlain by Quaternary alluvium deposited by the San Lorenzo River, and colluvium, resulting from migration of soils and rock down slope, from the Monterey Formation. The later deposits are not identified in the geologic map but evident by their composition and heterogeneity. Depth to bedrock across the project site is about 30 feet. The Monterey Formation is locally treated as a cohesionless intermediate geomaterial (IGM) in this report because it is dominantly sandy and friable.

Borings R-09-001 and R-09-002 were completed at Sta. 14+78.69 and 13+86.6 approximately 10 feet right of centerline. From top down, soils consisted of 2 to 8 feet of loose SAND and GRAVEL (FILL), and 20 to 30 feet of medium dense to dense clayey SAND with GRAVEL and SILT (alluvial terrace deposits and colluvium), underlain by the Monterey Formation. The siltstone and interbedded claystone at this location is massive to very thickly bedded, intensely to slightly fractured and moderately weathered and soft. RQD in the upper 10 feet of the formation ranges from 2 to 30% and 40 to 90% beyond 10 feet.

Slope displacement, particularly along the southern to central portion of the north bound curve, is evident by observed cracking and subsidence of the road way. Slope failures are particularly susceptible during the winter months when the water table is elevated into the overlying soils. Shallow slope failures typically triggered by saturated conditions after long duration or high intensity rain, are characterized by mostly shallow (rock-soil interface) translational or debris flow type failures. Geotechnical reports and records show a long history of landslide repair along Route 9 on either side of the proposed project area.

Groundwater was observed shortly after completion of two observation wells. The wells were installed in borings R-09-001 and R-09-002. Initial ground water levels coincide roughly with the top of the IGM described in the geology section above. Ground water elevations are summarized in Table 1 below.

Table 1. Groundwater Elevations

Boring	Date	Groundwater Elevation(ft)	Depth to Groundwater (ft)
R-09-001	09/08/2009	**327.7**	**30.35**
R-09-002	09/08/2009	**330.3**	**23.36**

Corrosion Evaluation

Caltrans Corrosion Guidelines (2003) specify a site to be corrosive to foundation elements if one or more of the following conditions exist for the representative soil and/or water samples taken at the site: pH of less than 5.5, chloride content greater than 500 ppm, or sulphate content greater than 2000 ppm. Soluable salt content in a sample are inferred by the resistivity. Soil and/or water with a resistivity of less than a 1,000 ohms is considered corrosive.

Results show the local soils at surface and 3 foot depths for locations R-09-001 and R-09-002 to be non-corrosive. Structural treatment for corrosion, however, should be considered because soil pH values are near the threshold. The results are summarized in Table 1 below.

Table 1: Soil Corrosion Results

Boring	Depth (ft)	Resistance Ω/cm	pH
R-09-001	1.0	2120	**5.7**
	3.0	2980	**5.6**
R-09-002	1.0	4300	**5.9**
	3.0	2430	**6.0**

Seismic Recommendations

Site seismicity is based on the Caltrans Seismic Design Criteria which was revised in 2009. Faults are selected for the data base under the following criteria: 1) a fault is considered active if it has ruptured within the past 700,000 years (late-Quaternary to present), 2) the fault must be greater than or equal to 10 km (6.2 miles), and 3) the fault must have a Maximum Moment Magnitude of 6.0 or greater. Based on this criteria, the Santa Cruz Mountain section of the San Andreas Fault Zone (SAFZ) is the controlling fault for site seismicity. The SAFZ is approximately 8 miles northeast of the site with a Maximum Moment Magnitude of 7.9.

The Caltrans Acceleration Response Spectrum (ARS) On-line program was used to generate deterministic and probabilistic site-specific spectral acceleration curves. The average shear wave velocity (Vs_{30}) in the upper 30 meters (100 feet) of soil at the site is was determined from Standard Penetration Test (SPT) correlation equations. Soils at the site have an average shear wave velocity of Vs_{30}= 320 m/s (1,050 ft/s) for the upper 100 feet of soil. A near-fault factor was applied given that the site is within the 25 km (15.5 mi) distance threshold. The corresponding design envelope ARS curve is presented in Figure 1.

Liquefaction is a process where saturated sediments temporarily lose strength and behave as a viscous liquid in response to earthquake shaking. The presence of liquefiable zones may affect the design of Caltrans structures and need to be identified prior to design. Liquefaction occurs primarily in sediments below the water table, usually at depths shallower than 50 feet. Liquefaction occurs primarily in loose, clean, fine alluvial sands, areas of dense soils, fine-grained soils (silts and clays), coarse sands and gravels, residual soils and rock are unlikely to liquefy.

Liquefaction is not expected to occur because of favorable soil conditions, summarized in the geology section above.

Table 2. Active and Potentially Active Faults

Fault Name	*Fault Type*	*Moment magnitude of maximum credible earthquake*	*Peak ground acceleration T=0 sec (gravity)*
San Andreas Fault (Santa Cruz Mountain section)	RLSS	7.9	**0.47**
Zayante-Vergales Fault	RLSS	7.0	**0.60**

Figure 1. Seismic Spectra for SCr-009-8.5/8.8

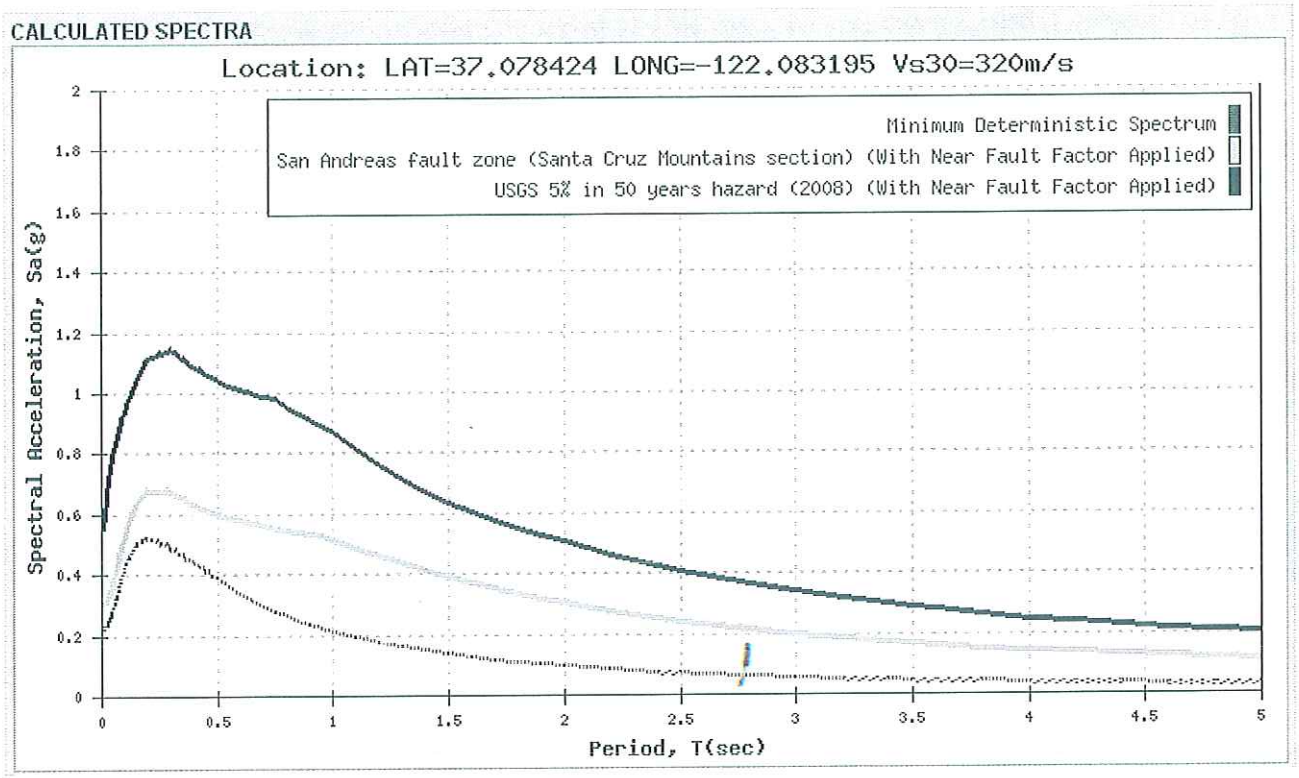

Design Envelope for SCr-009-8.5/8.8

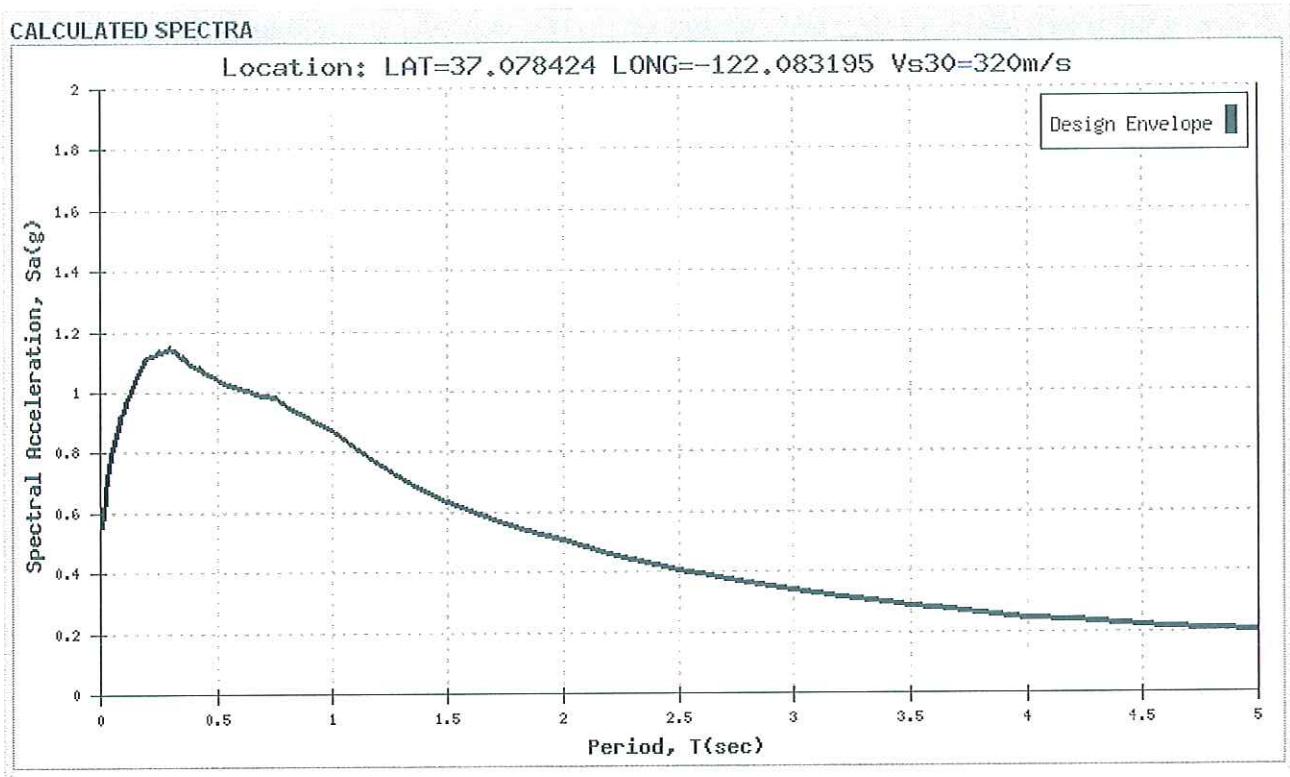

As-Built Foundation Data

As-built foundation data exists for the pile and tie-back Type 27SV concrete barrier wall at post mile 8.4 (southern end of proposed project start). The pile and tie-back portion of the barrier was constructed on 24-inch diameter CIDH piles at 8-foot spacing. The remaining 71 feet of wall (ending a station 13+77.38) was constructed on 16-inch diameter CIDH piles as a Type 27SV barrier. The Log of Test Borings (LOTB), show correlative conditions to those described in the geology section above. Friable sandstone and micaceous siltstone were logged between 300 to 310 foot elevations (approximately 20 feet below the surface. CLAY, SILT, GRAVEL, and COBBLES (described as FILL) are shown to overly formation strata. An as-built note on the general plan sheet indicates that some piles were shorter than 40 feet because of "extremely hard" drilling at depth.

Foundation Recommendations

Structures Design proposes construction of a Type 732 (Mod) concrete barrier on top of a combined concrete cap beam and side-hill viaduct supported on 16-inch and 24-inch CIDH piles respectively. Design calculations for all piles used the Beta Method prescribed in the most recent 2010 FHWA- Drilled Shafts publication (FHWA-NHI-10-16). Groundwater was conservatively estimated to be 10 feet higher than measurements recorded in September 2009. Working Stress Design (WSD) methodology was applied to the abutments and retaining wall piles with a safety factor of 2.0 for axial compression and tension resistance. The Load Resistance Factor Design

(LRFD) methodology was applied to the viaduct bent piles using the Caltrans AASHTO amended resistance factor of 0.7 (Sect. 10: California Amendments to AASHTO LRFD Bridge Design Specifications-Fourth Addition). Structures Design provided cutoff elevations, and loads. The piles will derive support primarily in skin friction in the cohesionless soils and intermediate geomaterials. Recommended pile tip elevations are provided in the tables below.

The specified maximum design load on the cap beam CIDH piles for the retaining wall is 40 kips. Using side resistance of the overlying soils and conservative groundwater elevations 10 feet higher than recorded elevations, pile tip elevations should be 19 feet below the cut-off elevation for all piles.

Subsidence beneath the existing NB-lane of Highway 9 is attributed to lateral spreading of loose FILL material and/or slope-wash debris. Based on drilling observations at the south end, this displacement appears to be occurring at about 5 to 6 feet below the existing highway. The viaduct cut-off wall should be constructed to a minimum depth of 6.5 feet to guard the bents from erosion.

Abutment Foundations Design Recommendations

Support Location	Pile Type	Cut-off Elevation (ft)	LRFD Service-I Limit State Load (kips) per Support		Strength Limit State Total Load (kips) per Pile (Compression)	Required Nominal Resistance (kips) (SF=2.0)	Design Tip Elevations (ft)	Specified Tip Elevation (ft)
			Total	Permanent				
Abut. 1	16" CIDH	350.68	90	35	41	90	333(a), 331(c)	331
Abut. 6	16" CIDH	353.11	90	35	41	90	336(a), 334(c)	334

Notes:
1) *Design tip elevations are controlled by: (a) Compression, and (c) Settlement, respectively.*
2) *The CIDH specified tip elevation shall not be raised.*

Bent Foundations Design Recommendations

Support Location	Pile Type	Cut-off Elevation (ft)	Service-I Limit State Load per Support (kips)	Total Permissible Support Settlement (inches)	Required Factored Nominal Resistance (kips)				Design Tip Elevations (ft)	Specified Tip Elevation (ft)	Nominal Driving Resistance Required (kips)
					Strength Limit		Extreme Event				
					Comp. (φ=0.7)	Tension (φ=0.7)	Comp. (φ=1)	Tension (φ=1)			
Bent 2	24" CIDH	352.8	210	1	400	0	80	0	318*(a-I)* 336*(a-II)* 318*(c)*	318	N/A
Bent 3	24" CIDH	353.53	210	1	400	0	80	0	319*(a-I)* 337*(a-II)* 319*(c)*	319	N/A
Bent 4	24" CIDH	354.01	210	1	400	0	80	0	319*(a-I)* 337*(a-II)* 318*(c)*	319	N/A
Bent 5	24" CIDH	354.23	210	1	400	0	80	0	319*(a-I)* 337*(a-II)* 318*(c)*	319	N/A

Notes:

1) *Design tip elevations are controlled by: (a-I) Compression (Strength Limit), (a-II) Compression (Extreme Event), (b-II) Tension (Extreme Event), (c) Settlement.*
2) *The specified tip elevation shall not be raised.*

Pile Data Table					
Location	Pile Type	Required Nominal Resistance (kips)		Design Tip Elevation (ft)	Specified Tip Elevation (ft)
		Compression	Tension		
Abut. 1	CIDH	90	0	333(a), 331(c)	331
Bent 2	CIDH	400	0	318 (a-I), 336(a-II), 318(c)	318
Bent 3	CIDH	400	0	319 (a-I), 337(a-II), 318(c)	319
Bent 4	CIDH	400	0	319 (a-I), 337(a-II), 318(c)	319
Bent 5	CIDH	400	0	319 (a-I), 337(a-II), 318(c)	319
Abut. 6	CIDH	90	0	336(a), 334(c)	334

Notes:

1) *Design tip elevations for Abutments are controlled by: (a) Compression and (c) Settlement.*
2) *Design tip elevations for Bents are controlled by: (a-I) Compression (Strength Limit), (a-II) Compression (Extreme Event), and (c) Settlement.*
3) *The specified tip elevation shall not be raised.*

Special Considerations for CIDH piles

The need for casing during construction will be contingent upon the time of year. During the winter months, anticipated higher groundwater elevations may cause some caving. Loose soils in the upper 10 feet may also require casing even in the absence of water.

Approach Fill Earthwork

Native soils contain both granitic alluvial gravels and silty and/or argillaceous slope wash from the local Monterey Formation. The later material readily weathers into clayey sand. Careful consideration should be taken in the selection of borrowed materials in order to achieve optimum compaction. Geotechnical Services should be contacted for inspection and/or testing, if a significant volume of native soils are borrowed for backfill along the retaining wall or approach fill at the viaduct.

Construction Considerations

Excavation of the 24-inch diameter CIDH pile holes for the viaduct will penetrate IGM (mostly friable micaceous siltstone). The RQD varies between 10% and 90%; poorest in the weathered zone at top. Difficult drilling may be encountered at depths beyond 25 feet below the surface Groundwater is also anticipated to be intersected at elevations below the IGM contact (varies on

average between 25 to 30 feet below the existing grade). Grout should be tremmied in wet conditions.

If you have any questions or comments, please contact Mike Jurasius at (805) 549-3729 or Michael Finegan at (805) 549-3194.

PROFESSIONAL GEOLOGIST
M.J. JURASIUS
No. 8618
Exp. 3/31/11
STATE OF CALIFORNIA

MICHAEL J JURASIUS, PG
Engineering Geologist
Geotechnical Design – North
Branch D

REGISTERED PROFESSIONAL ENGINEER
MICHAEL S. FINEGAN
No. C050138
Exp. 6/30/11
CIVIL
STATE OF CALIFORNIA

MICHAEL S. FINEGAN, P.E., CHIEF
Geotechnical Design – North
Branch D

c: Roy Bibbens / GDN Records
Job File / Branch D Records
GS Corporate (email Mark_Willian@dot.ca.gov)
Ken Dostalek / Project Manager
Structure Construction RE Pending File (email RE_pending_file@dot.ca.gov)
Kelly Holden / DES Office Engineer
Andrew Tan / PCE

Project Information

Standard Special Provision S5-280, "Project Information", discloses to bidders and contractors a list of pertinent information available for their inspection prior to bid opening. The Departiment makes the following supplemental project information available:

Supplemental Project Information

Means	Description
Included in the Information Handout	Foundation Report for the Holiday Lane Viaduct dated December 23, 2010.
Available for inspection at the District Office	Rock Core
Available for inspection at the Transportation Laboratory	None
Available for inspection at ____; telephone (___) –	None
Available as specified in the Standard Specifications	
Available at: http://www. Dot.ca.gov/hq/esc/oe/weekly_ads/index.php	

Items listed to be included in the information Handout will be provided in Acrobat (.pdf) format to the Addressee of this report via electronic mail.

References

1. Appelbaum, D. (2004), *Memo: Slope Failure Below Northbound Lane, 05-SCr-009-8.27.*

2. Ballentine, M. (2002), *Preliminary Geotechnical Design Report, Slope Stabilization*, EA 05-937500, Caltrans.

3. Ballentine, M. (2002), *Preliminary Geotechnical Design Report (Supplemental), Guardrail Upgrade*, EA 05-0K2300.

4. Brabb, E. E. , Graham, S. E. , Wentworth, C., Knifong, D., Graymer, R., and Blissenbach, J., (1997), Geologic map of Santa Cruz county, California: A digital database: U.S. Geological Survey Open-File Report 97-489.

5. Mualchin, L. (1996), *California Seismic Hazard Map 1996,* Caltrans.

6. Geotechnical Investigation Report, Storm Damage Repair Along Route 9 at PM 8.11, Santa Cruz County, California, Psomas & Associates, 1998.

ATTACHMENTS

Site Location Map	ATTACHMENT 1
Geologic Map and Legend	ATTACHMENT 2
Geotechnical Subsurface Investigation Map	ATTACHMENT 3
General Plan Sheet	ATTACHMENT 4
Acceleration Response Spectrum Data	ATTACHMENT 5

INDEX OF PLANS

STATE OF CALIFORNIA
DEPARTMENT OF TRANSPORTATION

PROJECT PLANS FOR CONSTRUCTION ON
STATE HIGHWAY

IN SANTA CRUZ COUNTY
NEAR BEN LOMOND
0.3 MILES NORTH OF GLEN ARBOR ROAD

TO BE SUPPLEMENTED BY STANDARD PLANS DATED MAY 2006

Dist	COUNTY	ROUTE	POST MILES TOTAL PROJECT	SHEET NO.	TOTAL SHEETS
05	SCr	9	8.0/8.8		

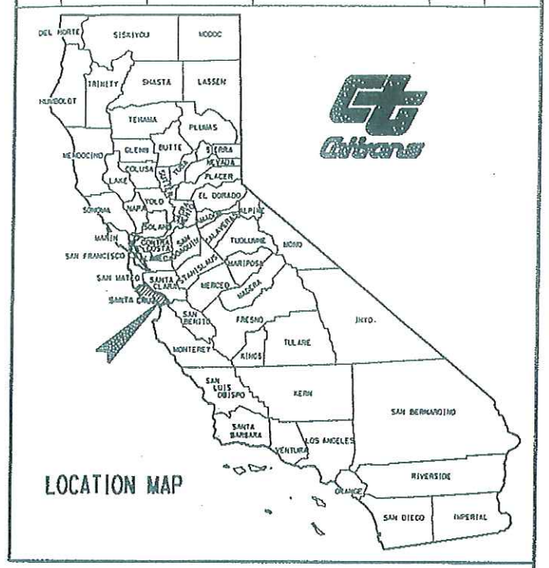

LOCATION MAP

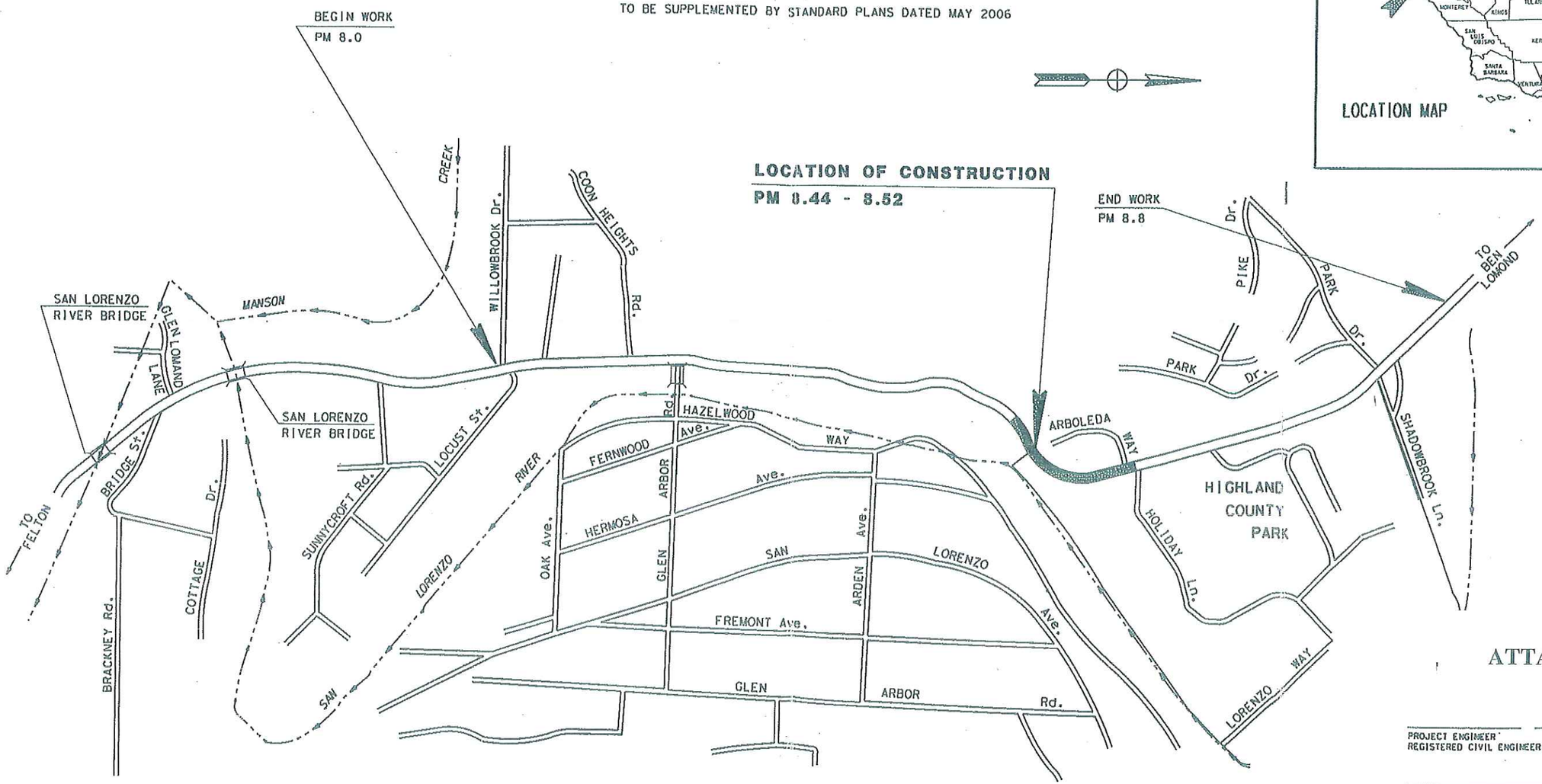

ATTACHMENT 1

PROJECT ENGINEER DATE
REGISTERED CIVIL ENGINEER

PLANS APPROVAL DATE

REGISTERED PROFESSIONAL ENGINEER
No.
Exp.
CIVIL
STATE OF CALIFORNIA

THE STATE OF CALIFORNIA OR ITS OFFICERS OR AGENTS SHALL NOT BE RESPONSIBLE FOR THE ACCURACY OR COMPLETENESS OF ELECTRONIC COPIES OF THIS PLAN SHEET.

THE CONTRACTOR SHALL POSSESS THE CLASS (OR CLASSES) OF LICENSE AS SPECIFIED IN THE "NOTICE TO CONTRACTORS."

PROJECT MANAGER: S. DiGrazia
DESIGN ENGINEER: Albert Aji

LAST REVISION 07-03-07
DATE PLOTTED => SCATE
TIME

CONTRACT No.
CU 06258 EA 0K2300

CALTRANS WEB SITE IS: HTTP//WWW.DOT.CA.GOV/

RELATIVE BORDER SCALE IS IN INCHES 0 1 2 3

USERNAME => $USER
DGN FILE => $REQUEST

Geologic Map: Santa Cruz County, Hwy 9, PM 8.44-8.52

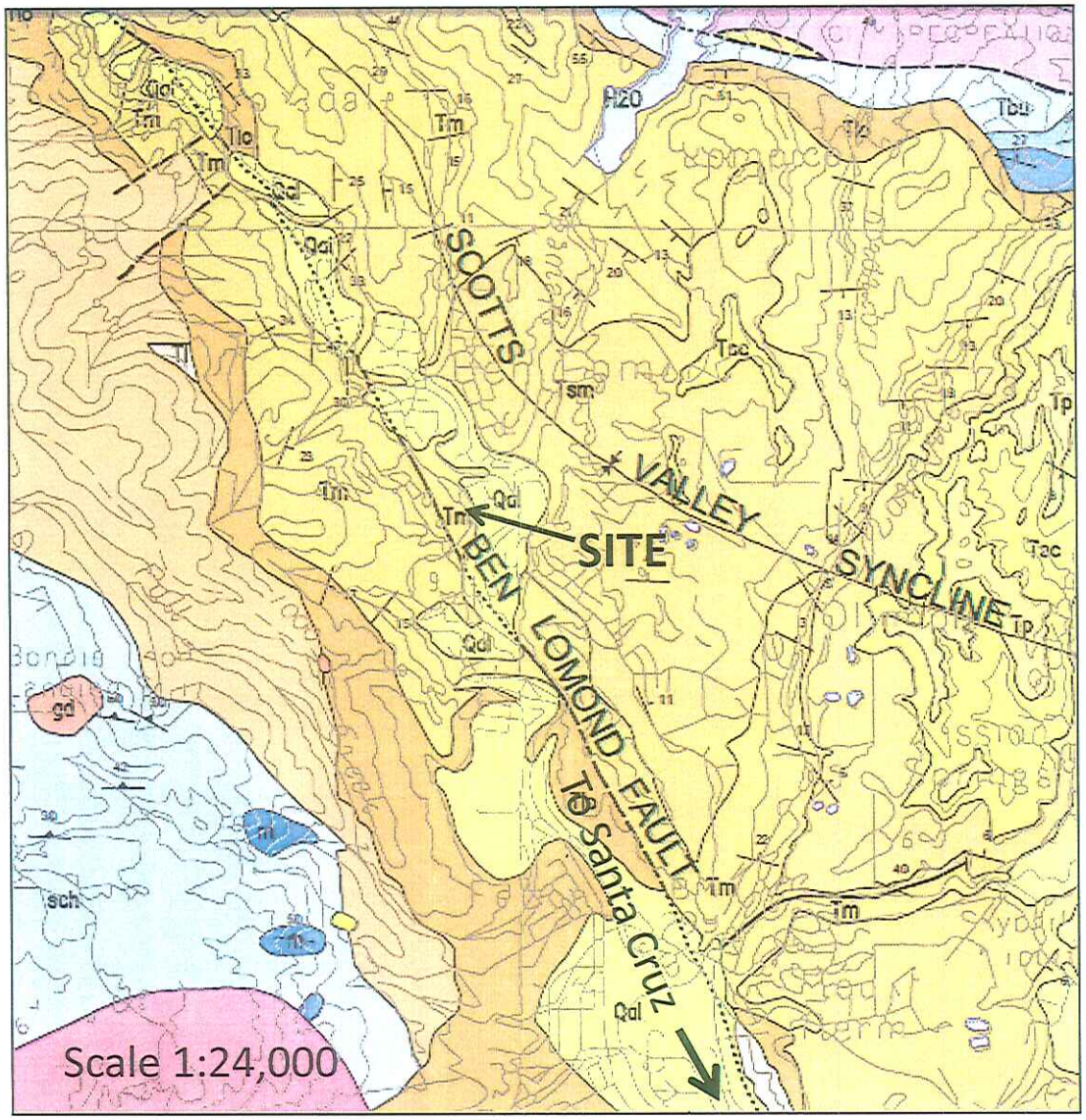

Modified from Brabb, 1989

Geologic Legend

Qal — Alluvial deposits, undifferentiated (Holocene) Unconsolidated, silt, sand, and gravel.

Tsc — Santa Cruz Mudstone (upper Miocene) Medium to thickly bedded siliceous organic mucstone.

Tsm — Santa Margarita Sandstone (Upper Miocene) Very thickly bedded to massive thickly cross-Bedded arkosic sandstone, locally calcareous And bituminous.

Tm — Monterey Formation (middle Miocene) Medium to thickly bedded, semisiliceous Organic mudstone and sandy siltstone.

Tl — Lompico Sandstone (middle Miocene) Thick bedded to massive calcareous arkosic Sandstone; locally friable.

Intrusive and Metamorphic Rocks

qd — Quartz diorite (Cretaceous) – Grades to grano-diorite south and east of Ben Lomond Mountain

sch — Metasedimentary rocks (Mesozoic or Paleozoic) Mainly pelitic schist and quartzite.

m — Marble (Mesozoic and Paleozoic)- Locally contains interbedded schist and calc-silicate rocks.

Structural Symbols

Fault – dashed where inferred; dotted where burried

80 — Strike and dip of bedding

ATTACHMENT 2

Dist	COUNTY	LOCATION CODE	POST MILES TOTAL PROJECT	SHEET No.	TOTAL SHEETS

REGISTERED CIVIL ENGINEER DATE

PLANS APPROVAL DATE

REGISTERED PROFESSIONAL ENGINEER No. Exp. CIVIL STATE OF CALIFORNIA

THE STATE OF CALIFORNIA OR ITS OFFICERS OR AGENTS SHALL NOT BE RESPONSIBLE FOR THE ACCURACY OR COMPLETENESS OF ELECTRONIC COPIES OF THIS PLAN SHEET.

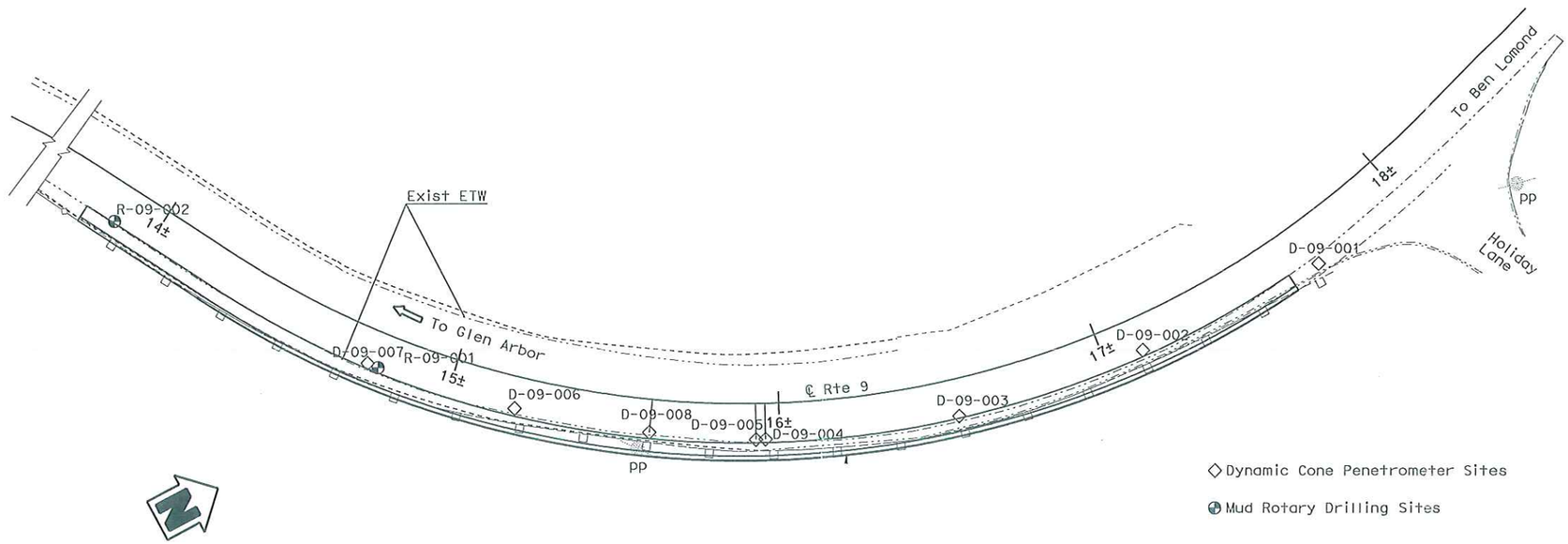

PLAN

1":20'

ATTACHMENT 3

REVISED BY	DATE REVISED

CALCULATED-DESIGNED BY	CHECKED BY

FUNCTIONAL SUPERVISOR

STATE OF CALIFORNIA - DEPARTMENT OF TRANSPORTATION

Caltrans

LAST REVISION 00-00-00 | DATE PLOTTED => 02-DEC-2010 | TIME PLOTTED => 07:46

BORDER LAST REVISED 3/1/2007 | RELATIVE BORDER SCALE IS IN INCHES 0 1 2 3 | USERNAME => s136707 | DGN FILE => Rte9-PM8.5borings.dgn | CU 00000 | EA 000000

DIST	COUNTY	ROUTE	POST MILES TOTAL PROJECT	SHEET No	TOTAL SHEETS
05	SCr	9			

REGISTERED CIVIL ENGINEER X DATE

PLANS APPROVAL DATE

The State of California or its officers or agents shall not be responsible for the accuracy or completeness of electronic copies of this plan sheet.

REGISTERED PROFESSIONAL ENGINEER Rosa Candiotti No. C64626 Exp. 6-30-2011 CIVIL STATE OF CALIFORNIA

PROFILE GRADE

No Scale

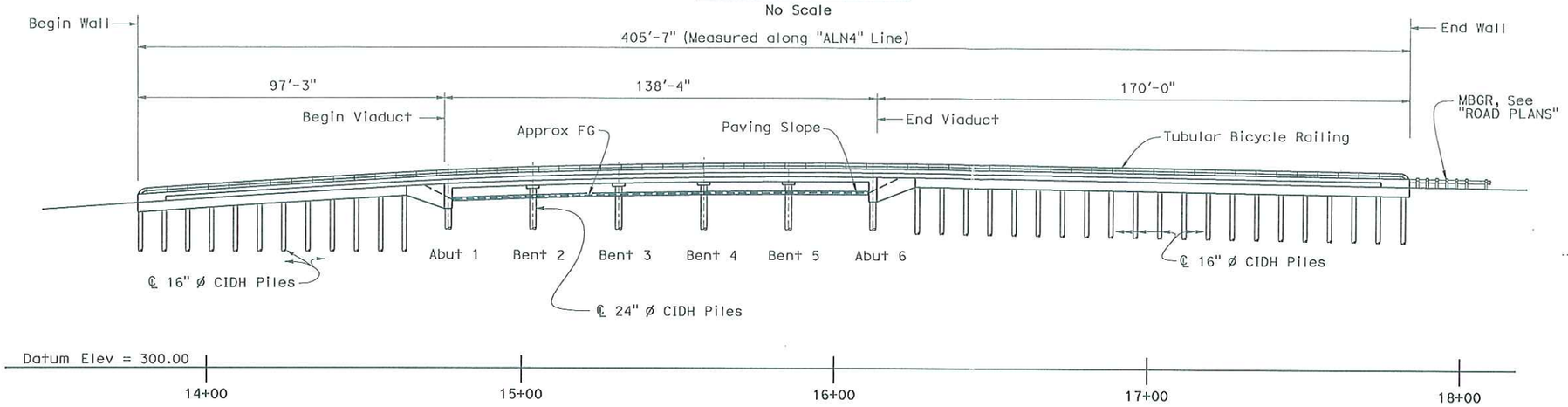

DEVELOPED ELEVATION

1" = 20'

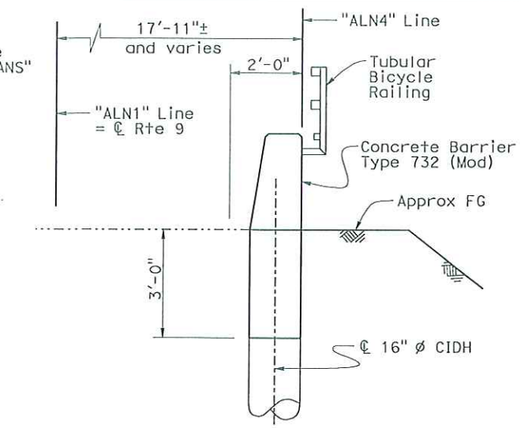

TYPICAL SECTION - WALL

½" = 1'-0"

CURVE DATA

NO.	R	Δ	T	L
Ⓐ	251.23	32°41'42"	73.69	143.36
Ⓑ	289.90	78°23'36"	236.40	396.64
Ⓒ	307.31	65°56'38"	199.36	353.70

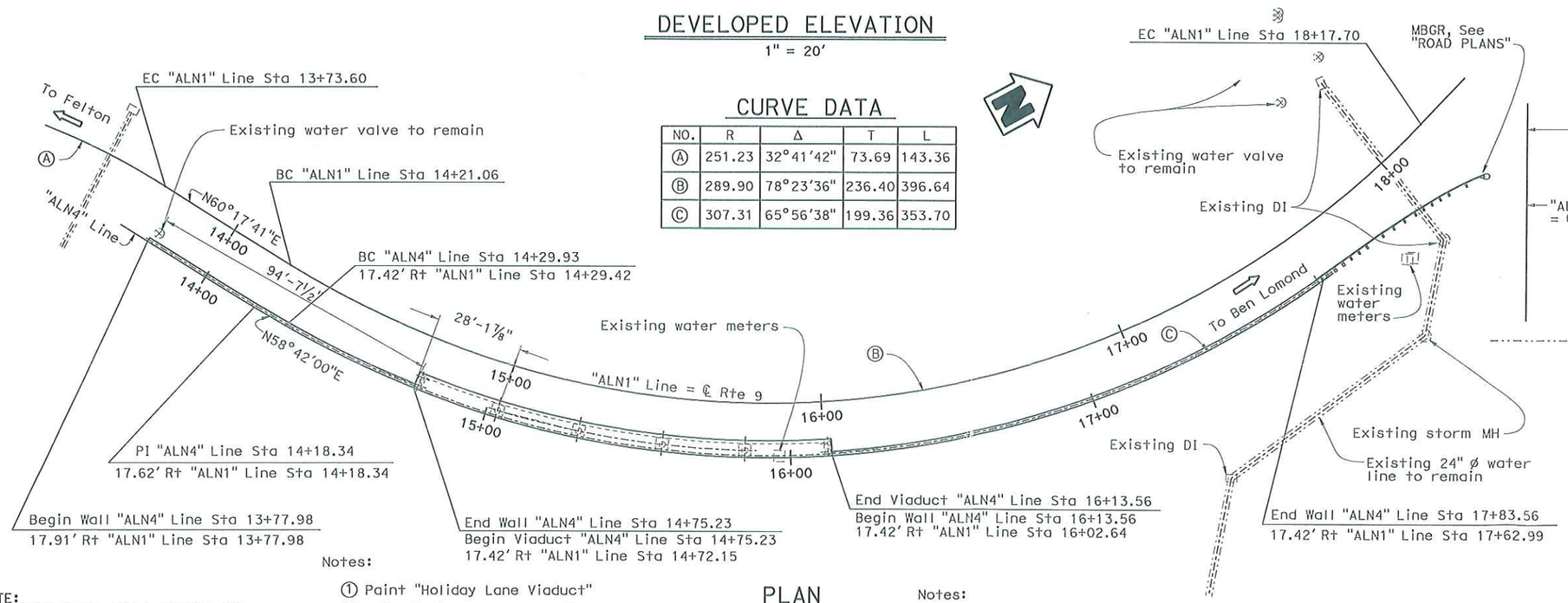

Notes:

① Paint "Holiday Lane Viaduct"

② Paint "Bridge No. 36-0111"

-·-·- Denotes existing

PLAN

1" = 20'

Notes:

1. For Index to Plans, General Notes, Standard Plans List and Pile Data, see "INDEX TO PLANS" sheet.

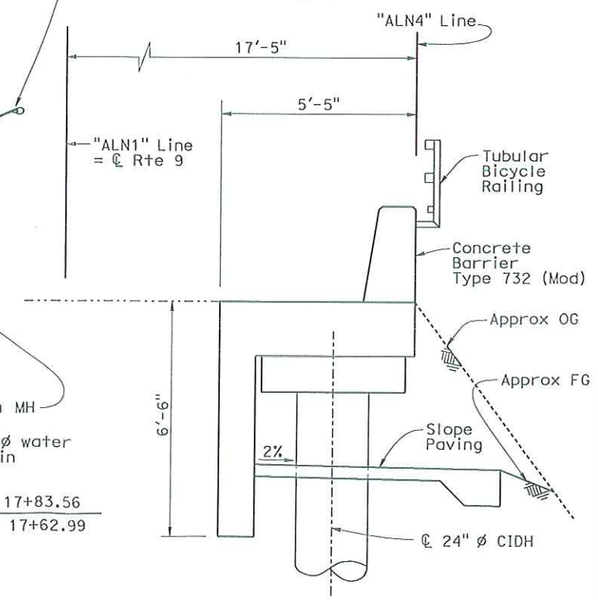

TYPICAL SECTION - VIADUCT

½" = 1'-0"

NOTE:
THE CONTRACTOR SHALL VERIFY ALL CONTROLLING FIELD DIMENSIONS BEFORE ORDERING OR FABRICATING ANY MATERIAL.

X DESIGN ENGINEER	DESIGN	BY R. Candiotti	CHECKED X	LOAD & RESISTANCE FACTOR DESIGN	LIVE LOADING: HL93 W/"LOW-BOY"; PERMIT DESIGN VEHICLE
	DETAILS	BY D. Elliott	CHECKED X	LAYOUT BY D. Elliott	CHECKED X
	QUANTITIES	BY X	CHECKED X	SPECIFICATIONS BY X	PLANS AND SPECS COMPARED X

ORIGINAL SCALE IN INCHES FOR REDUCED PLANS 0 1 2 3

STATE OF CALIFORNIA DEPARTMENT OF TRANSPORTATION

DIVISION OF ENGINEERING SERVICES STRUCTURE DESIGN DESIGN BRANCH 9

CU 06 EA 0K2301

BRIDGE NO. 36-0111 POST MILE 8.0/8.8

HOLIDAY LANE VIADUCT

GENERAL PLAN ATTACHMENT 4

DISREGARD PRINTS BEARING EARLIER REVISION DATES → REVISION DATES 5-28-10 6-8-10 6-18-10 7-14-10 7-30-10

SHEET 1 OF X

FILE => 36-0111-a-gp8_19_10.dgn

STRUCTURES DESIGN GENERAL PLAN SHEET (ENGLISH) (REV.07-24-06)

USERNAME => s136707 DATE PLOTTED => 02-DEC-2010 TIME PLOTTED => 08:31

Holiday Lane Viaduct

Bridge No. 36-0111 **SDC 1.5 Controlling Procedure : Probabalistic**

Period (s)	SDC 1.5
0.010	0.307
0.020	0.312
0.022	0.315
0.025	0.320
0.029	0.325
0.030	0.327
0.032	0.331
0.035	0.338
0.036	0.340
0.040	0.349
0.042	0.353
0.044	0.358
0.045	0.360
0.046	0.362
0.048	0.367
0.050	0.372
0.055	0.386
0.060	0.401
0.065	0.415
0.067	0.421

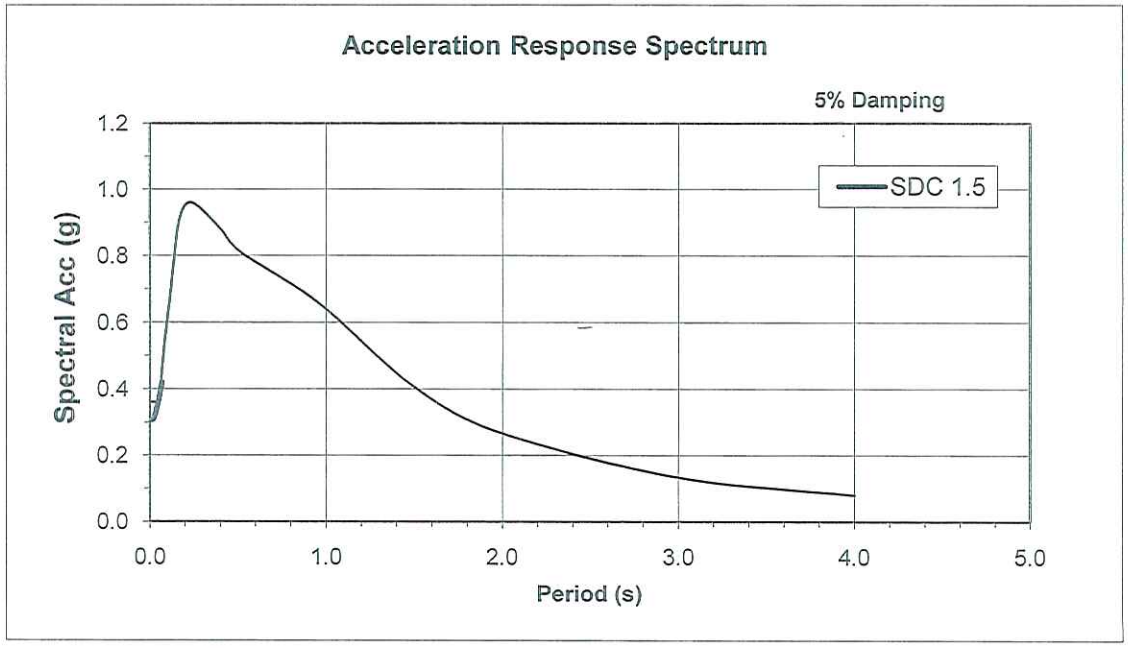

Deterministic Procedure Data

Fault	San Andreas Fault (Santa Cruz Mountains section)		R_{rup}	13.00	km
Fault ID	310		R_{jb}	13.00	km
Style	Strike-Slip		R_x	13.00	km
Mmax	7.9		V_{S30}	320.00	m/s
Dip	90	deg	$Z_{1.0}$	0	m
Z_{TOR}	0	km	$Z_{2.5}$	0.00	km

Notes

ARS curve was modified for Near Fault Directivity Effect (SDC Ver. 1.4 Section 6.1.2.1)

Dist	COUNTY	LOCATION CODE	POST MILES TOTAL PROJECT	SHEET No.	TOTAL SHEETS

Theresa Gabriel 12-20-07
REGISTERED CIVIL ENGINEER DATE

PLANS APPROVAL DATE

REGISTERED PROFESSIONAL ENGINEER Theresa A. Gabriel No. E15129 Exp. 6-30-10 ELECT STATE OF CALIFORNIA

THE STATE OF CALIFORNIA OR ITS OFFICERS OR AGENTS SHALL NOT BE RESPONSIBLE FOR THE ACCURACY OR COMPLETENESS OF SCANNED COPIES OF THIS PLAN SHEET.

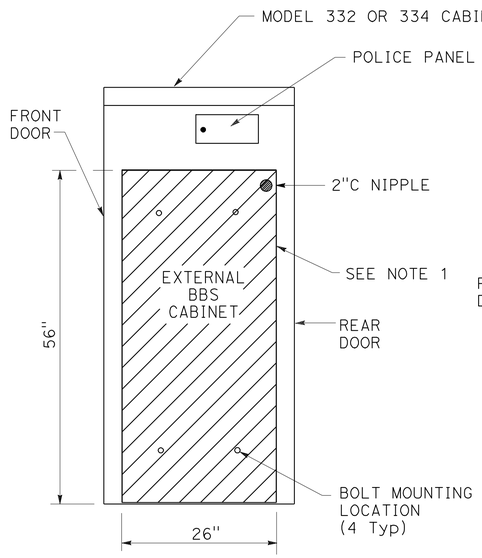

SIDE VIEW

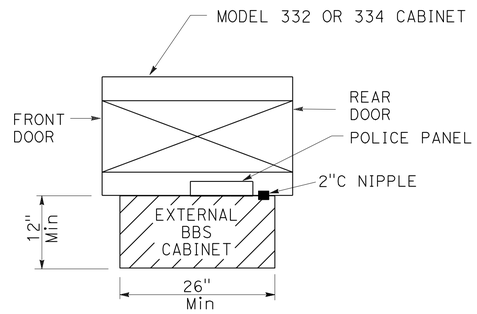

TOP VIEW

EXTERNAL BBS CABINET MOUNTED TO THE MODEL 332 OR 334 CABINET

NOTE: (THIS SHEET ONLY)

1. THE EXTERNAL BBS CABINET SHALL BE MOUNTED TO THE MODEL 332 OR 334 CABINET WITH FOUR 18-8 STAINLESS STEEL HEX HEAD, FULLY-THREADED, 3/8"-16 X 1" BOLTS; TWO WASHERS PER BOLT, DESIGNED FOR 3/8" BOLTS AND ARE 18-8 STAINLESS STEEL, 1" OUTSIDE DIAMETER, ROUND, AND FLAT; AND ONE K-LOCK NUT PER BOLT THAT IS 18-8 STAINLESS STEEL AND A HEX-NUT. THE ENGINEER WILL HAVE TO APPROVE THE BOLT MOUNTING LOCATION PRIOR TO INSTALLATION.
2. THE ANCHOR BOLTS SHALL BE 3/4" Dia X 15" WITH A 2"-90° BEND. THE CABINET MANUFACTURER'S SPECIFICATION SHALL DETERMINE THE LOCATION OF THE ANCHOR BOLTS IN THE FOUNDATION. THE ENGINEER WILL HAVE TO APPROVE THE ANCHOR BOLTS AND ITS LOCATION IN THE FOUNDATION PRIOR TO CONSTRUCTION.
3. THE CONTRACTOR SHALL VERIFY THE DIMENSIONS OF THE BBS CABINET PRIOR TO CONSTRUCTING THE FOUNDATION OF THE MODIFIED PORTION OF THE Std MODEL 332 AND 334 CABINET FOUNDATION. THE ENGINEER WILL HAVE TO APPROVE ANY NECESSARY DEVIATIONS PRIOR TO CONSTRUCTION.
4. ALL DIMENSIONS ARE NOMINAL.

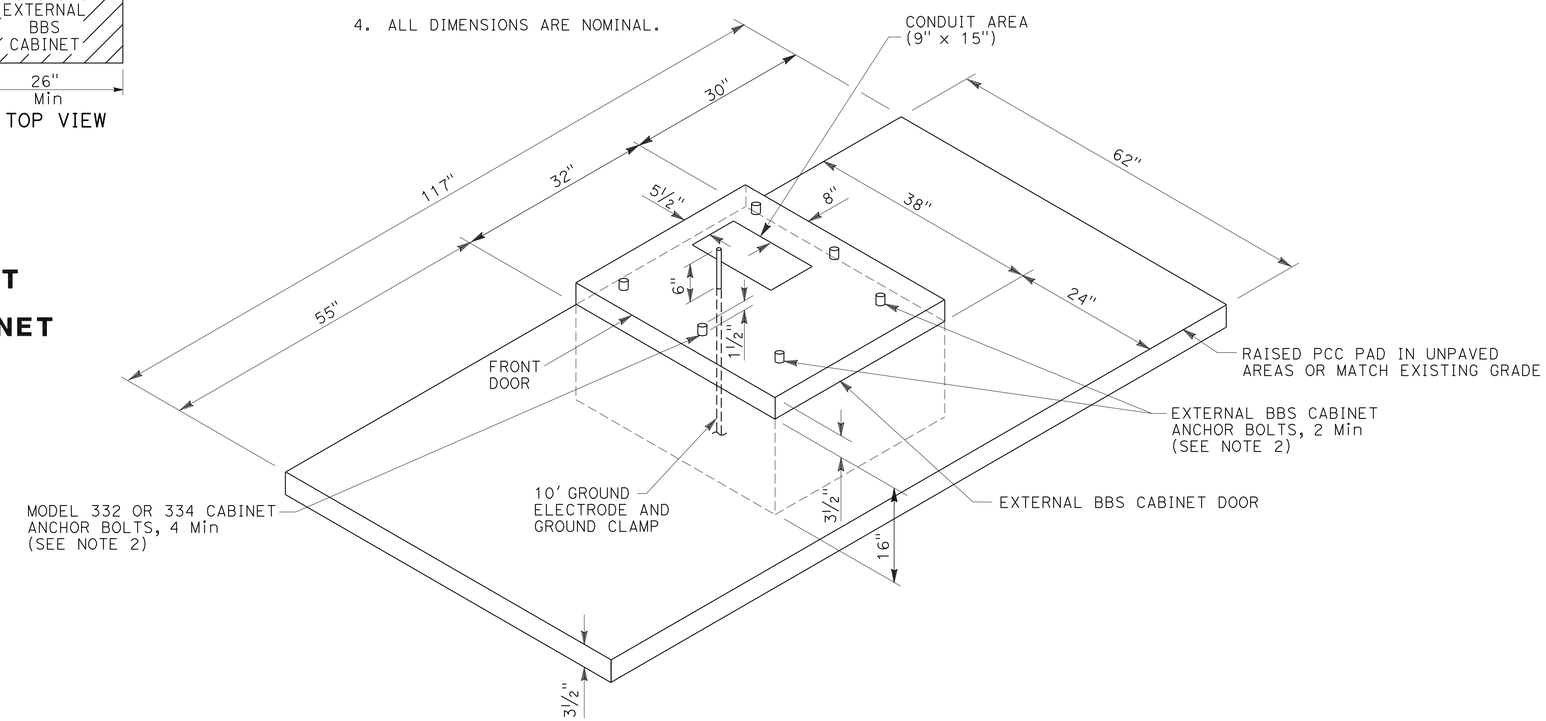

MODIFIED MODEL 332 AND 334 CABINET FOUNDATION DETAIL FOR BATTERY BACKUP SYSTEM (BBS)

(FOR DIMENSIONS AND DETAILS NOT SHOWN AND ADDITIONAL NOTES, SEE SHEET ES-3C OF THE STANDARD PLANS FOR MODEL 332 AND 334 CABINETS)

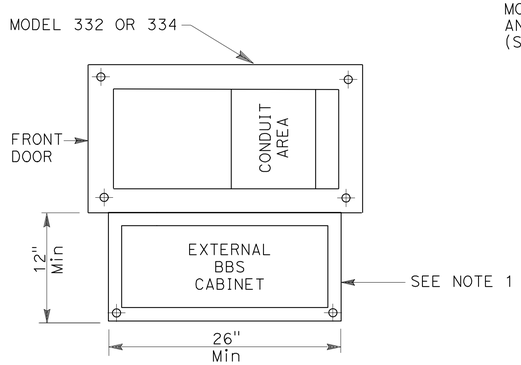

BASE PLAN FOR BBS MOUNTED TO THE MODEL 332 OR 334 CABINET

(FOR DIMENSIONS AND DETAILS NOT SHOWN, SEE SHEET A6-1 TO A6-4, CABINET HOUSING DETAILS OF THE TRANSPORTATION ELECTRICAL EQUIPMENT SPECIFICATION (TEES))

ELECTRICAL SYSTEMS
(BBS FOUNDATION DETAILS)

NO SCALE

THIS PLAN IS ACCURATE FOR ELECTRICAL WORK ONLY.

REVISED BY | DATE REVISED | CALCULATED-DESIGNED BY | CHECKED BY | FUNCTIONAL SUPERVISOR

STATE OF CALIFORNIA - DEPARTMENT OF TRANSPORTATION

Caltrans

LAST REVISION 2-2-09 | DATE PLOTTED => 13-APR-2010 | TIME PLOTTED => 11:41

Dist	COUNTY	LOCATION CODE	POST MILES TOTAL PROJECT	SHEET No.	TOTAL SHEETS

Theresa Gabriel 12-20-07
REGISTERED CIVIL ENGINEER DATE

PLANS APPROVAL DATE

REGISTERED PROFESSIONAL ENGINEER Theresa A. Gabriel No. E15129 Exp. 6-30-10 ELECT STATE OF CALIFORNIA

THE STATE OF CALIFORNIA OR ITS OFFICERS OR AGENTS SHALL NOT BE RESPONSIBLE FOR THE ACCURACY OR COMPLETENESS OF SCANNED COPIES OF THIS PLAN SHEET.

LEGEND: (THIS SHEET ONLY)

PTS = POWER TRANSFER SWITCH
UPS = UNINTERRUPTIBLE POWER SUPPLY
UPSC = UNINTERRUPTIBLE POWER SUPPLY CONTROLLER
UPSM = UPS MODE
BP = BYPASS
MBPS = MANUAL BYPASS SWITCH
AC+ = UNGROUNDED CONDUCTOR
AC- = GROUNDED CONDUCTOR
C = COMMON
Grn = GREEN
Blk = BLACK
Wht = WHITE
SF = STATE-FURNISHED
TB = TERMINAL BOARD
Cntl = CONTROL
Gnd = GROUND
Temp = TEMPERATURE
Batt = BATTERY

NOTES: (THIS SHEET ONLY)

1. TYPE A REFERS TO THE BBS EQUIPMENT FROM MANUFACTURER A.
2. CASE-1 REFERS TO THE SITUATION WHEN THE ENTIRE BBS EQUIPMENT INCLUDING THE BATTERIES ARE INSTALLED IN THE BBS CABINET.
3. THE LOCATION OF THE 2"C NIPPLE WILL BE DETERMINED BY THE ENGINEER IN THE FIELD.
4. THE CONTRACTOR SHALL FURNISH AND INSTALL A NEMA-1 ENCLOSURE WITH 30 A, 1P, 120/240 VOLTS RATED CIRCUIT BREAKER MANUFACTURED PER UL STANDARD 489.
5. A TEMPERATURE PROBE SHALL BE ATTACHED TO THE BATTERY BY TAPE OR ATTACHED TO THE NEGATIVE TERMINAL OF THE BATTERY.
6. THE ELECTRICAL POWER FOR THE COOLING FAN FOR THE BBS CABINET SHALL BE TAPPED FROM THE BOTTOM OF THE TB IN THE 332 CABINET.
7. THE CONTRACTOR SHALL PROVIDE A 9-WIRE WIRING HARNESS OR BUNDLED 9 MULTICOLOR CONDUCTORS, #18 AWG WIRES FROM THE RELAY ON THE INVERTER/CHARGER UNIT TO THE CONTROLLER. THE ENDS OF THE CONDUCTORS SHALL BE INSULATED WITH TAPE AND A SIX-FOOT COIL ON EACH END.

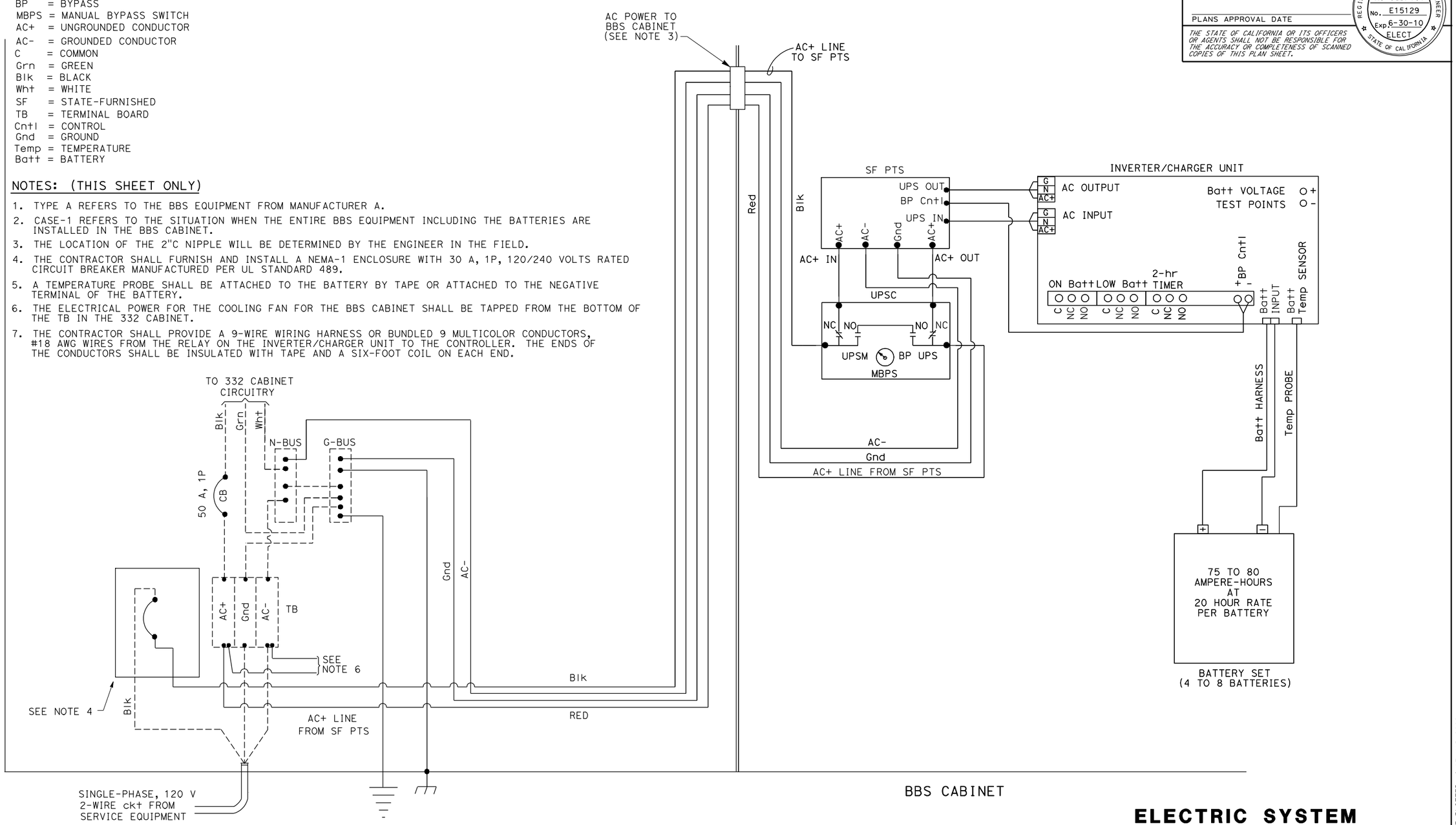

ELECTRIC SYSTEM
(BBS POWER CONNECTION DIAGRAM, TYPE A, CASE-1)

REVISED BY | DATE REVISED
CALCULATED-DESIGNED BY | CHECKED BY
FUNCTIONAL SUPERVISOR
STATE OF CALIFORNIA - DEPARTMENT OF TRANSPORTATION
Caltrans

LAST REVISION 3-11-09 | DATE PLOTTED => 13-MAR-2009 TIME PLOTTED => 09:06

Dist	COUNTY	LOCATION CODE	POST MILES TOTAL PROJECT	SHEET No.	TOTAL SHEETS

Theresa Gabriel 12-20-07
REGISTERED CIVIL ENGINEER DATE

PLANS APPROVAL DATE

REGISTERED PROFESSIONAL ENGINEER Theresa A. Gabriel No. E15129 Exp 6-30-10 ELECT STATE OF CALIFORNIA

THE STATE OF CALIFORNIA OR ITS OFFICERS OR AGENTS SHALL NOT BE RESPONSIBLE FOR THE ACCURACY OR COMPLETENESS OF SCANNED COPIES OF THIS PLAN SHEET.

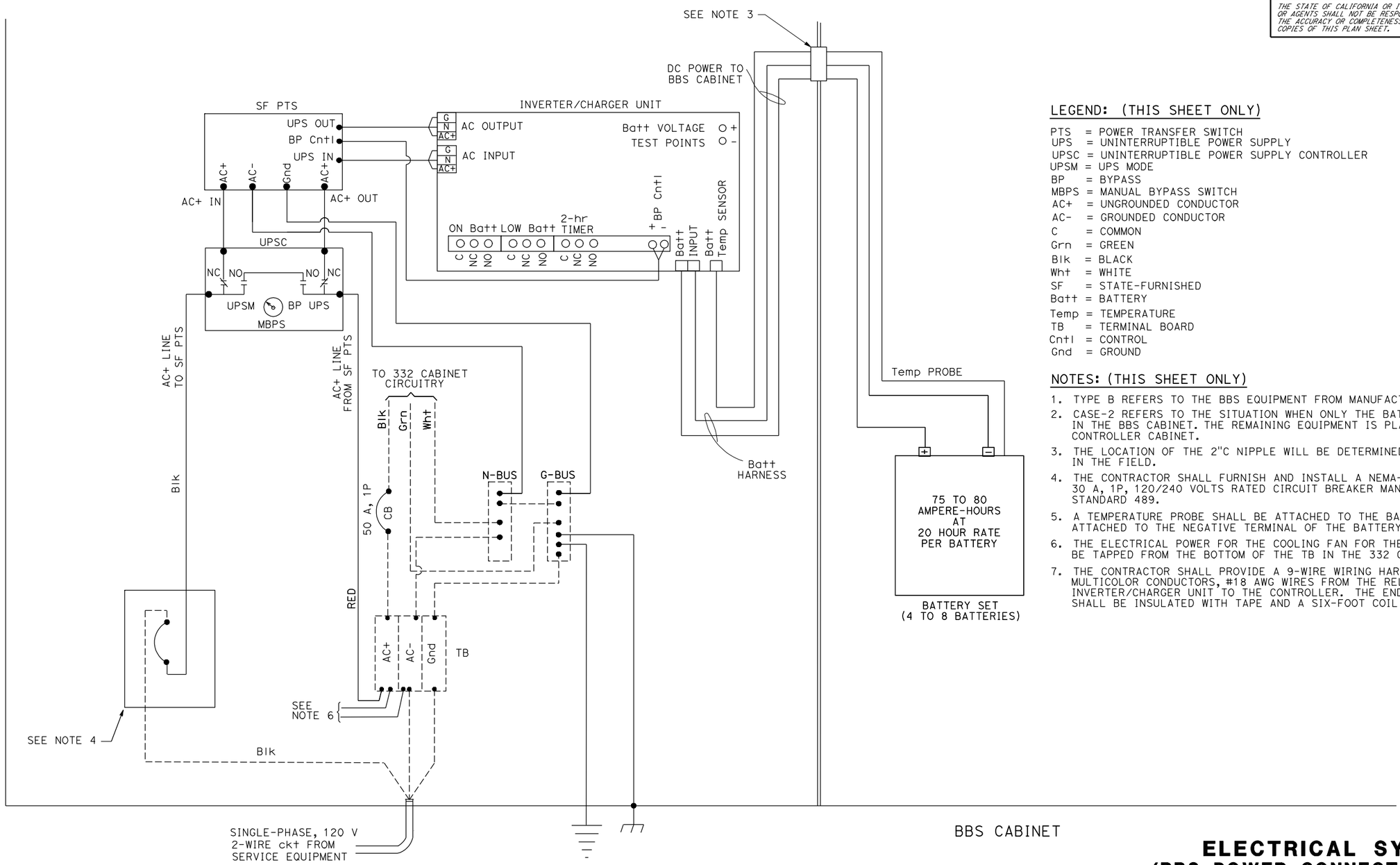

LEGEND: (THIS SHEET ONLY)

PTS = POWER TRANSFER SWITCH
UPS = UNINTERRUPTIBLE POWER SUPPLY
UPSC = UNINTERRUPTIBLE POWER SUPPLY CONTROLLER
UPSM = UPS MODE
BP = BYPASS
MBPS = MANUAL BYPASS SWITCH
AC+ = UNGROUNDED CONDUCTOR
AC- = GROUNDED CONDUCTOR
C = COMMON
Grn = GREEN
Blk = BLACK
Wht = WHITE
SF = STATE-FURNISHED
Batt = BATTERY
Temp = TEMPERATURE
TB = TERMINAL BOARD
Cntl = CONTROL
Gnd = GROUND

NOTES: (THIS SHEET ONLY)

1. TYPE B REFERS TO THE BBS EQUIPMENT FROM MANUFACTURER B.
2. CASE-2 REFERS TO THE SITUATION WHEN ONLY THE BATTERIES ARE INSTALLED IN THE BBS CABINET. THE REMAINING EQUIPMENT IS PLACED IN THE 332 CONTROLLER CABINET.
3. THE LOCATION OF THE 2"C NIPPLE WILL BE DETERMINED BY THE ENGINEER IN THE FIELD.
4. THE CONTRACTOR SHALL FURNISH AND INSTALL A NEMA-1 ENCLOSURE WITH 30 A, 1P, 120/240 VOLTS RATED CIRCUIT BREAKER MANUFACTURED PER UL STANDARD 489.
5. A TEMPERATURE PROBE SHALL BE ATTACHED TO THE BATTERY BY TAPE OR ATTACHED TO THE NEGATIVE TERMINAL OF THE BATTERY.
6. THE ELECTRICAL POWER FOR THE COOLING FAN FOR THE BBS CABINET SHALL BE TAPPED FROM THE BOTTOM OF THE TB IN THE 332 CABINET.
7. THE CONTRACTOR SHALL PROVIDE A 9-WIRE WIRING HARNESS OR BUNDLED 9 MULTICOLOR CONDUCTORS, #18 AWG WIRES FROM THE RELAY ON THE INVERTER/CHARGER UNIT TO THE CONTROLLER. THE ENDS OFTHE CONDUCTORS SHALL BE INSULATED WITH TAPE AND A SIX-FOOT COIL ON EACH END.

ELECTRICAL SYSTEMS
(BBS POWER CONNECTION DIAGRAM, TYPE A, CASE-2)

NO SCALE

REVISED BY	DATE REVISED

CALCULATED-DESIGNED BY	CHECKED BY

FUNCTIONAL SUPERVISOR

STATE OF CALIFORNIA - DEPARTMENT OF TRANSPORTATION
Caltrans

LAST REVISION 2-2-09
DATE PLOTTED => 13-MAR-2009
TIME PLOTTED => 09:07

Dist	COUNTY	LOCATION CODE	POST MILES TOTAL PROJECT	SHEET No.	TOTAL SHEETS

Theresa Gabriel 12-20-07
REGISTERED CIVIL ENGINEER DATE

PLANS APPROVAL DATE

REGISTERED PROFESSIONAL ENGINEER Theresa A. Gabriel No. E15129 Exp. 6-30-10 ELECT STATE OF CALIFORNIA

THE STATE OF CALIFORNIA OR ITS OFFICERS OR AGENTS SHALL NOT BE RESPONSIBLE FOR THE ACCURACY OR COMPLETENESS OF SCANNED COPIES OF THIS PLAN SHEET.

LEGEND: (THIS SHEET ONLY)

PTS = POWER TRANSFER SWITCH
UPS = UNINTERRUPTIBLE POWER SUPPLY
UPSC = UNINTERRUPTIBLE POWER SUPPLY CONTROLLER
UPSM = UPS MODE
BP = BYPASS
MBPS = MANUAL BYPASS SWITCH
AC+ = UNGROUNDED CONDUCTOR
AC- = GROUNDED CONDUCTOR
C = COMMON
Grn = GREEN
Blk = BLACK
Wht = WHITE
SF = STATE-FURNISHED
Batt = BATTERY
Temp = TEMPERATURE
TB = TERMINAL BOARD
Cntl = CONTROL
Gnd = GROUND

NOTES: (THIS SHEET ONLY)

1. TYPE B REFERS TO THE BBS EQUIPMENT FROM MANUFACTURER B.
2. CASE-1 REFERS TO THE SITUATION WHEN THE ENTIRE BBS EQUIPMENT INCLUDING THE BATTERIES ARE INSTALLED IN THE BBS CABINET.
3. THE LOCATION OF THE 2"C NIPPLE WILL BE DETERMINED BY THE ENGINEER IN THE FIELD.
4. THE CONTRACTOR SHALL FURNISH AND INSTALL A NEMA-1 ENCLOSURE WITH 30 A, 1P, 120/240 VOLTS RATED CIRCUIT BREAKER MANUFACTURED PER UL STANDARD 489.
5. A TEMPERATURE PROBE SHALL BE ATTACHED TO THE BATTERY BY TAPE OR ATTACHED TO THE NEGATIVE TERMINAL OF THE BATTERY.
6. THE ELECTRICAL POWER FOR THE COOLING FAN FOR THE BBS CABINET SHALL BE TAPPED FROM THE BOTTOM OF THE TB IN THE 332 CABINET.
7. THE CONTRACTOR SHALL PROVIDE A 9-WIRE WIRING HARNESS OR BUNDLED 9 MULTICOLOR CONDUCTORS, #18 AWG WIRES FROM THE RELAY ON THE INVERTER/CHARGER UNIT TO THE CONTROLLER. THE ENDS OF THE CONDUCTORS SHALL BE INSULATED WITH TAPE AND A SIX-FOOT COIL ON EACH END.

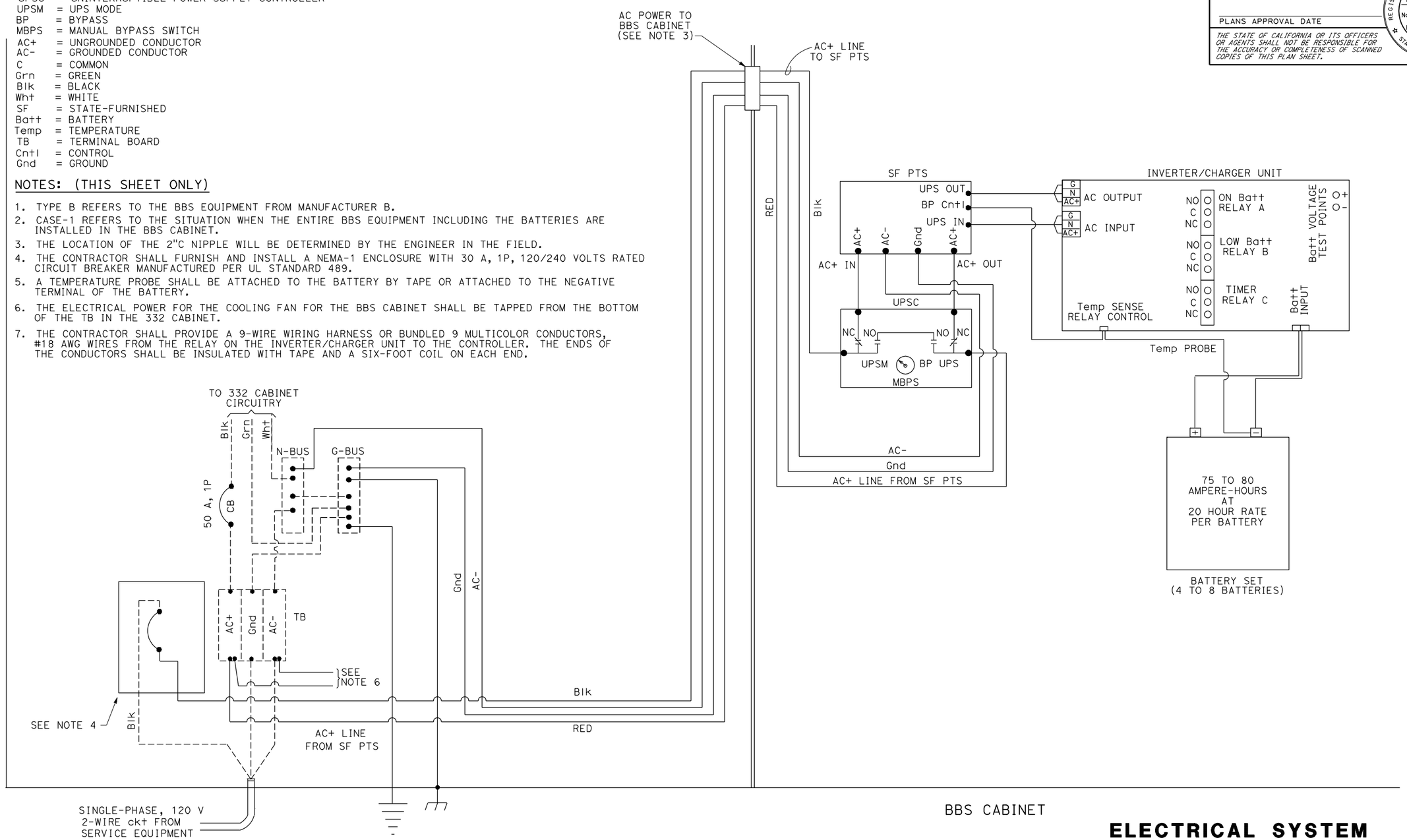

ELECTRICAL SYSTEM

(BBS POWER CONNECTION DIAGRAM, TYPE B, CASE-1)

REVISED BY | DATE REVISED
CALCULATED-DESIGNED BY | CHECKED BY
FUNCTIONAL SUPERVISOR
STATE OF CALIFORNIA - DEPARTMENT OF TRANSPORTATION
Caltrans

LAST REVISION 3-11-09 | DATE PLOTTED => 21-SEP-2009 | TIME PLOTTED => 13:33

Dist	COUNTY	LOCATION CODE	POST MILES TOTAL PROJECT	SHEET No.	TOTAL SHEETS

Theresa Gabriel 12-20-07
REGISTERED CIVIL ENGINEER DATE

PLANS APPROVAL DATE

REGISTERED PROFESSIONAL ENGINEER Theresa A. Gabriel No. E15129 Exp 6-30-10 ELECT STATE OF CALIFORNIA

THE STATE OF CALIFORNIA OR ITS OFFICERS OR AGENTS SHALL NOT BE RESPONSIBLE FOR THE ACCURACY OR COMPLETENESS OF SCANNED COPIES OF THIS PLAN SHEET.

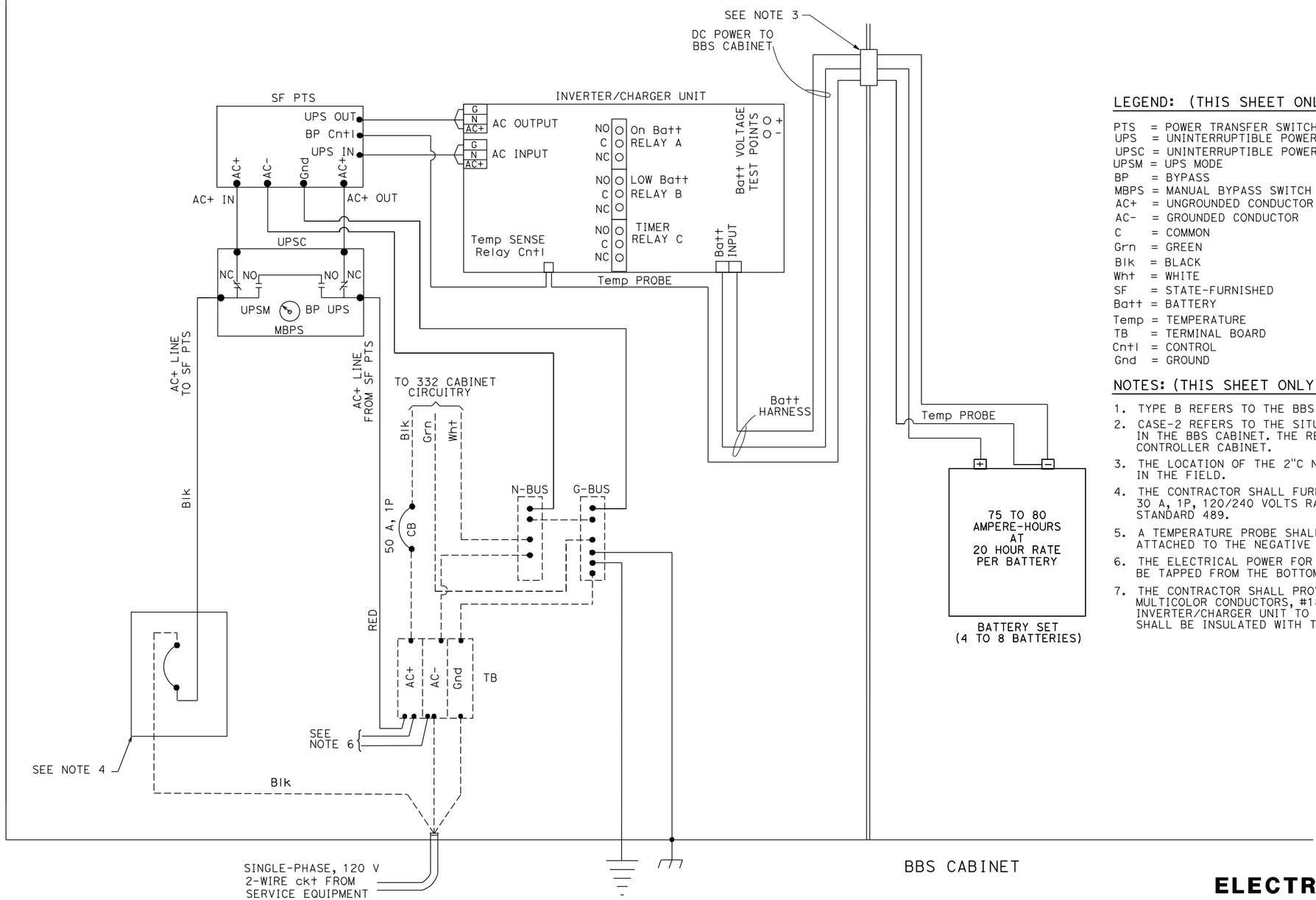

LEGEND: (THIS SHEET ONLY)

PTS = POWER TRANSFER SWITCH
UPS = UNINTERRUPTIBLE POWER SUPPLY
UPSC = UNINTERRUPTIBLE POWER SUPPLY CONTROLLER
UPSM = UPS MODE
BP = BYPASS
MBPS = MANUAL BYPASS SWITCH
AC+ = UNGROUNDED CONDUCTOR
AC- = GROUNDED CONDUCTOR
C = COMMON
Grn = GREEN
Blk = BLACK
Wht = WHITE
SF = STATE-FURNISHED
Batt = BATTERY
Temp = TEMPERATURE
TB = TERMINAL BOARD
Cntl = CONTROL
Gnd = GROUND

NOTES: (THIS SHEET ONLY)

1. TYPE B REFERS TO THE BBS EQUIPMENT FROM MANUFACTURER B.
2. CASE-2 REFERS TO THE SITUATION WHEN ONLY THE BATTERIES ARE INSTALLED IN THE BBS CABINET. THE REMAINING EQUIPMENT IS PLACED IN THE 332 CONTROLLER CABINET.
3. THE LOCATION OF THE 2"C NIPPLE WILL BE DETERMINED BY THE ENGINEER IN THE FIELD.
4. THE CONTRACTOR SHALL FURNISH AND INSTALL A NEMA-1 ENCLOSURE WITH 30 A, 1P, 120/240 VOLTS RATED CIRCUIT BREAKER MANUFACTURED PER UL STANDARD 489.
5. A TEMPERATURE PROBE SHALL BE ATTACHED TO THE BATTERY BY TAPE OR ATTACHED TO THE NEGATIVE TERMINAL OF THE BATTERY.
6. THE ELECTRICAL POWER FOR THE COOLING FAN FOR THE BBS CABINET SHALL BE TAPPED FROM THE BOTTOM OF THE TB IN THE 332 CABINET.
7. THE CONTRACTOR SHALL PROVIDE A 9-WIRE WIRING HARNESS OR BUNDLED 9 MULTICOLOR CONDUCTORS, #18 AWG WIRES FROM THE RELAY ON THE INVERTER/CHARGER UNIT TO THE CONTROLLER. THE ENDS OFTHE CONDUCTORS SHALL BE INSULATED WITH TAPE AND A SIX-FOOT COIL ON EACH END.

ELECTRICAL SYSTEM

(BBS POWER CONNECTION DIAGRAM, TYPE B, CASE-2)

REVISED BY	DATE REVISED

CALCULATED-DESIGNED BY
CHECKED BY
FUNCTIONAL SUPERVISOR

STATE OF CALIFORNIA - DEPARTMENT OF TRANSPORTATION
Caltrans

LAST REVISION 3-11-09
DATE PLOTTED => 13-MAR-2009
TIME PLOTTED => 09:10

Item	Qty	Part Description	Part#	U/M
1	1.00	AB350 100km PCB ARRAY, TL-3	AB100P	EACH
2	1.00	AB350 PCB ATTACHMENT ASSY	SBPCB	EACH

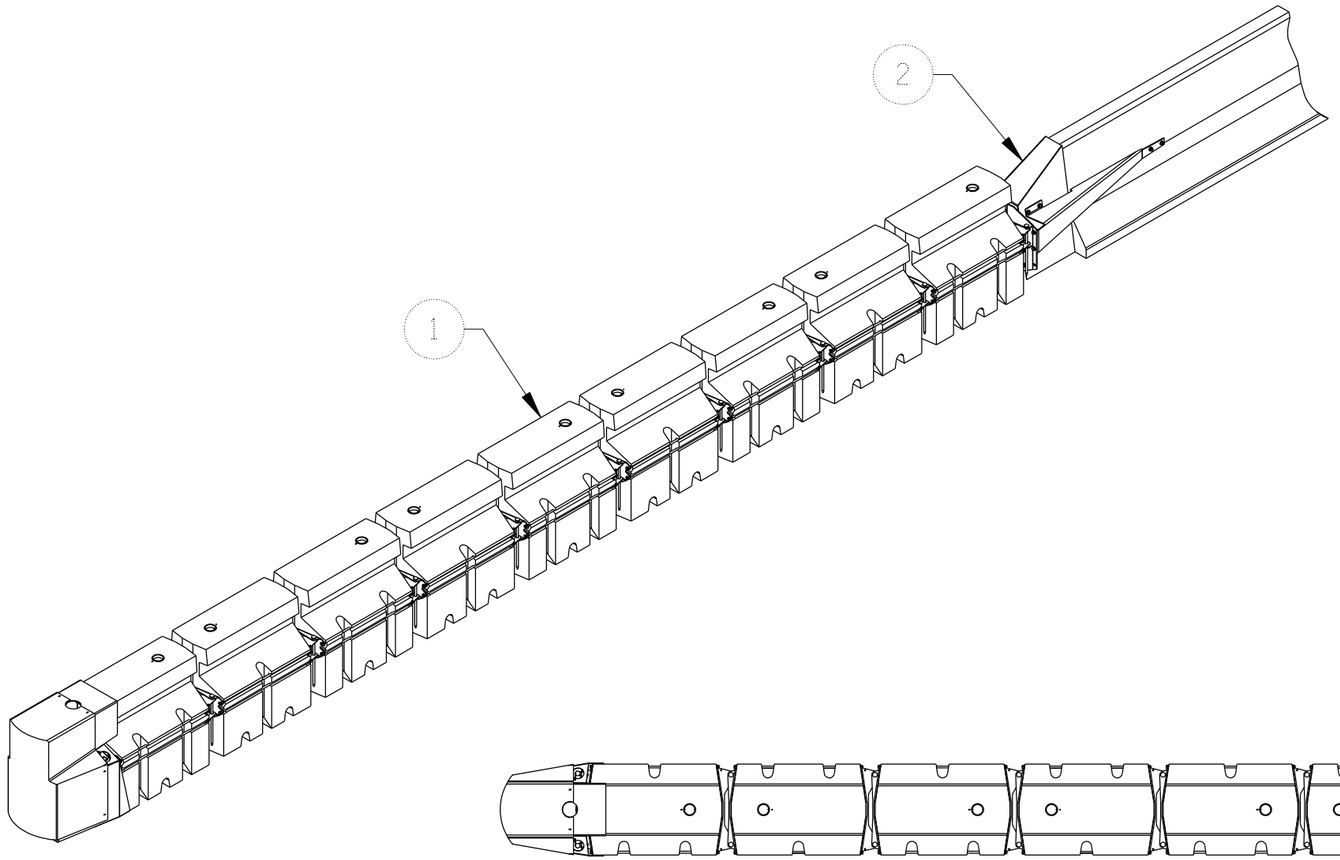

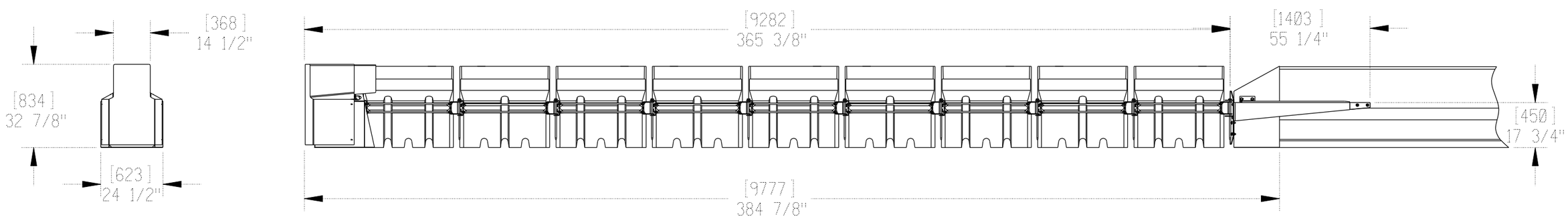

© 2005 Barrier Sytems Inc.

AB350 PCB
ATTACHMENT ASSY

NOTE:
The information heron is proprietary to Barrier Systems inc. shall not be disclosed, duplicated or used otherwise without the express written approval of Barrier Systems Inc.

REV.	CHANGES	DATE	BY	REQ'D	NEXT ASSY.	ITEM

NO SCALE

DRAWN BY	DATE	INIT.
	6/06/05	CMB
		GAD

TITLE:

Standard Tolerance
Angular +/- 1/2 Deg.
Fractional +/- 1/16
Dec. XXX= +/- .010
Dec. .XX= +/- .030

MODEL	DRAWING NUMBER	REV

Item	Qty	Part Description	Part#	U/M
1	1.00	AB350 PCB Nose Piece rev "D"	B010825	EACH
2	1.00	Adapter Hinge Plt Wldmt AB350	B000611	EACH
3	1.00	Strap Right Adapter Absorb 350	B000209	EACH
4	1.00	Strap Left Adapter Absorb 350	B000207	EACH
5	1.00	Adapter Tapered Absorb 350 PCB	B000518	EACH
6	1.00	Absorb Adapter Hdw Kit	K001014	EACH

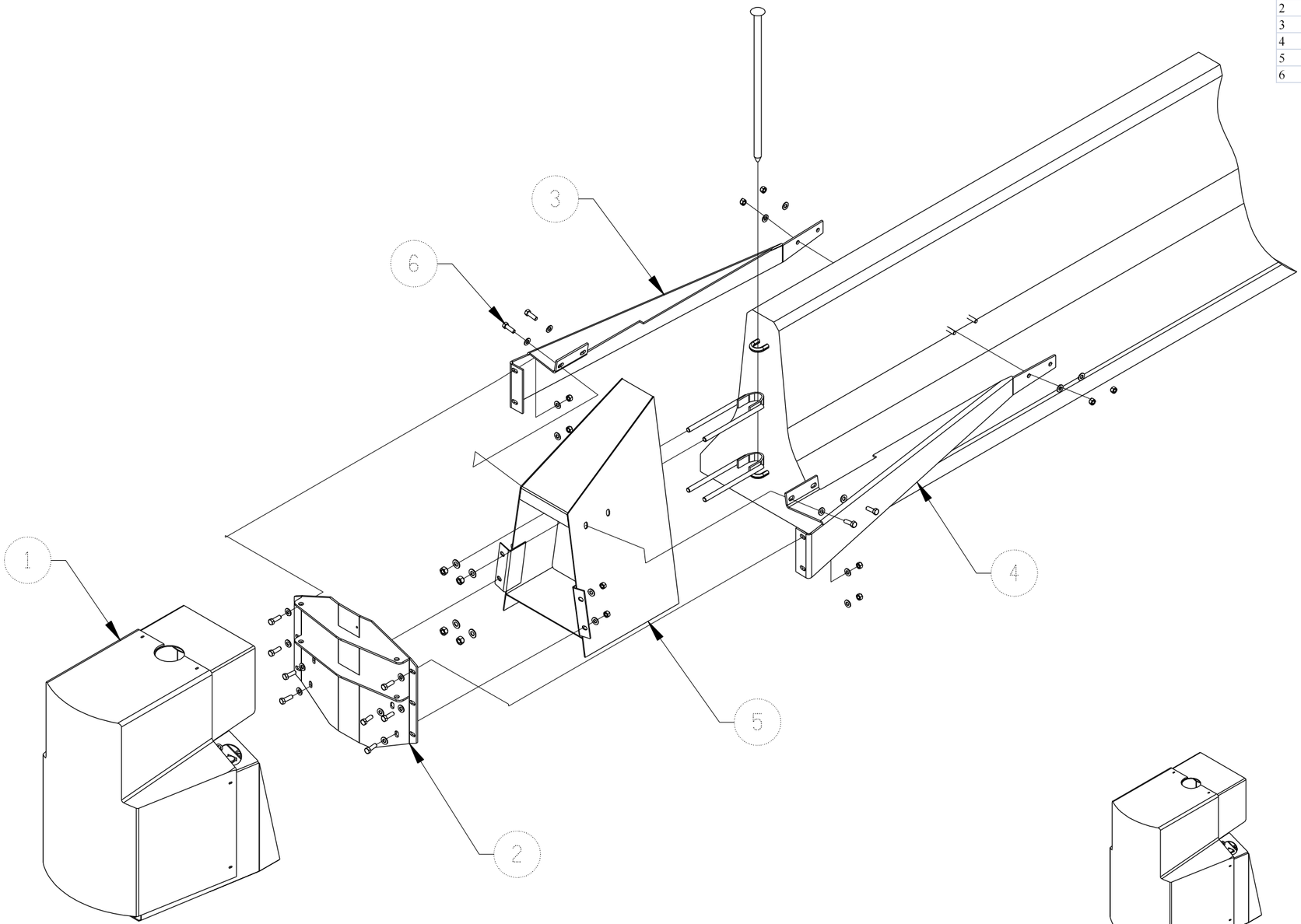

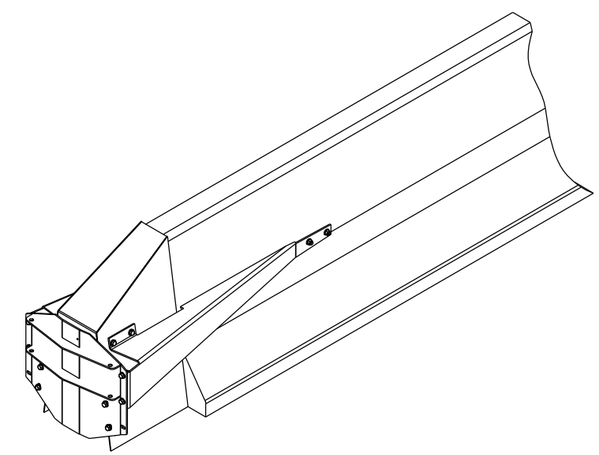

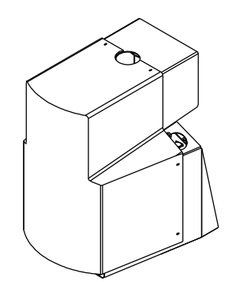

© 2005 Barrier Sytems Inc.

The information heron is proprietory to Barrier Systems Inc. shall not be disclosed, duplicated or used otherwise without the express written approval of Barrier Systems Inc.

REV.	CHANGES	DATE	BY	REQ'D	NEXT ASSY.	ITEM

NO SCALE

	DATE	INIT.
DRAWN BY	6/24/05	CMB
		GAD

Standard Tolerance
Angular +/- 1/2 Deg.
Fractional +/- 1/16
Dec. XXX= +/- .010
Dec. .XX= +/- .030

TITLE: AB350 PCB ATTACHMENT ASSY

MODEL	DRAWING NUMBER	REV
	SBPCB	

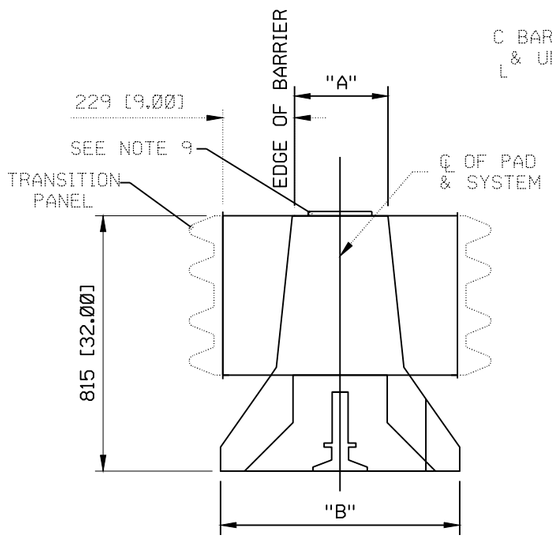

VIEW A-A
NO SCALE

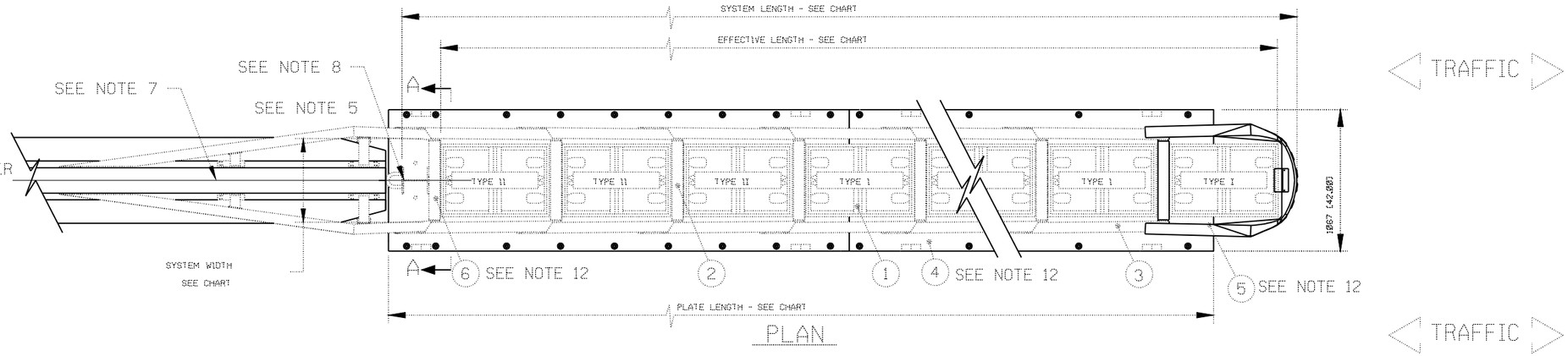

PLAN

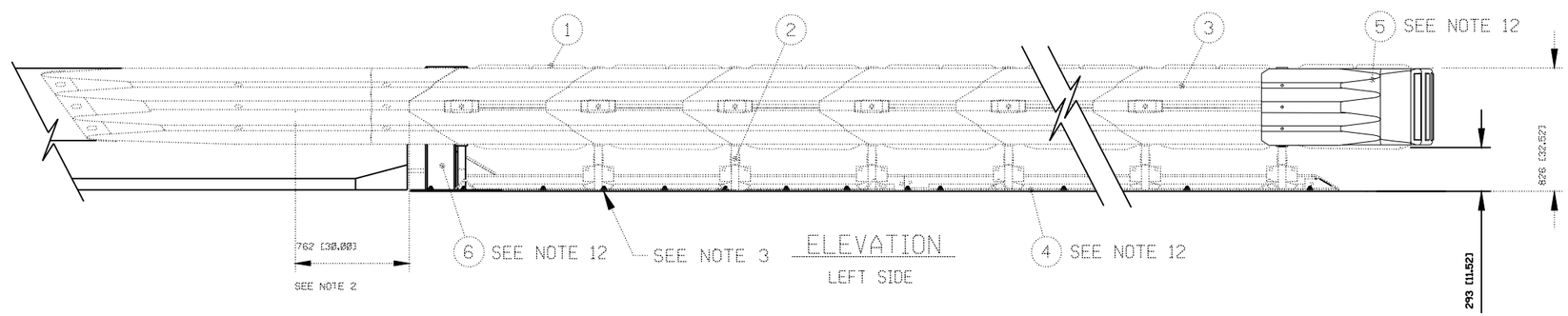

ELEVATION
LEFT SIDE

TABLE "A"

SYSTEM WIDTH	TYPICAL BARRIER APPLICATION	
	"A" TOP OF BARRIER	"B" BARRIER WIDTH
610[24.00]	152 [6.00]	610 [24.00]
762[30.00]	305 [12.00]	762 [30.00]
914[36.00]	457 [18.00]	914 [36.00]

* G = GREY or Y = YELLOW

BAYS	610[24] WIDTH MODEL#	762[30] WIDTH MODEL#	914[36] WIDTH MODEL#	SYSTEM LENGTH m	SYSTEM LENGTH ft-in	EFFECTIVE LENGTH m	EFFECTIVE LENGTH ft-in	PLATE LENGTH m	PLATE LENGTH ft-in	MAX DESIGN SPEED km/h [MPH]	# OF CARTRIDGES TYPE I	# OF CARTRIDGES TYPE II
3	QZ2403P*	QZ3003P*	QZ3603P*	4.00	[13'-1"]	3.56	[11'-8"]	3.47	[11'-5"]	70 [44]	3	1
4	QZ2404P*	QZ3004P*	QZ3604P*	4.90	[16'-1"]	4.47	[14'-8"]	4.39	[14'-5"]	80 [50]	3	2
5	QZ2405P*	QZ3005P*	QZ3605P*	5.82	[19'-1"]	5.38	[17'-8"]	5.30	[17'-5"]	90 [56]	4	2
6	QZ2406P*	QZ3006P*	QZ3606P*	6.74	[22'-1"]	6.30	[20'-8"]	6.21	[20'-5"]	100 [62]	4	3
7	QZ2407P*	QZ3007P*	QZ3607P*	7.65	[25'-1"]	7.21	[23'-8"]	7.13	[23'-5"]	△ 105 [65]	4	4
8	QZ2408P*	QZ3008P*	QZ3608P*	8.56	[28'-1"]	8.13	[26'-8"]	8.05	[26'-5"]	△ 110 [68]	4	5
9	QZ2409P*	QZ3009P*	QZ3609P*	9.48	[31'-1"]	9.04	[29'-8"]	8.96	[29'-5"]	△ 115 [71]	4	6

NOTES:

1. IN COMPLIANCE WITH THE AASHTO 2002 ROADSIDE DESIGN GUIDE, MANUFACTURER RECOMMENDS REMOVAL OF ALL CURBS AND ISLANDS TO ENSURE PROPER IMPACT PERFORMANCE.
2. PROVISION SHALL BE MADE FOR REAR FENDER PANELS TO SLIDE REARWARD UPON IMPACT 760 [30.00] MIN.
3. CAUTION: THE QUADGUARD C.Z. MUST BE CORRECTLY ANCHORED FOR PROPER IMPACT PERFORMANCE.
   ATTACH SYSTEM USING ONE OF THE FOLLOWING:
   - 7" STUDS MAY BE USED TO ATTACH SYSTEM TO 28 MPa[4000 PSI] MIN. P.C. CONCRETE PER THE FOLLOWING MINIMUMS:**
     - a) 150[6.00] NON REINFORCED ROADWAY OR PAD
     - b) 200[8.00] REINFORCED PORTABLE PAD PER THE REFERENCE DETAIL
     - c) 180[7.00] DECK STRUCTURE
   - 18" THREADED RODS MAY BE USED TO INSTALL SYSTEM ON ASPHALT.**

   **REFER TO THE QUADGUARD CZ MP-3 ANCHORING SYSTEM INSTALLATION INSTRUCTIONS FOR SPECIFICATIONS.
4. SEE THE "QUADGUARD SYSTEM PRODUCT MANUAL", FOR A DESCRIPTION OF ITS IMPACT PERFORMANCE CHARACTERISTICS AND DESIGN LIMITATIONS BEFORE PLACING A SYSTEM AT A GIVEN SITE. INFORMATION AND COPIES OF ABOVE MANUAL ARE AVAILABLE BY CALLING CUSTOMER SERVICE DEPARTMENT AT (888) 323-6374.
5. WHERE NECESSARY, THE CUSTOMER SHALL SUPPLY A TRANSITION FROM THE QUADGUARD SYSTEM TO THE OBJECT BEING SHIELDED.
6. UNITS OF MEASUREMENT ARE MILLIMETERS [INCHES] UNLESS OTHERWISE NOTED.
7. CAUTION: ℄ OF QUADGUARD SYSTEM SHALL BE PARALLEL WITH ℄ OF BARRIER ±1°.
8. CAUTION: MAX. 51 [2.00] CLEARANCE BETWEEN BACKUP AND BARRIER WALL. ZERO CLEARANCE RECOMMENDED.
9. LOCATE EDGE OF BARRIER @ 815 [32.00] ABOVE GRADE & USE DIMENSIONS PROVIDED IN TABLE "A" TO LOCATE QUADGUARD SYSTEM & PAD WITH RESPECT TO SAFETY SHAPE BARRIER.
10. THE NUMBER OF BAYS INDICATED IN THE TABLE IS BASED ON CALCULATED VALUES TO ENSURE ADEQUATE SYSTEM CAPACITY TO DISSIPATE THE LONGITUDINAL IMPACT ENERGY OF A 2000 kg VEHICLE TRAVELING AT THE SPEED INDICATED.
11. △ THE SIX BAY SYSTEM HAS BEEN FULLY TESTED AT 100 km/h UNDER THE FULL 8 TEST MATRIX OF NCHRP 350 TL-3. SYSTEMS LONGER THAN SIX BAYS SHALL ALSO BE CAPABLE OF MEETING THE OCCUPANT RISK CRITERIA AS RECOMMENDED IN NCHRP 350 FOR VEHICLES WEIGHING 2000 kg IMPACTING HEAD ON AT THE SPEED INDICATED IN THE TABLE. NOSE, ANCHOR AND TRANSITION ASSEMBLIES ARE NOT INCLUDED IN MODEL NUMBER. ORDER SEPARATELY.
12. TRANSITION PANEL SHALL BE ANGLED SUCH THAT MAXIMUM GAP FROM FENDER PANEL OVERLAP DOES NOT EXCEED 20 [.78].
13.

KEY

1. QUADGUARD CARTRIDGE
2. DIAPHRAGM
3. FENDER PANEL
4. C.Z. PLATE W/MONORAIL
5. NOSE ASSEMBLY
6. C.Z. BACKUP

Revisions	Date	Rev.	By	Ckd.	App.
REVISED NOTE 12 & UPDATED REFERENCES					

REFERENCES

SERIAL# _____
SALES ORDER# _____
EH PROJECT# _____
DESIGN SPEED △ _____
NOSE COLOR _____
NUMBER OF UNITS _____

DIAPHRAGM ASSY. _____
NOSE ASSY. _____
FENDER PANEL ASSY. _____
C.Z. BACKUP/PLATE ASSY. _____
LIFTING KIT _____
ANCHOR KIT 35-40-64
PORTABLE BARRIER ANCHOR _____
TRANSITON _____

DRAWN: STAGER — DATE:
DESIGNED: — DATE:
CHECKED: — DATE:
APPROVED — DATE:
CAD FILE:

ENERGY ABSORPTION SYSTEMS, INC.
ENGINEERING AND RESEARCH DEPARTMENT

QUADGUARD ® C.Z. SYSTEM ON A PLATE

SCALE	DWG.	SHEET	REV

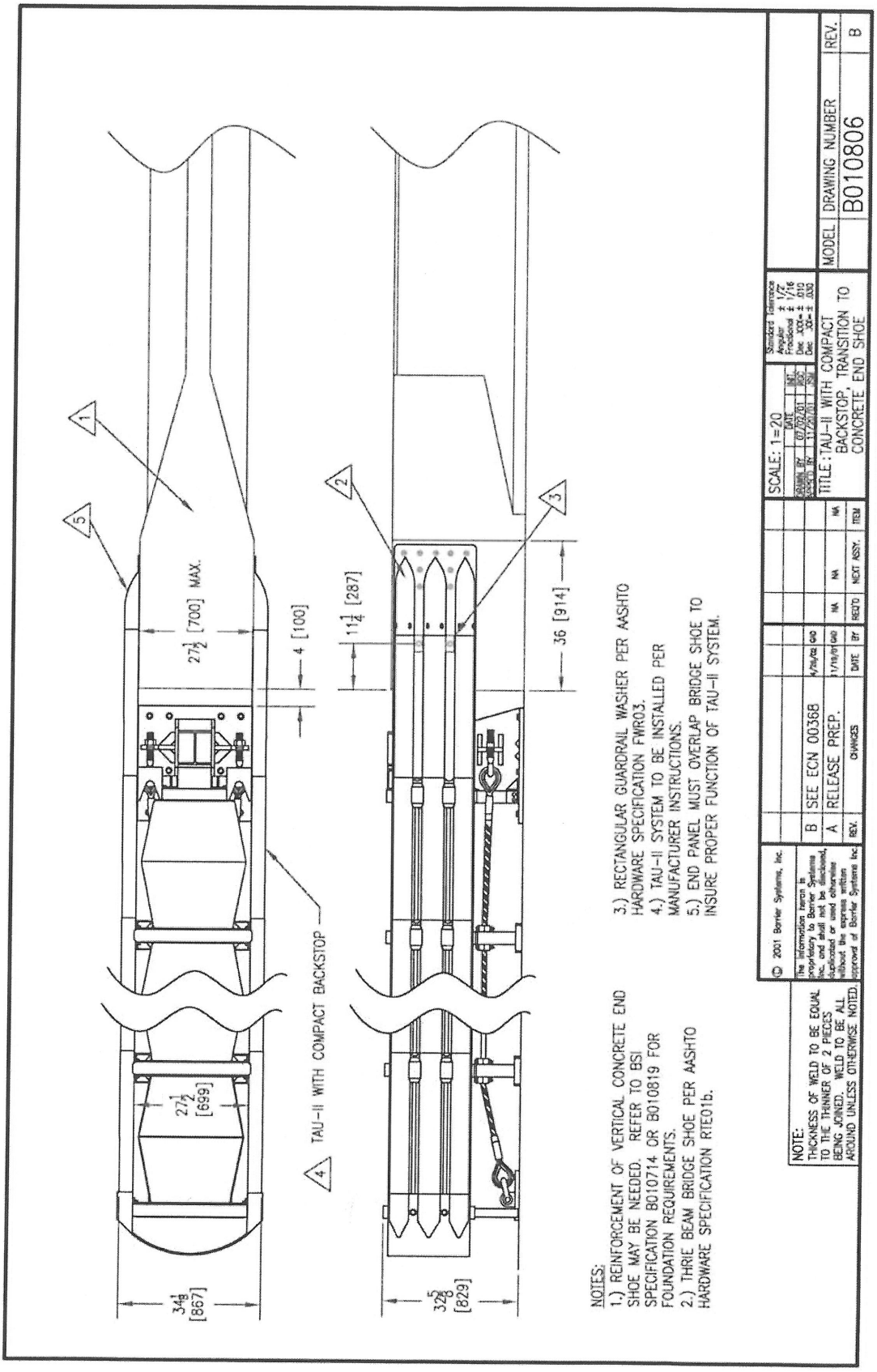
TAU-II WITH COMPACT BACKSTOP
27½ [700] MAX.
4 [100]
11¼ [287]
36 [914]
27½ [699]
34⅛ [867]
32⅝ [829]
1
2
3
4
5
NOTES:
1.) REINFORCEMENT OF VERTICAL CONCRETE END SHOE MAY BE NEEDED. REFER TO BSI SPECIFICATION B010714 OR B010819 FOR FOUNDATION REQUIREMENTS.
2.) THRIE BEAM BRIDGE SHOE PER AASHTO HARDWARE SPECIFICATION RTE01b.
3.) RECTANGULAR GUARDRAIL WASHER PER AASHTO HARDWARE SPECIFICATION FWR03.
4.) TAU-II SYSTEM TO BE INSTALLED PER MANUFACTURER INSTRUCTIONS.
5.) END PANEL MUST OVERLAP BRIDGE SHOE TO INSURE PROPER FUNCTION OF TAU-II SYSTEM.
NOTE:
THICKNESS OF WELD TO BE EQUAL TO THE THINNER OF 2 PIECES BEING JOINED. WELD TO BE ALL AROUND UNLESS OTHERWISE NOTED.
© 2001 Barrier Systems, Inc.
The information herein is proprietary to Barrier Systems Inc. and shall not be disclosed, duplicated or used otherwise without the express written approval of Barrier Systems Inc.
REV. CHANGES DATE BY REQ'D NEXT ASSY. ITEM
B SEE ECN 00368 4/24/02 GKD NA NA NA
A RELEASE PREP. 1/19/01 GKD NA NA NA
SCALE: 1=20
DRAWN BY 07/02/01 BKC
CHECK BY 11/29/01 RSI
Standard Clearance
Angular ± 1/2°
Fractional ± 1/16
Dec .XX= ± .010
Dec .XX= ± .030
TITLE: TAU-II WITH COMPACT BACKSTOP, TRANSITION TO CONCRETE END SHOE
MODEL
DRAWING NUMBER
B010806
REV.
B

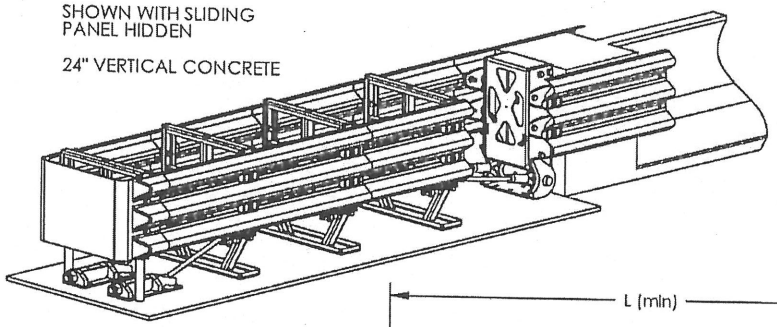

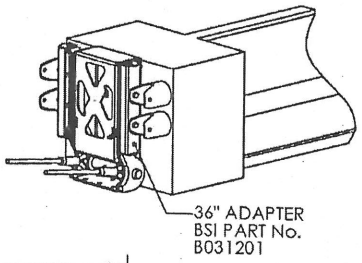

NOTES:
1.) FLUSH MOUNT BACKSTOP SYSTEMS ARE INTENDED FOR APPLICATIONS WHERE THE HAZARD WIDTH EXCEEDS THE LIMITATIONS OF THE PCB BACKSTOP. FLUSH MOUNT SYSTEMS ARE ALSO APPLICABLE IN LOCATIONS WITH LIMITED FOUNDATION SIZE.
2.) THE FLUSH MOUNT BACKSTOP MAY BE ATTACHED TO REINFORCED SAFETY SHAPE OR VERTICAL CONCRETE STRUCTURES UP TO 36" [914] WIDE. STRUCTURES OVER 24"[610] WIDE REQUIRE 36" ADAPTER B031201. EDGES OF VERTICLE CONCRETE MAY REQUIRE CHAMFER ACCORDING TO LOCAL STANDARDS.
3.) VERTICAL SLOTS ON THE BACKSTOP ALLOW REMOVAL/ REPLACEMENT OF THE BACKSTOP. ANCHORS MUST BE PLACED AT THE TOP OF SAID SLOTS TO BE EFFECTIVE.
4.) FLUSH MOUNT BACKSTOP SYSTEMS USE THE SAME CABLE USED IN ALL PARALLEL SYSTEMS. THE CABLE IS INSTALLED WITH THE THREADED TENSIONING END FORWARD. THE LOOPED END IS PINNED IN PLACE AT THE BACKSTOP.
5.) THE FRONT CABLE ANCHOR USES AN INSERTED KEY TO KEEP THE THREADED STUD FROM ROTATING DURING TENSIONING.
6.) ANCHOR ACCORDING TO BSI SPECIFICATIONS. REFERENCE BSI DRAWING A040113.

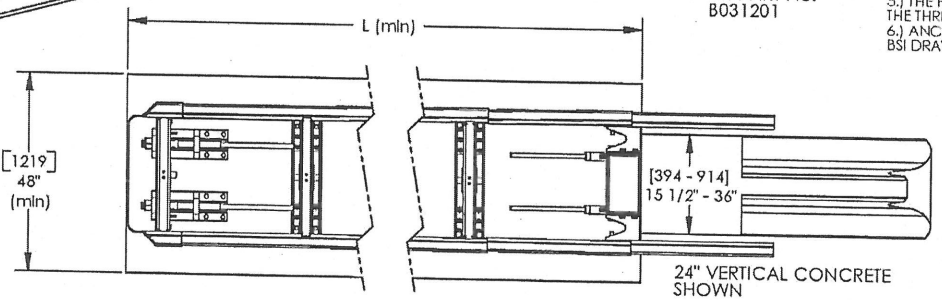

FOUNDATION PAD LENGTH DIMENSION "L" (MINIMUM)			
BAY No.	CAPACITY (kph)	L (ft-in)	L (mm)
2	50	6' - 11 1/2"	2121
3	60	9' - 9 1/2"	2985
4	70	12' - 7 1/2"	3848
5	80	15' - 5 1/2"	4712
6	85	18' - 4"	5588
7	90	21' - 2"	6452
8	100	24' - 0"	7315
9	105	26' - 10"	8179
10	110	29' - 8 1/2"	9055
11	115	32' - 6 1/2"	9919
12	120	35' - 4 1/2"	10782

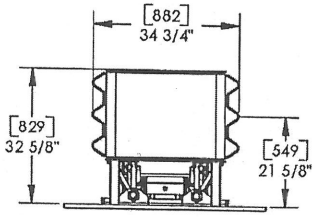

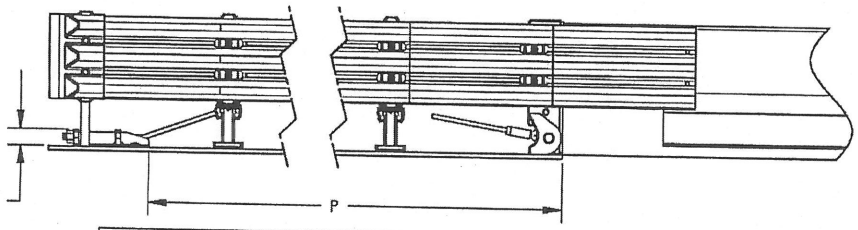

FRONT ANCHOR PLACEMENT DIMENSION "P"			
BAY No.	CAPACITY (kph)	P (ft-in)	P (mm)
2	50	4' - 11 1/2"	1511
3	60	7' - 9 1/2"	2375
4	70	10' - 7 1/2"	3239
5	80	13' - 5 1/2"	4102
6	85	16' - 4"	4978
7	90	19' - 2"	5842
8	100	22' - 0"	6706
9	105	24' - 10"	7569
10	110	27' - 8 1/2"	8446
11	115	30' - 6 1/2"	9309
12	120	33' - 4 1/2"	10173

NOTE:
THICKNESS OF WELD TO BE EQUAL TO THE THINNER OF 2 PIECES BEING JOINED. WELD TO BE ALL AROUND UNLESS OTHERWISE SPECIFIED

© 2004 Barrier Systems Inc
The information herein is proprietary to Barrier Systems Inc. shall not be disclosed, duplicated or used otherwise without the express written approval of Barrier Systems Inc.

REV.	CHANGES	DATE	BY	REQ'D	NEXT ASSY	ITEM
				1	TBD	1

SCALE: 1:24

	DATE	INT.
DRAWN BY	4/21/04	GAD
		GAD

Standard Tolerances
Angular +/- 1/2 Deg.
Fractional +/- 1/16
Dec. .XXX= +/- .010
Dec. .XX= +/- .030

TITLE: APPLICATION, FLUSH MOUNT BACKSTOP

MODEL	DRAWING NUMBER	REV
	B040239	

Figure 3

PARTS LIST

01 - Front Sled
02 - Cable Assembly
05 - Sled Panel
07 - Terminal Brace
09 - Anchor Bolts
12 - Side Panels
14 - Mobile Sheave Assembly
17 - Cable Adjuster Bolt
18-20 - Mobile Frames 4-6
26 - Cylinder
27 - Rear Panel
06, 08, 29 - Side Keepers

APPENDIX C - SMART CUSHION®, TEST LEVEL 2

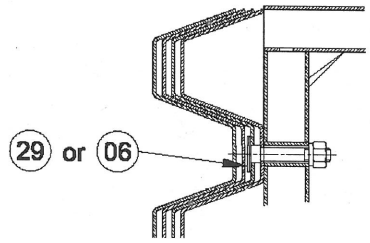

DETAIL A

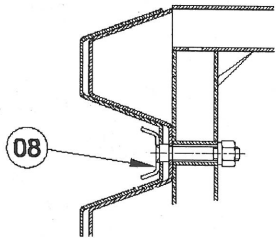

DETAIL B

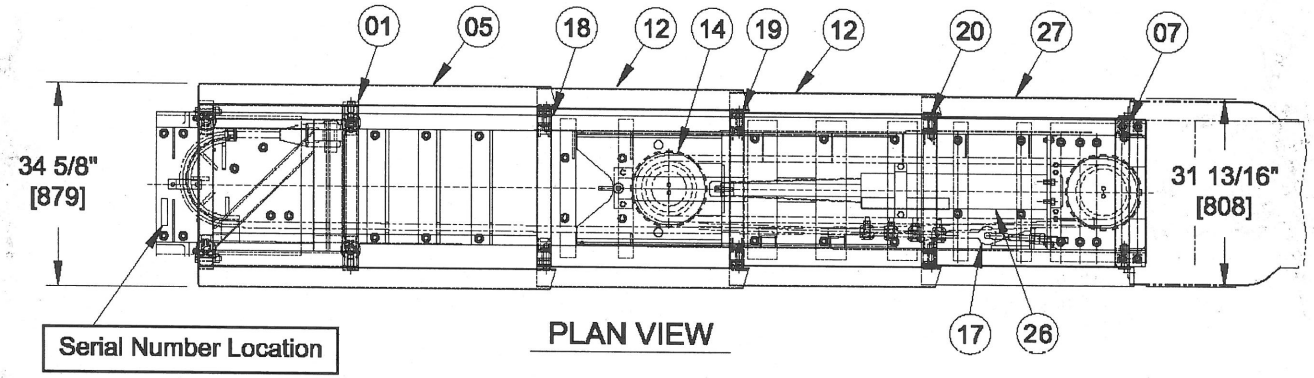

PLAN VIEW

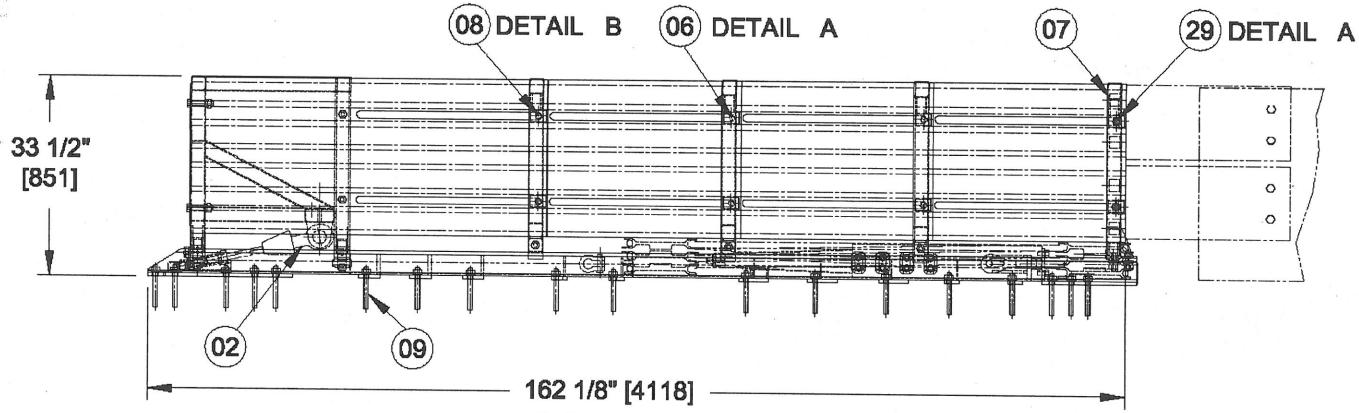

SIDE VIEW

APPENDIX E1 - TEST LEVEL 2 FOUNDATION

Cross Slope at Top Surface not to Exceed 1 in 10
Foundation must be a Level Plane

* * * * * Wide Hazards and Transitions may require the foundation to be longer. See Transition Drawings.

SPECIFICATIONS

All reinforcing steel - straight #4 ASTM-A36

Embedment requirements:

- 6" reinforced concrete pad with anchor embedment of 5 1/2"
- 8" non-reinforced concrete pad with anchor embedment of 5 1/2"
- 3" asphalt over 3" concrete with anchor embedment of 16 1/2"
- 6" asphalt over 6" of compacted subbase with anchor embedment of 16 1/2"
- 8" asphalt with anchor embedment of 16 1/2"

The contractor shall furnish a certification for material installed to the following requirements:

- 6" reinforced concrete (PCC) sampling per ASTM C31-84, testing per ASTM C39-84
- 8" non-reinforced concrete (PCC) sampling per ASTM C31-84, testing per ASTM 39-84
- 3" asphalt over 3" concrete - Type SP 12.5 Level C or higher
- 6" asphalt over 6" of compacted subbase - same as above
- 8" asphalt (AC) - Type SP 12.5 Traffic Level C or higher

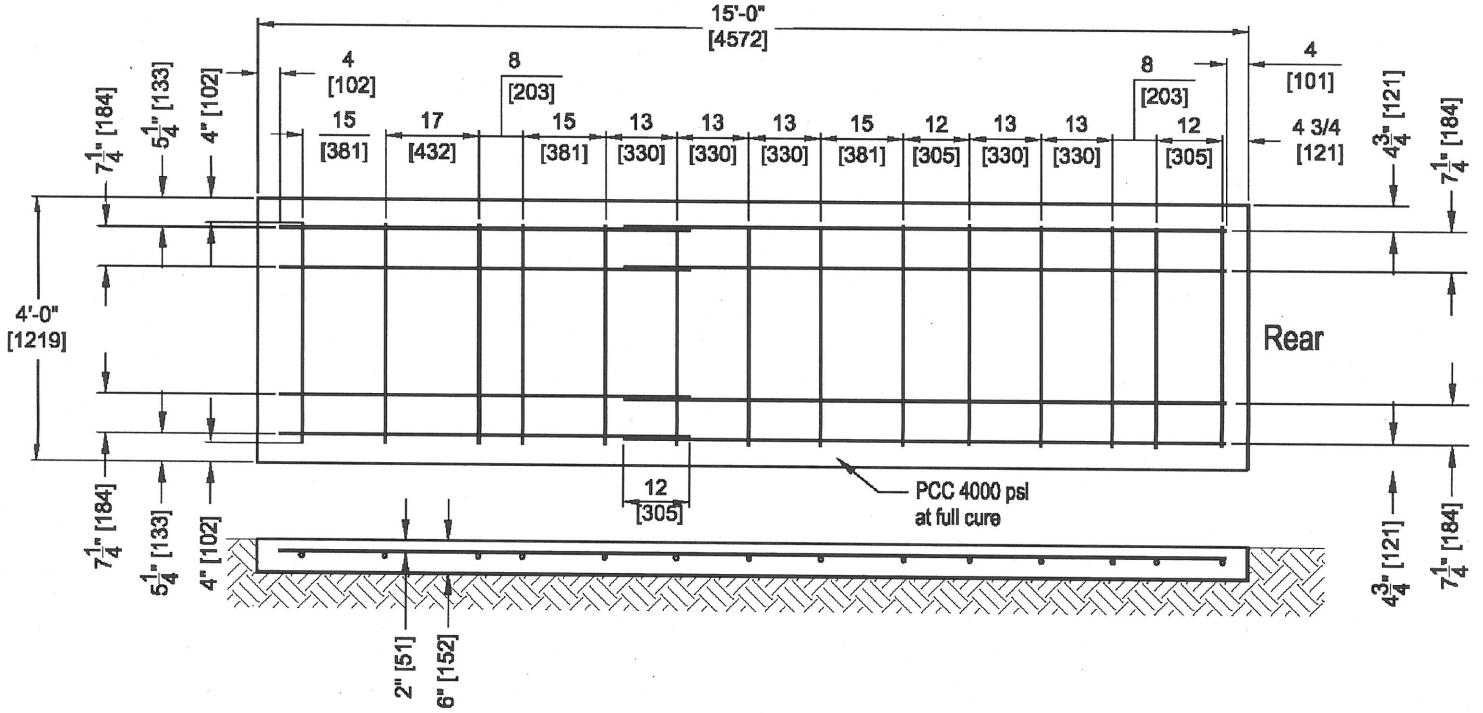

SCI70GM
Level 2 System

APPENDIX H - TRANSITION, CONCRETE BLOCK, 24 INCH (610mm)

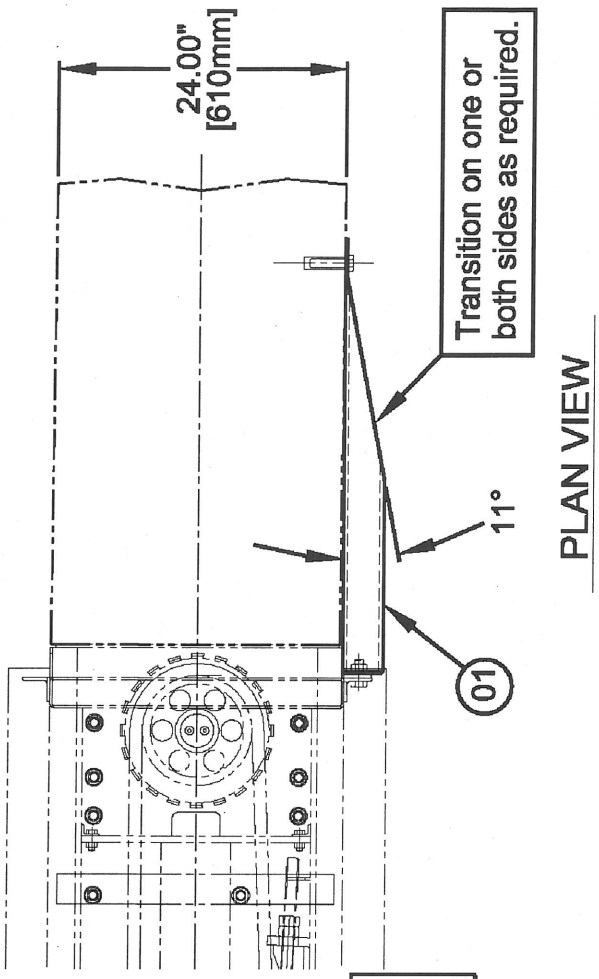

PLAN VIEW

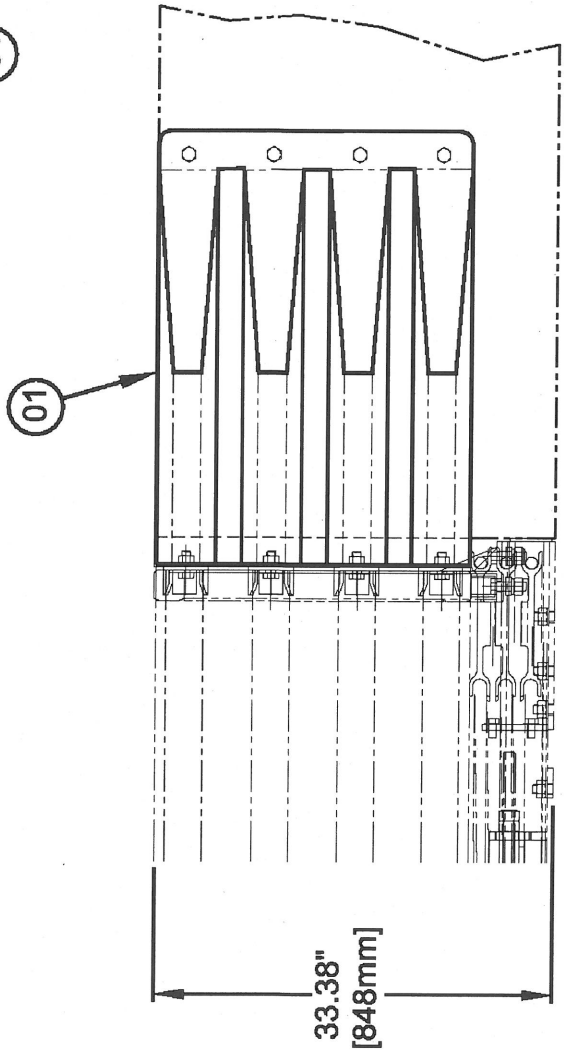

SIDE VIEW

PARTS LIST

Transition 24" Concrete Block Right or Left #9433

APPENDIX H(2) - TRANSITION, CONCRETE BLOCK, 24 INCH (610mm)

PARTS LIST

02 - Hex Bolt 3/4"-10NC x 2"
03 - Heavy Hex Nut 3/4"-10NC
04 - Lock Washer 3/4"
05 - Flat Washer 3/4"
08 - Drop-In Anchor 3/4"-10NC x 3"

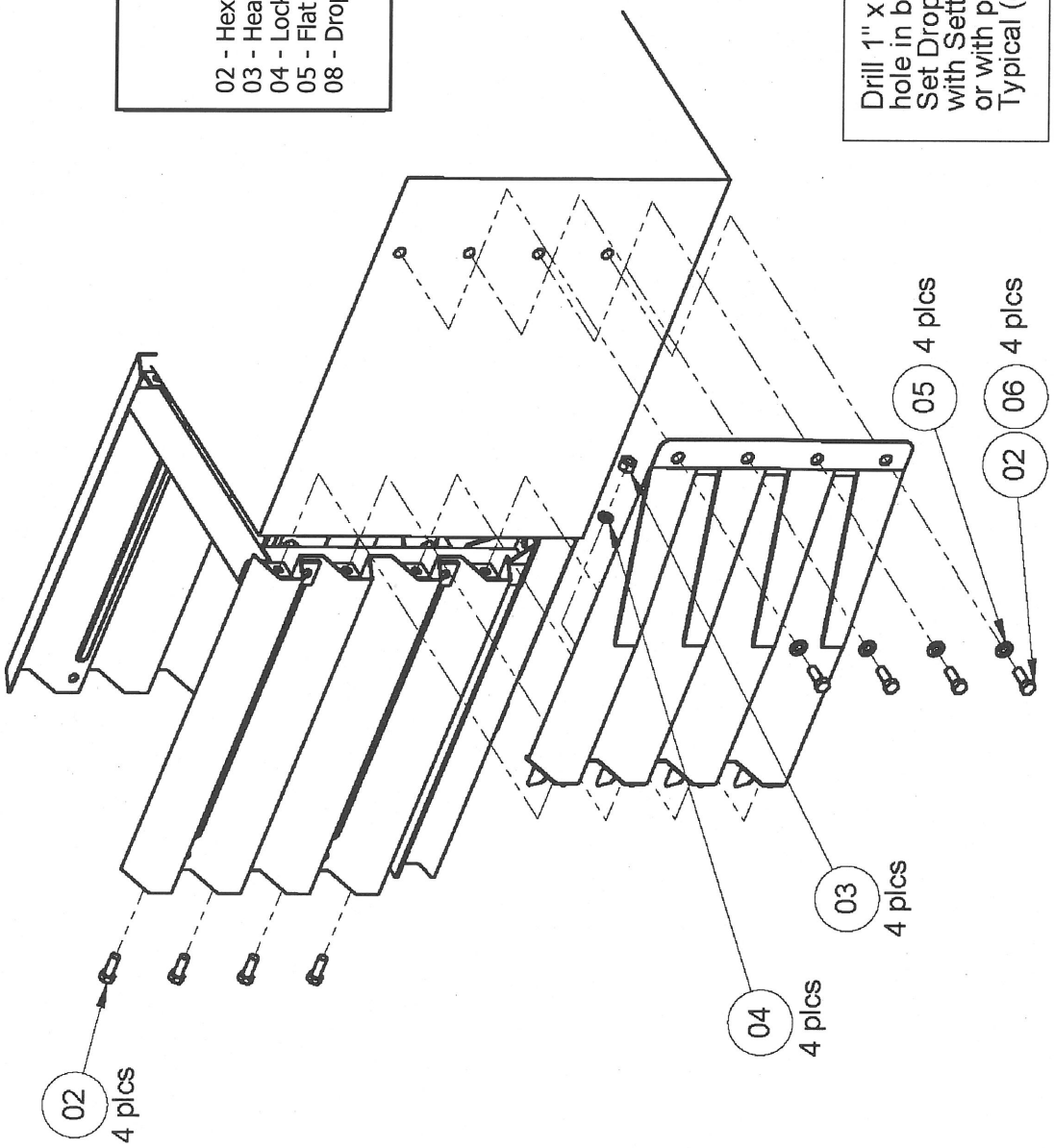

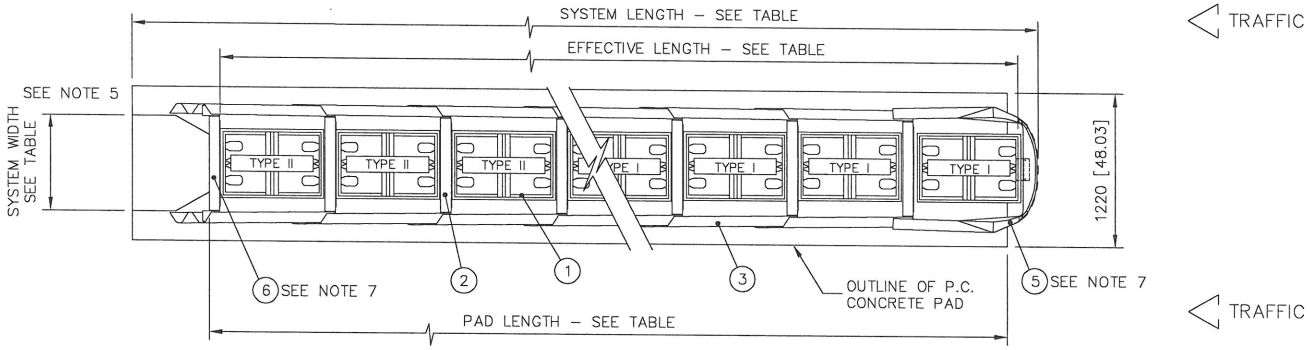

PLAN

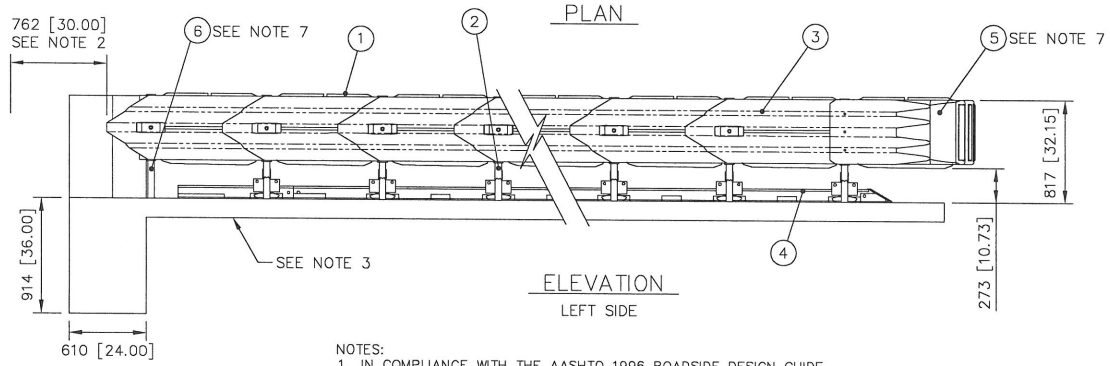

ELEVATION
LEFT SIDE

* G = GREY or Y = YELLOW

BAYS	610[24] WIDTH MODEL#	762[30] WIDTH MODEL#	915[36] WIDTH MODEL#	SYSTEM LENGTH m	SYSTEM LENGTH ft–in	EFFECTIVE LENGTH m	EFFECTIVE LENGTH ft–in	PAD LENGTH m	PAD LENGTH ft–in	MAX DESIGN SPEED km/h [MPH]	# OF CARTRIDGES TYPE I	# OF CARTRIDGES TYPE II
1	QS2401*	QS3001*	QS3601*	2.59	[8'–6"]	1.73	[5'–8"]	1.68	[5'–6"]	40 [25]	2	0
2	QS2402*	QS3002*	QS3602*	3.51	[11'–6"]	2.64	[8'–8"]	2.59	[8'–6"]	60 [37]	2	1
3	QS2403*	QS3003*	QS3603*	4.42	[14'–6"]	3.56	[11'–8"]	3.51	[11'–6"]	70 [44]	3	1
4	QS2404*	QS3004*	QS3604*	5.33	[17'–6"]	4.47	[14'–8"]	4.42	[14'–6"]	80 [50]	3	2
5	QS2405*	QS3005*	QS3605*	6.25	[20'–6"]	5.38	[17'–8"]	5.33	[17'–6"]	90 [56]	4	2
6	QS2406*	QS3006*	QS3606*	7.16	[23'–6"]	6.30	[20'–8"]	6.25	[20'–6"]	△100 [62]	4	3
7	QS2407*	QS3007*	QS3607*	8.08	[26'–6"]	7.21	[23'–8"]	7.16	[23'–6"]	△105 [65]	4	4
8	QS2408*	QS3008*	QS3608*	8.99	[29'–6"]	8.13	[26'–8"]	8.08	[26'–6"]	△110 [68]	4	5
9	QS2409*	QS3009*	QS3609*	9.91	[32'–6"]	9.04	[29'–8"]	8.99	[29'–6"]	△115 [71]	4	6
10	QS2410*	QS3010*	QS3610*	10.82	[35'–6"]	9.96	[32'–8"]	9.91	[32'–6"]	△120 [75]	5	6
11	QS2411*	QS3011*	QS3611*	11.73	[38'–6"]	10.87	[35'–8"]	10.82	[35'–6"]	△120 [75]	5	7
12	QS2412*	QS3012*	QS3612*	12.65	[41'–6"]	11.79	[38'–8"]	11.74	[38'–6"]	△120 [75]	5	8

NOTES:

1. IN COMPLIANCE WITH THE AASHTO 1996 ROADSIDE DESIGN GUIDE, MANUFACTURER RECOMMENDS REMOVAL OF ALL CURBS AND ISLANDS TO ENSURE PROPER IMPACT PERFORMANCE.
2. PROVISION SHALL BE MADE FOR REAR FENDER PANELS TO SLIDE REARWARD UPON IMPACT 762 [30.00] MIN.
3. 150 [6.00] MIN. REINFORCED 28 MPa [4000 PSI] P.C. CONCRETE PAD OR 200 [8.00] MIN. NON–REINFORCED 28 MPa [4000 PSI] P.C. CONCRETE ROADWAY, MEASURING AT LEAST 3.66 m [12'–0"] WIDE BY 15.24 m [50'–0"] LONG.
4. SEE THE "QUADGUARD SYSTEM DESIGN MANUAL", FOR A DESCRIPTION OF ITS IMPACT PERFORMANCE CHARACTERISTICS AND DESIGN LIMITATIONS BEFORE PLACING A SYSTEM AT A GIVEN SITE. INFORMATION AND COPIES OF ABOVE MANUAL ARE AVAILABLE BY CALLING CUSTOMER SERVICE DEPARTMENT AT (888) 323–6374.
5. WHERE NECESSARY, THE CUSTOMER SHALL SUPPLY A TRANSITION FROM THE QUADGUARD SYSTEM TO THE OBJECT BEING SHIELDED.
6. UNITS OF MEASUREMENT ARE MILLIMETERS [INCHES], UNLESS OTHERWISE NOTED.
7. BACKUP, TRANSITION, AND NOSE ASSEMBLIES NOT INCLUDED IN MODEL NUMBER. ORDER SEPARATELY.
8. THE NUMBER OF BAYS INDICATED IN THE TABLE IS BASED ON CALCULATED VALUES TO ENSURE ADEQUATE SYSTEM CAPACITY TO DISSIPATE THE LONGITUDINAL IMPACT ENERGY OF A 2000 kg VEHICLE TRAVELING AT THE SPEED INDICATED.
9. △ THE SIX BAY SYSTEM HAS BEEN FULLY TESTED AT 100 km/h UNDER THE FULL 8 TEST MATRIX OF NCHRP 350 TL–3. SYSTEMS LONGER THAN SIX BAYS SHALL ALSO BE CAPABLE OF MEETING THE OCCUPANT RISK CRITERIA AS RECOMMENDED IN NCHRP 350 FOR VEHICLES WEIGHING 2000 kg IMPACTING HEAD ON AT THE SPEED INDICATED IN THE TABLE.

UNIDIRECTIONAL

KEY

1. QUADGUARD CARTRIDGE
2. DIAPHRAGM
3. FENDER PANEL
4. MONORAIL
5. NOSE ASSEMBLY
6. BACKUP

Revisions	Date	Rev.	By	Ckd.	App.
REVISED NOTE 4., ADDED NOTE 8.	02/25/99	G	LWC	BB	SPT
ADDED NOTE 9	12/3/99	H	DK	DO	SPT
REVISED NOTE 3	2/14/02	I	DDW	STT	SPT

REFERENCES

SERIAL#	
SALES ORDER#	
EH PROJECT#	
DESIGN SPEED	See Chart Above
NOSE COLOR	
NUMBER OF UNITS	

DIAPHRAGM ASSY.	35–40–07
NOSE ASSY.	35–40–05
FENDER PANEL ASSY.	35–40–04
BACKUP ASSY.	35–40–08, 14
RAIL ASSY.	35–40–06
CONCRETE PAD	35–40–09

DRAWN: T. BUSSE	DATE: 08/08/96		
DESIGNED: JVM/MHO	DATE: 03/01/96		
CHECKED: BB	DATE: 08/13/96		
APPROVED: J. Machado	DATE: 08/13/96		
CAD FILE: QSCBCVR–U.dwg			

ENERGY ABSORPTION SYSTEMS, INC.
ENGINEERING AND RESEARCH DEPARTMENT

QUADGUARD® SYSTEM
W/ CONCRETE BACKUP

SCALE	DWG.	SHEET	REV
1=40	QSCBCVR–U	1 of 1	I

MATERIALS:

PARTS LIST			
ITEM	STOCK NO.	DESCRIPTION	REQ'D
1	2760271-0000	SIDE PANEL,END SHOE,QG,G	1
2	35 25130-0000	ANCHOR,MP-3,PT KIT,3/4X6 1/2 HOR	1

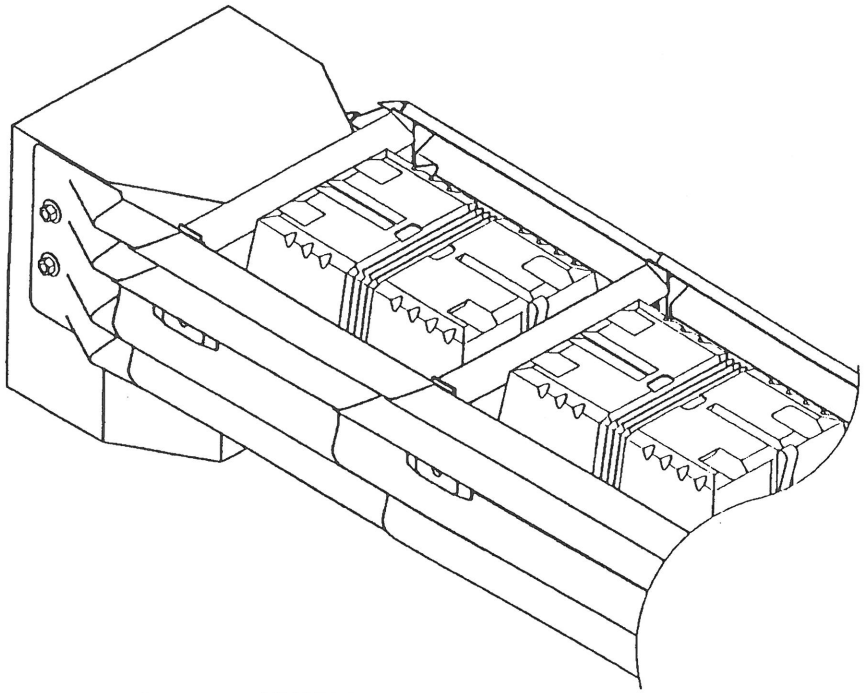

ASSEMBLED VIEW

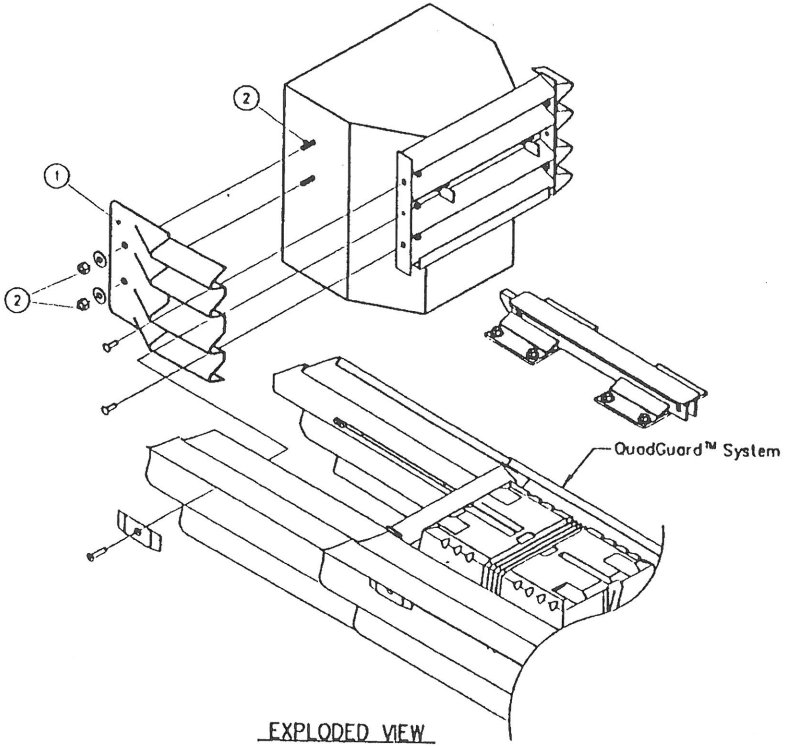

EXPLODED VIEW

3540150-0000

DESIGNED: J.B. WELCH	DATE: 9/96	Energy Absorption Systems, Inc. Engineering Design Drawing
NEXT ASSY:		
SCALE: N.T.S.		QuadGuard™ Transition to Vertical Concrete Barrier
TOLERANCES: a. Angular ± 1° b. Linear ± 2mm (UNLESS OTHERWISE NOTED)		FILE: QGTRANS CERTRPT 03 REV: SHEET: 1 of 2