Dist	COUNTY	ROUTE	POST MILES TOTAL PROJECT	SHEET No.	TOTAL SHEETS
04	CC	24	1.2,1.4	1	30

INDEX OF PLANS

SHEET No.	DESCRIPTION
1	TITLE AND LOCATION MAP
2-3	TYPICAL CROSS SECTIONS
4-5	LAYOUTS
6	CONSTRUCTION DETAILS
7-9	EROSION CONTROL PLAN, DETAILS AND QUANTITIES
10	CONTOUR GRADING
11-14	DRAINAGE PLANS, PROFILES, DETAILS AND QUANTITIES
15	CONSTRUCTION AREA SIGNS
16	TRAFFIC HANDLING PLAN, DETAILS AND QUANTITIES
17	SUMMARY OF QUANTITIES
18-30	REVISED AND NEW STANDARD PLANS

THE STANDARD PLANS LIST APPLICABLE TO THIS CONTRACT IS INCLUDED IN THE NOTICE TO BIDDERS AND SPECIAL PROVISIONS BOOK.

STATE OF CALIFORNIA

DEPARTMENT OF TRANSPORTATION

PROJECT PLANS FOR CONSTRUCTION ON

STATE HIGHWAY

IN CONTRA COSTA COUNTY
IN ORINDA
AT GATEWAY BOULEVARD OVERCROSSING

TO BE SUPPLEMENTED BY STANDARD PLANS DATED MAY 2006

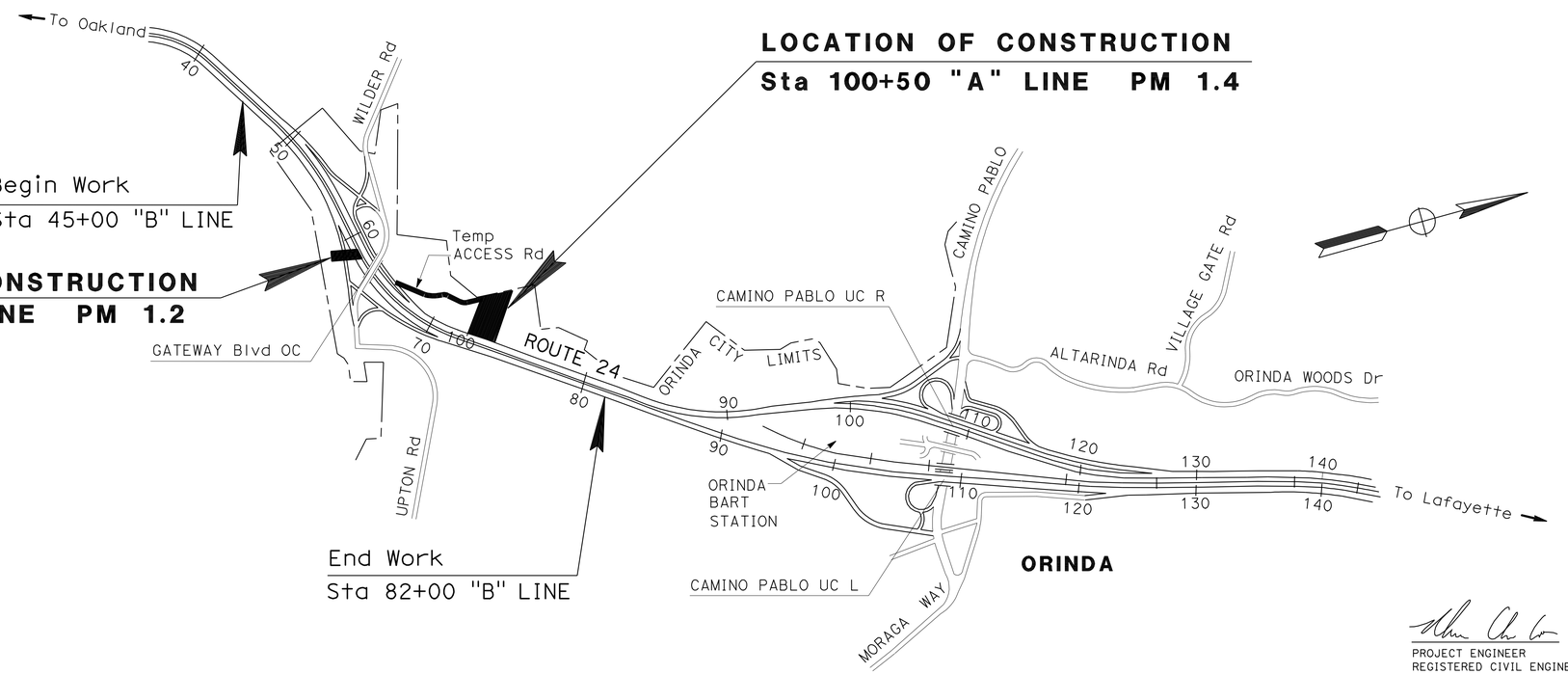

PROJECT MANAGER: JAY HAGHPARAST

DESIGN ENGINEER: CAROLINE REYES

PROJECT ENGINEER REGISTERED CIVIL ENGINEER — DATE 3/1/11

REGISTERED PROFESSIONAL ENGINEER — NHAN CAO No. 76454 Exp. 12/31/12 CIVIL — STATE OF CALIFORNIA

June 20, 2011

PLANS APPROVAL DATE

THE STATE OF CALIFORNIA OR ITS OFFICERS OR AGENTS SHALL NOT BE RESPONSIBLE FOR THE ACCURACY OR COMPLETENESS OF SCANNED COPIES OF THIS PLAN SHEET.

THE CONTRACTOR SHALL POSSESS THE CLASS (OR CLASSES) OF LICENSE AS SPECIFIED IN THE "NOTICE TO BIDDERS."

NO SCALE

CONTRACT No.	04-4S2704
PROJECT ID	0400001221

LAST REVISION 00-00-00 — DATE PLOTTED => 19-JUN-2012 TIME PLOTTED => 05:56

Dist	COUNTY	ROUTE	POST MILES TOTAL PROJECT	SHEET No.	TOTAL SHEETS
04	CC	24	1.2,1.4	2	30

REGISTERED CIVIL ENGINEER 3/1/11 DATE

6-20-11
PLANS APPROVAL DATE

REGISTERED PROFESSIONAL ENGINEER NHAN CAO No. 76454 Exp. 12/31/12 CIVIL STATE OF CALIFORNIA

THE STATE OF CALIFORNIA OR ITS OFFICERS OR AGENTS SHALL NOT BE RESPONSIBLE FOR THE ACCURACY OR COMPLETENESS OF SCANNED COPIES OF THIS PLAN SHEET.

NOTE:

1. REFER TO SHEETS EC-2 AND ECD-1 FOR INSTALLATION OF RECP (NETTING) IN CONJUNCTION WITH INSTALLATION OF GEOSYNTHETIC REINFORCEMENT AND ENBANKMENT CONSTRUCTION.

ABBREVIATION

OMPI - OPEN METAL PIPE INLET

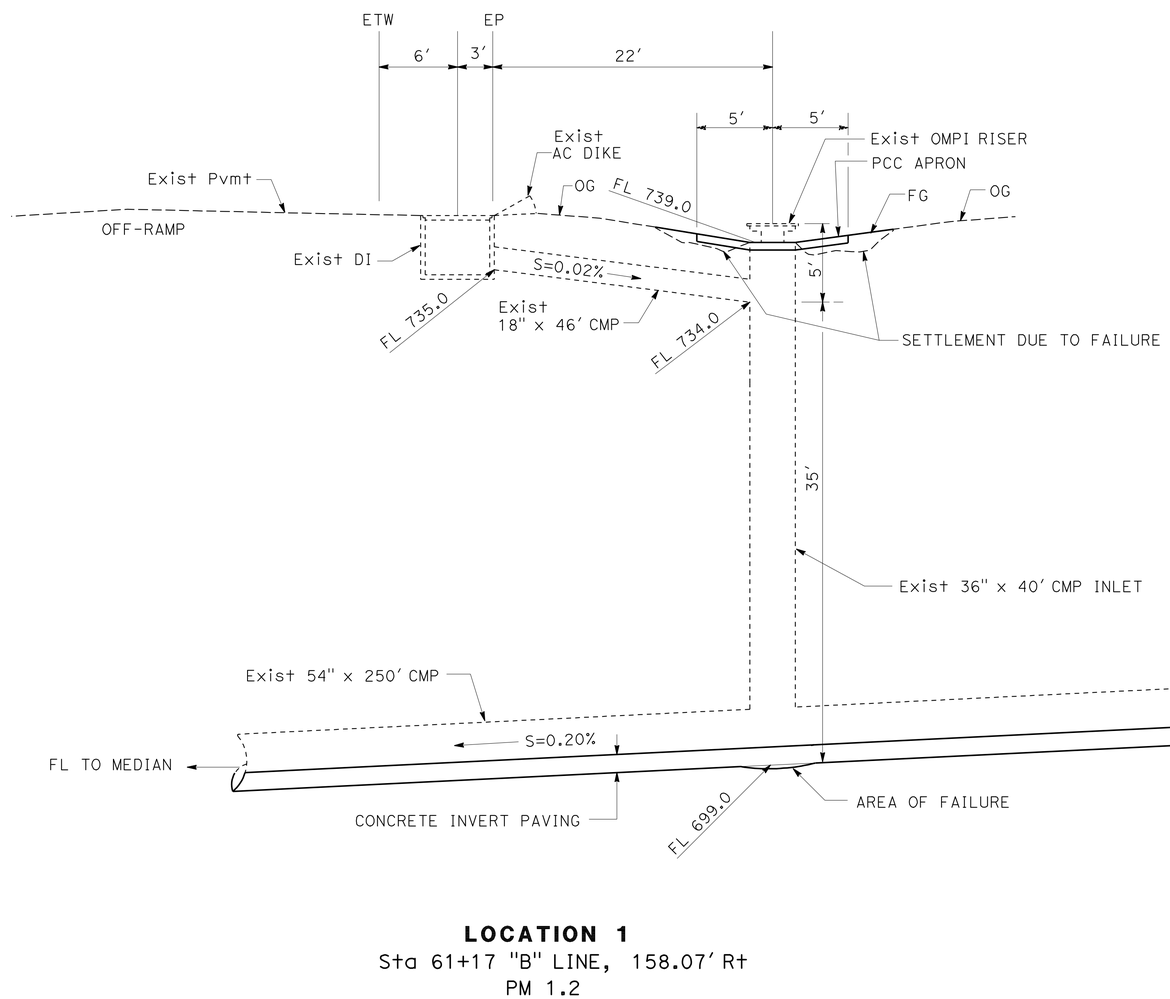

LOCATION 1
Sta 61+17 "B" LINE, 158.07' Rt
PM 1.2

ROUTE 24

TYPICAL CROSS SECTIONS

NO SCALE

X-1

STATE OF CALIFORNIA - DEPARTMENT OF TRANSPORTATION
Caltrans
10-DESIGN

FUNCTIONAL SUPERVISOR: CAROLINE REYES
CALCULATED-DESIGNED BY: NHAN CAO
CHECKED BY: DEREK WAGGONER
REVISED BY: NC
DATE REVISED: 3/1/11

LAST REVISION 00-00-00
DATE PLOTTED => 19-JUN-2012
TIME PLOTTED => 05:56

Dist	COUNTY	ROUTE	POST MILES TOTAL PROJECT	SHEET No.	TOTAL SHEETS
04	CC	24	1.2,1.4	3	30

REGISTERED CIVIL ENGINEER 3/1/11 DATE

6-20-11
PLANS APPROVAL DATE

REGISTERED PROFESSIONAL ENGINEER
NHAN CAO
No. 76454
Exp. 12/31/12
CIVIL
STATE OF CALIFORNIA

THE STATE OF CALIFORNIA OR ITS OFFICERS OR AGENTS SHALL NOT BE RESPONSIBLE FOR THE ACCURACY OR COMPLETENESS OF SCANNED COPIES OF THIS PLAN SHEET.

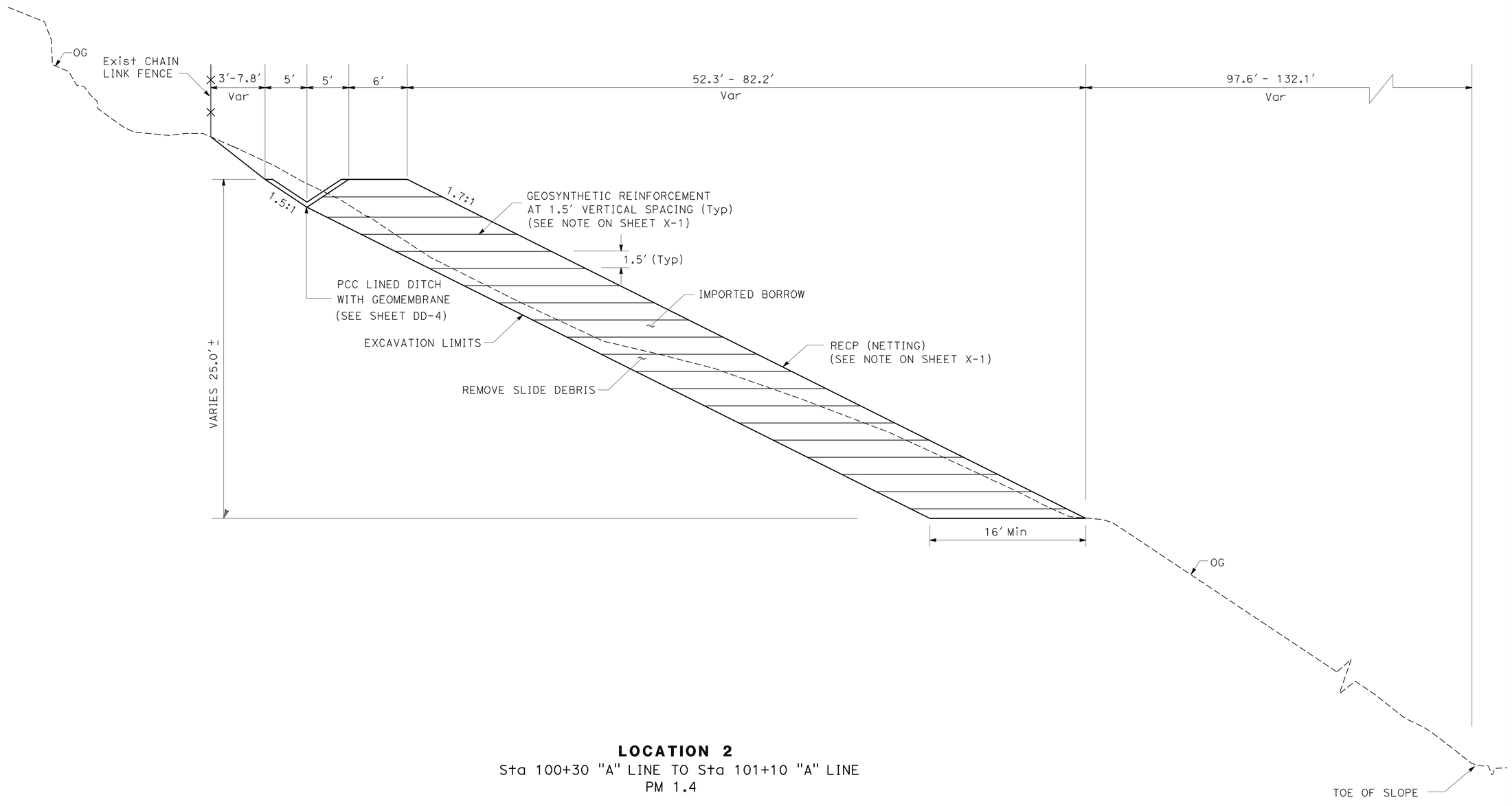

LOCATION 2
Sta 100+30 "A" LINE TO Sta 101+10 "A" LINE
PM 1.4

ROUTE 24

TYPICAL CROSS SECTIONS

NO SCALE

X-2

STATE OF CALIFORNIA - DEPARTMENT OF TRANSPORTATION
Caltrans
10-DESIGN

FUNCTIONAL SUPERVISOR: CAROLINE REYES
CALCULATED-DESIGNED BY: NHAN CAO
CHECKED BY: DEREK WAGGONER
REVISED BY: NC
DATE REVISED: 3/7/11

LAST REVISION 00-00-00
DATE PLOTTED => 19-JUN-2012
TIME PLOTTED => 05:56

Dist	COUNTY	ROUTE	POST MILES TOTAL PROJECT	SHEET No.	TOTAL SHEETS
04	CC	24	1.2,1.4	4	30

REGISTERED CIVIL ENGINEER 3/1/11 DATE

6-20-11
PLANS APPROVAL DATE

REGISTERED PROFESSIONAL ENGINEER NHAN CAO No. 76454 Exp. 12/31/12 CIVIL STATE OF CALIFORNIA

THE STATE OF CALIFORNIA OR ITS OFFICERS OR AGENTS SHALL NOT BE RESPONSIBLE FOR THE ACCURACY OR COMPLETENESS OF SCANNED COPIES OF THIS PLAN SHEET.

NOTES:

1. FOR ACCURATE RIGHT OF WAY DATA, CONTACT RIGHT OF WAY ENGINEERING AT THE DISTRICT OFFICE.
2. CONCRETE INVERT PAVING TO BE 4 INCH THICK, EXCEPT AT LOCATIONS SHOWN. TRANSITIONS TO 8 INCH INVERT PAVING. SEE SHEET DD-1 FOR DETAILS.
3. SEE SHEET DD-3 FOR DETAILS ON DRAINAGE SYSTEM No. 1.
4. SEE SHEET DD-4 FOR DETAILS ON DRAINAGE SYSTEM No. 2.

LEGEND

- Exist OVERHEAD TELEPHONE LINE (AT&T)
- Exist UNDERGROUND FIBER OPTICS CABLE (AT&T)
- Exist UTILITY POLE
- CONCRETE INVERT PAVING
- SLIDE AREA
- DRAINAGE SYSTEM No.
- DRAINAGE UNIT
- Temp REINFORCED SILT FENCE
- RECONSTRUCT CHAIN LINK FENCE
- DIRECTION OF TRAFFIC

ABBREVIATIONS

OMPI - OPEN METAL PIPE INLET
AT&T - AMERICAN TELEPHONE AND TELEGRAPH
PMP - PERFORATED METAL PIPE

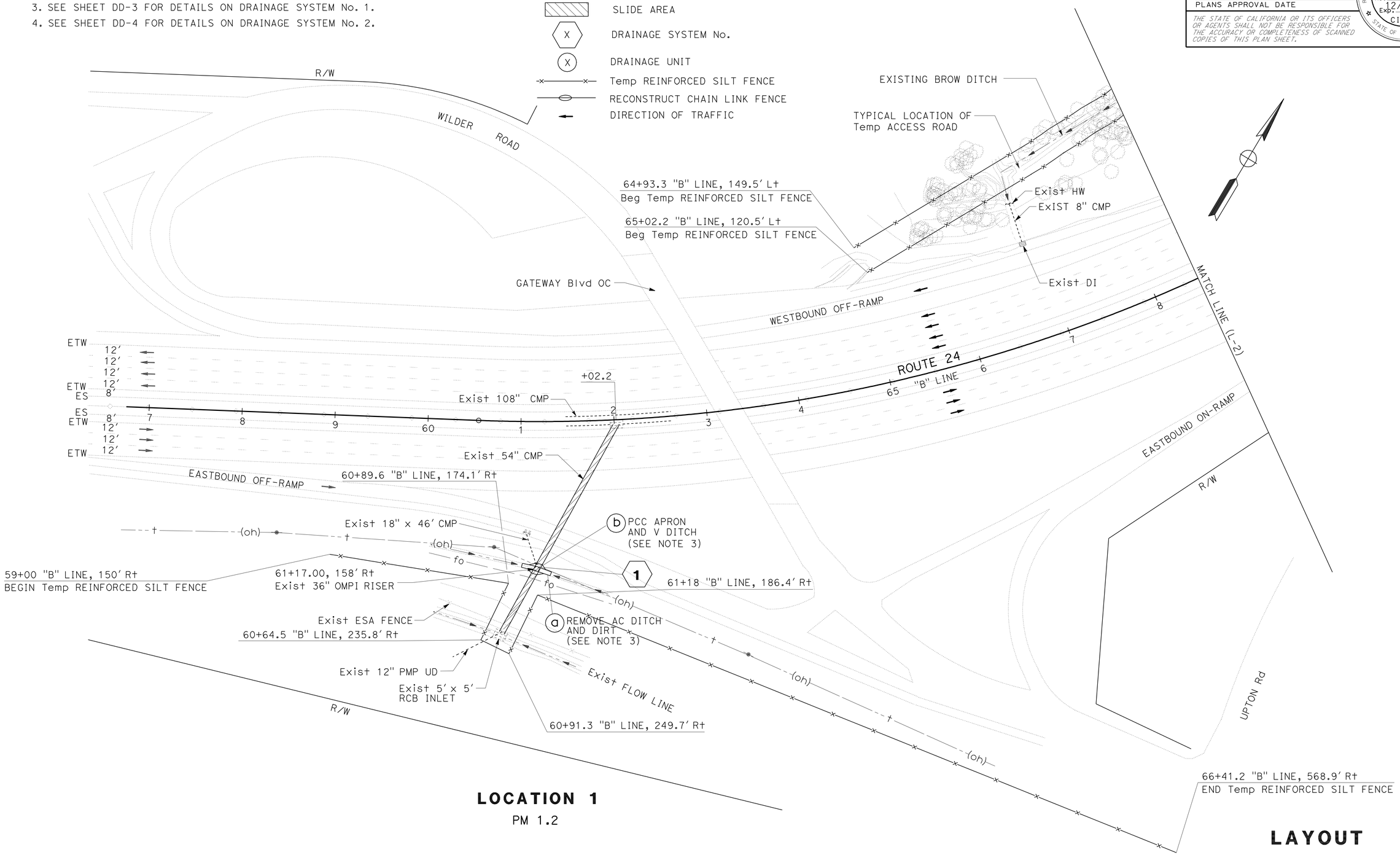

LOCATION 1

PM 1.2

LAYOUT

SCALE: 1" = 50'

L-1

STATE OF CALIFORNIA - DEPARTMENT OF TRANSPORTATION
Caltrans®
10-DESIGN

FUNCTIONAL SUPERVISOR: CAROLINE REYES
CALCULATED-DESIGNED BY: NHAN CAO
CHECKED BY: DEREK WAGGONER
REVISED BY: NC
DATE REVISED: 3/10/11

LAST REVISION 00-00-00
DATE PLOTTED => 19-JUN-2012
TIME PLOTTED => 05:56

Dist	COUNTY	ROUTE	POST MILES TOTAL PROJECT	SHEET No.	TOTAL SHEETS
04	CC	24	1.2,1.4	5	30

REGISTERED CIVIL ENGINEER 3/1/11 DATE

6-20-11
PLANS APPROVAL DATE

REGISTERED PROFESSIONAL ENGINEER NHAN CAO No. 76454 Exp. 12/31/12 CIVIL STATE OF CALIFORNIA

THE STATE OF CALIFORNIA OR ITS OFFICERS OR AGENTS SHALL NOT BE RESPONSIBLE FOR THE ACCURACY OR COMPLETENESS OF SCANNED COPIES OF THIS PLAN SHEET.

NOTE:

FOR ACCURATE RIGHT OF WAY DATA, CONTACT RIGHT OF WAY ENGINEERING AT THE DISTRICT OFFICE.

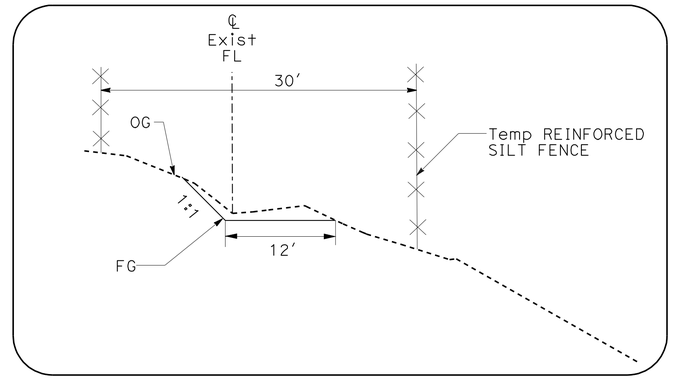

TYPICAL Temp ACCESS ROAD
NO SCALE

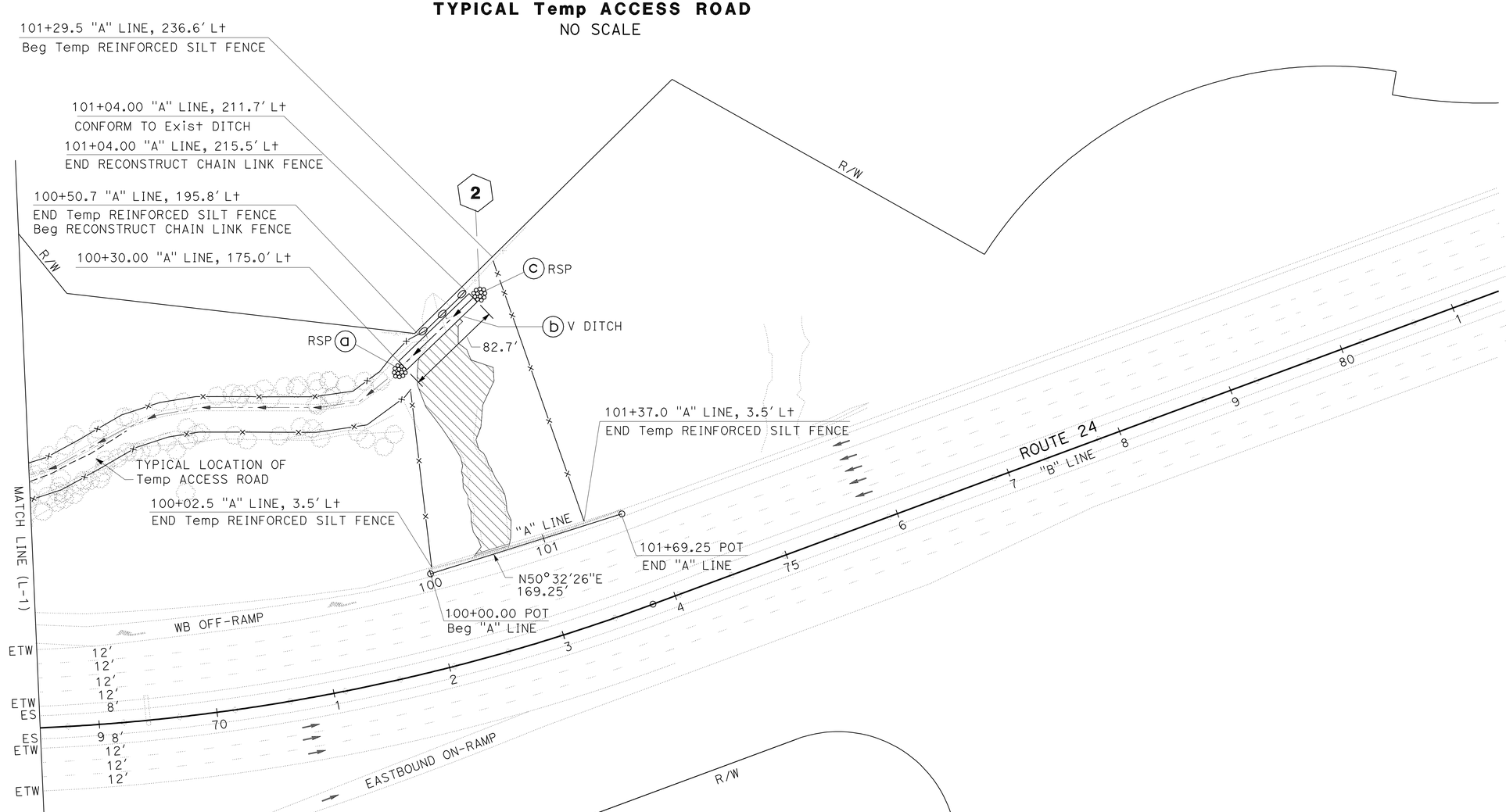

LOCATION 2
PM 1.4
SCALE: 1" = 50′

LAYOUT
SCALE AS SHOWN **L-2**

NC	3/10/11		
REVISED BY	DATE REVISED		
NHAN CAO	DEREK WAGGONER		
CALCULATED-DESIGNED BY	CHECKED BY		
FUNCTIONAL SUPERVISOR	CAROLINE REYES		

STATE OF CALIFORNIA - DEPARTMENT OF TRANSPORTATION
Caltrans
10-DESIGN

LAST REVISION 00-00-00 | DATE PLOTTED => 20-JUN-2012 | TIME PLOTTED => 05:38

Dist	COUNTY	ROUTE	POST MILES TOTAL PROJECT	SHEET No.	TOTAL SHEETS
04	CC	24	1.2,1.4	6	30

REGISTERED CIVIL ENGINEER 3/1/11 DATE

6-20-11
PLANS APPROVAL DATE

REGISTERED PROFESSIONAL ENGINEER
NHAN CAO
No. 76454
Exp. 12/31/12
CIVIL
STATE OF CALIFORNIA

THE STATE OF CALIFORNIA OR ITS OFFICERS OR AGENTS SHALL NOT BE RESPONSIBLE FOR THE ACCURACY OR COMPLETENESS OF SCANNED COPIES OF THIS PLAN SHEET.

NOTES:

1. GROUT INJECTION POINTS ARE AT 2 FEET INTERVALS TO A MAXIMUM DEPTH OF 35 FEET. (SEE ELEVATION DETAIL)
2. LOCATIONS AND NUMBER OF GROUT INJECTION PORTS ARE APPROXIMATE. EXACT LOCATIONS AND NUMBERS TO BE DETERMINED BY THE ENGINEER.

LEGEND

- t (oh) — Exist OVERHEAD TELEPHONE LINE (AT&T)
- fo — Exist UNDERGROUND FIBER OPTICS CABLE (AT&T)
- GROUT PORT
- DIRECTION OF FLOW
- Temp REINFORCED SILT FENCE

ABBREVIATION

AT&T - AMERICAN TELEPHONE AND TELEGRAPH
OMPI - OPEN METAL PIPE INLET

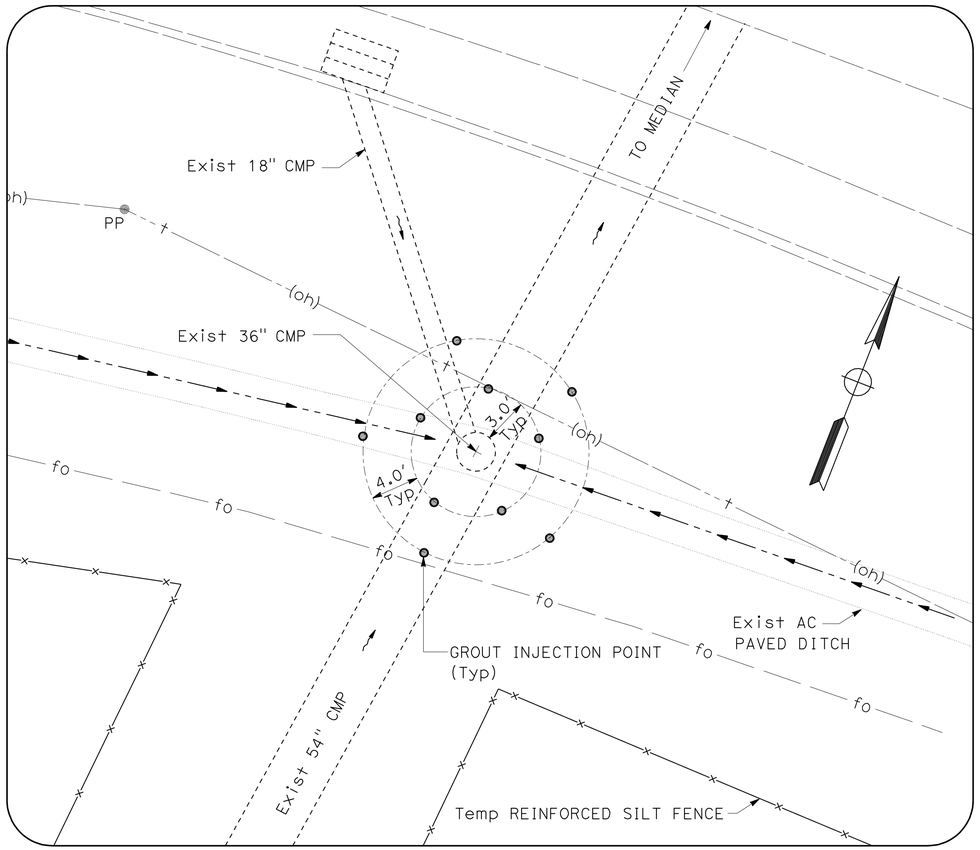

PLAN

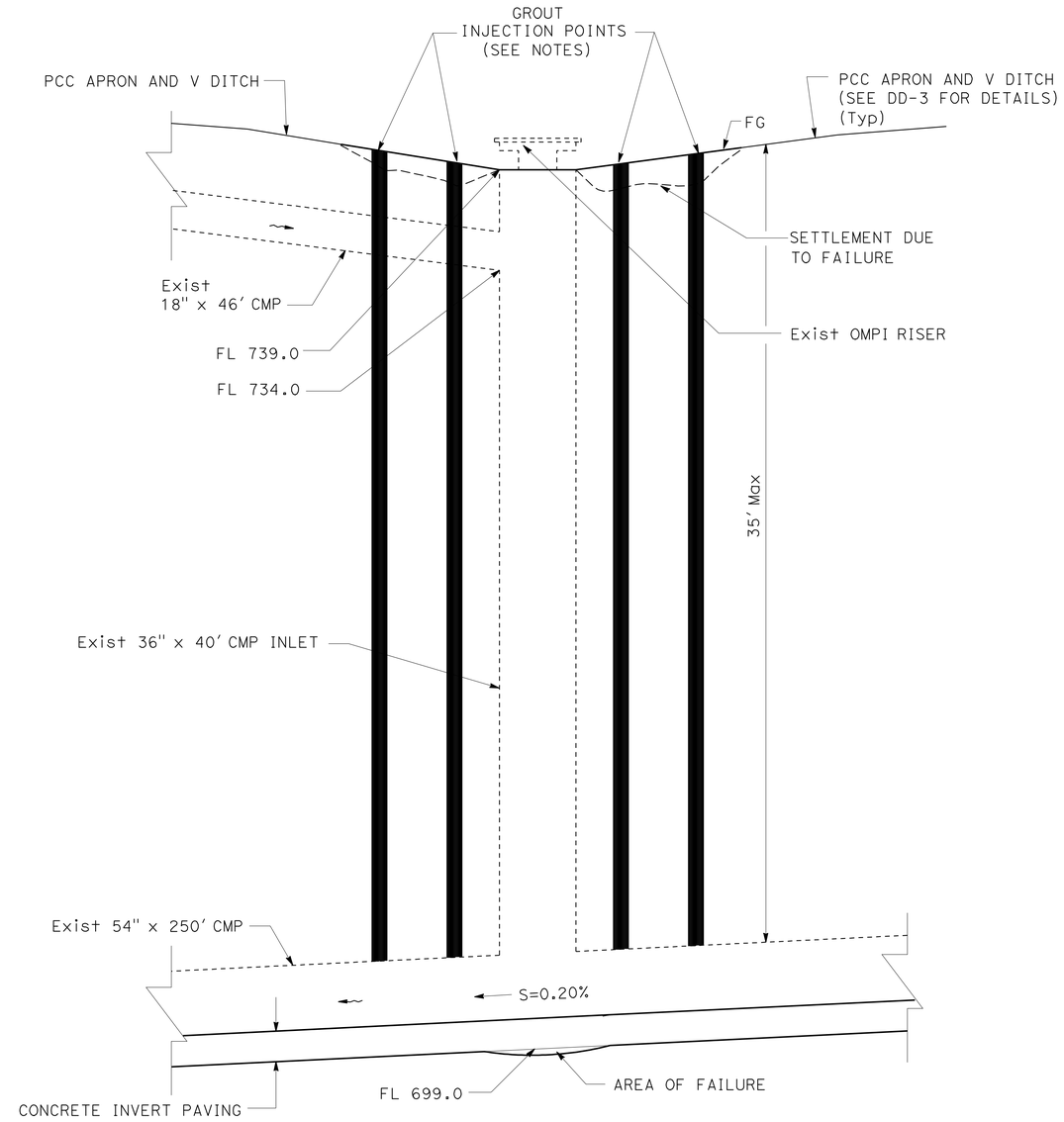

ELEVATION

COMPACTION GROUTING DETAILS

LOCATION 1
Sta 61+17 "B" LINE, 158.07' Rt
PM 1.2

CONSTRUCTION DETAILS

NO SCALE

C-1

STATE OF CALIFORNIA - DEPARTMENT OF TRANSPORTATION
Caltrans
10-DESIGN

FUNCTIONAL SUPERVISOR	CALCULATED-DESIGNED BY	REVISED BY	DATE REVISED
CAROLINE REYES	THOMAS TAING	TT	3/1/11
	NHAN CAO		
	CHECKED BY		

LAST REVISION 00-00-00 | DATE PLOTTED => 19-JUN-2012 | TIME PLOTTED => 05:56

Dist	COUNTY	ROUTE	POST MILES TOTAL PROJECT	SHEET No.	TOTAL SHEETS
04	CC	24	1.2,1.4	7	30

Alex McDonald
LICENSED LANDSCAPE ARCHITECT

6-20-11
PLANS APPROVAL DATE

LICENSED LANDSCAPE ARCHITECT
ALEXANDER K. MCDONALD No. 5342
Alex McDonald
Signature
08-31-12
Renewal Date
03-30-11
Date
STATE OF CALIFORNIA

THE STATE OF CALIFORNIA OR ITS OFFICERS OR AGENTS SHALL NOT BE RESPONSIBLE FOR THE ACCURACY OR COMPLETENESS OF SCANNED COPIES OF THIS PLAN SHEET.

NOTES:

1. FOR ACCURATE RIGHT OF WAY DATA, CONTACT RIGHT OF WAY ENGINEERING AT THE DISTRICT OFFICE.
2. FOR TEMPORARY REINFORCED SILT FENCE LOCATIONS, SEE LAYOUT PLANS.
3. EROSION CONTROL MATERIALS LOCATIONS ARE DIAGRAMMATIC ONLY.
4. ENSURE FIBER ROLLS INSTALLED IN EXISTING BROW DITCH ARE INSTALLED TO PREVENT FLANKING OF CONCENTRATED FLOW AROUND THE ENDS OF FIBER ROLLS.

LEGEND

EROSION CONTROL (TYPE 1)

EROSION CONTROL (COMPOST BLANKET)
EROSION CONTROL (BONDED FIBER MATRIX)

EROSION CONTROL (TYPE 2)

EROSION CONTROL (COMPOST BLANKET)
ROLLED EROSION CONTROL PRODUCT (NETTING)
EROSION CONTROL (BONDED FIBER MATRIX)

FIBER ROLLS

ABBREVIATIONS

ERC EROSION CONTROL
FR FIBER ROLLS

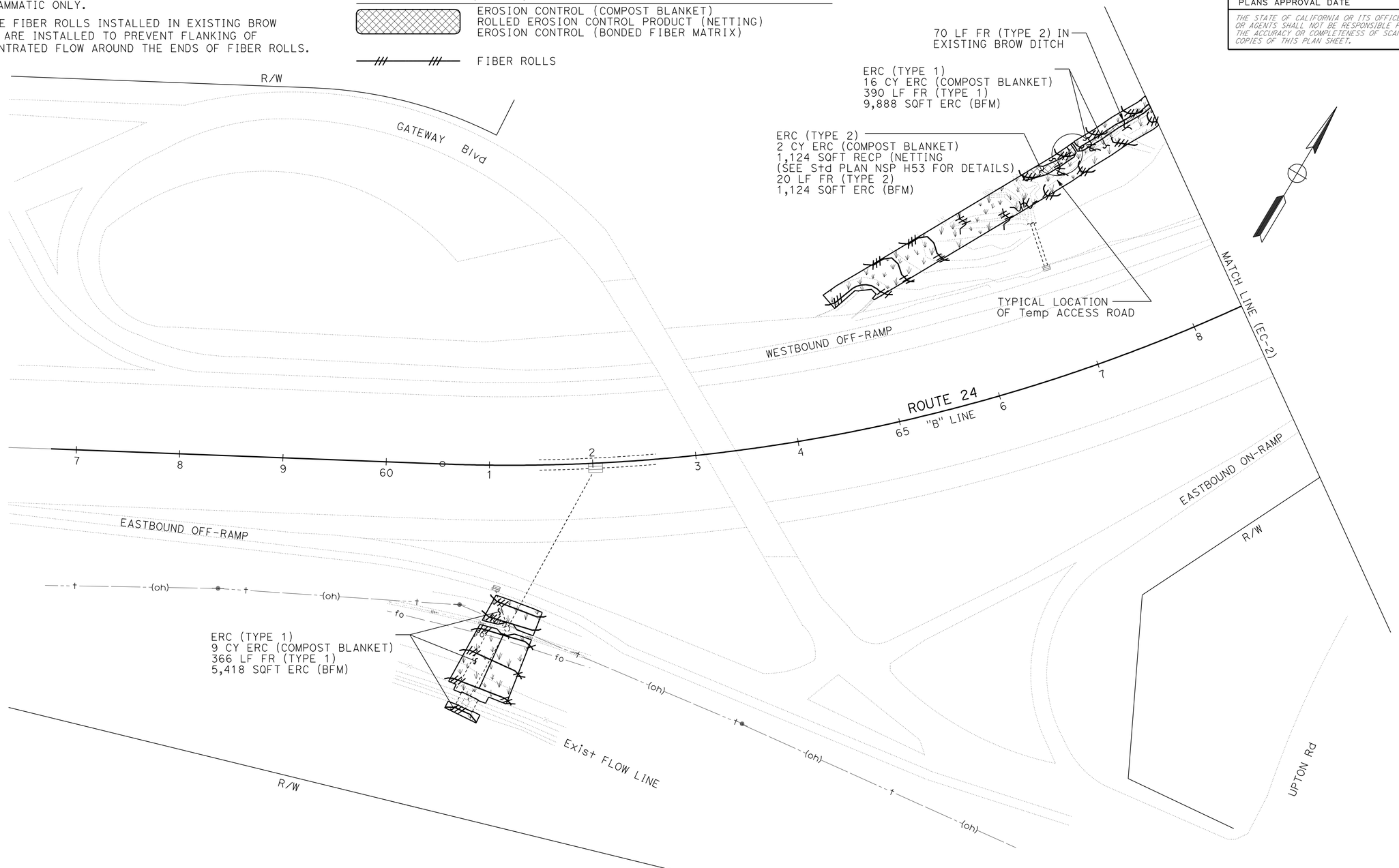

LOCATION 1
PM 1.2

THIS PLAN ACCURATE FOR EROSION CONTROL WORK ONLY.

EROSION CONTROL PLAN

SCALE: 1" = 50′ **EC-1**

REVISED BY	DATE REVISED
AKM	03/08/11

CALCULATED-DESIGNED BY: Alex McDonald
CHECKED BY: Jennifer Egawa
SENIOR LANDSCAPE ARCHITECT: DAVID W. YAM

STATE OF CALIFORNIA - DEPARTMENT OF TRANSPORTATION
Caltrans®
WATER QUALITY

LAST REVISION 03-03-11
DATE PLOTTED => 20-JUN-2012
TIME PLOTTED => 05:38

Dist	COUNTY	ROUTE	POST MILES TOTAL PROJECT	SHEET No.	TOTAL SHEETS
04	CC	24	1.2,1.4	8	30

Alex McDonald
LICENSED LANDSCAPE ARCHITECT

6-20-11
PLANS APPROVAL DATE

LICENSED LANDSCAPE ARCHITECT
ALEXANDER K. McDONALD No. 5342
Alex McDonald
Signature
08-31-12
Renewal Date
03-30-11
Date
STATE OF CALIFORNIA

THE STATE OF CALIFORNIA OR ITS OFFICERS OR AGENTS SHALL NOT BE RESPONSIBLE FOR THE ACCURACY OR COMPLETENESS OF SCANNED COPIES OF THIS PLAN SHEET.

NOTE:

FOR ACCURATE RIGHT OF WAY DATA, CONTACT RIGHT OF WAY ENGINEERING AT THE DISTRICT OFFICE.

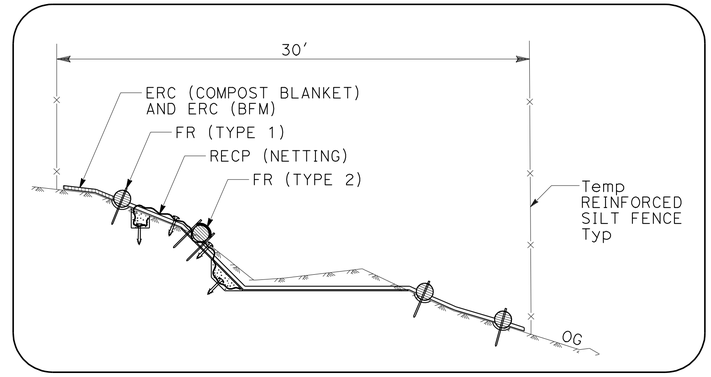

TYPICAL EROSION CONTROL MATERIALS AT TEMPORARY ACCESS ROAD
NO SCALE

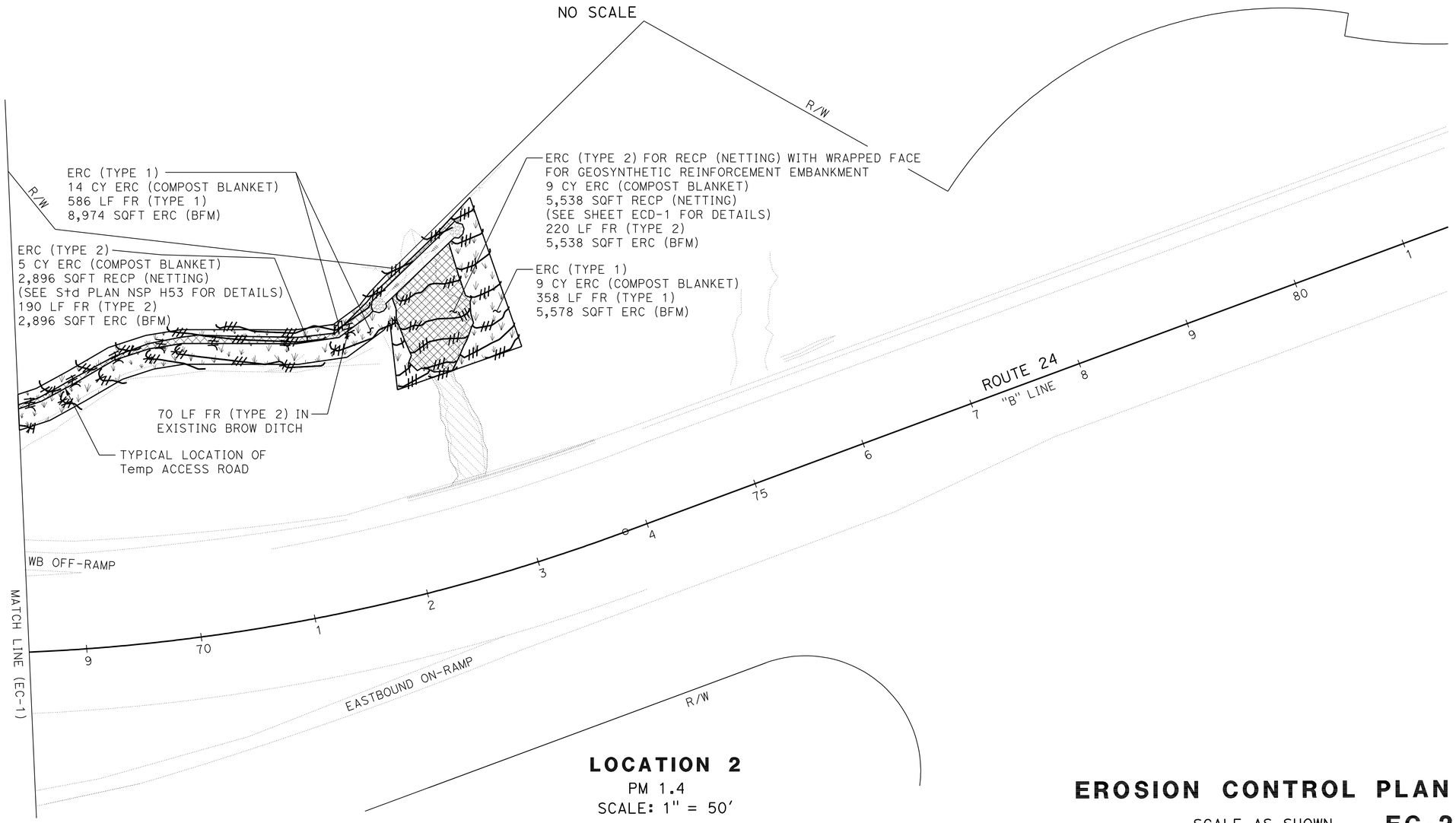

LOCATION 2
PM 1.4
SCALE: 1" = 50'

THIS PLAN ACCURATE FOR EROSION CONTROL WORK ONLY.

EROSION CONTROL PLAN

SCALE AS SHOWN **EC-2**

STATE OF CALIFORNIA - DEPARTMENT OF TRANSPORTATION
Caltrans®
WATER QUALITY

SENIOR LANDSCAPE ARCHITECT: DAVID W. YAM

CALCULATED-DESIGNED BY: Jennifer Egawa
CHECKED BY: Alex McDonald

REVISED BY: AKM
DATE REVISED: 03/08/11

LAST REVISION 03-03-11
DATE PLOTTED => 20-JUN-2012
TIME PLOTTED => 05:39

Dist	COUNTY	ROUTE	POST MILES TOTAL PROJECT	SHEET No.	TOTAL SHEETS
04	CC	24	1.2,1.4	9	30

Alex McDonald
LICENSED LANDSCAPE ARCHITECT

6-20-11
PLANS APPROVAL DATE

LICENSED LANDSCAPE ARCHITECT
ALEXANDER K. MCDONALD No. 5342
Alex McDonald
Signature
08-31-12
Renewal Date
03-30-11
Date
STATE OF CALIFORNIA

THE STATE OF CALIFORNIA OR ITS OFFICERS OR AGENTS SHALL NOT BE RESPONSIBLE FOR THE ACCURACY OR COMPLETENESS OF SCANNED COPIES OF THIS PLAN SHEET.

NOTES

1. INSTALL RECP (NETTING) IN CONJUNCTION WITH INSTALLATION OF GEOSYNTHETIC REINFORCEMENT AT LOCATION SHOWN ON SHEET EC-2.
2. ANCHOR RECP (NETTING) THROUGH GEOSYNTHETIC REINFORCEMENT AT ALL LOCATIONS.
3. SECURE RECP (NETTING) WITH FASTENERS AS PER THE MANUFACTURER'S INSTRUCTIONS.
4. DIMENSIONS MAY VARY TO MATCH FIELD CONDITIONS.

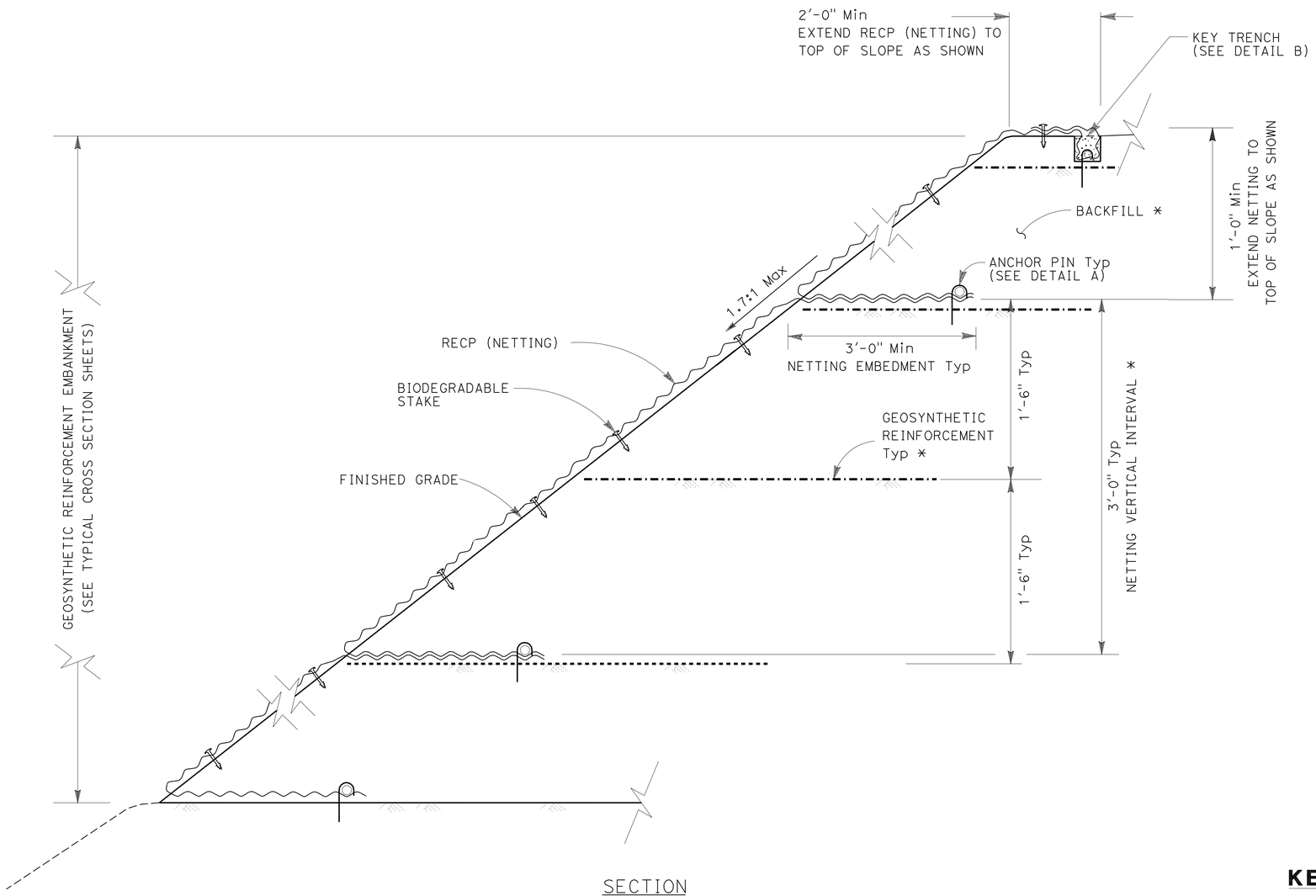

SECTION

ROLLED EROSION CONTROL PRODUCT (NETTING) WITH WRAPPED FACE FOR GEOSYNTHETIC REINFORCEMENT EMBANKMENT

* SEE GEOSYNTHETIC REINFORCEMENT DETAILS TYPICAL CROSS SECTION SHEETS

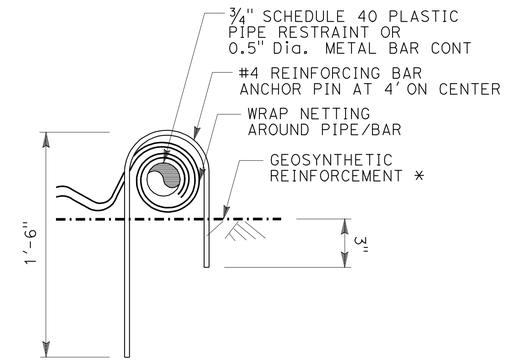

DETAIL A

ANCHOR PIN

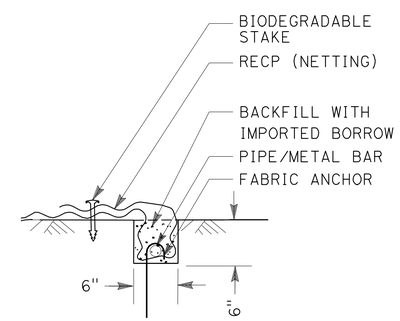

DETAIL B

KEY TRENCH DETAIL AT GEOSYNTHETIC REINFORCEMENT EMBANKMENT

EROSION CONTROL DETAILS

NO SCALE

ECD-1

STATE OF CALIFORNIA - DEPARTMENT OF TRANSPORTATION
Caltrans®
WATER QUALITY

SENIOR LANDSCAPE ARCHITECT: DAVID W. YAM
CALCULATED-DESIGNED BY: Alex McDonald
CHECKED BY: Jennifer Egawa
REVISED BY: AKM
DATE REVISED: 03/03/11

LAST REVISION 03-03-11
DATE PLOTTED => 20-JUN-2012
TIME PLOTTED => 05:39

Dist	COUNTY	ROUTE	POST MILES TOTAL PROJECT	SHEET No.	TOTAL SHEETS
04	CC	24	1.2,1.4	10	30

REGISTERED CIVIL ENGINEER 3/1/11 DATE

6-20-11
PLANS APPROVAL DATE

REGISTERED PROFESSIONAL ENGINEER NHAN CAO No. 76454 Exp. 12/31/12 CIVIL STATE OF CALIFORNIA

THE STATE OF CALIFORNIA OR ITS OFFICERS OR AGENTS SHALL NOT BE RESPONSIBLE FOR THE ACCURACY OR COMPLETENESS OF SCANNED COPIES OF THIS PLAN SHEET.

NOTE:

FOR ACCURATE RIGHT OF WAY DATA, CONTACT RIGHT OF WAY ENGINEERING AT THE DISTRICT OFFICE.

LEGEND

- (X) DRAINAGE SYSTEM No.
- (X) DRAINAGE UNIT
- Temp REINFORCED SILT FENCE
- RECONSTRUCT CHAIN LINK FENCE

DITCH PROFILE

SCALE: Horiz 1" = 20'
Vert 1" = 2'

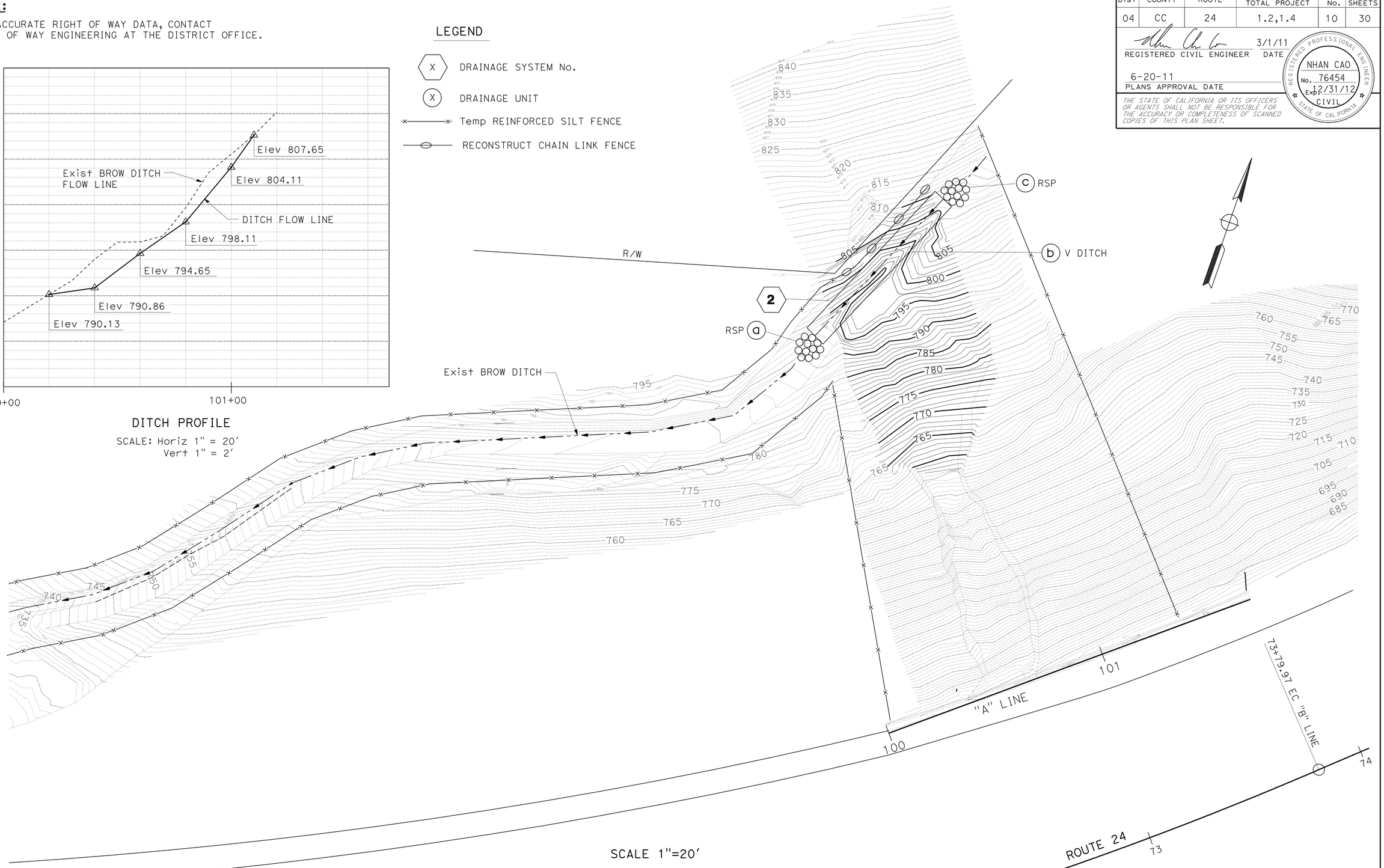

SCALE 1"=20'

THIS PLAN ACCURATE FOR CONTOUR GRADING WORK ONLY.

CONTOUR GRADING

SCALE AS SHOWN

G-1

DW	3/2/11
REVISED BY	DATE REVISED
DEREK WAGGONER	NHAN CAO
CALCULATED-DESIGNED BY	CHECKED BY
FUNCTIONAL SUPERVISOR	CAROLINE REYES

STATE OF CALIFORNIA - DEPARTMENT OF TRANSPORTATION

Caltrans

10-DESIGN

LAST REVISION 00-00-00 | DATE PLOTTED => 19-JUN-2012 | TIME PLOTTED => 05:57

Dist	COUNTY	ROUTE	POST MILES TOTAL PROJECT	SHEET No.	TOTAL SHEETS
04	CC	24	1.2,1.4	11	30

REGISTERED CIVIL ENGINEER 3/1/11 DATE

6-20-11
PLANS APPROVAL DATE

REGISTERED PROFESSIONAL ENGINEER NHAN CAO No. 76454 Exp. 12/31/12 CIVIL STATE OF CALIFORNIA

THE STATE OF CALIFORNIA OR ITS OFFICERS OR AGENTS SHALL NOT BE RESPONSIBLE FOR THE ACCURACY OR COMPLETENESS OF SCANNED COPIES OF THIS PLAN SHEET.

LEGEND

- CONCRETE INVERT PAVING
- Conc (DITCH LINING)
- REMOVE AC DITCH Conc (DITCH LINING)
- X - DRAINAGE SYSTEM No.
- X - DRAINAGE UNIT
- Exist OVERHEAD TELEPHONE LINE (AT&T)
- Exist UNDERGROUND FIBER OPTICS CABLE (AT&T)
- Temp REINFORCED SILT FENCE

NOTES:

1. INVERT PAVING TO BE 4" THICK, EXCEPT AT LOCATIONS SHOWN. TRANSITIONS TO 8" INVERT PAVING.
2. CULVERT CONTACT GROUTING LIMITED TO LAST 18 FEET.
3. INSTALL GROUT PORTS AT THE 2, 4, 8 AND 10 O'CLOCK CIRCUMFERENTIAL POSITIONS, EVERY 6 FEET ALONG HOST PIPE.

ABBREVIATIONS

OMPI - OPEN METAL PIPE INLET
PMP - PERFORATED METAL PIPE
AT&T - AMERICAN TELEPHONE AND TELEGRAPH

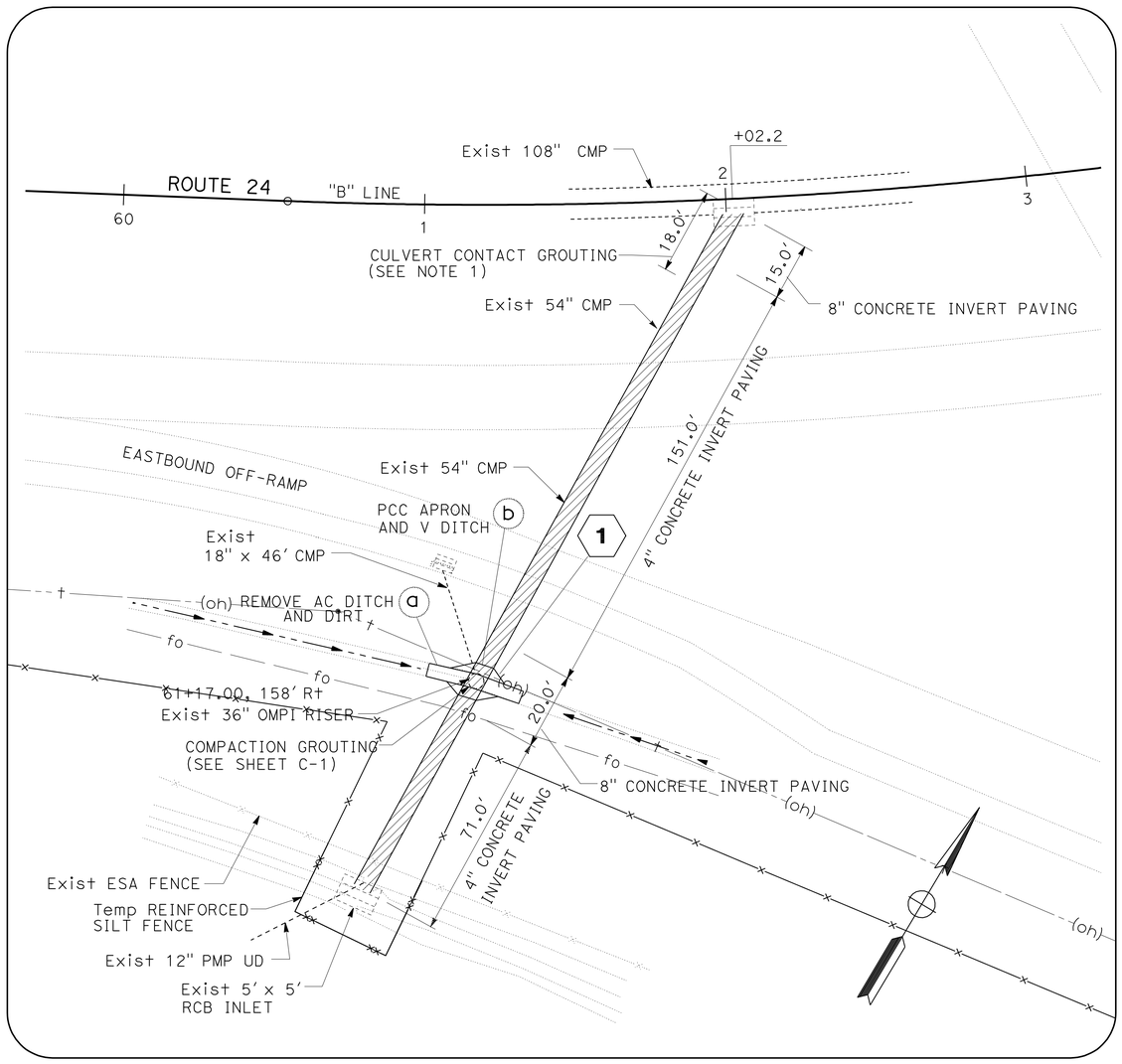

PLAN

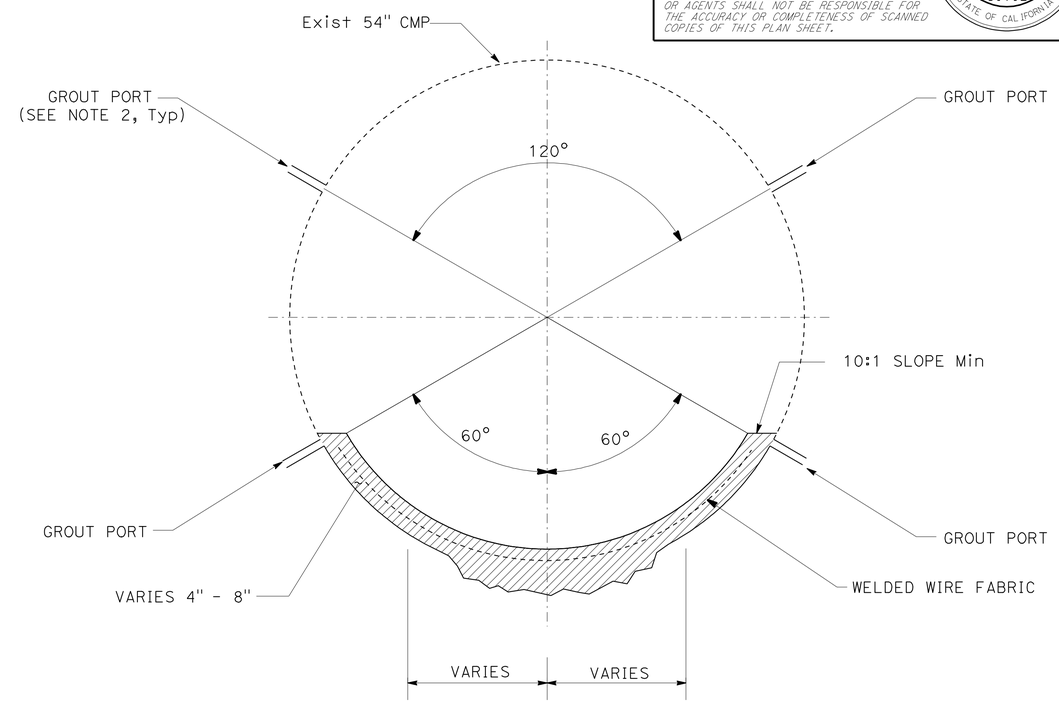

SECTION

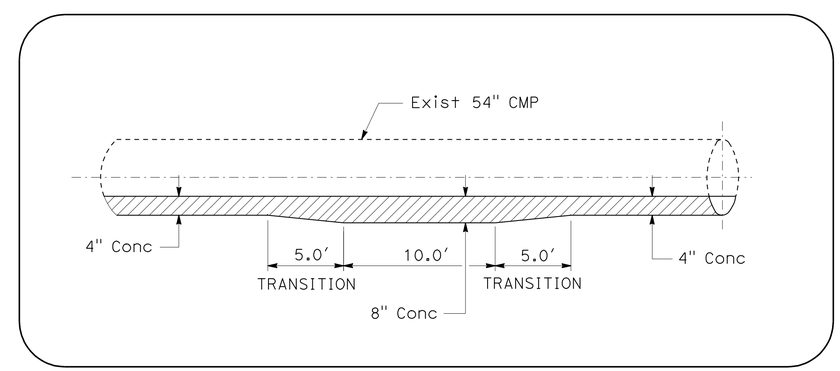

THICKNESS TRANSITION (4" TO 8")

CONCRETE INVERT PAVING DETAILS

LOCATION 1 (PM 1.2)

DRAINAGE DETAILS

NO SCALE

DD-1

REVISED BY	DATE REVISED
TT	3/2/11

THOMAS TAING — CALCULATED-DESIGNED BY
NHAN CAO — CHECKED BY
CAROLINE REYES — FUNCTIONAL SUPERVISOR

STATE OF CALIFORNIA - DEPARTMENT OF TRANSPORTATION
Caltrans
10-DESIGN

LAST REVISION 00-00-00
DATE PLOTTED => 19-JUN-2012
TIME PLOTTED => 05:57

Dist	COUNTY	ROUTE	POST MILES TOTAL PROJECT	SHEET No.	TOTAL SHEETS
04	CC	24	1.2,1.4	12	30

REGISTERED CIVIL ENGINEER 3/1/11 DATE

6-20-11
PLANS APPROVAL DATE

REGISTERED PROFESSIONAL ENGINEER NHAN CAO No. 76454 Exp. 12/31/12 CIVIL STATE OF CALIFORNIA

THE STATE OF CALIFORNIA OR ITS OFFICERS OR AGENTS SHALL NOT BE RESPONSIBLE FOR THE ACCURACY OR COMPLETENESS OF SCANNED COPIES OF THIS PLAN SHEET.

NOTE:

1. PLACE TEMPORARY 1" WELDED EYE BOLT STUD, NELSON E2L 0.437" x 3.5" OR SIMILAR; 5' APART @ 4' ABOVE PIPE INVERT. USE ¼" CABLE TIED TO THE EYEBOLT TO HOLD THE TEMPORARY 8" GROUNDWATER-BYPASS-PIPE. TEMPORARY 8" PIPE SHOULD BE EXTENDED TO OUTLET OF EXISTING 54" CORRUGATED METAL PIPE.

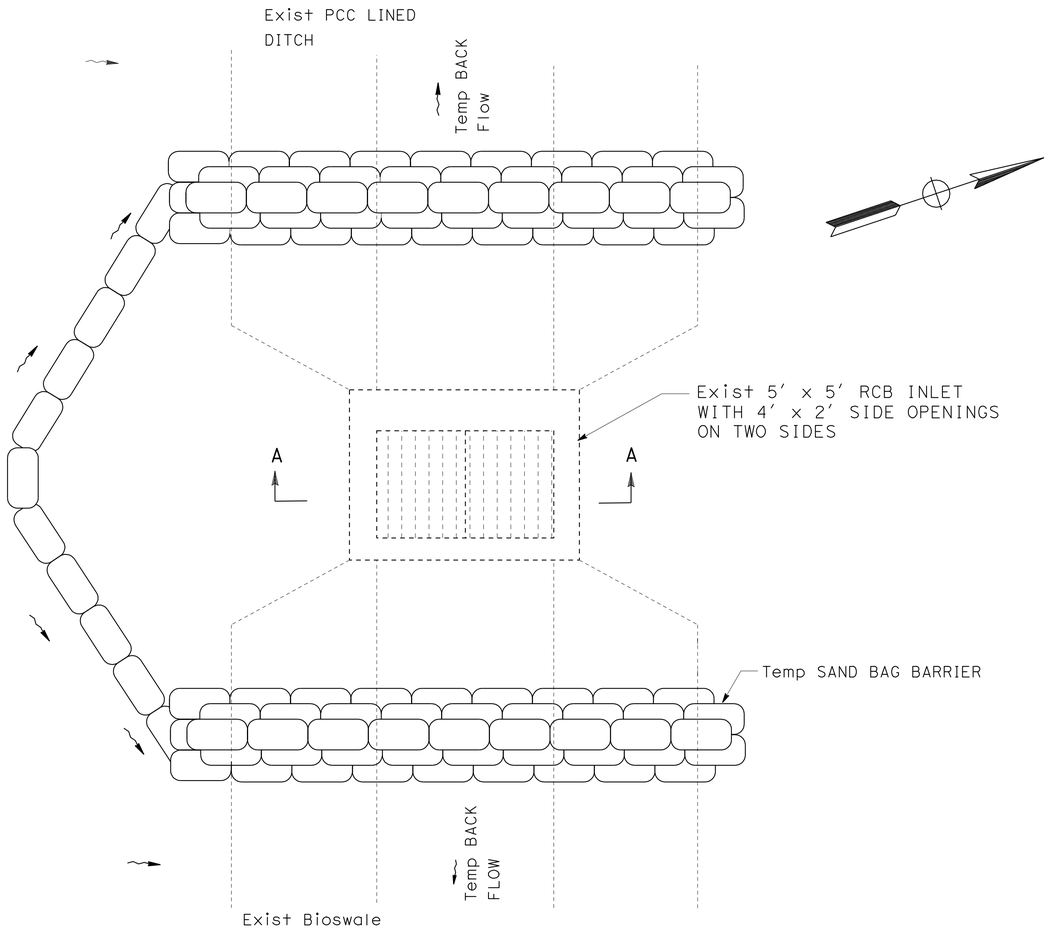

PLAN

TEMPORARY FLOW DIVERSION SYSTEM

LOCATION 1 (PM 1.2)

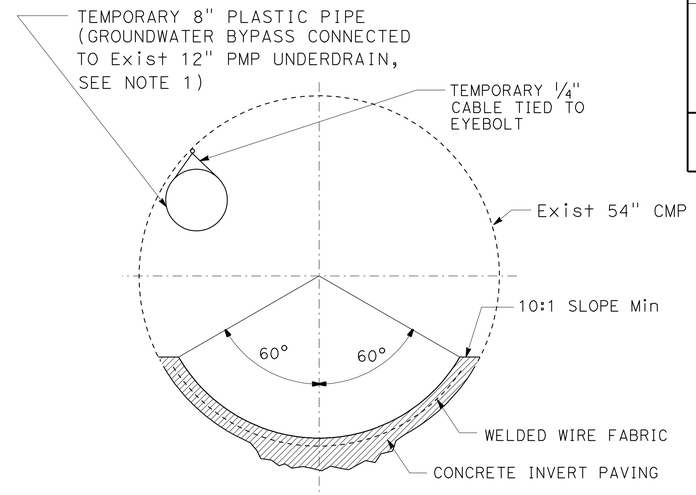

SECTION B-B

TEMPORARY GROUNDWATER BYPASS PIPE

LOCATION 1 (PM 1.2)

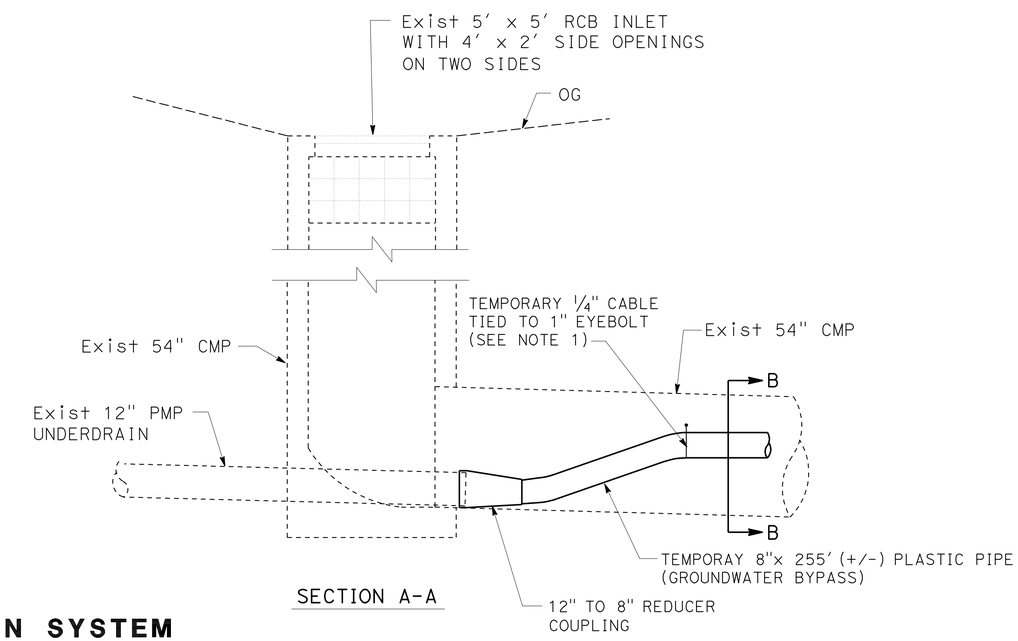

SECTION A-A

DRAINAGE DETAILS

NO SCALE **DD-2**

REVISED BY	DATE REVISED
NC	3/1/11

CALCULATED-DESIGNED BY: R. AMATYA
CHECKED BY: NHAN CAO
FUNCTIONAL SUPERVISOR: CAROLYN REYES

STATE OF CALIFORNIA - DEPARTMENT OF TRANSPORTATION
Caltrans
10-DESIGN

LAST REVISION 00-00-00
DATE PLOTTED => 19-JUN-2012
TIME PLOTTED => 05:57

Dist	COUNTY	ROUTE	POST MILES TOTAL PROJECT	SHEET No.	TOTAL SHEETS
04	CC	24	1.2,1.4	13	30

REGISTERED CIVIL ENGINEER 3/1/11 DATE

6-20-11
PLANS APPROVAL DATE

REGISTERED PROFESSIONAL ENGINEER NHAN CAO No. 76454 Exp. 12/31/12 CIVIL STATE OF CALIFORNIA

THE STATE OF CALIFORNIA OR ITS OFFICERS OR AGENTS SHALL NOT BE RESPONSIBLE FOR THE ACCURACY OR COMPLETENESS OF SCANNED COPIES OF THIS PLAN SHEET.

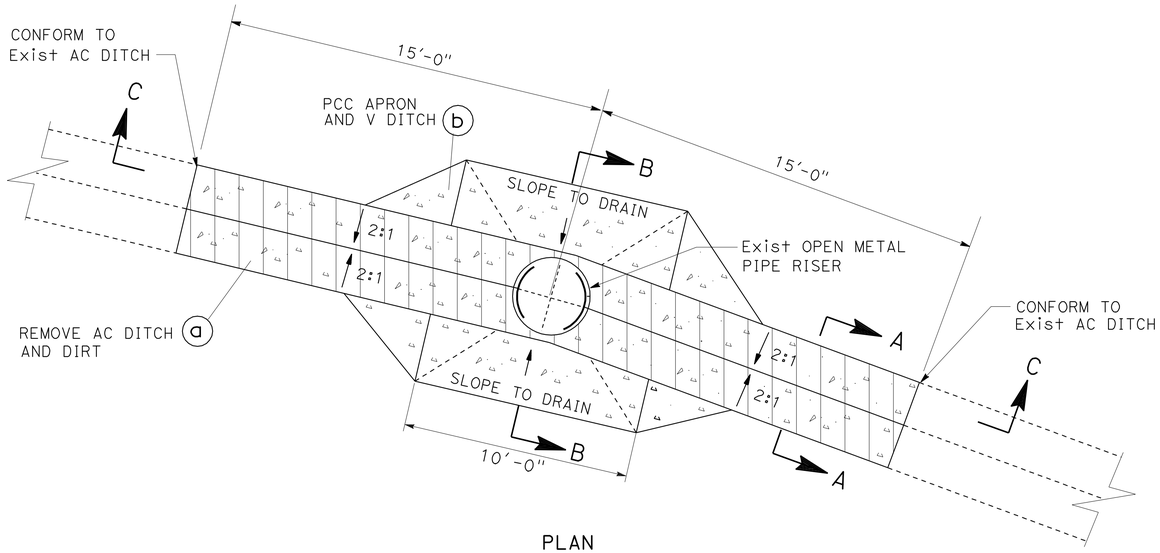

PLAN

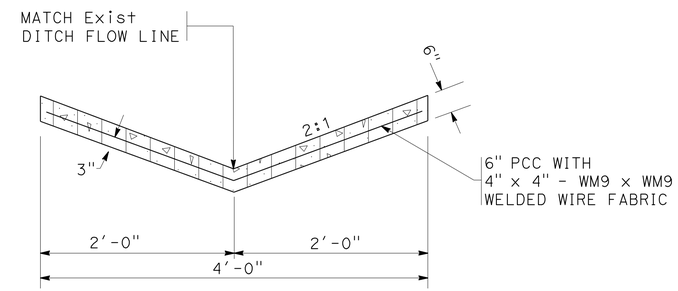

SECTION A-A

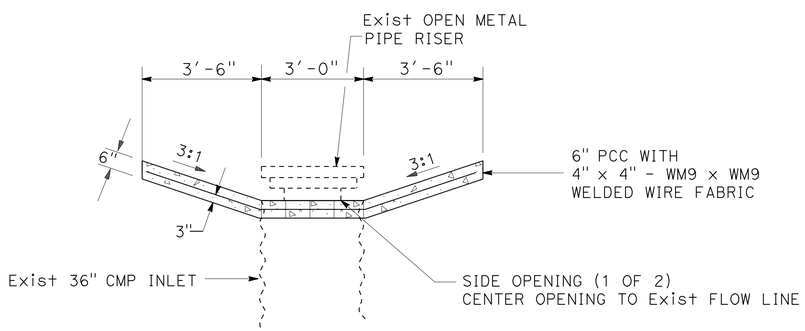

SECTION B-B

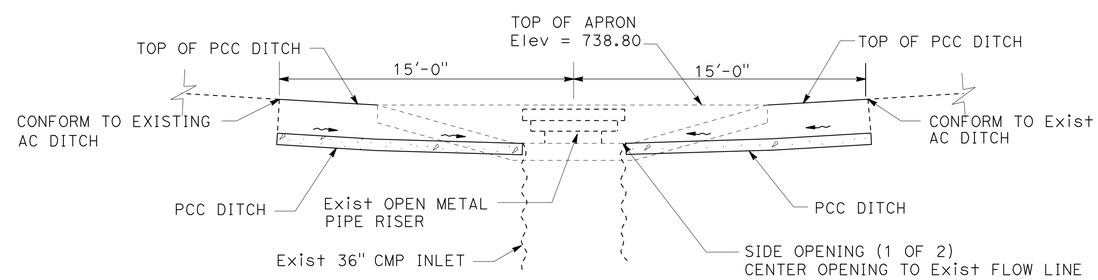

SECTION C-C

DRAINAGE SYSTEM No. 1

LOCATION 1 (PM 1.2)

DRAINAGE DETAILS

NO SCALE

DD-3

STATE OF CALIFORNIA - DEPARTMENT OF TRANSPORTATION
Caltrans®
10-DESIGN

FUNCTIONAL SUPERVISOR: CAROLINE REYES
CALCULATED-DESIGNED BY: DEREK WAGGONER
CHECKED BY: NHAN CAO
REVISED BY: DW
DATE REVISED: 3/3/11

LAST REVISION 00-00-00
DATE PLOTTED => 19-JUN-2012
TIME PLOTTED => 05:57

Dist	COUNTY	ROUTE	POST MILES TOTAL PROJECT	SHEET No.	TOTAL SHEETS
04	CC	24	1.2,1.4	14	30

REGISTERED CIVIL ENGINEER 3/1/11 DATE

6-20-11
PLANS APPROVAL DATE

REGISTERED PROFESSIONAL ENGINEER NHAN CAO No. 76454 Exp. 12/31/12 CIVIL STATE OF CALIFORNIA

THE STATE OF CALIFORNIA OR ITS OFFICERS OR AGENTS SHALL NOT BE RESPONSIBLE FOR THE ACCURACY OR COMPLETENESS OF SCANNED COPIES OF THIS PLAN SHEET.

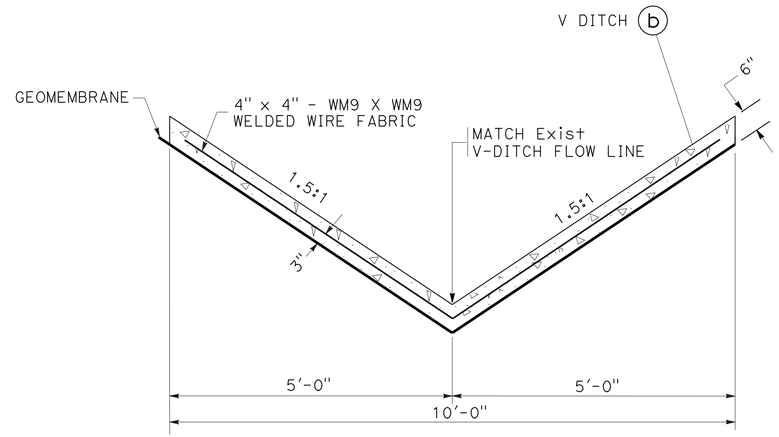

CONCRETE (DITCH LINING)
LOCATION 2 (PM 1.4)

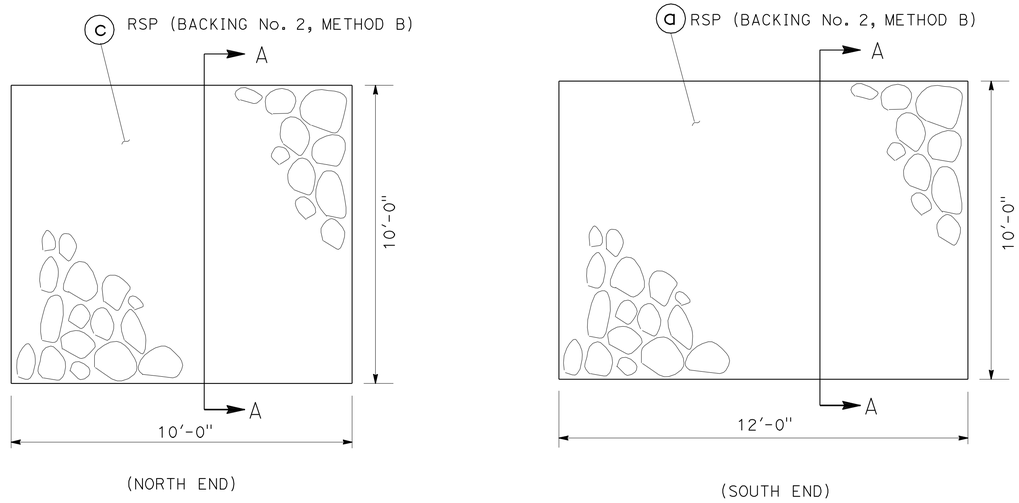

PLAN

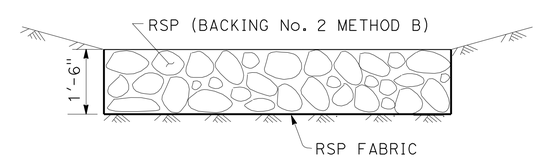

SECTION A-A

DRAINAGE SYSTEM No. 2
LOCATION 2 (PM 1.4)

DRAINAGE DETAILS
NO SCALE

DD-4

REVISED BY	DATE REVISED
NC	3/3/11

DEREK WAGGONER — NHAN CAO — CALCULATED-DESIGNED BY — CHECKED BY

FUNCTIONAL SUPERVISOR: CAROLINE REYES

STATE OF CALIFORNIA - DEPARTMENT OF TRANSPORTATION — Caltrans — 10-DESIGN

LAST REVISION 00-00-00 — DATE PLOTTED => 19-JUN-2012 — TIME PLOTTED => 05:57

Dist	COUNTY	ROUTE	POST MILES TOTAL PROJECT	SHEET No.	TOTAL SHEETS
04	CC	24	1.2,1.4	15	30

REGISTERED CIVIL ENGINEER 3/1/11 DATE

6-20-11
PLANS APPROVAL DATE

REGISTERED PROFESSIONAL ENGINEER NHAN CAO No. 76454 Exp. 12/31/12 CIVIL STATE OF CALIFORNIA

THE STATE OF CALIFORNIA OR ITS OFFICERS OR AGENTS SHALL NOT BE RESPONSIBLE FOR THE ACCURACY OR COMPLETENESS OF SCANNED COPIES OF THIS PLAN SHEET.

STATIONARY MOUNTED CONSTRUCTION AREA SIGNS

SIGN No.	SIGN CODE	PANEL SIZE	No. OF POST AND SIZE	No. OF SIGNS	SIGN MESSAGE
A	W20-1	48" x 48"	1- 4" x 6"	2	ROAD WORK AHEAD
B	G20-2	36" x 18"	1- 4" x 4"	3	END ROAD WORK

NOTES: 1. EXACT SIGN LOCATIONS TO BE DETERMINED BY THE ENGINEER.
2. SEE SHEET TH-1 FOR MORE CONSTRUCTION AREA SIGNS.

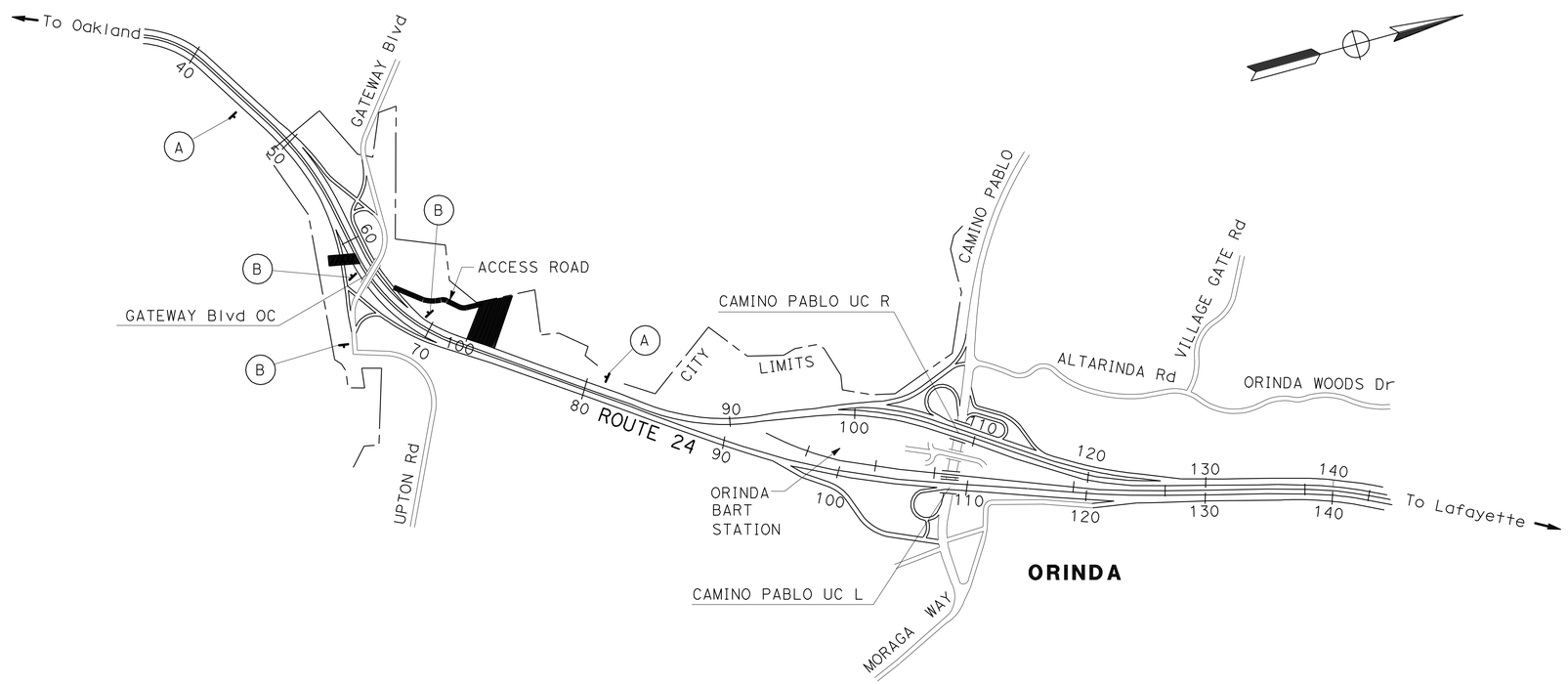

THIS PLAN ACCURATE FOR CONSTRUCTION AREA SIGN WORK ONLY.

CONSTRUCTION AREA SIGNS
NO SCALE

CS-1

NC	3/1/11
REVISED BY	DATE REVISED
DEREK WAGGONER	NHAN CAO
CALCULATED-DESIGNED BY	CHECKED BY
FUNCTIONAL SUPERVISOR	CAROLINE REYES

STATE OF CALIFORNIA - DEPARTMENT OF TRANSPORTATION
Caltrans 10-DESIGN

LAST REVISION 00-00-00 | DATE PLOTTED => 19-JUN-2012 TIME PLOTTED => 05:57

Dist	COUNTY	ROUTE	POST MILES TOTAL PROJECT	SHEET No.	TOTAL SHEETS
04	CC	24	1.2,1.4	16	30

REGISTERED CIVIL ENGINEER 09/30/10 DATE

6-20-11
PLANS APPROVAL DATE

REGISTERED PROFESSIONAL ENGINEER HUE NGUYEN No. 74484 Exp. 12/31/13 CIVIL STATE OF CALIFORNIA

THE STATE OF CALIFORNIA OR ITS OFFICERS OR AGENTS SHALL NOT BE RESPONSIBLE FOR THE ACCURACY OR COMPLETENESS OF SCANNED COPIES OF THIS PLAN SHEET.

NOTES:

1. FOR ACCURATE RIGHT OF WAY DATA, CONTACT RIGHT OF WAY ENGINEERING AT THE DISTRICT OFFICE.
2. EXACT SIGN LOCATIONS TO BE DETERMINED BY THE ENGINEER.
3. SEE SHEET CS-1 FOR MORE CONSTRUCTION AREA SIGNS.

LEGEND:

- TEMPORARY RAILING (TYPE K)
- TEMPORARY CRASH CUSHION ARRAY 'TS14'
- DIRECTION OF TRAFFIC
- CHANNELIZER (SURFACE MOUNTED)

STATIONARY MOUNTED CONSTRUCTION AREA SIGNS

SHEET No.	SIGN TYPE	SIGN MESSAGE	SIGN PANEL	No. OF POST AND SIZE	No. OF SIGNS EA
TH-1	W21-5a	RIGHT SHOULDER CLOSED	48" x 48"	1- 6" x 6"	1
	C30A (CA)	SHOULDER CLOSED	36" x 36"	1- 6" x 4"	1

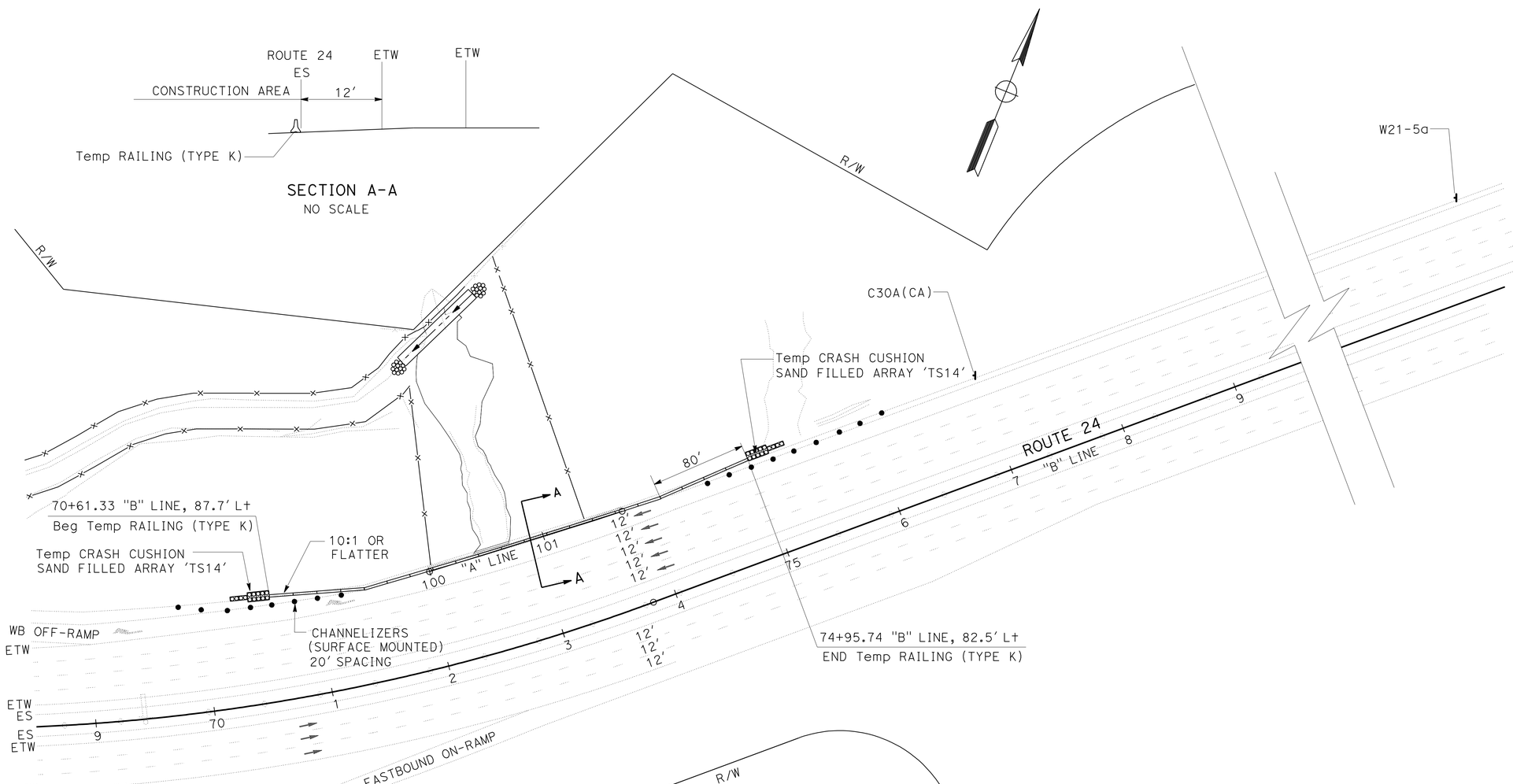

LOCATION 2

PM 1.4

SCALE: 1" = 50'

THIS PLAN ACCURATE FOR TRAFFIC HANDLING WORK ONLY.

TRAFFIC HANDLING PLAN

SCALE AS SHOWN

TH-1

REVISED BY	DATE REVISED
CN	3/10/11

CALCULATED-DESIGNED BY: CECILE NGUYEN
CHECKED BY: HUE H NGUYEN
FUNCTIONAL SUPERVISOR: MOHAMMED QATAMI

STATE OF CALIFORNIA - DEPARTMENT OF TRANSPORTATION
Caltrans 10-TRAFFIC DESIGN

LAST REVISION 02-18-11 | DATE PLOTTED => 20-JUN-2012 | TIME PLOTTED => 05:39

Dist	COUNTY	ROUTE	POST MILES TOTAL PROJECT	SHEET No.	TOTAL SHEETS
04	CC	24	1.2,1.4	17	30

REGISTERED CIVIL ENGINEER 3/1/11 DATE

6-20-11
PLANS APPROVAL DATE

REGISTERED PROFESSIONAL ENGINEER NHAN CAO No. 76454 Exp. 12/31/12 CIVIL STATE OF CALIFORNIA

THE STATE OF CALIFORNIA OR ITS OFFICERS OR AGENTS SHALL NOT BE RESPONSIBLE FOR THE ACCURACY OR COMPLETENESS OF SCANNED COPIES OF THIS PLAN SHEET.

NOTE: (N) NOT A SEPARATE PAY ITEM, FOR INFORMATION ONLY.

ROADWAY QUANTITIES

LOCATION	ROADWAY EXCAVATION	IMPORTED BORROW	GEOSYNTHETIC REINFORCEMENT	RECONSTRUCT CHAIN LINK FENCE	(N) REMOVE SLIDE DEBRIS
	CY	CY	SQYD	LF	CY
Temp ACCESS Rd (Loc 2)	970				
PM 1.4 (Loc 2)	800	400	2,700	50	800
TOTAL	1,770	400	2,700	50	

CONCRETE INVERT PAVING

LOCATION	CONCRETE INVERT PAVING	GROUT PORTS	CULVERT CONTACT GROUTING	COMPACTION GROUTING	GROUT INJECTION POINTS	CLEANING, INSPECTING AND PREPARING HOST PIPE
	CY	EA	CY	CF	EA	CY
PM 1.2 (Loc 1)	20	16	50	1,000	10	20

TEMPORARY STORMWATER POLLUTION CONTROL QUANTITIES

LOCATION (Sta - Sta)	TEMPORARY DRAINAGE INLET PROTECTION
	EA
61+17.0 "B" LINE, 158′ Rt	1
62+02.2 "B" LINE Rt	1
66+83. "B" LINE, 101.6′ Lt	1
TOTAL	3

TEMPORARY REINFORCED SILT FENCE

LOCATION	LF
"B" 59+00 TO "B" 66+41.2, Rt	1,100
"B" 64+93.3 TO "A" 100+50.7, Rt	695
"B" 65+02.2 TO "A" 100+25, Lt	830
"A" 101+29.5 TO "A" 101+37.0, Lt	235
TOTAL	2,860

TEMPORARY RAILING (TYPE K)

SHEET No.	LOCATION	SIDE	LF
TH-1	PM 1.4 (Loc 2)	Rt	440

TEMPORARY CRASH CUSHION MODULE

SHEET No.	LOCATION (Sta - Sta)	SIDE	EA
TH-1	70+60.92 "B" LINE TO 79+96.25 "B" LINE	Rt	28

CHANNELIZER (SURFACE MOUNTED)

SHEET No.	EA
TH-1	17

DRAINAGE QUANTITIES

CONCRETE (DITCH LINING)	DITCH EXCAVTION	GEOMEMBRANE	RSP (BACKING No. 2 METHOD B)	RSP FABRIC	DESCRIPTION	STATION	SHEET No.	DRAINAGE SYSTEM No. ⬡	DRAINAGE UNIT ○
CY	CY	SQFT	CY	SQYD					
	2.2				REMOVE AC DITCH AND DIRT (Loc 1)	61+17.0 "B" LINE, 158′ Rt	L-1	1	a
4.2					PCC APRON AND V DITCH (Loc 1)				b
			6	20	RSP (Loc 2)	100+30.0 "A" LINE, 175.0′ Lt	L-2	2	a
			9	30	RSP (Loc 2)	101+04.0 "A" LINE, 211.7′ Lt			b
18.4	51	1,050			V DITCH (Loc 2)				c
22.6	53.2	1,050	15	50	TOTAL				

EROSION CONTROL QUANTITIES

LOCATION (Sta - Sta)	FIBER ROLLS	EROSION CONTROL (COMPOST BLANKET)	ROLLED EROSION CONTROL PRODUCT (NETTING)	EROSION CONTROL (BONDED FIBER MATRIX)
	LF	CY	SQFT	SQFT
"B" 60+64.5 TO "B" 61+48.7, Rt	366	9	-	5,418
"B" 64+51.1 TO "B" 68+49.9, Lt	480	18	1,124	11,012
"B" 68+49.9 TO "B" 72+26.3, Lt	846	19	2,896	11,870
"B" 72+26.3 TO "B" 73+48.1, Lt	578	18	5,538	11,116
TOTAL	2,270	64	9,558	39,416

SUMMARY OF QUANTITIES
Q-1

REVISED BY	DATE REVISED
NC	3/10/11

DEREK WAGGONER — NHAN CAO — CALCULATED-DESIGNED BY — CHECKED BY

FUNCTIONAL SUPERVISOR: CAROLINE REYES

STATE OF CALIFORNIA - DEPARTMENT OF TRANSPORTATION — 10-DESIGN — Caltrans

LAST REVISION 00-00-00 | DATE PLOTTED => 20-JUN-2012 | TIME PLOTTED => 05:39

DIST	COUNTY	ROUTE	POST MILES TOTAL PROJECT	SHEET NO.	TOTAL SHEETS
04	CC	24	1.2,1.4	18	30

REGISTERED CIVIL ENGINEER

June 5, 2009
PLANS APPROVAL DATE

REGISTERED PROFESSIONAL ENGINEER Glenn DeCou No. C34547 Exp. 9-30-09 CIVIL STATE OF CALIFORNIA

The State of California or its officers or agents shall not be responsible for the accuracy or completeness of electronic copies of this plan sheet.

To accompany plans dated 6-20-11

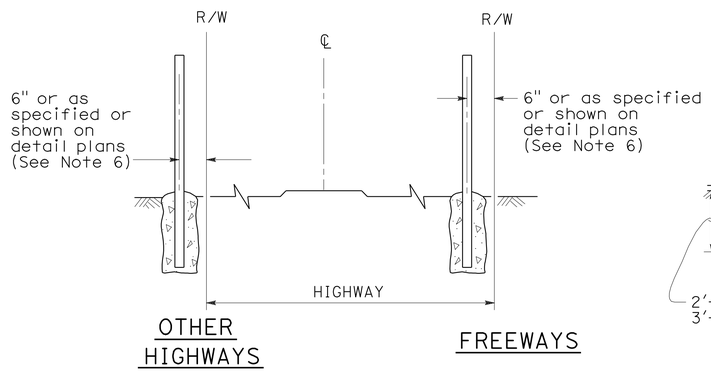

FENCE LOCATION

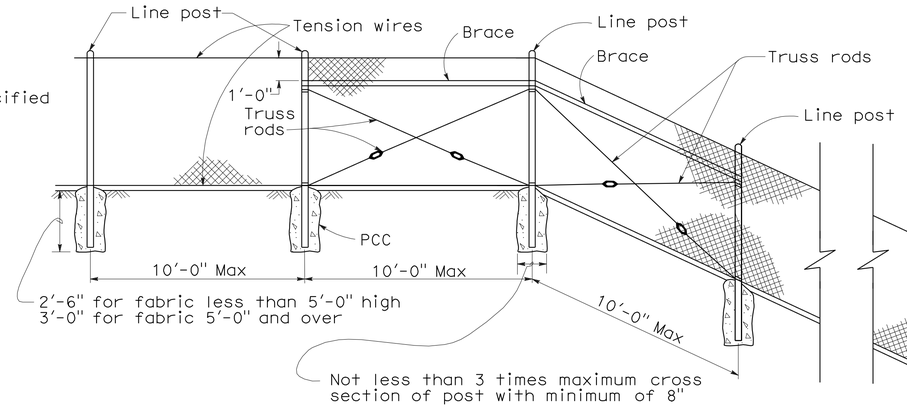

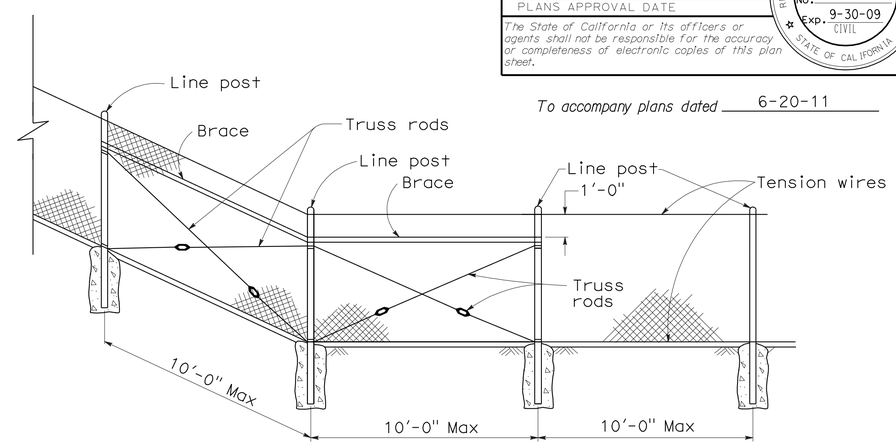

CHAIN LINK FENCE ON SHARP BREAK IN GRADE

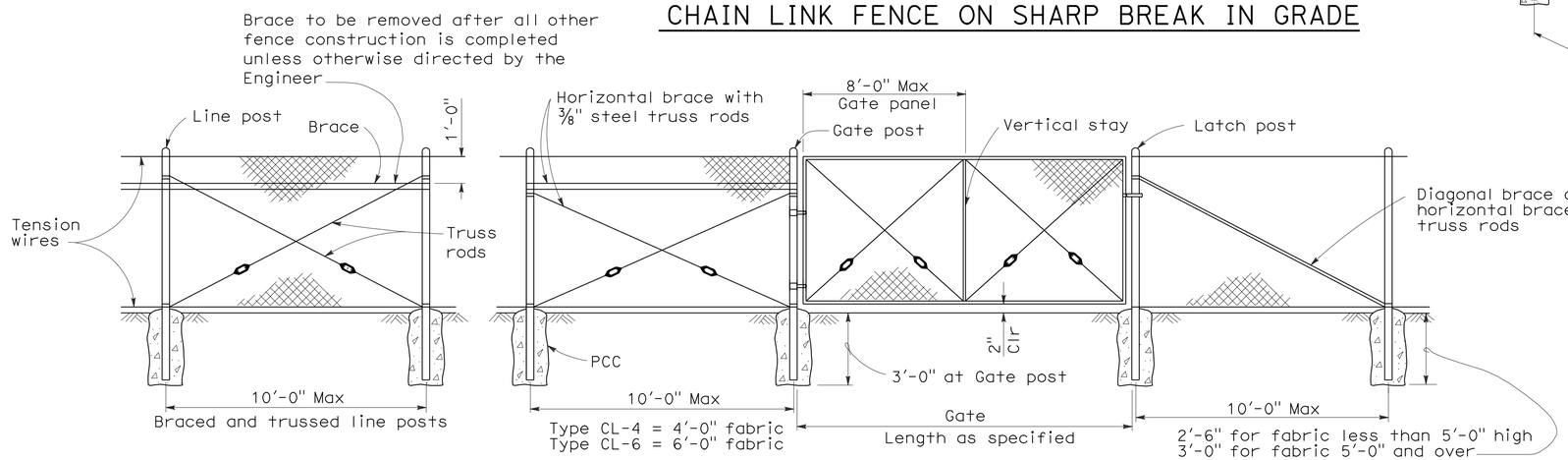

CHAIN LINK GATE INSTALLATION

GATE POST			
FENCE HEIGHT	GATE WIDTHS	NOMINAL ID	WEIGHT PER FOOT
6'-0" and Less	Up thru 6'-0"	2½"	4.95 LB
	Over 6'-0" thru 12'-0"	4"	10.79 LB
	Over 12'-0" thru 18'-0"	5"	14.62 LB
	Over 18'-0" to 24'-0" Max	6"	18.97 LB
Over 6'-0"	Up thru 6'-0"	3"	7.58 LB
	Over 6'-0" thru 12'-0"	5"	14.62 LB
	Over 12'-0" thru 18'-0"	6"	18.97 LB
	Over 18'-0" to 24'-0" Max	8"	28.55 LB

Above post dimensions and weights are minimums. Larger sizes may be used on approval of the Engineer.

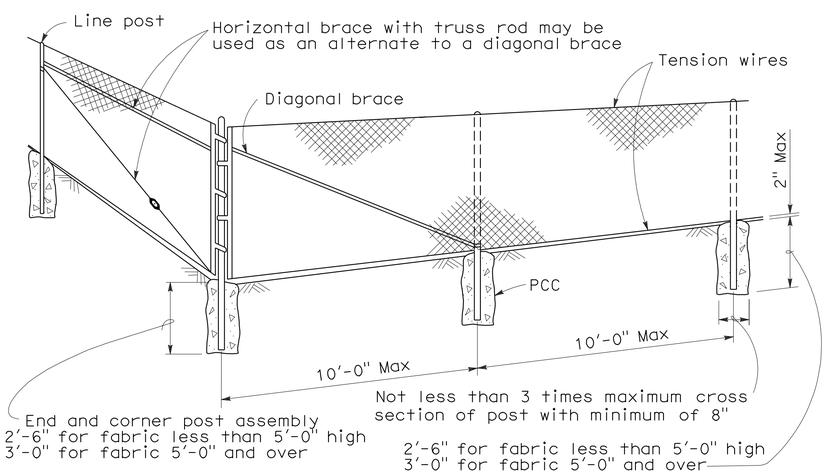

CORNER POST

NOTES:

1. The below table shows examples of post and brace sections which may comply with the Specifications.
2. Sections shown in the tables must also comply with the strength requirements and other provisions of the Specifications.
3. Other sections which comply with the strength requirements and other provisions of the Specifications may be used on approval of the Engineer.
4. Options exercised shall be uniform on any one project.
5. Dimensions shown are nominal.
6. Offset to be 2'-0" at monument locations, measured at right angles to R/W lines. Taper to achieve offset to be at least 20'-0" long.

TYPICAL MEMBER DIMENSIONS (See Notes)											
FENCE HEIGHT	LINE POSTS			END, LATCH & CORNER POSTS				BRACES			
	ROUND ID	H	ROLL FORMED	ROUND ID	ROLL FORMED			ROUND ID	H	ROLL FORMED	
6' & less	1½"	1⅞" × 1⅝"	1⅞" × 1⅝"	2"	3½" × 3½"	2" × 1¾"		1¼"	1½" × 1 5/16"	1⅝" × 1¼"	1¾" × 1¼"
Over 6'	2"	2¼" × 2"	2" × 1¾"	2½"	3½" × 3½"	2½" × 2½"		1¼"	1½" × 1 5/16"	1⅝" × 1¼"	1¾" × 1¼"

STATE OF CALIFORNIA
DEPARTMENT OF TRANSPORTATION

CHAIN LINK FENCE

NO SCALE

RSP A85 DATED JUNE 5, 2009 SUPERSEDES STANDARD PLAN A85
DATED MAY 1, 2006 - PAGE 111 OF THE STANDARD PLANS BOOK DATED MAY 2006.

REVISED STANDARD PLAN RSP A85

2006 REVISED STANDARD PLAN RSP A85

5-7-09

DIST	COUNTY	ROUTE	POST MILES TOTAL PROJECT	SHEET NO.	TOTAL SHEETS
04	CC	24	1.2,1.4	19	30

REGISTERED CIVIL ENGINEER

June 5, 2009
PLANS APPROVAL DATE

REGISTERED PROFESSIONAL ENGINEER Glenn DeCou No. C34547 Exp. 9-30-09 CIVIL STATE OF CALIFORNIA

The State of California or its officers or agents shall not be responsible for the accuracy or completeness of electronic copies of this plan sheet.

To accompany plans dated 6-20-11

NOTES:

1. H is 2'-6" for fabric less than 5'-0" high. H is 3'-0" for fabric 5'-0" and over.
2. T is not less than 3 times maximum cross section of post with minimum of 8".
3. Arms with barbed wire to be used where shown on plans.
4. See Revised Standard Plan RSP A85 for Chain Link Fencing dimensions.
5. Reinforcing must comply with ASTM A 706.
6. See Detail A on New Standard Plan NSP A86B for connection at headwall.

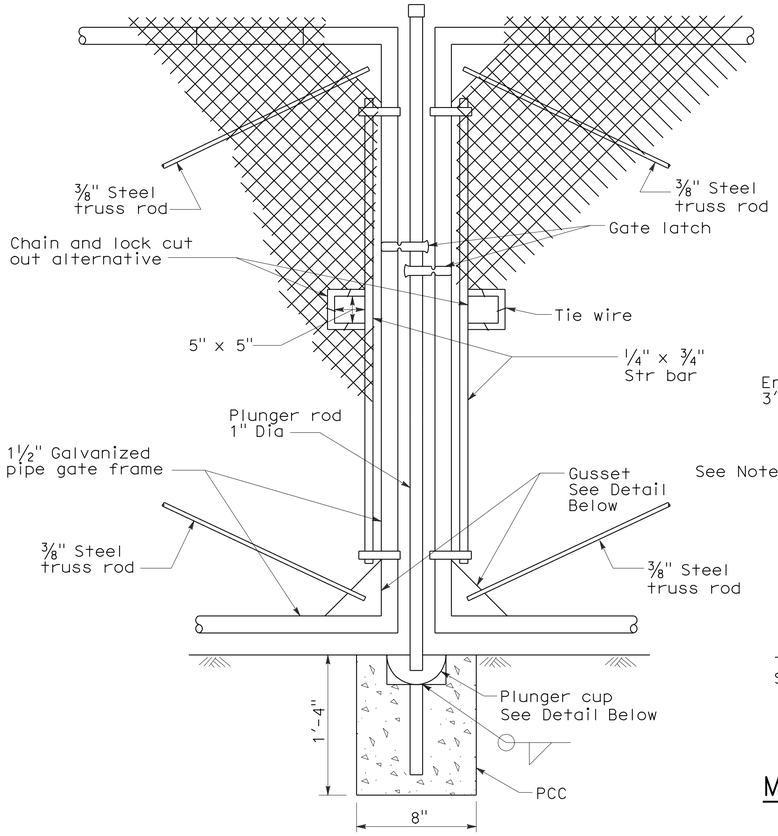

TYPICAL DOUBLE GATE REMOVABLE CENTER POST

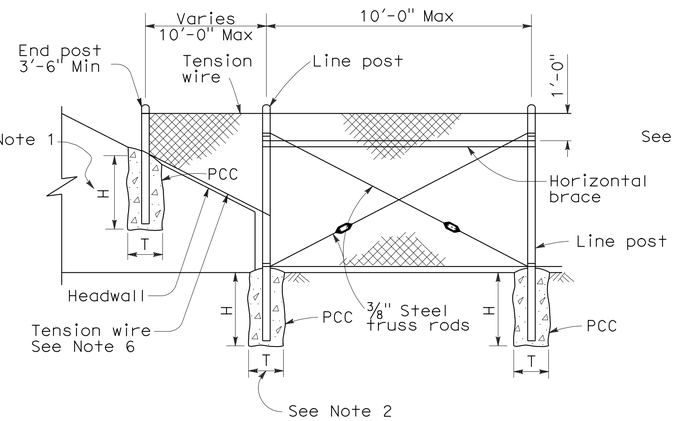

METHOD OF TYING FENCE TO HEADWALL

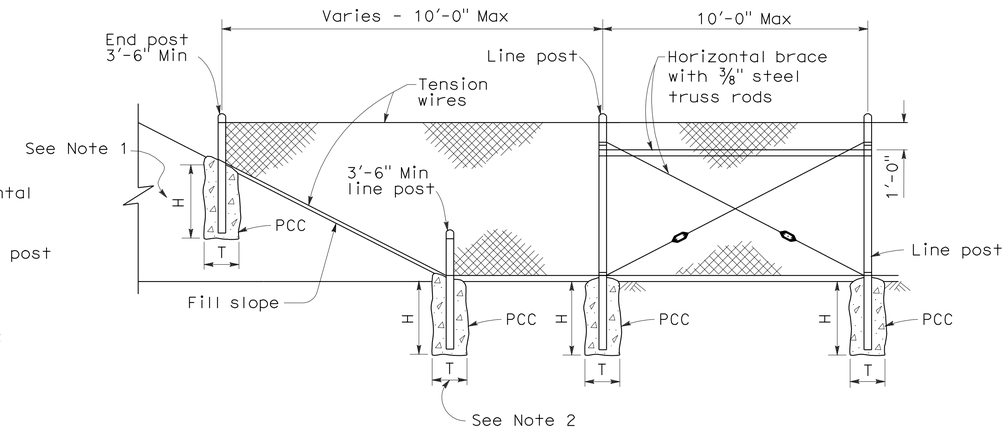

METHOD OF ERECTING FENCE FOR FILL SLOPE

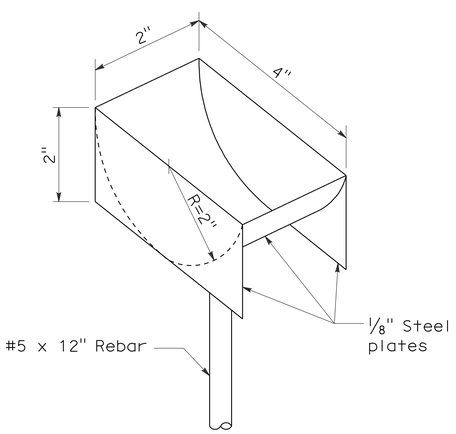

PLUNGER CUP DETAIL

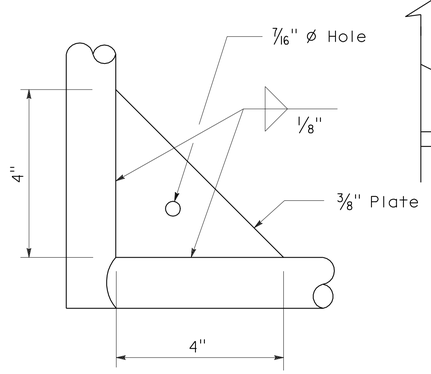

GUSSET DETAIL

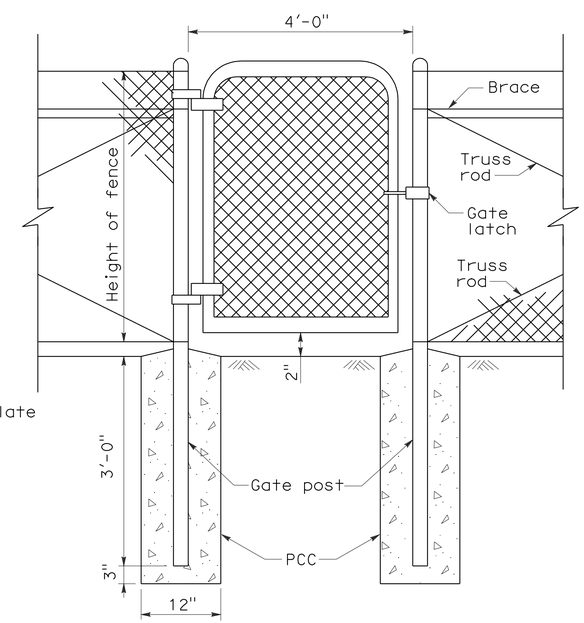

WALK GATE

POST TOP END

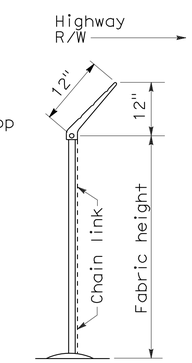

END ELEVATION

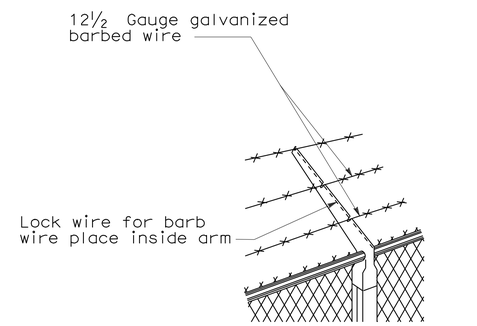

LINE POST TOP
Vertical arms when desired

BARBED WIRE POST TOP
See Note 3

STATE OF CALIFORNIA
DEPARTMENT OF TRANSPORTATION

CHAIN LINK FENCE DETAILS

NO SCALE

NSP A85A DATED JUNE 5, 2009 SUPPLEMENTS THE STANDARD PLANS BOOK DATED MAY 2006.

NEW STANDARD PLAN NSP A85A

2006 NEW STANDARD PLAN NSP A85A

5-7-09

DIST	COUNTY	ROUTE	POST MILES TOTAL PROJECT	SHEET NO.	TOTAL SHEETS
04	CC	24	1.2,1.4	20	30

REGISTERED CIVIL ENGINEER

June 5, 2009
PLANS APPROVAL DATE

REGISTERED PROFESSIONAL ENGINEER Glenn DeCou No. C34547 Exp. 9-30-09 CIVIL STATE OF CALIFORNIA

The State of California or its officers or agents shall not be responsible for the accuracy or completeness of electronic copies of this plan sheet.

To accompany plans dated 6-20-11

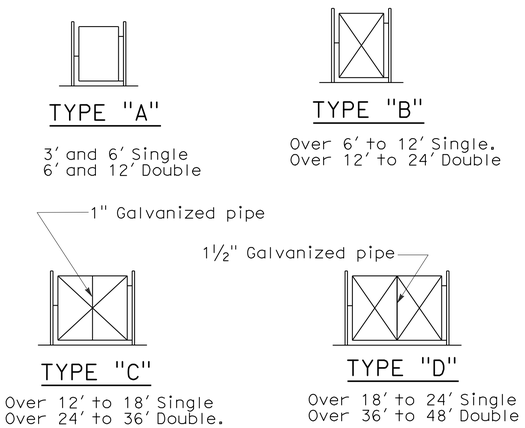

TYPICAL FRAMEWORK SHOWING NUMBER OF BAYS IN GATE

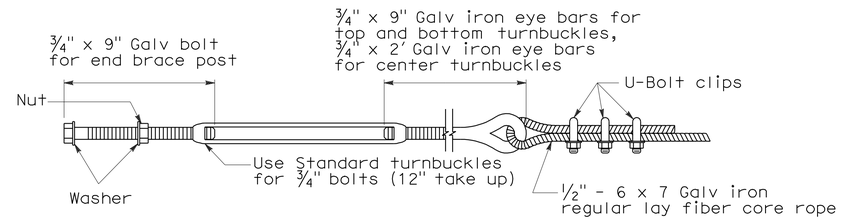

TURNBUCKLE A

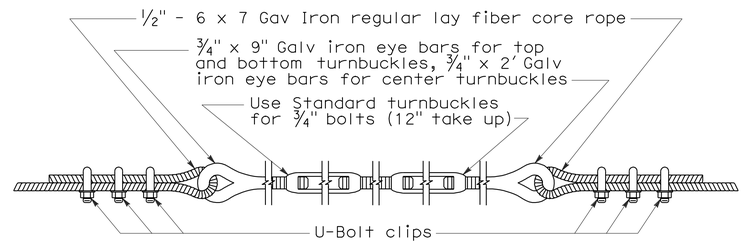

TURNBUCKLE B

NOTES:

1. All material for abutment connection to be galvanized.
2. The chain link fabric shall be replaced by barbed wire strands at 12" maximum centers between the double posts.
3. When the width of the culvert makes it necessary to anchor a post to the top of the culvert, a cast iron shoe or other device approved by the Engineer shall be used.
4. Fencing over stream and around headwall may also use Barbed Wire or Wire Mesh fencing with either wood post or steel post installation.
5. See Revised Standard Plan RSP A85 for Chain Link fence dimensions. See Standard Plan A86 for Barbed Wire and Wire Mesh fence dimensions and for wood post and steel post installation.

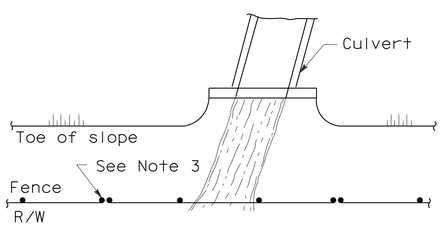

PLAN

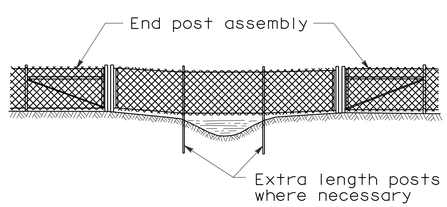

ELEVATION

INSTALLATION OVER STREAM

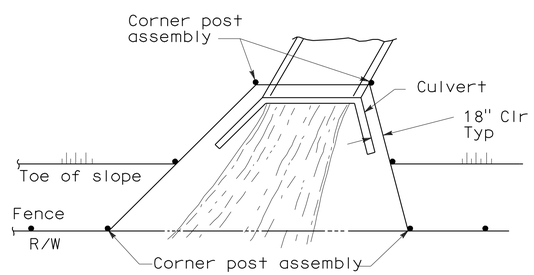

PLAN

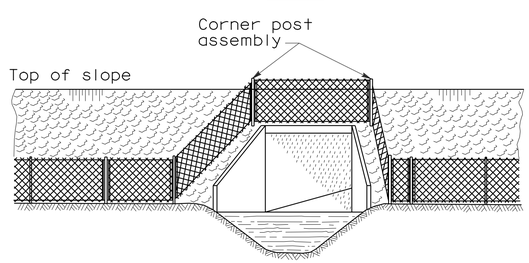

ELEVATION

INSTALLATION AROUND HEADWALL

See Note 4

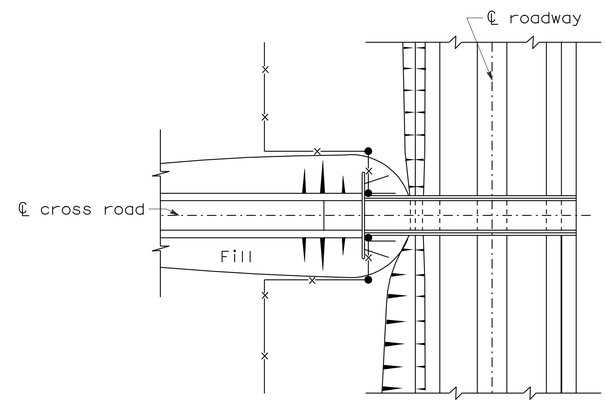

PLAN OF ROADWAY - UNDERPASS

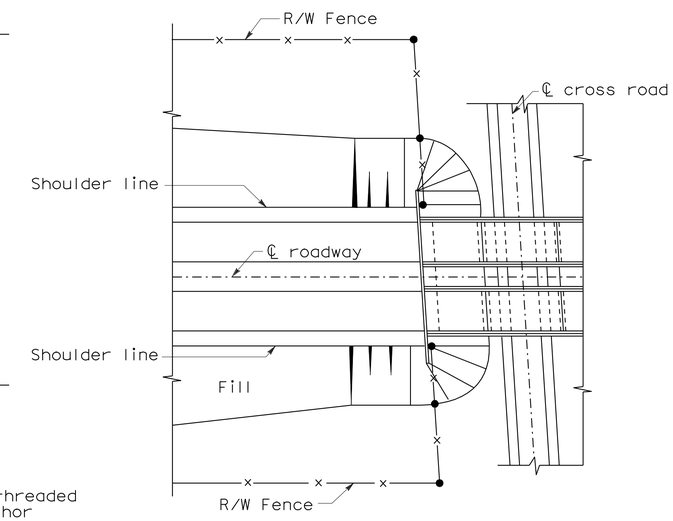

PLAN OF ROADWAY - OVERPASS

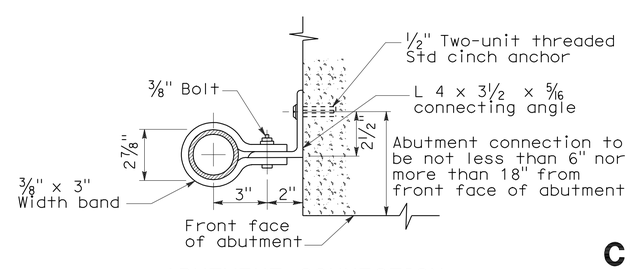

ABUTMENT CONNECTION

TYPICAL INSTALLATION AT BRIDGES

STATE OF CALIFORNIA
DEPARTMENT OF TRANSPORTATION

CHAIN LINK FENCE DETAILS

NO SCALE

NSP A85B DATED JUNE 5, 2009 SUPPLEMENTS THE STANDARD PLANS BOOK DATED MAY 2006.

NEW STANDARD PLAN NSP A85B

2006 NEW STANDARD PLAN NSP A85B

5-12-09

DIST	COUNTY	ROUTE	POST MILES TOTAL PROJECT	SHEET NO.	TOTAL SHEETS
04	CC	24	1.2,1.4	21	30

Gregory A. Balzer
LICENSED LANDSCAPE ARCHITECT

June 5, 2009
PLANS APPROVAL DATE

The State of California or its officers or agents shall not be responsible for the accuracy or completeness of electronic copies of this plan sheet.

LICENSED LANDSCAPE ARCHITECT — Gregory A. Balzer 2576 — 10-01-09 (Renewal Date) — 2-28-11 (Renewal Date) — 5-14-09 (Date) — STATE OF CALIFORNIA

To accompany plans dated 6-20-11

A

AB	aggregate base
ABS	acrylonitrile-butadiene-styrene
AC	asphalt concrete
Adj	adjacent/adjustable
AIC	auxiliary irrigation controller
Alt	alternative
AMEND	amendment
ARV	air release valve
AUTO	automatic
AUX	auxiliary
AVB	atmospheric vacuum breaker

B

B&B	balled and burlapped
B/B	brass/bronze
B/B/PL	brass/bronze/plastic
B/PL	brass/plastic
BFM	bonded fiber matrix
Bit Ctd	bituminous coated
BP	booster pump
BPA	backflow preventer assembly
BPAE	backflow preventer assembly in enclosure
BPE	backflow preventer enclosure
BV	ball valve

C

CAP	corrugated aluminum pipe
CARV	combination air release valve
CCA	cam coupler assembly
CEC	controller enclosure cabinet
CHDPE	corrugated high density polyethylene
CL	chain link
CNC	control and neutral conductors
Conc	concrete
Cond	conduit
CSP	corrugated steel pipe
CST	center strip
CV	check valve

D

Dia	diameter
DIP	ductile iron pipe
DN	diameter nominal

E

EA	each
Elect	electric/electrical
Elev	elevation
ENCL	enclosure
EP	edge of pavement
ES	edge of shoulder
EST	end strip
ESTB	establishment
ETW	edge of traveled way

F

F	full circle
F/P	full/part circle
FAU	filter assembly unit
FCV	flow control valve
FERT	fertilizer
FG	finished grade
FIPT	female iron pipe thread
FIS	fertilizer injector system
FL	flow line
FM	flow monitor
FS	flow sensor
Ft	foot/feet
FV	flush valve

G

GAL	Gallon(s)
Galv	galvanized
GARV	garden valve
GPH	gallons per hour
GPM	gallons per minute
GSP	galvanized steel pipe
GV	gate valve

H

H	half circle
HB	hose bib
HDPE	high density polyethylene
HP	horsepower/hinge point
HPL	high pressure line
Hwy	highway

I

IC	irrigation controller
ICC	irrigation controller(s) in controller enclosure cabinet
ID	inside diameter
In	inches
IFS	irrigation filtration system
IPS	iron pipe size
IPT	iron pipe thread
Irr	irrigation

L

L	length
LF	linear foot

M

Max	maximum
MBGR	metal beam guard railing
MCV	manual control valve
MIC	master irrigation controller
Min	minimum
MIPT	male iron pipe thread
Misc	miscellaneous
Mtl	material
MVP	maintenance vehicle pullout

N

NCN	no common name
NL	nozzle line
No.	number
NPT	national pipe thread

O

O/C	on center
OD	outside diameter
Oz	ounce

P

P	part circle
PB	pull box
PCC	portland cement concrete
PE	polyethylene
Pkt	packet
PL	plastic
PLT	plant/planting
PLT ESTB	plant establishment
PM	post mile
PR	pressure rated
PRLV	pressure relief valve
PSFM	polymer stabilized fiber matrix
PSI	pounds per square inch
PRV	pressure reducing valve
PVC	polyvinyl chloride
Pvmt	pavement

Q

Q	quarter circle
QCV	quick coupling valve

R

R	radius
RCP	reinforced concrete pipe
RCV	remote control valve
RCVM	remote control valve (master)
RCVMF	remote control valve (master) w/ flow meter
RCW	recycled/reclaimed water
RECP	rolled erosion control product
REQ	required
R/W	right of way

S

S	slip
SCC	sprinkler control conduit
SCH	schedule
SF	state-furnished
Shld	shoulder
SQFT	square foot/feet
SQYD	square yard(s)
SST	side strip
Sta	station
Std	standard
SW	sidewalk/sound wall

T

T	third circle/thread
TLS	truck loading standpipe
TQ	three quarter circle
TRM	turf reinforcement mat
TRVD	traveled
TT	two third circle
Typ	typical

U

UG	underground

V

VAU	valve assembly unit

W

W	width
W/	with
WM	water meter
WS	wye strainer
WSP	welded steel pipe
WWM	welded wire mesh

NOTE:

FOR ADDITIONAL ABBREVIATIONS, SEE STANDARD PLANS A10A AND A10B.

STATE OF CALIFORNIA
DEPARTMENT OF TRANSPORTATION

PLANTING AND IRRIGATION ABBREVIATIONS

NO SCALE

RSP H1 DATED JUNE 5, 2009 SUPERSEDES STANDARD PLAN H1
DATED MAY 1, 2006 - PAGE 201 OF THE STANDARD PLANS BOOK DATED MAY 2006.

REVISED STANDARD PLAN RSP H1

2006 REVISED STANDARD PLAN RSP H1

DIST	COUNTY	ROUTE	POST MILES TOTAL PROJECT	SHEET NO.	TOTAL SHEETS
04	CC	24	1.2,1.4	22	30

LICENSED LANDSCAPE ARCHITECT

April 3, 2009
PLANS APPROVAL DATE

The State of California or its officers or agents shall not be responsible for the accuracy or completeness of electronic copies of this plan sheet.

LICENSED LANDSCAPE ARCHITECT — Gregory A. Balzer 3878 — Signature — 02-28-11 Renewal Date — 03-04-09 Date — STATE OF CALIFORNIA

To accompany plans dated 6-20-11

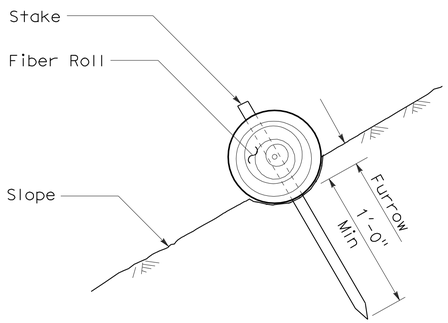

SECTION

FIBER ROLL (TYPE 1)

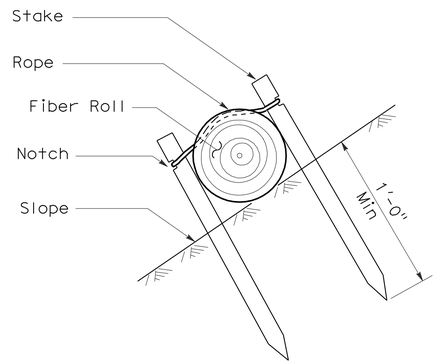

SECTION

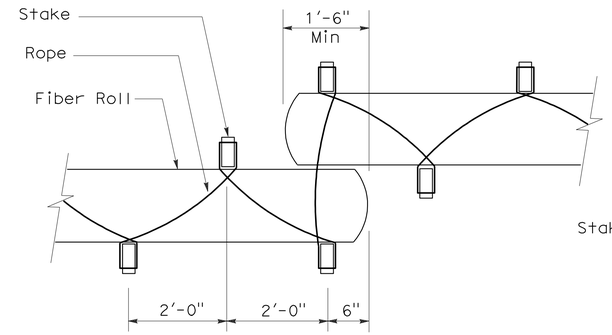

PLAN

FIBER ROLL (TYPE 2)

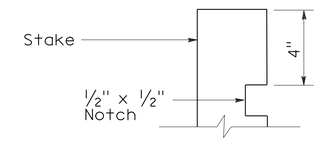

ELEVATION

STAKE NOTCH DETAIL

NOTES:

1. Fiber roll spacing varies depending upon slope inclination.
2. Installations shown in the perspectives are for slope inclination of 10:1 and steeper.

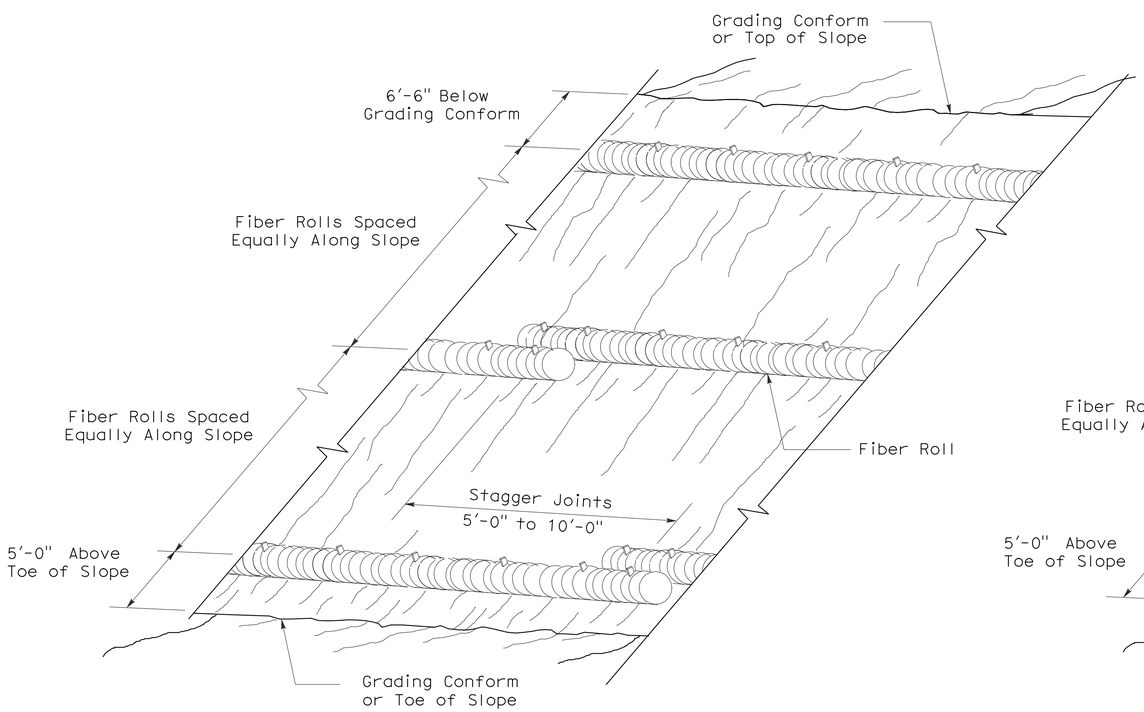

PERSPECTIVE

FIBER ROLL (TYPE 1)

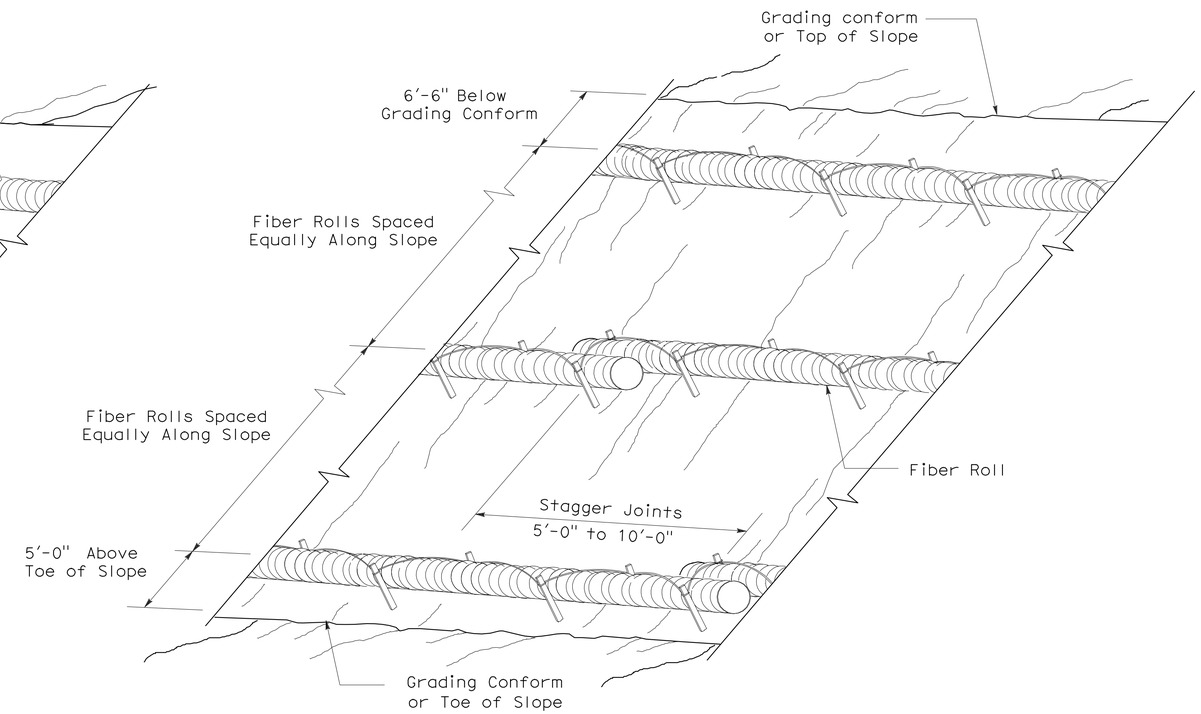

PERSPECTIVE

FIBER ROLL (TYPE 2)

STATE OF CALIFORNIA
DEPARTMENT OF TRANSPORTATION

EROSION CONTROL DETAILS (FIBER ROLL)

NO SCALE

RNSP H51 DATED APRIL 3, 2009 SUPERSEDES NSP H51 DATED DECEMBER 1, 2006 THAT SUPPLEMENTS THE STANDARD PLANS BOOK DATED MAY 2006.

REVISED NEW STANDARD PLAN RNSP H51

2006 REVISED NEW STANDARD PLAN RNSP H51

DIST	COUNTY	ROUTE	POST MILES TOTAL PROJECT	SHEET NO.	TOTAL SHEETS
04	CC	24	1.2,1.4	23	30

LICENSED LANDSCAPE ARCHITECT

June 5, 2009
PLANS APPROVAL DATE

The State of California or its officers or agents shall not be responsible for the accuracy or completeness of electronic copies of this plan sheet.

LICENSED LANDSCAPE ARCHITECT — Gregory A. Balzer — 6-9-09 Signature — 2-28-11 Renewal Date — 5-14-09 Date — STATE OF CALIFORNIA

To accompany plans dated 6-20-11

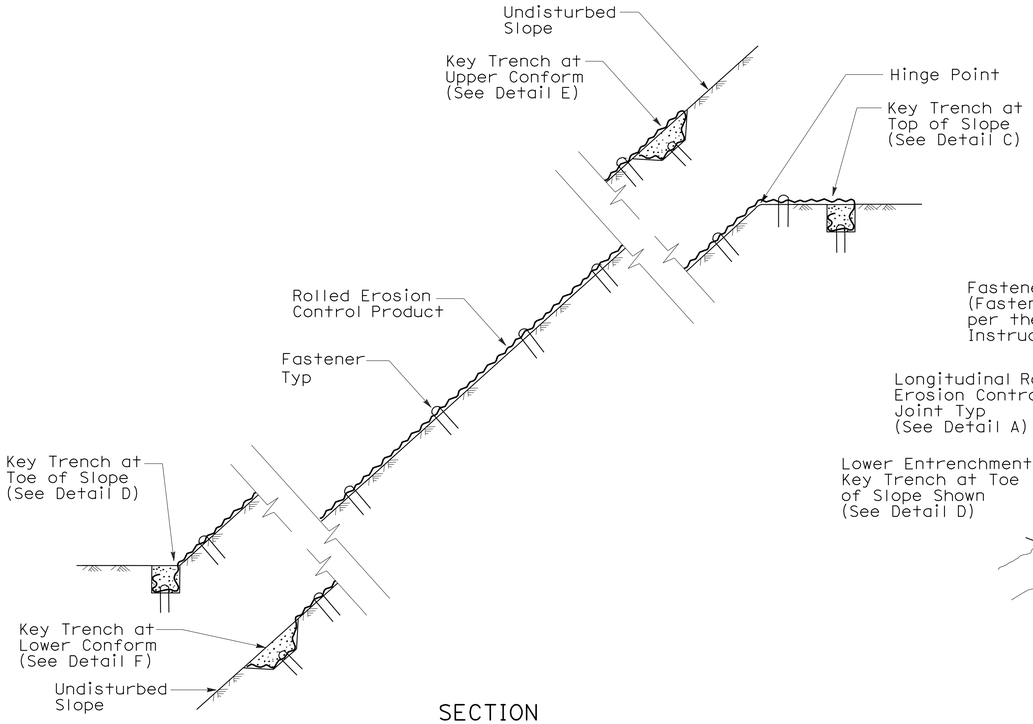

SECTION

ROLLED EROSION CONTROL PRODUCT ON SLOPE WITH VARIOUS KEY ENTRENCHMENTS

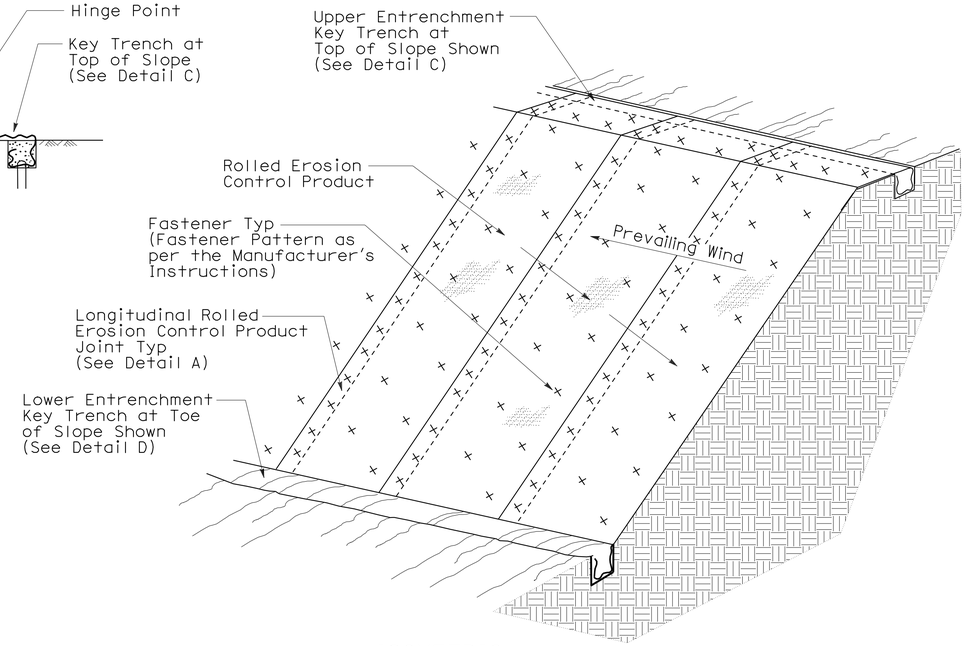

ISOMETRIC

ROLLED EROSION CONTROL PRODUCT ON SLOPE

NOTE:

1. Fiber Roll/Compost Sock shown for reference purposes only.
2. If transverse rolled erosion control product joints are required on slopes, see Detail B.

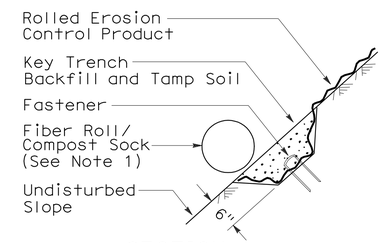

SECTION

DETAIL F
KEY TRENCH AT LOWER CONFORM

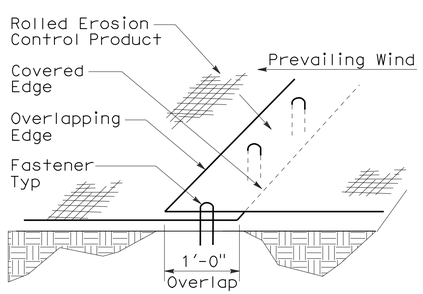

PERSPECTIVE

DETAIL A
LONGITUDINAL ROLLED EROSION CONTROL PRODUCT JOINT

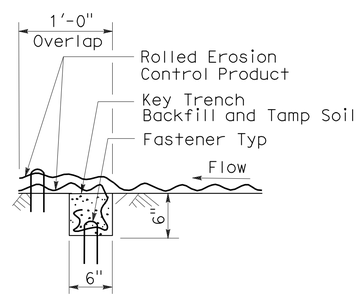

SECTION

DETAIL B
TRANSVERSE ROLLED EROSION CONTROL PRODUCT JOINT

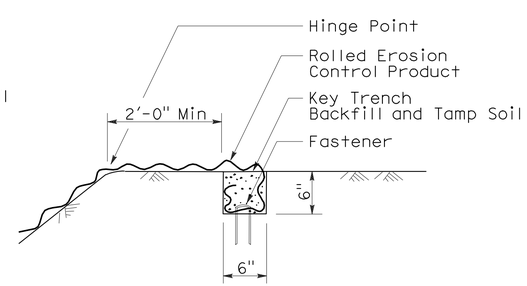

SECTION

DETAIL C
KEY TRENCH AT TOP OF SLOPE

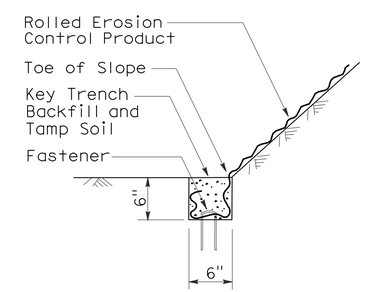

SECTION

DETAIL D
KEY TRENCH AT TOE OF SLOPE

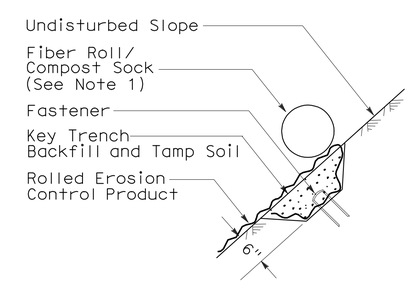

SECTION

DETAIL E
KEY TRENCH AT UPPER CONFORM

STATE OF CALIFORNIA
DEPARTMENT OF TRANSPORTATION

ROLLED EROSION CONTROL PRODUCT

NO SCALE

NSP H53 DATED JUNE 5, 2009 SUPPLEMENTS
THE STANDARD PLANS BOOK DATED MAY 2006.

NEW STANDARD PLAN NSP H53

2006 NEW STANDARD PLAN NSP H53

3-4-09

DIST	COUNTY	ROUTE	POST MILES TOTAL PROJECT	SHEET NO.	TOTAL SHEETS
04	CC	24	1.2,1.4	24	30

Randell D. Hiatt
REGISTERED CIVIL ENGINEER

June 6, 2008
PLANS APPROVAL DATE

REGISTERED PROFESSIONAL ENGINEER
Randell D. Hiatt
No. C50200
Exp. 6-30-09
CIVIL
STATE OF CALIFORNIA

The State of California or its officers or agents shall not be responsible for the accuracy or completeness of electronic copies of this plan sheet.

To accompany plans dated 6-20-11

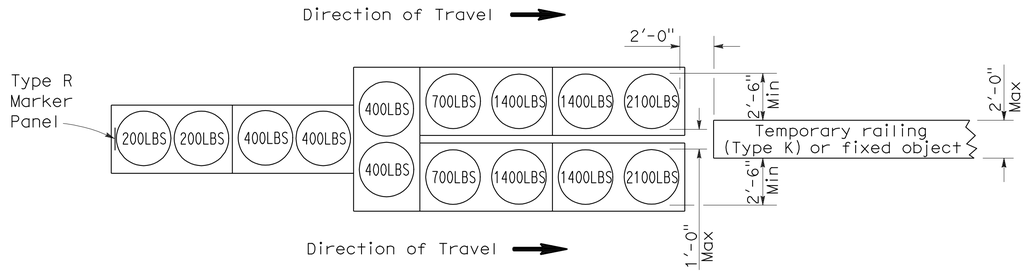

ARRAY 'TU14'

Approach speed 45 mph or more

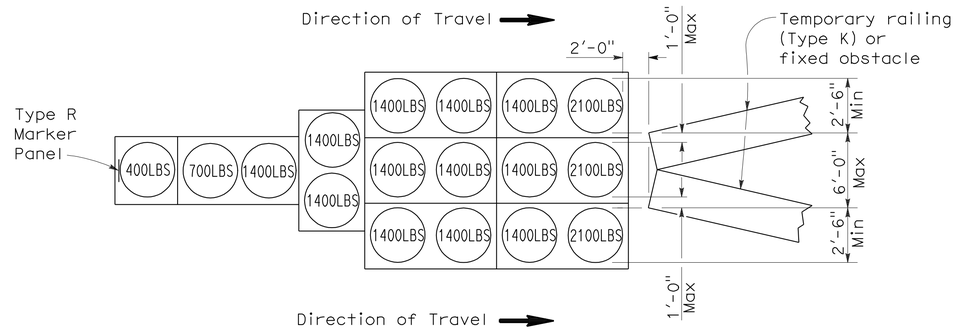

ARRAY 'TU17'

Approach speed less than 45 mph

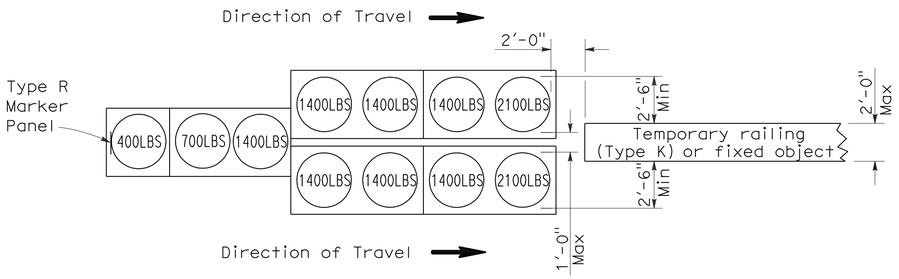

ARRAY 'TU11'

Approach speed less than 45 mph

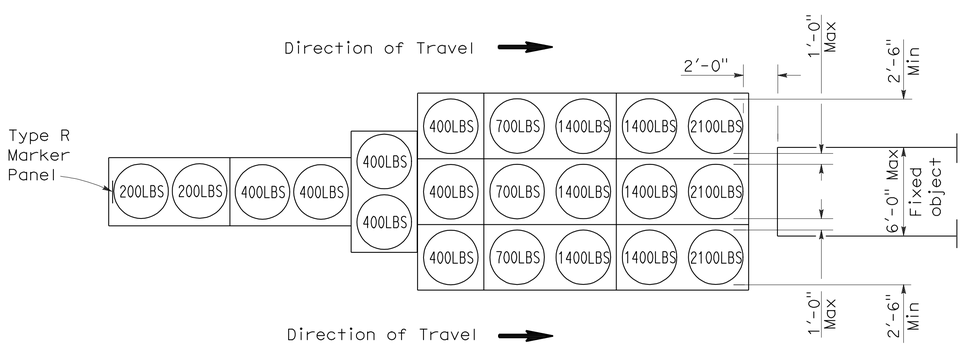

ARRAY 'TU21'

Approach speed 45 mph or more

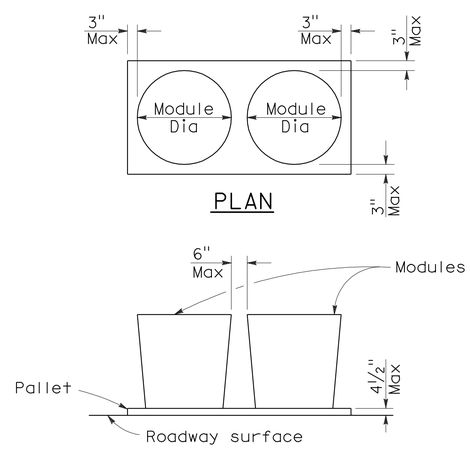

ELEVATION

CRASH CUSHION PALLET DETAIL

See Note 7

NOTES:

1. (XXX) Indicates sand filled module location and weight of sand in pounds for each module. Module spacing is based on the greater diameter of the module.
2. All sand weights are nominal.
3. Temporary crash cushion arrays shall not encroach on the traveled way.
4. Place the top of Type R marker panel 1" below the module lid.
5. Refer to Standard Plan A73B for marker details.
6. Approach speeds indicated conform to NCHRP 350 Report criteria.
7. Use of pallets is optional.

STATE OF CALIFORNIA
DEPARTMENT OF TRANSPORTATION

TEMPORARY CRASH CUSHION, SAND FILLED (UNIDIRECTIONAL)

NO SCALE

RSP T1A DATED JUNE 6, 2008 SUPERSEDES STANDARD PLAN T1A
DATED MAY 1, 2006 - PAGE 211 OF THE STANDARD PLANS BOOK DATED MAY 2006.

REVISED STANDARD PLAN RSP T1A

2006 REVISED STANDARD PLAN RSP T1A

5-15-08

DIST	COUNTY	ROUTE	POST MILES TOTAL PROJECT	SHEET NO.	TOTAL SHEETS
04	CC	24	1.2,1.4	25	30

Randell D. Hiatt
REGISTERED CIVIL ENGINEER

June 6, 2008
PLANS APPROVAL DATE

REGISTERED PROFESSIONAL ENGINEER
Randell D. Hiatt
No. C50200
Exp. 6-30-09
CIVIL
STATE OF CALIFORNIA

The State of California or its officers or agents shall not be responsible for the accuracy or completeness of electronic copies of this plan sheet.

To accompany plans dated 6-20-11

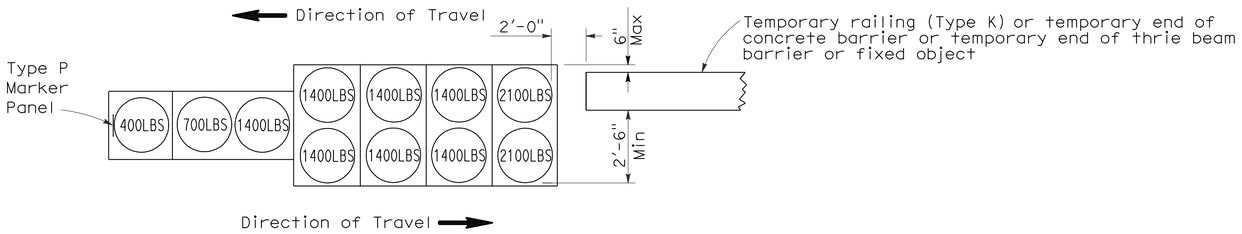

ARRAY 'TB11'

Approach speed less than 45 mph

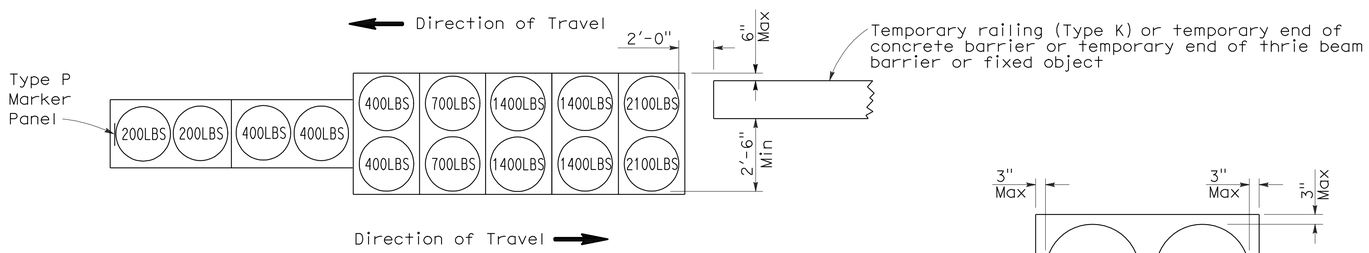

ARRAY 'TB14'

Approach speed 45 mph or more

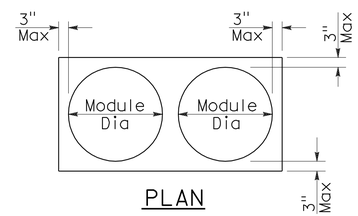

PLAN

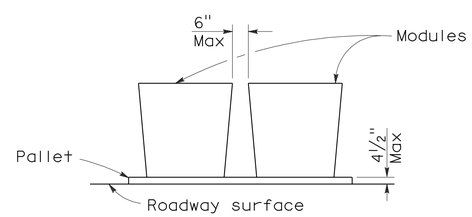

ELEVATION

CRASH CUSHION PALLET DETAIL

See Note 7

NOTES:

1. (XXX) Indicates sand filled module location and weight of sand in pounds for each module. Module spacing is based on the greater diameter of the module.
2. All sand weights are nominal.
3. Temporary crash cushion arrays shall not encroach on the traveled way.
4. Place the Type P marker panel so that the bottom of the panel rests upon the pallet.
5. Refer to Standard Plan A73B for marker details.
6. Approach speeds indicated conform to NCHRP 350 Report criteria.
7. Use of pallets is optional.

STATE OF CALIFORNIA
DEPARTMENT OF TRANSPORTATION

TEMPORARY CRASH CUSHION, SAND FILLED (BIDIRECTIONAL)

NO SCALE

RSP T1B DATED JUNE 6, 2008 SUPERSEDES STANDARD PLAN T1B
DATED MAY 1, 2006 - PAGE 212 OF THE STANDARD PLANS BOOK DATED MAY 2006.

REVISED STANDARD PLAN RSP T1B

2006 REVISED STANDARD PLAN RSP T1B

DIST	COUNTY	ROUTE	POST MILES TOTAL PROJECT	SHEET NO.	TOTAL SHEETS
04	CC	24	1.2,1.4	26	30

Randell D. Hiatt
REGISTERED CIVIL ENGINEER

June 6, 2008
PLANS APPROVAL DATE

REGISTERED PROFESSIONAL ENGINEER
Randell D. Hiatt
No. C50200
Exp. 6-30-09
CIVIL
STATE OF CALIFORNIA

The State of California or its officers or agents shall not be responsible for the accuracy or completeness of electronic copies of this plan sheet.

To accompany plans dated 6-20-11

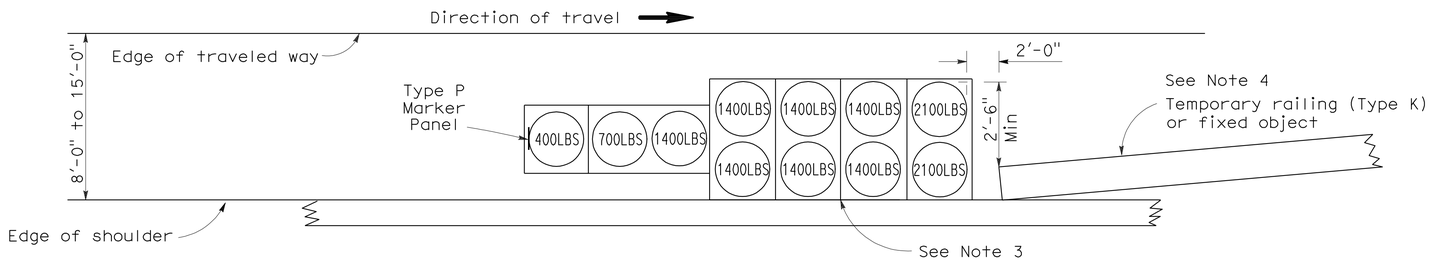

ARRAY 'TS11'

Approach speed less than 45 mph
See Note 9

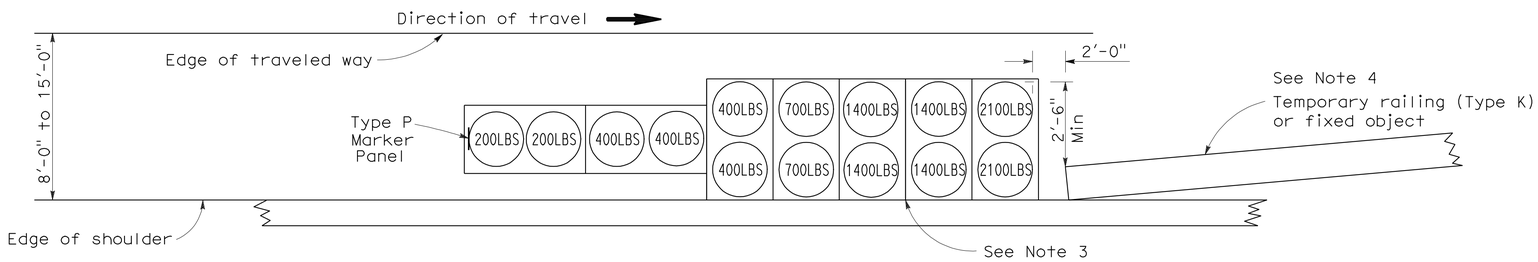

ARRAY 'TS14'

Approach speed 45 mph or more
See Note 9

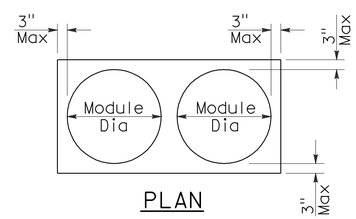

PLAN

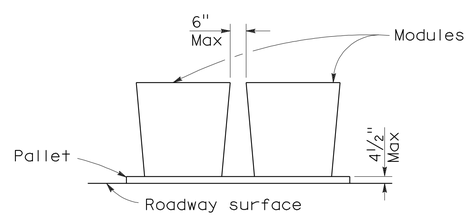

ELEVATION

CRASH CUSHION PALLET DETAIL

See Note 11

NOTES:

1. (XXX) Indicates sand filled module location and weight of sand in pounds for each module. Module spacing is based on the greater diameter of the module.
2. All sand weights are nominal.
3. The temporary crash cushion arrays shown on this plan shall be used only in locations where there will be traffic on one side of the temporary crash cushion array.
4. If the fixed object or approach end of the temporary railing is less than 15'-0" from the edge of traveled way, a temporary crash cushion is required in a construction or work zone.
5. Temporary crash cushion arrays shall not encroach on the traveled way.
6. Arrays for median shoulders shall conform to details shown on this plan for outside shoulders.
7. Place the Type P marker panel so that the bottom of the panel rests upon the pallet and faces traffic.
8. Refer to Standard Plan A73B for marker details.
9. For shoulder widths less than 8'-0", appropriate approved crash cushion protection, other than sand filled modules, shall be provided at fixed objects and at approach ends of temporary railing. The specific type of crash cushion shall be as shown on the project plans or as specified in the Special Provisions, or if not shown on the project plans or specified in the Special Provisions, shall be as approved by the Engineer.
10. Approach speeds indicated conform to NCHRP 350 Report criteria.
11. Use of pallets is optional.

STATE OF CALIFORNIA
DEPARTMENT OF TRANSPORTATION

TEMPORARY CRASH CUSHION, SAND FILLED (SHOULDER INSTALLATIONS)

NO SCALE

RSP T2 DATED JUNE 6, 2008 SUPERSEDES STANDARD PLAN T2
DATED MAY 1, 2006 - PAGE 213 OF THE STANDARD PLANS BOOK DATED MAY 2006.

REVISED STANDARD PLAN RSP T2

2006 REVISED STANDARD PLAN RSP T2

5-15-08

Dist	COUNTY	ROUTE	POST MILES TOTAL PROJECT	SHEET No.	TOTAL SHEETS
04	CC	24	1.2,1.4	27	30

Randell D. Hiatt
REGISTERED CIVIL ENGINEER

May 20, 2011
PLANS APPROVAL DATE

REGISTERED PROFESSIONAL ENGINEER
Randell D. Hiatt
No. C50200
Exp. 6-30-11
CIVIL
STATE OF CALIFORNIA

The State of California or its officers or agents shall not be responsible for the accuracy or completeness of electronic copies of this plan sheet.

To accompany plans dated 6-20-11

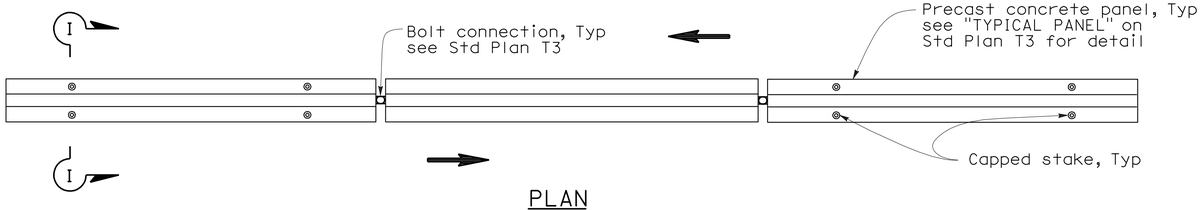

PLAN

RAILING STAKING CONFIGURATION FOR TWO-WAY TRAFFIC

See Note 1

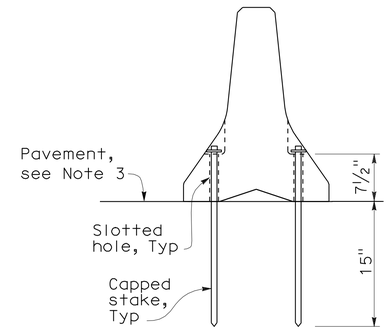

SECTION I-I

NOTES:

1. Where Type K Temporary Railing is placed as a temporary or long term barrier in two-way traffic on highways with less than 24" from the edge of traveled way, use four capped stakes per every other panel with end panels staked.
2. Where Type K Temporary Railing is placed 3" to 24" from the edge of an excavation on highways, use two capped stakes per panel along the traffic side.
3. Staked Type K Temporary Railing must be supported by at least 4" thick concrete, hot mix asphalt or existing asphalt concrete pavement.
4. The minimum yield strength for the washer must be 60,000 psi.
5. Direction of adjacent traffic indicated by ⟹.

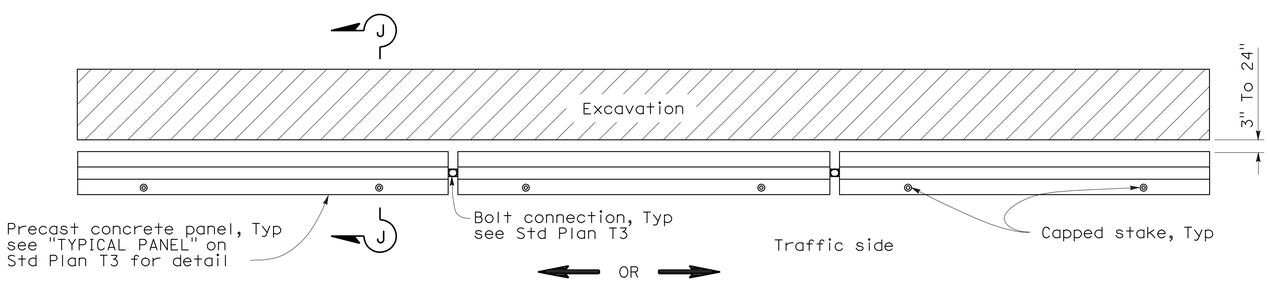

PLAN

RAILING STAKING CONFIGURATION ADJACENT TO AN EXCAVATION

See Note 2

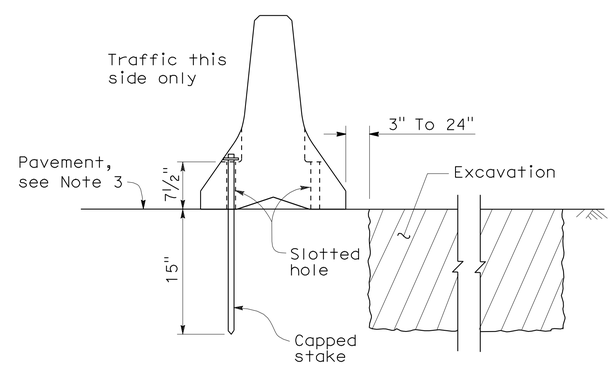

SECTION J-J

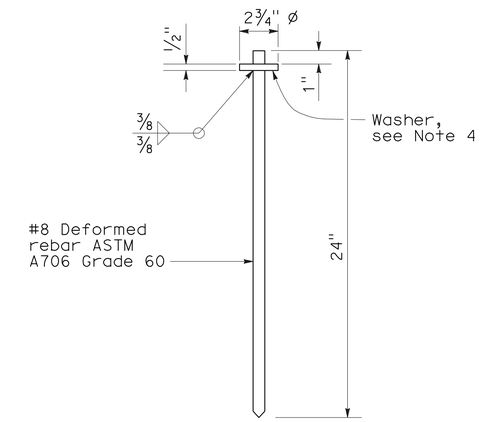

CAPPED STAKE DETAIL

STATE OF CALIFORNIA
DEPARTMENT OF TRANSPORTATION

TEMPORARY RAILING (TYPE K)

NO SCALE

NSP T3A DATED MAY 20, 2011 SUPPLEMENTS THE STANDARD PLANS BOOK DATED MAY 2006.

NEW STANDARD PLAN NSP T3A

2006 NEW STANDARD PLAN NSP T3A

DIST	COUNTY	ROUTE	POST MILES TOTAL PROJECT	SHEET NO.	TOTAL SHEETS
04	CC	24	1.2,1.4	28	30

LICENSED LANDSCAPE ARCHITECT

April 3, 2009
PLANS APPROVAL DATE

The State of California or its officers or agents shall not be responsible for the accuracy or completeness of electronic copies of this plan sheet.

LICENSED LANDSCAPE ARCHITECT — Robert B. Schott — Signature — 11-30-10 Renewal Date — 2-25-09 Date — STATE OF CALIFORNIA

To accompany plans dated 6-20-11

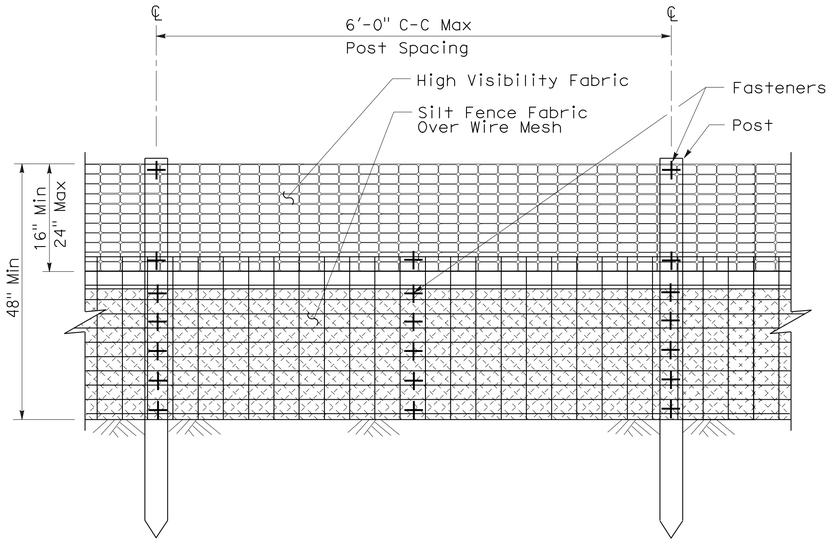

ELEVATION

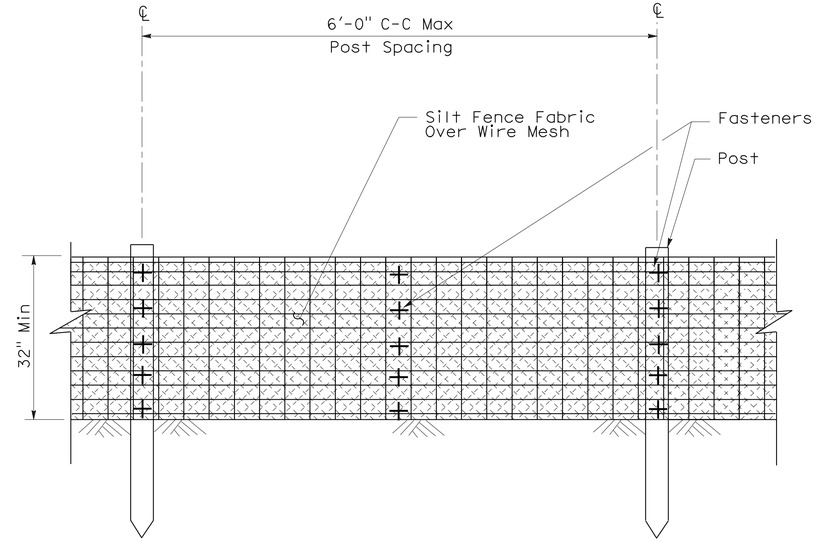

ELEVATION

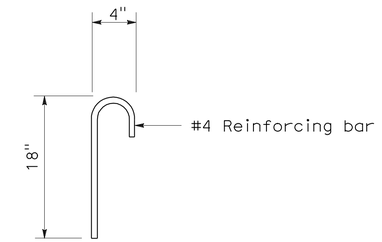

ANCHOR

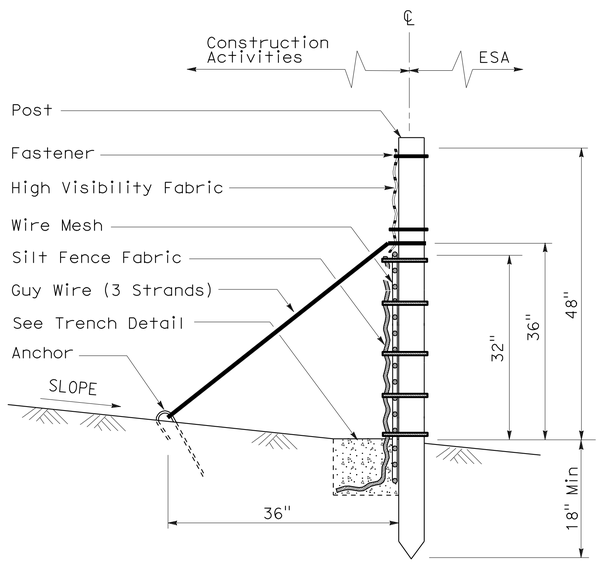

SECTION

TEMPORARY REINFORCED SILT FENCE (TYPE 1)

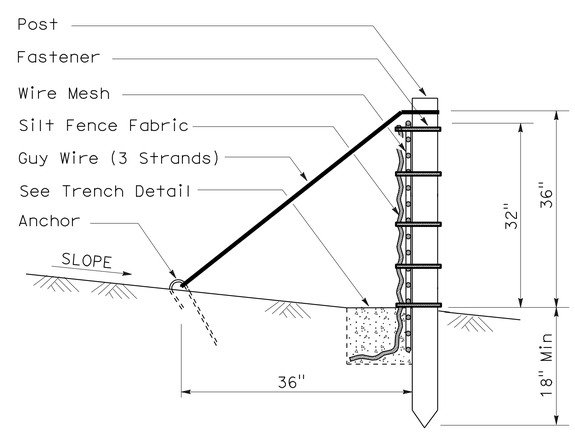

SECTION

TEMPORARY REINFORCED SILT FENCE (TYPE 2)

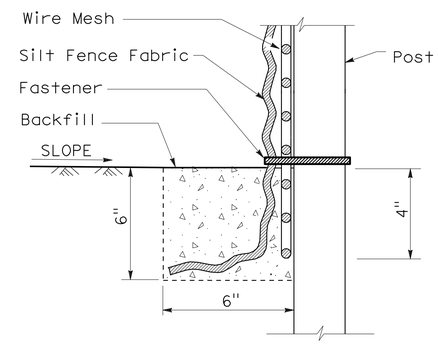

SECTION

TRENCH DETAIL

STATE OF CALIFORNIA
DEPARTMENT OF TRANSPORTATION

TEMPORARY WATER POLLUTION CONTROL DETAILS (TEMPORARY REINFORCED SILT FENCE)

NO SCALE

NSP T60 DATED APRIL 3, 2009 SUPPLEMENTS
THE STANDARD PLANS BOOK DATED MAY 2006.

NEW STANDARD PLAN NSP T60

2006 NEW STANDARD PLAN NSP T60

1-7-09

DIST	COUNTY	ROUTE	POST MILES TOTAL PROJECT	SHEET NO.	TOTAL SHEETS
04	CC	24	1.2,1.4	29	30

LICENSED LANDSCAPE ARCHITECT

August 15, 2008
PLANS APPROVAL DATE

The State of California or its officers or agents shall not be responsible for the accuracy or completeness of electronic copies of this plan sheet.

LICENSED LANDSCAPE ARCHITECT — Robert B. Schott — Signature — 11-04-08 Renewal Date — 08-11-08 Date — STATE OF CALIFORNIA

To accompany plans dated 6-20-11

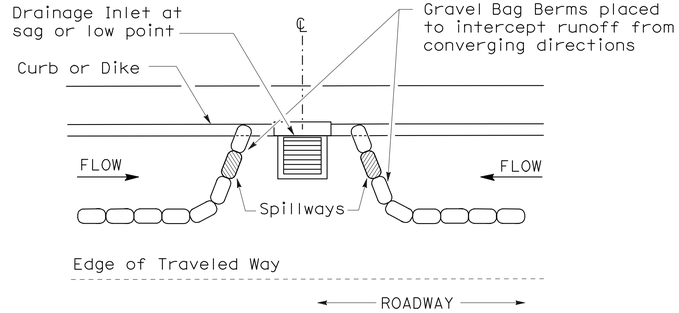

PLAN

CONFIGURATION FOR SAG POINT INLET (GRAVEL BAG BERM)

GRAVEL BAG BERM (TYPE 3A) SPACING TABLE

SLOPE OF ROADWAY (PERCENT)	1 to 3.9	4 to 5.9	6 to 7.9	8 to 10	10+
INTERVAL BETWEEN BERM	100′	75′	50′	25′	12′

For slope of less than 1%, install barriers only if erosion/sediment is prevalent

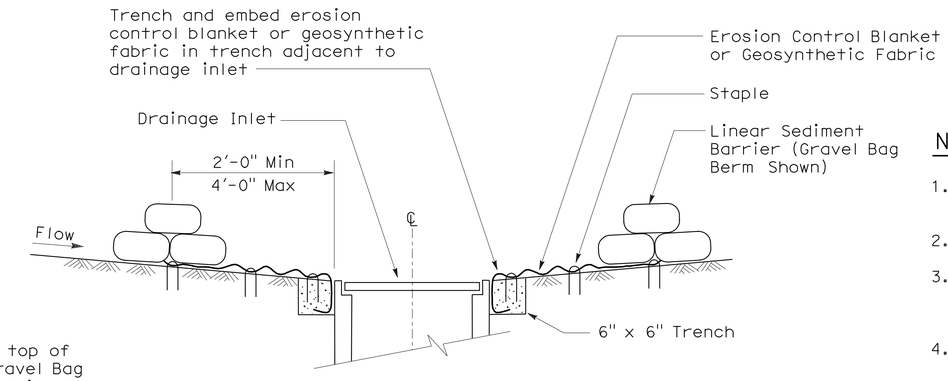

SECTION A-A

NOTES:

1. Place safety cones adjacent to drainage inlet protection.
2. Dimensions may vary to fit field conditions.
3. Install a minimum of 3 gravel bag berms upstream of each drainage inlet to be protected.
4. Position erosion control blanket or geosynthetic fabric at edge of concrete apron and secure in trench.
5. Erosion control blanket or geosynthetic fabric is not required if the area adjacent to the drainage inlet is vegetated or paved.

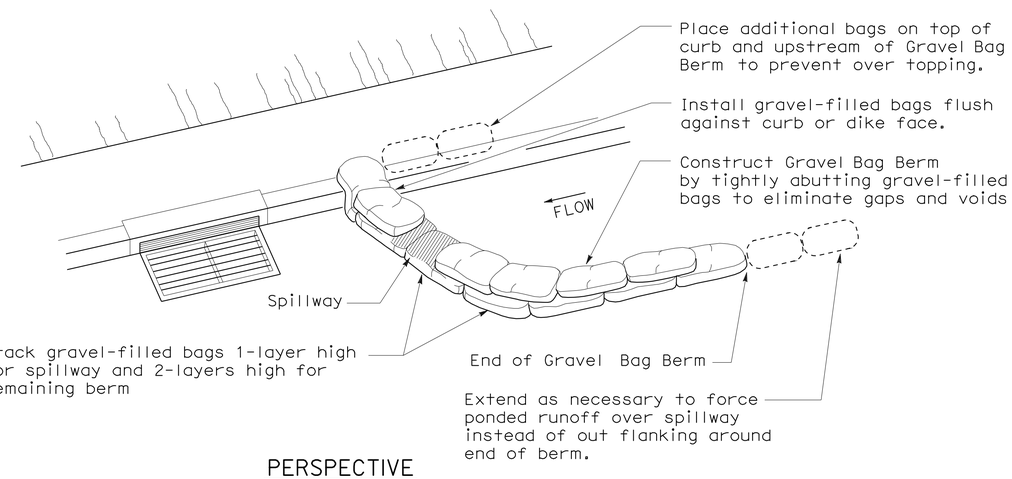

PERSPECTIVE

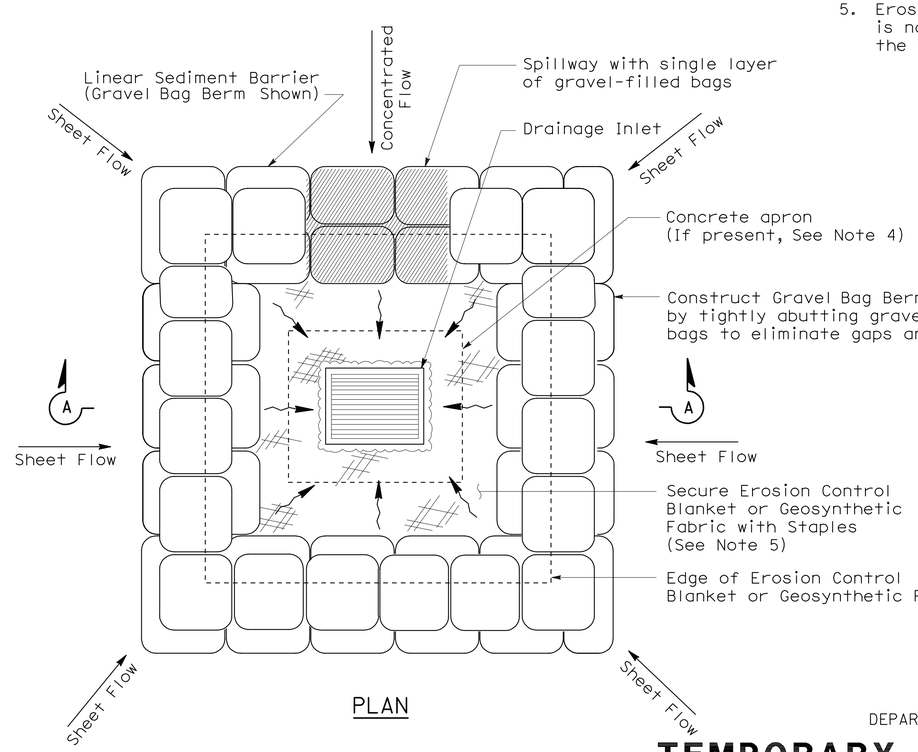

PLAN

TEMPORARY DRAINAGE INLET PROTECTION (TYPE 3B)

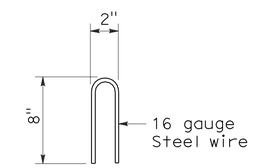

STAPLE DETAIL

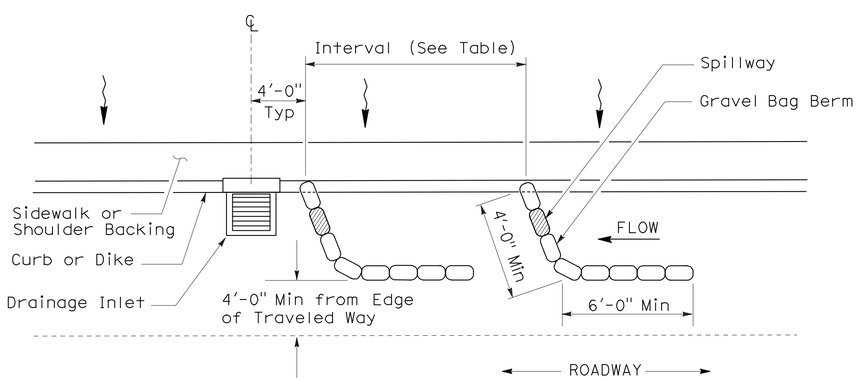

PLAN

TEMPORARY DRAINAGE INLET PROTECTION (TYPE 3A) (GRAVEL BAG BERM)

STATE OF CALIFORNIA
DEPARTMENT OF TRANSPORTATION

TEMPORARY WATER POLLUTION CONTROL DETAILS (TEMPORARY DRAINAGE INLET PROTECTION)

NO SCALE

NSP T62 DATED AUGUST 15, 2008 SUPPLEMENTS THE STANDARD PLANS BOOK DATED MAY 2006.

NEW STANDARD PLAN NSP T62

2006 NEW STANDARD PLAN NSP T62

7-11-08

DIST	COUNTY	ROUTE	POST MILES TOTAL PROJECT	SHEET NO.	TOTAL SHEETS
04	CC	24	1.2,1.4	30	30

LICENSED LANDSCAPE ARCHITECT

August 15, 2008
PLANS APPROVAL DATE

LICENSED LANDSCAPE ARCHITECT
Robert B. Schott
Signature
11-04-08
Renewal Date
08-11-08
Date
STATE OF CALIFORNIA

The State of California or its officers or agents shall not be responsible for the accuracy or completeness of electronic copies of this plan sheet.

To accompany plans dated 6-20-11

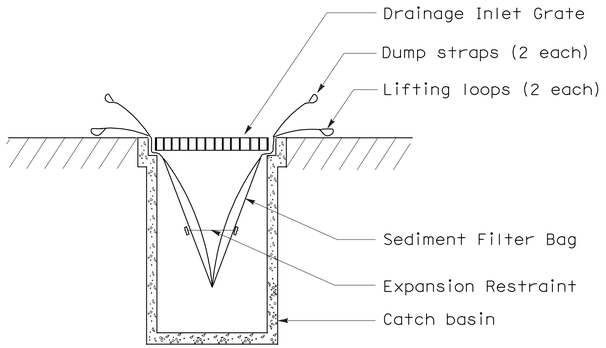

SECTION B-B

SEDIMENT FILTER BAG DETAIL

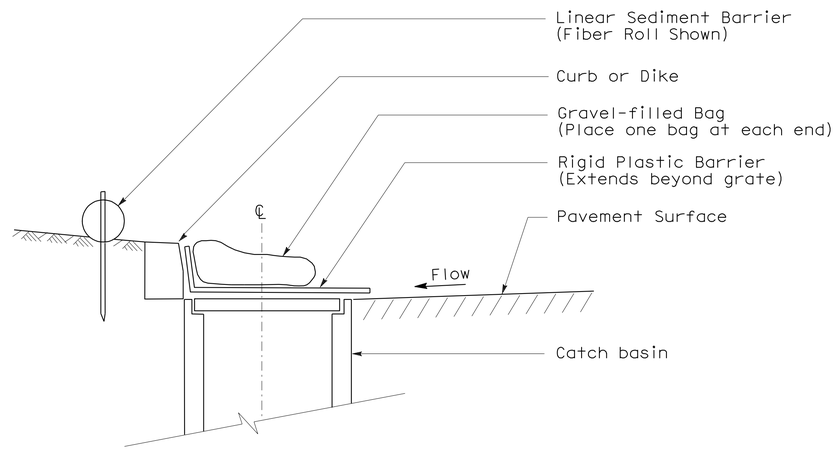

SECTION

TEMPORARY DRAINAGE INLET PROTECTION (TYPE 6A) (CATCH BASIN WITH GRATE)

NOTES:

1. See Standard Plan T51 for Temporary Silt Fence.
2. Dimensions may vary to fit field conditions.

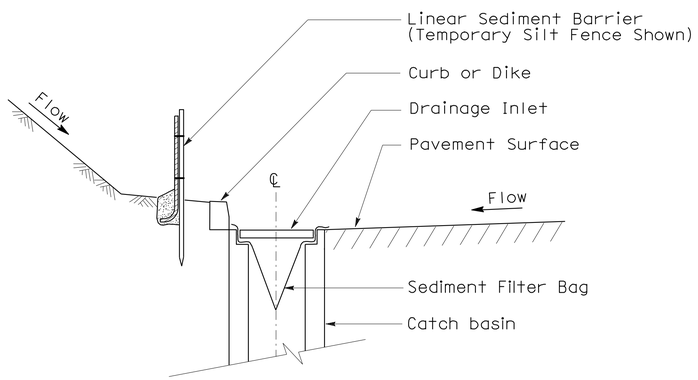

SECTION A-A

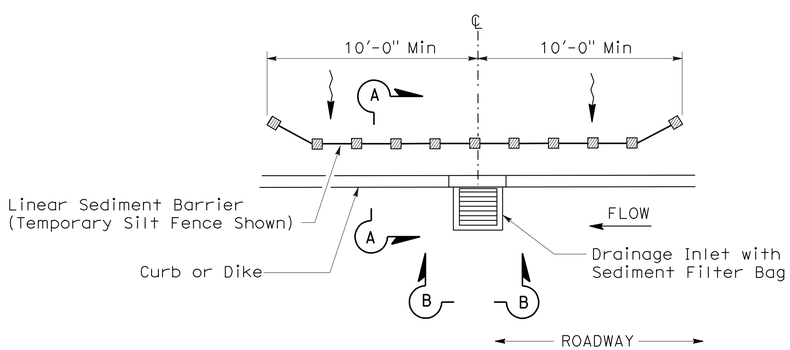

PLAN

TEMPORARY DRAINAGE INLET PROTECTION (TYPE 5) (SEDIMENT FILTER BAG)

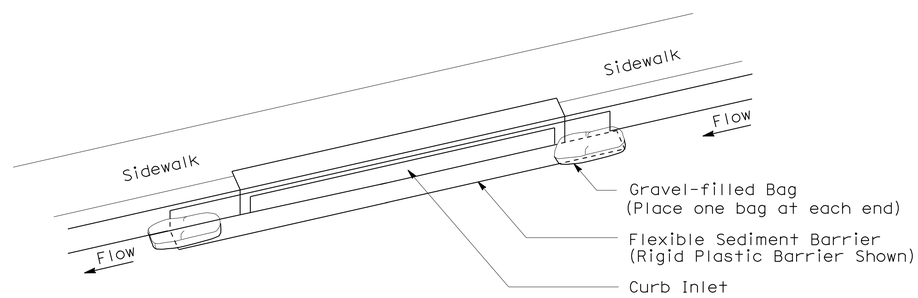

PERSPECTIVE

TEMPORARY DRAINAGE INLET PROTECTION (TYPE 6B) (CURB INLET WITHOUT GRATE)

STATE OF CALIFORNIA
DEPARTMENT OF TRANSPORTATION

TEMPORARY WATER POLLUTION CONTROL DETAILS (TEMPORARY DRAINAGE INLET PROTECTION)

NO SCALE

NSP T64 DATED AUGUST 15, 2008 SUPPLEMENTS
THE STANDARD PLANS BOOK DATED MAY 2006.

NEW STANDARD PLAN NSP T64

2006 NEW STANDARD PLAN NSP T64

7-11-08