Dist	COUNTY	ROUTE	POST MILES TOTAL PROJECT	SHEET No.	TOTAL SHEETS
04	Ala	80	2.5/3.3	2	176

Thomas Cheng 6-14-11
REGISTERED CIVIL ENGINEER DATE

11-28-11
PLANS APPROVAL DATE

REGISTERED PROFESSIONAL ENGINEER Thomas Cheng No. 29908 Exp. 3-31-13 CIVIL STATE OF CALIFORNIA

THE STATE OF CALIFORNIA OR ITS OFFICERS OR AGENTS SHALL NOT BE RESPONSIBLE FOR THE ACCURACY OR COMPLETENESS OF SCANNED COPIES OF THIS PLAN SHEET.

NOTES:

1. DIMENSIONS OF THE PAVEMENT STRUCTURES (STRUCTURAL SECTIONS) ARE SUBJECT TO TOLERANCES SPECIFIED IN THE STANDARD SPECIFICATIONS.
2. SUPERELEVATION AS SHOWN OR AS DIRECTED BY THE ENGINEER.
3. FOR EXACT LOCATION OF RETAINING WALL, SEE RETAINING WALL PLANS.
4. FOR EXACT LOCATION OF CURB, CONCRETE BARRIER AND MBGR, SEE LAYOUT PLAN.
5. MINIMUM VERTICAL CLEARANCE BETWEEN STA AB 101+80 TO 104+72.60 IS 20'±.
6. MINIMUM VERTICAL CLEARANCE NEAR STA B 144+50 IS 14'±.

1

ABBREVIATIONS:

BPPE	BIKE PATH PERMANENT EASEMENT
DG	DECOMPOSED GRANITE MATERIALS
DGAC	DENSE GRADED ASPHALT CONCRETE
RAC	RUBBERIZED ASPHALT CONCRETE

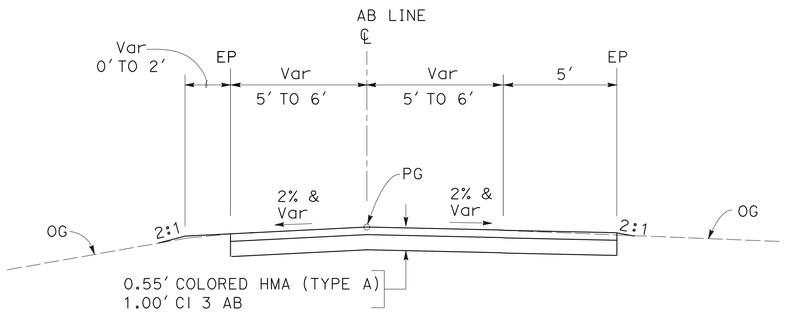

CLASS I BIKEWAY
AB 100+60 TO 101+80

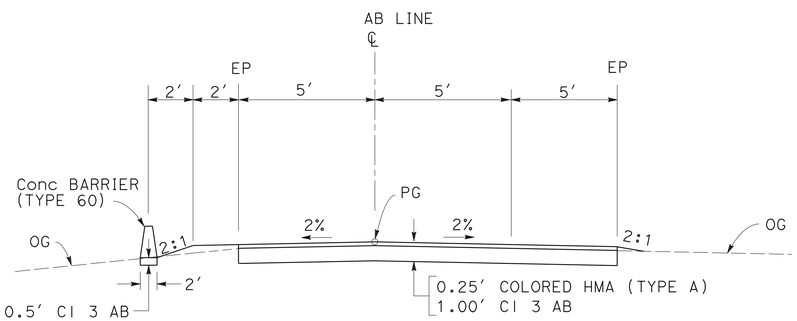

CLASS I BIKEWAY
AB 100+00 TO 100+60

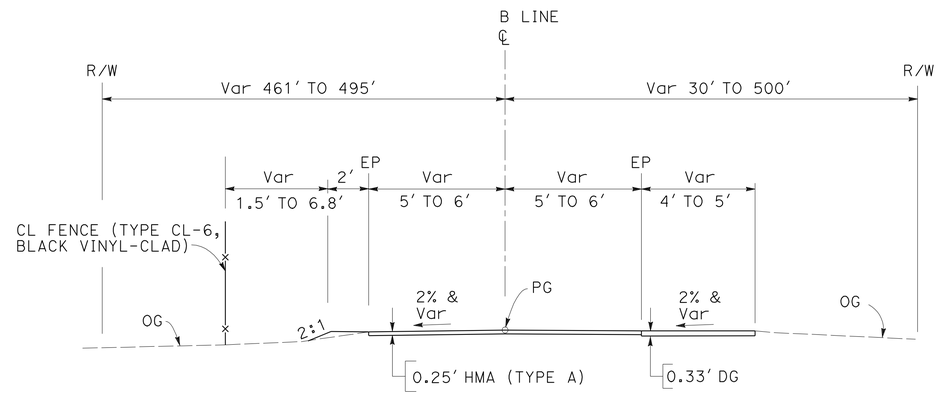

CLASS III BIKEWAY
MULTI-PURPOSE TRAIL
B 103+53.49 TO 104+90

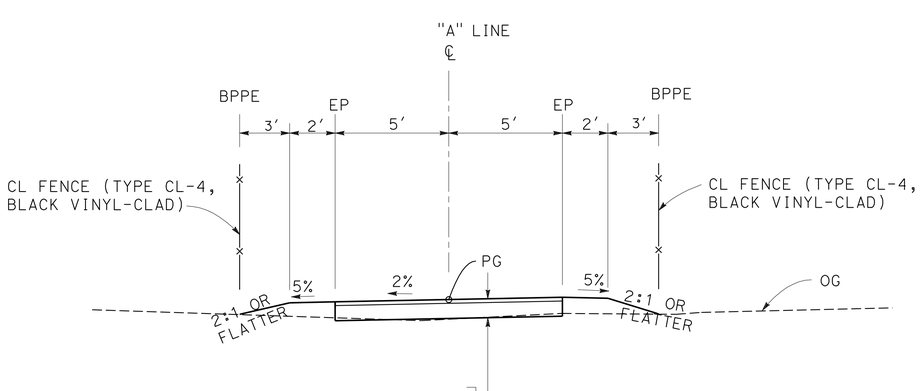

CLASS I BIKEWAY
Sta "A" 10+55 TO 27+77.58

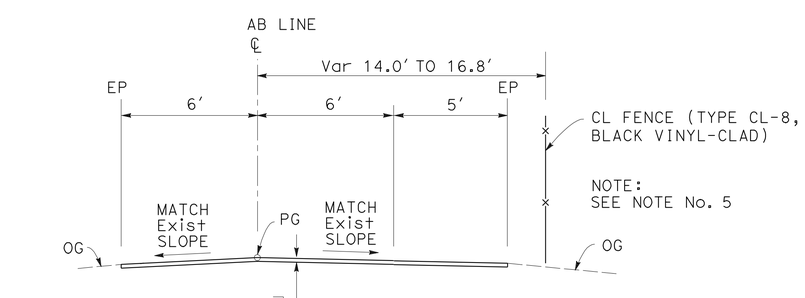

CLASS III BIKEWAY
AB 101+80 TO 104+69.21

1 **REVISED PER ADDENDUM No. 1 DATED APRIL 13, 2012**

TYPICAL CROSS SECTIONS
NO SCALE

X-1

STATE OF CALIFORNIA - DEPARTMENT OF TRANSPORTATION
Caltrans® **DESIGN**

FUNCTIONAL SUPERVISOR: HALIM MATHKOUR
CALCULATED-DESIGNED BY: QI LIU
CHECKED BY: THOMAS CHENG
REVISED BY: TC
DATE REVISED: 3/24/11

LAST REVISION: 10-06-11
DATE PLOTTED => 11-APR-2012
TIME PLOTTED => 07:52

Dist	COUNTY	ROUTE	POST MILES TOTAL PROJECT	SHEET No.	TOTAL SHEETS
04	Ala	80	2.5/3.3	3	176

REGISTERED CIVIL ENGINEER 6-14-11 DATE

11-28-11
PLANS APPROVAL DATE

REGISTERED PROFESSIONAL ENGINEER Thomas Cheng No. 29908 Exp. 3-31-13 CIVIL STATE OF CALIFORNIA

THE STATE OF CALIFORNIA OR ITS OFFICERS OR AGENTS SHALL NOT BE RESPONSIBLE FOR THE ACCURACY OR COMPLETENESS OF SCANNED COPIES OF THIS PLAN SHEET.

1

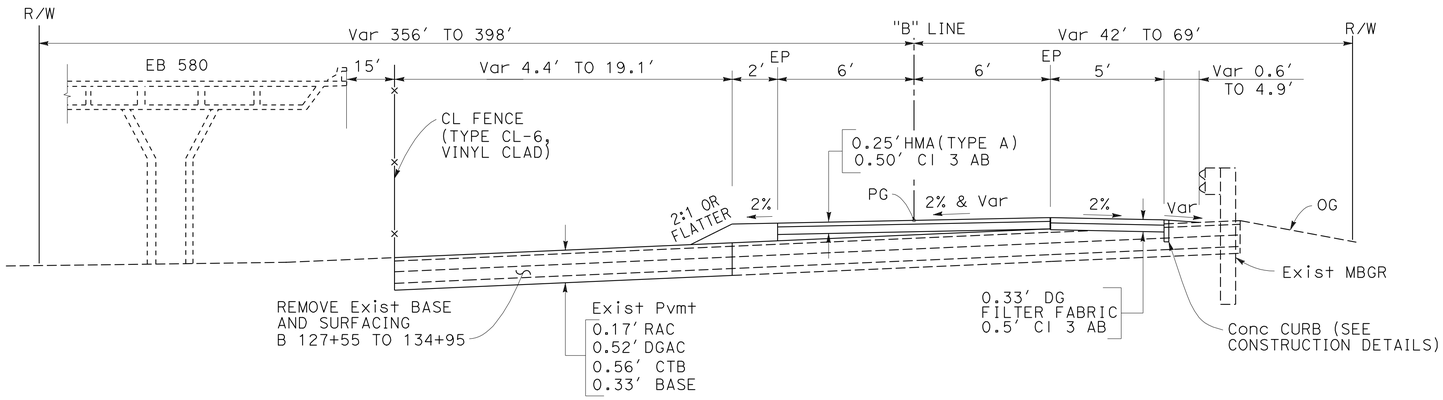

MULTI-PURPOSE TRAIL
Sta "B" 128+00 TO 134+00

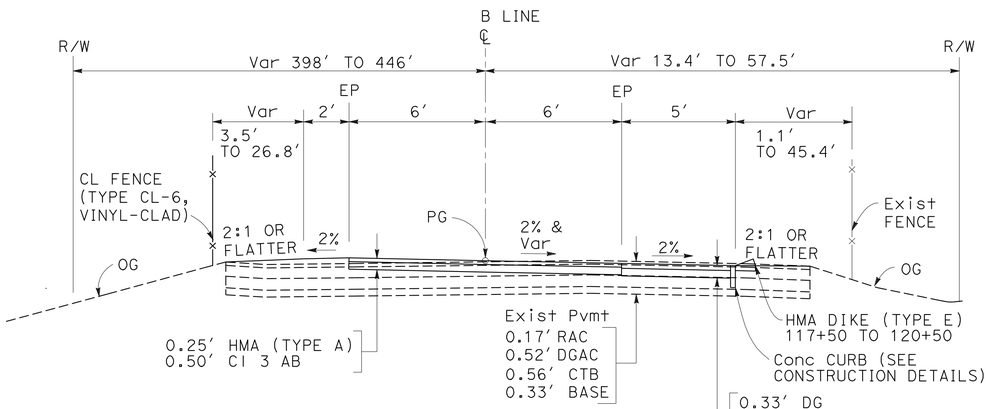

MULTI-PURPOSE TRAIL
B 115+00 TO 128+00

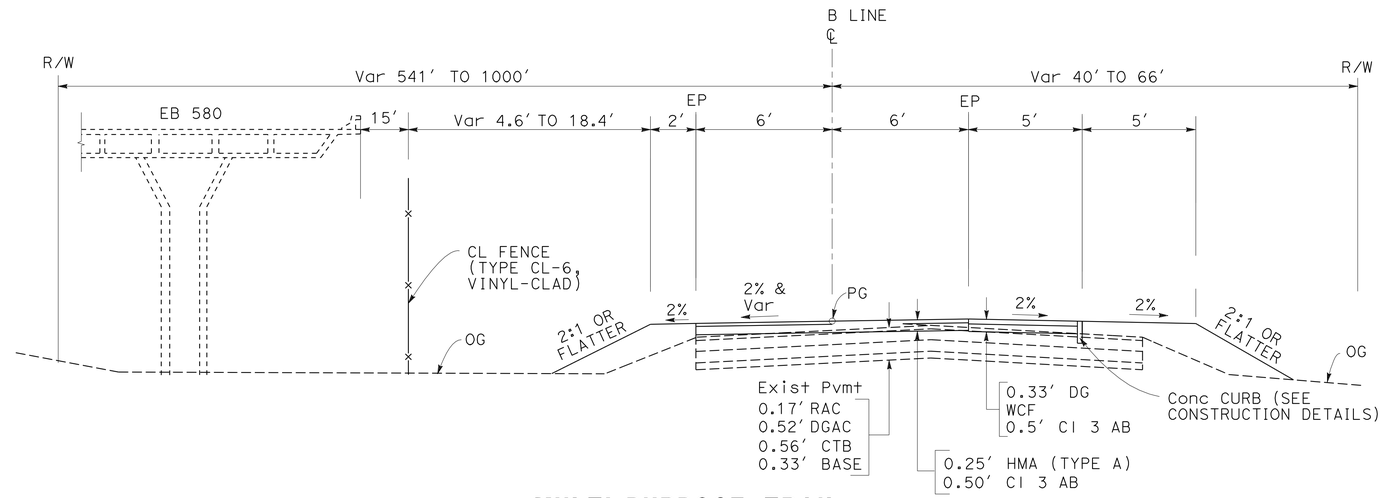

MULTI-PURPOSE TRAIL
B 136+50 TO 140+00

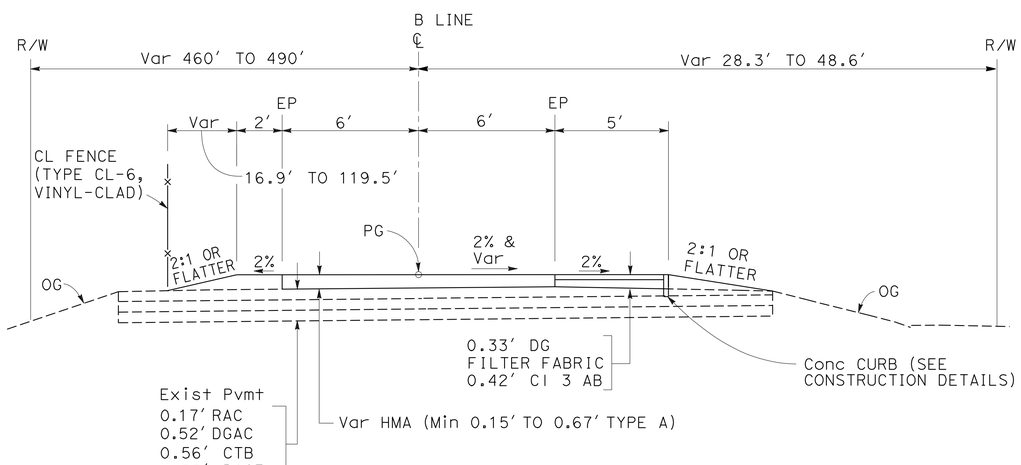

MULTI-PURPOSE TRAIL
B 104+90 TO 115+00

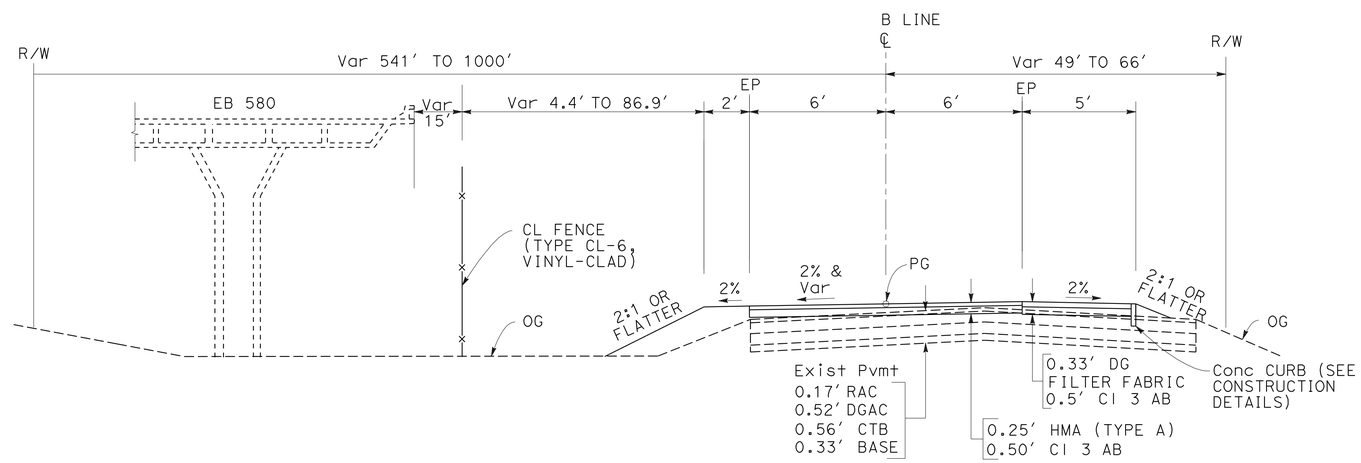

MULTI-PURPOSE TRAIL
B 134+00 TO 136+50
B 140+00 TO 147+50

NOTE:
SEE NOTE No. 6

1 **REVISED PER ADDENDUM No. 1 DATED APRIL 13, 2012**

FOR NOTES, ABBREVIATIONS AND LEGEND, SEE SHEET X-1

TYPICAL CROSS SECTIONS
NO SCALE

X-2

REVISED BY	DATE REVISED
TC	6/8/11

CALCULATED-DESIGNED BY: QI LIU
CHECKED BY: THOMAS CHENG
FUNCTIONAL SUPERVISOR: HALIM MATHKOUR

STATE OF CALIFORNIA - DEPARTMENT OF TRANSPORTATION
Caltrans
DESIGN

LAST REVISION 10-06-11
DATE PLOTTED => 11-APR-2012
TIME PLOTTED => 10:50

Dist	COUNTY	ROUTE	POST MILES TOTAL PROJECT	SHEET No.	TOTAL SHEETS
04	Ala	80	2.5/3.3	4	176

REGISTERED CIVIL ENGINEER 6-14-11 DATE

11-28-11
PLANS APPROVAL DATE

REGISTERED PROFESSIONAL ENGINEER Thomas Cheng No. 29908 Exp. 3-31-13 CIVIL STATE OF CALIFORNIA

THE STATE OF CALIFORNIA OR ITS OFFICERS OR AGENTS SHALL NOT BE RESPONSIBLE FOR THE ACCURACY OR COMPLETENESS OF SCANNED COPIES OF THIS PLAN SHEET.

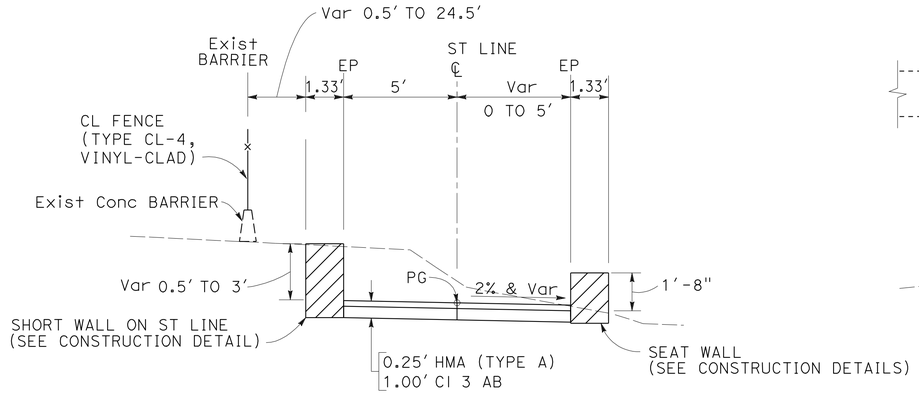

CLASS I BIKEWAY
ST 154+76.31 TO 156+55.79

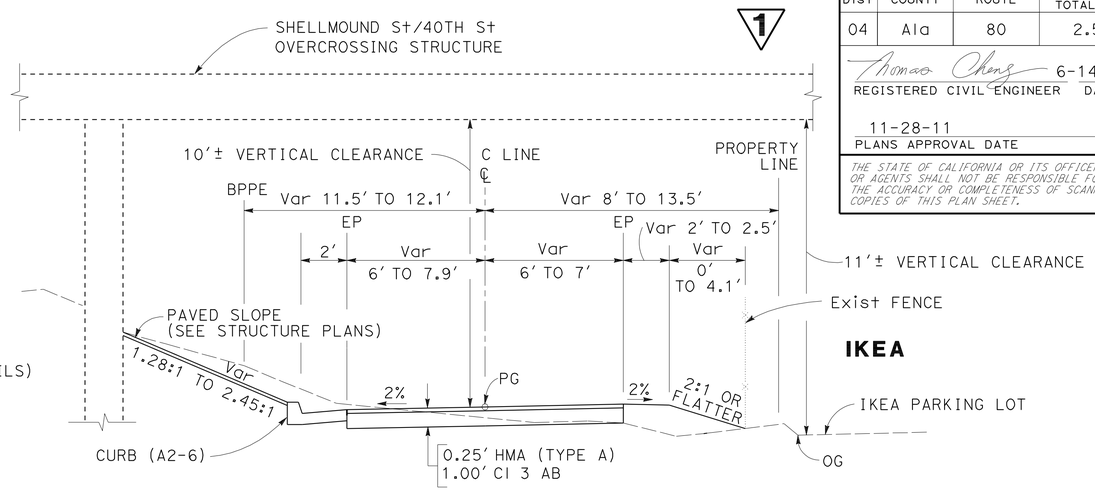

CLASS I BIKEWAY
C 10+83.56 TO 11+57.59

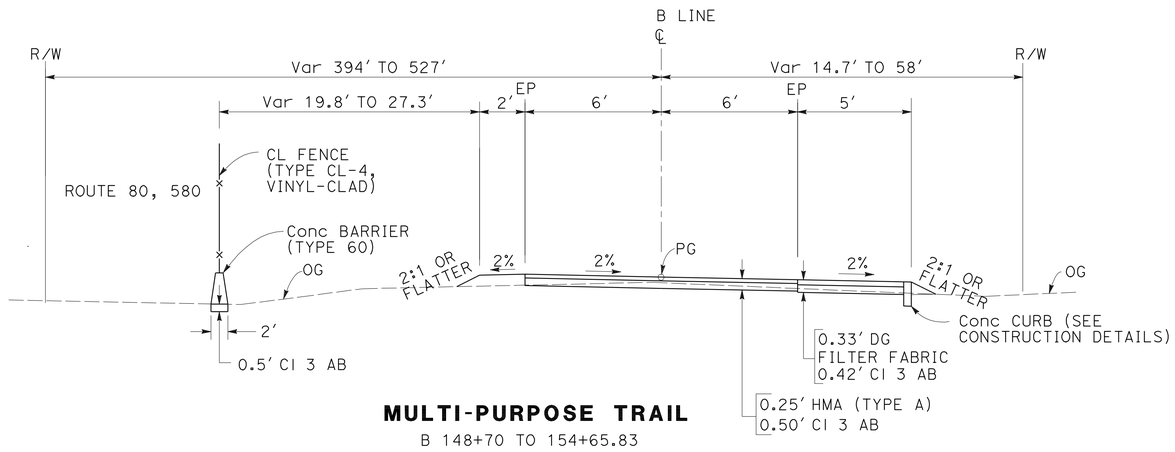

MULTI-PURPOSE TRAIL
B 148+70 TO 154+65.83

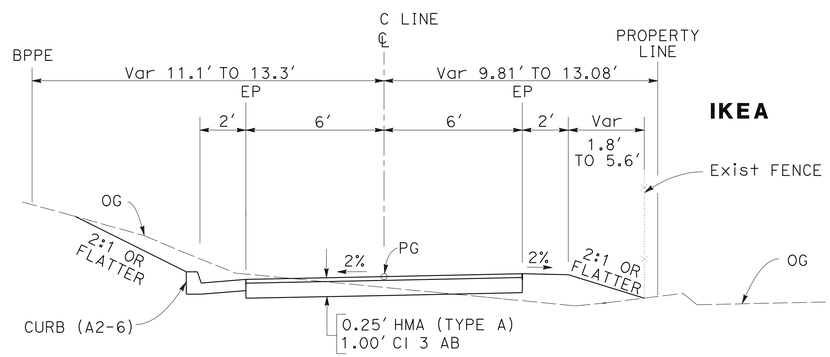

CLASS I BIKEWAY
C 10+60 TO 10+83.56

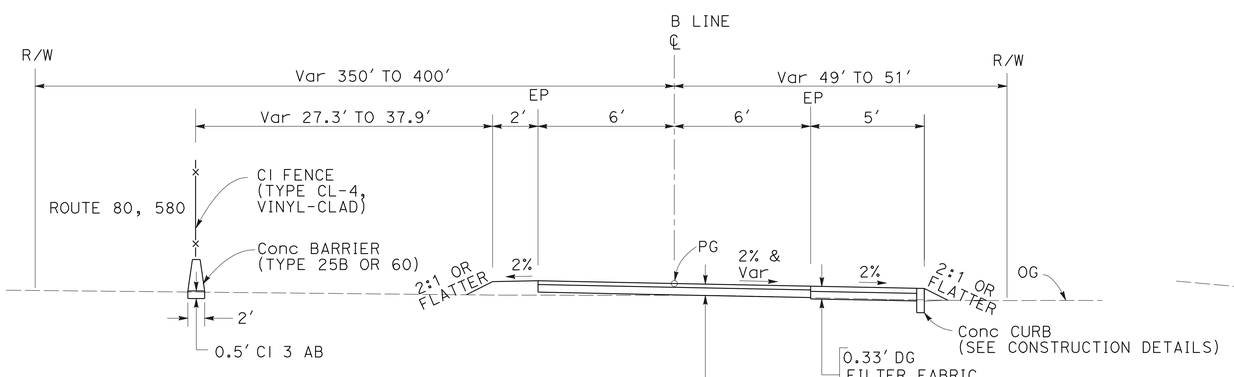

MULTI-PURPOSE TRAIL
B 147+50 TO 148+70

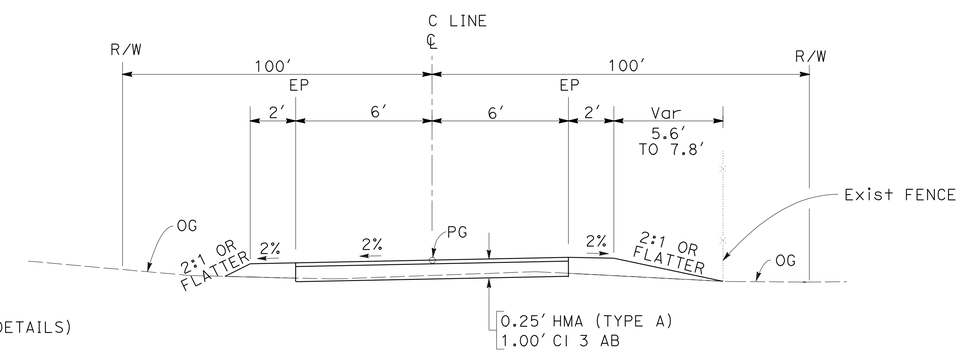

CLASS I BIKEWAY
C 10+00 TO 10+60

TYPICAL CROSS SECTIONS
NO SCALE

X-3

1 REVISED PER ADDENDUM No. 1 DATED APRIL 13, 2012

FOR NOTES, ABBREVIATIONS AND LEGEND, SEE SHEET X-1

REVISED BY	DATE REVISED
TC	6/8/11

CALCULATED-DESIGNED BY: QI LIU
CHECKED BY: THOMAS CHENG
FUNCTIONAL SUPERVISOR: HALIM MATHKOUR

STATE OF CALIFORNIA - DEPARTMENT OF TRANSPORTATION
Caltrans DESIGN

LAST REVISION 10-06-11
DATE PLOTTED => 11-APR-2012
TIME PLOTTED => 08:54

Dist	COUNTY	ROUTE	POST MILES TOTAL PROJECT	SHEET No.	TOTAL SHEETS
04	Ala	80	2.5/3.3	6	176

REGISTERED CIVIL ENGINEER 6-14-11 DATE

11-28-11
PLANS APPROVAL DATE

REGISTERED PROFESSIONAL ENGINEER Thomas Cheng No. 29908 Exp. 3-31-13 CIVIL STATE OF CALIFORNIA

THE STATE OF CALIFORNIA OR ITS OFFICERS OR AGENTS SHALL NOT BE RESPONSIBLE FOR THE ACCURACY OR COMPLETENESS OF SCANNED COPIES OF THIS PLAN SHEET.

NOTE:

FOR ACCURATE RIGHT OF WAY DATA, CONTACT RIGHT OF WAY ENGINEERING AT THE DISTRICT OFFICE.

ABBREVIATIONS:

BPPE BIKEPATH PERMANENT EASEMENT
ROE RIGHT OF ENTRY
TCE TEMPORARY CONSTRUCTION EASEMENT

LEGEND:

- COLD PLANE AC
- REMOVE BASE AND SURFACING
- ADDITIONAL AREA OF CLEARING AND GRUBBING
- COLUMN
- DIRECTION OF TRAVEL
- BIKEPATH PERMANENT EASEMENT (BPPE)
- TEMPORARY CONSTRUCTION EASEMENT (TCE)
- RIGHT OF ENTRY (ROE)
- MAINTENANCE VEHICLE PULLOUT (MVP)
- SEATING AREA
- CHAIN LINK GATE
- IRRIGATION CROSSOVER
- IRRIGATION SLEEVE

NOTES:

1. COORDINATE & BEARING VALUES SHOWN ARE CCS 83 ZONE 3.
2. ELEVATIONS ARE BASED ON NAVD 1988.

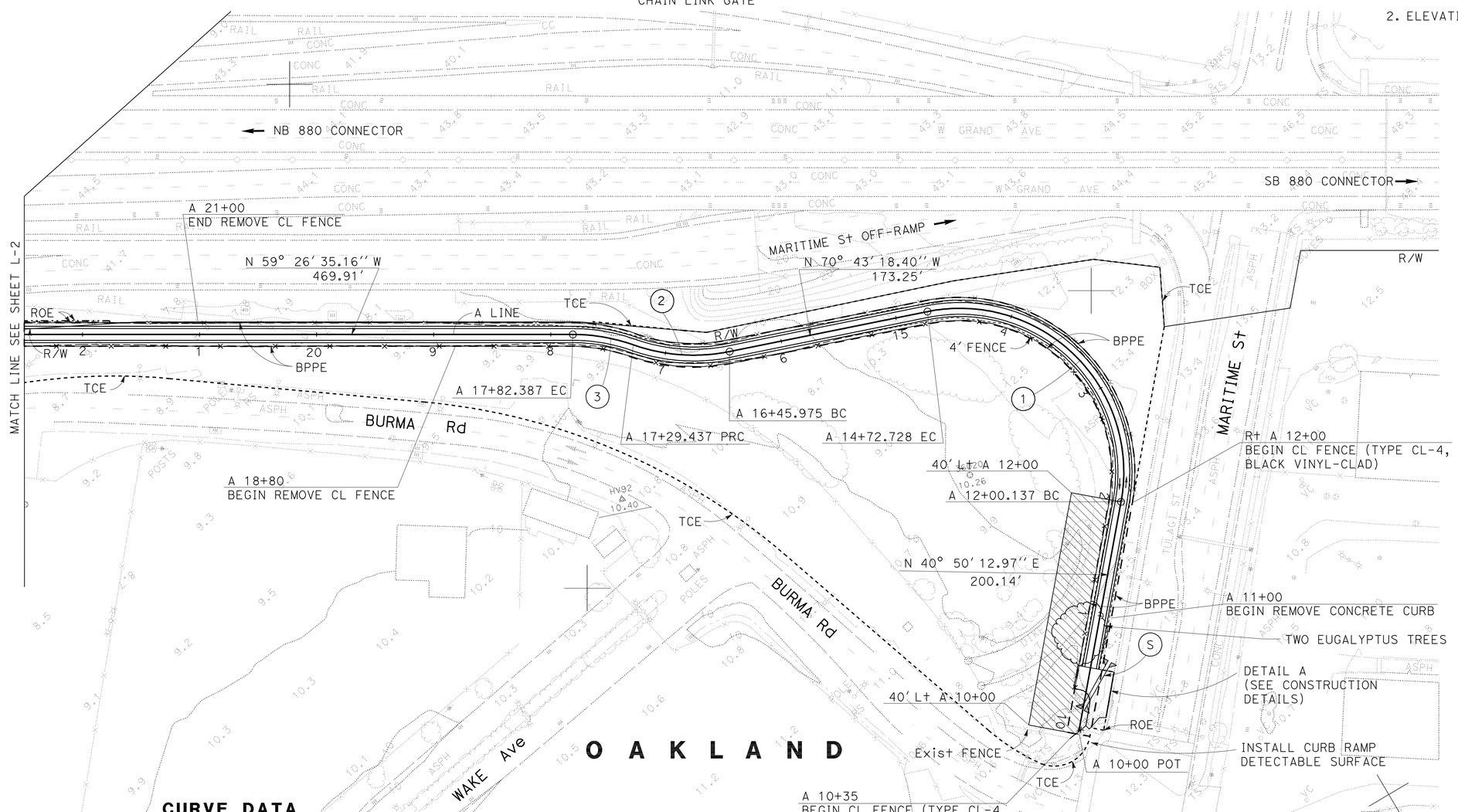

CURVE DATA

No.	R	Δ	T	L	N-COORDINATE	E-COORDINATE
1	140′	111° 33′ 31″	205.85′	272.59′	2126923.179	6041323.785
2	155′	31° 51′ 06″	42.77′	83.46′	2127258.837	6041257.648
3	155′	19° 34′ 23″	26.74′	52.95′	2127060.112	6041019.723

LAYOUT

SCALE: 1" = 50′

1 REVISED PER ADDENDUM No. 1 DATED APRIL 13, 2012

L-1

STATE OF CALIFORNIA - DEPARTMENT OF TRANSPORTATION
Caltrans DESIGN
FUNCTIONAL SUPERVISOR HALIM MATHKOUR
CALCULATED-DESIGNED BY DEO TIBAYAN
CHECKED BY THOMAS CHENG
REVISED BY TC
DATE REVISED 6/8/11

LAST REVISION 10-06-11
DATE PLOTTED => 12-APR-2012
TIME PLOTTED => 07:18

Dist	COUNTY	ROUTE	POST MILES TOTAL PROJECT	SHEET No.	TOTAL SHEETS
04	Ala	80	2.5/3.3	21	176

REGISTERED CIVIL ENGINEER 6-14-11 DATE

11-28-11
PLANS APPROVAL DATE

REGISTERED PROFESSIONAL ENGINEER Thomas Cheng No. 29908 Exp. 3-31-13 CIVIL STATE OF CALIFORNIA

THE STATE OF CALIFORNIA OR ITS OFFICERS OR AGENTS SHALL NOT BE RESPONSIBLE FOR THE ACCURACY OR COMPLETENESS OF SCANNED COPIES OF THIS PLAN SHEET.

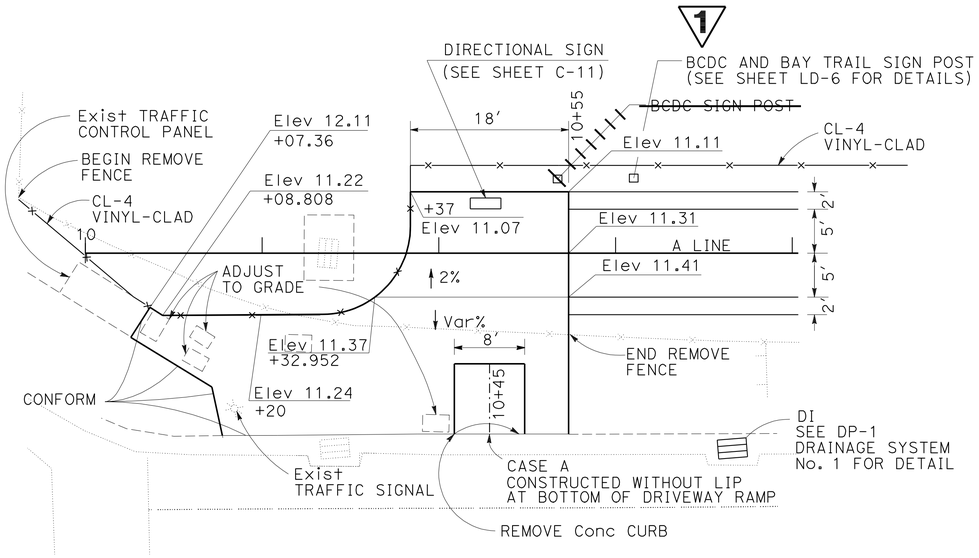

DETAIL A
MARITIME STREET/BURMA ROAD
(TERMINUS POINT)

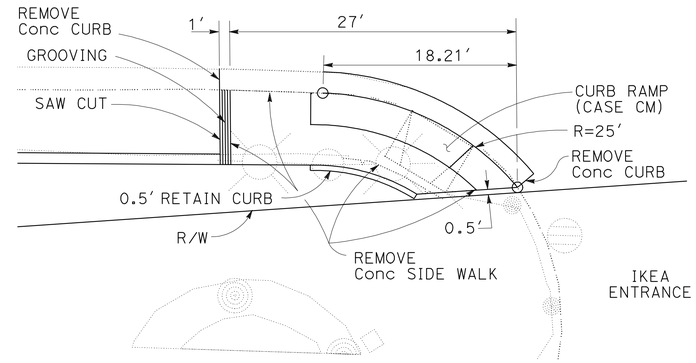

1 . SEE CONSTRUCTION DETAILS ON SHEET C-5 FOR MINOR CONCRETE PAVING AND EXPANSION JOINTS LAYOUT AT THREE TERMINUS POINTS AND OVERLOOK OF STORM WATER TREATMENT FACILITIES

2. FOR DETAIL NOT SHOWN, SEE STANDARD PLAN A87A, A88A AND A88B

DETAIL B
IKEA ENTRANCE

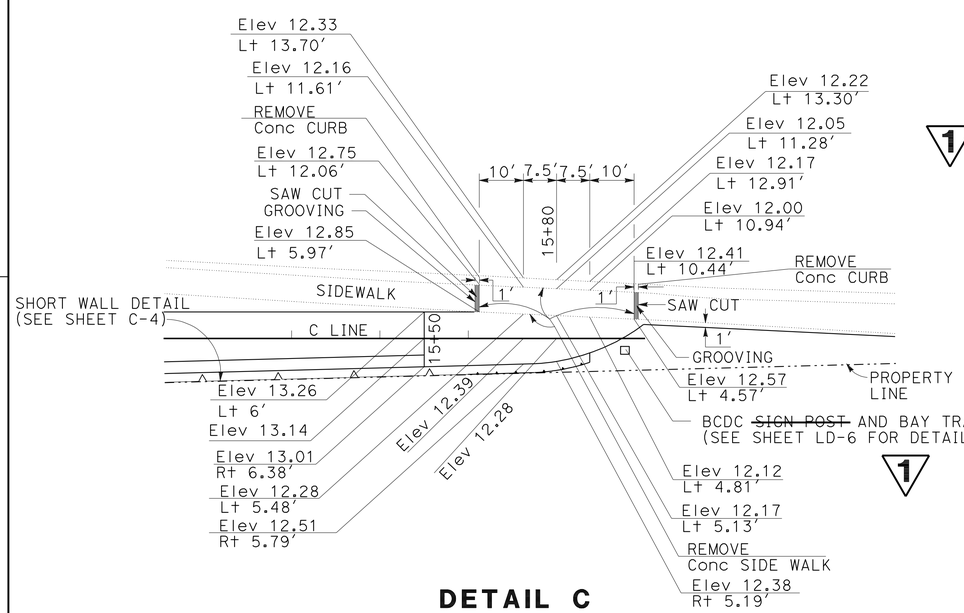

DETAIL C
SHELLMOUND STREET
(EAST TERMINUS POINT)

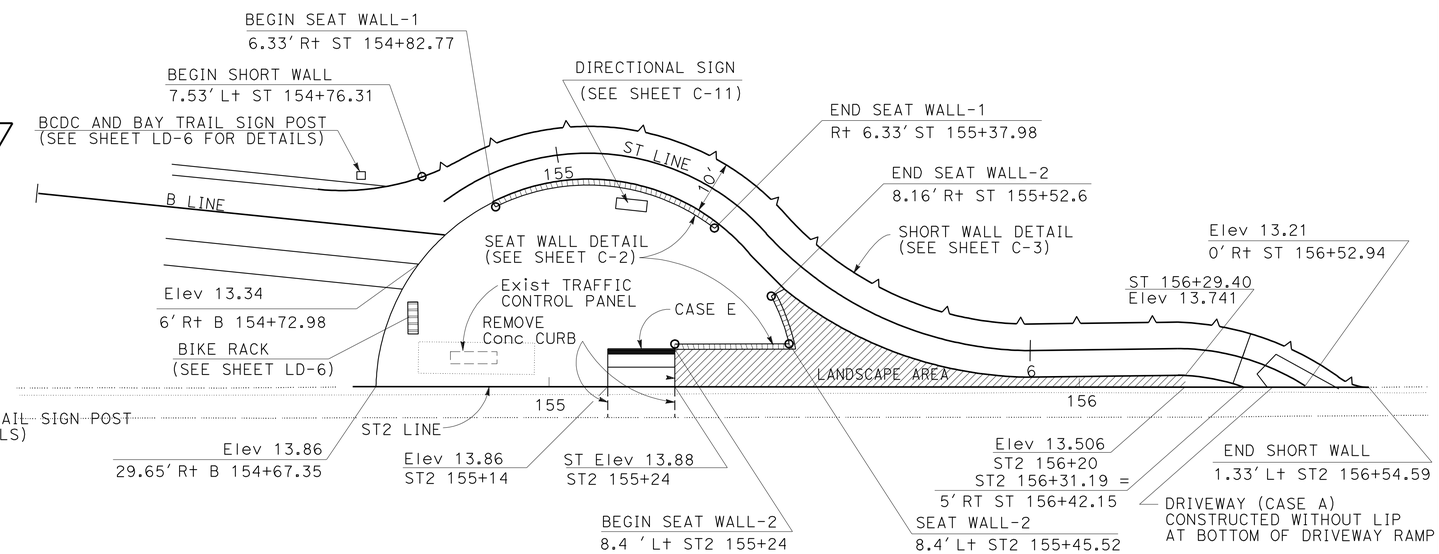

DETAIL D
SHELLMOUND STREET
(WEST TERMINUS POINT)

1 1 **REVISED PER ADDENDUM No. 1 DATED APRIL 13, 2012**

CONSTRUCTION DETAILS
NO SCALE

C-1

REVISED BY	DATE REVISED
TC	6/8/11

CHERRY LIU — DEO TIBAYAN — CALCULATED-DESIGNED BY — CHECKED BY

FUNCTIONAL SUPERVISOR: HALIM MATHKOUR

STATE OF CALIFORNIA - DEPARTMENT OF TRANSPORTATION — DESIGN — Caltrans

LAST REVISION 10-06-11 — DATE PLOTTED => 11-APR-2012 — TIME PLOTTED => 10:55

Dist	COUNTY	ROUTE	POST MILES TOTAL PROJECT	SHEET No.	TOTAL SHEETS
04	Ala	80	2.5/3.3	32	176

REGISTERED CIVIL ENGINEER 6-14-11 DATE

11-28-11
PLANS APPROVAL DATE

REGISTERED PROFESSIONAL ENGINEER Thomas Cheng No. 29908 Exp. 3-31-13 CIVIL STATE OF CALIFORNIA

THE STATE OF CALIFORNIA OR ITS OFFICERS OR AGENTS SHALL NOT BE RESPONSIBLE FOR THE ACCURACY OR COMPLETENESS OF SCANNED COPIES OF THIS PLAN SHEET.

NOTE:

FOR ACCURATE RIGHT OF WAY DATA, CONTACT RIGHT OF WAY ENGINEERING AT THE DISTRICT OFFICE.

LEGEND:

1

- REMEDIATION EXCAVATION (CLASS 2) (TYPE OARB)
- REMEDIATION EXCAVATION (CLASS R) (TYPE OARB)
- BIKEPATH PERMANENT EASEMENT (BPPE)
- TEMPORARY CONSTRUCTION EASEMENT (TCE)
- RIGHT OF ENTRY (ROE)

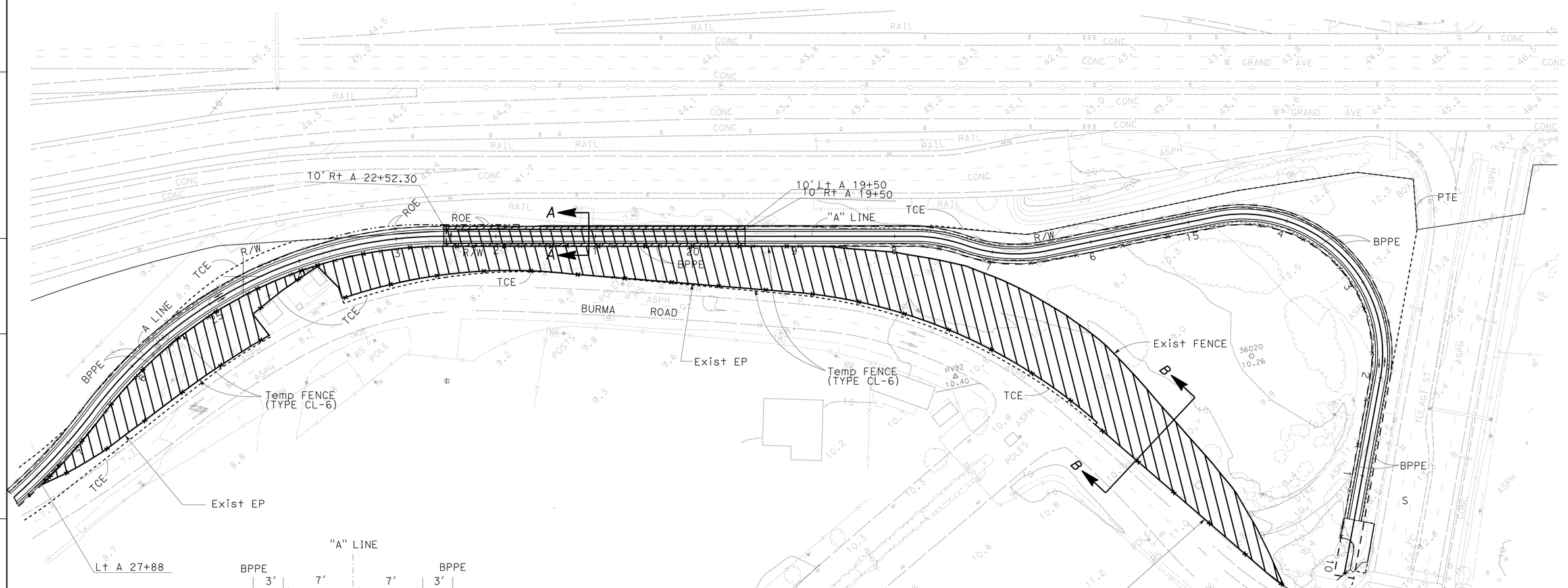

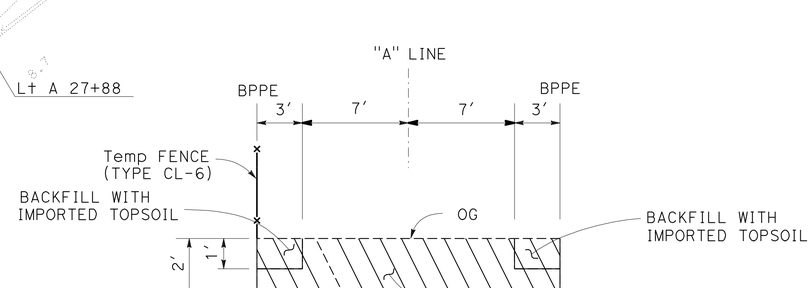

SECTION A-A

REMEDIATION EXCAVATION (CLASS 2) (TYPE OARB)

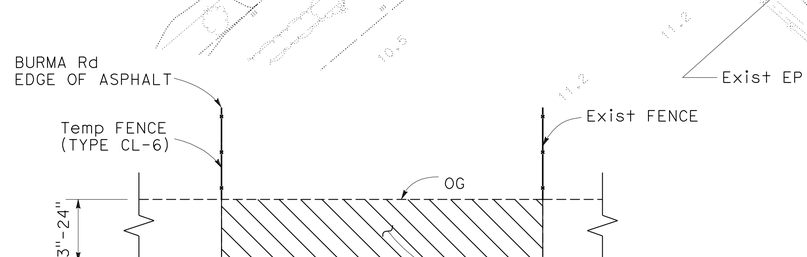

SECTION B-B

REMEDIATION EXCAVATION (CLASS R) (TYPE OARB)

CONSTRUCTION DETAILS

SCALE: 1" = 50'

1 **REVISED PER ADDENDUM No. 1 DATED APRIL 13, 2012**

C-12

STATE OF CALIFORNIA - DEPARTMENT OF TRANSPORTATION
Caltrans® **DESIGN**

FUNCTIONAL SUPERVISOR: HALIM MATHKOUR
REVISED BY: TC
DATE REVISED: 6/8/11
DEO TIBAYAN
THOMAS CHENG
CALCULATED-DESIGNED BY
CHECKED BY

LAST REVISION 10-06-11
DATE PLOTTED => 11-APR-2012
TIME PLOTTED => 09:24

Dist	COUNTY	ROUTE	POST MILES TOTAL PROJECT	SHEET No.	TOTAL SHEETS
04	Ala	80	2.5/3.3	33	176

REGISTERED CIVIL ENGINEER 6-14-11 DATE

11-28-11
PLANS APPROVAL DATE

REGISTERED PROFESSIONAL ENGINEER Thomas Cheng No. 29908 Exp. 3-31-13 CIVIL STATE OF CALIFORNIA

THE STATE OF CALIFORNIA OR ITS OFFICERS OR AGENTS SHALL NOT BE RESPONSIBLE FOR THE ACCURACY OR COMPLETENESS OF SCANNED COPIES OF THIS PLAN SHEET.

NOTE:

FOR ACCURATE RIGHT OF WAY DATA, CONTACT RIGHT OF WAY ENGINEERING AT THE DISTRICT OFFICE.

LEGEND:

REMEDIATION EXCAVATION (CLASS 1) (TYPE BARBARY)

REMEDIATION EXCAVATION (CLASS 1) (TYPE EMERYVILLE)

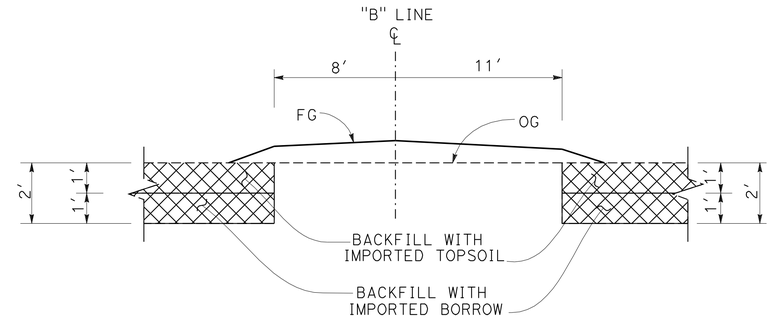

SECTION A-A

REMEDIATION EXCAVATION (CLASS 1) (TYPE BARBARY)

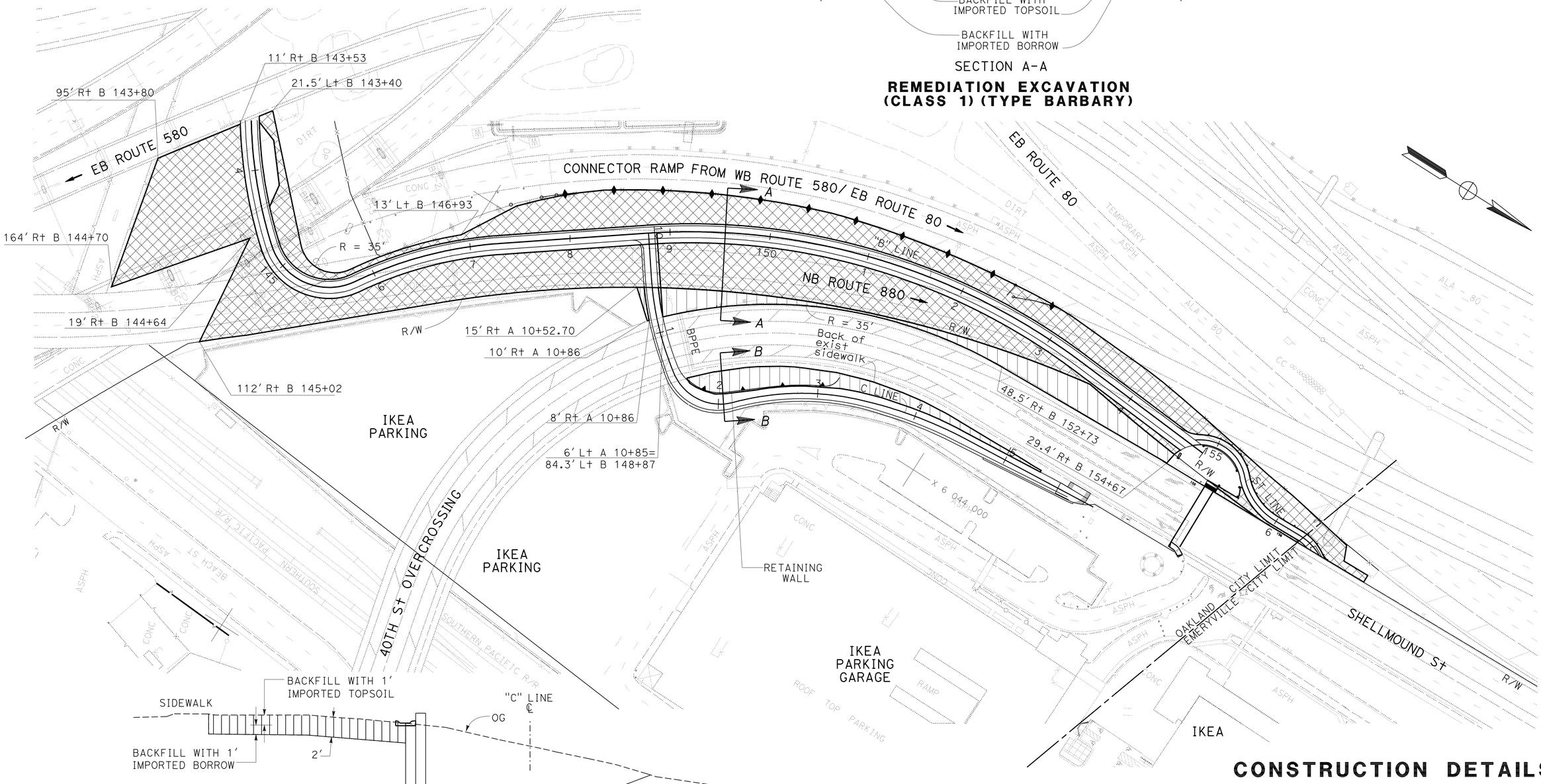

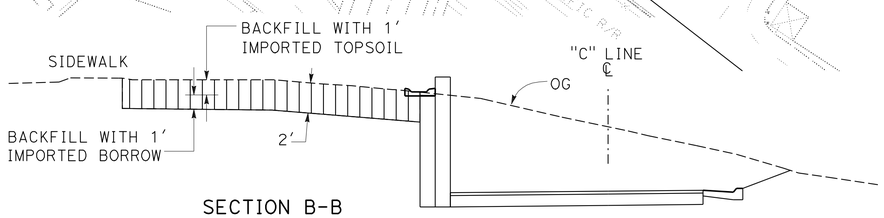

SECTION B-B

REMEDIATION EXCAVATION (CLASS 1) (TYPE EMERYVILLE)

CONSTRUCTION DETAILS
REMEDIATION EXCAVATION

SCALE: 1" = 50'

1 REVISED PER ADDENDUM No. 1 DATED APRIL 13, 2012

C-13

STATE OF CALIFORNIA - DEPARTMENT OF TRANSPORTATION
Caltrans
DESIGN

FUNCTIONAL SUPERVISOR: HALIM MATHKOUR
CALCULATED-DESIGNED BY: PETER ALTHERR
CHECKED BY: THOMAS CHENG
REVISED BY: TC
DATE REVISED: 3/24/11

LAST REVISION 10-06-11
DATE PLOTTED => 11-APR-2012
TIME PLOTTED => 09:24

Dist	COUNTY	ROUTE	POST MILES TOTAL PROJECT	SHEET No.	TOTAL SHEETS
04	Ala	80	2.5/3.3	38	176

REGISTERED CIVIL ENGINEER 2-9-10 DATE

11-28-11
PLANS APPROVAL DATE

REGISTERED PROFESSIONAL ENGINEER Garjohn Fong No. 52275 Exp. 12-31-12 CIVIL STATE OF CALIFORNIA

THE STATE OF CALIFORNIA OR ITS OFFICERS OR AGENTS SHALL NOT BE RESPONSIBLE FOR THE ACCURACY OR COMPLETENESS OF SCANNED COPIES OF THIS PLAN SHEET.

NOTE:

FOR ACCURATE RIGHT OF WAY DATA, CONTACT RIGHT OF WAY ENGINEERING AT THE DISTRICT OFFICE.

NOTES:

1. FOR ALL INLETS WITHIN THE ROADBED, SGD SHALL REFER TO INLET DEPRESSIONS AS SHOWN ON Std PLANS D78B WITH THICKNESS OF 8'' UNLESS OTHERWISE NOTED. NOTE 4 IN Std PLAN D78B REGARDING ISOLATION JOINTS SHALL NOT APPLY.
2. ALL TIES TO INLETS ARE TO THE GUTTER FLOWLINE OF GRATE (ie, ES OF ROADWAY) UNLESS OTHERWISE NOTED. (SEE SHEET DD-1).
3. ALL TIES TO MANHOLES & JUNCTION BOXES ARE TO BE AT THE CENTER OF BASE UNLESS OTHERWISE NOTED.
4. TOP OF GRATE (TG) ELEVATIONS INCLUDE 0.10' DEPRESSION UNLESS OTHERWISE NOTED.
5. DATUM IS NORTH AMERICAN VERTICAL DATUM OF 1988 (NAVD).
6. UNLESS OTHERWISE NOTED, ENTRANCE FLOW LINES FOR DRAINAGE INLETS SHALL BE IDENTICAL TO THE OUTLET FLOW LINE.
7. FOR DRAINAGE SYSTEM 14, SEE "ROADWAY DRAIN DIVERSION" DETAIL IN STRUCTURES PLANS FOR DETAILS TO EXTEND Exist DECK DRAIN TO NEARBY COLUMN.

ABBREVIATION:

SGD	STANDARD GUTTER DEPRESSION
DEPR	DEPRESSED
TG	TOP OF GRATE

LEGEND:

(No.) DRAINAGE SYSTEM NUMBER

(x) DRAINAGE UNIT

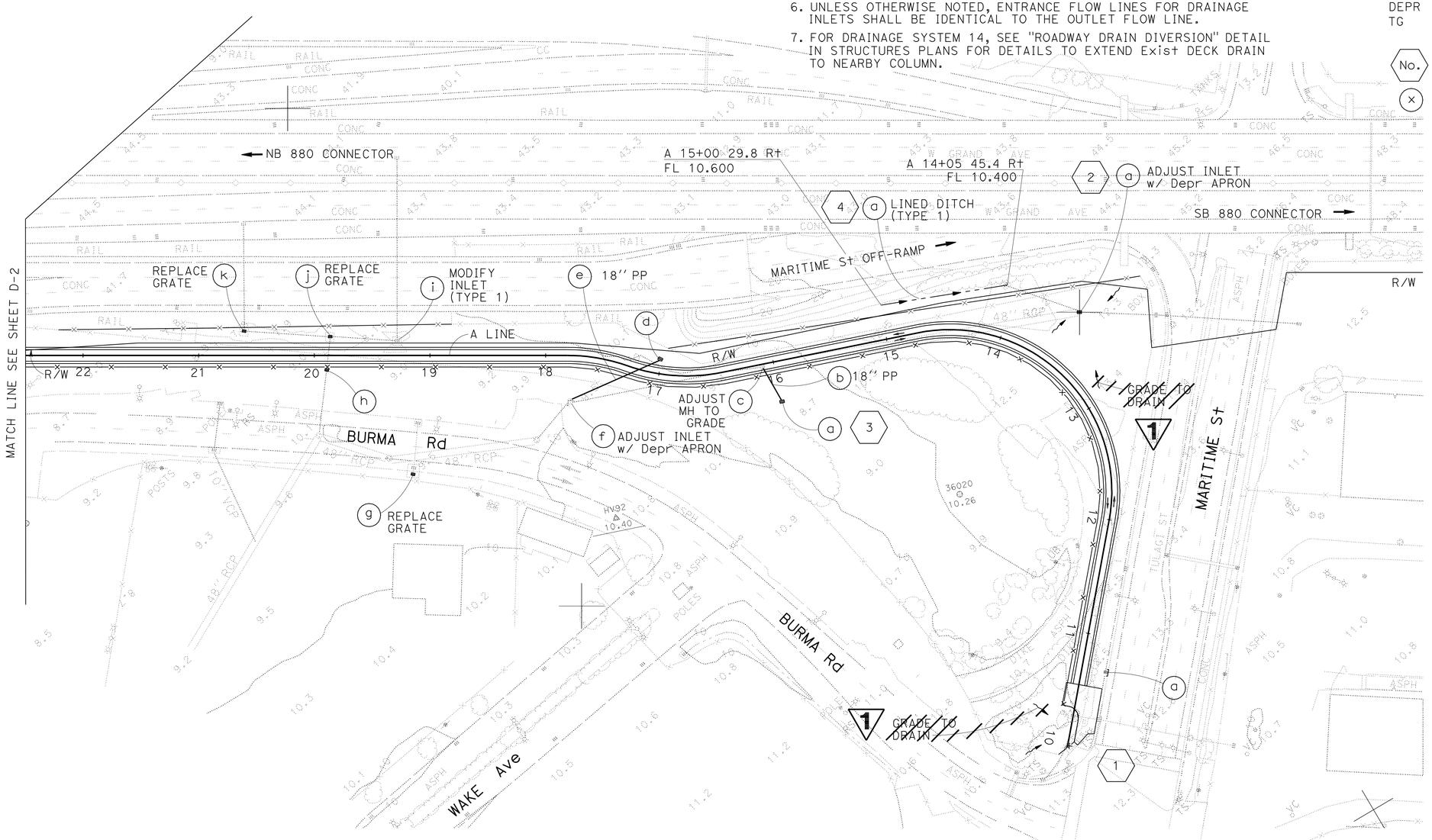

1 REVISED PER ADDENDUM No. 1 DATED APRIL 13, 2012

DRAINAGE PLAN

SCALE: 1" = 50'

THIS PLAN ACCURATE FOR DRAINAGE WORK ONLY

D-1

STATE OF CALIFORNIA - DEPARTMENT OF TRANSPORTATION
Caltrans
HYDRAULICS

FUNCTIONAL SUPERVISOR: ISAAC P. PEREZ

CALCULATED-DESIGNED BY: GARJOHN FONG
CHECKED BY: THOMAS CHENG

REVISED BY: MC
DATE REVISED: 3/9/11

LAST REVISION 10-06-11
DATE PLOTTED => 11-APR-2012
TIME PLOTTED => 08:54

Dist	COUNTY	ROUTE	POST MILES TOTAL PROJECT	SHEET No.	TOTAL SHEETS
04	Ala	80	2.5/3.3	43	176

REGISTERED CIVIL ENGINEER — DATE 2-9-10

11-28-11
PLANS APPROVAL DATE

REGISTERED PROFESSIONAL ENGINEER Garjohn Fong No. 52275 Exp. 12-31-12 CIVIL STATE OF CALIFORNIA

THE STATE OF CALIFORNIA OR ITS OFFICERS OR AGENTS SHALL NOT BE RESPONSIBLE FOR THE ACCURACY OR COMPLETENESS OF SCANNED COPIES OF THIS PLAN SHEET.

NOTE:

FOR ACCURATE RIGHT OF WAY DATA, CONTACT RIGHT OF WAY ENGINEERING AT THE DISTRICT OFFICE.

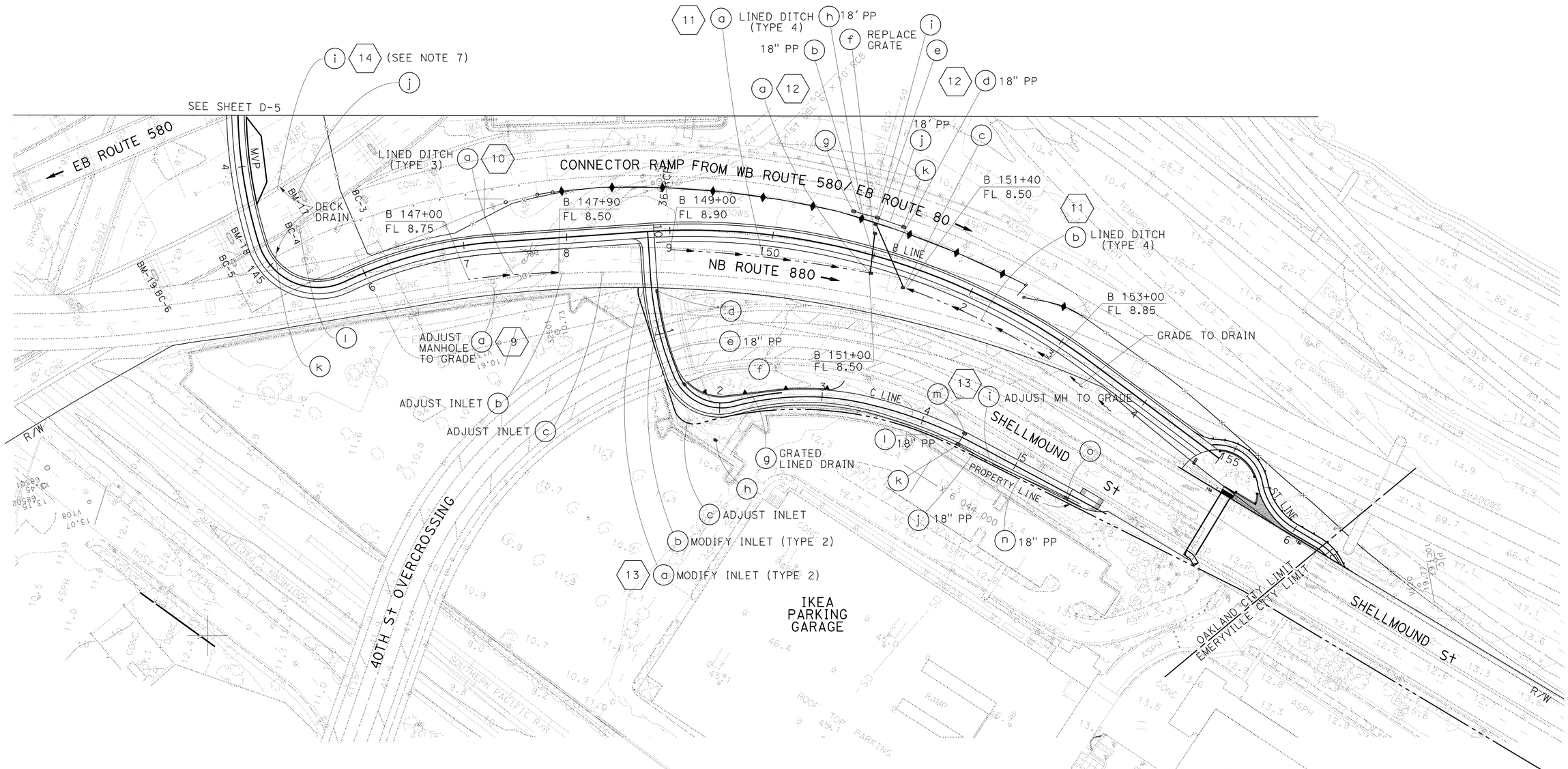

1 REVISED PER ADDENDUM No. 1 DATED APRIL 13, 2012

FOR NOTES, ABBREVIATIONS AND LEGEND, SEE SHEET D-1

THIS PLAN ACCURATE FOR DRAINAGE WORK ONLY

DRAINAGE PLAN

SCALE: 1" = 50'

D-6

STATE OF CALIFORNIA - DEPARTMENT OF TRANSPORTATION
Caltrans
HYDRAULICS

FUNCTIONAL SUPERVISOR: ISAAC P. PEREZ
CALCULATED-DESIGNED BY: GARJOHN FONG
CHECKED BY: THOMAS CHENG
REVISED BY: MC
DATE REVISED: 3/9/11

LAST REVISION 06-16-11
DATE PLOTTED => 11-APR-2012
TIME PLOTTED => 08:24

Dist	COUNTY	ROUTE	POST MILES TOTAL PROJECT	SHEET No.	TOTAL SHEETS
04	Ala	80	2.5/3.3	45	176

REGISTERED CIVIL ENGINEER 6-15-11 DATE

11-28-11
PLANS APPROVAL DATE

REGISTERED PROFESSIONAL ENGINEER Thomas Cheng No. 29908 Exp. 3-31-13 CIVIL STATE OF CALIFORNIA

THE STATE OF CALIFORNIA OR ITS OFFICERS OR AGENTS SHALL NOT BE RESPONSIBLE FOR THE ACCURACY OR COMPLETENESS OF SCANNED COPIES OF THIS PLAN SHEET.

1

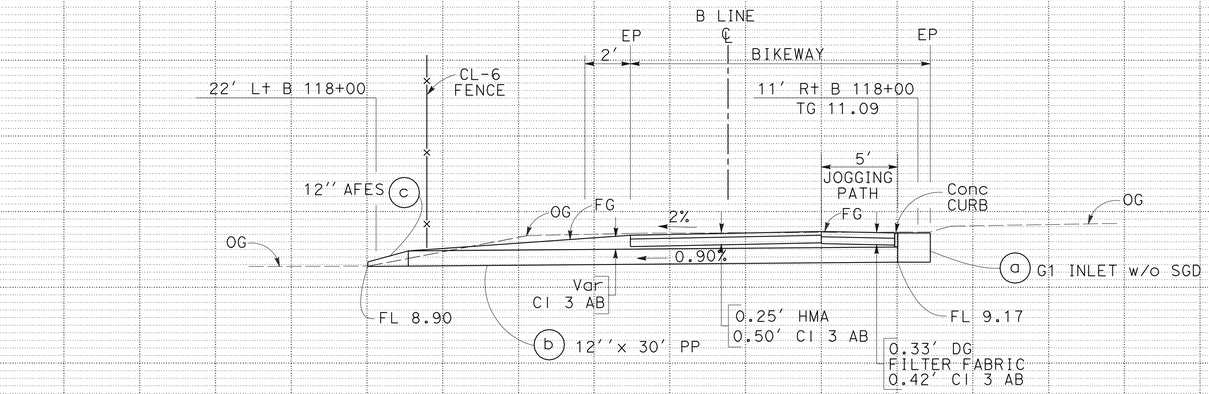

DRAINAGE SYSTEM No. 6

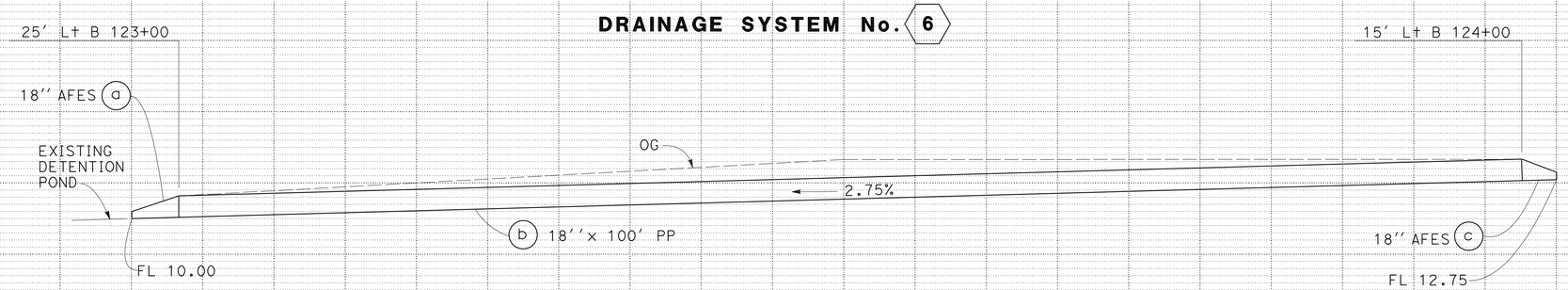

DRAINAGE SYSTEM No. 7

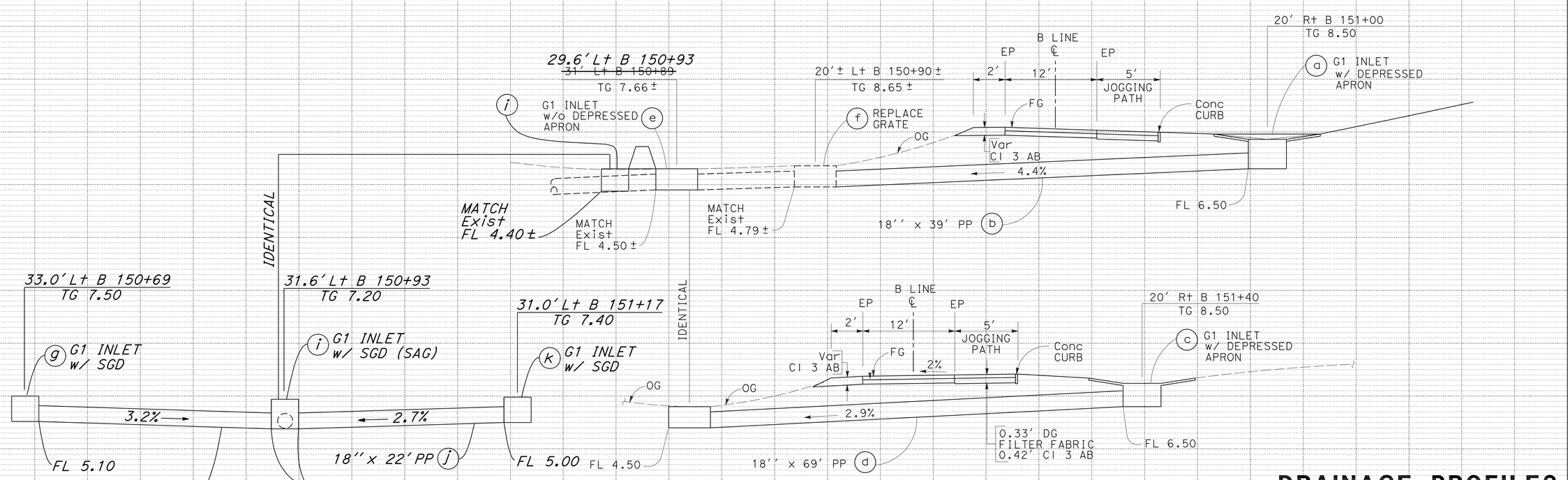

DRAINAGE SYSTEM No. 12

DRAINAGE PROFILES

SCALE: Horiz 1" = 5'
Vert 1" = 5'

1 **REVISED PER ADDENDUM No. 1 DATED APRIL 13, 2012**

DP-2

REVISED BY: MC — DATE REVISED: 2/4/11
CALCULATED-DESIGNED BY: DEO TIBAYAN — CHECKED BY: GARJOHN FONG
FUNCTIONAL SUPERVISOR: HALIM MATHKOUR

STATE OF CALIFORNIA - DEPARTMENT OF TRANSPORTATION
Caltrans DESIGN

LAST REVISION 03-09-12 | DATE PLOTTED => 11-APR-2012 | TIME PLOTTED => 08:24

1 REVISED PER ADDENDUM No. 1 DATED APRIL 13, 2012

ABBREVIATION:

SGD STANDARD GUTTER DEPRESSION

Dist	COUNTY	ROUTE	POST MILES TOTAL PROJECT	SHEET No.	TOTAL SHEETS
04	Ala	80	2.5/3.3	53	176

REGISTERED CIVIL ENGINEER 6-15-11 DATE

11-28-11
PLANS APPROVAL DATE

REGISTERED PROFESSIONAL ENGINEER Thomas Cheng No. 29908 Exp. 3-31-13 CIVIL STATE OF CALIFORNIA

THE STATE OF CALIFORNIA OR ITS OFFICERS OR AGENTS SHALL NOT BE RESPONSIBLE FOR THE ACCURACY OR COMPLETENESS OF SCANNED COPIES OF THIS PLAN SHEET.

DRAINAGE QUANTITIES

DRAINAGE SYSTEM No.	DRAINAGE UNIT	MINOR CONCRETE (MINOR STRUCTURE) CY	MINOR CONCRETE (MISCELLANEOUS CONSTRUCTION) CY	MISCELLANEOUS IRON AND STEEL LBS	ADJUST MANHOLE TO GRADE EA	12'' PP FT	18'' PP FT	36'' RCP FT	REMOVE GRATE EA	MODIFY INLET (TYPE 1) EA	MODIFY INLET (TYPE 2) CY	MINOR CONCRETE (DITCH LINING) CY	ADJUST INLET EA	DITCH EXCAVATION CY	12'' AFES EA	18'' AFES EA	FRAME, GRATES AND COVER (N) TYPE 24-12X EA	TYPE 36-RX EA	CITY OF OAKLAND MANHOLE (TYPE G) EA	CITY OF OAKLAND MANHOLE (TYPE H) EA	CITY OF OAKLAND INLET (TYPE B) EA	GRATED LINE DRAIN FT	6'' GALVANIZED STEEL PIPE FT	MAXIMUM COVER FT	HEIGHT OF INLET FT	DESCRIPTION	STATION	DRAINAGE PLAN SHEET No.	DRAINAGE SYSTEM No.	DRAINAGE UNIT
1	a	2.37		395																	1				6.7	OAKLAND INLET (TYPE B)	21' R+ A 10+60	D-1	1	a
2	a	0.55	0.83										1					1								ADJUST INLET w/ DEPRESSED APRON (TG 10.50)	51.8' R+ A 13+61.8±	D-1	2	a
3	a		0.83	215				4.2										1							3.7	GCP INLET w/ DEPRESSED APRON	30' L+ A 16+00	D-1	3	a
	b						24																	2.2		18'' PP	30' L+ A 16+00 TO 16+00			b
	c				1															1						ADJUST MANHOLE TO GRADE	A 16+00			c
	d	0.99	0.68	239													1								3.2	G1 INLET w/ DEPRESSED APRON	15' R+ A 17+00			d
	e						80																			18'' PP	15' R+ A 17+00 TO 40' L+ A 17+75			e
	f		0.83										1					1								ADJUST INLET w/ DEPRESSED APRON (TG 10.50)	40' L+ A 17+75			f
	g			192					1								1									REPLACE GRATE (TYPE 24-12X)	105.2' L+ A 19+14.7			g
	h	2.26	0.74	239													1								6.7	G2 INLET w/ DEPRESSED APRON	14' L+ A 19+83			h
	i									1							1									MODIFY INLET (TYPE 1)	11.9' R+ A 19+28.5			i
	j			192					1								1									REPLACE GRATE (TYPE 24-12X)				j
	k			192					1								1									REPLACE GRATE (TYPE 24-12X)		D-1		k
4	a											6.3		16.1												LINED DITCH (TYPE 1)	45' R+ A 14+05 TO 25' R+ A 15+00	D-1	4	a
5	a	0.77	0.68	239													1								2.2	G1 INLET w/ DEPRESSED APRON	15' R+ A 27+00	D-2	5	a
	b					27																				12'' PP	15' L+ A 27+00 TO 15' R+ A 27+00			b
	c	0.97	0.68	239													1								3.1	G1 INLET w/ DEPRESSED APRON	15' L+ A 27+00			c
	d					27																				12'' PP	15' L+ A 27+00 TO 22' L+ A 26+70			d
	e			192					1								1									REPLACE GRATE (TYPE 24-12X)	R+ AB			e
	f			192					2								2									REPLACE GRATE (TYPE 24-12X)	L+ AB			f
	g				1															1						1 ADJUST MANHOLE TO GRADE	0' ± A 25+75	D-2		g
6	a	0.72		239													1								1.9	G1 INLET w/o SGD	11' R+ B 118+00	D-3	6	a
	b					30																				12'' PP	11' R+ B 118+00 TO 22' L+ B 118+00			b
	c														1											12'' AFES	22' L+ B 118+00	D-3		c
7	a															1										18'' AFES	25' L+ B 123+00	D-4	7	a
	b						100																			18'' PP	25' L+ B 123+00 TO 15' L+ B 124+00			b
	c															1										18'' AFES	15' L+ B 124+00	D-4		c
8	a											12.4		27.7												LINED DITCH (TYPE 2)	15' L+ B 124+00 TO 15.0' L+ B 127+00	D-4	8	a
9	a				1														1							ADJUST MANHOLE TO GRADE	40' R+ B 147+27±	D-6	9	a
	b		0.68										1				1									ADJUST INLET w/ DEPRESSED APRON (TG 8.50)	35' R+ B 147+95±			b
	c		0.68										1				1									ADJUST INLET w/ DEPRESSED APRON (TG 8.50)	37' R+ B 148+32±	D-6		c
SHEET TOTAL		8.63	6.63	2765	1 ~~2~~ 3	84	204	4.2	6	1		18.7	4	43.8	1	2	14	3	1 ~~4~~ 2	1	1						SHEET	TOTAL			

(N) = NOT A SEPARATE PAY ITEM, FOR INFORMATION ONLY

DRAINAGE QUANTITIES DQ-1

STATE OF CALIFORNIA - DEPARTMENT OF TRANSPORTATION
Caltrans DESIGN

GARJOHN FONG | VENKATA KAVURI | REVISED BY MC | DATE REVISED 3/24/11 | CALCULATED-DESIGNED BY | CHECKED BY | FUNCTIONAL SUPERVISOR HALIM MATHKOUR

LAST REVISION 10-06-11 | DATE PLOTTED => 11-APR-2012 | TIME PLOTTED => 11:01

1 REVISED PER ADDENDUM No. 1 DATED APRIL 13, 2012

Dist	COUNTY	ROUTE	POST MILES TOTAL PROJECT	SHEET No.	TOTAL SHEETS
04	Ala	80	2.5/3.3	54	176

Thomas Cheng 6-15-11
REGISTERED CIVIL ENGINEER DATE

11-28-11
PLANS APPROVAL DATE

REGISTERED PROFESSIONAL ENGINEER Thomas Cheng No. 29908 Exp. 3-31-13 CIVIL STATE OF CALIFORNIA

THE STATE OF CALIFORNIA OR ITS OFFICERS OR AGENTS SHALL NOT BE RESPONSIBLE FOR THE ACCURACY OR COMPLETENESS OF SCANNED COPIES OF THIS PLAN SHEET.

1

DRAINAGE QUANTITIES

DRAINAGE SYSTEM No.	DRAINAGE UNIT	MINOR CONCRETE (MINOR STRUCTURE) CY	MINOR CONCRETE (MISCELLANEOUS CONSTRUCTION) CY	MISCELLANEOUS IRON AND STEEL LBS	ADJUST MANHOLE TO GRADE EA	12" PP FT	18" PP FT	36" RCP FT	REMOVE GRATE EA	MODIFY INLET (TYPE 1) EA	MODIFY INLET (TYPE 2) CY	MINOR CONCRETE (DITCH LINING) CY	ADJUST INLET EA	DITCH EXCAVATION CY	12" AFES EA	18" AFES EA	FRAME, GRATES AND COVER (N) TYPE 24-12X EA	FRAME, GRATES AND COVER (N) TYPE 36-RX EA	FRAME, GRATES AND COVER (N) CITY OF OAKLAND MANHOLE (TYPE G) EA	FRAME, GRATES AND COVER (N) CITY OF OAKLAND MANHOLE (TYPE H) EA	FRAME, GRATES AND COVER (N) CITY OF OAKLAND INLET (TYPE B) EA	GRATED LINED DRAIN FT	MAXIMUM COVER FT	HEIGHT OF INLET FT	FRAME, GRATES AND COVER (N) TYPE 24-12 EA	DESCRIPTION	STATION	DRAINAGE PLAN SHEET No.	DRAINAGE SYSTEM No.	DRAINAGE UNIT
10	a											10.1		20.0												LINED DITCH (TYPE 3)	30' Rt B 147+00 TO 30' Rt B 147+90	D-6	10	a
11	a											22.5		27.8												LINED DITCH (TYPE 4)	20' Rt B 149+00 TO 20' Rt B 151+00	D-6	11	a
	b											15.1		22.2												LINED DITCH (TYPE 4)	20' Rt B 151+40 TO 20' Rt B 153+00			b
12	a	0.95	0.68	239													1						2.0		G1 INLET w/ DEPRESSED APRON	20' Rt B 151+00	D-6	12	a
	b						39															3.0			18" PP	20' Rt B 151+00 TO 20' Lt B 150+90±			b
	c	0.95	0.68	239													1						2.0		G1 INLET w/ DEPRESSED APRON	20' Rt B 151+40			c
	d						69															3.0			18" PP	20' Rt B 151+40 TO 31' Lt B 150+89			d
	e	0.95		239													1						2.0		G1 INLET w/o APRON	31' Lt B 150+89			e
	f			192					1								1								REPLACE GRATE (TYPE 24-12X)	20' Lt B 150+90±	D-6		f
13	a										1								1						MODIFY INLET (TYPE 2)	5' Rt C 10+50 ±	D-6	13	a
	b										1								1						MODIFY INLET (TYPE 2)	0" Rt C 10+95 ±			b
	c												1				1								ADJUST INLET	20' Rt C 11+80 ±			c
	d	2.09		239													1						6.5		GO INLET w/o SGD	8' Lt C 10+60 ±			d
	e						95															1.7			18" PP	8' Lt C 10+60 TO 8' Lt C 11+55			e
	f	1.24		239													1						2.7		GO INLET w/o SGD	8' Lt C 11+55 ±			f
	g																				105				GRATED LINED DRAIN	6' Lt C 11+55 TO 6' Lt C 122+60			g
	h	0.95		239													1						2.8		G1 INLET w/o SGD	32' Rt C 12+00 ±			h
	i				1														1						ADJUST MANHOLE TO GRADE	11' Rt C 14+73 ±			i
	j						29																		18" PP	8' Rt C 14+40 TO 11' Rt C 14+73 ±			j
	k	1.24		239													1						3.0		GO INLET w/o SGD	8.3' Rt C 14+40			k
	l						12																		18" PP	8' Lt C 14+40 TO 8' Rt C 14+40			l
	m	1.24		239													1						2.8		GO INLET w/o SGD	8.2' Lt C 14+40			m
	n						82																		18" PP	11' ± Rt C 14+73± TO 6' Rt C 15+60			n
	o	0.95		239													1						2.7		G1 INLET w/o SGD	6' Rt C 15+60	D-6		o
14																											D-6	14	
	b		0.33																						Conc PAD AT COLUMN MB-16	53' Lt B 139+00			b
	d		0.33																						Conc PAD AT COLUMN MB-17	82' Lt B 140+56			d
	f		0.33																						Conc PAD AT COLUMN MB-18	30' Lt B 141+40			f
	h		0.33																						Conc PAD AT COLUMN BM-19	10' Lt B 142+33			h
	j		0.33																						Conc PAD AT COLUMN BM-17	52' Lt B 144+44			j
	l		0.33																						Conc PAD AT COLUMN BC-4	43' Lt B 144+73	D-6		l
12	g	0.95	1.04	326																				1	G1 INLET W/SGD	35.0' Lt B 150+69	D-6	12	g
	h						22																		18" PP				h
	i	0.95	1.24	326																				1	G1 INLET W/SGD	31.6' Lt B 150+93			i
	j						22																		18" PP				j
	k	0.95	1.04	326																				1	G1 INLET W/SGD	31.0' Lt B 151+17	D-6		k
SHEET TOTAL		13.40	6.66	3321	1		370		1		2	47.7	1	70.0			11			3				3	SHEET TOTAL				
TOTAL FROM SHEET DQ-1		8.63	6.63	2765	3	84	204	4.2	6	1		18.7	4	43.8	1	2	14	3	1	2	1	105		0	TOTAL FROM SHEET DQ-1				
GRAND TOTAL		22.04	13.29	6086	4	84	574	4.2	7	1	2	66.4	5	113.8	1	2	25	3	1	5	1	105		3	GRAND TOTAL				

(N) = NOT A SEPARATE PAY ITEM, FOR INFORMATION ONLY

DRAINAGE QUANTITIES DQ-2

STATE OF CALIFORNIA - DEPARTMENT OF TRANSPORTATION
Caltrans® DESIGN

GARJOHN FONG | VENKATA KAVURI | REVISED BY MC | DATE REVISED 3/24/11 | CALCULATED-DESIGNED BY | CHECKED BY | FUNCTIONAL SUPERVISOR HALIM MATHKOUR

LAST REVISION 10-06-11 | DATE PLOTTED => 11-APR-2012 | TIME PLOTTED => 11:08

Dist	COUNTY	ROUTE	POST MILES TOTAL PROJECT	SHEET No.	TOTAL SHEETS
04	Ala	80	2.5/3.3	55	176

Thomas Cheng 6-14-11
REGISTERED CIVIL ENGINEER DATE

11-28-11
PLANS APPROVAL DATE

REGISTERED PROFESSIONAL ENGINEER Thomas Cheng No. 29908 Exp. 3-31-13 CIVIL STATE OF CALIFORNIA

THE STATE OF CALIFORNIA OR ITS OFFICERS OR AGENTS SHALL NOT BE RESPONSIBLE FOR THE ACCURACY OR COMPLETENESS OF SCANNED COPIES OF THIS PLAN SHEET.

NOTE:

FOR ACCURATE RIGHT OF WAY DATA, CONTACT RIGHT OF WAY ENGINEERING AT THE DISTRICT OFFICE.

ABBREVIATIONS:

AT&T	AMERICAN TELEPHONE AND TELEGRAPH
EBMUD	EAST BAY MUNICIPAL UTILITY DISTRICT
FO	FIBER OPTIC
HP	HIGH PRESSURE
PG&E	PACIFIC GAS & ELECTRIC
SMM	STEEL PIPE WITH MOTAR LINING AND MOTAR COATING
UG	UNDERGROUND

LEGEND:

UTILITIES	OWNERSHIP
OH ELECTRIC	PG&E
UG ELECTRICAL	PG&E
GAS PIPE	PG&E
WATER LINE	EBMUD AND US NAVY
SEWER LINE	EBMUD
TELEPHONE LINE/FO	AT&T/PACIFIC BELL

NOTE:

LOCATION OF UTILITIES SHOWN ON THIS PLAN ARE APPROXIMATE AND SHALL BE VERIFIED BY THE CONTRACTOR.

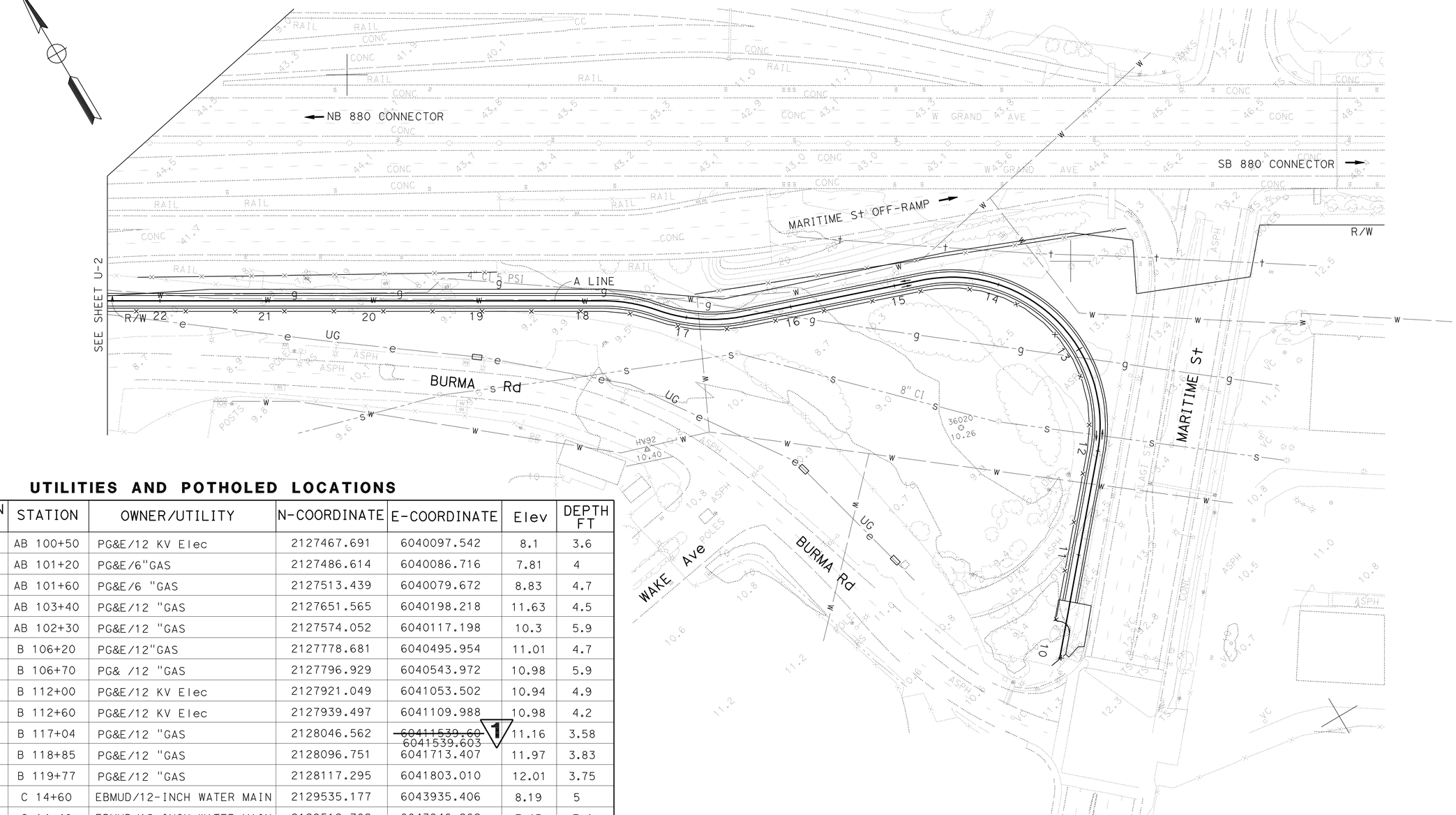

UTILITIES AND POTHOLED LOCATIONS

POTHOLE No.	UTILITY PLAN No.	STATION	OWNER/UTILITY	N-COORDINATE	E-COORDINATE	Elev	DEPTH FT
1	U-2	AB 100+50	PG&E/12 KV Elec	2127467.691	6040097.542	8.1	3.6
2	U-2	AB 101+20	PG&E/6"GAS	2127486.614	6040086.716	7.81	4
3	U-2	AB 101+60	PG&E/6 "GAS	2127513.439	6040079.672	8.83	4.7
4	U-2	AB 103+40	PG&E/12 "GAS	2127651.565	6040198.218	11.63	4.5
5	U-2	AB 102+30	PG&E/12 "GAS	2127574.052	6040117.198	10.3	5.9
6	U-2	B 106+20	PG&E/12"GAS	2127778.681	6040495.954	11.01	4.7
7	U-2	B 106+70	PG& /12 "GAS	2127796.929	6040543.972	10.98	5.9
8	U-3	B 112+00	PG&E/12 KV Elec	2127921.049	6041053.502	10.94	4.9
9	U-3	B 112+60	PG&E/12 KV Elec	2127939.497	6041109.988	10.98	4.2
10	U-3	B 117+04	PG&E/12 "GAS	2128046.562	~~6041539.60~~ 6041539.603 (1)	11.16	3.58
11	(1) U-~~4~~ 3	B 118+85	PG&E/12 "GAS	2128096.751	6041713.407	11.97	3.83
12	(1) U-~~4~~ 3	B 119+77	PG&E/12 "GAS	2128117.295	6041803.010	12.01	3.75
13	U-6	C 14+60	EBMUD/12-INCH WATER MAIN	2129535.177	6043935.406	8.19	5
14	U-6	C 14+40	EBMUD/12-INCH WATER MAIN	2129512.782	6043946.262	7.45	7.4
15	U-6	C 11+70	EBMUD/12-INCH WATER MAIN	2129272.136	6044057.357	6.75	9.5
16	U-6	C 12+80	EBMUD/12-INCH WATER MAIN	2129365.597	6043992.371	6.86	10.5
17	U-6	C 13+45	EBMUD/12-INCH WATER MAIN	2129421.374	6043967.784	6.77	10
18	U-6	C 12+30	EBMUD/12-INCH WATER MAIN	2129323.218	6044023.066	7.38	11

⬠ - HIGH RISK ◯ - LOW RISK

(1) REVISED PER ADDENDUM No. 1 DATED APRIL 13, 2012

THIS PLAN ACCURATE FOR UTILITY INFORMATION ONLY

UTILITY PLAN

SCALE: 1'' = 50'

U-1

REVISED BY	DATE REVISED
MC	3/9/11

THOMAS CHENG — DEO TIBAYAN — CALCULATED-DESIGNED BY — CHECKED BY

FUNCTIONAL SUPERVISOR: HALIM MATHKOUR

STATE OF CALIFORNIA - DEPARTMENT OF TRANSPORTATION — Caltrans — DESIGN

LAST REVISION — DATE PLOTTED => 11-APR-2012 — TIME PLOTTED => 09:38

Dist	COUNTY	ROUTE	POST MILES TOTAL PROJECT	SHEET No.	TOTAL SHEETS
04	Ala	80	2.5/3.3	56	176

Thomas Cheng 6-14-11
REGISTERED CIVIL ENGINEER DATE

11-28-11
PLANS APPROVAL DATE

REGISTERED PROFESSIONAL ENGINEER Thomas Cheng No. 29908 Exp. 3-31-13 CIVIL STATE OF CALIFORNIA

THE STATE OF CALIFORNIA OR ITS OFFICERS OR AGENTS SHALL NOT BE RESPONSIBLE FOR THE ACCURACY OR COMPLETENESS OF SCANNED COPIES OF THIS PLAN SHEET.

NOTE:

FOR ACCURATE RIGHT OF WAY DATA, CONTACT RIGHT OF WAY ENGINEERING AT THE DISTRICT OFFICE.

LOCATION OF MANHOLE, VALVE AND VAULT

No.	SHEET No.	STATION	Approx LOCATION	UTILITY
25	U-2	AB 101+22	2' Rt	PG&E GAS VALVE ON 6" GAS LINE
26	U-2	A 27+40	0'	PG&E ELECTRIC MH/UNDERGROUND VAULT
27	U-2	B 108+85	8' Lt	PG&E 12KV Elec MH
28	U-3	B 111+30	5.5' Lt	PG&E 12KV Elec MH
29	U-3	B 113+75	2' Lt	PG&E 12KV Elec MH
30	U-3	B 109+60	6' Lt	AT&T STEEL COVER & UNDERGROUND VAULT
31	U-3	B 110+78	5' Lt	AT&T MH
32	U-3	B 114+57	4.5' Lt	SANITARY MH
33	U-6	B 143+95.3	1' Lt	12" RECYCLED WATER VALVE

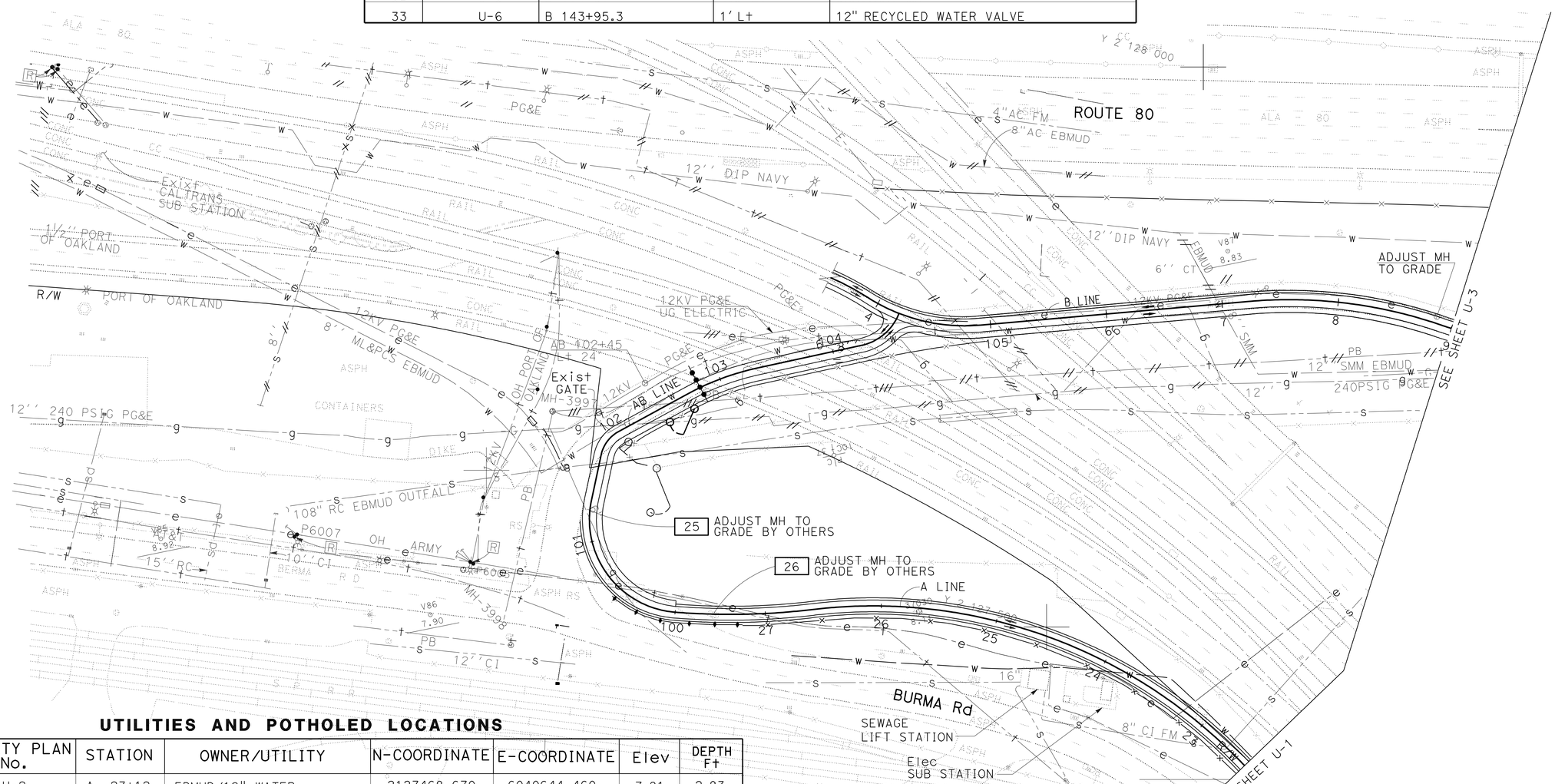

UTILITIES AND POTHOLED LOCATIONS

POTHOLE No.	UTILITY PLAN No.	STATION	OWNER/UTILITY	N-COORDINATE	E-COORDINATE	Elev	DEPTH Ft
19	U-2	A 23+12	EBMUD/12" WATER	2127468.670	6040644.460	7.81	2.83
20	U-3	B 110+39	PG&E/12" GAS	2127847.400	6040906.510	11.23	4.25
21	U-3	B 112+08	AT&T DUCT	2127911.160	6041063.830	10.85	3.42
22	U-3	B 115+30	AT&T DUCT	2128007.600	6041369.310	11.30	3.00
23	U-3	B 118+00	PG&E/4" ELECTRIC	2128075.390	6041630.550	11.43	2.83
23	U-3	B 118+00	PG&E/12" GAS	2128075.390	6041630.550	11.43	3.58
24	U-4	B 121+67	PG&E/12" GAS	2128160.951	6041987.986	12.32	4.25

△ - HIGH RISK ○ - LOW RISK

FOR NOTES, ABBREVIATIONS AND LEGEND, SEE SHEET U-1

THIS PLAN ACCURATE FOR UTILITY INFORMATION ONLY

1 REVISED PER ADDENDUM No. 1 DATED APRIL 13, 2012

UTILITY PLAN

SCALE: 1" = 50'

U-2

REVISED BY	MC
DATE REVISED	3/9/11
THOMAS CHENG	
DEO TIBAYAN	
CALCULATED-DESIGNED BY	
CHECKED BY	
FUNCTIONAL SUPERVISOR	
HALIM MATHKOUR	

STATE OF CALIFORNIA - DEPARTMENT OF TRANSPORTATION
Caltrans
DESIGN

LAST REVISION 11-22-11 | DATE PLOTTED => 11-APR-2012 | TIME PLOTTED => 13:09

Dist	COUNTY	ROUTE	POST MILES TOTAL PROJECT	SHEET No.	TOTAL SHEETS
04	Ala	80	2.5/3.3	57	176

REGISTERED CIVIL ENGINEER — DATE: 6-14-11

11-28-11
PLANS APPROVAL DATE

REGISTERED PROFESSIONAL ENGINEER — Thomas Cheng — No. 29908 — Exp. 3-31-13 — CIVIL — STATE OF CALIFORNIA

THE STATE OF CALIFORNIA OR ITS OFFICERS OR AGENTS SHALL NOT BE RESPONSIBLE FOR THE ACCURACY OR COMPLETENESS OF SCANNED COPIES OF THIS PLAN SHEET.

1

NOTE:

FOR ACCURATE RIGHT OF WAY DATA, CONTACT RIGHT OF WAY ENGINEERING AT THE DISTRICT OFFICE.

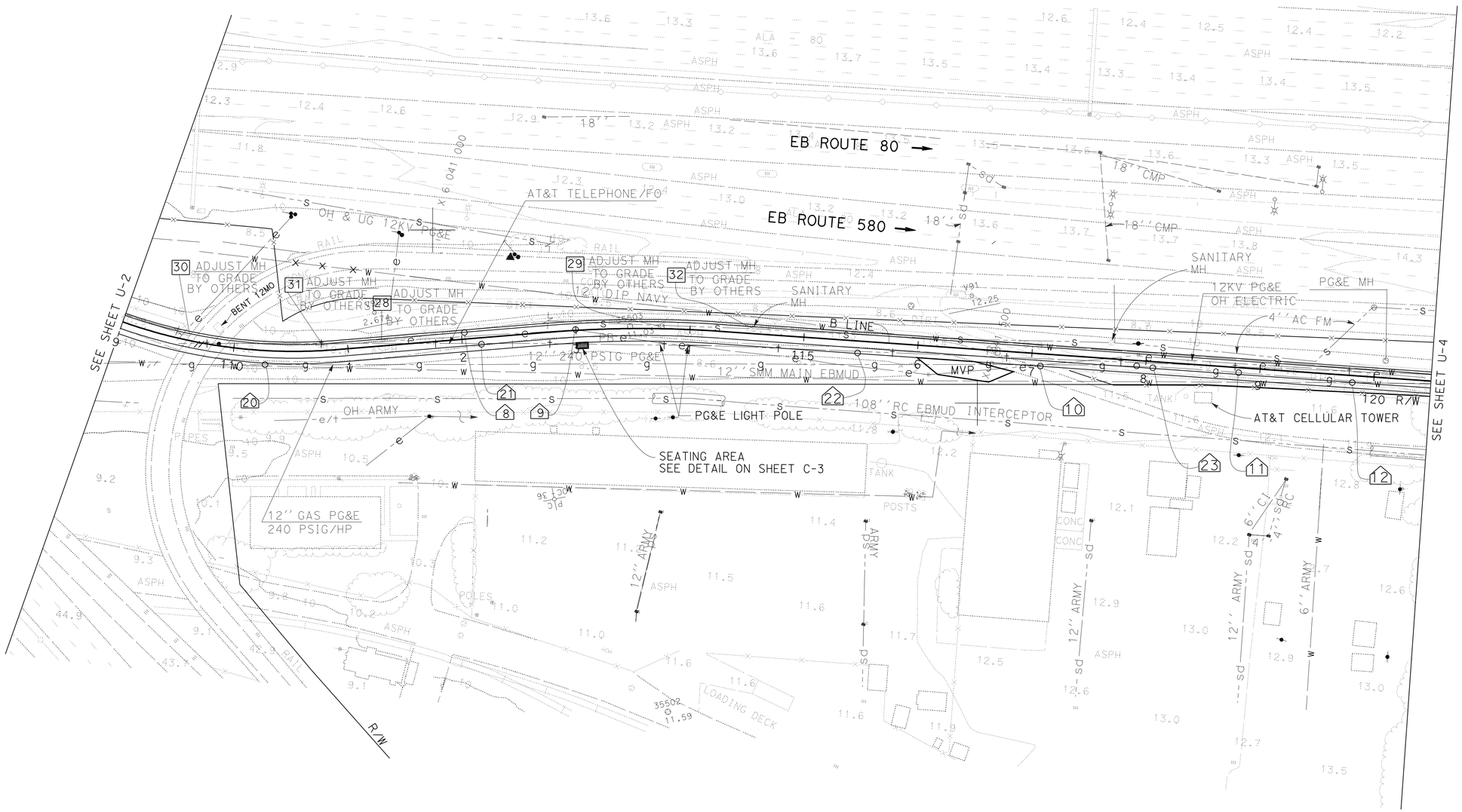

1 REVISED PER ADDENDUM No. 1 DATED APRIL 13, 2012

FOR NOTES, ABBREVIATIONS AND LEGEND, SEE SHEET U-1

THIS PLAN ACCURATE FOR UTILITY INFORMATION ONLY

UTILITY PLAN

SCALE: 1" = 50'

U-3

STATE OF CALIFORNIA - DEPARTMENT OF TRANSPORTATION
Caltrans
DESIGN

FUNCTIONAL SUPERVISOR: HALIM MATHKOUR
CALCULATED-DESIGNED BY: THOMAS CHENG
CHECKED BY: DEO TIBAYAN
REVISED BY: MC
DATE REVISED: 3/9/11

LAST REVISION: 10-06-11
DATE PLOTTED => 11-APR-2012
TIME PLOTTED => 08:43

Dist	COUNTY	ROUTE	POST MILES TOTAL PROJECT	SHEET No.	TOTAL SHEETS
04	Ala	80	2.5/3.3	60	176

REGISTERED CIVIL ENGINEER 6-14-11 DATE

11-28-11
PLANS APPROVAL DATE

REGISTERED PROFESSIONAL ENGINEER Thomas Cheng No. 29908 Exp. 3-31-13 CIVIL STATE OF CALIFORNIA

THE STATE OF CALIFORNIA OR ITS OFFICERS OR AGENTS SHALL NOT BE RESPONSIBLE FOR THE ACCURACY OR COMPLETENESS OF SCANNED COPIES OF THIS PLAN SHEET.

NOTE:

FOR ACCURATE RIGHT OF WAY DATA, CONTACT RIGHT OF WAY ENGINEERING AT THE DISTRICT OFFICE.

1 REVISED PER ADDENDUM No. 1 DATED APRIL 13, 2012

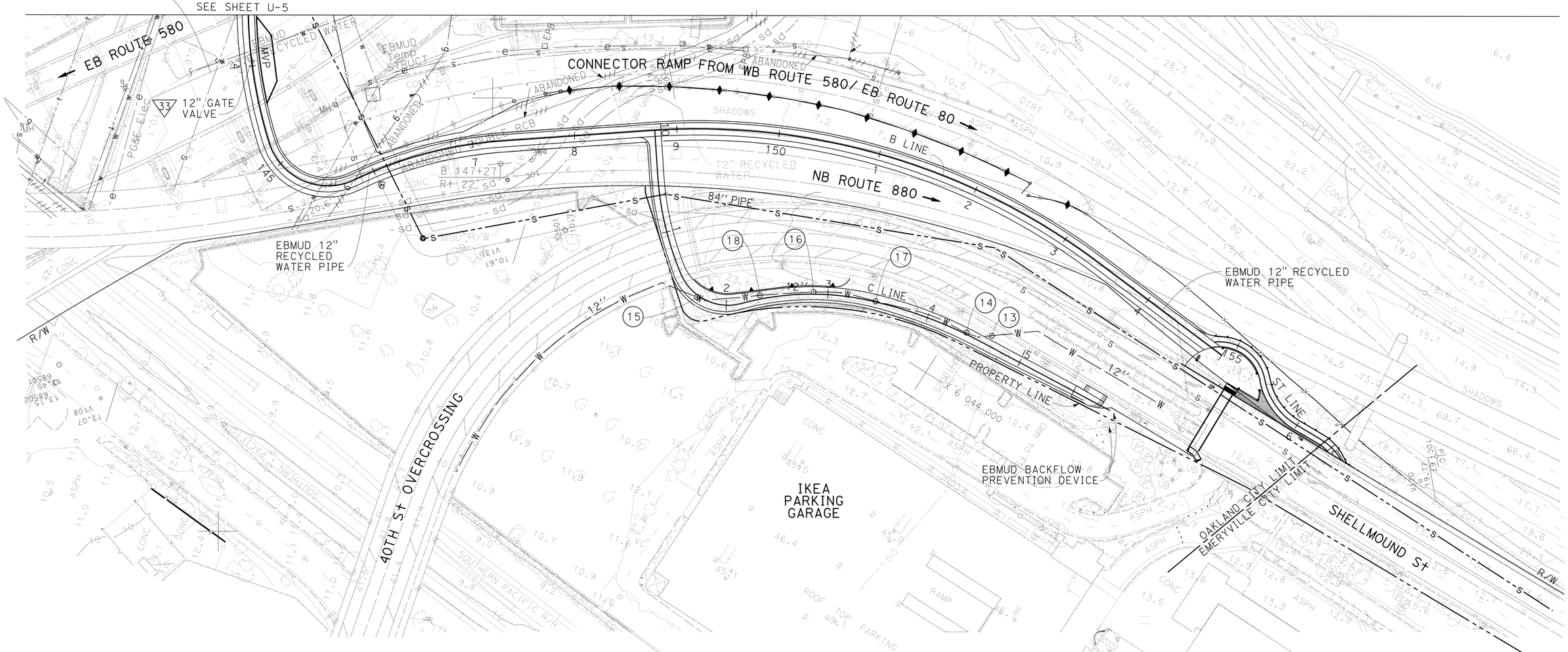

FOR NOTES, ABBREVIATIONS AND LEGEND, SEE SHEET U-1

THIS PLAN APPROVED FOR UTILITY INFORMATION ONLY

UTILITY PLAN

SCALE: 1'' = 50'

U-6

STATE OF CALIFORNIA - DEPARTMENT OF TRANSPORTATION

Caltrans DESIGN

FUNCTIONAL SUPERVISOR: HALIM MATHKOUR

CALCULATED-DESIGNED BY: THOMAS CHENG

CHECKED BY: DEO TIBAYAN

REVISED BY: MC

DATE REVISED: 3/9/11

LAST REVISION 10-06-11 | DATE PLOTTED => 11-APR-2012 | TIME PLOTTED => 08:43

BORDER LAST REVISED 7/2/2010 | USERNAME => s114640 | DGN FILE => 0400000785ka006.dgn | RELATIVE BORDER SCALE IS IN INCHES 0 1 2 3 | UNIT 0724 | PROJECT NUMBER & PHASE 04000007851

Dist	COUNTY	ROUTE	POST MILES TOTAL PROJECT	SHEET No.	TOTAL SHEETS
04	Ala	80	2.5/3.3	71	176

REGISTERED CIVIL ENGINEER 6-14-11 DATE

11-28-11
PLANS APPROVAL DATE

REGISTERED PROFESSIONAL ENGINEER Thomas Cheng No. 29908 Exp. 3-31-13 CIVIL STATE OF CALIFORNIA

THE STATE OF CALIFORNIA OR ITS OFFICERS OR AGENTS SHALL NOT BE RESPONSIBLE FOR THE ACCURACY OR COMPLETENESS OF SCANNED COPIES OF THIS PLAN SHEET.

TRAFFIC STRIPES AND PAVEMENT MARKINGS

SHEET No.	STATION	LOCATION	TYPE	DIRECTION	DETAIL No. OR PAVEMENT MARKING	THERMOPLASTIC TRAFFIC STRIPE SOLID 4'' YELLOW	THERMOPLASTIC TRAFFIC STRIPE BROKEN 4'' YELLOW	THERMOPLASTIC TRAFFIC STRIPE SOLID 4'' WHITE	THERMOPLASTIC CROSSWALK	THERMOPLASTIC PAVEMENT MARKING
						LF			SQFT	
		BURMA Rd AND MARITINE STREET INTERSECTION	CROSSWALK	EW/NS	12'' SOLID WHITE				270.00	
PD-1	A 10+00.00 TO 11+99.14	BIKE PATH	BIKE LANE LINE	NB/SB	DETAIL A		199.14			
	A 11+99.14 TO 14+72.49	BIKE PATH	BIKE LANE LINE	NB/SB	4'' YELLOW	273.35				
	A 14+72.49 TO 16+44.94	BIKE PATH	BIKE LANE LINE	NB/SB	DETAIL A		172.45			
	A 16+44.94 TO 17+86.27	BIKE PATH	BIKE LANE LINE	NB/SB	4'' YELLOW	141.33				
	A 10+30.00	BIKE PATH	SYMBOL	NB	BIKE LANE SYMBOL AND ARROW					14
	A 17+86.27 TO 22+50.00	BIKE PATH	BIKE LANE LINE	NB/SB	DETAIL A		463.73			
PD-2	A 22+50.00 TO 27+77.00	BIKE PATH	BIKE LANE LINE	NB/SB	DETAIL A		527.00			
	A 26+30.00	BIKE PATH	SYMBOL	WB	BIKE LANE SYMBOL AND ARROW					14
	A 26+72.00	BIKE PATH	SYMBOL	EB	BIKE LANE SYMBOL AND ARROW					14
	AB 104+36.00	BIKE PATH	SYMBOL	SB	BIKE LANE SYMBOL AND ARROW					14
	AB 100+00.00 TO 104+50.00	BIKE PATH	BIKE LANE LINE	NB/SB	4'' YELLOW	450.00		1 944.00 ~~472.00~~		
	AB 100+00.00 TO 104+72.00	BIKE PATH	BIKE LANE	NB/SB	DETAIL B					
	B 103+50.00	BIKE PATH	SYMBOL	NB	BIKE LANE SYMBOL AND ARROW					14
	B 104+50.00	BIKE PATH	SYMBOL	NB	BIKE LANE SYMBOL AND ARROW					14
	B 103+50.00 TO 104+50.00	BIKE PATH	BIKE LANE LINE	NB/SB	DETAIL A		100.00			
	B 104+50.00 TO 109+00.00	BIKE PATH	BIKE LANE LINE	NB/SB	DETAIL A		450.00			
PD-3	B 109+00.00 TO 120+25.00	BIKE PATH	BIKE LANE LINE	NB/SB	DETAIL A		1125.00			
PD-4	B 120+25.00 TO 122+50.00	BIKE PATH	BIKE LANE LINE	NB/SB	DETAIL A		250.00			
	B 122+50.00 TO 123+80.00	BIKE PATH	BIKE LANE LINE	NB/SB	4'' YELLOW	130.00				
	B 123+80.00 TO 132+50.00	BIKE PATH	BIKE LANE LINE	NB/SB	DETAIL A		870.00			
	B 124+60.00	BIKE PATH	SYMBOL	WB/NB	BIKE LANE SYMBOL AND ARROW					14
	B 125+25.00	BIKE PATH	SYMBOL	EB/SB	BIKE LANE SYMBOL AND ARROW					14
PD-5	B 132+50.00 TO 140+31.25	BIKE PATH	BIKE LANE LINE	NB/SB	DETAIL A		781.25			
	B 140+31.25 TO 143+50.00	BIKE PATH	BIKE LANE LINE	NB/SB	4'' YELLOW	318.75				
PD-6	B 143+50.00 TO 147+29.75	BIKE PATH	BIKE LANE LINE	NB/SB	4'' YELLOW	379.75				
	B 147+29.75 TO 154+76.00	BIKE PATH	BIKE LANE LINE	NB/SB	DETAIL A		746.25			
	B 149+15.00	BIKE PATH	SYMBOL	NB	BIKE LANE SYMBOL AND ARROW					14
	B 154+35.00	BIKE PATH	SYMBOL	SB	BIKE LANE SYMBOL AND ARROW					14
	C 10+00.00 TO 11+43.06	BIKE PATH	BIKE LANE LINE	NB/SB	DETAIL A		143.06			
	C 11+43.06 TO 13+39.85	BIKE PATH	BIKE LANE LINE	NB/SB	4'' YELLOW	196.79				
	C 13+39.85 TO 15+62.00	BIKE PATH	BIKE LANE LINE	NB/SB	DETAIL A		222.15			
	C 10+25.00	BIKE PATH	SYMBOL	NB	BIKE LANE SYMBOL AND ARROW					14
	C 15+50.00	BIKE PATH	SYMBOL	SB	BIKE LANE SYMBOL AND ARROW					14
	ST 156+20.00	BIKE PATH	SYMBOL	SB	BIKE LANE SYMBOL AND ARROW					14
		IKEA ENTRANCE SHELLMOUND STREET	CROSS WALK	EB/SB	12'' SOLID WHITE			1 944.00	130.00	
					SUB-TOTAL	1889.97	6050.03	~~472.00~~	400.00	182
					TOTAL		~~8412.00~~ 8883.97 1			582

1 REVISED PER ADDENDUM No. 1 DATED APRIL 13, 2012

PAVEMENT DELINEATION QUANTITIES

PDQ-1

STATE OF CALIFORNIA - DEPARTMENT OF TRANSPORTATION
Caltrans DESIGN

FUNCTIONAL SUPERVISOR: HALIM MATHKOUR
CALCULATED-DESIGNED BY: THOMAS CHENG
CHECKED BY: DEO TIBAYAN
REVISED BY: TC
DATE REVISED: 3/10/11

LAST REVISION 10-06-11 | DATE PLOTTED => 11-APR-2012 | TIME PLOTTED => 08:16

Dist	COUNTY	ROUTE	POST MILES TOTAL PROJECT	SHEET No.	TOTAL SHEETS
04	Ala	80	2.5/3.3	72	176

Florante P. Perez 9-28-11
REGISTERED CIVIL ENGINEER DATE

11-28-11
PLANS APPROVAL DATE

REGISTERED PROFESSIONAL ENGINEER Florante P. Perez No. 41030 Exp. 3-31-13 CIVIL STATE OF CALIFORNIA

THE STATE OF CALIFORNIA OR ITS OFFICERS OR AGENTS SHALL NOT BE RESPONSIBLE FOR THE ACCURACY OR COMPLETENESS OF SCANNED COPIES OF THIS PLAN SHEET.

1 **REVISED PER ADDENDUM No. 1 DATED APRIL 13, 2012**

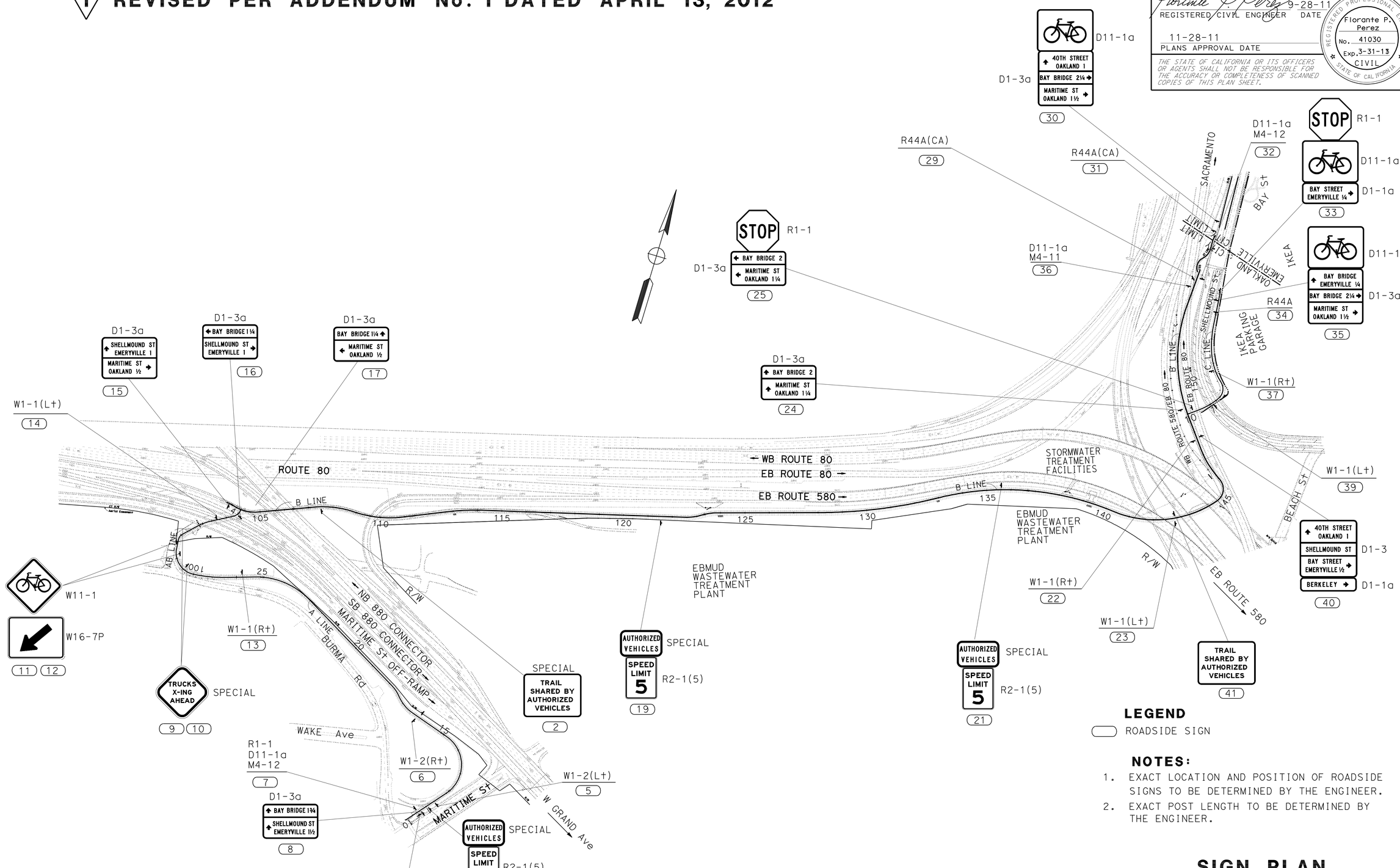

LEGEND

ROADSIDE SIGN

NOTES:

1. EXACT LOCATION AND POSITION OF ROADSIDE SIGNS TO BE DETERMINED BY THE ENGINEER.
2. EXACT POST LENGTH TO BE DETERMINED BY THE ENGINEER.

SIGN PLAN

NO SCALE

THIS PLAN ACCURATE FOR SIGN WORK ONLY

S-1

STATE OF CALIFORNIA - DEPARTMENT OF TRANSPORTATION
Caltrans
TRAFFIC

FUNCTIONAL SUPERVISOR: LOURDES DAVID
CALCULATED-DESIGNED BY: LEOPOLDO G. BONGATO
CHECKED BY: FLORANTE P. PEREZ
REVISED BY
DATE REVISED

LAST REVISION 10-06-11
DATE PLOTTED => 11-APR-2012
TIME PLOTTED => 08:16

Dist	COUNTY	ROUTE	POST MILES TOTAL PROJECT	SHEET No.	TOTAL SHEETS
04	Ala	80	2.5/3.3	73	176

Florante P. Perez 9-28-11
REGISTERED CIVIL ENGINEER DATE

11-28-11
PLANS APPROVAL DATE

REGISTERED PROFESSIONAL ENGINEER Florante P. Perez No. 41030 Exp. 3-31-13 CIVIL STATE OF CALIFORNIA

THE STATE OF CALIFORNIA OR ITS OFFICERS OR AGENTS SHALL NOT BE RESPONSIBLE FOR THE ACCURACY OR COMPLETENESS OF SCANNED COPIES OF THIS PLAN SHEET.

24" x 15"
D1-3a
BAY BRIDGE 1¾ ↑ 2"C
SHELLMOUND ST ↑
EMERYVILLE 1½
1.5" Radius, 0.5" Border,
White on Green;
(8)

24" x 18"
D1-3a
SHELLMOUND ST ↑ 2"C
EMERYVILLE 1
MARITIME ST →
OAKLAND ½
1.5" Radius, 0.5" Border,
White on Green;
(15)

24" x 15"
D1-3a
BAY BRIDGE 1¼ ↑ 2"C
← MARITIME ST
OAKLAND ½
1.5" Radius, 0.5" Border,
White on Green;
(17)

E E
24" x 9"
D1-1a
BAY STREET →
EMERYVILLE ¼ 2"C
1.5" Radius, 0.5" Border,
White on Green;
(33)

24" x 6"
D1-1a
BERKELEY → 2"C
1.5" Radius, 0.5" Border,
White on Green;
(40)

24" x 15"
SPECIAL
AUTHORIZED
VEHICLES 3"C
3.0" Radius, 1.0" Border,
Black on White;
(3) (19) (21) (26) (38)

24" x 15"
D1-3a
← BAY BRIDGE 1¼ 2"C
SHELLMOUND ST →
EMERYVILLE 1
1.5" Radius, 0.5" Border,
White on Green;
(16)

24" x 15"
D1-3a
↑ BAY BRIDGE 2 2"C
↑ MARITIME ST
OAKLAND 1¼
1.5" Radius, 0.5" Border,
White on Green;
(24)

24" x 24"
D1-3a
↑ BAY BRIDGE 2"C
EMERYVILLE ¼
BAY BRIDGE 2¼ →
MARITIME ST →
OAKLAND 1½
1.5" Radius, 0.5" Border,
White on Green;
(35)

24" x 18"
SPECIAL
TRAIL
SHARED BY
AUTHORIZED
VEHICLES 2"E
1.5" Radius, 0.5" Border,
Black on Yellow;
(2) (41)

18" x 18"
SPECIAL
TRUCKS
X-ING
AHEAD 2" E
18.0" across sides 3.8" Radius,
0.9" Border, 0.6" Indent,
Black on Yellow;
(9) (10)

24" x 24"
D1-3a
↑ 40TH STREET 2"C
OAKLAND 1
BAY BRIDGE 2¼ →
MARITIME ST →
OAKLAND 1½
1.5" Radius, 0.5" Border,
White on Green;
(30)

24" x 15"
D1-3a
← BAY BRIDGE 2 2"C
← MARITIME ST
OAKLAND 1¼
1.5" Radius, 0.5" Border,
White on Green;
(25)

24" x 24"
D1-3
↑ 40TH STREET
OAKLAND 1
SHELLMOUND ST 2"C
BAY STREET →
EMERYVILLE ½
1.5" Radius, 0.5" Border,
White on Green;
(40)

1 REVISED PER ADDENDUM No. 1 DATED APRIL 13, 2012

SIGN DETAILS
NO SCALE

SD-1

STATE OF CALIFORNIA - DEPARTMENT OF TRANSPORTATION
Caltrans
TRAFFIC
FUNCTIONAL SUPERVISOR LOURDES DAVID
CALCULATED-DESIGNED BY LEOPOLDO G. BONGATO
CHECKED BY FLORANTE P. PEREZ
REVISED BY
DATE REVISED

LAST REVISION 10-06-11
DATE PLOTTED => 11-APR-2012
TIME PLOTTED => 09:24

Dist	COUNTY	ROUTE	POST MILES TOTAL PROJECT	SHEET No.	TOTAL SHEETS
04	Ala	80	2.5/3.3	74	176

Florante P. Perez 6-14-11
REGISTERED CIVIL ENGINEER DATE

11-28-11
PLANS APPROVAL DATE

REGISTERED PROFESSIONAL ENGINEER Florante P. Perez No. 41030 Exp. 3-31-13 CIVIL STATE OF CALIFORNIA

THE STATE OF CALIFORNIA OR ITS OFFICERS OR AGENTS SHALL NOT BE RESPONSIBLE FOR THE ACCURACY OR COMPLETENESS OF SCANNED COPIES OF THIS PLAN SHEET.

1

ROADSIDE SIGN QUANTITIES

SIGN	CODE	PANEL SIZE (INCHES)	POST SIZE AND LENGTH 4" x 4" FEET	ROADSIDE SIGN ONE POST EA	SINGLE FACE	BACKGROUND SHEETING COLOR	BACKGROUND RETROREFLECTIVE ASTM TYPE	LEGEND SHEETING COLOR	LEGEND RETROREFLECTIVE ASTM TYPE	PROTECTIVE FILM STANDARD	PROTECTIVE FILM PREMIUM	FURNISH SINGLE SHEET ALUMINUM SIGN UNFRAMED 0.063" SQFT	REMARKS
1	R44A(CA)	12 x 24	13.50	1	X	WHITE	III	BLACK	PLAIN		X	2.00	
2	SPECIAL	24 x 18	13.00	1	X	GREEN	IV	WHITE	IV		X	3.00	
3	SPECIAL	24 x 15	14.50	1	X	WHITE	III	BLACK	PLAIN		X	2.50	
	R2-1(5)	18 x 24			X	WHITE	III	BLACK	PLAIN		X	3.00	
5	W1-2(L+)	18 x 18	11.50	1	X	YELLOW	VII	BLACK	PLAIN		X	2.25	
6	W1-2(R+)	18 x 18	11.50	1	X	YELLOW	VII	BLACK	PLAIN		X	2.25	
7	R1-1	18 x 18	14.50	1	X	RED	III	BLACK	PLAIN		X	2.25	
	D11-1a	24 x 18			X	GREEN	IV	WHITE	IV		X	3.00	
	M4-12	24 x 6			X	GREEN	IV	WHITE	IV		X	1.00	
8			12.75	1									
	D1-3a	24 x 15			X	GREEN	IV	WHITE	IV		X	2.50	
9	SPECIAL	18 x 18	11.50	1	X	YELLOW	IV	BLACK	PLAIN		X	2.25	
10	SPECIAL	18 x 18	11.50	1	X	YELLOW	IV	BLACK	PLAIN		X	2.25	
11	W11-1	18 x 18	13.00	1	X	FLOURECENT YELLOW GREEN	IX	WHITE	PLAIN		X	2.25	
	W16-7P	24 x 12			X	FLOURECENT YELLOW GREEN	IX	WHITE	PLAIN		X	2.00	
12	W11-1	18 x 18	13.00	1	X	FLOURECENT YELLOW GREEN	IX	WHITE	PLAIN		X	2.25	
	W16-7P	24 x 12			X	FLOURECENT YELLOW GREEN	IX	WHITE	PLAIN		X	2.00	
13	W1-1(R+)	18 x 18	11.50	1	X	YELLOW	VII	BLACK	PLAIN		X	2.25	
14	W1-1(L+)	18 x 18	11.50	1	X	YELLOW	VII	BLACK	PLAIN		X	2.25	
15	D1-3a	24 x 18	13.00	1	X	GREEN	IV	WHITE	IV		X	3.00	
16	D1-3a	24 x 15	12.75	1	X	GREEN	IV	WHITE	IV		X	2.50	
17	D1-3a	24 x 15	12.75	1	X	GREEN	IV	WHITE	IV		X	2.50	
19	SPECIAL	24 x 15	14.50	1	X	WHITE	IV	BLACK	IV		X	2.50	
	R2-1(5)	18 x 24			X	RED	III	BLACK	PLAIN		X	3.00	
21	SPECIAL	24 x 15	14.50	1	X	WHITE	III	BLACK	PLAIN		X	2.50	
	R2-1(5)	18 x 24			X	RED	III	BLACK	PLAIN		X	3.00	
22	W1-1(R+)	18 x 18	11.50	1	X	YELLOW	VII	BLACK	PLAIN		X	2.25	
SHEET TOTAL				19								62.50	

1 **REVISED PER ADDENDUM No. 1 DATED APRIL 13, 2012**

SIGN QUANTITIES

SQ-1

STATE OF CALIFORNIA - DEPARTMENT OF TRANSPORTATION
Caltrans
TRAFFIC

FUNCTIONAL SUPERVISOR: LOURDES DAVID
CALCULATED-DESIGNED BY: LEOPOLDO G. BONGATO
CHECKED BY: FLORANTE P. PEREZ
REVISED BY / DATE REVISED

LAST REVISION 10-06-11
DATE PLOTTED => 11-APR-2012
TIME PLOTTED => 09:47

Dist	COUNTY	ROUTE	POST MILES TOTAL PROJECT	SHEET No.	TOTAL SHEETS
04	Ala	80	2.5/3.3	75	176

1 Florante P. Perez 6-14-11
REGISTERED CIVIL ENGINEER DATE

11-28-11
PLANS APPROVAL DATE

REGISTERED PROFESSIONAL ENGINEER Florante P. Perez No. 41030 Exp. 3-31-13 CIVIL STATE OF CALIFORNIA

THE STATE OF CALIFORNIA OR ITS OFFICERS OR AGENTS SHALL NOT BE RESPONSIBLE FOR THE ACCURACY OR COMPLETENESS OF SCANNED COPIES OF THIS PLAN SHEET.

ROADSIDE SIGN QUANTITIES

SIGN	CODE	PANEL SIZE (INCHES)	POST SIZE AND LENGTH 4" x 4" FEET	ROADSIDE SIGN ONE POST EA	SINGLE FACE	BACKGROUND SHEETING COLOR	BACKGROUND RETROREFLECTIVE ASTM TYPE	LEGEND SHEETING COLOR	LEGEND RETROREFLECTIVE ASTM TYPE	PROTECTIVE FILM STANDARD	PROTECTIVE FILM PREMIUM	FURNISH SINGLE SHEET ALUMINUM SIGN UNFRAMED 0.063" SQFT	REMARKS
23	W1-1(L+)	18 x 18	11.50	1	X	YELLOW	VII	BLACK	PLAIN		X	2.25	
24	D1-3a	24 x 15	12.75	1	X	GREEN	IV	WHITE	IV		X	2.50	
25	R1-1	18 x 18	14.25	1	X	RED	III	BLACK	PLAIN		X	2.25	
	D1-3a	24 x 15			X	GREEN	IV	WHITE	IV		X	2.50	
29	R44A(CA)	12 x 24	11.50	1	X	WHITE	III	BLACK	PLAIN		X	2.00	
30	D11-1a	24 x 18	15.00	1	X	GREEN	IV	WHITE	IV		X	3.00	
	D1-3a	24 x 24			X	GREEN	IV	WHITE	IV		X	4.00	
31	R44A(CA)	12 x 24	13.50	1	X	WHITE	III	BLACK	PLAIN		X	2.00	
32	D11-1a	24 x 18	13.50	1	X	GREEN	IV	WHITE	IV		X	3.00	
	M4-12	24 x 6			X	GREEN	IV	WHITE	IV		X	1.00	
33	R1-1	18 x 18	14.50	1	X	RED	III	BLACK	PLAIN		X	2.25	
	D11-1a	24 x 18			X	GREEN	IV	WHITE	IV		X	3.00	
	D1-1a	24 x 9			X	GREEN	IV	WHITE	IV		X	1.5	
34	R44A(CA)	12 x 24	13.50	1	X	WHITE	III	BLACK	PLAIN		X	2.00	
35	D11-1a	24 x 18	15.00	1	X	GREEN	IV	WHITE	IV		X	3.00	
	D1-3a	24 x 24			X	GREEN	IV	WHITE	IV		X	4.00	
36	D11-1a	24 x 18	13.50	1	X	GREEN	IV	WHITE	IV		X	3.00	
	M4-11	24 x 6			X	GREEN	IV	WHITE	IV		X	1.00	
37	W1-1(R+)	18 x 18	11.50	1	X	YELLOW	VII	BLACK	PLAIN		X	2.25	
39	W1-1(L+)	18 x 18	11.50	1	X	YELLOW	VII	BLACK	PLAIN		X	2.25	
40	D1-3	24 x 24	14.00	1	X	GREEN	IV	WHITE	IV		X	4.00	
	D1-1a	24 x 6			X	GREEN	IV	WHITE	IV		X	1.00	
41	SPECIAL	24 x 18	13.00	1	X	YELLOW	VII	BLACK	PLAIN		X	3.00	
SHEET TOTAL				15								56.75	
TOTAL				34								119.25	

1 REVISED PER ADDENDUM No. 1 DATED APRIL 13, 2012

SIGN QUANTITIES

SQ-2

STATE OF CALIFORNIA - DEPARTMENT OF TRANSPORTATION
Caltrans TRAFFIC

FUNCTIONAL SUPERVISOR: LOURDES DAVID
CALCULATED-DESIGNED BY: LEOPOLDO G. BONGATO
CHECKED BY: FLORANTE P. PEREZ
REVISED BY / DATE REVISED

LAST REVISION 10-06-11 | DATE PLOTTED => 11-APR-2012 | TIME PLOTTED => 09:48

Dist	COUNTY	ROUTE	POST MILES TOTAL PROJECT	SHEET No.	TOTAL SHEETS
04	Ala	80	2.5/3.3	76	176

Thomas Cheng 6-14-11
REGISTERED CIVIL ENGINEER DATE

11-28-11
PLANS APPROVAL DATE

REGISTERED PROFESSIONAL ENGINEER Thomas Cheng No. 29908 Exp. 3-31-13 CIVIL STATE OF CALIFORNIA

THE STATE OF CALIFORNIA OR ITS OFFICERS OR AGENTS SHALL NOT BE RESPONSIBLE FOR THE ACCURACY OR COMPLETENESS OF SCANNED COPIES OF THIS PLAN SHEET.

1

CONCRETE BARRIER

STATION	LOCATION	TYPE 60 LF	CLASS 3 AB CY	REMARK
A 27+20 TO AB 100+40	Lt	98	3.6	
B 147+74.55 TO 147+89.49	Lt	15	0.6	TRANSITION TYPE 25B TO TYPE 60
B 147+89.49 TO 152+43.72	Lt	455	16.9	TYPE 60
B 152+47.83 TO 152+90.81	Lt	43	1.6	TYPE 60
B 152+90.81 TO 153+05.81	Lt	15	0.6	TRANSITION TYPE 60 TO TYPE 50
TOTAL		626	23.3	

HOT MIX ASPHALT (TYPE A)

STATION	LOCATION	SQFT	DEPTH Ft	TON
A 10+00 TO 27+77.58	Rt & Lt	17776	0.25	334
B 103+53.49 TO 104+90	Rt & Lt	4802	0.25	89
B 104+90 TO 115+00	Rt & Lt	12120	0.15-0.67	371
B 115+00 TO 128+00	Rt & Lt	15600	0.25	291
B 128+00 TO 134+00	Rt & Lt	7200	0.25	135
B 134+00 TO 154+65.83	Rt & Lt	24790	0.25	466
C 10+00 TO 15+50	Rt & Lt	7050	0.25	132
ST 154+76.31 TO 156+55.79		1770	0.25	32
HMA DIKE (TYPE E)				8.6
TOTAL		91108		1858.6

EARTHWORK

STATION	ROADWAY EXCAVATION (CY)	EMBANKMENT (N) (CY)
A 10+55 TO 27+77.58	368	435
AB 100+00 TO 104+69.21	169	4
B 103+53.49 TO 143+00	2238	1557
ST 154+76.31 TO 156+55.79	152	
TOTAL	2927	1996

CURB RAMP DETECTABLE WARNING SURFACE

STATION	AREA SQFT
MARITIME/BURMA Rd I/S	12.0
TOTAL	12.0

COLORED HOT MIX ASPHALT (TYPE A)

STATION	SQFT	DEPTH Ft	TON
AB 100+00 TO 100+60	914	0.25	18
AB 100+60 TO 101+80	1981	0.55	82
AB 101+80 TO 104+69.21	4990	0.25	96
TOTAL	7885		196

REMOVE CONCRETE (SIDEWALK)

STATION	LOCATION	SQFT
C 15+88	Lt	300
IKEA ENTRANCE	Rt	170
TOTAL		470

HMA DIKE (TYPE E)

STATION	LOCATION	LF	TON
B 117+50 TO 120+50	Rt	300	8.6
TOTAL		300	8.6

MINOR CONCRETE (MISCELLANEOUS CONSTRUCTION)

STATION	LOCATION	CURB 5"x1' CURB VOLUME CY	CURB TYPE A2-6 VOLUME CY	SEAT AREA VOLUME CY	DRIVEWAY VOLUME CY	TERMINUS POINT VOLUME CY	DRAINAGE CY
B 104+90 TO 106+88	Rt	3					
B 107+00 TO 124+91	Rt	28					
B 125+10 TO 131+79	Rt	11					
B 132+00 TO 140+01	Rt	13					
B 140+20 TO 148+68.5	Rt	13					
B 148+88.5 TO 154+65.8	Rt	9					
C 11+80 TO 14+80	Rt		18				
C 10+60 TO 11+58	Lt		6				
C 13+19 TO 14+40	Lt		7				
B 106+88 TO 107+00	Rt			2			
B 124+91 TO 125+10	Rt			2			
B 131+79 TO 132+00	Rt			3			
B 139+15 TO 139+45	Rt			18			
B 140+01 TO 140+20	Rt			2			
ST 156+50	Rt & Lt				3		
MARITIME STREET	Rt & Lt					19	
WEST TERMINUS POINT	Rt & Lt					26	
EAST TERMINUS POINT	Rt & Lt					13	
OVERLOOK	Lt			12			
IKEA ENTRANCE	Rt					4	
SIDEWALK NEAR IKEA	Rt					2	
FROM DQ-2							13.29
SUB TOTAL		77	31	39	3	64	13.29
TOTAL	227.29						

REMOVE MBGR

STATION	LOCATION	LF
B 147+62 TO 149+43	Lt	185
TOTAL		185

REMOVE BASE AND SURFACING

STATION	LOCATION	CY
B 128+00 TO 134+00	Lt	542
TOTAL		542

REMOVE CONCRETE CURB

STATION	LOCATION	LF
A 10+10	Rt	45
A 11+10	Lt	180
B 154+15	Rt	70
C 15+88	Lt	55
IKEA ENTRANCE	Rt	30
TOTAL		380

TEMPORARY RAILING (TYPE K)

STATION	LOCATION	LF
B 146+21.5 TO 156+52.94	Lt	1080
B 122+20 TO 127+46	Lt	520
TOTAL		1600

1 REVISED PER ADDENDUM No. 1 DATED APRIL 13, 2012

SUMMARY OF QUANTITIES

Q-1

REVISED BY	DATE REVISED	CALCULATED-DESIGNED BY	CHECKED BY	FUNCTIONAL SUPERVISOR
EL	3/24/11	EMILY LIU	QI LIU	HALIM MATHKOUR

STATE OF CALIFORNIA - DEPARTMENT OF TRANSPORTATION
Caltrans DESIGN

LAST REVISION 10-06-11 | DATE PLOTTED => 12-APR-2012 | TIME PLOTTED => 07:18

Dist	COUNTY	ROUTE	POST MILES TOTAL PROJECT	SHEET No.	TOTAL SHEETS
04	Ala	80	2.5/3.3	77	176

Thomas Cheng 6-14-11
REGISTERED CIVIL ENGINEER DATE

11-28-11
PLANS APPROVAL DATE

REGISTERED PROFESSIONAL ENGINEER Thomas Cheng No. 29908 Exp. 3-31-13 CIVIL STATE OF CALIFORNIA

THE STATE OF CALIFORNIA OR ITS OFFICERS OR AGENTS SHALL NOT BE RESPONSIBLE FOR THE ACCURACY OR COMPLETENESS OF SCANNED COPIES OF THIS PLAN SHEET.

IRRIGATION SLEEVE

LOCATION		SIDE		CONDUIT TYPE (5)		(N) WATER LINE CROSSOVER SIZE (INCH)				
				SIZE (INCH)						
LINE	STATION	L+	R+	3"	6"					
				LENGTH (LF)		3/4"	1"	1 1/4"	1 1/2"	2"
A LINE	10+50	X	X	20	-	X	-	-	-	-
B LINE	116+50	X	X	-	20	-	X	X	-	-
B LINE	123+50	X	-	12	-	X	-	-	-	-
B LINE	129+80	X	X	-	20	-	X	X	X	-
B LINE	131+00	X	-	10	-	X	-	-	-	-
B LINE	138+15	X	-	17	-	-	-	-	X	-
B LINE	139+20	X	-	17	-	X	-	-	X	-
B LINE	152+50	X		12	-	X	-	-	-	-
B LINE	154+50	X	X	20	-	-	-	-	-	X
ST LINE	155+75	X	X	20	-	-	-	X	-	-
TOTAL				128	40					

(N) - NOT A SEPARATE PAY ITEM, FOR INFORMATION ONLY
X - DENOTES REQUIREMENT

CONDUIT TYPE:

(APPLICABLE WHEN CIRCLED BELOW AND SHOWN UNDER THE 'CONDUIT TYPE' COLUMN HEADING)

1 BITUMINOUS COATED CORRUGATED STEEL PIPE (0.064 INCH THICK)
2 CORRUGATED STEEL PIPE (0.064 INCH THICK)
3 CORRUGATED HIGH DENSITY POLYETHYLENE PIPE
4 ALTERNATIVE CONDUIT
(5) POLYVINYL CHLORIDE (PVC) (PR) 315

IRRIGATION CROSSOVERS

LOCATION		SIDE		CONDUIT TYPE (3)		(N) WATER LINE CROSSOVER SIZE (INCH)					(N) SPRINKLER CONTROL CROSSOVER
				SIZE (INCH)							
LINE	STATION	L+	R+	8"	12"						
				LENGTH (LF)		1/2"	1 1/4"	1 1/2"	2"	3"	SIZE 2 INCH
AB LINE	104+50	X	X	20	-	-	-	-	X	X	-
B LINE	117+00	-	X	-	45'	X	X	-	X	X	X
B LINE	138+10	X	X	20	-	-	-	-	-	X	X
B LINE	143+50	X	X	20	-	-	-	-	-	X	X
C LINE	10+50	X	X	20	-	-	-	-	-	X	X
B LINE	148+80	X	X	20	-	-	-	-	-	X	X
TOTAL				100	45						

(N) - NOT A SEPARATE PAY ITEM, FOR INFORMATION ONLY
X - DENOTES REQUIREMENT

CONDUIT TYPE:

(APPLICABLE WHEN CIRCLED BELOW AND SHOWN UNDER THE 'CONDUIT TYPE' COLUMN HEADING)

1 BITUMINOUS COATED CORRUGATED STEEL PIPE (0.064 INCH THICK)
2 CORRUGATED STEEL PIPE (0.064 INCH THICK)
(3) CORRUGATED HIGH DENSITY POLYETHYLENE PIPE
4 ALTERNATIVE CONDUIT
5 WELDED STEEL PIPE

CHAIN LINK FENCE AND GATE

STATION	LOCATION	REMOVE CHAIN LINK FENCE	CHAIN LINK FENCE TYPE CL-8, BLACK VINYL-CLAD	CHAIN LINK FENCE TYPE CL-6, BLACK VINYL-CLAD	CHAIN LINK FENCE TYPE CL-4, BLACK VINYL-CLAD	REMOVE GATE	CHAIN LINK GATE 12'	CHAIN LINK GATE 16'	CHAIN LINK GATE 24'
		LF	LF			EA	EA		
A 10+35 TO 27+20	L+				1685				
A 12+00 TO 27+77.58	R+				1578				
AB 102+04 TO B 104+90	R+		335						
EB R+e 80 Exis+ BARRIER TO 147+74.55	L+			4422					
B 117+30 TO 121+00	R+			370					
B 147+43.54 TO ST 156+52.94	L+				909				
AB 102+50	R+								1
B 123+40	L+							1	
B 138+20	L+							1	
B 143+40	L+							1	
B 152+40	L+						1		
B 152+60 TO ST 156+52	R+	447							
A 18+80 TO 21+00	R+	220							
AB 102+04 TO B 104+90	R+	311							
B 106+30 TO 109+61	L+	331							
B 109+97 TO 121+00	L+ & R+	1103							
AB 102+80	R+					1			
AB 102+50	R+					1			
B 116+80	R+					1			
B 148+80	L+ & R+					1			
B 126+46	R+					1			
TOTAL		2412	335	4792	4172	5	1	3	1

COLD PLANE ASPHALT CONCRETE

STATION	Loc	SQFT
AB 101+80 TO 104+69.21	L+ & R+	6670 ~~5068~~
B 103+53.49 TO 10+90		
TOTAL		6670 ~~5068~~

1 1

AGGREGATE BASE

STATION	CLASS 3
	CY
A 10+55 TO 27+77.20	638
AB 100+00 TO 100+60	22
AB 100+60 TO 101+80	76
B 100+53.49 TO 115+00	79
B 115+00 TO 128+00	390
B 134+00 TO 154+65.83	650
C 10+00 TO 15+61.50	265
ST 154+76.31 TO 156+55.79	66
OVERLOOK	18
LIGHT POLE FOOTING	62.9
Conc BARRIER	23.3
TOTAL	~~2272.2~~ 2290.2

1 1

1 REVISED PER ADDENDUM No. 1 DATED APRIL 13, 2012

SUMMARY OF QUANTITIES

Q-2

STATE OF CALIFORNIA - DEPARTMENT OF TRANSPORTATION
Caltrans DESIGN

FUNCTIONAL SUPERVISOR: HALIM MATHKOUR
CALCULATED-DESIGNED BY: EMILY LIU
CHECKED BY: QI LIU
REVISED BY: EL
DATE REVISED: 3/24/11

LAST REVISION DATE PLOTTED => 11-APR-2012
10-06-11 TIME PLOTTED => 09:33

Dist	COUNTY	ROUTE	POST MILES TOTAL PROJECT	SHEET No.	TOTAL SHEETS
04	Ala	80	2.5/3.3	78	176

Thomas Cheng 6-15-11
REGISTERED CIVIL ENGINEER DATE

11-28-11
PLANS APPROVAL DATE

REGISTERED PROFESSIONAL ENGINEER Thomas Cheng No. 29908 Exp. 3-31-13 CIVIL STATE OF CALIFORNIA

THE STATE OF CALIFORNIA OR ITS OFFICERS OR AGENTS SHALL NOT BE RESPONSIBLE FOR THE ACCURACY OR COMPLETENESS OF SCANNED COPIES OF THIS PLAN SHEET.

1

REMEDIATION EXCAVATION (CLASS 1)

STATION	Loc	DEPTH (LF)	TYPE BARBARY AREA (SQFT)	TYPE BARBARY VOLUME (CY)	TYPE EMERYVILLE AREA (SQFT)	TYPE EMERYVILLE VOLUME (CY)	IMPORTED BORROW VOLUME (CY)	IMPORTED TOP SOIL VOLUME (CY)
B 143+50 TO 144+60	R†	2	10719	794			397	397
B 143+50 TO 152+30	L†	2	18002	1333			667	666
B 144+60 TO 154+70	R†	2	36009	2667			1334	1333
B 152+40 TO ST 156+52	L†	2	8777	650			325	325
ST 155+20 TO 156+30	R†	2	394	29			14	15
B 148+85 TO 154+70	R†	2			7774	576	288	288
ST 155+20 TO 156+00	R†	2			133	10	5	5
C 11+50 TO 15+40	R†	2			4762	353	176	177
TOTAL				5473		939	3206	3206

REMEDIATION EXCAVATION (CLASS R)

STATION	Loc	TYPE OARB VOLUME (CY)	IMPORTED BORROW VOLUME (CY)	IMPORTED TOP SOIL VOLUME (CY)	TEMPORARY FENCE (TYPE CL-6) (N) LF
A 10+00 TO 27+88	L†	4270	4270		2347
A 19+50 TO 22+52.30	L† & R†	448	380	68	
TOTAL		4718	4650	68	2347

ROADWAY EXCAVATION (CLASS 1)

STATION	Loc	TYPE EMERYVILLE VOLUME (CY)	TYPE BARBARY VOLUME (CY)
B 143+00 TO 154+90	L† & R†		110
C 10+00 TO 15+50	L† & R†		18
C 10+50 TO 15+88	L† & R†	1314	
TOTAL		1314	127

REMEDIATION EXCAVATION (CLASS 2)

STATION	Loc	TYPE OARB VOLUME (CY)	IMPORTED BORROW VOLUME (CY)
A 19+50 TO 22+52.30	L†	34	34
A 19+50 TO 22+52.30	R†	34	34
TOTAL		68	68

MINOR CONCRETE (MINOR STRUCTURE)

STATION	Loc	SHORT WALL CY	SEAT WALL CY	LIGHT POLE FOOTING (N) No. OF POLES	LIGHT POLE FOOTING CY	DRAINAGE SYSTEM CY
SHORTWALL ST 154+76.31 TO 156+60.81	L† & R†	33.0				
SHORTWALL C 14+80 TO 15+87.80	L† & R†	22.6				
ST 154+82.77 TO 155+37.98	R†		13.0			
ST 155+52.6 TO 155+62.66	R†		2.4			
ST2 155+24 TO 155+45.52	L†		5.1			
A 10+40 TO 26+95				15	15	
AB 100+40 TO 103+60				4	4	
B 104+40 TO 154+80				44	44	
C 10+60 TO 15+20				5	5	
FROM DQ-2						19.19
SUB TOTAL		55.6	20.5		68	19.19
TOTAL		163.29				

(N) NOT A SEPARATE PAY ITEM, FOR INFORMATION ONLY.

STRUCTURE EXCAVATION AND BACKFILL

STATION	Loc	(N) No. OF LIGHT POLES	STRUCTURAL EXCAVATION (LIGHT POLE FOOTING) (CY)	STRUCTURAL BACKFILL (CY)	CI 3 AB (CY)
A 10+40 TO 26+95	L† & R†	15	58	27.0	13.9
AB 100+40 TO 103+60	L† & R†	4	15	7.2	3.7
B 104+40 TO 154+80	L† & R†	44	127	79.2	40.7
C 10+60 TO 15+20	R†	5	19	9.0	4.6
TOTAL		68	219	122.4	62.9

(N) NOT A SEPARATE PAY ITEM, FOR INFORMATION ONLY.

DECOMPOSED GRANITE (DG) MISCELLANEOUS AREA

STATION	LOCATION	SQ YD
B 100+53.49 TO 104+90	R†	60
B 104+90 TO 148+70	R†	2444
B 104+88 TO 154+74	R†	326
TOTAL		2830

REMOVABLE BOLLARD

STATION	EA
AB 102+80	4
ST 156+40	1
TOTAL	5

BENCH

STATION	Loc	EA
B 106+88 TO 107+00	R†	2
B 124+91 TO 125+10	R†	2
B 131+78 TO 132+00	R†	2
B 140+01 TO 140+20	R†	2
TOTAL		8

BAR REINFORCING STEEL (LIGHT POLE FOOTING)

STATION	(N) No. OF LIGHT POLES	LB
A 10+40 TO 26+95	15	1815
AB 100+40 TO 103+60	4	484
B 104+40 TO 154+80	44	5324
C 10+60 TO 15+20	5	605
TOTAL	68	8228

(N) NOT A SEPARATE PAY ITEM, FOR INFORMATION ONLY.

1 REVISED PER ADDENDUM No. 1 DATED APRIL 13, 2012

SUMMARY OF QUANTITIES

Q-3

REVISED BY	DATE REVISED	FUNCTIONAL SUPERVISOR	CALCULATED-DESIGNED BY	CHECKED BY
DT	6/15/11	HALIM MATHKOUR	EMILY LIU	QI LIU

STATE OF CALIFORNIA - DEPARTMENT OF TRANSPORTATION
Caltrans DESIGN

LAST REVISION 10-06-11 | DATE PLOTTED => 11-APR-2012 | TIME PLOTTED => 11:21

Dist	COUNTY	ROUTE	POST MILES TOTAL PROJECT	SHEET No.	TOTAL SHEETS
04	Ala	80	2.5/3.3	115	176

Lorena Wong
LICENSED LANDSCAPE ARCHITECT

11-28-11
PLANS APPROVAL DATE

THE STATE OF CALIFORNIA OR ITS OFFICERS OR AGENTS SHALL NOT BE RESPONSIBLE FOR THE ACCURACY OR COMPLETENESS OF SCANNED COPIES OF THIS PLAN SHEET.

LICENSED LANDSCAPE ARCHITECT LORENA WONG No. 3304 Lorena Wong Signature 5-31-13 Renewal Date 9-28-11 Date STATE OF CALIFORNIA

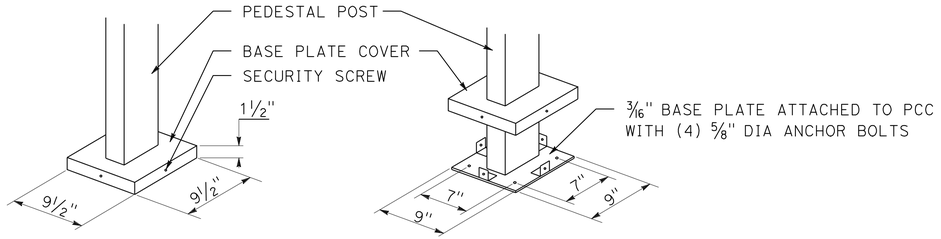

SURFACE MOUNT DETAIL

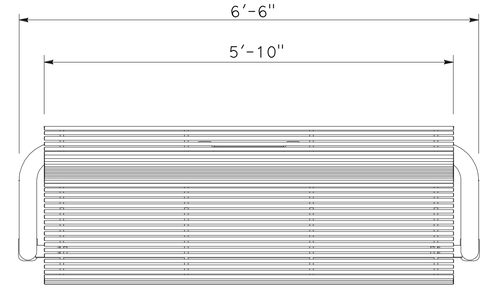

PLAN VIEW

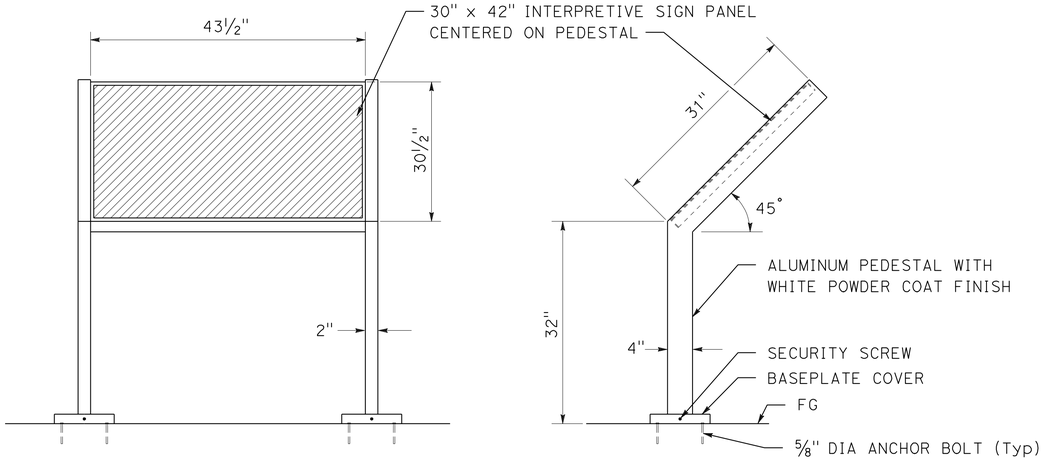

ELEVATION

SIDE ELEVATION

INTERPRETIVE SIGN PEDESTAL

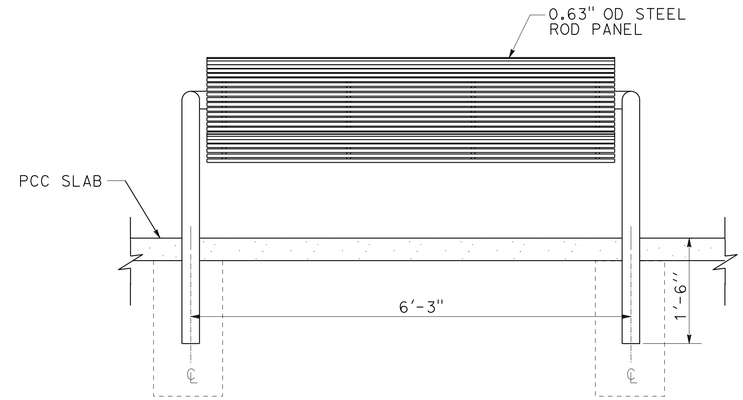

FRONT VIEW

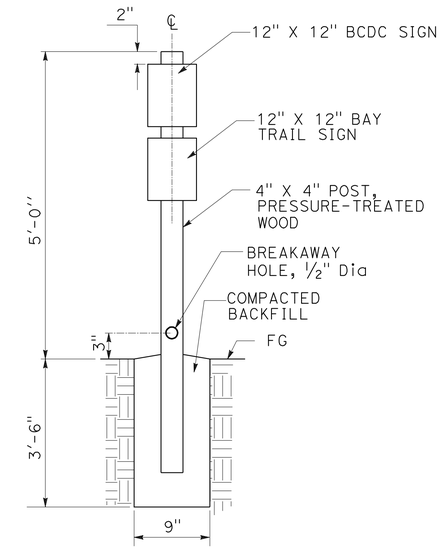

SECTIONAL ELEVATION

NOTES:

1. INSTALL POST WITH SIDES ALIGNED PARALLEL AND PERPENDICULAR TO PATH.
2. MOUNT BCDC SIGN ON ALL SIDES OF POST FACING PATH

BCDC AND BAY TRAIL SIGN POST

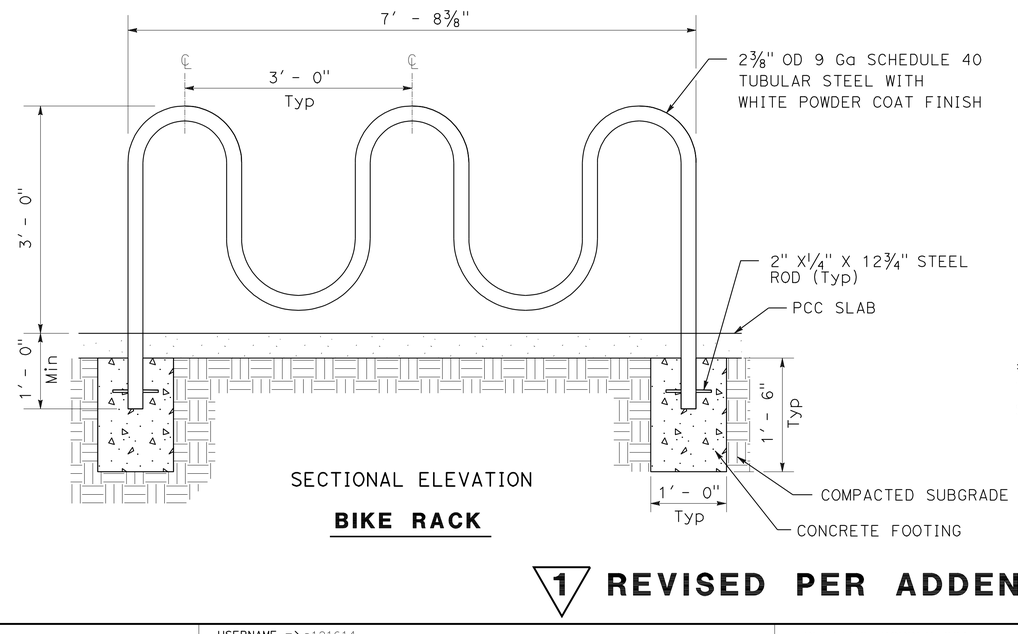

SECTIONAL ELEVATION

BIKE RACK

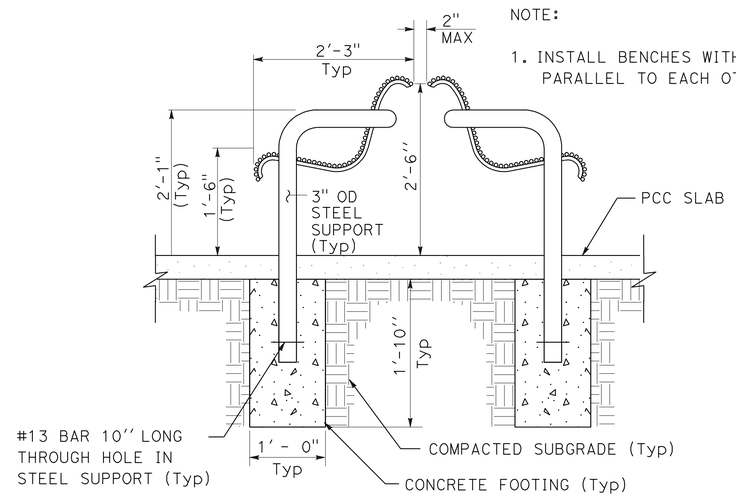

SIDE VIEW

BENCH

NOTE:

1. INSTALL BENCHES WITH BACKS PARALLEL TO EACH OTHER.

1 REVISED PER ADDENDUM No. 1 DATED APRIL 13, 2012

LANDSCAPE DETAILS

NO SCALE

LD-6

STATE OF CALIFORNIA - DEPARTMENT OF TRANSPORTATION
Caltrans LANDSCAPE ARCHITECTURE
SENIOR LANDSCAPE ARCHITECT LORENA WONG
CALCULATED-DESIGNED BY KIMBERLY WHITE
CHECKED BY FELIX ONUKWUGHA
REVISED BY KW
DATE REVISED 9/27/11
FO 3/22/12

LAST REVISION 10-06-11
DATE PLOTTED => 11-APR-2012
TIME PLOTTED => 13:09

1 ADDED PER ADDENDUM No. 1 DATED APRIL 13, 2012

DIST	COUNTY	ROUTE	POST MILES TOTAL PROJECT	SHEET No	TOTAL SHEETS
04	Ala	80	2.5/3.3	176A	176

REGISTERED CIVIL ENGINEER 12-05-11

11-28-11
PLANS APPROVAL DATE

REGISTERED PROFESSIONAL ENGINEER Samuel Awad No. 64589 Exp. 6-30-13 CIVIL STATE OF CALIFORNIA

The State of California or its officers or agents shall not be responsible for the accuracy or completeness of electronic copies of this plan sheet.

This LOTB sheet was prepared in accordance with the Caltrans Soil & Rock Logging, Classification, & Presentation Manual (2010 Edition).

NOTE: TV=unconfined compressive strength (tsf) as measured by Trovane measurement.

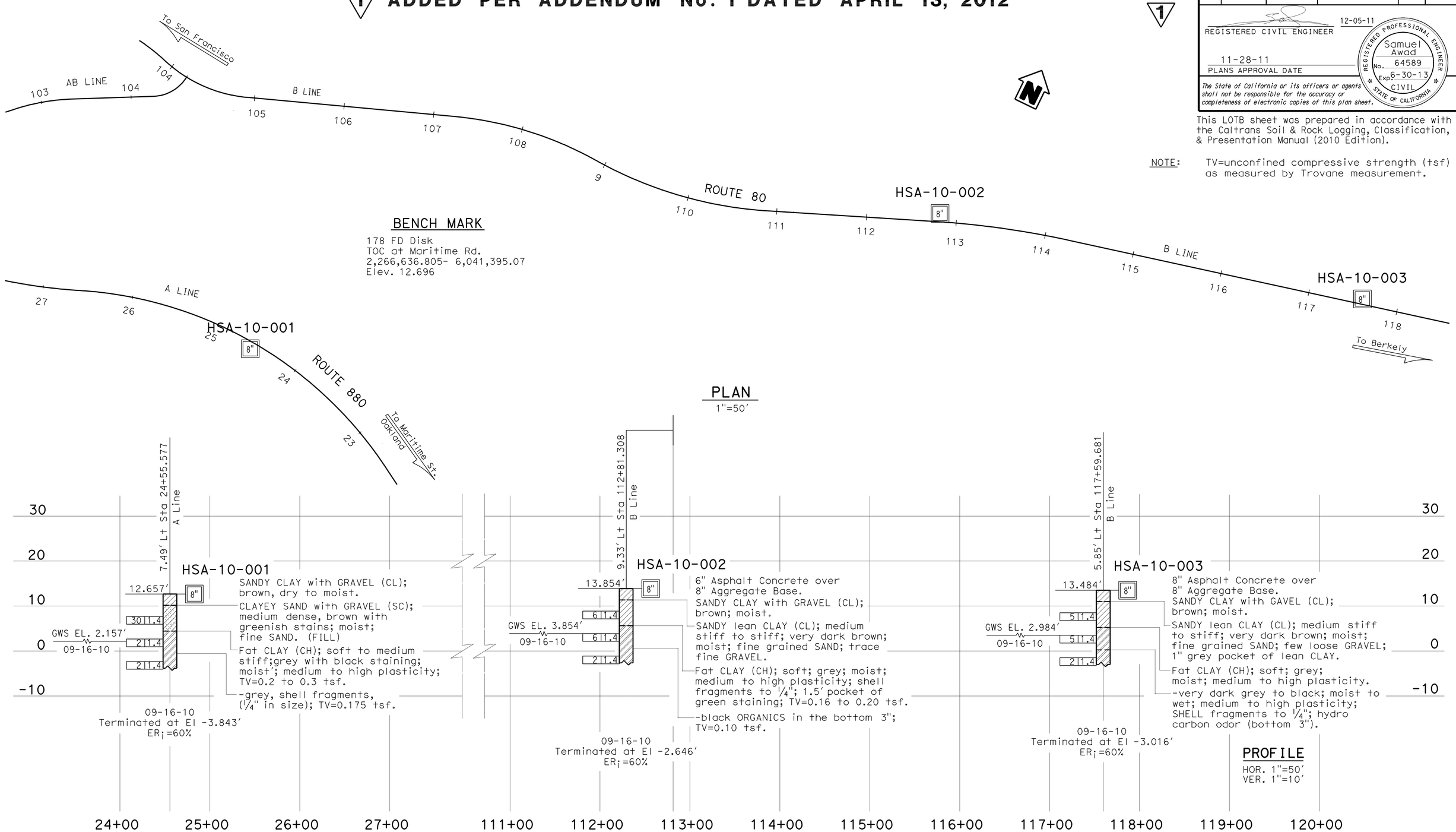

BENCH MARK
178 FD Disk
TOC at Maritime Rd.
2,266,636.805- 6,041,395.07
Elev. 12.696

ENGINEERING SERVICES		GEOTECHNICAL SERVICES	STATE OF CALIFORNIA DEPARTMENT OF TRANSPORTATION	DIVISION OF ENGINEERING SERVICES OFFICE OF GEOTECHNICAL DESIGN BRANCH	BRIDGE NO. / POST MILES 2.5/3.3	SEGMENT 2 BIKEWAY LOG OF TEST BORINGS 1 of 5
FUNCTIONAL SUPERVISOR NAME: H. Nikoui	DRAWN BY: M. Reynolds 09/11 CHECKED BY: M. Gaffney	FIELD INVESTIGATION BY: Furro, (subcontractor) via S. Awad				

ORIGINAL SCALE IN INCHES FOR REDUCED PLANS 0 1 2 3

UNIT: 3660
PROJECT NUMBER & PHASE: 04000007851 CONTRACT NO.: 04-292261

DISREGARD PRINTS BEARING EARLIER REVISION DATES → 12-20-11

REVISION DATES | SHEET | OF

FILE => 0400000785qa001.add

USERNAME => s123631 DATE PLOTTED => 11-APR-2012 TIME PLOTTED => 09:01

1 ADDED PER ADDENDUM No. 1 DATED APRIL 13, 2012

DIST	COUNTY	ROUTE	POST MILES TOTAL PROJECT	SHEET No	TOTAL SHEETS
04	Ala	80	2.5/3.3	176B	176

REGISTERED CIVIL ENGINEER 12-05-11

11-28-11
PLANS APPROVAL DATE

REGISTERED PROFESSIONAL ENGINEER Samuel Awad No. 64589 Exp. 6-30-13 CIVIL STATE OF CALIFORNIA

The State of California or its officers or agents shall not be responsible for the accuracy or completeness of electronic copies of this plan sheet.

This LOTB sheet was prepared in accordance with the Caltrans Soil & Rock Logging, Classification, & Presentation Manual (2010 Edition).

NOTE: TV=unconfined compressive strength (tsf) as measured by Trovane measurement.

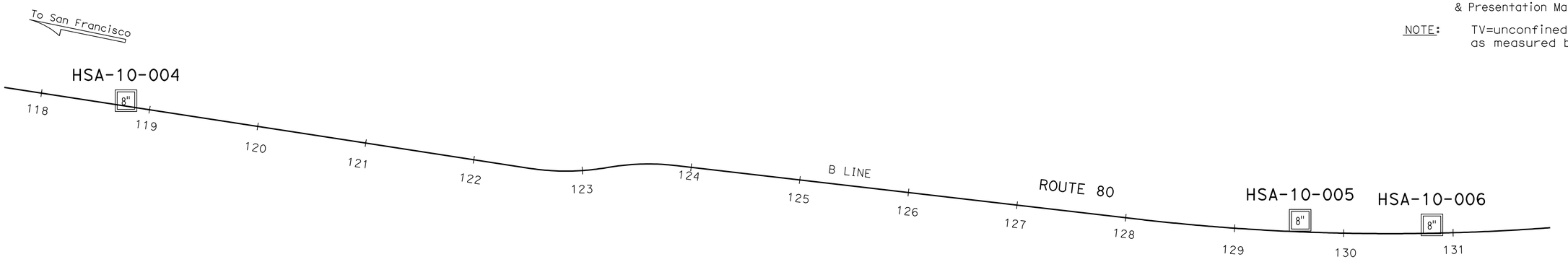

PLAN
1"=50'

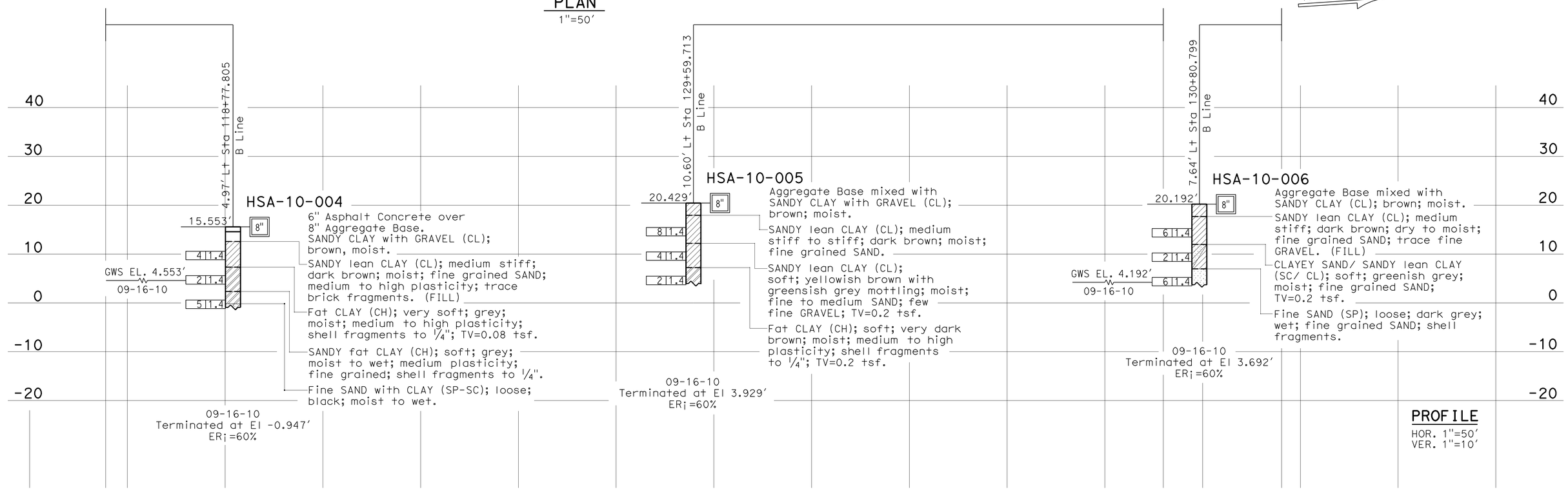

PROFILE
HOR. 1"=50'
VER. 1"=10'

ENGINEERING SERVICES		GEOTECHNICAL SERVICES	STATE OF CALIFORNIA DEPARTMENT OF TRANSPORTATION	DIVISION OF ENGINEERING SERVICES OFFICE OF GEOTECHNICAL DESIGN BRANCH	BRIDGE NO. / POST MILES 2.5/3.3	SEGMENT 2 BIKEWAY
FUNCTIONAL SUPERVISOR	DRAWN BY: M. Reynolds 09/11	FIELD INVESTIGATION BY: Furro, (subcontractor) via S. Awad				LOG OF TEST BORINGS 2 of 5
NAME: H. Nikoui	CHECKED BY: M. Gaffney					

ORIGINAL SCALE IN INCHES FOR REDUCED PLANS 0 1 2 3

UNIT: 3660
PROJECT NUMBER & PHASE: 04000007851 CONTRACT NO.: 04-292261

DISREGARD PRINTS BEARING EARLIER REVISION DATES

REVISION DATES 12-20-11 | SHEET | OF

FILE => 0400000785qa002.add

USERNAME => s123631 DATE PLOTTED => 11-APR-2012 TIME PLOTTED => 09:01

1 ADDED PER ADDENDUM No. 1 DATED APRIL 13, 2012

DIST	COUNTY	ROUTE	POST MILES TOTAL PROJECT	SHEET No	TOTAL SHEETS
04	Ala	80	2.5/3.3	176C	176

REGISTERED CIVIL ENGINEER 12-05-11

11-28-11
PLANS APPROVAL DATE

REGISTERED PROFESSIONAL ENGINEER Samuel Awad No. 64589 Exp. 6-30-13 CIVIL STATE OF CALIFORNIA

The State of California or its officers or agents shall not be responsible for the accuracy or completeness of electronic copies of this plan sheet.

This LOTB sheet was prepared in accordance with the Caltrans Soil & Rock Logging, Classification, & Presentation Manual (2010 Edition).

NOTE: TV=unconfined compressive strength (tsf) as measured by Trovane measurement.

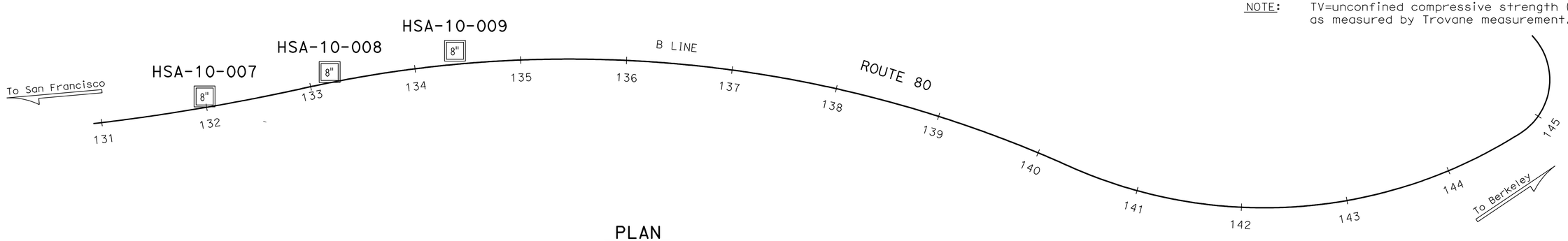

PLAN
1"=50'

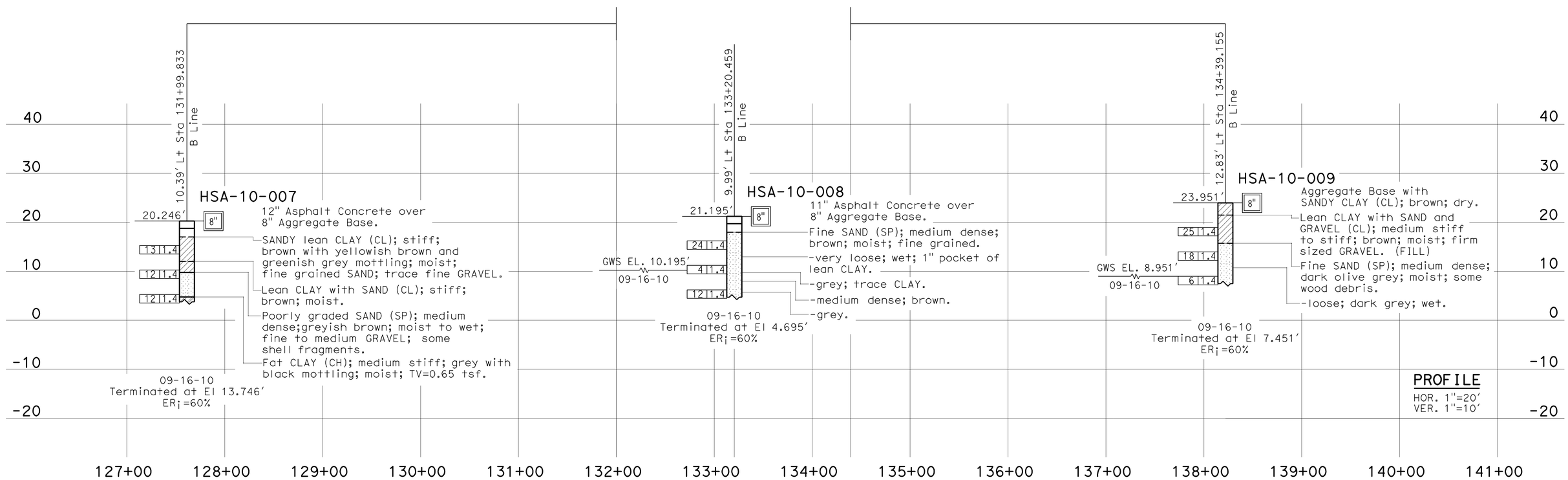

PROFILE
HOR. 1"=20'
VER. 1"=10'

ENGINEERING SERVICES		GEOTECHNICAL SERVICES	STATE OF CALIFORNIA DEPARTMENT OF TRANSPORTATION	DIVISION OF ENGINEERING SERVICES OFFICE OF GEOTECHNICAL DESIGN BRANCH	BRIDGE NO. / POST MILES 2.5/3.3	SEGMENT 2 BIKEWAY LOG OF TEST BORINGS 3 of 5
FUNCTIONAL SUPERVISOR NAME: H. Nikoui	DRAWN BY: M. Reynolds 09/11 CHECKED BY: M. Gaffney	FIELD INVESTIGATION BY: Furro, (subcontractor) via S. Awad				

ORIGINAL SCALE IN INCHES FOR REDUCED PLANS 0 1 2 3

UNIT: 3660
PROJECT NUMBER & PHASE: 04000007851 CONTRACT NO.: 04-292261

DISREGARD PRINTS BEARING EARLIER REVISION DATES → 12-20-11

REVISION DATES | SHEET | OF

FILE => 0400000785qa003.add

USERNAME => s123631 DATE PLOTTED => 11-APR-2012 TIME PLOTTED => 09:01

REFERENCE: CALTRANS SOIL & ROCK LOGGING, CLASSIFICATION, AND PRESENTATION MANUAL (2010)

DIST	COUNTY	ROUTE	POST MILES TOTAL PROJECT	SHEET No	TOTAL SHEETS
04	Ala	80	2.5/3.3	176D	176

REGISTERED CIVIL ENGINEER 12-05-11 DATE

11-28-11
PLANS APPROVAL DATE

REGISTERED PROFESSIONAL ENGINEER Samuel Awad No. 64589 Exp. 6-30-13 CIVIL STATE OF CALIFORNIA

The State of California or its officers or agents shall not be responsible for the accuracy or completeness of electronic copies of this plan sheet.

1

1 ADDED PER ADDENDUM No. 1 DATED APRIL 13, 2012

CEMENTATION

Description	Criteria
Weak	Crumbles or breaks with handling or little finger pressure.
Moderate	Crumbles or breaks with considerable finger pressure.
Strong	Will not crumble or break with finger pressure.

BOREHOLE IDENTIFICATION

Symbol	Hole Type	Description
Size	A	Auger Boring (hollow or solid stem bucket)
Size	R RW RC P	Rotary drilled boring (conventional) Rotary drilled with self-casing wire-line Rotary core with continuously-sampled, self-casing wire-line Rotary percussion boring (air)
Size	R	Rotary drilled diamond core
Size	HD HA	Hand driven (1-inch soil tube) Hand Auger
●	D	Dynamic Cone Penetration Boring
▲	CPT	Cone Penetration Test (ASTM D 5778)
⬚	O	Other (note on LOTB)

Note: Size in inches.

CONSISTENCY OF COHESIVE SOILS

Description	Shear Strength (tsf)	Pocket Penetrometer Measurement, PP, (tsf)	Torvane Measurement, TV, (tsf)	Vane Shear Measurement, VS, (tsf)
Very Soft	Less than 0.12	Less than 0.25	Less than 0.12	Less than 0.12
Soft	0.12 - 0.25	0.25 - 0.5	0.12 - 0.25	0.12 - 0.25
Medium Stiff	0.25 - 0.5	0.5 - 1	0.25 - 0.5	0.25 - 0.5
Stiff	0.5 - 1	1 - 2	0.5 - 1	0.5 - 1
Very Stiff	1 - 2	2 - 4	1 - 2	1 - 2
Hard	Greater than 2	Greater than 4	Greater than 2	Greater than 2

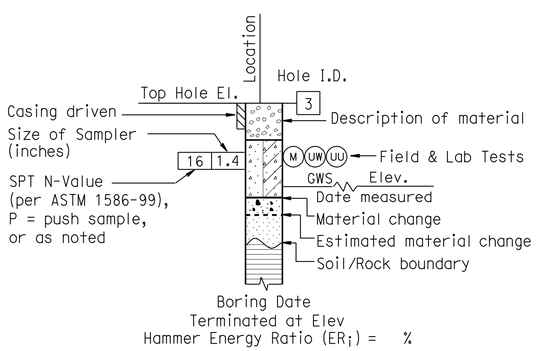

ROTARY BORING

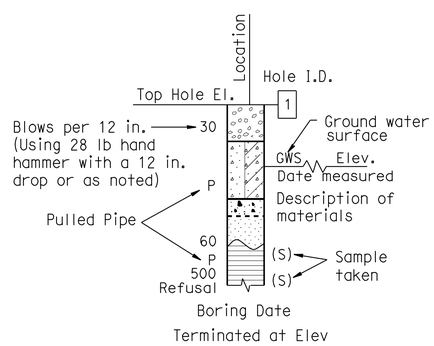

HAND BORING

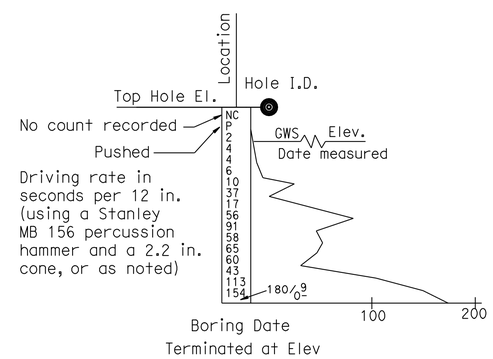

DYNAMIC CONE PENETRATION BORING

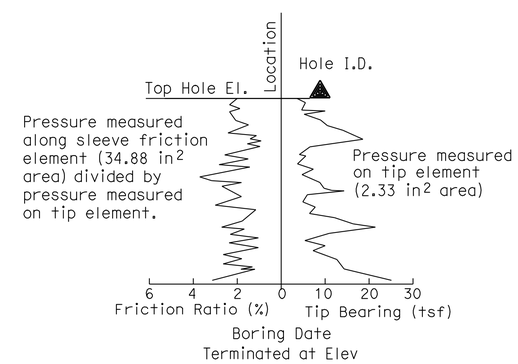

CONE PENETRATION TEST (CPT) BORING

ENGINEERING SERVICES	GEOTECHNICAL SERVICES	STATE OF CALIFORNIA DEPARTMENT OF TRANSPORTATION	DIVISION OF ENGINEERING SERVICES OFFICE OF GEOTECHNICAL DESIGN BRANCH	BRIDGE NO. / POST MILE 2.5/3.3	SEGMENT 2 BIKEWAY LOG OF TEST BORINGS 4 of 5
	PREPARED BY: M. Reynolds 09/11				

GS LOTB SOIL LEGEND

ORIGINAL SCALE IN INCHES FOR REDUCED PLANS 0 1 2 3

UNIT: 3660
PROJECT NUMBER & PHASE: 04000007851 CONTRACT NO.: 04-292261

DISREGARD PRINTS BEARING EARLIER REVISION DATES → 12-20-11

REVISION DATES | SHEET | OF

FILE => 0400000785qa004.add

USERNAME => s123631 DATE PLOTTED => 11-APR-2012 TIME PLOTTED => 09:01

REFERENCE: CALTRANS SOIL & ROCK LOGGING, CLASSIFICATION, AND PRESENTATION MANUAL (2010)

DIST	COUNTY	ROUTE	POST MILES TOTAL PROJECT	SHEET No	TOTAL SHEETS
04	Ala	80	2.5/3.3	176E	176

1

12-05-11
REGISTERED CIVIL ENGINEER DATE

11-28-11
PLANS APPROVAL DATE

REGISTERED PROFESSIONAL ENGINEER Samuel Awad No. 64589 Exp. 6-30-13 CIVIL STATE OF CALIFORNIA

The State of California or its officers or agents shall not be responsible for the accuracy or completeness of electronic copies of this plan sheet.

GROUP SYMBOLS AND NAMES

Graphic/Symbol	Group Names	Graphic/Symbol	Group Names
GW	Well-graded GRAVEL Well-graded GRAVEL with SAND	CL	Lean CLAY Lean CLAY with SAND Lean CLAY with GRAVEL SANDY lean CLAY SANDY lean CLAY with GRAVEL GRAVELLY lean CLAY GRAVELLY lean CLAY with SAND
GP	Poorly-graded GRAVEL Poorly-graded GRAVEL with SAND		
GW-GM	Well-graded GRAVEL with SILT Well-graded GRAVEL with SILT and SAND	CL-ML	SILTY CLAY SILTY CLAY with SAND SILTY CLAY with GRAVEL SANDY SILTY CLAY SANDY SILTY CLAY with GRAVEL GRAVELLY SILTY CLAY GRAVELLY SILTY CLAY with SAND
GW-GC	Well-graded GRAVEL with CLAY (or SILTY CLAY) Well-graded GRAVEL with CLAY and SAND (or SILTY CLAY and SAND)		
GP-GM	Poorly-graded GRAVEL with SILT Poorly-graded GRAVEL with SILT and SAND	ML	SILT SILT with SAND SILT with GRAVEL SANDY SILT SANDY SILT with GRAVEL GRAVELLY SILT GRAVELLY SILT with SAND
GP-GC	Poorly-graded GRAVEL with CLAY (or SILTY CLAY) Poorly-graded GRAVEL with CLAY and SAND (or SILTY CLAY and SAND)		
GM	SILTY GRAVEL SILTY GRAVEL with SAND	OL	ORGANIC lean CLAY ORGANIC lean CLAY with SAND ORGANIC lean CLAY with GRAVEL SANDY ORGANIC lean CLAY SANDY ORGANIC lean CLAY with GRAVEL GRAVELLY ORGANIC lean CLAY GRAVELLY ORGANIC lean CLAY with SAND
GC	CLAYEY GRAVEL CLAYEY GRAVEL with SAND		
GC-GM	SILTY, CLAYEY GRAVEL SILTY, CLAYEY GRAVEL with SAND	OL	ORGANIC SILT ORGANIC SILT with SAND ORGANIC SILT with GRAVEL SANDY ORGANIC SILT SANDY ORGANIC SILT with GRAVEL GRAVELLY ORGANIC SILT GRAVELLY ORGANIC SILT with SAND
SW	Well-graded SAND Well-graded SAND with GRAVEL		
SP	Poorly-graded SAND Poorly-graded SAND with GRAVEL	CH	Fat CLAY Fat CLAY with SAND Fat CLAY with GRAVEL SANDY fat CLAY SANDY fat CLAY with GRAVEL GRAVELLY fat CLAY GRAVELLY fat CLAY with SAND
SW-SM	Well-graded SAND with SILT Well-graded SAND with SILT and GRAVEL		
SW-SC	Well-graded SAND with CLAY (or SILTY CLAY) Well-graded SAND with CLAY and GRAVEL (or SILTY CLAY and GRAVEL)	MH	Elastic SILT Elastic SILT with SAND Elastic SILT with GRAVEL SANDY elastic SILT SANDY elastic SILT with GRAVEL GRAVELLY elastic SILT GRAVELLY elastic SILT with SAND
SP-SM	Poorly-graded SAND with SILT Poorly-graded SAND with SILT and GRAVEL		
SP-SC	Poorly-graded SAND with CLAY (or SILTY CLAY) Poorly-graded SAND with CLAY and GRAVEL (or SILTY CLAY and GRAVEL)	OH	ORGANIC fat CLAY ORGANIC fat CLAY with SAND ORGANIC fat CLAY with GRAVEL SANDY ORGANIC fat CLAY SANDY ORGANIC fat CLAY with GRAVEL GRAVELLY ORGANIC fat CLAY GRAVELLY ORGANIC fat CLAY with SAND
SM	SILTY SAND SILTY SAND with GRAVEL		
SC	CLAYEY SAND CLAYEY SAND with GRAVEL	OH	ORGANIC elastic SILT ORGANIC elastic SILT with SAND ORGANIC elastic SILT with GRAVEL SANDY ORGANIC elastic SILT SANDY ORGANIC elastic SILT with GRAVEL GRAVELLY ORGANIC elastic SILT GRAVELLY ORGANIC elastic SILT with SAND
SC-SM	SILTY, CLAYEY SAND SILTY, CLAYEY SAND with GRAVEL		
PT	PEAT	OL/OH	ORGANIC SOIL ORGANIC SOIL with SAND ORGANIC SOIL with GRAVEL SANDY ORGANIC SOIL SANDY ORGANIC SOIL with GRAVEL GRAVELLY ORGANIC SOIL GRAVELLY ORGANIC SOIL with SAND
	COBBLES COBBLES and BOULDERS BOULDERS		

FIELD AND LABORATORY TESTING

- (C) Consolidation (ASTM D 2435)
- (CL) Collapse Potential (ASTM D 5333)
- (CP) Compaction Curve (CTM 216)
- (CR) Corrosivity Testing (CTM 643, CTM 422, CTM 417)
- (CU) Consolidated Undrained Triaxial (ASTM D 4767)
- (DS) Direct Shear (ASTM D 3080)
- (EI) Expansion Index (ASTM D 4829)
- (M) Moisture Content (ASTM D 2216)
- (OC) Organic Content-% (ASTM D 2974)
- (P) Permeability (CTM 220)
- (PA) Particle Size Analysis (ASTM D 422)
- (PI) Plasticity Index (AASHTO T 90) Liquid Limit (AASHTO T 89)
- (PL) Point Load Index (ASTM D 5731)
- (PM) Pressure Meter
- (R) R-Value (CTM 301)
- (SE) Sand Equivalent (CTM 217)
- (SG) Specific Gravity (AASHTO T 100)
- (SL) Shrinkage Limit (ASTM D 427)
- (SW) Swell Potential (ASTM D 4546)
- (UC) Unconfined Compression-Soil (ASTM D 2166) Unconfined Compression-Rock (ASTM D 2938)
- (UU) Unconsolidated Undrained Triaxial (ASTM D 2850)
- (UW) Unit Weight (ASTM D 4767)

APPARENT DENSITY OF COHESIONLESS SOILS

Description	SPT N_{60} (Blows / 12 in.)
Very Loose	0 - 5
Loose	5 - 10
Medium Dense	10 - 30
Dense	30 - 50
Very Dense	Greater than 50

MOISTURE

Description	Criteria
Dry	No discernable moisture
Moist	Moisture present, but no free water
Wet	Visible free water

PERCENT OR PROPORTION OF SOILS

Description	Criteria
Trace	Particles are present but estimated to be less than 5%
Few	5% - 10%
Little	15% - 25%
Some	30% - 45%
Mostly	50% - 100%

PARTICLE SIZE

Description		Size (in.)
Boulder		Greater than 12
Cobble		3 - 12
Gravel	Coarse	3/4 - 3
	Fine	1/5 - 3/4
Sand	Coarse	1/16 - 1/5
	Medium	1/64 - 1/16
	Fine	1/300 - 1/64
Silt and Clay		Less than 1/300

1 ADDED PER ADDENDUM No. 1 DATED APRIL 13, 2012

ENGINEERING SERVICES

GEOTECHNICAL SERVICES

PREPARED BY: M. Reynolds 09/11

STATE OF CALIFORNIA DEPARTMENT OF TRANSPORTATION

DIVISION OF ENGINEERING SERVICES OFFICE OF GEOTECHNICAL DESIGN BRANCH

BRIDGE NO.

POST MILE 2.5/3.3

SEGMENT 2 BIKEWAY

LOG OF TEST BORINGS 5 of 5

GS LOTB SOIL LEGEND

ORIGINAL SCALE IN INCHES FOR REDUCED PLANS 0 1 2 3

UNIT: 3660
PROJECT NUMBER & PHASE: 04000007851 CONTRACT NO.: 04-292261

DISREGARD PRINTS BEARING EARLIER REVISION DATES

REVISION DATES 12-20-11 SHEET OF

FILE => 0400000785ga005.add

USERNAME => s123631 DATE PLOTTED => 11-APR-2012 TIME PLOTTED => 09:02