04-283821
Information Handout

Table of Contents

1) United States Department of the Interior Fish and Wildlife Service Biological Opinion and Conference Opinion Number 1-1-05-F-0025.

2) California Department of Fish and Game 1602 Streambed Alteration Agreement Notification Number 1600-2008-0451-3.

3) Army Corps of Engineers 404 Nationwide Permit Number SPN-2003-282830 N.

4) Regional Water Quality Control Board Water Quality Certification for Site No.: 02-49-C0198 (BT), CIWQS Place No.: 725448.

5) Caltrans District 4 December 2009 Final Comprehensive Mitigation and Monitoring Plan for On-Site Restoration Activities, Stage Gulch Road Curve Correction and Realignment Project, with appendices, for EAs 04-283811 and 04-283821.

6) Storm Water Information Handout, Contract 04-283821, 04-Son-116-PM 41.8/44.7, Mitigation - Tree Planting and Creek Channelization.

1) United States Department of the Interior Fish and Wildlife Service Biological Opinion and Conference Opinion Number 1-1-05-F-0025.

United States Department of the Interior

FISH AND WILDLIFE SERVICE
Sacramento Fish and Wildlife Office
2800 Cottage Way, Room W-2605
Sacramento, California 95825-1846

IN REPLY REFER TO:
1-1-05-F-0025

July 12, 2005

Mr. Gene K. Fong
Federal Highway Administration
U.S. Department of Transportation
650 Capitol Mall, Suite 4-100
Sacramento, California 95814

Subject: Formal Consultation and Conference on the Stage Gulch Road (State Route 116) Curve Correction and Realignment Project, Sonoma County, California (HAD-CA File # 04-Son-116, PM 41.8-44.7, Document # P51361)

Dear Mr. Fong:

This is in response to your December 16, 2004, request for initiation of formal consultation with the U.S. Fish and Wildlife Service (Service) on the proposed Stage Gulch Road (State Route 116) Curve Correction and Realignment Project in Sonoma County, California. Your letter was received on December 17, 2004. This document represents the Service's biological opinion and conference opinion on the effects of the action on the threatened California red-legged frog (*Rana aurora draytonii*) and its proposed critical habitat. This response is in accordance with section 7 of the Endangered Species Act of 1973, as amended (16 U.S.C. 1531 *et seq.*) (Act).

The following sources of information were used to develop this biological opinion: (1) the August 18, 2003, *Fact Sheet for the SON 116 Shoulder Widening From Adobe Road to Arnold Drive*, prepared by the California Department of Transportation (Caltrans); (2) the March 2004, *California Red-Legged Frog (Rana aurora draytonii) Initial Site Assessment*, prepared by Caltrans; (3) a site visit on May 19, 2004, with the Service, Caltrans, and National Oceanic and Atmospheric Administration-National Marine Fisheries Service (NMFS); (4) the November 2004, *Route 116 Stage Gulch Road Curve Improvement and Realignment Project Initial Study with Proposed Mitigated Negative Declaration*, prepared by Caltrans; (5) the October 2004, *Stage Gulch Road Curve Correction and Re-alignment Project Natural Environment Study Report*, prepared by Caltrans; (6) the September 2004, *Stage Gulch Road Curve Correction and Re-alignment Project Biological Assessment for the California Red-Legged Frog (Rana aurora draytonii)*, prepared by Caltrans; (7) various meetings, emails, and

TAKE PRIDE IN AMERICA

Received
JUL 14 2005
ELIMA

phone conversations involving the Service and Caltrans; and (8) other information available to the Service.

Consultation History

September 18, 2003:	Service staff met with Caltrans, Army Corps of Engineers (Corps), and California Department of Fish and Game (DFG) for a site visit.
March 29, 2004:	The Service received a request for a "not likely to adversely affect" determination and the *California Red-Legged Frog (Rana aurora draytonii) Initial Site Assessment*.
May 19, 2004:	Service staff met with Caltrans and NMFS for a site visit.
August 30, 2004:	Telephone conversation between Caltrans and the Service regarding a California red-legged frog sighting within the project area.
November 5, 2004:	The Service received the *Route 116 Stage Gulch Road Curve Improvement and Realignment Project Initial Study with Proposed Mitigated Negative Declaration*.
December 14, 2004:	The Service met with Caltrans and received the *Stage Gulch Road Curve Correction and Re-alignment Project Natural Environment Study Report, Stage Gulch Road Curve Correction and Re-alignment Project Biological Assessment for the California Red-Legged Frog (Rana aurora draytonii)*, and the *Stage Gulch Road Curve Correction and Re-alignment Project Biological Assessment for the Central California Coastal Steelhead (Oncorhynchus mykiss)*.
December 17, 2004:	The Service received a request for initiation of formal consultation from the Federal Highway Administration and copies of the *Stage Gulch Road Curve Correction and Re-alignment Project Natural Environment Study Report* and *Stage Gulch Road Curve Correction and Re-alignment Project Biological Assessment for the California Red-Legged Frog (Rana aurora draytonii)*.
June 29, 2005:	Service staff met with the Caltrans biologist to discuss project temporary and permanent effects.
July 5, 2005:	The Service received updated maps from Caltrans that indicated the temporary and permanent effects on the California red-legged frog that would result from the proposed project.
July 12, 2005:	The Federal Highway Administration submitted a letter dated July 11, 2005, to the Service that stated that Caltrans will compensate for permanent effects to 4.41 acres of California red-legged frog habitat and temporary effects to 5.87 acres of the habitat of this species. The permanent effects will be compensated for at a 3:1 ratio (13.23 acres)

and the temporary effects will be compensated at a 0.1:1 ratio (0.587 acres) and the temporarily disturbed areas will be restored to their pre-project condition for a total of 13.817 acres of compensation. Caltrans also will restore and enhance 4.77 acres of riparian and upland habitat along Champlin Creek. This restoration will provide aquatic and upland habitat for the California red-legged frog and will reduce the off-site compensation to 9.04 acres. The 9.04 acres will be purchased at an offsite location, subject to Service approval.

BIOLOGICAL OPINION

Project Description

From Adobe Road to Arnold Drive, approximately 2.9 miles, State Route 116 is an undivided, two lane rural highway on a typical curving horizontal alignment through rolling terrain. The road has two 10-12-foot lanes and 0-2-foot shoulders. The Sonoma County Regional Transportation Plan identified the highway as a major east-west transportation corridor between Petaluma and Sonoma.

Caltrans, in cooperation with the Federal Highway Administration, proposes to widen and realign State Route 116 between mile posts 41.8 and 44.7. The roadway will be widened to the standard 11.8 feet lanes and 7.9 feet shoulder width. All nonstandard curves horizontal curves will be modified to a minimum of 853 feet radius, the mandatory design standard for the speed of 50 miles per hour. The vertical curve on the Sonoma County Transfer Station Road will also be corrected to improve the transition to State Route 116. Approximately 1312 feet of roadway near the Sonoma County Transfer Station Road will be realigned from the westside to the eastside of Champlin Creek, avoiding the need for cut and fill areas within the creek and minimizing the number of trees that will removed from the riparian area. The realignment of this section will also include a left turn pocket to facilitate access and egress to the Sonoma County Transfer Station Road. Caltrans proposes to install retaining walls at two locations along the roadway to stabilize slopes, reduce tree impacts, and minimize right-of-way acquisition.

Caltrans will modify multiple culvert locations to accommodate the highway improvements and design new culverts crossings to enhance fish passage, dispersal behavior of aquatic species, and hydrologic efficiency. The larger concrete box culverts will be replaced with natural bottom culverts. The existing pavement and two box culverts will be removed along the abandoned section of roadbed to restore Champlin Creek to a more natural configuration. The existing culverts under the Sonoma County Transfer Station Road will be removed and replaced with two oversized culverts with modified headwalls that will act as retaining walls to minimize the footprint within Champlin Creek. Caltrans will also create a stilling basin immediately downstream of culvert replacement at the Sonoma County Transfer Station Road to offset the temporary impact to the plunge pool occupied by the frog.

General highway improvements include the repair of failing road base and pavement. Caltrans will plane existing pavement down below the longitudinal cracks or eroded pavement and install new base material with a new pavement overlay. All metal beam guardrails will be upgraded to current standards.

Minimization of Adverse Effects

Caltrans has proposed to offset the adverse effects by the replacement of culverts with natural substrate bottoms that will provide migrating aquatic species more camouflage and cover from predators. Caltrans will create retention ponds at several locations, the primary site being the area of the Champlin Creek restoration, just west of the Sonoma County Transfer Station Road. Other retention ponds sites include upstream of the culverts at mile post 42.66 and mile post 42.70. Caltrans will also create a stilling immediately downstream of culvert replacement at the Sonoma County Transfer Station Road to offset the temporary impact to the plunge pool occupied by the California red-legged frog.

Caltrans will implement standard Best Management Practices to ensure protection of the aquatic environment, water quality, and riparian corridor. Caltrans will delineate environmentally sensitive areas (ESA) on the final plans and will install temporary fence outlining the ESA prior to work beginning that will remain in place until completion of the job. To prevent impacts to frog habitat, no work activities, equipment storage, or construction material storage will occur inside these ESA limits. Caltrans will maintain erosion control measures during the construction period. Construction work within the riparian and Corps jurisdictional areas will occur during the dry period of the year from May 1 to October 30 of any given year. If work is conducted where there is perennial flow through the culverts, the water will be diverted through the project area during the construction period to prevent impeding the creek flow. Caltrans will use a cofferdam designed to dewater the creek through the construction area. Once construction is complete, Caltrans will remove all project-introduced material and restore the pre-construction creek flow.

Additionally, Caltrans will compensate for permanent effects to 4.41 acres of California red-legged frog habitat and temporary effects to 5.87 acres of California red-legged frog habitat. The permanent effects to the habitat of this animal will be compensated for at a 3:1 ratio (13.23 acres) and the temporary effects to its habitat will be compensated at a 0.1:1 ratio (0.587 acres) and the temporarily disturbed areas will be restored to their pre-project condition for a total of 13.817 acres of compensation. Caltrans also will restore and enhance 4.77 acres of riparian and upland habitat along Champlin Creek. This restoration will provide aquatic and upland habitat for the California red-legged frog and will reduce the compensation to 9.04 acres. The 9.04 acres will be purchased at a Service-approved conservation bank or other location approved by the Service.

Caltrans is proposing to ensure the protection and conservation of the red-legged frog during all phases of the proposed project through implementation of the following conservation measures:

1. Caltrans shall submit the name(s) and credentials, at least 15 days prior to the onset of activities, of biologists who would conduct activities specified in the following measures. No project activities shall begin until Caltrans has received written approval from the Service that the biologists are qualified to conduct the work.

2. A Service-approved biologist shall survey the work site two weeks before the onset of activities. If California red-legged frogs, tadpoles, or eggs are found, the approved biologist shall contact the Service to determine if moving any of these life-stages is appropriate. In making this determination the Service shall consider if an appropriate relocation site exists. If the Service approves moving animals, the approved biologist shall be allowed sufficient time to move red-legged frogs from the work site before work activities begin. Only Service-approved biologists shall participate in activities associated with the capture, handling, and monitoring of red-legged frogs.

3. Before any construction activities begin on a project, a Service-approved biologist shall conduct a training session for all construction personnel. At a minimum, the training shall include a description of the red-legged frog and its habitat, the importance of the red-legged frog and its habitat, the general measures that are being implemented to conserve the red-legged frog as they relate to the project, and the boundaries within which the project may be accomplished. Brochures, books and briefings may be used in the training session, provided that a qualified person is on hand to answer any questions.

4. A Service-approved biologist shall be present at the work site until such time as all removal of red-legged frogs, instruction of workers, and habitat disturbance have been completed. After this time, the contractor or permittee shall designate a person to monitor on-site compliance with all minimization measures. The Service-approved biologist shall ensure that this individual receives training outlined above in measure 3 and in the identification of red-legged frogs. The monitor and the Service-approved biologist shall have the authority to halt any action that might result in impacts that exceed the levels anticipated by the Service during review of the proposed action. If work is stopped, the Service shall be notified immediately by the Service-approved biologist or on-site biological monitor.

5. During project activities, Caltrans will ensure that all trash that may attract predators shall be properly contained, removed from the work site and disposed of regularly. Following construction, all trash and construction debris shall be removed from work areas.

6. All fueling and maintenance of vehicles and other equipment and staging areas shall occur at least 20 meters from any riparian habitat or water body. Caltrans shall ensure that fueling, maintenance, and staging do not contaminate the site. Prior to the onset

of work, Caltrans will implement a plan that ensures a prompt and effective response to any accidental spills. All workers shall be informed of the importance of preventing spills and of the appropriate measures to take should a spill occur.

7. A Service-approved biologist shall ensure that the spread or introduction of invasive exotic plant species shall be avoided to the maximum extent possible. When practicable, invasive exotic plants in the project areas shall be removed.

8. Project sites shall be revegetated with an appropriate assemblage of native riparian wetland and upland vegetation suitable for the area and provide the Service with a species list and restoration and monitoring plan shall be included with the project proposal for their review and approval. Such a plan must include, but not be limited to, location of the restoration, species to be used, restoration techniques, time of year the work will be done, identifiable success criteria for completion, and remedial actions if the success criteria are not achieved.

9. Caltrans shall ensure that stream contours shall be returned to their original condition at the end of project activities, unless consultation with the Service has determined that it is not beneficial to the species or feasible.

10. The number of access routes, number and size of staging areas, and the total area of the activity shall be limited to the minimum necessary to achieve the project goal. Routes and boundaries shall be clearly demarcated, and these areas shall be outside of riparian and wetland areas. Where impacts occur in these staging areas and access routes, restoration shall occur as identified in measures 8 and 9 above.

11. Work activities shall be completed between April 1 and November 1 or as directed by the DFG Streambed Alteration Agreement. Should the proponent or applicant demonstrate a need to conduct activities outside this period, the Service may authorize such activities after obtaining the agencies' approval.

12. To control erosion during and after project implementation, the applicant shall implement best management practices, as identified by the appropriate Regional Water Quality Control Board.

13. If a work site is to be temporarily dewatered by pumping, intakes shall be completely screened with wire mesh not larger than five millimeters (mm) to prevent red-legged frogs from entering the pump system. Water shall be released or pumped downstream at an appropriate rate to maintain downstream flows during construction. Upon completion of construction activities, any barriers to flow shall be removed in a manner that would allow flow to resume with the least disturbance to the substrate.

14. A Service-approved biologist shall permanently remove, from within the project area, any individuals of exotic species, such as bullfrogs, crayfish, and centrarchid fishes, to

the maximum extent possible. The permittee shall have the responsibility to ensure that their activities are in compliance with the California Fish and Game Code.

15. Caltrans will compensate for permanent effects to 4.41 acres of California red-legged frog habitat and temporary effects to 5.87 acres of the habitat of this species. The permanent effects will be compensated for at a 3:1 ratio (13.23 acres) and the temporary effects will be compensated at a 0.1:1 ratio (0.587 acres) and the temporarily disturbed areas will be restored to their pre-project condition for a total of 13.817 acres of compensation. Caltrans also will restore and enhance 4.77 acres of riparian and upland habitat along Champlin Creek. This restoration will provide aquatic and upland habitat for the California red-legged frog and will reduce the off-site compensation to 9.04 acres. The 9.04 acres will be purchased at an offsite location, subject to Service approval.

Action Area

The action area for the proposed project includes Stage Gulch Road (Highway 116) from Adobe Road to Arnold Drive, the Sonoma County Transfer Road, and Champlin Creek.

Status of the Species/Environmental Baseline

The red-legged frog was listed as a threatened species on May 23, 1996, (U.S. Fish and Wildlife Service 1996). Please refer to the final rule and the *Recovery Plan for the California Red-Legged Frog (Rana aurora draytonii)* (U.S. Fish and Wildlife Service 2002) for additional information on this species.

This species is the largest native frog in the western United States (Wright and Wright 1949), ranging from 1.5 to 5.1 inches in length (Stebbins 2003). The abdomen and hind legs of adults are largely red; the back is characterized by small black flecks and larger irregular dark blotches with indistinct outlines on a brown, gray, olive, or reddish background color. Dorsal spots usually have light centers (Stebbins 2003), and dorsolateral folds are prominent on the back. Larvae (tadpoles) range from 0.6 to 3.1 inches in length, and the background color of the body is dark brown and yellow with darker spots (Storer 1925).

Red-legged frogs have paired vocal sacs and vocalize in air (Hayes and Krempels 1986). Female frogs deposit egg masses on emergent vegetation so that the egg mass floats on the surface of the water (Hayes and Miyamoto 1984). Red-legged frogs breed from November through March with earlier breeding records occurring in southern localities (Storer 1925). Individuals occurring in coastal drainages are active year-round (Jennings *et al.* 1992), whereas those found in interior sites are normally less active during the cold season.

The historic range of the red-legged frog extended coastally from the vicinity of Elk Creek in Mendocino County, California, and inland from the vicinity of Redding, Shasta County,

California, southward to northwestern Baja California, Mexico (Fellers 2005; Jennings and Hayes 1985; Hayes and Krempels 1986). The red-legged frog was historically documented with 46 counties but the taxa now remains in 238 streams or drainages within 23 counties, representing a loss of 70 percent of its former range (U.S. Fish and Wildlife Service 2002). Red-legged frogs are still locally abundant within portions of the San Francisco Bay area and the central coast. Within the remaining distribution of the species, only isolated populations have been documented in the Sierra Nevada, northern Coast, and northern Transverse Ranges. The species is believed to be extirpated from the southern Transverse and Peninsular ranges, but is still present in Baja California, Mexico (California Department of Fish and Game 2004).

Adult red-legged frogs prefer dense, shrubby or emergent riparian vegetation closely associated with deep (>2.3 feet), still, or slow-moving water (Hayes and Jennings 1988). However, frogs also have been found in ephemeral creeks and drainages and in ponds that may or may not have riparian vegetation. The largest densities of red-legged frogs currently are associated with deep pools with dense stands of overhanging willows (*Salix* spp.) and an intermixed fringe of cattails (*Typha latifolia*) (Jennings 1988). Red-legged frogs disperse upstream and downstream of their breeding habitat to forage and seek sheltering habitat.

During other parts of the year habitat includes nearly any area within 1-2 miles of a breeding site that stays moist and cool through the summer (Fellers 2005). According to Fellers (2005), this includes coyote bush (*Baccharis pilularis*) California blackberry thickets (*Rubus ursinus*), and root masses associated with willow (*Salix* species) and California bay trees (*Umbellularis californica*). Sometimes the non-breeding habitat used by red-legged frogs is extremely limited in size, for example, a 6-foot wide Coyote bush thicket growing along a tiny intermittent creek surrounded by heavily grazed grassland (Fellers 2005). Sheltering habitat for red-legged frogs is potentially all aquatic, riparian, and upland areas within the range of the species and includes any landscape features that provide cover, such as existing animal burrows, boulders or rocks, organic debris such as downed trees or logs, and industrial debris. Agricultural features such as drains, watering troughs, spring boxes, abandoned sheds, or hay ricks may also be used. Incised stream channels with portions narrower and depths greater than than 18 inches also may provide important summer sheltering habitat. Accessibility to sheltering habitat is essential for the survival of red-legged frogs within a watershed, and can be a factor limiting frog population numbers and survival.

Red-legged frogs do not have a distinct breeding migration (Fellers 2005). Adult frogs are often associated with permanent bodies of water. Some frogs remain at breeding sites all year while others disperse. Dispersal distances are typically less than 0.5 mile, with a few individuals moving up to 1-2 miles (Fellers 2005). Movements are typically along riparian corridors, but some individuals, especially on rainy nights, move directly from one site to another through normally inhospitable habitats, such as heavily grazed pastures or oak-grassland savannas (Fellers 2005). Dispersing frogs in northern Santa Cruz County traveled

distances from 0.25 mile to more than 2 miles without apparent regard to topography, vegetation type, or riparian corridors (Bulger *et al.* 2003).

Egg masses contain about 2,000 to 5,000 moderate sized (0.08 to 0.11 inches in diameter), dark reddish brown eggs and are typically attached to vertical emergent vegetation, such as bulrushes (*Scirpus* spp.) or cattails (Jennings *et al.* 1992). Red-legged frogs are often prolific breeders, laying their eggs during or shortly after large rainfall events in late winter and early spring (Hayes and Miyamoto 1984). Eggs hatch in 6 to 14 days (Jennings 1988). In coastal lagoons, the most significant mortality factor in the pre-hatching stage is water salinity (Jennings *et al.* 1992); eggs exposed to salinity levels greater than 4.5 parts per thousand results in 100 percent mortality (Jennings and Hayes 1990). Increased siltation during the breeding season can cause asphyxiation of eggs and small larvae. Larvae undergo metamorphosis 3.5 to 7 months after hatching (Storer 1925; Wright and Wright 1949; Jennings and Hayes 1990). Of the various life stages, larvae probably experience the highest mortality rates, with less than 1 percent of eggs laid reaching metamorphosis (Jennings *et al.* 1992). Sexual maturity normally is reached at 3 to 4 years of age (Storer 1925; Jennings and Hayes 1985). Red-legged frogs may live 8 to 10 years (Jennings *et al.* 1992). Populations of red-legged frogs fluctuate from year to year. When conditions are favorable red-legged frogs can experience extremely high rates of reproduction and thus produce large numbers of dispersing young and a concomitant increase in the number of occupied sites. In contrast, red-legged frogs may temporarily disappear from an area when conditions are stressful (*e.g.*, drought).

The diet of red-legged frogs is highly variable. Hayes and Tennant (1985) found invertebrates to be the most common food items. Vertebrates, such as Pacific tree frogs (*Hyla regilla*) and California mice (*Peromyscus californicus*), represented over half the prey mass eaten by larger frogs (Hayes and Tennant 1985). Hayes and Tennant (1985) found juvenile frogs to be active diurnally and nocturnally, whereas adult frogs were largely nocturnal. Feeding activity probably occurs along the shoreline and on the surface of the water (Hayes and Tennant 1985). The diet of red-legged frogs apparently has not been studied, but their diet probably is similar to other ranid frogs that feed on algae, diatoms, and detritus by grazing on the surface of rocks and vegetation (Fellers 2005; Kupferberg 1996a, 1996b).

Several researchers in central California have noted the decline and eventual local disappearance of California and northern red-legged frogs in systems supporting bullfrogs (*Rana catesbeiana*) (Jennings and Hayes 1990; Twedt 1993), red swamp crayfish (*Procambarus clarkii*), signal crayfish (*Pacifastacus leniusculus*), and several species of warm water fish including sunfish (*Lepomis* spp.), goldfish (*Carassius auratus*), common carp (*Cyprinus carpio*), and mosquitofish (*Gambusia affinis*) (L. Hunt, in litt. 1993; S. Barry, in litt. 1992; S. Sweet, in litt. 1993). Habitat loss, non-native species introduction, and urban encroachment are the primary factors that have adversely affected the red-legged frog throughout its range.

Several researchers in central California have noted the decline and eventual disappearance of red-legged frog populations once bullfrogs became established at the same site (L. Hunt, in litt. 1993; S. Barry, in litt. 1992; S. Sweet, in litt. 1993). This has been attributed to both predation and competition. Twedt (1993) documented bullfrog predation of juvenile northern red-legged frogs (*Rana aurora aurora*), and suggested that bullfrogs could prey on subadult northern red-legged frogs as well. In addition to predation, bullfrogs may have a competitive advantage over red-legged frogs; bullfrogs are larger, possess more generalized food habits (Bury and Whelan 1984), have an extended breeding season (Storer 1933) during which an individual female can produce as many as 20,000 eggs (Emlen 1977), and larvae are unpalatable to predatory fish (Kruse and Francis 1977). In addition to competition, bullfrogs also interfere with red-legged frog reproduction. Both California and northern red-legged frogs have been observed in amplexus with (mounted on) both male and female bullfrogs (Jennings and Hayes 1990; Twedt 1993; M. Jennings, in litt.1993; R. Stebbins in litt. 1993). Thus bullfrogs are able to prey upon and out-compete red-legged frogs, especially in sub-optimal habitat. The urbanization of land within and adjacent to red-legged frog habitat has also impacted red-legged frogs. These declines are attributed to channelization of riparian areas, enclosure of the channels by urban development that blocks red-legged frog dispersal, and the introduction of predatory fishes and bullfrogs. This
report further identifies the conversion and isolation of perennial pool habitats resulting from urbanization as an ongoing impact to red-legged frogs.

Mao *et al.* (1999 cited in Fellers 2005) reported northern red-legged frog (*Rana aurora aurora*) infected with an iridovirus, which also was presented in sympatric three-spined sticklebacks (*Gastrucleatus aculeatus*) in northwestern California. Ingles (1932a, 1932b, and 1933 cited in Fellers 2005) reported four species of trematodes from red-legged frogs, but he later synonomized two of them.

The recovery plan for red-legged frogs identifies eight Recovery Units (Service 2002). The establishment of these recovery units is based on the Recovery Team's determination that various regional areas of the species' range are essential to its survival and recovery. The status of the red-legged frog will be considered within the smaller scale of Recovery Units as opposed to the overall range. These Recovery Units are delineated by major watershed boundaries as defined by U.S. Geological Survey hydrologic units and the limits of the range of the red-legged frog. The goal of the draft recovery plan is to protect the long-term viability of all extant populations within each recovery unit. Within each recovery unit, core areas have been delineated and represent contiguous areas of moderate to high red-legged frog densities that are relatively free of exotic species such as bullfrogs. The goal of designating core areas is to protect metapopulations that, combined with suitable dispersal habitat, will allow for the long term viability within existing populations. This management strategy will allow for the recolonization of habitat within and adjacent to core areas that are naturally subjected to periodic localized extinctions, thus assuring the long-term survival and recovery of red-legged frogs.

The project area falls within Core Area # 12 (Petaluma Creek-Sonoma Creek). The conservation needs for this core area are: (1) protect existing populations; (2) reduce impacts of urban development; and (3) protect, restore, and/or create breeding and dispersal habitat.

The County of Sonoma is within the current range of the California red-legged frog, and there are 13 records in the California Natural Diversity Data Base. This species was observed in an abandoned man-made pond on Sonoma County Transfer Station property about 0.1 miles northwest of the project area. On August 27, 2004, a Caltrans biologist observed a California red-legged frog on August 27, 2004, in a plunge pool below directly below the double barrel culvert on Champlin Creek under the Sonoma County Transfer Station Road. There are no other reported sightings of the frog within the Champlin Creek watershed; however, there have been several historical sightings within a 10-mile radius of the project area. California red-legged frogs have been recorded moving 1-2 miles. Suitable habitat is located within and adjacent to the action area. Therefore, the Service has determined it is reasonable to conclude the red-legged frog inhabits the action area, based on the observations of animals in the vicinity, the biology and ecology of the animal, the presence of suitable habitat, as well as the recent observation of the animal in the action area.

California Red-Legged Frog Proposed Critical Habitat

On March 13, 2001, the final rule determining critical habitat for red-legged frogs was published in the Federal Register (U.S. Fish and Wildlife Service 2001). This rule established 31 critical habitat units based on three primary constituent elements: (a) essential aquatic habitat; (b) associated uplands; and (c) dispersal habitat connecting essential aquatic habitat. In November 2002, the U.S. District Court for the District of Columbia vacated most of the 2001 designation and ordered the Service to publish a new critical habitat proposal. On April 13, 2004, the Service re-proposed 4.1 million acres in 28 California counties as critical habitat for the frog (U.S. Fish and Wildlife Service 2004). This proposed rule basically re-proposes the same areas designated critical habitat in the 2001 final rule.

The Service is required to list the known primary constituent elements together with the critical habitat description. Such physical and biological features include, but are not limited to, space for individual and population growth and for normal behavior; food, water, air, light, minerals, or other nutritional or physiological requirements; cover or shelter; sites for breeding, reproduction, rearing (or development) of offspring; and habitats that are protected from disturbance or are representative of the historic geographical and ecological distributions of a species (U. S. Fish and Wildlife Service 2004).

Due to the complex life history and dispersal capabilities of the California red-legged frog, and the dynamic nature of the environments in which they are found, the primary constituent elements described below are found throughout the watersheds that are proposed as critical habitat. Special management, such as habitat rehabilitation efforts (e.g., removal of nonnative predators), may be necessary in the area designated. The proposed critical habitat for the

California red-legged frog provides for breeding and non-breeding habitats and for dispersal between these habitats, as well as allowing for expansion of frog populations vital to the recovery of the subspecies. The proposed critical habitat includes: (a) essential aquatic habitat; (b) associated uplands; and (c) dispersal habitat connecting essential aquatic habitat.

Aquatic habitat is essential for providing space, food, and cover, necessary to sustain all life stages of red-legged frogs. It consists of virtually all low-gradient fresh water bodies, including natural and man-made (e.g., stock) ponds, backwaters within streams and creeks, marshes, lagoons, and dune ponds, except deep lacustrine water habitat (e.g., deep lakes and reservoirs 50 acres or larger in size) inhabited by nonnative predators. The subspecies requires a permanent water source to ensure that aquatic habitat is available year-round. Permanent water sources can include, but are not limited to, ponds, perennial creeks, permanent plunge pools within intermittent creeks, seeps, and springs. Aquatic habitat used for breeding usually has a minimum deep water depth of 20 inches, and maintains water during the entire tadpole rearing season (at least March through July). During periods of drought, or less-than-average rainfall, these breeding sites may not hold water long enough for individuals to complete metamorphosis, but because they support breeding in wetter years these sites would still be considered essential breeding habitat. Ponds that support a small population of red-legged frogs, but are not surrounded by suitable upland habitat, or are cut off from other breeding ponds or permanent water sources by impassable dispersal barriers, do not have the primary constituent elements for proposed California red-legged frog critical habitat.

To be a primary constituent element for California red-legged frog proposed critical habitat, the aquatic components within the designated boundaries must include two or more breeding sites (as defined above) located within 1.25 miles of each other; at least one of the breeding sites must also be a permanent water source; or, the aquatic component can consist of two or more seasonal breeding sites with a permanent non-breeding water source located within 1.25 miles of each breeding site. California red-legged frogs have been documented to travel 2.25 miles in a virtual straight line migration from non-breeding to breeding habitats (U.S. Fish and Wildlife Service 2001a). In addition, breeding sites must be connected by dispersal habitat connecting essential aquatic habitat, described below.

Associated upland and riparian habitat is essential to maintain California red-legged frog populations associated with essential aquatic habitat. The associated uplands and riparian habitat provide food and shelter sites for California red-legged frogs, and assist in maintaining the integrity of aquatic sites by protecting them from disturbance and supporting the normal functions of the aquatic habitat. Key conditions include the timing, duration, and extent of water moving within the system, filtering capacity, and maintaining the habitat to favor red-legged frogs and discourage the colonization of nonnative species such as bullfrogs. Essential upland habitat consists of all upland areas within 300 feet, or no further than the watershed boundary, of the edge of the ordinary high-water mark of essential aquatic habitat (U.S. Fish and Wildlife Service 2001a).

Essential dispersal habitat provides connectivity among California red-legged frog breeding habitat (and associated upland) patches. While frogs can pass many obstacles, and do not require a particular type of habitat for dispersal, the habitat connecting essential breeding locations and other aquatic habitat must be free of barriers (e.g., a physical or biological feature that prevents frogs from dispersing beyond the feature) and at least 300 feet wide. Essential dispersal habitat consists of all upland and wetland habitat free of barriers that connects two or more patches of essential breeding habitat within 1.25 miles of one another. Dispersal barriers include heavily traveled roads (an average of 30 cars per hour from 10:00 p.m. to 4:00 a.m.) that possess no bridges or culverts; moderate to high density urban or industrial developments; and large reservoirs more than 50 acres in size. Agricultural lands such as row crops, orchards, vineyards, and pastures do not constitute barriers to California red-legged frog dispersal.

Dispersal habitat connecting essential aquatic habitat. Essential dispersal habitat provides connectivity among red-legged frog breeding habitat (and associated upland) patches. While frogs can pass many obstacles, and do not require a particular type of habitat for dispersal, the habitat connecting essential breeding locations and other aquatic habitat must be free of barriers (*e.g.*, a physical or biological feature that prevents frogs from dispersing beyond the feature) and at least 300 feet wide. Essential dispersal habitat consists of all upland and wetland habitat free of barriers that connects two or more patches of essential breeding habitat within 1.25 miles of one another. Dispersal barriers include heavily traveled roads (an average of 30 cars per hour from 10:00 p.m. to 4:00 a.m.) that possess no bridges or culverts; moderate to high density urban or industrial developments; and large reservoirs more than 50 acres in size. Agricultural lands such as row crops, orchards, vineyards, and pastures do not constitute barriers to red-legged frog dispersal.

The Stage Gulch Road project occurs within the American Canyon unit (Unit 11), which consists of watersheds within and adjacent to American Canyon Creek and Sulphur Springs Creek in Napa and Solano counties. Watersheds within this unit include Fagan Creek, a tributary to the Napa River, the Jameson Canyon watershed, and the Sky Valley and Pine Lake watersheds that flow into Lake Herman. The unit encompasses 27,779 acres of which 99 percent is privately owned. Unit 11 is owned by several subpopulations of the California red-legged frog.

Unit 15 has been affected by activities that destroy essential aquatic and upland habitats, and dispersal habitats providing connectivity between subpopulations. Degradation and loss of these habitats have occurred through urbanization, mining, inappropriate management of grazing, recreation, invasion of non-native plants, impoundments, water diversions, degraded water quality, and introduced predators.

The action area is relatively undeveloped, and it contains State Route 116, and several ranches. The surrounding habitat includes several vegetation communities, including valley

oak woodland, annual non-native grassland, seasonally wetted areas with associated vegetation, and ponds. As described in the *Stage Gulch Road Curve Correction and Re-alignment Project Biological Assessment for the California Red-Legged Frog (Rana aurora draytonii)*, and other sources of information, essentially all undeveloped lands on and adjacent to the project site contain the constituent elements of proposed California red-legged frog critical habitat, including essential aquatic habitat, associated uplands, and essential dispersal habitat.

Effects of the Proposed Action

California Red-legged Frog

The proposed Stage Gulch Road project may be directly injure, kill, harm, and harass individual California red-legged frogs by activities that disturb breeding, dispersal, and upland habitat of the animal. The proposed project would (1) result in the permanent loss of 4.41 acres of California red-legged frog habitat and 5.87 acres of temporary effects to 3 acres of California red-legged frog habitat; (2) result in the injury and death of an unknown number of red-legged frogs; (3) result in construction-related harassment, to the California red-legged frogs in the action area; (4) impede the dispersal of California red-legged frogs through the site while the action is in progress; (5) increase the likelihood of predation of the California red-legged ; (6) fragment and reduce the amount of red-legged frog habitat in Napa County.

Culvert extensions, replacements and road realignment will affect the ponding and flow of Champlin Creek. These impacts will be minimized by the restoration of the creek and by creating retention ponds along the realignment. A stilling pond will also be created to offset the effects to a plunge pool where a red-legged frog was sighted. Effects to riparian and upland habitat would affect approximately 2 acres including culvert extensions and replacements, and the inclusion of some fill slopes into the creek area. The location of the road realignment will avoid the need for cut and fill areas with in Champlin Creek and minimize the number of trees that will be removed from the riparian area. Widening of the highway will require the loss of trees which would reduce the shading of the water and increase the water temperature. The restoration and revegetation of the abandoned section of roadway and the restoration of Champlin Creek will offset the effects to the riparian and upland habitat.

Temporary effects are project activities that temporarily remove one or more essential components of the habitat of a listed species, but can be restored to pre-project conditions of equal or greater habitat value. In order for the effects to be considered temporary, the affected habitat of the listed species must be totally restored within two seasons. Ground disturbance resulting from the proposed project includes grading, excavating, and fill. Ground disturbance has potential to cause injury and mortality to individual California red-legged frogs occupying the action area. As part of the proposed project, the California Department of Transportation

has stated upon completion of the project, they will actively restore riparian habitat at the project site.

Changes in light level, such as bright lights used if there is nighttime road construction, may disrupt orientation in nocturnal animals. The range of anatomical adaptations to allow night vision is broad (Park 1940), and rapid increases in light can blind animals. For frogs, a quick increase in illumination causes a reduction in visual capability from which the recovery time may be minutes to hours (Buchanan 1993). After becoming adjusted to a light, frogs may be attracted to it as well (Jaeger and Hailman 1973). Laboratory experiments have demonstrated that dark-adapted frog species exposed to rapid increases in illumination may be temporarily "blinded" and unable to gather visual information on prey, predators, or conspecifics until their eyes adapt to the new illumination. Foraging may be facilitated in frog species that hunt around lights because the ambient illumination is increased to a level that allows the frogs to see prey or because lights attract abnormally large numbers of insects and other invertebrate prey. Experiments and anecdotal evidence indicates that both temporary and permanent changes to the night time illumination of an area may affect the reproduction, foraging, predator avoidance, and social interactions of frog species (Buchanan 2002). Reproductive behaviors may be altered by artificial lighting; it may be inhibited in frog species that normally reproduce only at very low illuminations. Female frogs of the species *Physalaemus pustulosus* are less selective about mate choice when light levels are increased, evidently preferring to mate quickly and avoid the increased predation risk of mating activity (Rand *et al.* 1997). Longcore and Rich (2002) reported that frogs in an experimental enclosure stopped mating activity during night football games, when lights from a nearby stadium increased sky glow. Mating choruses only resumes when the enclosure was covered to shield the frogs from light. Increased illumination may allow
predators to see frogs that may not normally be visible to them. Circadian rhythms, activity patterns, and intraspecific visual communication also may be affected by increased illuminations.

The presence of roads in an area could result in the introduction of chemical contaminants to the site. Contaminants could be introduced in several ways. Substances used in road building materials or to recondition roads can leach out or wash off roads into the adjacent habitat. Vehicle exhaust emissions can include hazardous substances which may concentrate in soils along roads. Heavy metals such as lead, aluminum, iron, cadmium, copper, manganese, titanium, nickel, zinc, and boron are all emitted in vehicle exhaust (Trombulak and Frissell 2000). Concentrations of organic pollutants (*e.g.*, Dioxins and polychlorinated biphenyls) are higher in soils along roads (Benfenati *et al.* 1992). Ozone levels are higher in the air near roads (Trombulak and Frissell 2000). Vehicles may leak hazardous substances such as motor oil and antifreeze. Although the quantity leaked by a given vehicle may be minute, these substances can accumulate on roads and then get washed into the adjacent environment by runoff during rain storms. An immense variety of substances could be introduced during accidental spills of materials. Such spills can result from small containers falling off passing

vehicles, or from accidents resulting in whole loads being spilled. Large spills may be partially or completely mitigated by clean-up efforts, depending on the substance.

Listed species using areas adjacent to roads could be exposed to any contaminants that are present at the site. Exposure pathways could include inhalation, dermal contact, direct ingestion, ingestion of contaminated soil or plants, or consumption of contaminated prey. Exposure to contaminants could cause short- or long-term morbidity, possibly resulting in reduced productivity or mortality. Carcinogenic substances could cause genetic damage resulting in sterility, reduced productivity, or reduced fitness among progeny. Contaminants also may have the same effect on prey species. This could result in reduced prey abundance and diminished local carrying capacity. The effects of contaminants may be difficult to detect. Morbidity or mortality likely would occur after the animals had left the contaminated site, and more subtle effects such as genetic damage could only be detected through intensive study and monitoring.

Preconstruction surveys for California red-legged frogs and relocating individuals may reduce injury or mortality. However, the capture and handling of red-legged frogs to remove them from a work area may result in the harassment, mortality or injury of individuals. Stress, injury and mortality may occur as a result of improper handling, containment and transport of individuals. Death and injury of individuals could occur at the time of trapping due to trapping accidents, or later in time subsequent to their release. Although survivorship for translocated red-legged frogs has not been estimated, survivorship of translocated wildlife, in general, are lower because of intraspecific competition, lack of familiarity with the availability of potential breeding, feeding, and sheltering habitats, and increased risk of predation. Caltrans proposes to reduce or prevent injury associated with the transport of individuals by use of a qualified biologist.

Construction equipment that has been used in different areas and with different species of amphibians including the California red-legged frog may transmit diseases by introducing contaminated soil and other material on the equipment. The chance of a disease being introduced into a new area is greater today than in the past due to the increasing occurrences of disease throughout amphibian populations in California and the United States. It is possible that chytrid fungus may exacerbate the effects of other diseases on amphibians or increase the sensitivity of the amphibian to environmental changes (e.g., water pH) that reduce normal immune response capabilities (Bosch *et al.* 2000).

Roads have been documented as barriers to movements by a diversity of species, and this effect varies with road size and traffic volume. The inhibition of animal movements caused by roads produces a significant effect by fragmenting habitats and populations (Joly and Morand 1997). Roads were found to be significant barriers to gene flow among common frogs (*Rana temporaria*) in Germany and this has resulted in genetic differentiation among populations separated by roads (Reh and Seitz 1990). Similarly, significant genetic subdivision was detected in bank voles (*Clethrionomys glarelous*) populations separated by a

164 foot wide highway in Germany (Gerlach and Musolf 2000). California red-legged frog mortality and injury occurs when the animals attempt to cross roads and are hit by cars, trucks, or motorcycles. The majority of strikes occur on rainy nights when the animals are moving to their breeding ponds. Thus, vehicle strikes are a direct source of mortality for the California tiger salamander. If vehicle strikes are sufficiently frequent in a given locality, this could result in reduced abundance of this animal. Especially problematic is the death of females prior to the laying of their eggs because this could result in the loss of an entire cohort, and therefore, reduced recruitment of new individuals into the population.

California red-legged frogs may be killed by predators. If water that is impounded during or after work activities creates favorable habitat for non-native predators, such as bullfrogs, crayfish, and centrarchid fishes, California red-legged frogs may incur abnormally high rates of predation. Additionally, when California red-legged frogs are concentrated in a small area at unusually high densities, native predators such as great blue herons (*Ardea herodias*), great egrets (*A. alba*), opossums (*Didelphis virginiana*), and raccoons (*Procyon lotor*) may feed on them opportunistically. This effect will be minimized by avoiding creation of ponded water as a result of project actions such as dewatering the work area. Trash left during or after project activities could attract predators to work sites, which could, in turn, prey on California red-legged frogs. For example, raccoons are attracted to trash and also prey opportunistically on both species. This potential effect can be reduced or avoided by careful control of waste products at all work sites.

California red-legged frogs moving away from disturbed areas may be driven into the open where they are more susceptible to injury or mortality due to foot traffic, vehicles, or other project and maintenance activities. In addition, displaced frogs may be forced into competition for food and living space with animals in adjacent areas.

California Red-Legged Frog Proposed Critical Habitat

This conference opinion on the proposed critical habitat for the California red-legged frog does not rely on the regulatory definition of "destruction or adverse modification" of critical habitat at 50 CFR § 402.02. Instead, we have relied upon the statute and the August 6, 2004, Ninth Circuit Court of Appeals decision in *Gifford Pinchot Task Force v. U.S. Fish and Wildlife Service* (No. 03-35279) to complete the following analysis with respect to the proposed critical habitat.

The proposed action is not expected to appreciably diminish the value of the proposed critical habitat for the California red-legged frog, or prevent proposed critical habitat from sustaining its role in the conservation and recovery of the species. The California Department of Transportation is proposing to restore riparian habitat on-site that will be suitable for the California red-legged frog. There is currently an existing highway within the action area, and, due to the proposed restoration activities, the proposed road work will not significantly interfere with the current capability of the proposed critical habitat to

satisfy essential requirements of the species. Constituent elements for the California red-legged frog will remain intact during and after project completion, or will be restored, and will continue to provide suitable habitat.

Cumulative Effects

Cumulative effects include the effects of State, Tribal, local, or private actions that are reasonably certain to occur in the action area considered for this biological opinion. Future actions that are unrelated to the proposed action are not considered in this section because they require separate consultation pursuant to section 7 of the Act.

From 1995 to 2020, the human population is projected to increase by 18 percent for the San Francisco Bay hydrologic region, while at the same time agricultural crop land use in the region is projected to remain around 65,000 acres (California Department of Water Resources 998). According the California Department of Forestry, from 2000 to 2020, the human population within counties in the Bay Area region is expected to grow by 29 percent (5.3 million people to 6.8 million people), and by 60 percent from 2000 to 2040 (5.3 million people to 8.4 million people) (California Department of Forestry 1998). There will likely be many other development projects that occur during this timeframe due to increases in human population growth that will continue to imperil the California red-legged frog.

Numerous non-Federal activities continue to negatively impact the frog in the action area. Habitats are lost or degraded as a result of urbanization, road and utility construction and maintenance, overgrazing, agricultural expansion, and water irrigation and storage projects that may not be funded, permitted, or constructed by a Federal agency. Other threats include contamination, poisoning, increased predation, and competition from non-native species associated with human development. Small private actions that may impact listed species, such as conversion of land, ground squirrel reduction efforts, mosquito control, and residential development, may occur without consultation with or authorization by the Service. Caltrans has identified two projects that may adversely affect the red-legged frog.

Conclusion

After reviewing the current status of the red-legged frog, the environmental baseline for the action area, the effects of the proposed project, and the cumulative effects, it is the Service's biological opinion that the Stage Gulch Road (State Route 116) Curve Correction and Realignment Project, as proposed, is not likely to jeopardize the continued existence of the red-legged frog. We base our determination on the following: effects to red-legged frogs will be minimized, any red-legged frogs found on-site would be relocated to suitable habitat, and additional habitat for the red-legged frog will be provided by the creation of retention ponds and a stilling basin, the removal of the existing roadway at the realignment, and creek restoration. Critical habitat has been proposed for the red-legged frog in the action area, but none will be adversely modified or destroyed.

INCIDENTAL TAKE STATEMENT

Section 9 of the Act and Federal regulation pursuant to section 4(d) of the Act prohibit the take of endangered and threatened species, respectively, without special exemption. Take is defined as harass, harm, pursue, hunt, shoot, wound, kill, trap, capture or collect, or to attempt to engage in any such conduct. Harass is defined by the Service as an intentional or negligent act or omission which creates the likelihood of injury to a listed species by annoying it to such an extent as to significantly disrupt normal behavioral patterns which include, but are not limited to, breeding, feeding, or sheltering. Harm is defined by the Service to include significant habitat modification or degradation that results in death or injury to listed species by impairing behavioral patterns including breeding, feeding, or sheltering. Incidental take is defined as take that is incidental to, and not the purpose of, the carrying out of an otherwise lawful activity. Under the terms of section 7(b)(4) and section 7(o)(2), taking that is incidental to and not intended as part of the agency action is not considered to be prohibited taking under the Act provided that such taking is in compliance with this Incidental Take Statement.

The measures described below are non-discretionary, and must be implemented by the Federal Highway Administration so that they become binding conditions of project authorization for the exemption in section 7(o)(2) to apply. The Federal Highway Administration has a continuing duty to regulate the activity covered by this Incidental Take Statement. If the Federal Highway Administration (1) fails to require the applicant to adhere to the terms and conditions of the incidental take statement through enforceable terms that are added to the permit or grant document, and/or (2) fails to retain oversight to ensure compliance with these terms and conditions, the protective coverage of section 7(o)(2) may lapse.

Amount of Incidental Take

The Service expects that incidental take of red-legged frogs may occur during the proposed action. The extent of take will be difficult to detect or quantify because of the elusive nature of this species. Additionally, their relatively small size and cryptic coloration make the finding of a dead specimen unlikely. Seasonal population fluctuations also may mask the ability to determine the exact extent of take. Therefore, the Service is estimating that all California red-legged frogs inhabiting 10.28 acres (4.41 acres permanent effects and 5.87 acres of temporary effects) of red-legged frog habitat will be subject to incidental take. Upon implementation of the Reasonable and Prudent Measures, incidental take associated with the Stage Gulch Road (State Route 116) Curve Correction and Realignment project in the form of harm, harassment, capture, injury, and death of the red-legged frog caused by habitat loss and construction activities will become exempt from the prohibitions described under section 9 of the Act.

Effect of the Take

The Service has determined that this level of anticipated take is not likely to result in jeopardy to the red-legged frog. No critical habitat for the red-legged frog has been designated in the project area; therefore, none will be adversely modified or destroyed.

Reasonable and Prudent Measure

The Service believes the following reasonable and prudent measure is necessary and appropriate to minimize the effects to the California red-legged frog:

1. The California Department of Transportation shall implement conservation measures for the California red-legged frog to minimize (1) the effects of the loss of habitat that will occur as a result of the project; (2) the potential for harassment, harm, injury, and mortality to this listed species; and (3) the potential for inadvertent capture or entrapment of federally listed wildlife species during construction activities.

2. The California Department of Transportation shall ensure their compliance with this biological opinion.

Terms and Conditions

In order to be exempt from the prohibitions of section 9 of the Act, the Federal Highway Administration must comply with the following terms and conditions, which implement the reasonable and prudent measure described above. These terms and conditions are non-discretionary.

A. The following Term and Conditions will implement Reasonable and Prudent Measure number one (1):

   1. The California Department of Transportation shall minimize the potential for harm, harassment, injury, or killing of the California red-legged frog resulting from project related activities by implementation of the avoidance and minimization measures as described in the and appearing in the *Route 116 Stage Gulch Road Curve Improvement and Realignment Project Initial Study with Proposed Mitigated Negative Declaration*; *Stage Gulch Road Curve Correction and Re-alignment Project Natural Environment Study Report*; *Stage Gulch Road Curve Correction and Re-alignment Project BiologicalAssessment for the California Red-Legged Frog (Rana aurora draytonii)*; and the *Project Description* of this biological opinion.

   2. The California Department of Transportation shall include Special Provisions that include the avoidance and minimization measures of this biological opinion in the solicitation for bid information. In addition, the California Department of

Transportation will educate and inform contractors involved in the project as to the requirements of the biological opinion.

3. The California Department of Transportation biologist shall have oversight over implementation of all the Terms and Conditions in this biological opinion, and shall have the authority to stop project activities, through communication with the California Department of Transportation Resident Engineer, if any of the requirements associated with these Terms and Conditions are not being fulfilled. If biologist/construction liaison has requested a stop work due to take of any of the listed species the Service and the California Department of Fish and Game will be notified within one (1) working day via electronic mail or telephone.

4. All construction activity shall be confined within the boundaries of the Stage Gulch Road project, which may include temporary access roads, haul roads, and staging areas specifically designated and marked for these purposes. At no time shall equipment or personnel be allowed to adversely affect areas outside the project site without authorization from the Service.

5. Tightly woven fiber netting or similar material shall be used for erosion control or other purposes at the Stage Gulch Road project site to ensure that the red-legged frog does not get trapped. This limitation will be communicated to the contractor through use of Special Provisions included in the bid solicitation package.

6. Use of pesticides at the proposed project site shall be utilized in such a manner to prevent primary or secondary poisoning of listed species, and the depletion of prey populations on which they depend. All uses of such compounds hall observe label and other restrictions mandated by the U.S. Environmental Protection Agency, California Department of Pesticide Regulation, and other appropriate State and Federal regulations, as well as additional project-related restrictions deemed necessary by the Service or the California Department of Fish and Game.

7. Project employees shall be directed to exercise caution when commuting within the habitats of the red-legged frog. A 20-mile per hour speed limit will be strongly encouraged on unpaved roads within listed species habitats.

8. Cross-country travel by vehicles shall be prohibited, unless authorized by the Service.

9. Project employees shall be provided with written guidance governing vehicle use, speed limits on unpaved roads, fire prevention, and other hazards.

10. The Resident Engineer or their designee shall be responsible for implementing these conservation measures and shall be the point of contact for the proposed project.

11. All grindings and asphaltic-concrete waste shall be stored within previously disturbed areas absent of habitat and at a minimum of 150 feet from any culvert, wash, pond, vernal pool, or stream crossing.

12. The Stage Gulch Road Project construction area shall be delineated with high visibility temporary fencing at least four (4) feet in height, flagging, or other barrier to prevent encroachment of construction personnel and equipment onto any sensitive areas during project work activities. Such fencing shall be inspected and maintained daily until completion of the project. The fencing will be removed only when all construction equipment is removed from the site. Actions within the project area shall be limited to vehicle and equipment operation on existing roads. No project activities will occur outside the delineated project construction area.

13. Maintenance and construction excavations greater than two (2) feet deep either shall be covered or filled in at the end of each working day. The trench or pit shall be surveyed in the morning and late afternoon hours to ascertain whether the California red-legged frog has fallen into the trench or pit. If a California red-legged frog is discovered trapped in a trench or pit, the animal shall be carefully captured by the Caltrans biologist and released at a secure location, such as the entrance to a ground squirrel burrow, within walking distance and is outside of the construction area. The Service shall be notified by telephone and electronic mail within one (1) working day of the incident.

14. As described in the *Project Description* and other documents provided by Caltrans the permanent effects to red-legged frog habitat will be compensated for at a 3:1 ratio (13.23 acres) and the temporary effects to red-legged frog habitat will be compensated for at a 0.1:1 ratio (0.587) for a total of 13.817 acres. A successful restoration of Champlin Creek will reduce the needed compensation by 4.77 acres, for a total of 9.04 acres of offsite compensation. At least sixty (60) calendar days prior to ground breaking, the California Department of Transportation shall permanently protect 9.04 acres for the California red-legged frog from a Service-approved conservation bank or other location approved by the Service.

15. As described at *Project Description* of this biological opinion and other documents provided by Caltrans, Caltrans shall complete a Service-approved restoration plan for the 4.77 acres of temporarily affected habitat at least six (6) calendar months prior to the date that ground breaking is initiated at the proposed project. The plan shall include restoration and revegetation work associated with temporary effects using native California plant species from on-site or local sources (i.e., local ecotype). Plant materials from non-local sources shall be allowed only with written authorization from the Service. To the maximum extent practicable (i.e., presence of natural lands), topsoil shall be removed, cached, and returned to the site according to successful restoration protocols. Loss of soil from run-off or erosion shall be prevented with

straw bales, straw wattles, or similar means provided they do not entangle, block escape or dispersal routes of listed animal species. The restoration plan shall contain specific quantifiable criteria to evaluate the success of the restoration and include annual reports for a period of at least three growing seasons after the restoration plan is implemented.

16. Only a California Department of Transportation biologist who is familiar with the biology and ecology of the California red-legged frog, or a Service-approved biologist will be allowed to trap or capture listed species.

B. The following Term and Conditions will implement Reasonable and Prudent Measure number two (2):

1. If requested, during or upon completion of construction activities, the on-site biologist, and/or a representative from California Department of Transportation shall accompany Service or California Department of Fish and Game personnel on an on-site inspection of the site to review project effects to the California red-legged frog and its habitat.

2. The Federal Highway Administration shall ensure California Department of Transportation complies with the *Reporting Requirements* of this biological opinion.

Reporting Requirements

The Service and the California Department of Fish and Game must be notified within one (1) working day of the discovery of death or injury to a California red-legged frog that occurs due to project related activities or is observed at the project site. Injured California red-legged frogs must be cared for by a licensed veterinarian or other qualified person, such as a qualified Caltrans biologist; dead individuals of this listed species should be preserved according to standard museum techniques and held in a secure location. Notification must include the date, time, and location of the incident or of the finding of a dead or injured animal clearly indicated on a USGS 7.5 minute quadrangle and other maps at a finer scale, as requested by the Service, and any other pertinent information. The Service contacts are Chris Nagano, Deputy Assistant Field Supervisor at the Sacramento Fish and Wildlife Office (916/414-6600), and Scott Heard, Resident Agent-in-Charge of the Service's Law Enforcement Division at 916/414-6660.

The California Department of Transportation shall submit a post-construction compliance report prepared by the on-site biologist to the Sacramento Fish and Wildlife Office within sixty (60) calendar days of the date of the completion of construction activity. This report shall detail (i) dates that construction occurred; (ii) pertinent information concerning the success of the project in meeting compensation and other conservation measures; (iii) an explanation of failure to meet such measures, if any; (iv) known project effects on the

California red-legged frog, if any; (v) occurrences of incidental take of any of this listed species, if any; and (vi) other pertinent information.

CONSERVATION RECOMMENDATIONS

Sections 2(c) and 7(a)(1) of the Act direct Federal agencies to utilize their authorities to further the purposes of the Act by carrying out conservation programs for the benefit of endangered and threatened species and the ecosystems upon which they depend. Conservation recommendations are discretionary agency activities to minimize or avoid the adverse effects of a proposed action on listed species or critical habitat, to help implement recovery plans, or to develop information.

1. The California Department of Transportation should assist the Service in implementing recovery actions identified in the *Recovery Plan for the California red-legged Frog* (U.S. Fish and Wildlife Service 2002b) .

2. The California Department of Transportation should incorporate culverts, tunnels, or bridges on highways and other roadways that allow safe passage by the California red-legged frog, other listed animals, and wildlife. The California Department of Transportation should include photographs, plans, and other information in their biological assessments if they incorporate "wildlife friendly" crossings into their projects.

3. The Federal Highway Administration and the California Department of Transportation should consider participating in the planning for a regional habitat conservation plan for the California red-legged frog, other listed species, and sensitive species.

4. The California Department of Transportation should consider establishing functioning preservation and creation conservation banking systems to further the conservation of the California red-legged frog, and other appropriate species. Such banking systems also could possibly be utilized for other required compensation (i.e., seasonal wetlands, riparian habitats, *etc.*) where appropriate.

5. Sightings of any listed or sensitive animal species should be reported to the California Natural Diversity Database of the California Department of Fish and Game. A copy of the reporting form and a topographic map clearly marked with the location where the animals were observed also should be provided to the Service.

6. The California Department of Transportation should provide habitat for bats, including surfaces for bat roosts on the underside of bridges and other structures whenever possible.

In order for the Service to be kept informed of actions minimizing or avoiding adverse effects or benefiting listed species or their habitats, the Service requests notification of the implementation of any conservation recommendations.

REINITIATION--CLOSING STATEMENT

This concludes formal consultation on the Stage Gulch Road (State Route 116) Curve Correction and Realignment Project in Sonoma County, California. As provided in 50 CFR § 402.16, reinitiation of formal consultation is required where discretionary Federal agency involvement or control over the action has been maintained (or is authorized by law) and if: (1) the amount or extent of incidental take is exceeded; (2) new information reveals effects of the agency action that may affect listed species or critical habitat in a manner or to an extent not considered in this opinion; (3) the agency action is subsequently modified in a manner that causes an effect to the listed species or critical habitat that was not considered in this opinion; or (4) a new species is listed or critical habitat designated that may be affected by the action. In instances where the amount or extent of incidental take is exceeded, any operations causing such take must cease pending reinitiation.

Please contact the Deputy Assistant Field Supervisor for Endangered Species or the Chief of our Coast-Bay-Delta Branch at the letterhead address or at 916/414-6600. If you have any questions regarding this biological opinion on the effects of the Stage Gulch Road (State Route 116) project on the threatened California red-legged frog

Sincerely,

Cay C. Goude
Acting Field Supervisor

cc:
ARD-ES, Portland, Oregon
Carl Wilcox, California Department of Fish and Game, Yountville, California
Chuck Morton, California Department of Transportation, Oakland, California

Literature Cited

Benfenati, E., S. Valzacchi, G. Maniani, L. Airoldi, and R. Farnelli. 1992. PCDD, PCDF, PCB, PAH, cadmium, and lead in roadside soil: relationship between road distance and concentration. Chemosphere 24:1077-1083.

Bosch, J., I. Martinez-Solano and M. Garcia-Paris. 2000. Evidence of a chytrid fungus infection involved in the decline of the common midwife toad (*Alytes obstetricanus*) in protected areas of central Spain. Biological Conservation 97: 331-337.

Buchanan, B. W. 1993. Effects of enhanced lighting on the behaviour of nocturnal frogs. Animal Behavior 45: 89-899.

_____ 2002. Observed and potential effects of artificial light on the behavior, ecology, and evolution of nocturnal frogs. Paper presented at the Urban Wildlands Group's Ecological Consequences of Artificial Night Lighting. February 23-24, 2002. University of California, Los Angeles, California.

Bulger, J. B., Scott, Jr., N. J., Seymore, R. B. 2003. Terrestrial activity and conservation of adult California red-legged frogs (*Rana aurora draytonii*) in coastal forests and grasslands. Biological Conservation 110: 85-95.

Bury, R.B., and J.A. Whelan. 1984. Ecology and management of the bullfrog. U.S. Fish and Wildlife Service Resource Publication 155.

California Department of Fish and Game. 2004. RAREFIND. Natural Heritage Division, Sacramento, California

Emlen, S.T. 1977. "Double clutching" and its possible significance in the bullfrog. Copeia 1977(4):749-751.

Fellers, G. 2005. *Rana draytonii* Baird and Girard, 1852b California red-legged frog. Pages 552-554 *in* M. Lannoo (ed.). Amphibian declines the conservation status of United States species. University of California Press. Berkeley, California.

Gerlach, G., and K. Musolf. 2000. Fragmentation of landscapes as a cause for genetic subdivision in bank voles. Conservation Biology 14:1066-1074.

Hayes, M.P. and M.R. Jennings. 1988. Habitat correlates of distribution of the California red-legged frog (*Rana aurora draytonii*) and the foothill yellow-legged frog (*Rana boylii*): Implications for management. Pages 144-158 *in* R. Sarzo, K. E. Severson, and D. R. Patton (technical coordinators). Proceedings of the Symposium on the

Management of Amphibians, Reptiles, and Small Mammals in North America. U.S.D.A. Forest Service General Technical Report RM-166.

Hayes, M.P. and D.M. Krempels. 1986. Vocal sac variation among frogs of the genus *Rana* from western North America. Copeia 1986(4):927-936.

Hayes, M.P. and M.M. Miyamoto. 1984. Biochemical, behavioral and body size differences between *Rana aurora aurora* and *R. a. draytonii*. Copeia 1984(4):1018-1022.

Hayes, M. P., Tennant, M. R. 1985. Diet and Feeding Behavior of the California Red-legged Frog *Rana aurora draytonii* (Ranidae). Southwestern Naturalist 30(4):601-605.

Ingles, L.G. 1932a. Four new species of *Heamatoloechus* (Trematoda) from California. University of California Publications in Zoology 37: 189-201.

_____ 1932b. *Cephalogonimus brevicirrus*, a new species of trematoda from the intestine of *Rana aurora* from California. University of California Publications in Zoology 37:203-210.

_____ 1933. Studies on the structure and life history of *Ostiolum oxyorchis* (Ingles) from the California red-legged frog *Rana aurora draytonii*. University of California Publication in Zoology 39:135-162.

Jennings, M.R. 1988. Natural history and decline of native ranids in California. Pages 61-72 *in* H.F. DeLisle, P.R. Brown, B. Kaufman, and B.M. McGurty (eds). Proceedings of the conference on California Herpetology Southwestern Herpetologists Society Special Publication 4:1-143.

Jennings, M.R., M.P. Hayes, and D.C. Holland. 1992. A petition to the U.S. Fish and Wildlife Service to place the California red-legged frog (*Rana aurora draytonii*) and the western pond turtle (*Clemmys marmorata*) on the list of endangered and threatened wildlife and plants. 21 pp.

Jennings, M.R. and M.P. Hayes. 1985. Pre-1900 overharvest of California red-legged frog (*Rana aurora draytonii*): The inducement for bullfrog (*Rana catesbeiana*) introduction. Herpetological Review 31:94-103.

_____ 1990. Final report of the status of the California red-legged frog (*Rana aurora draytonii*) in the Pescadero Marsh Natural Preserve. Prepared for the California Department of Parks and Recreation under contract No. 4-823-9018 with the California Academy of Sciences. 56 pp.

Joly, P. and A. Morand. 1997. Amphibian diversity and land-water ecotones. Pages 161-182 *in* J.P. Bravard and R. Juge (eds.). Biodiversity in land-water ecotones. Man and Biosphere series volume 18. United Nations Educational, Scientific, and Cultural Organization, Paris, France.

Kruse, K.C. and M.G. Francis. 1977. A predation deterrent in larvae of the bullfrog, *Rana catesbeiana*. Transactions of the American Fisheries Society 106(3):248-252.

Kupfergerg, S.J. 1996a. Hydrologic and geomorphic factors affecting conservation of a river-breeding frog (*Rana boylii*). Ecological applications 6: 1322-1344.

_____ 1996b. The ecology of native tadpoles (*Rana boylii* and *Hyla regilla*) and the impacts of invading bullfrogs (*Rana catesbeiana*) in a northern California river. PhD dissertation. University of California, Berkeley, California.

Longcore, T., R. Mattoni, G. Pratt, and C. Rich. In Press. On the perils of ecological restoration: lessons from the El Segundo blue butterfly. *In* J.E. Keeley (ed.). 2nd Interface between ecology and land development in Califoria. Occidental College, Los Aneles, Caliifornia.

Longcore, T. and C. Rich. 2004. Ecological light pollution. Front. Ecol. Environ. 2(4):191-198.

Mao, J., D.E. Green, G.M. Fellers, and V.G. Chincar. 1999. Molecular characterization of iridoviruses isolated from sympatric amphibians and fish. Virus Research 6: 45-52.

Park, O. 1940. Nocturnalism – the development of a problem. Ecological Monographs 10:485-536.

Rand, A.S., M.E. Bridarolli, L. Dries, and M.J. Ryan. 1997. Light levels influence female choice in Tungara frogs: predation risk assessment? Copeia 1997:447-450.

Reh, W. and A. Seitz. 1990. The influence of land use on the genetic structure of populations of the common frog (*Rana temporaria*). Biological Conservation 54:239-249.

Stebbins, R.C. 2003. A field guide to western reptiles and amphibians. Houghton Mifflin Company, Boston, Massachusetts.

Storer, T. I. 1925. A synopsis of the amphibia of California. University of California Publications in Zoology 27:1-1-342.

Storer, T.I. 1933. Frogs and their commercial use. California Fish and Game 19(3)203-213.

Trombulak, S.C., and C.A. Frissell. 2000. The ecological effects of roads on terrestrial and aquatic communities: a review. Conservation Biology 14:18-30.

Twedt, B. 1993. A comparative ecology of *Rana aurora* Baird and Girard and *Rana catesbeiana* Shaw at Freshwater Lagoon, Humboldt County, California. Master of Science thesis. Humboldt State University, Arcata, California. 53 pp + appendix.

United States Fish and Wildlife Service 1996. Endangered and threatened wildlife and plants; determination of threatened status for the California Red-Legged Frog. **Federal Register** 61:25813-25833.

_____ 2001. Endangered and threatened wildlife and plants; final determinations of critical habitat for the California Red-legged Frog; Final Rule. **Federal Register** 66:14626-14758.

_____ 2002. Recovery Plan for the California Red-legged Frog (*Rana aurora draytonii*). Portland, Oregon. viii + 173 pp.

_____ 2004. Endangered and threatened wildlife and plants; proposed designation of critical habitat for the California red-legged frog (*Rana aurora draytonii*) proposed rule. **Federal Register** 69:19620-19642.

Wright, A.H. and A.A. Wright. 1949. Handbook of frogs and toads of the United States and Canada. Comstock Publishing Company, Inc., Ithaca, New York. xii + 640 pp.

2) California Department of Fish and Game 1602 Streambed Alteration Agreement Notification Number 1600-2008-0451-3.

STATE OF CALIFORNIA THE RESOURCES AGENCY ARNOLD SCHWARZENEGGER, GOVERNOR
DEPARTMENT OF FISH AND GAME
BAY DELTA REGION
(707) 944-5520
Mailing address:
POST OFFICE BOX 47
YOUNTVILLE CALIFORNIA 94599
Street address:
7329 SILVERADO TRAIL
NAPA CALIFORNIA 94558

May 6, 2009

Jeffrey Jensen
California Department of Transportation
111 Grand Avenue
Oakland, CA 94623

Notification Number: 1600-2008-0451-3

1602 LAKE AND STREAMBED ALTERATION AGREEMENT

This agreement is issued by the Department of Fish and Game pursuant to Division 2, Chapter 6 of the California Fish and Game Code:

WHEREAS, the Applicant, Jeffrey Jensen/California Department of Transportation, submitted a signed NOTIFICATION proposing to substantially divert or obstruct the natural flow of, or substantially change the bed, channel, or bank of, or use material from the streambed or lake of the following water: Champlin Creek, located in the County of Sonoma, State of California; and

WHEREAS, the Department has determined that such operations may substantially adversely affect existing fish and wildlife resources including water quality, hydrology, aquatic or terrestrial plant or animal species; and

WHEREAS, the project has undergone the appropriate review under the California Environmental Quality Act; and

WHEREAS, the Applicant shall undertake the project as proposed in the signed PROJECT DESCRIPTION and PROJECT CONDITIONS (attached). If the Applicant changes the project from that described in the PROJECT DESCRIPTION and does not include the PROJECT CONDITIONS, this agreement is no longer valid; and

WHEREAS, the agreement shall expire on December 31, 2013; with the work to occur between June 15 and October 15; and

WHEREAS, nothing in this agreement authorizes the Applicant to trespass on any land or property, nor does it relieve the Applicant of the responsibility for compliance with applicable Federal, State, or local laws or ordinances. Placement, or removal, of any material below the level of ordinary high water may come under the jurisdiction of the U. S. Army Corps of Engineers pursuant to Section 404 of the Clean Water Act;

THEREFORE, the Applicant may proceed with the project as described in the PROJECT DESCRIPTION and PROJECT CONDITIONS. A copy of this agreement, with attached PROJECT DESCRIPTION and PROJECT CONDITIONS, shall be provided to contractors and subcontractors and shall be in their possession at the work site.

Failure to comply with all conditions of this agreement may result in legal action.

This agreement is approved by:

Charles Armor
Regional Manager
Bay Delta Region

cc: Melissa Escaron
Warden Georges
Lieutenant Riske

FOR DEPARTMENT USE ONLY				
Date Received	Amount Received	Account Date	Date Completed	Application No.
9/22/08	$29,300.00			1600-2008-0451-3

CK #082-265089
CA Dept of Transportation

Escaron
George
Risk

STATE OF CALIFORNIA
DEPARTMENT OF FISH AND GAME
NOTIFICATION OF LAKE OR STREAMBED ALTERATION

Complete EACH field, unless otherwise indicated, following the enclosed instructions and submit ALL required enclosures. Attach additional pages, if necessary.

1. APPLICANT PROPOSING PROJECT

Name	Jeffrey G. Jensen, Office Chief of Biological Sciences and Permits		
Business/Agency	California Department of Transportation (Caltrans) District 4		
Street Address	111 Grand Ave.		
City, State, Zip	Oakland CA 94623		
Telephone	(510) 622-8729	Fax	(510) 286-6374
Email	jeffrey.jensen@dot.ca.gov		

FISH & GAME
SEP 22 2008
YOUNTVILLE

2. CONTACT PERSON (*Complete only if different from applicant*)

Name	Christopher States, Senior Biologist, Office of Biological Sciences and Permits		
Street Address	111 Grand Ave.		
City, State, Zip	Oakland CA 94623		
Telephone	(510) 286-7185	Fax	
Email			

3. PROPERTY OWNER (*Complete only if different from applicant*)

Name			
Street Address			
City, State, Zip			
Telephone		Fax	
Email			

4. PROJECT NAME AND AGREEMENT TERM

A. Project Name	Stage Gulch Road Curve Correction and Re-alignment Project
B. Agreement Term Requested	☑ Regular (*5 years or less*) ☐ Long-term (*greater than 5 years*)

C. Project Term		D. Seasonal Work Period		E. Number of Work Days
Beginning (*year*)	Ending (*year*)	Start Date (*month/day*)	End Date (*month/day*)	
2009	2011	06/15	10/15	440.00

5. AGREEMENT TYPE

Check the applicable box. If box B, C, D, or E is checked, complete the specified attachment.

A.	☑ Standard *(Most construction projects, excluding the categories listed below)*	
B.	☐ Gravel/Sand/Rock Extraction (*Attachment A*)	*Mine I.D. Number:* _____
C.	☐ Timber Harvesting (*Attachment B*)	THP *Number:* _____
D.	☑ Water Diversion/Extraction/Impoundment (*Attachment C*)	*SWRCB Number:* _____
E.	☐ Routine Maintenance (*Attachment D*)	
F.	☐ DFG Fisheries Restoration Grant Program (FRGP)	*FRGP Contract Number:* _____
G.	☐ Master	
H.	☐ Master Timber Harvesting	

6. FEES

Please see the current fee schedule to determine the appropriate notification fee. Itemize each project's estimated cost and corresponding fee. *Note: The Department may not process this notification until the correct fee has been received.*

	A. Project	B. Project Cost	C. Project Fee
1	Stage Gulch Road Curve Correction and Re-alignment Project		
2	See Attachment A: Steam Crossing Itemization Table		
3			
4			
5			
		D. Base Fee *(if applicable)*	
		E. TOTAL FEE ENCLOSED	$29,300.00

7. PRIOR NOTIFICATION OR ORDER

A. Has a notification previously been submitted to, or a Lake or Streambed Alteration Agreement previously been issued by, the Department for the project described in this notification?

☐ Yes (*Provide the information below*) ☑ No

Applicant: _____ Notification Number: _____ Date: _____

B. Is this notification being submitted in response to an order, notice, or other directive ("order") by a court or administrative agency (including the Department)?

☑ No ☐ Yes (*Enclose a copy of the order, notice, or other directive. If the directive is not in writing, identify the person who directed the applicant to submit this notification and the agency he or she represents, and describe the circumstances relating to the order.*)

☐ *Continued on additional page(s)*

8. PROJECT LOCATION

A. Address or description of project location.

(Include a map that marks the location of the project with a reference to the nearest city or town, and provide driving directions from a major road or highway)

Caltrans is proposing a roadway improvement project in Sonoma County consisting of roadway widening, curve correction, and partial re-alignment of State Route 116 between post miles 41.8 and 44.7. The project extends from west from Arnold Drive to Adobe Road between the cities of Sonoma and Petaluma.

Driving directions: SR 101 north from San Francisco, take SR 116 east to the project site starting at post mile 41.8

See Attachment B: Project Location Map

☑ *Continued on additional page(s)*

B. River, stream, or lake affected by the project.	Champlin Creek
C. What water body is the river, stream, or lake tributary to?	San Pablo Bay
D. Is the river or stream segment affected by the project listed in the state or federal Wild and Scenic Rivers Acts?	☐ Yes ☑ No ☐ Unknown
E. County	Sonoma County

F. USGS 7.5 Minute Quad Map Name	G. Township	H. Range	I. Section	J. ¼ Section
Petaluma River, Glen Ellen, Sears Point, Sonoma	5N	4W-5W		

☐ *Continued on additional page(s)*

K. Meridian (*check one*)	☐ Humboldt ☑ Mt. Diablo ☐ San Bernardino

L. Assessor's Parcel Number(s)

See Attachment C

☑ *Continued on additional page(s)*

M. Coordinates (*If available, provide at least latitude/longitude or UTM coordinates and check appropriate boxes)*

Latitude/Longitude	*Latitude:* 38.25598		*Longitude:* 122.36371	
	☐ Degrees/Minutes/Seconds	☑ Decimal Degrees		☐ Decimal Minutes
UTM	*Easting:*	*Northing:*		☐ Zone 10 ☐ Zone 11
Datum used for Latitude/Longitude or UTM		☑ NAD 27		☐ NAD 83 or WGS 84

9. PROJECT CATEGORY AND WORK TYPE *(Check each box that applies)*

PROJECT CATEGORY	NEW CONSTRUCTION	REPLACE EXISTING STRUCTURE	REPAIR/MAINTAIN EXISTING STRUCTURE
Bank stabilization – bioengineering/recontouring	☑	☐	☐
Bank stabilization – rip-rap/retaining wall/gabion	☑	☐	☐
Boat dock/pier	☐	☐	☐
Boat ramp	☐	☐	☐
Bridge	☐	☐	☐
Channel clearing/vegetation management	☐	☐	☐
Culvert	☐	☑	☐
Debris basin	☐	☐	☐
Dam	☐	☐	☐
Diversion structure – weir or pump intake	☐	☐	☐
Filling of wetland, river, stream, or lake	☑	☐	☐
Geotechnical survey	☐	☐	☐
Habitat enhancement – revegetation/mitigation	☑	☐	☐
Levee	☐	☐	☐
Low water crossing	☐	☐	☐
Road/trail	☐	☐	☐
Sediment removal – pond, stream, or marina	☐	☐	☐
Storm drain outfall structure	☐	☐	☐
Temporary stream crossing	☑	☐	☐
Utility crossing : Horizontal Directional Drilling	☐	☐	☐
Jack/bore	☐	☐	☐
Open trench	☐	☐	☐
Other *(specify)*:	☐	☐	☐

10. PROJECT DESCRIPTION

A. Describe the project in detail. Photographs of the project location and immediate surrounding area should be included.

- Include any structures (e.g., rip-rap, culverts, or channel clearing) that will be placed, built, or completed in or near the stream, river, or lake.
- Specify the type and volume of materials that will be used.
- If water will be diverted or drafted, specify the purpose or use.

Enclose diagrams, drawings, plans, and/or maps that provide all of the following: site specific construction details; the dimensions of each structure and/or extent of each activity in the bed, channel, bank or floodplain; an overview of the entire project area (i.e., "bird's-eye view") showing the location of each structure and/or activity, significant area features, and where the equipment/machinery will enter and exit the project area.

See Attachment D: Project Description

☐ *Continued on additional page(s)*

B. Specify the equipment and machinery that will be used to complete the project.

Typical equipment that will be used to complete the proposed construction would include the Following: excavator, loader, backhoe, dump truck, concrete mix truck, grader, gradall (articulating 4WD extendable forklift), semi truck with bottom dump trailer, pickup truck (standard, flatbed, stake side), vibrating roller, hand operated soil compactor, various hand tools (shovel, hammer, etc)

☐ *Continued on additional page(s)*

C. Will water be present during the proposed work period (specified in box 4.D) in the stream, river, or lake (specified in box 8.B).	☑ Yes ☐ No (*Skip to box 11*)
D. Will the proposed project require work in the wetted portion of the channel?	☑ Yes (*Enclose a plan to divert water around work site*) ☐ No

11. PROJECT IMPACTS

A. Describe impacts to the bed, channel, and bank of the river, stream, or lake, and the associated riparian habitat. Specify the dimensions of the modifications in length (linear feet) and area (square feet or acres) and the type and volume of material (cubic yards) that will be moved, displaced, or otherwise disturbed, if applicable.

See Attachment E: Project Impacts

☑ *Continued on additional page(s)*

B. Will the project affect any vegetation? ☑ Yes (*Complete the tables below*) ☐ No

Vegetation Type	Temporary Impact	Permanent Impact
Oak-Bay Riparian Woodland	Linear feet: 1029ft Total area: 0.16 ac	Linear feet: 1354ft Total area: 0.18ac
	Linear feet: Total area:	Linear feet: Total area:

Tree Species	Number of Trees to be Removed	Trunk Diameter (range)
Oak	218	4"-38"
other California native trees	37	4"-12"
other non-native species	6	4"-36"

☐ *Continued on additional page(s)*

C. Are any special status animal or plant species, or habitat that could support such species, known to be present on or near the project site?

☑ Yes *(List each species and/or describe the habitat below)* ☐ No ☐ Unknown

California red-legged frog (see attachment F: Biological Assessment for California red-legged frog)

☑ *Continued on additional page(s)*

D. Identify the source(s) of information that supports a "yes" or "no" answer above in Box 11.C.

see attachment F: Biological Assessment for California red-legged frog

☑ *Continued on additional page(s)*

E. Has a biological study been completed for the project site?

☑ Yes (*Enclose the biological study*) ☐ No

Note: A biological assessment or study may be required to evaluate potential project impacts on biological resources.

F. Has a hydrological study been completed for the project or project site?

☐ Yes (*Enclose the hydrological study*) ☑ No

Note: A hydrological study or other information on site hydraulics (e.g., flows, channel characteristics, and/or flood recurrence intervals) may be required to evaluate potential project impacts on hydrology.

12. MEASURES TO PROTECT FISH, WILDIFE, AND PLANT RESOURCES

A. Describe the techniques that will be used to prevent sediment from entering watercourses during and after construction.

Use of standard BMP's and implementation of a SWPPP. Use of ESA's to limit work area. Construction of temporary stream crossing, culverts and, in stream restoration work limited to summer dry season (June 15 to Oct.15). See Attachment G: Project Impact Minimization Measures

☑ *Continued on additional page(s)*

B. Describe project avoidance and/or minimization measures to protect fish, wildlife, and plant resources.

The project has avoided and reduced impacts to Champlin Creek and surrounding habitat through scoping changes that realigned the proposed roadway. Other minimization elements included working in the creeks only in the dry season, minimum access routes, proscribed equipment staging areas away from creeks, no open pits greater than 2ft without inspections and ramping for small animal egress, designated fueling area away from all waters and riparian areas, invasive plant removal, no project material left on site (trash pickup, construction spoils, etc.), replanting of temporary construction areas, use of ESA's (high visibility orange fencing) gravity flow open channel dewatering, standard Caltrans BMP's &SWPPP measures.

☐ *Continued on additional page(s)*

C. Describe any project mitigation and/or compensation measures to protect fish, wildlife, and plant resources.

Replanting of trees on site, stream enhancements along Champlin Creek to the north and south of the transfer station culvert replacement. Creek modifications to include a stilling basin, ponding area, and an additional high flow channel parallel to the creek. See Attachment I: Stream Restoration Plan

☑ *Continued on additional page(s)*

13. PERMITS

List any local, state, and federal permits required for the project and check the corresponding box(es). Enclose a copy of each permit that has been issued.

A.	USFWS Biological Opinion & NMFS Letter of Concurrence	☐ Applied	☑ Issued
B.	USACE 404, RWQCB 401	☑ Applied	☐ Issued
C.		☐ Applied	☐ Issued

D. Unknown whether ☐ local, ☐ state, or ☐ federal permit is needed for the project. (*Check each box that applies*)

☐ *Continued on additional page(s)*

14. ENVIRONMENTAL REVIEW

A. Has a draft or final document been prepared for the project pursuant to the California Environmental Quality Act (CEQA), National Environmental Protection Act (NEPA), California Endangered Species Act (CESA) and/or federal Endangered Species Act (ESA)?

☑ Yes *(Check the box for each CEQA, NEPA, CESA, and ESA document that has been prepared and enclose a copy of each)*

☐ No *(Check the box for each CEQA, NEPA, CESA, and ESA document listed below that will be or is being prepared)*

☐ Notice of Exemption	☑ Mitigated Negative Declaration	☑ NEPA document (*type*): CE
☑ Initial Study	☐ Environmental Impact Report	☐ CESA document (*type*):
☐ Negative Declaration	☐ Notice of Determination *(Enclose)*	☐ ESA document (*type*): BA
☐ THP/ NTMP	☑ Mitigation, Monitoring, Reporting Plan	

B. State Clearinghouse Number (*if applicable*)	2004112023		
C. Has a CEQA lead agency been determined?	☑ Yes (*Complete boxes D, E, and F*)	☐ No (*Skip to box 14.G*)	
D. CEQA Lead Agency	California Department of Transportation		
E. Contact Person	Jeffery G. Jensen	F. Telephone Number	(510) 286-6374

G. If the project described in this notification is part of a larger project or plan, briefly describe that larger project or plan.

The creek crossings, stream restoration, and culvert modifications are part of a larger curve correction and re-alignment project on State Route 116. See Attachments J & K: Natural Environment Study and Initial Study

☑ *Continued on additional page(s)*

H. Has an environmental filing fee (Fish and Game Code section 711.4) been paid?

☑ Yes (*Enclose proof of payment*) ☐ No (*Briefly explain below the reason a filing fee has not been paid*)

Note: If a filing fee is required, the Department may not finalize a Lake or Streambed Alteration Agreement until the filing fee is paid.

15. SITE INSPECTION

Check one box only.

☐ In the event the Department determines that a site inspection is necessary, I hereby authorize a Department representative to enter the property where the project described in this notification will take place at any reasonable time, and hereby certify that I am authorized to grant the Department such entry.

☐ I request the Department to first contact (*insert name*) Caltrans Associate Biologist Robert Young at (*insert telephone number*) (510) 622-1771 to schedule a date and time to enter the property where the project described in this notification will take place. I understand that this may delay the Department's determination as to whether a Lake or Streambed Alteration Agreement is required and/or the Department's issuance of a draft agreement pursuant to this notification.

16. DIGITAL FORMAT

Is any of the information included as part of the notification available in digital format (i.e., CD, DVD, etc.)?

☐ Yes (Please enclose the information via digital media with the completed notification form)

☑ No

17. SIGNATURE

I hereby certify that to the best of my knowledge the information in this notification is true and correct and that I am authorized to sign this notification as, or on behalf of, the applicant. I understand that if any information in this notification is found to be untrue or incorrect, the Department may suspend processing this notification or suspend or revoke any draft or final Lake or Streambed Alteration Agreement issued pursuant to this notification. I understand also that if any information in this notification is found to be untrue or incorrect and the project described in this notification has already begun, I and/or the applicant may be subject to civil or criminal prosecution. I understand that this notification applies only to the project(s) described herein and that I and/or the applicant may be subject to civil or criminal prosecution for undertaking any project not described herein unless the Department has been separately notified of that project in accordance with Fish and Game Code section 1602 or 1611.

SIGNED FOR

Signature of Applicant or Applicant's Authorized Representative

9/19/08

Date

Jeffrey G. Jensen

Print Name

STATE OF CALIFORNIA THE RESOURCES AGENCY ARNOLD SCHWARZENEGGER, GOVERNOR
DEPARTMENT OF FISH AND GAME
BAY DELTA REGION
(707) 944-5520
Mailing address:
POST OFFICE BOX 47
YOUNTVILLE, CALIFORNIA 94599
Street address:
7329 SILVERADO TRAIL
NAPA, CALIFORNIA 94558

Notification Number: 1600-2008-0451-3, Caltrans EA 283800
Champlin Creek and various unnamed tributaries, Sonoma County

California Department of Transportation

Attn: Mr. Jeffrey Jensen

111 Grand Ave.
Oakland, CA 94623

PROJECT DESCRIPTION and PROJECT CONDITIONS

Description

The California Department of Transportation (Caltrans) proposes a safety improvement project (Project) on state route (SR) 116 in Sonoma County from west of Arnold Drive to Adobe Road, between post miles 41.8 and 44.7. The Project includes roadway widening, curve correction, partial roadway re-alignment, and a partial realignment and restoration of Champlin Creek. The California Department of Fish and Game (Department) is issuing this Streambed Alteration Agreement (Agreement) for the project described herein.

Champlin Creek and its tributaries flow through the Project area. Caltrans has included several retaining walls in the Project design to minimize impacts to Champlin Creek. Fourteen stream crossings will be impacted by the proposed Project as described in documentation provided in support of this Agreement. Construction work in the stream crossings will include culvert extensions, head wall construction, culvert replacements, installation of rock slope protection (RSP), and associated earthwork. Additionally, at PM 43.13, SR 116 intersects with the Sonoma County Transfer Station road. The existing transfer station road and culverts will be removed and replaced with an improved road and a new box culvert. The culverted section of this crossing will be decreased by incorporating retaining walls. In order to facilitate this upgrade, all traffic must be diverted to a temporary culverted land bridge structure that will be built on the upstream side of the existing transfer station roadway.

Construction of the Project is scheduled to begin January 2010 and will last for approximately 36 months. Work will not be allowed in the riparian zone before June 15th or after October 15th, of any year.

Conceptual Mitigation

Champlin Creek is an intermittent creek that meanders through the project site. Caltrans shall provide onsite riparian mitigation by removing two sections of existing SR 116 roadway along Champlin Creek totaling approximately 1,450 feet. Riparian habitat within the project site is dominated by oak-bay uplands and an oak-bay riparian zone. A comprehensive Mitigation and Monitoring Plan for Champlin Creek (Plan) detailing the replacement of lost habitat through mitigation plantings and geomorphic improvements to Champlin Creek, will be submitted to the Department for approval. The Plan shall include success criteria and a 10 year monitoring period to ensure success of the riparian plantings and the geomorphic stabilization efforts.

Additionally, a stilling basin will be built to create California red-legged frog (CRLF) habitat at the downstream end of the Sonoma County Transfer roadway. The basin will be composed of RSP placed over a waterproof membrane.

Conditions

1. At least 5 months prior to construction, Caltrans shall submit to the Department for approval, a Mitigation and Monitoring Plan for Onsite Restoration Activities on Champlin Creek (Plan) detailing compensation for impacts at the habitat level.

2. Longitudinal surveys of the flowline of Champlin Creek from 100 feet downstream of the restoration area downstream limit to 100 feet upstream of the restoration area upstream limit will be performed and submitted to the Department as part of the mitigation Plan approval. A schedule for subsequent geomorphic stability analysis will be included in the Plan.

3. The Plan shall include a ten year monitoring and reporting schedule and appropriate success criteria for the revegetation and streambed realignment efforts. The Plan will include contingency measures for corrective actions should monitoring reveal that success criteria are not being met. Monitoring and reporting efforts will continue until success criteria are met, or until a new plan is developed with, and approved by, the Department.

4. If a rainfall event with an intensity equaling or exceeding the 4% annual probability of exceedance rainfall intensity occurs during the monitoring period, a longitudinal survey as described in condition #2 will be performed to assess the geomorphic condition of the restoration area following the event.

5. All work shall be done according to the project description and plans submitted to the Department. Caltrans shall notify the Department of any modifications made to the plans submitted to the Department that pertain to impacts to the creek or the riparian corridor.

6. Work within the stream/riparian corridor shall be confined to the period of June 15 to October 15. Revegetation work is not confined to this time period but must be completed in the same calendar year.

7. Each native riparian tree greater than 4 inches DBH that is removed or damaged, shall be replaced with native trees in a riparian area at a minimum 5:1 ratio. For each non-native riparian tree that is removed or damaged, trees shall be replaced with native riparian trees at a minimum 1:1 ratio. Temporarily impacted riparian understory shall be replaced at a 1:1 ratio. Trees that later die as a result of excavation or construction activities will be mitigated for at the aforementioned ratios.

8. If mitigation plantings cannot be accommodated onsite, then Caltrans shall submit an offsite mitigation planting plan for approval by the Department prior to construction.

9. To help ensure survival and vigor, Caltrans will procure replacement trees with sufficiently similar genetic composition to the impacted trees.

10. When possible vegetation will be trimmed to preserve root structures for re-sprouting.

11. RSP will be backfilled with clean soil and planted with local willow cuttings above the 2 year flood event line to the largest extent practicable.

12. Environmentally Sensitive Area (ESA) fencing shall be installed at the direction of a qualified biologist to delineate the work area and protect the surrounding habitat.

13. Prior to commencement of work within the stream zone, Caltrans shall photograph the project site. Upon completion of work activities, Caltrans shall photograph the project site at designated photo stations. Labeled copies of photographs shall be sent to the Department of Fish and Game within 5 days of completion of the project. Notification of work commencement shall be sent to the Department at P.O. Box 47, Yountville, CA 94599. Refer to Notification 1600-2008-0451-3 when notifying the Department.

14. All new culverts will be upgraded to enhance fish passage.

15. Roadbed and roadway materials from the abandoned stretch of SR 116 will be removed for disposal at an offsite, permitted location. Root systems of trees will be avoided during roadbed excavation.

16. Equipment shall not be operated in wetted areas (including but not limited to ponded, flowing, or wetland areas).

17. The work period for completing the work within the stream zone, shall be restricted to periods of low or no stream flow and dry weather. Excavation for and placement of the fill shall not begin unless a no precipitation forecast is obtained covering the entire construction phase (within the area covered in this Agreement) and the time necessary to implement erosion control

measures. This forecast shall be documented upon request by the Department.

18. No phase of the project may be started if that phase and its associated erosion control measures cannot be completed prior to the onset of precipitation if that construction phase may cause the introduction of sediments into the stream. After any storm event, Caltrans shall inspect all sites currently under construction and all sites scheduled to begin construction within the next 72 hours for erosion and sedimentation problems and take corrective action as needed.

19. All construction activity shall terminate at any site that has surface runoff until runoff ceases and no further storms are forecast for the following 24-hour period.

20. Staging and storage areas for equipment, materials, fuels, lubricants and solvents, shall be located outside of the stream channel and banks, avoiding areas of concentrated ground squirrel burrows. Stationary equipment such as motors, pumps, generators, compressors and welders, located within or adjacent to the stream shall be positioned over drip-pans. Any equipment or vehicles driven and/or operated within or adjacent to the stream must be checked and maintained daily, to prevent leaks of materials that if introduced to water could be deleterious to aquatic life. No fueling, cleaning, or maintenance of vehicles or equipment shall take place within any areas where an accidental discharge to a watercourse may occur, vehicles must be moved away from the stream prior to refueling and lubrication.

21. Erosion control measures shall be utilized throughout all phases of operation where sediment runoff from exposed slopes threatens to enter waterways. At no time shall silt laden runoff be allowed to enter the stream or directed to where it may enter the stream. Only clean rocks and boulders shall be used for the project. Erosion control structures shall be monitored for effectiveness and shall be repaired or replaced as needed. Build up of soil behind the fence shall be removed promptly and any breaches or undermined areas repaired at once.

22. Erosion control measures shall be monitored during and after each storm event. Modification, repairs and improvements to erosion control measures shall be made whenever needed. Upon Department determination that turbidity/siltation levels resulting form project related activities constitute a threat to aquatic life, activities associated with the turbidity/siltation, shall be halted until effective Department approved control devices are installed, or abatement procedures are initiated. The Department may take enforcement action if appropriate turbidity and siltation control measures are not deployed.

23. When work in a flowing stream is unavoidable, the entire stream flow shall be diverted around or through the work area during the excavation and/or construction operations. If a diversion is needed, a plan must be submitted to the Department at least 15 days prior to the start of the diversion construction for review and approval prior to diversion construction. Normal flows will be restored to the affected stream immediately upon completion of work at that location.

24. All exposed/disturbed areas and access points within the stream zone left barren of vegetation as a result of the construction activities shall be restored by seeding with a blend

native and non-native erosion control grass seeds. Seeded areas shall be mulched. All other areas of disturbed soil which drain toward the stream channel shall be seeded with erosion control grass seeds. Revegetation shall be completed as soon as possible after construction activities in those areas cease. Seeding placed after October 15 must be covered with broadcast straw, jute netting, coconut fiber blanket or similar erosion control blanket. Erosion control with monofilament shall not be used.

25. Building materials and/or construction equipment shall not be stockpiled or stored where they could be washed into the water or where they will cover aquatic or riparian vegetation.

26. Debris, soil, silt, bark, rubbish, creosote-treated wood, raw cement/concrete or washings thereof, asphalt, paint or other coating material, oil or other petroleum products, or any other substances which could be hazardous to aquatic life, resulting from project related activities, shall be prevented from contaminating the soil and/or entering the stream. Any of these materials, placed within or where they may enter a stream or lake, by Caltrans or any party working under contract, or with the permission of Caltrans, shall be removed immediately.

27. Caltrans shall not dump any litter or construction debris within the riparian/stream zone. All such debris and waste shall be picked up daily and properly disposed of at an appropriate site.

28. This Agreement does not authorize the take of any state or federally listed species. Liability for any take or incidental take of such listed species remains the responsibility of Caltrans for the duration of the project. Any unauthorized take of such listed species may result in prosecution and nullification of the agreement.

29. Prior to the beginning of any excavation, clearing, grubbing, or staging in or near the riparian area, a focused survey of all potentially suitable California red legged frog (CRLF) habitat shall be conducted 14 days prior to instream construction or disturbance of riparian areas. In the event that a CRLF is observed in the area, work in the riparian area shall be halted and the USFWS shall be contacted to determine appropriate actions. Results of pre-construction surveys shall be reported to the Department.

30. All Terms and Conditions of the USFWS Biological Opinion for the Project shall be adhered to at all times.

31. Prior to the beginning of any excavation, clearing, grubbing, or staging in or near the riparian area, a survey shall be conducted for western pond turtles. If pond turtles are discovered within the work area, the animal shall be relocated by a qualified biologist (as determined by a combination of academic training and professional experience) to an appropriate up or downstream location.

32. If earthwork, clearing and grubbing, or vegetation trimming is scheduled during bird nesting season, February 15 and August 15, pre-construction surveys shall be conducted by a qualified biologist for active bird nests. The surveys shall take place within 3 days prior to the commencement of work. If nesting birds are found a 50-foot radius buffer should be established

around the nest, a 300-foot radius buffer in the case of hawks or owls. If a lapse in project-related work of 5 days or longer occurs, another survey will be required before project work can be reinitiated.

33. Existing culverts and over-crossings shall be inspected for wildlife prior to adjacent, overhead, or nearby construction. If any wildlife is encountered during the course of the inspection, said wildlife shall be allowed to leave the area unharmed, and shall be flushed, hazed, or herded in a safe direction away from the project site. This condition does not allow for the take or disturbance of any state or federally listed species. If bats are found Caltrans shall contact Melissa Escaron, Staff Environmental Scientist at (707)339-0334.

34. If any sensitive species are observed in project surveys, Caltrans shall submit California Natural Diversity Data Base (CNDDB) forms to the CNDDB for all preconstruction survey data within five working days of the sightings, and provide DFG Region 3 with copies of the CNDDB forms and survey maps.

35. To the extent that any provisions of this Agreement provide for activities that Caltrans to traverse another owner's property, such provisions are agreed to with the understanding that Caltrans possesses the legal right to so traverse. In the absence of such right, any such provision is void.

36. In the event that the project scope, nature, or environmental impact is altered by the imposition of subsequent permit conditions by any local, state or federal regulatory authority, Caltrans shall notify the Department of any imposed project modifications that interfere with compliance to Department conditions.

If Caltrans needs more time to complete the authorized activity, the work period may be extended on a day-to-day basis by contacting Melissa Escaron at (707) 339-0334 or the Yountville office at (707) 944-5520.

A copy of this Agreement must be provided to the contractor and all subcontractors who work within the stream zone and must be in their possession at the work site.

Department personnel or its agents may inspect the work site at any time.

Caltrans is liable for compliance with the terms of this Agreement, including violations committed by the contractors and/or subcontractors. The Department reserves the right to suspend construction activity described in this Agreement if the Department determines any of the following has occurred:

A). Failure to comply with any of the conditions of this Agreement

B). Information provided in support of the Agreement is determined by the Department to be inaccurate.

C). Information becomes available to the Department that was not known when preparing the original conditions of this Agreement (including, but not limited to, the occurrence of state or federally listed species in the area or risk to resources not previously observed)

Applicant's initials
Notification Number 1600-2008-0451-3

D).The project as described in the Agreement has changed or conditions affecting fish and wildlife resources change.

Any violation of the terms of this Agreement may result in the project being stopped, a citation being issued, or charges being filed with the District Attorney. Contractors and subcontractors may also be liable for violating the conditions of this agreement.

Amendments and Extensions

Caltrans shall notify the Department before any modifications are made in the project plans submitted to the Department. Project modifications may require an amendment or a new notification.

This Agreement is transferable to subsequent owners of the project property by requesting an amendment.

To extend the Agreement beyond the expiration date, a written request or completed "Request to Extend Lake or Streambed Alteration Agreement" form, with an appropriate fee, must be submitted to the Department (1600 Program, Post Office Box 47, Yountville, California 94599) for consideration at least 30 days before the Agreement expiration date. An extension requires a fee. The Fee Schedule and Extension form can be obtained at HYPERLINK "http://www.dfg.ca.gov/habcon/1600/Forms.html" www.dfg.ca.gov/habcon/1600/Forms.html or by phone at (707) 944-5520. Extensions of the original Agreement are issued at the discretion of the Department.

To modify the project, a written request for an amendment or a completed "Request to Amend Lake or Streambed Alteration Agreement" form, with an appropriate fee, must be submitted to the Department (1600 Program, Post Office Box 47, Yountville, California 94599). An amendment requires a fee. The Fee Schedule and Amendment form can be obtained at HYPERLINK "http://www.dfg.ca.gov/habcon/1600/Forms.html" www.dfg.ca.gov/habcon/1600/Forms.html or by phone at (707) 944-5520. Amendments to the original Agreement are issued at the discretion of the Department.tc \l2 "To modify the project, a written request for an amendment must be submitted to the Department (1600 Program, Post Office Box 47, Yountville, California 94599). The fee for an amendment is one-half (½) of the original fee. Amendments to the original Agreement are issued at the discretion of the Department.

Please note that you may not proceed with construction until your proposed project has undergone CEQA review and the Department signs the Agreement.

I, the undersigned, state that the above is the final description of the project I am submitting to the Department for CEQA review, leading to an Agreement, and agree to implement the conditions above required by the Department as part of that project. I will not proceed with this project until the Department signs the Agreement. I also understand that the CEQA review may result in the addition of measures to the project to avoid, minimize, or compensate for significant environmental impacts:

Applicant's name (print): Jeffrey G. Jensen

Applicant's signature: _____

Signed the 27 day of April, 2009

Applicant's initials: _____
Notification Number 1600-2008-0461-3

3) Army Corps of Engineers 404 Nationwide Permit Number SPN-2003-282830 N.

DEPARTMENT OF THE ARMY
SAN FRANCISCO DISTRICT, U.S. ARMY CORPS OF ENGINEERS
1455 MARKET STREET
SAN FRANCISCO, CALIFORNIA 94103-1398

REPLY TO

JUN 2 2009

Regulatory Division

SUBJECT: File Number SPN-2003-282830 N

Mr. Jeffrey Jensen
Division of Biological Sciences and Permits
California Department of Transportation
111 Grand Avenue
Post Office Box 23660
Oakland, California 94623-0660

Dear Mr. Jensen:

This letter is written in response to your submittal of September 16, 2008, concerning Department of the Army authorization for the State Route 116, "Stage Gulch", Curve Correction and Realignment Project. The project area extends from Adobe Road to Arnold Drive west of Sonoma, in Sonoma County, California.

The project will widen and realign State Route 116 (SR 116) between post mile 41.8 and 44.7 to reduce the possibility of traffic accidents. In addition, the project will enhance the safety of drivers entering and exiting the highway. The project includes the following elements: widening the shoulders along SR 116, correction of non-standard horizontal and vertical curves on SR 116, relocation of the intersection of the intersection of SR 116 and the Sonoma County Transfer Station Road (dump road), and other general highway improvements. The roadway will be widened to 12-foot lanes with 9-foot shoulders. All non-standard curves will be corrected to a minimum 850-foot radius to provide sufficient sign distance for traffic speeds of 50 mph.

The intersection at the dump road will be modified to improve the road's transition onto SR 116. A 1,300-foot section of the highway between post mile 42.9 and 43.34 near the dump road will be realigned to the eastside of Champlin Creek to avoid and minimize effects to the creek's riparian corridor. The realignment of the highway along this section will also include a left turn pocket to facilitate access and egress to the dump road for trucks. General highway improvements will also be made, including the repair of failing road base and pavement. The existing pavement will be removed and a new base material with pavement will be installed. In addition, all guardrails will be upgraded to meet current standards.

The project will require the replacement and extension of 19 culverts to accommodate the highway improvements. All new culverts will be upgraded to enhance fish passage, dispersal behavior of aquatic species, and hydraulic efficiency. Along the new alignment near the dump

road, the natural-bottom culverts will reduce erosion, improve dispersal of aquatic species, and enhance fish passage.

Approximately 0.156 acre of waters of the U.S. and 0.111 acre of wetlands will be permanently impacted by the widening and reconstruction of State Route 116. Approximately 0.175 acre of waters of the U.S. and 0.089 acre of wetlands will be temporarily impacted by the project.

Based on a review of the information you submitted and an inspection of the project site conducted by Corps personnel on October 1, 2008, your project qualifies for authorization under Department of the Army Nationwide Permit 14 *Linear Transportation Projects* (72 Fed. Reg. 11092, March 12, 2007), pursuant to Section 404 of the Clean Water Act (33 U.S.C. Section 1344). See Enclosure 1. All work shall be completed in accordance with the layout plans L-1 through L-15, dated March 14, 2008, and "Impacts to Potential Waters of the U.S. and Waters of the State", dated April 2, 2009. See Enclosure 2.

The project must be in compliance with the General Conditions cited in Enclosure 1 for this Nationwide Permit authorization to remain valid. Non-compliance with any condition could result in the suspension, modification or revocation of the authorization for your project, thereby requiring you to obtain an Individual Permit from the Corps. This Nationwide Permit authorization does not obviate the need to obtain other State or local approvals required by law.

This authorization will remain valid for two years from the date of this letter unless the Nationwide Permit is modified, suspended or revoked. If you have commenced work or are under contract to commence work prior to the suspension, or revocation of the Nationwide Permit and the project would not comply with the resulting Nationwide Permit authorization, you have twelve (12) months from that date to complete the project under the present terms and conditions of the Nationwide Permit. Upon completion of the project and all associated mitigation requirements, you shall sign and return the Certification of Compliance, Enclosure 3, verifying that you have complied with the terms and conditions of the permit.

To ensure compliance with this Nationwide Permit authorization, the following special conditions shall be implemented:

1. General Condition 17 in the Nationwide Permit Summary Sheet, stipulates that project authorization under a Nationwide Permit does not allow for the incidental take of any federally-listed species in the absence of a Biological Opinion (BO) with incidental take provisions. The Federal Highway Administration initiated consultation with the U.S. Fish and Wildlife Service (USFWS), to address project related impacts to California red-legged frog (*Rana aurora draytonii*), pursuant to

Section 7(a) of the Endangered Species Act of 1973, as amended (16 U.S.C. Section 1431 *et seq.*). By letter of July 15, 2005, the USFWS issued a BO for your project. The BO contains mandatory terms and conditions to ensure implementation of reasonable and prudent measures associated with "incidental take" and project minimization measures. Authorization under this Corps permit is conditional upon compliance with all of the mandatory terms and conditions associated with incidental take authorized by the attached documents, whose terms and conditions are incorporated by reference in this permit. Failure to comply with the terms and conditions associated with incidental take of the BO, where a take of the listed species occurs, would constitute an unauthorized take and it would also constitute non-compliance with this Corps permit. The USFWS is the appropriate authority to determine compliance with the terms and conditions of the BO and the Endangered Species Act.

2. All project staging and equipment storage areas shall be located away from areas subject to the jurisdiction of the Corps.

3. No debris, oil, petroleum products or other organic material resulting from construction activities shall be allowed to enter or be placed where it may be washed by rainfall or runoff into areas subject to the jurisdiction of the Corps.

4. Any temporary structures used to dewater the stream channel shall consist of clean gravel, sandbags or other non-eroding material and shall be completely removed from the work area at project completion.

5. Following project construction, disturbed areas including access points, staging and equipment storage areas, etc. shall be returned to pre-project conditions. This shall include, but is not necessarily limited to, grading to establish pre-project contours, removal of debris and planting site-specific vegetation.

6. Compensation for unavoidable impacts to riparian trees within the project area shall be conducted pursuant to the "Conceptual Planting Plans, Project: Sonoma 116 Champlin Creek", dated April 9, 2009. The planting plans were submitted to our office as a part of the "Conceptual Mitigation and Monitoring Plan for Onsite Restoration Activities", dated April 2009 (Conceptual Plan).

    a. The riparian mitigation areas will be deemed successful when plantings have 70% or greater survival.
    b. The mitigation areas shall be monitored for success for 10 years. Annual reports shall be submitted to our office. At the end of the monitoring period you shall submit the final monitoring report to our office to determine if

success criteria have been met.

c. If at year 5, survival is less than 70%, all failed tree and shrub plantings on the mitigation site should be replanted with live plantings and monitored an additional three (3) years to achieve 70% total survival.

7. To mitigate for the loss of 0.111 acre of jurisdictional wetlands, you shall purchase 0.21 credits of seasonal wetlands at the Burdell Ranch Mitigation Bank. A copy of the bank receipt must be submitted to our office prior to the start of construction.

8. To mitigate for permanent impacts to 0.156 acre of other waters of the U.S., you shall restore 0.12 acre if Champlin Creek on-site in accordance with the planting plans in Appendix C-3 in your Conceptual Plan and the Champlin "Creek Conceptual Restoration Design" (restoration design drawing), provided to our office on April 29, 2009.

   a. Restoration shall be considered successful when there has been no more than minimal natural erosion and sedimentation along Champlin Creek over a 5 year period in the mitigation area shown on the restoration design drawing. Success of the restoration of Champlin Creek shall be measured by photo-monitoring and geomorphic stability surveys as described on pages 19 and 20 of the Conceptual Plan.
   b. You shall monitor the creek banks in the area of the restoration work to ensure that no significant alteration of the creek habitat occurred as a result of construction activities. If increased sedimentation increases and/or the riparian plant species fail to establish along the bank area, you shall work with the San Francisco Bay Regional Water Quality Control Board and our office to remediate the problems and stabilize the site.
   c. You shall monitor the restored section of Champlin Creek for 10 years.
   d. If the restoration of Champlin Creek is not considered to be successful by the end of the 10-year monitoring period, we may require additional on-site mitigation or the purchase of mitigation bank credits at a greater than 2:1 loss to creation ratio for temporal impacts.
   e. The restoration area shall be set aside in perpetuity as inoperable right-of-way. The final mitigation and monitoring plan shall include documentation of long-term protection and a long-term management plan. The restoration area must be easily identifiable as an area for you and adjacent property owners to avoid when evaluating future projects in the area.
   f. You shall also provide an endowment or other financial assurance to cover the long-term maintenance activities if the restoration area.

9. A final mitigation and monitoring plan for the project shall be submitted to our office prior to construction.

10. Your responsibility to complete the required compensatory mitigation as set forth in special conditions 6, 7, and 8 will not be considered fulfilled until you have demonstrated mitigation success and have received written notification from our office.

11. In the event of any unanticipated discoveries of potential cultural/historic resources, you shall immediately halt work in the vicinity of the discovery and contact the appropriate regulatory authorities. You shall complete consultation pursuant to 36 CFR 800 to the satisfaction of the SHPO prior to resuming work.

Should you have any questions regarding this matter, please call Andrea Meier of our Regulatory Division at 415-503-6798. Please address all correspondence to the Regulatory Division and refer to the File Number at the head of this letter. If you would like to provide comments on our permit review process, please complete the Customer Survey Form available online at http://per2.nwp.usace.army.mil/survey.html.

Sincerely,

for Jane M. Hicks
Chief, Regulatory Division

Enclosures

Copies furnished without enclosures:

US EPA, San Francisco, CA
US NMFS, Santa Rosa, CA
CA DFG, Napa, CA
CA RWQCB, Santa Rosa, CA

Culvert
Upland Data Point
Wetland Data Point
Flow Lines
Boundary of USACE Jurisdictional Verification

Potential Waters of the US (Wetland)
Potential Waters of the US (culverted)
Potential Waters of the US (non-wetland)
Potential Waters of the US (Wetlands) as identified to Caltrans by USACE during November 2008 field verification
Waters of the State

Caltrans Designs, 04-15-2008
Main Alignment
Cut and Fill
Existing ROW
Proposed ROW
Existing Hydrology

Impacts
Permanent
Temporary
Restored

Perm Effects: Existing Edge of Pavement to Cut & Fill
Temp Effects: 15' from the Cut & Fill
Restore: Existing pavement to be restored to natural conditions

0 100 Feet

IMPACTS TO POTENTIAL WATERS OF THE U.S. AND WATERS OF THE STATE
MAP 1 OF 16
SR 116 "STAGE GULCH" CURVE CORRECTION
AND REALIGNMENT PROJECT EA 283801
SONOMA COUNTY, CA

BAD: ZINFANDEL\PROJECTS\TRANS\SHARE\STAGEGULCH\MAPFILES\STAGEGULCH_404_401\IMPACTS_MAPBOOK.MXD STAGEGULCH_404_401\IMPACTS_MAPBOOK.PDF 4/2/2009 14:45:32

Culvert
Upland Data Point
Wetland Data Point
Flow Lines
Boundary of USACE Jurisdictional Verification

Potential Waters of the US (Wetland)
Potential Waters of the US (culverted)
Potential Waters of the US (non-wetland)
Potential Waters of the US (Wetlands) as identified to Caltrans by USACE during November 2008 field verification
Waters of the State

Caltrans Designs, 04-15-2008
Main Alignment
Cut and Fill
Existing ROW
Proposed ROW
Existing Hydrology

Impacts
Permanent
Temporary
Restored

Perm Effects: Existing Edge of Pavement to Cut & Fill
Temp Effects: 15' from the Cut & Fill
Restore: Existing pavement to be restored to natural conditions

N

0 100 Feet

IMPACTS TO POTENTIAL WATERS OF THE U.S. AND WATERS OF THE STATE
MAP 2 OF 16
SR 116 "STAGE GULCH" CURVE CORRECTION AND REALIGNMENT PROJECT EA 283801
SONOMA COUNTY, CA

BAD:\\ZNFANDE\PROJ\CALTRANS\364064\GIS\STAGEGULCH\MAPFILES\STAGEGULCH_404_401\IMPACTS_MAPBOOK.MXD STAGEGULCH_404_401\IMPACTS_MAPBOOK.PDF 4/2/2009 14:45:32

Culvert
Upland Data Point
Wetland Data Point
Flow Lines
Boundary of USACE Jurisdictional Verification

Potential Waters of the US (Wetland)
Potential Waters of the US (culverted)
Potential Waters of the US (non-wetland)
Potential Waters of the US (Wetlands) as identified to Caltrans by USACE during November 2008 field verification
Waters of the State

Caltrans Designs, 04-15-2008
Main Alignment
Cut and Fill
Existing ROW
Proposed ROW
Existing Hydrology

Impacts
Permanent
Temporary
Restored

Perm Effects: Existing Edge of Pavement to Cut & Fill
Temp Effects: 15' from the Cut & Fill
Restore: Existing pavement to be restored to natural conditions

N

0 100 Feet

IMPACTS TO POTENTIAL WATERS OF THE U.S. AND WATERS OF THE STATE
MAP 3 OF 16
SR 116 "STAGE GULCH" CURVE CORRECTION AND REALIGNMENT PROJECT EA 283801
SONOMA COUNTY, CA

BAD:\\ZIMFAMDELI\PROJ\CALTRANS\04406A\SR116\STAGEGULCH\MAPFILES\STAGEGULCH_404_401\IMPACTS_MAPBOOK.MXD STAGEGULCH_404_401\IMPACTS_MAPBOOK.PDF 4/2/2009 14:49:32

Culvert
Upland Data Point
Wetland Data Point
Flow Lines
Boundary of USACE Jurisdictional Verification

Potential Waters of the US (Wetland)
Potential Waters of the US (culverted)
Potential Waters of the US (non-wetland)
Potential Waters of the US (Wetlands) as identified to Caltrans by USACE during November 2008 field verification
Waters of the State

Caltrans Designs, 04-15-2008
Main Alignment
Cut and Fill
Existing ROW
Proposed ROW
Existing Hydrology

Impacts
Permanent
Temporary
Restored

Perm Effects: Existing Edge of Pavement to Cut & Fill
Temp Effects: 15' from the Cut & Fill
Restore: Existing pavement to be restored to natural conditions

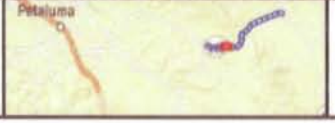

0 100 Feet

IMPACTS TO POTENTIAL WATERS OF THE U.S. AND WATERS OF THE STATE
MAP 4 OF 16
SR 116 "STAGE GULCH" CURVE CORRECTION AND REALIGNMENT PROJECT EA 283801
SONOMA COUNTY, CA

Culvert
Upland Data Point
Wetland Data Point
Flow Lines
Boundary of USACE Jurisdictional Verification

Potential Waters of the US (Wetland)
Potential Waters of the US (culverted)
Potential Waters of the US (non-wetland)
Potential Waters of the US (Wetlands) as identified to Caltrans by USACE during November 2008 field verification
Waters of the State

Caltrans Designs, 04-15-2008
Main Alignment
Cut and Fill
Existing ROW
Proposed ROW
Existing Hydrology

Impacts
Permanent
Temporary
Restored

Perm Effects: Existing Edge of Pavement to Cut & Fill
Temp Effects: 15' from the Cut & Fill
Restore: Existing pavement to be restored to natural conditions

0 100 Feet

IMPACTS TO POTENTIAL WATERS OF THE U.S. AND WATERS OF THE STATE
MAP 5 OF 16
SR 116 "STAGE GULCH" CURVE CORRECTION AND REALIGNMENT PROJECT EA 283801
SONOMA COUNTY, CA

BAD \\ZINFANDEL\PROJ\CALTRANS\04\0964\GIS\STAGEGULCH\MAPFILES\STAGEGULCH_404_401IMPACTS_MAPBOOK.MXD STAGEGULCH_404_401IMPACTS_MAPBOOK.PDF 4/2/2009 14:45:32

IMPACTS TO POTENTIAL WATERS OF THE U.S. AND WATERS OF THE STATE

MAP 6 OF 16

SR 116 "STAGE GULCH" CURVE CORRECTION AND REALIGNMENT PROJECT EA 283801
SONOMA COUNTY, CA

BAD \\DNFANDEL\PROJ\CALTRANS\04064-03\STAGEGUL\CHMAPFILES\STAGEGULCH_404_401\IMPACTS_MAPBOOK.MXD STAGEGULCH_404_401\IMPACTS_MAPBOOK.PDF 4/2/2009 14:49:32

IMPACTS TO POTENTIAL WATERS OF THE U.S. AND WATERS OF THE STATE
MAP 7 OF 16

SR 116 "STAGE GULCH" CURVE CORRECTION AND REALIGNMENT PROJECT EA 283801
SONOMA COUNTY, CA

BAD:\ZINFANDEL\PROJ\CALTRANS\364964\GIS\STAGEGULCH\MAPFILES\STAGEGULCH_404_401\IMPACTS_MAPBOOK.MXD STAGEGULCH_404_401\IMPACTS_MAPBOOK.PDF 4/2/2009 14:45:32

Culvert
Upland Data Point
Wetland Data Point
Flow Lines
Boundary of USACE Jurisdictional Verification

Potential Waters of the US (Wetland)
Potential Waters of the US (culverted)
Potential Waters of the US (non-wetland)
Potential Waters of the US (Wetlands) as identified to Caltrans by USACE during November 2008 field verification
Waters of the State

Caltrans Designs, 04-15-2008
Main Alignment
Cut and Fill
Existing ROW
Proposed ROW
Existing Hydrology

Impacts
Permanent
Temporary
Restored

Perm Effects: Existing Edge of Pavement to Cut & Fill
Temp Effects: 15' from the Cut & Fill
Restore: Existing pavement to be restored to natural conditions

0 100 Feet

IMPACTS TO POTENTIAL WATERS OF THE U.S. AND WATERS OF THE STATE
MAP 8 OF 16
SR 116 "STAGE GULCH" CURVE CORRECTION AND REALIGNMENT PROJECT EA 283801
SONOMA COUNTY, CA

BAD \\ZINFANDEL\PROJ\CALTRANS\344064G3\STAGEGULCH\MAPFILES\STAGEGULCH_404_401IMPACTS_MAPBOOK.MXD STAGEGULCH_404_401IMPACTS_MAPBOOK.PDF 4/22/2009 14:45:32

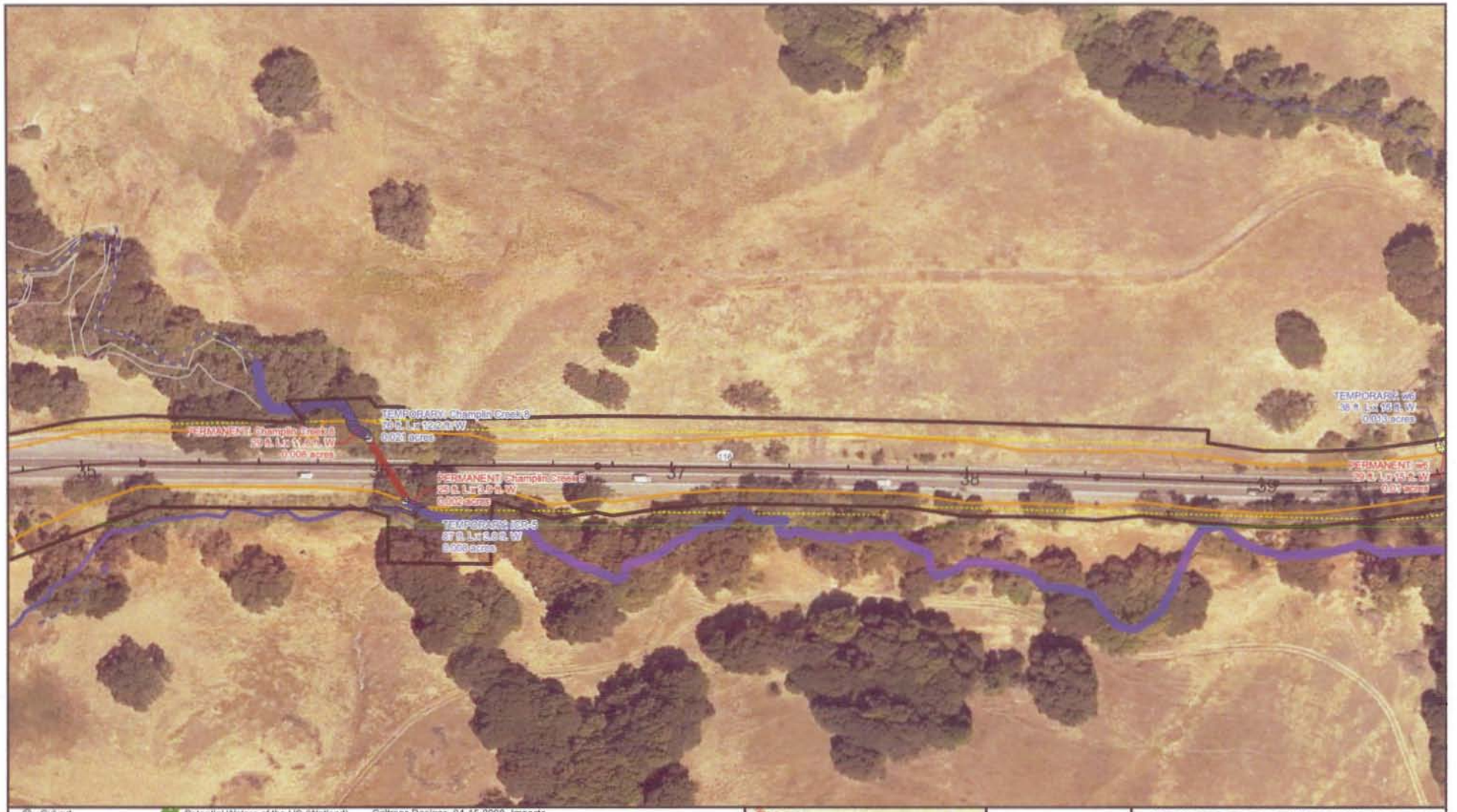

IMPACTS TO POTENTIAL WATERS OF THE U.S. AND WATERS OF THE STATE
MAP 9 OF 16

SR 116 "STAGE GULCH" CURVE CORRECTION
AND REALIGNMENT PROJECT EA 283801
SONOMA COUNTY, CA

Culvert
Upland Data Point
Wetland Data Point
Flow Lines
Boundary of USACE Jurisdictional Verification

Potential Waters of the US (Wetland)
Potential Waters of the US (culverted)
Potential Waters of the US (non-wetland)
Potential Waters of the US (Wetlands) as identified to Caltrans by USACE during November 2008 field verification
Waters of the State

Caltrans Designs, 04-15-2008
Main Alignment
Cut and Fill
Existing ROW
Proposed ROW
Existing Hydrology

Impacts
Permanent
Temporary
Restored

Perm Effects: Existing Edge of Pavement to Cut & Fill
Temp Effects: 15' from the Cut & Fill
Restore: Existing pavement to be restored to natural conditions

0 100 Feet

IMPACTS TO POTENTIAL WATERS OF THE U.S. AND WATERS OF THE STATE
MAP 10 OF 16

SR 116 "STAGE GULCH" CURVE CORRECTION AND REALIGNMENT PROJECT EA 283801
SONOMA COUNTY, CA

Culvert
Upland Data Point
Wetland Data Point
Flow Lines
Boundary of USACE Jurisdictional Verification

Potential Waters of the US (Wetland)
Potential Waters of the US (culverted)
Potential Waters of the US (non-wetland)
Potential Waters of the US (Wetlands) as identified to Caltrans by USACE during November 2008 field verification
Waters of the State

Caltrans Designs, 04-15-2008
Main Alignment
Cut and Fill
Existing ROW
Proposed ROW
Existing Hydrology

Impacts
Permanent
Temporary
Restored

Perm Effects: Existing Edge of Pavement to Cut & Fill
Temp Effects: 15' from the Cut & Fill
Restore: Existing pavement to be restored to natural conditions

0 100 Feet

IMPACTS TO POTENTIAL WATERS OF THE U.S. AND WATERS OF THE STATE
MAP 11 OF 16
SR 116 "STAGE GULCH" CURVE CORRECTION AND REALIGNMENT PROJECT EA 283801
SONOMA COUNTY, CA

MAD \\ZINFANDEL\PROJ\CALTRANS\04064\GIS\STAGEGULCH\MAPFILES\STAGEGULCH_404_401IMPACTS_MAPBOOK.MXD STAGEGULCH_404_401IMPACTS_MAPBOOK.PDF 4/2/2009 14:49:22

Culvert
Upland Data Point
Wetland Data Point
Flow Lines
Boundary of USACE Jurisdictional Verification

Potential Waters of the US (Wetland)
Potential Waters of the US (culverted)
Potential Waters of the US (non-wetland)
Potential Waters of the US (Wetlands) as identified to Caltrans by USACE during November 2008 field verification
Waters of the State

Caltrans Designs, 04-15-2008
Main Alignment
Cut and Fill
Existing ROW
Proposed ROW
Existing Hydrology

Impacts
Permanent
Temporary
Restored

Perm Effects: Existing Edge of Pavement to Cut & Fill
Temp Effects: 15' from the Cut & Fill
Restore: Existing pavement to be restored to natural conditions

0 100 Feet

IMPACTS TO POTENTIAL WATERS OF THE U.S. AND WATERS OF THE STATE
MAP 12 OF 16

SR 116 "STAGE GULCH" CURVE CORRECTION AND REALIGNMENT PROJECT EA 283801
SONOMA COUNTY, CA

BAD \\ZINFANDEL\PROJ\CALTRANS\SK4064\GIS\STAGEGULCH\MAPFILES\STAGEGULCH_404_401\IMPACTS_MAPBOOK.MXD STAGEGULCH_404_401\IMPACTS_MAPBOOK.PDF 4/22/2009 14:49:52

Culvert
Upland Data Point
Wetland Data Point
Flow Lines
Boundary of USACE Jurisdictional Verification

Potential Waters of the US (Wetland)
Potential Waters of the US (culverted)
Potential Waters of the US (non-wetland)
Potential Waters of the US (Wetlands) as identified to Caltrans by USACE during November 2008 field verification
Waters of the State

Caltrans Designs, 04-15-2008
Main Alignment
Cut and Fill
Existing ROW
Proposed ROW
Existing Hydrology

Impacts
Permanent
Temporary
Restored

Perm Effects: Existing Edge of Pavement to Cut & Fill
Temp Effects: 15' from the Cut & Fill
Restore: Existing pavement to be restored to natural conditions

0 100 Feet

IMPACTS TO POTENTIAL WATERS OF THE U.S. AND WATERS OF THE STATE
MAP 13 OF 16
SR 116 "STAGE GULCH" CURVE CORRECTION AND REALIGNMENT PROJECT EA 283801
SONOMA COUNTY, CA

Culvert
Upland Data Point
Wetland Data Point
Flow Lines
Boundary of USACE Jurisdictional Verification

Potential Waters of the US (Wetland)
Potential Waters of the US (culverted)
Potential Waters of the US (non-wetland)
Potential Waters of the US (Wetlands) as identified to Caltrans by USACE during November 2008 field verification
Waters of the State

Caltrans Designs, 04-15-2008
Main Alignment
Cut and Fill
Existing ROW
Proposed ROW
Existing Hydrology

Impacts
Permanent
Temporary
Restored

Perm Effects: Existing Edge of Pavement to Cut & Fill
Temp Effects: 15' from the Cut & Fill
Restore: Existing pavement to be restored to natural conditions

0 100 Feet

IMPACTS TO POTENTIAL WATERS OF THE U.S. AND WATERS OF THE STATE
MAP 14 OF 16
SR 116 "STAGE GULCH" CURVE CORRECTION AND REALIGNMENT PROJECT EA 283801
SONOMA COUNTY, CA

BAD \\ZNFAN\DEL\PROJ\CALTRANS\3440\GIS\STAGEGULCH\MAPFILES\STAGEGULCH_404_401\IMPACTS_MAPBOOK MXD STAGEGULCH_404_401\IMPACTS_MAPBOOK PDF 4/2/2009 14:45:32

- Culvert
- Upland Data Point
- Wetland Data Point
- Flow Lines
- Boundary of USACE Jurisdictional Verification
- Potential Waters of the US (Wetland)
- Potential Waters of the US (culverted)
- Potential Waters of the US (non-wetland)
- Potential Waters of the US (Wetlands) as identified to Caltrans by USACE during November 2008 field verification
- Waters of the State

Caltrans Designs, 04-15-2008
- Main Alignment
- Cut and Fill
- Existing ROW
- Proposed ROW
- Existing Hydrology

Impacts
- Permanent
- Temporary
- Restored

Perm Effects: Existing Edge of Pavement to Cut & Fill
Temp Effects: 15' from the Cut & Fill
Restore: Existing pavement to be restored to natural conditions

0 100 Feet

IMPACTS TO POTENTIAL WATERS OF THE U.S. AND WATERS OF THE STATE
MAP 15 OF 16
SR 116 "STAGE GULCH" CURVE CORRECTION AND REALIGNMENT PROJECT EA 283801
SONOMA COUNTY, CA

BAD:\ZINFANDEL\PROJ\CALTRANS\04-SON\CURVE\STAGE\SGULCH\MAPFILES\STA\SGULCH_404_401\IMPACTS_MAPBOOK.MXD STAGE\SGULCH_404_401\IMPACTS_MAPBOOK.PDF 4/22/2009 14:43:32

Culvert
Upland Data Point
Wetland Data Point
Flow Lines
Boundary of USACE Jurisdictional Verification

Potential Waters of the US (Wetland)
Potential Waters of the US (culverted)
Potential Waters of the US (non-wetland)
Potential Waters of the US (Wetlands) as identified to Caltrans by USACE during November 2008 field verification
Waters of the State

Caltrans Designs, 04-15-2008
Main Alignment
Cut and Fill
Existing ROW
Proposed ROW
Existing Hydrology

Impacts
Permanent
Temporary
Restored

Perm Effects: Existing Edge of Pavement to Cut & Fill
Temp Effects: 15' from the Cut & Fill
Restore: Existing pavement to be restored to natural conditions

0 100 Feet

IMPACTS TO POTENTIAL WATERS OF THE U.S. AND WATERS OF THE STATE
MAP 16 OF 16
SR 116 "STAGE GULCH" CURVE CORRECTION AND REALIGNMENT PROJECT EA 283801
SONOMA COUNTY, CA

BAG \\ZINFANDEL\PROJ\CALTRANS\SHARED\SR116\STAGEGULCH\MAPFILES\STAGEGULCH_404_401\IMPACTS_MAPBOOK MXD STAGEGULCH_404_401\IMPACTS_MAPBOOK PDF 4/2/2009 14:45:32

Dist	COUNTY	ROUTE	KILOMETER POST TOTAL PROJECT	SHEET No.	TOTAL SHEETS
04	Son	116	67.3/71.9		

REGISTERED CIVIL ENGINEER 7-24-07 DATE

PLANS APPROVAL DATE 12-31-07

REGISTERED PROFESSIONAL ENGINEER Jason R. Phoen 57593 CIVIL STATE OF CALIFORNIA

THE STATE OF CALIFORNIA OR ITS OFFICERS OR AGENTS SHALL NOT BE RESPONSIBLE FOR THE ACCURACY OR COMPLETENESS OF ELECTRONIC COPIES OF THIS PLAN SHEET.

Caltrans Metric

FOR COMPLETE RIGHT OF WAY DATA, SEE RIGHT OF WAY RECORD MAPS AT DISTRICT OFFICE.

CURVE DATA

No.	R	Δ	T	L	N-COORDINATE	E-COORDINATE
①	304.801	05° 22' 16"	14.297	28.573	563702.976	1953906.350
②	275.000	34° 31' 43"	85.465	165.725	563600.981	1954024.866

LEGEND:

- HOT MIX ASPHALT OVERLAY (TYPE A)
- REPLACE HMA-SURFACING
- CONSTRUCT ROADWAY
- REMOVE BASE AND SURFACING
- CONFORM (PLANE AC PAVEMENT)
- ENVIRONMENTALLY SENSITIVE AREA (ESA)
- ESA — Temp ESA FENCE
- PDE — PERMANENT DRAINAGE EASEMENT
- PSE — PERMANENT SLOPE EASEMENT
- TCE — TEMPORARY CONSTRUCTION EASEMENT
- Temp FENCE (TYPE BW, WOOD POST)

ABBREVIATION

AFTS ALTERNATIVE FLARED TERMINAL SYSTEM

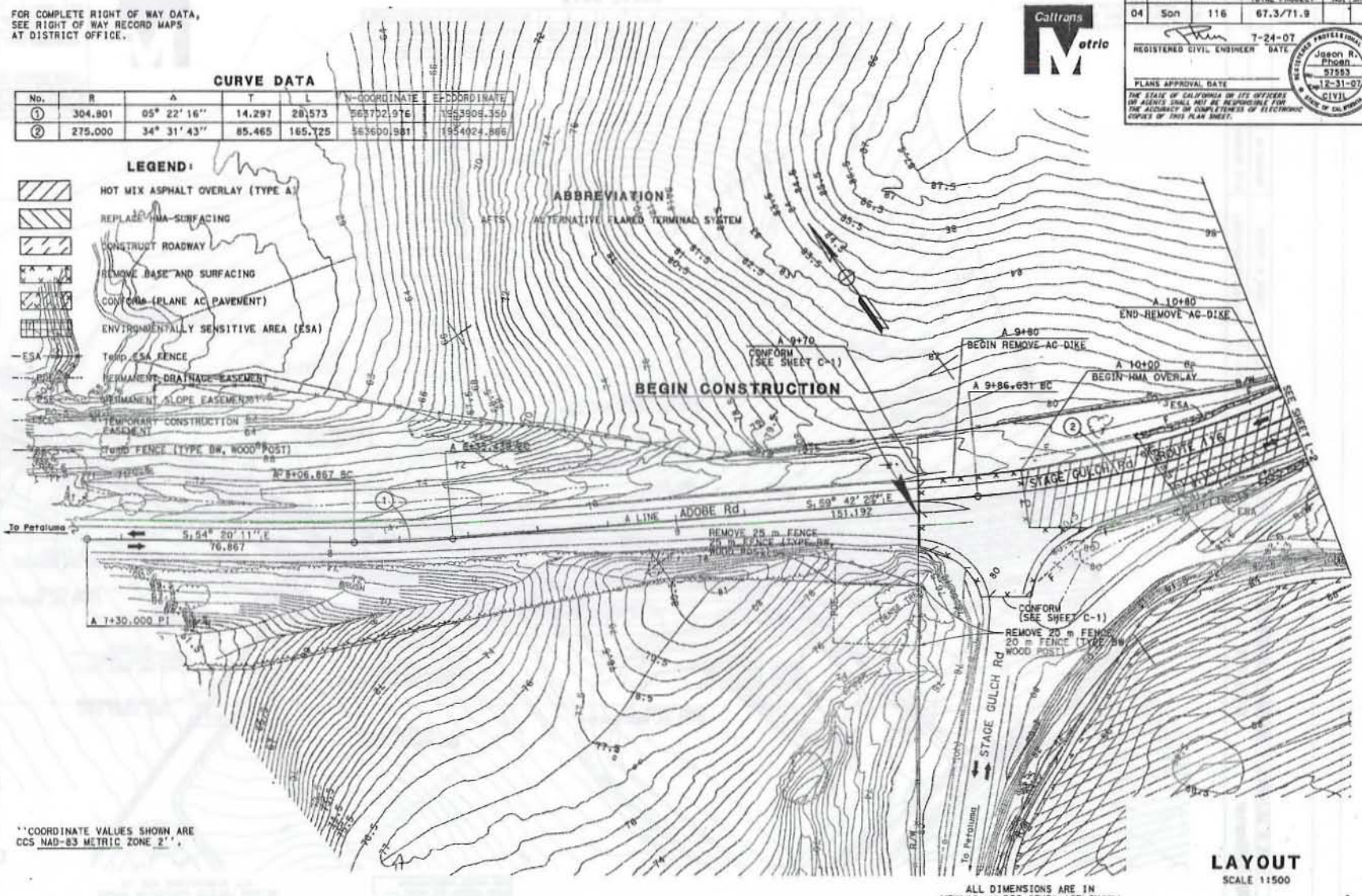

"COORDINATE VALUES SHOWN ARE CCS NAD-83 METRIC ZONE 2".

ALL DIMENSIONS ARE IN METERS UNLESS OTHERWISE SHOWN

LAYOUT

SCALE 1:500

L-1

STATE OF CALIFORNIA - DEPARTMENT OF TRANSPORTATION

Caltrans

DESIGN

FUNCTIONAL SUPERVISOR: STEWART LEE

CALCULATED-DESIGNED BY: JASON R. PHOEN

CHECKED BY: EMARNAN PONGPAIROJ

REVISED BY: JRP

DATE REVISED: 5/07

DATE PLOTTED => 14-MAR-2008

TIME PLOTTED => 11:23

03-14-08

BORDER LAST REVISED 3/1/2007

RELATIVE BORDER SCALE IS IN MILLIMETERS 0 20 40 60 80

USERNAME => s4126849

DGN FILE => 4283801ea001.dgn

CU 04261

EA 283801

FOR COMPLETE RIGHT OF WAY DATA, SEE RIGHT OF WAY RECORD MAPS AT DISTRICT OFFICE.

CURVE DATA

No.	R	Δ	T	L	N-COORDINATE	E-COORDINATE
2	275.000	35° 31' 43"	85.465	169.725	563600.98	1954024.886
3	305.000	23° 28' 06"	63.353	124.929	563637.333	1954109.516

Dist	COUNTY	ROUTE	KILOMETER POST TOTAL PROJECT	SHEET No.	TOT SHEE
04	Son	116	67.3/71.9		

REGISTERED CIVIL ENGINEER 7-24-07 DATE

PLANS APPROVAL DATE

Jason R. Phoen 61553 12-31-07 CIVIL STATE OF CALIFORNIA

THE STATE OF CALIFORNIA OR ITS OFFICERS OR AGENTS SHALL NOT BE RESPONSIBLE FOR THE ACCURACY OR COMPLETENESS OF ELECTRONIC COPIES OF THIS PLAN SHEET.

Caltrans Metric

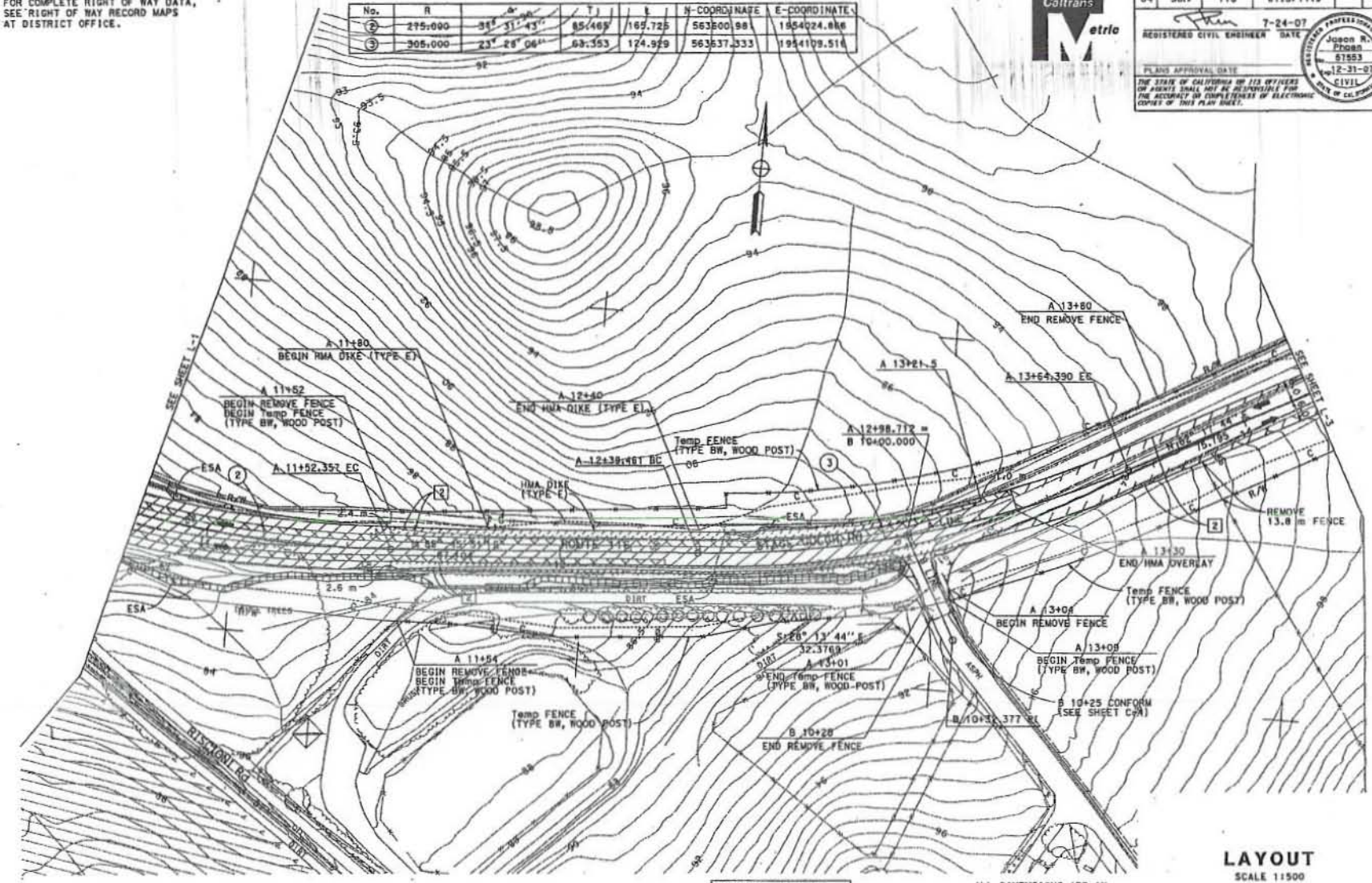

FOR NOTES, ABBREVIATIONS &/OR LEGEND, SEE SHEET L-1

ALL DIMENSIONS ARE IN METERS UNLESS OTHERWISE SHOWN

LAYOUT

SCALE 1:500

L-2

STATE OF CALIFORNIA - DEPARTMENT OF TRANSPORTATION

Caltrans

DESIGN

FUNCTIONAL SUPERVISOR: STEWART LEE

CALCULATED-DESIGNED BY: JASON R. PHOEN

CHECKED BY: EMARNAN PONGPAIROJ

REVISED BY: JRP

DATE REVISED: 5/07

BORDER LAST REVISED 3/1/2007

RELATIVE BORDER SCALE IS IN MILLIMETERS 0 20 40 60 80

USERNAME => s126797

DGN FILE => 4283801ea002.dgn

CU 04261

EA 283801

FOR COMPLETE RIGHT OF WAY DATA, SEE RIGHT OF WAY RECORD MAPS AT DISTRICT OFFICE.

CURVE DATA

No.	R	Δ	T	L	N-COORDINATE	E-COORDINATE
4	305.000	24° 09' 34.710"	65.274	128.608	5631 32.503	1954406.718

Dist	COUNTY	ROUTE	KILOMETER POST TOTAL PROJECT	SHEET No.	TOTAL SHEETS
04	Son	116	67.3/71.9		

REGISTERED CIVIL ENGINEER 7-24-07 DATE

PLANS APPROVAL DATE

THE STATE OF CALIFORNIA OR ITS OFFICERS OR AGENTS SHALL NOT BE RESPONSIBLE FOR THE ACCURACY OR COMPLETENESS OF ELECTRONIC COPIES OF THIS PLAN SHEET.

REGISTERED PROFESSIONAL ENGINEER Jason R. Phoen 57553 12-31-07 CIVIL STATE OF CALIFORNIA

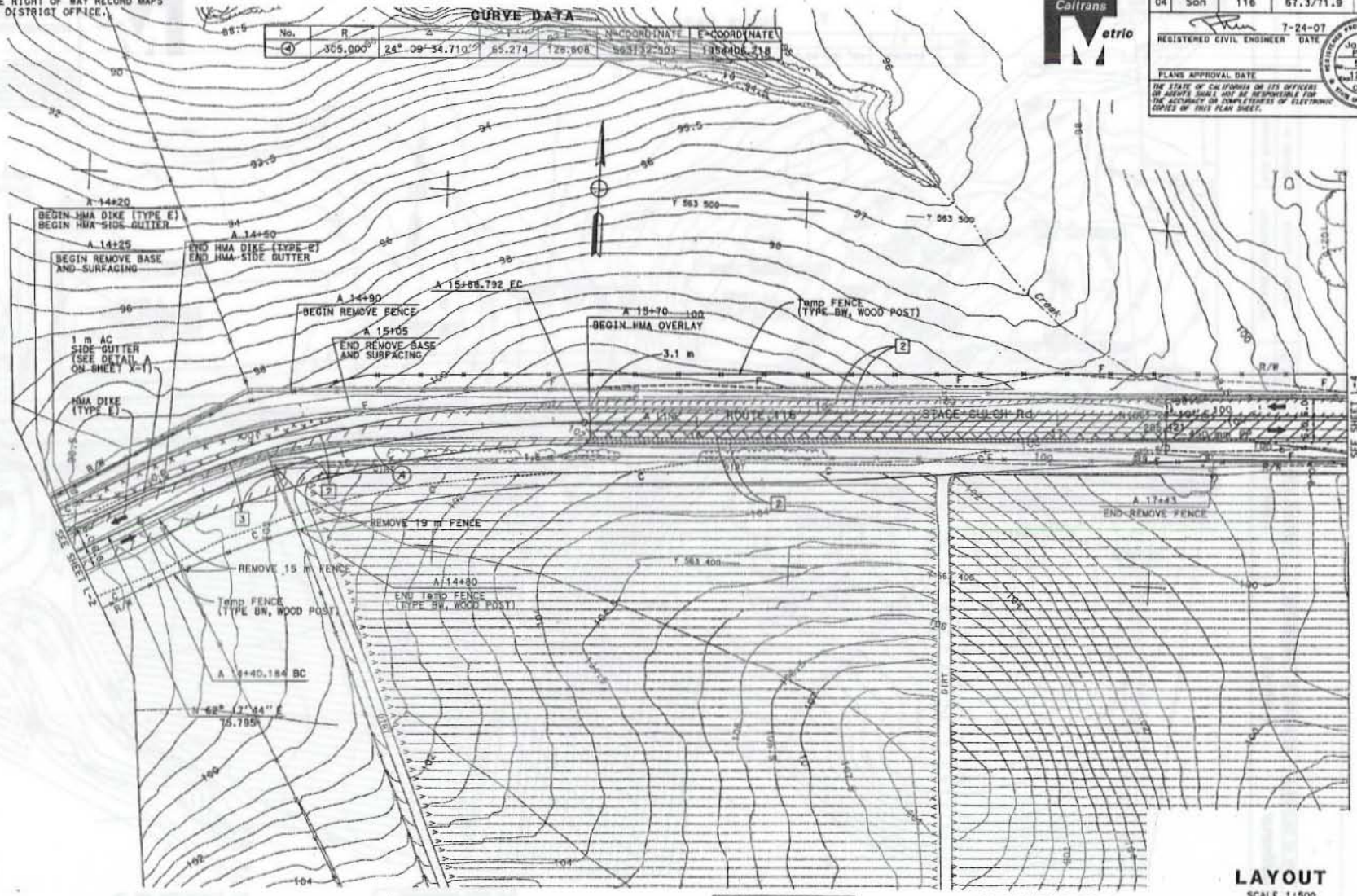

FOR NOTES, ABBREVIATIONS &/OR LEGEND, SEE SHEET L-1

ALL DIMENSIONS ARE IN METERS UNLESS OTHERWISE SHOWN

LAYOUT

SCALE 1:500

L-3

STATE OF CALIFORNIA - DEPARTMENT OF TRANSPORTATION

Caltrans DESIGN

FUNCTIONAL SUPERVISOR: STEWART LEE

CALCULATED-DESIGNED BY: JASON R. PHOEN

CHECKED BY: EMARNAN PONGPATROJ

REVISED BY: JRP

DATE REVISED: 5/07

DATE PLOTTED => 19-MAR-2008

TIME PLOTTED => 10:17

12-12-07

BORDER LAST REVISED 3/1/2007

RELATIVE BORDER SCALE IS IN MILLIMETERS 0 20 40 60 80

USERNAME => s133787

DGN FILE => 4283801cu003.dgn

CU 04261

EA 283801

Dist	COUNTY	ROUTE	KILOMETER POST TOTAL PROJECT	SHEET No.	TOTAL SHEETS
04	Son	116	67.3/71.9		

REGISTERED CIVIL ENGINEER 7-24-07 DATE

PLANS APPROVAL DATE

THE STATE OF CALIFORNIA OR ITS OFFICERS OR AGENTS SHALL NOT BE RESPONSIBLE FOR THE ACCURACY OR COMPLETENESS OF ELECTRONIC COPIES OF THIS PLAN SHEET.

REGISTERED PROFESSIONAL ENGINEER Jason R. Phoen 57553 12-31-07 CIVIL STATE OF CALIFORNIA

Caltrans Metric

FOR COMPLETE RIGHT OF WAY DATA, SEE RIGHT OF WAY RECORD MAPS AT DISTRICT OFFICE.

CURVE DATA

No.	R	Δ	T	L	N-COORDINATE	E-COORDINATE
5	610.000	09° 53' 43.810"	52.808	105.352	562846.353	1954773.932

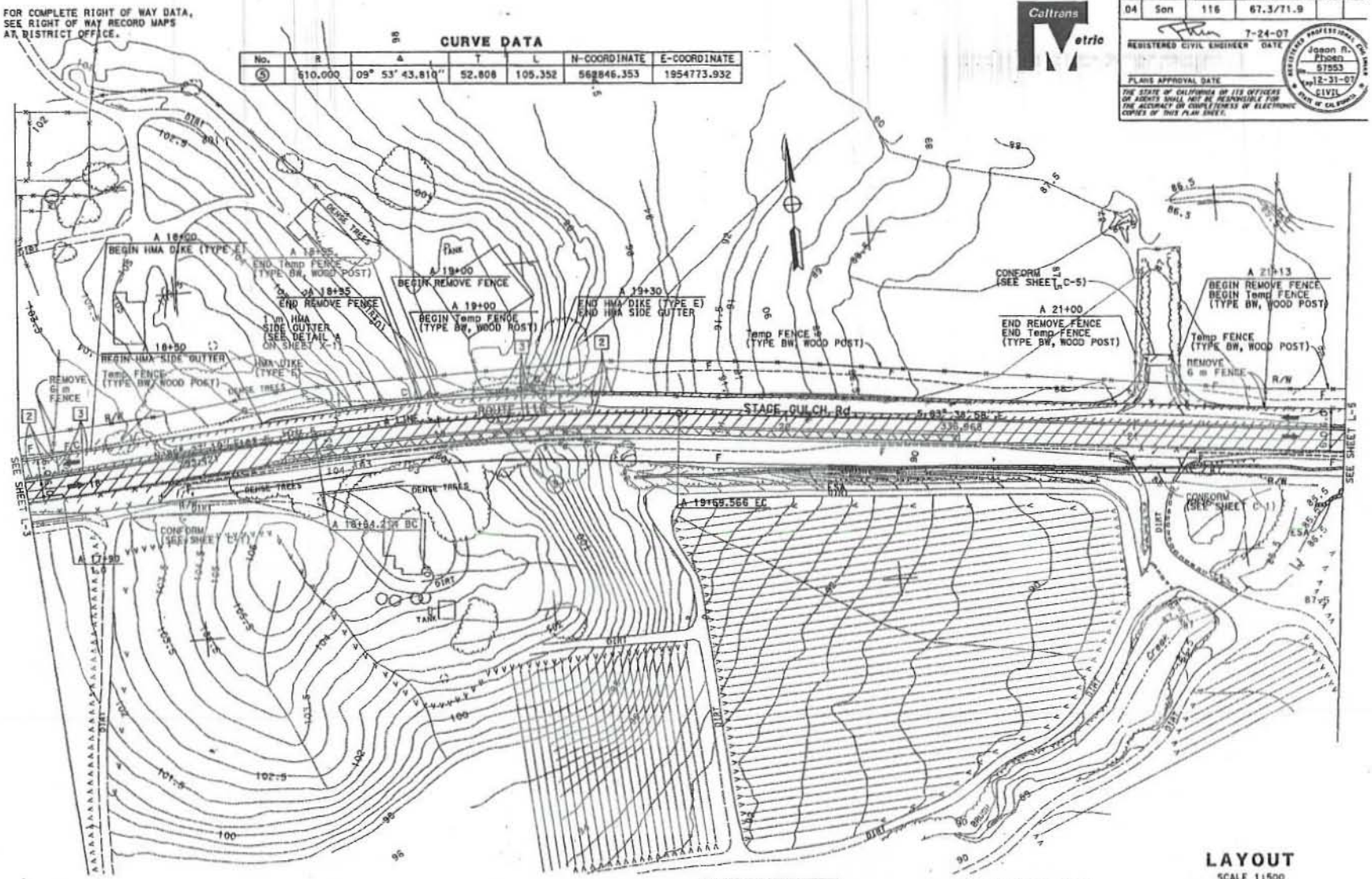

FOR NOTES, ABBREVIATIONS &/OR LEGEND, SEE SHEET L-1

ALL DIMENSIONS ARE IN METERS UNLESS OTHERWISE SHOWN

LAYOUT

SCALE 1:500

L-4

STATE OF CALIFORNIA - DEPARTMENT OF TRANSPORTATION	FUNCTIONAL SUPERVISOR	STEWART LEE
Caltrans	CALCULATED-DESIGNED BY	JASON R. PHOEN
DESIGN	CHECKED BY	EMARNAN PONGPAIROJ
	REVISED BY	JRP
	DATE REVISED	5/07

BORDER LAST REVISED 3/1/2007

RELATIVE BORDER SCALE IS IN MILLIMETERS 0 20 40 60 80

USERNAME =>1128787
DGN FILE =>428380pe004.dgn

CU 04261

EA 283801

Dist	COUNTY	ROUTE	KILOMETER POST TOTAL PROJECT	SHEET No.	TOTAL SHEETS
04	Son	116	67.3/71.9		

REGISTERED CIVIL ENGINEER 7-24-07 DATE

PLANS APPROVAL DATE 12-31-07

Jason R. Phoen 57653 CIVIL STATE OF CALIFORNIA

THE STATE OF CALIFORNIA OR ITS OFFICERS OR AGENTS SHALL NOT BE RESPONSIBLE FOR THE ACCURACY OR COMPLETENESS OF ELECTRONIC COPIES OF THIS PLAN SHEET.

Caltrans Metric

FOR COMPLETE RIGHT OF WAY DATA, SEE RIGHT OF WAY RECORD MAPS AT DISTRICT OFFICE.

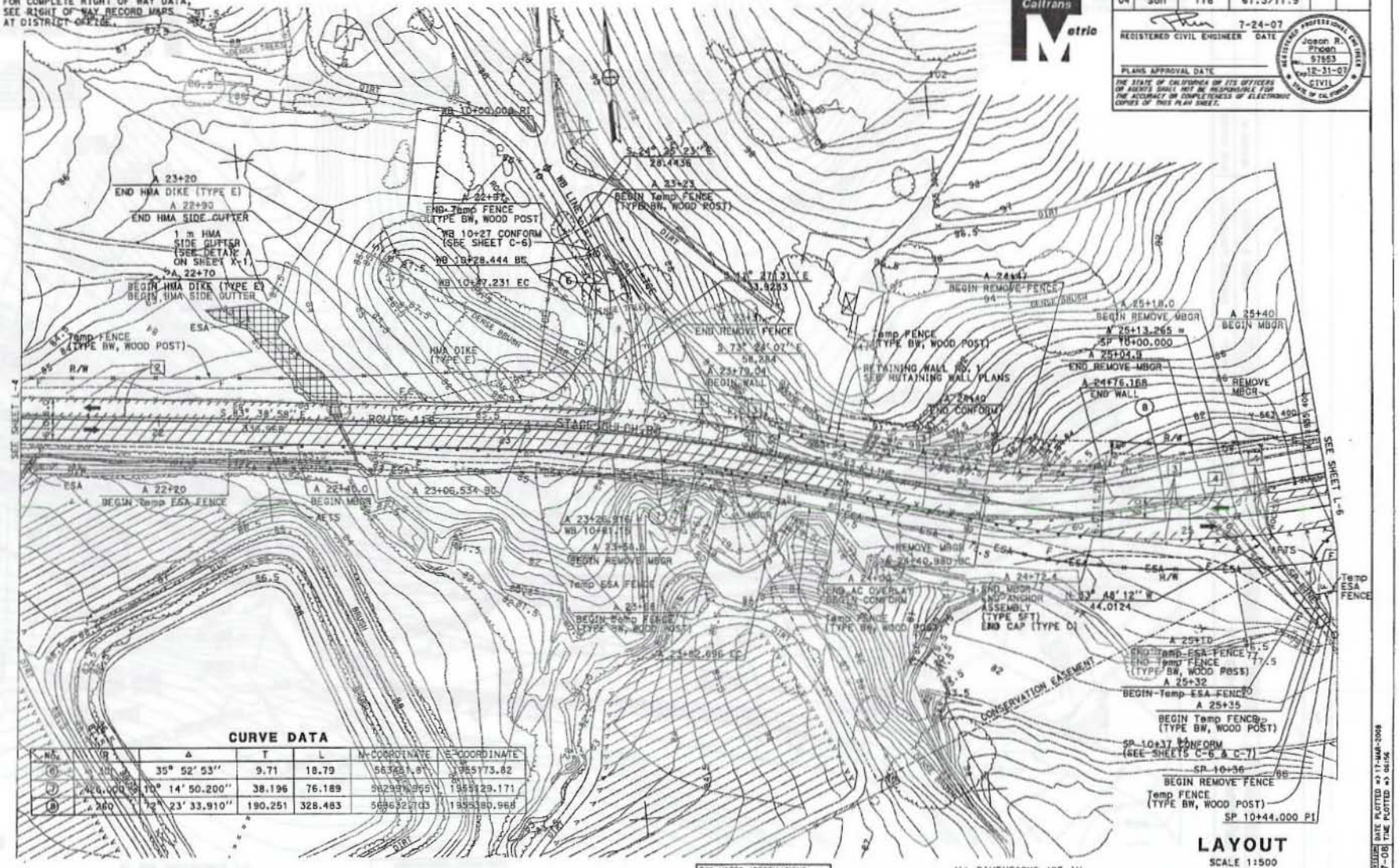

CURVE DATA

NO.	R	Δ	T	L	N-COORDINATE	E-COORDINATE
(6)	100	35° 52' 53"	9.71	18.79	563451.81	1955173.82
(7)	426.000	10° 14' 50.200"	38.196	76.189	562931.955	1955129.171
(8)	260	72° 23' 33.910"	190.251	328.483	562532.703	1955180.968

FOR NOTES, ABBREVIATIONS &/OR LEGEND, SEE SHEET L-1

ALL DIMENSIONS ARE IN METERS UNLESS OTHERWISE SHOWN

LAYOUT

SCALE 1:500

L-5

STATE OF CALIFORNIA - DEPARTMENT OF TRANSPORTATION

Caltrans

DESIGN

FUNCTIONAL SUPERVISOR: STEWART LEE

CALCULATED-DESIGNED BY: JASON R. PHOEN

CHECKED BY: EMARNAN PONGPAIROJ

REVISED BY: JRP

DATE REVISED: 5/07

BORDER LAST REVISED 3/1/2007

RELATIVE BORDER SCALE IS IN MILLIMETERS 0 20 40 60 80

USERNAME => s126787

DGN FILE => 428380ea005.dgn

CU 04261

EA 283801

LAST REVISION 03-17-08

DATE PLOTTED => 17-MAR-2008

TIME PLOTTED => 06:56

Dist	COUNTY	ROUTE	KILOMETER POST TOTAL PROJECT	SHEET No.	TOT. SHEE
04	Son	116	67.3/71.9		

REGISTERED CIVIL ENGINEER 7-24-07 DATE

PLANS APPROVAL DATE

THE STATE OF CALIFORNIA OR ITS OFFICERS OR AGENTS SHALL NOT BE RESPONSIBLE FOR THE ACCURACY OR COMPLETENESS OF ELECTRONIC COPIES OF THIS PLAN SHEET.

REGISTERED PROFESSIONAL ENGINEER Jason R. Phoen 57553 12-31-07 CIVIL STATE OF CALIFORNIA

Caltrans Metric

FOR COMPLETE RIGHT OF WAY DATA, SEE RIGHT OF WAY RECORD MAPS AT DISTRICT OFFICE.

CURVE DATA

No.	DELTA	R	L	E-COORDINATE	N-COORDINATE
(B)	260.000	74°43'33.918"	198.257	326.483	563632.703	1955380.968

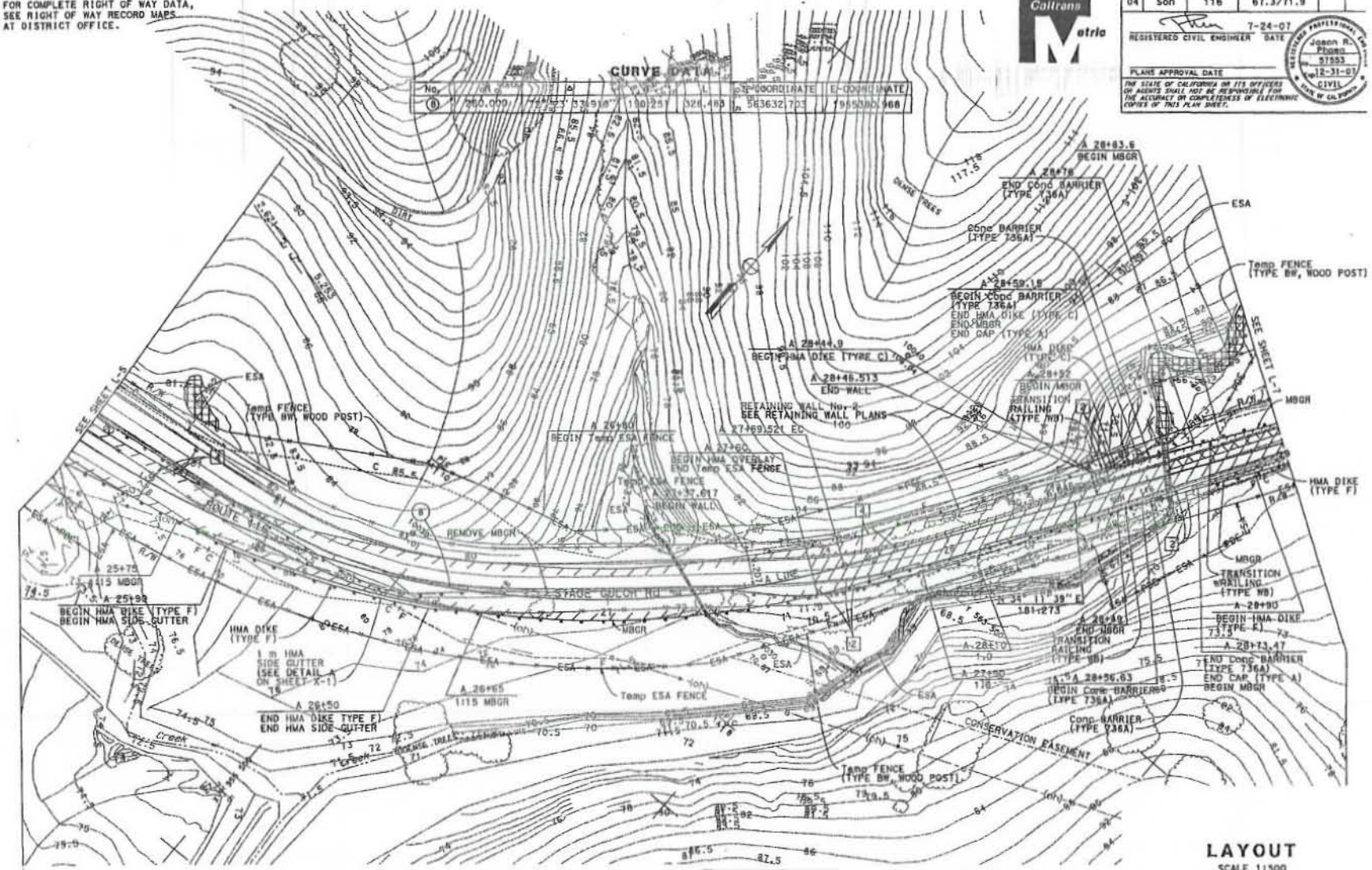

FOR NOTES, ABBREVIATIONS &/OR LEGEND, SEE SHEET L-4

ALL DIMENSIONS ARE IN METERS UNLESS OTHERWISE SHOWN

LAYOUT

SCALE 1:500

L-6

STATE OF CALIFORNIA - DEPARTMENT OF TRANSPORTATION

Caltrans DESIGN

FUNCTIONAL SUPERVISOR: STEWART LEE

CALCULATED-DESIGNED BY: JASON R. PHOEN

CHECKED BY: EMARNAN PONGPAIROJ

REVISED BY: JRP

DATE REVISED: 5/07

BORDER LAST REVISED 3/1/2007

RELATIVE BORDER SCALE IS IN MILLIMETERS 0 20 40 60 80

USERNAME =>s128787

DGN FILE =>428380sa006.dgn

CU 04261

EA 283801

Dist	COUNTY	ROUTE	KILOMETER POST TOTAL PROJECT	SHEET No.	TOTAL SHEETS
04	Son	116	67.3/71.9		

REGISTERED CIVIL ENGINEER DATE 7-24-07

PLANS APPROVAL DATE

Jason R. Phoen 57553 12-31-07 CIVIL STATE OF CALIFORNIA

THE STATE OF CALIFORNIA OR ITS OFFICERS OR AGENTS SHALL NOT BE RESPONSIBLE FOR THE ACCURACY OR COMPLETENESS OF ELECTRONIC COPIES OF THIS PLAN SHEET.

Caltrans Metric

FOR COMPLETE RIGHT OF WAY DATA, SEE RIGHT OF WAY RECORD MAPS AT DISTRICT OFFICE.

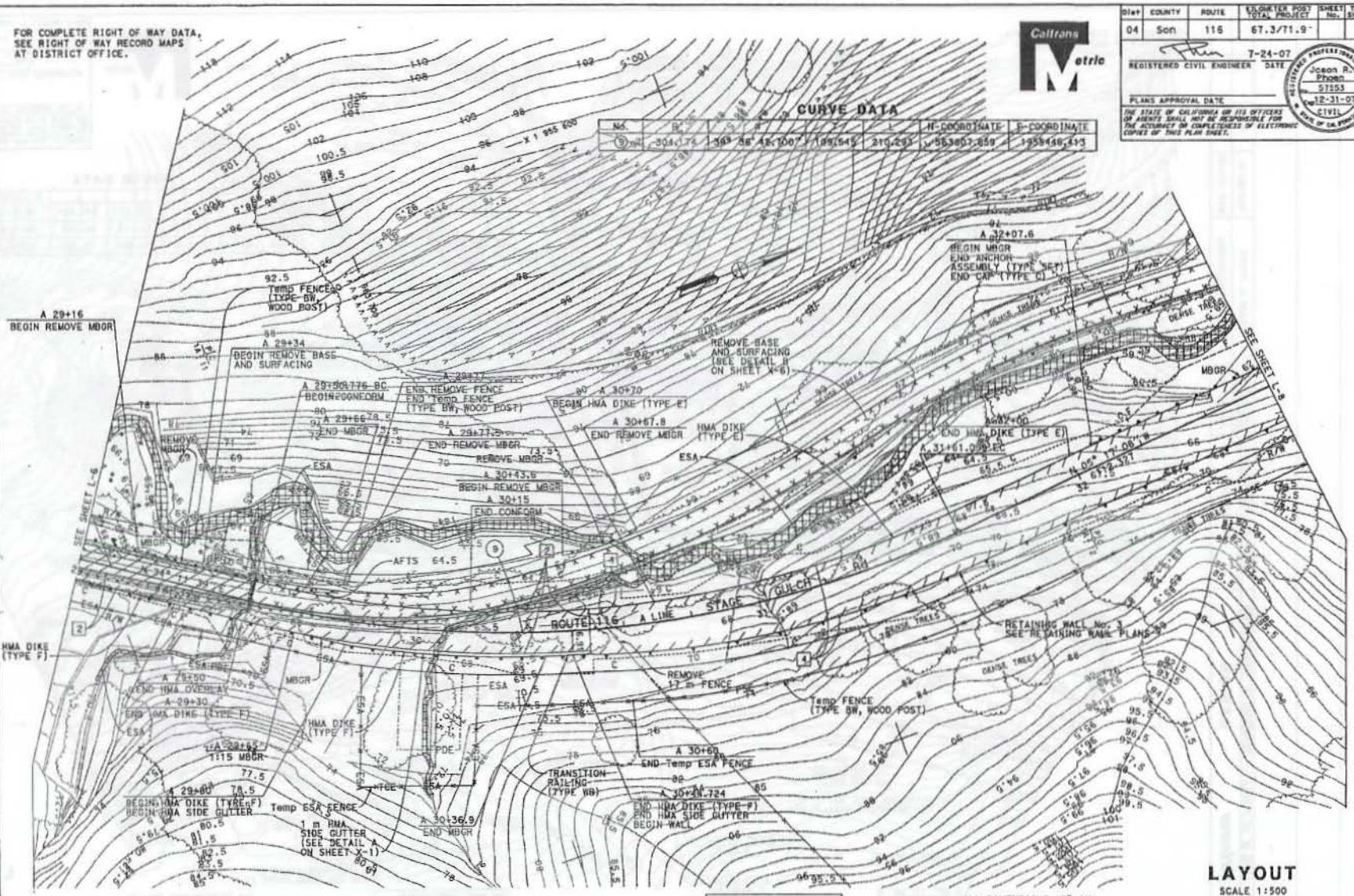

CURVE DATA

No.	R	Δ	T	L	H-COORDINATE	E-COORDINATE
9	304.76	39°56'42.100"	188.545	210.293	563807.859	1953436.413

FOR NOTES, ABBREVIATIONS &/OR LEGEND, SEE SHEET L-1

ALL DIMENSIONS ARE IN METERS UNLESS OTHERWISE SHOWN

LAYOUT

SCALE 1:500

L-7

STATE OF CALIFORNIA - DEPARTMENT OF TRANSPORTATION

Caltrans DESIGN

FUNCTIONAL SUPERVISOR: STEWART LEE

CALCULATED-DESIGNED BY: JASON R. PHOEN

CHECKED BY: EMARNAN PONGPAIROJ

REVISED BY: JRP

DATE REVISED: 5/07

DATE PLOTTED => 19-MAR-2008
TIME PLOTTED => 14:21

03-17-08

BORDER LAST REVISED 3/1/2007

RELATIVE BORDER SCALE IS IN MILLIMETERS 0 20 40 60 80

USERNAME => s128787
DGN FILE => 4283801ss007.dgn

CU 04261

EA 283801

DIST.	COUNTY	ROUTE	KILOMETER POST TOTAL PROJECT	SHEET No.	TOT. SHEE
04	Son	116	67.3/71.9		

REGISTERED CIVIL ENGINEER 7-24-07 DATE

PLANS APPROVAL DATE

THE STATE OF CALIFORNIA OR ITS OFFICERS OR AGENTS SHALL NOT BE RESPONSIBLE FOR THE ACCURACY OR COMPLETENESS OF ELECTRONIC COPIES OF THIS PLAN SHEET.

REGISTERED PROFESSIONAL ENGINEER Jason R. Phoen 67553 12-31-07 CIVIL STATE OF CALIFORNIA

Caltrans District

FOR COMPLETE RIGHT OF WAY DATA, SEE RIGHT OF WAY RECORD MAPS AT DISTRICT OFFICE.

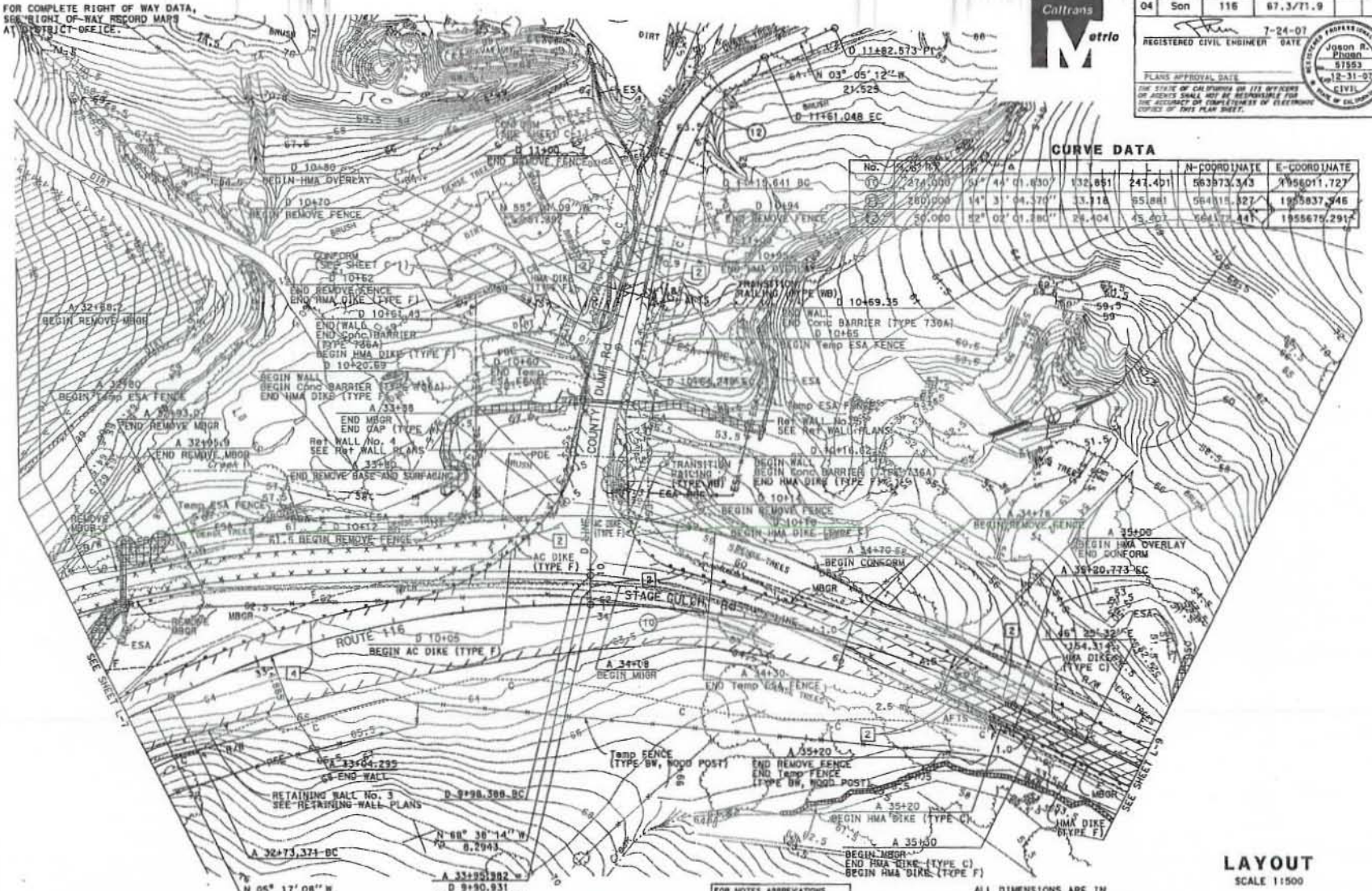

CURVE DATA

No.	R	Δ	L	N-COORDINATE	E-COORDINATE
10	274.000	51° 44' 01.830"	132.851	247.401	563973.343	1956011.727
11	260.000	14° 3' 04.370"	63.118	95.881	564015.327	1955837.946
12	30.000	82° 02' 01.280"	26.404	45.403	564172.441	1955675.291

FOR NOTES, ABBREVATIONS &/OR LEGEND, SEE SHEET L-1

ALL DIMENSIONS ARE IN METERS UNLESS OTHERWISE SHOWN

LAYOUT

SCALE 1:500

L-8

STATE OF CALIFORNIA - DEPARTMENT OF TRANSPORTATION

Caltrans DESIGN

FUNCTIONAL SUPERVISOR: STEWART LEE

CALCULATED-DESIGNED BY: JASON R. PHOEN

CHECKED BY: EMANNAN PONGPAIROJ

REVISED BY: JRP

DATE REVISED: 5/07

BORDER LAST REVISED 3/1/2007

RELATIVE BORDER SCALE IS IN MILLIMETERS 0 20 40 60 80

USERNAME => s119910
DGN FILE => 4283400c008.dgn

CU 04261

EA 283801

Dist	COUNTY	ROUTE	KILOMETER POST TOTAL PROJECT	SHEET No.	TOTAL SHEETS
04	Son	116	67.3/71.9		

REGISTERED CIVIL ENGINEER DATE 7-24-07

PLANS APPROVAL DATE

THE STATE OF CALIFORNIA OR ITS OFFICERS OR AGENTS SHALL NOT BE RESPONSIBLE FOR THE ACCURACY OR COMPLETENESS OF ELECTRONIC COPIES OF THIS PLAN SHEET.

REGISTERED PROFESSIONAL ENGINEER Jason R. Phoen 57953 12-31-07 CIVIL STATE OF CALIFORNIA

Caltrans Metric

FOR COMPLETE RIGHT OF WAY DATA, SEE RIGHT OF WAY RECORD MAPS AT DISTRICT OFFICE.

CURVE DATA

No.	R	Δ	T	L	N-COORDINATE	E-COORDINATE
13	6159.928	01° 34' 21.420"	84.542	169.074	550815.186	1860180.683

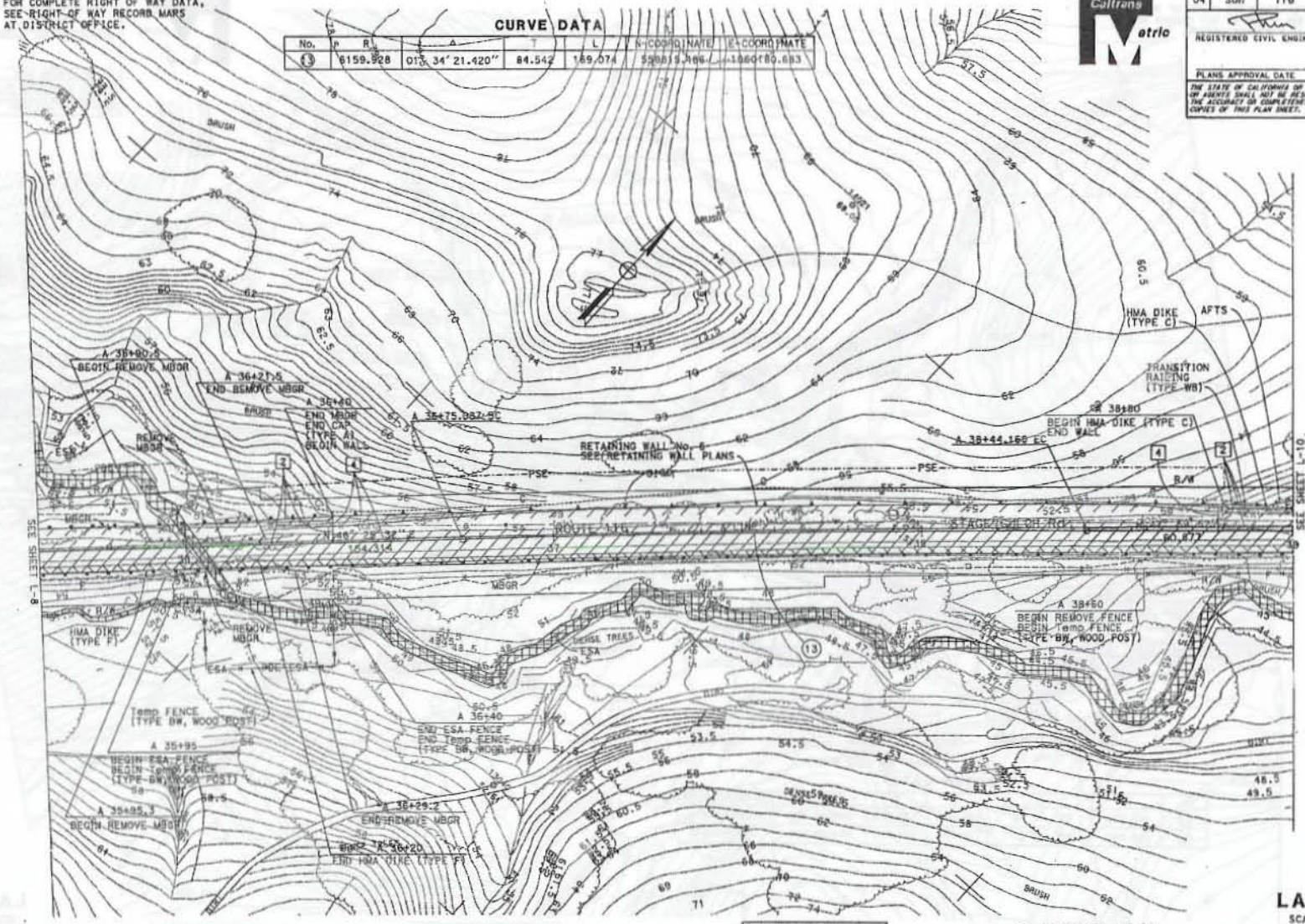

FOR NOTES, ABBREVIATIONS &/OR LEGEND, SEE SHEET L-1

ALL DIMENSIONS ARE IN METERS UNLESS OTHERWISE SHOWN

LAYOUT

SCALE 1:1500

L-9

STATE OF CALIFORNIA - DEPARTMENT OF TRANSPORTATION

Caltrans

DESIGN

FUNCTIONAL SUPERVISOR	CALCULATED-DESIGNED BY	REVISED BY	JRP
STEWART LEE	JASON R. PHOEN	DATE REVISED	5/07
	CHECKED BY	EMARNAN PONGPAIROJ	

LAST REVISION DATE PLOTTED => 19-MAR-2008
03-17-08 TIME PLOTTED => 13:01

BORDER LAST REVISED 3/1/2007

RELATIVE BORDER SCALE IS IN MILLIMETERS 0 20 40 60 80

USERNAME => s128787
DGN FILE => 428380o0005.dgn

CU 04261

EA 283801

DIST	COUNTY	ROUTE	KILOMETER POST TOTAL PROJECT	SHEET No.	TOTAL SHEETS
04	Son	116	67.3/71.9		

REGISTERED CIVIL ENGINEER 7-24-07 DATE

PLANS APPROVAL DATE

THE STATE OF CALIFORNIA OR ITS OFFICERS OR AGENTS SHALL NOT BE RESPONSIBLE FOR THE ACCURACY OR COMPLETENESS OF ELECTRONIC COPIES OF THIS PLAN SHEET.

REGISTERED PROFESSIONAL ENGINEER Jason R. Phoon 57553 12-31-07 CIVIL STATE OF CALIFORNIA

Caltrans Metric

FOR COMPLETE RIGHT OF WAY DATA, SEE RIGHT OF WAY RECORD MAPS AT DISTRICT OFFICE.

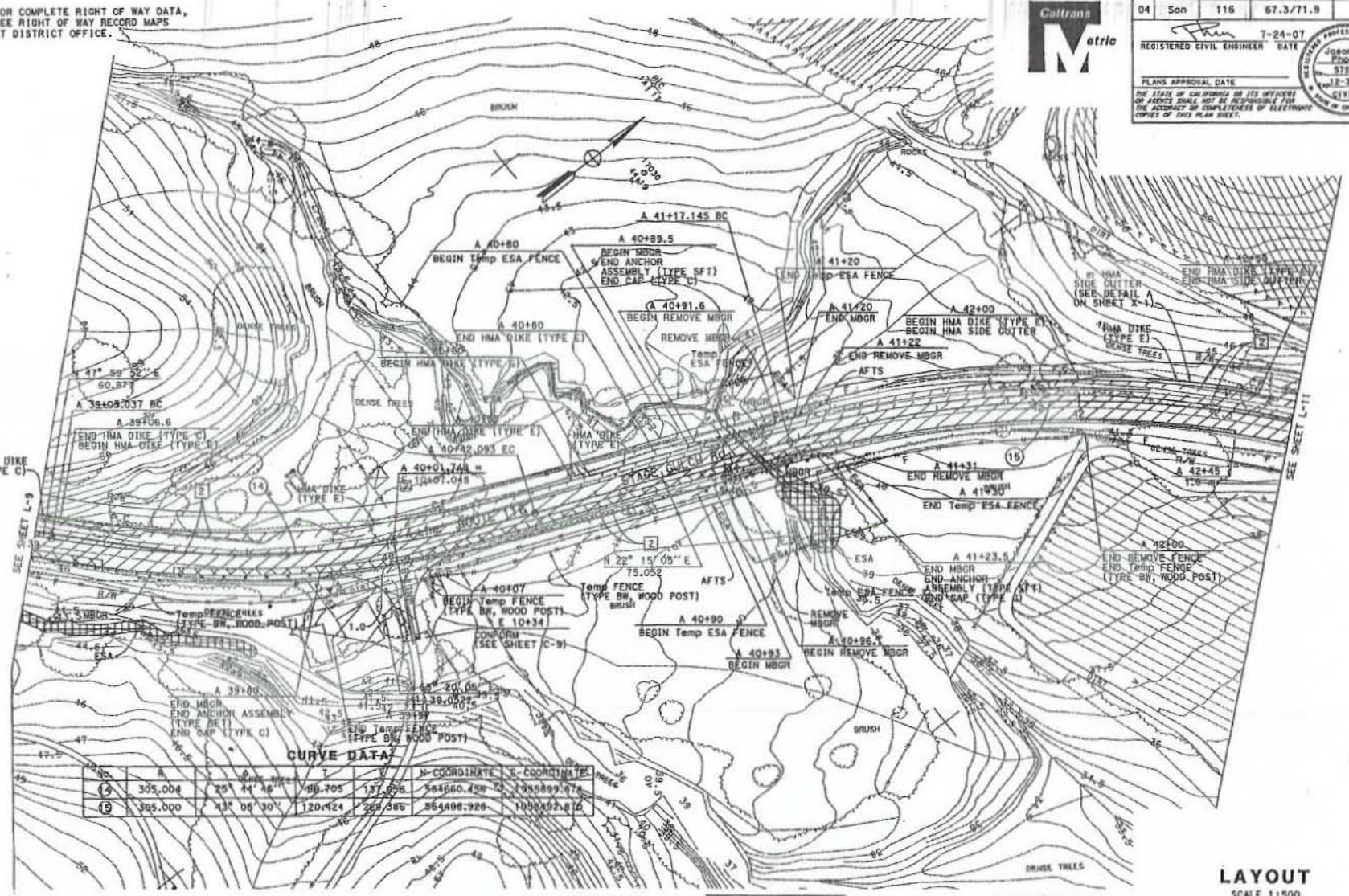

CURVE DATA

NO.	R	Δ	T	L	N-COORDINATE	E-COORDINATE
14	305.000	25° 44' 46"	69.705	137.026	564660.456	1055899.078
15	305.000	43° 05' 30"	120.424	229.386	564498.928	1056492.870

FOR NOTES, ABBREVIATIONS &/OR LEGEND, SEE SHEET L-1

ALL DIMENSIONS ARE IN METERS UNLESS OTHERWISE SHOWN

LAYOUT

SCALE 1:500

L-10

JASON R. PHOON	JRP	CALCULATED-DESIGNED BY	FUNCTIONAL SUPERVISOR
EMANNAN PONGPAIROJ	5/07	CHECKED BY	STEWART LEE
REVISED BY			
DATE REVISED			

STATE OF CALIFORNIA - DEPARTMENT OF TRANSPORTATION

Caltrans

DESIGN

BORDER LAST REVISED 3/1/2007

RELATIVE BORDER SCALE IS IN MILLIMETERS 0 20 40 60 80

USERNAME => s128797
DGN FILE => 426380cp010.dgn

CU 04261

EA 283801

FILE NAME | DATE PLOTTED | TIME PLOTTED

Dist	COUNTY	ROUTE	KILOMETER POST TOTAL PROJECT	SHEET No.	TOTAL SHEETS
04	Son	116	67.3/71.9		

REGISTERED CIVIL ENGINEER 7-24-07 DATE

PLANS APPROVAL DATE

THE STATE OF CALIFORNIA OR ITS OFFICERS OR AGENTS SHALL NOT BE RESPONSIBLE FOR THE ACCURACY OR COMPLETENESS OF ELECTRONIC COPIES OF THIS PLAN SHEET.

REGISTERED PROFESSIONAL ENGINEER Jason R. Phoen 57553 12-31-07 CIVIL STATE OF CALIFORNIA

Caltrans Metric

FOR COMPLETE RIGHT OF WAY DATA, SEE RIGHT OF WAY RECORD MAPS AT DISTRICT OFFICE.

CURVE DATA

CURVE No.	R	Δ	T	L	N-COORDINATE	E-COORDINATE
1	305.000	83° 05' 30"	20.424	229.396	564498.988	1956492.870

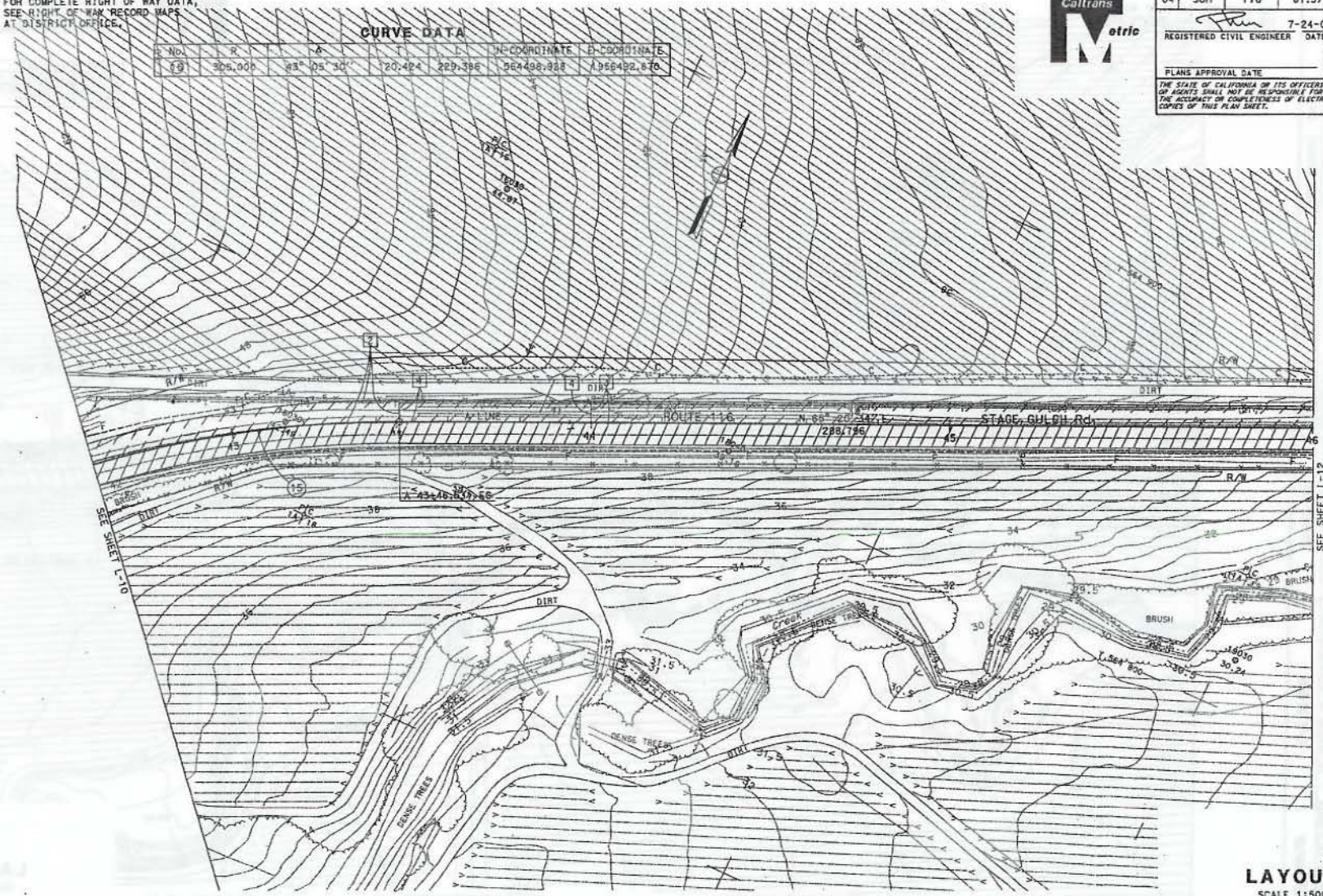

FOR NOTES, ABBREVIATIONS &/OR LEGEND, SEE SHEET L-1

ALL DIMENSIONS ARE IN METERS UNLESS OTHERWISE SHOWN

LAYOUT

SCALE 1:500

L-11

STATE OF CALIFORNIA - DEPARTMENT OF TRANSPORTATION

Caltrans

DESIGN

FUNCTIONAL SUPERVISOR: STEWART LEE

CALCULATED-DESIGNED BY: JASON R. PHOEN

CHECKED BY: EMARINAN PONGPAIROJ

REVISED BY: JRP

DATE REVISED: 5/07

LAST REVISION DATE PLOTTED => 18-MAR-2008 TIME PLOTTED => 08:49

BORDER LAST REVISED 3/1/2007

RELATIVE BORDER SCALE IS IN MILLIMETERS 0 20 40 60 80

USERNAME => s128787 DGN FILE => 4283800o011.dgn

CU 04261

EA 283801

DIst	COUNTY	ROUTE	KILOMETER POST TOTAL PROJECT	SHEET No.	TOTAL SHEETS
04	Son	116	67.3/71.9		

REGISTERED CIVIL ENGINEER 7-24-07 DATE

PLANS APPROVAL DATE

THE STATE OF CALIFORNIA OR ITS OFFICERS OR AGENTS SHALL NOT BE RESPONSIBLE FOR THE ACCURACY OR COMPLETENESS OF ELECTRONIC COPIES OF THIS PLAN SHEET.

Jason R. Pinoen 57553 12-31-07 CIVIL STATE OF CALIFORNIA

FOR COMPLETE RIGHT OF WAY DATA, SEE RIGHT OF WAY RECORD MAPS AT DISTRICT OFFICE.

CURVE DATA

No.	R	A	L	N-COORDINATE	E-COORDINATE
15	6000	03° 05' 28"	329.095	559373.698	1959218.287

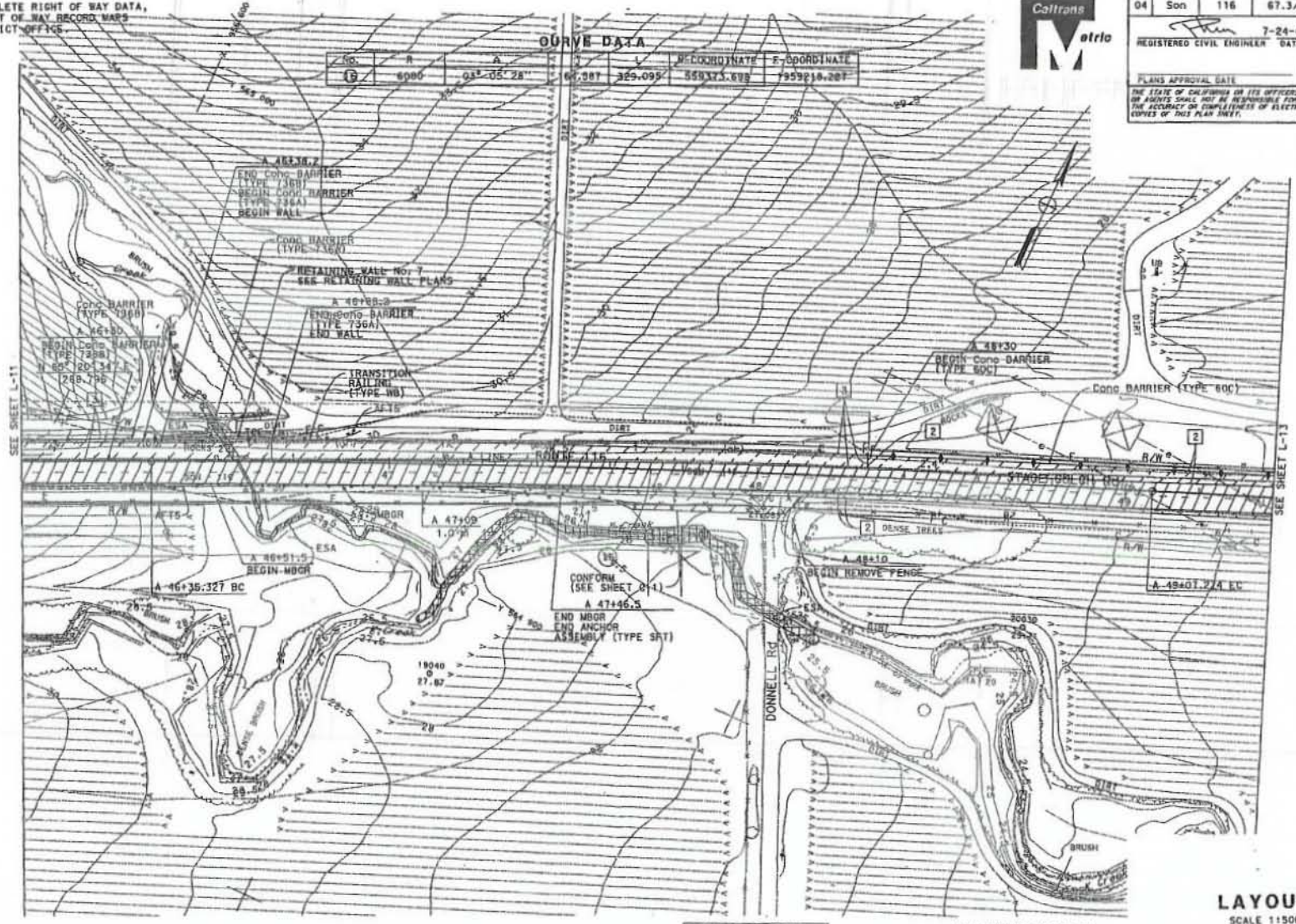

FOR NOTES, ABBREVIATIONS &/OR LEGEND, SEE SHEET L-1

ALL DIMENSIONS ARE IN METERS UNLESS OTHERWISE SHOWN

LAYOUT

SCALE 1:500

L-12

STATE OF CALIFORNIA - DEPARTMENT OF TRANSPORTATION

Caltrans

DESIGN

FUNCTIONAL SUPERVISOR: STEWART LEE

CALCULATED-DESIGNED BY: JASON R. PINOEN

CHECKED BY: EMARNAN PONGPAIROJ

REVISED BY: JRP

DATE REVISED: 5/07

BORDER LAST REVISED 3/1/2007

RELATIVE BORDER SCALE IS IN MILLIMETERS 0 20 40 60 80

USERNAME => s128787
DGN FILE => 423380cu012.dgn

CU 04261

EA 283801

Dist	COUNTY	ROUTE	KILOMETER POST TOTAL PROJECT	SHEET No.	TOTAL SHEETS
04	Son	116	67.3/71.9		

REGISTERED CIVIL ENGINEER 7-24-07 DATE

PLANS APPROVAL DATE

THE STATE OF CALIFORNIA OR ITS OFFICERS OR AGENTS SHALL NOT BE RESPONSIBLE FOR THE ACCURACY OR COMPLETENESS OF ELECTRONIC COPIES OF THIS PLAN SHEET.

REGISTERED PROFESSIONAL ENGINEER Jason R. Phoen 57553 12-31-07 CIVIL STATE OF CALIFORNIA

Caltrans Metric

FOR COMPLETE RIGHT OF WAY DATA, SEE RIGHT OF WAY RECORD MAPS AT DISTRICT OFFICE.

CURVE DATA

No.	R	Δ	T	L	N-COORDINATE	E-COORDINATE
1	6000	01° 14' 34.6"	65.083	130.160	559554.0718	1859309.2109

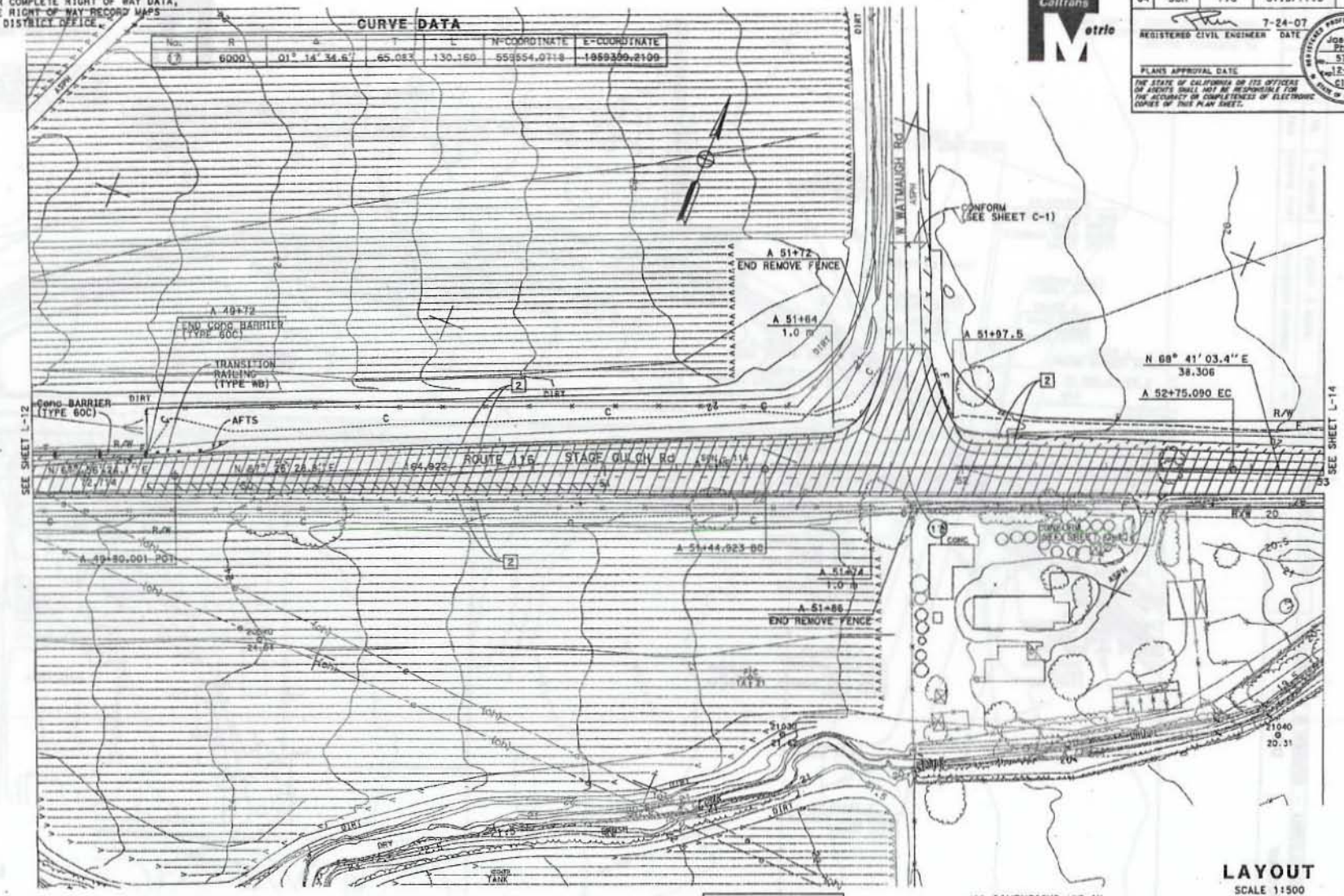

FOR NOTES, ABBREVIATIONS &/OR LEGEND, SEE SHEET L-1

ALL DIMENSIONS ARE IN METERS UNLESS OTHERWISE SHOWN

LAYOUT

SCALE 1:500

L-13

STATE OF CALIFORNIA - DEPARTMENT OF TRANSPORTATION

Caltrans DESIGN

FUNCTIONAL SUPERVISOR: STEWART LEE

CALCULATED-DESIGNED BY: JASON R. PHOEN

CHECKED BY: EMANNAN PONGPATROJ

REVISED BY: JRP

DATE REVISED: 5/07

BORDER LAST REVISED 3/1/2007

RELATIVE BORDER SCALE IS IN MILLIMETERS 0 20 40 60 80

USERNAME => s128781

DGN FILE => 4283801oo013.dgn

CU 04261

EA 283801

LAST REVISION DATE PLOTTED => 18-MAR-2008

TIME PLOTTED => 07:43

12-19-07

Dist	COUNTY	ROUTE	KILOMETER POST TOTAL PROJECT	SHEET No.	TOTAL SHEETS
04	Son	116	67.3/71.9		

REGISTERED CIVIL ENGINEER 7-24-07 DATE

PLANS APPROVAL DATE

THE STATE OF CALIFORNIA OR ITS OFFICERS OR AGENTS SHALL NOT BE RESPONSIBLE FOR THE ACCURACY OR COMPLETENESS OF ELECTRONIC COPIES OF THIS PLAN SHEET.

REGISTERED PROFESSIONAL ENGINEER Jason R. Phoen 57553 12-31-07 CIVIL STATE OF CALIFORNIA

Caltrans Metric

FOR COMPLETE RIGHT OF WAY DATA, SEE RIGHT OF WAY RECORD MAPS AT DISTRICT OFFICE.

CURVE DATA

No.	R	Δ	T	L	N-COORDINATE	E-COORDINATE
18	5000	00° 49' 40.7"	43.353	86.704	570747.0991	1955013.8259

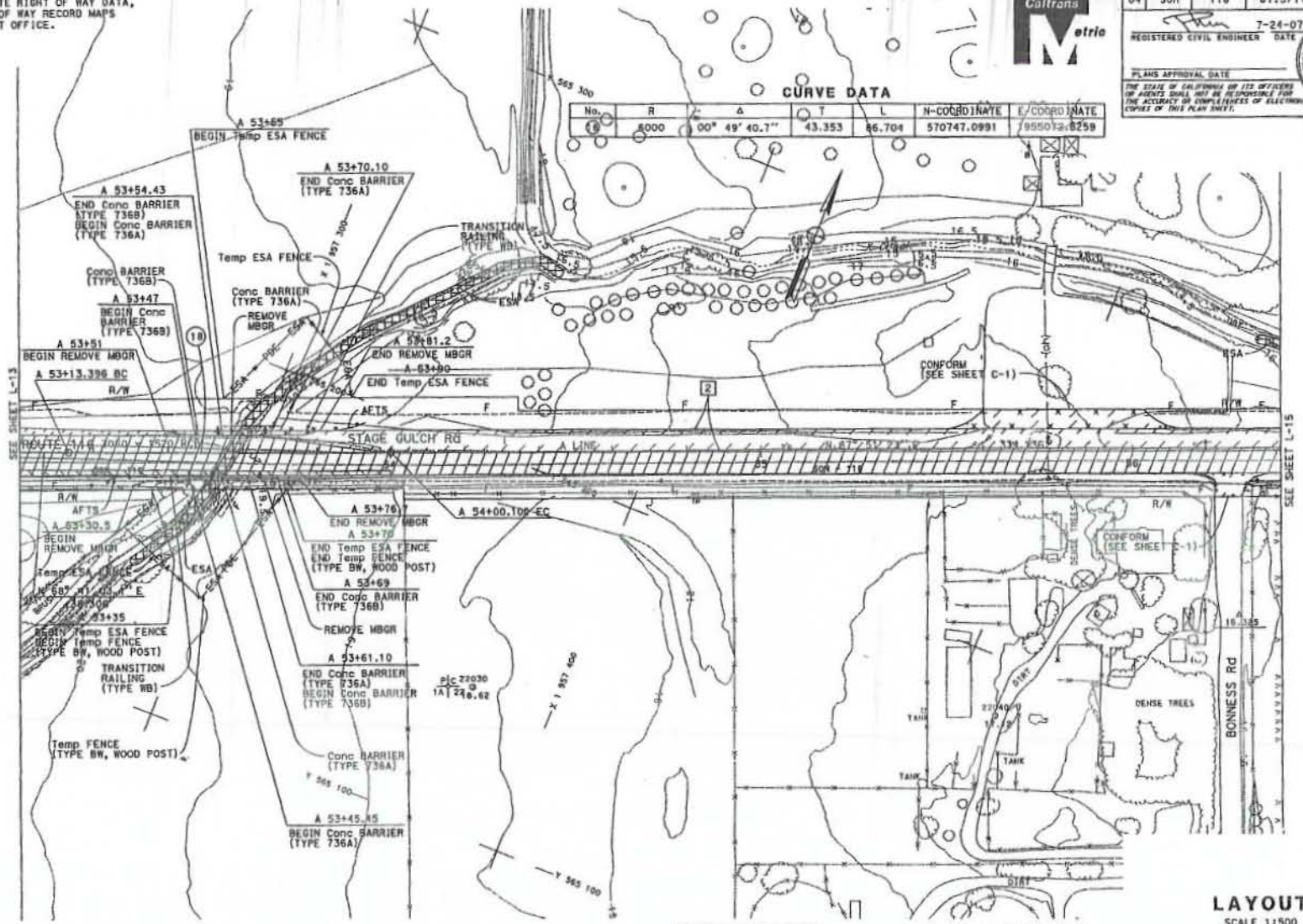

FOR NOTES, ABBREVIATIONS &/OR LEGEND, SEE SHEET L-1

ALL DIMENSIONS ARE IN METERS UNLESS OTHERWISE SHOWN

LAYOUT

SCALE 1:500

L-14

STATE OF CALIFORNIA - DEPARTMENT OF TRANSPORTATION	FUNCTIONAL SUPERVISOR	CALCULATED-DESIGNED BY	CHECKED BY	REVISED BY	DATE REVISED
DESIGN	STEWART LEE	JASON R. PHOEN	EMANNAN PONGPATROJ	JRP	5/97

BORDER LAST REVISED 3/1/2007

RELATIVE BORDER SCALE IS IN MILLIMETERS 0 20 40 60 80

USERNAME =>a128787
DGN FILE => 4283801014.dgn

CU 04261

EA 283801

FOR COMPLETE RIGHT OF WAY DATA, SEE RIGHT OF WAY RECORD MAPS AT DISTRICT OFFICE.

CURVE DATA

No.	R	Δ	T	L	N-COORDINATE	E-COORDINATE
5	6000	01° 00' 31.2"	52.815	105.628	559758.1420	1959905.4722

Caltrans Metric

Dist	COUNTY	ROUTE	KILOMETER POST TOTAL PROJECT	SHEET No.	TOTAL SHEETS
04	Son	116	67.3/71.9		

REGISTERED CIVIL ENGINEER 7-24-07 DATE

PLANS APPROVAL DATE

Jason R. Phoen 57553 12-31-07 CIVIL STATE OF CALIFORNIA

THE STATE OF CALIFORNIA OR ITS OFFICERS OR AGENTS SHALL NOT BE RESPONSIBLE FOR THE ACCURACY OR COMPLETENESS OF ELECTRONIC COPIES OF THIS PLAN SHEET.

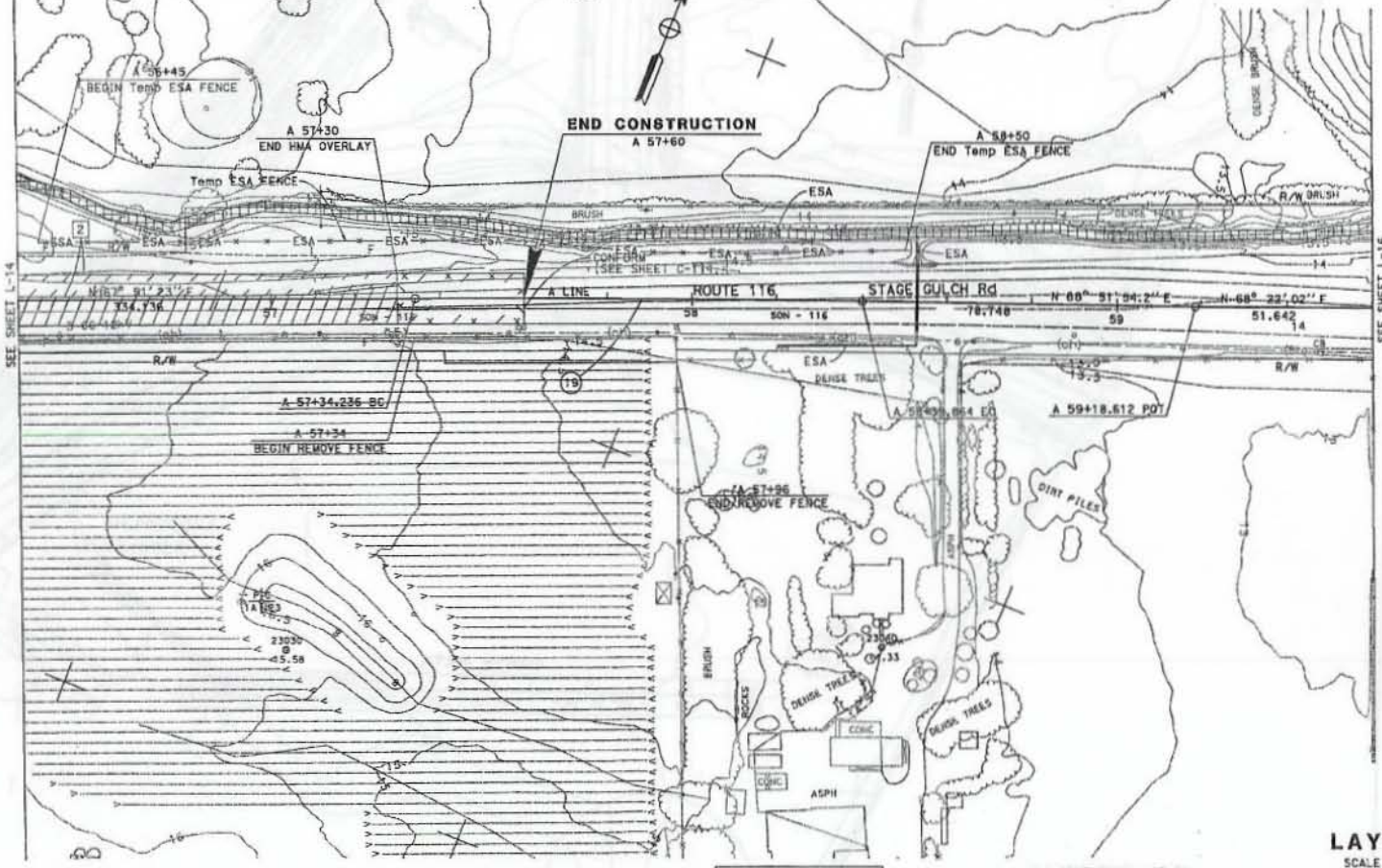

FOR NOTES, ABBREVIATIONS &/OR LEGEND, SEE SHEET L-1

ALL DIMENSIONS ARE IN METERS UNLESS OTHERWISE SHOWN

LAYOUT

SCALE 1:500

L-15

STATE OF CALIFORNIA - DEPARTMENT OF TRANSPORTATION

Caltrans DESIGN

FUNCTIONAL SUPERVISOR: STEWART LEE

CALCULATED-DESIGNED BY: JASON R. PHOEN

CHECKED BY: EMARNAN PONGPAIROJ

REVISED BY: JRP

DATE REVISED: 5/07

BORDER LAST REVISED 3/1/2007

RELATIVE BORDER SCALE IS IN MILLIMETERS 0 20 40 60 80

USERNAME => s128787

DGN FILE => 4283801ae015.dgn

CU 04261

EA 283801

LAST REVISION DATE PLOTTED => 16-MAR-2008

03-18-08 TIME PLOTTED => 08:46

Dist	COUNTY	ROUTE	KILOMETER POST TOTAL PROJECT	SHEET No.	TOTAL SHEETS
04	Son	116	67.3/71.9		

REGISTERED CIVIL ENGINEER 7-24-07 DATE

PLANS APPROVAL DATE

THE STATE OF CALIFORNIA OR ITS OFFICERS OR AGENTS SHALL NOT BE RESPONSIBLE FOR THE ACCURACY OR COMPLETENESS OF ELECTRONIC COPIES OF THIS PLAN SHEET.

REGISTERED PROFESSIONAL ENGINEER Jason R. Phoen 67553 Exp. 12-31-07 CIVIL STATE OF CALIFORNIA

Caltrans Metric

FOR COMPLETE RIGHT OF WAY DATA, SEE RIGHT OF WAY RECORD MAPS AT DISTRICT OFFICE.

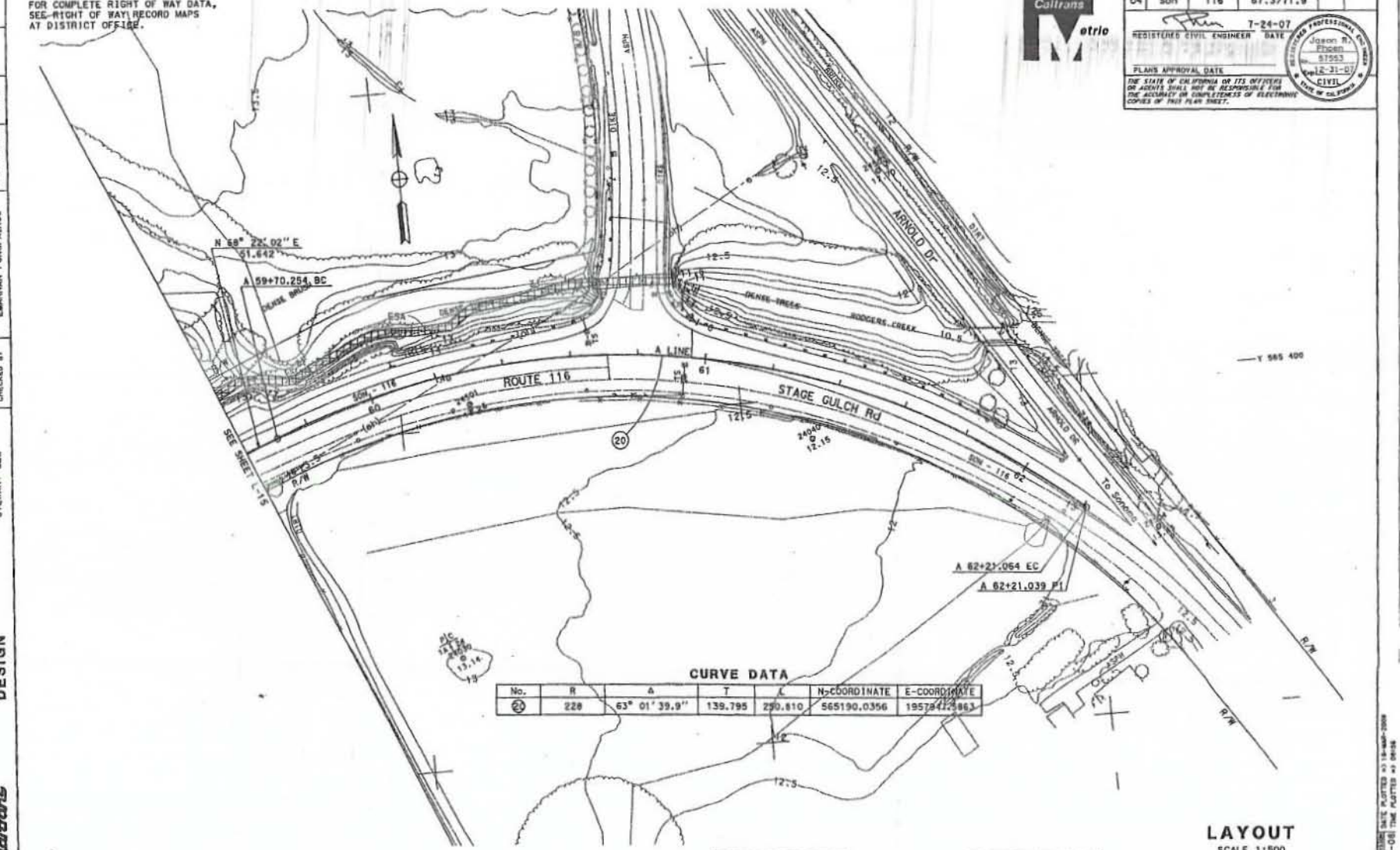

CURVE DATA

No.	R	Δ	T	L	N-COORDINATE	E-COORDINATE
20	220	63° 01' 39.9"	139.795	250.810	565190.0356	1957941.5863

FOR NOTES, ABBREVIATIONS &/OR LEGEND, SEE SHEET L-1

ALL DIMENSIONS ARE IN METERS UNLESS OTHERWISE SHOWN

LAYOUT

SCALE 1:500

L-16

STATE OF CALIFORNIA - DEPARTMENT OF TRANSPORTATION

Caltrans

DESIGN

FUNCTIONAL SUPERVISOR: STEWART LEE

CALCULATED-DESIGNED BY: JASON R. PHOEN

CHECKED BY: EMARNAN PONGPAIROJ

REVISED BY: JRP

DATE REVISED: 5/07

BORDER LAST REVISED 3/1/2007

RELATIVE BORDER SCALE IS IN MILLIMETERS 0 20 40 60 80

USERNAME => s126787
DGN FILE => 4263800c016.dgn

CU 04261

EA 263801

JPR_KOTTING DATE PLOTTED => 19-MAR-2009
03-18-08 TIME PLOTTED => 09:06

Champlin Creek Conceptual Restoration Design

Date Received: April 29, 2009

4) Regional Water Quality Control Board Water Quality Certification for Site No.: 02-49-C0198 (BT), CIWQS Place No.: 725448.

California Regional Water Quality Control Board
San Francisco Bay Region

Linda S. Adams
Agency Secretary

1515 Clay Street, Suite 1400, Oakland, California 94612
(510) 622-2300 • Fax (510) 622-2460
http://www.waterboards.ca.gov/sanfranciscobay

Arnold Schwarzenegger
Governor

May 28, 2009
Site No.: 02-49-C0198 (BT)
CIWQS Place No.: 725448

Sent via electronic mail: No hard copy to follow

California Department of Transportation
Attn: Mr. Jason Mac
Jason_Mac@dot.ca.gov
111 Grand Ave.
Oakland, CA 94623

Subject: Water Quality Certification for the State Route 116 Stage Gulch Road Curve Correction and Realignment Project, Sonoma County

Caltrans Project No.: EA 04-283801

Dear Mr. Mac:

We have reviewed and hereby issue water quality certification to the California Department of Transportation (Department) for the project referenced above (hereinafter Project). The Department has applied to the U.S. Army Corps of Engineers (Corps) for Nationwide Permit Nos. 13, *Bank Stabilization*, 14, *Linear Transportation Projects*, 27, *Wetland and Riparian Restoration and Creation Activities, and*, 33, *Temporary Construction, Access and Dewatering*, pursuant to Section 404 of the Clean Water Act (33 U.S.C. 1344). As such, the Department has applied to the Water Board for a Clean Water Act Section 401 water quality certification that the Project will not violate State water quality standards.

Project: The Department proposes to realign and widen State Route 116 (SR 116) between Old Adobe Road and Arnold Drive in unincorporated Sonoma County to reduce the frequency of traffic accidents. Also, the intersection of SR 116 and County Dump Road will be reconfigured to improve the ingress and egress. The Project is proposed to begin construction in January 2010 and last approximately 36 months.

The Project area is characterized by grazing and vineyard land uses, and hilly topography with upland oak and high-quality oak-bay riparian woodlands. SR 116 and intermittent Champlin Creek are adjacent each other throughout the approximately 3-mile Project length, and cross each other at several locations.

SR 116 will be widened, reworked, and realigned. An approximately 1,275 linear foot segment of SR 116 west of the Sonoma County Transfer Station Road will be completely removed from the riparian corridor and relocated east to the adjacent upland area. The Department will abandon and remove this portion of SR 116 and restore the riparian corridor.

Impacts: The proposed project will result in permanent fill to approximately 1,436 linear feet (0.16 acres) of jurisdictional waters, 0.11 acres of jurisdictional wetlands, and, 165 linear feet (0.012) acres of state jurisdictional roadside ditches as a result of culvert extensions and roadway widening and realignment. The Project will also result in temporary impacts to approximately 1,065 linear feet (0.17 acres) of jurisdictional waters, 0.089 acres of jurisdictional wetlands, and 475 linear feet (0.022 acres) of state jurisdictional roadside ditches.

Project implementation would result in approximately 8.14 acres of added impervious area. Stormwater runoff from impervious areas may contain hydrocarbons, metals, volatile organic compounds, trash, and sediment at levels that may significantly impact jurisdictional waters if left untreated.

Mitigation: To compensate for permanent impacts to approximately 1,436 linear feet (0.16 acres of jurisdictional waters), the Department shall remove 1,274 linear feet of the existing SR 116 from the riparian zone of Champlin Creek and restore the area to riparian habitat. Two culverts shall be removed at the upper and lower limits of the restoration area. Also, two creek meanders may be altered to better-suit the site conditions. Restoration activities (i.e., removal of roadway and construction of riparian bench, meander re-build) through the Champlin Creek corridor shall total approximately 1.2 acres.

The Department shall mitigate for permanent impacts to jurisdictional wetlands by the purchase of 0.2 acres of seasonal freshwater wetland mitigation credits at the Burdell Ranch Wetland Mitigation Bank.

Because the Department shall be constructing approximately 5,200 linear feet of new roadside drainage ditches on-site that shall be vegetated using native grass mix, additional mitigation is not required for permanent impacts to state jurisdictional roadside drainage ditches. The approximately 5,200 linear feet of ditches shall be placed in areas where ditches do not currently exist.

To mitigate for temporary impacts to jurisdictional wetlands, waters, and state jurisdictional drainage ditches, all areas disturbed during construction shall be stabilized and revegetated using any combination of native grasses, shrubs, and legumes.

As mitigation for increased pollutant loads associated with impervious areas, the Department shall provide treatment of stormwater runoff from an area equivalent to the added and reworked impervious areas (8.75 acres). The Department shall install three biofiltration swales and 14 biofiltration strips at the following locations:

- **Biofiltration swale 1** shall be located adjacent westbound SR 116 between post miles 41.98 and 42.01. The swale will treat approximately 0.53 acres of impervious area;

- **Biofiltration swale 2** shall be located adjacent westbound SR 116 stations 44.02 and 44.05. The swale will treat approximately 0.48 acres of impervious area;

- **Biofiltration swale 3** shall be located adjacent westbound SR 116 stations 44.17 and 44.19. The swale will treat approximately 0.32 acres of impervious area;

- **Biofiltration strip 1** shall be located adjacent westbound SR 116 between post miles 41.81 and 41.87. The strip will treat approximately 0.40 acres of impervious area;

- **Biofiltration strip 2** shall be located adjacent eastbound SR 116 between post miles 42.08 and 42.18. The strip will treat approximately 0.48 acres of impervious area;

- **Biofiltration Strip 3** shall be located adjacent westbound SR 116 between post miles 42.22 and 42.30. The strip will treat approximately 0.21 acres of impervious area;

- **Biofiltration Strip 4** shall be located adjacent eastbound SR 116 between post miles 42.42 and 42.50. The strip will treat approximately 0.27 acres of impervious area;

- **Biofiltration Strip 5** shall be located adjacent westbound SR 116 between post miles 42.48 and 42.54. The strip will treat approximately 0.16 acres of impervious area;

- **Biofiltration Strip 6** shall be located adjacent westbound SR 116 between post miles 42.74 and 42.87. The strip will treat approximately 0.66 acres of impervious area;

- **Biofiltration Strip 7** shall be located adjacent westbound SR 116 between post miles 43.04 and 43.09. The strip will treat approximately 0.28 acres of impervious area;

- **Biofiltration Strip 8** shall be located adjacent eastbound SR 116 between post miles 43.25 and 43.38. The strip will treat approximately 1.38 acres of impervious area;

- **Biofiltration Strip 9** shall be located adjacent eastbound SR 116 between post miles 43.73 and 44.09. The strip will treat approximately 1.35 acres of impervious area;

- **Biofiltration Strip 10** shall be located adjacent eastbound SR 116 between post miles 44.19 and 44.43. The strip will treat approximately 0.67 acres of impervious area;

- **Biofiltration Strip 11** shall be located adjacent westbound SR 116 between post miles 44.29 and 44.42. The strip will treat approximately 0.48 acres of impervious area;

- **Biofiltration Strip 12** shall be located adjacent westbound SR 116 between post miles 44.42 and 44.52. The strip will treat approximately 0.35 acres of impervious area;

- **Biofiltration Strip 13** shall be located adjacent westbound SR 116 between post miles 44.54 and 44.78. The strip will treat approximately 0.57 acres of impervious area; and,

- **Biofiltration Strip 14** shall be located adjacent eastbound SR 116 between post miles 44.76 and 44.82. The strip will treat approximately 0.14 acres of impervious area.

CEQA Compliance: A Mitigated Negative Declaration for the Project was filed by the California Department of Transportation on July 28, 2005.

Wetland Tracker System: It has been determined through regional, state, and national studies that tracking of mitigation/restoration projects must be improved to better assess the performance of these projects, following monitoring periods that last several years. In addition, to effectively carry out the State's No Net Loss Policy for wetlands, the state needs to closely track both wetland losses and mitigation/restoration project success. Therefore, we require that the Authority use a standard form to provide Project information related to impacts and mitigation/restoration measures. An electronic copy of the form and instructions can be downloaded at: http://www.waterboards.ca.gov/sanfranciscobay/certs.shtml. Project information concerning impacts and mitigation/restoration will be made available at the web link: http://www.wetlandtracker.org.

Certification: I hereby issue an order certifying that any discharge from the referenced project will comply with the applicable provisions of sections 301 (Effluent Limitations), 302 (Water Quality Related Effluent Limitations), 303 (Water Quality Standards and Implementation Plans), 306 (National Standards of Performance), and 307 (Toxic and Pretreatment Effluent Standards) of the Clean Water Act, and with other applicable requirements of State law. This discharge is also regulated under State Water Resources Control Board Order No. 2003 - 0017 – DWQ, "General Waste Discharge Requirements for Dredge and Fill Discharges That Have Received State Water Quality Certification" which requires compliance with all conditions of this Water Quality Certification. The following conditions are associated with this certification:

1. The Agency shall adhere to the Standard and Regional conditions imposed by Nationwide Permit Nos. 13, 24, 27, and 33, issued to the Department by the Corps and to the conditions

of the California Department of Fish and Game (CDFG) Final Streambed Alteration Agreement (Agreement);

2. The Department shall submit a Final Mitigation and Monitoring Plan (Plan) no later than September 1, 2009. The Plan shall include, at a minimum, all of the following:

Riparian Restoration

a. A riparian restoration plan that includes:
   i. Restoration and enhancement of an approximately 2.9 acre riparian area;
   ii. Complete removal of asphalt concrete from 1,274 linear feet of the existing SR 116 and subsequent revegetation in and adjacent this area;
   iii. A survey supported proposal to sub-excavate areas of roadway removal for purposes of restoring riparian habitat;
   iv. A detailed riparian planting plan based upon baseline conditions documented from thriving riparian areas within or nearby the Project area.
   v. Use of biostabilization or biotechnical bank stabilization where bank stabilization is proposed;
   vi. Removal of the two Champlin Creek culverts from the abandoned section of SR 116 and restoration of the creek channel at these locations;
   vii. Realignment of Champlin Creek meanders where justified by survey data.
b. A maintenance and monitoring plan for riparian restoration activities. The maintenance and monitoring plan shall include success criteria and require that:
   i. Any individual planting not be considered successfully established if two or fewer growing seasons have passed from the time of planting and/or the termination of supplemental irrigation;
   ii. Photographic monitoring points be used during the monitoring period, with color photos included in every monitoring report; and,
   iii. Final success criteria shall not be considered achieved on any element of the riparian restoration plan until ten years have passed from the time of mitigation construction.

Annual Monitoring Reports

c. A time schedule for submittal of annual monitoring reports to the Water Board;

Temporary Impacts

d. A planting and mitigation plan for onsite restoration of temporary impacts. The planting plan shall include a diversity of native oak species. The planting plan shall also include maple, buckeye, laurel, willow, snowberry, California blackberry, coffee berry, sticky monkeyflower, mugwort, and dogbane. The Department shall also include a plan to ensure that temporarily impacted areas revegetate successfully;

Supporting Surveys

e. Survey data, including longitudinal profiles, to support proposed work in Champlin Creek that may significantly change the existing creek grade, direction,

dimensions, or resilience to down-cutting (i.e., installation of impermeable creek bed liner[1]); and,

Planted Rock-Slope Protection

f. A plan to install appropriate woody riparian vegetation within all areas where rock slope protection is being proposed at culvert outfalls; in these areas where vegetation is not being proposed, the Department shall explain why inclusion of vegetation is not feasible. The Plan shall also include a maintenance and monitoring plan that ensures successful establishment of rock slope protection-planted vegetation. Individual plantings may not be considered successfully established until two growing seasons have passed from their initial planting, and, individual RSP-planted areas may not be considered successful any sooner than five years from the initial planting episode.

3. The Final Mitigation and Monitoring Plan shall be found acceptable to the Water Board Executive Officer before any Project-related construction may commence;

4. On-site riparian restoration mitigation shall not be considered complete until the Final Mitigation Report is found acceptable to the Executive Officer, in writing;

5. Certification is conditioned upon submission to the Water Board a receipt for purchase of 0.2 acres of seasonal freshwater wetland mitigation credits at Burdell Ranch Wetland Mitigation Bank;

6. The Department shall commence onsite riparian restoration construction activities no later than June 15, 2011. Failure to meet this deadline shall result in an enforcement action by the Water Board;

7. Project construction within waters of the state shall be restricted to the dry season, specifically, April 15 to October 15, or the end of any extension granted by CDFG;

8. All temporarily disturbed areas shall be revegetated with a combination of grass, shrub, and legume species native to the project area, and, restored to improved or pre-construction conditions;

9. During clearing and grubbing activities in areas of temporary impact, which are not within the limits of excavation or embankment construction, the Department shall trim vegetatively-propagating tree species, such as willows, above ground, without damaging their root structures. Where this is not feasible, and the tree is removed or otherwise

[1] The Department has proposed an in-stream California red-legged frog "stilling basin" with an impermeable bed liner as mitigation for potential impacts to the frog. At the time of certification issuance, the Department has not provided evidence that the proposed stilling basin will not be deleterious to the long-term stability of Champlin Creek. As such, installation of the stilling basin is not accepted under this certification.

irreparably damaged, the Department shall replace the damaged tree no later than fourteen days from the time of impact and report this activity in the annual report;

10. Biofiltration swales shall be equipped with underdrains to ensure vertical infiltration of stormwater. In locations where biofiltration strips and swales are proposed in Type C and D soils, the strips and/or swales shall be compost-amended to enhance infiltration;

11. Not later than 30 days prior to the beginning of construction of any Project component, the Department shall submit, acceptable to the Executive Officer, a final SWPPP to address the Project's expected construction stage impacts, prepared pursuant to the State Water Resources Control Board Water Quality Order No. 99-06-DWQ, the NPDES Statewide Permit for Storm Water Discharges From the State of California City of Transportation Properties, Facilities, and Activities. If the Department is proposing rainy season construction activities, the Department shall provide a detailed schedule of activities and the associated pollution prevention measures that shall be in place to protect Champlin Creek;

12. The Department shall maintain a copy of this Water Quality Certification at the Project site so as to be available at all times to site operating personnel. It is the responsibility of the Department to assure that all personnel (employees, contractors, and subcontractors) are adequately informed and trained regarding the conditions of this certification;

13. This certification does not allow for the take, or incidental take, of any special status species. The Department shall use the appropriate protocols, as approved by the California Department of Fish and Game and the U.S. Fish and Wildlife Service, to ensure that Project activities do not impact the Beneficial Use of the Preservation of Rare and Endangered Species;

14. No fueling, cleaning, or maintenance of vehicles or equipment shall take place within any areas where an accidental discharge to Champlin Creek may occur. Construction materials and heavy equipment must be stored outside the active flow of Champlin Creek;

15. The Department is required to use the standard Wetland Tracker form to provide Project information describing impacts and mitigation/restoration measures not later than September 15, 2009, to the Executive Officer. The completed Wetland Tracker form shall be submitted electronically to wetlandtracker@waterboards.ca.gov, or, shall be submitted as a hard copy to both: 1) San Francisco Bay Regional Water Quality Control Board (see letterhead for address), to the attention of Wetland Tracker, and, 2) San Francisco Estuary Institute, 7770 Pardee Lane, Oakland, CA 94621-1424, to the attention of Mike May;

16. Except as expressly allowed in this Certification, the discharge, or creation of the potential for discharge, of debris, rubbish, or any soil materials including fresh concrete, cement, silts, clay, sand and other organic materials to Champlin Creek is prohibited. Any of these materials placed within or where they may enter Champlin Creek by the Department or any party working under contract, or with the permission of the Department, shall be removed

immediately. When construction is completed, any excess material shall be removed from the work area and any areas adjacent to the work area where such material may be washed into Champlin Creek. During construction, the Department and the contractor shall not dump any litter or construction debris within the riparian/stream zone. All such debris and waste shall be picked up daily and properly disposed of at an appropriate site;

17. This certification action is subject to modification or revocation upon administrative or judicial review, including review and amendment pursuant to Section 13330 of the California Water Code (CWC) and Section 3867 of Title 23 of the California Code of Regulations (23 CCR);

18. This certification action does not apply to any discharge from any activity involving a hydroelectric facility requiring a Federal Energy Regulatory Commission (FERC) license or an amendment to a FERC license, unless the pertinent certification application was filed pursuant to California Code of Regulations (CCR) Title 23, Subsection 3855(b) and that application specifically identified that a FERC license or amendment to a FERC license for a hydroelectric facility was being sought; and,

19. Certification is conditioned upon total payment of the full fee required in State regulations (23 CCR Section 3833). Water Board staff received full payment of $27,615.60 on November 20, 2008.

We anticipate your cooperation in implementing these conditions. However, please be advised that any violation of water quality certification conditions is a violation of State law and subject to administrative civil liability pursuant to California Water Code (CWC) section 13350. Failure to respond, inadequate response, late response, or failure to meet any condition of this certification may subject you to civil liability imposed by the Water Board to a maximum of $5,000 per day per violation or $10 for each gallon of waste discharged in violation of this certification.

Condition Nos. 2, 5, 11 and 15 are requirements for submittal of information or reports. Any requirement for a report made as a condition to this action is a formal requirement pursuant to CWC section 13267, and failure or refusal to provide, or falsification of such required report is subject to civil liability as described in CWC section 13268.

Should new information come to our attention that indicates a water quality problem with this project, the Water Board may issue Waste Discharge Requirements pursuant to 23 CCR Section 3857.

If you have any question, please contact Brendan Thompson of my staff at (510) 622-2506, or via e-mail to BThompson@waterboards.ca.gov.

Sincerely,

Bruce H. Wolfe
Executive Officer

cc (via e-mail): Mr. Bill Orme SWRCB-DWQ
Mr. Hal Durio, Regulatory Branch, USACE
Ms. Jane Hicks, Regulatory Branch, USACE
Ms. Holly Costa, Regulatory Branch, USACE
Mr. Cameron Johnson, Regulatory Branch, USACE
Mr. Dale Bowyer, Water Board
Ms. Melissa Escaron, CDFG
Mr. Hardeep Takhar, Caltrans
Mr. David Smith, USEPA

5) Caltrans District 4 December 2009 Final Comprehensive Mitigation and Monitoring Plan for On-Site Restoration Activities, Stage Gulch Road Curve Correction and Realignment Project, with appendices, for EAs 04-283811 and 04-283821.

TECHNICAL MEMORANDUM CH2MHILL

Champlin Creek Geomorphic Assessment

PREPARED FOR: WRECO / Caltrans

PREPARED BY: Jeremy Thomas, CH2M HILL

DATE: August 28, 2008

Introduction

This technical memorandum provides an initial geomorphic assessment of a reach of Champlin Creek, which runs parallel to Stake Gulch Rd (Highway 116), in Sonoma County, California. The objective of this geomorphic assessment is to provide a baseline study to inform the restoration and realignment of Champlin Creek channel which will occur during the Stage Gulch Road Realignment Project.

Regional Setting

Champlin Creek is a minor tributary to Sonoma Creek, and lies on the westernmost part of the Sonoma Creek watershed, in Sonoma County, California. Sonoma Creek drains a watershed of approximately 166 mi^2 that discharges into San Pablo Bay. Regionally, the area experiences a Mediterranean climate, characterized by warm summers and mild wet winters with an average yearly rainfall of approximately 35 inches in Sonoma (SSU, 2008).

The landscape is defined by complex volcanic geology, including intermixed hard flow strata and erodible reworked ask deposits (Micheli, 2006). On top of this lie highly erodible soils derived from weathered metavolcanics, composed predominantly of clays and clay-loams. The project area is dominated by soil units which include Goulding Cobbly Clay Loams, Goulding Toomes Complex, Diablo Clay, and Laniger Loams, which tend to be well drained, with an average depth of about 20 inches (NRCS Web Soil Survey, 2008).

In the areas not dominated by agriculture, transportation corridors, or urban / rural infrastructure, large expanses of grasslands tend to predominate, with riparian forests along the valley bottoms and patches forest and scrub that extend to the upper slopes in some areas. Typical tree species include coast live oak, valley oak, bay, California box elder, California black walnut, white alder, arroyo and red tree willow, California buckeye, and other species dominating the overstory canopy. Typical shrub species include coyote brush, California wild rose, toyon, and common rush in the understory. Invasive species include wild blackberry, cattail, and giant reed (Arundo donax), among others (Micheli, 2006).

Intensive sheep and cattle grazing, timber harvesting, construction of dams, levees, and other water diversions, clearing and draining of wetlands, and dredging and mining of channels occurred in the region by early settlers, and continued largely unregulated up until modern times (SEC, 2002 & 2004). These land uses fundamentally altered the transport and delivery of water and sediment to the channel network. The changes to these channel-

forming processes were manifested in physical changes to the channel network throughout the greater Sonoma Creek watershed, including a trend towards simplification of the channel network, channel incision, and bank erosion. These trends, in turn, served to "dry out" the valley by incising channels through historic freshwater wetlands and routing water more quickly through the channel network, decreasing the capacity of the landscape to recharge groundwater levels (Micheli, 2006).

A reconstruction of the historical landscape from multiple sources provides evidence that prior to widespread settlement, the Sonoma Creek watershed was significantly wetter, with summer surface ponding and abundant springs, evidence of a perennially high groundwater table. Valley bottoms would have supported a complex network of shallow channels, marshes, wet meadows, and seasonal ponds and lakes (SEC, 2002 & 2004).

The Champlin Creek region currently supports agriculture, most notably the production of high quality wine grapes and cattle ranching, as well as rural residential land uses. There is large proportion of natural vegetative cover in the Champlin Creek watershed; the few areas of impervious cover include road surfaces and rooftops.

As defined by the San Francisco Bay Water Quality Control Plan, beneficial uses of Sonoma Creek include contact and non-contact recreation, threatened and endangered species habitat, cold and warm water fisheries, and fish spawning and migration[1]. Based on evidence of sediment impacts to fish habitat, the Water Board listed Sonoma Creek and its tributaries in 1996 as impaired by sediment under section 303(d) of the Clean Water Act (Micheli, 2006). As a result of this listing, the greater Sonoma Creek watershed has been the focus of coordinated management efforts to assess the potential for restoration of three aquatic species of concern; steelhead trout (Oncorhynchus mykiss), Chinook salmon (Oncorhyncus tshawytscha), and California freshwater shrimp (Syncaris pacifica).

Project Reach

Stage Gulch Road (Highway 116) is a two-lane road that is oriented in an East-West direction, providing transportation access between the Counties of Sonoma, Marin, and Napa. As Stage Gulch Road is located in the bottom of a shallow valley, Champlin Creek runs parallel to the road, and during its sometimes straight, sometimes meandering channel profile, it crosses underneath the road many times through culverts.

The Champlin Creek project reach consists of approximately 900 feet of channel which currently runs along Stage Gulch Road. The upstream and downstream extents of the project reach are defined by two concrete box culverts, which direct the channel from the north side of Stage Gulch Road to the south side of Stage Gulch Road at the upstream end of the project reach, and then back to the north side of Stage Gulch Road at the downstream end of the project reach.

[1] The San Francisco Bay Water Quality Control Board (Water Board) regulates water quality throughout the Bay Area, including the Sonoma Creek watershed, to protect the beneficial uses of water defined by the San Francisco Bay Water Quality Control Plan (Basin Plan).

Champlin Creek is an ephemeral channel. Discharge occurs as a result of surface runoff during precipitation events and groundwater surcharge during the rainy winter and spring seasons; the channel is typically dry during the summer months as precipitation events are rare and groundwater elevations decrease.

Methods

Geomorphic data collection occurred in mid-August, 2008, and consisted of 2 days of field surveys on site.

Data collection to inform the geomorphic assessment consisted of:

- The collection of relevant fluvial geomorphic reports of the Sonoma Creek watershed, as well as current project documentation including GIS maps and topographic surveys;
- Survey of channel longitudinal profile;
- Survey of three channel cross sections;
- Bed surface sediment size distribution (pebble count);
- Photographic documentation; and
- Notes about the viability of channel restoration and realignment opportunities based on field observations.

Review of Available Data

Field data collection efforts were informed by GIS mapping and topographic surveys performed during the Stage Gulch Road Realignment 401 and 404 permitting processes, as well as existing landscape studies initiated by the Water Board. Baseline geomorphic and ecological conditions in the greater Sonoma Creek watershed are well documented in the Sonoma Creek Watershed Limiting Factors Analysis prepared by Elisabeth Micheli, UC Berkeley, the Sonoma Ecology Center, and Stillwater Sciences.

Longitudinal and Cross Sectional Surveys

On August 19th, 2008, a longitudinal profile of the channel thalweg was surveyed from the downstream extent of the project reach to the upstream extent of the project reach. The objective of the longitudinal profile was to obtain an accurate channel slope through the project reach, identify channel morphology including the geometry and spacing of pools, and locate significant features such as concrete box culverts.

The longitudinal profile survey uses a benchmark located on the concrete box culvert structure at the downstream end of the project reach, with an elevation of approximately 60 feet. Note that this benchmark was established by the survey team to allow relative elevations to be established, and is not a registered USGS benchmark.

Three channel cross sections were surveyed along the project reach to determine variations in channel geometry. Cross section locations were determined in the field based upon the degree to which they were representative of the overall channel cross sectional geometry in

the project reach, and/or the presence of features that were considered to be of interest to the geomorphic analysis, including stream bank geometry, in-channel bars, and terraces. The cross sections use the same benchmark established during the survey of the longitudinal profile.

Pebble Count

The pebble count procedure, first described by Wolman (1954) is a measurement of 100 (or more) randomly selected stones from a homogeneous population on a river bed or bar. The procedure yields reproducible size distribution curve for surface deposits of gravel and cobbles. Widely used in geomorphology and river engineering, the pebble count effectively characterizes grain size distributions.

A Wolman pebble count was performed at Cross Section 1, at longitudinal profile station 01+99, using the methods described below. Cross Section 1 was considered an ideal location for the pebble count as it was representative of substrate conditions for riffle features along the project reach.

Sediment particles were selected by a finger touch to the stream bed, with eyes averted to retain random selections. As each particle is selected, its intermediate axis was determined. Each grain of sediment has three perpendicular axes – a long, or "a" axis; a short, or "c" axis, and an intermediate, or "b" axis. The "b" axis was measured with a ruler to determine into which size class the stone fits. Sediment particles were recorded in size classes that increase by powers of 20.5, also known as "half-phi" classes. Once the pebble count itself was performed, the data was analyzed and graphed to obtain a size distribution curve.

Photographic Documentation

During an initial site reconnaissance and during subsequent field survey, digital photographs were taken of the project site to document existing conditions. These photographs appear throughout this memorandum, and the full photographic library is included in Appendix A.

Field Notes

Observations about the channel features such as the locations and extent of bank erosion, bed material size and distribution, the location and type of vegetation, and other features of interest were noted in a field book during the site survey. This information has been translated onto a GIS map (Figure 1).

Additionally, notes about the opportunities and constraints associated with channel realignment or restoration were taken. These will be used to guide the design of the preliminary restoration concept for Champlin Creek.

Results

Field observations were summarized in an existing conditions basemap (Figure 1).

FIGURE 1
CHAMPLIN CREEK EXISTING CONDITIONS

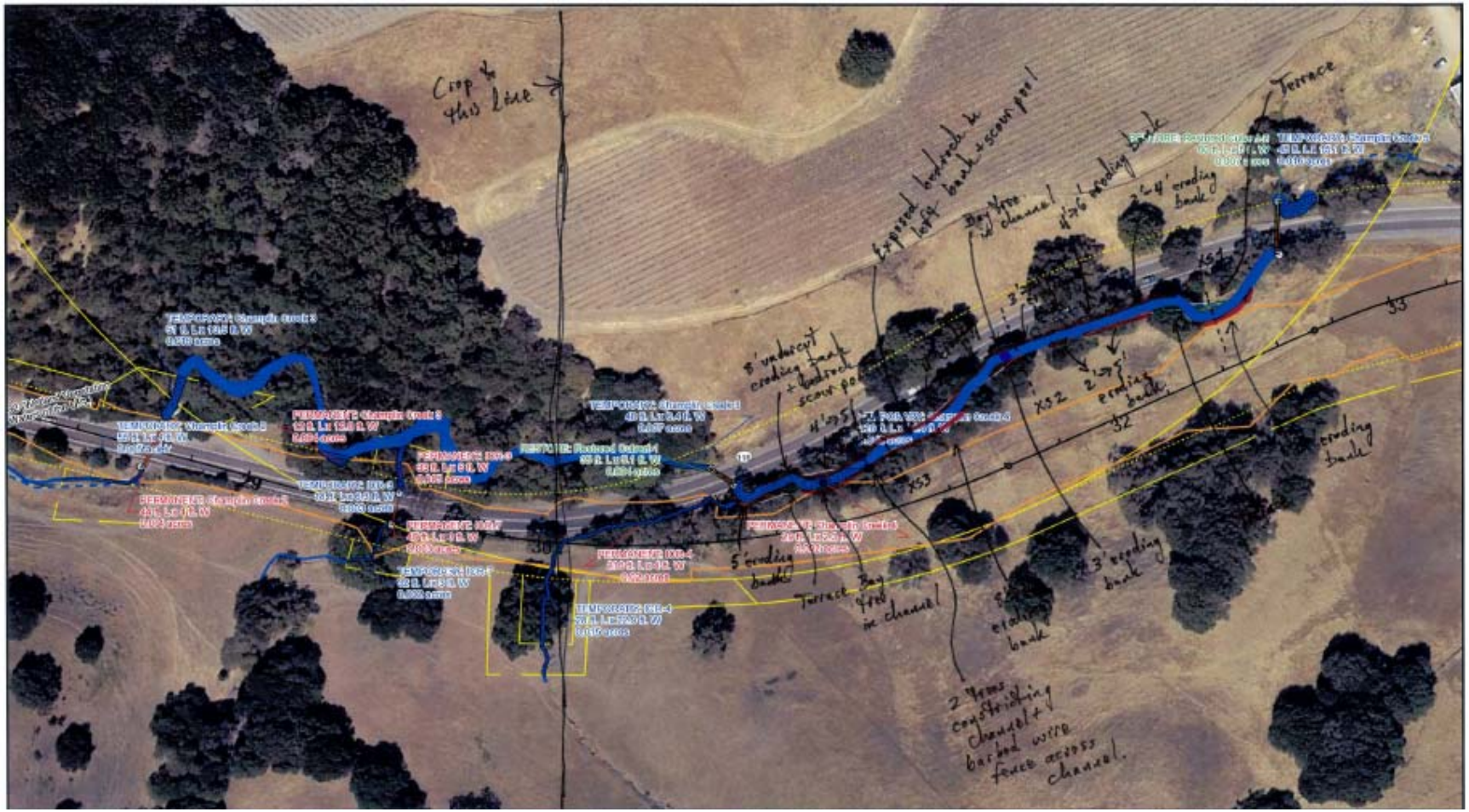

The longitudinal profile of Champlin Creek through the project reach is provided below (Figure 2).

FIGURE 2.
CHAMPLIN CREEK LONGITUDINAL PROFILE

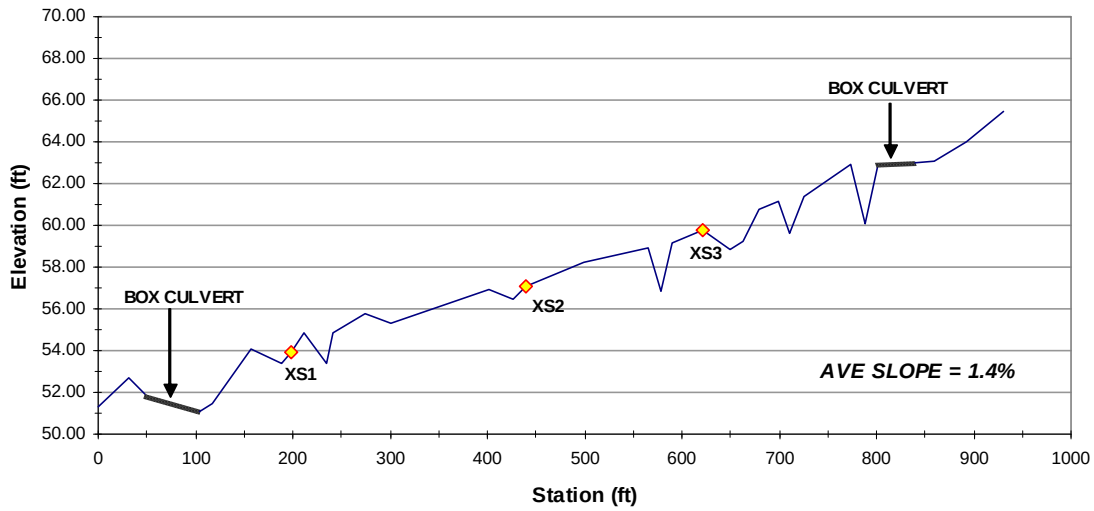

The average slope through the project reach (from the inlet of the upstream culvert to the outlet of the downstream culvert) is .014 (1.4%). Channel gradient is generally uniform throughout the reach.

Large pools/scour pools occur along the upper portion of the reach. The first one is located at the outlet of the upstream box culvert, and is caused by the orientation of the culvert outlet, which forces flow into the right bank and induces bed scour. Pool depths range from 3 feet to less than 1 foot deep. Several pools have exposed bedrock along the bed or one or both banks. Bedrock does not appear in the lower half of the reach.

The downstream box culvert has experienced significant aggradation at the outlet, restricting the capacity of the culvert to convey discharge. Due to the limited length of the longitudinal profile downstream of this point it is difficult to determine if this is representative of a transition to a reduced channel gradient downstream, resulting in local aggradation at this point, or if this aggradation is due to other processes (including, perhaps, the existence of a metal grate at the outlet of the culvert to trap trash and debris, which instead may be reducing velocities through this area).

Cross sectional geometry is displayed in Figures 3, 4 and 5 (below). Because this is an ephemeral channel which is seemingly prone to rapid and seemingly large discharge events (discussed further below), any indications of a bankfull stage were almost impossible to identify in the field; indeed the concept of a bankfull flow being the channel forming discharge in the system is not supported by visual observations.

FIGURE 3.
CHAMPLIN CREEK CROSS SECTION 1

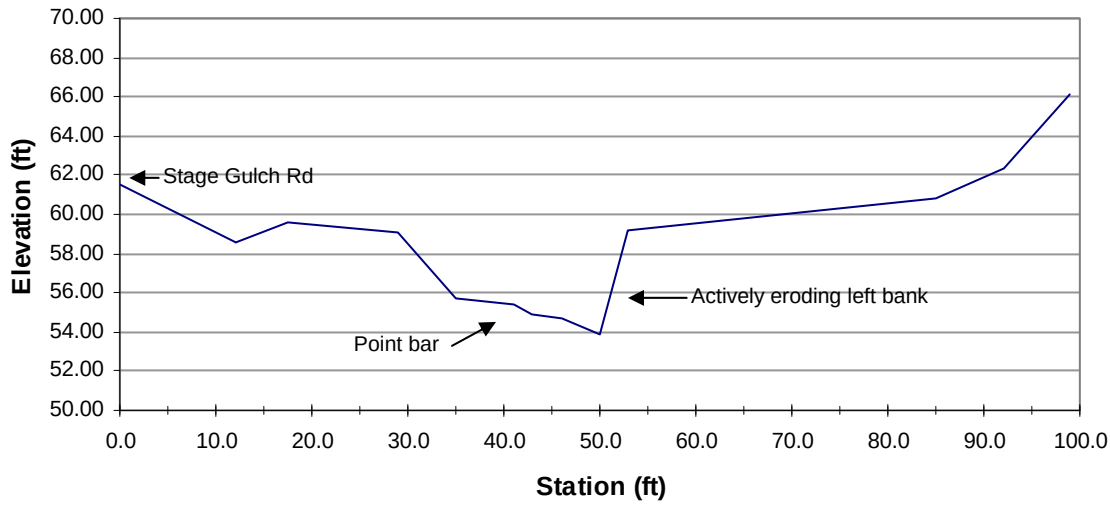

Cross Section 1 represents the more complex channel geometry in the reach, including an in-stream bar on the left bank, which is uncommon through the rest of the reach. The bottom channel width is 15 feet, the top channel width is 24 feet. Maximum channel depth is 5.35 feet, average channel depth is 4.26 feet.

FIGURE 4.
CHAMPLIN CREEK CROSS SECTION 2

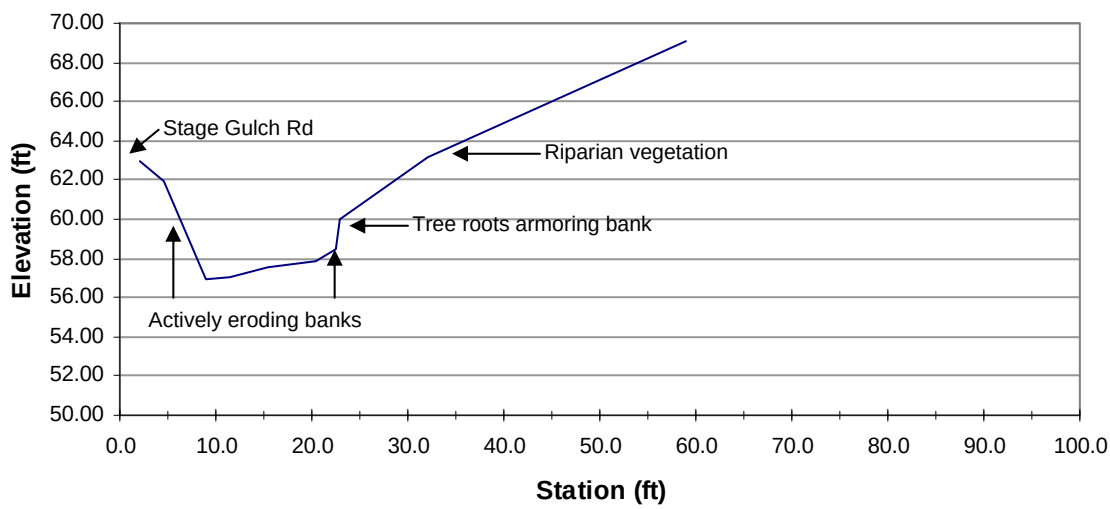

Cross Sections 2 and 3 are more typical of the channel geometry through the majority of the project reach, with an actively eroding, near vertical left bank that abuts Stage Gulch Road, and an eroding right bank that extends up to a break in slope, and then a vegetated hillslope that continues to climb away form the channel.

Both the left and the right bank through the project reach support mature oak and bay trees; the tree roots provide structural cohesion to the bank and allow a near vertical bank profile in many locations. Typically, the right bank is more vegetated and supports more mature vegetation.

In places, channel incision has undermined tree roots and created overhanging banks. Several trees which are severely undermined are in danger of collapsing into the channel, providing evidence that channel instability, including bed incision and bank toe erosion, is pervasive through the reach.

The bottom channel width is 13.5 feet, the top channel width is 18.5 feet. Maximum channel depth is 4.96 feet, average channel depth is 2.90 feet.

FIGURE 5.
CHAMPLIN CREEK CROSS SECTION 3

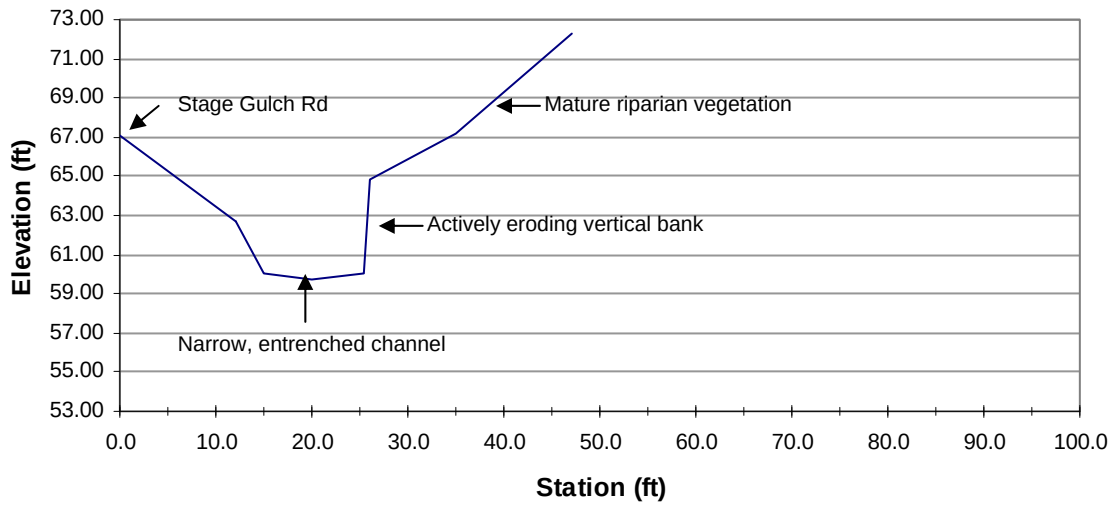

Cross section 3 is representative of Champlin Creek channel geometry in the upper end of the project reach, a narrower, more incised, and deeply entrenched channel, with greater amounts of mature vegetation and greater amounts of active erosion along the right bank.

The bottom channel width is 10.5 feet, the top channel width is 14.0 feet. Maximum channel depth is 5.07 feet, average channel depth is 3.87 feet.

Channel substrate is generally homogenous through all riffles along the project reach, consisting of larger clasts of gravels and small to medium sized cobbles; volcanic rocks eroded from the channel banks and bed. Sediments sizes are well mixed in the channel bed, with uniform facies both transversely and longitudinally through the channel profile.

Bed sediments in scour pools tend to be finer than in the rest of the project reach, and in several locations outcrops of bedrock occur in the deeper pools.

The sediment size distribution from the Wolman pebble count conducted at Cross Section 1 is displayed in Figure 6 below. The D50 (median grain size) is 58 mm, the D84 is 116 mm.

FIGURE 6.
CHAMPLIN CREEK CROSS SECTION 1 CUMULATIVE PARTICLE SIZE DISTRIBUTION

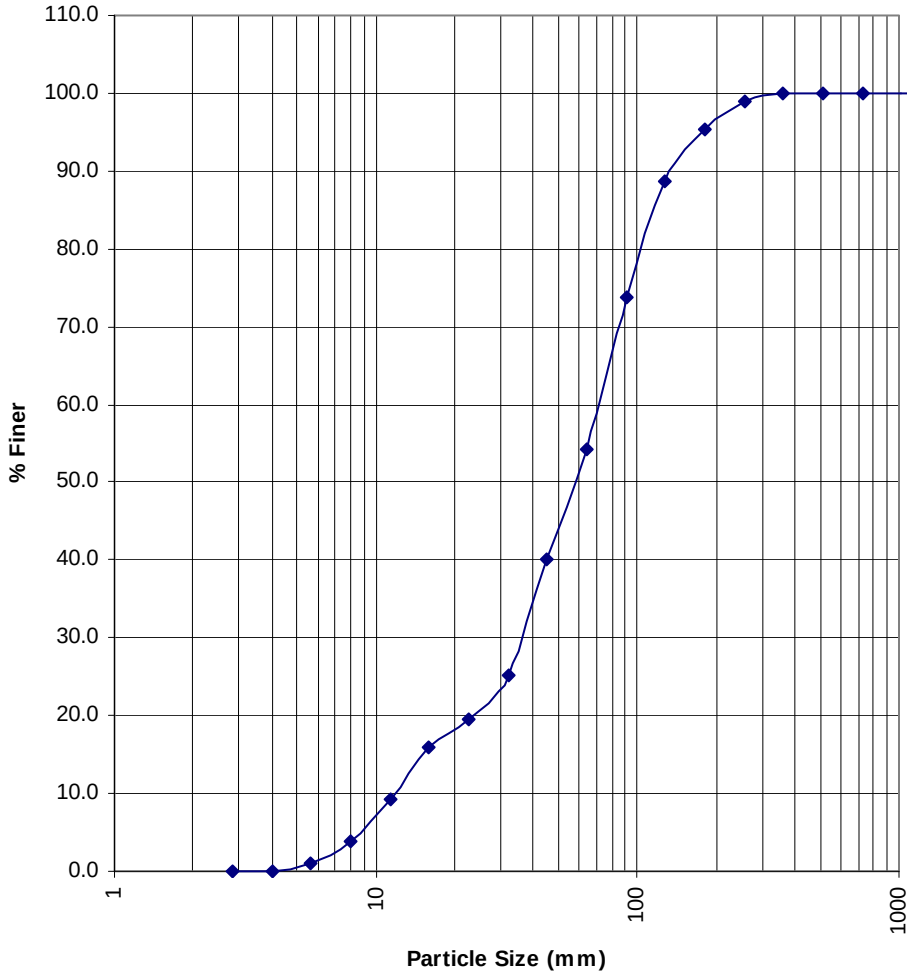

FIGURE 7.
CHAMPLIN CREEK CROSS SECTION 1 PARTICLE SIZE HISTOGRAM

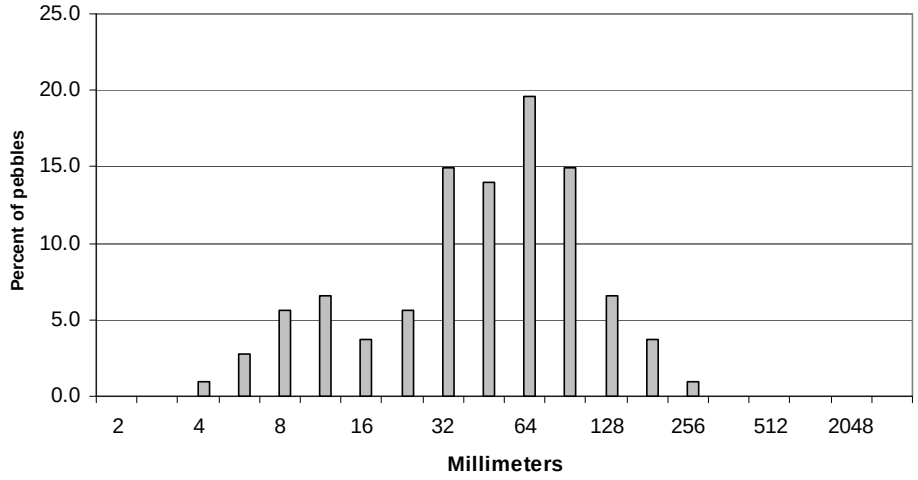

Discussion

Champlin Creek, like many other channels in the greater Sonoma Creek watershed, is actively adjusting in response to a legacy of human alterations to the regional and local landscape.

The channel is actively eroding along the majority of the project reach. Some of this erosion can be attributed to the impact of Stage Gulch Road, including the orientation and design of the culverts, which either force water into the channel banks and create a hydraulic scouring effect at the outlet (in the case of the upstream culvert) or are situated in a longitudinal depression, and serve as a sediment sink (the lower culvert).

It is also seems likely that during the construction of the existing Stage Gulch Road, the historic channel was realigned and straightened along the roadway to allow for road engineering. Evidence for this is the lack of sinuosity in this part of the creek, especially when compared to the reach immediately upstream, which has a more sinuous, meandering orientation while retaining a similar valley shape and channel slope.

Other potential sources of instability, including historical changes in land cover and land use in the watershed, have been previously discussed.

The evidence for active channel adjustment is manifested in vertical, raw, and sometimes undercut banks, mass wasting on steeper channel banks as a result of the removal of bank toe material, as well as channel incision and aggradation.

The large size of channel substrate materials, which consists predominantly of large gravels and small cobbles in a reach that has a moderate slope, supports the conclusion that Champlin Creek is a high energy system, prone to high water velocities and hydraulic shear stresses.

The nearly ubiquitous presence of this larger substrate material can also be attributed to the large clasts of volcanic material loosely packed in a matrix of finer silts and clays displayed in eroding bank profiles. As the channel bed and banks erode, this material is delivered directly into the channel network. Fine sediments wash away quickly as suspended load, while the larger clasts slowly migrate downstream as bedload during effective flow events.

Implications for Restoration Design

Any realignment or restoration of this reach of Champlin Creek associated with the Stage Gulch Road Realignment Project should attempt to support the restoration of fish populations through the watershed by limiting the delivery of fine sediments downstream. This can be accomplished by providing morphological stability to this section of channel, minimizing the extent and degree of bed and bank erosion, and removing the upstream and downstream culverts.

Due to the ephemeral nature of the channel, the restoration of fish habitat directly on site is not recommended.

Restoration design should focus on dimensioning the channel cross sectional area to adequately convey channel forming flows, and reconnecting floodplain terraces to reduce

shear stresses through the channel and irrigate floodplain habitats during higher flow events.

Where sufficient sunlight is available (in areas lacking in significant canopy), bank stabilization can occur using a mixture of native grass seeding, coir fiber matting, and live staking of rapidly growing, native species of willow. Arroyo willow (*Salix lasiolepis*) and red tree willow (*Salix laevigata*) are native to this area. This will provide immediate bank protection benefits as well as high quality riparian habitat for a wide variety of aquatic, amphibian, and avian species.

Native tree species should be planted on upper terraces to create a riparian woodland buffer to the stream channel, and to augment the existing oak / bay woodland in the valley bottom. Recommended native tree species include coast live oak, valley oak, bay, California box elder, California black walnut, white alder, and California buckeye.

Deer herbivory can greatly impact the survivability of new plantings, it is advised that proper deer exclusion structures be utilized and properly maintained during the establishment of new plantings.

Although not suitable for fish habitat, this reach may be restored to provide suitable habitat for the California red legged frog, a regional species of concern. Habitat requirement for red legged frog is described as follows: Adult California red-legged frogs prefer dense, shrubby or emergent riparian vegetation closely associated with deep (>2.3 feet [0.7 meters]), still, or slow-moving water (Hayes and Jennings 1988). However, frogs also have been found in ephemeral creeks and drainages and in ponds that may or may not have riparian vegetation. The largest densities of red-legged frogs currently are associated with deep pools with dense stands of overhanging willows (*Salix* species) and an intermixed fringe of cattails (*Typha latifolia*) (Jennings 1988). Red-legged frogs disperse upstream and downstream of their breeding habitat to forage and seek sheltering habitat.

According to Feller and Kleeman (2007), non-breeding dry season habitat includes several characteristics: 1) sufficient moisture to allow the frogs to survive throughout the non-breeding season that may be up to 11 months long ; 2) sufficient cover to moderate temperatures during the warmest and coldest times of the year; and 3) protection (e.g., deep pools in a stream, or complex cover such as root masses or thick vegetation) from predators such as hawks and owls, herons, and small carnivores.

During other parts of the year, habitat includes nearly any area within 1-2 miles (1.6-3.2 kilometers) of a breeding site that stays moist and cool through the summer (Fellers 2005). According to Fellers (2005), this can include vegetated areas with coyote bush (*Baccharis pilularis*), California blackberry thickets (*Rubus ursinus*), and root masses associated with willow (*Salix* species) and California bay trees (*Umbellularia californica*). Sometimes the non-breeding habitat used by red-legged frogs is extremely limited in size. For example, non-breeding red-legged frogs have been found in a 6-foot (1.8-meter) wide coyote bush thicket growing along a tiny intermittent creek surrounded by heavily grazed grassland (Fellers 2005). Sheltering habitat for red-legged frogs is potentially all aquatic, riparian, and upland areas within the range of the species and includes any landscape features that provide cover, such as existing animal burrows, boulders or rocks, organic debris such as downed trees or logs, and industrial debris. Agricultural features such as drains, watering troughs,

spring boxes, abandoned sheds, or hay stacks may also be used. Incised stream channels with portions narrower and depths greater than 18 inches (45.7 centimeters) also may provide important summer sheltering habitat. Accessibility to sheltering habitat is essential for the survival of red-legged frogs within a watershed, and can be a factor limiting frog population numbers and survival.

Creation of red legged frog habitat would involve the construction of shallow pond or wet meadows habitat in or adjacent to the channel, using the area formerly occupied by Stage Gulch Rd prior to realignment. Design considerations would include:

- Dimensioning the alluvial channel to effectively convey flow and sediments during high discharge events.
- Maintaining flood control protection of functional areas of Stage Gulch Rd.
- Creating slow moving or still water habitat greater than 2.3 feet in depth.
- The planting of willow and cattail species around the pond.
- Provide foraging habitat adjacent to pond.
- Minimizing habitat for non-native red legged frog predator species (bullfrog).

References

Blake, M.C., Graymer, R.W., Jones, D.L., and Soule, A. 1992. Geologic map and map database of parts of Marin, San Francisco, Alameda, Contra Costa and Sonoma Counties, CA. U.S. Geological Survey Miscellaneous Field Studies.

Dunne, Thomas, and Luna B. Leopold. 1978. Water in Environmental Planning. W. H. Freeman and Company, New York.

Fellers, Gary M. 2005. *Rana draytonii* Baird and Girard 1852, California Red-legged Frog. Pp. 552 – 554. *In*: Michael Lannoo (ed.), Amphibian Declines: The Conservation Status of United States Species. Volume 2: Species Accounts. University of California Press, Berkeley, California. xxi+1094 Pp.

Fellers, Gary M. and Patrick M. Kleeman. 2007. California Red-legged Frog (*Rana draytonii*) Movement and Habitat Use: Implications for Conservation. Journal of Herpetology. 41(2): 276-286.

Hayes, M. P. and M. R. Jennings. 1988. Habitat correlates of distribution of the California redlegged frog (*Rana aurora draytonii*) and the foothill yellowlegged frog (*Rana boylii*): implications for management. In Management of amphibians, reptiles, and small mammals in North America. eds R. C. Szaro, K. E. Severson and D. R. Patton. Gen. Tech. Rep. RM166. USDA Forest Service, Rocky Mountain Forest and Range Experiment Station, Fort Collins, CO. pp. 144158.

Jennings, M. R. 1988. Natural history and decline of native ranids in California. Proceedings of the Conference on California Herpetology. eds H. F. De Lisle, P. R. Brown, B. Kaufman and B. M. McGurty. Southwestern Herpetologists Society,

Micheli, Elisabeth (ed.) 2006. FINAL Sonoma Creek Watershed Limiting Factors Analysis. Prepared by UC Berkeley Department of Earth and Planetary Sciences, Sonoma Ecology Center, and Stillwater Sciences.

NRCS Web Soil Survey. Website accessed on Aug 26, 2008. http://websoilsurvey.nrcs.usda.gov/app/

SEC. 2004. DRAFT Synopsis of changes in geomorphology, hydrology, fisheries, and related topics for the Sonoma Valley watershed c. 1823- 2004. Prepared by Arthur Dawson. Eldridge, CA.

SEC. 2002. Dawson, A (ed). The Oral History Project. Sonoma Ecology Center. January 2002.

Sonoma State University. Website accessed on Aug 26, 2008. http://libweb.sonoma.edu/regional/climate/climate.html

APPENDIX A: Photographic Catalogue

Note: In general, photos start downstream and work upstream through the project reach.

Downstream view of inlet to lower culvert

Survey benchmark established on top of lower culvert

Outlet of lower culvert with trash screen

Upstream view of eroding right bank at Cross Section 1

Channel substrate material at Cross Section 1

Downstream view of eroding left bank near Cross Section 1

Channel substrate

Downstream view of eroding right bank and tree root protection

Downstream view of eroding left bank near Stage Gulch Rd

Tree in middle of active channel near Cross Section 2

Downstream view of eroding right bank and root protection

Upstream view of eroding left bank and scour pool

Upstream view of eroding right bank and root protection

Same – near Cross Section 3

Channel constricts through 2 trees above Cross Section 3

Left bank erosion almost undermining Stage Gulch Rd

Upstream view of outlet to upper culvert and scour pool

Downstream view of bank erosion from inside upper culvert

Downstream view of inlet to upper culvert

Upstream view of channel above inlet to upper culvert

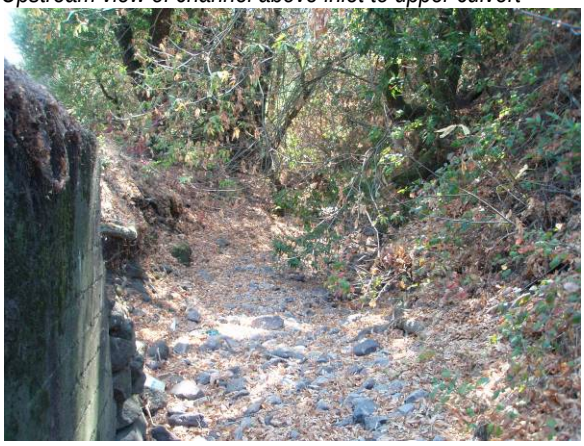

Rapid Permit Checklist
(San Francisco Regional Water Quality Control Board)

PROJECT: Stage Gulch Curve Correction - Champlin Creek Restoration and Mitigation Project

ADDRESS: Stage Gulch Road (SR 116) approximately 2.3 miles northwest of intersection of SR 116 and SR 121.

DATE: July 2009 - Stream surveyed in May 2009

I. Watershed and Reach Influences

A. Watershed Influences

Location/Function in Watershed **(Indicate All that Apply with an "X")**
(See Reference A: Longitudinal View Along Stream Corridor)

Headwaters	X
Supply Reach	
Transport Reach	
Storage Reach	
Middle Reach	
Lower Reach	

Stream Type

Ephemeral (i.e. flow only occurs in response to precipitation)	
Intermittent (i.e. seasonal flows)	X
Perrenial	

Upstream Watershed Land Uses **(Indicate Long-Term or Short-Term)**

Vineyards/Row Crops	Long-Term
Rangeland/Grazing	Long-Term
Mining/Quarry	
Forestry/Logging	
Parks/Reserves/Open Space	
Urban	
Dams/Reservoirs	
Other (Specify)	

Natural Influences (Regional) **(Indicate All that Apply with an "X")**

Changes in Land, Waterbody or Sea Level (base level changes)	
Fault Zone/Earth Movement	
Fire-Impacted Areas (within last 5 years)	
Meander or Channel Type Changes	
Landslides/Mud Slides	
Other (Specify)	

Rapid Permit Checklist
(San Francisco Regional Water Quality Control Board)

I. Watershed and Reach Influences (continued)

B. Reach Influences

Natural Influences (Local) **(Indicate All that Apply with an "X")**

Local Fault Line	
Fire Zone	
Meander Changes	
Landslides/Mudslides	
Plant Community Evolution	
Other (Specify)	

Human Influences **(Indicate All that Apply with an "X")**

Stormwater/Site Runoff/Grade Controls	X
Wiers/Check Dams	
Culverts	X
Bridges	
Channel Straightening	X
Vegetation Removal	X
Gravel Removal	
Bank, Channel, and/or Floodplain Encroachments	X
Invasive Plants	
Bank Protection Works and/or Debris in Channel	
Row Crops, Vineyards, and/or Orchards Adjacent to Reach (Indicate all that occur adjacent to reach)	**Vineyards**
Livestock in or near Reach (e.g. free range cattle with riparian corridor/creek access, stables and/or feedlots near or in channel or flood plain area, etc.)	X
In Channel Trail or Road Crossings (i.e. Fords)	
Other (Specify)	

Dominant Stream Processes (Currently Acting on Channel) **(Indicate All that Apply with an "X")**

Excessive Erosion	X
Incising of Channel Bottom	X
Headcutting	
Meander Development	
Channel Widening	X
Channel Narrowing	
Equilibrium between sediment supply entering and leaving	
Other (Specify)	

Rapid Permit Checklist
(San Francisco Regional Water Quality Control Board)

I. Watershed and Reach Influences (continued)

C. Status of Channel Evolution

Site Evolution

(indicate the reference diagrams that best describes the status of evolution at your site)

Stream Adjustments to Watershed Conditions (See Reference B: River Processes and Morphology, R.D. Hey)	X	Chan
Stream Recovery from Channelization (or Headcutting) (See Reference C: Stream Corridor Restoration Manual)	X	Class
Channel Incision Adjustments (See Reference D: Oregon Fish and Wildlife Office)	X	Stage
Stream Adjustments to In-Stream Modifications (culverts, weirs, bank stabilization projects, vegetation removal, etc.) (See Reference E: Common Channel Destabilizing Practice, Primer on Stream Protection, San Francisco Regional Water Quality Control Board)	X	Culve
Bureau of Land Management Proper Functioning Condition Rating (Indicate Proper Functioning, Functional-At-Risk, Nonfunctional, or Unknown)	Unknown	

D. Existing Hydrology, Channel Geometry and Hydraulic Conditions

(See Reference F: Regional Curves, Channel Shapes)
(See Reference G: Regional Curves, Bankfull Discharges)
(See Reference H: Computing Flood Frequency)

Drainage Area to Project Location =	~1.5	square miles
Mean Annual Precipitation =	35	inches per year
Channel Forming Discharge =	162	cubic feet per second
Mean Bankfull Depth for Relevant Stream Types =	~1.5	feet
Bankfull Channel Width for Relevant Stream Types =	~15	feet
Discharge for the 2-Year Recurrence Interval, Q_2=	162	cubic feet per second
Discharge for the 5-Year Recurrence Interval, Q_5=	222	cubic feet per second
Discharge for the 10-Year Recurrence Interval, Q_{10} =	261	cubic feet per second
Discharge for the 50-Year Recurrence Interval, Q_{50} =		cubic feet per second
Discharge for the 100-Year Recurrence Interval, Q_{100} =	392	cubic feet per second
Flood Elevation Estimates =	~4.5	feet
Estimated Area of Watershed Impervious/Percent Basin Developed = (Specify in square miles or percent of watershed)	<5%	

Methods Used to Estimate Above Values (Indicate All that Apply)

Field Visual Estimation	
Field Estimation using Regional Curves	X
Reference Reaches	
Surveyed Cross-Sections	X
Stream Gage Data	
High Water Marks	
Dimensionless Rating Curves	
Computed Effective Discharges	X
Regional Regression Analysis, Stormwater or Watershed Models	X
HEC-RAS or Other Hydraulic Models	X
Topographic Maps, Aerial Photography	

Rapid Permit Checklist
(San Francisco Regional Water Quality Control Board)

II. Existing Channel Characteristics

A. Landscape Types **(Indicate All that Apply with an "X")**

(See Reference I: Channels, Floodplains and Terraces in Stream Corridor Restoration Manual for description of Unconfined, Confined by hillslopes with high terrace, and Incised with widening floodplain categories)

Combinations (below indicate all the apply with an "X")	
Unconfined	
Confined by hillslopes with high terrace	X
Incised with widening floodplain	
Alluvial Fan	
Single Thread Alluvial	
Braided	
Arroyo	
Bedrock	
Meadow	
Tidal	
Other (Specify)	

B. Dominant Streambed Materials **(Indicate All that Apply with an "X")**

Silt/clays	X
Sand	X
Gravel	X
Cobbles	
Boulders	
Bedrock	

C. Floodplain and Channel Conditions

Valley Slope	1.43	Percent
Channel Slope	1.29	Percent
Channel Sinuosity	1.10	
Historic Channel Type and Sinuosity	Undetermined	
Step Pool Spacing	155	feet

Note: Channel classification systems (Rosgen, Montgomery-Buffington, etc.) can be used to describe channel types.

Rapid Permit Checklist
(San Francisco Regional Water Quality Control Board)

II. Existing Channel Characteristics (continued)

D. Vegetation Functions **(Indicate All that Apply with an "X")**

Vegetation Communities	
Pioneer Species (willow/cottonwood/alder/dogwood/ninebark)	**X**
Mixed Woodland (maple, bay, elderberry, buckeye)	**X**
Mature-Climax Species (oak, redwood, sycamore)	**X**
Channel Shade	**X**
Bank Stability, Sediment Transport and Deposition	**X**
Live and Dead In-Stream Habitat Structure	**X**
Wildlife Habitat	**X**
No Functions	
Federal and/or State Special Status Species (List and indicate designation - Federal Threated Species; Federal Endangered Species; State Threatened Species; State Endangered Species; State Rare Species; and California Native Plant Society Lists 1A, 1B, 2, 3, and/or 4 Species)	Unknown

E. Fish Habitat

Are Native Fish Present? (Indicate Present/Not Present)	**Not Present**
Salmonid Stream (Indicate upstream, in reach and/or downstream)	**Downstream**
Barriers to Fish or Other Aquatic Species (Indicate with an"X")	**X**
Instream Habitat Complexity or Lack of Complexity	Lack of complexity
Federal and/or State Special Status Species (frogs, snakes, turtles, etc.) (List and indicate designation - Federal Threated Species; Federal Endangered Species; State Threatened; State Endangered; and State Species of Special Concern)	California Red Legged Frog observed downstream of reach.

III. Future Conditions Proposed by Project

A. Project Design Objectives **(may include multiple objectives, such as flood damage reduction, habitat restoration, stream bank restoration, stormwater management, etc.)**

The project will:

Parent roadway project will widen and re-align a reach of SR 116 in order to bring the reach up to Caltrans standards for traffic safety. This form describes a stream restoration project that is intended as mitigation for stream channel that the parent roadway project will disturb.

Rapid Permit Checklist
(San Francisco Regional Water Quality Control Board)

III. Future Conditions Proposed by Project (continued)

B. Ecological Restoration Objectives (Indicate All that Apply)

Instream Habitat	X
Stream Corridor Native Riparian Restoration	X
Invasive Plant Removal	
Sediment Reduction or Storage	
Enhance Floodplain Functions	
Increase Sediment Supply Available for Transport	
Water Temperature Modification	
Nutrient Uptake	
Other (Specify)	

C. Methods Used to Estimate Future Dynamic Equilibrium Conditions (Indicate All that Apply)

Historic Conditions	X
Reference Reaches (visual or surveyed cross-sections)	X
Regional Hydraulic Geometry (regional curves on channel shape and drainage area)	X
Stream Gage Data on 1.5 Reccurrence Interval Discharge, $Q_{1.5}$	
Flood Frequency Curves from Stream Gage Data	
Dimensionless Rating Curves to Determine Channel Forming Discharges	
Computed Effective Discharges to Determine Channel Forming Discharges	
Regional Regression Analysis, Stormwater or Watershed Models	
HEC-RAS or Other Hydraulic Model	X
Sediment Transport Model	
Other (Specify)	

IV. Describe How the Project Protects or Restores Floodplain

(Indicate All that Apply with an "X")

Existing Channel Cross-Section Protection	
Remove Levees, Berms or Structures Encroaching on Floodplain	
Existing Levees or Berms Set Back	
Restore Floodplain Vegetation	X
Native Vegetated Buffer Added to Landslide of Stream Corridor	X
Floodplain Area Excavated to Bankfull Elevation	X
Pond and Plug or Other Methods of Re-watering Floodplain	X
Livestock Exclusion Fencing	X
Stormwater Infiltration Systems (infiltration basins, rain gardens, vegetated swales, porous pavement, etc.)	
Stormwater Detention Systems (extended detention basins, treatment wetlands, retention ponds, etc.)	
Other (Specify)	

Rapid Permit Checklist
(San Francisco Regional Water Quality Control Board)

V. Describe How the Project Protects or Restores Native Streamside Vegetation

A. Current Status of Invasive Plants at Project Site
(Indicate Not Present, Sparse, Dominant in Riparian Corridor, or Clogging Channel)

Sparse

List Species of Invasive Plants Present

Undetermined

B. Non-native and Invasive Plant Control Methods (Indicate All that Apply with an "X")

Hand Tools	X
Mulch/Geotextile Fabric	X
Controlled Burns	
Mowing	
Herbicides	
Managed Grazing (Goats, Cows, etc.)	
Mechanical	X
Other (Specify)	

C. Revegetation Method (Indicate All that Apply with an "X")

Seed	X
Hydroseed	
Plugs	X
Container Stock/Bare Root	X
Soil Bioengineering Systems (proceed to VII)	X
Other (Specify)	

VI. Describe How the Project Protects and/or Restores the Stream Channel Slope

A. Existing Slope Retained

40 Percent

B. Proposed Restoration Channel Slope

1.3 Percent

C. Pool Riffle Stream

Informed by Historic Channel Sinuosity		
Informed by Reference Reach Sinuosity	1.05	
Proposed Channel Sinuosity	1.1	
Check on Design Slope = Valley Slope/Sinuosity	1.30	Percent
Channel Lengthened (indicate increase in linear feet)	7.5	feet
Channel Shortened (indicate decrease in linear feet)		feet

Rapid Permit Checklist
(San Francisco Regional Water Quality Control Board)

VI. Describe How the Project Protects and/or Restores the Stream Channel Slope (continued)

D. Step-Pool Stream

Step Pools Design Slope	**no steps**	Percent
Reference Reaches		

Geometric Relationships (e.g. less than 1-2 x bank full width = length)

(see Reference J: Meander and Slope Restoration, Primer on Stream Protection, San Francisco Bay Regional Water Quality Control Board)

(See Reference K: Chin, Papanicolaou equations or other)

Step Height		feet
Channel Slope		Percent
Length Between Steps		feet

E. Other Stream Types

Braided System	
Alluvial Fan	

VII. Describe How the Project Restores Stream Banks

A. Fencing and Vegetated Buffers

Livestock Exclusions Fencing	X
New Livestock Water Supplies	
Riparian Buffers	X
Runoff and Drainage Improvements	
Stormwater Treatment Landscaping (treatment wetlands, vegetated swales, infiltration galleries , etc.)	X
Other (Specify)	

B. Soil Bioengineering Systems and Permissible Shear Stress/Permissible Velocities

(See Reference L: Permissible Shear Stress for Soil Bioengineering, U.S. Army Corps of Engineers, and National Engineering Handbook, Natural Resources Conservation Service)

Shear Stress Calculation **(Enter Data to Estimate Shear Stress at Site)**

Mean Channel Depth (Hydraulic Radius) =	1.8	feet
Stream Slope (Friction Slope) =	0.013	feet/foot
Specific Weight of Water =	62.4	pounds per square foot
Shear Stress Acting on Channel =	1.5	pounds per square foot

Bioengineering Alternatives **(Indicate All that Apply with an "X")**

Stakes/Cuttings	X
Poles	
Posts	
Live Facines	
Brush Layering	
Brush Matting	X
Grass	
Tree Plantings	
Geotextile Fabric	X
Others (Specify)	

Rapid Permit Checklist
(San Francisco Regional Water Quality Control Board)

VIII. Describe How the Project Protects and/or Restores Aquatic Habitat

A. Habitat Enhancement Proposed Native Wildlife (Special Status Species)

Invertebrate Habitat	Increases habitat complexity and instream cover, reduces instream velocities.
Salmonid Habitat	Removes fish passage barriers, increases channel complexity.
Other Native Fish Habitat	Removes fish passage barriers, increases channel complexity.
Reptile/Amphibian Habitat	Design includes off-line ponds for California Red-legged Frog foraging habitat.
Bird Habitat	Restores greater quantities and widths of riparian vegetation for forage and nesting habitat. Restores floodplain wetland habitat for greater habitat diversity.
Mammal Habitat	Restores greater quantities and widths of riparian vegetation for forage and nesting habitat. Restores floodplain wetland habitat for greater habitat diversity.

Rapid Permit Checklist
(San Francisco Regional Water Quality Control Board)

VIII. Describe How the Project Protects and/or Restores Aquatic Habitat (continued)

B. Proposed Exotic Wildlife Controls (Invasive Species)

Invertebrates	
Fish	
Reptiles/Amphibians	Creates habitat preferential for California Red-legged Frog / discourages invasion by bullfrogs.
Birds	
Mammals	

Rapid Permit Checklist
(San Francisco Regional Water Quality Control Board)

VIII. Describe How the Project Protects and/or Restores Aquatic Habitat (continued)

C. Proposed Protection and/or Enhancement of Habitat Complexity for Different Life Stages (continued)

Diversity of Vegetative Cover:	Project will increase diversity and coverage of native riparian vegetation on banks, and increase widths of riparian vegetation along channel banks.
Habitat Connectivity:	Project will remove two culverts that currently serve as fish passage barriers. Project will also add off-channel and floodplain wetland habitat that is connected to the main channel.
Stream Channel Grain Size Distribution:	Project will maintain current grain size distribution in main channel (large gravels), and offer side channel habitat where grain sizes will be reduced.
Shelter from Predators and/or High Flows: (undercut banks, roots, woody debris, etc.)	Project will increase native riparian vegetation on banks, and increase the amount of vegetative cover in the stream channel. Project will maintain portions of original channel where tree root protection provides excellent bank protection / fish habitat. Project will reconnect the floodplain to reduce
Instream Bedforms: (number and depth of pools, etc.)	Project will use step pools and cross vanes to increase the diversity of in-stream morphology, creating discernible riffles and pools in the reach.

Prepared by: Ulysses Hillard Date: 7/1/2009

State of California
DEPARTMENT OF TRANSPORTATION

Business, Transportation and Housing Agency

Memorandum

Flex your power!
Be energy efficient!

To: HARDEEP TAKHAR
Office Chief, Office of Water Quality

Date: April 16, 2009
04-SON-116
04-283811
Stage Gulch Road

From: RUBIN WOO
Office Chief, Office of Design SHOPP

Subject: SON 116 (Stage Gulch) On Site Mitigation Designation as Non-operating Right of Way

The Division of Environmental, Office of Water Quality has requested that on site mitigation locations (see attached) be designated as "non-operating right of way," not subject to future roadway improvements. This request is based on concerns of the permitting resource agencies (Dept. Fish and Game, Water Board and US Fish and Wildlife Services) with regard to protection of mitigation sites from future impacts.

A search of future projects along Route 116 was conducted by the Office of System and Regional Planning. It appears that the Sonoma County Transportation Authority (SCTA) does have a future plan for adding center turn lane along Route 116 in its 2009 Countywide Transportation Plan for Sonoma County. John Maitland, Deputy Director of Projects and Planning (SCTA) was sent a copy of a plan illustrating the locations where on site mitigation will occur along Route 116. Following a review of the plan, Mr. Maitland has furnished a letter (see attached) indicating the SCTA does not find the mitigation sites to be in conflict with their future plans for left-turn channelization.

In addition, District Right of Way has concluded that since the mitigation areas are outside of the proposed roadway, these areas are already considered "non-operating right of way". As such, based on the above information, Design has determined that, due to a reasonable effort to locate future work along this route, the mitigation sites will be considered as "non-operating right of way," not subject to future roadway improvements.

Attachments

cc: J. Mac – Project Management
T. McNamara – R/W Acquisitions
C. States – Biological Science and Permits
S. Lee/J. Phoen/Project File

sonoma county transportation authority

490 Mendocino Avenue, Suite 206
Santa Rosa, CA 95401
www.sctainfo.org
(707) 563-5373

April 9, 2009

California Department of Transportation
Mike Jones, Planning
111 Grand Avenue
P.O. Box 23660
Oakland, CA 94623-0660

RE: Hwy 116 – Stage Gulch Road (Champlin Creek) Project

Dear Mike:

The Sonoma County Transportation Authority (SCTA) supports the Route 116-Stage Gulch Road project realigning and widening project between Arnold Drive and Adobe Road. I discussed with the Sonoma County Transportation and Public Works Department the possible future need for left turn channelization along Route 116. There is a possible need in the future for a left turn pocket at the intersection of Bonness Road and Route 116. There is also a proposed development project at the golf course just east of Watmaugh Road that is in the planning stage currently. However, this project will be conditioned to have its main access off of Watmaugh Road, not Route 116. Following a review of the proposed mitigation locations along Route 116, it does not appear that the future left turn pocket at Bonness Road and Route 116 will encroach into the mitigation areas proposed for the project.

It is SCTA's understanding that it is necessary to declare certain sections of existing state right-of-way along Route 116 "inoperable" (mitigation locations) in order to obtain resource agency permits for construction to realign and widen Route 116. As such, SCTA finds that according to our current future plans for left turn channelization along Route 116, the proposed mitigation locations would be unaffected. Also, SCTA believes that the proposed Stage Gulch road project to realign and widen Route 116 will accommodate bicycles and pedestrians to a much better degree than the current configuration.

If you have any questions, please contact me at 707-565-7377.

Thank you for your time and attention.

Sincerely,

John Maitland

John Maitland
Deputy Director
Projects and Planning

Board of Directors
♦ Mike Kerns, Chair, Sonoma County ♦ Jake Mackenzie, Vice Chair, Rohnert Park ♦
♦ Valerie Brown, Sonoma County ♦ Pat Gilardi, Cotati ♦ David Glass, Petaluma ♦ Sarah Gurney, Sebastopol ♦ Paul Kelley, Sonoma County ♦
♦ Mike McGuire, Healdsburg ♦ Carol Russell, Cloverdale ♦ Sam Salmon, Windsor♦ August Sebastiani, Sonoma ♦ Gary Wysocky, Santa Rosa ♦

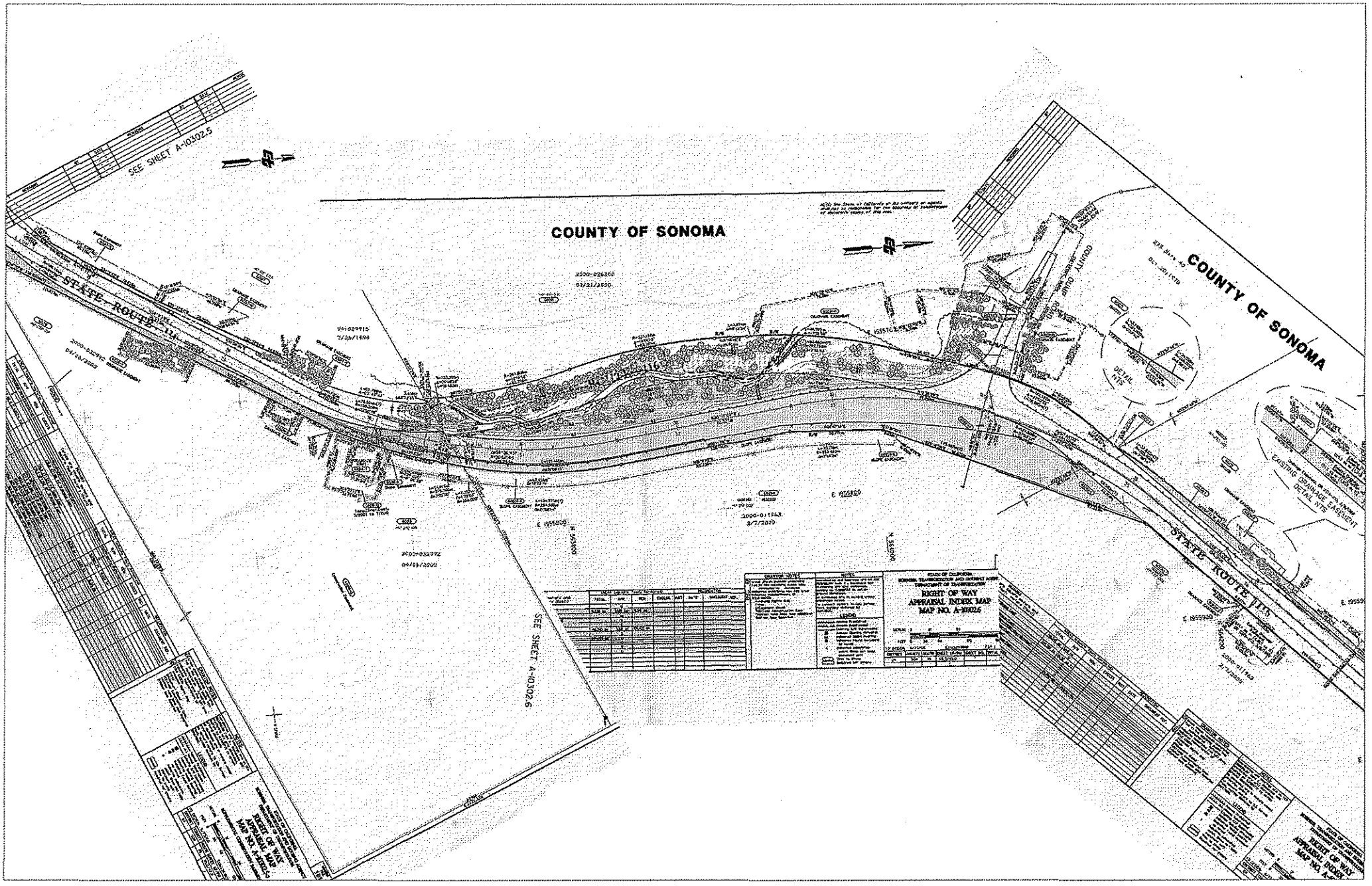
COUNTY OF SONOMA
SEE SHEET A-10302.5
SEE SHEET A-10302.6
STATE ROUTE 116
COUNTY OF SONOMA
STATE ROUTE 116
DETAIL NTS
EXISTING DRAINAGE EASEMENT
DETAIL NTS
RIGHT OF WAY
APPRAISAL INDEX MAP
MAP NO. A-10302.6

NOTE: The State of California or its officers or agents shall not be responsible for the accuracy or completeness of electronic copies of this map.

Caltrans Metric

COUNTY OF SONOMA

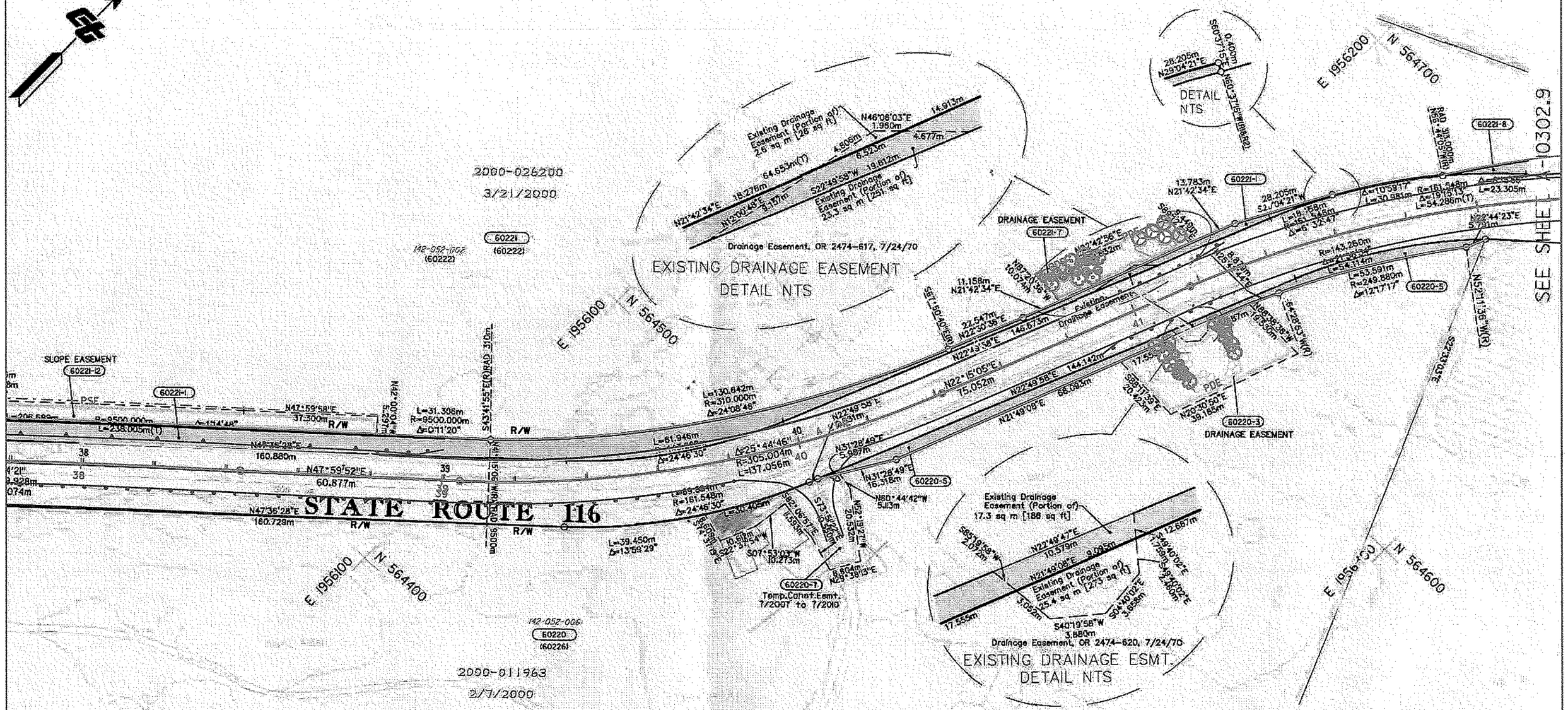

GRANTOR	AREAS (square meters; ha=hectares) TOTAL	R/W	REM	EXCESS	REMARKS (areas are square meters and square feet; meters (feet))	AREAS (square feet; Ac=acres) TOTAL	R/W	REM	EXCESS	RECORDATION INST	DATE	DOCUMENT REF.
Thomas E. Vinson	56.6724ha	4,641.2 m²				140.040 Ac	3,618 ft²					
Thomas E. Vinson		459.3 m²	55.16236ha				4,944 ft²	136.309 Ac				
Thomas E. Vinson		0			713.5 m²/7,680 ft² Drainage Esmt		0					
Thomas E. Vinson		0			479.4 m²/5,161 ft² TempConEsmt 7/2007-7/2010		0					
UCC Vineyard Fund LLC	82.8475ha	2,630.8 m²				204.720 Ac	28,317 ft²					
UCC Vineyard Fund LLC		659.8 m²	82.5185ha				7,102 ft²	203.744 Ac				

GRANTOR NOTES

(1) Areas shown exclude underlying fee in the adjoining public way.
ha=hectares Ac=acres
Indicates Underlying Fee (UF) Area
Indicates Indeterminate UF
TITLE CODES:
A=Access Rights Only
F=Fee
E=Easement (Ease)
TCE=Temp Construction Ease
T=Other Temp Ease (see Remarks)
O=Other (see Remarks)

NOTES

Coordinates and bearings are on CCS 1983(1991.35) Zone 2. Distances and stationing are grid distances. Multiply by 0.9999773 to obtain ground distances.
All distances are in meters unless otherwise noted.
To convert meters to U.S. Survey feet, multiply distance by 3937/1200.

LEGEND

Access Prohibited
Access Superseded
Existing R/W Superseded

HANDING FILE 181

STATE OF CALIFORNIA
BUSINESS, TRANSPORTATION AND HOUSING AGENCY
DEPARTMENT OF TRANSPORTATION

RIGHT OF WAY APPRAISAL MAP
MAP NO. A-10302.8

METERS 0 12 30 60

COUNTY OF SONOMA

NOTE: The State of California or its officers or agents shall not be responsible for the accuracy or completeness of electronic copies of this map.

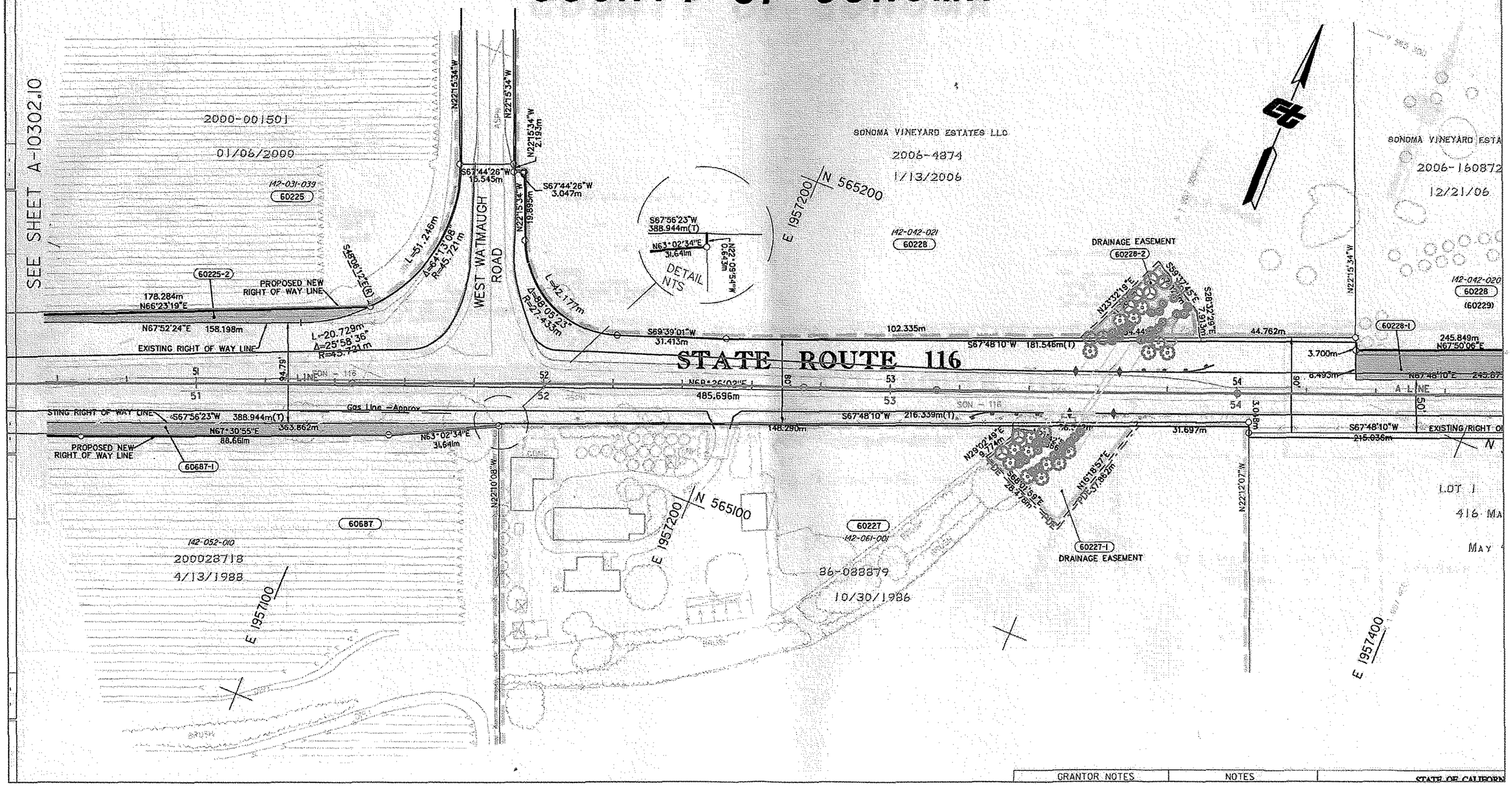

GRANTOR NOTES | NOTES | STATE OF CALIFORN

To: Robert S Young <robert_s_young@dot.ca.gov>,
MESCARON@dfg.ca.gov

Subject Re: Stage Gulch hydraulic calcs

:

Hi Robert,

Thank you for providing the requested information regarding the 19a culvert on Champlain Creek.

NMFS made recommendations during sec 7 consultation in 2004 for the 19a culvert to include fish friendly aspects, such as a low flow channel and natural bottom. We further recommend for the installation of all the other culverts to include natural bottoms as well. I have determined based upon the information you've submitted and upon what was discussed during our site visit on July 2, 2008 and today's phone conversation, that NMFS' November 22, 2004 letter of concurrence remains valid for the project, and that there is no need for additional recommendations or a new consultation on the project. Let me know if you have any questions.

Best Regards,

Jacki

Robert S Young wrote:
> Jacki,
>
> I have talked with Hydraulics and was provided the calculations for
> drainage structure 19a and they are attached. It seems that flow
> calculations of the stream for high flows in the creek for culvert
and

> stream work were not needed and the Q's used for sizing the
> structures
is
> based on Caltrans policy of using 100 and 25 year flood events as the
> criteria for capacity.
>
> With regard to 19a the capacity of the combined existing box culvert
> and the added natural bottom 1/2 buried 48" culvert as a low flow
> channel are the same because the original structure will have a sill
> added to it keeping the capacity of the new system equal to the old
> one. The head-cut working its way upstream by the golf course would
> not be affected in any way by the proposed work.
>
> I hope this helps and i can get some feedback from you in regards to
> our field meeting of June 2. The attachment is below. sorry for the
> delay and please get back to em when you can.

>
>
> (See attached file: Champlain Creek Sill.pdf)
>
>
>
> Robert Young
> Associate Environmental Planner (Natural Sciences) Office of
> Biological Sciences and Permits California Department of
> Transportation
> 111 Grand Avenue
> Oakland, California 94632
> (510) 622-1771
>
>
>

> Jacqueline

> Pearson Meyer

> <Jacqueline.Pears
To
> on-Meyer@noaa.gov Robert S Young

> > <robert_s_young@dot.ca.gov>

>
cc
> 07/02/2008 04:32

> PM
Subject
> Re: Stage Gulch meeting
> tomorrow

> 7-2-08

>

>

>

>

>

>

>
>
>
>
> Robert,
>
> Could you send me the hydraulic calcs. for this project? I want to

> look at the flows that are coming through there especially at the
> culvert above the large scour hole (19A). Also, I was looking over
> Maura's notes and natural bottom culverts were recommended for all of
> the upstream culverts. Let me take a look at the hydraulics and I'll
> let you know if I have any different recommendations....the wheels
are

> turning :). Have a safe and happy 4th!
>
> Jacki
>
>
>
>
> Robert S Young wrote:
>
>> Hello all,
>>
>> As you are all aware, there is a meeting tomorrow to discuss a
>> naturally existing fish passage barrier and construction elements
>> along Champlin Creek for Caltrans Stage Gulch Road / SR116
construction project.
>>
>> We should all try and meet at the intersection of w. Watmaugh Road
>> and
SR
>> 116 / Stage Gulch Road. There is ample parking and please try and
>> make
it
>> by 10:00. Driving directions and rough agenda are below:
>>
>> Driving Directions
>>
>> From SR 37 (from either SR 101 or 80)
>> go to SR 121 / Arnold Drive and go North
>> Take a left on Stage Gulch Rd.
>> Pull over at W. Watmaugh Rd.
>>
>>
>> (See attached file: 116 at W. Watmaugh Rd..jpg)
>>
>>
>> Agenda
>>
>> Introductions
>> Brief project description
>> Natural Barrier on Champlin Creek
>> NMFS letter of concurrence
>> Major Creek Crossings (by vanpool)
>> Watmaugh Road
>> unnamed creek
>> the big oak
>> transfer dump road
>> Discussion
>>
>>
>>

>>
>>
>>
>>
>>
>> Robert Young
>> Associate Environmental Planner (Natural Sciences) Office of
>> Biological Sciences and Permits California Department of
>> Transportation
>> 111 Grand Avenue
>> Oakland, California 94632
>> (510) 622-1771
>>
>> ----------
-
>> ---
>>
>>
>
> --
> Jacqueline Pearson Meyer
> Fishery Biologist
> National Oceanic and Atmospheric Administration National Marine
> Fisheries Service Protected Resources Division
> 777 Sonoma Avenue, Room 325
> Santa Rosa, CA, 95404
> Ph: 707-575-6057
> Fax: 707-578-3435
>
>
> Our Mission is to conserve and recover NMFS trust resources and the
> ecosystems on which they depend.
>

--
Jacqueline Pearson Meyer
Fishery Biologist
National Oceanic and Atmospheric Administration National Marine
Fisheries Service Protected Resources Division
777 Sonoma Avenue, Room 325
Santa Rosa, CA, 95404
Ph: 707-575-6057
Fax: 707-578-3435

Our Mission is to conserve and recover NMFS trust resources and the
ecosystems on which they depend.

Dist	COUNTY	ROUTE	KILOMETER POST TOTAL PROJECT	SHEET No.	TOTAL SHEETS
04	Son	116	67.3/71.9		

REGISTERED CIVIL ENGINEER 7-24-07 DATE

PLANS APPROVAL DATE

REGISTERED PROFESSIONAL ENGINEER Jason R. Phoen No. 57553 Exp. 12-31-09 CIVIL STATE OF CALIFORNIA

THE STATE OF CALIFORNIA OR ITS OFFICERS OR AGENTS SHALL NOT BE RESPONSIBLE FOR THE ACCURACY OR COMPLETENESS OF ELECTRONIC COPIES OF THIS PLAN SHEET.

Caltrans Metric

FOR COMPLETE RIGHT OF WAY DATA, SEE RIGHT OF WAY RECORD MAPS AT DISTRICT OFFICE.

CURVE DATA

No.	R	Δ	T	L	N-COORDINATE	E-COORDINATE
18	6000	00° 49' 40.7''	43.353	86.704	570747.0991	1955072.8259

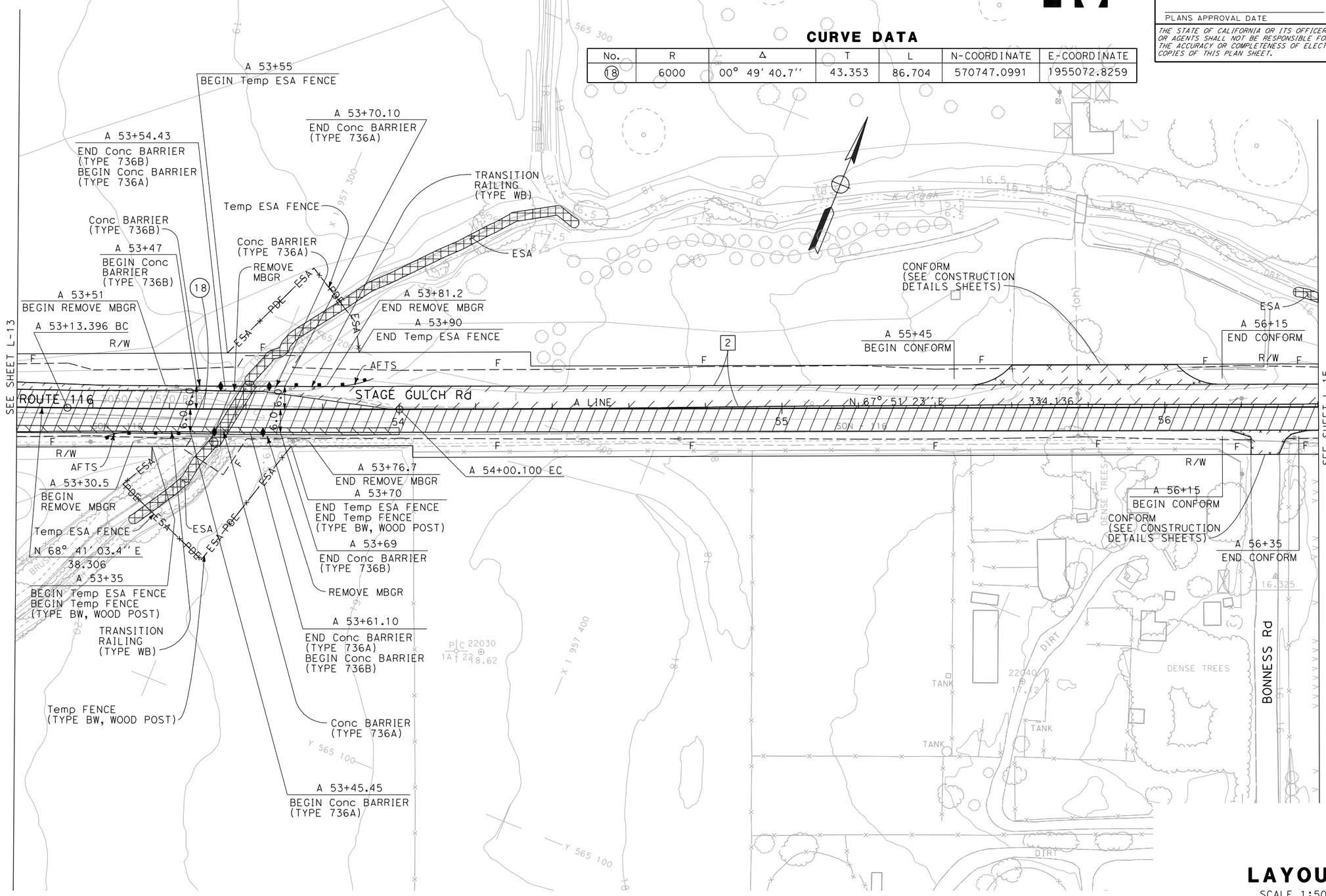

FOR NOTES, ABBREVIATIONS &/OR LEGEND, SEE SHEET L-1

ALL DIMENSIONS ARE IN METERS UNLESS OTHERWISE SHOWN

LAYOUT

SCALE 1:500

L-14

JRP	5/07
REVISED BY	DATE REVISED
JASON R. PHOEN	EMARNAN PONGPAIROJ
CALCULATED-DESIGNED BY	CHECKED BY
FUNCTIONAL SUPERVISOR	STEWART LEE

STATE OF CALIFORNIA - DEPARTMENT OF TRANSPORTATION

Caltrans DESIGN

LAST REVISION 07-09-08 DATE PLOTTED => 12/4/2009 TIME PLOTTED => 3:17:42 PM

Dist	COUNTY	ROUTE	KILOMETER POST TOTAL PROJECT	SHEET No.	TOTAL SHEETS
04	Son	116	67.3/71.9		

LICENSED LANDSCAPE ARCHITECT

PLANS APPROVAL DATE

THE STATE OF CALIFORNIA OR ITS OFFICERS OR AGENTS SHALL NOT BE RESPONSIBLE FOR THE ACCURACY OR COMPLETENESS OF ELECTRONIC COPIES OF THIS PLAN SHEET.

LICENSED LANDSCAPE ARCHITECT ALEXANDER K. MCDONALD No. 5367 Signature Renewal Date Date STATE OF CALIFORNIA

Caltrans Metric

FOR COMPLETE RIGHT OF WAY AND ACCURATE ACCESS DATA, SEE RIGHT OF WAY RECORD MAPS AT DISTRICT OFFICE.

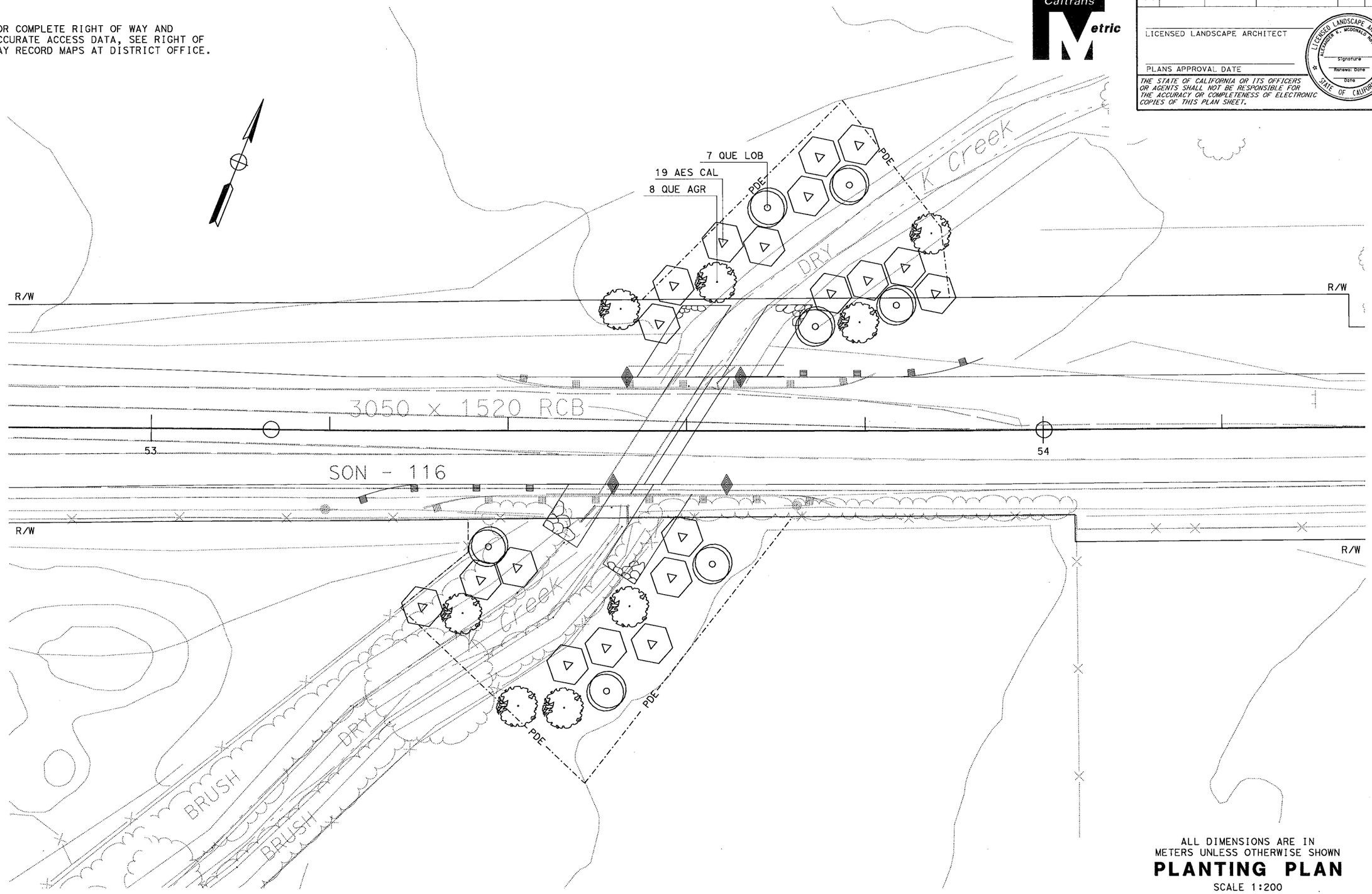

ALL DIMENSIONS ARE IN METERS UNLESS OTHERWISE SHOWN

PLANTING PLAN

SCALE 1:200

THIS SHEET ACCURATE FOR HIGHWAY PLANTING WORK ONLY.

SITE 6

REVISED BY	DATE REVISED

CALCULATED-DESIGNED BY: Alex McDonald
CHECKED BY: Jennifer Egawa
SENIOR LANDSCAPE ARCHITECT: DAVE W. YAM

STATE OF CALIFORNIA - DEPARTMENT OF TRANSPORTATION
Caltrans **WATER QUALITY**

LAST REVISION 00-00-00 | DATE PLOTTED => 03-DEC-2009 | TIME PLOTTED => 11:20

BORDER LAST REVISED 3/1/2007 | RELATIVE BORDER SCALE IS IN MILLIMETERS 0 20 40 60 80 | USERNAME => s130924 | DGN FILE => 428382ti008.dgn | CU 00000 | EA 000000

Dist	COUNTY	ROUTE	KILOMETER POST TOTAL PROJECT	SHEET No.	TOTAL SHEETS
04	Son	116	67.3/71.9		

Charlotte A. Cashin 7-18-07
REGISTERED CIVIL ENGINEER DATE

PLANS APPROVAL DATE

REGISTERED PROFESSIONAL ENGINEER Charlotte A. Cashin No. 34417 Exp. 9-30-09 CIVIL STATE OF CALIFORNIA

THE STATE OF CALIFORNIA OR ITS OFFICERS OR AGENTS SHALL NOT BE RESPONSIBLE FOR THE ACCURACY OR COMPLETENESS OF ELECTRONIC COPIES OF THIS PLAN SHEET.

Caltrans Metric

FOR COMPLETE RIGHT OF WAY DATA,
SEE RIGHT OF WAY RECORD MAPS
AT DISTRICT OFFICE.

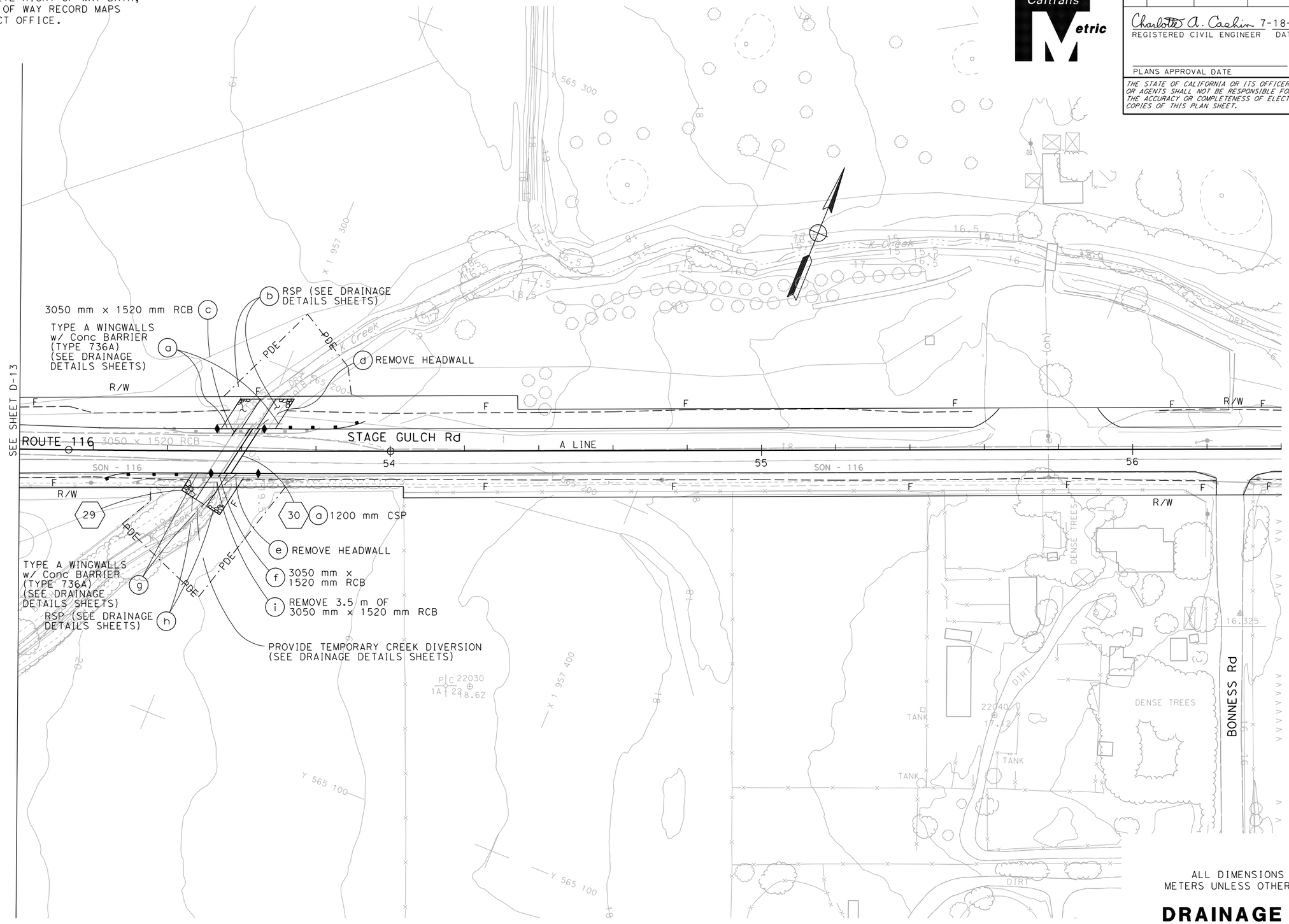

ALL DIMENSIONS ARE IN METERS UNLESS OTHERWISE SHOWN

FOR NOTES, ABBREVIATIONS &/OR LEGEND, SEE SHEET D-1

THIS PLAN ACCURATE FOR DRAINAGE WORK ONLY

DRAINAGE PLAN

SCALE 1:500

D-14

STATE OF CALIFORNIA - DEPARTMENT OF TRANSPORTATION	FUNCTIONAL SUPERVISOR	CALCULATED-DESIGNED BY	JASON R. PHOEN
Caltrans	JOSEPH E. PETERSON	CHECKED BY	EMARNAN PONGPAIROJ
HYDRAULICS		REVISED BY	JRP
		DATE REVISED	5/07

LAST REVISION 03-07-09 DATE PLOTTED => 12/4/2009 TIME PLOTTED => 3:18:00 PM

Dist	COUNTY	ROUTE	KILOMETER POST TOTAL PROJECT	SHEET No.	TOTAL SHEETS
04	Son	116	67.3/71.9		

Charlotte A. Cashin 7-18-07
REGISTERED CIVIL ENGINEER DATE

PLANS APPROVAL DATE

REGISTERED PROFESSIONAL ENGINEER Charlotte A. Cashin No. 34417 Exp. 9-30-09 CIVIL STATE OF CALIFORNIA

THE STATE OF CALIFORNIA OR ITS OFFICERS OR AGENTS SHALL NOT BE RESPONSIBLE FOR THE ACCURACY OR COMPLETENESS OF ELECTRONIC COPIES OF THIS PLAN SHEET.

Caltrans Metric

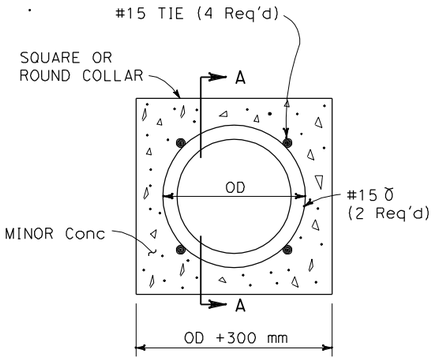

PLAN

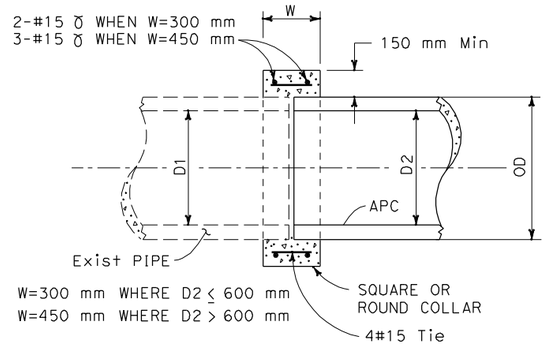

SECTION A-A

CONCRETE COLLAR DETAIL

2 4 24

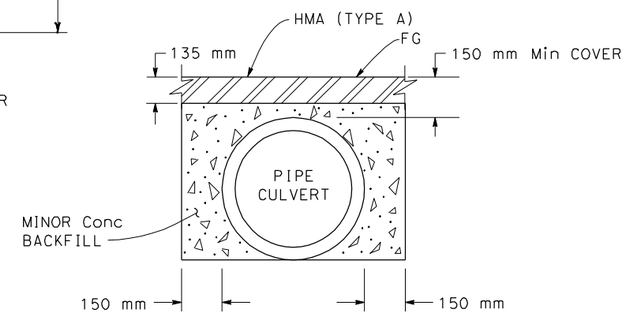

MINOR CONCRETE (BACKFILL)

2 3 4 25 28

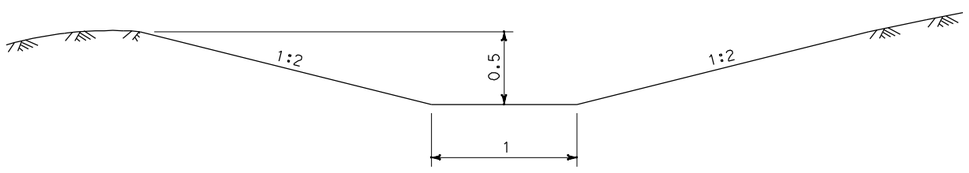

TYPE A CHANNEL

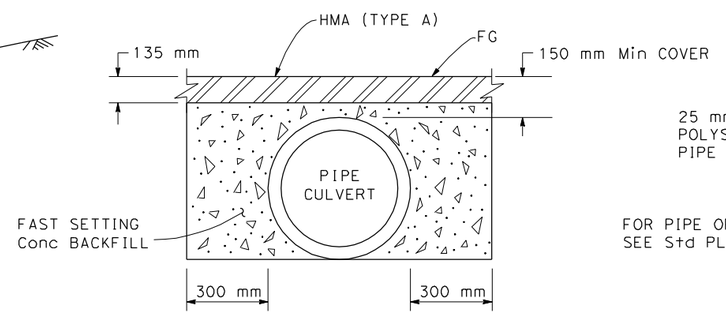

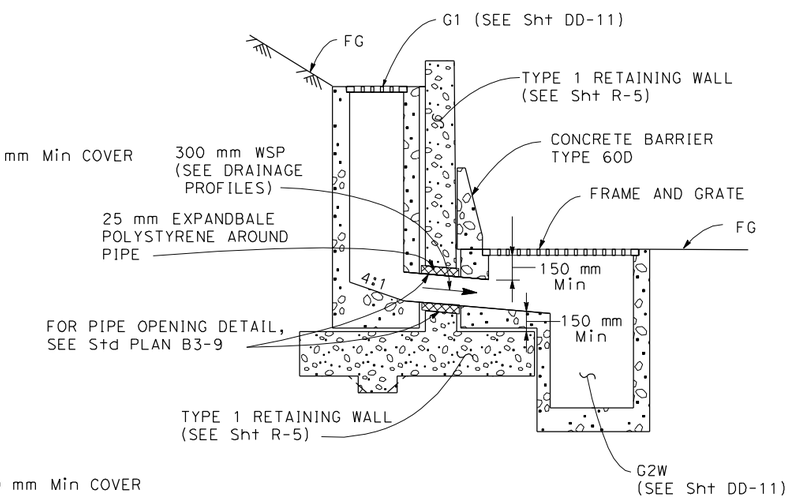

RETAINING WALL, PIPE OUTLET DETAIL

23 25

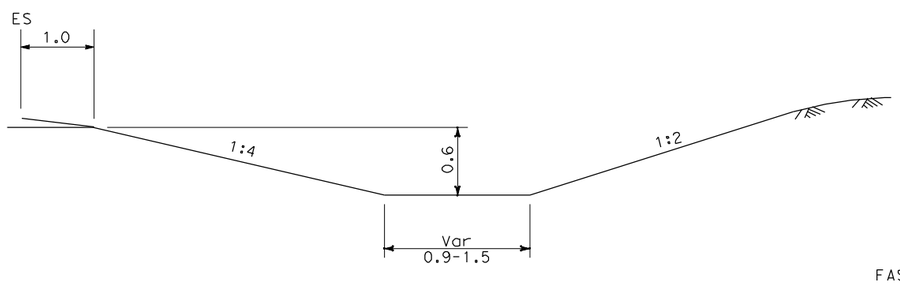

DITCH DETAIL

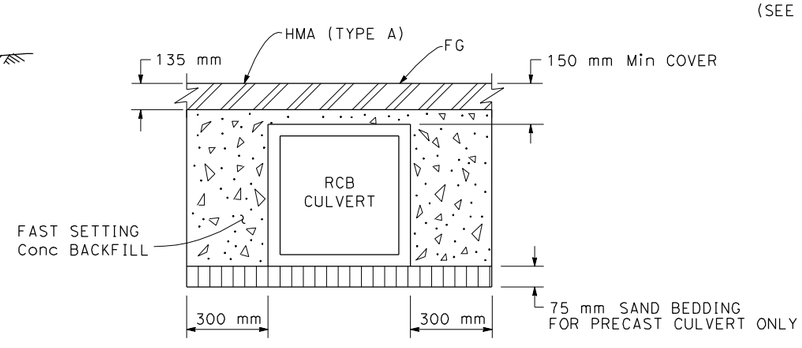

CONCRETE BACKFILL (FAST SETTING CONCRETE)

12 14 15 26 27 30

ALL DIMENSIONS ARE IN METERS UNLESS OTHERWISE SHOWN

DRAINAGE DETAILS

NO SCALE

DD-13

MC	5/07	REVISED BY	DATE REVISED
MARCUS CHAN	JASON R. PHOEN	CALCULATED-DESIGNED BY	CHECKED BY
FUNCTIONAL SUPERVISOR	JOSEPH E. PETERSON		

STATE OF CALIFORNIA - DEPARTMENT OF TRANSPORTATION
Caltrans HYDRAULICS

LAST REVISION 07-01-08 DATE PLOTTED => 12/4/2009 TIME PLOTTED => 3:21:33 PM

Dist	COUNTY	ROUTE	KILOMETER POST TOTAL PROJECT	SHEET No.	TOTAL SHEETS
04	Son	116	67.3/71.9		

REGISTERED CIVIL ENGINEER 7-25-07 DATE

PLANS APPROVAL DATE

REGISTERED PROFESSIONAL ENGINEER Jason R. Phoen No. 57553 Exp. 12-31-09 CIVIL STATE OF CALIFORNIA

THE STATE OF CALIFORNIA OR ITS OFFICERS OR AGENTS SHALL NOT BE RESPONSIBLE FOR THE ACCURACY OR COMPLETENESS OF ELECTRONIC COPIES OF THIS PLAN SHEET.

Caltrans Metric

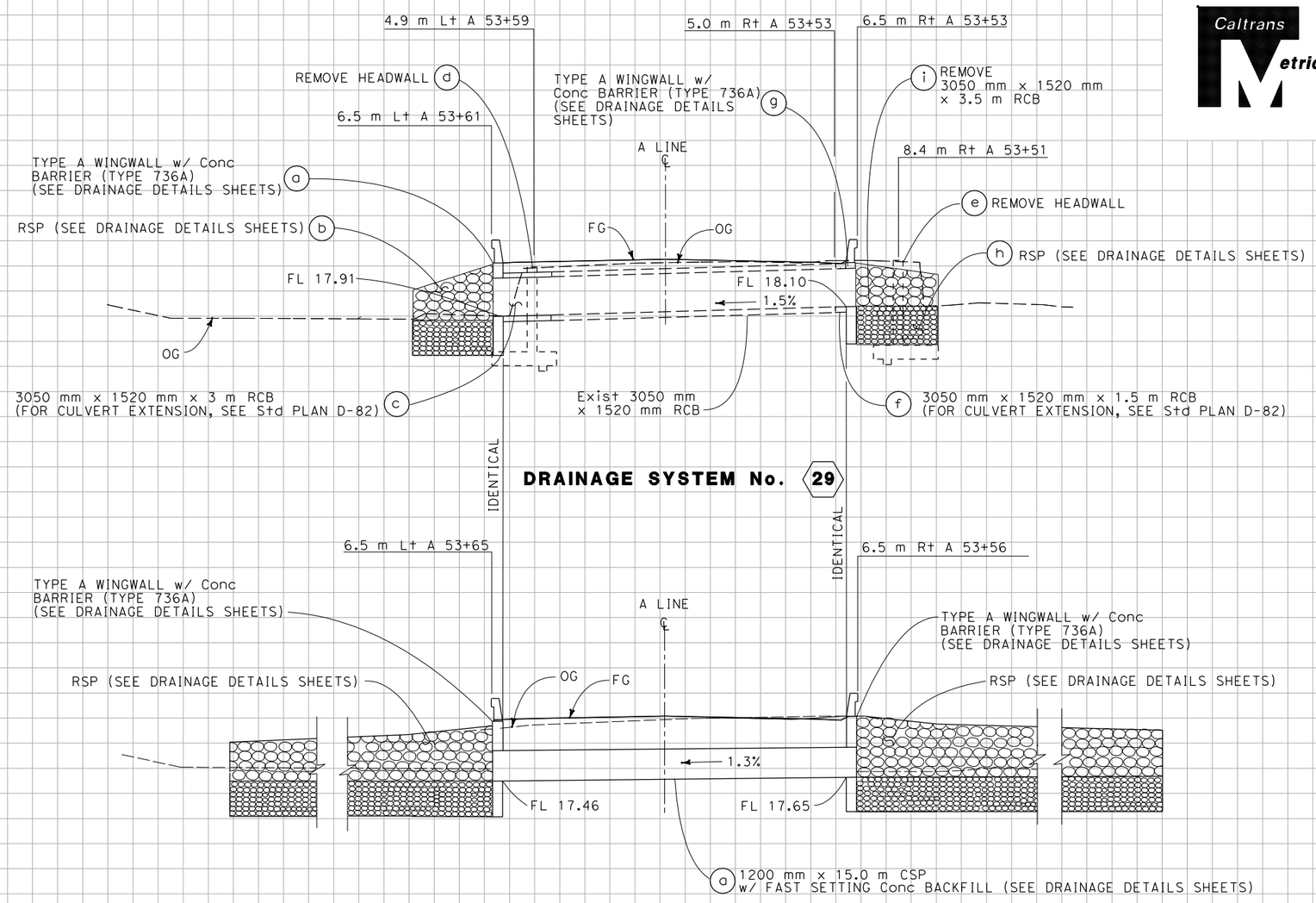

DRAINAGE SYSTEM No. 29

DRAINAGE SYSTEM No. 30

ALL DIMENSIONS ARE IN METERS UNLESS OTHERWISE SHOWN

DRAINAGE PROFILES

SCALE HORIZ 1:100 VERT 1:100

DP-8

REVISED BY	DATE REVISED
MC	5/07

MARCUS CHAN — JASON R. PHOEN

CALCULATED-DESIGNED BY — CHECKED BY

FUNCTIONAL SUPERVISOR — STEWART LEE

STATE OF CALIFORNIA - DEPARTMENT OF TRANSPORTATION

Caltrans **DESIGN**

Station	
m^3 Exc	
m^3 Emb	

LAST REVISION 07-01-08 DATE PLOTTED => 12/4/2009 TIME PLOTTED => 3:25:27 PM

Dist	COUNTY	ROUTE	KILOMETER POST TOTAL PROJECT	SHEET No.	TOTAL SHEETS
04	Son	116	67.3/71.9		

REGISTERED CIVIL ENGINEER 7-24-07 DATE

PLANS APPROVAL DATE

REGISTERED PROFESSIONAL ENGINEER Jason R. Phoen No. 57553 Exp. 12-31-09 CIVIL STATE OF CALIFORNIA

THE STATE OF CALIFORNIA OR ITS OFFICERS OR AGENTS SHALL NOT BE RESPONSIBLE FOR THE ACCURACY OR COMPLETENESS OF ELECTRONIC COPIES OF THIS PLAN SHEET.

Caltrans Metric

FOR COMPLETE RIGHT OF WAY DATA, SEE RIGHT OF WAY RECORD MAPS AT DISTRICT OFFICE.

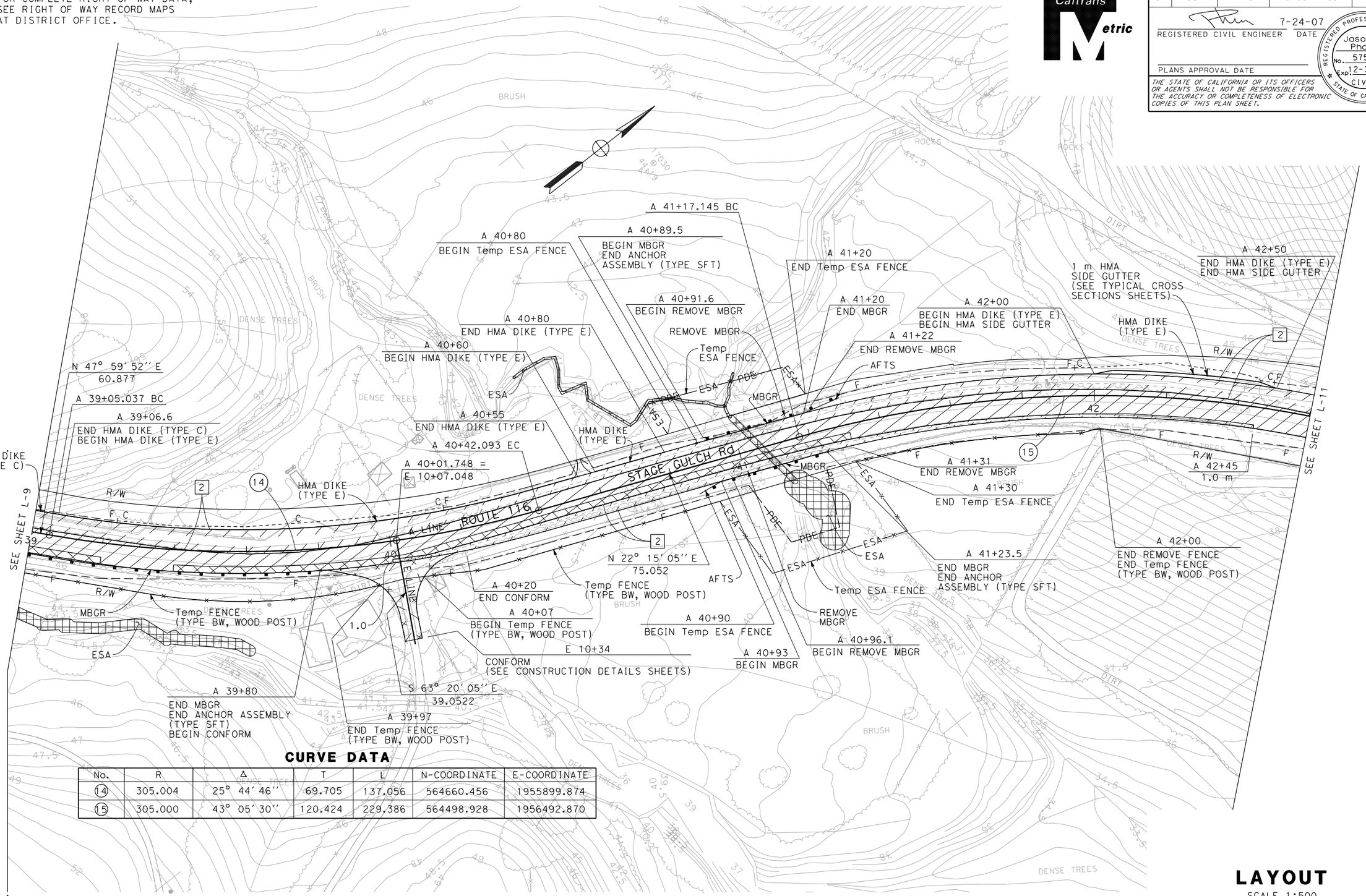

CURVE DATA

No.	R	Δ	T	L	N-COORDINATE	E-COORDINATE
14	305.004	25° 44′ 46″	69.705	137.056	564660.456	1955899.874
15	305.000	43° 05′ 30″	120.424	229.386	564498.928	1956492.870

FOR NOTES, ABBREVIATIONS &/OR LEGEND, SEE SHEET L-1

ALL DIMENSIONS ARE IN METERS UNLESS OTHERWISE SHOWN

LAYOUT

SCALE 1:500

L-10

JRP	REVISED BY
5/07	DATE REVISED
JASON R. PHOEN	CALCULATED-DESIGNED BY
EMARNAN PONGPAIROJ	CHECKED BY
STEWART LEE	FUNCTIONAL SUPERVISOR

STATE OF CALIFORNIA - DEPARTMENT OF TRANSPORTATION

Caltrans DESIGN

LAST REVISION 07-09-08

DATE PLOTTED => 12/4/2009
TIME PLOTTED => 3:17:40 PM

BORDER LAST REVISED 3/1/2007

RELATIVE BORDER SCALE IS IN MILLIMETERS 0 20 40 60 80

USERNAME => irene_liu
DGN FILE => ...\dwg\site 1-6\L-10_CT.dgn

CU 04261

EA 283811

Dist	COUNTY	ROUTE	KILOMETER POST TOTAL PROJECT	SHEET No.	TOTAL SHEETS
04	Son	116	67.3/71.9		

LICENSED LANDSCAPE ARCHITECT

PLANS APPROVAL DATE

LICENSED LANDSCAPE ARCHITECT ALEXANDER K. McDONALD No. 5342 Signature Renewal Date Date STATE OF CALIFORNIA

THE STATE OF CALIFORNIA OR ITS OFFICERS OR AGENTS SHALL NOT BE RESPONSIBLE FOR THE ACCURACY OR COMPLETENESS OF ELECTRONIC COPIES OF THIS PLAN SHEET.

Caltrans Metric

FOR COMPLETE RIGHT OF WAY AND ACCURATE ACCESS DATA, SEE RIGHT OF WAY RECORD MAPS AT DISTRICT OFFICE.

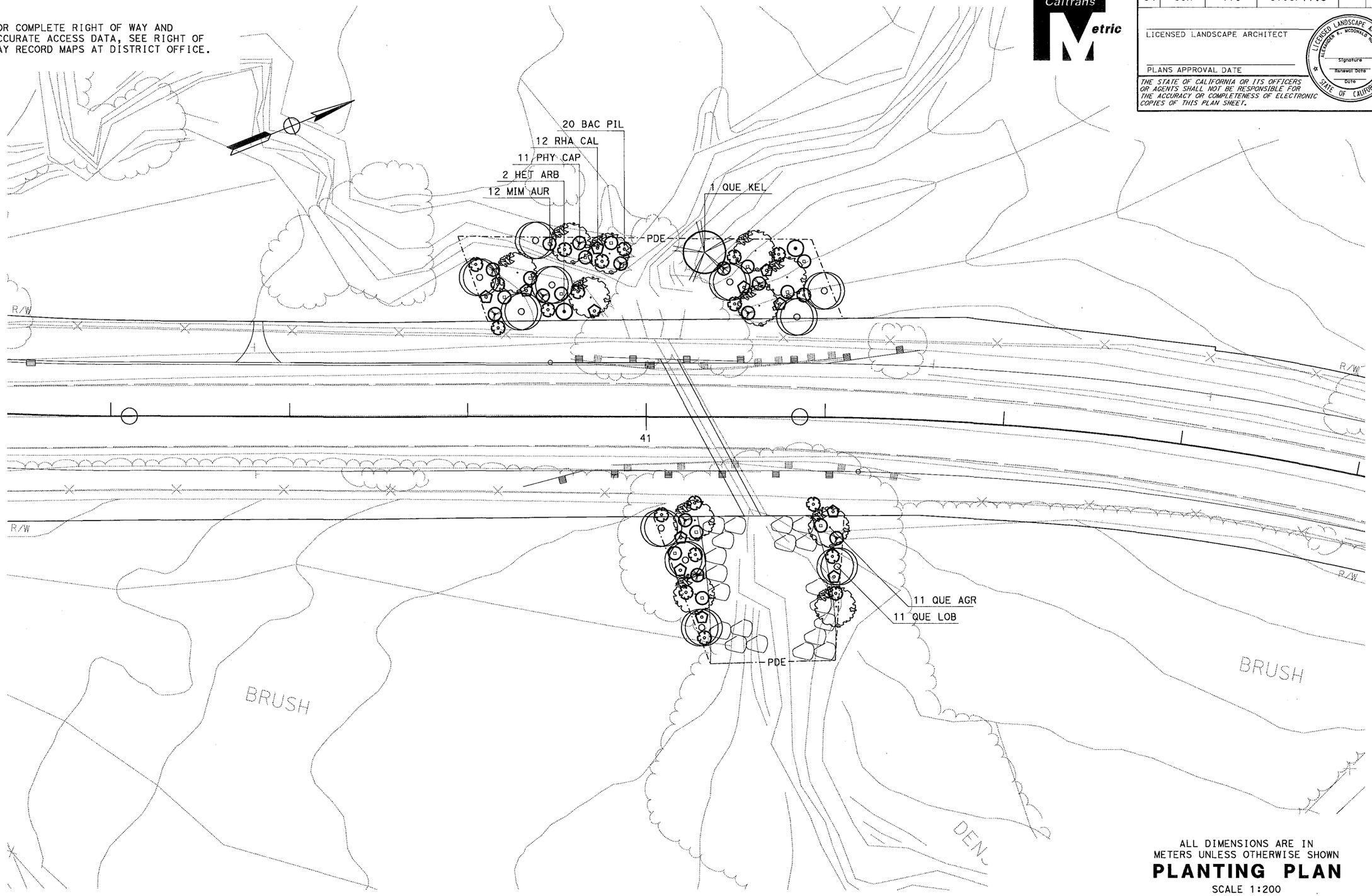

ALL DIMENSIONS ARE IN METERS UNLESS OTHERWISE SHOWN

PLANTING PLAN

SCALE 1:200

SITE 5

THIS SHEET ACCURATE FOR HIGHWAY PLANTING WORK ONLY.

STATE OF CALIFORNIA - DEPARTMENT OF TRANSPORTATION

Caltrans **WATER QUALITY**

SENIOR LANDSCAPE ARCHITECT: DAVE W. YAM

CALCULATED-DESIGNED BY: Alex McDonald

CHECKED BY: Jennifer Egawa

REVISED BY

DATE REVISED

LAST REVISION 00-00-00

DATE PLOTTED => 03-DEC-2009

TIME PLOTTED => 11:20

BORDER LAST REVISED 3/1/2007

RELATIVE BORDER SCALE IS IN MILLIMETERS 0 20 40 60 80

USERNAME => s130924

DGN FILE => 428382t1007.dgn

CU 00000

EA 000000

Dist	COUNTY	ROUTE	KILOMETER POST TOTAL PROJECT	SHEET No.	TOTAL SHEETS
04	Son	116	67.3/71.9		

Charlotte A. Cashin 7-18-07
REGISTERED CIVIL ENGINEER DATE

PLANS APPROVAL DATE

REGISTERED PROFESSIONAL ENGINEER Charlotte A. Cashin No. 34417 Exp. 9-30-09 CIVIL STATE OF CALIFORNIA

THE STATE OF CALIFORNIA OR ITS OFFICERS OR AGENTS SHALL NOT BE RESPONSIBLE FOR THE ACCURACY OR COMPLETENESS OF ELECTRONIC COPIES OF THIS PLAN SHEET.

Caltrans Metric

FOR COMPLETE RIGHT OF WAY DATA,
SEE RIGHT OF WAY RECORD MAPS
AT DISTRICT OFFICE.

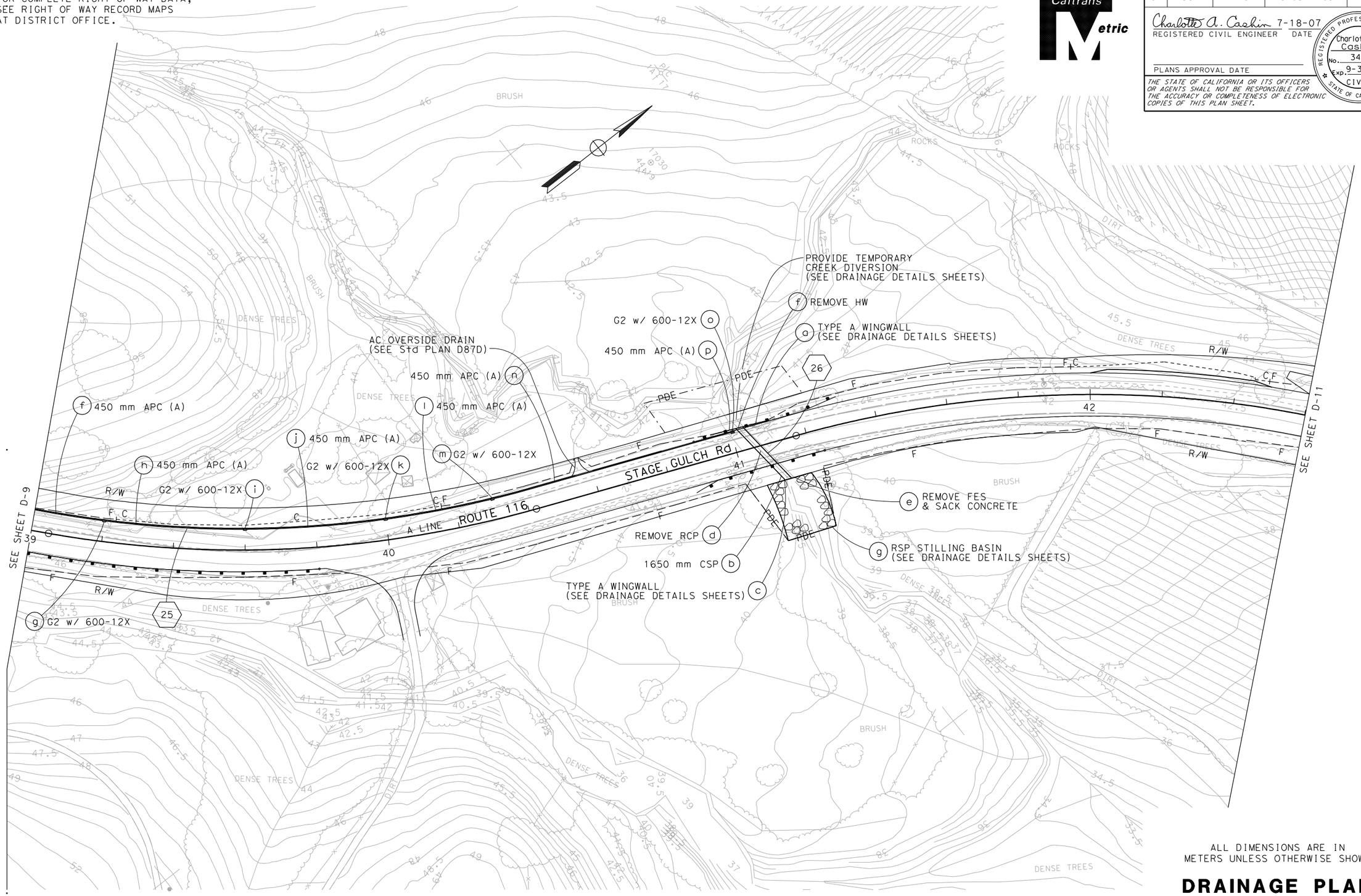

ALL DIMENSIONS ARE IN METERS UNLESS OTHERWISE SHOWN

FOR NOTES, ABBREVIATIONS &/OR LEGEND, SEE SHEET D-1

THIS PLAN ACCURATE FOR DRAINAGE WORK ONLY

DRAINAGE PLAN

SCALE 1:500

D-10

STATE OF CALIFORNIA - DEPARTMENT OF TRANSPORTATION
Caltrans
HYDRAULICS

FUNCTIONAL SUPERVISOR: JOSEPH E. PETERSON
CALCULATED-DESIGNED BY: JASON R. PHOEN
CHECKED BY: EMARNAN PONGPAIROJ
REVISED BY: JRP
DATE REVISED: 5/07

LAST REVISION 02-03-09
DATE PLOTTED => 12/4/2009
TIME PLOTTED => 3:17:58 PM

Dist	COUNTY	ROUTE	KILOMETER POST TOTAL PROJECT	SHEET No.	TOTAL SHEETS
04	Son	116	67.3/71.9		

Charlotte A. Cashin 7-18-07
REGISTERED CIVIL ENGINEER DATE

PLANS APPROVAL DATE

REGISTERED PROFESSIONAL ENGINEER Charlotte A. Cashin No. 34417 Exp. 9-30-09 CIVIL STATE OF CALIFORNIA

THE STATE OF CALIFORNIA OR ITS OFFICERS OR AGENTS SHALL NOT BE RESPONSIBLE FOR THE ACCURACY OR COMPLETENESS OF ELECTRONIC COPIES OF THIS PLAN SHEET.

Caltrans Metric

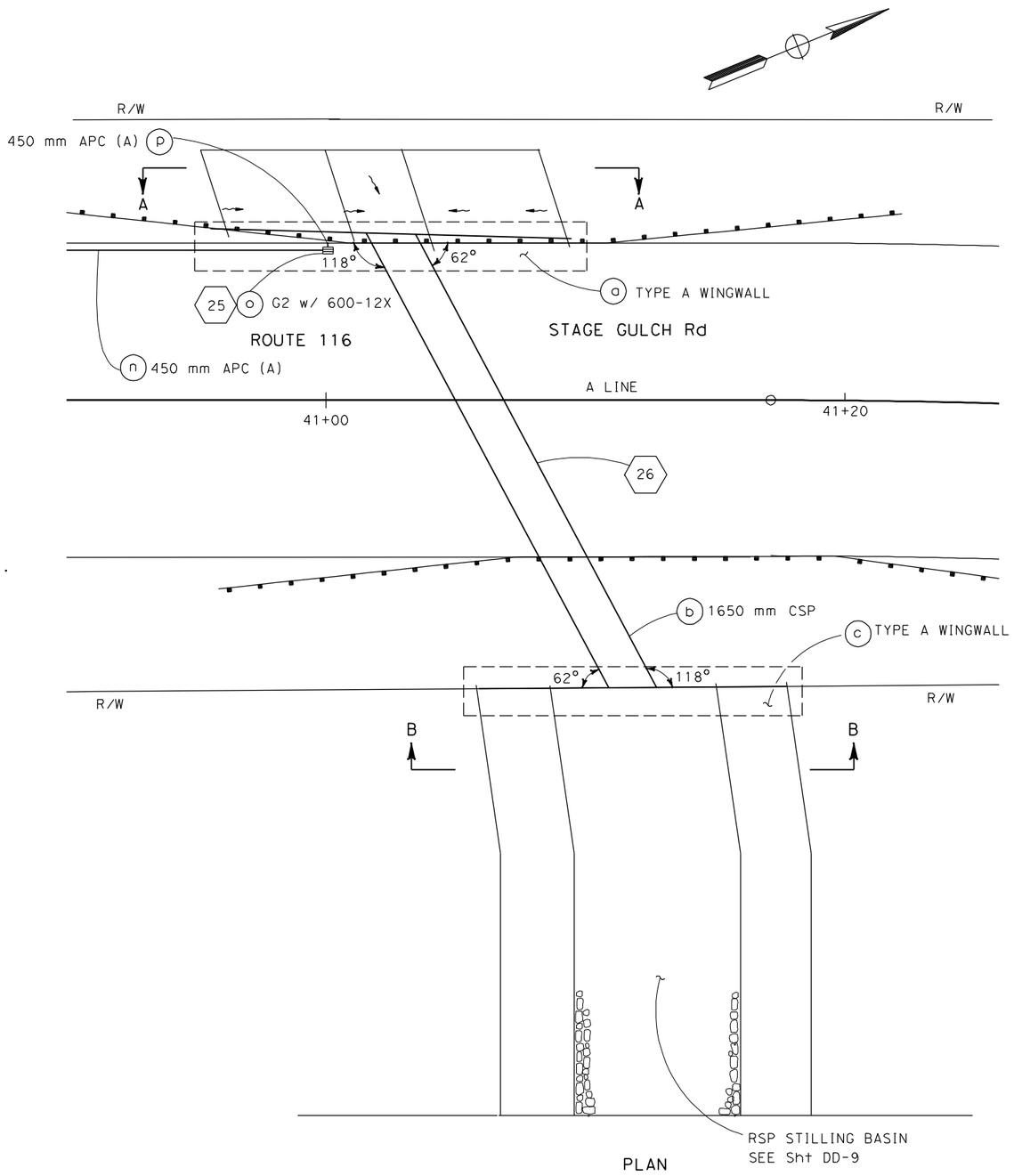

PLAN

DRAINAGE SYSTEM No. 26

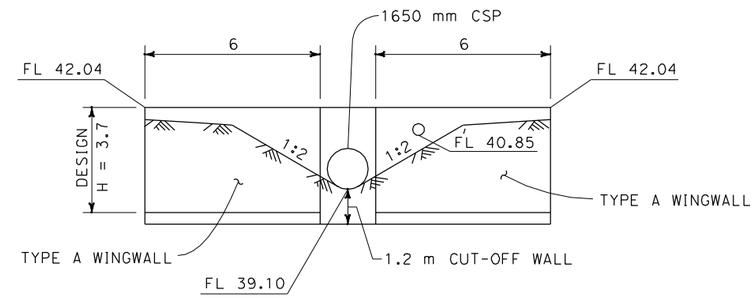

SECTION A-A

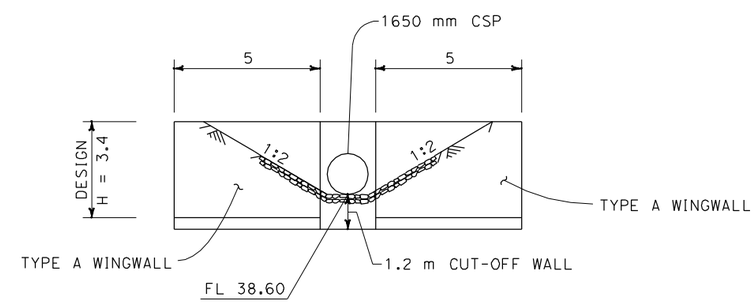

SECTION B-B

FOR DETAILS NOT SHOWN, SEE Std PLANS D90, B11-56

ALL DIMENSIONS ARE IN METERS UNLESS OTHERWISE SHOWN

DRAINAGE DETAILS

NO SCALE

DD-8

REVISED BY	MC
DATE REVISED	5/07
CALCULATED-DESIGNED BY	MARCUS CHAN
CHECKED BY	JASON R. PHOEN
FUNCTIONAL SUPERVISOR	JOSEPH E. PETERSON

STATE OF CALIFORNIA - DEPARTMENT OF TRANSPORTATION
Caltrans **HYDRAULICS**

LAST REVISION 07-01-08 | DATE PLOTTED => 12/4/2009 | TIME PLOTTED => 3:21:15 PM

Dist	COUNTY	ROUTE	KILOMETER POST TOTAL PROJECT	SHEET No.	TOTAL SHEETS
04	Son	116	67.3/71.9		

REGISTERED CIVIL ENGINEER DATE

PLANS APPROVAL DATE

REGISTERED PROFESSIONAL ENGINEER No. Exp. CIVIL STATE OF CALIFORNIA

THE STATE OF CALIFORNIA OR ITS OFFICERS OR AGENTS SHALL NOT BE RESPONSIBLE FOR THE ACCURACY OR COMPLETENESS OF ELECTRONIC COPIES OF THIS PLAN SHEET.

WRECO
1814 FRANKLIN, SUITE 608
OAKLAND, CA 94612

CALTRANS
111 GRAND AVENUE
OAKLAND, CA 94612

Caltrans Metric

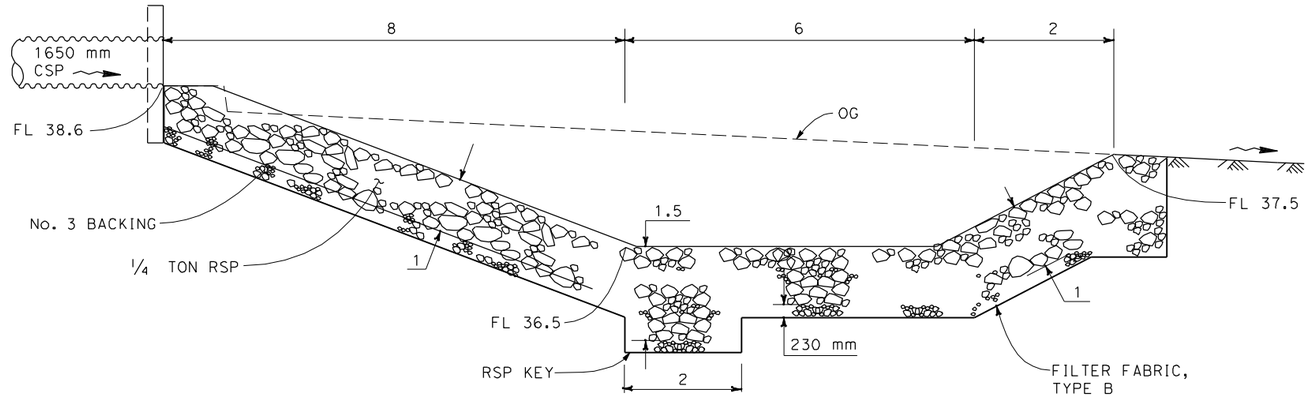

PROFILE - RSP STILLING BASIN

NOTE:

1. WILLOW BRANCHES SHALL BE 3 m TO 3.7 m LONG, AND PLACED SUCH THAT THE TIPS PROTRUDE FROM THE FG 150 mm Min.

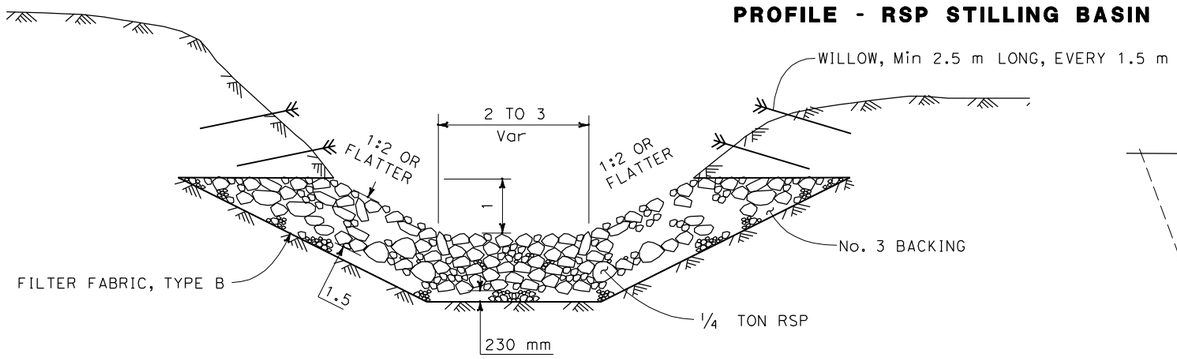

SECTION A-A

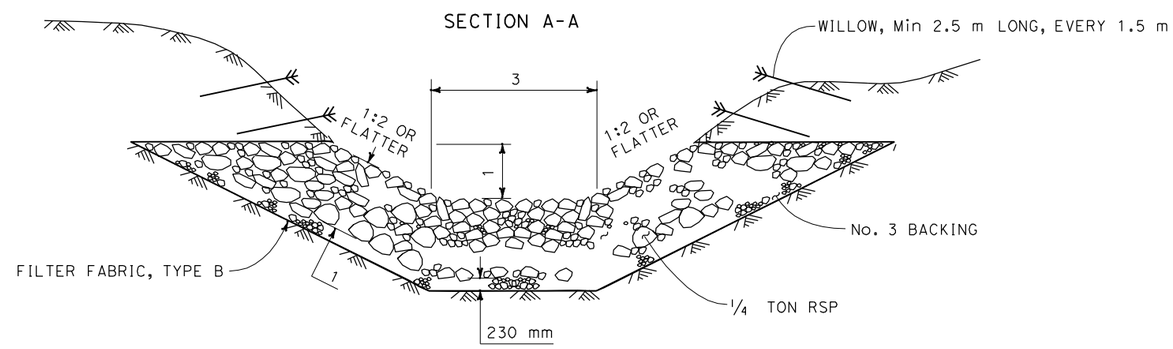

SECTION B-B

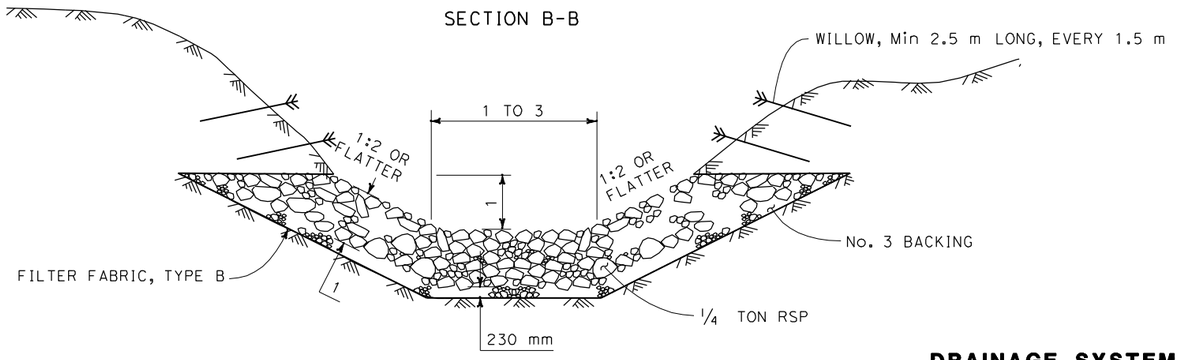

SECTION C-C

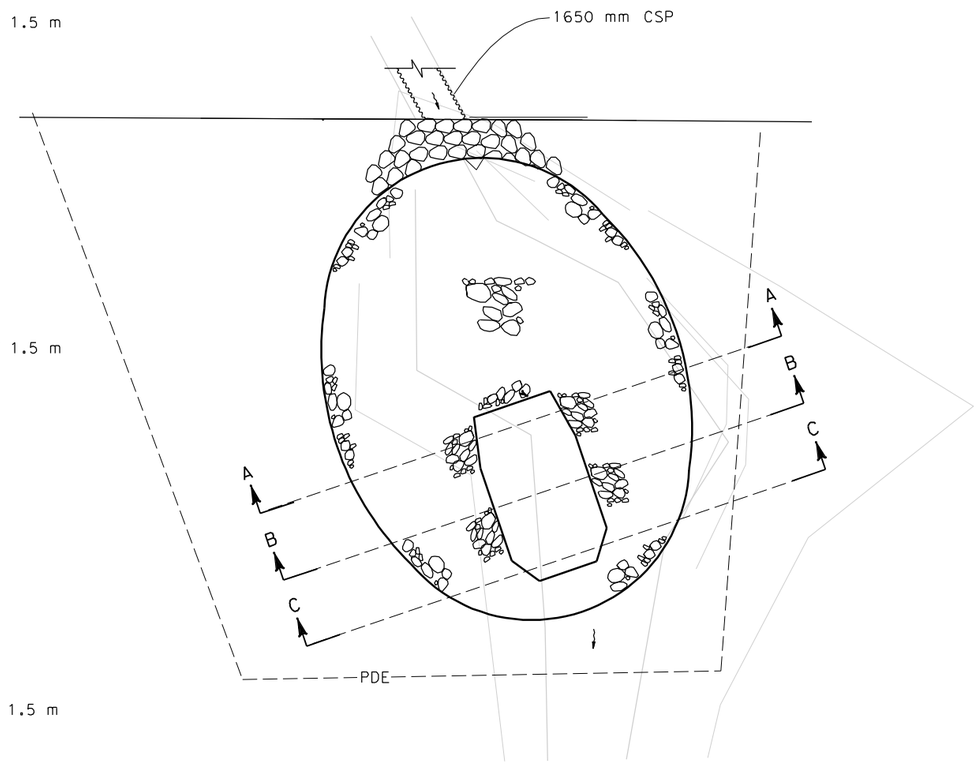

PLAN VIEW

RSP STILLING BASIN

DRAINAGE SYSTEM No. 26

DRAINAGE DETAILS

NO SCALE

ALL DIMENSIONS ARE IN METERS UNLESS OTHERWISE SHOWN

DD-9

REVISED BY	DATE REVISED
IRENE LIU	ULYSSES HILLARD
CALCULATED-DESIGNED BY	CHECKED BY
CONSULTANT FUNCTIONAL SUPERVISOR	HAN-BIN LIANG

STATE OF CALIFORNIA - DEPARTMENT OF TRANSPORTATION

Caltrans

LAST REVISION 00-00-00 | DATE PLOTTED => 12/4/2009 | TIME PLOTTED => 3:34:22 PM

Dist	COUNTY	ROUTE	KILOMETER POST TOTAL PROJECT	SHEET No.	TOTAL SHEETS
04	Son	116	67.3/71.9		

Charlotte A. Cashin 7-18-07
REGISTERED CIVIL ENGINEER DATE

PLANS APPROVAL DATE

REGISTERED PROFESSIONAL ENGINEER Charlotte A. Cashin No. 34417 Exp. 9-30-09 CIVIL STATE OF CALIFORNIA

THE STATE OF CALIFORNIA OR ITS OFFICERS OR AGENTS SHALL NOT BE RESPONSIBLE FOR THE ACCURACY OR COMPLETENESS OF ELECTRONIC COPIES OF THIS PLAN SHEET.

Caltrans Metric

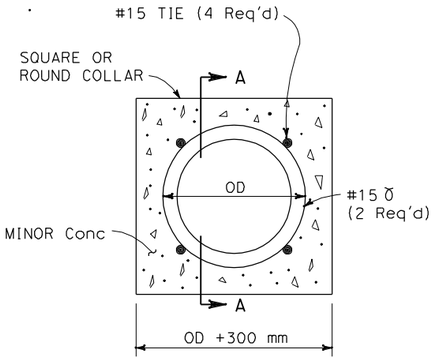

PLAN

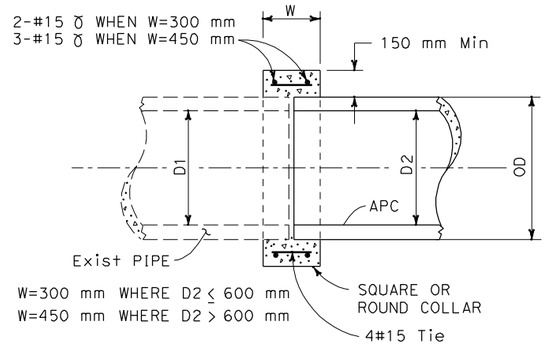

SECTION A-A

CONCRETE COLLAR DETAIL

2 4 24

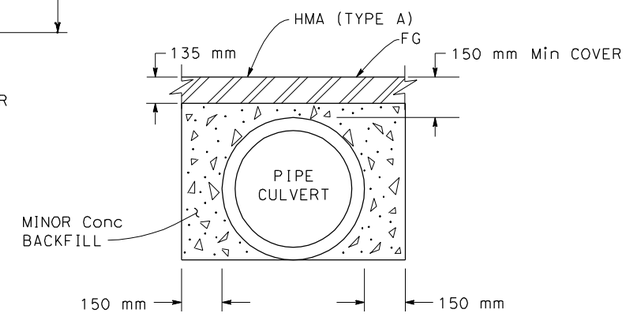

MINOR CONCRETE (BACKFILL)

2 3 4 25 28

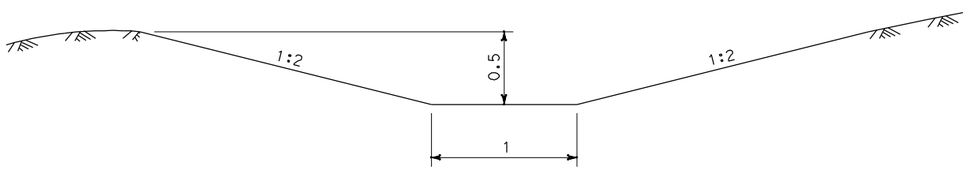

TYPE A CHANNEL

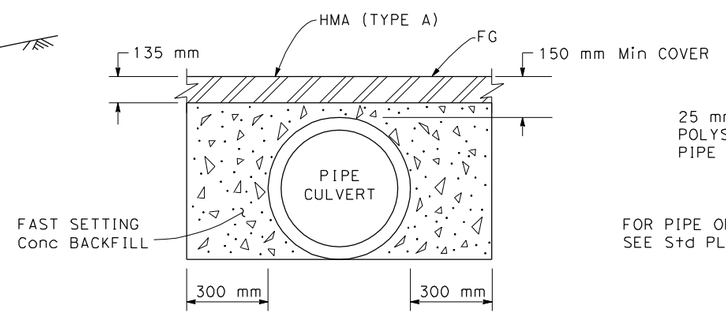

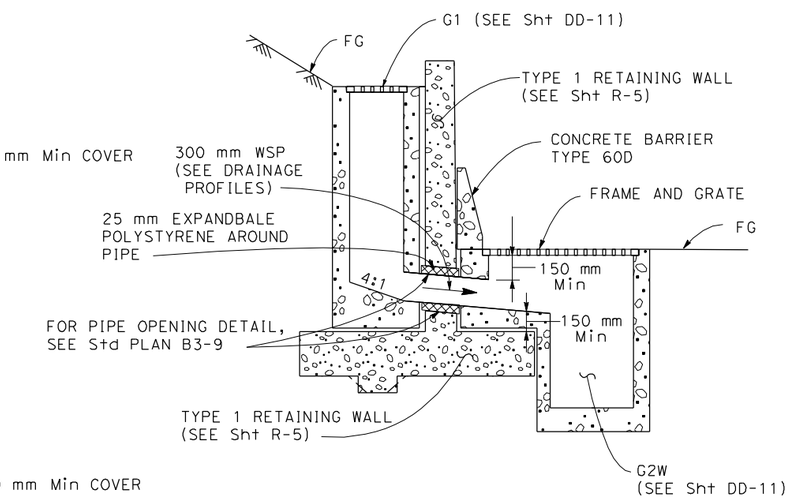

RETAINING WALL, PIPE OUTLET DETAIL

23 25

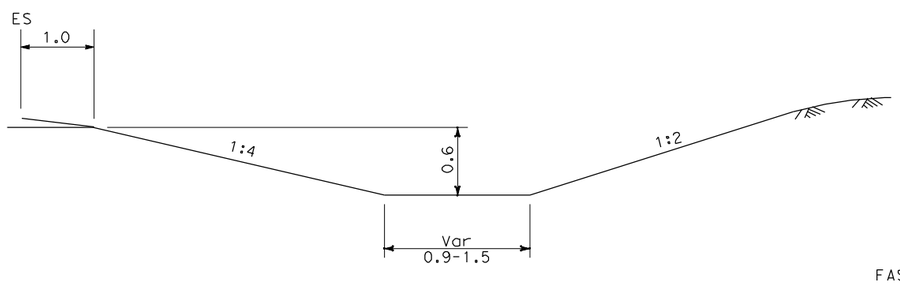

DITCH DETAIL

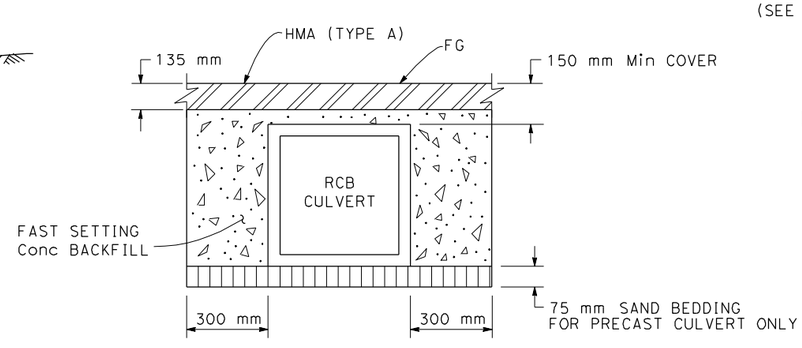

CONCRETE BACKFILL (FAST SETTING CONCRETE)

12 14 15 26 27 30

ALL DIMENSIONS ARE IN METERS UNLESS OTHERWISE SHOWN

DRAINAGE DETAILS

NO SCALE

DD-13

MC	5/07	REVISED BY	DATE REVISED
MARCUS CHAN	JASON R. PHOEN	CALCULATED-DESIGNED BY	CHECKED BY
FUNCTIONAL SUPERVISOR	JOSEPH E. PETERSON		

STATE OF CALIFORNIA - DEPARTMENT OF TRANSPORTATION
Caltrans HYDRAULICS

LAST REVISION 07-01-08 DATE PLOTTED => 12/4/2009 TIME PLOTTED => 3:21:33 PM

Dist	COUNTY	ROUTE	KILOMETER POST TOTAL PROJECT	SHEET No.	TOTAL SHEETS
04	Son	116	67.3/71.9		

REGISTERED CIVIL ENGINEER 7-25-07 DATE

PLANS APPROVAL DATE

REGISTERED PROFESSIONAL ENGINEER Jason R. Phoen No. 57553 Exp. 12-31-09 CIVIL STATE OF CALIFORNIA

THE STATE OF CALIFORNIA OR ITS OFFICERS OR AGENTS SHALL NOT BE RESPONSIBLE FOR THE ACCURACY OR COMPLETENESS OF ELECTRONIC COPIES OF THIS PLAN SHEET.

Caltrans Metric

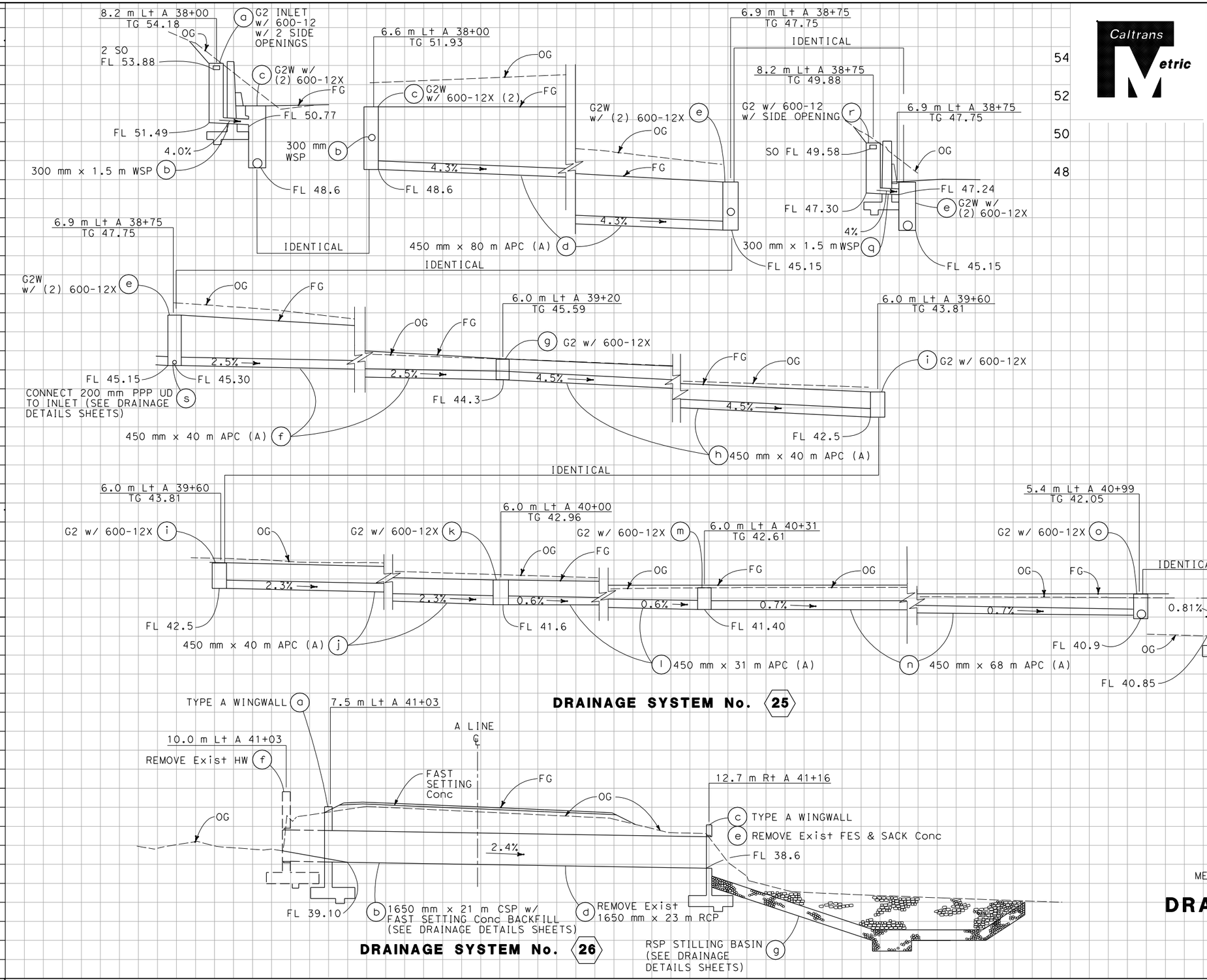

ALL DIMENSIONS ARE IN METERS UNLESS OTHERWISE SHOWN

DRAINAGE PROFILES

SCALE HORIZ 1:100 VERT 1:100

DP-7

Station	
m^3	Exc
	Emb

MC 5/07 — REVISED BY — DATE REVISED

MARCUS CHAN — JASON R. PHOEN — CALCULATED-DESIGNED BY — CHECKED BY

FUNCTIONAL SUPERVISOR STEWART LEE

STATE OF CALIFORNIA - DEPARTMENT OF TRANSPORTATION — Caltrans — DESIGN

LAST REVISION 07-01-08 — DATE PLOTTED => 12/4/2009 — TIME PLOTTED => 3:25:25 PM

Dist	COUNTY	ROUTE	KILOMETER POST TOTAL PROJECT	SHEET No.	TOTAL SHEETS
04	Son	116	67.3/71.9		

REGISTERED CIVIL ENGINEER 7-24-07 DATE

PLANS APPROVAL DATE

REGISTERED PROFESSIONAL ENGINEER Jason R. Phoen No. 57553 Exp. 12-31-09 CIVIL STATE OF CALIFORNIA

THE STATE OF CALIFORNIA OR ITS OFFICERS OR AGENTS SHALL NOT BE RESPONSIBLE FOR THE ACCURACY OR COMPLETENESS OF ELECTRONIC COPIES OF THIS PLAN SHEET.

Caltrans Metric

FOR COMPLETE RIGHT OF WAY DATA, SEE RIGHT OF WAY RECORD MAPS AT DISTRICT OFFICE.

CURVE DATA

No.	R	Δ	T	L	N-COORDINATE	E-COORDINATE
13	6159.928	01° 34′ 21.420″	84.542	169.074	559815.486	1960180.683

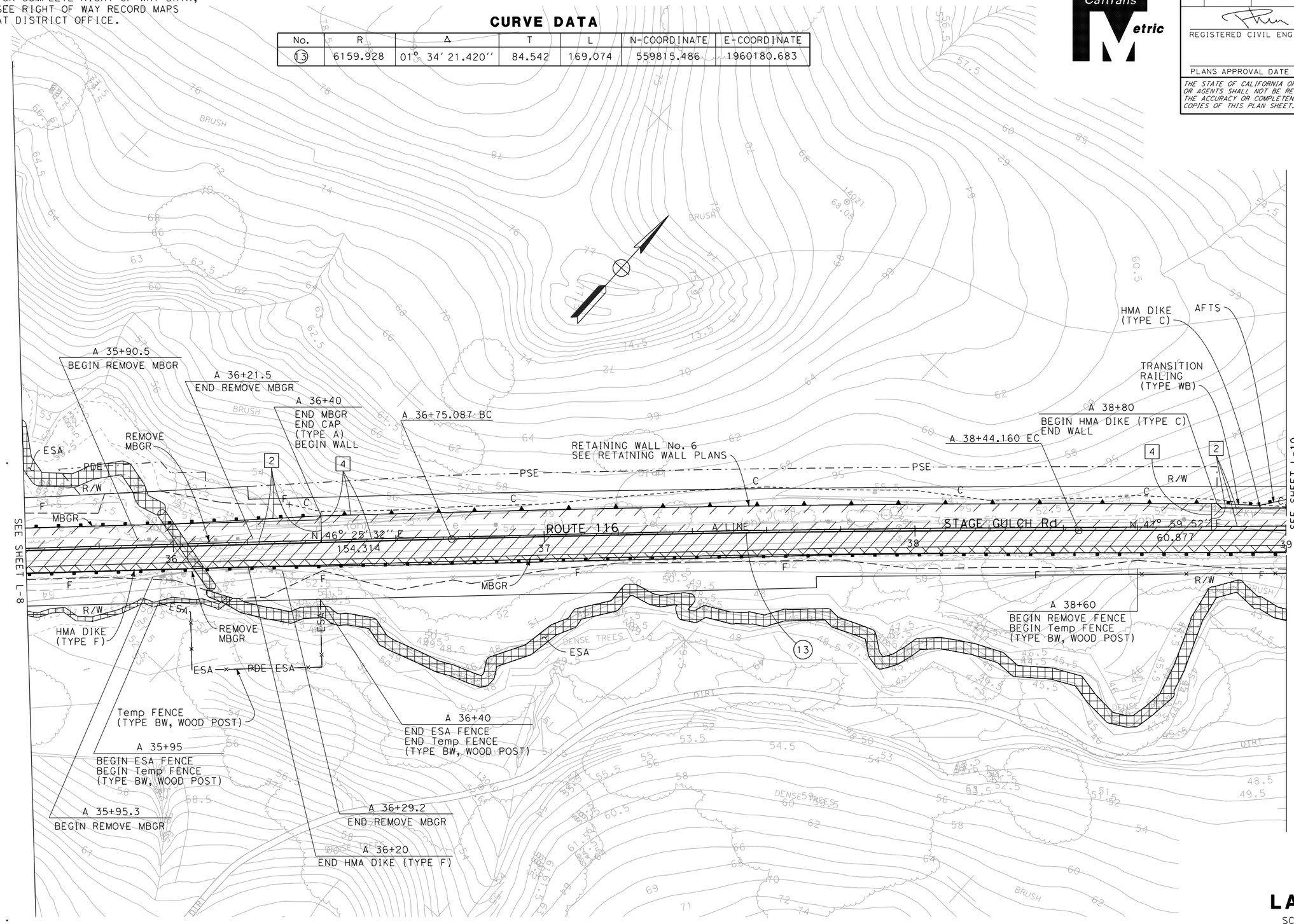

FOR NOTES, ABBREVIATIONS &/OR LEGEND, SEE SHEET L-1

ALL DIMENSIONS ARE IN METERS UNLESS OTHERWISE SHOWN

LAYOUT

SCALE 1:500

L-9

JASON R. PHOEN	REVISED BY JRP
EMARNAN PONGPAIROJ	DATE REVISED 5/07
CALCULATED-DESIGNED BY	
CHECKED BY	
FUNCTIONAL SUPERVISOR	
STEWART LEE	

STATE OF CALIFORNIA - DEPARTMENT OF TRANSPORTATION

Caltrans

DESIGN

LAST REVISION 07-09-08 DATE PLOTTED => 12/4/2009 TIME PLOTTED => 3:17:38 PM

Dist	COUNTY	ROUTE	KILOMETER POST TOTAL PROJECT	SHEET No.	TOTAL SHEETS
04	Son	116	67.3/71.9		

LICENSED LANDSCAPE ARCHITECT

PLANS APPROVAL DATE

LICENSED LANDSCAPE ARCHITECT
KENNETH K. MCDONALD NO. 4382
Signature
Renewal Date
Date
STATE OF CALIFORNIA

THE STATE OF CALIFORNIA OR ITS OFFICERS OR AGENTS SHALL NOT BE RESPONSIBLE FOR THE ACCURACY OR COMPLETENESS OF ELECTRONIC COPIES OF THIS PLAN SHEET.

Caltrans Metric

FOR COMPLETE RIGHT OF WAY AND ACCURATE ACCESS DATA, SEE RIGHT OF WAY RECORD MAPS AT DISTRICT OFFICE.

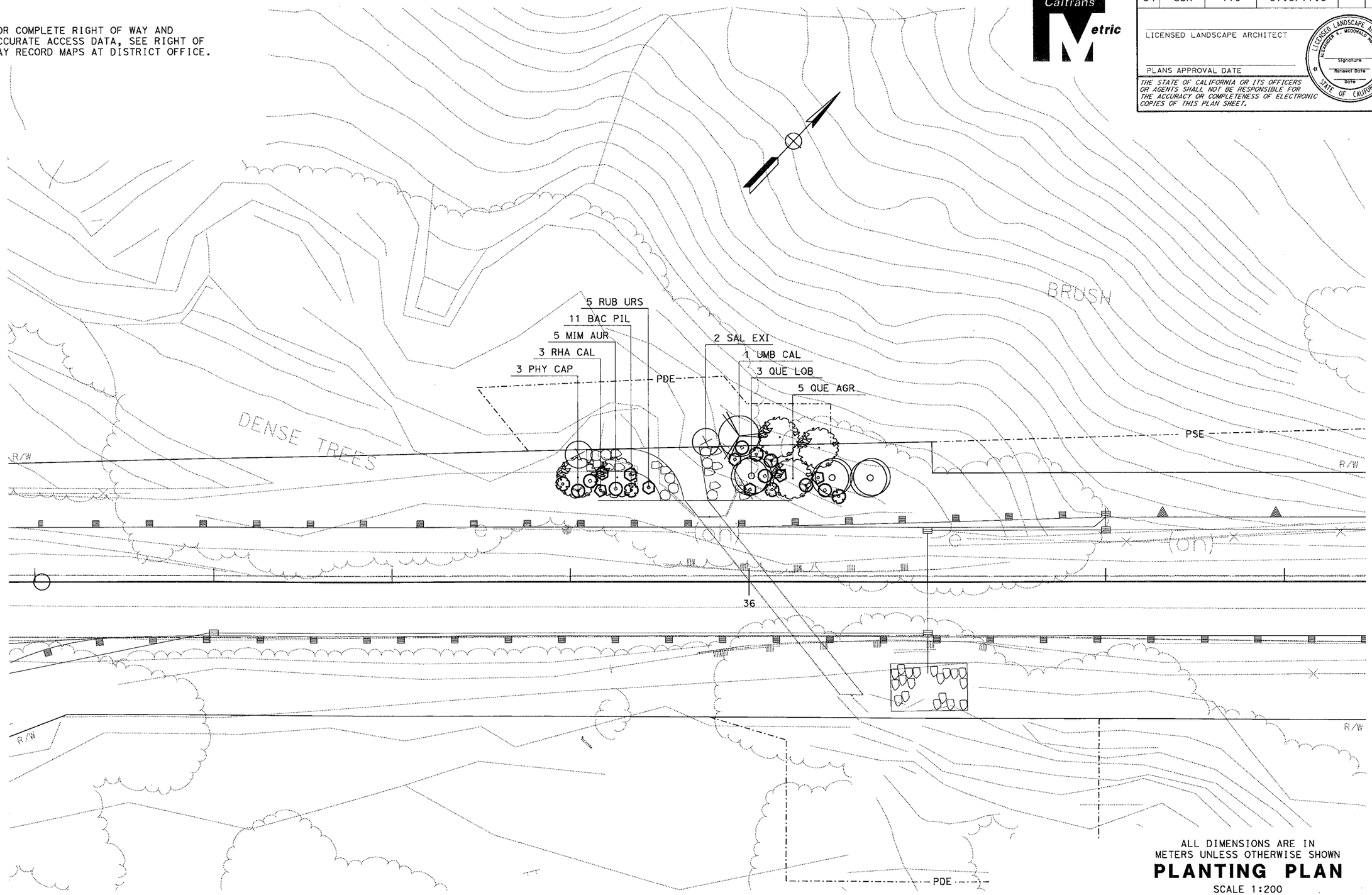

ALL DIMENSIONS ARE IN METERS UNLESS OTHERWISE SHOWN

PLANTING PLAN

SCALE 1:200

THIS SHEET ACCURATE FOR HIGHWAY PLANTING WORK ONLY.

SITE 4

REVISED BY	
DATE REVISED	
CALCULATED-DESIGNED BY	Alex McDonald
CHECKED BY	Jennifer Egawa
SENIOR LANDSCAPE ARCHITECT	DAVE W. YAM

STATE OF CALIFORNIA - DEPARTMENT OF TRANSPORTATION

Caltrans **WATER QUALITY**

LAST REVISION 00-00-00

DATE PLOTTED => 03-DEC-2009
TIME PLOTTED => 15:12

Dist	COUNTY	ROUTE	KILOMETER POST TOTAL PROJECT	SHEET No.	TOTAL SHEETS
04	Son	116	67.3/71.9		

Charlotte A. Cashin 7-18-07
REGISTERED CIVIL ENGINEER DATE

PLANS APPROVAL DATE

REGISTERED PROFESSIONAL ENGINEER Charlotte A. Cashin No. 34417 Exp. 9-30-09 CIVIL STATE OF CALIFORNIA

THE STATE OF CALIFORNIA OR ITS OFFICERS OR AGENTS SHALL NOT BE RESPONSIBLE FOR THE ACCURACY OR COMPLETENESS OF ELECTRONIC COPIES OF THIS PLAN SHEET.

Caltrans Metric

FOR COMPLETE RIGHT OF WAY DATA, SEE RIGHT OF WAY RECORD MAPS AT DISTRICT OFFICE.

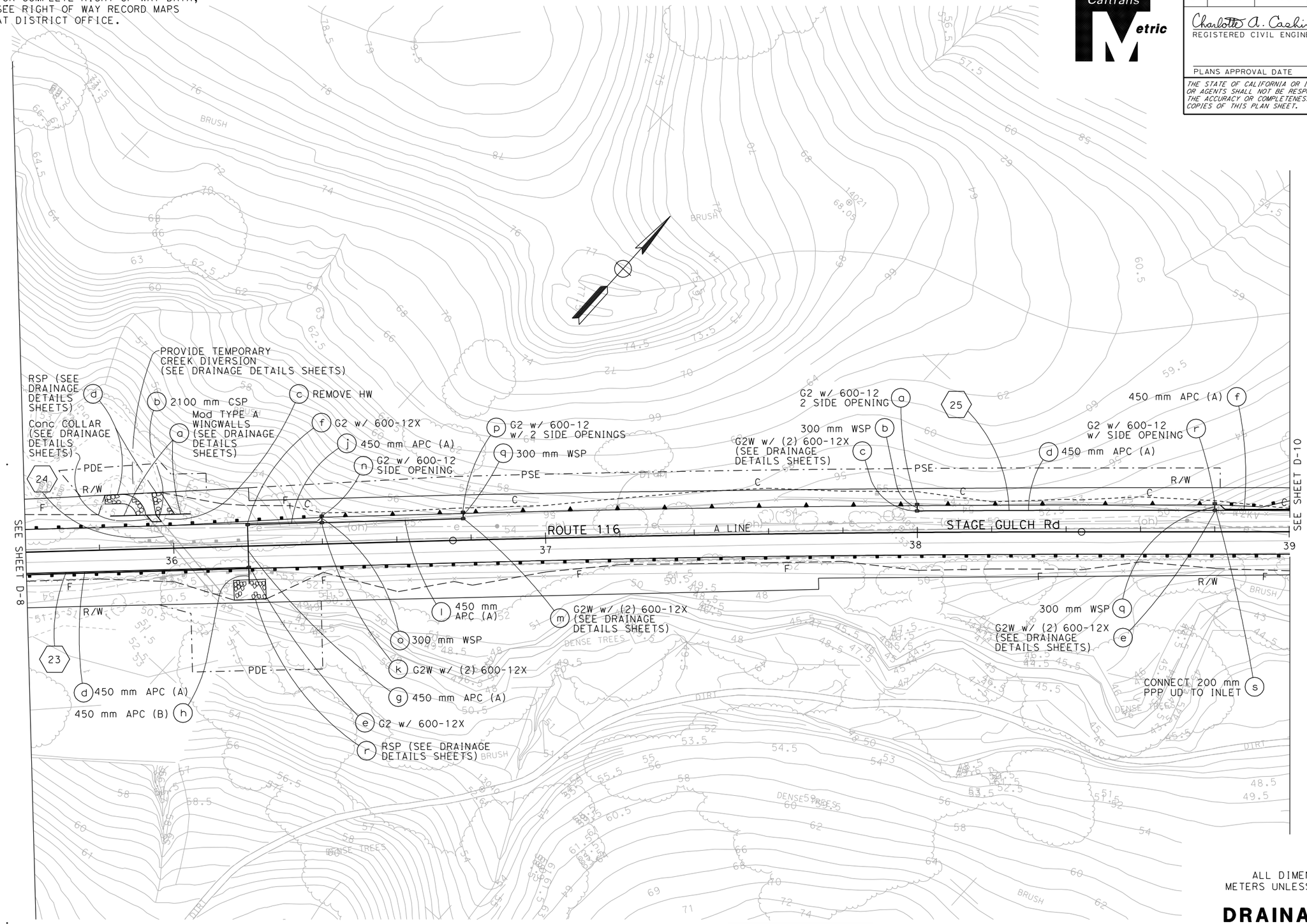

FOR NOTES, ABBREVIATIONS &/OR LEGEND, SEE SHEET D-1

ALL DIMENSIONS ARE IN METERS UNLESS OTHERWISE SHOWN

THIS PLAN ACCURATE FOR DRAINAGE WORK ONLY

DRAINAGE PLAN

SCALE 1:500

D-9

STATE OF CALIFORNIA - DEPARTMENT OF TRANSPORTATION	HYDRAULICS	FUNCTIONAL SUPERVISOR JOSEPH E. PETERSON	CALCULATED-DESIGNED BY JASON R. PHOEN
CHECKED BY EMARNAN PONGPAIROJ	REVISED BY JRP	DATE REVISED 5/07	

LAST REVISION 07-09-08 DATE PLOTTED => 12/4/2009 TIME PLOTTED => 3:17:57 PM

Dist	COUNTY	ROUTE	KILOMETER POST TOTAL PROJECT	SHEET No.	TOTAL SHEETS
04	Son	116	67.3/71.9		

Caltrans Metric

Charlotte A. Cashin 7-18-07
REGISTERED CIVIL ENGINEER DATE

PLANS APPROVAL DATE

REGISTERED PROFESSIONAL ENGINEER Charlotte A. Cashin No. 34417 Exp. 9-30-09 CIVIL STATE OF CALIFORNIA

THE STATE OF CALIFORNIA OR ITS OFFICERS OR AGENTS SHALL NOT BE RESPONSIBLE FOR THE ACCURACY OR COMPLETENESS OF ELECTRONIC COPIES OF THIS PLAN SHEET.

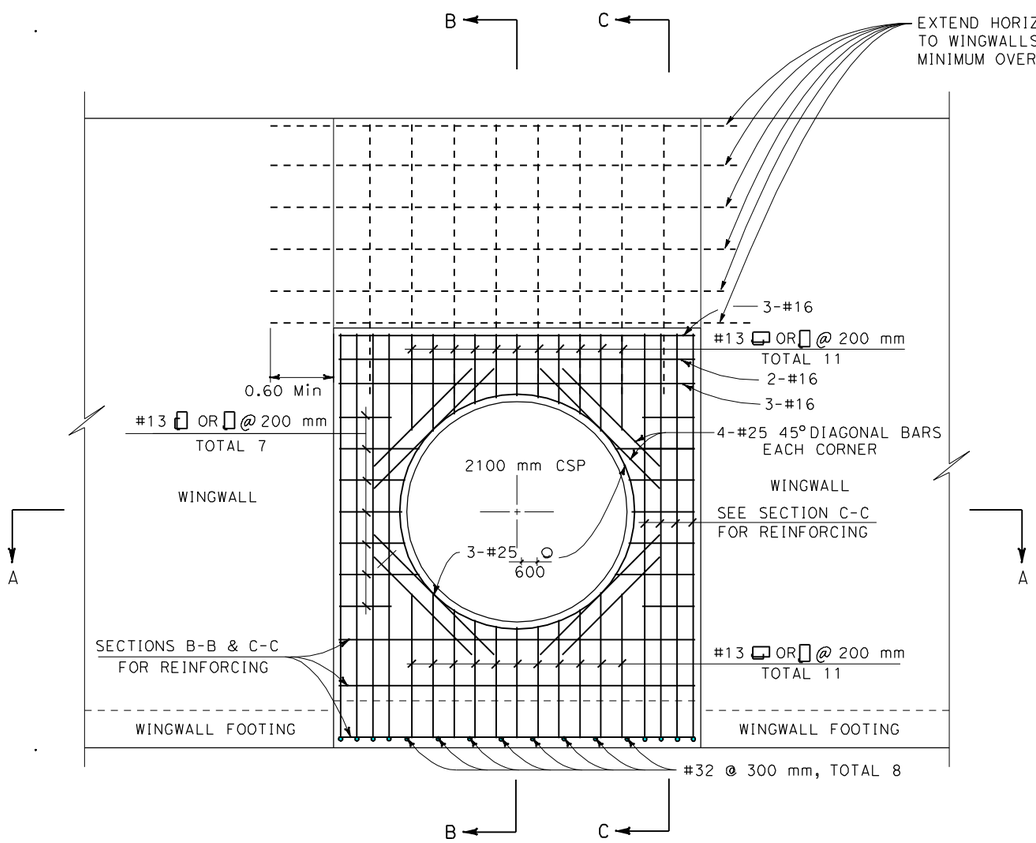

ELEVATION
DETAIL 2
DRAINAGE SYSTEM No. 24

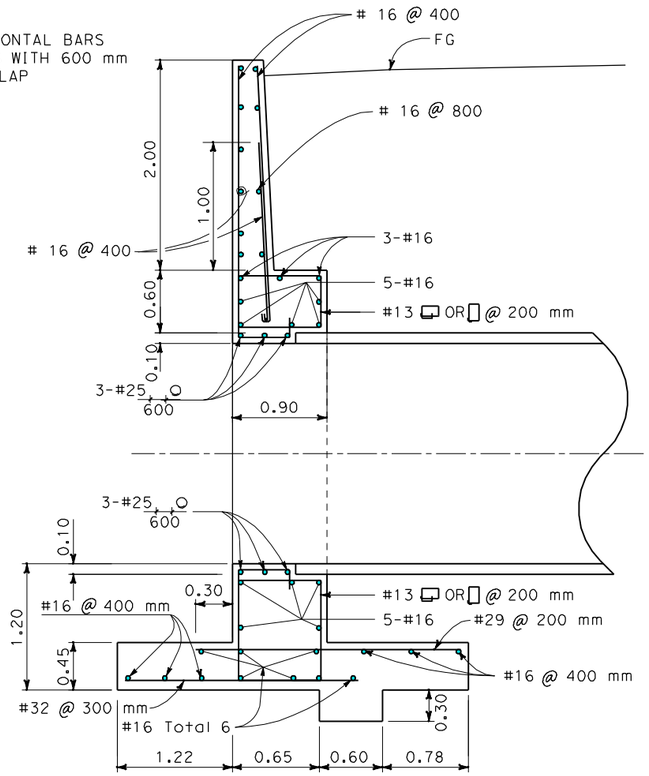

SECTION B-B

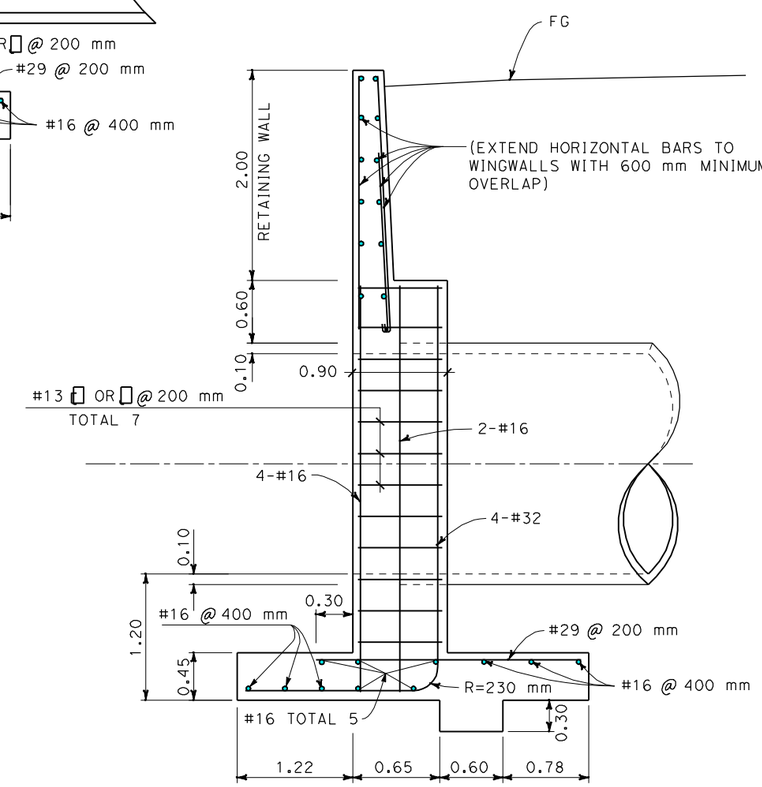

SECTION C-C

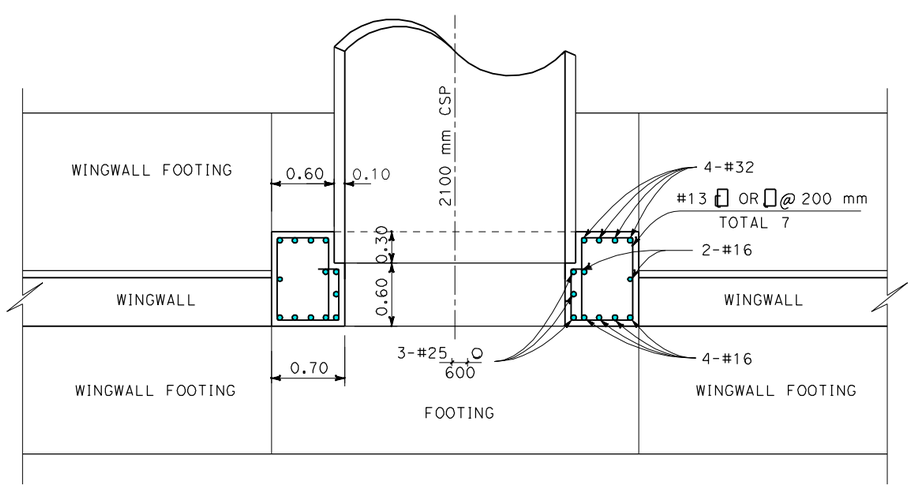

SECTION A-A

DRAINAGE DETAILS

NO SCALE

ALL DIMENSIONS ARE IN METERS UNLESS OTHERWISE SHOWN

DD-6

MC	5/07		
REVISED BY	DATE REVISED		
MARCUS CHAN	JASON R. PHOEN		
CALCULATED-DESIGNED BY	CHECKED BY		
FUNCTIONAL SUPERVISOR	JOSEPH E. PETERSON		

STATE OF CALIFORNIA - DEPARTMENT OF TRANSPORTATION
Caltrans HYDRAULICS

LAST REVISION 07-07-08 | DATE PLOTTED => 12/4/2009 | TIME PLOTTED => 3:21:10 PM

Dist	COUNTY	ROUTE	KILOMETER POST TOTAL PROJECT	SHEET No.	TOTAL SHEETS
04	Son	116	67.3/71.9		

Charlotte A. Cashin 7-18-07
REGISTERED CIVIL ENGINEER DATE

PLANS APPROVAL DATE

REGISTERED PROFESSIONAL ENGINEER Charlotte A. Cashin No. 34417 Exp. 9-30-09 CIVIL STATE OF CALIFORNIA

THE STATE OF CALIFORNIA OR ITS OFFICERS OR AGENTS SHALL NOT BE RESPONSIBLE FOR THE ACCURACY OR COMPLETENESS OF ELECTRONIC COPIES OF THIS PLAN SHEET.

Caltrans Metric

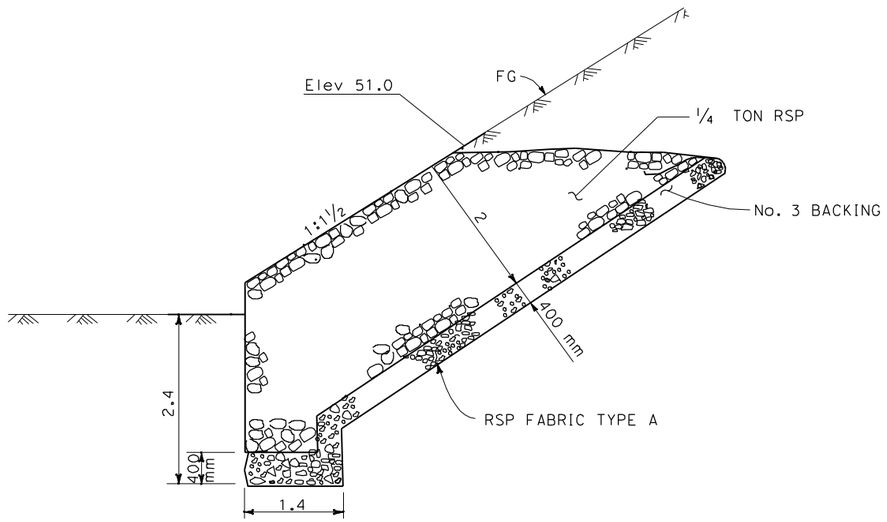

SECTION A-A

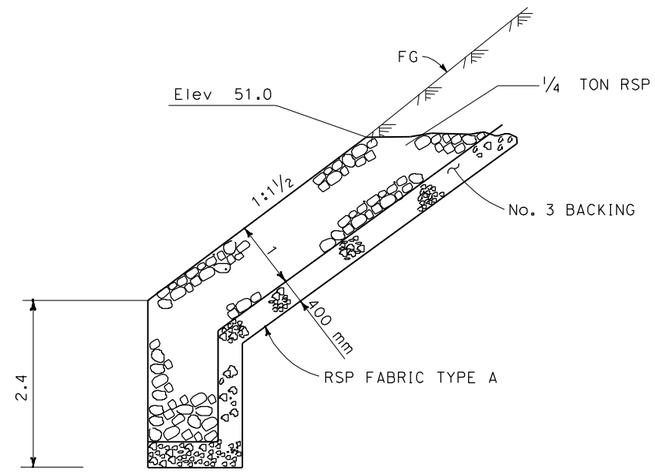

SECTION B-B

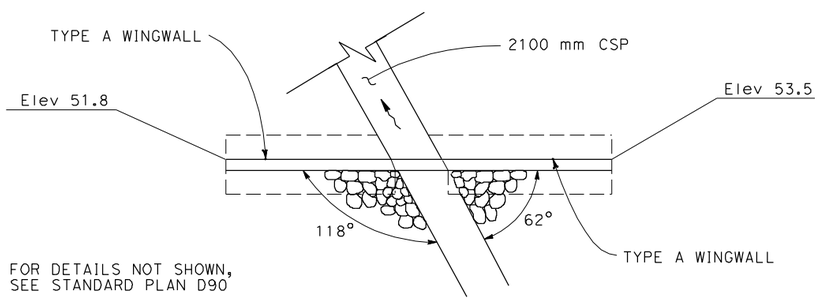

PLAN VIEW

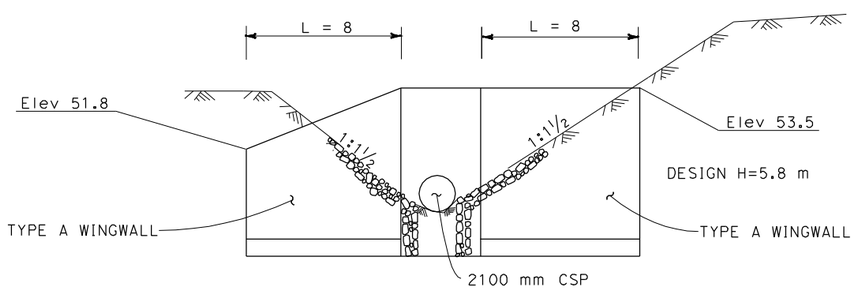

SECTION

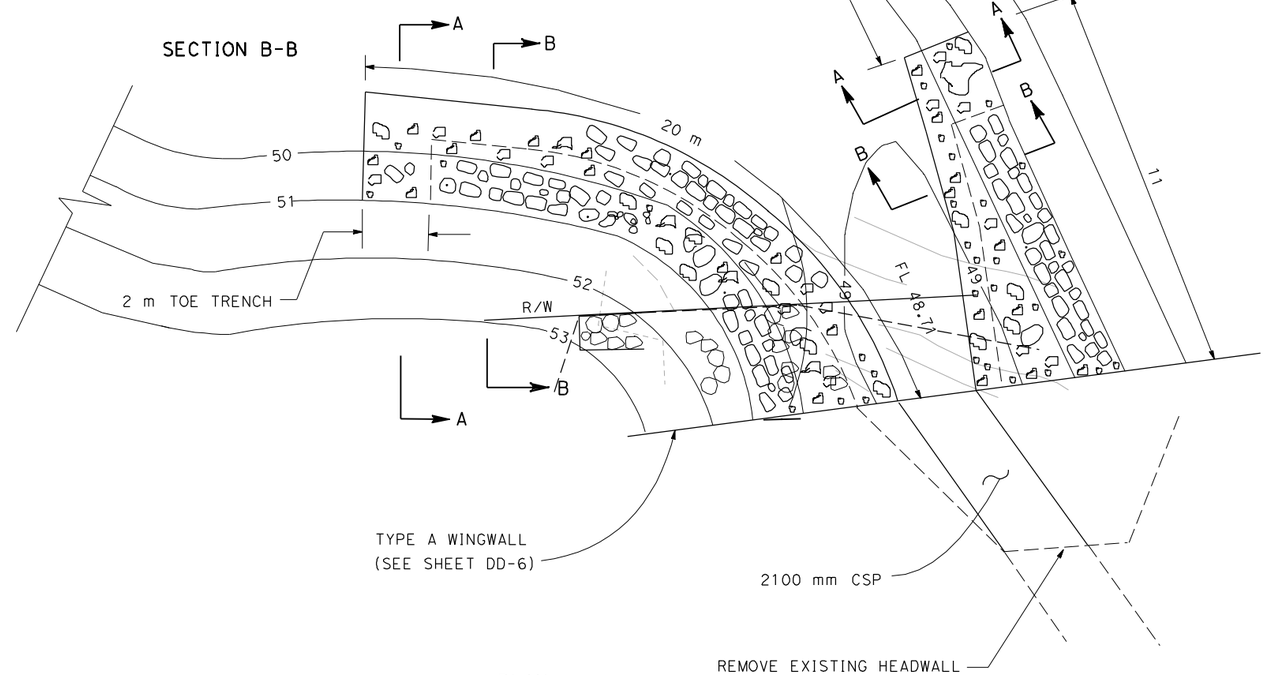

PLAN

DRAINAGE SYSTEM No. 24

DRAINAGE DETAILS

NO SCALE

ALL DIMENSIONS ARE IN
METERS UNLESS OTHERWISE SHOWN

DD-7

CALCULATED-DESIGNED BY	MARCUS CHAN
CHECKED BY	JASON R. PHOEN
REVISED BY	MC
DATE REVISED	5/07
FUNCTIONAL SUPERVISOR	JOSEPH E. PETERSON

STATE OF CALIFORNIA - DEPARTMENT OF TRANSPORTATION
Caltrans **HYDRAULICS**

LAST REVISION 07-01-08 DATE PLOTTED => 12/4/2009 TIME PLOTTED => 3:21:13 PM

Dist	COUNTY	ROUTE	KILOMETER POST TOTAL PROJECT	SHEET No.	TOTAL SHEETS
04	Son	116	67.3/71.9		

Charlotte A. Cashin 7-18-07
REGISTERED CIVIL ENGINEER DATE

PLANS APPROVAL DATE

REGISTERED PROFESSIONAL ENGINEER Charlotte A. Cashin No. 34417 Exp. 9-30-09 CIVIL STATE OF CALIFORNIA

THE STATE OF CALIFORNIA OR ITS OFFICERS OR AGENTS SHALL NOT BE RESPONSIBLE FOR THE ACCURACY OR COMPLETENESS OF ELECTRONIC COPIES OF THIS PLAN SHEET.

Caltrans Metric

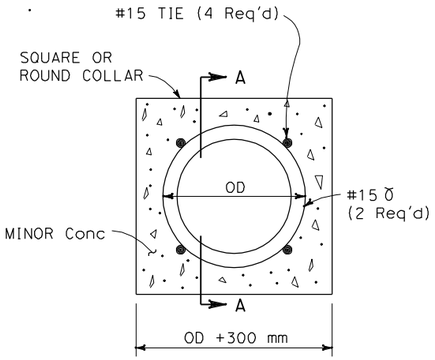

PLAN

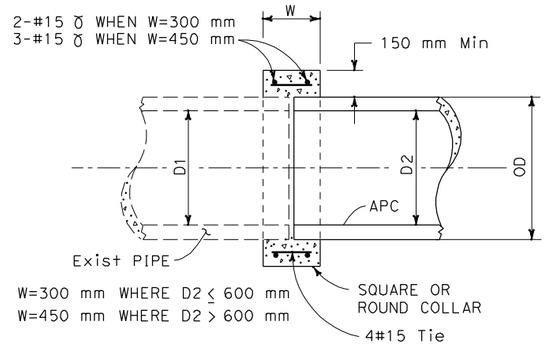

SECTION A-A

CONCRETE COLLAR DETAIL

2 4 24

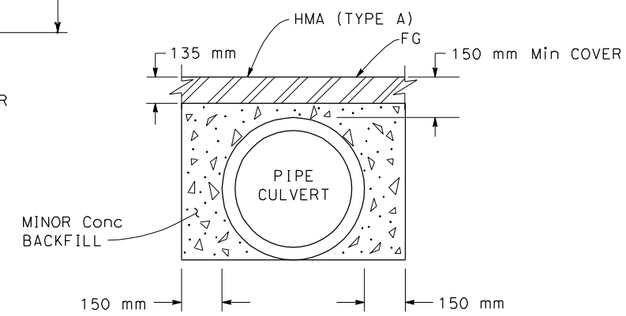

MINOR CONCRETE (BACKFILL)

2 3 4 25 28

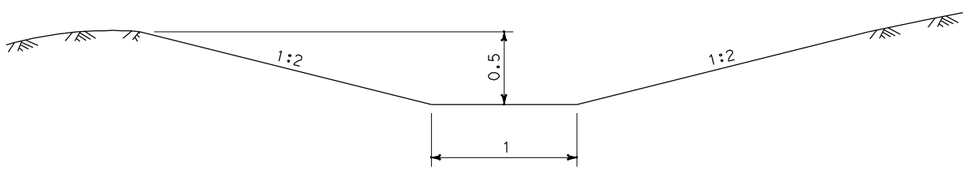

TYPE A CHANNEL

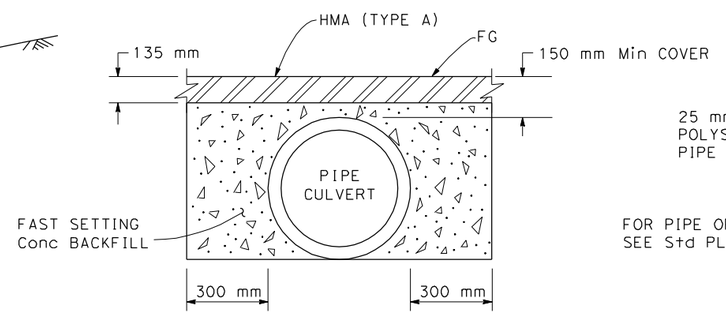

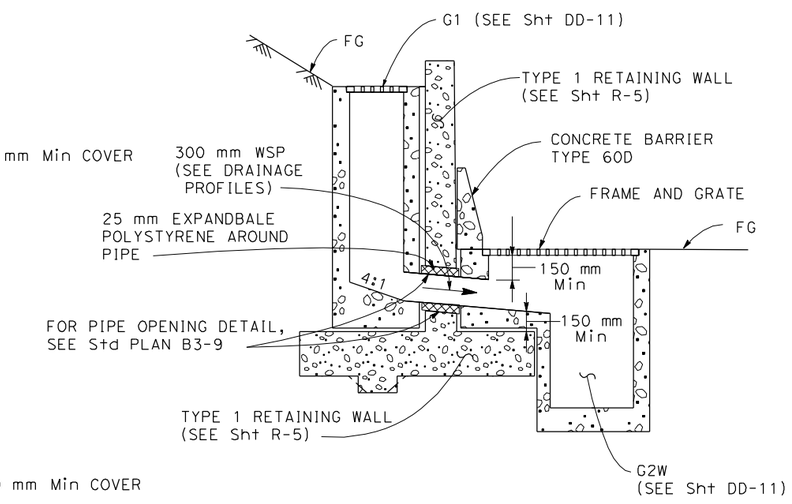

RETAINING WALL, PIPE OUTLET DETAIL

23 25

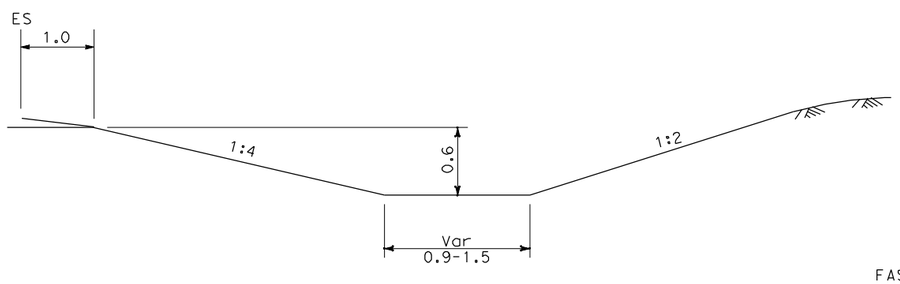

DITCH DETAIL

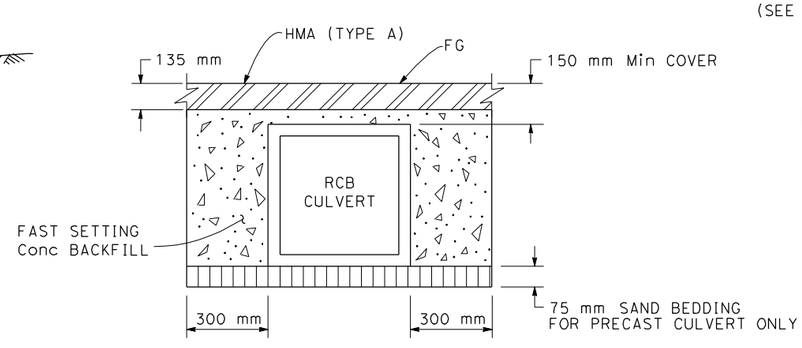

CONCRETE BACKFILL (FAST SETTING CONCRETE)

12 14 15 26 27 30

ALL DIMENSIONS ARE IN METERS UNLESS OTHERWISE SHOWN

DRAINAGE DETAILS

NO SCALE

DD-13

MC	5/07	REVISED BY	DATE REVISED
MARCUS CHAN	JASON R. PHOEN	CALCULATED-DESIGNED BY	CHECKED BY
FUNCTIONAL SUPERVISOR	JOSEPH E. PETERSON		

STATE OF CALIFORNIA - DEPARTMENT OF TRANSPORTATION
Caltrans HYDRAULICS

LAST REVISION 07-01-08 DATE PLOTTED => 12/4/2009 TIME PLOTTED => 3:21:33 PM

Dist	COUNTY	ROUTE	KILOMETER POST TOTAL PROJECT	SHEET No.	TOTAL SHEETS
04	Son	116	67.3/71.9		

REGISTERED CIVIL ENGINEER 7-25-07 DATE

PLANS APPROVAL DATE

REGISTERED PROFESSIONAL ENGINEER Jason R. Phoen No. 57553 Exp. 12-31-09 CIVIL STATE OF CALIFORNIA

THE STATE OF CALIFORNIA OR ITS OFFICERS OR AGENTS SHALL NOT BE RESPONSIBLE FOR THE ACCURACY OR COMPLETENESS OF ELECTRONIC COPIES OF THIS PLAN SHEET.

Caltrans Metric

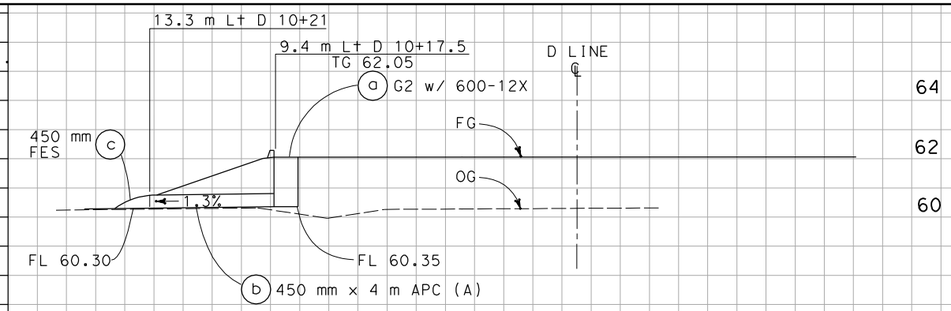

DRAINAGE SYSTEM No. 20

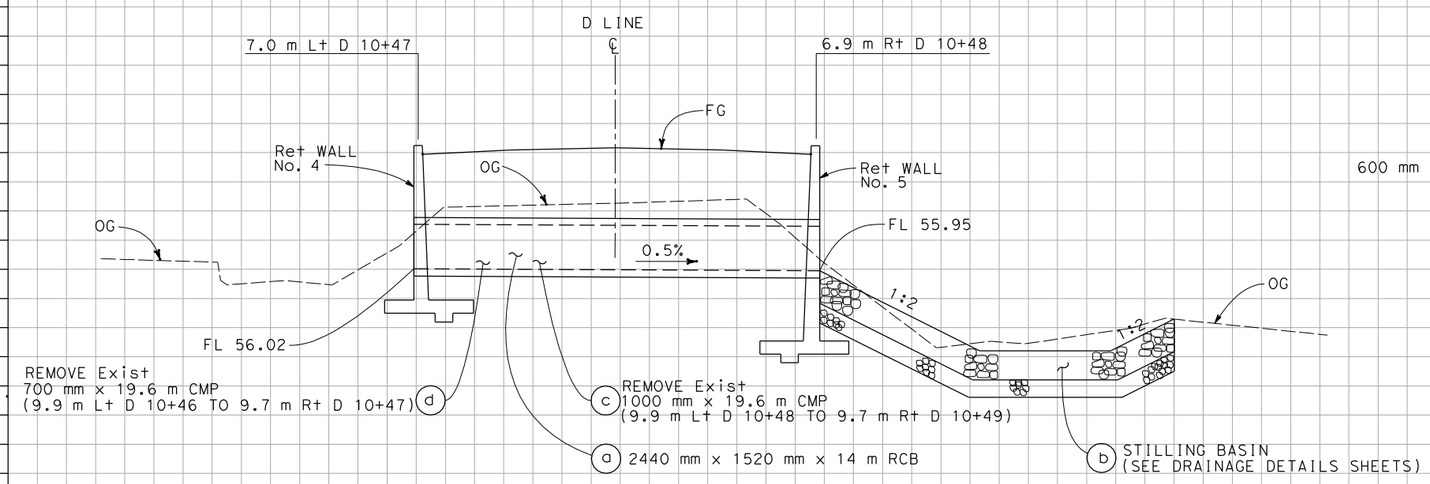

DRAINAGE SYSTEM No. 21

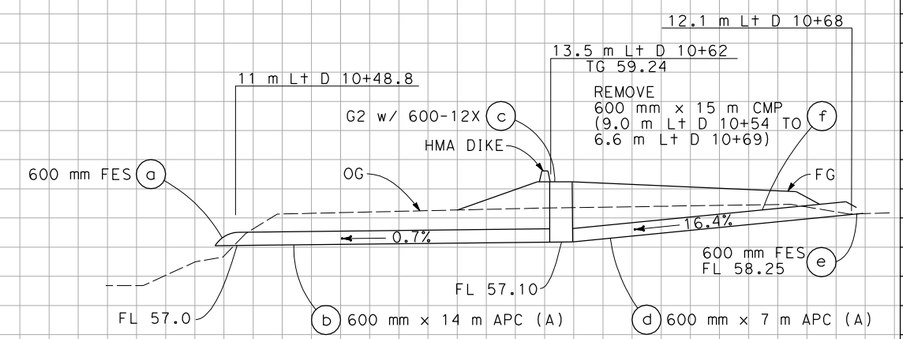

DRAINAGE SYSTEM No. 22

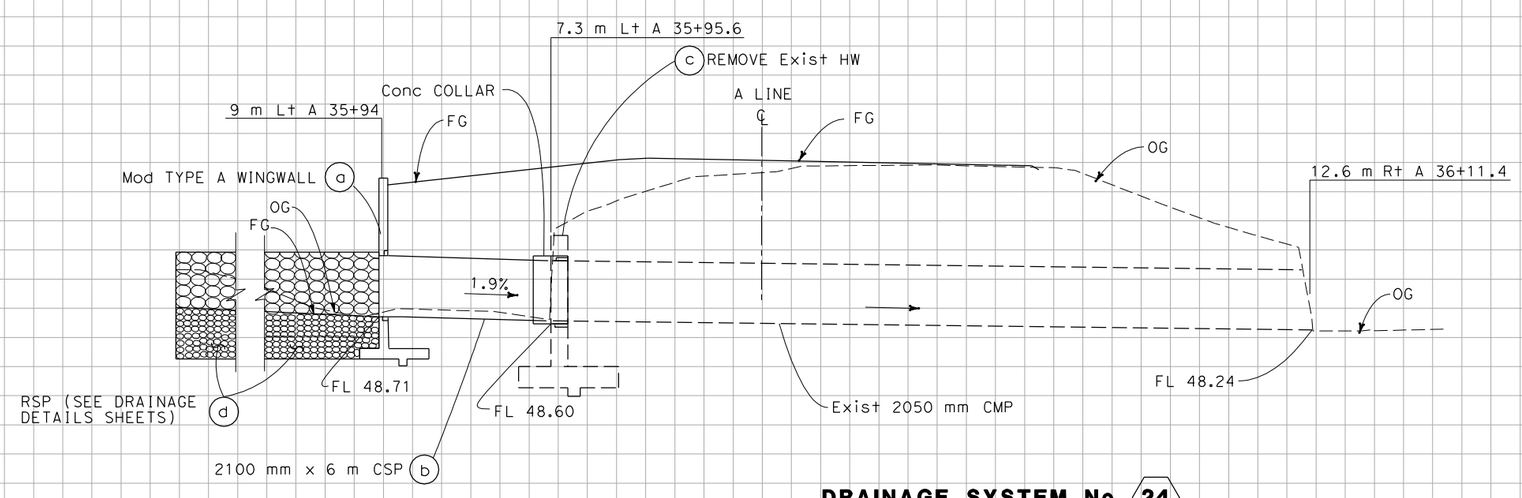

DRAINAGE SYSTEM No. 24

ALL DIMENSIONS ARE IN METERS UNLESS OTHERWISE SHOWN

DRAINAGE PROFILES

SCALE HORIZ 1:100 VERT 1:100

DP-6

Station	
m^3 Exc	
m^3 Emb	

REVISED BY: MC — DATE REVISED: 5/07

CALCULATED-DESIGNED BY: MARCUS CHAN — CHECKED BY: JASON R. PHOEN

FUNCTIONAL SUPERVISOR: STEWART LEE

STATE OF CALIFORNIA - DEPARTMENT OF TRANSPORTATION — Caltrans — DESIGN

LAST REVISION 07-01-08 DATE PLOTTED => 12/4/2009 TIME PLOTTED => 3:25:23 PM

FOR COMPLETE RIGHT OF WAY DATA,
SEE RIGHT OF WAY RECORD MAPS
AT DISTRICT OFFICE.

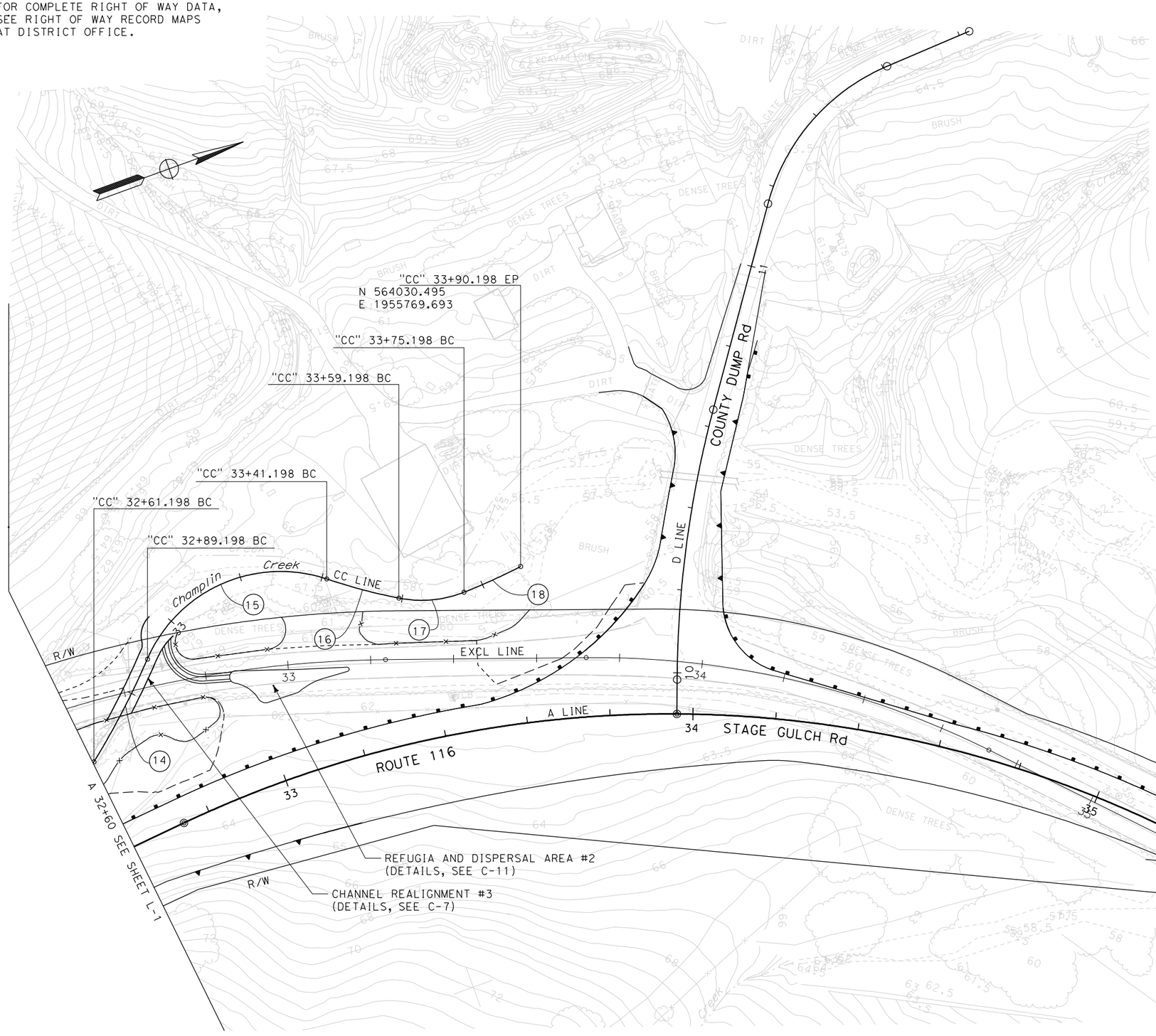

Dist	COUNTY	ROUTE	KILOMETER POST TOTAL PROJECT	SHEET No.	TOTAL SHEETS
04	Son	116	67.3/71.9		

REGISTERED CIVIL ENGINEER DATE

PLANS APPROVAL DATE

REGISTERED PROFESSIONAL ENGINEER ULYSSES HILLARD No. C 64873 Exp. 6/30/11 CIVIL STATE OF CALIFORNIA

THE STATE OF CALIFORNIA OR ITS OFFICERS OR AGENTS SHALL NOT BE RESPONSIBLE FOR THE ACCURACY OR COMPLETENESS OF ELECTRONIC COPIES OF THIS PLAN SHEET.

WRECO
1814 FRANKLIN, SUITE 608
OAKLAND, CA 94612

CALTRANS
111 GRAND AVENUE
OAKLAND, CA 94612

CURVE DATA

No.	R	L	Δ	T	N-COORDINATE	E-COORDINATE
14	200.00	28.00	8°01′17″	14.02	563943.606	1955708.885
15	35.00	52.00	85°07′31″	32.14	563975.335	1955675.352
16	140.00	18.00	7°22′00″	9.01	564007.524	1955700.994
17	28.00	16.00	32°44′26″	8.23	564022.273	1955709.917
18	150.00	15.00	5°43′46″	7.51	564037.998	1955709.488

ALL DIMENSIONS ARE IN
METERS UNLESS OTHERWISE SHOWN

LAYOUT

SCALE 1:500

FOR NOTES, ABBREVIATIONS
&/OR LEGEND, SEE SHEET L-6

L-7

STATE OF CALIFORNIA - DEPARTMENT OF TRANSPORTATION
Caltrans

CONSULTANT FUNCTIONAL SUPERVISOR: HAN-BIN LIANG
CALCULATED-DESIGNED BY: IRENE LIU
CHECKED BY: ULYSSES HILLARD
REVISED BY
DATE REVISED

LAST REVISION 00-00-00
DATE PLOTTED => 12/4/2009
TIME PLOTTED => 3:17:31 PM

Dist	COUNTY	ROUTE	KILOMETER POST TOTAL PROJECT	SHEET No.	TOTAL SHEETS
04	Son	116	67.3/71.9		

LICENSED LANDSCAPE ARCHITECT

PLANS APPROVAL DATE

LICENSED LANDSCAPE ARCHITECT — ALEXANDRA K. McDONALD No. 5365 — Signature — Renewal Date — Date — STATE OF CALIFORNIA

THE STATE OF CALIFORNIA OR ITS OFFICERS OR AGENTS SHALL NOT BE RESPONSIBLE FOR THE ACCURACY OR COMPLETENESS OF ELECTRONIC COPIES OF THIS PLAN SHEET.

Caltrans Metric

FOR COMPLETE RIGHT OF WAY AND ACCURATE ACCESS DATA, SEE RIGHT OF WAY RECORD MAPS AT DISTRICT OFFICE.

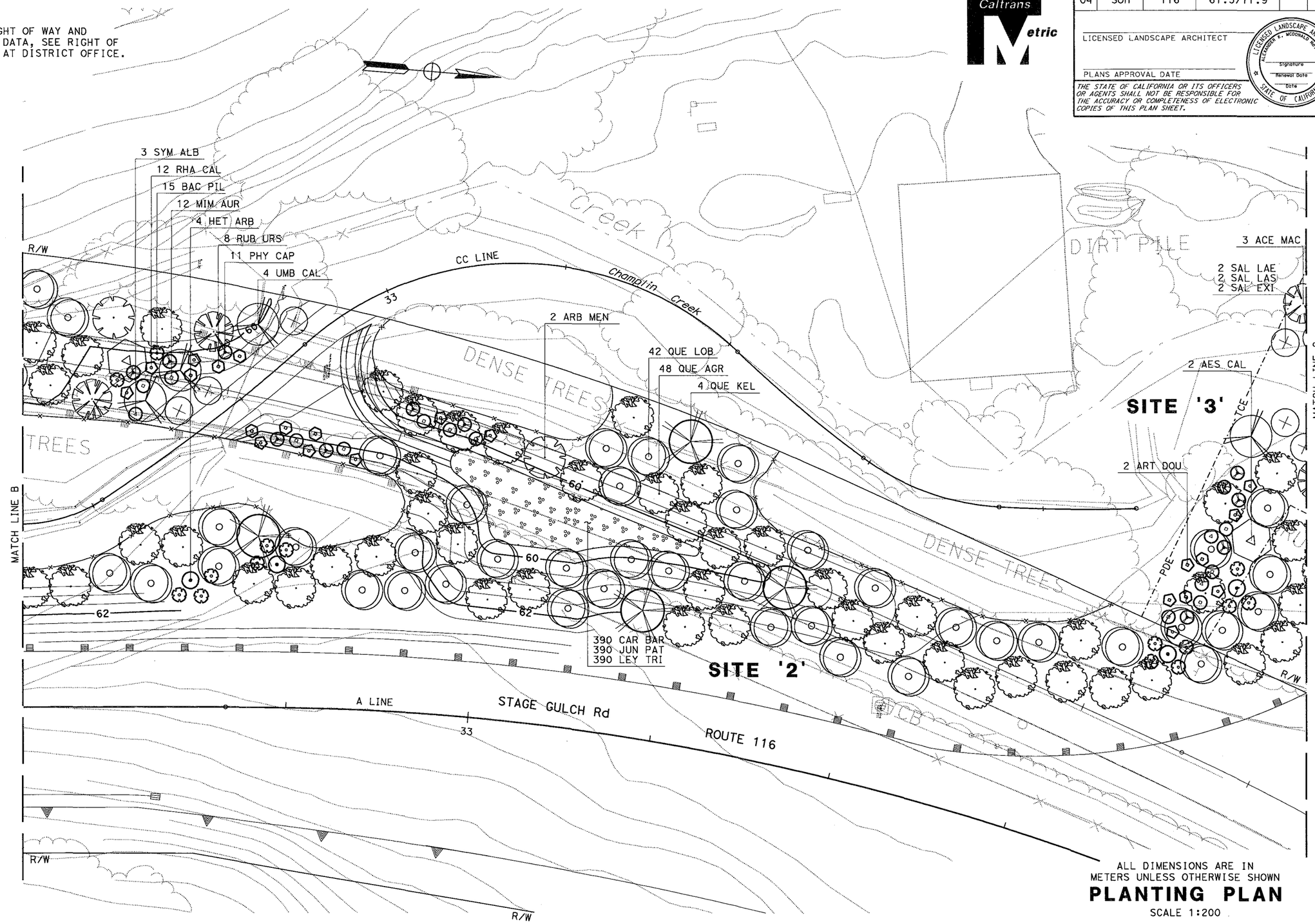

ALL DIMENSIONS ARE IN METERS UNLESS OTHERWISE SHOWN

PLANTING PLAN

SCALE 1:200

THIS SHEET ACCURATE FOR HIGHWAY PLANTING WORK ONLY.

SITE 2 & 3

STATE OF CALIFORNIA - DEPARTMENT OF TRANSPORTATION

Caltrans **WATER QUALITY**

SENIOR LANDSCAPE ARCHITECT: DAVE W. YAM

CALCULATED-DESIGNED BY: Alex McDonald

CHECKED BY: Jennifer Egawa

REVISED BY

DATE REVISED

LAST REVISION 00-00-00

DATE PLOTTED => 03-DEC-2009

TIME PLOTTED => 15:11

BORDER LAST REVISED 3/1/2007

RELATIVE BORDER SCALE IS IN MILLIMETERS 0 20 40 60 80

USERNAME => s130924

DGN FILE => 428382+1004.dgn

CU 00000

EA 000000

Dist	COUNTY	ROUTE	KILOMETER POST TOTAL PROJECT	SHEET No.	TOTAL SHEETS
04	Son	116	67.3/71.9		

LICENSED LANDSCAPE ARCHITECT

PLANS APPROVAL DATE

LICENSED LANDSCAPE ARCHITECT ALEXANDER K. MCDONALD NO. 3382 Signature Renewal Date Date STATE OF CALIFORNIA

THE STATE OF CALIFORNIA OR ITS OFFICERS OR AGENTS SHALL NOT BE RESPONSIBLE FOR THE ACCURACY OR COMPLETENESS OF ELECTRONIC COPIES OF THIS PLAN SHEET.

Caltrans Metric

FOR COMPLETE RIGHT OF WAY AND ACCURATE ACCESS DATA, SEE RIGHT OF WAY RECORD MAPS AT DISTRICT OFFICE.

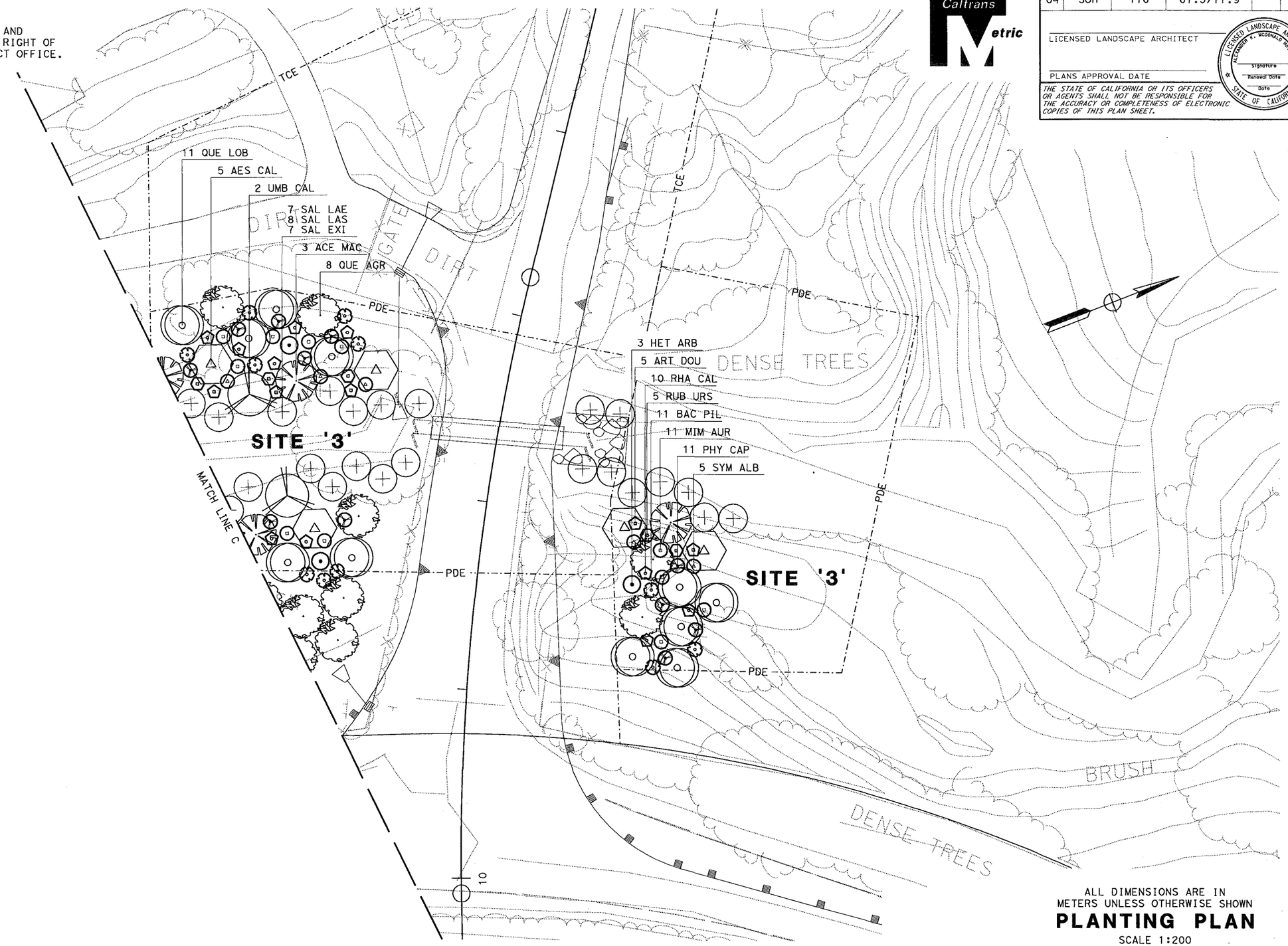

ALL DIMENSIONS ARE IN METERS UNLESS OTHERWISE SHOWN

PLANTING PLAN

SCALE 1:200

THIS SHEET ACCURATE FOR HIGHWAY PLANTING WORK ONLY.

SITE 3

STATE OF CALIFORNIA - DEPARTMENT OF TRANSPORTATION

Caltrans **WATER QUALITY**

SENIOR LANDSCAPE ARCHITECT: DAVE W. YAM

CALCULATED-DESIGNED BY: Alex McDonald

CHECKED BY: Jennifer Egawa

REVISED BY

DATE REVISED

LAST REVISION 00-00-00

DATE PLOTTED => 03-DEC-2009

TIME PLOTTED => 11:24

BORDER LAST REVISED 3/1/2007

RELATIVE BORDER SCALE IS IN MILLIMETERS 0 20 40 60 80

USERNAME => s130924

DGN FILE => 428382ti005.dgn

CU 00000

EA 000000

Dist	COUNTY	ROUTE	KILOMETER POST TOTAL PROJECT	SHEET No.	TOTAL SHEETS
04	Son	116	67.3/71.9		

REGISTERED CIVIL ENGINEER DATE

PLANS APPROVAL DATE

REGISTERED PROFESSIONAL ENGINEER ULYSSES HILLARD No. C 64873 Exp. 6/30/11 CIVIL STATE OF CALIFORNIA

THE STATE OF CALIFORNIA OR ITS OFFICERS OR AGENTS SHALL NOT BE RESPONSIBLE FOR THE ACCURACY OR COMPLETENESS OF ELECTRONIC COPIES OF THIS PLAN SHEET.

WRECO
1814 FRANKLIN, SUITE 608
OAKLAND, CA 94612

CALTRANS
111 GRAND AVENUE
OAKLAND, CA 94612

Caltrans Metric

FOR COMPLETE RIGHT OF WAY DATA,
SEE RIGHT OF WAY RECORD MAPS
AT DISTRICT OFFICE.

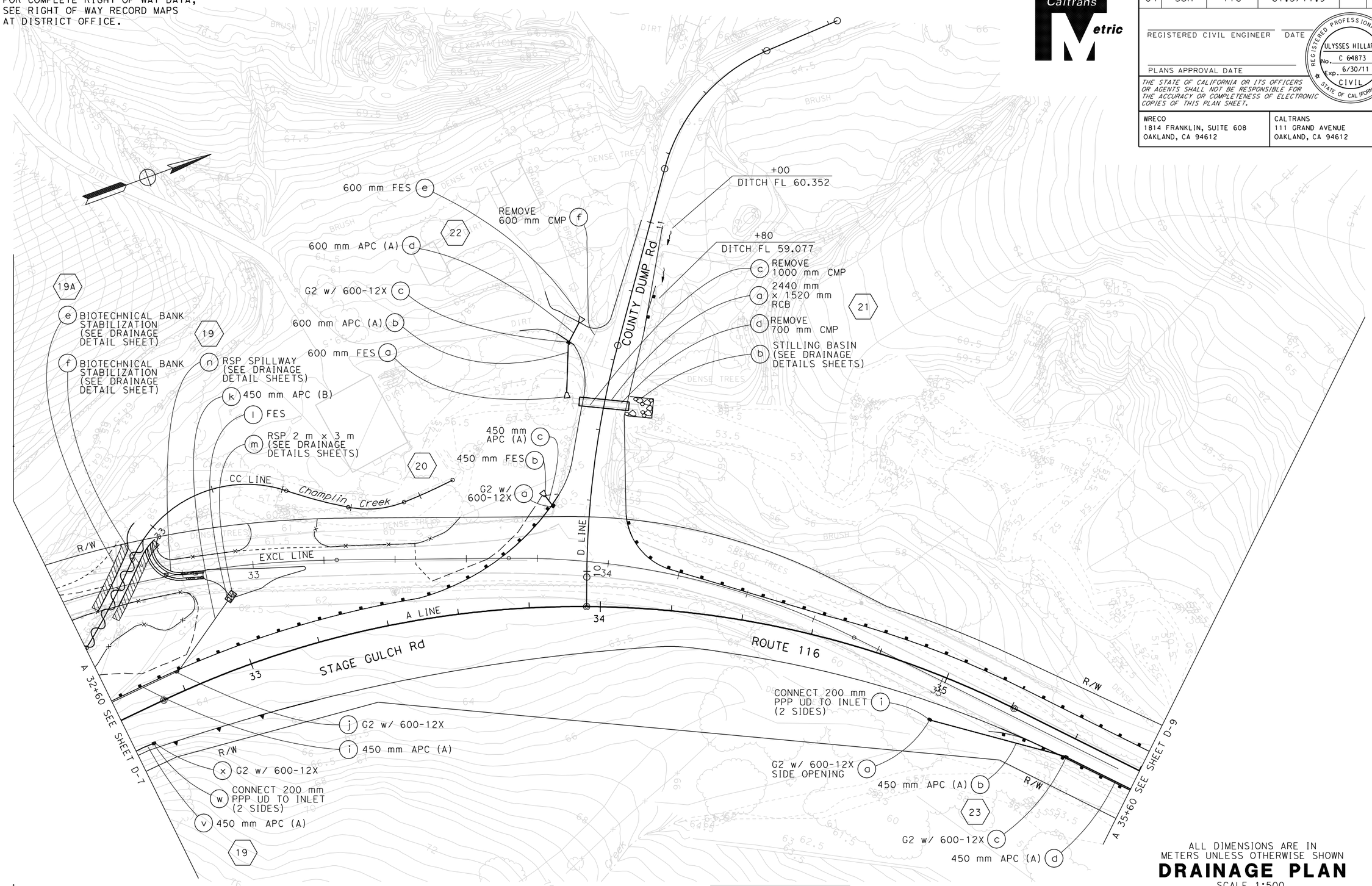

FOR NOTES, ABBREVIATIONS &/OR LEGEND, SEE SHEET D-1

THIS PLAN ACCURATE FOR DRAINAGE WORK ONLY

ALL DIMENSIONS ARE IN METERS UNLESS OTHERWISE SHOWN

DRAINAGE PLAN

SCALE 1:500

D-8

LAST REVISION 00-00-00
DATE PLOTTED => 12/4/2009
TIME PLOTTED => 4:17:01 PM

REVISED BY | DATE REVISED

IRENE LIU | ULYSSES HILLARD

CALCULATED-DESIGNED BY | CHECKED BY

CONSULTANT FUNCTIONAL SUPERVISOR: HAN-BIN LIANG

STATE OF CALIFORNIA - DEPARTMENT OF TRANSPORTATION

Caltrans

BORDER LAST REVISED 3/1/2007

RELATIVE BORDER SCALE IS IN MILLIMETERS 0 20 40 60 80

USERNAME => irene_liu
DGN FILE => ...\dwg\site 1-6\D-08.dgn

CU 04261

EA 283811

Dist	COUNTY	ROUTE	KILOMETER POST TOTAL PROJECT	SHEET No.	TOTAL SHEETS
04	Son	116	67.3/71.9		

REGISTERED CIVIL ENGINEER DATE

PLANS APPROVAL DATE

REGISTERED PROFESSIONAL ENGINEER No. Exp. CIVIL STATE OF CALIFORNIA

THE STATE OF CALIFORNIA OR ITS OFFICERS OR AGENTS SHALL NOT BE RESPONSIBLE FOR THE ACCURACY OR COMPLETENESS OF ELECTRONIC COPIES OF THIS PLAN SHEET.

WRECO
1814 FRANKLIN, SUITE 608
OAKLAND, CA 94612

CALTRANS
111 GRAND AVENUE
OAKLAND, CA 94612

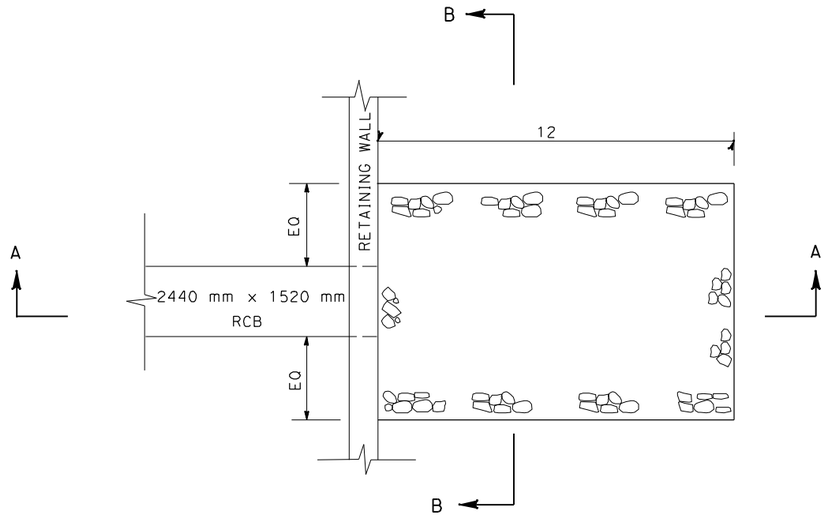

PLAN

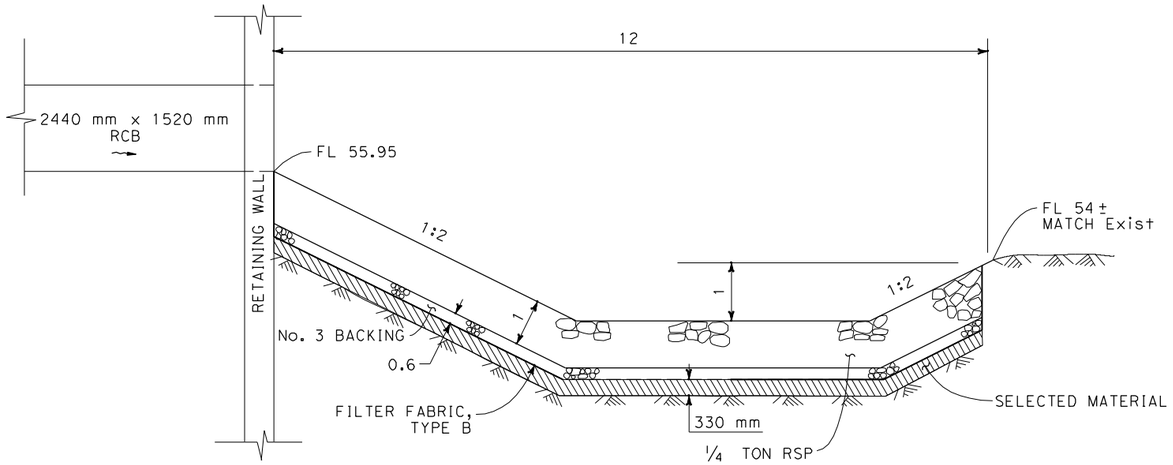

SECTION A-A

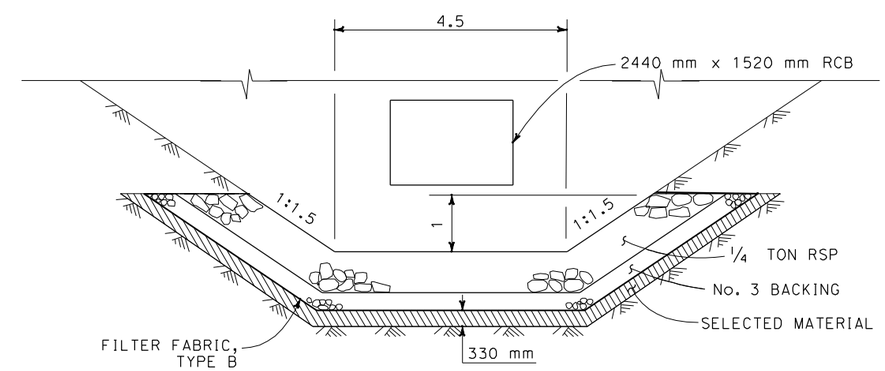

SECTION B-B

STILLING BASIN
DRAINAGE SYSTEM No. 21

DRAINAGE DETAILS

NO SCALE

ALL DIMENSIONS ARE IN
METERS UNLESS OTHERWISE SHOWN

DD-4

LAST REVISION 00-00-00
DATE PLOTTED => 12/4/2009
TIME PLOTTED => 3:21:01 PM

REVISED BY	DATE REVISED

CALCULATED-DESIGNED BY: IRENE LIU
CHECKED BY: ULYSSES HILLARD
CONSULTANT FUNCTIONAL SUPERVISOR: HAN-BIN LIANG

STATE OF CALIFORNIA - DEPARTMENT OF TRANSPORTATION
Caltrans

Dist	COUNTY	ROUTE	KILOMETER POST TOTAL PROJECT	SHEET No.	TOTAL SHEETS
04	Son	116	67.3/71.9		

REGISTERED CIVIL ENGINEER 7-25-07 DATE

PLANS APPROVAL DATE

REGISTERED PROFESSIONAL ENGINEER Jason R. Phoen No. 57553 Exp. 12-31-09 CIVIL STATE OF CALIFORNIA

THE STATE OF CALIFORNIA OR ITS OFFICERS OR AGENTS SHALL NOT BE RESPONSIBLE FOR THE ACCURACY OR COMPLETENESS OF ELECTRONIC COPIES OF THIS PLAN SHEET.

Caltrans Metric

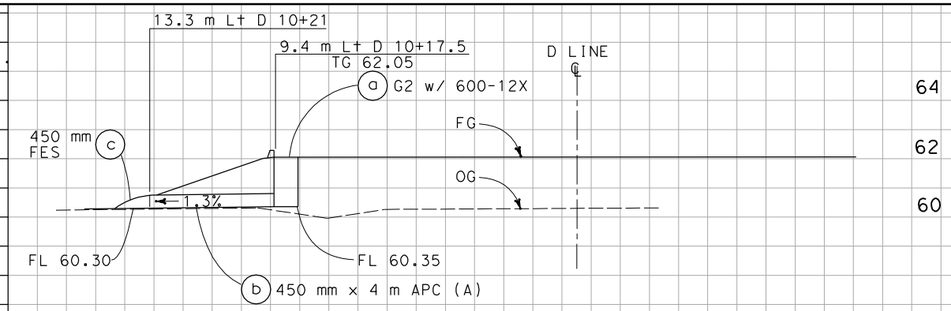

DRAINAGE SYSTEM No. 20

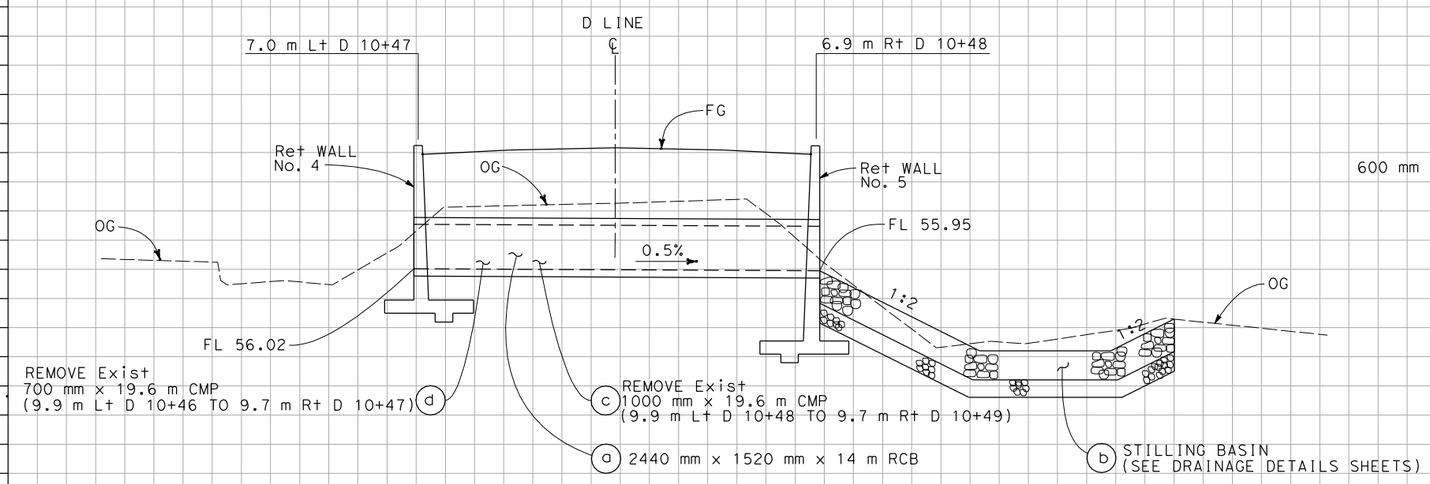

DRAINAGE SYSTEM No. 21

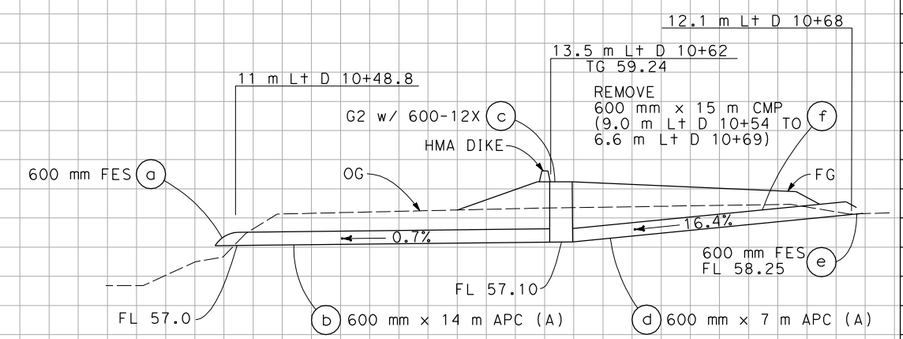

DRAINAGE SYSTEM No. 22

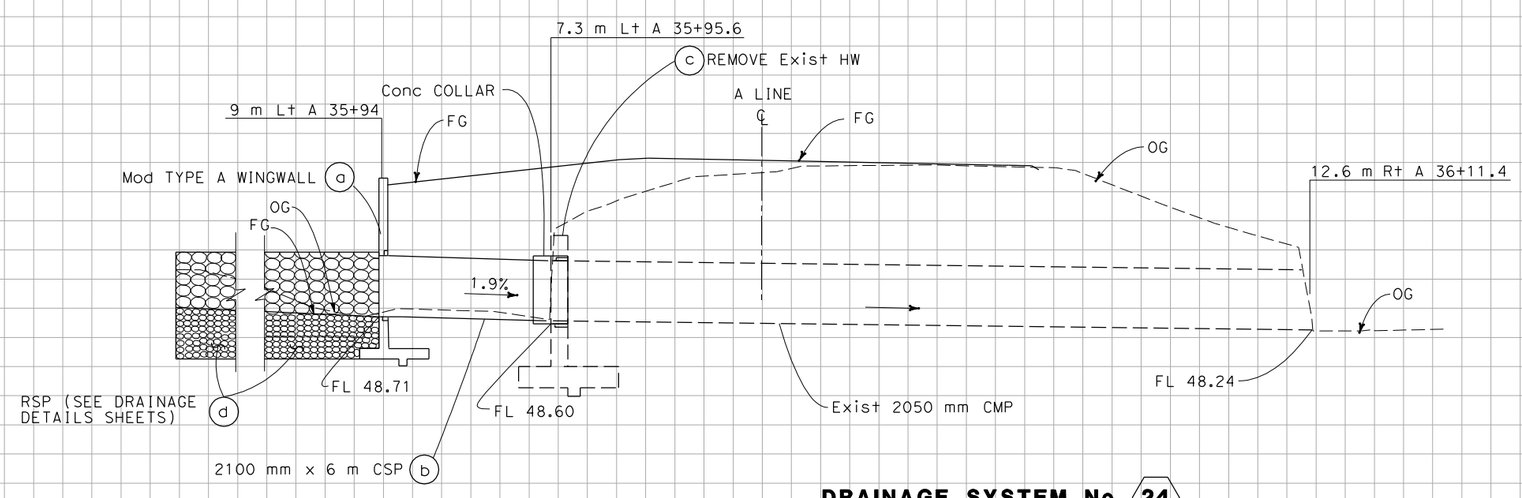

DRAINAGE SYSTEM No. 24

ALL DIMENSIONS ARE IN METERS UNLESS OTHERWISE SHOWN

DRAINAGE PROFILES

SCALE HORIZ 1:100 VERT 1:100

DP-6

Station	
m^3 Exc	
m^3 Emb	

REVISED BY: MC — DATE REVISED: 5/07

CALCULATED-DESIGNED BY: MARCUS CHAN — CHECKED BY: JASON R. PHOEN

FUNCTIONAL SUPERVISOR: STEWART LEE

STATE OF CALIFORNIA - DEPARTMENT OF TRANSPORTATION — Caltrans — DESIGN

LAST REVISION 07-01-08 DATE PLOTTED => 12/4/2009 TIME PLOTTED => 3:25:23 PM

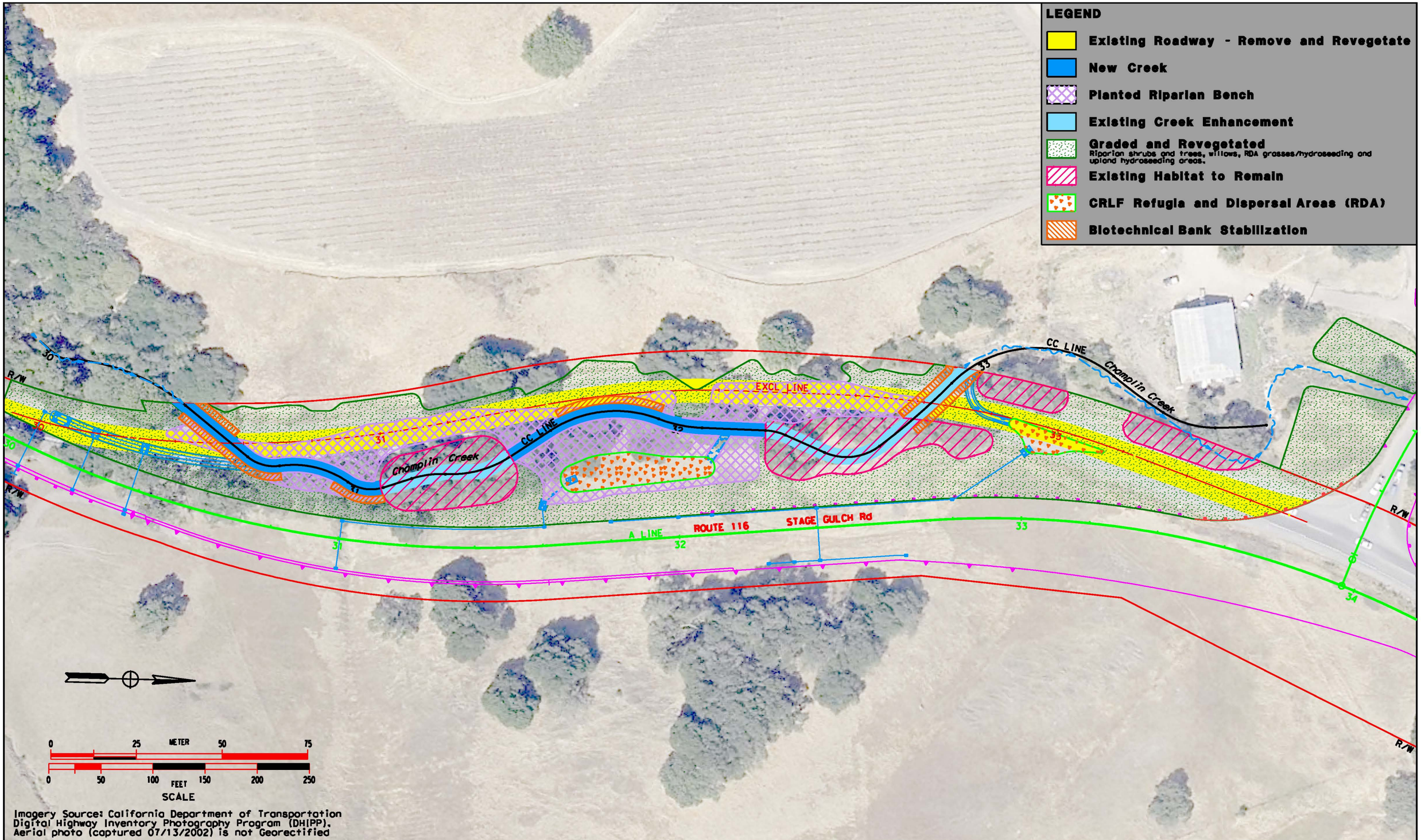

Caltrans

Appendix H4: Mitigation Site 2 Restoration Plan

Stage Gulch Road Curve Correction and Realignment Project Final Mitigation and Monitoring Plan for On-Site Restoration Activities
December 2009

FOR COMPLETE RIGHT OF WAY DATA,
SEE RIGHT OF WAY RECORD MAPS
AT DISTRICT OFFICE.

CURVE DATA

No.	R	L	Δ	T	N-COORDINATE	E-COORDINATE
1	7.00	5.20	42°32′33"	2.73	563674.124	1955691.528
2	6.00	4.50	42°58′19"	2.36	563683.698	1955691.028
3	6.00	4.00	38°11′50"	2.08	563692.464	1955698.378
4	60.00	38.00	36°17′14"	19.66	563714.192	1955699.055
5	12.00	10.00	47°44′47"	5.31	563752.352	1955728.945
6	28.00	21.00	42°58′19"	11.02	563768.452	1955726.200
7	12.00	11.00	52°31′16"	5.92	563782.613	1955735.501

CURVE DATA

No.	R	L	Δ	T	N-COORDINATE	E-COORDINATE
8	28.00	10.00	20°27′46"	5.05	563801.001	1955729.089
9	32.00	20.00	35°48′36"	10.34	563816.390	1955729.421
10	35.00	33.00	54°01′18"	17.84	563851.123	1955705.487
11	40.00	13.00	18°37′16"	6.56	563874.130	1955713.611
12	16.00	6.00	21°29′09"	3.04	563902.220	1955714.018
13	16.00	17.00	60°52′36"	9.40	563925.290	1955723.486

Caltrans Metric

Dist	COUNTY	ROUTE	KILOMETER POST TOTAL PROJECT	SHEET No.	TOTAL SHEETS
04	Son	116	67.3/71.9		

REGISTERED CIVIL ENGINEER DATE

PLANS APPROVAL DATE

REGISTERED PROFESSIONAL ENGINEER ULYSSES HILLARD No. C 64873 Exp. 6/30/11 CIVIL STATE OF CALIFORNIA

THE STATE OF CALIFORNIA OR ITS OFFICERS OR AGENTS SHALL NOT BE RESPONSIBLE FOR THE ACCURACY OR COMPLETENESS OF ELECTRONIC COPIES OF THIS PLAN SHEET.

WRECO
1814 FRANKLIN, SUITE 608
OAKLAND, CA 94612

CALTRANS
111 GRAND AVENUE
OAKLAND, CA 94612

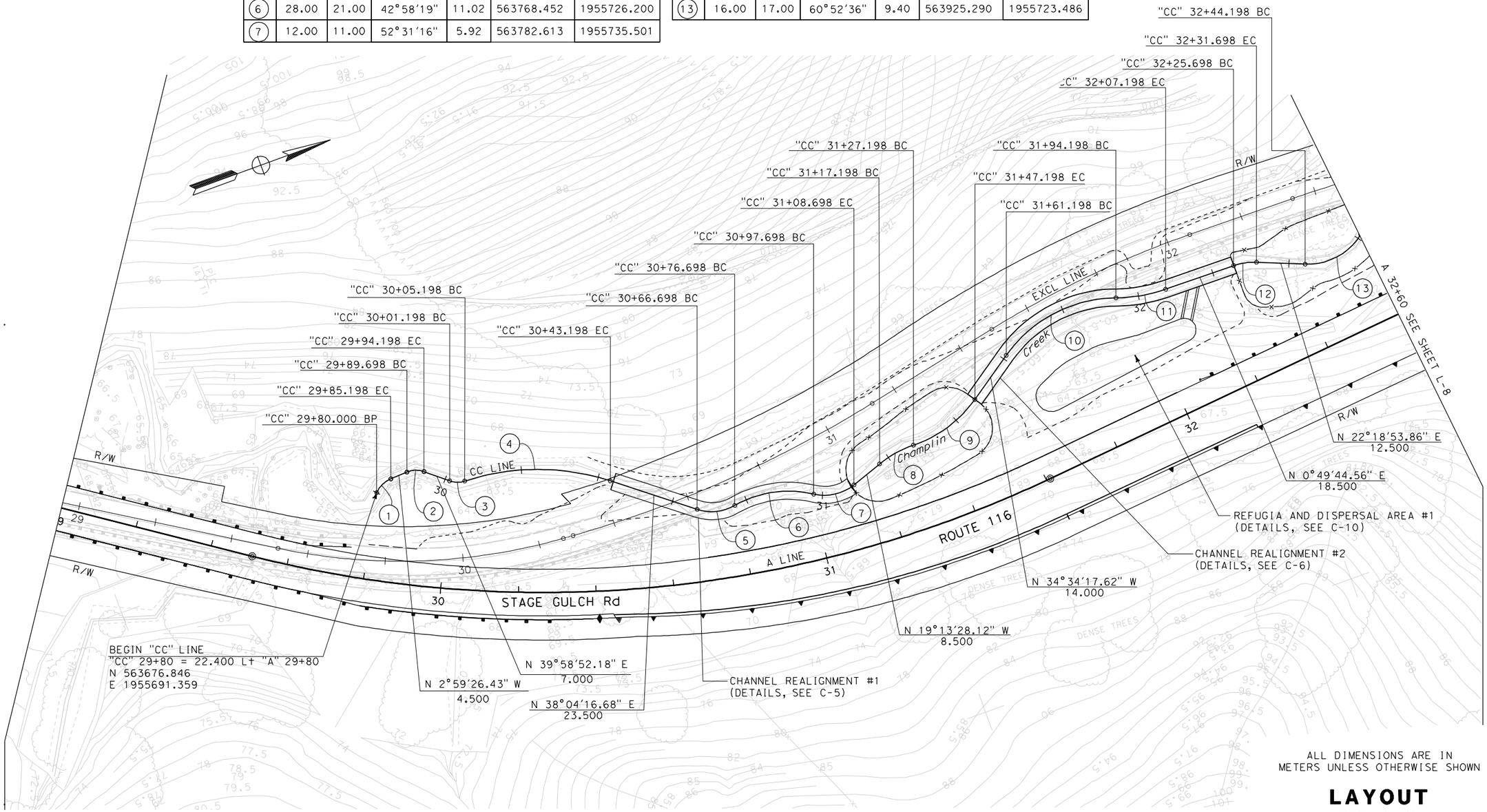

ALL DIMENSIONS ARE IN
METERS UNLESS OTHERWISE SHOWN

LAYOUT

SCALE 1:500

L-7

REVISED BY	DATE REVISED

IRENE LIU — ULYSSES HILLARD

CALCULATED-DESIGNED BY — CHECKED BY

CONSULTANT FUNCTIONAL SUPERVISOR — HAN-BIN LIANG

STATE OF CALIFORNIA - DEPARTMENT OF TRANSPORTATION

Caltrans

LAST REVISION 00-00-00 — DATE PLOTTED => 12/10/2009 — TIME PLOTTED => 2:01:56 PM

Dist	COUNTY	ROUTE	KILOMETER POST TOTAL PROJECT	SHEET No.	TOTAL SHEETS
04	Son	116	67.3/71.9		

REGISTERED CIVIL ENGINEER DATE

PLANS APPROVAL DATE

REGISTERED PROFESSIONAL ENGINEER ULYSSES HILLARD No. C 64873 Exp. 6/30/11 CIVIL STATE OF CALIFORNIA

THE STATE OF CALIFORNIA OR ITS OFFICERS OR AGENTS SHALL NOT BE RESPONSIBLE FOR THE ACCURACY OR COMPLETENESS OF ELECTRONIC COPIES OF THIS PLAN SHEET.

WRECO
1814 FRANKLIN, SUITE 608
OAKLAND, CA 94612

CALTRANS
111 GRAND AVENUE
OAKLAND, CA 94612

FOR COMPLETE RIGHT OF WAY DATA, SEE RIGHT OF WAY RECORD MAPS AT DISTRICT OFFICE.

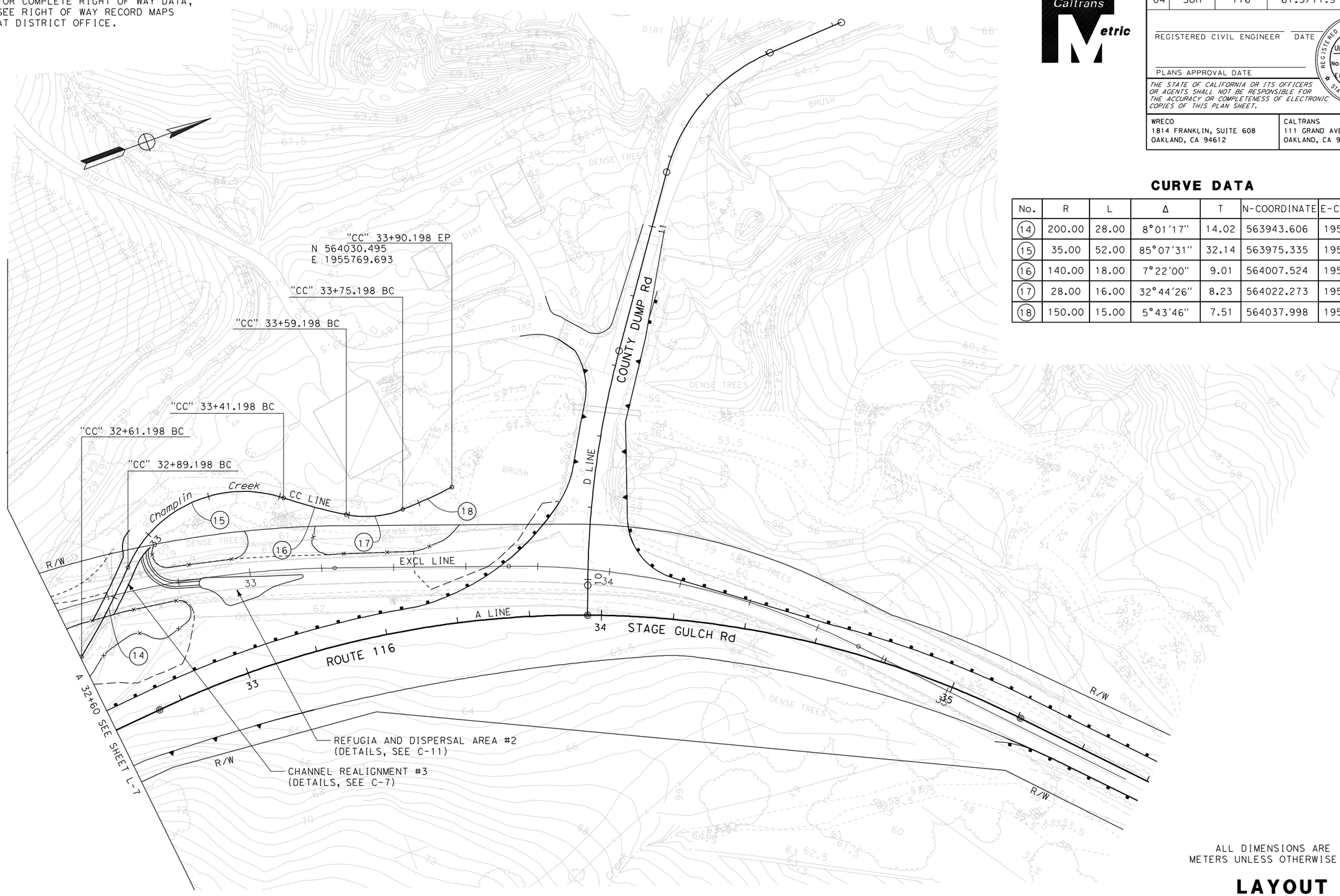

CURVE DATA

No.	R	L	Δ	T	N-COORDINATE	E-COORDINATE
14	200.00	28.00	8°01'17"	14.02	563943.606	1955708.885
15	35.00	52.00	85°07'31"	32.14	563975.335	1955675.352
16	140.00	18.00	7°22'00"	9.01	564007.524	1955700.994
17	28.00	16.00	32°44'26"	8.23	564022.273	1955709.917
18	150.00	15.00	5°43'46"	7.51	564037.998	1955709.488

ALL DIMENSIONS ARE IN METERS UNLESS OTHERWISE SHOWN

LAYOUT

SCALE 1:500

L-8

FOR NOTES, ABBREVIATIONS &/OR LEGEND, SEE SHEET L-6

STATE OF CALIFORNIA - DEPARTMENT OF TRANSPORTATION

Caltrans

CONSULTANT FUNCTIONAL SUPERVISOR: HAN-BIN LIANG

CALCULATED-DESIGNED BY: IRENE LIU

CHECKED BY: ULYSSES HILLARD

REVISED BY / DATE REVISED

LAST REVISION 00-00-00

DATE PLOTTED => 12/10/2009
TIME PLOTTED => 2:03:33 PM

BORDER LAST REVISED 3/1/2007

RELATIVE BORDER SCALE IS IN MILLIMETERS 0 20 40 60 80

USERNAME => jessica_pollitz
DGN FILE => ...\Dwg\Site 1-6\L-08.dgn

CU 04261

EA 283811

Dist	COUNTY	ROUTE	KILOMETER POST TOTAL PROJECT	SHEET No.	TOTAL SHEETS
04	Son	116	67.3/71.9		

LICENSED LANDSCAPE ARCHITECT

PLANS APPROVAL DATE

LICENSED LANDSCAPE ARCHITECT ALEXANDER K. MCDONALD NO. 3382 Signature Renewal Date Date STATE OF CALIFORNIA

THE STATE OF CALIFORNIA OR ITS OFFICERS OR AGENTS SHALL NOT BE RESPONSIBLE FOR THE ACCURACY OR COMPLETENESS OF ELECTRONIC COPIES OF THIS PLAN SHEET.

Caltrans Metric

FOR COMPLETE RIGHT OF WAY AND ACCURATE ACCESS DATA, SEE RIGHT OF WAY RECORD MAPS AT DISTRICT OFFICE.

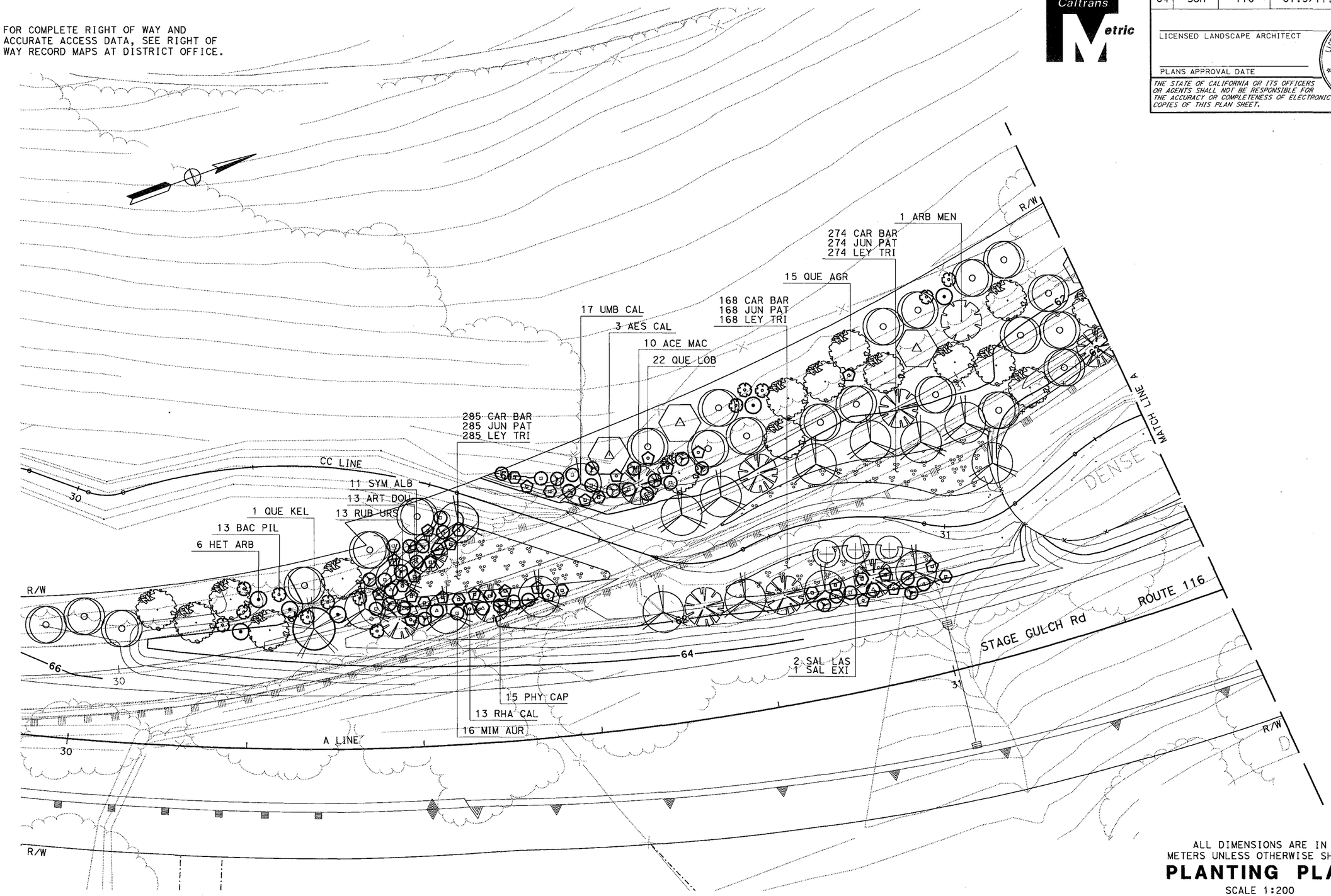

ALL DIMENSIONS ARE IN METERS UNLESS OTHERWISE SHOWN

PLANTING PLAN

SCALE 1:200

THIS SHEET ACCURATE FOR HIGHWAY PLANTING WORK ONLY.

SITE 2

STATE OF CALIFORNIA - DEPARTMENT OF TRANSPORTATION

Caltrans **WATER QUALITY**

SENIOR LANDSCAPE ARCHITECT: DAVE W. YAM

CALCULATED-DESIGNED BY: Alex McDonald

CHECKED BY: Jennifer Egawa

REVISED BY

DATE REVISED

LAST REVISION 00-00-00 | DATE PLOTTED => 03-DEC-2009 | TIME PLOTTED => 14:36

BORDER LAST REVISED 3/1/2007

RELATIVE BORDER SCALE IS IN MILLIMETERS 0 20 40 60 80

USERNAME => s130924
DGN FILE => 428382ti002.dgn

CU 00000

EA 000000

Dist	COUNTY	ROUTE	KILOMETER POST TOTAL PROJECT	SHEET No.	TOTAL SHEETS
04	Son	116	67.3/71.9		

LICENSED LANDSCAPE ARCHITECT

PLANS APPROVAL DATE

LICENSED LANDSCAPE ARCHITECT ALEXANDER K. MCDONALD No. 5342 Signature Renewal Date Date STATE OF CALIFORNIA

THE STATE OF CALIFORNIA OR ITS OFFICERS OR AGENTS SHALL NOT BE RESPONSIBLE FOR THE ACCURACY OR COMPLETENESS OF ELECTRONIC COPIES OF THIS PLAN SHEET.

Caltrans Metric

FOR COMPLETE RIGHT OF WAY AND ACCURATE ACCESS DATA, SEE RIGHT OF WAY RECORD MAPS AT DISTRICT OFFICE.

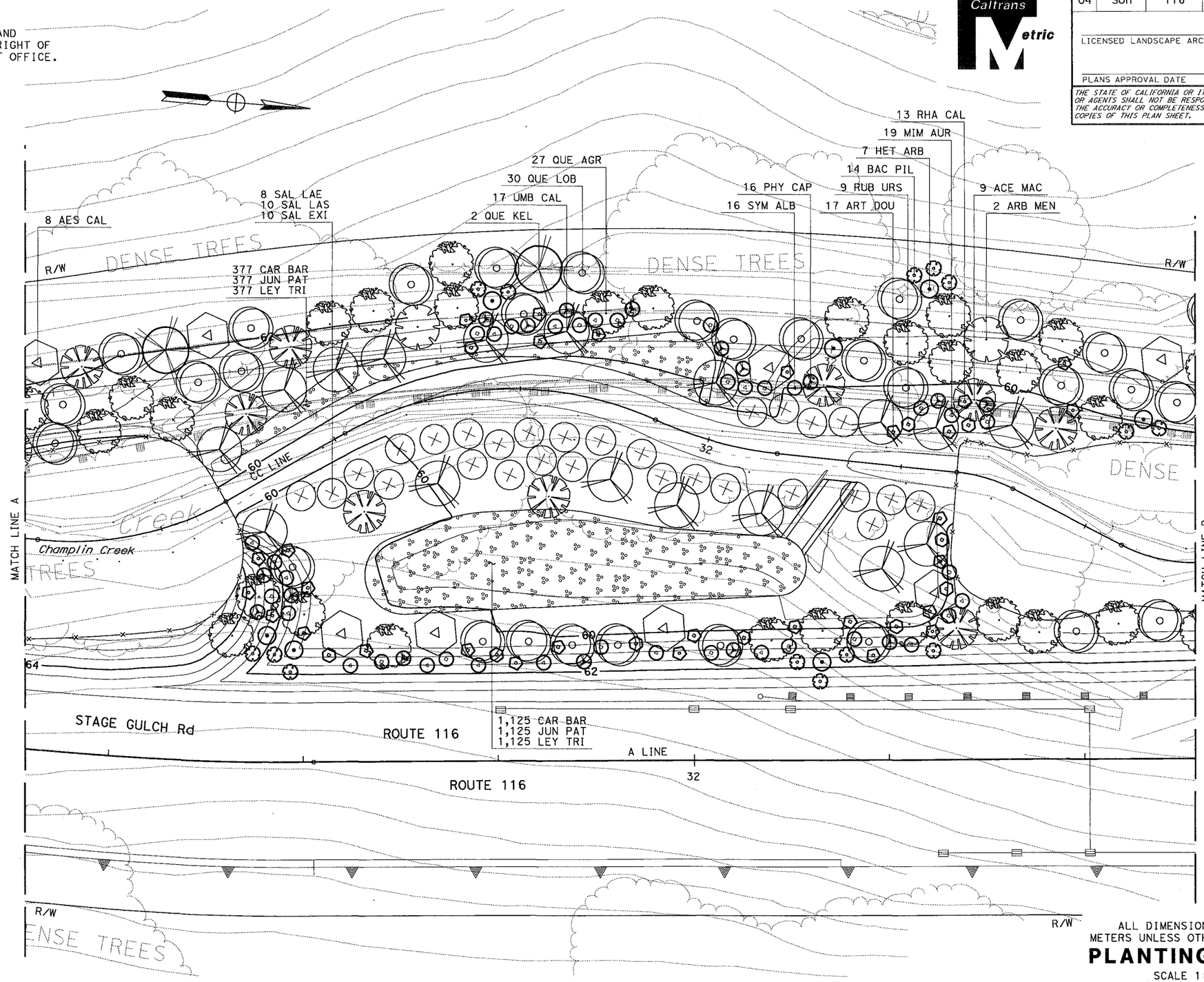

ALL DIMENSIONS ARE IN METERS UNLESS OTHERWISE SHOWN

PLANTING PLAN

SCALE 1:200

THIS SHEET ACCURATE FOR HIGHWAY PLANTING WORK ONLY.

SITE 2

STATE OF CALIFORNIA - DEPARTMENT OF TRANSPORTATION

Caltrans **WATER QUALITY**

SENIOR LANDSCAPE ARCHITECT: DAVE W. YAM

CALCULATED-DESIGNED BY: Alex McDonald

CHECKED BY: Jennifer Egawa

REVISED BY

DATE REVISED

LAST REVISION 00-00-00 DATE PLOTTED => 03-DEC-2009 TIME PLOTTED => 15:07

BORDER LAST REVISED 3/1/2007

RELATIVE BORDER SCALE IS IN MILLIMETERS 0 20 40 60 80

USERNAME => s130924
DGN FILE => 428382t1003.dgn

CU 00000

EA 000000

Dist	COUNTY	ROUTE	KILOMETER POST TOTAL PROJECT	SHEET No.	TOTAL SHEETS
04	Son	116	67.3/71.9		

LICENSED LANDSCAPE ARCHITECT

PLANS APPROVAL DATE

LICENSED LANDSCAPE ARCHITECT — ALEXANDRA K. McDONALD No. 5365 — Signature — Renewal Date — Date — STATE OF CALIFORNIA

THE STATE OF CALIFORNIA OR ITS OFFICERS OR AGENTS SHALL NOT BE RESPONSIBLE FOR THE ACCURACY OR COMPLETENESS OF ELECTRONIC COPIES OF THIS PLAN SHEET.

Caltrans Metric

FOR COMPLETE RIGHT OF WAY AND ACCURATE ACCESS DATA, SEE RIGHT OF WAY RECORD MAPS AT DISTRICT OFFICE.

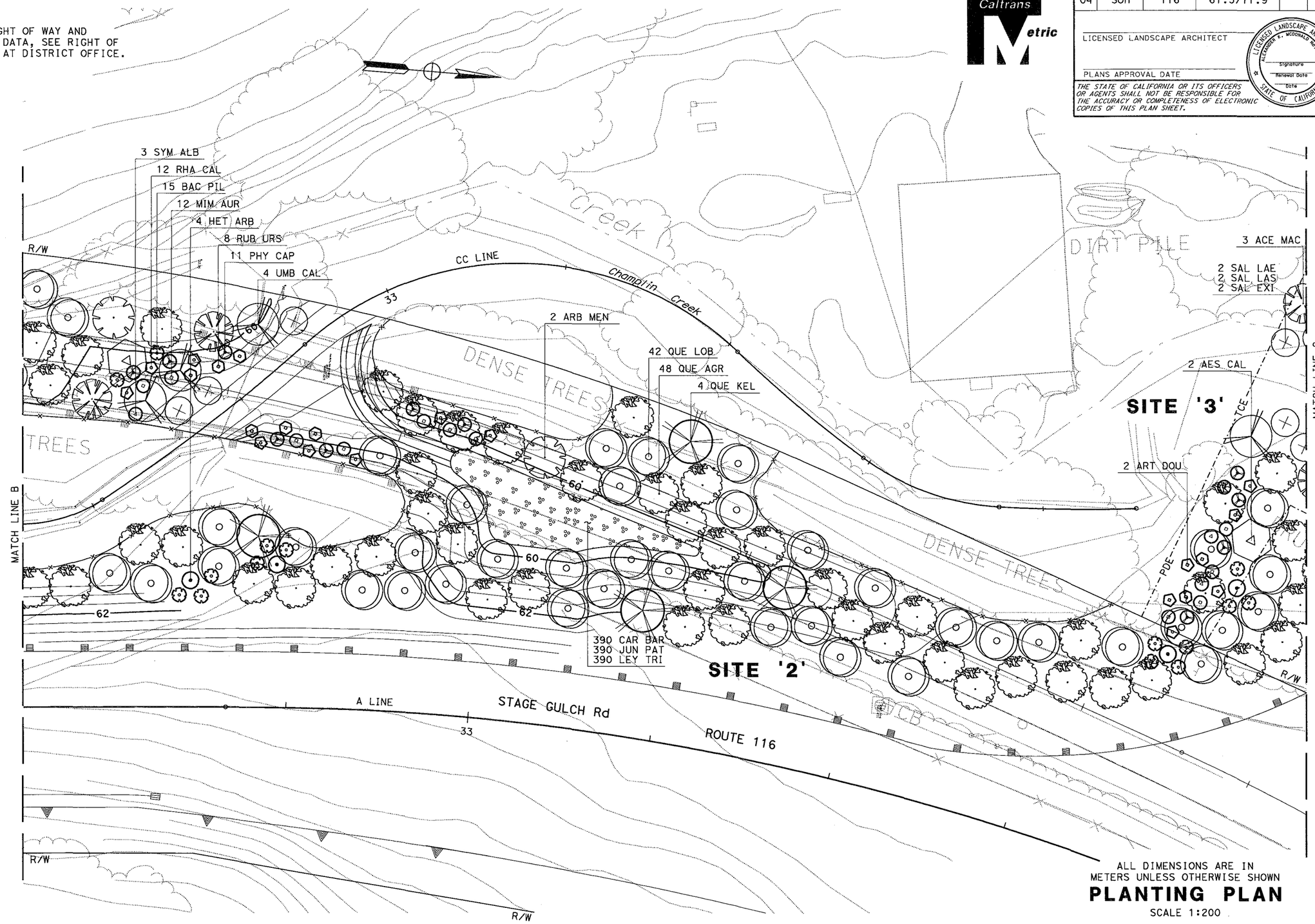

ALL DIMENSIONS ARE IN METERS UNLESS OTHERWISE SHOWN

PLANTING PLAN

SCALE 1:200

THIS SHEET ACCURATE FOR HIGHWAY PLANTING WORK ONLY.

SITE 2 & 3

STATE OF CALIFORNIA - DEPARTMENT OF TRANSPORTATION

Caltrans **WATER QUALITY**

SENIOR LANDSCAPE ARCHITECT: DAVE W. YAM

CALCULATED-DESIGNED BY: Alex McDonald

CHECKED BY: Jennifer Egawa

REVISED BY

DATE REVISED

LAST REVISION 00-00-00

DATE PLOTTED => 03-DEC-2009

TIME PLOTTED => 15:11

BORDER LAST REVISED 3/1/2007

RELATIVE BORDER SCALE IS IN MILLIMETERS 0 20 40 60 80

USERNAME => s130924

DGN FILE => 428382+1004.dgn

CU 00000

EA 000000

Dist	COUNTY	ROUTE	KILOMETER POST TOTAL PROJECT	SHEET No.	TOTAL SHEETS
04	Son	116	67.3/71.9		

LICENSED LANDSCAPE ARCHITECT

PLANS APPROVAL DATE

LICENSED LANDSCAPE ARCHITECT ALEXANDER K. MCDONALD NO. 3382 Signature Renewal Date Date STATE OF CALIFORNIA

THE STATE OF CALIFORNIA OR ITS OFFICERS OR AGENTS SHALL NOT BE RESPONSIBLE FOR THE ACCURACY OR COMPLETENESS OF ELECTRONIC COPIES OF THIS PLAN SHEET.

Caltrans Metric

FOR COMPLETE RIGHT OF WAY AND ACCURATE ACCESS DATA, SEE RIGHT OF WAY RECORD MAPS AT DISTRICT OFFICE.

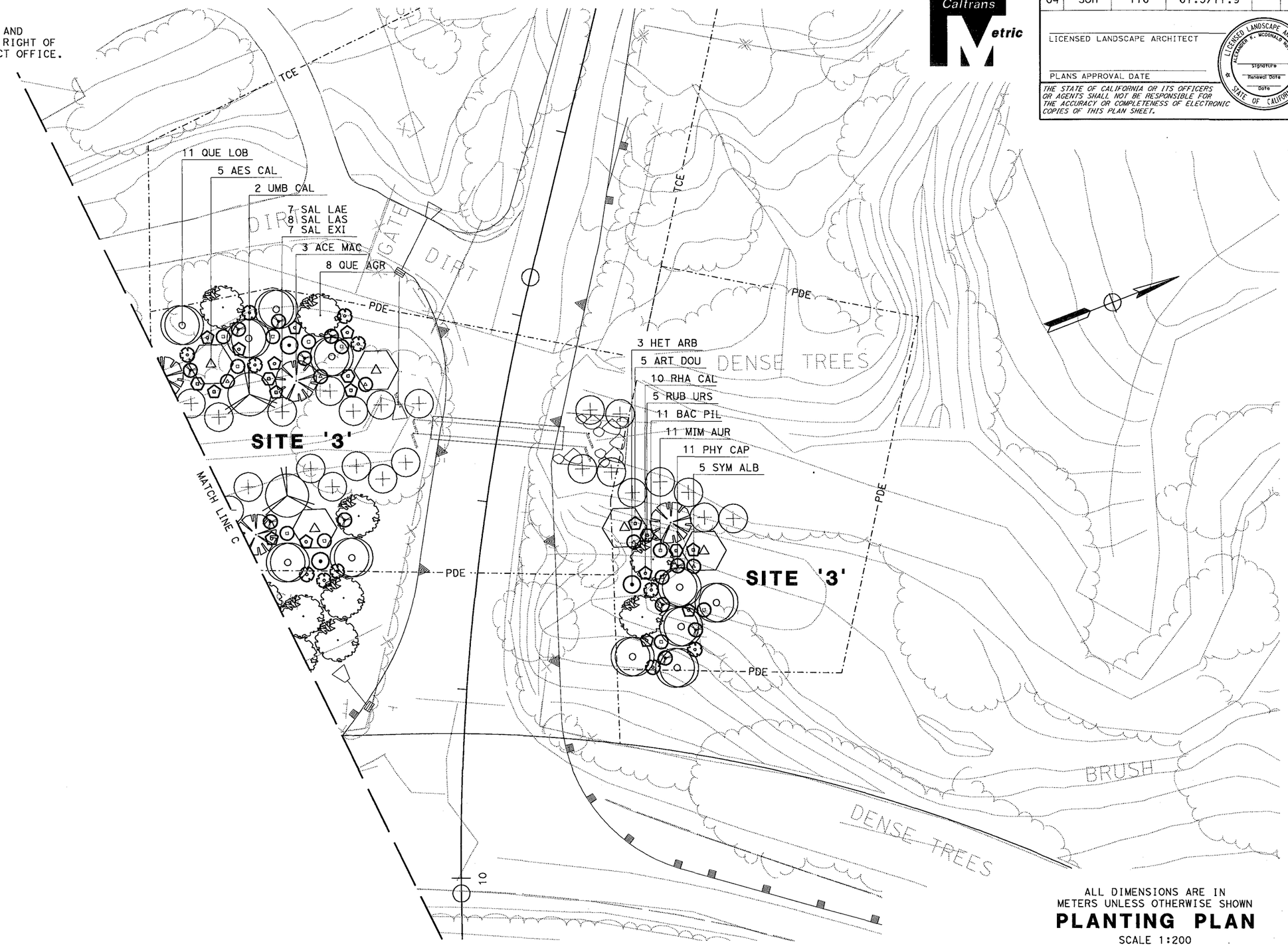

ALL DIMENSIONS ARE IN METERS UNLESS OTHERWISE SHOWN

PLANTING PLAN

SCALE 1:200

THIS SHEET ACCURATE FOR HIGHWAY PLANTING WORK ONLY.

SITE 3

STATE OF CALIFORNIA - DEPARTMENT OF TRANSPORTATION

Caltrans **WATER QUALITY**

SENIOR LANDSCAPE ARCHITECT: DAVE W. YAM

CALCULATED-DESIGNED BY: Alex McDonald

CHECKED BY: Jennifer Egawa

REVISED BY

DATE REVISED

LAST REVISION 00-00-00

DATE PLOTTED => 03-DEC-2009

TIME PLOTTED => 11:24

BORDER LAST REVISED 3/1/2007

RELATIVE BORDER SCALE IS IN MILLIMETERS 0 20 40 60 80

USERNAME => s130924

DGN FILE => 428382ti005.dgn

CU 00000

EA 000000

FOR COMPLETE RIGHT OF WAY DATA,
SEE RIGHT OF WAY RECORD MAPS
AT DISTRICT OFFICE.

Caltrans Metric

Dist	COUNTY	ROUTE	KILOMETER POST TOTAL PROJECT	SHEET No.	TOTAL SHEETS
04	Son	116	67.3/71.9		

REGISTERED CIVIL ENGINEER DATE

PLANS APPROVAL DATE

REGISTERED PROFESSIONAL ENGINEER
ULYSSES HILLARD
No. C 64873
Exp. 6/30/11
CIVIL
STATE OF CALIFORNIA

THE STATE OF CALIFORNIA OR ITS OFFICERS OR AGENTS SHALL NOT BE RESPONSIBLE FOR THE ACCURACY OR COMPLETENESS OF ELECTRONIC COPIES OF THIS PLAN SHEET.

WRECO
1814 FRANKLIN, SUITE 608
OAKLAND, CA 94612

CALTRANS
111 GRAND AVENUE
OAKLAND, CA 94612

ALL DIMENSIONS ARE IN
METERS UNLESS OTHERWISE SHOWN

CONSTRUCTION DETAILS

SCALE 1:500

C-1

REVISED BY	DATE REVISED

CALCULATED-DESIGNED BY	CHECKED BY
IRENE LIU	ULYSSES HILLARD

CONSULTANT FUNCTIONAL SUPERVISOR
HAN-BIN LIANG

STATE OF CALIFORNIA - DEPARTMENT OF TRANSPORTATION
Caltrans

LAST REVISION 00-00-00
DATE PLOTTED => 12/3/2009
TIME PLOTTED => 1:06:04 PM

Dist	COUNTY	ROUTE	KILOMETER POST TOTAL PROJECT	SHEET No.	TOTAL SHEETS
04	Son	116	67.3/71.9		

REGISTERED CIVIL ENGINEER DATE

PLANS APPROVAL DATE

REGISTERED PROFESSIONAL ENGINEER ULYSSES HILLARD No. C 64873 Exp. 6/30/11 CIVIL STATE OF CALIFORNIA

THE STATE OF CALIFORNIA OR ITS OFFICERS OR AGENTS SHALL NOT BE RESPONSIBLE FOR THE ACCURACY OR COMPLETENESS OF ELECTRONIC COPIES OF THIS PLAN SHEET.

WRECO
1814 FRANKLIN, SUITE 608
OAKLAND, CA 94612

CALTRANS
111 GRAND AVENUE
OAKLAND, CA 94612

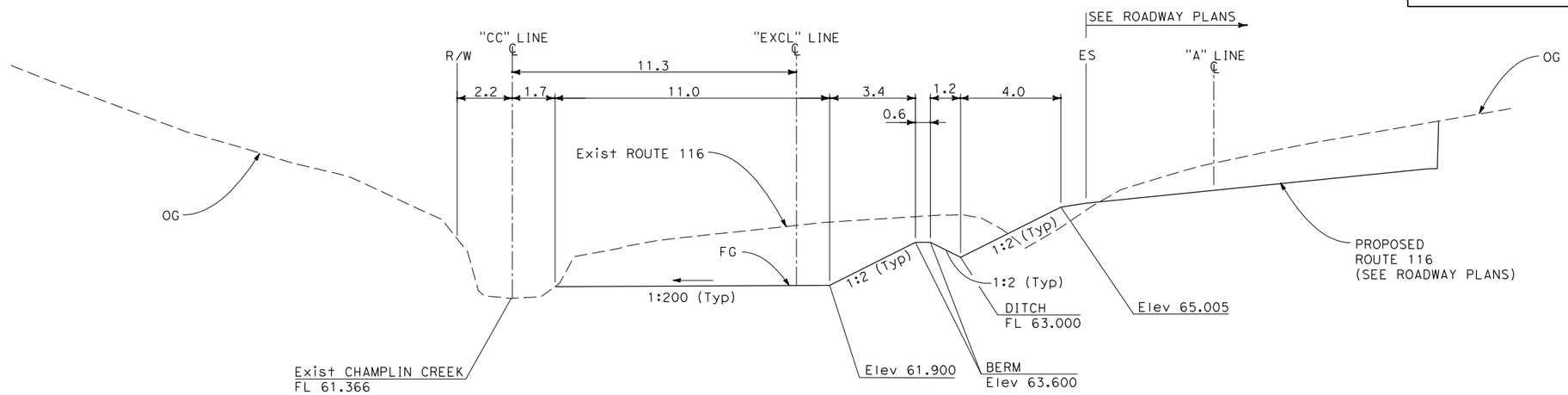

SECTION A-A ("CC" 30+45)

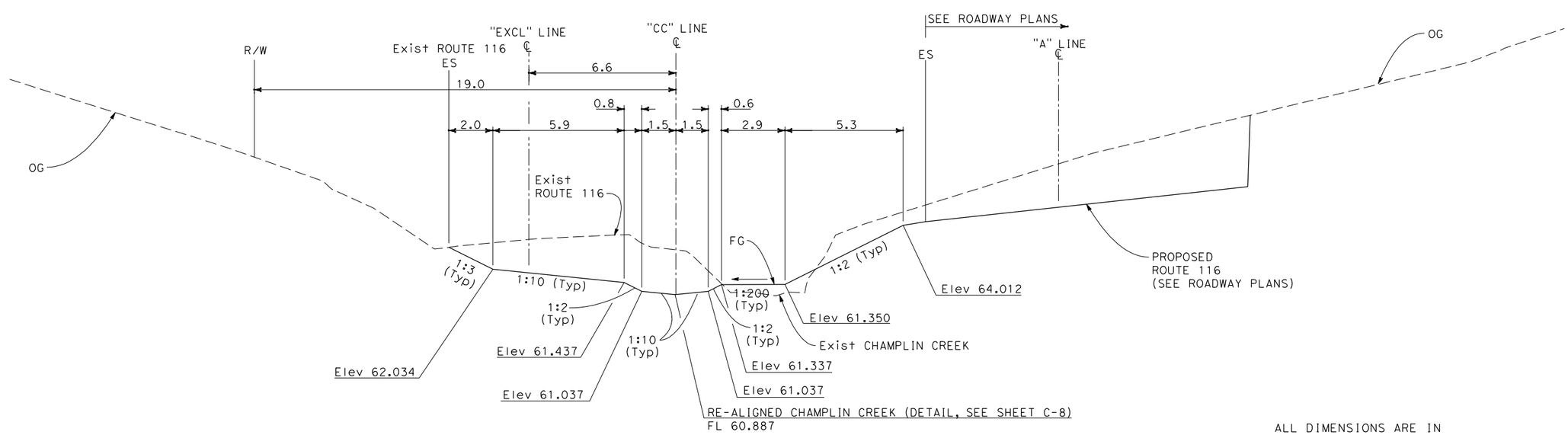

SECTION B-B ("CC" 30+72)

ALL DIMENSIONS ARE IN
METERS UNLESS OTHERWISE SHOWN

CONSTRUCTION DETAILS

NO SCALE

C-2

REVISED BY	DATE REVISED
IRENE LIU	ULYSSES HILLARD
CALCULATED-DESIGNED BY	CHECKED BY
CONSULTANT FUNCTIONAL SUPERVISOR	HAN-BIN LIANG

STATE OF CALIFORNIA - DEPARTMENT OF TRANSPORTATION

Caltrans

LAST REVISION 00-00-00 DATE PLOTTED => 12/3/2009 TIME PLOTTED => 1:06:16 PM

Dist	COUNTY	ROUTE	KILOMETER POST TOTAL PROJECT	SHEET No.	TOTAL SHEETS
04	Son	116	67.3/71.9		

REGISTERED CIVIL ENGINEER DATE

PLANS APPROVAL DATE

REGISTERED PROFESSIONAL ENGINEER ULYSSES HILLARD No. C 64873 Exp. 6/30/11 CIVIL STATE OF CALIFORNIA

THE STATE OF CALIFORNIA OR ITS OFFICERS OR AGENTS SHALL NOT BE RESPONSIBLE FOR THE ACCURACY OR COMPLETENESS OF ELECTRONIC COPIES OF THIS PLAN SHEET.

WRECO
1814 FRANKLIN, SUITE 608
OAKLAND, CA 94612

CALTRANS
111 GRAND AVENUE
OAKLAND, CA 94612

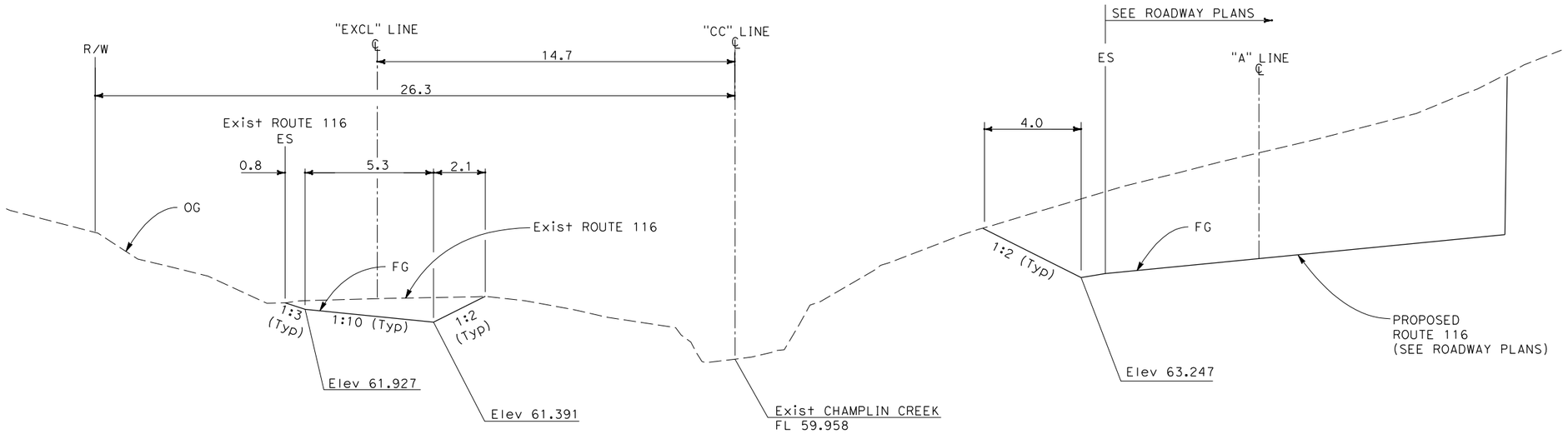

SECTION C-C ("CC" 31+27)

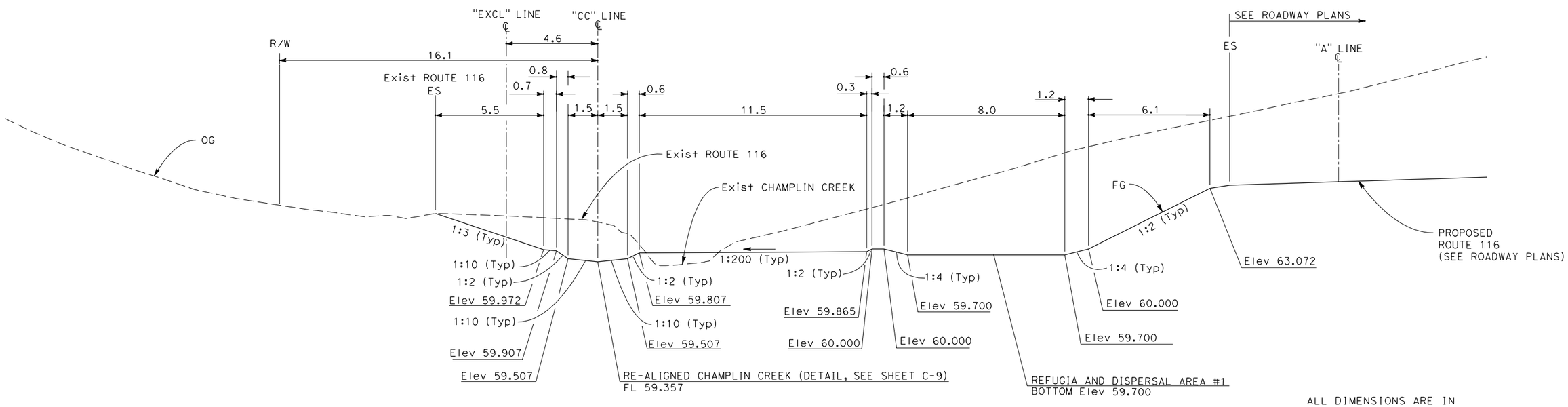

SECTION D-D ("CC" 31+80)

ALL DIMENSIONS ARE IN METERS UNLESS OTHERWISE SHOWN

CONSTRUCTION DETAILS

NO SCALE

C-3

REVISED BY	DATE REVISED
IRENE LIU	ULYSSES HILLARD
CALCULATED-DESIGNED BY	CHECKED BY
CONSULTANT FUNCTIONAL SUPERVISOR	HAN-BIN LIANG

STATE OF CALIFORNIA - DEPARTMENT OF TRANSPORTATION

Caltrans

LAST REVISION 00-00-00

DATE PLOTTED => 12/3/2009
TIME PLOTTED => 1:06:20 PM

Dist	COUNTY	ROUTE	KILOMETER POST TOTAL PROJECT	SHEET No.	TOTAL SHEETS
04	Son	116	67.3/71.9		

REGISTERED CIVIL ENGINEER DATE

PLANS APPROVAL DATE

REGISTERED PROFESSIONAL ENGINEER ULYSSES HILLARD No. C 64873 Exp. 6/30/11 CIVIL STATE OF CALIFORNIA

THE STATE OF CALIFORNIA OR ITS OFFICERS OR AGENTS SHALL NOT BE RESPONSIBLE FOR THE ACCURACY OR COMPLETENESS OF ELECTRONIC COPIES OF THIS PLAN SHEET.

WRECO
1814 FRANKLIN, SUITE 608
OAKLAND, CA 94612

CALTRANS
111 GRAND AVENUE
OAKLAND, CA 94612

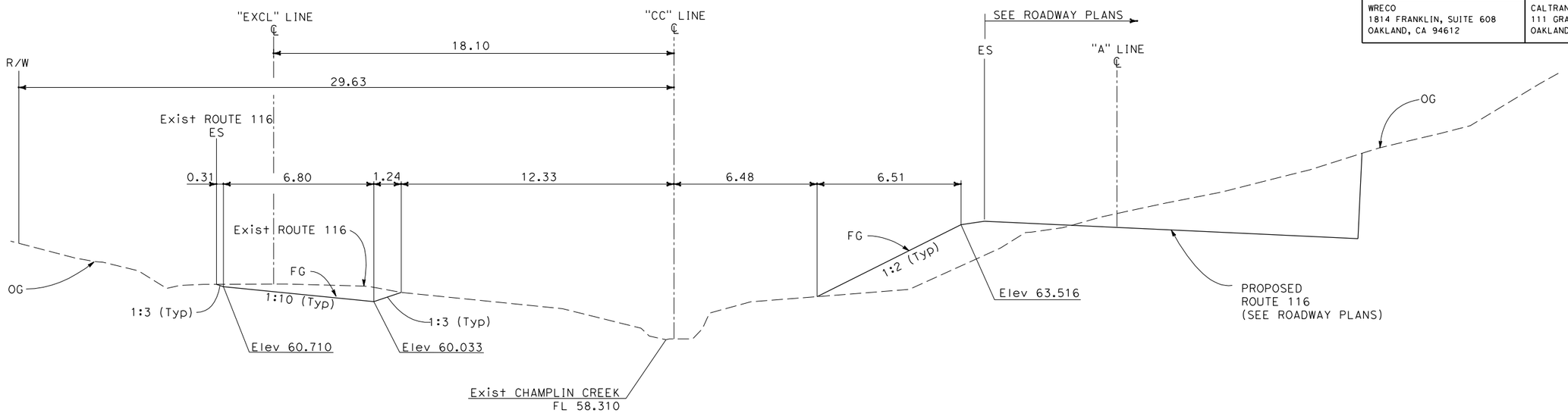

SECTION E-E ("CC" 32+52)

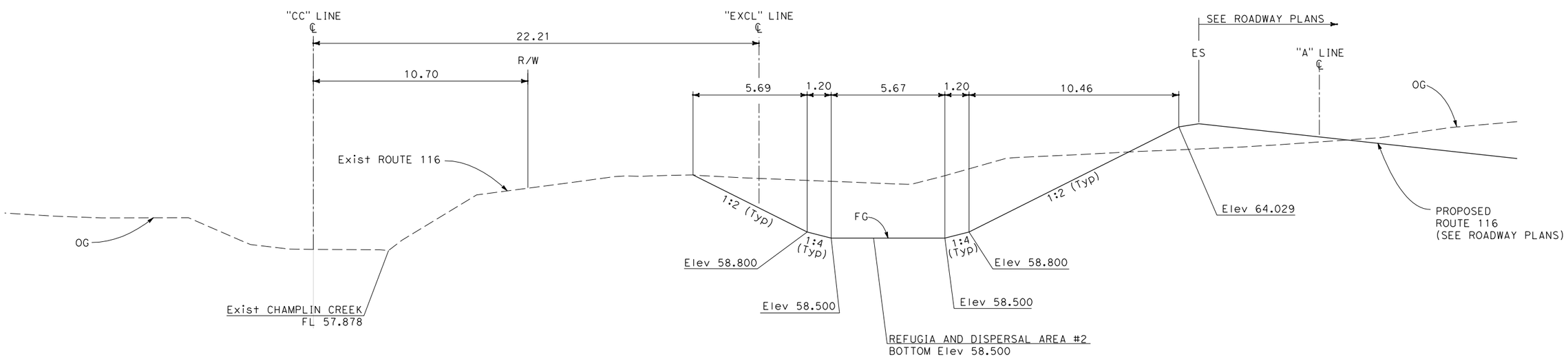

SECTION F-F ("CC" 33+18)

ALL DIMENSIONS ARE IN
METERS UNLESS OTHERWISE SHOWN

CONSTRUCTION DETAILS

NO SCALE

C-4

REVISED BY	DATE REVISED

CALCULATED-DESIGNED BY	CHECKED BY
IRENE LIU	ULYSSES HILLARD

CONSULTANT FUNCTIONAL SUPERVISOR: HAN-BIN LIANG

STATE OF CALIFORNIA - DEPARTMENT OF TRANSPORTATION

Caltrans

LAST REVISION 00-00-00 | DATE PLOTTED => 12/3/2009 | TIME PLOTTED => 1:06:24 PM

Dist	COUNTY	ROUTE	KILOMETER POST TOTAL PROJECT	SHEET No.	TOTAL SHEETS
04	Son	116	67.3/71.9		

REGISTERED CIVIL ENGINEER DATE

PLANS APPROVAL DATE

REGISTERED PROFESSIONAL ENGINEER ULYSSES HILLARD No. C 64873 Exp. 6/30/11 CIVIL STATE OF CALIFORNIA

THE STATE OF CALIFORNIA OR ITS OFFICERS OR AGENTS SHALL NOT BE RESPONSIBLE FOR THE ACCURACY OR COMPLETENESS OF ELECTRONIC COPIES OF THIS PLAN SHEET.

WRECO
1814 FRANKLIN, SUITE 608
OAKLAND, CA 94612

CALTRANS
111 GRAND AVENUE
OAKLAND, CA 94612

FOR COMPLETE RIGHT OF WAY DATA,
SEE RIGHT OF WAY RECORD MAPS
AT DISTRICT OFFICE.

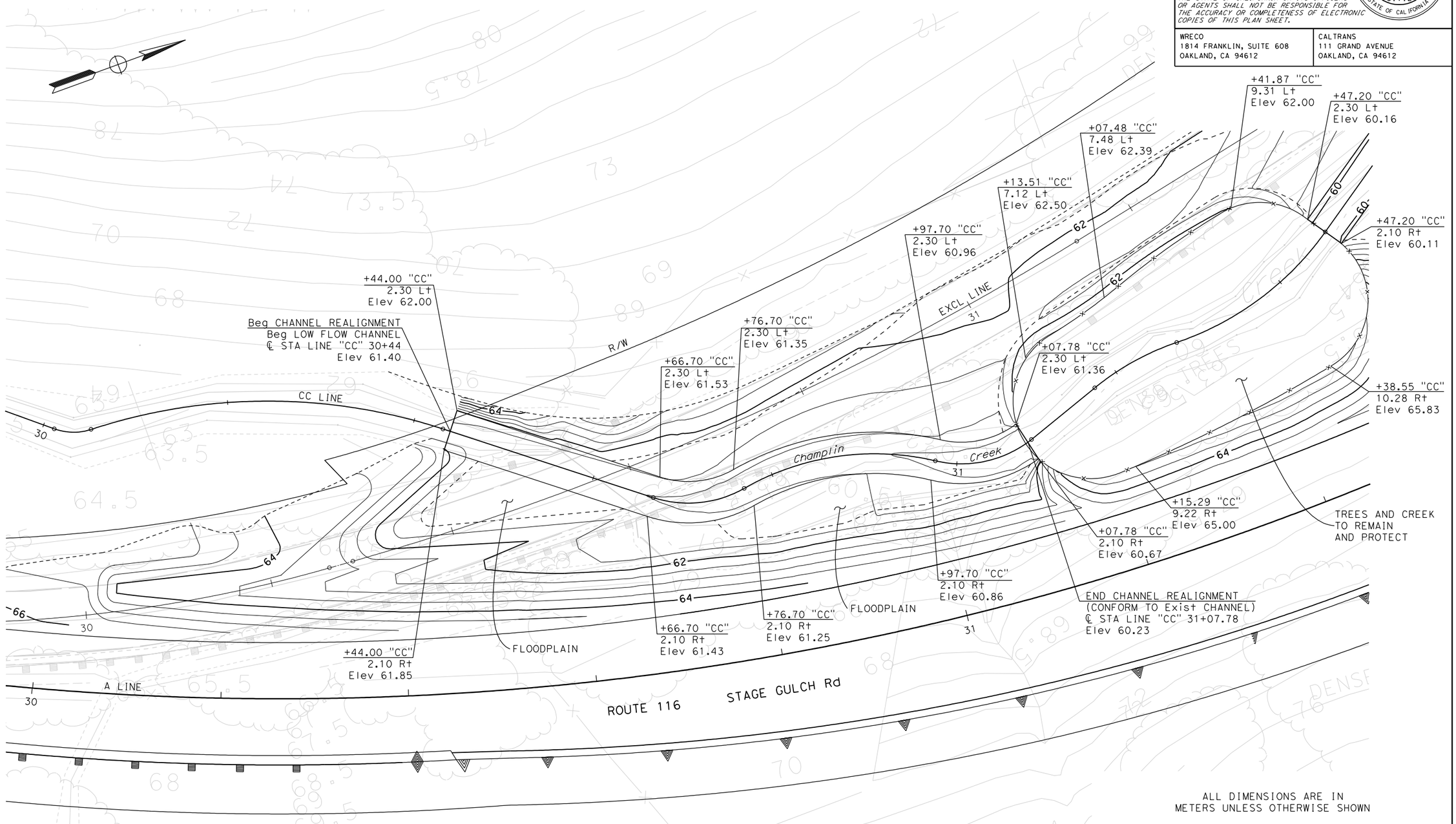

ALL DIMENSIONS ARE IN
METERS UNLESS OTHERWISE SHOWN

PLAN

CHANNEL REALIGNMENT #1

CONSTRUCTION DETAILS

SCALE 1:200

C-5

REVISED BY	DATE REVISED

CALCULATED-DESIGNED BY	CHECKED BY
IRENE LIU	ULYSSES HILLARD

CONSULTANT FUNCTIONAL SUPERVISOR
HAN-BIN LIANG

STATE OF CALIFORNIA - DEPARTMENT OF TRANSPORTATION
Caltrans

LAST REVISION 00-00-00
DATE PLOTTED => 12/11/2009
TIME PLOTTED => 11:43:28 AM

Dist	COUNTY	ROUTE	KILOMETER POST TOTAL PROJECT	SHEET No.	TOTAL SHEETS
04	Son	116	67.3/71.9		

REGISTERED CIVIL ENGINEER DATE

PLANS APPROVAL DATE

REGISTERED PROFESSIONAL ENGINEER ULYSSES HILLARD No. C 64873 Exp. 6/30/11 CIVIL STATE OF CALIFORNIA

THE STATE OF CALIFORNIA OR ITS OFFICERS OR AGENTS SHALL NOT BE RESPONSIBLE FOR THE ACCURACY OR COMPLETENESS OF ELECTRONIC COPIES OF THIS PLAN SHEET.

WRECO
1814 FRANKLIN, SUITE 608
OAKLAND, CA 94612

CALTRANS
111 GRAND AVENUE
OAKLAND, CA 94612

FOR COMPLETE RIGHT OF WAY DATA,
SEE RIGHT OF WAY RECORD MAPS
AT DISTRICT OFFICE.

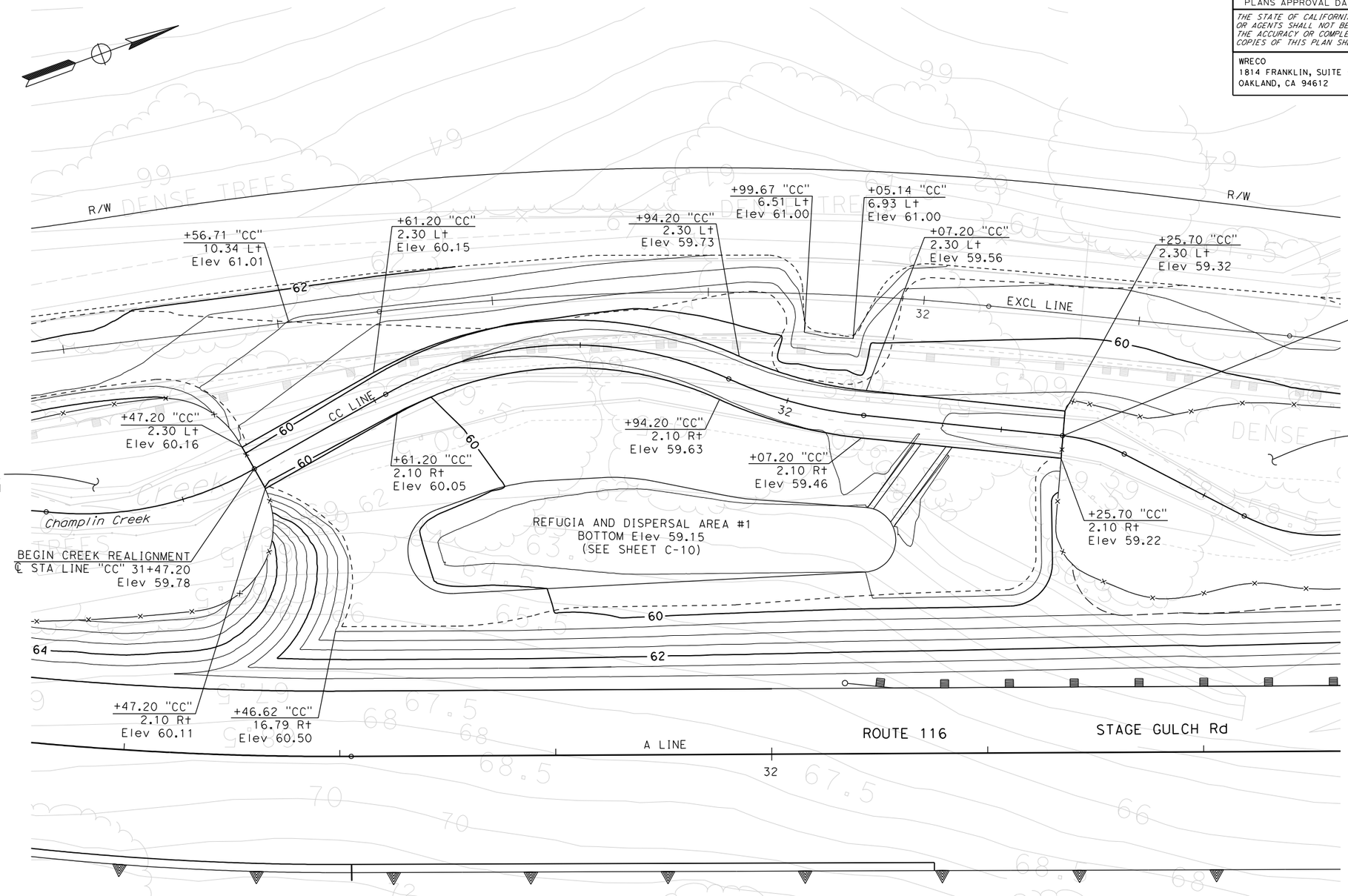

PLAN

CHANNEL REALIGNMENT #2

ALL DIMENSIONS ARE IN
METERS UNLESS OTHERWISE SHOWN

CONSTRUCTION DETAILS

SCALE 1:200

C-6

REVISED BY	DATE REVISED
IRENE LIU	ULYSSES HILLARD
CALCULATED-DESIGNED BY	CHECKED BY
CONSULTANT FUNCTIONAL SUPERVISOR	HAN-BIN LIANG

STATE OF CALIFORNIA - DEPARTMENT OF TRANSPORTATION

Caltrans

LAST REVISION 00-00-00 | DATE PLOTTED => 12/11/2009 | TIME PLOTTED => 11:46:35 AM

Dist	COUNTY	ROUTE	KILOMETER POST TOTAL PROJECT	SHEET No.	TOTAL SHEETS
04	Son	116	67.3/71.9		

REGISTERED CIVIL ENGINEER DATE

PLANS APPROVAL DATE

REGISTERED PROFESSIONAL ENGINEER ULYSSES HILLARD No. C 64873 Exp. 6/30/11 CIVIL STATE OF CALIFORNIA

THE STATE OF CALIFORNIA OR ITS OFFICERS OR AGENTS SHALL NOT BE RESPONSIBLE FOR THE ACCURACY OR COMPLETENESS OF ELECTRONIC COPIES OF THIS PLAN SHEET.

WRECO
1814 FRANKLIN, SUITE 608
OAKLAND, CA 94612

CALTRANS
111 GRAND AVENUE
OAKLAND, CA 94612

FOR COMPLETE RIGHT OF WAY DATA,
SEE RIGHT OF WAY RECORD MAPS
AT DISTRICT OFFICE.

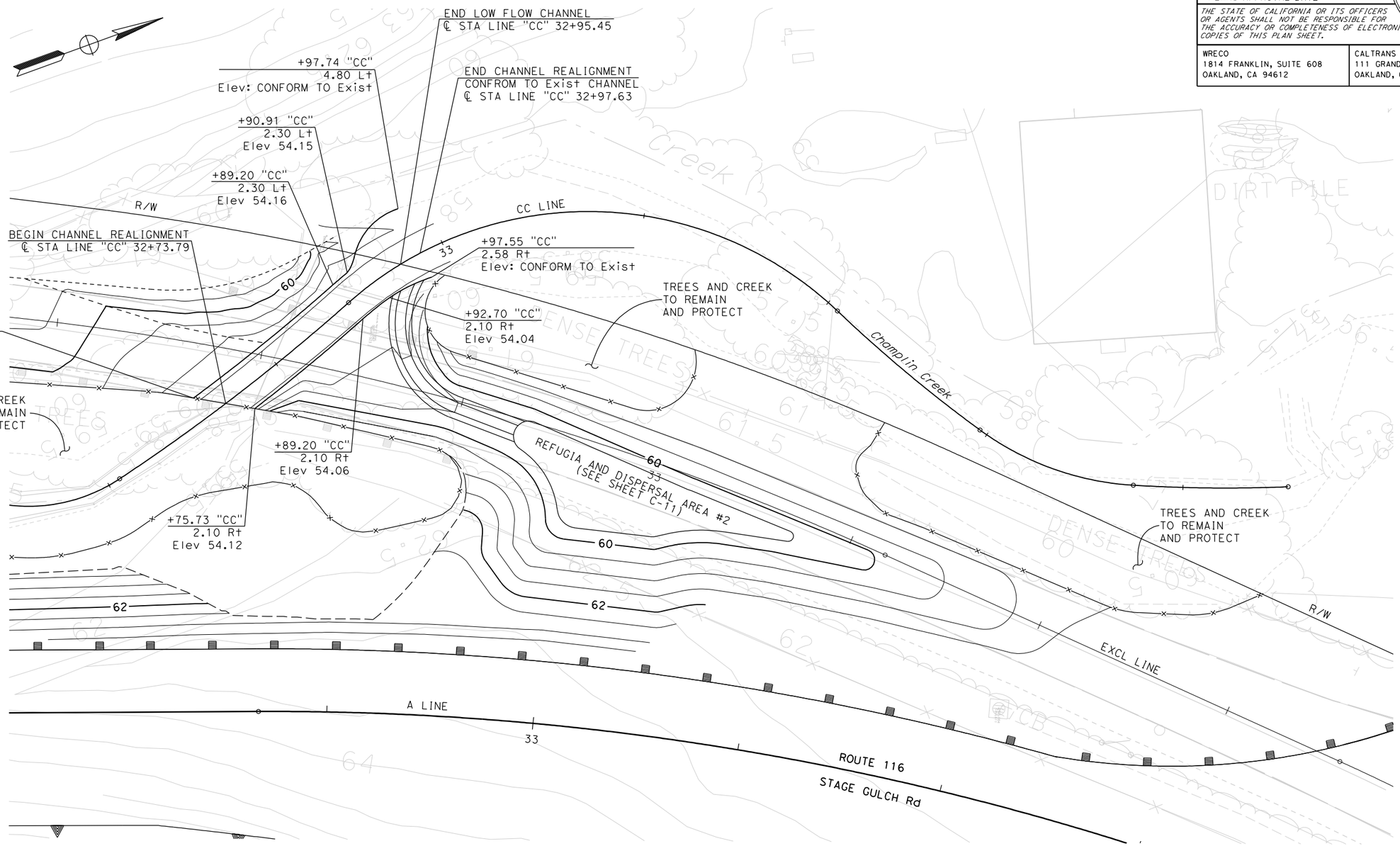

PLAN

CHANNEL REALIGNMENT #3

ALL DIMENSIONS ARE IN
METERS UNLESS OTHERWISE SHOWN

CONSTRUCTION DETAILS

SCALE 1:200

C-7

REVISED BY	DATE REVISED
IRENE LIU	ULYSSES HILLARD
CALCULATED-DESIGNED BY	CHECKED BY
CONSULTANT FUNCTIONAL SUPERVISOR	HAN-BIN LIANG

STATE OF CALIFORNIA - DEPARTMENT OF TRANSPORTATION

Caltrans

LAST REVISION 00-00-00 | DATE PLOTTED => 12/11/2009 | TIME PLOTTED => 11:46:58 AM

Dist	COUNTY	ROUTE	KILOMETER POST TOTAL PROJECT	SHEET No.	TOTAL SHEETS
04	Son	116	67.3/71.9		

Caltrans Metric

REGISTERED CIVIL ENGINEER DATE

PLANS APPROVAL DATE

REGISTERED PROFESSIONAL ENGINEER ULYSSES HILLARD No. C 64873 Exp. 6/30/11 CIVIL STATE OF CALIFORNIA

THE STATE OF CALIFORNIA OR ITS OFFICERS OR AGENTS SHALL NOT BE RESPONSIBLE FOR THE ACCURACY OR COMPLETENESS OF ELECTRONIC COPIES OF THIS PLAN SHEET.

WRECO
1814 FRANKLIN, SUITE 608
OAKLAND, CA 94612

CALTRANS
111 GRAND AVENUE
OAKLAND, CA 94612

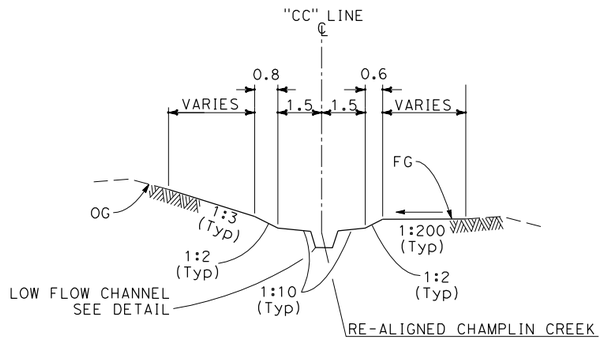

Sta "CC" 30+48.88 TO 30+66.70
NO SCALE

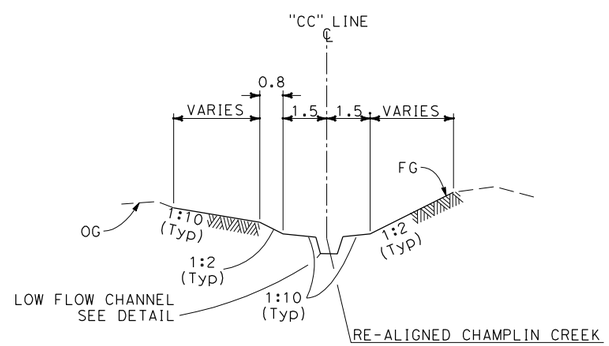

Sta "CC" 30+66.70 TO 30+76.70
NO SCALE

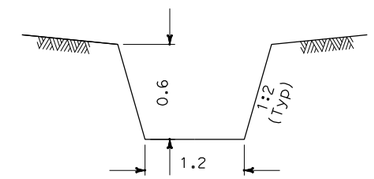

LOW FLOW CHANNEL
NO SCALE

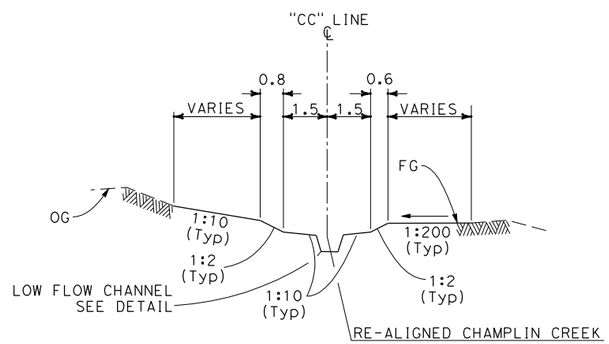

Sta "CC" 30+76.70 TO 30+97.70
NO SCALE

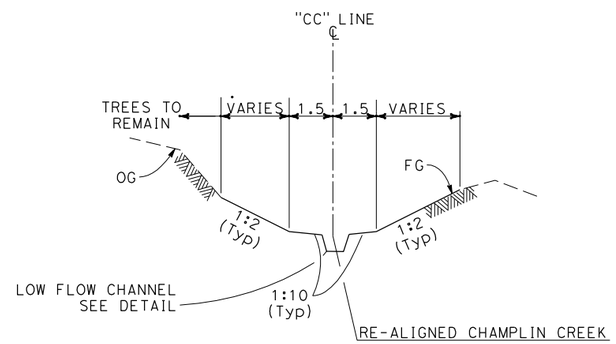

Sta "CC" 30+97.70 TO 31+08.70
NO SCALE

TYPICAL SECTIONS

RE-ALIGNED CHAMPLIN CREEK

ALL DIMENSIONS ARE IN METERS UNLESS OTHERWISE SHOWN

CONSTRUCTION DETAILS

NO SCALE

C-8

REVISED BY	DATE REVISED

CALCULATED-DESIGNED BY	CHECKED BY
IRENE LIU	ULYSSES HILLARD

CONSULTANT FUNCTIONAL SUPERVISOR
HAN-BIN LIANG

STATE OF CALIFORNIA - DEPARTMENT OF TRANSPORTATION
Caltrans

LAST REVISION 00-00-00 | DATE PLOTTED => 12/11/2009 TIME PLOTTED => 11:47:22 AM

Dist	COUNTY	ROUTE	KILOMETER POST TOTAL PROJECT	SHEET No.	TOTAL SHEETS
04	Son	116	67.3/71.9		

REGISTERED CIVIL ENGINEER DATE

PLANS APPROVAL DATE

REGISTERED PROFESSIONAL ENGINEER ULYSSES HILLARD No. C 64873 Exp. 6/30/11 CIVIL STATE OF CALIFORNIA

THE STATE OF CALIFORNIA OR ITS OFFICERS OR AGENTS SHALL NOT BE RESPONSIBLE FOR THE ACCURACY OR COMPLETENESS OF ELECTRONIC COPIES OF THIS PLAN SHEET.

WRECO
1814 FRANKLIN, SUITE 608
OAKLAND, CA 94612

CALTRANS
111 GRAND AVENUE
OAKLAND, CA 94612

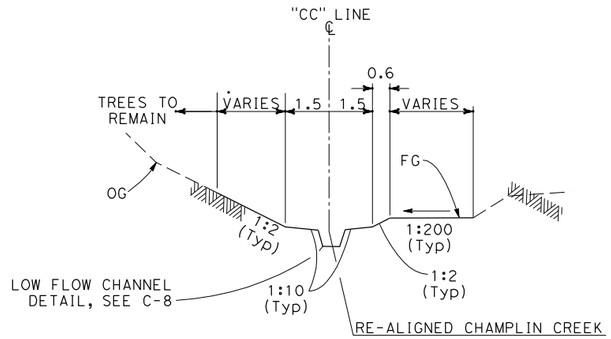

Sta "CC" 31+47.08 TO 31+51.16
NO SCALE

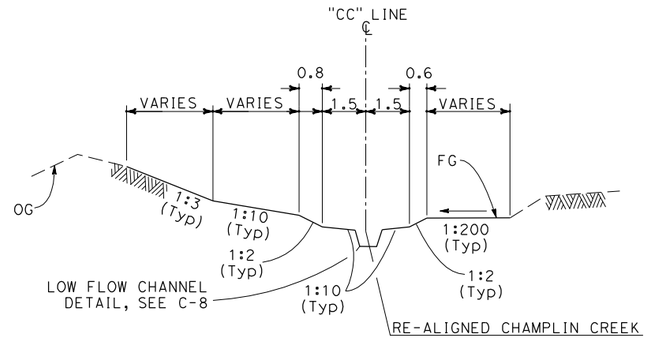

Sta "CC" 31+51.16 TO 31+94.20
NO SCALE

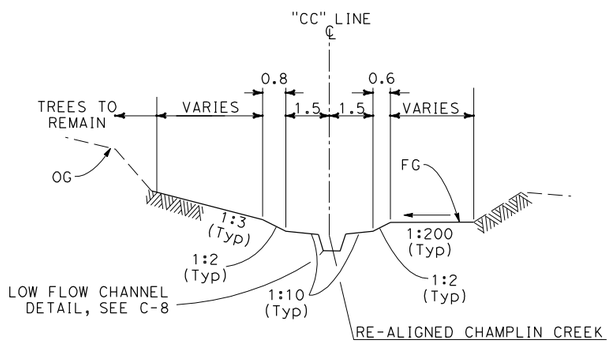

Sta "CC" 31+94.20 TO 32+25.70
NO SCALE

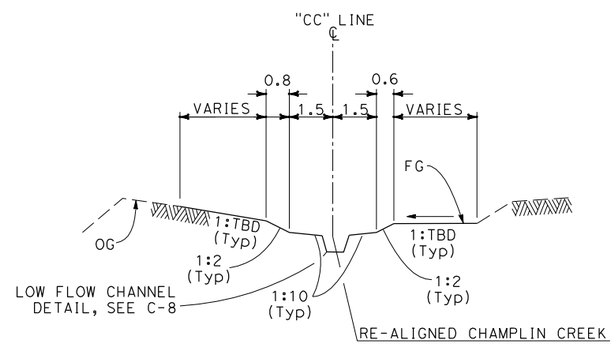

Sta "CC" 32+71.91 TO 32+97.20
NO SCALE

TYPICAL SECTIONS

RE-ALIGNED CHAMPLIN CREEK

ALL DIMENSIONS ARE IN METERS UNLESS OTHERWISE SHOWN

CONSTRUCTION DETAILS

NO SCALE

C-9

REVISED BY	DATE REVISED

IRENE LIU — ULYSSES HILLARD

CALCULATED-DESIGNED BY — CHECKED BY

CONSULTANT FUNCTIONAL SUPERVISOR — HAN-BIN LIANG

STATE OF CALIFORNIA - DEPARTMENT OF TRANSPORTATION

Caltrans

LAST REVISION 00-00-00 — DATE PLOTTED => 12/11/2009 TIME PLOTTED => 11:48:09 AM

Dist	COUNTY	ROUTE	KILOMETER POST TOTAL PROJECT	SHEET No.	TOTAL SHEETS
04	Son	116	67.3/71.9		

REGISTERED CIVIL ENGINEER DATE

PLANS APPROVAL DATE

REGISTERED PROFESSIONAL ENGINEER ULYSSES HILLARD No. C 64873 Exp. 6/30/11 CIVIL STATE OF CALIFORNIA

THE STATE OF CALIFORNIA OR ITS OFFICERS OR AGENTS SHALL NOT BE RESPONSIBLE FOR THE ACCURACY OR COMPLETENESS OF ELECTRONIC COPIES OF THIS PLAN SHEET.

WRECO
1814 FRANKLIN, SUITE 608
OAKLAND, CA 94612

CALTRANS
111 GRAND AVENUE
OAKLAND, CA 94612

FOR COMPLETE RIGHT OF WAY DATA,
SEE RIGHT OF WAY RECORD MAPS
AT DISTRICT OFFICE.

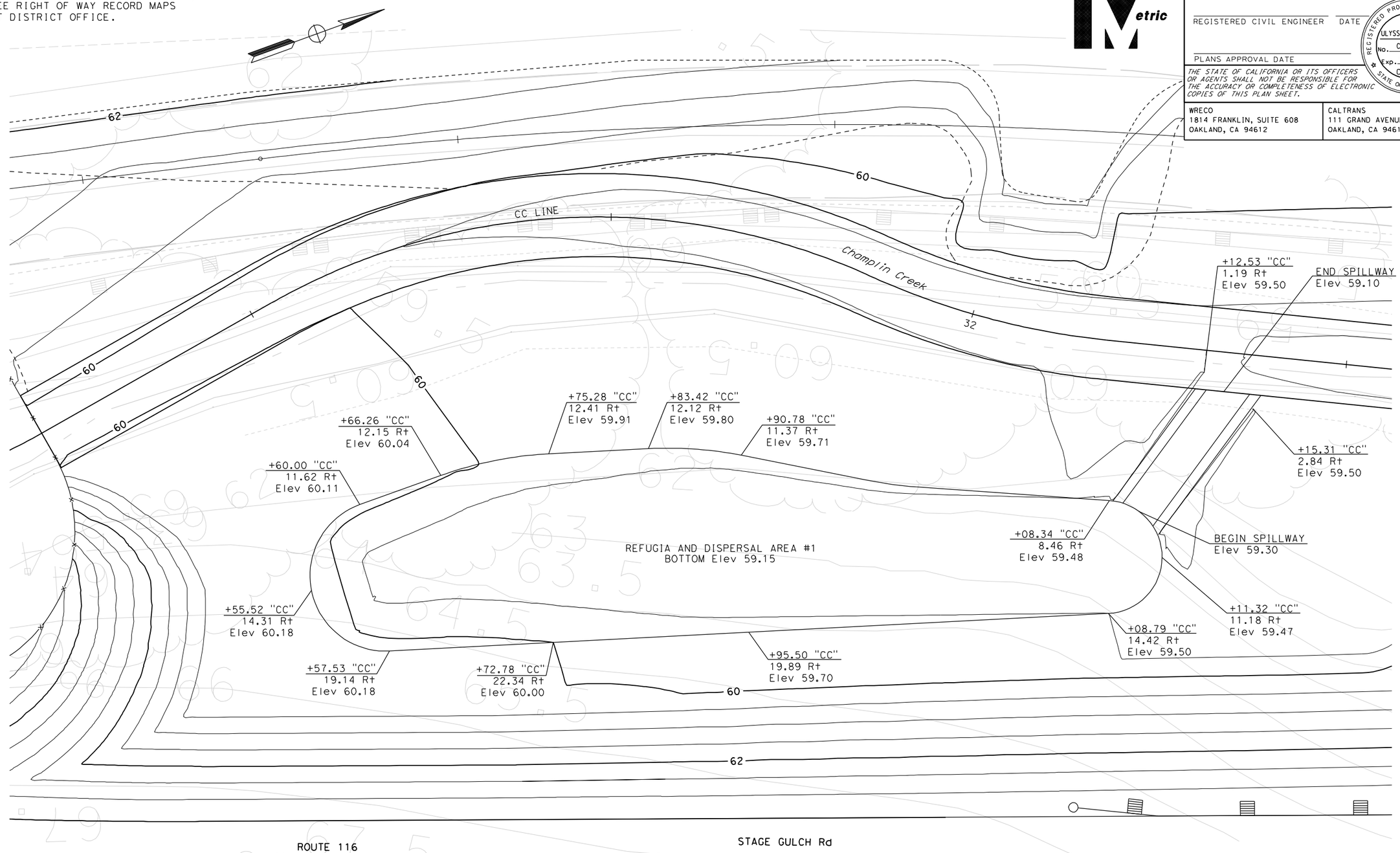

PLAN

REFUGIA AND DISPERSAL AREA #1

ALL DIMENSIONS ARE IN
METERS UNLESS OTHERWISE SHOWN

CONSTRUCTION DETAILS

SCALE 1:100

C-10

REVISED BY	DATE REVISED
IRENE LIU	ULYSSES HILLARD
CALCULATED-DESIGNED BY	CHECKED BY
CONSULTANT FUNCTIONAL SUPERVISOR	HAN-BIN LIANG

STATE OF CALIFORNIA - DEPARTMENT OF TRANSPORTATION
Caltrans

LAST REVISION 00-00-00
DATE PLOTTED => 12/10/2009
TIME PLOTTED => 2:34:08 PM

Dist	COUNTY	ROUTE	KILOMETER POST TOTAL PROJECT	SHEET No.	TOTAL SHEETS
04	Son	116	67.3/71.9		

REGISTERED CIVIL ENGINEER DATE

PLANS APPROVAL DATE

REGISTERED PROFESSIONAL ENGINEER ULYSSES HILLARD No. C 64873 Exp. 6/30/11 CIVIL STATE OF CALIFORNIA

THE STATE OF CALIFORNIA OR ITS OFFICERS OR AGENTS SHALL NOT BE RESPONSIBLE FOR THE ACCURACY OR COMPLETENESS OF ELECTRONIC COPIES OF THIS PLAN SHEET.

WRECO
1814 FRANKLIN, SUITE 608
OAKLAND, CA 94612

CALTRANS
111 GRAND AVENUE
OAKLAND, CA 94612

FOR COMPLETE RIGHT OF WAY DATA,
SEE RIGHT OF WAY RECORD MAPS
AT DISTRICT OFFICE.

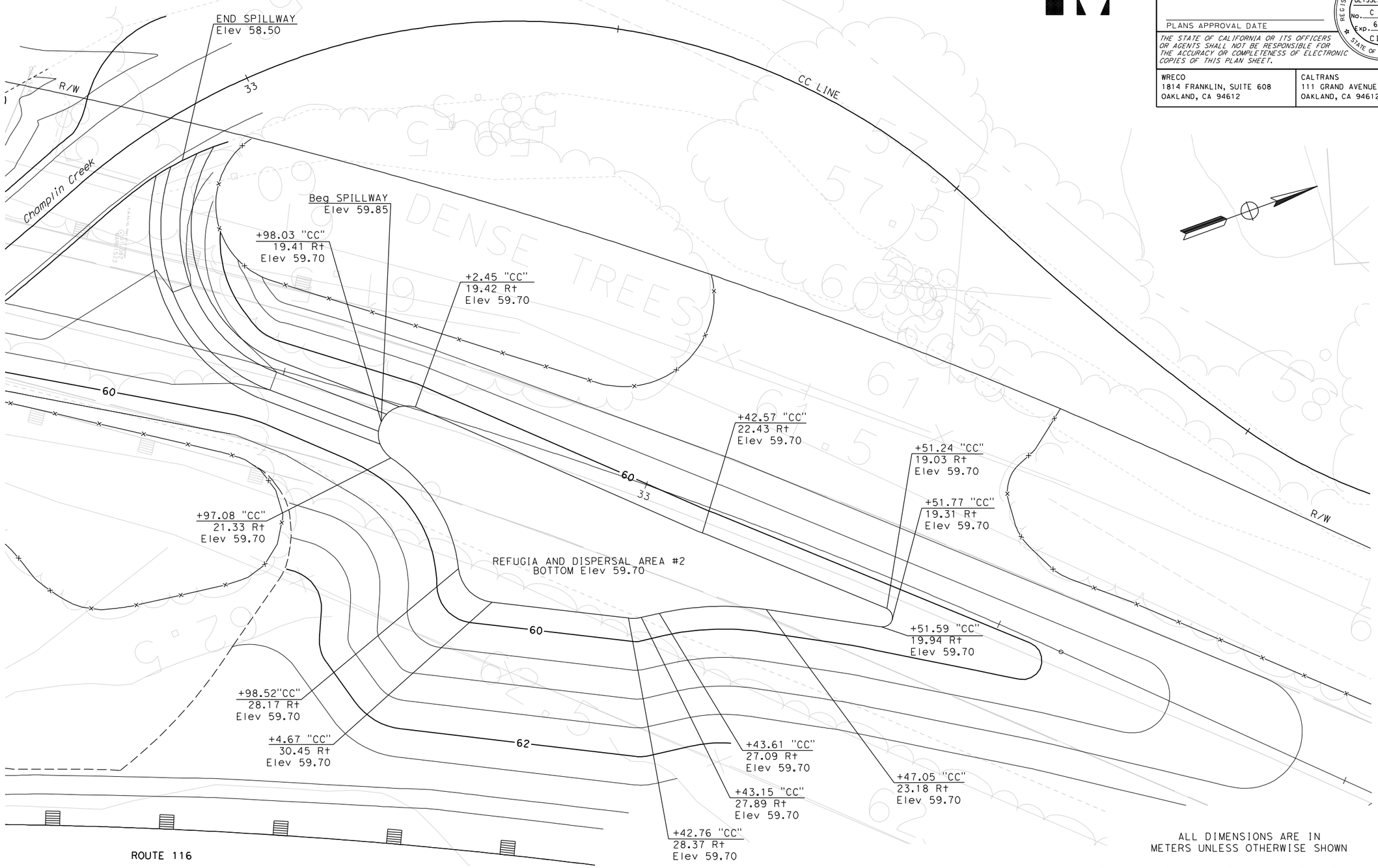

PLAN

ALL DIMENSIONS ARE IN
METERS UNLESS OTHERWISE SHOWN

CONSTRUCTION DETAILS

SCALE 1:100

REFUGIA AND DISPERSAL AREA #2

C-11

REVISED BY	DATE REVISED

CALCULATED-DESIGNED BY: IRENE LIU
CHECKED BY: ULYSSES HILLARD

CONSULTANT FUNCTIONAL SUPERVISOR: HAN-BIN LIANG

STATE OF CALIFORNIA - DEPARTMENT OF TRANSPORTATION
Caltrans

LAST REVISION 00-00-00
DATE PLOTTED => 12/10/2009
TIME PLOTTED => 2:35:20 PM

Dist	COUNTY	ROUTE	KILOMETER POST TOTAL PROJECT	SHEET No.	TOTAL SHEETS
04	Son	116	67.3/71.9		

REGISTERED CIVIL ENGINEER DATE

PLANS APPROVAL DATE

REGISTERED PROFESSIONAL ENGINEER No. Exp. CIVIL STATE OF CALIFORNIA

THE STATE OF CALIFORNIA OR ITS OFFICERS OR AGENTS SHALL NOT BE RESPONSIBLE FOR THE ACCURACY OR COMPLETENESS OF ELECTRONIC COPIES OF THIS PLAN SHEET.

WRECO
1814 FRANKLIN, SUITE 608
OAKLAND, CA 94612

CALTRANS
111 GRAND AVENUE
OAKLAND, CA 94612

Caltrans Metric

FOR COMPLETE RIGHT OF WAY DATA,
SEE RIGHT OF WAY RECORD MAPS
AT DISTRICT OFFICE.

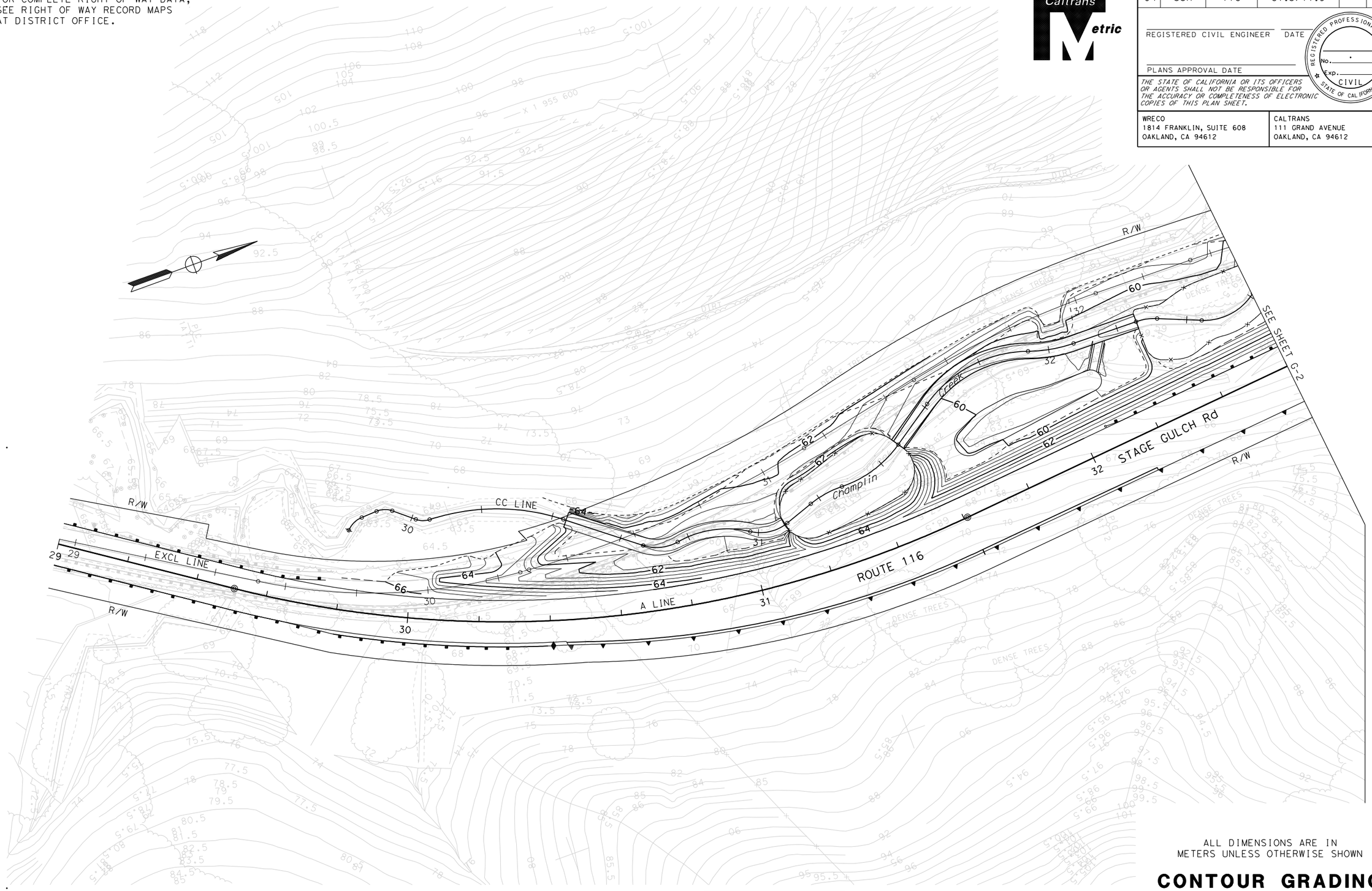

ALL DIMENSIONS ARE IN
METERS UNLESS OTHERWISE SHOWN

FOR NOTES, ABBREVIATIONS
&/OR LEGEND, SEE SHEET L-6

CONTOUR GRADING

SCALE 1:500

G-1

REVISED BY | DATE REVISED

IRENE LIU | ULYSSES HILLARD

CALCULATED-DESIGNED BY | CHECKED BY

CONSULTANT FUNCTIONAL SUPERVISOR

HAN-BIN LIANG

STATE OF CALIFORNIA - DEPARTMENT OF TRANSPORTATION

Caltrans

LAST REVISION 00-00-00

DATE PLOTTED => 12/3/2009
TIME PLOTTED => 1:07:35 PM

BORDER LAST REVISED 3/1/2007

RELATIVE BORDER SCALE IS IN MILLIMETERS 0 20 40 60 80

USERNAME => irene_liu
DGN FILE => ...\dwg\pl\G-01.dgn

CU 04261

EA 283811

Dist	COUNTY	ROUTE	KILOMETER POST TOTAL PROJECT	SHEET No.	TOTAL SHEETS
04	Son	116	67.3/71.9		

REGISTERED CIVIL ENGINEER DATE

PLANS APPROVAL DATE

REGISTERED PROFESSIONAL ENGINEER No. Exp. CIVIL STATE OF CALIFORNIA

THE STATE OF CALIFORNIA OR ITS OFFICERS OR AGENTS SHALL NOT BE RESPONSIBLE FOR THE ACCURACY OR COMPLETENESS OF ELECTRONIC COPIES OF THIS PLAN SHEET.

WRECO
1814 FRANKLIN, SUITE 608
OAKLAND, CA 94612

CALTRANS
111 GRAND AVENUE
OAKLAND, CA 94612

Caltrans Metric

FOR COMPLETE RIGHT OF WAY DATA,
SEE RIGHT OF WAY RECORD MAPS
AT DISTRICT OFFICE.

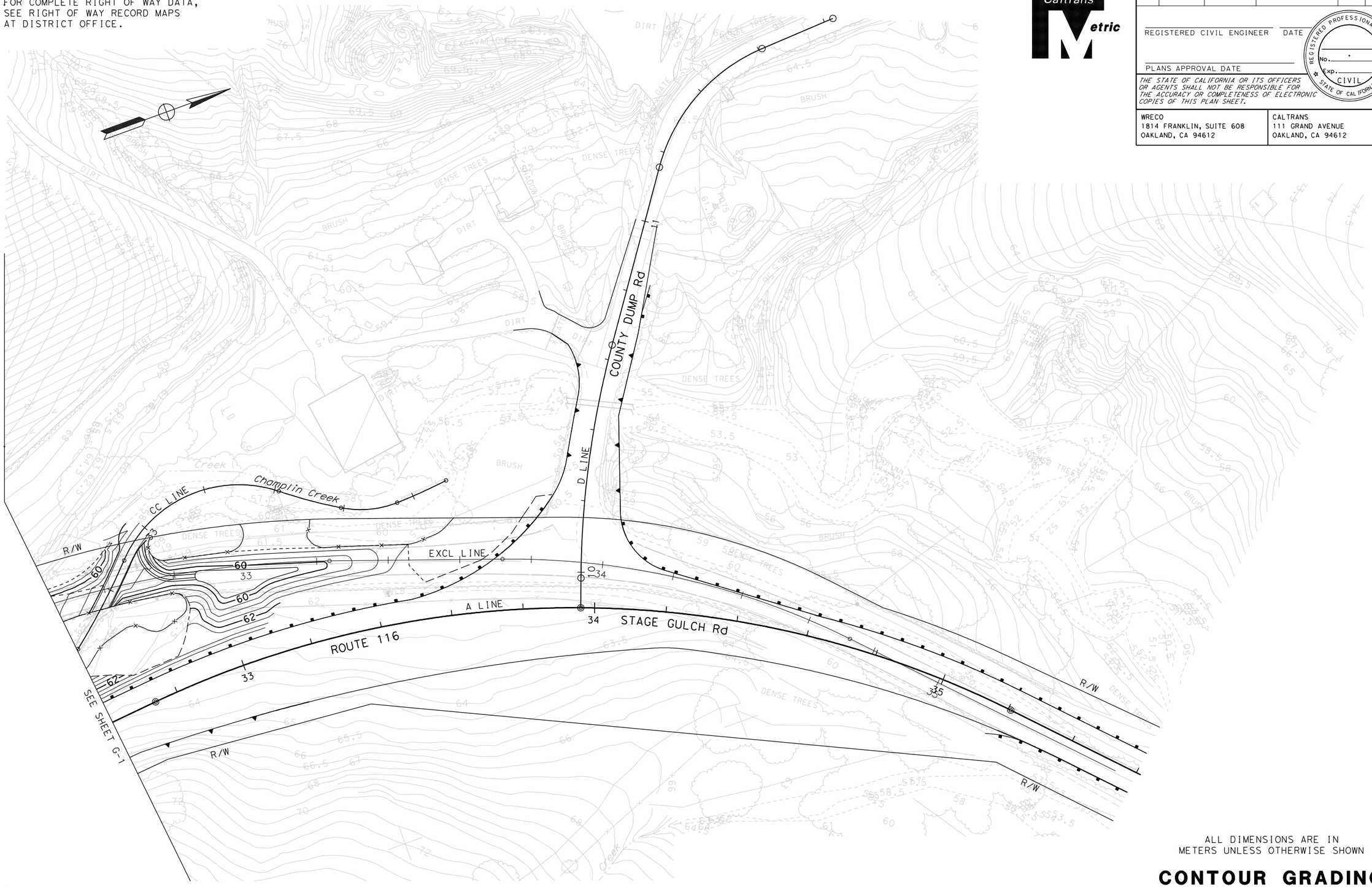

ALL DIMENSIONS ARE IN
METERS UNLESS OTHERWISE SHOWN

CONTOUR GRADING

SCALE 1:500

G-2

FOR NOTES, ABBREVIATIONS
&/OR LEGEND, SEE SHEET L-6

REVISED BY	IRENE LIU
DATE REVISED	ULYSSES HILLARD
CALCULATED-DESIGNED BY	CONSULTANT FUNCTIONAL SUPERVISOR
CHECKED BY	HAN-BIN LIANG

STATE OF CALIFORNIA - DEPARTMENT OF TRANSPORTATION

Caltrans

LAST REVISION 00-00-00
DATE PLOTTED => 12/3/2009
TIME PLOTTED => 1:07:39 PM

FOR COMPLETE RIGHT OF WAY DATA,
SEE RIGHT OF WAY RECORD MAPS
AT DISTRICT OFFICE.

Dist	COUNTY	ROUTE	KILOMETER POST TOTAL PROJECT	SHEET No.	TOTAL SHEETS
04	Son	116	67.3/71.9		

REGISTERED CIVIL ENGINEER DATE

PLANS APPROVAL DATE

REGISTERED PROFESSIONAL ENGINEER ULYSSES HILLARD No. C 64873 Exp. 6/30/11 CIVIL STATE OF CALIFORNIA

THE STATE OF CALIFORNIA OR ITS OFFICERS OR AGENTS SHALL NOT BE RESPONSIBLE FOR THE ACCURACY OR COMPLETENESS OF ELECTRONIC COPIES OF THIS PLAN SHEET.

WRECO
1814 FRANKLIN, SUITE 608
OAKLAND, CA 94612

CALTRANS
111 GRAND AVENUE
OAKLAND, CA 94612

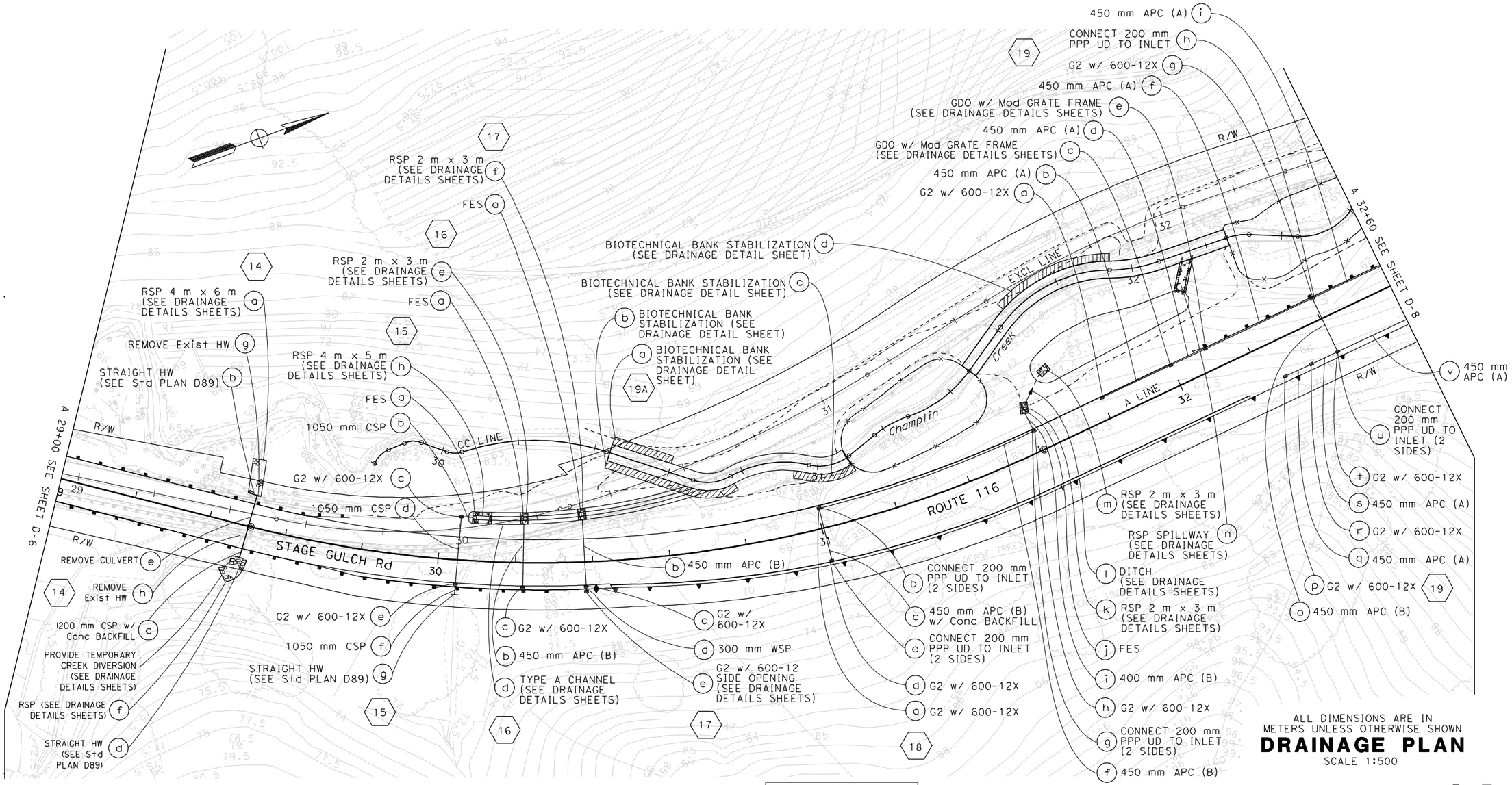

FOR NOTES, ABBREVIATIONS &/OR LEGEND, SEE SHEET D-1

THIS PLAN ACCURATE FOR DRAINAGE WORK ONLY

ALL DIMENSIONS ARE IN METERS UNLESS OTHERWISE SHOWN

DRAINAGE PLAN

SCALE 1:500

D-7

STATE OF CALIFORNIA - DEPARTMENT OF TRANSPORTATION

Caltrans

CONSULTANT FUNCTIONAL SUPERVISOR: HAN-BIN LIANG

CALCULATED-DESIGNED BY: IRENE LIU

CHECKED BY: ULYSSES HILLARD

REVISED BY

DATE REVISED

LAST REVISION 00-00-00

DATE PLOTTED => 12/10/2009
TIME PLOTTED => 2:53:36 PM

BORDER LAST REVISED 3/1/2007

RELATIVE BORDER SCALE IS IN MILLIMETERS 0 20 40 60 80

USERNAME => jessica_pollitz
DGN FILE => ...\Dwg\Site 1-6\D-07.dgn

CU 04261

EA 283811

Dist	COUNTY	ROUTE	KILOMETER POST TOTAL PROJECT	SHEET No.	TOTAL SHEETS
04	Son	116	67.3/71.9		

REGISTERED CIVIL ENGINEER DATE

PLANS APPROVAL DATE

REGISTERED PROFESSIONAL ENGINEER ULYSSES HILLARD No. C 64873 Exp. 6/30/11 CIVIL STATE OF CALIFORNIA

THE STATE OF CALIFORNIA OR ITS OFFICERS OR AGENTS SHALL NOT BE RESPONSIBLE FOR THE ACCURACY OR COMPLETENESS OF ELECTRONIC COPIES OF THIS PLAN SHEET.

WRECO
1814 FRANKLIN, SUITE 608
OAKLAND, CA 94612

CALTRANS
111 GRAND AVENUE
OAKLAND, CA 94612

FOR COMPLETE RIGHT OF WAY DATA, SEE RIGHT OF WAY RECORD MAPS AT DISTRICT OFFICE.

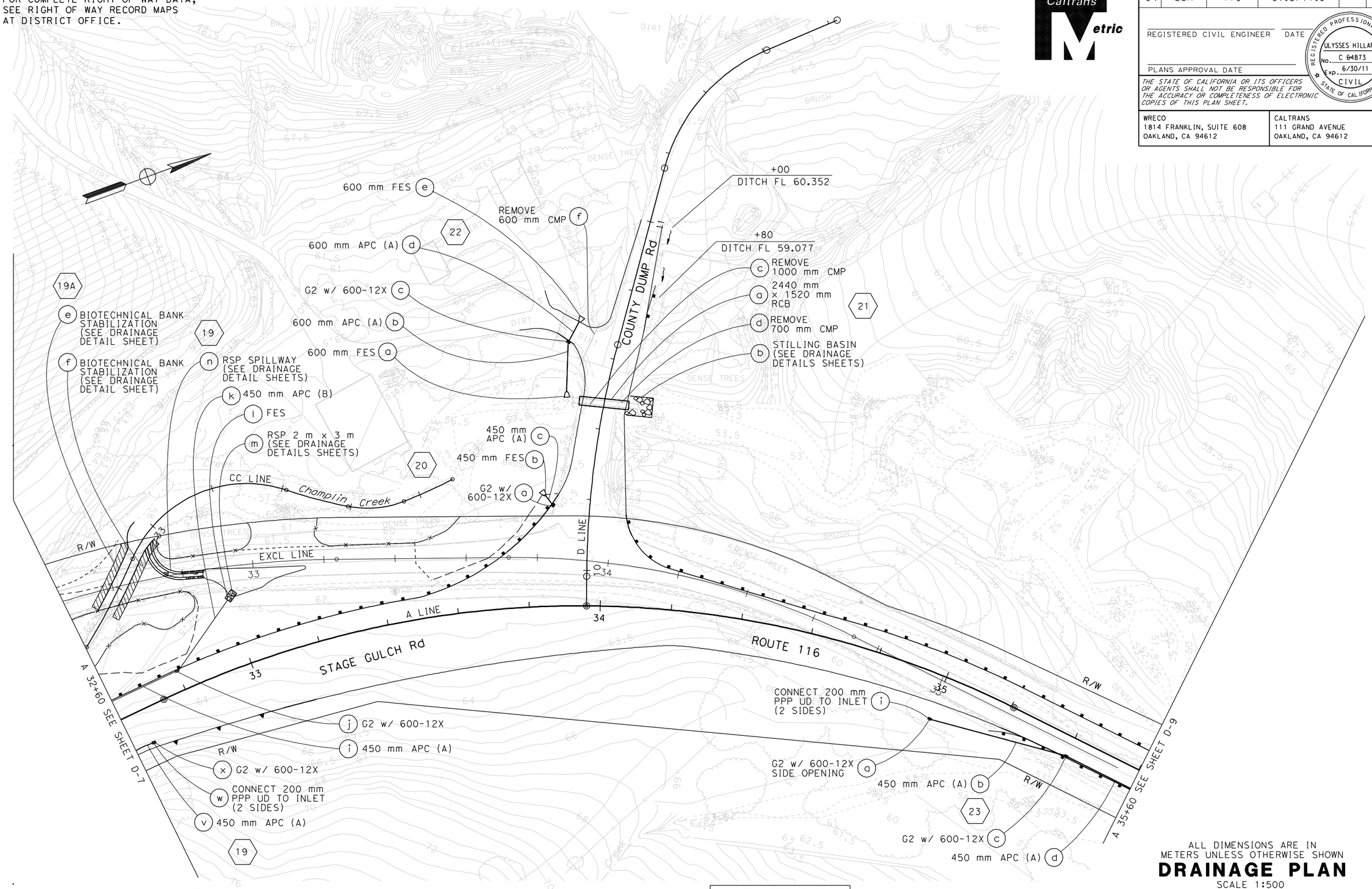

FOR NOTES, ABBREVIATIONS &/OR LEGEND, SEE SHEET D-1

THIS PLAN ACCURATE FOR DRAINAGE WORK ONLY

ALL DIMENSIONS ARE IN METERS UNLESS OTHERWISE SHOWN

DRAINAGE PLAN

SCALE 1:500

D-8

REVISED BY	DATE REVISED

CALCULATED-DESIGNED BY	CHECKED BY
IRENE LIU	ULYSSES HILLARD

CONSULTANT FUNCTIONAL SUPERVISOR: HAN-BIN LIANG

STATE OF CALIFORNIA - DEPARTMENT OF TRANSPORTATION

Caltrans

LAST REVISION 00-00-00

DATE PLOTTED => 12/10/2009
TIME PLOTTED => 2:54:50 PM

Dist	COUNTY	ROUTE	KILOMETER POST TOTAL PROJECT	SHEET No.	TOTAL SHEETS
04	Son	116	67.3/71.9		

REGISTERED CIVIL ENGINEER DATE

PLANS APPROVAL DATE

REGISTERED PROFESSIONAL ENGINEER ULYSSES HILLARD No. C 64873 Exp. 6/30/11 CIVIL STATE OF CALIFORNIA

THE STATE OF CALIFORNIA OR ITS OFFICERS OR AGENTS SHALL NOT BE RESPONSIBLE FOR THE ACCURACY OR COMPLETENESS OF ELECTRONIC COPIES OF THIS PLAN SHEET.

WRECO
1814 FRANKLIN, SUITE 608
OAKLAND, CA 94612

CALTRANS
111 GRAND AVENUE
OAKLAND, CA 94612

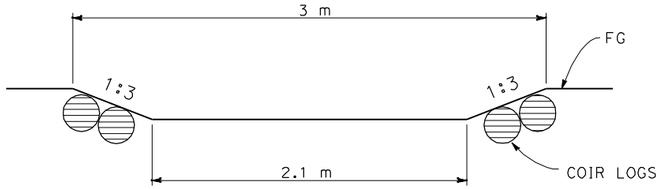

SECTION A-A

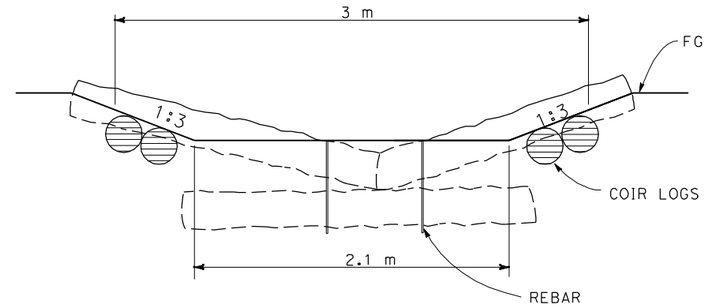

SECTION B-B

NOTES:

1. N EQUALS NUMBER OF STEPS PER SPILLWAY.

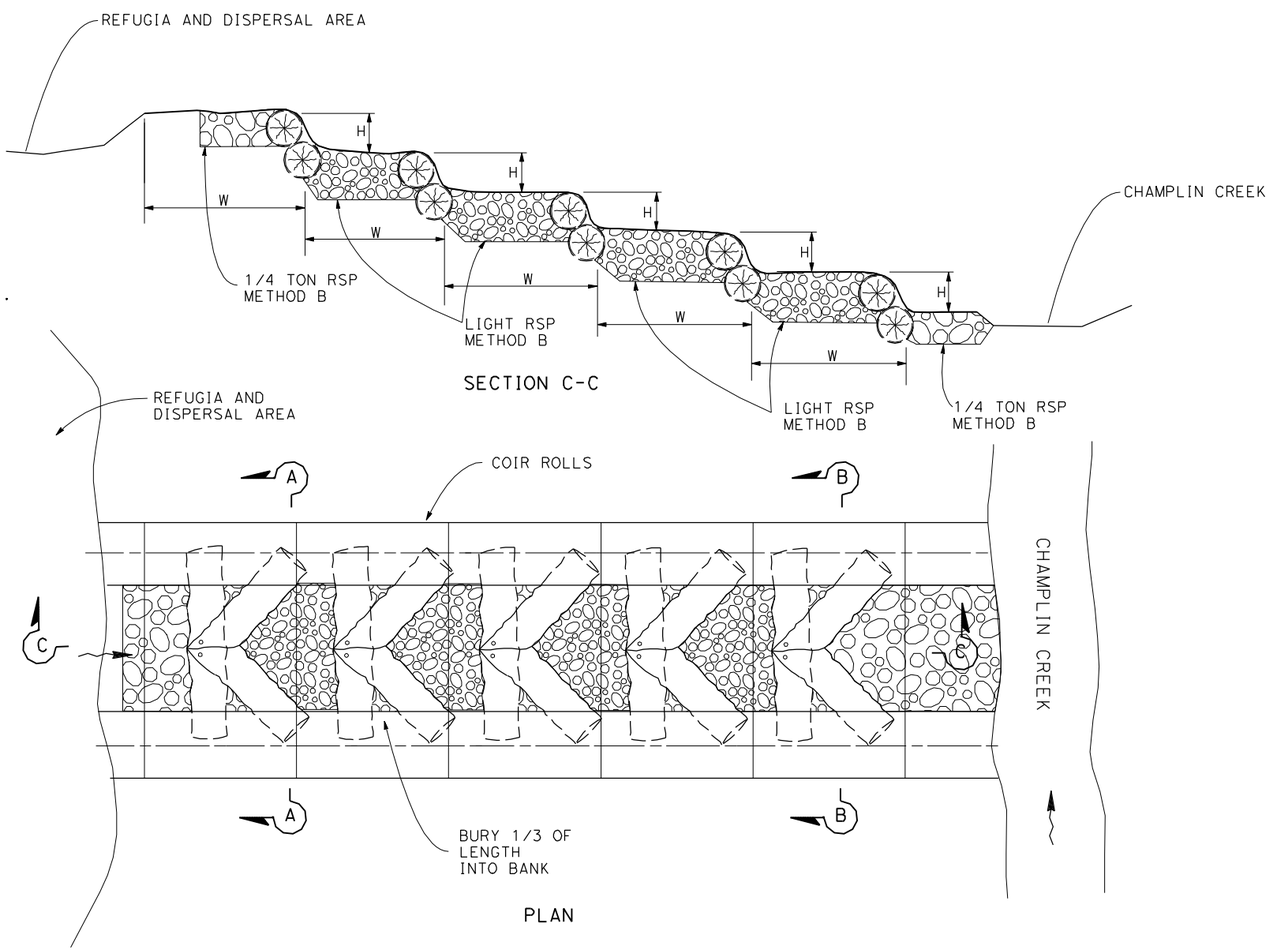

SYSTEM NUMBER	S (%)	H (m)	L (m)	W (m)	N (SEE NOTE 2)
18 I	2.5	0.10	7.8	2.6	2
19 V	5.1	0.20	20.0	3.33	5

SPILLWAY

DRAINAGE SYSTEM No. 18 I 19 V

ALL DIMENSIONS ARE IN METERS UNLESS OTHERWISE SHOWN

DRAINAGE DETAILS

NO SCALE

DD-5

STATE OF CALIFORNIA - DEPARTMENT OF TRANSPORTATION

Caltrans

CONSULTANT FUNCTIONAL SUPERVISOR: HAN-BIN LIANG

CALCULATED-DESIGNED BY: IRENE LIU

CHECKED BY: ULYSSES HILLARD

REVISED BY

DATE REVISED

LAST REVISION 00-00-00

DATE PLOTTED => 12/4/2009
TIME PLOTTED => 3:21:06 PM

Dist	COUNTY	ROUTE	KILOMETER POST TOTAL PROJECT	SHEET No.	TOTAL SHEETS
04	Son	116	67.3/71.9		

Charlotte A. Cashin 4-09-08
REGISTERED CIVIL ENGINEER DATE

PLANS APPROVAL DATE

REGISTERED PROFESSIONAL ENGINEER Charlotte A. Cashin No. 34417 Exp. 9-30-09 CIVIL STATE OF CALIFORNIA

THE STATE OF CALIFORNIA OR ITS OFFICERS OR AGENTS SHALL NOT BE RESPONSIBLE FOR THE ACCURACY OR COMPLETENESS OF ELECTRONIC COPIES OF THIS PLAN SHEET.

Caltrans Metric

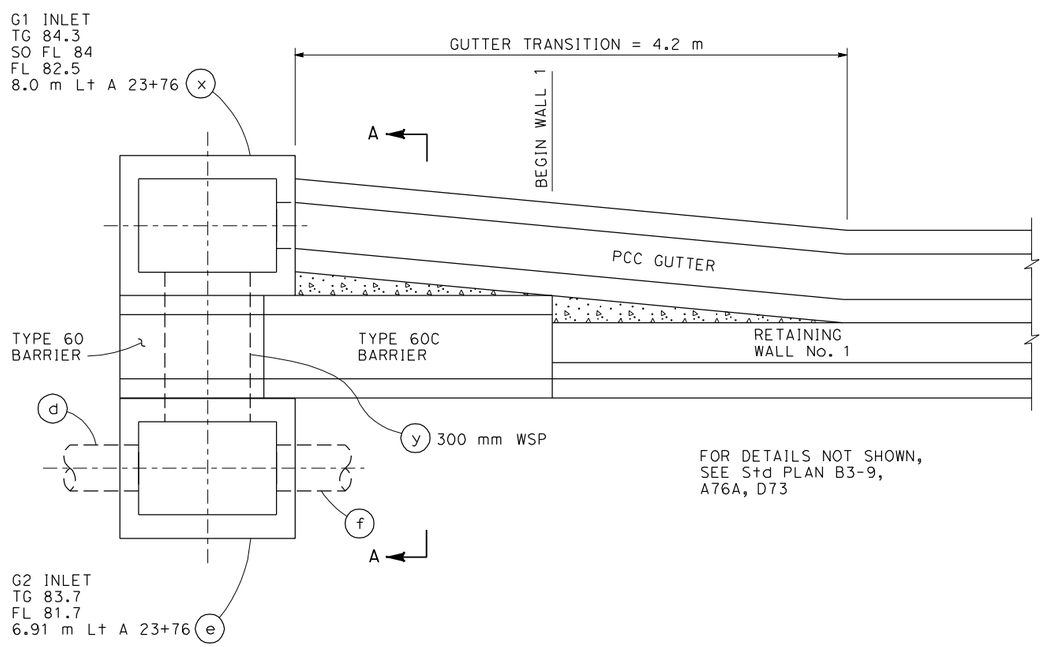

FOR DETAILS NOT SHOWN,
SEE Std PLAN B3-9,
A76A, D73

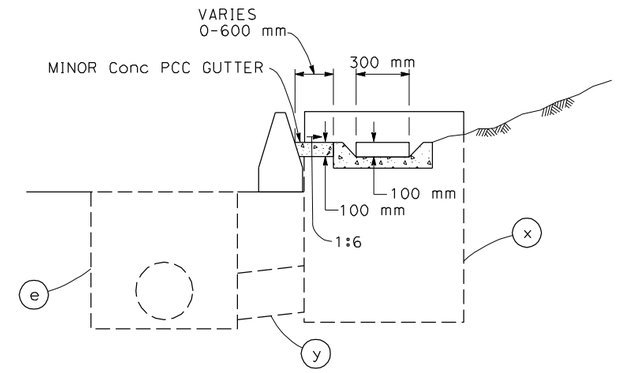

SECTION A-A

PCC GUTTER AT BEGINNING RETAINING WALL No. 1

(7)

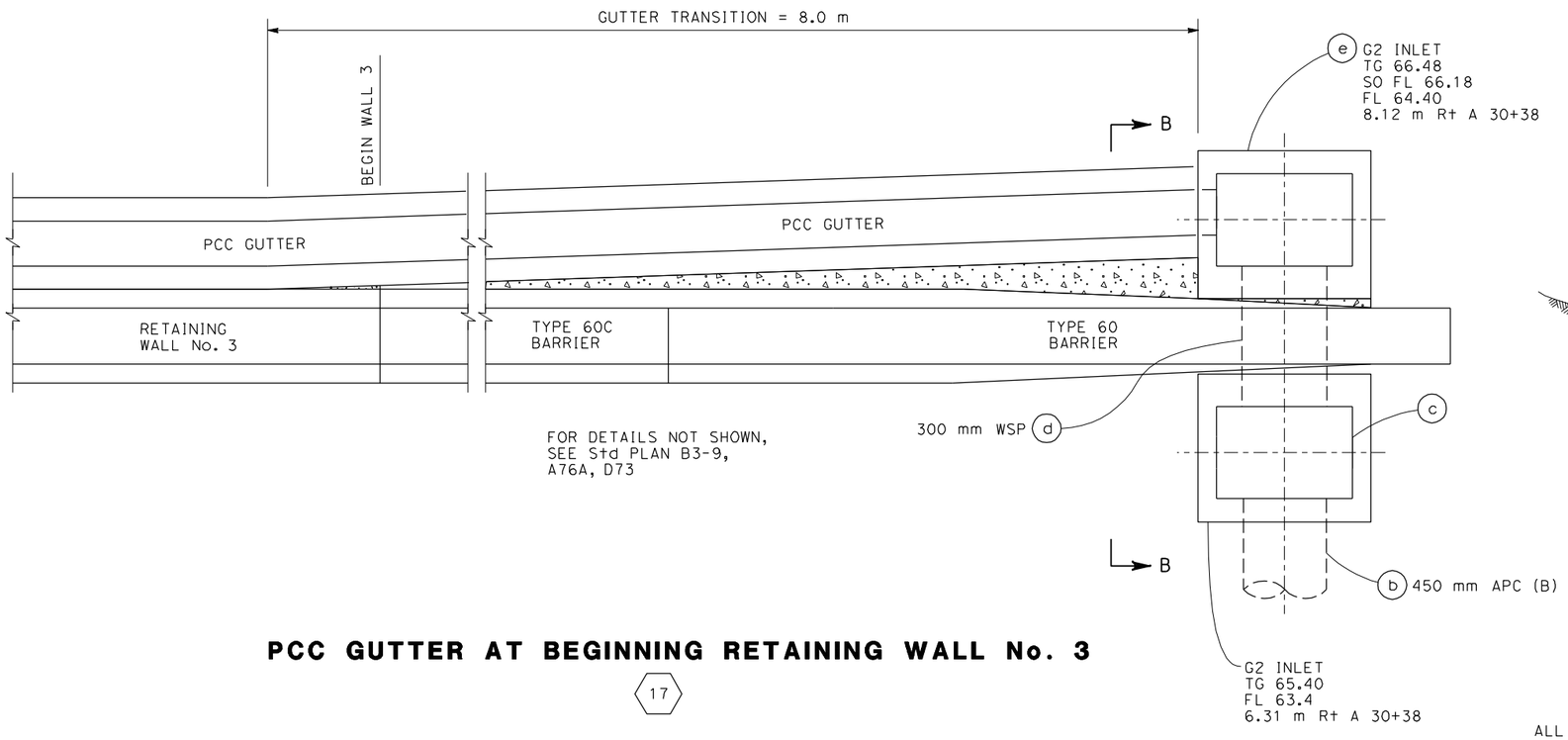

FOR DETAILS NOT SHOWN,
SEE Std PLAN B3-9,
A76A, D73

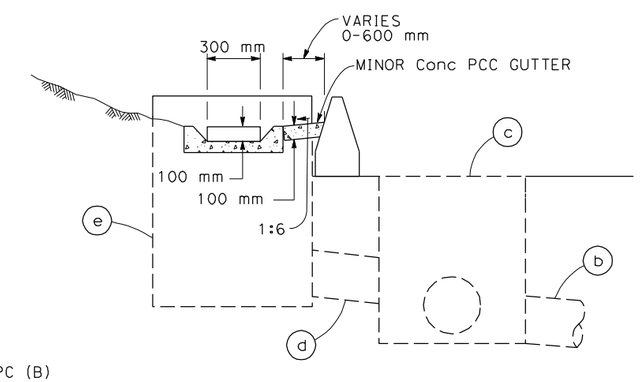

SECTION B-B

PCC GUTTER AT BEGINNING RETAINING WALL No. 3

(17)

ALL DIMENSIONS ARE IN
METERS UNLESS OTHERWISE SHOWN

DRAINAGE DETAILS

NO SCALE

DD-10

REVISED BY	MC	MARCUS CHAN	CALCULATED-DESIGNED BY
DATE REVISED	5/07	JASON R. PHOEN	CHECKED BY
FUNCTIONAL SUPERVISOR	JOSEPH E. PETERSON		

STATE OF CALIFORNIA - DEPARTMENT OF TRANSPORTATION
Caltrans
HYDRAULICS

LAST REVISION 07-01-08
DATE PLOTTED => 12/4/2009
TIME PLOTTED => 3:21:22 PM

Dist	COUNTY	ROUTE	KILOMETER POST TOTAL PROJECT	SHEET No.	TOTAL SHEETS
04	Son	116	67.3/71.9		

Charlotte A. Cashin 7-18-07
REGISTERED CIVIL ENGINEER DATE

PLANS APPROVAL DATE

REGISTERED PROFESSIONAL ENGINEER Charlotte A. Cashin No. 34417 Exp. 9-30-09 CIVIL STATE OF CALIFORNIA

THE STATE OF CALIFORNIA OR ITS OFFICERS OR AGENTS SHALL NOT BE RESPONSIBLE FOR THE ACCURACY OR COMPLETENESS OF ELECTRONIC COPIES OF THIS PLAN SHEET.

Caltrans Metric

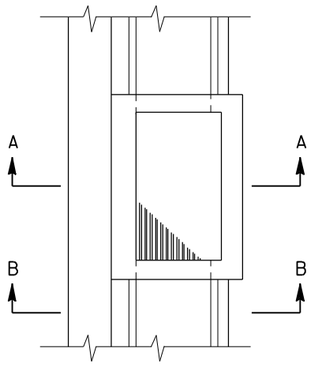

PLAN
MODIFIED GI INLET

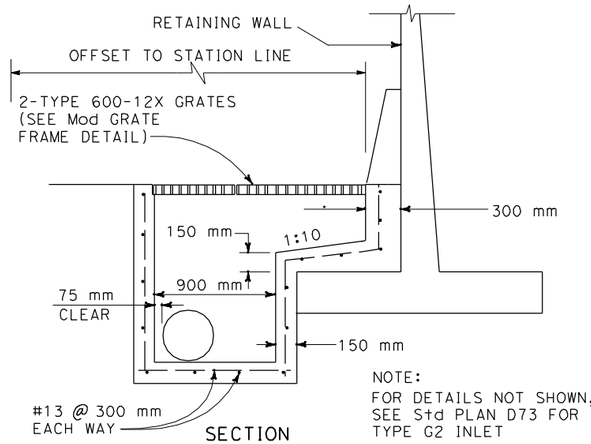

NOTE:
FOR DETAILS NOT SHOWN, SEE Std PLAN D73 FOR TYPE G2 INLET

SECTION
G2W INLET

23 25

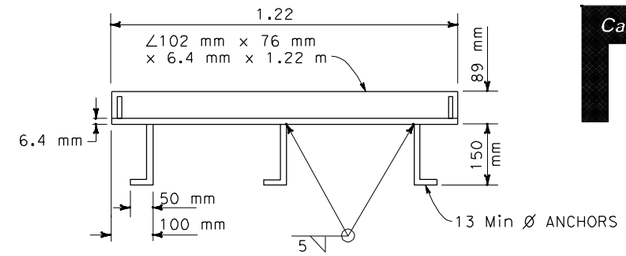

LONGITUDINAL SECTION
(THRU FRAME & GRATE)

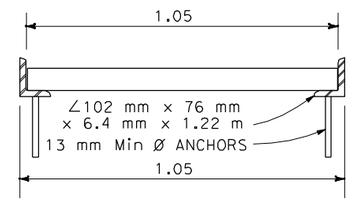

CROSS SECTION
(THRU FRAME)

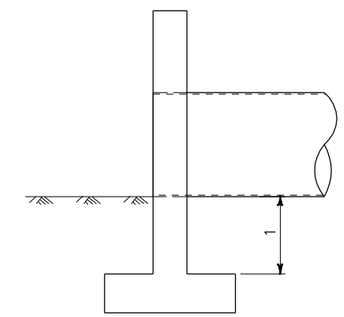

NOTE:
FOR DETAILS NOT SHOWN, SEE Std PLAN D89.

MODIFIED STRAIGHT HEADWALL

2 10

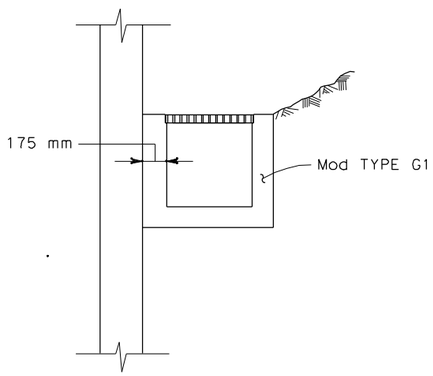

SECTION A-A

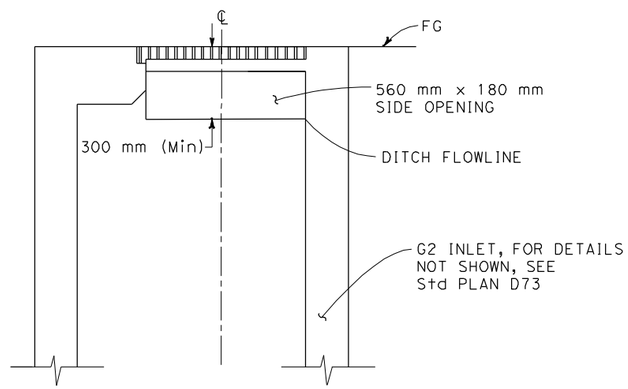

G2 WITH SIDE OPENING

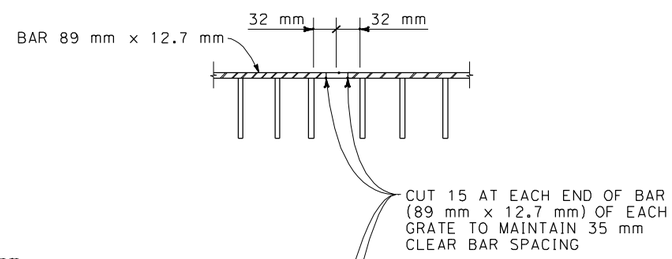

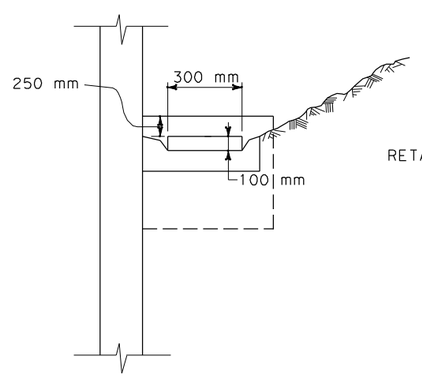

SECTION B-B

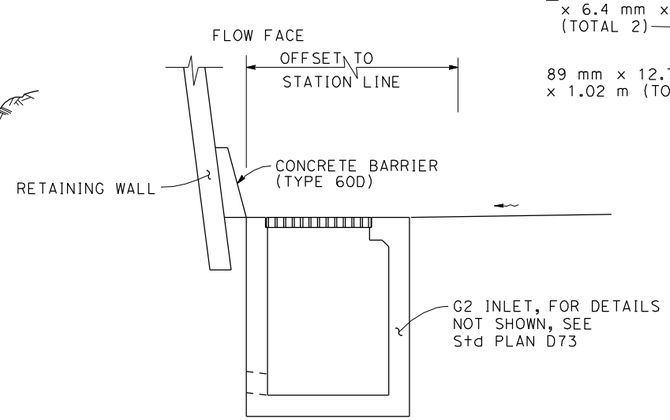

G2 INLET ADJACENT TO BARRIER (TYPICAL)

7 12 18 19

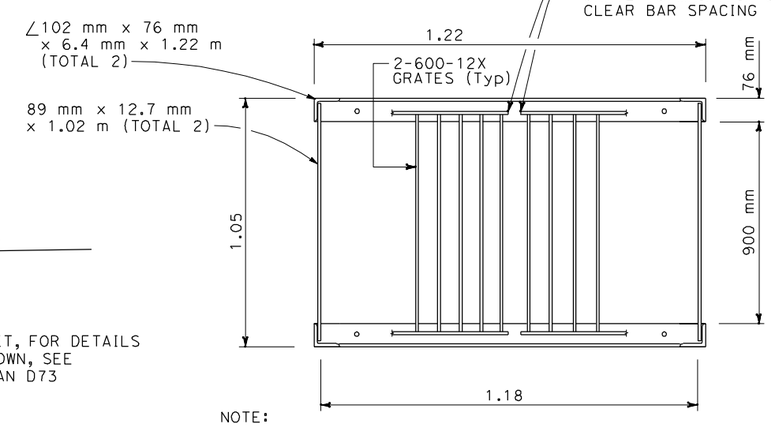

NOTE:
FOR FRAME AND GRATE INLET DETAIL NOT SHOWN, SEE Std PLAN D74B

MODIFIED GRATE FRAME DETAIL

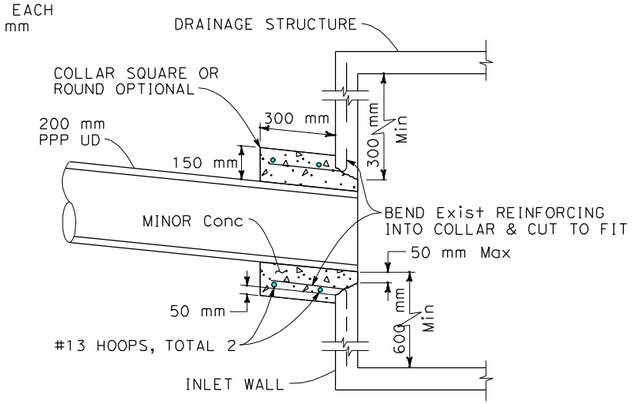

200 mm PERFORATED PLASTIC PIPE UNDERDRAIN CONNECTION TO DRAINAGE STRUCTURE

ALL DIMENSIONS ARE IN METERS UNLESS OTHERWISE SHOWN

DRAINAGE DETAILS

NO SCALE

DD-11

STATE OF CALIFORNIA - DEPARTMENT OF TRANSPORTATION
Caltrans **HYDRAULICS**

FUNCTIONAL SUPERVISOR: JOSEPH E. PETERSON
CALCULATED-DESIGNED BY: MARCUS CHAN
CHECKED BY: JASON R. PHOEN
REVISED BY: MC
DATE REVISED: 5/07

LAST REVISION 07-01-08
DATE PLOTTED => 12/4/2009
TIME PLOTTED => 3:21:25 PM

Dist	COUNTY	ROUTE	KILOMETER POST TOTAL PROJECT	SHEET No.	TOTAL SHEETS
04	Son	116	67.3/71.9		

Charlotte A. Cashin 7-18-07
REGISTERED CIVIL ENGINEER DATE

PLANS APPROVAL DATE

REGISTERED PROFESSIONAL ENGINEER Charlotte A. Cashin No. 34417 Exp. 9-30-09 CIVIL STATE OF CALIFORNIA

THE STATE OF CALIFORNIA OR ITS OFFICERS OR AGENTS SHALL NOT BE RESPONSIBLE FOR THE ACCURACY OR COMPLETENESS OF ELECTRONIC COPIES OF THIS PLAN SHEET.

Caltrans Metric

ROCK SLOPE PROTECTION WITH STRAIGHT MODIFIED HEADWALL

SYSTEM No.	STATION	W	L
		m	
2	16 m R+ 12+40	2.0	3.0
10	16.7 m R+ 27+20	4.6	3.0
14	8.0 m L+ 29+50	4.0	6.0

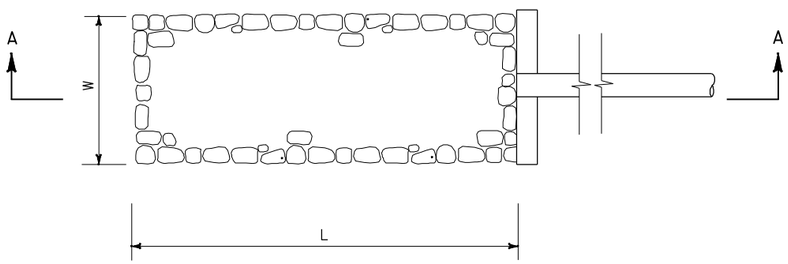

PLAN

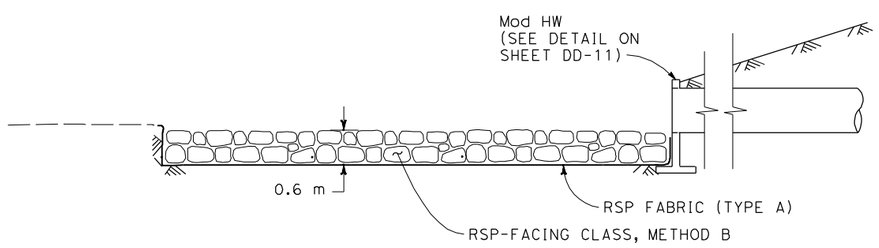

SECTION A-A

ROCK SLOPE PROTECTION WITH STRAIGHT OR MODIFIED HEADWALL

2 10 14

ROCK SLOPE PROTECTION WITH FLARED END SECTION

SYSTEM No.	STATION	W	L
		m	
1	20.5 m R+ 9+71	3.0	3.0
3	14.5 m R+ 12+97	2.0	3.0
4	10.3 m L+ 17+30	2.0	3.0
5	9.8 m L+ 19+50	2.0	3.0
7	21 m L+ 25+55	2.0	3.0
11	16 m L+ 27+14	2.0	3.0
15	12 m L+ 30+08	4.0	5.0
18	9 m L+ 31+01	2.0	3.0
19	13 m L+ 32+41	2.0	3.0
28	8.1 m L+ 49+80	2.0	3.0

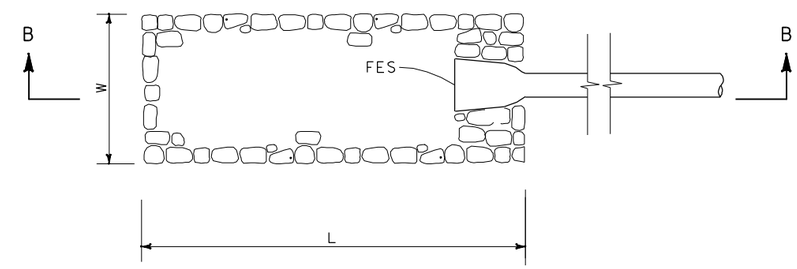

PLAN

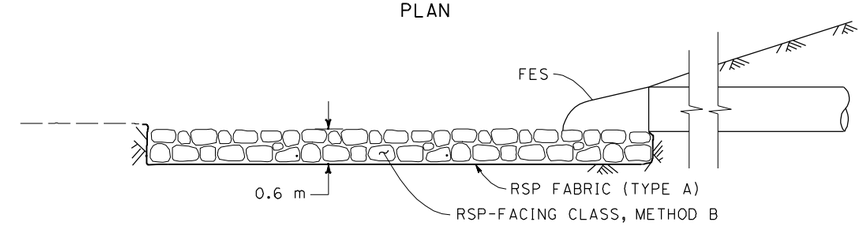

SECTION B-B

ROCK SLOPE PROTECTION WITH FLARED END SECTION

1 3 4 5 7 11 15 18 19 28

DRAINAGE DETAILS

NO SCALE

ALL DIMENSIONS ARE IN
METERS UNLESS OTHERWISE SHOWN

DD-12

REVISED BY	DATE REVISED
MC	5/07

MARCUS CHAN — JASON R. PHOEN
CALCULATED-DESIGNED BY — CHECKED BY
FUNCTIONAL SUPERVISOR — JOSEPH E. PETERSON

STATE OF CALIFORNIA - DEPARTMENT OF TRANSPORTATION
Caltrans
HYDRAULICS

LAST REVISION 07-01-08
DATE PLOTTED => 12/4/2009
TIME PLOTTED => 3:21:29 PM

Dist	COUNTY	ROUTE	KILOMETER POST TOTAL PROJECT	SHEET No.	TOTAL SHEETS
04	Son	116	67.3/71.9		

REGISTERED CIVIL ENGINEER DATE

PLANS APPROVAL DATE

REGISTERED PROFESSIONAL ENGINEER No. Exp. CIVIL STATE OF CALIFORNIA

THE STATE OF CALIFORNIA OR ITS OFFICERS OR AGENTS SHALL NOT BE RESPONSIBLE FOR THE ACCURACY OR COMPLETENESS OF ELECTRONIC COPIES OF THIS PLAN SHEET.

WRECO
1814 FRANKLIN, SUITE 608
OAKLAND, CA 94612

CALTRANS
111 GRAND AVENUE
OAKLAND, CA 94612

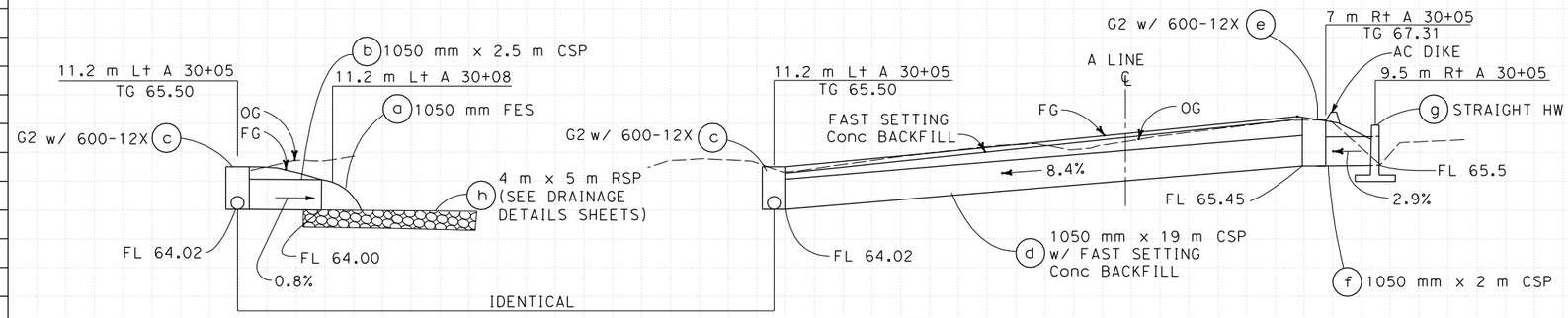

DRAINAGE SYSTEM No. 15

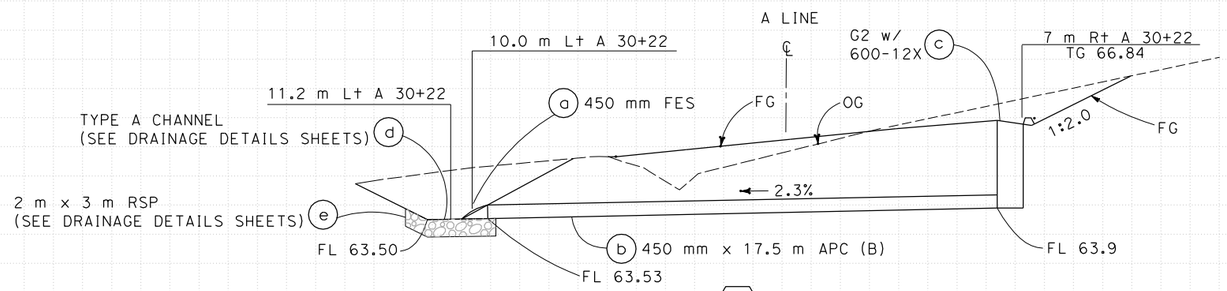

DRAINAGE SYSTEM No. 16

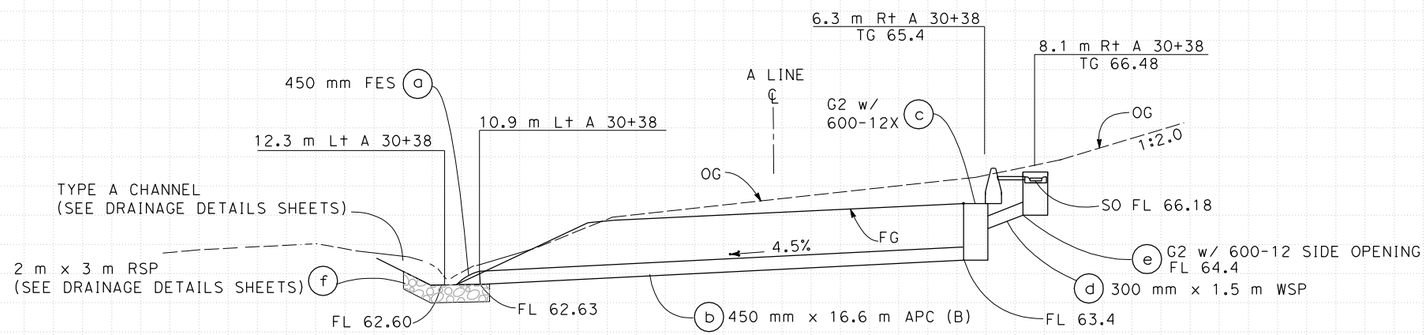

DRAINAGE SYSTEM No. 17

ALL DIMENSIONS ARE IN
METERS UNLESS OTHERWISE SHOWN

DRAINAGE PROFILES

SCALE HORIZ 1:100
VERT 1:100

DP-3

Caltrans Metric

REVISED BY | DATE REVISED
IRENE LIU | ULYSSES HILLARD
CALCULATED-DESIGNED BY | CHECKED BY
CONSULTANT FUNCTIONAL SUPERVISOR | HAN-BIN LIANG
STATE OF CALIFORNIA - DEPARTMENT OF TRANSPORTATION
Caltrans

Station
m³ Exc
Emb

LAST REVISION 00-00-00
DATE PLOTTED => 12/4/2009
TIME PLOTTED => 3:25:14 PM

Dist	COUNTY	ROUTE	KILOMETER POST TOTAL PROJECT	SHEET No.	TOTAL SHEETS
04	Son	116	67.3/71.9		

REGISTERED CIVIL ENGINEER DATE

PLANS APPROVAL DATE

REGISTERED PROFESSIONAL ENGINEER No. Exp. CIVIL STATE OF CALIFORNIA

THE STATE OF CALIFORNIA OR ITS OFFICERS OR AGENTS SHALL NOT BE RESPONSIBLE FOR THE ACCURACY OR COMPLETENESS OF ELECTRONIC COPIES OF THIS PLAN SHEET.

WRECO
1814 FRANKLIN, SUITE 608
OAKLAND, CA 94612

CALTRANS
111 GRAND AVENUE
OAKLAND, CA 94612

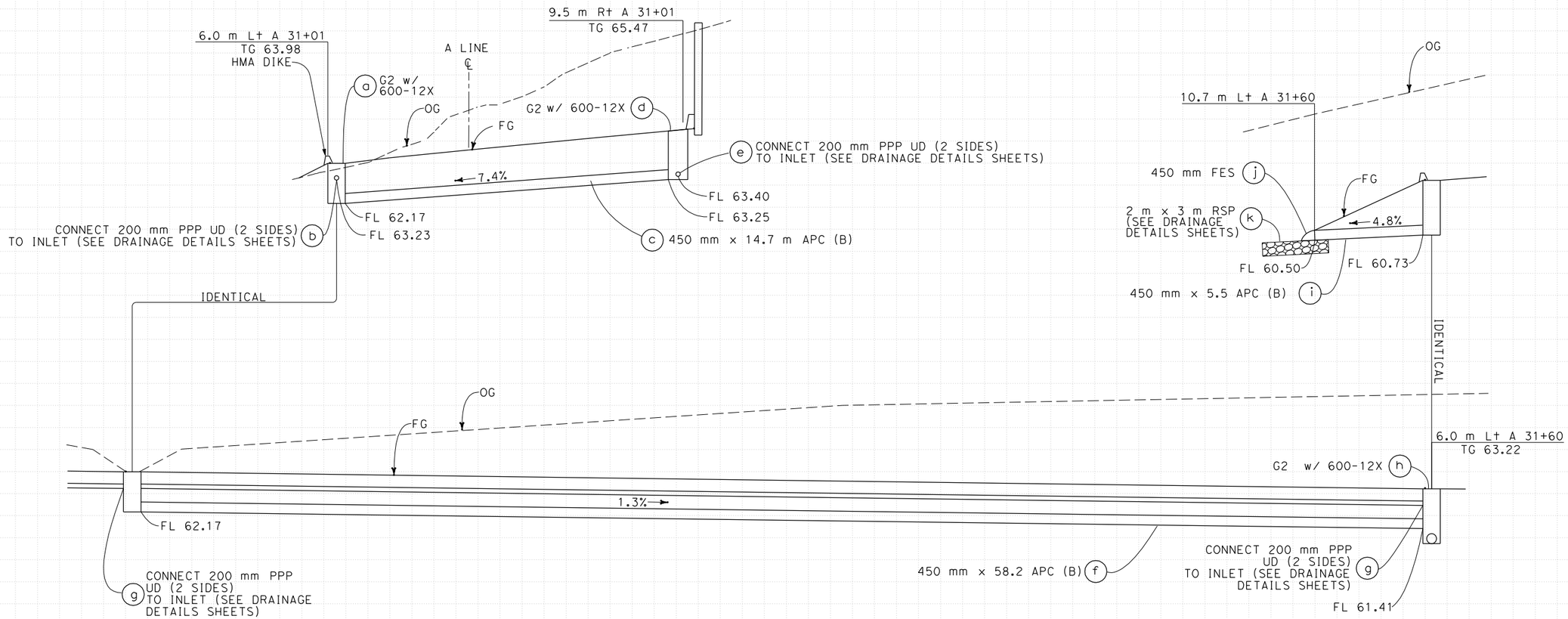

DRAINAGE SYSTEM No. 18

ALL DIMENSIONS ARE IN METERS UNLESS OTHERWISE SHOWN

DRAINAGE PROFILES

SCALE HORIZ 1:100
VERT 1:100

DP-4

Station	
m^3	Exc
	Emb

REVISED BY | DATE REVISED

IRENE LIU | ULYSSES HILLARD

CALCULATED-DESIGNED BY | CHECKED BY

CONSULTANT FUNCTIONAL SUPERVISOR | HAN-BIN LIANG

STATE OF CALIFORNIA - DEPARTMENT OF TRANSPORTATION

Caltrans

LAST REVISION 00-00-00 | DATE PLOTTED => 12/4/2009 | TIME PLOTTED => 3:25:18 PM

BORDER LAST REVISED 3/1/2007

RELATIVE BORDER SCALE IS IN MILLIMETERS 0 20 40 60 80

USERNAME => irene_liu
DGN FILE => ...\dwg\site 1-6\DP\DP-04.dgn

CU 04261

EA 283811

Dist	COUNTY	ROUTE	KILOMETER POST TOTAL PROJECT	SHEET No.	TOTAL SHEETS
04	Son	116	67.3/71.9		

REGISTERED CIVIL ENGINEER DATE

PLANS APPROVAL DATE

REGISTERED PROFESSIONAL ENGINEER No. Exp. CIVIL STATE OF CALIFORNIA

THE STATE OF CALIFORNIA OR ITS OFFICERS OR AGENTS SHALL NOT BE RESPONSIBLE FOR THE ACCURACY OR COMPLETENESS OF ELECTRONIC COPIES OF THIS PLAN SHEET.

WRECO
1814 FRANKLIN, SUITE 608
OAKLAND, CA 94612

CALTRANS
111 GRAND AVENUE
OAKLAND, CA 94612

Caltrans Metric

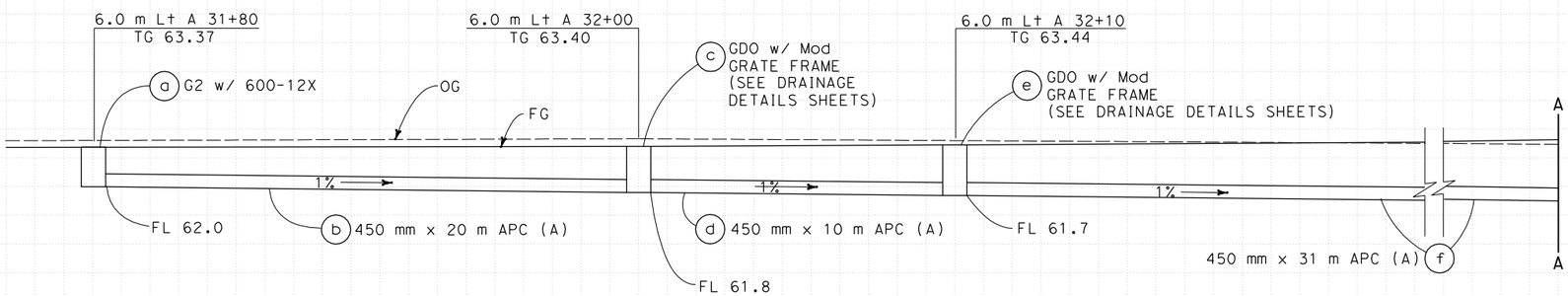

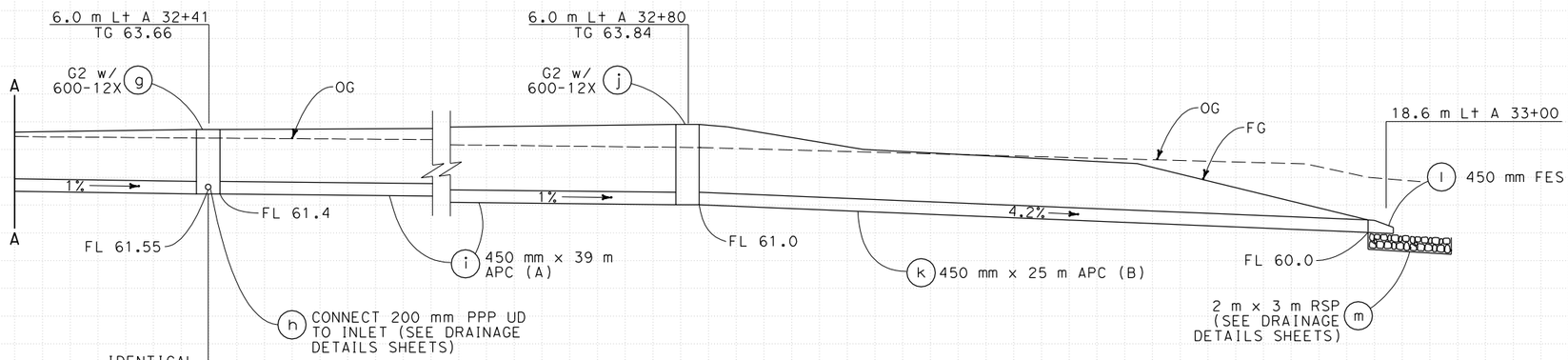

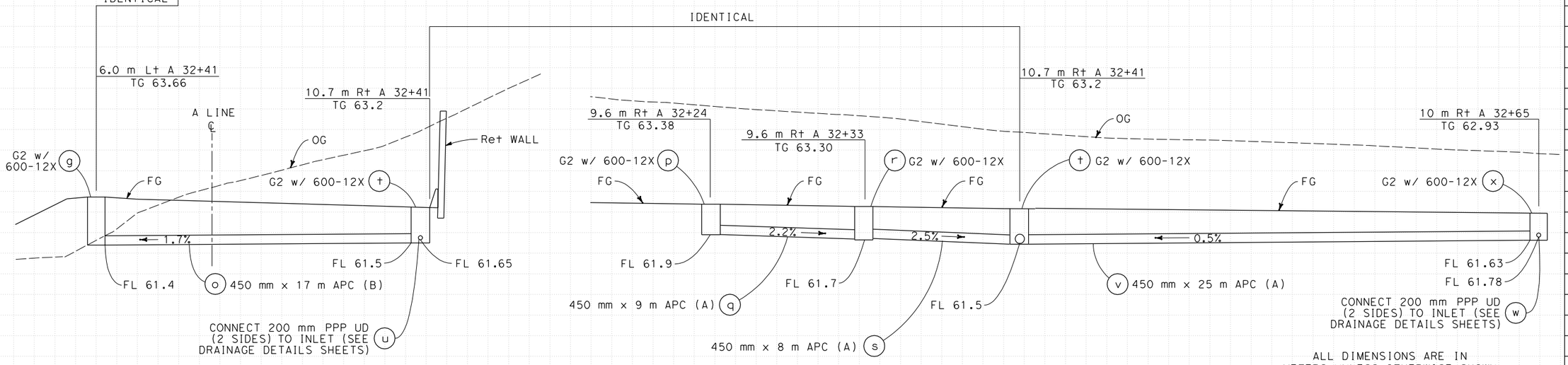

ALL DIMENSIONS ARE IN METERS UNLESS OTHERWISE SHOWN

DRAINAGE PROFILES

SCALE HORIZ 1:100
VERT 1:100

DRAINAGE SYSTEM No. 19

DP-5

REVISED BY	DATE REVISED
IRENE LIU	ULYSSES HILLARD
CALCULATED-DESIGNED BY	CHECKED BY
CONSULTANT FUNCTIONAL SUPERVISOR	HAN-BIN LIANG

STATE OF CALIFORNIA - DEPARTMENT OF TRANSPORTATION

Caltrans

Station	
m³	Exc
	Emb

LAST REVISION 00-00-00

DATE PLOTTED => 12/4/2009
TIME PLOTTED => 3:25:21 PM

Dist	COUNTY	ROUTE	KILOMETER POST TOTAL PROJECT	SHEET No.	TOTAL SHEETS
04	Son	116	67.3/71.9		

REGISTERED CIVIL ENGINEER DATE

PLANS APPROVAL DATE

REGISTERED PROFESSIONAL ENGINEER ULYSSES HILLARD No. C 64873 Exp. 6/30/11 CIVIL STATE OF CALIFORNIA

THE STATE OF CALIFORNIA OR ITS OFFICERS OR AGENTS SHALL NOT BE RESPONSIBLE FOR THE ACCURACY OR COMPLETENESS OF ELECTRONIC COPIES OF THIS PLAN SHEET.

WRECO
1814 FRANKLIN, SUITE 608
OAKLAND, CA 94612

CALTRANS
111 GRAND AVENUE
OAKLAND, CA 94612

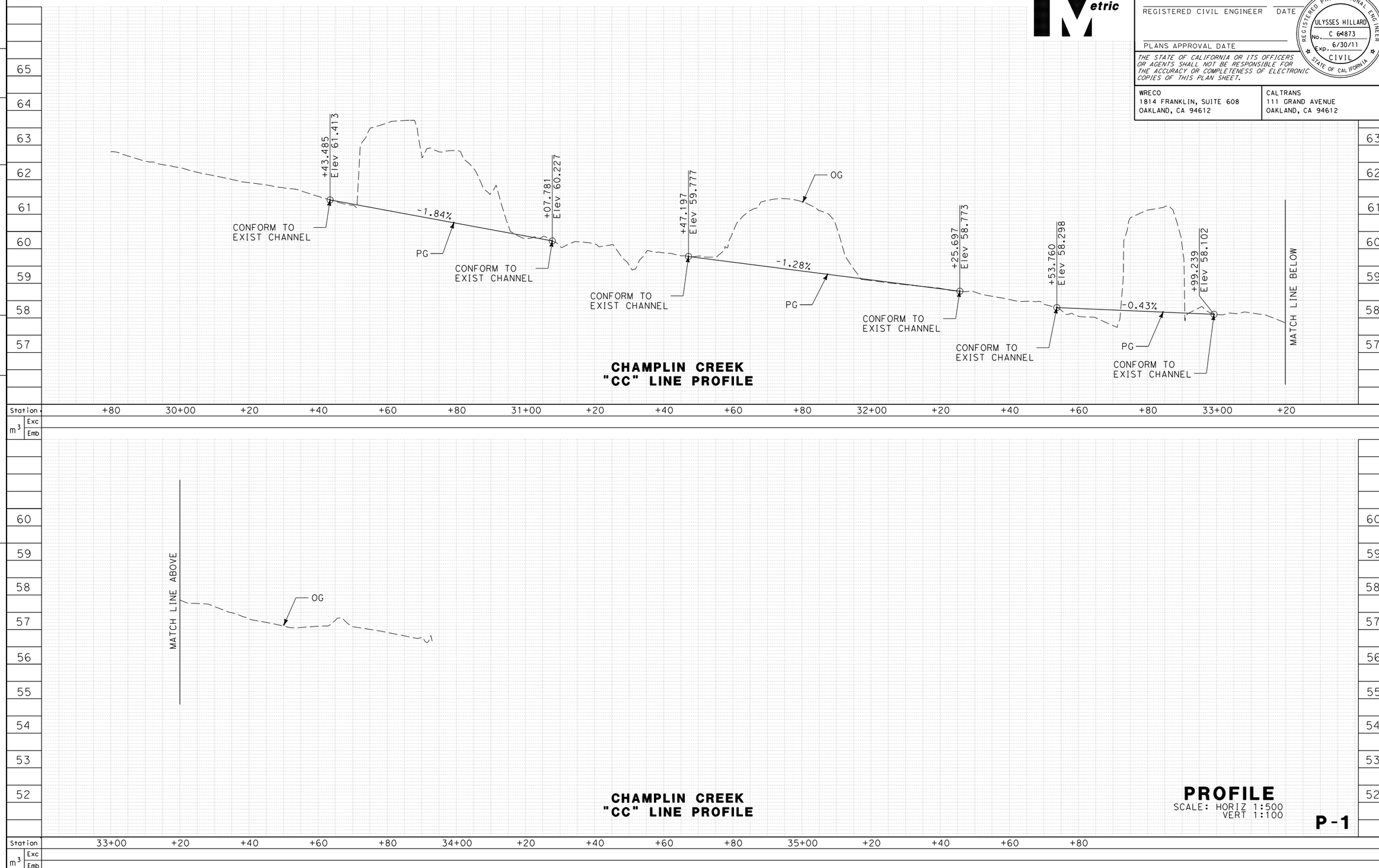

CHAMPLIN CREEK
"CC" LINE PROFILE

CHAMPLIN CREEK
"CC" LINE PROFILE

PROFILE
SCALE: HORIZ 1:500
VERT 1:100

P-1

Caltrans Metric

STATE OF CALIFORNIA - DEPARTMENT OF TRANSPORTATION
Caltrans

CONSULTANT FUNCTIONAL SUPERVISOR: HAN-BIN LIANG

CALCULATED-DESIGNED BY: IRENE LIU
CHECKED BY: ULYSSES HILLARD

REVISED BY
DATE REVISED

LAST REVISION 00-00-00
DATE PLOTTED => 12/3/2009
TIME PLOTTED => 11:07:57 PM

Dist	COUNTY	ROUTE	KILOMETER POST TOTAL PROJECT	SHEET No.	TOTAL SHEETS
04	Son	116	67.3/71.9		

REGISTERED CIVIL ENGINEER DATE

PLANS APPROVAL DATE

REGISTERED PROFESSIONAL ENGINEER ULYSSES HILLARD No. C 64873 Exp. 6/30/11 CIVIL STATE OF CALIFORNIA

THE STATE OF CALIFORNIA OR ITS OFFICERS OR AGENTS SHALL NOT BE RESPONSIBLE FOR THE ACCURACY OR COMPLETENESS OF ELECTRONIC COPIES OF THIS PLAN SHEET.

WRECO
1814 FRANKLIN, SUITE 608
OAKLAND, CA 94612

CALTRANS
111 GRAND AVENUE
OAKLAND, CA 94612

NOTES:

1. WILLOW BRANCHES SHALL BE 3 m TO 3.7 m LONG, AND PLACED SUCH THAT THE BUTT ENDS CONTACT THE NATIVE SOIL AND THE TIPS PROTRUDE FROM THE FG 150 mm Min.
2. LAYER CONSTRUCTION SHALL BEGIN AT THE BASE OF THE SLOPE AND PROCEED UPWARD.
3. THE BRUSHLAYERS SHALL BE PLACED 10 TO 20 DEGREES OFF HORIZONTAL.
4. LIVE BRANCHES ARE PLACED IN A CRISSCROSS OR OVERLAPPING PATTERN WITH GROWING TIPS FACING THE OUTSIDE FACE OF THE SLOPE.
5. BACKFILL SHALL BE PLACED ON TOP OF THE BRANCHES AND COMPACTED.

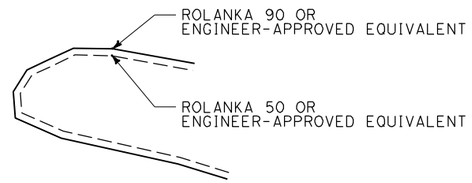

DETAIL A

TABLE 1

DRAINAGE SYSTEM	LOCATION	AVERAGE BANK HEIGHT (m)	AVERAGE NUMBER OF SOIL LIFT*
19A a	Lt "CC" 30+44 TO "CC" 30+60	3.0	6
19A b	Rt "CC" 30+44 TO "CC" 30+76.70	0.3	1
19A c	Rt "CC" 30+94 TO "CC" 31+07.78	2.2	6
19A d	Lt "CC" 31+65 TO "CC" 31+94.20	1.6	5
19A e	Lt "CC" 32+72 TO "CC" 32+92.49	0.9	3
19A f	Rt "CC" 32+72 TO "CC" 32+97	0.6	2

* MAXIMUM 6 SOIL LIFTS ABOVE GROUND, REGARDLESS OF BANK HEIGHT.

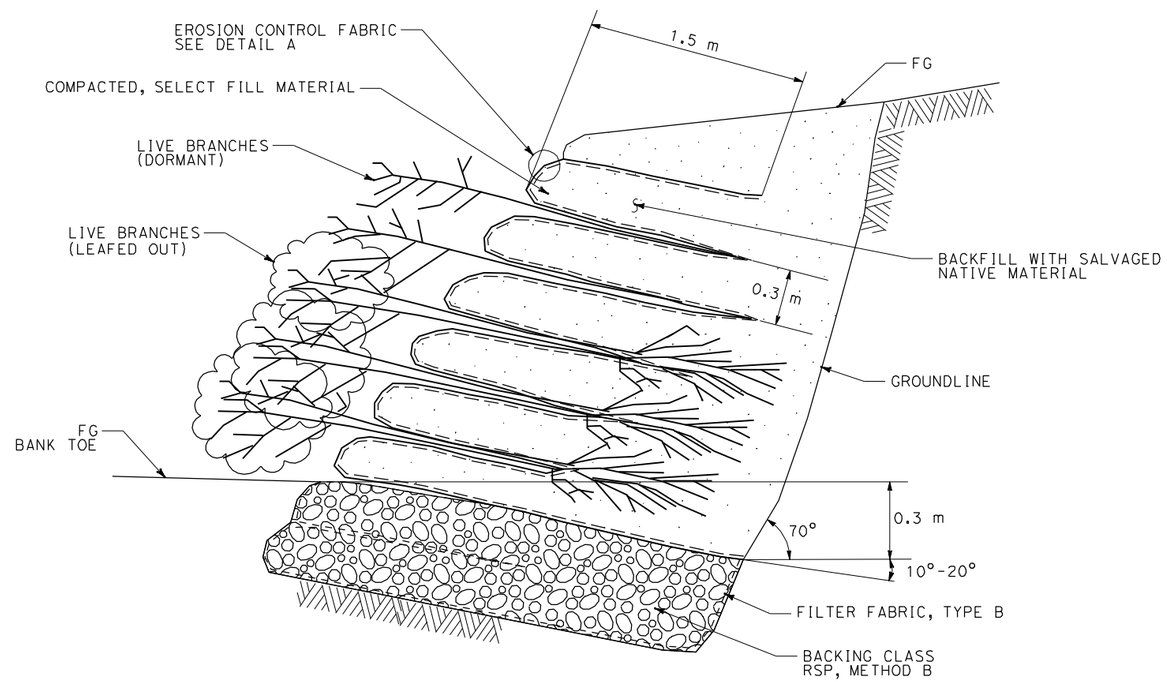

ELEVATION

BIOTECHNICAL BANK STABILIZATION, BRUSH LAYERING

DRAINAGE DETAILS

NO SCALE

ALL DIMENSIONS ARE IN
METERS UNLESS OTHERWISE SHOWN

DD-1

STATE OF CALIFORNIA - DEPARTMENT OF TRANSPORTATION
Caltrans

CONSULTANT FUNCTIONAL SUPERVISOR: HAN-BIN LIANG
CALCULATED-DESIGNED BY: IRENE LIU
CHECKED BY: ULYSSES HILLARD
REVISED BY
DATE REVISED

LAST REVISION 00-00-00
DATE PLOTTED => 12/10/2009
TIME PLOTTED => 2:57:19 PM

Dist	COUNTY	ROUTE	KILOMETER POST TOTAL PROJECT	SHEET No.	TOTAL SHEETS
04	Son	116	67.3/71.9		

REGISTERED CIVIL ENGINEER 7-24-07 DATE

PLANS APPROVAL DATE

REGISTERED PROFESSIONAL ENGINEER Jason R. Phoen No. 57553 Exp. 12-31-09 CIVIL STATE OF CALIFORNIA

THE STATE OF CALIFORNIA OR ITS OFFICERS OR AGENTS SHALL NOT BE RESPONSIBLE FOR THE ACCURACY OR COMPLETENESS OF ELECTRONIC COPIES OF THIS PLAN SHEET.

Caltrans Metric

FOR COMPLETE RIGHT OF WAY DATA, SEE RIGHT OF WAY RECORD MAPS AT DISTRICT OFFICE.

CURVE DATA

No.	R	Δ	T	L	N-COORDINATE	E-COORDINATE
8	260.000	72° 23' 59.900''	190.291	328.541	563632.703	1955380.968

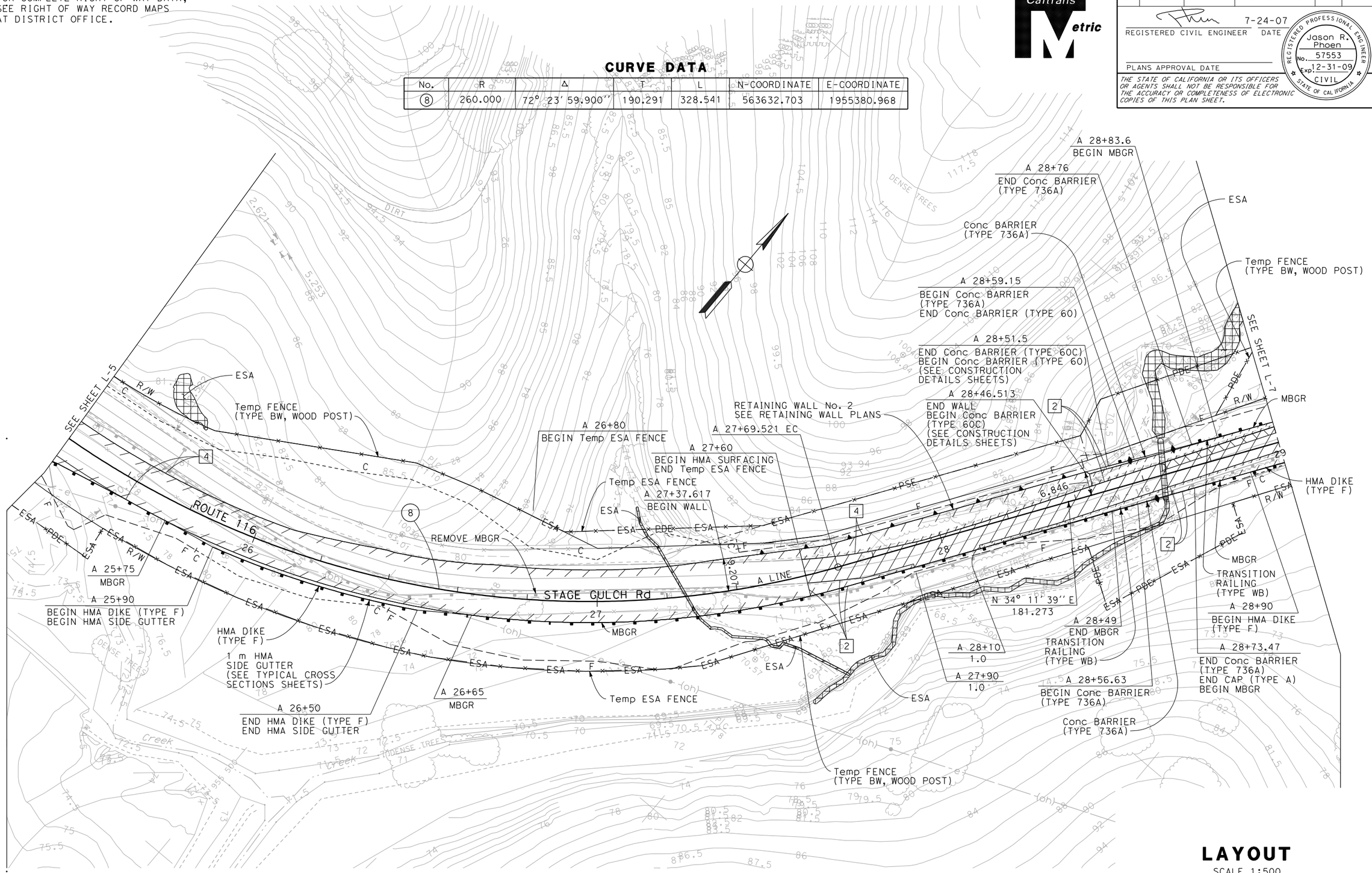

FOR NOTES, ABBREVIATIONS &/OR LEGEND, SEE SHEET L-1

ALL DIMENSIONS ARE IN METERS UNLESS OTHERWISE SHOWN

LAYOUT

SCALE 1:500

L-6

JRP	5/07	JASON R. PHOEN	EMARNAN PONGPAIROJ
REVISED BY	DATE REVISED	CALCULATED-DESIGNED BY	CHECKED BY

FUNCTIONAL SUPERVISOR: STEWART LEE

STATE OF CALIFORNIA - DEPARTMENT OF TRANSPORTATION

Caltrans DESIGN

LAST REVISION 07-09-08 | DATE PLOTTED => 12/4/2009 | TIME PLOTTED => 3:17:25 PM

BORDER LAST REVISED 3/1/2007 | RELATIVE BORDER SCALE IS IN MILLIMETERS 0 20 40 60 80 | USERNAME => irene_liu | DGN FILE => ...\dwg\site 1-6\L-06_CT.dgn | CU 04261 | EA 283811

Dist	COUNTY	ROUTE	KILOMETER POST TOTAL PROJECT	SHEET No.	TOTAL SHEETS
04	Son	116	67.3/71.9		

LICENSED LANDSCAPE ARCHITECT

PLANS APPROVAL DATE

LICENSED LANDSCAPE ARCHITECT — ALEXANDER K. MCDONALD No. 4382 — Signature — Renewal Date — Date — STATE OF CALIFORNIA

THE STATE OF CALIFORNIA OR ITS OFFICERS OR AGENTS SHALL NOT BE RESPONSIBLE FOR THE ACCURACY OR COMPLETENESS OF ELECTRONIC COPIES OF THIS PLAN SHEET.

Caltrans Metric

FOR COMPLETE RIGHT OF WAY AND ACCURATE ACCESS DATA, SEE RIGHT OF WAY RECORD MAPS AT DISTRICT OFFICE.

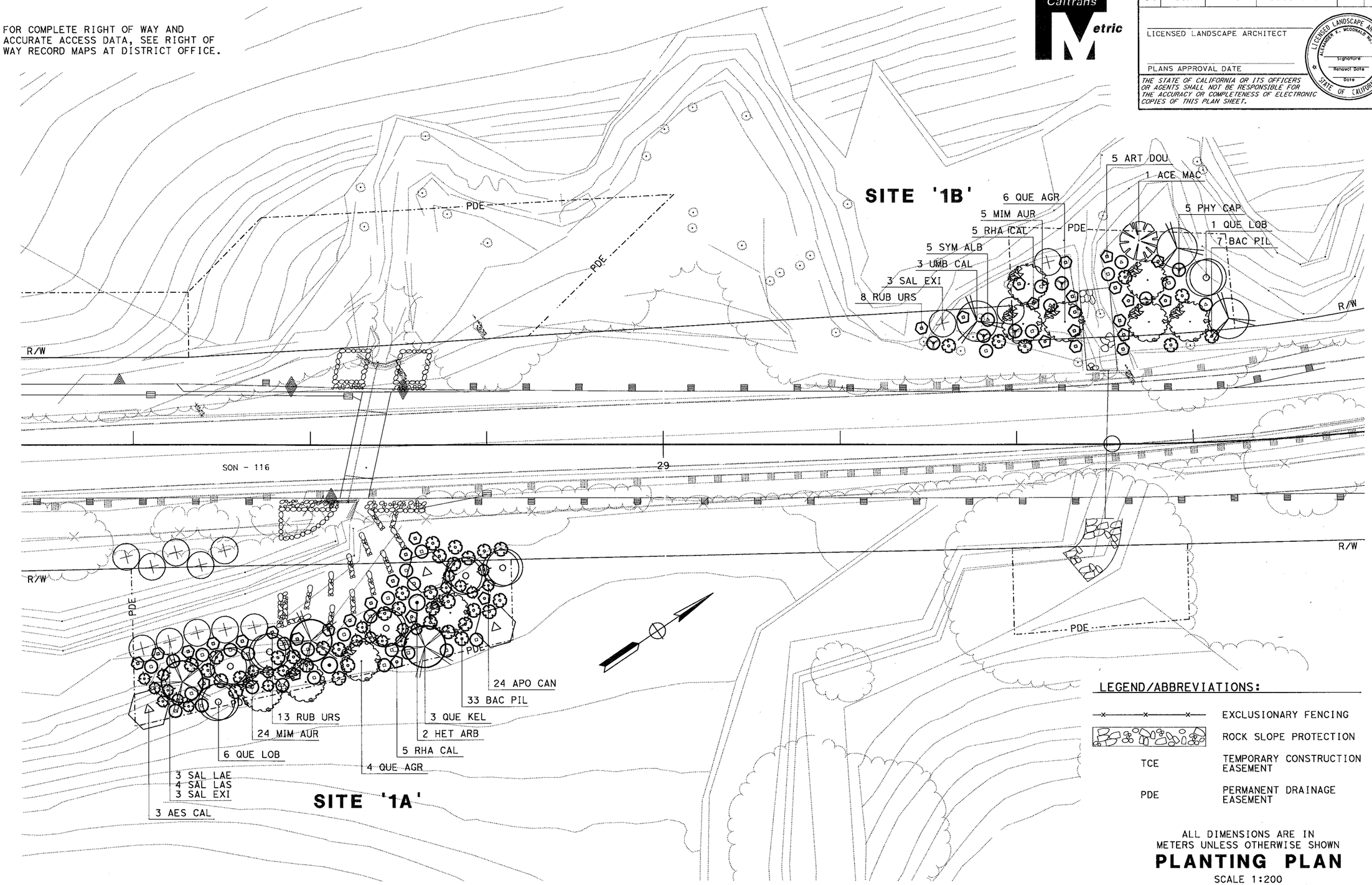

LEGEND/ABBREVIATIONS:

—×—×—×—	EXCLUSIONARY FENCING
	ROCK SLOPE PROTECTION
TCE	TEMPORARY CONSTRUCTION EASEMENT
PDE	PERMANENT DRAINAGE EASEMENT

ALL DIMENSIONS ARE IN METERS UNLESS OTHERWISE SHOWN

PLANTING PLAN

SCALE 1:200

SITE 1A & 1B

THIS SHEET ACCURATE FOR HIGHWAY PLANTING WORK ONLY.

STATE OF CALIFORNIA - DEPARTMENT OF TRANSPORTATION

Caltrans WATER QUALITY

SENIOR LANDSCAPE ARCHITECT: DAVE W. YAM

CALCULATED-DESIGNED BY: Alex McDonald

CHECKED BY: Jennifer Egawa

REVISED BY

DATE REVISED

LAST REVISION 00-00-00

DATE PLOTTED => 03-DEC-2009

TIME PLOTTED => 14:12

Dist	COUNTY	ROUTE	KILOMETER POST TOTAL PROJECT	SHEET No.	TOTAL SHEETS
04	Son	116	67.3/71.9		

REGISTERED CIVIL ENGINEER DATE

PLANS APPROVAL DATE

REGISTERED PROFESSIONAL ENGINEER ULYSSES HILLARD No. C 64873 Exp. 6/30/11 CIVIL STATE OF CALIFORNIA

THE STATE OF CALIFORNIA OR ITS OFFICERS OR AGENTS SHALL NOT BE RESPONSIBLE FOR THE ACCURACY OR COMPLETENESS OF ELECTRONIC COPIES OF THIS PLAN SHEET.

WRECO
1814 FRANKLIN, SUITE 608
OAKLAND, CA 94612

CALTRANS
111 GRAND AVENUE
OAKLAND, CA 94612

FOR COMPLETE RIGHT OF WAY DATA,
SEE RIGHT OF WAY RECORD MAPS
AT DISTRICT OFFICE.

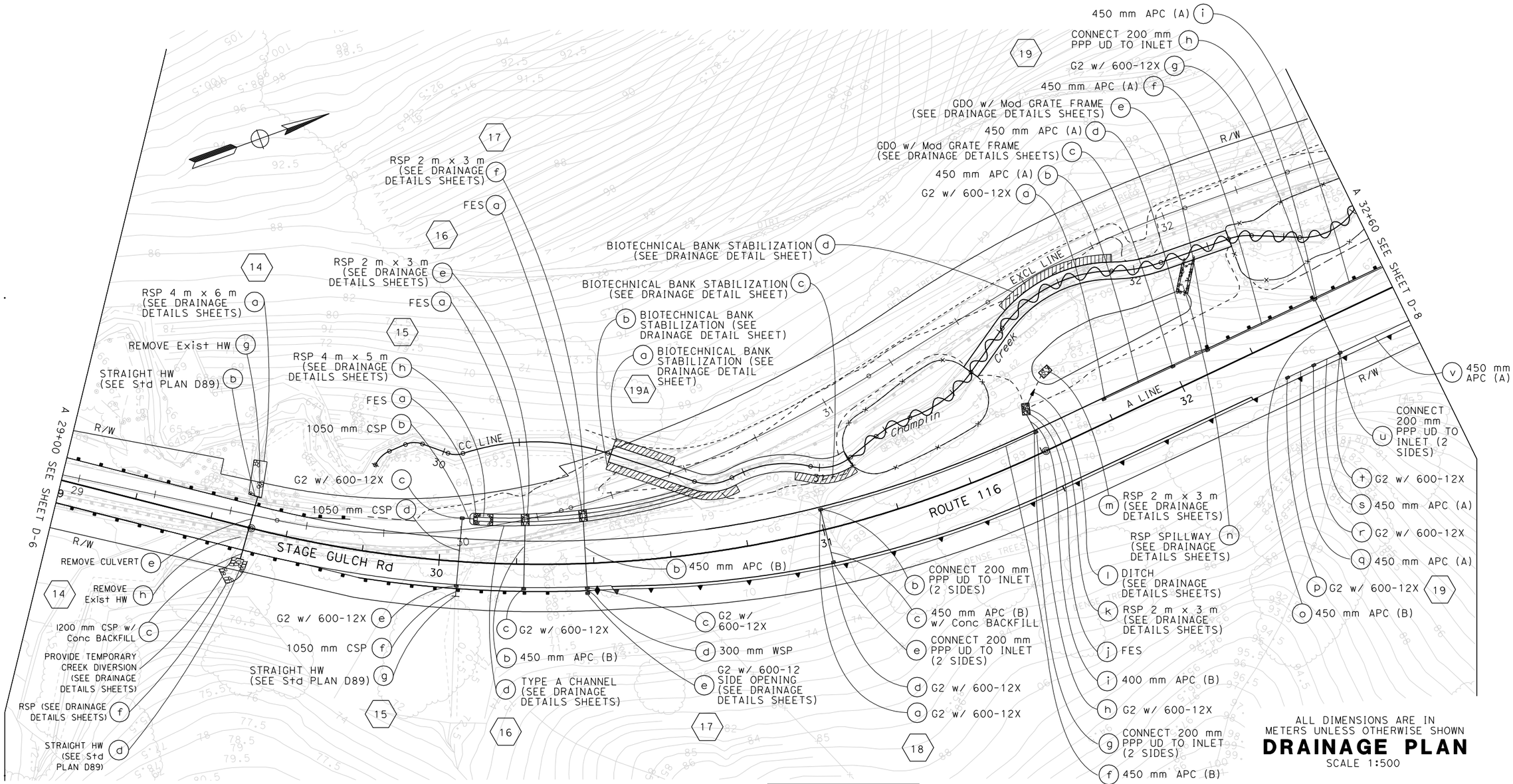

FOR NOTES, ABBREVIATIONS &/OR LEGEND, SEE SHEET D-1

ALL DIMENSIONS ARE IN METERS UNLESS OTHERWISE SHOWN

DRAINAGE PLAN

SCALE 1:500

D-7

REVISED BY	DATE REVISED
IRENE LIU	ULYSSES HILLARD

CALCULATED-DESIGNED BY	CHECKED BY

CONSULTANT FUNCTIONAL SUPERVISOR: HAN-BIN LIANG

STATE OF CALIFORNIA - DEPARTMENT OF TRANSPORTATION

Caltrans

LAST REVISION 00-00-00 | DATE PLOTTED => 12/4/2009 | TIME PLOTTED => 4:16:18 PM

Dist	COUNTY	ROUTE	KILOMETER POST TOTAL PROJECT	SHEET No.	TOTAL SHEETS
04	Son	116	67.3/71.9		

Charlotte A. Cashin 7-18-07
REGISTERED CIVIL ENGINEER DATE

PLANS APPROVAL DATE

REGISTERED PROFESSIONAL ENGINEER Charlotte A. Cashin No. 34417 Exp. 9-30-09 CIVIL STATE OF CALIFORNIA

THE STATE OF CALIFORNIA OR ITS OFFICERS OR AGENTS SHALL NOT BE RESPONSIBLE FOR THE ACCURACY OR COMPLETENESS OF ELECTRONIC COPIES OF THIS PLAN SHEET.

Caltrans Metric

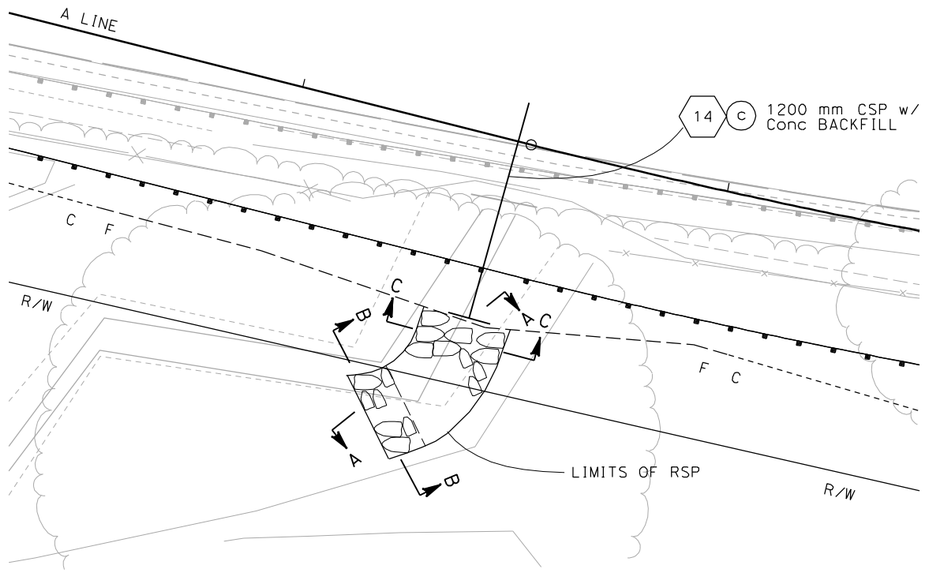

PLAN

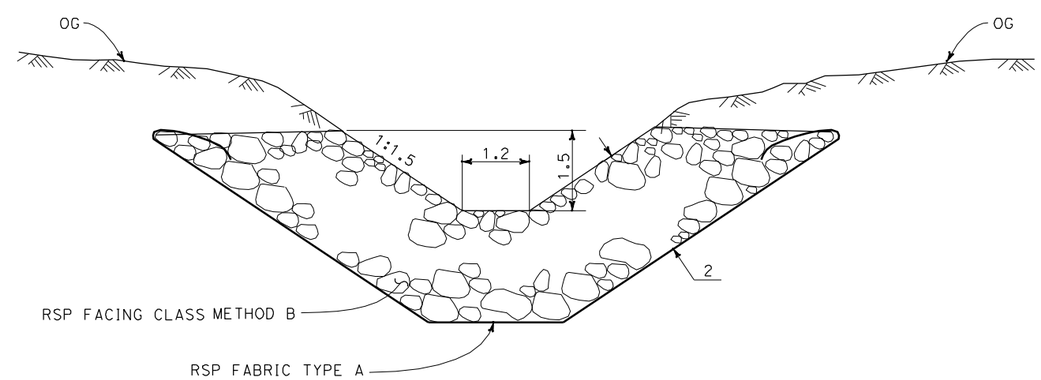

SECTION B-B

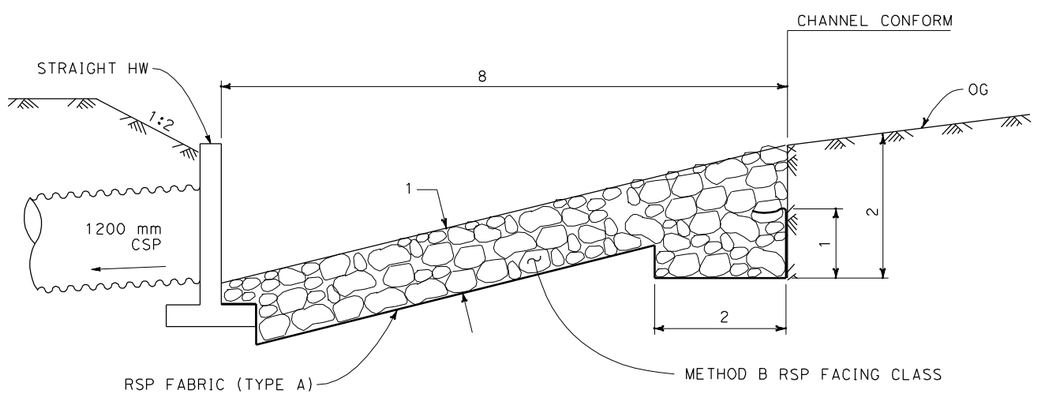

SECTION A-A

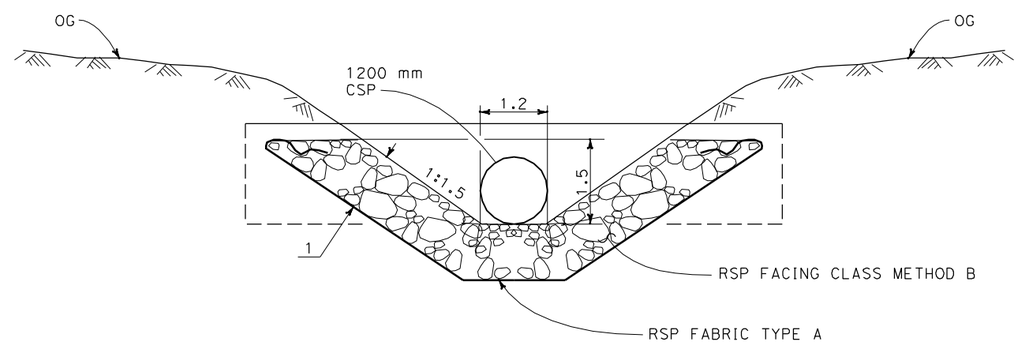

SECTION C-C

DRAINAGE SYSTEM No. 14

DRAINAGE DETAILS

NO SCALE

ALL DIMENSIONS ARE IN METERS UNLESS OTHERWISE SHOWN

DD-3

STATE OF CALIFORNIA - DEPARTMENT OF TRANSPORTATION	FUNCTIONAL SUPERVISOR	CALCULATED-DESIGNED BY
Caltrans HYDRAULICS	JOSEPH E. PETERSON	CHECKED BY
REVISED BY	MC	MARCUS CHAN
DATE REVISED	5/07	JASON R. PHOEN

LAST REVISION 07-07-08 | DATE PLOTTED => 12/4/2009 TIME PLOTTED => 3:20:55 PM

Dist	COUNTY	ROUTE	KILOMETER POST TOTAL PROJECT	SHEET No.	TOTAL SHEETS
04	Son	116	67.3/71.9		

REGISTERED CIVIL ENGINEER 7-25-07 DATE

PLANS APPROVAL DATE

REGISTERED PROFESSIONAL ENGINEER Jason R. Phoen No. 57553 Exp. 12-31-09 CIVIL STATE OF CALIFORNIA

THE STATE OF CALIFORNIA OR ITS OFFICERS OR AGENTS SHALL NOT BE RESPONSIBLE FOR THE ACCURACY OR COMPLETENESS OF ELECTRONIC COPIES OF THIS PLAN SHEET.

Caltrans Metric

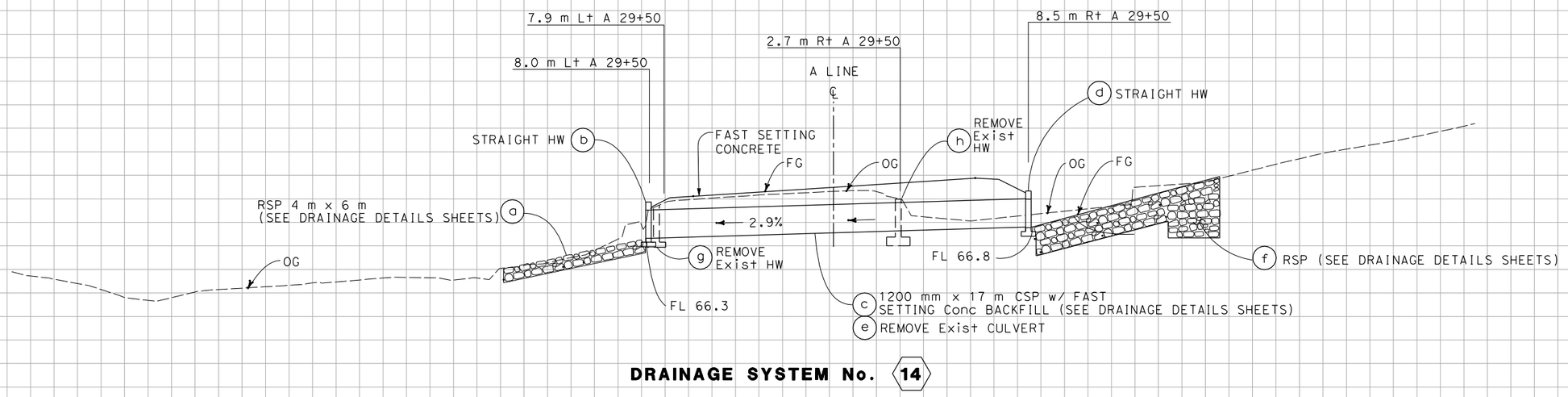

DRAINAGE SYSTEM No. 14

ALL DIMENSIONS ARE IN METERS UNLESS OTHERWISE SHOWN

DRAINAGE PROFILES

SCALE HORIZ 1:100
VERT 1:100

DP-2

MC	REVISED BY
5/07	DATE REVISED
MARCUS CHAN	CALCULATED-DESIGNED BY
JASON R. PHOEN	CHECKED BY
STEWART LEE	FUNCTIONAL SUPERVISOR

STATE OF CALIFORNIA - DEPARTMENT OF TRANSPORTATION
Caltrans
DESIGN

Station	
m^3	Exc
	Emb

LAST REVISION 07-01-08
DATE PLOTTED => 12/4/2009
TIME PLOTTED => 3:25:12 PM

Dist	COUNTY	ROUTE	KILOMETER POST TOTAL PROJECT	SHEET No.	TOTAL SHEETS
04	Son	116	67.3/71.9		

REGISTERED CIVIL ENGINEER 7-24-07 DATE

PLANS APPROVAL DATE

REGISTERED PROFESSIONAL ENGINEER Jason R. Phoen No. 57553 Exp. 12-31-09 CIVIL STATE OF CALIFORNIA

THE STATE OF CALIFORNIA OR ITS OFFICERS OR AGENTS SHALL NOT BE RESPONSIBLE FOR THE ACCURACY OR COMPLETENESS OF ELECTRONIC COPIES OF THIS PLAN SHEET.

Caltrans Metric

FOR COMPLETE RIGHT OF WAY DATA, SEE RIGHT OF WAY RECORD MAPS AT DISTRICT OFFICE.

CURVE DATA

No.	R	Δ	T	L	N-COORDINATE	E-COORDINATE
8	260.000	72° 23' 59.900''	190.291	328.541	563632.703	1955380.968

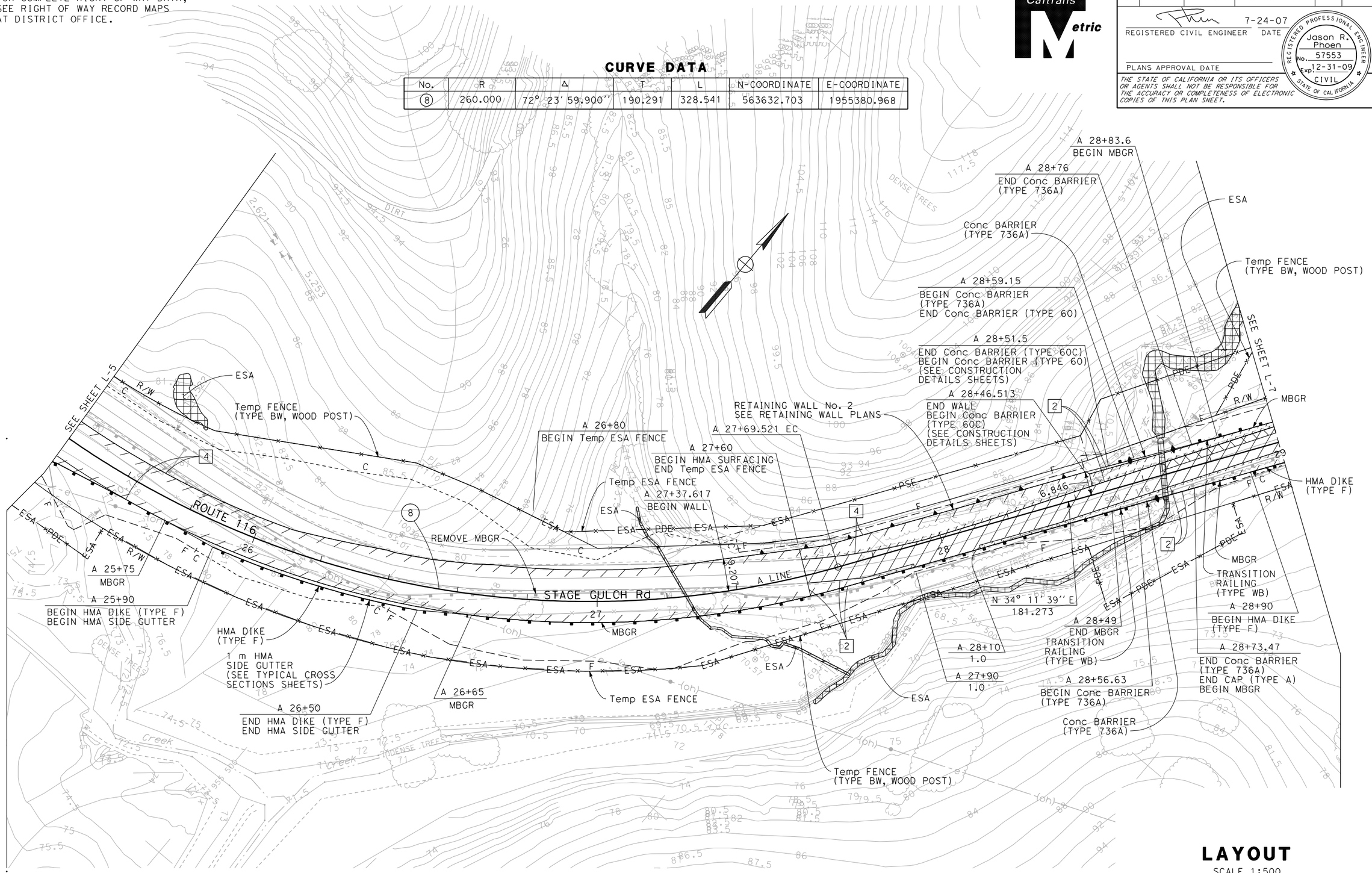

FOR NOTES, ABBREVIATIONS &/OR LEGEND, SEE SHEET L-1

ALL DIMENSIONS ARE IN METERS UNLESS OTHERWISE SHOWN

LAYOUT

SCALE 1:500

L-6

JRP	5/07	JASON R. PHOEN	EMARNAN PONGPAIROJ
REVISED BY	DATE REVISED	CALCULATED-DESIGNED BY	CHECKED BY

FUNCTIONAL SUPERVISOR: STEWART LEE

STATE OF CALIFORNIA - DEPARTMENT OF TRANSPORTATION

Caltrans DESIGN

LAST REVISION 07-09-08 | DATE PLOTTED => 12/4/2009 | TIME PLOTTED => 3:17:25 PM

BORDER LAST REVISED 3/1/2007 | RELATIVE BORDER SCALE IS IN MILLIMETERS 0 20 40 60 80 | USERNAME => irene_liu | DGN FILE => ...\dwg\site 1-6\L-06_CT.dgn | CU 04261 | EA 283811

Dist	COUNTY	ROUTE	KILOMETER POST TOTAL PROJECT	SHEET No.	TOTAL SHEETS
04	Son	116	67.3/71.9		

LICENSED LANDSCAPE ARCHITECT

PLANS APPROVAL DATE

LICENSED LANDSCAPE ARCHITECT — ALEXANDER K. MCDONALD No. 4382 — Signature — Renewal Date — Date — STATE OF CALIFORNIA

THE STATE OF CALIFORNIA OR ITS OFFICERS OR AGENTS SHALL NOT BE RESPONSIBLE FOR THE ACCURACY OR COMPLETENESS OF ELECTRONIC COPIES OF THIS PLAN SHEET.

Caltrans Metric

FOR COMPLETE RIGHT OF WAY AND ACCURATE ACCESS DATA, SEE RIGHT OF WAY RECORD MAPS AT DISTRICT OFFICE.

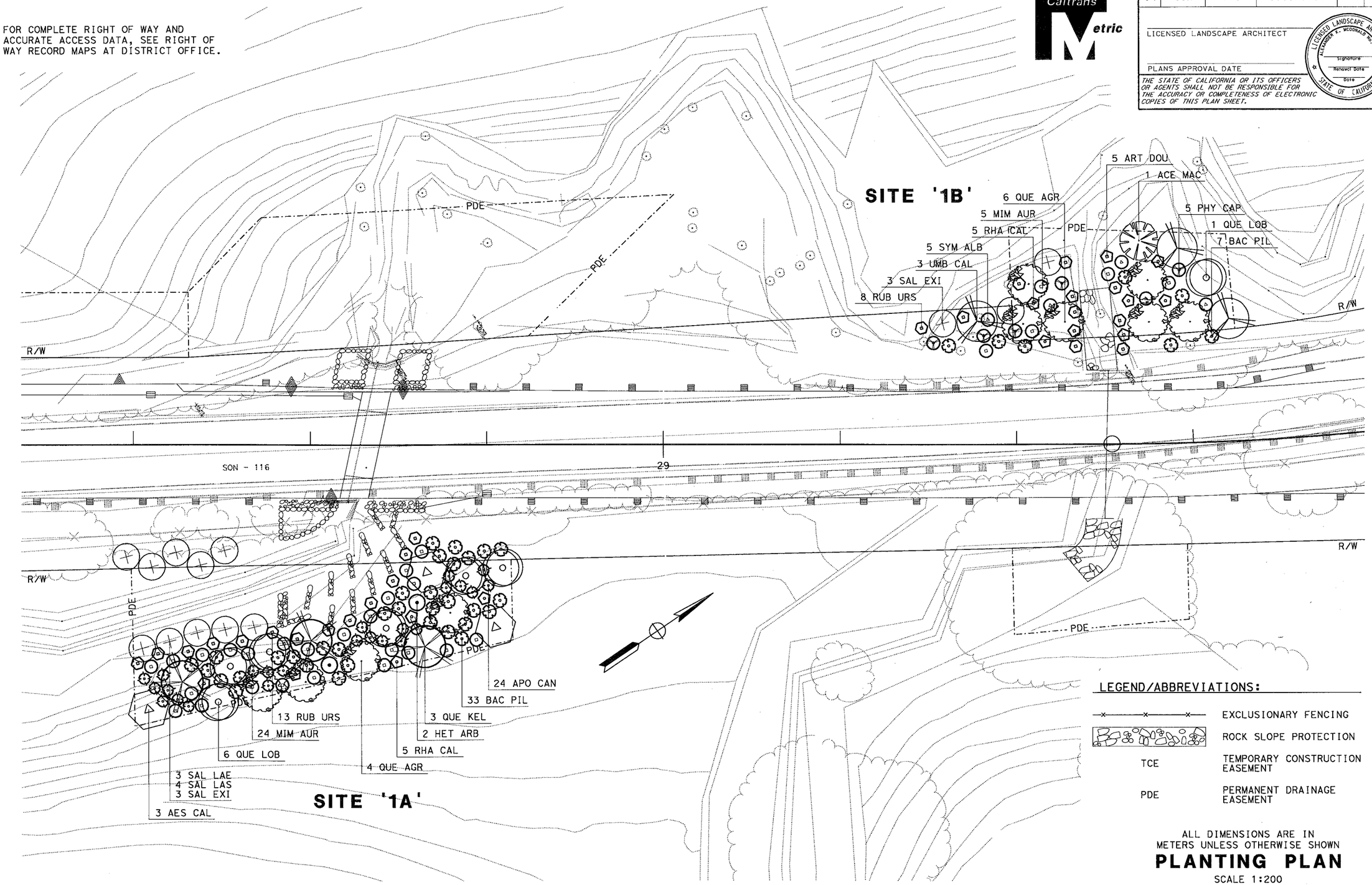

LEGEND/ABBREVIATIONS:

—×—×—×—	EXCLUSIONARY FENCING
	ROCK SLOPE PROTECTION
TCE	TEMPORARY CONSTRUCTION EASEMENT
PDE	PERMANENT DRAINAGE EASEMENT

ALL DIMENSIONS ARE IN METERS UNLESS OTHERWISE SHOWN

PLANTING PLAN

SCALE 1:200

SITE 1A & 1B

THIS SHEET ACCURATE FOR HIGHWAY PLANTING WORK ONLY.

STATE OF CALIFORNIA - DEPARTMENT OF TRANSPORTATION

Caltrans WATER QUALITY

SENIOR LANDSCAPE ARCHITECT: DAVE W. YAM

CALCULATED-DESIGNED BY: Alex McDonald

CHECKED BY: Jennifer Egawa

REVISED BY

DATE REVISED

LAST REVISION 00-00-00

DATE PLOTTED => 03-DEC-2009

TIME PLOTTED => 14:12

Dist	COUNTY	ROUTE	KILOMETER POST TOTAL PROJECT	SHEET No.	TOTAL SHEETS
04	Son	116	67.3/71.9		

Charlotte A. Cashin 7-18-07
REGISTERED CIVIL ENGINEER DATE

PLANS APPROVAL DATE

REGISTERED PROFESSIONAL ENGINEER Charlotte A. Cashin No. 34417 Exp. 9-30-09 CIVIL STATE OF CALIFORNIA

THE STATE OF CALIFORNIA OR ITS OFFICERS OR AGENTS SHALL NOT BE RESPONSIBLE FOR THE ACCURACY OR COMPLETENESS OF ELECTRONIC COPIES OF THIS PLAN SHEET.

Caltrans Metric

FOR COMPLETE RIGHT OF WAY DATA, SEE RIGHT OF WAY RECORD MAPS AT DISTRICT OFFICE.

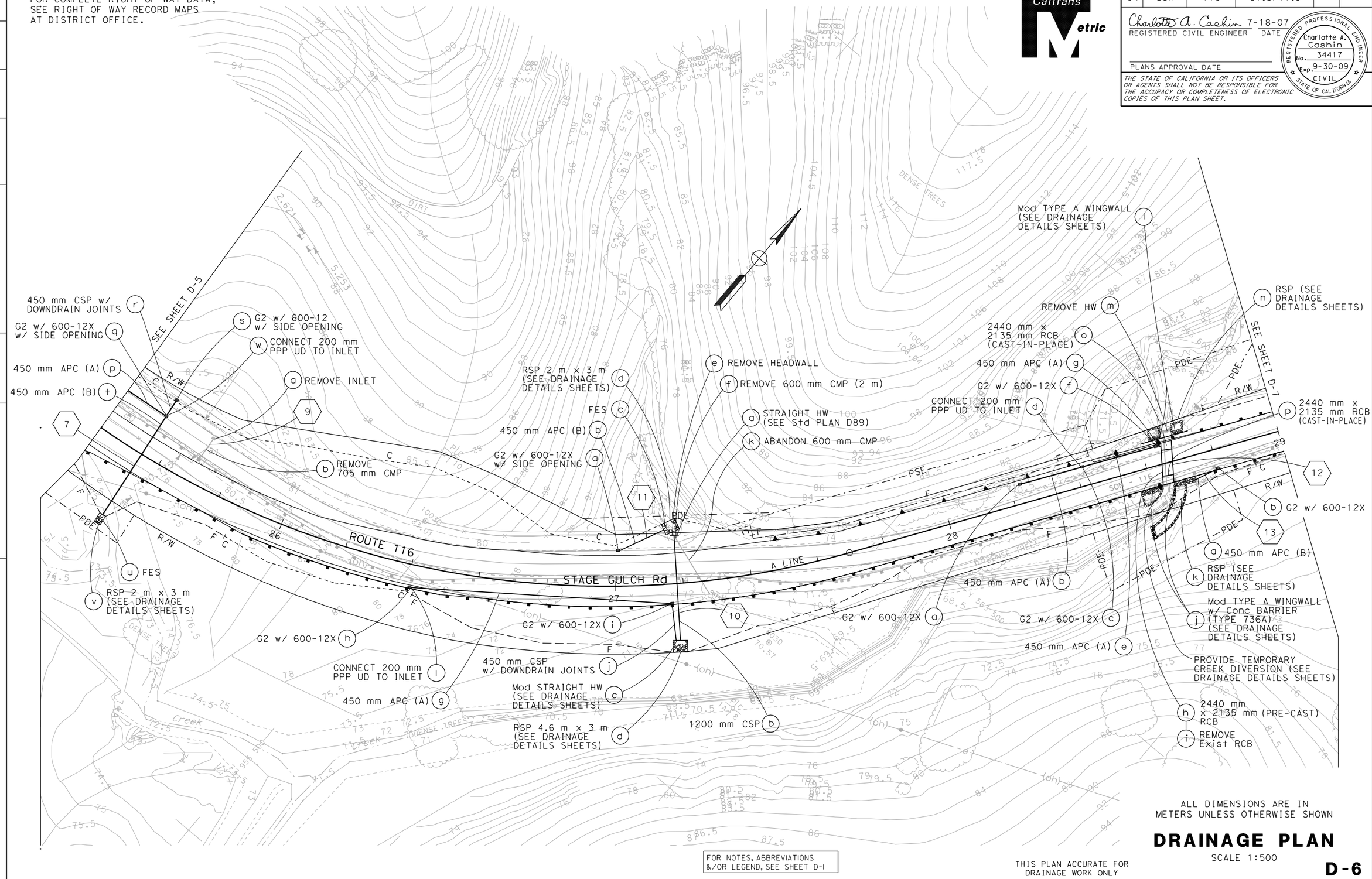

ALL DIMENSIONS ARE IN METERS UNLESS OTHERWISE SHOWN

DRAINAGE PLAN

SCALE 1:500

FOR NOTES, ABBREVIATIONS &/OR LEGEND, SEE SHEET D-1

THIS PLAN ACCURATE FOR DRAINAGE WORK ONLY

D-6

JASON R. PHOEN	REVISED BY: JRP
EMARNAN PONGPAIROJ	DATE REVISED: 5/07
CALCULATED-DESIGNED BY	
CHECKED BY	
FUNCTIONAL SUPERVISOR: JOSEPH E. PETERSON	

STATE OF CALIFORNIA - DEPARTMENT OF TRANSPORTATION
Caltrans HYDRAULICS

LAST REVISION 01-28-09 | DATE PLOTTED => 12/4/2009 | TIME PLOTTED => 3:17:44 PM

Dist	COUNTY	ROUTE	KILOMETER POST TOTAL PROJECT	SHEET No.	TOTAL SHEETS
04	Son	116	67.3/71.9		

Charlotte A. Cashin 7-18-07
REGISTERED CIVIL ENGINEER DATE

PLANS APPROVAL DATE

REGISTERED PROFESSIONAL ENGINEER Charlotte A. Cashin No. 34417 Exp. 9-30-09 CIVIL STATE OF CALIFORNIA

THE STATE OF CALIFORNIA OR ITS OFFICERS OR AGENTS SHALL NOT BE RESPONSIBLE FOR THE ACCURACY OR COMPLETENESS OF ELECTRONIC COPIES OF THIS PLAN SHEET.

Caltrans Metric

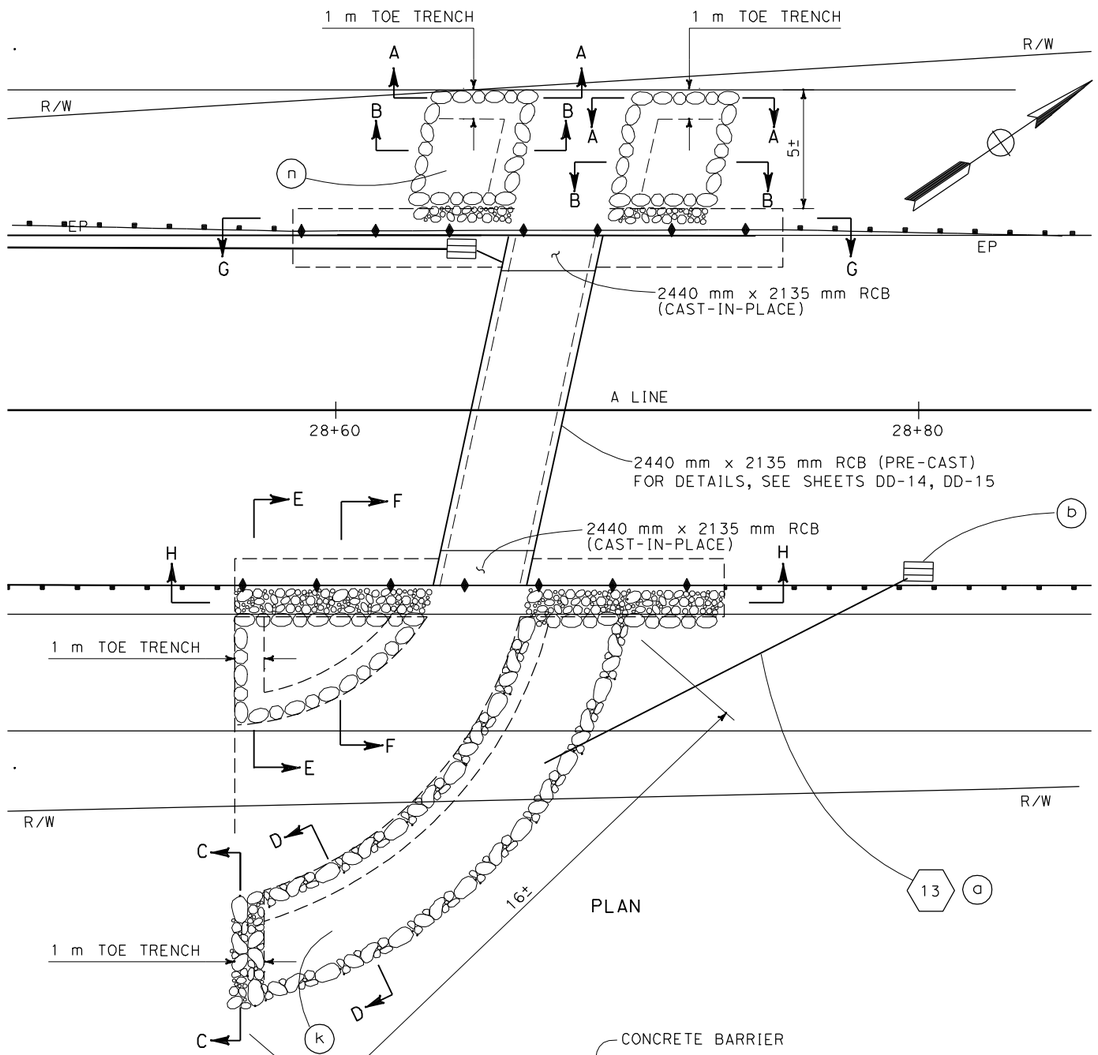

PLAN

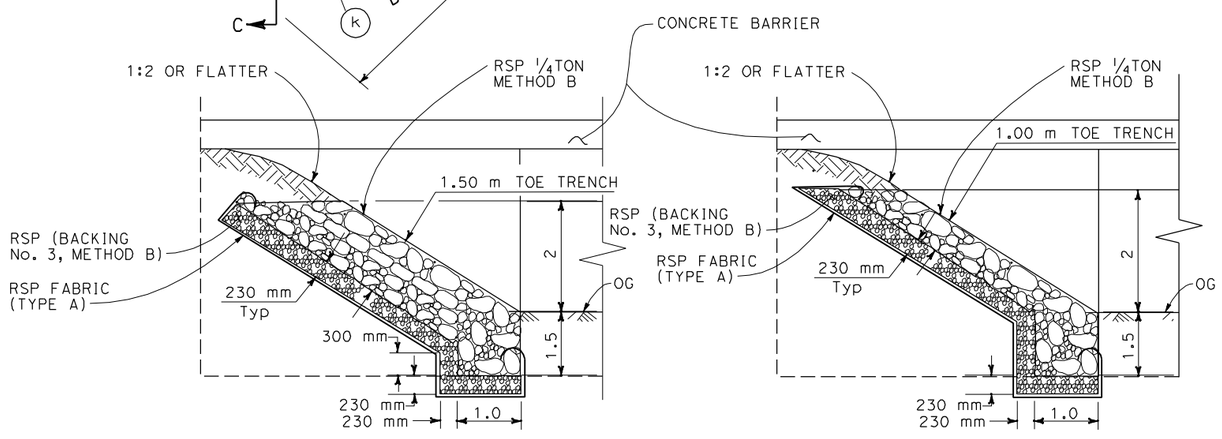

SECTION A-A

SECTION B-B

DRAINAGE SYSTEM No. 12

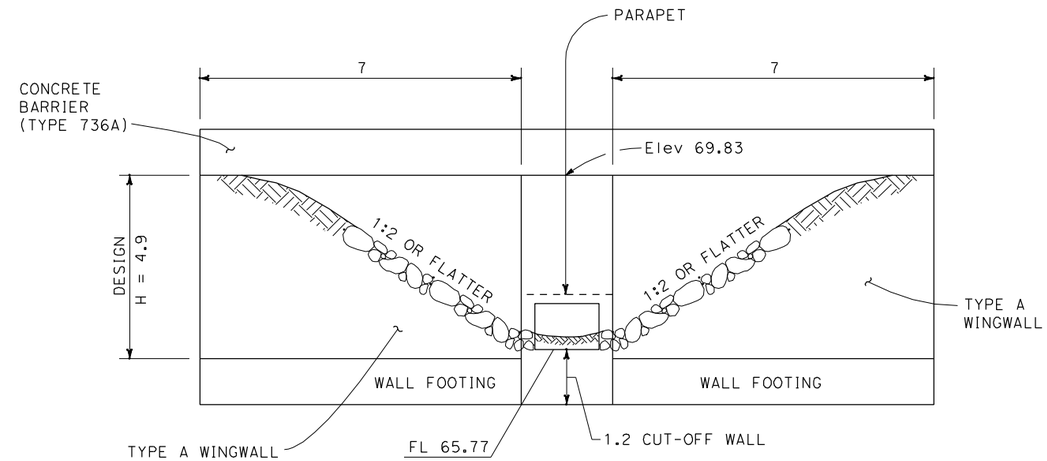

SECTION H-H

SEE PARAPET AND BARRIER REINFORCEMENT DETAIL ON SHEET DD-15
FOR DETAILS NOT SHOWN, SEE STANDARD PLAN D80, D84, B11-56

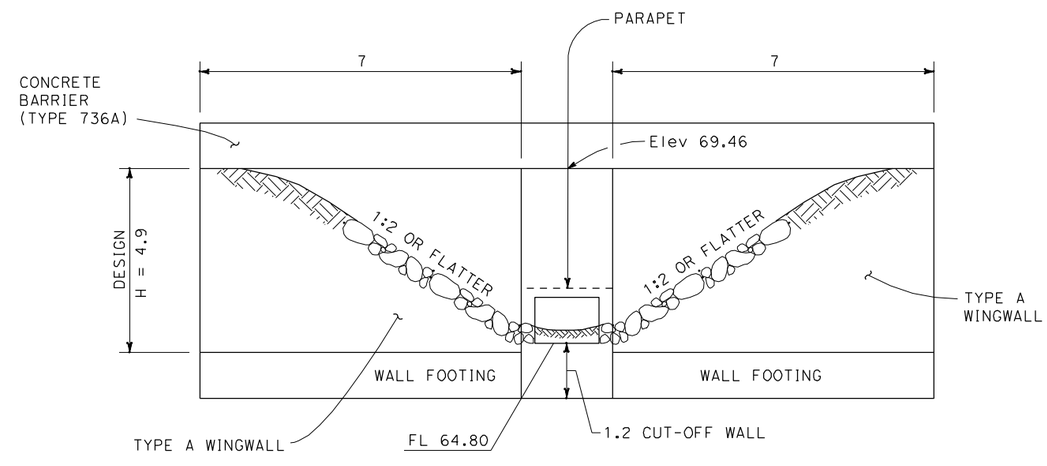

SECTION G-G

SEE PARAPET AND BARRIER REINFORCEMENT DETAIL ON SHEET DD-15
FOR DETAILS NOT SHOWN, SEE STANDARD PLAN D80, D84, B11-56

DRAINAGE DETAILS

NO SCALE

ALL DIMENSIONS ARE IN
METERS UNLESS OTHERWISE SHOWN

DD-14

REVISED BY	MC
DATE REVISED	5/07
CALCULATED-DESIGNED BY	MARCUS CHAN
CHECKED BY	JASON R. PHOEN
FUNCTIONAL SUPERVISOR	JOSEPH E. PETERSON

STATE OF CALIFORNIA - DEPARTMENT OF TRANSPORTATION
Caltrans HYDRAULICS

LAST REVISION 07-07-08
DATE PLOTTED => 12/4/2009
TIME PLOTTED => 3:21:37 PM

Dist	COUNTY	ROUTE	KILOMETER POST TOTAL PROJECT	SHEET No.	TOTAL SHEETS
04	Son	116	67.3/71.9		

REGISTERED CIVIL ENGINEER 7-25-07 DATE

PLANS APPROVAL DATE

REGISTERED PROFESSIONAL ENGINEER Jason R. Phoen No. 57553 Exp. 12-31-09 CIVIL STATE OF CALIFORNIA

THE STATE OF CALIFORNIA OR ITS OFFICERS OR AGENTS SHALL NOT BE RESPONSIBLE FOR THE ACCURACY OR COMPLETENESS OF ELECTRONIC COPIES OF THIS PLAN SHEET.

Caltrans Metric

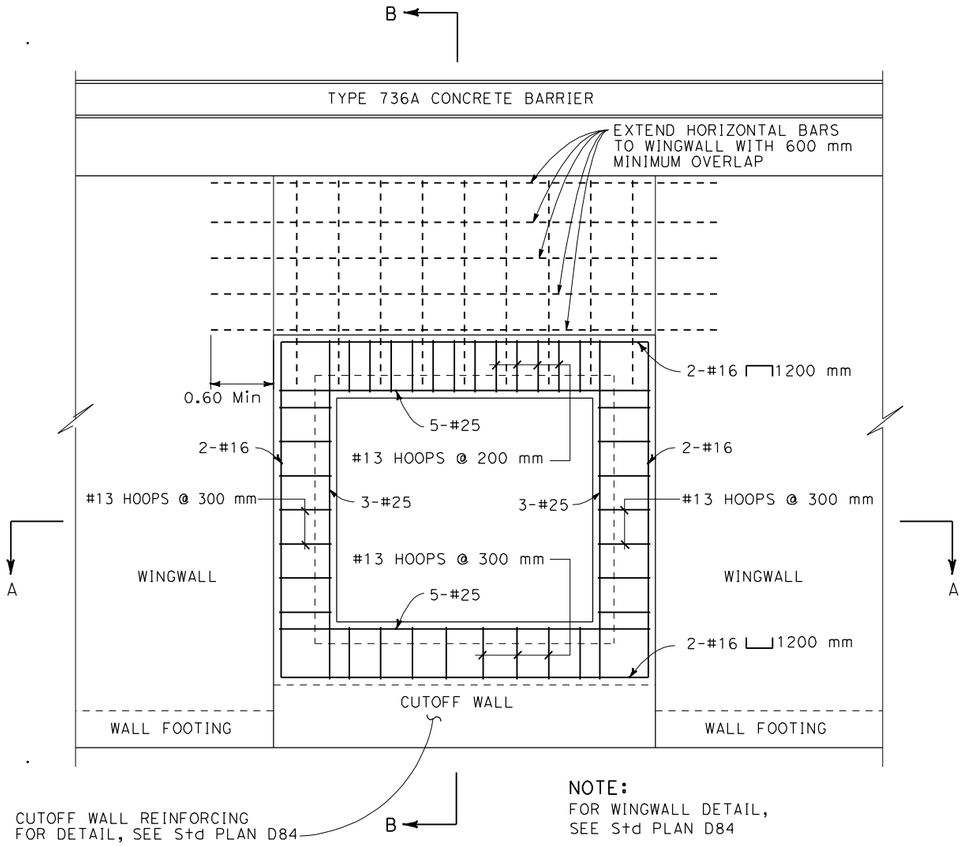

NOTE:
FOR WINGWALL DETAIL, SEE Std PLAN D84

ELEVATION
DETAIL 1

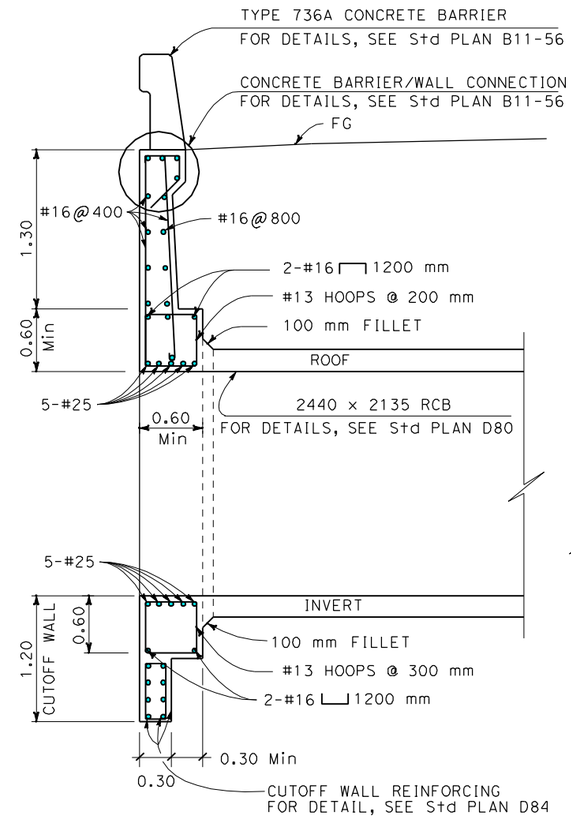

SECTION B-B

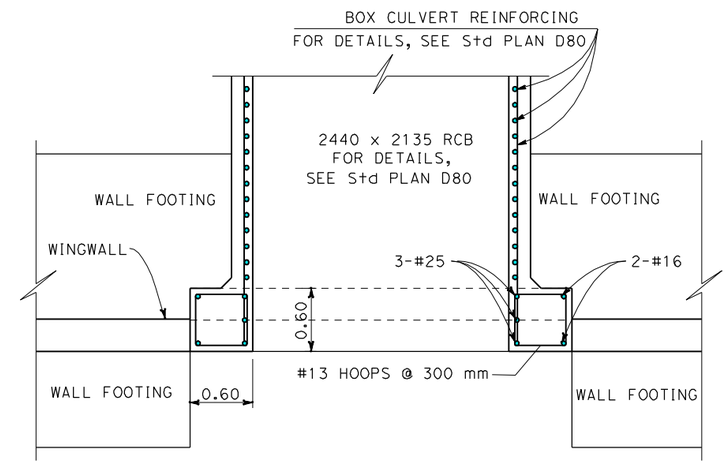

SECTION A-A

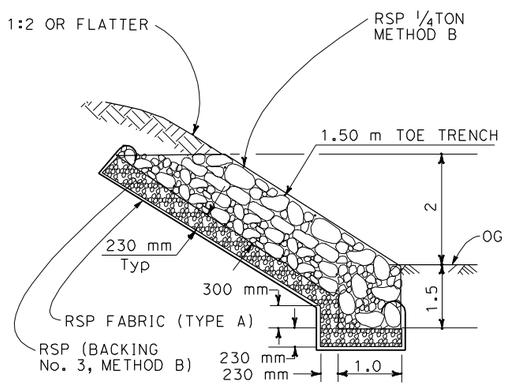

SECTION C-C

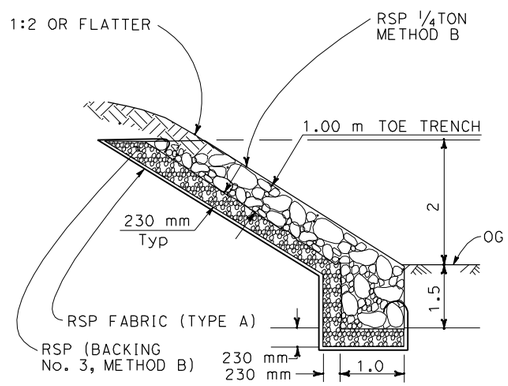

SECTION D-D

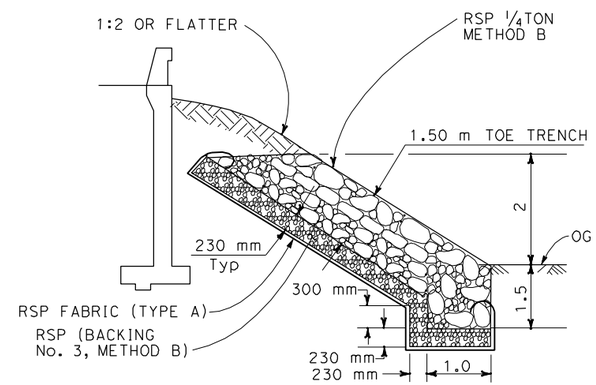

SECTION E-E

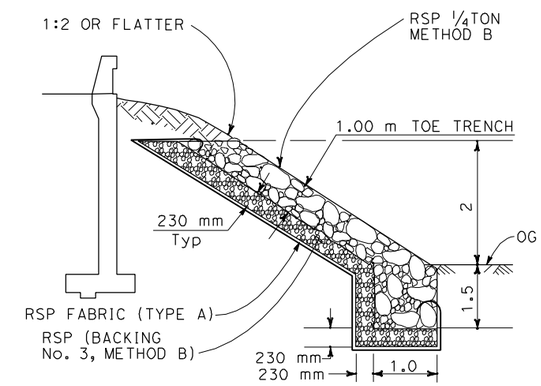

SECTION F-F

DRAINAGE SYSTEM No. 12

DRAINAGE DETAILS

NO SCALE

ALL DIMENSIONS ARE IN METERS UNLESS OTHERWISE SHOWN

DD-15

REVISED BY	DATE REVISED
MC	5/07

MARCUS CHAN — JASON R. PHOEN — CALCULATED-DESIGNED BY — CHECKED BY

FUNCTIONAL SUPERVISOR: STEWART LEE

STATE OF CALIFORNIA - DEPARTMENT OF TRANSPORTATION — Caltrans — DESIGN

LAST REVISION 07-01-08 — DATE PLOTTED => 12/4/2009 — TIME PLOTTED => 3:21:42 PM

Dist	COUNTY	ROUTE	KILOMETER POST TOTAL PROJECT	SHEET No.	TOTAL SHEETS
04	Son	116	67.3/71.9		

REGISTERED CIVIL ENGINEER 7-24-07 DATE

PLANS APPROVAL DATE

REGISTERED PROFESSIONAL ENGINEER Jason R. Phoen No. 57553 Exp. 12-31-09 CIVIL STATE OF CALIFORNIA

THE STATE OF CALIFORNIA OR ITS OFFICERS OR AGENTS SHALL NOT BE RESPONSIBLE FOR THE ACCURACY OR COMPLETENESS OF ELECTRONIC COPIES OF THIS PLAN SHEET.

Caltrans Metric

DESIGN NOTES

SPECIFICATIONS:

DESIGN: BRIDGE DESIGN SPECIFICATIONS (1983 AASHTO SPECIFICATIONS WITH REVISIONS BY CALTRANS).DEPTH OF COVER IS ASSUMED TO BE UNIFORM.

EARTH LOAD:

EARTH PRESSURES FOR TWO CONDITIONS:
2240 kg/m³ VERT,670 kg/m³ HORIZ
2240 kg/m³ VERT,2240 kg/m³ HORIZ

UNIT STRESSES:

f'c = 35 MPa
f'y = 450 MPa FOR WELD WIRE FABRIC
n = 7

SHEAR:

MAXIMUM ALLOWABLE SHEAR, $V=0.291\sqrt{f'c}$, MPa

EXCLUSION:

AXIAL LOADING ON THE MEMBERS HAS NOT BEEN CONSIDERED.

EARTHWORK:

SEE "PRECAST RCB CULVERT,EXCAVATION AND BACKFILL DETAILS" SHEET.

GENERAL NOTES

DESIGNATION:

STANDARD SINGLE OR MULTIPLE PRECAST BOX CULVERTS ARE SHOWN ON THE PLANS AS SPAN TIMES HEIGHT WITH MAXIMUM COVER OVER ROOF THUS: 2.4 x 1.5 m RCB WITH 3 m OR DOUBLE 3 m x 1.5 m RCB WITH 6 m,FOLLOWED BY ALTERNATIVES.

ALTERNATIVES:

SINGLE CELL:

STANDARD DIMENSIONS OF AASHTO MATERIAL SPECIFICATION 'M259' OR 'M273'.

MULTIPLE CELL:

CONSTRUCTED BY PLACING SINGLE CELLS ADJACENT TO EACH OTHER.INLET AND OUTLET ENDS OF CULVERT WILL BE ROUNDED UNLESS SQUARE ENDS ARE DESIGNATED. PARAPET WILL BE SHOWN UNLESS DESIGNATED IN PLANS.SUCH DESIGNATION MAY BE DIFFERENT FOR INLET AND OUTLET ENDS.

LIMITATIONS:

WHERE THE OVERFILL IS LESS THAN 300 mm, PRECAST RCB CULVERTS ARE NOT TO BE USED. PRECAST RCB CULVERTS ARE NOT TO BE USED IN SIPHON OR PRESSURIZED INSTALLATIONS UNLESS APPROPRIATE "WATERTIGHT" JOINTING IS PROVIDED.

SPECIAL REINFORCEMENT COVERAGE:

PRECAST RCB CULVERT STANDARD DETAILS ARE NOT TO BE USED IN A CORROSIVE ENVIRONMENT OR WHERE THERE IS A SEVERE ABRASIVE FLOW CONDITION OR FREEZE-THAW LOCATIONS.

SPECIAL DESIGN:

REQUIRED FOR CULVERT WITH DIFFERENT CONDITIONS,OR LOADS OR DESIGN BEARING PRESSURES GREATER THAN THOSE GIVEN ON THESE PLANS.REQUIRED FOR CULVERTS WHERE END DETAILS NEED HIGHER SKEW ANGLES OR HIGHER PARAPETS OR BARRIER SECTIONS.

CONSTRUCTION NOTES

CUTOFF WALLS:

1.2 m CUTOFF WALLS ARE TO BE PROVIDED AT INLET AND/OR OUTLET UNLESS CHANNEL IS LINED AND UNLESS OTHERWISE SHOWN. THESE WALLS ARE TO BE EXTENDED IF SCOUR CONDITIONS WARRANT. SEE STANDARD PLANS D84,D85 AND D86A.

WINGWALLS:

WINGWALLS SHALL BE CAST-IN-PLACE AND SHALL CONFORM TO STANDARD PLAN DETAILS FOR BOX CULVERT WINGWALLS.SEE STANDARD PLANS D84,D85 AND D86A.

BACKFILL:

SEE SHEET DD-13.

CONSTRUCTION LOADS:

STRUTTING MAY BE REQUIRED NEAR TEMPORARY ENDS.FOR CONSTRUCTION LOADS ON CULVERTS,SEE STANDARD PLAN D88.

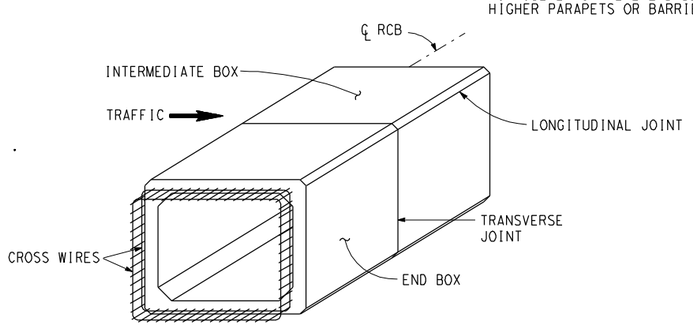

PRECAST RCB TERMINOLOGY

NOTE: INNER AND OUTER REINFORCEMENT TO BE EXPOSED AS REQUIRED TO TIE TO CAST-IN-PLACE CONSTRUCTION. A MINIMUM OF TWO CROSS WIRES SHALL BE EXPOSED ON ALL SIDES.

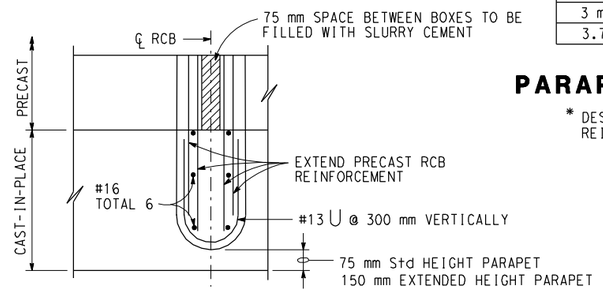

PARTIAL PLAN INTERIOR WALL MULTI CELL CULVERT

PARAPET "P" BARS			
SPAN \ SKEW ANGLE	0° TO 15°	16° TO 30°	31° TO 45°
1.2 m	#16	#16	#16
1.8 m	#16	#16	*
2.4 m	#16	#16	*
3 m	#16	*	*
3.7 m	#19	*	*

PARAPET REINFORCEMENT

* DESIGN LIMITED BY SKEW OF PRECAST REINFORCED CONCRETE BOX SECTION

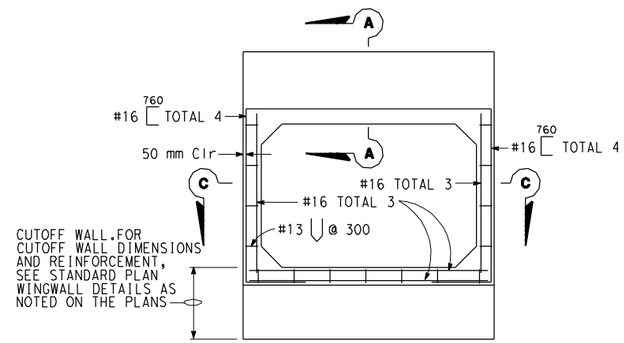

CAST-IN-PLACE END ELEVATION

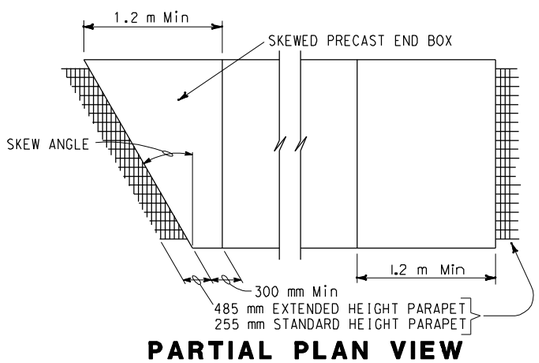

PARTIAL PLAN VIEW

FOR ILLUSTRATIVE PURPOSES ONLY.
FOR CORRECT SKEW DIRECTION SEE PLANS.

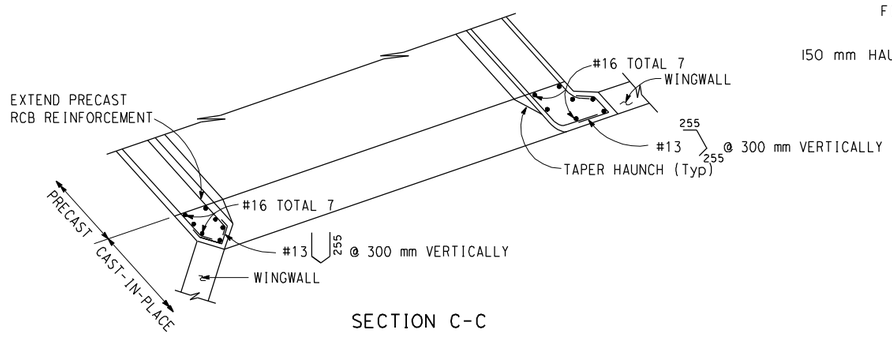

SECTION C-C

DRAINAGE SYSTEM No. 12

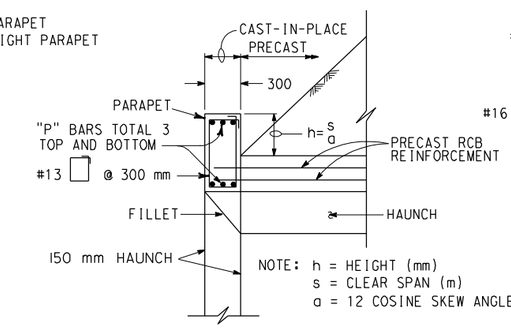

SECTION A-A
(STANDARD HEIGHT PARAPET)

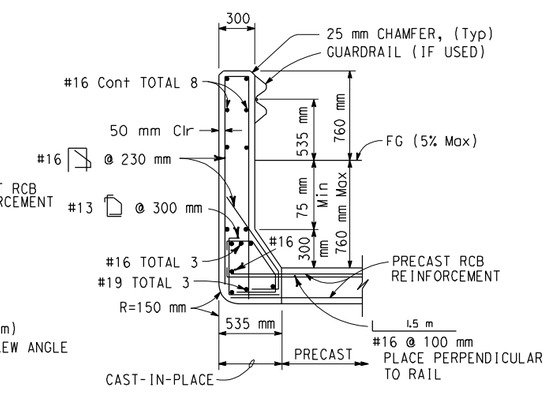

SECTION A-A
(EXTENDED HEIGHT PARAPET)

TYPICAL CULVERT END DETAILS

FOR WALL AND INVERT REINFORCEMENT NOT SHOWN,SEE "END ELEVATION" DETAIL

ALL DIMENSIONS ARE IN METERS UNLESS OTHERWISE SHOWN

DRAINAGE DETAILS

NO SCALE

DD-16

MC	5/07		
REVISED BY	DATE REVISED		
MARCUS CHAN	JASON R. PHOEN		
CALCULATED-DESIGNED BY	CHECKED BY		
FUNCTIONAL SUPERVISOR	STEWART LEE		

STATE OF CALIFORNIA - DEPARTMENT OF TRANSPORTATION
Caltrans DESIGN

LAST REVISION 07-01-08 DATE PLOTTED => 12/4/2009 TIME PLOTTED => 3:21:46 PM

Dist	COUNTY	ROUTE	KILOMETER POST TOTAL PROJECT	SHEET No.	TOTAL SHEETS
04	Son	116	67.3/71.9		

Caltrans Metric

REGISTERED CIVIL ENGINEER — DATE 7-24-07

PLANS APPROVAL DATE

REGISTERED PROFESSIONAL ENGINEER — Jason R. Phoen — No. 57553 — Exp. 12-31-09 — CIVIL — STATE OF CALIFORNIA

THE STATE OF CALIFORNIA OR ITS OFFICERS OR AGENTS SHALL NOT BE RESPONSIBLE FOR THE ACCURACY OR COMPLETENESS OF ELECTRONIC COPIES OF THIS PLAN SHEET.

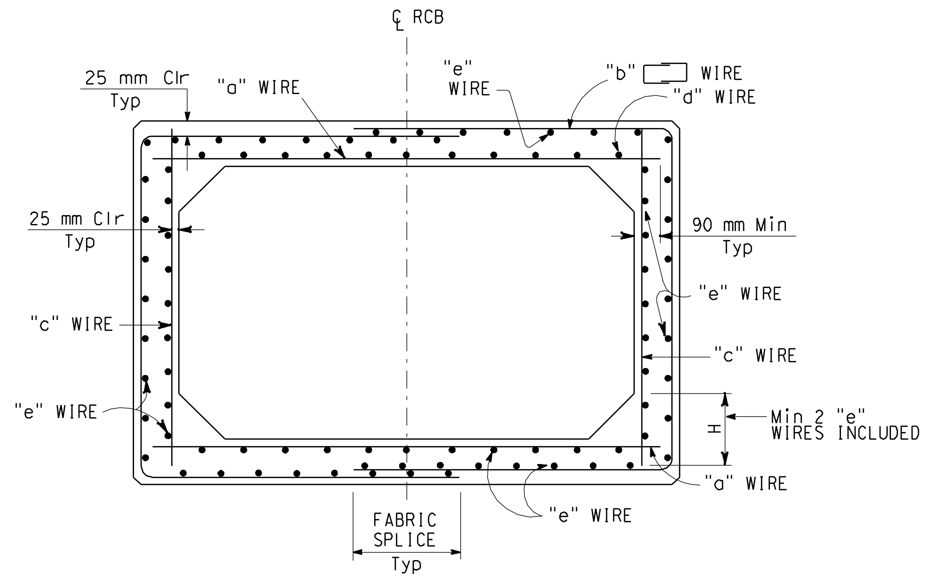

TYPICAL SECTION - SPANS 1.2 m THRU 3.7 m

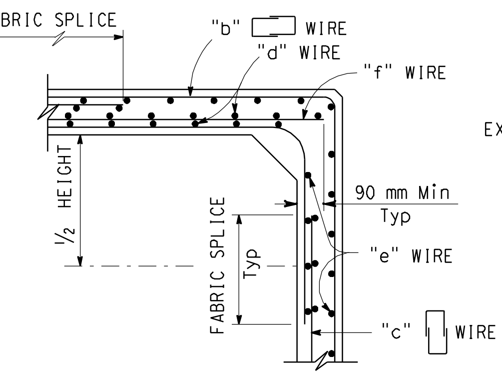

ALTERNATIVE DETAILING OPTION

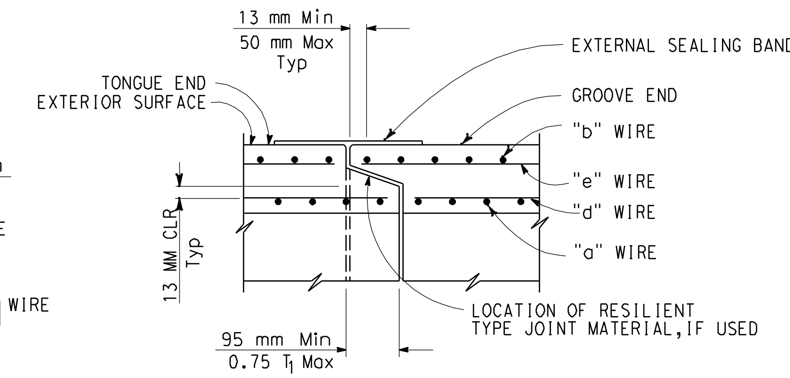

END JOINT DETAIL

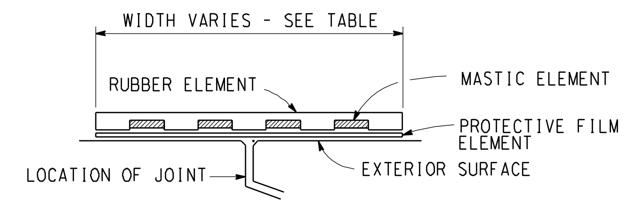

EXTERNAL SEALING BAND SCHEMATIC

TABLE	
SPAN (m)	EXTERNAL SEALING BAND WIDTH (mm)
1.2 m-1.8 m	230
2.1 m-2.4 m	280
3 m-3.7 m	330

DESIGN BEARING PRESSURE (MPa)		
SPAN \ COVER	3 m	6 m
1.2 m THRU 2.4 m	0.11	0.19
3 m THRU 3.7 m	0.12	0.20

AASHTO STANDARD SHAPE			M259						M273					
SPAN (m)			1.2						1.2					
HEIGHT (m)			0.6		0.9		1.2		0.6		0.9		1.2	
MAXIMUM EARTH COVER (m)			3.0	6.0	3.0	6.0	3.0	6.0	3.0	6.0	3.0	6.0	3.0	6.0
CONCRETE (mm)	ROOF	T_1	125	125	125	125	125	125	190	190	190	190	190	190
	SIDE WALL	T_2	125	125	125	125	125	125	125	125	125	125	125	125
	INVERT	T_3	125	125	125	125	125	125	150	150	150	150	150	150
MINIMUM WELDED WIRE FABRIC REINF AREAS (SQUARE mm/m)		"a"	870	870	910	910	955	955	615	615	655	655	655	655
		"b"	760	530	675	570	675	740	295	485	320	595	425	785
		"c"	275	275	275	275	275	380	275	275	275	275	275	425
		"d"	445	275	465	275	485	275	320	275	340	275	340	275
		"e"	275	275	275	275	275	275	275	275	275	275	275	275
		"f"	595	595	635	635	675	570	340	340	380	380	380	235
* QUANTITY	CONCRETE	m^3/m	0.55		0.65		0.73		0.70		0.78		0.85	
	REINF	kg/m	79	67	83	79	92	94	52	60	60	71	70	91

AASHTO STANDARD SHAPE			M259								M273							
SPAN (m)			1.5								1.5							
HEIGHT (m)			0.6		0.9		1.2		1.5		0.6		0.9		1.2		1.5	
MAXIMUM EARTH COVER (m)			3.0	6.0	3.0	6.0	3.0	6.0	3.0	6.0	3.0	6.0	3.0	6.0	3.0	6.0	3.0	6.0
CONCRETE (mm)	ROOF	T_1	150	150	150	150	150	150	150	150	205	205	205	205	205	205	205	205
	SIDE WALL	T_2	150	150	150	150	150	150	150	150	150	150	150	150	150	150	150	150
	INVERT	T_3	150	150	150	150	150	150	150	150	180	180	180	180	180	180	180	180
MINIMUM WELDED WIRE FABRIC REINF AREAS (SQUARE mm/m)		"a"	805	805	870	870	890	890	910	910	655	655	700	700	720	720	720	720
		"b"	720	635	655	655	635	740	635	910	380	570	340	635	400	740	530	955
		"c"	275	275	275	275	275	275	295	485	275	275	275	275	275	275	295	530
		"d"	360	275	400	275	400	275	425	275	295	275	320	275	340	275	340	275
		"e"	275	275	275	275	275	275	275	275	275	275	275	275	275	275	275	275
		"f"	530	530	595	595	615	615	615	425	380	380	425	425	445	445	425	190
* QUANTITY	CONCRETE	m^3/m	0.80		0.88		0.98		1.08		0.93		1.03		1.10		1.20	
	REINF	kg/m	83	77	91	86	97	100	106	124	63	70	67	82	77	95	92	122

AASHTO STANDARD SHAPE			M259								M273							
SPAN (m)			1.8								1.8							
HEIGHT (m)			0.9		1.2		1.5		1.8		0.9		1.2		1.5		1.8	
MAXIMUM EARTH COVER (m)			3.0	6.0	3.0	6.0	3.0	6.0	3.0	6.0	3.0	6.0	3.0	6.0	3.0	6.0	3.0	6.0
CONCRETE (mm)	ROOF	T_1	180	180	180	180	180	180	180	180	205	205	205	205	205	205	205	205
	SIDE WALL	T_2	180	180	180	180	180	180	180	180	180	180	180	180	180	180	180	180
	INVERT	T_3	180	180	180	180	180	180	180	180	180	180	180	180	180	180	180	180
MINIMUM WELDED WIRE FABRIC REINF AREAS (SQUARE mm/m)		"a"	825	825	870	870	890	890	890	890	760	805	785	845	805	845	805	825
		"b"	635	760	615	805	615	930	740	1100	485	760	530	825	615	930	740	1100
		"c"	295	295	295	295	295	295	360	615	295	295	295	295	295	295	380	615
		"d"	340	275	360	275	380	275	380	275	320	275	340	275	340	275	340	275
		"e"	275	275	275	275	275	275	275	275	275	275	275	275	275	275	275	275
		"f"	530	530	570	570	595	595	530	275	465	510	485	550	510	550	425	210
* QUANTITY	CONCRETE	m^3/m	1.18		1.28		1.38		1.48		1.23		1.33		1.43		1.56	
	REINF	kg/m	100	106	107	121	116	134	134	164	89	107	100	121	112	132	131	161

AASHTO STANDARD SHAPE		M259 AND M273										M259 AND M273									
SPAN (m)		2.1										2.4									
HEIGHT (m)		0.9		1.2		1.5		1.8		2.1		1.2		1.5		1.8		2.1		2.4	
MAXIMUM EARTH COVER (m)		3.0	6.0	3.0	6.0	3.0	6.0	3.0	6.0	3.0	6.0	3.0	6.0	3.0	6.0	3.0	6.0	3.0	6.0	3.0	6.0
CONCRETE (m)	$T_1=T_2=T_3$	205	205	205	205	205	205	205	205	205	205	205	205	205	205	205	205	205	205	205	205
MINIMUM WELDED WIRE FABRIC REINF AREAS (SQUARE mm/m)	"a"	825	930	845	995	890	1015	890	1015	910	1015	950	1250	995	1290	1015	1310	1015	1310	1035	1290
	"b"	655	890	635	910	635	995	740	1120	890	1310	720	1165	785	1230	870	1335	995	1505	1165	1735
	"c"	340	340	340	340	340	340	340	380	465	740	340	340	340	340	340	340	380	570	615	995
	"d"	320	275	340	275	340	275	340	275	340	275	340	275	360	275	360	275	360	275	380	275
	"e"	275	275	275	275	275	275	275	275	275	275	275	275	275	275	275	275	275	275	275	275
	"f"	485	595	510	655	550	675	550	635	445	275	615	910	655	955	675	975	635	740	425	295
* QUANTITY CONC	m^3/m	1.48		1.60		1.73		1.85		1.98		1.73		1.85		1.98		2.10		2.23	
REINF	kg/m	115	133	122	145	125	153	145	180	170	217	143	185	158	208	175	222	195	254	232	305

AASHTO STANDARD SHAPE		M259 AND M273												M259 AND M273													
SPAN (m)		3.0												3.7													
HEIGHT (m)		1.5		1.8		2.1		2.4		2.7		3.0		1.8		2.1		2.4		2.7		3.0		3.4		3.7	
MAXIMUM EARTH COVER (m)		3.0	6.0	3.0	6.0	3.0	6.0	3.0	6.0	3.0	6.0	3.0	6.0	3.0	6.0	3.0	6.0	3.0	6.0	3.0	6.0	3.0	6.0	3.0	6.0	3.0	6.0
CONCRETE (m)	$T_1=T_2=T_3$	255	255	255	255	255	255	255	255	255	255	255	255	305	305	305	305	305	305	305	305	305	305	305	305	305	305
MINIMUM WELDED WIRE FABRIC REINF AREAS (SQUARE mm/m)	"a"	950	1500	975	1565	975	1590	995	1610	995	1590	995	1565	1080	1800	1100	1840	1120	1885	1145	1905	1145	1905	1145	1885	1120	1865
	"b"	955	1420	995	1480	1060	1565	1165	1715	1315	1905	1505	2160	1120	1695	1165	1755	1230	1840	1335	1970	1460	2140	1630	2370	1820	2625
	"c"	445	445	445	445	445	445	445	445	570	845	845	1270	530	530	530	530	530	530	530	530	530	740	805	1145	1080	1610
	"d"	320	275	320	275	320	275	320	275	320	275	320	275	320	275	320	275	340	275	340	275	340	275	340	275	340	275
	"e"	275	275	275	275	275	275	275	275	275	275	275	275	275	275	275	275	275	275	275	275	275	275	275	275	275	275
	"f"	510	1060	530	1120	530	1145	550	1165	425	740	150	295	550	1270	570	1310	595	1355	615	1375	615	1165	340	740	45	255
* QUANTITY CONC	m^3/m	2.70		2.85		3.00		3.20		3.35		3.50		3.90		4.10		4.26		4.47		4.65		4.85		5.00	
REINF	kg/m	198	265	213	288	228	305	250	340	280	440	330	452	260	360	275	385	295	410	320	442	347	490	395	555	450	635

* SEE NOTE 3

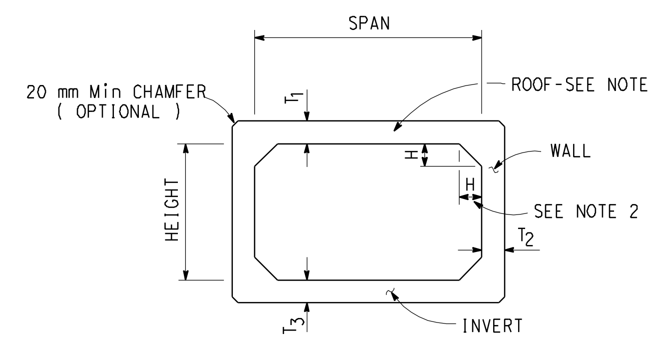

SCHEMATIC

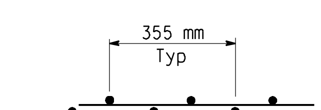

FABRIC SPLICE DETAIL

NOTES:

1. THE INSIDE AND OUTSIDE SURFACES OF THE RCB ROOF SHALL BE MARKED "TOP".
2. H MINIMUM SHALL EQUAL THE WALL THICKNESS. H MAXIMUM SHALL BE 200 mm FOR SPANS THROUGH 2.4 m AND 355 mm FOR SPANS OVER 2.4 m.
3. QUANTITIES ARE APPROXIMATE AND FOR DESIGN PURPOSES ONLY.
4. FOR DESIGN AND DETAILS NOT SHOWN, SEE SHEET DD-16.

DRAINAGE SYSTEM No. 12

DRAINAGE DETAILS

NO SCALE

ALL DIMENSIONS ARE IN METERS UNLESS OTHERWISE SHOWN

DD-17

STATE OF CALIFORNIA - DEPARTMENT OF TRANSPORTATION — DESIGN — Caltrans

FUNCTIONAL SUPERVISOR: STEWART LEE

CALCULATED-DESIGNED BY: MARCUS CHAN — CHECKED BY: JASON R. PHOEN

REVISED BY: MC — DATE REVISED: 5/07

LAST REVISION 07-01-08 — DATE PLOTTED => 12/4/2009 — TIME PLOTTED => 3:21:52 PM

Dist	COUNTY	ROUTE	KILOMETER POST TOTAL PROJECT	SHEET No.	TOTAL SHEETS
04	Son	116	67.3/71.9		

REGISTERED CIVIL ENGINEER 7-25-07 DATE

PLANS APPROVAL DATE

REGISTERED PROFESSIONAL ENGINEER Jason R. Phoen No. 57553 Exp. 12-31-09 CIVIL STATE OF CALIFORNIA

THE STATE OF CALIFORNIA OR ITS OFFICERS OR AGENTS SHALL NOT BE RESPONSIBLE FOR THE ACCURACY OR COMPLETENESS OF ELECTRONIC COPIES OF THIS PLAN SHEET.

Caltrans Metric

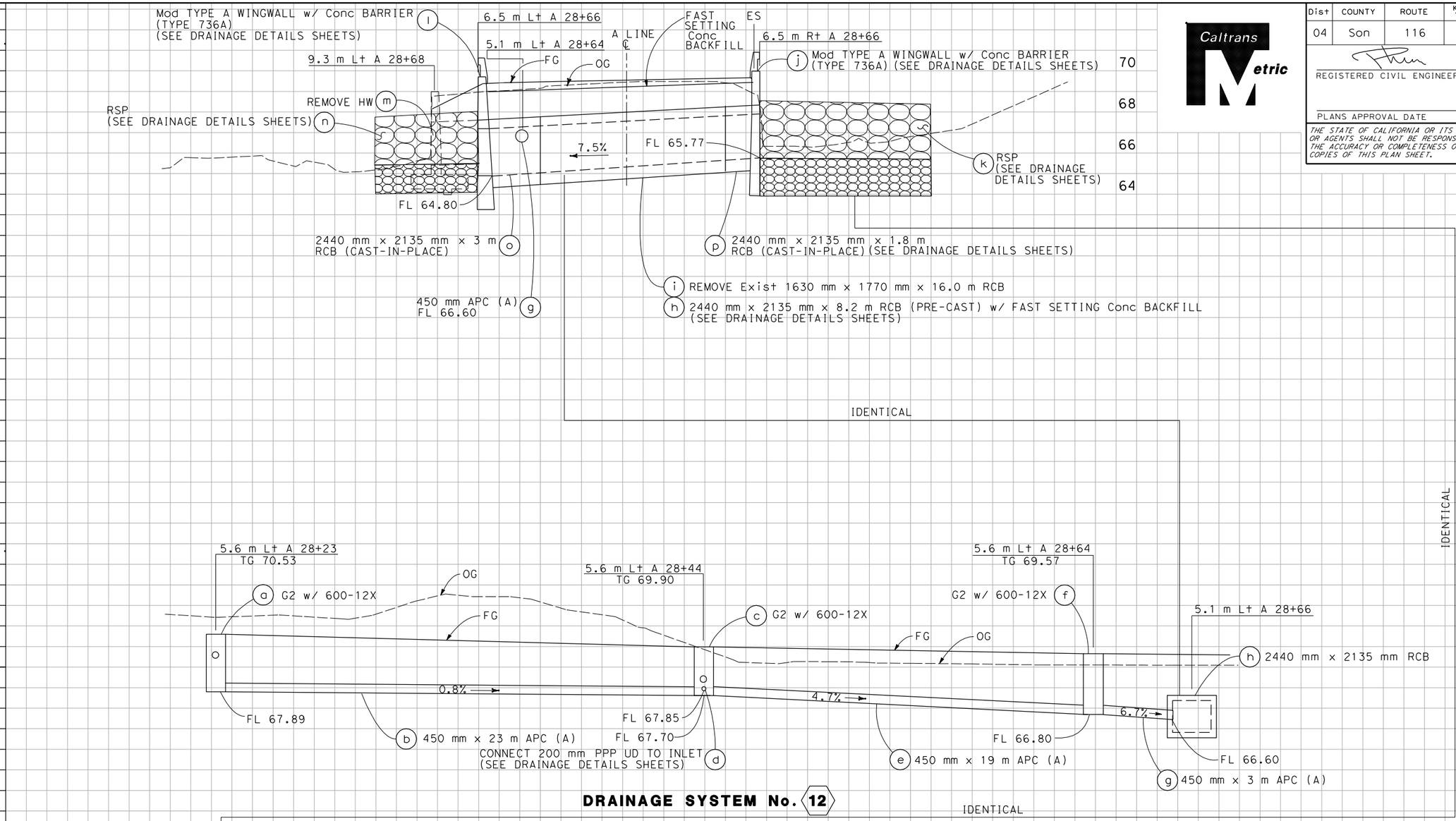

ALL DIMENSIONS ARE IN METERS UNLESS OTHERWISE SHOWN

DRAINAGE PROFILES

SCALE HORIZ 1:100 VERT 1:100

DP-1

REVISED BY	DATE REVISED
MC	5/07

MARCUS CHAN — JASON R. PHOEN

CALCULATED-DESIGNED BY — CHECKED BY

FUNCTIONAL SUPERVISOR: STEWART LEE

STATE OF CALIFORNIA - DEPARTMENT OF TRANSPORTATION — DESIGN — Caltrans

Station | m³ Exc | Emb

LAST REVISION 07-01-08 — DATE PLOTTED => 12/4/2009 — TIME PLOTTED => 3:25:10 PM

N:\Projects\2855-01\Reports\Baseline Vegetation Characterization

H. T. HARVEY & ASSOCIATES
ECOLOGICAL CONSULTANTS

Figure 1: Site Map

Stage Gulch Road Curve Correction and Realignment Project (2855-01)
July 2009

Dist	COUNTY	ROUTE	KILOMETER POST TOTAL PROJECT	SHEET No.	TOTAL SHEETS
04	Son	116	67.3/71.9		

LICENSED LANDSCAPE ARCHITECT

PLANS APPROVAL DATE

LICENSED LANDSCAPE ARCHITECT — ALEXANDER K. MCDONALD — No. 3582 — Signature — Renewal Date — Date — STATE OF CALIFORNIA

THE STATE OF CALIFORNIA OR ITS OFFICERS OR AGENTS SHALL NOT BE RESPONSIBLE FOR THE ACCURACY OR COMPLETENESS OF ELECTRONIC COPIES OF THIS PLAN SHEET.

Caltrans Metric

ABBREVIATIONS

AMEND — amendment
B & B — balled and burlapped
DIA — diameter
EA — each
g — gram
Kg — kilogram
m — meter
m² — square meter
m³ — cubic meter
MAX — maximum
MIN — minimum
mm — millimeter
No — number
Pkt — packet
PLT ESTB — plant establishment
PVMT — pavement
R/W — right of way
SF — state furnished
TRVD — traveled

PLANT LIST AND PLANTING SPECIFICATIONS

PLANT GROUP	PLANT No	SYMBOL	BOTANICAL NAME	COMMON NAME	SIZE	QUANTITY EACH	HOLE SIZE (mm) DIA	HOLE SIZE (mm) DEPTH	BASIN TYPE	IRON SULFATE ①	SOIL AMEND ①	COMMERCIAL FERTILIZER ① PLANTING	COMMERCIAL FERTILIZER ① PLT ESTB	BASIN MULCH	STAKING	PLANTING LIMITS MINIMUM DISTANCE (m) FROM TRVD WAY	PVMT	FENCE	WALL	PAVED DITCH	EARTH DITCH	ON CENTER (m)	REMARKS
I	1		ACER MACROPHYLLUM	BIG LEAF MAPLE	POT ⑩	26	600	600	II	--	0.12 m³	1 Pkt	28 g	0.05 m³	--	9	--	6	6	6	7	④	TREE ⑧
	2		AESCULUS CALIFORNICA	BUCKEYE	POT ⑩	40	600	600	II	--	0.12 m³	1 Pkt	28 g	0.05 m³	--	11	--	6	6	3	3.5	④	TREE ⑧
	3		ARBUTUS MENZIESII	MADRONE	POT ⑩	5	600	600	II	--	0.12 m³	1 Pkt	28 g	0.05 m³	--	9	--	6	6	6	7	④	TREE ⑧
	4		QUERCUS AGRIFOLIA	COAST LIVE OAK	POT ⑩	132	600	600	II	--	0.12 m³	1 Pkt	28 g	0.05 m³	--	9	--	6	4.5	4.5	5	④	TREE ⑧⑨
	5		QUERCUS KELLOGGII	CALIFORNIA BLACK OAK	POT ⑩	11	600	600	II	--	0.12 m³	1 Pkt	28 g	0.05 m³	--	9	--	6	6	6	7	④	TREE ⑧⑨
	6		QUERCUS LOBATA	VALLEY OAK	POT ⑩	133	600	600	II	--	0.12 m³	1 Pkt	28 g	0.05 m³	--	9	--	6	6	6	7	④	TREE ⑧⑨
	7		UMBELLULARIA CALIFORNICA	BAY LAUREL	POT ⑩	44	600	600	II	--	0.12 m³	1 Pkt	28 g	0.05 m³	--	12.5	--	9	9	6	7	④	TREE ⑧
M	8		ARTEMISIA DOUGLASIANA	MUGWORT	LINER ⑪	42	600	600	II	--	0.12 m³	1 Pkt	28 g	0.05 m³	--	--	2	2	2	3	3	④	SHRUB ⑧
	9		APOCYNUM CANNABINUM	DOGBANE	LINER ⑪	24	600	600	II	--	0.12 m³	1 Pkt	28 g	0.05 m³	--	--	2	2	2	3	3	④	SHRUB ⑧
	10		BACCHARIS PILULARIS	COYOTE BRUSH	LINER ⑪	124	600	600	II	--	0.12 m³	1 Pkt	28 g	0.05 m³	--	--	2	2	2	3	3	④	SHRUB
	11		CAREX BARBARAE	SANTA BARBARA SEDGE	LINER ⑫	2,619	②		II	--	--	1 Pkt	28 g	--	--	--	2	2	2	3	3	.305	GRASS ⑧
	12		HETEROMELES ARBUTIFOLIA	TOYON	LINER ⑪	24	600	600	II	--	0.12 m³	1 Pkt	28 g	0.05 m³	--	--	4.5	4.5	3	3	3.5	④	SHRUB
	13		JUNCUS PATENS	COMMON RUSH	LINER ⑫	2,619	②		II	--	--	1 Pkt	28 g	--	--	--	2	2	2	3	3	.305	GRASS
	14		LEYMUS TRITICOIDES	CREEPING WILD RYE	LINER ⑫	2,619	②		II	--	--	1 Pkt	28 g	--	--	--	2	2	2	3	3	.305	GRASS ⑧
	15		MIMULUS AURANTIACUS	STICKEY MONKEY-FLOWER	LINER ⑪	104	600	600	II	--	0.12 m³	1 Pkt	28 g	0.05 m³	--	--	2	2	2	3	3	④	SHRUB ⑧
	16		PHYSOCARPUS CAPITATUS	NINE BARK	LINER ⑪	72	600	600	II	--	0.12 m³	1 Pkt	28 g	0.05 m³	--	--	2	2	2	3	3	④	SHRUB ⑧
	17		RHAMNUS CALIFORNICA	COFFEEBERRY	LINER ⑪	73	600	600	II	--	0.12 m³	1 Pkt	28 g	0.05 m³	--	--	4.5	4.5	3	3	3.5	④	SHRUB ⑧
	18		RUBUS URSINUS	CALIFORNIA BLACKBERRY	LINER ⑪	61	600	600	II	--	0.12 m³	1 Pkt	28 g	0.05 m³	--	--	4.5	4.5	3	3	3.5	④	SHRUB ⑧
	19		SYMPHORICARPOS ALBUS	SNOW BERRY	LINER ⑪	40	600	600	II	--	0.12 m³	1 Pkt	28 g	0.05 m³	--	--	2	2	2	3	3	④	SHRUB
W	20		SALIX LAEVIGATA	RED WILLOW	WILLOW CUTTING	20 ⑬	⑦		--	--	--	1 Pkt	--	--	--	9	--	6	6	6	7	④	(LOCALLY COLLECTED WITHIN AN 8 KILOMETER RADIUS FROM PROJECT SITE)
	21		SALIX LASIOLEPIS	ARROYO WILLOW	WILLOW CUTTING	26 ⑬	⑦		--	--	--	1 Pkt	--	--	--	9	--	6	6	6	7	④	(LOCALLY COLLECTED WITHIN AN 8 KILOMETER RADIUS FROM PROJECT SITE)
	22		SALIX EXIGUA	NARROWLEAF WILLOW	WILLOW CUTTING	28 ⑬	⑦		--	--	--	1 Pkt	--	--	--	9	--	6	6	6	7	④	(LOCALLY COLLECTED WITHIN AN 8 KILOMETER RADIUS FROM PROJECT SITE)

APPLICABLE WHEN CIRCLED:

① - Quantities shown are "per plant" unless shown as m² application rates.
2 - Sufficient to receive root ball.
3 - Does not apply to mulch areas.
④ - As shown on plans.
5 - Unless otherwise shown on plans.
6 - See detail.
⑦ - See Special Provisions.
⑧ - Foliage protector required.
⑨ - Acorn seeding required.
⑩ - 100 mm X 355 mm Pot
⑪ - 64 mm Dia X 127 mm Liner
⑫ - 25 mm X 25 mm X 63 mm Liner
⑬ - Quantities do not include willows in rock slope protection, log weirs or biotechnical bank stabilization areas.

NOTES:

1. Underlined portions of botanical name indicate abbreviations used on Planting Plans.
2. Disturbed soil areas not planted will be treated with erosion control materials in combination with a primarily native seed mix of grasses, shrubs and legumes.
3. Approximately 10 to 15 acorns shall be collected for each Plant (Group I) oak tree planted. Acorns shall be collected from mature trees located within a five-kilometer radius of the mitigation sites. Acorns shall be tested for viability by floatation. Plant two acorns per planting hole for every oak tree planted. Acorn planting holes shall be randomly spaced throughout each site and at a quantity comparable to oak trees planted at that site. Acorn Planting holes shall be as shown on plans.

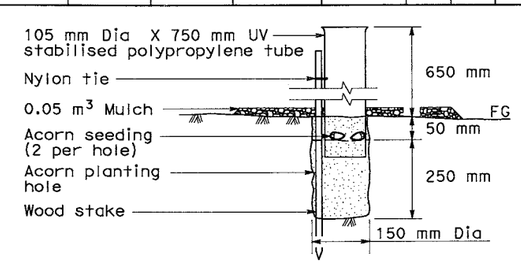

SECTION
ACORN PLANTING HOLE

PLANT LIST
PL-1

REVISED BY | DATE REVISED
Alex McDonald | Jennifer Egawa
CALCULATED-DESIGNED BY | CHECKED BY
SENIOR LANDSCAPE ARCHITECT | DAVE W. YAM
STATE OF CALIFORNIA - DEPARTMENT OF TRANSPORTATION
Caltrans WATER QUALITY

LAST REVISION 00-00-00 | DATE PLOTTED => 03-DEC-2009 | TIME PLOTTED => 14:04

DIST	COUNTY	ROUTE	POST MILES TOTAL PROJECT	SHEET NO.	TOTAL SHEETS

LICENSED LANDSCAPE ARCHITECT

May 1, 2006
PLANS APPROVAL DATE

LICENSED LANDSCAPE ARCHITECT
Gregory A. Balzer 2006
Expiration Date
02-28-2007
Renewal Date
10-11-2005
Date
STATE OF CALIFORNIA

The State of California or its officers or agents shall not be responsible for the accuracy or completeness of electronic copies of this plan sheet.

To get to the Caltrans web site, go to: http://www.dot.ca.gov

NOTE:

Top of stakes to have minimum 4" clearance from bottom of tree crown where applicable

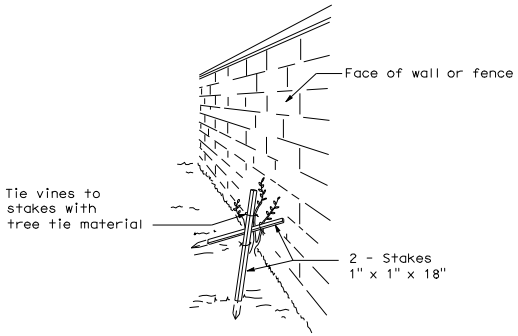

PERSPECTIVE
VINE STAKING

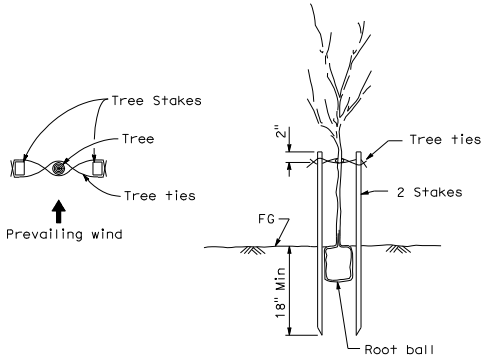

TREE STAKING

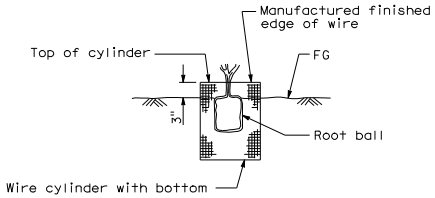

SECTION
ROOT PROTECTOR

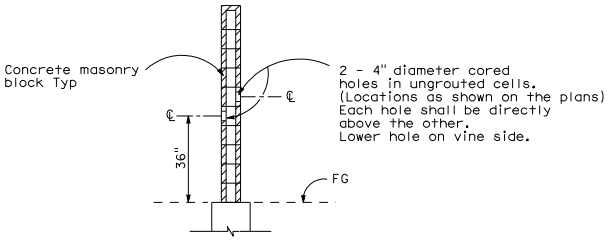

SECTION
CORE HOLE (PLANT)

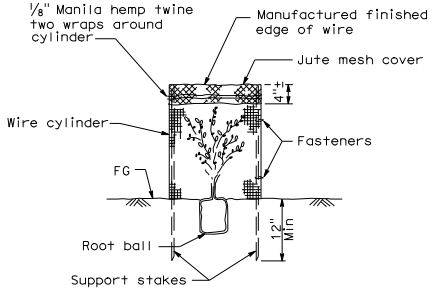

SECTION
FOLIAGE PROTECTOR

STATE OF CALIFORNIA
DEPARTMENT OF TRANSPORTATION

PLANTING AND IRRIGATION DETAILS

NO SCALE

H4

2006 STANDARD PLAN H4

07-12-05

DIST	COUNTY	ROUTE	POST MILES TOTAL PROJECT	SHEET NO.	TOTAL SHEETS

LICENSED LANDSCAPE ARCHITECT

May 1, 2006
PLANS APPROVAL DATE

LICENSED LANDSCAPE ARCHITECT
Gregory A. Bolger
Signature
02-28-2007
Renewal Date
10-11-2005
Date
STATE OF CALIFORNIA

The State of California or its officers or agents shall not be responsible for the accuracy or completeness of electronic copies of this plan sheet.

To get to the Caltrans web site, go to: http://www.dot.ca.gov

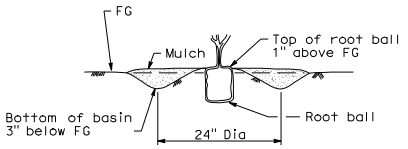

SECTION
(Flat Area)

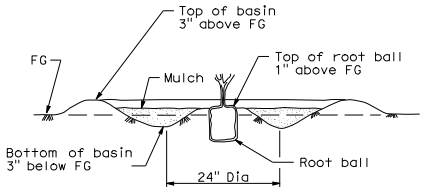

SECTION
(Flat Area)

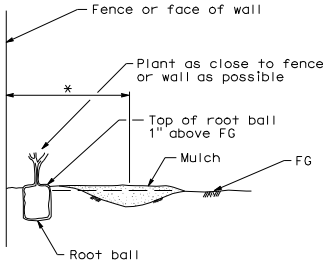

SECTION
(Flat Area)

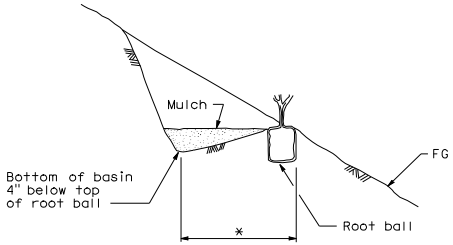

SECTION
(Slope Area)

BASIN TYPE I

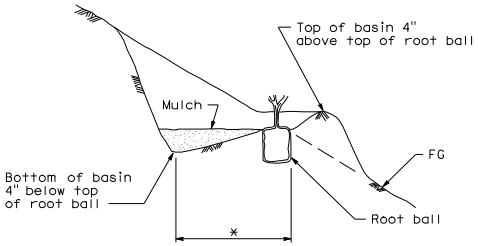

SECTION
(Slope Area)

BASIN TYPE II

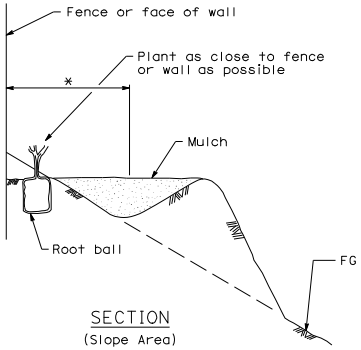

SECTION
(Slope Area)

BASIN TYPE III

* Basin area equivalent to 24" Dia

STATE OF CALIFORNIA
DEPARTMENT OF TRANSPORTATION

PLANTING AND IRRIGATION DETAILS

NO SCALE

H3

2006 STANDARD PLAN H3

07-12-05

Dist	COUNTY	ROUTE	KILOMETER POST TOTAL PROJECT	SHEET No.	TOTAL SHEETS
04	Son	116	67.3/71.9	76	337

Alex McDonald
LICENSED LANDSCAPE ARCHITECT

6-22-09
PLANS APPROVAL DATE

LICENSED LANDSCAPE ARCHITECT — ALEXANDER K. MCDONALD NO. 4247 — Alex McDonald — Signature — 08-31-10 Renewal Date — Date — STATE OF CALIFORNIA

THE STATE OF CALIFORNIA OR ITS OFFICERS OR AGENTS SHALL NOT BE RESPONSIBLE FOR THE ACCURACY OR COMPLETENESS OF ELECTRONIC COPIES OF THIS PLAN SHEET.

Caltrans Metric

ABBREVIATIONS

AMEND — amendment
B & B — balled and burlapped
DIA — diameter
EA — each
g — gram
kg — kilogram
m — meter
m² — square meter
m³ — cubic meter
MAX — maximum
MIN — minimum
mm — millimeter
No — number
Pkt — packet
PLT ESTB — plant establishment
PVMT — pavement
R/W — right of way
SF — state furnished
TRVD — traveled

APPLICABLE WHEN CIRCLED:

1 - Quantities shown are "per plant" unless shown as m² application rates.
2 - Sufficient to receive root ball.
3 - Does not apply to mulch areas.
4 - As shown on plans.
5 - Unless otherwise shown on plans.
6 - See detail.
7 - See Special Provisions.

PLANT LIST AND PLANTING SPECIFICATIONS

PLANT GROUP	PLANT No	SYMBOL	BOTANICAL NAME	COMMON NAME	SIZE	QUANTITY EACH	HOLE SIZE (mm) DIA	HOLE SIZE (mm) DEPTH	TOPSOIL 1	SOIL AMEND 1	COMMERCIAL FERTILIZER 1 PLANTING	COMMERCIAL FERTILIZER 1 PLT ESTB	BASIN MULCH	STAKING	PLANTING LIMITS MINIMUM DISTANCE (m) FROM TRVD WAY	PVMT	FENCE	WALL	PAVED DITCH	EARTH DITCH	ON CENTER (m)	REMARKS
W	1		SALIX LAEVIGATA	RED WILLOW	7	21	2		0.37	0.18	7	--	--	--	9	--	6	6	--	--	4	PLANT IN PERFORATED CARDBOARD TUBE 6
	2		SALIX LASIOLEPIS	ARROYO WILLOW	7	24	2		0.37	0.18	7	--	--	--	9	--	6	6	--	--	4	PLANT IN PERFORATED CARDBOARD TUBE 6

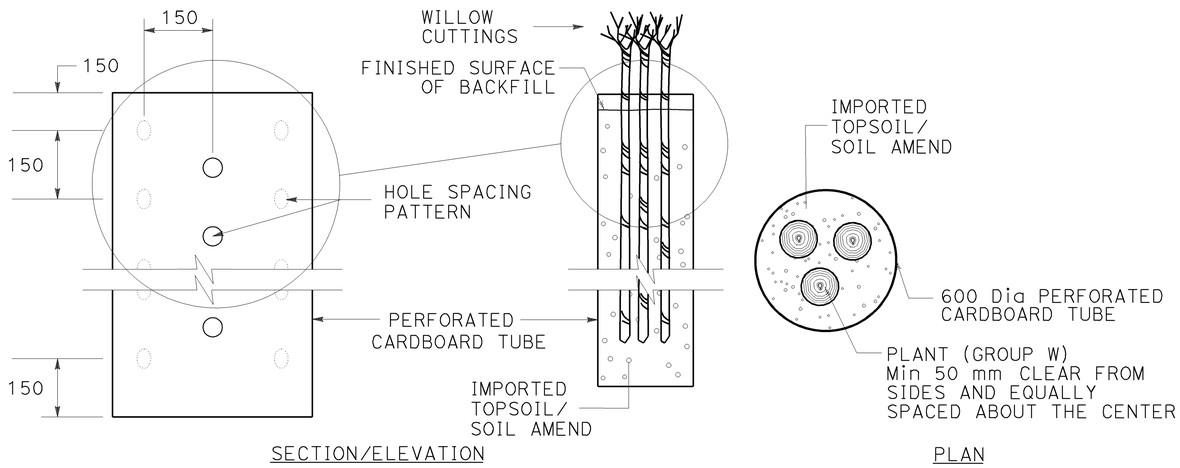

PLANT (GROUP W) IN PERFORATED CARDBOARD TUBE

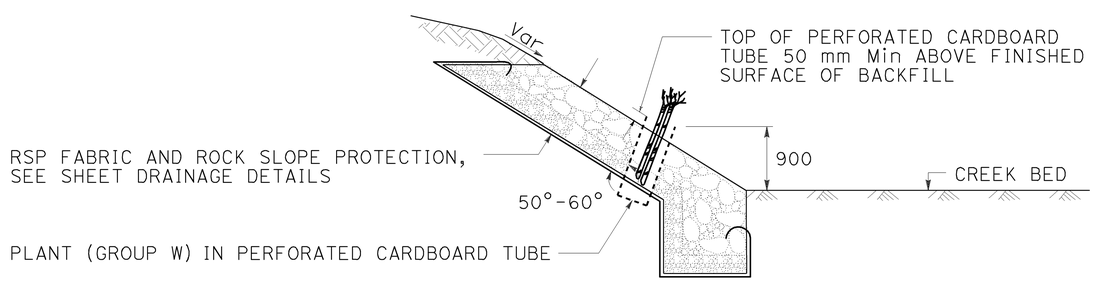

TYPICAL SECTION
PLANT (GROUP W) IN ROCK SLOPE PROTECTION

NOTES:

1. UNDERLINED PORTIONS OF BOTANICAL NAME INDICATE ABBREVIATIONS USED ON PLANTING PLANS.
2. MIX WILLOW SPECIES AT EACH PLANTING LOCATION.

ALL DIMENSIONS ARE IN MILLIMETERS UNLESS OTHERWISE SHOWN

EROSION CONTROL DETAILS
NO SCALE

ECD-4

REVISED BY 01/07 — DATE REVISED 01/07
CALCULATED-DESIGNED BY Alex McDonald — CHECKED BY Jennifer Egawa
SENIOR LANDSCAPE ARCHITECT DAVE W. YAM

STATE OF CALIFORNIA - DEPARTMENT OF TRANSPORTATION
Caltrans WATER QUALITY

LAST REVISION 03-17-09 — DATE PLOTTED => 25-JUN-2009 — TIME PLOTTED => 14:46

Dist	COUNTY	ROUTE	KILOMETER POST TOTAL PROJECT	SHEET No.	TOTAL SHEETS
04	Son	116	67.3/71.9		

REGISTERED CIVIL ENGINEER DATE

PLANS APPROVAL DATE

REGISTERED PROFESSIONAL ENGINEER ULYSSES HILLARD No. C 64873 Exp. 6/30/11 CIVIL STATE OF CALIFORNIA

THE STATE OF CALIFORNIA OR ITS OFFICERS OR AGENTS SHALL NOT BE RESPONSIBLE FOR THE ACCURACY OR COMPLETENESS OF ELECTRONIC COPIES OF THIS PLAN SHEET.

WRECO
1814 FRANKLIN, SUITE 608
OAKLAND, CA 94612

CALTRANS
111 GRAND AVENUE
OAKLAND, CA 94612

Caltrans Metric

NOTES:

1. WILLOW BRANCHES SHALL BE 3 m TO 3.7 m LONG, AND PLACED SUCH THAT THE BUTT ENDS CONTACT THE NATIVE SOIL AND THE TIPS PROTRUDE FROM THE FG 150 mm Min.
2. LAYER CONSTRUCTION SHALL BEGIN AT THE BASE OF THE SLOPE AND PROCEED UPWARD.
3. THE BRUSHLAYERS SHALL BE PLACED 10 TO 20 DEGREES OFF HORIZONTAL.
4. LIVE BRANCHES ARE PLACED IN A CRISSCROSS OR OVERLAPPING PATTERN WITH GROWING TIPS FACING THE OUTSIDE FACE OF THE SLOPE.
5. BACKFILL SHALL BE PLACED ON TOP OF THE BRANCHES AND COMPACTED.

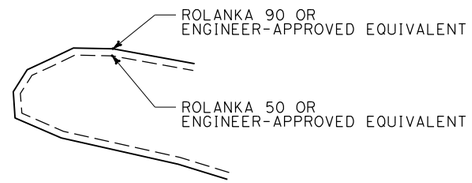

DETAIL A

TABLE 1

DRAINAGE SYSTEM	LOCATION	AVERAGE BANK HEIGHT (m)	AVERAGE NUMBER OF SOIL LIFT*
19A a	Lt "CC" 30+44 TO "CC" 30+60	3.0	6
19A b	Rt "CC" 30+44 TO "CC" 30+76.70	0.3	1
19A c	Rt "CC" 30+94 TO "CC" 31+07.78	2.2	6
19A d	Lt "CC" 31+65 TO "CC" 31+94.20	1.6	5
19A e	Lt "CC" 32+72 TO "CC" 32+92.49	0.9	3
19A f	Rt "CC" 32+72 TO "CC" 32+97	0.6	2

* MAXIMUM 6 SOIL LIFTS ABOVE GROUND, REGARDLESS OF BANK HEIGHT.

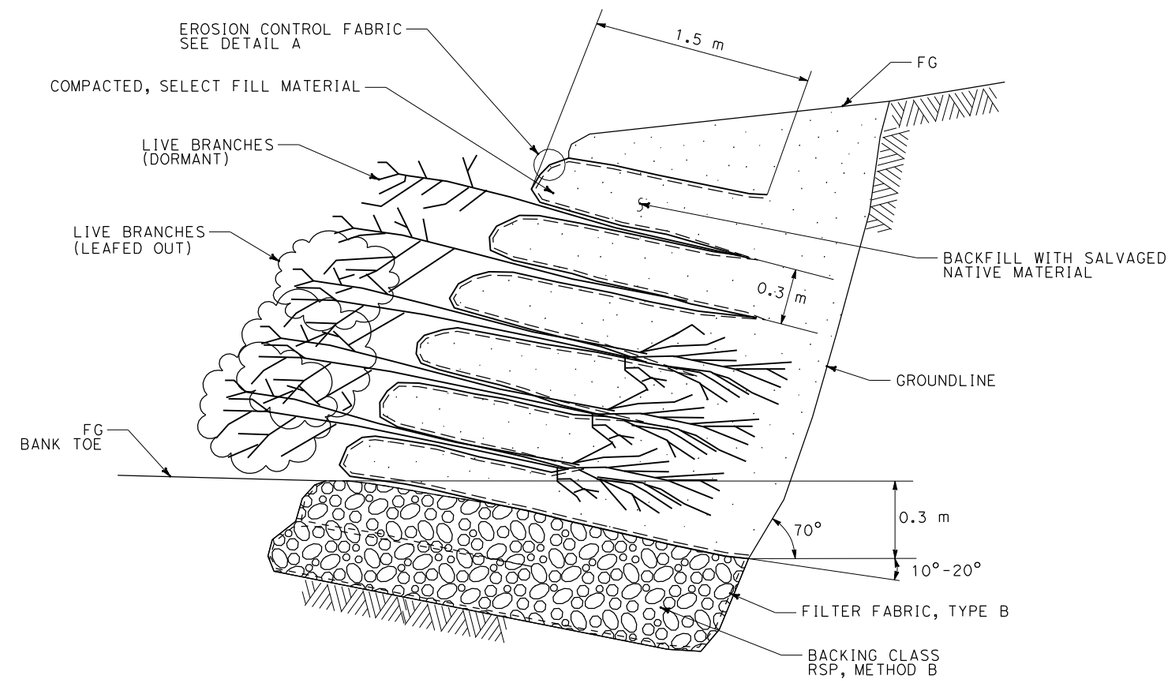

ELEVATION

BIOTECHNICAL BANK STABILIZATION, BRUSH LAYERING

DRAINAGE DETAILS

NO SCALE

ALL DIMENSIONS ARE IN
METERS UNLESS OTHERWISE SHOWN

DD-1

STATE OF CALIFORNIA - DEPARTMENT OF TRANSPORTATION
Caltrans

CONSULTANT FUNCTIONAL SUPERVISOR: HAN-BIN LIANG
CALCULATED-DESIGNED BY: IRENE LIU
CHECKED BY: ULYSSES HILLARD
REVISED BY
DATE REVISED

LAST REVISION 00-00-00
DATE PLOTTED => 12/4/2009
TIME PLOTTED => 4:48:33 PM

Dist	COUNTY	ROUTE	KILOMETER POST TOTAL PROJECT	SHEET No.	TOTAL SHEETS
04	Son	116	67.3/71.9		

REGISTERED CIVIL ENGINEER 7-24-07 DATE

PLANS APPROVAL DATE

REGISTERED PROFESSIONAL ENGINEER Jason R. Phoen No. 57553 Exp. 12-31-09 CIVIL STATE OF CALIFORNIA

THE STATE OF CALIFORNIA OR ITS OFFICERS OR AGENTS SHALL NOT BE RESPONSIBLE FOR THE ACCURACY OR COMPLETENESS OF ELECTRONIC COPIES OF THIS PLAN SHEET.

Caltrans Metric

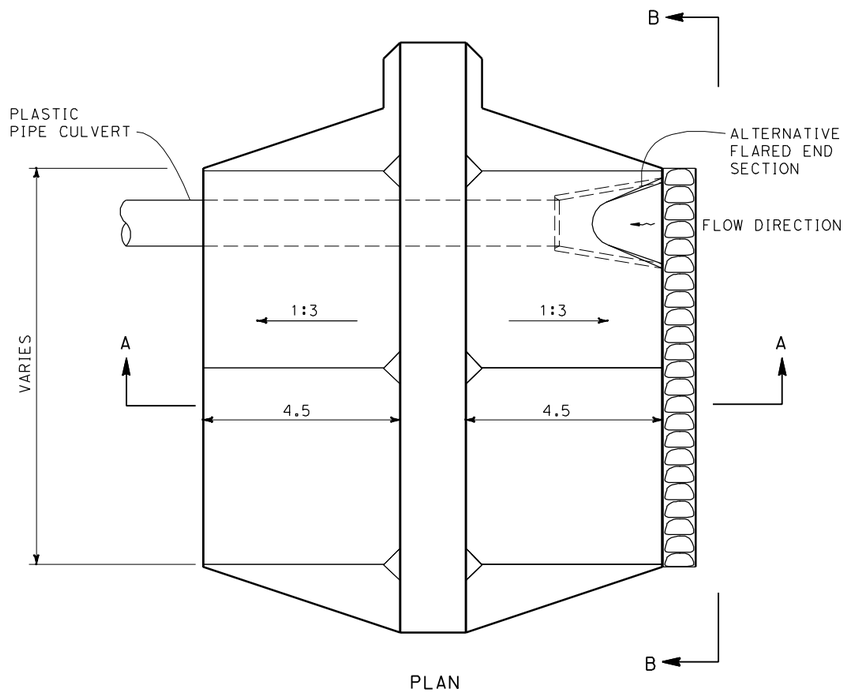

PLAN

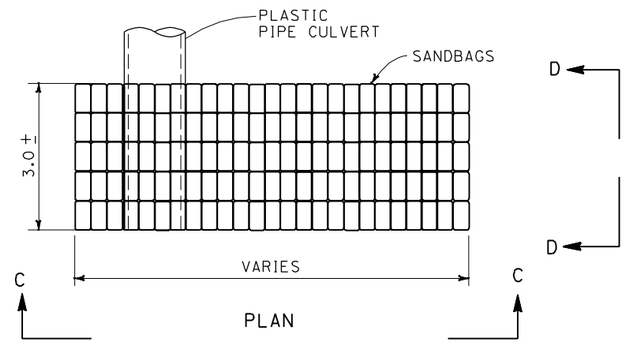

PLAN

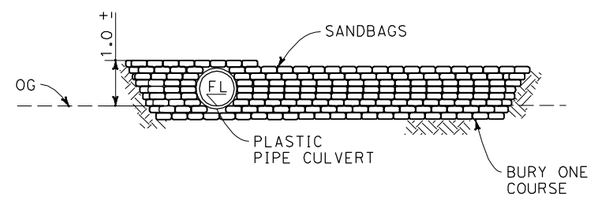

SECTION C-C

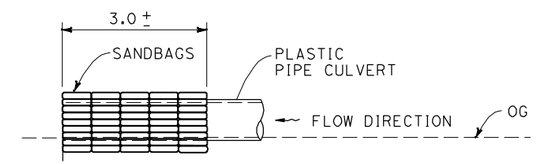

SECTION D-D

SAND BAG BARRIER DETAILS (DOWNSTREAM)

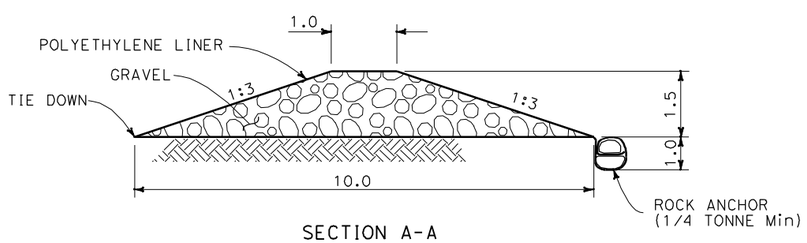

SECTION A-A

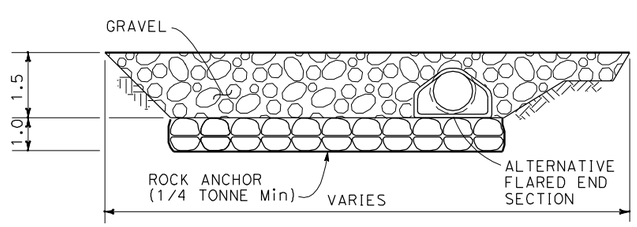

SECTION B-B

COFFERDAM DETAILS (UPSTREAM)

TEMPORARY CREEK DIVERSION

LOCATION	STATION	PIPE SIZE
1	A 22+50	600 mm PLASTIC
2	A 28+70	900 mm PLASTIC
3	A 29+50	600 mm PLASTIC
4	A 36+00	900 mm PLASTIC
5	A 41+10	600 mm PLASTIC
6	A 53+60	900 mm PLASTIC

DRAINAGE DETAILS

NO SCALE

ALL DIMENSIONS ARE IN MILLIMETERS UNLESS OTHERWISE SHOWN

DD-2

MC	5/07
REVISED BY	DATE REVISED
MARCUS CHAN	JASON R. PHOEN
CALCULATED-DESIGNED BY	CHECKED BY
FUNCTIONAL SUPERVISOR	STEWART LEE

STATE OF CALIFORNIA - DEPARTMENT OF TRANSPORTATION

Caltrans **DESIGN**

LAST REVISION 07-11-08 DATE PLOTTED => 12/4/2009 TIME PLOTTED => 3:20:52 PM

ALTERNATIVE PIPE CULVERTS (ALLOWABLE PIPE MATERIAL AND PROTECTION)

DESIGNATION	RCP	CSP		SSRP		PLASTIC PIPE	
	SIZE	SIZE	THICKNESS	SIZE	THICKNESS	SIZE	TYPE
450 mm APC (A)	450 mm	450 mm	1.3 mm THICK w/ POLYMERIC SHEET COATING	-	-	450 mm	EITHER
450 mm APC (B)	-	450 mm	1.3 mm THICK w/ POLYMERIC SHEET COATING	-	-	450 mm	CORRUGATED
600 mm APC (A)	600 mm	600 mm	1.3 mm THICK w/ POLYMERIC SHEET COATING	600 mm	1.3 mm THICK	600 mm	EITHER
600 mm APC (B)	-	600 mm	1.3 mm THICK w/ POLYMERIC SHEET COATING	-	-	600 mm	CORRUGATED
750 mm APC	750 mm	-	-	750 mm	1.3 mm THICK	750 mm	SMOOTH ***
900 mm APC	-	900 mm	1.3 mm THICK w/ POLYMERIC SHEET COATING	-	-	900 mm	CORRUGATED ***

*** RIBBED PROFILE WALL POLYETHEYLENE PIPE IS PROHIBITED
SSRP - STEEL SPIRAL RIBBED PIPE

ABBREVIATIONS

S - STANDARD JOINT
D - DOWNDRAIN JOINT

Caltrans Metric

Dist	COUNTY	ROUTE	KILOMETER POST TOTAL PROJECT	SHEET No.	TOTAL SHEETS
04	Son	116	67.3/71.9		

REGISTERED CIVIL ENGINEER DATE

PLANS APPROVAL DATE

REGISTERED PROFESSIONAL ENGINEER No. Exp. CIVIL STATE OF CALIFORNIA

THE STATE OF CALIFORNIA OR ITS OFFICERS OR AGENTS SHALL NOT BE RESPONSIBLE FOR THE ACCURACY OR COMPLETENESS OF ELECTRONIC COPIES OF THIS PLAN SHEET.

WRECO
1814 FRANKLIN, SUITE 608
OAKLAND, CA 94612

CALTRANS
111 GRAND AVENUE
OAKLAND, CA 94612

DRAINAGE QUANTITIES

DRAINAGE SYSTEM No.	DRAINAGE UNIT	REMOVE CONCRETE (m^3)	REMOVE HEADWALL (EA)	REMOVE CULVERT (m)	ABANDON CULVERT (EA)	REMOVE INLET (EA)	CLASS 2 CONCRETE (BOX CULVERT) (m^3)	CLASS 2 CONCRETE (WINGWALLS) (m^3)	MINOR CONCRETE (BACKFILL) (m^3)	CONCRETE BACKFILL (FAST SETTING CONCRETE) (m^3)	MINOR CONCRETE (MINOR STRUCTURE) (m^3)	BAR REINFORCING STEEL (kg)	MISCELLANEOUS IRON AND STEEL (kg)	300 mm WSP (2.67 mm THICK) (m)	450 mm APC (TYPE A) (m)	450 mm APC (TYPE B) (m)	600 mm APC (TYPE A) (m)	600 mm APC (TYPE B) (m)	750 mm APC (m)	900 mm APC (m)	PRECAST Conc BOX CULVERT (2440 mm x 2135 mm) (m)	SAND BACKFILL (m^3)	DESCRIPTION	STATION	DRAINAGE PLAN SHEET No.	DRAINAGE SYSTEM No.	DRAINAGE UNIT
15	a																						1050 mm FES	11.2 m Lt A 30+08	D-7	15	a
	b																						1050 mm CSP	11.2 m Lt A 30+05 TO 11.2 m Lt A 30+08			b
	c										1.38		108										G2 INLET w/ 600-12X	11.2 m Lt A 30+05			c
	d									34													1050 mm CSP w/ FAST SETTING Conc BACKFILL	7.0 m Rt A 30+05 TO 11.2 m Lt A 30+05			d
	e										1.61		108										G2 INLET w/ 600-12X	7.0 m Rt A 30+05			e
	f																						1050 mm CSP	9.5 m Rt A 30+05 TO 7.0 m Rt A 30+05			f
	g										1.75												STRAIGHT HEADWALL	9.5 m Rt A 30+05			g
	h																						RSP	11.2 m Lt A 30+08			h
16	a																						450 mm FES	10.0 m Lt A 30+22	D-7	16	a
	b															17.5							450 mm APC (B)	7.0 m Rt A 30+22 TO 10.5 m Lt A 30+22			b
	c										3.81		108										G2 INLET w/ 600-12X	7.0 m Rt A 30+22			c
	d																						TYPE A CHANNEL	11.2 m Lt A 30+07 TO 16.2 m Lt A 30+68.5			d
	e																						RSP	10.0 m Lt A 30+22			e
17	a																						450 mm FES	10.9 m Lt A 30+38	D-7	17	a
	b															16.6							450 mm APC (B)	7.0 m Rt A 30+38 TO 10.9 m Lt A 30+38			b
	c										1.70		108										G2 INLET w/ 600-12X	6.3 m Rt A 30+38			c
	d													1.5									300 mm x 1.5 m WSP	6.3 m Rt A 30+38 TO 8.1 m Rt A 30+38			d
	e										1.75		108										G2 INLET w/ 600-12X	8.1 m Rt A 30+38			e
	f																						RSP	10.9 m Lt A 30+38			f
18	a										1.04		108										G2 INLET w/ 600-12X	6.0 m Lt A 31+01	D-7	18	a
	b																						CONNECT 200 mm PPP UD TO INLET (2 SIDES)	5.5 m Lt A 31+01			b
	c															14.7							450 mm APC (B)	9.5 m Rt A 31+01 TO 5.5 m Lt A 31+01			c
	d										1.84		108										G2 INLET w/ 600-12X	9.5 m Rt A 31+01			d
	e																						CONNECT 200 mm PPP UD TO INLET (2 SIDES)	9.0 m Rt A 31+01			e
	f															58.2							450 mm APC (B)	6.0 m Rt A 31+01 TO 6.0 m Lt A 31+60			f
	g																						CONNECT 200 mm PPP UD TO INLET (2 SIDES)	5.5 m Lt A 31+60			g
	h										2.01		108										G2 INLET w/ 600-12X	6.0 m Lt A 31+60			h
	i															5.5							450 mm APC (B)	6.0 m Lt A 31+60 TO 10.7 m Lt A 31+60			i
	j																						450 mm FES	10.7 m Lt A 31+60			j
	k																						RSP	10.7 m Lt A 30+60			k
	l																						DITCH	10.7 m Lt A 31+60 TO 18.1 m Lt A 31+68			l
	m																						RSP	18.1 m Lt A 31+68			m
	n																						SPILLWAY	22.2 m Lt A 32+10.4 TO 28.5 m Lt A 32+15			n
SHEET TOTAL										34	16.89		864	1.5		112.5							SHEET TOTAL				

REVISED BY | DATE REVISED
IRENE LIU | ULYSSES HILLARD
CALCULATED-DESIGNED BY | CHECKED BY
CONSULTANT FUNCTIONAL SUPERVISOR | HAN-BIN LIANG
STATE OF CALIFORNIA - DEPARTMENT OF TRANSPORTATION
Caltrans

DATE PLOTTED => 12/3/2009
TIME PLOTTED => 11:11:29 PM
LAST REVISION 00-00-00

DRAINAGE QUANTITIES DQ-1

Dist	COUNTY	ROUTE	KILOMETER POST TOTAL PROJECT	SHEET No.	TOTAL SHEETS
04	Son	116	67.3/71.9		

Caltrans Metric

REGISTERED CIVIL ENGINEER DATE

PLANS APPROVAL DATE

REGISTERED PROFESSIONAL ENGINEER ULYSSES HILLARD No. C 041873 Exp. 6/30/11 CIVIL STATE OF CALIFORNIA

THE STATE OF CALIFORNIA OR ITS OFFICERS OR AGENTS SHALL NOT BE RESPONSIBLE FOR THE ACCURACY OR COMPLETENESS OF ELECTRONIC COPIES OF THIS PLAN SHEET.

WRECO
1814 FRANKLIN, SUITE 608
OAKLAND, CA 94612

CALTRANS
111 GRAND AVENUE
OAKLAND, CA 94612

DRAINAGE QUANTITIES

DRAINAGE SYSTEM No.	DRAINAGE UNIT	CSP w/ POLYMERIC SHEET COATING (1.3 mm THICK) 450 mm (m)	900 mm (m)	1050 mm (m)	1200 mm (m)	1650 mm (m)	2100 mm (m)	ALTERNATIVE FLARED END SECTION 450 mm (EA)	600 mm (EA)	750 mm (EA)	900 mm (EA)	1050 mm (EA)	ROCK SLOPE PROTECTION (FACING, METHOD B) (m^3)	ROCK SLOPE PROTECTION, (1/4 TON, METHOD B) (m^3)	ROCK SLOPE PROTECTION (BACKING No. 3, METHOD B) (m^3)	ROCK SLOPE PROTECTION FABRIC (TYPE A) (m^2)	GEOMEMBRANE (WATER BARRIER) (m^2)	GEOTEXTILE (CUSHION FABRIC) (m^2)	MAXIMUM COVER (N) (m)	HEIGHT OF INLET "H" (N) (m)	FRAME & GRATE (N) (EA)	CONCRETE BARRIER * (TYPE 736A) (m)	CHANNEL EXCAVATION (m^3)	CONCRETE COLLAR (N) (EA)	PIPE JOINT CLASSIFICATION (N)	REMOVE FES (EA)	CONNECT 200 mm PPP UD TO INLET (N) (EA)	ROCK SLOPE PROTECTION, (1/4 TON, METHOD A) (m^3)	ROCK SLOPE PROTECTION (BACKING No. 3, METHOD A) (m^3)	COIR LOG (m)	CABLE TIE (EA)	DUCK BILL ANCHOR (EA)	DESCRIPTION	STATION	DRAINAGE PLAN SHEET No.	DRAINAGE SYSTEM No.	DRAINAGE UNIT
15	a											1																								1050 mm FES	11.2 m Lt A 30+08	D-7	15	a
	b			2.5															0.4							S										1050 mm CSP	11.2 m Lt A 30+05 TO 11.2 m Lt A 30+08			b
	c																			1.48	1															G2 INLET w/ 600-12X	11.2 m Lt A 30+05			c
	d			19															0.7							S										1050 mm CSP w/ FAST SETTING Conc BACKFILL	7.0 m Rt A 30+05 TO 11.2 m Lt A 30+05			d
	e																			1.86	1															G2 INLET w/ 600-12X	7.0 m Rt A 30+05			e
	f			2															0.6							S										1050 mm CSP	9.5 m Rt A 30+05 TO 7.0 m Rt A 30+05			f
	g																																			STRAIGHT HEADWALL	9.5 m Rt A 30+05			g
	h												12			32.2																			RSP	11.2 m Lt A 30+08			h
16	a							1																												450 mm FES	10.0 m Lt A 30+22	D-7	16	a
	b																		2.3							S										450 mm APC (B)	7.0 m Rt A 30+22 TO 10.5 m Lt A 30+22			b
	c																			2.94	1															G2 INLET w/ 600-12X	7.0 m Rt A 30+22			c
	d																						245													TYPE A CHANNEL	11.2 m Lt A 30+07 TO 16.2 m Lt A 30+68.5			d
	e												3.6			13.4																			RSP	10.0 m Lt A 30+22			e
17	a							1																												450 mm FES	10.9 m Lt A 30+38	D-7	17	a
	b																		1.5							S										450 mm APC (B)	7.0 m Rt A 30+38 TO 10.9 m Lt A 30+38			b
	c																			2	1															G2 INLET w/ 600-12X	6.3 m Rt A 30+38			c
	d																																			300 mm x 1.5 m WSP	6.3 m Rt A 30+38 TO 8.1 m Rt A 30+38			d
	e																			2.08	1															G2 INLET w/ 600-12X	8.1 m Rt A 30+38			e
	f												3.6			13.4																			RSP	10.9 m Lt A 30+38			f
18	a																			0.94	1															G2 INLET w/ 600-12X	6.0 m Lt A 31+01	D-7	18	a
	b																											1								CONNECT 200 mm PPP UD TO INLET (2 SIDES)	5.5 m Lt A 31+01			b
	c																		1.8							S										450 mm APC (B)	9.5 m Rt A 31+01 TO 5.5 m Lt A 31+01			c
	d																			2.22	1															G2 INLET w/ 600-12X	9.5 m Rt A 31+01			d
	e																											1								CONNECT 200 mm PPP UD TO INLET (2 SIDES)	9.0 m Rt A 31+01			e
	f																		1.4							S										450 mm APC (B)	6.0 m Rt A 31+01 TO 6.0 m Lt A 31+60			f
	g																																			CONNECT 200 mm PPP UD TO INLET (2 SIDES)	5.5 m Lt A 31+60			g
	h																			2.49	1															G2 INLET w/ 600-12X	6.0 m Lt A 31+60			h
	i																		2.0							S										450 mm APC (B)	6.0 m Lt A 31+60 TO 10.7 m Lt A 31+60			i
	j							1																												450 mm FES	10.7 m Lt A 31+60			j
	k												3.6			13.4																			RSP	10.7 m Lt A 30+60			k
	l																																			DITCH	10.7 m Lt A 31+60 TO 18.1 m Lt A 31+68			l
	m												3.6			13.4																			RSP	18.1 m Lt A 31+68			m
	n																														39.2	4	4			SPILLWAY	22.2 m Lt A 32+10.4 TO 28.5 m Lt A 32+15			n
SHEET TOTAL				23.5				3				1	26.4			85.8					8		245					3								SHEET TOTAL				

(N) - NOT A SEPARATE PAY ITEM, FOR INFORMATION ONLY
* - FOR INFORMATION ONLY, SEE R-7 FOR QUANTITIES

DRAINAGE QUANTITIES DQ-2

REVISED BY | DATE REVISED
IRENE LIU | ULYSSES HILLARD
CALCULATED-DESIGNED BY | CHECKED BY
CONSULTANT FUNCTIONAL SUPERVISOR
HAN-BIN LIANG

STATE OF CALIFORNIA - DEPARTMENT OF TRANSPORTATION
Caltrans

LAST REVISION 00-00-00 | DATE PLOTTED => 12/3/2009 | TIME PLOTTED => 11:10:07 PM

Dist	COUNTY	ROUTE	KILOMETER POST TOTAL PROJECT	SHEET No.	TOTAL SHEETS
04	Son	116	67.3/71.9		

REGISTERED CIVIL ENGINEER DATE

PLANS APPROVAL DATE

REGISTERED PROFESSIONAL ENGINEER ULYSSES HILLARD No. C 061873 Exp. 6/30/11 CIVIL STATE OF CALIFORNIA

THE STATE OF CALIFORNIA OR ITS OFFICERS OR AGENTS SHALL NOT BE RESPONSIBLE FOR THE ACCURACY OR COMPLETENESS OF ELECTRONIC COPIES OF THIS PLAN SHEET.

WRECO
1814 FRANKLIN, SUITE 608
OAKLAND, CA 94612

CALTRANS
111 GRAND AVENUE
OAKLAND, CA 94612

Caltrans Metric

DRAINAGE QUANTITIES

DRAINAGE SYSTEM No.	DRAINAGE UNIT	REMOVE CONCRETE (m^3)	REMOVE HEADWALL (EA)	REMOVE CULVERT (m)	ABANDON CULVERT (EA)	REMOVE INLET (EA)	CLASS 2 CONCRETE (BOX CULVERT) (m^3)	CLASS 2 CONCRETE (WINGWALLS) (m^3)	MINOR CONCRETE (BACKFILL) (m^3)	CONCRETE BACKFILL (FAST SETTING CONCRETE) (m^3)	MINOR CONCRETE (MINOR STRUCTURE) (m^3)	BAR REINFORCING STEEL (kg)	MISCELLANEOUS IRON AND STEEL (kg)	300 mm WSP (2.67 mm THICK) (m)	450 mm APC (TYPE A) (m)	450 mm APC (TYPE B) (m)	600 mm APC (TYPE A) (m)	600 mm APC (TYPE B) (m)	750 mm APC (m)	900 mm APC (m)	PRECAST Conc BOX CULVERT (2440 mm x 2135 mm) (m)	SAND BACKFILL (m^3)	DESCRIPTION	STATION	DRAINAGE PLAN SHEET No.	DRAINAGE SYSTEM No.	DRAINAGE UNIT
19	a										1.31		108										G2 INLET w/ 600-12X	6.0 m Lt A 31+80	D-7, D-8	19	a
	b														20								450 mm APC (A)	6.0 m Lt A 31+80 TO A 32+00			b
	c										1.77		288										GDO INLET w/ Mod GRATE FRAME	6.0 m Lt A 32+00			c
	d														10								450 mm APC (A)	6.0 m Lt A 32+00 TO A 32+10			d
	e										1.88		288										GDO INLET w/ Mod GRATE FRAME	6.0 m Lt A 32+10			e
	f														31								450 mm APC (A)	6.0 m Lt A 32+10 TO A 32+41			f
	g										1.87		108										G2 INLET w/ 600-12X	6.0 m Lt A 32+41			g
	h																						CONNECT 200 mm PPP UD TO INLET	6.0 m Lt A 32+41			h
	i														39								450 mm APC (A)	6.0 m Lt A 32+41 TO 6.0 m Lt A 32+80			i
	j										3.70		108										G2 INLET w/ 600-12X	6.0 m Lt A 32+80			j
	k															25							450 mm APC (B)	6.0 m Lt A 32+80 TO 18.6 m Lt A 33+00			k
	l																						450 mm FES	18.6 m Lt A 33+00			l
	m																						RSP	18.6 m Lt A 33+00			m
	n																						SPILLWAY	28.2 m Lt A 32+97.7 TO 41.3 m Lt A 32+87			n
	o															17							450 mm APC (B)	6.0 m Lt A 32+41 TO 10.7 m Rt A 32+41			o
	p										1.38		108										G2 INLET w/ 600-12X	9.6 m Rt A 32+24			p
	q														8								450 mm APC (A)	9.6 m Rt A 32+24 TO A 32+33			q
	r										1.45		108										G2 INLET w/ 600-12X	9.6 m Rt A 32+33			r
	s														9								450 mm APC (A)	9.6 m Rt A 32+33 TO 10.7 m Rt A 32+41			s
	t										1.51		108										G2 INLET w/ 600-12X	10.7 m Rt A 32+41			t
	u																						CONNECT 200 mm PPP UD TO INLET (2 SIDES)	10.7 m Rt A 32+41			u
	v														25								450 mm APC (A)	10.7 m Rt A 32+41 TO 10.0 m Rt A 32+65			v
	w																						CONNECT 200 mm PPP UD TO INLET (2 SIDES)	10.0 m Rt A 32+65			w
	x										1.17		108										G2 INLET w/ 600-12X	10.0 m Rt A 32+65			x
SHEET TOTAL											16.04		1332		142	42							SHEET TOTAL				

REVISED BY | DATE REVISED

IRENE LIU | ULYSSES HILLARD

CALCULATED-DESIGNED BY | CHECKED BY

CONSULTANT FUNCTIONAL SUPERVISOR: HAN-BIN LIANG

STATE OF CALIFORNIA - DEPARTMENT OF TRANSPORTATION

Caltrans

DRAINAGE QUANTITIES DQ-3

LAST REVISION 00-00-00 | DATE PLOTTED => 12/3/2009 | TIME PLOTTED => 11:11:57 PM

Dist	COUNTY	ROUTE	KILOMETER POST TOTAL PROJECT	SHEET No.	TOTAL SHEETS
04	Son	116	67.3/71.9		

REGISTERED CIVIL ENGINEER DATE

PLANS APPROVAL DATE

REGISTERED PROFESSIONAL ENGINEER ULYSSES HILLARD No. C 061873 Exp. 6/30/11 CIVIL STATE OF CALIFORNIA

THE STATE OF CALIFORNIA OR ITS OFFICERS OR AGENTS SHALL NOT BE RESPONSIBLE FOR THE ACCURACY OR COMPLETENESS OF ELECTRONIC COPIES OF THIS PLAN SHEET.

WRECO
1814 FRANKLIN, SUITE 608
OAKLAND, CA 94612

CALTRANS
111 GRAND AVENUE
OAKLAND, CA 94612

Caltrans Metric

DRAINAGE QUANTITIES

DRAINAGE SYSTEM No.	DRAINAGE UNIT	CSP w/ POLYMERIC SHEET COATING (1.3 mm THICK) 450 mm (m)	900 mm	1050 mm	1200 mm	1650 mm	2100 mm	ALTERNATIVE FLARED END SECTION 450 mm (EA)	600 mm	750 mm	900 mm	1050 mm	ROCK SLOPE PROTECTION (FACING, METHOD B) (m^3)	ROCK SLOPE PROTECTION, (1/4 TON, METHOD B)	ROCK SLOPE PROTECTION (BACKING No. 3, METHOD B)	ROCK SLOPE PROTECTION FABRIC (TYPE A) (m^2)	GEOMEMBRANE (WATER BARRIER)	GEOTEXTILE (CUSHION FABRIC)	MAXIMUM COVER (N) (m)	HEIGHT OF INLET "H" (N)	FRAME & GRATE (N) (EA)	CONCRETE BARRIER * (TYPE 736A) (m)	CHANNEL EXCAVATION (m^3)	CONCRETE COLLAR (N) (EA)	PIPE JOINT CLASSIFICATION (N)	REMOVE FES (EA)	CONNECT 200 mm PPP UD TO INLET (N)	ROCK SLOPE PROTECTION, (1/4 TON, METHOD A) (m^3)	ROCK SLOPE PROTECTION (BACKING No. 3, METHOD A)	COIR LOG (m)	CABLE TIE (EA)	DUCK BILL ANCHOR	DESCRIPTION	STATION	DRAINAGE PLAN SHEET No.	DRAINAGE SYSTEM No.	DRAINAGE UNIT
19	a																			1.37	1													G2 INLET w/ 600-12X	6.0 m Lt A 31+80	D-7, D-8	19	a
	b																		1.5						S									450 mm APC (A)	6.0 m Lt A 31+80 TO A 32+00			b
	c																			1.60	1													GDO INLET w/ Mod GRATE FRAME	6.0 m Lt A 32+00			c
	d																		1.8						S									450 mm APC (A)	6.0 m Lt A 32+00 TO A 32+10			d
	e																			1.74	1													GDO INLET w/ Mod GRATE FRAME	6.0 m Lt A 32+10			e
	f																		1.8						S									450 mm APC (A)	6.0 m Lt A 32+10 TO A 32+41			f
	g																			2.26	1													G2 INLET w/ 600-12X	6.0 m Lt A 32+41			g
	h																										1							CONNECT 200 mm PPP UD TO INLET	6.0 m Lt A 32+41			h
	i																		2.4						S									450 mm APC (A)	6.0 m Lt A 32+41 TO 6.0 m Lt A 32+80			i
	j																			2.84	1													G2 INLET w/ 600-12X	6.0 m Lt A 32+80			j
	k																		2.4						S									450 mm APC (B)	6.0 m Lt A 32+80 TO 18.6 m Lt A 33+00			k
	l							1																										450 mm FES	18.6 m Lt A 33+00			l
	m												3.6			13.4																		RSP	18.6 m Lt A 33+00			m
	n																													100	10	10		SPILLWAY	28.2 m Lt A 32+97.7 TO 41.3 m Lt A 32+87			n
	o																		1.8						S									450 mm APC (B)	6.0 m Lt A 32+41 TO 10.7 m Rt A 32+41			o
	p																			1.48	1													G2 INLET w/ 600-12X	9.6 m Rt A 32+24			p
	q																		1.2						S									450 mm APC (A)	9.6 m Rt A 32+24 TO A 32+33			q
	r																			1.60	1													G2 INLET w/ 600-12X	9.6 m Rt A 32+33			r
	s																		1.3						S									450 mm APC (A)	9.6 m Rt A 32+33 TO 10.7 m Rt A 32+41			s
	t																			1.70	1													G2 INLET w/ 600-12X	10.7 m Rt A 32+41			t
	u																										1							CONNECT 200 mm PPP UD TO INLET (2 SIDES)	10.7 m Rt A 32+41			u
	v																		1.3						S									450 mm APC (A)	10.7 m Rt A 32+41 TO 10.0 m Rt A 32+65			v
	w																										1							CONNECT 200 mm PPP UD TO INLET (2 SIDES)	10.0 m Rt A 32+65			w
	x																			1.15	1													G2 INLET w/ 600-12X	10.0 m Rt A 32+65			x
SHEET TOTAL								2					3.6	134	106	13.4	181	361			9						3			100	10	10			SHEET TOTAL			

(N) - NOT A SEPARATE PAY ITEM, FOR INFORMATION ONLY
* - FOR INFORMATION ONLY, SEE R-7 FOR QUANTITIES

DRAINAGE QUANTITIES DQ-4

STATE OF CALIFORNIA - DEPARTMENT OF TRANSPORTATION
Caltrans

CONSULTANT FUNCTIONAL SUPERVISOR: HAN-BIN LIANG
CALCULATED-DESIGNED BY: IRENE LIU
CHECKED BY: ULYSSES HILLARD
REVISED BY
DATE REVISED

LAST REVISION 00-00-00
DATE PLOTTED => 12/3/2009
TIME PLOTTED => 11:10:11 PM

BURDELL RANCH
SERVICE AREA BOUNDARY
Pacific Ocean
Rohnert Park
Boyes Hot Springs
El Verano
Sonoma
Napa
Vacaville
Fairfield
Novato
Vallejo
Crockett
Martinez
Hercules
El Sobrante
San Pablo
Fairfax
San Anselmo
Kentfield
Corte Madera
Mill Valley
Belvedere
Sausalito
Albany
Orinda
Lafayette
Pleasant Hill
Clayton
Walnut Creek
Alamo
Moraga
Danville
San Ramon
Emeryville
Piedmont
San Francisco
Alameda
Tomales Bay
Cordelia Slough
Nurse Slough
Suisun Bay
101
121
37
780
80
680
4
242
580
24
WF
1
CF

H. T. HARVEY & ASSOCIATES
ECOLOGICAL CONSULTANTS

STAGE GULCH ROAD CURVE CORRECTION AND REALIGNMENT PROJECT TREE SURVEY SONOMA, CALIFORNIA

By

H. T. Harvey & Associates

Prepared for

Jennifer Renz
CH2MHill
155 Grand Ave, Suite 1000
Oakland, CA 94612

24 July 2009 Project No. 2855-01

711 4th Street • Davis, CA 95616 • Ph: 530.753.3733 • F: 530.753.3736

TABLE OF CONTENTS

PROJECT DESCRIPTION 1
INTRODUTION 1
METHODS 1
RESULTS 1

APPENDICES:

Appendix A. Tree Survey Table and Tree Location Figures A-1

PROJECT DESCRIPTION

INTRODUCTION

The Stage Gulch Road Curve Correction and Realignment Project is located in Sonoma County along State Route 116 between Post Miles 41.8 and 44.7. The project includes the widening and realignment of the existing roadway, the relocation of a portion of the roadway in the vicinity of the Sonoma County Transfer Station Road, and the replacement of culverts. This tree survey was performed to assist with the determination of tree impacts of the project.

METHODS

H. T. Harvey & Associates' certified arborists C. Little (ISA #WE-6419A) and S. Infalt (ISA #WE-7374A) conducted a survey of all trees within the project corridor from 9 July through 17 July 2009.

All trees within the survey boundary with a minimum diameter of 4" of at least one stem at 4.5' above grade were included in the survey. For multi-stemmed trees with at least one stem greater than 4", all additional stems greater than 2" in diameter at 4.5' above grade were measured. Stem diameters were measured to the nearest tenth of an inch, and stems that had to be estimated (see below) were estimated to the nearest inch. Each tree was tagged with a uniquely numbered tag, the species was identified, the diameter at 4.5' was measured, and the location of the tree was recorded with a Trimble GeoXT GPS unit.

Due to lack of safe access a small fraction of the diameters were estimated, and some of these trees were not tagged. Trees that were not tagged were assigned a unique alpha-numeric identifier (i.e. "188a") on the results table and figures but are not physically marked in the field.

Satellite availability was variable during the survey. Fewer satellites were accessible in situations with dense tree canopy coverage and at certain times of day. A small fraction of tree locations could not be accurately recorded with the GPS unit. In these situations, GPS points were taken away from the trees and later offset to produce an estimated coordinate location for the trees. Notes have been provided in the results table to identify which tree locations were estimated.

RESULTS

The results of the tree survey are attached in a table and figure located in Appendix A.

Appendix A.
Tree Survey Table and Tree Location Figures

Stage Gulch Road Curve Correction and Realignment Project Tree Survey

Sonoma, CA

Tree Number	Common Name	Botanical name	Diameter at 4.5 ft (in)	Habitat	Comments	UTM NAD83 Zone 10	
						X	Y
1	California bay	*Umbellularia californica*	8.1, 8.4, 9.7, 2.3, 9.8, 9.5, 15.3, 12.7, 6.9	Upland		543161	4232313
2	California bay	*Umbellularia californica*	6.8, 5.6, 9.5, 5.2, 5, 9.7, 3.2, 4	Upland		543169	4232321
3	Coast live oak	*Quercus agrifolia*	4.5	Upland		543174	4232330
4	California buckeye	*Aesculus californica*	3.8, 4.3, 2.5, 4.5, 2.9, 1.9, 2.6, 3.3	Upland		543179	4232336
5	California bay	*Umbellularia californica*	6.9, 6.4, 7	Upland		543178	4232339
6	Coast live oak	*Quercus agrifolia*	6.8, 9.8, 8	Upland		543184	4232346
7	Coast live oak	*Quercus agrifolia*	4.0	Upland		543192	4232361
8	Coast live oak	*Quercus agrifolia*	1.3, 4.3, 4.7, 1.8, 3.2	Upland		543198	4232371
9	Coast live oak	*Quercus agrifolia*	6.1	Upland		543199	4232375
10	Coast live oak	*Quercus agrifolia*	5.7, 3.1, 1.4	Upland		543200	4232375
11	White willow	*Salix alba*	39.9	Riparian Corridor		541375	4232117
12	Coast live oak	*Quercus agrifolia*	4.1, 1.4, 7.4	Upland		543204	4232381
13	California bay	*Umbellularia californica*	55.3, 7.1, 1.2, 4.5, 6, 5.6, 7.4	Riparian Corridor		543234	4232415
14	Black oak	*Quercus kelloggii*	40.0	Riparian Corridor		543233	4232422
15	Coast live oak	*Quercus agrifolia*	27.3	Upland		543242	4232447
16	Coast live oak	*Quercus agrifolia*	7.8	Upland		543243	4232445
17	California buckeye	*Aesculus californica*	6.3, 3.3, 7.8, 7, 7.4, 4.3	Upland		543244	4232450
18	Coast live oak	*Quercus agrifolia*	51.3	Riparian Corridor		543271	4232459
19	Coast live oak	*Quercus agrifolia*	13.8	Riparian Corridor		543270	4232460
20	Coast live oak	*Quercus agrifolia*	21.8	Riparian Corridor		543274	4232459
21	Coast live oak	*Quercus agrifolia*	41.8	Riparian Corridor		543273	4232457
22	Coast live oak	*Quercus agrifolia*	26.0	Riparian Corridor		543277	4232458
23	Coast live oak	*Quercus agrifolia*	26.0	Riparian Corridor		543275	4232465
24	White willow	*Salix alba*	52.0	Riparian Corridor		541386	4232122
25	Apple	*Malus* sp.	3, 4, 5	Upland		541383	4232114
25A	Plum	*Prunus* sp.	5.0	Upland	estimated dbh due to location; field gps coordinates could not be obtained due to limited satellite coverage	541398	4232122

Tree Number	Common Name	Botanical name	Diameter at 4.5 ft (in)	Habitat	Comments	UTM NAD83 Zone 10	
						X	Y
25B	Plum	*Prunus* sp.	5.0	Upland	estimated dbh due to location; field gps coordinates could not be obtained due to limited satellite coverage	541398	4232117
25C	Plum	*Prunus* sp.	5.0	Upland	estimated dbh due to location; field gps coordinates could not be obtained due to limited satellite coverage	541390	4232115
25D	Plum	*Prunus* sp.	5.0	Upland	estimated dbh due to location; field gps coordinates could not be obtained due to limited satellite coverage	541396	4232113
26	Valley oak	*Quercus lobata*	13.8	Upland		543251	4232470
27	Coast live oak	*Quercus agrifolia*	12, 12.3	Riparian Corridor		543253	4232475
28	Coast live oak	*Quercus agrifolia*	4.1	Riparian Corridor		543257	4232486
29	Coast live oak	*Quercus agrifolia*	6.8	Riparian Corridor		543255	4232489
30	Coast live oak	*Quercus agrifolia*	15.4, 13.2, 12.7, 14.3	Riparian Corridor		543255	4232494
31	White willow	*Salix alba*	32.0	Riparian Corridor		541395	4232126
32	Valley oak	*Quercus lobata*	27.3	Riparian Corridor		543257	4232507
33	Eucalyptus	*Eucalyptus sp.*	11.9, 60.8, 18.3	Upland		541501	4232078
34	Valley oak	*Quercus lobata*	21.7	Riparian Corridor		543262	4232510
35	Valley oak	*Quercus lobata*	40.4	Upland		543270	4232517
36	Valley oak	*Quercus lobata*	23.1	Riparian Corridor		543263	4232528
37	Valley oak	*Quercus lobata*	16.6	Riparian Corridor		543267	4232531
38	California buckeye	*Aesculus californica*	5.7, 1.9, 1.4	Riparian Corridor		543265	4232539
39	Black oak	*Quercus kelloggii*	19.5, 20, 14.6	Riparian Corridor		543265	4232535
40	Black oak	*Quercus kelloggii*	17.8	Riparian Corridor		543259	4232538
41	California buckeye	*Aesculus californica*	10.2, 3.3, 4.2, 10.9, 8.3, 9.4	Riparian Corridor		543261	4232537
42	Coast live oak	*Quercus agrifolia*	4.2, 4.1	Riparian Corridor		543265	4232544
43	Valley oak	*Quercus lobata*	11.7	Riparian Corridor		543263	4232543
44	California bay	*Umbellularia californica*	5.5	Riparian Corridor		543263	4232543

Tree Number	Common Name	Botanical name	Diameter at 4.5 ft (in)	Habitat	Comments	UTM NAD83 Zone 10	
						X	Y
45	Valley oak	*Quercus lobata*	16.5	Riparian Corridor		543264	4232544
46	Valley oak	*Quercus lobata*	8.2	Riparian Corridor		543265	4232548
47	Valley oak	*Quercus lobata*	8.5	Riparian Corridor		543264	4232550
48	Coast live oak	*Quercus agrifolia*	18, 17	Riparian Corridor		543263	4232551
49	California bay	*Umbellularia californica*	4, 3.6, 2, 1.7, 2.3	Riparian Corridor		543262	4232552
50	Black oak	*Quercus kelloggii*	10.8	Riparian Corridor		543263	4232554
51	California bay	*Umbellularia californica*	4, 2.5	Riparian Corridor		543262	4232555
52	California buckeye	*Aesculus californica*	8.8, 4.8, 8.6	Riparian Corridor		543262	4232555
53	Valley oak	*Quercus lobata*	18.7	Riparian Corridor		543263	4232558
54	Valley oak	*Quercus lobata*	10.2	Riparian Corridor		543263	4232557
55	Black oak	*Quercus kelloggii*	13.1	Riparian Corridor		543262	4232557
56	California bay	*Umbellularia californica*	5.7	Riparian Corridor		543259	4232560
57	California bay	*Umbellularia californica*	4.3	Riparian Corridor		543261	4232561
58	Coast live oak	*Quercus agrifolia*	7.7	Riparian Corridor		543262	4232563
59	Black oak	*Quercus kelloggii*	10.8	Riparian Corridor		543267	4232563
60	Red willow	*Salix laevigata*	6.9	Riparian Corridor		543269	4232567
61	Red willow	*Salix laevigata*	13, 11.6	Riparian Corridor		543262	4232568
62	Valley oak	*Quercus lobata*	12.0	Riparian Corridor		543260	4232563
63	Coast live oak	*Quercus agrifolia*	15.6, 9.2, 5.5	Riparian Corridor		543259	4232563
64	California bay	*Umbellularia californica*	3.4, 4	Riparian Corridor		543259	4232546
65	California buckeye	*Aesculus californica*	7.6, 6.3, 2.9, 1.7	Riparian Corridor		543259	4232546
66	Valley oak	*Quercus lobata*	10.9	Riparian Corridor		543266	4232569
67	Valley oak	*Quercus lobata*	10.5	Riparian Corridor		543268	4232571
68	Valley oak	*Quercus lobata*	9.1	Riparian Corridor		543268	4232573
69	Black oak	*Quercus kelloggii*	13.5	Riparian Corridor		543269	4232575
70	Coast live oak	*Quercus agrifolia*	20.3	Riparian Corridor		543261	4232581
71	Valley oak	*Quercus lobata*	8.5	Riparian Corridor		543266	4232586
72	Valley oak	*Quercus lobata*	12.3	Riparian Corridor		543268	4232589
73	Coast live oak	*Quercus agrifolia*	19.5, 3.3, 9.1	Riparian Corridor		543271	4232588
74	Coast live oak	*Quercus agrifolia*	13.4	Riparian Corridor		543265	4232591
75	Coast live oak	*Quercus agrifolia*	7.1, 11.1, 12.1, 12, 10.9	Riparian Corridor		543261	4232597
76	Coast live oak	*Quercus agrifolia*	32.2	Riparian Corridor		543260	4232583
77	Valley oak	*Quercus lobata*	23.0	Riparian Corridor		543261	4232576
78	Coast live oak	*Quercus agrifolia*	14.0	Riparian Corridor		543262	4232574

Tree Number	Common Name	Botanical name	Diameter at 4.5 ft (in)	Habitat	Comments	UTM NAD83 Zone 10	
						X	Y
79	Eucalyptus	*Eucalyptus* sp.	39.7	Upland		541501	4232074
80	Eucalyptus	*Eucalyptus* sp.	76.6	Upland		541504	4232076
81	Eucalyptus	*Eucalyptus* sp.	64.6	Upland		541511	4232075
82	Eucalyptus	*Eucalyptus* sp.	61.4	Upland		541519	4232079
83	Eucalyptus	*Eucalyptus* sp.	49.3	Upland		541524	4232079
84	Eucalyptus	*Eucalyptus* sp.	78.0	Upland		541527	4232093
85	Eucalyptus	*Eucalyptus* sp.	37.6	Upland		541533	4232083
86	Eucalyptus	*Eucalyptus* sp.	80.0	Upland		541535	4232088
87	Eucalyptus	*Eucalyptus* sp.	83.0	Upland		541544	4232088
88	Coast live oak	*Quercus agrifolia*	12.8	Upland		542244	4232226
89	Coast live oak	*Quercus agrifolia*	7.1, 6.6, 9.7	Upland		542248	4232226
90	Coast live oak	*Quercus agrifolia*	9, 4.7	Upland		542249	4232225
91	Coast live oak	*Quercus agrifolia*	14, 4	Upland		542254	4232224
92	Coast live oak	*Quercus agrifolia*	13, 13.3	Upland		542253	4232224
93	Coast live oak	*Quercus agrifolia*	19.7, 5	Upland		542254	4232225
94	Coast live oak	*Quercus agrifolia*	14.0	Upland		542255	4232225
95	Coast live oak	*Quercus agrifolia*	15.9, 11.6, 9.4, 6	Upland		542259	4232225
96	Coast live oak	*Quercus agrifolia*	7.6, 29.4	Upland		542263	4232222
97	Coast live oak	*Quercus agrifolia*	7.8, 15.4	Upland		542266	4232226
98	Coast live oak	*Quercus agrifolia*	20.5	Upland		542268	4232226
99	Coast live oak	*Quercus agrifolia*	15.4	Upland		542274	4232227
100	California bay	*Umbellularia californica*	12, 11.7, 11.2, 12.7	Upland		542281	4232226
101	California bay	*Umbellularia californica*	17.8, 17, 9, 5.4, 4.8, 20.5	Upland		542282	4232221
102	Coast live oak	*Quercus agrifolia*	4.3, 6.3	Upland		542286	4232222
103	California bay	*Umbellularia californica*	18, 18, 10.1, 12.7, 11.7, 18.3, 4.7, 9.7, 14.5, 15.6, 13.5, 23.5, 23.8, 22.3	Upland		542302	4232224
104	California bay	*Umbellularia californica*	8, 7.6	Upland		542318	4232228
105	California bay	*Umbellularia californica*	5.6, 4.2, 10.5	Upland		542325	4232230
106	California bay	*Umbellularia californica*	19, 14, 18	Upland		542324	4232229
107	Coast live oak	*Quercus agrifolia*	37.3	Upland		542337	4232234
108	Pear	*Pyrus* sp.	18.0	Upland		542357	4232225
109	California bay	*Umbellularia californica*	8.0	Upland		542358	4232226

Tree Number	Common Name	Botanical name	Diameter at 4.5 ft (in)	Habitat	Comments	UTM NAD83 Zone 10 X	Y
110	Coast live oak	*Quercus agrifolia*	21.5	Upland		542348	4232237
111	Coast live oak	*Quercus agrifolia*	14.5, 7.8, 22.3, 28	Upland		542329	4232242
112	Coast live oak	*Quercus agrifolia*	12.2, 9	Upland		542320	4232240
113	Coast live oak	*Quercus agrifolia*	9.3, 7, 5	Upland		542319	4232244
114	Coast live oak	*Quercus agrifolia*	16.4, 10.3	Upland		542306	4232244
115	Coast live oak	*Quercus agrifolia*	16.0	Upland		542270	4232241
116	Coast live oak	*Quercus agrifolia*	28.5	Upland		542267	4232244
117	California bay	*Umbellularia californica*	14.9	Upland		542266	4232240
118	Coast live oak	*Quercus agrifolia*	14.0	Upland		542262	4232242
119	Coast live oak	*Quercus agrifolia*	13, 14.7	Upland		542262	4232241
120	Coast live oak	*Quercus agrifolia*	9.0	Upland		542258	4232241
121	Coast live oak	*Quercus agrifolia*	45.8	Upland		542257	4232250
122	California bay	*Umbellularia californica*	4, 6, 5, 29, 10, 10, 4, 38.5	Upland		542243	4232252
123	Eucalyptus	*Eucalyptus* sp.	17.5, 20.5	Upland		542238	4232248
124	Eucalyptus	*Eucalyptus* sp.	7, 4	Upland		542234	4232247
125	Eucalyptus	*Eucalyptus* sp.	12.7, 8.3, 70, 32, 6, 8, 8, 10.5, 32	Upland		542229	4232246
126	Coast live oak	*Quercus agrifolia*	14.1, 7.9, 10	Upland		542214	4232240
127	Pear	*Pyrus* sp.	5.6, 7.5	Upland		542141	4232239
128	Coast live oak	*Quercus agrifolia*	11.4, 13	Upland		542257	4232241
129	Coast live oak	*Quercus agrifolia*	20.0	Upland		542255	4232239
130	Coast live oak	*Quercus agrifolia*	15.4	Upland		542243	4232235
131	Coast live oak	*Quercus agrifolia*	11.2	Riparian Corridor		542648	4232200
132	Coast live oak	*Quercus agrifolia*	8.2	Upland		542784	4232178
133	Coast live oak	*Quercus agrifolia*	7.3, 5.1, 6.1, 6	Upland		542786	4232179
134	Valley oak	*Quercus lobata*	9.9	Upland		542787	4232177
135	California bay	*Umbellularia californica*	8, 8.1	Upland		542789	4232176
136	Coast live oak	*Quercus agrifolia*	5.5, 5.5, 6	Upland		542794	4232176
137	Coast live oak	*Quercus agrifolia*	4, 7.4	Upland		542797	4232175
138	Valley oak	*Quercus lobata*	19.6	Upland		542798	4232173
139	Coast live oak	*Quercus agrifolia*	6.4, 5, 5.8	Upland		542805	4232171
140	Coast live oak	*Quercus agrifolia*	6.9, 4.9	Upland		542817	4232168
141	Coast live oak	*Quercus agrifolia*	8.7	Upland		542819	4232167
142	Coast live oak	*Quercus agrifolia*	15.6, 16.1	Upland		542817	4232168

Tree Number	Common Name	Botanical name	Diameter at 4.5 ft (in)	Habitat	Comments	UTM NAD83 Zone 10	
						X	Y
143	Coast live oak	*Quercus agrifolia*	28.0	Upland		542826	4232165
144	Coast live oak	*Quercus agrifolia*	8.5	Upland		542833	4232165
145	Coast live oak	*Quercus agrifolia*	23, 16.9	Upland		542858	4232163
146	Coast live oak	*Quercus agrifolia*	14, 4	Upland		543068	4232211
147	Coast live oak	*Quercus agrifolia*	5.0	Upland		543089	4232232
148	Coast live oak	*Quercus agrifolia*	15.5	Upland		543104	4232241
149	Coast live oak	*Quercus agrifolia*	5, 6.3	Upland		543144	4232282
150	Coast live oak	*Quercus agrifolia*	19.2	Upland	diameter measured at 12" above grade (trunk splits and flairs into two large horizontal stems)	543146	4232291
151	California buckeye	*Aesculus californica*	3.8, 4, 5.7, 5, 4.3, 4.6	Riparian Corridor		543150	4232295
152	California buckeye	*Aesculus californica*	9.7, 6, 6.4, 5, 5.5, 5, 5, 4, 4	Riparian Corridor		543154	4232297
153	California buckeye	*Aesculus californica*	7.9, 5.7, 7, 17.7, 5.5, 9.7, 8.4, 7.8	Riparian Corridor		543161	4232306
154	Coast live oak	*Quercus agrifolia*	7, 7.8, 5.5	Riparian Corridor		542652	4232212
155	Coast live oak	*Quercus agrifolia*	12.1, 16, 12.2, 10.7, 9.2	Upland		542676	4232208
156	Black walnut	*Juglans hindsii*	18.2	Upland		542732	4232211
157	Coast live oak	*Quercus agrifolia*	46.8	Upland		542690	4232223
158	Coast live oak	*Quercus agrifolia*	28.4	Upland		542703	4232222
159	Black walnut	*Juglans hindsii*	19.1	Upland	measured at 12"	542733	4232218
160	Monterey pine	*Pinus radiata*	55.8	Upland		542735	4232233
161	Black walnut	*Juglans hindsii*	14.6	Upland		542734	4232242
162	Black walnut	*Juglans hindsii*	13.5	Upland		542728	4232250
163	Coast live oak	*Quercus agrifolia*	8.9	Upland		542744	4232241
164	Coast live oak	*Quercus agrifolia*	4.3	Upland		542745	4232238
165	Coast live oak	*Quercus agrifolia*	18.6	Upland		542747	4232239
166	Coast live oak	*Quercus agrifolia*	14, 7.2	Upland		542748	4232237
167	Coast live oak	*Quercus agrifolia*	37.0	Upland		542750	4232210
168	Coast live oak	*Quercus agrifolia*	23.6, 9	Upland		542756	4232221
169	Coast live oak	*Quercus agrifolia*	33.7	Upland		542764	4232198
170	Coast live oak	*Quercus agrifolia*	18.3	Upland		542774	4232200
171	California bay	*Umbellularia californica*	12.9, 9.3	Upland		542784	4232203

Tree Number	Common Name	Botanical name	Diameter at 4.5 ft (in)	Habitat	Comments	UTM NAD83 Zone 10	
						X	Y
172	California bay	*Umbellularia californica*	9.7, 12.8, 10.8, 15.6, 4, 14.8, 8.8, 7.4, 11.4	Upland		542782	4232198
173	Coast live oak	*Quercus agrifolia*	14.0	Upland		542792	4232194
174	Coast live oak	*Quercus agrifolia*	9.9, 9.7	Upland		542793	4232197
175	Coast live oak	*Quercus agrifolia*	18.5, 11.6	Upland		542797	4232199
176	Coast live oak	*Quercus agrifolia*	16.5, 14.1	Upland		542797	4232199
176A	Coast live oak	*Quercus agrifolia*	8.0	Upland	tree not tagged due to location; dbh estimated	542799	4232193
177	Coast live oak	*Quercus agrifolia*	22, 22	Upland	hanging over vertical bank; estimated one stem diameter due to location	542805	4232191
178	Coast live oak	*Quercus agrifolia*	20, 11.6, 12, 12	Upland	estimated 12" dia stems due to location	542805	4232192
179	Coast live oak	*Quercus agrifolia*	15.9, 21.4, 22	Upland	estimated 22" stem due to location on vertical bank	542811	4232191
179A	Coast live oak	*Quercus agrifolia*	4.0	Upland	tree not tagged due to location; dbh estimated	542811	4232189
179B	Coast live oak	*Quercus agrifolia*	10.0	Upland	tree not tagged due to location; dbh estimated	542817	4232189
179C	Coast live oak	*Quercus agrifolia*	20.0	Upland	tree not tagged due to location; dbh estimated	542817	4232189
180	Coast live oak	*Quercus agrifolia*	34.0	Upland	estimated dbh due to location	542815	4232191
181	Coast live oak	*Quercus agrifolia*	7.5, 26.7	Upland		542825	4232189
182	Coast live oak	*Quercus agrifolia*	17.0	Upland		542829	4232192
183	Coast live oak	*Quercus agrifolia*	14, 31	Upland		542830	4232191
184	Coast live oak	*Quercus agrifolia*	11.0	Upland		542822	4232184
185	Coast live oak	*Quercus agrifolia*	17.0	Upland		542828	4232183
186	Coast live oak	*Quercus agrifolia*	31.0	Upland		542830	4232183
186A	Coast live oak	*Quercus agrifolia*	16.0	Upland	tree not tagged due to location; dbh estimated	542838	4232179
187	Valley oak	*Quercus lobata*	12.0	Upland		542844	4232180
188	Valley oak	*Quercus lobata*	16.0	Upland		542847	4232178
189	Coast live oak	*Quercus agrifolia*	22.5	Upland		542849	4232182
190	Coast live oak	*Quercus agrifolia*	8.2, 14	Upland		543057	4232224

Tree Number	Common Name	Botanical name	Diameter at 4.5 ft (in)	Habitat	Comments	UTM NAD83 Zone 10	
						X	Y
191	Coast live oak	*Quercus agrifolia*	16.2	Upland		543083	4232262
192	Coast live oak	*Quercus agrifolia*	9.8, 16.5	Upland		543088	4232263
193	California bay	*Umbellularia californica*	8.8, 7.2	Upland		543110	4232276
194	Coast live oak	*Quercus agrifolia*	14.0	Upland		543107	4232278
195	Madrone	*Arbutus menziesii*	6.8	Upland		543109	4232280
196	Coast live oak	*Quercus agrifolia*	7.8	Upland		543108	4232282
197	California buckeye	*Aesculus californica*	4.9, 7.1, 3.5	Upland		543111	4232283
198	California bay	*Umbellularia californica*	6.9, 6.2, 5, 5, 5, 5, 5, 5, 5, 5, 5, 4, 4, 6, 6, 3, 3, 3	Upland		543118	4232284
199	California bay	*Umbellularia californica*	6.2, 3, 3, 4, 4, 5, 5, 5, 5	Upland		543118	4232285
200	Coast live oak	*Quercus agrifolia*	9.9	Upland		543117	4232287
201	Coast live oak	*Quercus agrifolia*	10.4	Upland		543115	4232290
202	California buckeye	*Aesculus californica*	5.8, 3, 5.7, 5, 3, 4	Upland		543124	4232292
203	California buckeye	*Aesculus californica*	5, 5, 5, 4, 4, 4, 3, 3, 6	Upland		543130	4232296
203A	California bay	*Umbellularia californica*	7, 6, 4, 5, 6	Upland	tree not tagged due to location; dbh estimated	543131	4232293
204	California bay	*Umbellularia californica*	8.5, 5, 5, 5, 4, 4, 4, 3, 3, 6	Upland		543133	4232298
205	California buckeye	*Aesculus californica*	5, 5, 5, 5, 5, 4, 3	Upland		543130	4232299
206	California buckeye	*Aesculus californica*	3, 3, 3, 3, 5	Upland		543136	4232303
207	California buckeye	*Aesculus californica*	6.7, 6, 7, 5.2, 4	Upland		543136	4232309
208	California buckeye	*Aesculus californica*	9.4, 11.3, 5.4, 5, 4	Upland		543137	4232310
209	Coast live oak	*Quercus agrifolia*	20, 8	Upland	estimated dbh due to location	543139	4232315
210	California buckeye	*Aesculus californica*	7.6, 6, 6, 5, 5, 3, 3	Upland	estimated dbh due to location	543138	4232313
211	California buckeye	*Aesculus californica*	5, 5, 4	Upland		543136	4232316
211A	Coast live oak	*Quercus agrifolia*	10, 12	Upland	tree not tagged due to location; dbh estimated	543136	4232329
211B	Coast live oak	*Quercus agrifolia*	5.0	Upland	tree not tagged due to location; dbh estimated	543137	4232329
212	California bay	*Umbellularia californica*	14.7	Upland		543141	4232337
213	Coast live oak	*Quercus agrifolia*	12.7	Upland		543142	4232337

Tree Number	Common Name	Botanical name	Diameter at 4.5 ft (in)	Habitat	Comments	UTM NAD83 Zone 10 X	Y
214	California buckeye	*Aesculus californica*	6, 6, 5, 5, 3, 3	Upland		543149	4232338
215	Coast live oak	*Quercus agrifolia*	8.2	Upland		543152	4232344
216	Coast live oak	*Quercus agrifolia*	8.7	Upland		543152	4232336
217	Coast live oak	*Quercus agrifolia*	14.0	Upland		543159	4232336
218	California bay	*Umbellularia californica*	10.8	Upland		543156	4232338
219	Coast live oak	*Quercus agrifolia*	16.7	Upland		543154	4232339
220	Coast live oak	*Quercus agrifolia*	14.4, 13.1	Upland		543147	4232340
221	California bay	*Umbellularia californica*	7.5	Upland		543154	4232339
222	California bay	*Umbellularia californica*	7.3	Upland		543154	4232344
223	Coast live oak	*Quercus agrifolia*	9.9	Upland		543159	4232345
224	California buckeye	*Aesculus californica*	6.1	Upland		543158	4232349
225	California bay	*Umbellularia californica*	4.5	Upland		543158	4232349
226	Coast live oak	*Quercus agrifolia*	10.3	Upland		543154	4232348
227	California bay	*Umbellularia californica*	12.5, 12.3	Upland		543158	4232351
228	Coast live oak	*Quercus agrifolia*	9.1	Upland		543157	4232355
229	California bay	*Umbellularia californica*	6.2	Upland		543156	4232355
230	Coast live oak	*Quercus agrifolia*	9.7	Upland		543158	4232354
231	Coast live oak	*Quercus agrifolia*	9.5	Upland		543162	4232347
232	California buckeye	*Aesculus californica*	7.4, 5.4, 11	Upland		543170	4232355
233	Coast live oak	*Quercus agrifolia*	12, 9	Upland		543152	4232333
234	Coast live oak	*Quercus agrifolia*	6.1, 6.2	Upland		543150	4232329
235	Coast live oak	*Quercus agrifolia*	6.8	Upland		543151	4232327
236	Coast live oak	*Quercus agrifolia*	14.3, 17.3	Upland		543151	4232327
236A	Coast live oak	*Quercus agrifolia*	10.0	Upland	tree not tagged due to location; dbh estimated	543149	4232334
236B	Coast live oak	*Quercus agrifolia*	5, 6	Upland	tree not tagged due to location; dbh estimated	543151	4232330
237	Coast live oak	*Quercus agrifolia*	10.0	Upland		543144	4232319
238	Coast live oak	*Quercus agrifolia*	6, 6	Upland		543145	4232319
239	Coast live oak	*Quercus agrifolia*	6.3	Upland		543146	4232319
240	California bay	*Umbellularia californica*	24.4	Riparian Corridor		543159	4232361
241	California bay	*Umbellularia californica*	8.9, 6.8	Upland		543159	4232361
242	California bay	*Umbellularia californica*	4.2, 11.8, 14.5, 5.7	Upland		543154	4232362
243	California buckeye	*Aesculus californica*	5.4, 7.3, 6	Riparian Corridor		543161	4232369
244	California bay	*Umbellularia californica*	9.5, 6.9	Riparian Corridor		543166	4232377

Tree Number	Common Name	Botanical name	Diameter at 4.5 ft (in)	Habitat	Comments	UTM NAD83 Zone 10 X	Y
245	Oregon ash	*Fraxinus latifolia*	13.1, 16.7	Riparian Corridor		543163	4232381
246	California bay	*Umbellularia californica*	15.3, 12, 11.8, 10.5, 12.6, 19.1	Riparian Corridor		543170	4232382
247	Coast live oak	*Quercus agrifolia*	27.2, 15.8	Upland		543176	4232381
248	California bay	*Umbellularia californica*	15.8, 12.7, 13.7, 14.8, 8.7, 6.8, 8.4, 15.7, 8.8, 8.1	Riparian Corridor		543173	4232390
249	California bay	*Umbellularia californica*	13.8	Riparian Corridor		543173	4232403
250	Coast live oak	*Quercus agrifolia*	8.4, 4	Riparian Corridor		543179	4232404
251	Coast live oak	*Quercus agrifolia*	7, 7, 8	Riparian Corridor		543183	4232401
252	Coast live oak	*Quercus agrifolia*	17.2	Riparian Corridor		543201	4232400
253	California bay	*Umbellularia californica*	11, 8, 15.1, 4.5, 10.7, 9, 9, 9, 8.4, 7.2, 10.3, 8.5, 9.2, 8.4, 7.1, 8, 9.4	Riparian Corridor		543203	4232406
254	California bay	*Umbellularia californica*	11.2, 4.6, 12.9	Riparian Corridor		543209	4232414
255	California bay	*Umbellularia californica*	10.1	Riparian Corridor		543209	4232415
256	California bay	*Umbellularia californica*	22.8, 14.7	Riparian Corridor		543210	4232415
257	California bay	*Umbellularia californica*	14.3	Riparian Corridor		543212	4232418
258	California bay	*Umbellularia californica*	21.2	Riparian Corridor		543213	4232421
259	California bay	*Umbellularia californica*	22.8, 14.7	Riparian Corridor		543214	4232420
260	California buckeye	*Aesculus californica*	6.1	Riparian Corridor		543202	4232423
261	Valley oak	*Quercus lobata*	17.6	Riparian Corridor		543218	4232432
262	Coast live oak	*Quercus agrifolia*	16.9, 15.5	Riparian Corridor		543213	4232437
263	California buckeye	*Aesculus californica*	9.1, 13.9	Riparian Corridor		543216	4232436
264	Valley oak	*Quercus lobata*	21.9	Riparian Corridor		543225	4232438
265	California buckeye	*Aesculus californica*	10.1, 4.4, 10.5, 4.5, 4, 4, 4, 4, 4, 5.7, 5.5	Riparian Corridor		543218	4232447
266	California bay	*Umbellularia californica*	16.5, 9, 9, 9.5	Riparian Corridor		543219	4232452
267	California bay	*Umbellularia californica*	26, 9.6	Riparian Corridor		543222	4232451
268	California buckeye	*Aesculus californica*	7.3	Riparian Corridor		543229	4232459
269	California buckeye	*Aesculus californica*	8.7, 7.8, 7.5	Riparian Corridor		543232	4232467
270	Coast live oak	*Quercus agrifolia*	13.2, 6	Riparian Corridor		543236	4232476
271	California bay	*Umbellularia californica*	4.7, 8.5, 7.5	Riparian Corridor		543239	4232487
272	California buckeye	*Aesculus californica*	7.6	Riparian Corridor		543242	4232497

Tree Number	Common Name	Botanical name	Diameter at 4.5 ft (in)	Habitat	Comments	UTM NAD83 Zone 10	
						X	Y
273	California bay	*Umbellularia californica*	9.3, 8.7	Riparian Corridor		543243	4232509
274	California bay	*Umbellularia californica*	19.9, 18.4, 18, 18	Riparian Corridor		543237	4232509
275	Valley oak	*Quercus lobata*	27.5	Riparian Corridor		543242	4232516
276	Coast live oak	*Quercus agrifolia*	26.5, 29.6	Upland		543234	4232598
277	Coast live oak	*Quercus agrifolia*	26.0	Upland		543228	4232630
278	Coast live oak	*Quercus agrifolia*	57.0	Upland		543225	4232668
279	Valley oak	*Quercus lobata*	31.9	Upland		543224	4232673
280	Coast live oak	*Quercus agrifolia*	31.6	Upland		543223	4232704
281	Coast live oak	*Quercus agrifolia*	9.4, 11, 4	Riparian Corridor		543224	4232742
281A	Coast live oak	*Quercus agrifolia*	6.0	Riparian Corridor	tree not tagged due to location; dbh estimated	543221	4232742
282	Coast live oak	*Quercus agrifolia*	5.8	Riparian Corridor		543224	4232744
283	Coast live oak	*Quercus agrifolia*	6.1, 4	Riparian Corridor		543225	4232746
284	Coast live oak	*Quercus agrifolia*	4.7	Riparian Corridor		543225	4232748
285	Coast live oak	*Quercus agrifolia*	6, 7, 5	Riparian Corridor		543225	4232751
286	Coast live oak	*Quercus agrifolia*	23.0	Upland	estimated dbh	543239	4232806
287	Coast live oak	*Quercus agrifolia*	10.0	Upland	estimated dbh	543246	4232827
288	Arroyo willow	*Salix lasiolepis*	6.5, 7.4, 4.3, 4.8	Riparian Corridor		543217	4232872
289	Arroyo willow	*Salix lasiolepis*	7.1	Riparian Corridor		543219	4232874
290	Arroyo willow	*Salix lasiolepis*	8.8	Riparian Corridor		543219	4232872
291	Arroyo willow	*Salix lasiolepis*	8.6, 7.2	Riparian Corridor		543219	4232871
292	Arroyo willow	*Salix lasiolepis*	5.7, 6.5, 6, 6, 5, 6	Riparian Corridor		543224	4232873
293	Arroyo willow	*Salix lasiolepis*	4.9, 3	Riparian Corridor		543222	4232868
294	Arroyo willow	*Salix lasiolepis*	5.8, 5	Riparian Corridor		543221	4232867
295	Valley oak	*Quercus lobata*	36.0	Riparian Corridor		543240	4232825
296	Valley oak	*Quercus lobata*	26.0	Riparian Corridor	estimated dbh	543236	4232817
297	Coast live oak	*Quercus agrifolia*	24.0	Riparian Corridor	estimated dbh	543236	4232812
298	Valley oak	*Quercus lobata*	13.7	Upland		543236	4232807
299	Valley oak	*Quercus lobata*	24.0	Upland	estimated dbh	543235	4232803
300	Coast live oak	*Quercus agrifolia*	23.8	Upland		543226	4232770
301	Valley oak	*Quercus lobata*	25.9	Upland		543226	4232764
302	Valley oak	*Quercus lobata*	5.9	Upland		543183	4232895
303	Red willow	*Salix laevigata*	7.8, 11, 8	Riparian Corridor		543197	4232899
304	Red willow	*Salix laevigata*	11.6	Riparian Corridor		543198	4232900
305	Red willow	*Salix laevigata*	8.7, 7.5	Riparian Corridor		543194	4232903

Tree Number	Common Name	Botanical name	Diameter at 4.5 ft (in)	Habitat	Comments	UTM NAD83 Zone 10	
						X	Y
306	Red willow	*Salix laevigata*	12.6	Riparian Corridor		543186	4232907
307	Valley oak	*Quercus lobata*	13.2	Riparian Corridor		543176	4232908
308	Red willow	*Salix laevigata*	10.4	Riparian Corridor		543172	4232912
309	Coast live oak	*Quercus agrifolia*	11.0	Upland		543206	4232915
310	Valley oak	*Quercus lobata*	14.5	Upland		543212	4232913
311	Red willow	*Salix laevigata*	11.0	Riparian Corridor		543172	4232914
312	Valley oak	*Quercus lobata*	13.7, 17, 5	Upland		543213	4232913
313	Coast live oak	*Quercus agrifolia*	13.5	Riparian Corridor		543225	4232900
314	Valley oak	*Quercus lobata*	7.0	Riparian Corridor		543226	4232896
315	Valley oak	*Quercus lobata*	19.0	Riparian Corridor		543226	4232896
316	Valley oak	*Quercus lobata*	15.0	Riparian Corridor		543229	4232894
317	Arroyo willow	*Salix lasiolepis*	10.0	Riparian Corridor	in willow thicket- hundreds of small diameter stems	543235	4232901
318	Valley oak	*Quercus lobata*	65.0	Riparian Corridor		543231	4232916
319	Plum	*Prunus sp.*	8.3, 4.5, 9	Riparian Corridor		543236	4232915
320	Red willow	*Salix laevigata*	8.4, 10	Riparian Corridor		543245	4232921
321	Coast live oak	*Quercus agrifolia*	9.0	Riparian Corridor		543234	4232891
322	Coast live oak	*Quercus agrifolia*	9.7	Riparian Corridor		543237	4232890
323	Valley oak	*Quercus lobata*	5.2	Riparian Corridor		543238	4232889
324	Valley oak	*Quercus lobata*	12.0	Riparian Corridor		543239	4232888
325	Valley oak	*Quercus lobata*	6.0	Riparian Corridor		543239	4232888
326	Valley oak	*Quercus lobata*	8.0	Riparian Corridor		543244	4232889
327	Valley oak	*Quercus lobata*	18.0	Upland		543244	4232882
328	Valley oak	*Quercus lobata*	10.1	Upland		543254	4232898
329	Valley oak	*Quercus lobata*	7.9	Upland		543260	4232901
330	Coast live oak	*Quercus agrifolia*	16.0	Upland	estimated dbh	543259	4232882
331	Valley oak	*Quercus lobata*	17.8	Upland		543277	4232897
332	Valley oak	*Quercus lobata*	18.0	Upland		543271	4232897
333	Valley oak	*Quercus lobata*	19.0	Upland		543272	4232900
334	Valley oak	*Quercus lobata*	7.0	Upland		543274	4232900
335	Valley oak	*Quercus lobata*	11.7	Upland		543277	4232899
336	Valley oak	*Quercus lobata*	7, 7.2	Upland		543278	4232906
337	Valley oak	*Quercus lobata*	15.4	Upland		543277	4232907
338	Valley oak	*Quercus lobata*	6.5	Upland		543278	4232907

Tree Number	Common Name	Botanical name	Diameter at 4.5 ft (in)	Habitat	Comments	UTM NAD83 Zone 10	
						X	Y
339	Coast live oak	*Quercus agrifolia*	13.7, 8, 12.2, 13, 11, 8	Upland		543282	4232909
340	Coast live oak	*Quercus agrifolia*	8.8, 7.2	Upland		543283	4232908
341	Valley oak	*Quercus lobata*	10.4	Upland		543286	4232909
342	California bay	*Umbellularia californica*	6.7, 9.5	Upland		543286	4232912
343	Valley oak	*Quercus lobata*	16.0	Upland		543290	4232909
344	Coast live oak	*Quercus agrifolia*	15.8, 12, 11.5, 12, 13	Upland		543291	4232918
345	Coast live oak	*Quercus agrifolia*	17.2, 12.8	Upland		543292	4232918
346	Coast live oak	*Quercus agrifolia*	6.6	Upland		543296	4232919
347	Coast live oak	*Quercus agrifolia*	9.2	Upland		543295	4232919
348	Eucalyptus	*Eucalyptus sp.*	10.8, 14.8	Upland		543301	4232929
349	Coast live oak	*Quercus agrifolia*	9.2, 10.1, 9.8	Upland		543349	4232979
350	Coast live oak	*Quercus agrifolia*	8.3	Upland		543346	4232984
351	Coast live oak	*Quercus agrifolia*	15.2, 16.5	Upland		543347	4232986
352	Coast live oak	*Quercus agrifolia*	11.5, 11.4, 23.3	Upland		543348	4232988
353	Coast live oak	*Quercus agrifolia*	11.5, 11.4, 23.3	Upland		543358	4232991
354	Valley oak	*Quercus lobata*	20.0	Upland		543356	4232993
355	California bay	*Umbellularia californica*	8.5, 4.7	Upland		543359	4232989
356	Coast live oak	*Quercus agrifolia*	18.2	Upland		543361	4232992
357	Valley oak	*Quercus lobata*	13, 9.4	Upland		543361	4232993
358	California buckeye	*Aesculus californica*	5.2, 4.4, 3.9, 5.6	Upland		543363	4232993
359	Coast live oak	*Quercus agrifolia*	24.6	Upland		543361	4233001
360	Coast live oak	*Quercus agrifolia*	18.0	Upland		543364	4232999
361	Coast live oak	*Quercus agrifolia*	17.0	Riparian Corridor		543369	4233004
362	Coast live oak	*Quercus agrifolia*	12.5	Riparian Corridor		543370	4233005
363	Coast live oak	*Quercus agrifolia*	17.1	Riparian Corridor		543372	4233007
364	Coast live oak	*Quercus agrifolia*	15.0	Riparian Corridor		543375	4233010
365	California buckeye	*Aesculus californica*	7.4, 5.5, 4.7, 4, 4	Riparian Corridor		543373	4233010
366	California buckeye	*Aesculus californica*	13, 4	Riparian Corridor		543372	4233010
367	California buckeye	*Aesculus californica*	7.7	Riparian Corridor		543379	4233014
368	California buckeye	*Aesculus californica*	6.5, 4.6, 4, 9.8, 5, 8	Riparian Corridor		543380	4233013
369	California buckeye	*Aesculus californica*	5.4, 6, 6.8, 7.8, 5, 10.8, 5, 8, 5, 5.5, 5.5, 14.3	Riparian Corridor		543385	4233022
370	Coast live oak	*Quercus agrifolia*	14, 14	Riparian Corridor		543386	4233024

Tree Number	Common Name	Botanical name	Diameter at 4.5 ft (in)	Habitat	Comments	UTM NAD83 Zone 10	
						X	Y
371	California buckeye	*Aesculus californica*	9.5, 9.5	Riparian Corridor		543381	4233023
372	Coast live oak	*Quercus agrifolia*	13.0	Riparian Corridor	growing horizontally into project right of way	543380	4233031
373	California bay	*Umbellularia californica*	14.0	Riparian Corridor		543387	4233028
374	California bay	*Umbellularia californica*	6, 6.5, 10.3	Riparian Corridor		543391	4233028
375	California buckeye	*Aesculus californica*	12.9, 39.5	Riparian Corridor		543402	4233035
376	California buckeye	*Aesculus californica*	14, 14.2, 11.5	Riparian Corridor		543409	4233035
377	Coast live oak	*Quercus agrifolia*	4.5	Riparian Corridor		543407	4233028
378	Coast live oak	*Quercus agrifolia*	5.4	Riparian Corridor		543405	4233029
378A	Coast live oak	*Quercus agrifolia*	8, 8	Riparian Corridor	tree not tagged due to location; dbh estimated	543400	4233022
379	Coast live oak	*Quercus agrifolia*	4.5	Riparian Corridor		543399	4233020
380	Coast live oak	*Quercus agrifolia*	8, 8	Riparian Corridor	estimated dbh	543394	4233016
381	Valley oak	*Quercus lobata*	19.6	Riparian Corridor		543418	4233041
382	Valley oak	*Quercus lobata*	23.8	Riparian Corridor		543421	4233047
383	Valley oak	*Quercus lobata*	18.4	Riparian Corridor		543423	4233048
384	Valley oak	*Quercus lobata*	6.8, 14.3	Upland		543488	4233107
385	Valley oak	*Quercus lobata*	15.0	Upland		543497	4233118
386	Coast live oak	*Quercus agrifolia*	4, 5	Upland		543498	4233120
387	Coast live oak	*Quercus agrifolia*	6, 6	Upland		543515	4233134
388	Coast live oak	*Quercus agrifolia*	7, 6	Upland		543519	4233137
389	Valley oak	*Quercus lobata*	5, 9.1	Upland		543522	4233140
390	Coast live oak	*Quercus agrifolia*	4, 7.3	Upland		543531	4233151
391	Valley oak	*Quercus lobata*	5.0	Upland		543535	4233150
392	Coast live oak	*Quercus agrifolia*	5, 3, 5, 5, 6	Upland		543535	4233151
393	Coast live oak	*Quercus agrifolia*	6, 6	Upland		543537	4233154
394	Coast live oak	*Quercus agrifolia*	6.7	Upland		543538	4233156
395	Coast live oak	*Quercus agrifolia*	6.8, 6	Upland		543541	4233158
396	California buckeye	*Aesculus californica*	11.7, 11.3	Upland		543629	4233251
397	Coast live oak	*Quercus agrifolia*	10.0	Upland		543635	4233257
398	Valley oak	*Quercus lobata*	22.5	Upland		543677	4233308
399	Coast live oak	*Quercus agrifolia*	12.5, 14.2	Upland		543679	4233312
400	Valley oak	*Quercus lobata*	4.7	Upland		543685	4233321
401	Coast live oak	*Quercus agrifolia*	5.8, 18.0	Riparian Corridor		543248	4232597
402	Coast live oak	*Quercus agrifolia*	6.7	Riparian Corridor		543253	4232599

Tree Number	Common Name	Botanical name	Diameter at 4.5 ft (in)	Habitat	Comments	UTM NAD83 Zone 10	
						X	Y
403	Valley oak	*Quercus lobata*	7.3	Riparian Corridor		543248	4232605
404	Coast live oak	*Quercus agrifolia*	25.4, 10.1	Riparian Corridor		543248	4232613
405	California bay	*Umbellularia californica*	5.0	Riparian Corridor		543248	4232613
406	Coast live oak	*Quercus agrifolia*	5.6	Riparian Corridor		543238	4232704
407	California bay	*Umbellularia californica*	7.6, 9.0	Riparian Corridor		543237	4232710
408	California buckeye	*Aesculus californica*	6.0, 5.1, 3.2, 3.7, 4.4	Riparian Corridor		543237	4232709
409	Valley oak	*Quercus lobata*	6.8, 5.5, 2.8	Riparian Corridor		543239	4232713
410	Valley oak	*Quercus lobata*	7.2	Riparian Corridor		543239	4232713
411	Valley oak	*Quercus lobata*	6.4, 7.3	Riparian Corridor		543237	4232714
412	Valley oak	*Quercus lobata*	6.6, 3.2	Riparian Corridor		543239	4232714
413	Valley oak	*Quercus lobata*	6.4	Riparian Corridor		543238	4232715
414	Valley oak	*Quercus lobata*	4.2	Riparian Corridor		543237	4232719
415	Coast live oak	*Quercus agrifolia*	8.3, 3.5, 2.8, 1.6, 1.8, 1.2	Riparian Corridor		543240	4232721
416	Valley oak	*Quercus lobata*	4.0	Riparian Corridor		543238	4232718
417	Coast live oak	*Quercus agrifolia*	9.2, 6.7	Riparian Corridor		543237	4232721
418	California bay	*Umbellularia californica*	5.2, 2.4, 1.0, 1.4	Riparian Corridor		543240	4232723
419	Coast live oak	*Quercus agrifolia*	6.6, 2.8, 1.4	Riparian Corridor		543239	4232722
420	Coast live oak	*Quercus agrifolia*	6.0, 1.7, 5.3, 1.4, 1.3, 2.1, 1.9, 2.6	Riparian Corridor		543238	4232724
421	California bay	*Umbellularia californica*	5.3, 6.6	Riparian Corridor		543237	4232727
422	Valley oak	*Quercus lobata*	30.3	Riparian Corridor		543235	4232729
423	California buckeye	*Aesculus californica*	9.5, 5.5, 6.9	Riparian Corridor		543243	4232704
424	California buckeye	*Aesculus californica*	6.0, 2.4, 5.6, 1.4	Riparian Corridor		543237	4232687
425	Coast live oak	*Quercus agrifolia*	28.0	Riparian Corridor		543238	4232679
426	Valley oak	*Quercus lobata*	19.0	Riparian Corridor		543236	4232676
427	California bay	*Umbellularia californica*	24.3, 1.5, 1.9, 7.6	Riparian Corridor		543238	4232676
428	California bay	*Umbellularia californica*	7.0, 5.0	Riparian Corridor		543239	4232677
429	Coast live oak	*Quercus agrifolia*	17.9	Riparian Corridor		543238	4232662
430	Valley oak	*Quercus lobata*	24.3	Riparian Corridor		543238	4232660
431	Red willow	*Salix laevigata*	16.9	Riparian Corridor		543243	4232635
432	California bay	*Umbellularia californica*	4.1	Riparian Corridor		543244	4232628
433	Coast live oak	*Quercus agrifolia*	23.1, 11.8	Riparian Corridor		543251	4232623
434	California bay	*Umbellularia californica*	5.5	Riparian Corridor		543259	4232600
435	Coast live oak	*Quercus agrifolia*	19.4	Riparian Corridor		543261	4232600

Tree Number	Common Name	Botanical name	Diameter at 4.5 ft (in)	Habitat	Comments	UTM NAD83 Zone 10 X	Y
436	Valley oak	*Quercus lobata*	15.6	Riparian Corridor		543261	4232603
437	Coast live oak	*Quercus agrifolia*	14.1	Riparian Corridor		543261	4232608
438	Valley oak	*Quercus lobata*	13.2	Riparian Corridor		543259	4232605
439	California bay	*Umbellularia californica*	6.0	Riparian Corridor		543260	4232609
440	California bay	*Umbellularia californica*	10.0	Riparian Corridor		543259	4232609
441	Coast live oak	*Quercus agrifolia*	8.0	Riparian Corridor		543261	4232607
442	Coast live oak	*Quercus agrifolia*	8.4	Riparian Corridor		543260	4232607
443	Coast live oak	*Quercus agrifolia*	14.6	Riparian Corridor		543259	4232610
444	Coast live oak	*Quercus agrifolia*	12.0	Riparian Corridor		543258	4232614
445	Valley oak	*Quercus lobata*	18.2	Riparian Corridor	measured at 3 ft	543254	4232620
446	Coast live oak	*Quercus agrifolia*	21.8, 10.9, 5.6	Riparian Corridor		543255	4232624
447	Coast live oak	*Quercus agrifolia*	10.9	Riparian Corridor		543253	4232626
448	Coast live oak	*Quercus agrifolia*	24.2, 13.9, 19.8, 18.6	Riparian Corridor		543245	4232640
449	Coast live oak	*Quercus agrifolia*	16.2, 5.1, 2.4	Riparian Corridor		543243	4232660
450	Coast live oak	*Quercus agrifolia*	11.8	Riparian Corridor		543244	4232660
451	Coast live oak	*Quercus agrifolia*	12.2	Riparian Corridor		543243	4232667
452	Coast live oak	*Quercus agrifolia*	37.6	Riparian Corridor		543246	4232694
453	California bay	*Umbellularia californica*	38.5	Riparian Corridor		543247	4232696
454	Valley oak	*Quercus lobata*	9.9	Riparian Corridor		543241	4232744
455	Valley oak	*Quercus lobata*	28.0	Riparian Corridor		543238	4232747
456	Valley oak	*Quercus lobata*	17.8	Riparian Corridor		543237	4232742
457	Coast live oak	*Quercus agrifolia*	7.2, 5.2, 6.5	Riparian Corridor		545583	4234220
458	Coast live oak	*Quercus agrifolia*	9.8, 4.0, 3.9, 9.8	Upland		545581	4234213
459	Coast live oak	*Quercus agrifolia*	7.4, 8.4, 9.6, 4.6	Upland		545584	4234208
460	Coast live oak	*Quercus agrifolia*	11.3, 6.2, 3.3	Riparian Corridor		545582	4234227
461	Arroyo willow	*Salix lasiolepis*	2.1, 8.2, 6.7, 6.8, 6.7, 8.2, 16.0	Riparian Corridor		545570	4234225
462	Arroyo willow	*Salix lasiolepis*	6.4, 3.9, 1.8, 1.2, 1.4	Riparian Corridor		545564	4234223
463	Arroyo willow	*Salix lasiolepis*	7.4, 3.8, 7.2	Riparian Corridor		545564	4234230
464	Eucalyptus	*Eucalyptus* sp.	6.4, 16.0, 15.1, 3.1, 13.0, 8.0, 10.0	Riparian Corridor		545560	4234222
465	Red willow	*Salix laevigata*	9.3	Riparian Corridor		545562	4234230
466	Red willow	*Salix laevigata*	8.2, 10.5	Riparian Corridor		545558	4234230
467	Arroyo willow	*Salix lasiolepis*	6.4, 5.1, 7.2	Riparian Corridor		545558	4234229
468	Eucalyptus	*Eucalyptus* sp.	7.8, 8.2, 7.9, 1.8, 16.1	Riparian Corridor		545551	4234223

Tree Number	Common Name	Botanical name	Diameter at 4.5 ft (in)	Habitat	Comments	UTM NAD83 Zone 10 X	Y
469	Red willow	*Salix laevigata*	7.2	Riparian Corridor		545554	4234231
470	Arroyo willow	*Salix lasiolepis*	9.4, 3.1	Riparian Corridor		545552	4234230
471	Red willow	*Salix laevigata*	10.9, 15.9	Riparian Corridor		545548	4234235
472	Arroyo willow	*Salix lasiolepis*	7.1	Riparian Corridor		545546	4234234
473	Red willow	*Salix laevigata*	9.4, 5.9, 8.5, 4.3	Riparian Corridor		545544	4234235
474	Red willow	*Salix laevigata*	10.5, 11.9	Riparian Corridor		545545	4234233
475	Red willow	*Salix laevigata*	4.9	Riparian Corridor		545541	4234236
476	Red willow	*Salix laevigata*	8.9	Riparian Corridor		545543	4234237
477	Red willow	*Salix laevigata*	11.4	Riparian Corridor		545543	4234238
478	Red willow	*Salix laevigata*	9.1, 8.0, 9.7, 6.8	Riparian Corridor		545541	4234239
479	Red willow	*Salix laevigata*	9.2	Riparian Corridor		545540	4234235
480	Red willow	*Salix laevigata*	5.5	Riparian Corridor		545540	4234237
481	Red willow	*Salix laevigata*	13.6	Riparian Corridor		545544	4234240
482	Red willow	*Salix laevigata*	5.4	Riparian Corridor		545541	4234241
483	Plum	*Prunus sp.*	6.0, 4.5, 1.3, 1.4	Riparian Corridor		545536	4234243
484	Red willow	*Salix laevigata*	9.9, 11.1, 11.5, 13.9, 13.3, 11.1, 11.3, 12.2, 12.3, 11.9, 11.4	Riparian Corridor		545532	4234244
485	Black walnut	*Juglans hindsii*	4.3	Riparian Corridor		545530	4234244
486	Red willow	*Salix laevigata*	5.2	Riparian Corridor		545526	4234243
487	Red willow	*Salix laevigata*	9.6	Riparian Corridor		545524	4234245
488	Red willow	*Salix laevigata*	11.2, 5.8, 5.8, 6.0	Riparian Corridor		545525	4234245
489	Red willow	*Salix laevigata*	11.4, 9.6	Riparian Corridor		545522	4234246
490	Red willow	*Salix laevigata*	10.7	Riparian Corridor		545523	4234244
491	Red willow	*Salix laevigata*	10.8	Riparian Corridor		545520	4234245
492	Red willow	*Salix laevigata*	9.4	Riparian Corridor		545524	4234236
493	Red willow	*Salix laevigata*	7.8	Riparian Corridor		545525	4234237
494	Coast live oak	*Quercus agrifolia*	4.3, 6.0	Riparian Corridor		545496	4234250
495	Red willow	*Salix laevigata*	6.0	Riparian Corridor		545499	4234248
496	Red willow	*Salix laevigata*	9.0	Riparian Corridor		545500	4234249
497	Red willow	*Salix laevigata*	8.8, 11.0, 9.2	Riparian Corridor		545500	4234248
498	Red willow	*Salix laevigata*	11.8, 10.2, 10.9	Riparian Corridor		545498	4234249
499	Red willow	*Salix laevigata*	11.2, 11.6, 4.0	Riparian Corridor		545497	4234253
500	Red willow	*Salix laevigata*	5.1	Riparian Corridor		545499	4234256
502	Red willow	*Salix laevigata*	11.1	Riparian Corridor		545501	4234254

Tree Number	Common Name	Botanical name	Diameter at 4.5 ft (in)	Habitat	Comments	UTM NAD83 Zone 10	
						X	Y
503	Red willow	*Salix laevigata*	13.0	Riparian Corridor		545503	4234252
504	Red willow	*Salix laevigata*	7.2	Riparian Corridor		545502	4234253
505	Red willow	*Salix laevigata*	12.7	Riparian Corridor		545506	4234251
506	Red willow	*Salix laevigata*	8.0	Riparian Corridor		545504	4234251
507	Red willow	*Salix laevigata*	9.2	Riparian Corridor		545505	4234251
508	Red willow	*Salix laevigata*	9.0, 6.1	Riparian Corridor		545518	4234250
509	Red willow	*Salix laevigata*	9.0	Riparian Corridor		545516	4234248
510	Red willow	*Salix laevigata*	3.0, 10.6, 9.5	Riparian Corridor		545514	4234249
511	Red willow	*Salix laevigata*	10.8, 7.6	Riparian Corridor		545518	4234248
512	Red willow	*Salix laevigata*	6.0	Riparian Corridor		545519	4234248
513	Red willow	*Salix laevigata*	4.2	Riparian Corridor		545514	4234256
514	Red willow	*Salix laevigata*	10.2, 4.8	Riparian Corridor		545518	4234255
515	Red willow	*Salix laevigata*	10.1, 12.8, 11.2, 4.0	Riparian Corridor		545522	4234255
516	Red willow	*Salix laevigata*	12.3	Riparian Corridor		545522	4234258
517	Arroyo willow	*Salix lasiolepis*	5.6	Riparian Corridor		545522	4234256
518	Red willow	*Salix laevigata*	10.0, 9.0, 10.8, 8.4	Riparian Corridor		545524	4234257
519	Red willow	*Salix laevigata*	7.4, 7.2	Riparian Corridor		545525	4234253
520	Red willow	*Salix laevigata*	5.6	Riparian Corridor		545528	4234251
521	Red willow	*Salix laevigata*	15.8	Riparian Corridor		545536	4234247
522	Arroyo willow	*Salix lasiolepis*	4.3	Riparian Corridor		545532	4234249
523	Arroyo willow	*Salix lasiolepis*	6.5	Riparian Corridor		545542	4234245
524	Valley oak	*Quercus lobata*	24.2	Upland		543299	4232585
525	Valley oak	*Quercus lobata*	13.0	Upland		543300	4232587
526	Coast live oak	*Quercus agrifolia*	4.5	Upland		543297	4232587
527	Coast live oak	*Quercus agrifolia*	29.6	Upland		543294	4232603
528	Valley oak	*Quercus lobata*	22.3	Upland		543300	4232605
529	Coast live oak	*Quercus agrifolia*	31.8	Upland		543302	4232608
530	Valley oak	*Quercus lobata*	22.2	Upland		543295	4232665
531	Valley oak	*Quercus lobata*	21.5	Upland		543297	4232667
532	Coast live oak	*Quercus agrifolia*	21.2	Upland		543297	4232674
533	Coast live oak	*Quercus agrifolia*	7.8, 13.9, 12.2, 11.9	Upland		543296	4232680
534	Coast live oak	*Quercus agrifolia*	17.7, 8.7	Upland		543299	4232682
535	Madrone	*Arbutus menziesii*	28.9	Upland		543298	4232689
536	Coast live oak	*Quercus agrifolia*	4.2, 5.7, 3.3	Upland		543292	4232686
537	Coast live oak	*Quercus agrifolia*	5.7, 5.4	Upland		543288	4232684

Tree Number	Common Name	Botanical name	Diameter at 4.5 ft (in)	Habitat	Comments	UTM NAD83 Zone 10	
						X	Y
538	Coast live oak	*Quercus agrifolia*	12.3	Upland		543293	4232687
539	Coast live oak	*Quercus agrifolia*	11.5	Upland		543293	4232690
540	Coast live oak	*Quercus agrifolia*	10.3	Upland		543290	4232692
541	Black oak	*Quercus kelloggii*	17.0	Upland		543288	4232697
542	Black oak	*Quercus kelloggii*	7.0	Upland		543289	4232698
543	Coast live oak	*Quercus agrifolia*	15.5	Upland		543292	4232699
544	Coast live oak	*Quercus agrifolia*	15.9, 16.6	Upland		543294	4232703
545	Coast live oak	*Quercus agrifolia*	15.0	Upland		543296	4232709
546	Coast live oak	*Quercus agrifolia*	12.9, 11.9	Upland		543296	4232712
547	Valley oak	*Quercus lobata*	7.6	Upland		543295	4232719
548	Coast live oak	*Quercus agrifolia*	11.7, 7.6	Upland		543294	4232717
549	Coast live oak	*Quercus agrifolia*	8.2, 8.0, 8.0	Upland		543291	4232723
550	Coast live oak	*Quercus agrifolia*	10.5, 2.2, 2.4, 5.1, 3.1, 7.5, 8.6	Upland		543286	4232722
551	Coast live oak	*Quercus agrifolia*	17.3, 18.4, 15.4	Upland		543293	4232730
552	Coast live oak	*Quercus agrifolia*	18.3, 8.8, 8.9	Upland		543290	4232734
553	Valley oak	*Quercus lobata*	16.0	Upland		543298	4232897
554	Coast live oak	*Quercus agrifolia*	29.0	Upland		543322	4232889
555	Valley oak	*Quercus lobata*	23.7	Upland		543322	4232889
556	Coast live oak	*Quercus agrifolia*	18.7	Upland		543317	4232895
557	Coast live oak	*Quercus agrifolia*	24.2	Upland		543321	4232894
558	Coast live oak	*Quercus agrifolia*	31.2	Upland		543323	4232901
559	Coast live oak	*Quercus agrifolia*	35.9	Upland		543317	4232904
560	Coast live oak	*Quercus agrifolia*	29.7	Upland		543318	4232909
561	Coast live oak	*Quercus agrifolia*	23.3	Upland		543325	4232908
562	Coast live oak	*Quercus agrifolia*	24.3	Upland		543332	4232921
563	Valley oak	*Quercus lobata*	18.0	Upland		543332	4232922
564	Valley oak	*Quercus lobata*	17.8	Riparian Corridor		543360	4232951
565	Valley oak	*Quercus lobata*	9.3	Riparian Corridor		543360	4232951
566	Valley oak	*Quercus lobata*	10.0	Riparian Corridor		543366	4232959
567	Valley oak	*Quercus lobata*	22.0	Riparian Corridor	estimated dbh	543365	4232959
568	Valley oak	*Quercus lobata*	24.0	Riparian Corridor		543359	4232967
569	Coast live oak	*Quercus agrifolia*	6.5	Riparian Corridor		543359	4232965
570	California bay	*Umbellularia californica*	4.7	Riparian Corridor		543358	4232964
571	Coast live oak	*Quercus agrifolia*	6.7	Riparian Corridor		543356	4232962

Tree Number	Common Name	Botanical name	Diameter at 4.5 ft (in)	Habitat	Comments	UTM NAD83 Zone 10	
						X	Y
572	Coast live oak	*Quercus agrifolia*	5.5	Riparian Corridor		543356	4232963
573	Valley oak	*Quercus lobata*	6.5	Riparian Corridor		543353	4232959
574	Coast live oak	*Quercus agrifolia*	9.6	Riparian Corridor		543355	4232958
575	Coast live oak	*Quercus agrifolia*	12.7	Riparian Corridor		543355	4232958
576	Coast live oak	*Quercus agrifolia*	4.7	Riparian Corridor		543356	4232959
577	Coast live oak	*Quercus agrifolia*	8.0	Riparian Corridor		543357	4232958
578	Coast live oak	*Quercus agrifolia*	6.8	Riparian Corridor		543354	4232961
579	Coast live oak	*Quercus agrifolia*	6.0	Riparian Corridor		543359	4232957
580	Coast live oak	*Quercus agrifolia*	4.5	Riparian Corridor		543354	4232957
581	Coast live oak	*Quercus agrifolia*	14.3, 5	Riparian Corridor		543355	4232955
582	Valley oak	*Quercus lobata*	7.3	Riparian Corridor		543350	4232956
583	Valley oak	*Quercus lobata*	4.5	Riparian Corridor		543346	4232953
584	Coast live oak	*Quercus agrifolia*	5.0	Riparian Corridor		543346	4232952
585	Coast live oak	*Quercus agrifolia*	6.0	Riparian Corridor		543344	4232949
586	Valley oak	*Quercus lobata*	6.3	Riparian Corridor		543346	4232947
587	Valley oak	*Quercus lobata*	5.7, 4	Riparian Corridor		543344	4232950
588	Valley oak	*Quercus lobata*	14.4	Upland		543340	4232946
589	Coast live oak	*Quercus agrifolia*	4.5	Upland		543340	4232946
590	Valley oak	*Quercus lobata*	13.2	Upland		543337	4232942
591	Coast live oak	*Quercus agrifolia*	5.2	Upland		543339	4232940
592	Valley oak	*Quercus lobata*	13.8	Upland		543305	4232908
593	Coast live oak	*Quercus agrifolia*	22.0	Upland		543306	4232910
594	California bay	*Umbellularia californica*	7, 7	Upland		543314	4232915
595	California bay	*Umbellularia californica*	4.5, 5, 6	Upland		543314	4232916
596	California bay	*Umbellularia californica*	7.5, 7	Upland		543317	4232918
597	Coast live oak	*Quercus agrifolia*	16.0	Upland		543319	4232921
598	Valley oak	*Quercus lobata*	25.8	Riparian Corridor		543411	4233017
599	Coast live oak	*Quercus agrifolia*	9.2	Riparian Corridor		543411	4233016
600	Coast live oak	*Quercus agrifolia*	9.0	Riparian Corridor		543402	4232998
601	Coast live oak	*Quercus agrifolia*	25.5	Upland		543686	4233329
602	Coast live oak	*Quercus agrifolia*	10, 12, 7.5	Riparian Corridor		543715	4233397
603	Red willow	*Salix laevigata*	9.0	Riparian Corridor		543713	4233400
604	California bay	*Umbellularia californica*	15.5, 13.5	Riparian Corridor		543710	4233401
605	Coast live oak	*Quercus agrifolia*	8.2	Riparian Corridor		543714	4233403
606	Coast live oak	*Quercus agrifolia*	7.8	Riparian Corridor		543717	4233401

Tree Number	Common Name	Botanical name	Diameter at 4.5 ft (in)	Habitat	Comments	UTM NAD83 Zone 10 X	Y
607	Coast live oak	*Quercus agrifolia*	5.2, 6.8, 7.5	Riparian Corridor		543717	4233407
608	Coast live oak	*Quercus agrifolia*	11.5, 5.4	Riparian Corridor		543719	4233407
609	Coast live oak	*Quercus agrifolia*	10, 6, 10	Upland		543730	4233425
610	Coast live oak	*Quercus agrifolia*	11.7, 6.4	Upland		543752	4233469
611	Coast live oak	*Quercus agrifolia*	5.9, 6.8	Upland		543752	4233473
612	Coast live oak	*Quercus agrifolia*	9.8, 15.2	Upland		543751	4233475
613	Coast live oak	*Quercus agrifolia*	10.9, 6.8	Upland		543760	4233484
614	Coast live oak	*Quercus agrifolia*	5.3	Upland		543759	4233486
615	Coast live oak	*Quercus agrifolia*	30.2	Upland		543762	4233485
616	Coast live oak	*Quercus agrifolia*	8.5	Upland		543765	4233491
617	Coast live oak	*Quercus agrifolia*	4.5	Upland		543766	4233491
618	Coast live oak	*Quercus agrifolia*	6.5	Upland		543765	4233490
619	Coast live oak	*Quercus agrifolia*	7.4, 8	Upland		543766	4233491
620	Coast live oak	*Quercus agrifolia*	17.0	Upland		543766	4233489
621	Coast live oak	*Quercus agrifolia*	8.3	Upland		543767	4233485
622	Coast live oak	*Quercus agrifolia*	11.8	Upland		543771	4233493
623	Coast live oak	*Quercus agrifolia*	7.3, 10	Upland		543773	4233497
624	Coast live oak	*Quercus agrifolia*	8.1	Upland		543772	4233496
625	Coast live oak	*Quercus agrifolia*	10.3, 5.3	Upland		543783	4233506
626	Coast live oak	*Quercus agrifolia*	11.8	Upland		543784	4233508
627	Coast live oak	*Quercus agrifolia*	13.7	Upland		543788	4233513
627A	Coast live oak	*Quercus agrifolia*	20.0	Upland	tree not tagged due to location; dbh estimated	543784	4233514
627B	Coast live oak	*Quercus agrifolia*	20.0	Upland	tree not tagged due to location; dbh estimated	543785	4233513
627C	Coast live oak	*Quercus agrifolia*	10.0	Upland	tree not tagged due to location; dbh estimated	543789	4233519
628	Coast live oak	*Quercus agrifolia*	16.7	Upland		543799	4233525
628A	Coast live oak	*Quercus agrifolia*	14.0	Upland	tree not tagged due to location; dbh estimated	543796	4233525
629	Coast live oak	*Quercus agrifolia*	15.4, 17.5	Upland		543937	4233606
630	Valley oak	*Quercus lobata*	7.5, 7.5, 6	Upland		543781	4233484
631	Coast live oak	*Quercus agrifolia*	4.7	Upland		543787	4233489
632	California buckeye	*Aesculus californica*	8.6, 7.5	Upland		543788	4233490
633	Coast live oak	*Quercus agrifolia*	25.5	Upland		543793	4233492

Tree Number	Common Name	Botanical name	Diameter at 4.5 ft (in)	Habitat	Comments	UTM NAD83 Zone 10	
						X	Y
634	Coast live oak	*Quercus agrifolia*	46.0	Upland	measured at 20"	543797	4233499
635	Coast live oak	*Quercus agrifolia*	7.6, 6.4, 4, 4	Upland		543870	4233558
636	Valley oak	*Quercus lobata*	13.3	Upland		543891	4233567
637	Valley oak	*Quercus lobata*	12.1	Upland		543912	4233578
638	Valley oak	*Quercus lobata*	11, 6	Upland		543983	4233611
639	Wattle	*Acacia sp*	4.1, 4, 3	Upland		544012	4233626
640	Eucalyptus	*Eucalyptus* sp.	70, 45	Upland	estimated dbh	544315	4233765
641	Eucalyptus	*Eucalyptus* sp.	41.0	Upland		544325	4233770
642	Eucalyptus	*Eucalyptus* sp.	77.0	Upland		544334	4233772
643	Eucalyptus	*Eucalyptus* sp.	80.0	Upland	estimated dbh	544341	4233777
644	Eucalyptus	*Eucalyptus* sp.	90.0	Upland	estimated dbh	544357	4233777
645	Eucalyptus	*Eucalyptus* sp.	80.0	Upland	estimated dbh	544356	4233779
646	Eucalyptus	*Eucalyptus* sp.	40.0	Upland	estimated dbh	544485	4233834
647	Eucalyptus	*Eucalyptus* sp.	100.0	Upland	estimated dbh	544495	4233840
648	Eucalyptus	*Eucalyptus* sp.	50.0	Upland	estimated dbh	544600	4233884
649	Eucalyptus	*Eucalyptus* sp.	55.0	Upland	estimated dbh	544646	4233904
650	Eucalyptus	*Eucalyptus* sp.	24.0	Upland	estimated dbh	544688	4233923
651	Eucalyptus	*Eucalyptus* sp.	20.0	Upland	estimated dbh	544695	4233925
652	Honeylocust	*Gleditsia triacanthos*	26.7	Upland		545012	4234056
653	Coast live oak	*Quercus agrifolia*	25.7	Riparian Corridor		545101	4234127
654	Eucalyptus	*Eucalyptus* sp.	60.0	Upland		545247	4234151
655	Wattle	*Acacia* sp.	5, 6	Upland		545253	4234153
656	Elm	*Ulmus* sp.	11.8	Upland		545260	4234159
657	Elm	*Ulmus* sp.	9.9	Upland		545261	4234158
658	Elm	*Ulmus* sp.	12.0	Upland		545263	4234160
659	Elm	*Ulmus* sp.	7.6, 6.5	Upland		545369	4234203
660	Eucalyptus	*Eucalyptus* sp.	50, 14	Upland		545660	4234101
661	Coast live oak	*Quercus agrifolia*	13.5, 9	Upland		545627	4234179
662	Coast live oak	*Quercus agrifolia*	8.5, 7, 10, 5, 10, 9	Upland		545627	4234190
663	Arroyo willow	*Salix lasiolepis*	5, 8, 6, 4	Riparian Corridor		545622	4234192
664	Sandbar willow	*Salix exigua*	5, 5, 5, 4, 4	Riparian Corridor		545609	4234210
665	Coast live oak	*Quercus agrifolia*	13.2	Riparian Corridor		545611	4234203
666	Coast live oak	*Quercus agrifolia*	13.3, 10.5, 13, 16, 26	Riparian Corridor		545606	4234208
667	Coast live oak	*Quercus agrifolia*	7, 5, 8	Riparian Corridor		545587	4234235
668	Coast live oak	*Quercus agrifolia*	9.2, 9.9	Riparian Corridor		543421	4233021

Tree Number	Common Name	Botanical name	Diameter at 4.5 ft (in)	Habitat	Comments	UTM NAD83 Zone 10	
						X	Y
669	California buckeye	*Aesculus californica*	4, 4, 4, 3, 3	Riparian Corridor		543421	4233024
670	Coast live oak	*Quercus agrifolia*	49.3	Riparian Corridor		543433	4233004
671	Coast live oak	*Quercus agrifolia*	24.0	Riparian Corridor	estimated dbh due to location under large fallen oak	543430	4233016
672	California bay	*Umbellularia californica*	14, 8.5	Riparian Corridor		543437	4233020
673	Coast live oak	*Quercus agrifolia*	6.0	Riparian Corridor		543436	4233023
673A	Coast live oak	*Quercus agrifolia*	7.0	Riparian Corridor	tree not tagged due to location; dbh estimated	543443	4233025
674	California buckeye	*Aesculus californica*	20.0	Riparian Corridor		543443	4233029
675	Coast live oak	*Quercus agrifolia*	19.8, 18.5	Riparian Corridor		543442	4233037
676	Coast live oak	*Quercus agrifolia*	6, 4, 6, 4.7, 5.2	Riparian Corridor		543441	4233043
677	Coast live oak	*Quercus agrifolia*	20.9	Upland		543459	4233061
678	Coast live oak	*Quercus agrifolia*	10.3	Upland		543462	4233065
679	Valley oak	*Quercus lobata*	8.0	Upland		543463	4233065
680	Valley oak	*Quercus lobata*	21.5	Riparian Corridor		543491	4233085
681	Valley oak	*Quercus lobata*	10.0	Riparian Corridor		543491	4233087
682	Valley oak	*Quercus lobata*	16.0	Riparian Corridor		543495	4233092
683	Valley oak	*Quercus lobata*	10.9	Upland		543494	4233095
684	Coast live oak	*Quercus agrifolia*	10.0	Riparian Corridor		543505	4233101
685	Valley oak	*Quercus lobata*	14.8	Riparian Corridor		543502	4233101
686	Valley oak	*Quercus lobata*	12.0	Riparian Corridor		543502	4233102
687	Coast live oak	*Quercus agrifolia*	17.8	Riparian Corridor		543505	4233105
688	Valley oak	*Quercus lobata*	19.0	Riparian Corridor		543505	4233106
689	Valley oak	*Quercus lobata*	18.0	Riparian Corridor		543508	4233107
690	Valley oak	*Quercus lobata*	14.0	Riparian Corridor		543509	4233106
691	Valley oak	*Quercus lobata*	22.0	Riparian Corridor		543513	4233109
692	California buckeye	*Aesculus californica*	7.5	Riparian Corridor		543520	4233114
693	Coast live oak	*Quercus agrifolia*	4.2	Riparian Corridor		543509	4233110
694	Coast live oak	*Quercus agrifolia*	14.1	Riparian Corridor		543517	4233116
695	Valley oak	*Quercus lobata*	25.2	Riparian Corridor		543517	4233117
696	California bay	*Umbellularia californica*	4.0	Riparian Corridor		543520	4233118
697	California bay	*Umbellularia californica*	10.7	Riparian Corridor		543524	4233123
698	Coast live oak	*Quercus agrifolia*	7.0	Riparian Corridor		543529	4233126
699	Coast live oak	*Quercus agrifolia*	19.5	Riparian Corridor		543531	4233129

Tree Number	Common Name	Botanical name	Diameter at 4.5 ft (in)	Habitat	Comments	UTM NAD83 Zone 10	
						X	Y
700	Coast live oak	*Quercus agrifolia*	4.9, 9	Riparian Corridor		543537	4233134
701	Coast live oak	*Quercus agrifolia*	11.6, 11, 17.2	Riparian Corridor		543540	4233136
702	Coast live oak	*Quercus agrifolia*	15, 7.3	Riparian Corridor		543551	4233145
703	Coast live oak	*Quercus agrifolia*	5.2	Upland		543553	4233148
704	Coast live oak	*Quercus agrifolia*	6.2, 8, 6.8	Upland		543557	4233153
705	Coast live oak	*Quercus agrifolia*	17.2	Upland		543573	4233168
706	Coast live oak	*Quercus agrifolia*	4.8	Upland		543574	4233165
707	Valley oak	*Quercus lobata*	12.2, 20	Upland		543574	4233169
709	Valley oak	*Quercus lobata*	21.3	Upland		543575	4233170
710	Coast live oak	*Quercus agrifolia*	13.8	Upland		543606	4233198
711	Coast live oak	*Quercus agrifolia*	17.7	Upland		543614	4233208
712	Coast live oak	*Quercus agrifolia*	11.0	Upland		543627	4233218
713	Elm	*Ulmus* sp.	5.3	Upland		543629	4233221
714	Coast live oak	*Quercus agrifolia*	13.0	Upland		543632	4233225
715	California buckeye	*Aesculus californica*	11.0	Upland		543633	4233224
716	Coast live oak	*Quercus agrifolia*	16.5	Upland		543635	4233227
717	Coast live oak	*Quercus agrifolia*	15.4	Upland		543639	4233229
718	California buckeye	*Aesculus californica*	32.0	Upland		543678	4233264
719	Coast live oak	*Quercus agrifolia*	28, 25.5	Riparian Corridor		543738	4233401
720	Coast live oak	*Quercus agrifolia*	6.5	Riparian Corridor		543739	4233398
721	Coast live oak	*Quercus agrifolia*	20, 22.5	Riparian Corridor		543752	4233396
722	California buckeye	*Aesculus californica*	6.3, 9.3	Riparian Corridor		543757	4233398
723	California buckeye	*Aesculus californica*	9.9, 10	Riparian Corridor		543756	4233403
724	Coast live oak	*Quercus agrifolia*	20.4, 21.5	Riparian Corridor		543757	4233406
725	Plum	*Prunus* sp.	8.2	Upland		543758	4233407
726	Coast live oak	*Quercus agrifolia*	24.7	Riparian Corridor		543754	4233406
727	Black walnut	*Juglans hindsii*	13.7	Riparian Corridor		543746	4233413
728	Valley oak	*Quercus lobata*	27.7	Riparian Corridor		543735	4233411
729	Coast live oak	*Quercus agrifolia*	23.0	Riparian Corridor		543735	4233406
730	California buckeye	*Aesculus californica*	6.4, 4, 4, 3, 3, 3	Riparian Corridor		545294	4234206
731	Black walnut	*Juglans hindsii*	5.2, 4, 4	Riparian Corridor		545306	4234211
732	California buckeye	*Aesculus californica*	16.6	Riparian Corridor		545312	4234214
733	California buckeye	*Aesculus californica*	5, 5, 4, 4, 4, 4, 4, 4, 4, 3, 3, 3, 3, 3	Riparian Corridor		545313	4234214
734	California buckeye	*Aesculus californica*	4.4, 3, 3, 3, 2, 2	Riparian Corridor		545314	4234218

Tree Number	Common Name	Botanical name	Diameter at 4.5 ft (in)	Habitat	Comments	UTM NAD83 Zone 10	
						X	Y
735	California buckeye	*Aesculus californica*	5.2, 4, 4, 4, 3	Riparian Corridor		545316	4234216
736	California buckeye	*Aesculus californica*	4.5, 3, 3	Riparian Corridor		545316	4234217
737	California buckeye	*Aesculus californica*	4.5	Riparian Corridor		545317	4234219
738	California buckeye	*Aesculus californica*	4, 4, 4, 4, 3, 3, 3	Riparian Corridor		545318	4234218
739	Coast live oak	*Quercus agrifolia*	22.8	Riparian Corridor		545330	4234222
740	California buckeye	*Aesculus californica*	4.0	Riparian Corridor		545332	4234221
741	California buckeye	*Aesculus californica*	5.4, 5.8, 4	Riparian Corridor		545333	4234222
742	California buckeye	*Aesculus californica*	6.1, 3	Riparian Corridor		545335	4234226
743	California buckeye	*Aesculus californica*	6.2	Riparian Corridor		545334	4234223
744	California buckeye	*Aesculus californica*	7.5, 5	Riparian Corridor		545333	4234223
745	California buckeye	*Aesculus californica*	5, 4, 4, 4, 7.5, 9.5, 8, 3	Riparian Corridor		545352	4234232
746	Eucalyptus	*Eucalyptus* sp.	11.0	Riparian Corridor		545355	4234230
747	Arroyo willow	*Salix lasiolepis*	5, 3, 2, 2	Riparian Corridor		545361	4234232
748	Black walnut	*Juglans hindsii*	11.0	Riparian Corridor		545364	4234238
749	Black walnut	*Juglans hindsii*	7.0	Riparian Corridor		545364	4234238
750	Plum	*Prunus* sp.	22.2	Riparian Corridor	measured at 20"	545369	4234233
751	Black walnut	*Juglans hindsii*	11, 10.3, 11	Riparian Corridor		545370	4234233
752	Red willow	*Salix laevigata*	14.8	Riparian Corridor		545384	4234233
753	Red willow	*Salix laevigata*	4, 4, 3	Riparian Corridor		545399	4234243
754	California bay	*Umbellularia californica*	9.6, 8, 8, 11.5	Riparian Corridor		545413	4234252
755	California bay	*Umbellularia californica*	6.8, 6.5	Riparian Corridor		545408	4234253
756	California bay	*Umbellularia californica*	7, 4, 13, 12	Riparian Corridor		545413	4234253
757	California bay	*Umbellularia californica*	8.5	Riparian Corridor		545413	4234256
758	California bay	*Umbellularia californica*	5.8	Riparian Corridor		545414	4234256
759	California bay	*Umbellularia californica*	7.0	Riparian Corridor		545414	4234257
760	California bay	*Umbellularia californica*	4.5, 7.5, 7	Riparian Corridor		545416	4234255
761	California buckeye	*Aesculus californica*	6.3, 3	Riparian Corridor		545420	4234254
762	California buckeye	*Aesculus californica*	4.0	Riparian Corridor		545419	4234252
763	California buckeye	*Aesculus californica*	7.2, 6.8, 5	Riparian Corridor		545420	4234252
763A	Red willow	*Salix laevigata*	20.0	Riparian Corridor	tree not tagged due to location; dbh estimated	545393	4234241
764	California buckeye	*Aesculus californica*	6.8, 4, 3	Riparian Corridor		545420	4234251
765	Red willow	*Salix laevigata*	16, 16	Riparian Corridor		545423	4234247
766	Oregon ash	*Fraxinus latifolia*	7.0	Riparian Corridor		545424	4234247

Tree Number	Common Name	Botanical name	Diameter at 4.5 ft (in)	Habitat	Comments	UTM NAD83 Zone 10	
						X	Y
766A	Sandbar willow	*Salix exigua*	8, 8, 6	Riparian Corridor	tree not tagged due to location; dbh estimated	545427	4234251
767	Red willow	*Salix laevigata*	12.0	Riparian Corridor		545430	4234243
768	Red willow	*Salix laevigata*	10.7	Riparian Corridor		545436	4234255
769	Red willow	*Salix laevigata*	14.5, 13, 11	Riparian Corridor		545438	4234256
770	Red willow	*Salix laevigata*	13.0	Riparian Corridor		545439	4234257
771	Black walnut	*Juglans hindsii*	8.0	Riparian Corridor		545437	4234257
772	Red willow	*Salix laevigata*	11.5	Riparian Corridor		545440	4234257
773	Red willow	*Salix laevigata*	12.0	Riparian Corridor		545443	4234259
774	Black walnut	*Juglans hindsii*	20.5	Riparian Corridor		545447	4234260
775	California bay	*Umbellularia californica*	7.5	Riparian Corridor		545449	4234258
776	California bay	*Umbellularia californica*	6.2, 6, 5, 4	Riparian Corridor		545450	4234256
777	California bay	*Umbellularia californica*	6, 5, 4.5	Riparian Corridor		545453	4234259
778	Black walnut	*Juglans hindsii*	8, 7, 7	Riparian Corridor		545444	4234249
779	Oregon ash	*Fraxinus latifolia*	6.5	Riparian Corridor		545447	4234250
780	Plum	*Prunus* sp.	7, 5	Riparian Corridor		545449	4234249
781	Coast live oak	*Quercus agrifolia*	10, 5.8	Riparian Corridor		545452	4234244
782	Oregon ash	*Fraxinus latifolia*	6.5	Riparian Corridor		545461	4234257
783	Red willow	*Salix laevigata*	18, 16	Riparian Corridor		545464	4234257
784	Red willow	*Salix laevigata*	14.5	Riparian Corridor	field gps coordinates could not be obtained due to limited satellite coverage	545464	4234255
785	Red willow	*Salix laevigata*	11.0	Riparian Corridor	field gps coordinates could not be obtained due to limited satellite coverage	545465	4234260
786	Red willow	*Salix laevigata*	7.5	Riparian Corridor	field gps coordinates could not be obtained due to limited satellite coverage	545467	4234260
787	Red willow	*Salix laevigata*	13.2, 8, 6	Riparian Corridor	field gps coordinates could not be obtained due to limited satellite coverage	545468	4234256

Tree Number	Common Name	Botanical name	Diameter at 4.5 ft (in)	Habitat	Comments	UTM NAD83 Zone 10	
						X	Y
788	Red willow	*Salix laevigata*	14.5, 11	Riparian Corridor		545466	4234254
788A	Willow	*Salix* sp.	9.0	Riparian Corridor	estimated dbh due to location; field gps coordinates could not be obtained due to limited satellite coverage; tree not tagged in field	545544	4234247
788B	Willow	*Salix* sp.	10.0	Riparian Corridor	estimated dbh due to location; field gps coordinates could not be obtained due to limited satellite coverage; tree not tagged in field	545547	4234248
788C	Willow	*Salix* sp.	6.0	Riparian Corridor	estimated dbh due to location; field gps coordinates could not be obtained due to limited satellite coverage; tree not tagged in field	545548	4234245
788D	Willow	*Salix* sp.	15.0	Riparian Corridor	estimated dbh due to location; field gps coordinates could not be obtained due to limited satellite coverage; tree not tagged in field	545551	4234245
788E	Willow	*Salix* sp.	6.0	Riparian Corridor	estimated dbh due to location; field gps coordinates could not be obtained due to limited satellite coverage; tree not tagged in field	545550	4234243

Tree Number	Common Name	Botanical name	Diameter at 4.5 ft (in)	Habitat	Comments	UTM NAD83 Zone 10	
						X	Y
788F	Willow	*Salix* sp.	20.0	Riparian Corridor	estimated dbh due to location; field gps coordinates could not be obtained due to limited satellite coverage; tree not tagged in field	545555	4234240
788G	Willow	*Salix* sp.	14.0	Riparian Corridor	estimated dbh due to location; field gps coordinates could not be obtained due to limited satellite coverage; tree not tagged in field	545556	4234240
788H	Willow	*Salix* sp.	16.0	Riparian Corridor	estimated dbh due to location; field gps coordinates could not be obtained due to limited satellite coverage; tree not tagged in field	545555	4234239
788I	Willow	*Salix* sp.	10.0	Riparian Corridor	estimated dbh due to location; field gps coordinates could not be obtained due to limited satellite coverage; tree not tagged in field	545560	4234238
788J	Willow	*Salix* sp.	12.0	Riparian Corridor	estimated dbh due to location; field gps coordinates could not be obtained due to limited satellite coverage; tree not tagged in field	545561	4234236

Tree Number	Common Name	Botanical name	Diameter at 4.5 ft (in)	Habitat	Comments	UTM NAD83 Zone 10	
						X	Y
788K	Willow	*Salix* sp.	6.0	Riparian Corridor	estimated dbh due to location; field gps coordinates could not be obtained due to limited satellite coverage; tree not tagged in field	545563	4234234

N:\Projects\2855-01\Reports\Baseline Vegetation Characterization

H. T. HARVEY & ASSOCIATES
ECOLOGICAL CONSULTANTS

Figure 1: Tree Location Index Map

Stage Gulch Road Curve Correction and Realignment Project (2855-01)
July 2009

N:\Projects\2855-01\Reports\Tree Report

H. T. HARVEY & ASSOCIATES
ECOLOGICAL CONSULTANTS

Figure 2A: Tree Location Map

Stage Gulch Road Curve Correction and Realignment Project (2855-01)

July 2009

N:\Projects\2855-01\Reports\Tree Report

H. T. HARVEY & ASSOCIATES
ECOLOGICAL CONSULTANTS

Figure 2B: Tree Location Map

Stage Gulch Road Curve Correction and Realignment Project (2855-01)

July 2009

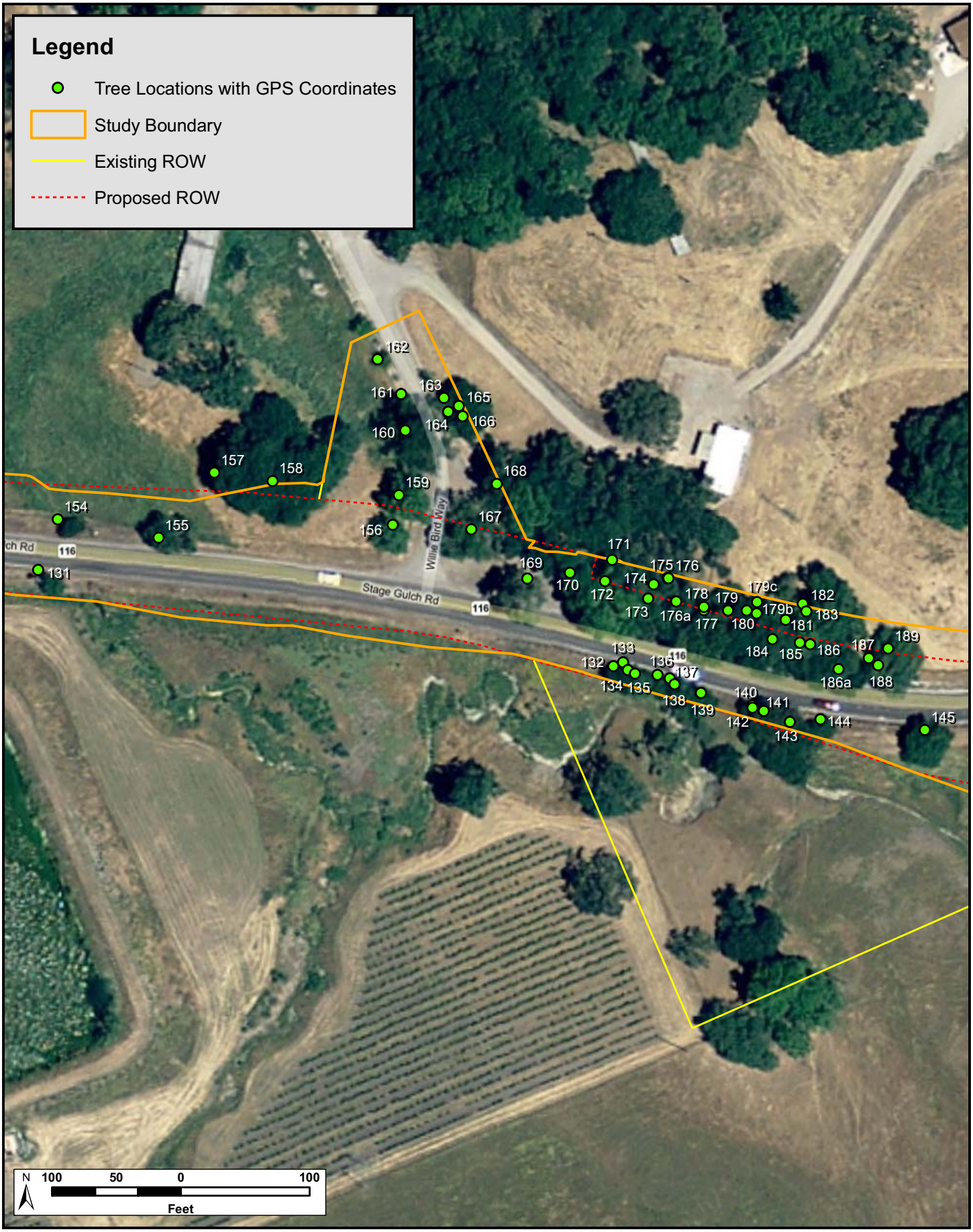

N:\Projects\2855-01\Reports\Tree Report

H. T. HARVEY & ASSOCIATES
ECOLOGICAL CONSULTANTS

Figure 2C: Tree Location Map

Stage Gulch Road Curve Correction and Realignment Project (2855-01)

July 2009

N:\Projects\2855-01\Reports\Tree Report

H. T. HARVEY & ASSOCIATES
ECOLOGICAL CONSULTANTS

Figure 2D: Tree Location Map

Stage Gulch Road Curve Correction and Realignment Project (2855-01)

July 2009

N:\Projects\2855-01\Reports\Tree Report

H. T. HARVEY & ASSOCIATES
ECOLOGICAL CONSULTANTS

Figure 2E: Tree Location Map

Stage Gulch Road Curve Correction and Realignment Project (2855-01)

July 2009

N:\Projects\2855-01\Reports\Tree Report

H. T. HARVEY & ASSOCIATES
ECOLOGICAL CONSULTANTS

Figure 2F: Tree Location Map

Stage Gulch Road Curve Correction and Realignment Project (2855-01)

July 2009

N:\Projects\2855-01\Reports\Tree Report

H. T. HARVEY & ASSOCIATES
ECOLOGICAL CONSULTANTS

Figure 2G: Tree Location Map

Stage Gulch Road Curve Correction and Realignment Project (2855-01)

July 2009

N:\Projects\2855-01\Reports\Tree Report

H. T. HARVEY & ASSOCIATES
ECOLOGICAL CONSULTANTS

Figure 2H: Tree Location Map

Stage Gulch Road Curve Correction and Realignment Project (2855-01)

July 2009

N:\Projects\2855-01\Reports\Tree Report

H. T. HARVEY & ASSOCIATES
ECOLOGICAL CONSULTANTS

Figure 2I: Tree Location Map

Stage Gulch Road Curve Correction and Realignment Project (2855-01)

July 2009

N:\Projects\2855-01\Reports\Tree Report

H. T. HARVEY & ASSOCIATES
ECOLOGICAL CONSULTANTS

Figure 2J: Tree Location Map

Stage Gulch Road Curve Correction and Realignment Project (2855-01)

July 2009

N:\Projects\2855-01\Reports\Tree Report

H. T. HARVEY & ASSOCIATES
ECOLOGICAL CONSULTANTS

Figure 2K: Tree Location Map

Stage Gulch Road Curve Correction and Realignment Project (2855-01)

July 2009

N:\Projects\2855-01\Reports\Tree Report

H. T. HARVEY & ASSOCIATES
ECOLOGICAL CONSULTANTS

Figure 2L: Tree Location Map

Stage Gulch Road Curve Correction and Realignment Project (2855-01)

July 2009

N:\Projects\2855-01\Reports\Tree Report

H. T. HARVEY & ASSOCIATES
ECOLOGICAL CONSULTANTS

Figure 2M: Tree Location Map

Stage Gulch Road Curve Correction and Realignment Project (2855-01)

July 2009

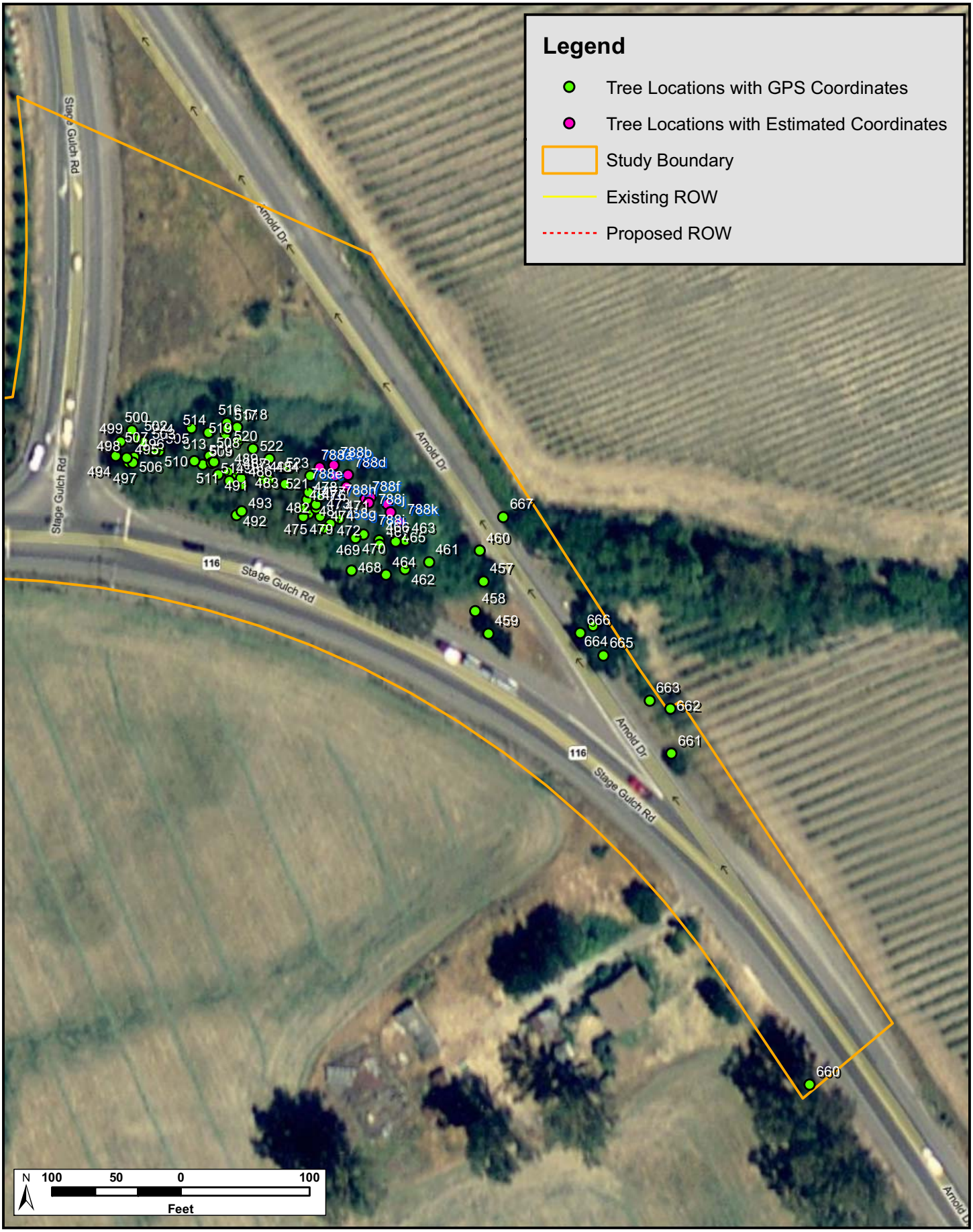

N:\Projects\2855-01\Reports\Tree Report

H. T. HARVEY & ASSOCIATES
ECOLOGICAL CONSULTANTS

Figure 2N: Tree Location Map

Stage Gulch Road Curve Correction and Realignment Project (2855-01)

July 2009

Stage Gulch EA 28381 - Summary of Impacts to Biological Resources. USACE and RWQCB impact calculations were last updated April 21, 2009. CDFG impact calculations have been revised.

Feature Name	CDFG Crossing	Stationing	PERMANENT IMPACTS USACE/RWQCB/CDFG				TEMPORARY IMPACTS USACE/RWQCB/CDFG				PERMANENT IMPACTS	
			Area (ft2)	Area (ac)	Volume (ft3)	Length (lf)	Area (ft2)	Area (ac)	Volume (ft3)	Length (lf)	Area (ft2)	Area (ac)
USACE, RWQCB and CDFG Jurisdictional Waters												
Champlin Creek 1	-	21+50	-	-	-	-	11	0	22	7	-	-
Champlin Creek 2	Crossing 3	28+60 to 28+60	174	0.004	348	44	218	0.005	436	55	1,437	0.033
Champlin Creek 3	Crossing 5	28+60 to 29+40	174	0.004	348	13	1,002	0.023	2,004	99	25,875	0.594
Champlin Creek 4 and 5	Crossing 6	30+00 to 39+90	-	-	-	-	-	-	-	-	3,441	0.079
Champlin Creek 6	Crossing 7	33+60 to 34+00	828	0.019	1,656	104	-	-	-	-	2,396	0.055
Champlin Creek 7	Crossing 8	34+00 to 34+40	174	0.004	348	20	741	0.017	1,482	93	7,623	0.175
Champlin Creek 8	Crossing 9	35+70 to 36+00	348	0.008	696	29	915	0.021	1,830	76	7,492	0.172
Champlin Creek 9	-	36+10	87	0.002	174	25	-	-	-	-	-	-
Champlin Creek 10	-	46+60 to 47+70	-	-	-	-	-	-	-	-	-	-
Champlin Creek 11	-	47+80 to 48+00	-	-	-	-	-	-	-	-	-	-
Champlin Creek 12	Crossing 12	53+20 to 53+60	174	0.004	348	23	479	0.011	958	62		
Champlin Creek 13	-	53+60 to 53+90	14	0.006	522	32	610	0.014	1,220	73	-	-
Champlin Creek 14	-	56+40 to 60+40	-	-	-	-	-	-	-	-	-	-
ICR-1	Crossing 1	22+50	-	-	-	-	45	0.001	90	15	392	0.009
ICR-2 (1)	Crossing 2	27+20	44	0.001	88	15	44	0.001	88	15	392	0.009
ICR-2 (2)	-	27+20	6	0.004	348	77	87	0.002	174	33	-	-
ICR-3	Crossing 4	29+50	218	0.005	436	64	120	0.003	240	30	3,093	0.071
ICR-4	Crossing 14	30+40 to 30+70	817	0.02	1,634	213	653	0.015	1,306	28	0	0.000
ICR-5	-	35+70 to 36+00	7	0	13	5	327	0.008	653	85	-	-
ICR-6 (1)	Crossing 10	40+80 to 41+00	-	-	-	-	131	0.003	262	61	9,888	0.227
ICR-6 (2)	-	41+00 to 41+20	10	0.034	2,962	67	741	0.017	1,482	27	-	-
ICR-6 (3)	-	41+00	10	-	-	-	44	0.001	88	22	-	-
ICR-7	Crossing 13	29+50	112	0.003	224	75	87	0.002	174	30	6,098	0.140
ICR-8	-	34+40	-	-	-	-	-	-	-	-	-	-
ICR-9 (1)	-	46+60	-	-	-	-	-	-	-	-	-	-
ICR-9 (2)	Crossing 11	46+60	44	0.001	88	12	-	-	-	-		
Seep-1	-	25+60	-	-	-	-	-	-	-	-	-	-
DD-1	-	10+40 to 11+60	1,324	0.03	1,324	292	1,204	0.028	1,204	254	-	-
DD-2	-	13+00 to 14+00	325	0.007	325	326	0	0	0	0	-	-
DD-6	-	34+00	-	-	-	-	-	-	-	-	-	-
DD-7	-	58+20 to 58+60	-	-	-	-	-	-	-	-	-	-
Subtotal	-	-	**6,766**	**0.156**	**11,882**	**1,436**	**7,459**	**0.172**	**13,713**	**1,065**	**68,128**	**1.564**
USACE and RWQCB Jurisdictional Wetlands												
W-1	-	11+80 to 13+00	2,769	0.064	2,769	405	0	0	0	0	-	-
W-2	-	10+40 to 11+00	756	0.017	756	365	0	0	0	0	-	-
W-3	-	22+40 to 22+60	371	0.009	557	63	583	0.013	874	62	-	-
W-4	-	20+40 to 20+70	466	0.011	466	47	1,025	0.024	1,025	68	-	-
W-5	-	34+10 to 34+40	0	0	0	0	1,702	0.039	1,702	53	-	-
W-6	-	39+60 to 39+80	432	0.01	432	29	570	0.013	570	38	-	-
Subtotal	-	-	**4,794**	**0.111**	**4,980**	**909**	**3,880**	**0.089**	**4,171**	**221**	**-**	**-**
RWQCB Jurisdictional Ditches												
DD-3	-	12+45 to 12+80	175	0.004	175	89	0	0	0	0	-	-
DD-4	-	21+20 to 22+50	0	0	0	0	941	0.022	941	475	-	-
DD-5	-	34+00	368	0.008	368	76	0	0	0	0	-	-
Subtotal	-	-	**543**	**0.012**	**543**	**165**	**941**	**0.022**	**941**	**475**	**-**	**-**

Impacts to CDFG Jurisdictional Features

Map 1 of 6 Crossing 1

Stage Gulch Curve Correction and Realignment Project
04-SON-116 PM 41.8/44.7 EA 283811

Tree IDs 261 - 264
0.036 ac
Tree IDs 254 - 260
Tree ID 14
1.399 ac
0.035 ac
0.140
Tree ID 13
Tree ID 243
0.038 ac
0.009 ac
Tree ID 148
Legend
Riparian Trees to be Removed
Canopy of Trees to be Removed
Mapped Area
E
0 50 100 200
Feet
Impacts to CDFG Jurisdictional Features
Map 2 of 6 Crossings 2, 3, 4, 13
Stage Gulch Curve Correction and Realignment Project
04-SON-116 PM 41.8/44.7 EA 283811

Tree ID 425- 427
Tree ID 429 - 430
Tree ID 448
Tree ID 431
Tree ID 432
Tree ID 401
0.002 ac
Tree ID 424
1.399 ac
Tree ID 451
Tree ID 449 - 450
0.118 ac
0.127 ac
Tree IDs 433 - 445-447
Tree ID 73
Tree IDs 36 - 63, 65 - 69, 77-78
0.248 ac
Tree ID 275
0.019 ac
Tree ID 34
Tree ID 32
0.071 ac
0.009 ac
Tree ID 27
Legend
Riparian Trees to be Removed
Canopy of Trees to be Removed
Mapped Area
0
100
200
Feet
Impacts to CDFG Jurisdictional Features
Map 3 of 6 Crossings 5, 6, 14
Stage Gulch Curve Correction and Realignment Project
04-SON-116 PM 41.8/44.7 EA 28

Tree ID 318
Tree ID 319
0.175 ac
Tree ID 317
Tree ID 313 - 316
Tree ID 321-325
Tree IDs 288 - 294
0.055 ac
0.003 ac
0.020 ac
Tree ID 455
Tree ID 456
Tree IDs 281, 281a, 282 - 285
0.056 ac
Tree ID 421 - 422
Mapped Area
Legend
Riparian Trees to be Removed
Canopy of Trees to be Removed
E
0 50 100 200
Feet
Impacts to CDFG Jurisdictional Features
Map 4 of 6 Crossings 7, 8
Stage Gulch Curve Correction and Realignment Project
04-SON-116 PM 41.8/44.7 EA 283811

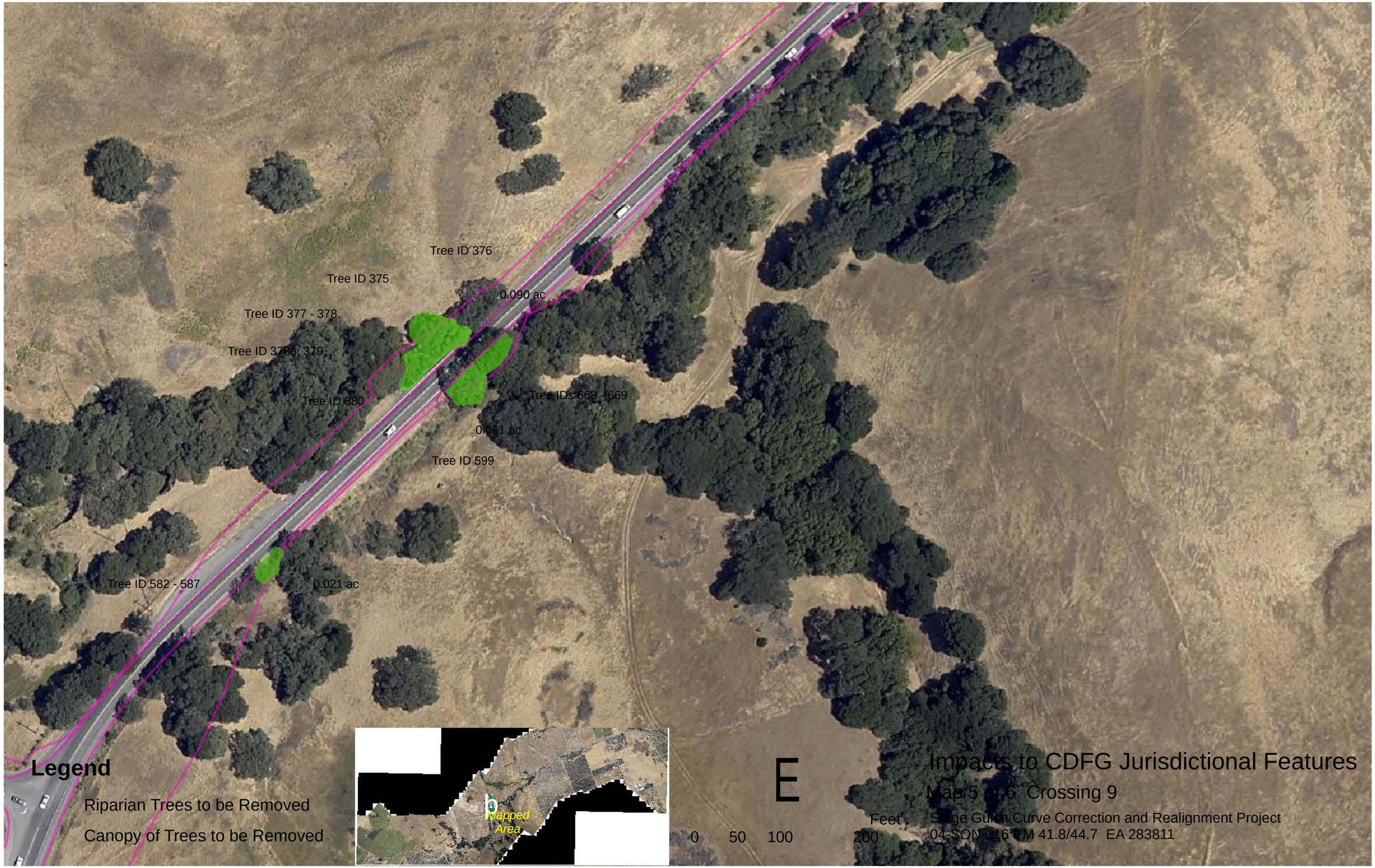
Tree ID 376
Tree ID 375
0.090 ac
Tree ID 377 - 378
Tree ID 378a, 379
Tree ID 380
Tree IDs 668 - 669
0.061 ac
Tree ID 599
Tree ID 582 - 587
0.021 ac
Mapped Area
Legend
Riparian Trees to be Removed
Canopy of Trees to be Removed
E
0 50 100 200
Feet
Impacts to CDFG Jurisdictional Features
Map 5 of 6 Crossing 9
Sage Gulch Curve Correction and Realignment Project
04-SON-116 PM 41.8/44.7 EA 283811

Impacts to CDFG Jurisdictional Features

Map 6 of 6 Crossing 10

Stage Gulch Curve Correction and Realignment Project
04-SON-116 PM 41.8/44.7 EA 283811

- Culvert
- Upland Data Point
- Wetland Data Point
- Flow Lines
- Boundary of USACE Jurisdictional Verification

Potential Waters of the US (Wetland)
Potential Waters of the US (culverted)
Potential Waters of the US (non-wetland)
Potential Waters of the US (Wetlands) as identified to Caltrans by USACE during November 2008 field verification
Waters of the State

Caltrans Designs, 04-15-2008
- Main Alignment
- Cut and Fill
- Existing ROW
- Proposed ROW
- Existing Hydrology

Impacts
- Permanent
- Temporary
- Restored

Perm Effects: Existing Edge of Pavement to Cut & Fill

Temp Effects: 15' from the Cut & Fill

Restore: Existing pavement to be restored to natural conditions

0 100 Feet

IMPACTS TO POTENTIAL WATERS OF THE U.S. AND WATERS OF THE STATE MAP 1 OF 16

SR 116 "STAGE GULCH" CURVE CORRECTION
AND REALIGNMENT PROJECT EA 283801
SONOMA COUNTY, CA

BAO \\ZINFANDEL\PROJ\CALTRANS\364064\GIS\STAGEGULCH\MAPFILES\STAGEGULCH_404_401IMPACTS_MAPBOOK.MXD STAGEGULCH_404_401IMPACTS_MAPBOOK.PDF 4/2/2009 14:45:32

Culvert
Upland Data Point
Wetland Data Point
Flow Lines
Boundary of USACE Jurisdictional Verification

Potential Waters of the US (Wetland)
Potential Waters of the US (culverted)
Potential Waters of the US (non-wetland)
Potential Waters of the US (Wetlands) as identified to Caltrans by USACE during November 2008 field verification
Waters of the State

Caltrans Designs, 04-15-2008
Main Alignment
Cut and Fill
Existing ROW
Proposed ROW
Existing Hydrology

Impacts
Permanent
Temporary
Restored

Perm Effects: Existing Edge of Pavement to Cut & Fill
Temp Effects: 15' from the Cut & Fill
Restore: Existing pavement to be restored to natural conditions

0 100 Feet

IMPACTS TO POTENTIAL WATERS OF THE U.S. AND WATERS OF THE STATE
MAP 2 OF 16

SR 116 "STAGE GULCH" CURVE CORRECTION AND REALIGNMENT PROJECT EA 283801
SONOMA COUNTY, CA

BAO \\ZINFANDEL\PROJ\CALTRANS\364064\GIS\STAGEGULCH\MAPFILES\STAGEGULCH_404_401IMPACTS_MAPBOOK.MXD STAGEGULCH_404_401IMPACTS_MAPBOOK.PDF 4/2/2009 14:45:32

Culvert
Upland Data Point
Wetland Data Point
Flow Lines
Boundary of USACE Jurisdictional Verification

Potential Waters of the US (Wetland)
Potential Waters of the US (culverted)
Potential Waters of the US (non-wetland)
Potential Waters of the US (Wetlands) as identified to Caltrans by USACE during November 2008 field verification
Waters of the State

Caltrans Designs, 04-15-2008 Impacts
Main Alignment
Cut and Fill
Existing ROW
Proposed ROW
Existing Hydrology

Permanent
Temporary
Restored

Perm Effects: Existing Edge of Pavement to Cut & Fill
Temp Effects: 15' from the Cut & Fill
Restore: Existing pavement to be restored to natural conditions

0 100 Feet

IMPACTS TO POTENTIAL WATERS OF THE U.S. AND WATERS OF THE STATE
MAP 3 OF 16

SR 116 "STAGE GULCH" CURVE CORRECTION AND REALIGNMENT PROJECT EA 283801
SONOMA COUNTY, CA

BAO \\ZINFANDEL\PROJ\CALTRANS\364064\GIS\STAGEGULCH\MAPFILES\STAGEGULCH_404_401IMPACTS_MAPBOOK.MXD STAGEGULCH_404_401IMPACTS_MAPBOOK.PDF 4/2/2009 14:45:32

Culvert
Upland Data Point
Wetland Data Point
Flow Lines
Boundary of USACE Jurisdictional Verification

Potential Waters of the US (Wetland)
Potential Waters of the US (culverted)
Potential Waters of the US (non-wetland)
Potential Waters of the US (Wetlands) as identified to Caltrans by USACE during November 2008 field verification
Waters of the State

Caltrans Designs, 04-15-2008 Impacts
Main Alignment
Cut and Fill
Existing ROW
Proposed ROW
Existing Hydrology

Permanent
Temporary
Restored

Perm Effects: Existing Edge of Pavement to Cut & Fill
Temp Effects: 15' from the Cut & Fill
Restore: Existing pavement to be restored to natural conditions

0 100 Feet

IMPACTS TO POTENTIAL WATERS OF THE U.S. AND WATERS OF THE STATE
MAP 4 OF 16

SR 116 "STAGE GULCH" CURVE CORRECTION AND REALIGNMENT PROJECT EA 283801
SONOMA COUNTY, CA

BAO \\ZINFANDEL\PROJ\CALTRANS\364064\GIS\STAGEGULCH\MAPFILES\STAGEGULCH_404_401IMPACTS_MAPBOOK.MXD STAGEGULCH_404_401IMPACTS_MAPBOOK.PDF 4/2/2009 14:45:32

Culvert
Upland Data Point
Wetland Data Point
Flow Lines
Boundary of USACE Jurisdictional Verification

Potential Waters of the US (Wetland)
Potential Waters of the US (culverted)
Potential Waters of the US (non-wetland)
Potential Waters of the US (Wetlands) as identified to Caltrans by USACE during November 2008 field verification
Waters of the State

Caltrans Designs, 04-15-2008 Impacts
Main Alignment
Cut and Fill
Existing ROW
Proposed ROW
Existing Hydrology

Permanent
Temporary
Restored

Perm Effects: Existing Edge of Pavement to Cut & Fill
Temp Effects: 15' from the Cut & Fill
Restore: Existing pavement to be restored to natural conditions

0 100 Feet

IMPACTS TO POTENTIAL WATERS OF THE U.S. AND WATERS OF THE STATE
MAP 5 OF 16

SR 116 "STAGE GULCH" CURVE CORRECTION AND REALIGNMENT PROJECT EA 283801
SONOMA COUNTY, CA

BAO \\ZINFANDEL\PROJ\CALTRANS\364064\GIS\STAGEGULCH\MAPFILES\STAGEGULCH_404_401IMPACTS_MAPBOOK.MXD STAGEGULCH_404_401IMPACTS_MAPBOOK.PDF 4/2/2009 14:45:32

Culvert
Upland Data Point
Wetland Data Point
Flow Lines
Boundary of USACE Jurisdictional Verification

Potential Waters of the US (Wetland)
Potential Waters of the US (culverted)
Potential Waters of the US (non-wetland)
Potential Waters of the US (Wetlands) as identified to Caltrans by USACE during November 2008 field verification
Waters of the State

Caltrans Designs, 04-15-2008
Main Alignment
Cut and Fill
Existing ROW
Proposed ROW
Existing Hydrology

Impacts
Permanent
Temporary
Restored

Perm Effects: Existing Edge of Pavement to Cut & Fill
Temp Effects: 15' from the Cut & Fill
Restore: Existing pavement to be restored to natural conditions

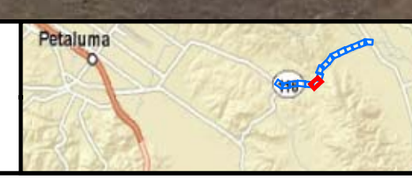

0 100 Feet

IMPACTS TO POTENTIAL WATERS OF THE U.S. AND WATERS OF THE STATE

MAP 6 OF 16

SR 116 "STAGE GULCH" CURVE CORRECTION AND REALIGNMENT PROJECT EA 283801
SONOMA COUNTY, CA

Culvert
Upland Data Point
Wetland Data Point
Flow Lines
Boundary of USACE Jurisdictional Verification

Potential Waters of the US (Wetland)
Potential Waters of the US (culverted)
Potential Waters of the US (non-wetland)
Potential Waters of the US (Wetlands) as identified to Caltrans by USACE during November 2008 field verification
Waters of the State

Caltrans Designs, 04-15-2008
Main Alignment
Cut and Fill
Existing ROW
Proposed ROW
Existing Hydrology

Impacts
Permanent
Temporary
Restored

Perm Effects: Existing Edge of Pavement to Cut & Fill
Temp Effects: 15' from the Cut & Fill
Restore: Existing pavement to be restored to natural conditions

0 100 Feet

IMPACTS TO POTENTIAL WATERS OF THE U.S. AND WATERS OF THE STATE
MAP 7 OF 16

SR 116 "STAGE GULCH" CURVE CORRECTION
AND REALIGNMENT PROJECT EA 283801
SONOMA COUNTY, CA

BAO \\ZINFANDEL\PROJ\CALTRANS\364064\GIS\STAGEGULCH\MAPFILES\STAGEGULCH_404_401IMPACTS_MAPBOOK.MXD STAGEGULCH_404_401IMPACTS_MAPBOOK.PDF 4/2/2009 14:45:32

Culvert
Upland Data Point
Wetland Data Point
Flow Lines
Boundary of USACE Jurisdictional Verification

Potential Waters of the US (Wetland)
Potential Waters of the US (culverted)
Potential Waters of the US (non-wetland)
Potential Waters of the US (Wetlands) as identified to Caltrans by USACE during November 2008 field verification
Waters of the State

Caltrans Designs, 04-15-2008
Main Alignment
Cut and Fill
Existing ROW
Proposed ROW
Existing Hydrology

Impacts
Permanent
Temporary
Restored

Perm Effects: Existing Edge of Pavement to Cut & Fill
Temp Effects: 15' from the Cut & Fill
Restore: Existing pavement to be restored to natural conditions

0 100 Feet

IMPACTS TO POTENTIAL WATERS OF THE U.S. AND WATERS OF THE STATE MAP 8 OF 16

SR 116 "STAGE GULCH" CURVE CORRECTION AND REALIGNMENT PROJECT EA 283801
SONOMA COUNTY, CA

Culvert
Upland Data Point
Wetland Data Point
Flow Lines
Boundary of USACE Jurisdictional Verification

Potential Waters of the US (Wetland)
Potential Waters of the US (culverted)
Potential Waters of the US (non-wetland)
Potential Waters of the US (Wetlands) as identified to Caltrans by USACE during November 2008 field verification
Waters of the State

Caltrans Designs, 04-15-2008
Main Alignment
Cut and Fill
Existing ROW
Proposed ROW
Existing Hydrology

Impacts
Permanent
Temporary
Restored

Perm Effects: Existing Edge of Pavement to Cut & Fill
Temp Effects: 15' from the Cut & Fill
Restore: Existing pavement to be restored to natural conditions

0 100 Feet

IMPACTS TO POTENTIAL WATERS OF THE U.S. AND WATERS OF THE STATE MAP 9 OF 16

SR 116 "STAGE GULCH" CURVE CORRECTION
AND REALIGNMENT PROJECT EA 283801
SONOMA COUNTY, CA

Culvert
Upland Data Point
Wetland Data Point
Flow Lines
Boundary of USACE Jurisdictional Verification

Potential Waters of the US (Wetland)
Potential Waters of the US (culverted)
Potential Waters of the US (non-wetland)
Potential Waters of the US (Wetlands) as identified to Caltrans by USACE during November 2008 field verification
Waters of the State

Caltrans Designs, 04-15-2008 Impacts
Main Alignment
Cut and Fill
Existing ROW
Proposed ROW
Existing Hydrology

Permanent
Temporary
Restored

Perm Effects: Existing Edge of Pavement to Cut & Fill
Temp Effects: 15' from the Cut & Fill
Restore: Existing pavement to be restored to natural conditions

0 100 Feet

IMPACTS TO POTENTIAL WATERS OF THE U.S. AND WATERS OF THE STATE MAP 10 OF 16

SR 116 "STAGE GULCH" CURVE CORRECTION AND REALIGNMENT PROJECT EA 283801
SONOMA COUNTY, CA

BAO \\ZINFANDEL\PROJ\CALTRANS\364064\GIS\STAGEGULCH\MAPFILES\STAGEGULCH_404_401IMPACTS_MAPBOOK.MXD STAGEGULCH_404_401IMPACTS_MAPBOOK.PDF 4/2/2009 14:45:32

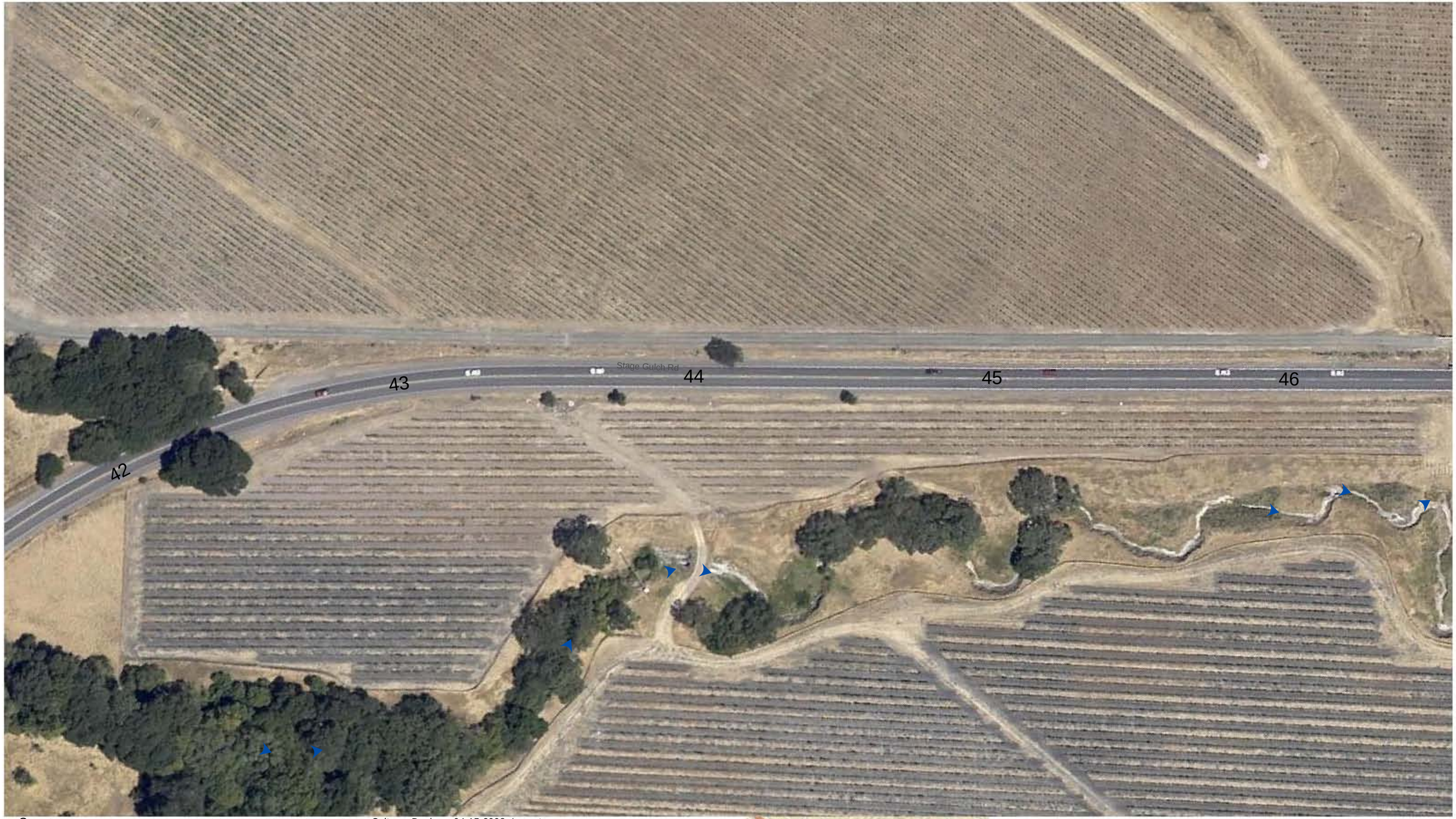

Culvert
Upland Data Point
Wetland Data Point
Flow Lines
Boundary of USACE Jurisdictional Verification

Potential Waters of the US (Wetland)
Potential Waters of the US (culverted)
Potential Waters of the US (non-wetland)
Potential Waters of the US (Wetlands) as identified to Caltrans by USACE during November 2008 field verification
Waters of the State

Caltrans Designs, 04-15-2008 Impacts
Main Alignment
Cut and Fill
Existing ROW
Proposed ROW
Existing Hydrology

Permanent
Temporary
Restored

Perm Effects: Existing Edge of Pavement to Cut & Fill
Temp Effects: 15' from the Cut & Fill
Restore: Existing pavement to be restored to natural conditions

0 100 Feet

IMPACTS TO POTENTIAL WATERS OF THE U.S. AND WATERS OF THE STATE
MAP 11 OF 16

SR 116 "STAGE GULCH" CURVE CORRECTION AND REALIGNMENT PROJECT EA 283801
SONOMA COUNTY, CA

Culvert
Upland Data Point
Wetland Data Point
Flow Lines
Boundary of USACE Jurisdictional Verification

Potential Waters of the US (Wetland)
Potential Waters of the US (culverted)
Potential Waters of the US (non-wetland)
Potential Waters of the US (Wetlands) as identified to Caltrans by USACE during November 2008 field verification
Waters of the State

Caltrans Designs, 04-15-2008 Impacts
Main Alignment
Cut and Fill
Existing ROW
Proposed ROW
Existing Hydrology

Permanent
Temporary
Restored

Perm Effects: Existing Edge of Pavement to Cut & Fill
Temp Effects: 15' from the Cut & Fill
Restore: Existing pavement to be restored to natural conditions

0 100 Feet

IMPACTS TO POTENTIAL WATERS OF THE U.S. AND WATERS OF THE STATE MAP 12 OF 16

SR 116 "STAGE GULCH" CURVE CORRECTION AND REALIGNMENT PROJECT EA 283801
SONOMA COUNTY, CA

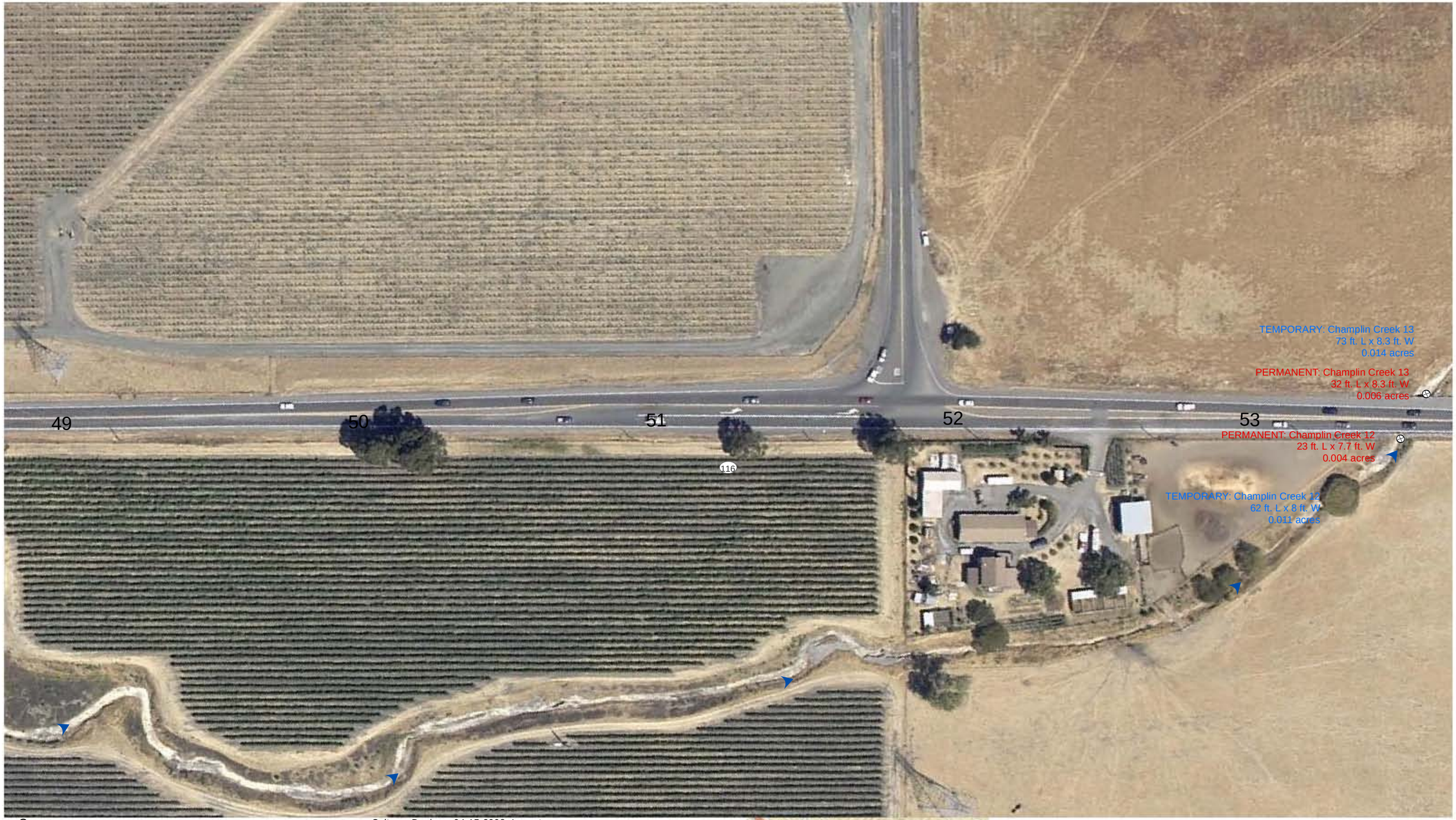

Culvert
Upland Data Point
Wetland Data Point
Flow Lines
Boundary of USACE Jurisdictional Verification

Potential Waters of the US (Wetland)
Potential Waters of the US (culverted)
Potential Waters of the US (non-wetland)
Potential Waters of the US (Wetlands) as identified to Caltrans by USACE during November 2008 field verification
Waters of the State

Caltrans Designs, 04-15-2008 Impacts
Main Alignment
Cut and Fill
Existing ROW
Proposed ROW
Existing Hydrology

Permanent
Temporary
Restored

Perm Effects: Existing Edge of Pavement to Cut & Fill
Temp Effects: 15' from the Cut & Fill
Restore: Existing pavement to be restored to natural conditions

0 100 Feet

IMPACTS TO POTENTIAL WATERS OF THE U.S. AND WATERS OF THE STATE
MAP 13 OF 16

SR 116 "STAGE GULCH" CURVE CORRECTION
AND REALIGNMENT PROJECT EA 283801
SONOMA COUNTY, CA

BAO \\ZINFANDEL\PROJ\CALTRANS\364064\GIS\STAGEGULCH\MAPFILES\STAGEGULCH_404_401IMPACTS_MAPBOOK.MXD STAGEGULCH_404_401IMPACTS_MAPBOOK.PDF 4/2/2009 14:45:32

Culvert
Upland Data Point
Wetland Data Point
Flow Lines
Boundary of USACE Jurisdictional Verification

Potential Waters of the US (Wetland)
Potential Waters of the US (culverted)
Potential Waters of the US (non-wetland)
Potential Waters of the US (Wetlands) as identified to Caltrans by USACE during November 2008 field verification
Waters of the State

Caltrans Designs, 04-15-2008
Main Alignment
Cut and Fill
Existing ROW
Proposed ROW
Existing Hydrology

Impacts
Permanent
Temporary
Restored

Perm Effects: Existing Edge of Pavement to Cut & Fill
Temp Effects: 15' from the Cut & Fill
Restore: Existing pavement to be restored to natural conditions

0 100 Feet

IMPACTS TO POTENTIAL WATERS OF THE U.S. AND WATERS OF THE STATE MAP 14 OF 16

SR 116 "STAGE GULCH" CURVE CORRECTION AND REALIGNMENT PROJECT EA 283801
SONOMA COUNTY, CA

Culvert
Upland Data Point
Wetland Data Point
Flow Lines
Boundary of USACE Jurisdictional Verification

Potential Waters of the US (Wetland)
Potential Waters of the US (culverted)
Potential Waters of the US (non-wetland)
Potential Waters of the US (Wetlands) as identified to Caltrans by USACE during November 2008 field verification
Waters of the State

Caltrans Designs, 04-15-2008
Main Alignment
Cut and Fill
Existing ROW
Proposed ROW
Existing Hydrology

Impacts
Permanent
Temporary
Restored

Perm Effects: Existing Edge of Pavement to Cut & Fill
Temp Effects: 15' from the Cut & Fill
Restore: Existing pavement to be restored to natural conditions

0 100 Feet

IMPACTS TO POTENTIAL WATERS OF THE U.S. AND WATERS OF THE STATE MAP 15 OF 16

SR 116 "STAGE GULCH" CURVE CORRECTION AND REALIGNMENT PROJECT EA 283801
SONOMA COUNTY, CA

BAO \\ZINFANDEL\PROJ\CALTRANS\364064\GIS\STAGEGULCH\MAPFILES\STAGEGULCH_404_401IMPACTS_MAPBOOK.MXD STAGEGULCH_404_401IMPACTS_MAPBOOK.PDF 4/2/2009 14:45:32

Culvert
Upland Data Point
Wetland Data Point
Flow Lines
Boundary of USACE Jurisdictional Verification

Potential Waters of the US (Wetland)
Potential Waters of the US (culverted)
Potential Waters of the US (non-wetland)
Potential Waters of the US (Wetlands) as identified to Caltrans by USACE during November 2008 field verification
Waters of the State

Caltrans Designs, 04-15-2008 Impacts
Main Alignment
Cut and Fill
Existing ROW
Proposed ROW
Existing Hydrology

Permanent
Temporary
Restored

Perm Effects: Existing Edge of Pavement to Cut & Fill
Temp Effects: 15' from the Cut & Fill
Restore: Existing pavement to be restored to natural conditions

0 100 Feet

IMPACTS TO POTENTIAL WATERS OF THE U.S. AND WATERS OF THE STATE MAP 16 OF 16

SR 116 "STAGE GULCH" CURVE CORRECTION AND REALIGNMENT PROJECT EA 283801
SONOMA COUNTY, CA

H. T. HARVEY & ASSOCIATES
ECOLOGICAL CONSULTANTS

STAGE GULCH ROAD
CURVE CORRECTION AND REALIGNMENT PROJECT
MITIGATION SITES
BASELINE VEGETATION AND CALIFORNIA RED-LEGGED FROG CHARACTERIZATION

Prepared by

H.T. HARVEY & ASSOCIATES

Dan Stephens, H. T. Harvey & Associates
Patrick Reynolds, H. T. Harvey & Associates
Catherine Little, H. T. Harvey & Associates

and

MARK JENNINGS, RANA RESOURCES

Prepared for

Jennifer Renz
CH2MHill
155 Grand Ave.
Suite 1000
Oakland, CA 94612

29 July 2009 Project No. 2855-01

711 Fourth Street • Davis, California 95616 • P 530.753.3733 • F 530.753.3736

TABLE OF CONTENTS

TABLE OF CONTENTS i
INTRODUCTION 1
METHODS 3
VEGETATION COMMUNITIES 3
REFERENCE SITE VEGETATION CHARACTERIZATION 3
CALIFORNIA RED-LEGGED FROG HABITAT ASSESSMENT 3
PHOTO-DOCUMENTATION 4
RESULTS 5
VEGETATION COMMUNITIES 5
QUANTITATIVE VEGETATION SURVEYS 12
CALIFORNIA RED-LEGGED FROG HABITAT ASSESSMENT 13
PHOTO-DOCUMENTATION 13
FINDINGS 14
LITERATURE CITED 15

FIGURES:

Figure 1. Site Map 2
Figure 2a. Vegetation Community Maps 6
Figure 2b. Vegetation Community Maps 7
Figure 2c. Vegetation Community Maps 8
Figure 2d. Vegetation Community Maps 9
Figure 2e. Vegetation Community Maps 10

TABLES:

Table 1. Percent Vegetation Cover of Woody Shrubs and Trees within Central Coast Live Oak Riparian Forest 13
Table 2. Percent Vegetation Cover of Woody Shrubs and Trees within Coast Live Oak Woodland 13

APPENDICES:

APPENDIX A. Vascular Species Observed During Vegetation Surveys A-1
APPENDIX B. California Red-Legged Frog Habitat Assessment Memo B-1
APPENDIX C. Photo-Documentation Photos C-1

INTRODUCTION

This report characterizes the baseline vegetation and California red-legged frog (CRLF) habitat present at the Stage Gulch Road Curve Correction and Realignment Project mitigation sites. This baseline vegetation community assessment and evaluation of CRLF habitat were required by the Regional Water Quality Control Board (RWQCB) and are therefore presented as a single report. The vegetation community characterization was completed to document the existing habitats present at each of the mitigation sites and to guide the selection of appropriate plant species and percent cover targets for the proposed habitat restoration. The vegetation communities within the project's 6 mitigation and 2 reference sites (Figure 1) are presented in addition to the results of the California Red-legged Frog (CRLF) habitat assessment prepared by Rana Resources. Six biotic communities were mapped within these areas including developed, non-native grassland, valley wildrye grassland, Central Coast arroyo willow riparian forest, Central Coast live oak riparian forest, and coast live oak woodland. The methods used to map and document the vegetation communities present within these areas and descriptions of each community as well as the methods and results of the habitat assessment for CRLF are presented below.

N:\Projects\2855-01\Reports\Baseline Vegetation Characterization

H. T. HARVEY & ASSOCIATES
ECOLOGICAL CONSULTANTS

Figure 1: Site Map

Stage Gulch Road Curve Correction and Realignment Project (2855-01)

July 2009

METHODS

VEGETATION COMMUNITIES

Using aerial photograph interpretation and ground-truthing, an H. T. Harvey & Associates restoration/plant ecologist mapped the vegetation communities present within each of the mitigation sites and 2 reference sites on 18 June 2009 and 24 June 2009. Distinct habitat types were mapped using the most applicable vegetation communities classified by Holland (1986). The intent of the vegetation community mapping was to describe general vegetation communities, not detailed micro-habitats that may be present on site. As a result, many of the sites had only one or two communities mapped. Vegetation community polygons were delineated on large-scale maps of the aerial photographs and transferred into a GIS database. Reference sites were established within Central Coast live oak riparian forest and coast live oak woodland communities within the project area. A list of vascular species encountered within each vegetation community was compiled during the surveys and will subsequently be included in the mitigation and monitoring plan's description of baseline environmental conditions.

REFERENCE SITE VEGETATION CHARACTERIZATION

Site Selection

A Caltrans biologist and H. T. Harvey & Associates restoration/plant ecologist selected two reference sites within the existing Caltrans project right-of-way. Sites were chosen to best represent the plant communities that are proposed to be created on the mitigation sites. Requiring the reference locations to be chosen within the right-of-way resulted in a fairly limited area of selection. However, within these constraints, areas with the most intact and largest contiguous forest community type were selected.

Quantitative Vegetation Surveys

Vegetative cover surveys were conducted on 18 June 2009. Species composition and percent cover were determined at the two reference sites using the line intercept method (Bonham 1989). Permanent 100-foot long transects were established at the Central Coast live oak riparian forest and the coast live oak woodland reference sites (Figure 2a and 2b). Percent cover data by species was collected for shrub and tree species along these transects. GPS coordinates for each permanent transect will be provided to Caltrans.

CALIFORNIA RED-LEGGED FROG HABITAT ASSESSMENT

Mark Jennings of Rana Resources conducted a habitat assessment for CRLF habitat on 13 May 2009. All mitigation sites within the project area were evaluated for potential CRLF habitat.

PHOTO-DOCUMENTATION

Permanent photo-documentation points were established at each of the mitigation sites and the two reference sites; and are shown on Figures 2a-2e. Photos were taken at these fixed locations during baseline vegetation surveys and can be repeated in the future as necessary.

RESULTS

VEGETATION COMMUNITIES

Vegetation communities found within the project vicinity are typical of those found within riparian and upland habitats along the edge of California's central coast range. Six vegetation communities were identified on site including developed, non-native grassland, valley wildrye grassland, Central Coast arroyo willow riparian forest, Central Coast live oak riparian forest, and coast live oak woodland. Non-native grassland habitat was identified primarily along roadsides and on upland hillsides adjacent to oak woodland. Native-dominated wildrye grassland occurs at mitigation site 5 (Figure 2d). Central Coast live oak riparian forest was the primary vegetation community found associated with Champlin creek and its associated tributaries, with small pockets of Central Coast arroyo willow riparian and coast live oak woodland. The following describes the vegetation communities found at each of the mitigation and reference sites. Appendix A provides a list of vascular plant species observed within each of the vegetation communities.

Mitigation and Reference Sites

Site 1A

Mitigation site 1A supports non-native grassland habitat (Holland code #42200). The grasslands present are dominated by non-native annual grass species including slender oat (*Avena barbata*), soft chess (*Bromus hordeaceus*), Italian ryegrass (*Lolium multiflorum*), bristly dogs tail grass (*Cynosurus echinatus*) and Medusa-head (*Taeniatherum caput-medusae*), interspersed with forbs including yellow star thistle (*Centaurea solstitialis*), field bindweed (*Convolvulus arvensis*), California poppy (*Eschscholzia californica*), Italian plumeless thistle (*Carduus pycnocephalus*), and hayfield tarweed (*Hemizonia congesta* ssp. *congesta*). Closer to the unnamed drainage on site, similar habitat was present, but a few additional species were identified such as annual beard grass (*Polypogon monspeliensis*), burclover (*Medicago polymorpha*), Douglas' mugwort (*Artemisia douglasiana*), and Harding grass (*Phalaris aquatica*).

Site 1B

Central Coast live oak riparian forest (Holland code #61220) habitat occurs at mitigation site 1B. The riparian habitat found at this site is comprised of a native multi-layered riparian community associated with Champlin Creek. This vegetation community consists of a native overstory dominated by California bay laurel (*Umbellularia californica*), California buckeye (*Aesculus californica*), and coast live oak (*Quercus agrifolia*). The understory is dominated by white snowberry (*Symphoricarpos albus* var. *laevigatus*) and poison oak (*Toxicodendron diversilobum*), interspersed with California wildrose (*Rosa californica*), soaproot (*Chlorogalum pomeridianum*), and California brome (*Bromus carinatus*). This location was sampled for the baseline Central Coast live oak riparian forest reference site.

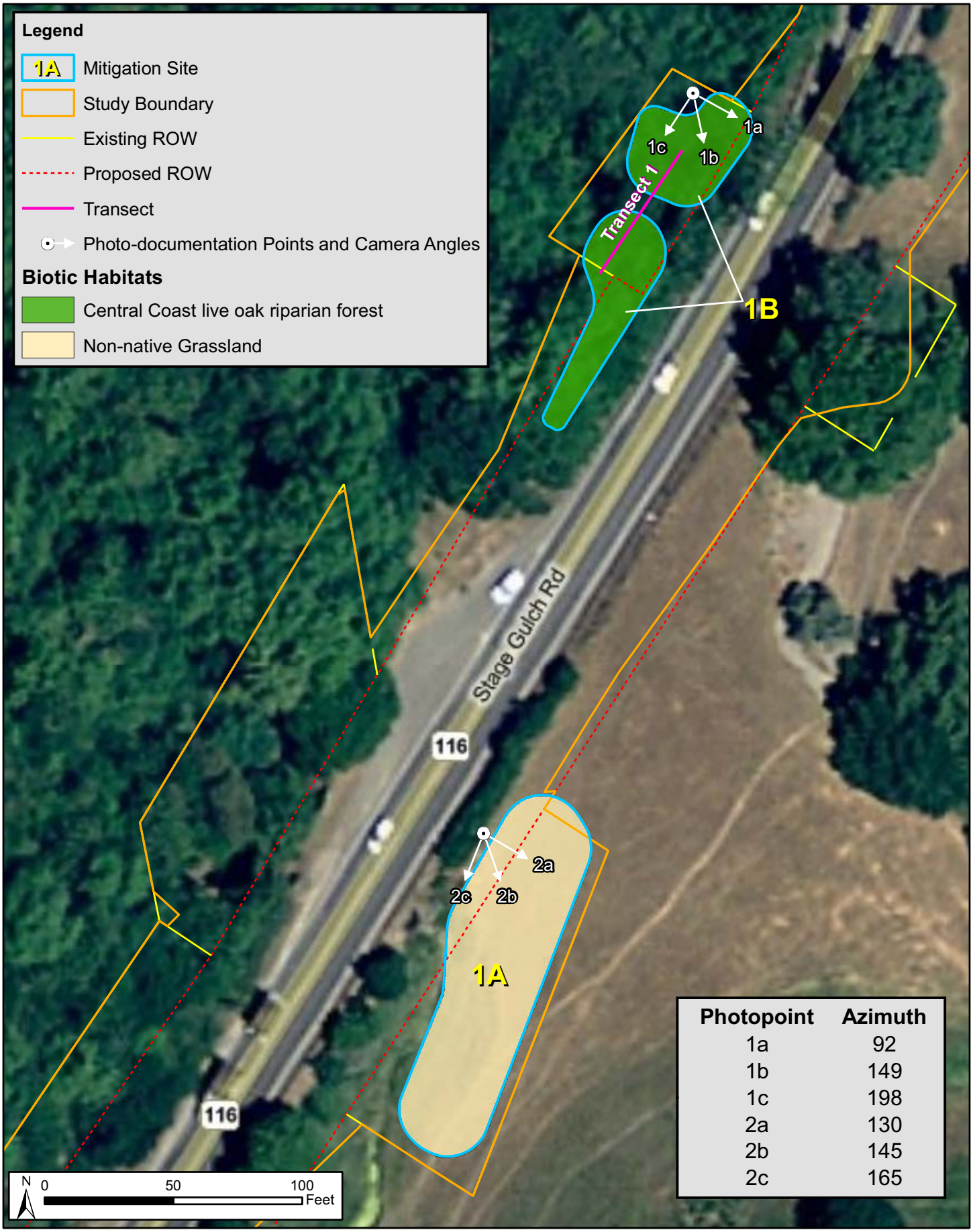

Photopoint	Azimuth
1a	92
1b	149
1c	198
2a	130
2b	145
2c	165

N:\Projects\2855-01\Reports\Baseline Vegetation Characterization

H. T. HARVEY & ASSOCIATES
ECOLOGICAL CONSULTANTS

Figure 2a: Mitigation Site

Stage Gulch Road Curve Correction and Realignment Project (2855-01)

July 2009

Photopoint	Azimuth
3a	355
3b	40
3c	108
3d	150
3e	222
3f	305
6a	295
6b	340
6c	30
6d	78
7a	6
7b	298
7c	245
7d	170
7e	120
9a	120
9b	100
9c	12
9d	315
9e	274
9f	230

N:\Projects\2855-01\Reports\Baseline Vegetation Characterization

H. T. HARVEY & ASSOCIATES
ECOLOGICAL CONSULTANTS

Figure 2b: Mitigation Site

Stage Gulch Road Curve Correction and Realignment Project (2855-01)

July 2009

Photopoint	Azimuth
8a	50
8b	122
8c	182
8d	218

N:\Projects\2855-01\Reports\Baseline Vegetation Characterization

H. T. HARVEY & ASSOCIATES
ECOLOGICAL CONSULTANTS

Figure 2c: Mitigation Site

Stage Gulch Road Curve Correction and Realignment Project (2855-01)

July 2009

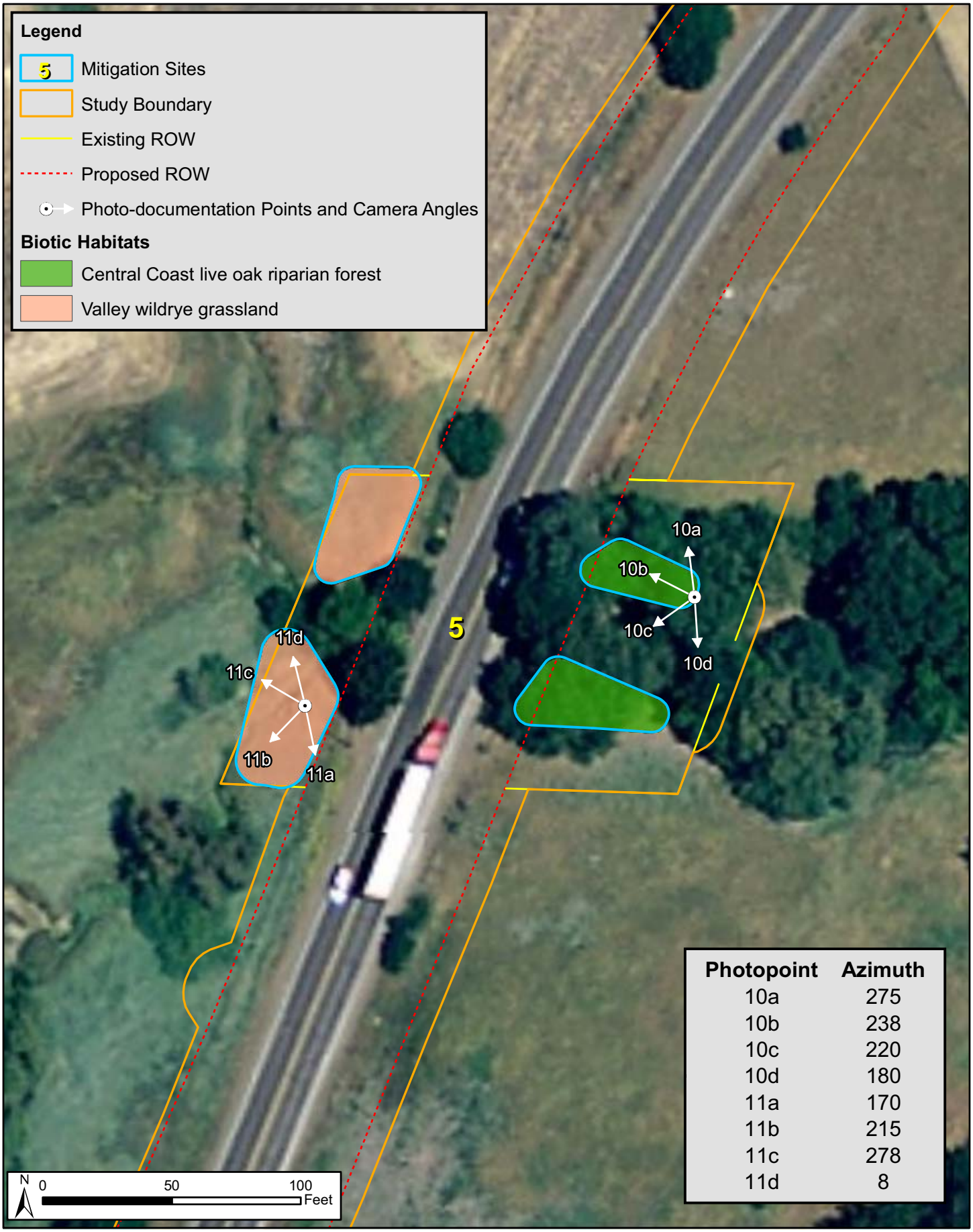

Photopoint	Azimuth
10a	275
10b	238
10c	220
10d	180
11a	170
11b	215
11c	278
11d	8

N:\Projects\2855-01\Reports\Baseline Vegetation Characterization

H. T. HARVEY & ASSOCIATES
ECOLOGICAL CONSULTANTS

Figure 2d: Mitigation Site

Stage Gulch Road Curve Correction and Realignment Project (2855-01)

July 2009

Photopoint	Azimuth
4a	154
4b	195
4c	255
4d	300
5a	258
5b	298
5c	346
5d	10

N:\Projects\2855-01\Reports\Baseline Vegetation Characterization

H. T. HARVEY & ASSOCIATES
ECOLOGICAL CONSULTANTS

Figure 2e: Mitigation Site

Stage Gulch Road Curve Correction and Realignment Project (2855-01)

July 2009

Site 2

There were 4 biotic habitats found at mitigation site 2 including non-native grassland, Central Coast live oak riparian forest, coast live oak woodland, and developed.

Non-native grassland habitat (Holland code #42200) at site 2 is dominated by non-native annual grasses including slender oat, soft chess, Medusa-head, and Italian ryegrass, interspersed with forbs including yellow star thistle, black mustard (*Brassica nigra*), Italian plumeless thistle, hayfield tarweed, and coast tarweed (*Madia sativa*).

Central Coast live oak riparian forest (Holland code #61220) at site 2 consists of a closed canopy native overstory dominated by California bay laurel, California buckeye, and coast live oak, interspersed with valley oak (*Quercus lobata*). The understory is fairly sparse consisting of species such as poison oak, white snowberry, toyon (*Heteromeles arbutifolia*), pink honeysuckle (*Lonicera hispidula* var. *vacillans*), Himalayan blackberry (*Rubus discolor*), tall flatsedge (*Cyperus eragrostis*), and blue wildrye (*Elymus glaucus*).

Coast live oak woodland (Holland code#71160) at site 2 is located on upper terraces of Champlin Creek and in patches along the road. This community type is composed of a dense native overstory dominated by coast live oak, valley oak, California bay laurel, and California buckeye. The understory is composed of patches of shrubs and a fairly sparse herbaceous component including poison oak, coyote brush (*Baccharis pilularis*), bristly dogs tail grass, ripgut brome (*Bromus diandrus*), spreading hedgeparsley (*Torilis arvensis*), and Italian plumeless thistle. This community was sampled for the baseline coast live oak woodland reference site.

The existing road that bisects the mitigation site was delineated as developed. This area does not support vegetation.

Site 3

Two vegetation communities were found at mitigation site 3 including non-native grassland and Central Coast arroyo willow riparian forest. The non-native grassland (Holland code #42200) habitat at site 3 is composed of non-native annual grasses interspersed with forb species. This community is dominated by slender oat, ripgut brome, soft chess, Italian ryegrass, Harding grass, wild lettuce (*Lactuca serriola*), hayfield tarweed, and a larger component of invasive species including fennel (*Foeniculum vulgare*), Italian plumeless thistle, black mustard, poison hemlock (*Conium maculatum*), Fuller's teasel (*Dipsacus fullonum*), and bristly ox-tongue (*Picris echioides*).

The Central Coast arroyo willow riparian forest (Holland code #61230) habitat found at mitigation site 3 occurs in small pockets within the banks of Champlin Creek. This community consists of dense, tall shrubs almost completely composed of arroyo willow (*Salix lasiolepis*). The understory is sparse due to the dense willow canopy, but species were identified including

California blackberry (*Rubus ursinus*), pennyroyal (*Mentha pulegium*), annual beard grass, Harding grass, and Santa Barbara sedge (*Carex barbarae*).

Site 4

Central Coast live oak riparian forest (Holland code #61220) habitat occurs at mitigation site 4. The riparian habitat found at this site consists of a dense native overstory dominated by California bay laurel, California buckeye, and coast live oak. The understory is dominated by white snowberry and poison oak, interspersed with Himalayan blackberry, coyote brush, California grape (*Vitis californica*), California blackberry, Italian ryegrass, and California brome.

Site 5

Central Coast live oak riparian forest (Holland code #61220) and wildrye grassland habitat occupy mitigation site 5. The Central Coast live oak riparian forest riparian habitat found at this site consists of a dense native overstory dominated by California bay laurel, California buckeye, and coast live oak. The understory is dominated by white snowberry and poison oak, interspersed with Himalayan blackberry, coyote brush, California grape, California blackberry, Italian ryegrass, and California brome.

The valley wildrye grassland (Holland code #42140) habitat found at Site 5 is dominated by a native grass species, creeping wildrye (*Leymus triticoides*) that is interspersed with small patches of slender oat, ripgut brome, field bindweed, black mustard, Fuller's teasel, Italian plumeless thistle, and wild lettuce. Similar species occur closer to the channel but also include plants such as Harding grass, Himalayan blackberry, fiddle dock (*Rumex pulcher*), pennyroyal, and Mexican whorled milkweed (*Asclepias fascicularis*).

Site 6

Non-native grassland habitat (Holland code #42200) occupies mitigation site 6. The grassland habitat present at this site is located on the banks above Champlin Creek and is dominated by non-native annual grasses and forbs with a larger component of invasive species. Some of the species present at this site include slender oat, Italian ryegrass, wild lettuce, Italian plumeless thistle, creeping wildrye, milk thistle (*Silybum marianum*), bristly ox-tongue, and black mustard. Closer to the channel there are additional species including curly dock (*Rumex crispus*), penny royal, Harding grass, and sourclover (*Melilotus indica*).

QUANTITATIVE VEGETATION SURVEYS

The 2009 baseline vegetation sampling results within the reference sites are provided in Tables 1 and 2. The percent cover of native woody species within the Central Coast live oak riparian forest and coast live oak woodland was 100%. Within the Central Coast live oak riparian forest reference site, individual woody tree and shrub species cover ranged from 0.5% (California blackberry) to 64.9% (California buckeye) (Table 1). Within the coast live oak woodland reference site individual woody tree and shrub species cover ranged from 11.6% (poison oak) to 75.3% (coast live oak) (Table 2). The percent cover reported by species in the tables below

includes areas of overlapping canopy. Thus, individual species total percent cover when added together exceeds the total woody species cover present and recorded in this report.

Table 1. Percent Vegetation Cover of Woody Shrubs and Trees within Central Coast Live Oak Riparian Forest

COMMON NAME	SCIENTIFIC NAME	PERCENT VEGETATION COVER*
California buckeye	*Aesculus californica*	64.9
coast live oak	*Quercus agrifolia*	28.6
California blackberry	*Rubus ursinus*	0.5
common snowberry	*Symphoricarpos albus*	45.7
poison oak	*Toxicodendron diversilobum*	28.1
California bay laurel	*Umbellularia californica*	48.0

*Cover values include overlapping canopies

Table 2. Percent Vegetation Cover of Woody Shrubs and Trees within Coast Live Oak Woodland

COMMON NAME	SCIENTIFIC NAME	PERCENT VEGETATION COVER*
California buckeye	*Aesculus californica*	22.7
coast live oak	*Quercus agrifolia*	75.3
valley oak	*Quercus lobata*	28.5
poison oak	*Toxicodendron diversilobum*	11.6
California laurel	*Umbellularia californica*	27.8

*Cover values include overlapping canopies

CALIFORNIA RED-LEGGED FROG HABITAT ASSESSMENT

The habitat at the proposed stilling basin at the Sonoma County Transfer Station Road and other mitigation sites within the project area was examined for potential CRLF habitat. The proposed stilling basin is considered "occupied habitat" due to a known location upstream of the site. This location provides dense willow riparian cover. All the other mitigation sites within the project area provide marginal CRLF habitat due to the shallow pools within the stream, the lack of dense riparian vegetation, and the presence of erosion along the channel. Please refer to Appendix B for more detailed results of the CRLF habitat assessment.

PHOTO-DOCUMENTATION

Representative photographs taken from the permanent photo-documentation locations are shown in Appendix C. GPS coordinates and photographs for each photo-documentation point will be provided to Caltrans under separate cover.

FINDINGS

Six biotic communities were mapped at the mitigation and reference sites including developed, non-native grassland, valley wildrye grassland, Central Coast arroyo willow riparian forest, Central Coast live oak riparian forest, and coast live oak woodland. These plant communities found at the mitigation and reference sites are largely consistent with those that were described in the 14 April 2009 Stage Gulch mitigation and monitoring plan (Caltrans 2009). The current effort successfully developed information on baseline conditions at the mitigation sites, and on species composition and percent cover for the target vegetation communities to be restored on the mitigation sites. This information was utilized to finalize designs and planting plans for each of the mitigation sites.

LITERATURE CITED

Bonham, C. D. 1989. Measurements for Terrestrial Vegetation. John Wiley & Sons, New York, 338 pp.

Caltrans. 2009. Conceptual mitigation and monitoring plan for onsite restoration activities, Stage Gulch road curve correction and realignment project. April 2009.

APPENDIX A.
Vascular Species Observed During Vegetation Surveys

Appendix A. Vascular Species Observed During Vegetation Surveys

NON-NATIVE GRASSLAND	
COMMON NAME	**SCIENTIFIC NAME**
Douglas' mugwort	*Artemisia douglasiana*
slender oat	*Avena barbata*
Mediterranean lineseed	*Bellardia trixago*
black mustard	*Brassica nigra*
ripgut brome	*Bromus diandrus*
soft chess	*Bromus hordeaceus*
Italian plumeless thistle	*Carduus pycnocephalus*
yellow star thistle	*Centaurea solstitialis*
dusky dogfennel	*Chamaemelum fuscatum*
poison hemlock	*Conium maculatum*
field bindweed	*Convolvulus arvensis*
bristly dogs tail grass	*Cynosurus echinatus*
tall flatsedge	*Cyperus eragrostis*
Fuller's teasel	*Dipsacus fullonum*
common spikerush	*Eleocharis macrostachya*
redstem stork's bill	*Erodium cicutarium*
California poppy	*Eschscholzia californica*
fennel	*Foeniculum vulgare*
hayfield tarweed	*Hemizonia congesta* ssp. *congesta*
smooth cat's ear	*Hypochaeris glabra*
iris	*Iris* sp.
brownhead rush	*Juncus phaeocephalus*
wild lettuce	*Lactuca serriola*
creeping wildrye	*Leymus triticoides*
Italian ryegrass	*Lolium multiflorum*
lupine	*Lupinus* sp.
coast tarweed	*Madia sativa*
burclover	*Medicago polymorpha*
pennyroyal	*Mentha pulegium*
Harding grass	*Phalaris aquatica*
bristly ox-tongue	*Picris echioides*
annual beard grass	*Polypogon monspeliensis*
California wildrose	*Rosa californica*
curly dock	*Rumex crispus*
fiddle dock	*Rumex pulcher*
red willow	*Salix laevigata*
milk thistle	*Silybum marianum*
prickly sowthistle	*Sonchus asper* ssp. *asper*
Medusa-head	*Taeniatherum caput-medusae*
spreading hedgeparsley	*Torilis arvensis*
salsify	*Tragopogon dubius*
Ithuriel's spear	*Triteleia laxa*
VALLEY WILDRYE GRASSLAND	
COMMON NAME	**SCIENTIFIC NAME**
Mexican whorled milkweed	*Asclepias fascicularis*

VALLEY WILDRYE GRASSLAND (CONT.)	
COMMON NAME	**SCIENTIFIC NAME**
slender oat	*Avena barbata*
black mustard	*Brassica nigra*
ripgut brome	*Bromus diandrus*
Italian plumeless thistle	*Carduus pycnocephalus*
field bindweed	*Convolvulus arvensis*
Fuller's teasel	*Dipsacus fullonum*
fennel	*Foeniculum vulgare*
common velvetgrass	*Holcus lanatus*
common rush	*Juncus patens*
wild lettuce	*Lactuca serriola*
creeping wildrye	*Leymus triticoides*
sourclover	*Melilotus indica*
pennyroyal	*Mentha pulegium*
Harding grass	*Phalaris aquatica*
bristly ox-tongue	*Picris echioides*
Canada bluegrass	*Poa compressa*
California wildrose	*Rosa californica*
Himalayan blackberry	*Rubus discolor*
fiddle dock	*Rumex pulcher*
milk thistle	*Silybum marianum*
spreading hedgeparsley	*Torilis arvensis*
hairy vetch	*Vicia villosa*
CENTRAL COAST ARROYO WILLOW RIPARIAN FOREST	
COMMON NAME	**SCIENTIFIC NAME**
slender oat	*Avena barbata*
Italian plumeless thistle	*Carduus pycnocephalus*
Santa Barbara sedge	*Carex barbarae*
Fuller's teasel	*Dipsacus fullonum*
pennyroyal	*Mentha pulegium*
Harding grass	*Phalaris aquatica*
annual beard grass	*Polypogon monspeliensis*
California blackberry	*Rubus ursinus*
arroyo willow	*Salix lasiolepis*
CENTRAL COAST LIVE OAK RIPARIAN FOREST	
COMMON NAME	**SCIENTIFIC NAME**
California buckeye	*Aesculus californica*
Douglas' mugwort	*Artemisia douglasiana*
Mexican whorled milkweed	*Asclepias fascicularis*
slender oat	*Avena barbata*
coyote brush	*Baccharis pilularis*
black mustard	*Brassica nigra*
California brome	*Bromus carinatus*
ripgut brome	*Bromus diandrus*
soft chess	*Bromus hordeaceus*
Italian plumeless thistle	*Carduus pycnocephalus*

CENTRAL COAST LIVE OAK RIPARIAN FOREST (CONT.)	
COMMON NAME	**SCIENTIFIC NAME**
soaproot	*Chlorogalum pomeridianum*
bristly dogs tail grass	*Cynosurus echinatus*
tall flatsedge	*Cyperus eragrostis*
blue wildrye	*Elymus glaucus*
field horsetail	*Equisetum arvense*
longbeak stork's bill	*Erodium botrys*
fennel	*Foeniculum vulgare*
common bedstraw	*Galium aparine*
waxy mannagrass	*Glyceria declinata*
toyon	*Heteromeles arbutifolia*
foxtail barley	*Hordeum murinum* ssp. *leporinum*
Northern California black walnut	*Juglans californica* var. *hindsii*
common rush	*Juncus patens*
perennial sweet pea	*Lathyrus latifolius*
Italian ryegrass	*Lolium multiflorum*
pink honeysuckle	*Lonicera hispidula* var. *vacillans*
pennyroyal	*Mentha pulegium*
orange bush monkeyflower	*Mimulus aurantiacus*
coast live oak	*Quercus agrifolia*
California black oak	*Quercus kelloggii*
valley oak	*Quercus lobata*
California wildrose	*Rosa californica*
Himalayan blackberry	*Rubus discolor*
red willow	*Salix laevigata*
California figwort	*Scrophularia californica*
California blackberry	*Rubus ursinus*
curly dock	*Rumex crispus*
common chickweed	*Stellaria media*
white snowberry	*Symphoricarpos albus* var. *laevigatus*
spreading hedgeparsley	*Torilis arvensis*
poison oak	*Toxicodendron diversilobum*
California bay laurel	*Umbellularia californica*
stinging nettle	*Urtica dioica*
California grape	*Vitis californica*
COAST LIVE OAK WOODLAND	
COMMON NAME	**SCIENTIFIC NAME**
California buckeye	*Aesculus californica*
coyote brush	*Baccharis pilularis*
California brome	*Bromus carinatus*
ripgut brome	*Bromus diandrus*
Italian plumeless thistle	*Carduus pycnocephalus*
bristly dogs tail grass	*Cynosurus echinatus*
fennel	*Foeniculum vulgare*
Italian ryegrass	*Lolium multiflorum*
coast live oak	*Quercus agrifolia*
valley oak	*Quercus lobata*

COAST LIVE OAK WOODLAND (CONT.)	
COMMON NAME	**SCIENTIFIC NAME**
California blackberry	*Rubus ursinus*
curly dock	*Rumex crispus*
spreading hedgeparsley	*Torilis arvensis*
poison oak	*Toxicodendron diversilobum*
California bay laurel	*Umbellularia californica*
hairy vetch	*Vicia villosa*

APPENDIX B.
California Red-Legged Frog Habitat Assessment Memo

MEMORANDUM

#14,218b
July 21, 2009

To: Jennifer Renz, Craig Lawrence, and Dave Lundgren, CH2M Hill.
From: Mark R. Jennings, Rana Resources.
Subject: Stage Gulch CRLF Habitat Assessment.

Dear Jennifer, Craig, and Dave:

On 13 May 2009, I examined the State Route 116 Stage Gulch Road Curve Correction and Realignment project's proposed location for a stilling basin at the Sonoma County Transfer Station Road in addition to other locations through the project area. My comments are with regards to California red-legged frog (*Rana draytonii*; CRLF) habitat at that location, as well as the other sites we examined that day.

1). The CRLF habitat at the proposed stilling basin (at the Sonoma County Transfer Station Road) will be considered "occupied habitat" by the U.S. Fish and Wildlife Service and the California Department of Fish and Game because a CRLF was previously spotted there within the past several years and reported to the California Natural Diversity Data Base. Although the location is fairly high up in the drainage and thus does not contain surface water year around, it nonetheless has enough subsurface flow to sustain a dense riparian cover of willow (*Salix* sp.) trees. The agencies will require that mitigation for the loss of this occupied habitat be "in kind." I realize that it is hydrologically impossible to create another willow tree riparian zone based on the current rechannelization project. In my opinion, what Caltrans is proposing will create a hydrologic habitat that will provide equitable cover (=upland vegetation) and aquatic habitat for CRLF and will be "better" than the current habitat due to the pools being larger in area, deeper, and which will last longer than the current situation. Additionally, the upland habitat plantings proposed (such as blackberry (*Rubus* spp.) vines) will be suitable for CRLF use and cover. After discussing the proposed design with Caltrans engineers, it is clear that Caltrans cannot physically replace the willow cover, so Caltrans will compensate by making the upland habitat suitable by way of physical vegetation structure (via shading and density of cover) and the aquatic habitat more suitable and larger than it currently is. Additionally, the area will be protected as a mitigation area. Currently, the site is used by various activities including livestock grazing.

2). As for the other sites we examined all are marginal with regards to CRLF habitat due to the shallow nature of the stream ponds, the lack of dense streamside vegetation, and the presence of erosion along the stream channel (especially near road culverts). Hence, anything we can do to create plunge pools greater than 3-feet deep on the main stream and any off stream ponded habitats which last for several months during the year will be considered a positive attribute for CRLF habitat. In the field, I suggested that the use of rock crevices could be incorporated within plunge pool designs at the edges of concrete

sills or culverts under the redesigned road bridges. I also believe that with the off stream pond habitats proposed, this would provide aquatic habitats for CRLF that are not currently present and their intermittent nature will prevent introduced aquatic predators such as bullfrogs (*Lithobates* (*Rana*) *catesbeianus*) from colonizing and establishing themselves in the drainage.

3). The proposed mitigation for CRLF habitat on the Stage Gulch project will also have a positive effect on other species of special concern that inhabit the area, including the western pond turtle (*Actinemys marmorata*).

Thanks again for allowing me to be involved with this project. Please feel free to contact me if you have any questions on the above.

Sincerely,

Mark R. Jennings

APPENDIX C.
Photo-Documentation Photos

Mitigation site 1A, photo-documentation point 2C. Grassland vegetation community.

Mitigation site 1B, photo-documentation point 1C. Central Coast live oak riparian forest vegetation community. Note the fairly dense native understory. This location was sampled for the baseline oak-bay riparian woodland reference site.

Mitigation site 2, photo-documentation point 3F. Coast live oak woodland vegetation community. This location was sampled for the baseline oak-bay woodland reference site.

Mitigation site 3, photo-documentation point 6B. Grassland vegetation in the foreground and arroyo willow riparian in the background.

Mitigation site 4, photo-documentation point 8D. Central Coast live oak riparian forest vegetation community.

Mitigation site 5, photo-documentation point 10B. Central Coast live oak riparian forest vegetation community.

Mitigation site 5, photo-documentation point 11B. Grassland vegetation community.

Mitigation site 6, photo-documentation point 4C. Grassland vegetation community.

H. T. HARVEY & ASSOCIATES
ECOLOGICAL CONSULTANTS

STAGE GULCH ROAD CURVE CORRECTION AND REALIGNMENT PROJECT

MITIGATION AND REFERENCE SITES SOILS INVESTIGATION

Prepared by:

Dan Stephens, B.S., Principal
Patrick Reynolds, M.S., Senior Restoration Ecologist
Matt Quinn, M.S., Soil Ecologist

Prepared For:

CH2MHILL
c/o Jennifer Renz
155 Grand Avenue, Suite 1000
Oakland, CA 94612

29 July 2009 Project No. 2855-01

983 University Avenue, Building D • Los Gatos, CA 95032 • Ph: 408.458.3200 • F: 408.458.3210

TABLE OF CONTENTS

TABLE OF CONTENTS i
INTRODUCTION 1
METHODS 2
RESULTS 4
SOIL PIT PROFILE DESCRIPTIONS 6
SUMMARY AND RECOMMENDATIONS 10
REFERENCES 15

FIGURE:

Figure 1. Soil Map Units and Pit Locations 3

TABLE:

Table 1. Summary of Recommendations 14

APPENDICES:

APPENDIX A. SOIL SERIES DESCRIPTIONS A-1
APPENDIX B. SOIL LABORATORY RESULTS B-1

INTRODUCTION

This technical memo was produced following a preliminary investigation of soil conditions along the alignment of State Highway 116 for the Stage Gulch Curve Correction and Realignment project. Soils were sampled from and described for six proposed mitigation planting areas and two reference areas that support the target vegetation to be restored. The purpose of the investigation was to evaluate the soils for their suitability for the proposed habitat restoration by documenting existing soil conditions through field sampling and comparing these findings to the descriptions in the Sonoma County Soil Survey (SCS 1972) and to reference site soils. These results were then used to identify constraints to vegetation establishment given the anticipated post-construction soil conditions and to provide preliminary soil amendment/augmentation recommendations to improve soil conditions for the target habitats to be established.

According to the Sonoma County Soil Survey, the soils in the vicinity of the proposed project are dominated by Diablo clay, with some areas of Clear Lake clay, Laniger loam, and Goulding cobbly clay loam. The Diablo clays are located along much of the Champlin Creek corridor through the project reach, with a portion of the downstream end of the reach mapped as Clear Lake clay. There is a small area at the upstream extent of the project reach that is mapped as Laniger loam and the uplands to the east are mapped as Goulding cobbly clay loam (Figure 1). Soil series descriptions from the Sonoma County Soil Survey are provided for reference in Appendix A. For specific soil unit descriptions please refer to the Sonoma County Soil Survey (SCS 1972).

METHODS

A total of 11 pits were excavated to a maximum depth of 36 inches to visually assess soil conditions at the proposed mitigation sites and reference areas and to compare them to the map units and unit descriptions in the Sonoma County Soil survey (Figure 1). The proposed mitigation planting areas are spread out across a large area and this reconnaissance level of effort does not represent a comprehensive assessment of all the soil conditions that may be encountered. In addition, there are proposed plantings in areas which are currently under the existing roadway. In order to provide a more comprehensive and detailed assessment of soil conditions at each of the proposed planting areas, including areas under the existing roadway, it would be necessary to review final grading plans and excavate a number of backhoe pits to observe soil conditions at the design grade.

Soil pits were excavated until refusal, which consisted of large cobbles and gravels, or 36 inches, whichever was encountered first. To the extent feasible the pits were excavated with a "sharp-shooter" shovel to provide a good view of the soil profile in the pit face. However, in certain circumstances it was more feasible to use a hand auger to excavate to greater depths. This method required describing soil conditions from the auger tailings. In addition, composite topsoil samples (0-12 inches) were collected at each of the sites (with the exception of Site #4 which already supports the target vegetation) and submitted to a laboratory for analyses to determine if there are any chemical or nutrient availability constraints to establishing the target vegetation. Composite samples included 5 subsamples from the immediate vicinity of each pit used to describe the local soil conditions.

H. T. HARVEY & ASSOCIATES
ECOLOGICAL CONSULTANTS

Figure 1: Map Units and Soil Pit Locations

Stage Gulch Road Curve Correction and Realignment Project (2855-01)
July 2009

RESULTS

The soils in the project area generally correspond with the soil mapping units depicted in the Sonoma County Soil Survey. However, the soils immediately adjacent to the creek channel were characterized in the field as gravelly clay loams, which the soil survey has mapped as mostly Diablo clay and Clear Lake clay. This discrepancy is most likely due to the scale of mapping done in the late 1950's/early 1960's that was not detailed enough to pick up inclusions such as narrow bands of riparian soils along intermittent drainages. The transitional zones from the edge of the existing riparian corridor to the adjacent uplands were characterized as mostly clay and gravelly clay, which matches the soil survey descriptions. The soils in the uplands (east of proposed mitigation site #2, where the road will be moved) were confirmed in the field to be very similar to the description in the soil survey of a cobbly clay loam. One substantial difference with the soil survey, found during the field investigation, was at proposed mitigation site #6. The soil survey has this area mapped as Clear Lake clay, while the field investigation found a 30 inch gravelly sandy clay loam overlying an indurated cobbly clay hardpan. The soil survey does show one soil unit (Tuscan cobbly clay loam) in the general project vicinity (northeast of proposed mitigation site #5), which is approximately 0.5 mile upstream of site #6 that has an underlying cobbly hardpan. The soil survey description of soil characteristics for Tuscan cobbly clay loam closely matches the observations made in the field with the exception of depth to the hardpan. It is possible that again the scale of mapping during the soil survey was not sufficient to pick up this inclusion of the Tuscan map unit and the depth to the hardpan is likely very variable throughout the unit.

Field observations of soil conditions in the reference sites (Pit #1B Reference, Pit #2 Reference, and Pit #3 Willow Reference) show that the soils that currently support target vegetation are generally gravelly clay loams while the soils within most of the proposed mitigation planting areas are dominated by heavier clay loams and clays overlying very cobbly material and/or potentially shallow bedrock. As previously noted, the Sonoma County Soil Survey shows the project area to be dominated by Diablo clay, Clear Lake clay, Laniger loam, and Goulding cobbly clay loam. The soil series descriptions for Diablo and Clear Lake clays include vegetation cover of annual grasses and forbs, although some areas within the project site, located immediately adjacent to the creek channel are mapped as Diablo clay and support riparian habitat. Laniger loam is described as supporting oaks, manzanita, ceanothus, poison oak, brush and grasses and Goulding cobbly clay loam supports scattered oaks, grey pine, brush, grasses and forbs. Tuscan cobbly clay loam, although not mapped as part of the mitigation areas, is likely present at site #6 and is described as supporting grasses and forbs. Mitigation planting areas that include Diablo or Clear Lake clays will likely be more suited for a herbaceous dominated plant palette, although investigating actual finish grade soil conditions, through

backhoe excavation or following grading, will provide a better opportunity to determine if subsoil conditions would to be suitable for the target vegetation (note: subsoil could potentially be determined as suitable with some amendments). Although generally not considered ideal for the establishment of woody vegetation, it is reasonable to conclude that the addition of soil amendments, including organic matter and gypsum, will increase infiltration rates and the ability of the planted trees and shrubs to root deeper and access late season soil moisture. Thus, although survival and growth are likely to be reduced, these soils, if amended should be able to support a somewhat inhibited riparian habitat in most locations. Mitigation areas that include Laniger or Goulding soils will more likely be suitable for the target vegetation, though may benefit from some level of amendment(s), depending on the extent of grading that occurs. Areas with soil conditions typical of the Tuscan soil series are more suited for herbaceous vegetation with the potential for some small stature, drought tolerant trees and shrubs. Therefore, it should be assumed that some soil amendments and/or augmentation may be required throughout the mitigation sites to provide for successful vegetation establishment. Details regarding potential amendments/augmentation are included in the Summary and Recommendations section.

Soil laboratory results are included in Appendix B. The particle size distributions provided by the laboratory matched very closely with field descriptions. The laboratory results show that there are no major soil chemistry concerns or nutrient deficiencies in the existing topsoil. However, it should be noted that these samples are from existing topsoil and are not necessarily representative of subsoil conditions that may be exposed during construction.

SOIL PIT PROFILE DESCRIPTIONS

Soil pit descriptions corresponding with the locations on Figure 1 are provided below.

Pit 1A Lower Terrace Planting Area

Depth	**Description**
0-12 inches	clay, dark brown/black, prismatic structure, many fine to medium roots, dry
12-30 inches	clay, black, increase in sand content, some fine roots, slightly moist
30+ inches	sand and small gravels, substantial moisture increase
Comments	Area is located on a small inset floodplain terrace along Champlin Creek approximately 50 feet upstream of culvert under Stage Gulch Road, mapped as Diablo clay in soil survey – characteristics are very similar, dominant vegetation is non-native grasses including wild oats (*Avena fatua*), Italian ryegrass (*Lolium multiflorum*), and Harding grass (*Phalaris aquatica*.).

Pit 1A Upper Terrace Planting Area

Depth	**Description**
0-16 inches	gravelly clay loam/loam, dark brown, granular structure, many fine roots, dry
16-24 inches	gravelly clay loam, brown, granular structure, few fine roots, dry
24 inches	refusal from large rocks
Comments	Area is located on an upper terrace which transitions to uplands approximately 50 feet east of the culvert inlet under Stage Gulch Road, mapped as Diablo clay with adjacent uplands as Goulding cobbly clay loam – characteristics are similar to Goulding cobbly clay loam, dominant vegetation is non-native grasses and forbs including wild oats (*Avena fatua*) and yellow starthistle (*Centaurea sostitialis*).

Pit 1B Reference

Depth	**Description**
0-12 inches	very gravelly clay loam, dark brown, crumb structure, many fine to medium roots, dry
12-28 inches	gravelly clay loam, dark brown, crumb structure, many fine to medium roots, slightly moist
28 inches	refusal from large rocks/cobbles
Comments	Area is located on east floodplain of Champlin Creek, within existing riparian corridor, approximately 20 feet from the channel, gravels appear

to be a mix of colluvium and alluvium, mapped as Diablo clay/Laniger loam – characteristics are much more similar to Goudling cobbly clay loam, dominant overstory vegetation is California Bay (*Umbelullaria californica*) with some California buckeye (*Aesculus californica*) and coast live oak (*Quercus agrifolia*), understory is dominanted by snowberry (*Symphoricarpos albus*) and poison oak (*Toxicodendron diversilobum*)

Pit 2A Constructed Basin Planting Area

Depth	**Description**
0-8 inches	very gravelly clay, dark brown, prismatic structure, some fine roots, many large cobbles (6-8 inches), dry
8-16 inches	cobbles and weathered rock with clay filling interstitial gaps, weathered rock is light brown, clay is dark brown, very slightly moist on faces of cobbles
16 inches	refusal from cobbles and rocks

Comments: Area is located to east of Champlin Creek between creek and proposed new roadway where a constructed detention basin is to be located, area is mapped as Diablo clay – characteristics of clay component are similar and soil survey refers to areas of shallow clay over weather rock and bedrock, bedrock outcrops were observed in hillside immediately adjacent to the east, dominant vegetation is non-native grasses and forbs including wild oats (*Avena fatua*), Italian ryegrass (*Lolium multiflorum*), tarweed (*Hemizonia sp.*), and medusahead (*Taeniatherum caput-medusae*)

Pit 2B Upper Terrace Planting Area

Depth	**Description**
0-6 inches	clay, black, prismatic structure, many fine roots, very few small gravels, dry
6-36 inches	clay, black, prismatic structure, almost no gravels, slightly moist with increasing depth

Comments: Area located to east of culvert inlet under Stage Gulch Road on upland terrace between Champlin Creek and proposed new roadway, area is mapped as Diablo clay – characteristics match very closely, dominated by non-native grasses and forbs including wild oats (*Avena fatua*), Italian ryegrass (*Lolium multiflorum*), tarweed (*Hemizonia sp.*), and black mustard (*Brassica nigra*)

Pit 2 Reference

Depth	**Description**
0-24 inches	gravelly clay loam, brown, granular structure, many fine to medium roots, dry

24-30 inches	sandy clay loam, brown, granular structure, few medium roots, large increase in small gravel and sand, slightly moist
30 inches	refusal from gravels

Comments: Area located within riparian corridor between Champlin Creek and existing roadway, area is mapped as Diablo clay – characteristics are more similar to Goulding cobbly clay loam, overstory vegetation dominated by California Bay (*Umbelullaria californica*) with some California buckeye (*Aesculus californica*) and coast live oak (*Quercus agrifolia*), understory dominated by poison oak (*Toxicodendron diversilobum*) and hedgehog dogtail grass (*Cynosurus echinatus*)

Pit 3A Upland Planting Area

Depth	**Description**
0-4 inches	gravelly clay/heavy clay loam, dark brown, prismatic structure, many fine roots, dry
4-16 inches	very gravelly clay, dark brown, approximately 60% gravel, dry
16 inches	refusal from gravels

Comments: Area located between riparian corridor and existing roadway, area is mapped as Diablo clay – characteristics are similar, dominant vegetation includes non-native grasses and forbs including Italian ryegrass (*Lolium multiflorum*), soft chess (*Bromus hordaceous*), Italian thistle (*Carduus pycnocephalus*), and some scattered native California rose (*Rosa californica*).

Pit 3B Willow Reference/Planting Area

Depth	**Description**
0-8 inches	gravelly sandy loam, brown, many fine to medium roots, slightly moist
8 inches	refusal from gravels

Comments: Area located within existing willow dominated riparian corridor on northwest side of Champlin Creek approximately 10 feet from channel, area is mapped as Diablo clay – characteristics of sample do not match likely due to sampling location being within the active floodplain, very limited access for sampling, material observed in creek cut banks appears to be very similar to profile described for site #3A overlying sandstone bedrock that is exposed in lower creek bank, dominant vegetation is arroyo willow (*Salix lasiolepis*) and poison oak (*Toxicodendron diversilobum*)

Pit 4 Planting Area

Depth	**Description**
0-12 inches	clay loam, dark brown, granular structure, many roots, dry
12 –36 inches	gravelly clay loam, dark brown, granular structure, some medium to large roots, substantial increase in gravel content
Comments	Area located immediately upstream of culvert inlet under Stage Gulch Road, area mapped as Diablo clay – characteristics are not very similar likely due to proximity to active channel, description of 12-36 inches generated from observing material in creek bank cut, water was present in the creek channel adjacent to the site, this area supports very dense riparian habitat dominated by coast live oak (*Quercus agrifolia*), California buckeye (*Aesculus californica*), and California Bay (*Umbelullaria californica*) with an understory of poison oak (*Toxicodendron diversilobum*) and California blackberry (*Rubus ursinus*). **Due to the area already supporting target mitigation habitat no sample for this location was submitted to the laboratory for analysis.**

Pit 5 Upstream Planting Area

Depth	**Description**
0-18 inches	clay, black, prismatic structure, many fine to medium roots, slightly moist, gravels increase substantially with depth
18 inches	refusal from gravels
Comments	Area located upstream of culvert inlet under Stage Gulch Road on terrace to north of channel, area mapped as Diablo clay – characteristics are very similar, area is dominated by dense stand of native creeping wildrye (*Leymus triticoides*), coast live oak (*Quercus agrifolia*) provides dense cover along the channel both upstream and downstream of the culvert crossing, further upstream there are scattered arroyo willows (*Salix lasiolepis*)

Pit 6 Downstream Planting Area

Depth	**Description**
0-30 inches	gravelly sandy clay loam, brown, granular structure, many fine roots, dry
30 inches	refusal from cobbly clay hardpan
Comments	Area located at culvert crossing under Stage Gulch Road, area is mapped as Clear Lake clay – characteristics are much more similar to Tuscan cobbly clay loam which is found approximately 0.5 mile to the west and includes a indurated cobbly hardpan at similar depth, hardpan is exposed in creek bed both upstream and downstream of culvert crossing, area is dryland farmed and creek banks support non-native grasses dominated by wild oats (*Avena fatua*)

SUMMARY AND RECOMMENDATIONS

This preliminary soils investigation evaluated soil conditions through field sampling within proposed mitigation planting areas and reference areas which currently support the target vegetation. Laboratory analyses were conducted for samples collected from within the mitigation and reference areas. These field and laboratory findings were compared to the soil units as mapped and described in the Sonoma County Soil Survey (1972). The results of the field observations, laboratory data, and comparison with the Sonoma County Soil Survey were then used to identify potential constraints to target vegetation establishment and to provide preliminary soil amendment/augmentation recommendations, if needed. However, due to the fact that a large portion of the overall mitigation area is currently underneath existing roadway, this investigation did not evaluate soil conditions at the anticipated finish grade for all the proposed mitigation areas, but rather developed a general understanding of soil conditions within the project area.

Most of the soil conditions observed in the proposed mitigation planting sites do not exhibit similar characteristics to the reference sites. The reference site soils are in general coarser grained materials that have higher infiltration rates than the heavier clays observed at most of the proposed mitigation sites. Therefore, it is anticipated that the finer textured soils observed at the proposed mitigation sites, which are currently dominated by annual grasses and forbs, may inhibit rooting of the target oak and bay dominated woodlands and limit access to deeper, later-season soil moisture. Given the limited number of reference samples and the identified differences in soil conditions within the mitigation areas, it would be beneficial to conduct additional sampling within other reference areas both along the existing Champlin Creek riparian corridor, as well as in the adjacent uplands that support oak woodlands. It would also be highly beneficial to further confirm actual soil conditions within the mitigation sites, through excavation of backhoe pits, in areas that will be heavily graded (particularly in the vicinity of Site #2), to depths sufficient to characterize conditions at the anticipated finish grade.

The information gathered during this preliminary soils investigation suggests that soil amendment/augmentation should occur at most of the sites to increase the likelihood of successful target vegetation establishment. Potential amendment/augmentation is described for each site below and is summarized in Table 1. It is recommended that prior to the final design phase of the project, preliminary amendment/augmentation recommendations should be confirmed through the additional sampling as described above. Following additional sampling, the actual types, amounts, and methods of amendments for each of the sites can be determined.

Site 1A

Site #1A has two very distinct planting areas, a lower inset floodplain terrace and an upper terrace that is more associated with the adjacent uplands than with the creek.

The lower terrace is approximately 30 inches of clay overlying sand and gravel. Currently this area supports herbaceous vegetation. With the exception of the potential for the clay to inhibit rooting of target vegetation there are no other concerns with the soils at this location. If willows are proposed for this area it is recommended that they be located immediately adjacent to the channel to improve access to sufficient soil moisture. For plantings on the floodplain it should be anticipated that there will be a very slow infiltration rate and any proposed irrigation should accommodate for this potential constraint. Amending the soils on the floodplain with organic matter and gypsum may increase infiltration rates and aid in establishment of target vegetation.

The upper terrace has substantially different soil conditions. This area is characterized by gravelly loam overlying large cobbles and rocks at approximately 24 inches. The area currently supports herbaceous vegetation. Given the observed soil conditions, with sufficient irrigation and maintenance, there should not be a problem with establishing oak woodland habitat in this area. However, if substantial grading is proposed for this area, soil conditions exposed following grading may be nutrient deficient and require amendments, such as incorporation of organic matter.

Site 1B

Site #1B is located within the existing oak woodland/riparian habitat along Champlin Creek. This area currently supports target habitat but is proposed for planting as it is expected to be disturbed during construction. As the soils here already provide suitable conditions for target habitat it is anticipated that following construction they will continue to be adequate for re-establishing the target habitat. However, if there is extensive grading at this site the newly exposed soils may be nutrient deficient and require amendments, such as incorporation of organic matter.

Site 2

Site #2 has a large component of the planting area that is currently underneath the existing roadway. The reference samples within existing woodland and riparian habitat, in close proximity to the creek, show that the soils are relatively coarse grained and currently supporting target vegetation. It is anticipated that the soils under the roadway, which is close to the existing creek, are likely similar in texture. However, to confirm this, these soils will need to be sampled

and tested following decommissioning the road to confirm actual soil conditions. It should be noted that even if the texture is adequate in this area it is likely the soils will be severely nutrient deficient and will require amendments (such as incorporation of organic matter) to provide a sufficient growing medium for successful vegetation establishment.

The area at Site #2A, which is between Champlin Creek and the proposed new roadway, where a constructed detention basin is proposed, will very likely have extremely harsh soil conditions and/or potentially bedrock exposed following grading. Therefore, it is highly recommended that this area be over-excavated to allow for placement of a 2-foot layer of topsoil to provide adequate rooting depth for the target vegetation. In areas where grassland is the target vegetation community then topsoil could be harvested from the vicinity of soil pit #2B (deep clay) or other areas with similar soil conditions. If there are areas where harsh rock/bedrock conditions are exposed where oak and bay woodland are proposed it is recommended that a coarser grained topsoil (clay loam or loam) be utilized to provide a suitable growing medium. If coarser grained topsoil is not available then topsoil from the existing clay rich soils could be utilized. However, incorporation of soil amendments including organic matter and gypsum would be necessary to improve rooting conditions and even with these amendments higher mortality and slower growth rates should be expected.

Site 3

Site #3 has two different planting areas. The first area (#3A) is above the top of bank which currently is dominated by grassland, although there are a few scattered oaks particularly along the existing roadway. The soils in this area are very gravelly clay/clay loam that are likely adequate to support the target oak woodland habitat with sufficient irrigation and maintenance. However, if there is extensive grading at this site the newly exposed soils may be nutrient deficient and require amendments, including incorporation of organic matter. The second area (#3B) is located along the edge of the creek channel where a stilling basin is proposed. This area currently supports dense willow thickets and can be expected to provide adequate soil conditions to re-establish willow following construction of the stilling basin. The soils observed at #3B are very localized and only found immediately adjacent to the active channel. Within 10-15 feet of the edge of the creek the soil conditions are much more similar to the soils observed at #3A. Therefore, the extent of willow plantings should be limited to within approximately 10-15 linear feet from the edge of the channel. Otherwise there may not be sufficient soil moisture for successful establishment of planted willows.

Site 4

Site #4 was only briefly observed as the area currently supports dense oak/bay dominated riparian vegetation and it is anticipated that these soils will have no problems supporting successful re-establishment of this habitat type. However, if there is extensive grading at this site the newly exposed soils may be nutrient deficient and require amendments, including incorporation of organic matter.

Site 5

This area currently supports target oak/bay riparian habitat along the channel banks. The site #5 soil description is based on a sample point just outside the edge of the canopy in an area of heavy clay which supports a dense stand of creeping wildrye. Visual observations of the soils along the creek banks, which are supporting target vegetation, concluded that they are composed of coarser grained material than the soil within the proposed planting areas outside the top of bank. The heavy clay soils in planting areas beyond top of bank may limit root growth of the target vegetation and will exhibit very slow infiltration rates. Therefore, it may be necessary to incorporate soil amendments including organic matter and gypsum to improve rooting conditions and even with these amendments higher mortality and slower growth rates should be expected. It is recommended that special attention be paid to the type of irrigation that is utilized in this area due to the very slow infiltration rates that will be encountered.

Site 6

The soil conditions at site #6 are very different from the soils observed at the other proposed mitigation planting areas. The soils are characterized as gravelly sandy clay loam with an underlying cobbly hardpan at approximately 30 inches. The hardpan is relatively extensive in this area and makes up the bed of the channel throughout the proposed planting areas both upstream and downstream of the culvert crossing. While it is anticipated that the chemical and physical properties of the soil in this area would be sufficient to support the target vegetation, the main concern is the underlying hardpan. There may be enough rooting depth to support drought tolerant trees and shrubs but obligate riparian species, such as willows, will not likely be successful in this area. Special attention should be paid to the proposed plant palette for this area.

Table 1. Summary of Recommendations

SITE	RECOMMENDATION(S)
General	1. Collect and analyze additional reference site samples from within riparian corridor and adjacent uplands supporting oak woodlands. 2. Excavate backhoe pits within mitigation areas to a depth sufficient to characterize conditions at the anticipated finish grade. 3. Based on results from additional reference site sampling and from sampling at anticipated finish grades, determine actual types, amounts, and methods for amendments.
Site 1A Lower Terrace	1. If willows are proposed for planting at this site they should be focused immediately adjacent to the creek channel. 2. Special attention should be given to determining a proper irrigation system to accommodate the slow infiltration rates that will be encountered at this site. 3. Incorporation of organic matter and gypsum should be considered to aid in improving soil structure and infiltration rates.
Site 1A Upper Terrace	If soil conditions, following grading are determined to be nutrient deficient, incorporate organic matter and potentially other amendments based upon specific nutrient deficiencies identified.
Site 1B/Reference	This site currently supports target vegetation. If minimal to no grading occurs then no soil amendments are recommended. However, if substantial grading occurs, soils should be sampled at finish grade and determined if they are nutrient deficient. If determined to be nutrient deficient, incorporate organic matter and potentially other amendments based upon specific nutrient deficiencies identified.
Site 2	1. Sample and analyze soils from underneath the current roadway, following road decommissioning. Recommendations for amendment of these soils would likely include incorporation of organic matter and potentially other amendments based upon specific nutrient deficiencies identified. 2. Excavate backhoe pits to anticipated finish grade and determine suitable soil amendment(s) for clay rich areas and likely specify topsoil importation for areas that have exposed extremely rocky materials or bedrock.
Site 3	1. Excavate backhoe pits to anticipated finish grade and determine suitable soil amendment(s). 2. Willow plantings at this site should be focused immediately adjacent to the creek channel to the extent feasible.
Site 4	This site currently supports target vegetation. If minimal to no grading occurs then no soil amendments are recommended. However, if substantial grading occurs, soils should be sampled at finish grade to determine if there are nutrient deficiencies. If determined to be nutrient deficient, consider incorporation of organic matter and potentially other amendments based upon specific nutrient deficiencies identified.
Site 5	1. For clay rich soils beyond the existing top-of-bank, incorporation of organic matter and gypsum should be considered. 2. In areas where substantial grading will occur, soils should be sampled at finish grade to determine if there are nutrient deficiencies and amended accordingly. 3. If areas with clay rich soils are planted with woody species, special attention should be given to determining a proper irrigation system to accommodate the slow infiltration rates that will be encountered.
Site 6	1. Due to the presence of a relatively shallow hardpan that makes up the bed of the channel in this area, it is recommended that a drought tolerant plant palette be used for this site. 2. Obligate riparian species, such as willows, are not recommended for this site as the will not be able to access groundwater.

REFERENCES

[SCS] United States Department of Agriculture Soil Conservation Service. 1972. Sonoma County California Soil Survey.

APPENDIX A.
SOIL SERIES DESCRIPTIONS

LOCATION DIABLO CA

Established Series
Rev. LEW/RCH/JJJ/SBS
02/97

DIABLO SERIES

The Diablo series is a member of the fine, smectitic, thermic family of Aridic Haploxererts. Typically, Diablo soils have dark gray, neutral and mildly alkaline, silty clay upper A horizons, gray and olive gray, calcareous, silty clay lower A horizons, and light olive gray, silty clay AC and C horizons that rest on shale.

TAXONOMIC CLASS: Fine, smectitic, thermic Aridic Haploxererts

TYPICAL PEDON: Diablo silty clay, grain field. (Colors are for dry soil unless otherwise noted.)

Ap--0 to 6 inches; dark gray (5Y 4/1) silty clay, very dark gray (5Y 3/1) moist; the immediate very thin surface crust dries light gray and gray (5Y 6/1, 7/1); the surface 1 to 3 inches has string medium granular structure, the remainder has strong coarse and medium blocky structure; very hard, very firm, sticky, very plastic; common fine roots mainly along faces of peds; few very fine tubular pores; neutral; clear wavy boundary. (4 to 10 inches thick)

A--6 to 15 inches; dark gray (5Y 4/1) silty clay, very dark gray (5Y 3/1) moist; moderate coarse prismatic and moderate coarse blocky structure; very hard, very firm, sticky, very plastic;few fine roots mainly along faces of peds; noneffervescent except for an occasional small white lime nodule; mildly alkaline; clear smooth boundary. (8 to 20 inches thick)

Bkss1--15 to 26 inches; finely mixed gray and olive gray (5Y 5/1 and 5/2) silty clay, dark gray and olive gray (5Y 4/1 and 4/2) moist; moderate coarse prismatic and medium blocky structure; very hard, very firm, sticky, very plastic; few fine roots along faces of peds; few fine and very fine tubular pores; numerous slickensides; slightly effervescent in matrix, strongly effervescent few white lime nodules; moderately alkaline; clear wavy boundary. (3 to 12 inches thick)

Bkss2--26 to 32 inches; finely mixed gray and olive gray (5Y 5/1 and 5/2) silty clay, dark gray and olive gray (5Y 4/1 and 4/2) moist); weak coarse prismatic and weak medium blocky structure; very hard, very firm, sticky, very plastic; few fine roots mainly along faces of peds, roots distinctly flattened in appearance; few fine and very fine tubular pores; numerous slickensides; slightly effervescent matrix, strongly effervescent few small hard white lime nodules; diffuse smooth boundary. (4 to 8 inches thick)

Bck--32 to 42 inches; light olive gray (5Y 6/2) silty clay, olive gray (5Y 5/2) moist; weak medium subangular blocky structure; very hard, very firm, slightly sticky, plastic; few fine roots; few fine and very fine tubular pores; many white lime films and soft segregations; moderately alkaline; clear wavy boundary. (10 to 16 inches thick)

C--42 to 50 inches; fine and medium mottled appearing olive gray and light olive gray (5Y 5/2, 6/2) silty clay loam, olive gray (5Y 5/2, 4/2) moist; weak fine and medium subangular blocky structure; very hard, very firm, slightly sticky, plastic; few fine roots; few fine and very fine tubular pores; many shale fragments; strongly effervescent soft white filaments; soft and hard lime nodules; moderately alkaline; clear smooth boundary. (8 to 16 inches thick)

Cr--50 to 60 inches; light olive gray (5Y 6/2) slightly effervescent shale and fine grained sandstone with white films on facings.

TYPE LOCATION: Alameda County, California; approximately 3 miles northeast of Livermore; 1,325 feet east and 275 feet north of the SW corner of section 25, T.2 S., R.1 E.

RANGE IN CHARACTERISTICS: Depth to the Cr ranges from 40 to 80 inches. Slopes are complex and more than 9 percent. The mean annual soil temperature is about 60 to 64 degrees F. Dry soils have cracks 1/2 to 2 inches wide from the surface to a depth of 20 to 40 inches. Cracks close with soil wetting beginning in late October to late November and cracks remain closed until the soils dries in April to early June. Cracks remain open the rest of the year.

The A horizons, the Bss horizons and all but some of the lower C horizons have more than 30 percent clay; most horizons have 45 to 60 percent clay. Slickensides are present in the Bss horizons. The A horizon or the soil from the surface to a depth of 12 to 30 inches is gray, dark gray or very dark gray. It is heavy clay loam, silty clay or clay and is slightly acid to moderately alkaline, but is noncalcareous except in the lower most part of a few pedons. The lower part of the A horizon has mixed colors. Chroma in some part is less than 1.5 and ranges from 2 to 4 in other parts. The A horizons are moderately alkaline and calcareous in some part.

The C horizon is grayish brown, dark grayish brown, brown, light yellowish brown or light olive brown. It is clay loam, silty clay or clay and contains fragments of shale and rock in some pedons in amounts up to 30 percent, particularly just above the rock contact. The C horizon is calcareous and in most pedons most of the lime is small segregations. A few pedons have small lime concretions.

COMPETING SERIES AND THEIR DIFFERENTIAE: These are the Alo, Altamont, Ayar, Bosanko, Cibo, Climara, Cropley, Linne, and Zaca series. Alo, Altamont, Ayar, and Cibo soils are brownish in the upper A horizons with chroma of 2 or more. Bosanko soils have a paralithic contact at depths of less than 40 inches. Climara soils have a lithic contact of hard igneous rock at depths of less than 40 inches. Cropley soils have smooth

slopes of less than 9 percent and lack a paralithic contact at depths of less than 40 inches. Linne soils lack wide cracks and slickensides. Zaca soils are strongly calcareous in the A horizon.

GEOGRAPHIC SETTING: Diablo soils are on complex undulating, rolling to steep uplands with slopes of 5 to 50 percent. Elevations are 25 to 3,000 feet. These soils formed in residuum weathered from shale, sandstone, and consolidated sediments with minor areas of tuffaceous material. The climate is dry subhumid mesothermal with warm, dry summers and cool, moist winters. The mean annual precipitation is 10 to 35 inches. The average January temperature is 45 to 53 degrees F.; the average July temperature is 65 to 75 degrees F.; and the mean annual temperature is about 57 to 62 degrees F. The average frost free season is about 220 to 320 days.

PRINCIPAL ASSOCIATED SOILS: These are the competing Alo, Altamont, and Linne soils and the Azule, Los Osos, Nacimento, San Benito, and Shedd soils. Azule and Los Osos soils have argillic horizons. Nacimento and San Benito soils have less than 35 percent clay. Shedd soils have dry value of 6 or less.

DRAINAGE AND PERMEABILITY: Well drained; slow runoff when soil is dry, medium to rapid when soils are moist; slow permeability.

USE AND VEGETATION: Used for grazing and for production of dry farmed grain, mainly barley. Uncultivated areas have a cover of annual grasses and forbs.

DISTRIBUTION AND EXTENT: Soils are extensive in central and southern Coast Ranges of California.

MLRA OFFICE RESPONSIBLE: Davis, California

SERIES ESTABLISHED: Livermore Valley Area, California, 1910.

REMARKS: The Diablo soils were formerly classified as Grumusols.

Series reclassified April, 1996. Competing series not reviewed at that time.

LOCATION CLEAR LAKE CA

Established Series
Rev. GWH/CAF/JJJ/SBS
05/2006

CLEAR LAKE SERIES

The Clear Lake series consists of very deep, poorly drained soils that formed in fine textured alluvium derived from sandstone and shale. Clear Lake soils are in basins and in swales of drainageways. Slopes are 0 to 2 percent. The mean annual precipitation is about 20 inches and the mean annual air temperature is about 60 degrees F.

TAXONOMIC CLASS: Fine, smectitic, thermic Xeric Endoaquerts

TYPICAL PEDON: Clear Lake clay, annual pasture. (Colors are for dry soil unless otherwise stated when described there was a watertable at 48 inches).

A--0 to 13 inches; dark gray (N 4/0) clay, very dark gray (N 3/0) moist, few fine faint redoximorphic concentrations; strong medium granular structure at the surface and strong very coarse prismatic structure below when dry, massive when wet; very hard, firm, very sticky and very plastic; many fine roots; common very fine and fine pores; grass seeds, grass and burned plant remains in cracks and along cleavage planes; neutral (pH 7.0); gradual wavy boundary. (4 to 15 inches thick)

Bss1--13 to 19 inches; dark gray (N 4/0) clay, very dark gray (N 3/0) moist; strong coarse prismatic structure when dry, massive when wet; extremely hard, very firm, very sticky and very plastic; many fine roots; many very fine and fine pores; many slickensides; grass remains in cracks and along cleavage planes; moderately alkaline (pH 8.0); clear wavy boundary. (5 to 10 inches thick)

Bss2--19 to 45 inches; dark gray (N 4/0) clay, very dark gray (N 3/0) moist; strong coarse prismatic structure; extremely hard, very firm, very sticky and very plastic; few roots; few pores; many slickensides; few fine concretions; smooth pressure faces on peds; slightly calcareous; moderately alkaline (pH 8.0); diffuse irregular boundary. (10 to 35 inches thick)

Bssk--45 to 60 inches; grayish brown (2.5Y 5/2) clay, light olive brown (2.5Y 5/4) moist; tongues of very dark grayish brown (2.5Y 3/2) moist in the upper part; light yellowish brown (10YR 6/4) masses of iron accumulations; massive; very hard, very firm, very sticky and very plastic; few fine roots; few very fine pores; few slickensides; few fine concretions; few soft lime masses; slightly calcareous; moderately alkaline (pH 8.0).

TYPE LOCATION: Solano County, California; 300 feet south, 300 feet east of northwest corner of sec. 25, T. 6 N., R. 2 E.

RANGE IN CHARACTERISTICS: The combined thickness of the A, Bss, and Bssk horizons is more than 60 inches. The mean annual soil temperature is 59 degrees to 65 degrees F. On drying, large cracks extend as deep as 48 inches and form large prisms. The cracks open and close at least once each year and are open by June or July and are closed by October or November. Various amounts of undecomposed plant material and surface soil are in these cracks. Common to many slickensides are in the zone from 12 to 48 inches. In some pedons moderate amounts of plant remains are in the lower part of the A horizon and the upper part of the Bss horizon as well as in tongues of the A horizon extending in to the Bss horizon. These soils have a calcium to magnesium ratio of more than 2.

The A and Bss horizons have 10YR, 2.5Y or 5Y hue or is of neutral hue; value ranges from 2 through 5. Chromas are 1 or 0 moist and dry. Moist values are 1 or 2 units darker. In some pedons, colors are mottled with hues of 7.5YR or 10YR, values of 3 to 5 and chromas of 2 to 6. In other pedons concretions of Fe and Mn are present. These horizons range from moderately acid to moderately alkaline (pH 5.6 to 8.4) in the upper part and from slightly alkaline to moderately alkaline and calcareous in the lower part. The more acid surfaces are probably the result of cultural practices, especially extensive use of fertilizers and other agricultural chemicals. In areas adjacent to streams or sloughs, there is an overwash of stratified fine sandy loam or silty clay loam. It is silty clay or clay.

The Bssk horizon has 10YR, 2.5Y or 5Y hue or is neutral; value ranges from 3 through 6 and chroma from 1 through 6; colors are mottled with hues of 10YR, 7.5YR, 2.5Y and 5Y. This horizon ranges from slightly alkaline to strongly alkaline and is usually calcareous with segregations of accumulated lime in soft masses or seams. In some pedons the lower part is stratified and noncalcareous. It is silty clay or clay.

COMPETING SERIES: These are the Carhart (CA), Copus (T CA), Dodgeland(CA), and Hildreth (CA) series. Carhart soils are 20 to 40 inches to paralithic material. Hildreth soils overlie unrelated material and are somewhat poorly drained. Copus soils have neutral pH. Dodgeland soils have hue of 10YR and less than 40 percent clay in some horizons.

GEOGRAPHIC SETTING: Clear Lake soils are in basins and in swales of level drainageways. Slopes are 0 to 2 percent. Elevations are 25 to 2,000 feet. The soils formed in fine textured alluvium derived from sandstone and shale or other mixed rock sources. The soils are in a dry subhumid climate of relatively hot dry summers and cool moist winters. Mean annual precipitation ranges from 10 to 35 inches. Mean January temperature varies from 42 degrees to 47 degrees F., mean July temperature varies from 69 degrees to 72 degrees F., and mean annual temperature varies from 58 degrees to 62 degrees F. The frost-free season is 160 to 300 days. Cooler temperatures and a shorter frost-free season occurs in Lake County.

GEOGRAPHICALLY ASSOCIATED SOILS: These are the Cropley, Antioch, Capay, Pacheco, Salinas and San Ysidro soils. Antioch soils have natric horizons. Capay soils have a chroma of 2 or more throughout. Cropley soils have chromas of 1.5 or more

within 40 inches. Pacheco and Salinas soils have a mollic epipedon and have less than 35 percent clay. San Ysidro soils have an ochric epipedon and lack cracks and slickensides.

DRAINAGE AND PERMEABILITY: Poorly drained; negligible to high runoff (if assumed concave runoff is always negigible); slow to very slow permeability. A water table is at depths of 4 to 10 feet in the late summer and in some areas is very near the surface during wet months of winter. Some areas are artificially drained.

USE AND VEGETATION: Used for growing many row crops such as tomatoes, beans and sugar beets, dry farmed to grain, or irrigated and dry farmed pasture. Also used for rangeland. Native vegetation is grasses and forbs.

DISTRIBUTION AND EXTENT: In small valleys of the Coast Range and along the San Joaquin and Sacramento Valleys. The soils are moderately extensive in MLRA-17 and 14.

MLRA OFFICE RESPONSIBLE: Davis, California

SERIES ESTABLISHED: Lake County (Clear Lake Area), California, 1927.

REMARKS: Hildreth soils are currently listed in the same family. As currently described, Hildreth soils would not classify as Vertisols. A part of the Hildreth soils may belong to another series or different subgroup. More study of the Hildreth soils is needed to accurately classify these soils.

Diagnostic horizons and features recognized in this pedon are:

Ochric epipedon - the zone from the surface to a depth of 13 inches (A horizon).

Series classification updated May 1996. Competing series not reviewed at that time.

ADDITIONAL DATA: Two pedons in Sonoma County, CA: S61CA-097-009 (40A-3087), at 38 degrees north latitude, 14 minutes, 54 seconds, 122 degrees West longitude, 36 minutes, 31 seconds; and S61CA-097-010 (40A-3088), at 38 degrees North latitude, 16 minutes, 14 seconds, 122 West longitude, 38 minutes, 38 seconds. Two pedons in Solano County: NSSL pedon S79CA-095-000-000 (type location) and S91CA-099-005 (partial pedon). One pedon in Colusa County: S89CA-011-005.

Runoff terminology adjusted 5/96 to the adjective criteria of the Soil Survey Manual, 10/93.

REMARKS: In future MLRA updates Clear Lake mapped in MLRA 17 should be separated from acreage mapped in MLRA 14 (Coast Range Valleys)

LOCATION GOULDING CA

Established Series
Rev. SBJ/WCL/DJE/CEJ/SBS
02/1999

GOULDING SERIES

The Goulding series consists of shallow, somewhat excessively drained soils formed in material weathered from metavolcanic or metasedimentary rocks. Goulding soils are on mountains and have slopes of 5 to 75 percent. The annual precipitation is about 30 inches and the annual air temperature is about 55 degrees F.

TAXONOMIC CLASS: Loamy-skeletal, mixed, active, mesic Lithic Dystroxerepts

TYPICAL PEDON: Goulding gravelly loam, rangeland on a 60 percent slope facing east under shrubs and grasses at 2,150 feet elevation. (Colors are for dry soil unless other wise noted).

A--0 to 4 inches; brown (7.5YR 5/4) gravelly loam, dark brown (7.5YR 3/4) moist; strong medium and coarse granular structure; soft, very friable, slightly sticky and slightly plastic; few very fine and common fine roots; few very fine and fine tubular pores; 25 percent fine gravel; slightly acid (pH 6.5); clear wavy boundary. (3 to 12 inches thick).

Bt--4 to 17 inches; brown (7.5YR 5/4) very gravelly loam, dark brown (7.5YR 3/4) moist; moderate fine and medium subangular blocky structure; slightly hard, friable, sticky and slightly plastic; few very fine and fine tubular pores; few thin clay films bridging mineral grains; 50 percent pebbles; slightly acid (pH 6.5) clear wavy boundary. (7 to 16 inches thick).

R--17 inches; fractured hard metavolcanic rock.

TYPE LOCATION: Glenn County, California; About 1.5 miles southwest of Black Diamond Ridge Lookout. About 1.3 miles north from Glenn-Colusa County line on Black Diamond Ridge Lookout road. Three hundred feet up slope west of road on east facing slope. Area not sectionized T.18 N and R.7 W.

RANGE IN CHARACTERISTICS: Thickness of the solum and depth to bedrock ranges from 10 to 20 inches. Mean annual soil temperature varies from 54 to 59 degrees F. The moisture control section (from 3 inches to the lithic contact) is dry in all parts about mid May and remains dry until mid October (130-150 days). Reaction ranges from strongly acid to slightly acid throughout. The control section has 35 to 80 percent rock fragments and averages 18 to 30 percent clay.

The A horizon is 10YR 6/3, 6/4, 5/2, 5/4, 5/3, 4/3; 7.5YR 5/3, 5/4, or 6/4. Moist color is 10YR 5/3, 4/3, 4/4, 3/3, 3/4; 7.5YR 4/4, 3/4, or 3/2. It is loam or clay loam and may be gravelly, cobbly, stony, very gravelly or very stony with rock fragments ranging from 10 to 50 percent by volume.

The Bt horizon is 10YR 6/2, 6/3, 6/4, 6/6, 5/4, or 4/4; 7.5YR 3/4, 4/4, 4/3, or 5/6. It is 10YR 3/4, 4/4 or 7.5YR 4/4 moist. It is sandy loam, loam, or clay loam and may be very gravelly, extremely gravelly, very cobbly or very stony. Clay content averages 1 or 2 percent more than the A horizon, in some pedons. Not all pedons have clay films.

COMPETING SERIES: There are no other series in this family.

GEOGRAPHIC SETTING: Goulding soils are on hills and mountains. Slopes are 5 to 75 percent. These soils formed from metavolcanic rocks, mostly greenstone, or metasedimentary rocks. Elevation ranges from 1,500 to 5,000 feet. At elevations below 3,500 feet, these soils are on north or sheltered aspects or have semidense or dense vegetative cover. The climate is subhumid with warm dry summers and cool moist winters. Average annual precipitation is 25 to 60 inches. Some precipitation occurs as snow on the higher ridges. Seasonal snowfall ranges from a few inches to about 24 inches. The mean annual temperature is about 46 degrees to 57 degrees F; The average January temperature is about 40 degrees F; and the average July temperature is about 70 degrees F. The frost-free season is about 100 to 235 days.

GEOGRAPHICALLY ASSOCIATED: These are the Boomer, Hoosimbim, Marpa, Neuns, Stonyford, Vitzthum, and Vanvor soils. These soils, except for Vitzthum, are all greater the 20 inches deep. The Vitzthum soils have argillic horizons.

DRAINAGE AND PERMEABILITY: Somewhat excessively drained; medium to very rapid runoff; moderate permeability.

USE AND VEGETATION: Goulding soils are used for watershed and wildlife habitat. Natural vegetation is scattered oak, digger pine, brush, grasses and forbs. Brush species are interior live oak, California scrub oak, scrub canyon live oak, manzanita, and buckbrush.

DISTRIBUTION AND EXTENT: The soils occur in the Coast Range and Klamath Mountains of northern California. They are moderately extensive. MLRA is 5.

MLRA OFFICE RESPONSIBLE: Davis, California

SERIES ESTABLISHED: Glenn County, California, 1957. Name from Goulding Creek, Glenn County.

REMARKS: Diagnostic horizons and features recognized in this pedon are:

Ochric epipedon - Zone from the soil surface to 4 inches (A horizon).

Cambic horizon - Zone from 4 to 17 inches (Bt) horizon characterized by soil structure and clay films.

Lithic contact - the boundary is at about 17 inches (R).

CEC class - assumed, based on near pedons and base saturation.

Base Saturation for Dystric subgroup - assumed, based on associated soils. Goulding type location in Colusa County had base saturation of 18%.

ADDITIONAL DATA: No pedons sampled as Goulding in NSSL database.

LOCATION LANIGER CA

Established Series
Rev. SBJ/RCH
02/2006

LANIGER SERIES

The Laniger series is a member of a medial, thermic family of Andic Xerochrepts. The soils have grayish brown, medium acid, fine sandy loam A horizons and brown, slightly acid, fine sandy loam B2 horizons over strongly cemented rhyolite.

TAXONOMIC CLASS: Medial, mixed, thermic Typic Haploxerands

TYPICAL PEDON: Laniger fine sandy loam - rangeland. (Colors for dry conditions unless otherwise noted.)

A11--0 to 1 inch; dark grayish brown (10YR 4/2) fine sandy loam, very dark brown (10YR 2/2) moist; weak medium granular structure; nearly loose, very friable, nonsticky, nonplastic; contains much partly decomposed organic material and many very fine roots; very porous; medium acid; abrupt smooth boundary. (0 to 1 inch thick).

A12--1 to 9 inches; grayish brown (10YR 5/2) fine sandy loam, dark brown (10YR 3/3) moist; weak medium subangular blocky structure; slightly hard, friable, nonsticky and nonplastic; many very fine roots and very fine pores; medium to slightly acid; clear wavy boundary. (4 to 10 inches thick).

A3--9 to 16 inches; grayish brown (10YR 5/2) fine sandy loam, dark brown (10YR 3/3) moist; weak medium subangular blocky structure; slightly hard, friable, nonsticky and nonplastic; few very fine roots; common very fine pores; slightly acid; clear wavy boundary. (4 to 10 inches thick).

B2--16 to 38 inches; brown (10YR 5/3) fine sandy loam, dark yellowish brown (10YR 3/4) moist; weak medium subangular blocky structure; slightly hard, friable, nonsticky and nonplastic; porous; very few roots; slightly acid; abrupt very irregular boundary. (15 to 20 inches thick).

R--38 inches +; light colored, rhyolitic, lapilli tuff containing fragments of pumice; strongly consolidated.

TYPE LOCATION: Tehama County, California. About 4 miles northeast of Vina in the SE1/4 of the SW1/4 of the NW1/4, Sec. 32, T.25N., R.1W.

RANGE IN CHARACTERISTICS: Depth to bedrock ranges from about 23 to 48 inches and clay content increases slightly with depth. The soils have ochric epipedons,

cambic horizons; are usually dry in all parts between 10 to 40 inches; and soil temperature is 59 degrees F. or greater. The A horizons range in color from grayish brown to dark grayish brown (10YR) dry, and very dark grayish brown to very dark brown moist; in texture from fine sandy loam to loam; and in thickness from 10 to 29 inches. The B2 horizons range in color from brown to grayish brown dry, to dark brown to dark yellowish brown moist; in texture from loam to sandy loam, in reaction from slightly to medium acid; and in thickness from 12 to 22 inches.

COMPETING SERIES: These include the Amador, Butte, Forward, Jiggs, Kidd, and Pentz series. The Amador soils have very pale, very strongly acid A horizons and bedrock occurs at 12 inches. Butte soils have light brownish gray gravelly loam A horizons and strongly acid argillic horizons. The Forward soils have light brownish gray, slightly and medium acid A horizons and very pale brown B2 horizons that are strongly acid in the lower part. The Jiggs soils have stony loam A horizons and strongly acid C horizons. The Kidd soils have pale brown gravelly sandy loam A horizons, strongly acid B2 horizons and bedrock occurs at 15 inches. The Pentz soils are slightly acid and have bedrock at 14 inches.

SETTING: The Laniger soils occur on gently to steeply sloping hills under grass-oak vegetation. Underlying bedrock is rhyolite or rhyolitic tuff. Elevations range from 500 to 2,000 feet and the climate is subhumid to sermiarid mesothermal with mean annual rainfall of 20 to 45 inches, with hot dry summers and cool moist winters. Mean annual temperature is about 60 degrees F., average January temperature about 46 degrees F., and average July temperature about 75 degrees F.

PRINCIPAL ASSOCIATED SOILS: Laniger soils occur in the same general area as Butte, Kidd, Newville, Santa Lucia and Tuscan soils.

DRAINAGE AND PERMEABILITY: Well to somewhat excessively drained, moderate to rapid permeability and medium to rapid runoff.

USE AND VEGETATION: Used for range and pasture. Natural vegetation is blue oaks, live oaks, manzanita, ceanothus, poison oak, brush and grasses.

DISTRIBUTION AND EXTENT: Along the margins of the northern Sacramento Valley on the tuffs of the Cascade Range and in coastal areas on tuffs. The soils are moderately extensive.

MLRA OFFICE RESPONSIBLE: Davis, California

SERIES ESTABLISHED: Tehama County, California, 1962. Name from Laniger Lake.

REMARKS: The Laniger series was formerly classified in the Regosol group. The soils have ochric epipedons (< 1% OM) and cambic horizons.

LOCATION TUSCAN CA

Established Series
Rev. SBJ/RCH/SBS
04/98

TUSCAN SERIES

The Tuscan series is a member of a fine, smectitic, thermic family Typic Durixeralfs. The soils have dark brown, slightly acid cobbly loam A1 horizons; reddish brown, slightly acid cobbly light clay loam B1 horizons; reddish brown, medium acid cobbly clay B2t horizons and reddish brown indurated cobbly C horizons developed in alluvium from basic rock.

TAXONOMIC CLASS: Clayey, smectitic, thermic, shallow Typic Durixeralfs

TYPICAL PEDON: Tuscan cobbly loam (range-pasture) (Colors for dry conditions unless otherwise noted).

A11--0 to 3 inches; Dark brown (7.5YR 4/3) cobbly loam dark reddish brown (5YR 3/3) moist; nearly massive when dry breaking readily to weak fine granular structure; slightly hard, friable, slightly sticky, slightly plastic; abundant very fine roots; many very fine pores; slightly acid; abrupt wavy boundary. 1 to 3 inches thick.

A12--3 to 7 inches; Reddish brown (5YR 4/3) cobbly loam, dark reddish brown (5YR 3/3) moist; strong very fine subangular blocky structure; slightly hard, friable, slightly sticky, slightly plastic; abundant very fine roots; many very fine pores; slightly acid; clear irregular boundary. 3 to 6 inches thick.

B1t--7 to 10 inches; Reddish brown (5YR 4/4) cobbly light clay loam, dark reddish brown (5YR 3/4) moist; moderate medium to very fine subangular blocky structure; hard, firm, sticky and slightly plastic; thin continuous clay films in pores, colloid mainly in bridges; few very fine roots; many very fine pores; slightly acid; abrupt wavy boundary. 2 to 4 inches thick.

B2t--10 to 17 inches; Reddish brown (5YR 4/4) cobbly clay, dark reddish brown (5YR 3/4) moist; massive; hard, firm, sticky and plastic; few very fine roots; common very fine tubular pores; moderately thick continuous clay films on some ped faces, in all pores, and in bridges; medium acid less acid with increasing depth; abrupt wavy boundary. 2 to 8 inches thick.

C1m--17 to 18 inches; Reddish brown (5YR 5/4) indurated cobbly hardpan, dark reddish brown (5YR 3/4) moist with some thin silica coatings on pebbles and cobbles and black manganese stains in seams; massive; extremely hard; (clay films are visible and

apparently this horizon had considerable clay accumulation before becoming cemented); abrupt wavy boundary. 1 to 2 inches thick.

C2m--18 inches+; Cemented stratified cobbles and gravels of basic igneous origin.

TYPE LOCATION: Tehama County, California, in the SW1/4 of the NW1/4 of Sec. 29, T.27N, R.2W, 3 miles east of Dairyville on Foothill Road.

RANGE IN CHARACTERISTICS: Thickness of solum usually is less than 20 inches but ranges from 8 to 24 inches. The A horizons contain < 1 percent organic matter. The A1 horizons range in color from grayish brown (10YR) brown and dark brown (7.5YR) to reddish brown and yellowish red (5YR) in lower part; in texture from gravelly or cobbly loam to cobbly light clay loam; in structure from massive to granular; in reaction from slightly acid to strongly acid. The B2t horizon ranges in color from brown and dark brown (7.5YR) to reddish brown (5YR) and dark reddish brown to dark red (2.5YR); in texture from gravelly or cobbly heavy clay loam to gravelly clay, occasionally very gravelly clay; in structure from massive to strong prismatic or angular blocky; in reaction from medium acid to neutral (pH 6.0-7.0). Most profiles have a B1 horizon; these range from 2 to 7 inches thick.

COMPETING SERIES: These include the Clough, Gloria, Igo, Moda, Palo Cedro, Redding, San Joaquin and Yokohl series. The Clough soils have abrupt AB boundaries and very gravelly, very strongly acid Bt horizons. The Gloria soils are moderately deep or deep to the duripan. The Igo soils lack argillic horizons. The Moda soils have abrupt AB boundaries and are brown or light brown. The Palo Cedro soils are brown, have abrupt AB boundaries and strongly acid Bt horizons. The Redding soils are kaolinitic, have abrupt AB boundaries and medium to strongly acid Bt horizons. The San Joaquin soils have A1 horizons with pale colors (values 4 or more moist) and abrupt AB boundaries. Yokohl soils have abrupt AB boundaries.

GEOGRAPHIC SETTING: The Tuscan soils occur on broad gently sloping old alluvial terraces that are hummocky or gently undulating. The alluvium was derived mostly from basalt, andesite and tuff. The soils occur at elevations of 200 to 1,000 feet in a subhumid climate with mean annual rainfall of 20 to 35 inches, with hot dry summers and cool moist winters. Mean annual temperature is about 60 degrees F., average January temperature about 45 degrees F., and average July temperature about 75 degrees F.

GEOGRAPHICALLY ASSOCIATED SOILS: The Tuscan soils occur in the same general area as the Anita, Igo, Inks, Keefers, Redding and Supan soils.

DRAINAGE AND PERMEABILITY: Well drained, permeability moderate over slow and very slow, slow to medium runoff.

USE AND VEGETATION: Winter and spring range. Natural vegetation is annual grasses and forbs with a thin layer of moss in open areas.

DISTRIBUTION AND EXTENT: Eastern margin of Sacramento Valley and small scattered areas in central coastal counties, California.

MLRA OFFICE RESPONSIBLE: Davis, California

SERIES ESTABLISHED: Soil survey of Red Bluff Area, Tehama County, California, 1910.

REMARKS: The Tuscan series was formerly classified in the (maximal) Noncalcic Brown group. The soils have an argillic horizon and a duripan.

OSED scanned by SSQA. Last revised by state on 12/16/65.

APPENDIX B.
SOIL LABORATORY RESULTS

H.T Harvey & Associates
983 University Ave
Building D
Los Gatos CA 95032

Soil & Plant Laboratory, Inc.
Leaders in Soil & Plant Testing Since 1946
352 Mathew Street Santa Clara, CA 95050 408-727-0330 (phone) 408-727-5125 (fax)
www.soilandplantlaboratory.com

Project : Stage Gulch
Job# 2855-01

COMPREHENSIVE SOIL ANALYSIS

Report No : **09-176-0013**
Purchase Order : 09-1378
Date Recd : 06/25/2009
Date Printed : 06/30/2009

Sample Description - Sample ID	Half Sat % / TEC	pH / Qual Lime	ECe dS/m	NO_3-N ppm	NH_4-N ppm	PO_4-P ppm	K ppm	Ca ppm	Mg ppm	Cu ppm	Zn ppm	Mn ppm	Fe ppm	Organic % dry wt.	Lab No.
				Sufficiency Factors											
Site 2- Reference 0-12" Composite	33	6.2	0.3	1	7	28	369	3331	732	3.2	5.8	17	100	4.1	20083
	232	None		0.1		0.7	1.3	0.9	1.5	1.1	0.5	0.7	0.9		
Site 3- Reference 0-8" Composite	26	6.7	0.7	7	7	37	426	3843	911	3.4	4.1	12	69	2.9	20084
	274	None		0.3		1.2	1.4	0.9	1.7	1.0	0.3	0.4	0.6		
Site 1A-Terrace 0-12" Composite	23	5.8	0.4	3	8	20	292	2653	361	2.7	2.3	20	108	4.9	20085
	168	None		0.2		0.7	1.5	1.1	1.1	1.4	0.3	1.2	1.5		
Site 1A-Lower Bench 0-12" Composite	27	6.3	0.3	6	13	20	202	4050	1261	3.4	1.4	12	74	2.5	20086
	310	None		0.3		0.6	0.6	0.9	2.2	1.0	0.1	0.4	0.6		
Site 1B 0-12" Composite	30	6.0	0.4	2	17	21	303	3716	716	3.6	7.3	17	111	6.0	20087
	249	None		0.3		0.6	1.0	1.0	1.4	1.2	0.6	0.7	1.0		
Site 2A 0-12" Composite	31	6.2	0.3	2	7	15	212	4939	1213	3.1	1.0	8	57	3.1	20088
	352	None		0.1		0.4	0.6	1.0	1.9	0.8	0.1	0.2	0.4		

Saturation Extract Values						SAR	Gravel %		Percent of Sample Passing 2 mm Screen					USDA Soil Classification	Lab No.
									Sand						
Ca meq/L	Mg meq/L	Na meq/L	K meq/L	B ppm	SO_4 meq/L		Coarse 5 - 12	Fine 2 - 5	Very Coarse 1 - 2	Coarse 0.5 - 1	Med. to Very Fine 0.05 - 0.5	Silt .002-.05	Clay 0-.002		
2.7	1.4	0.5	0.7	0.08	1.3	0.4	12.0	4.2	4.0	5.6	30.4	32.6	27.2	Gravelly Clay Loam	20083
4.2	2.8	1.1	1.3	0.18	1.6	0.6	11.4	9.8	12.2	14.8	35.1	18.6	19.2	Gravelly Sandy Loam	20084
2.6	1.1	0.8	0.7	0.08	1.2	0.6	4.8	9.6	9.8	8.0	26.6	36.4	19.2	Loam	20085
2.2	1.3	0.8	0.4	0.11	0.8	0.6	0	0.2	0.6	2.6	40.7	22.6	33.4	Clay Loam	20086
3.0	1.6	0.8	0.7	0.10	1.5	0.5	11.0	6.4	5.6	6.6	29.5	30.8	27.3	Gravelly Clay Loam	20087
1.8	0.8	1.0	0.4	0.04	0.9	0.9	1.8	6.8	6.2	5.8	18	26.6	43.3	Clay	20088

Sufficiency factor (1.0=sufficient for average crop) below each nutrient value. N factor based on 200 ppm constant feed. SAR = Sodium adsorption ratio. Half Saturation %=approx field moisture capacity. Nitrogen(N), Potassium(K), Calcium(Ca) and Magnesium(Mg) by sodium chloride extraction. Phosphorus(P) by sodium bicarbonate extraction. Copper(Cu), Zinc(Zn), Manganese(Mn) & Iron(Fe) by DTPA extraction. Sat. ext. method for salinity (ECe as dS/m),Boron (B), Sulfate(SO_4), Sodium(Na). Gravel fraction expressed as percent by weight of oven-dried sample passing a 12mm(1/2 inch) sieve. Particle sizes in millimeters. Organic percentage determined by Walkley-Black or Loss on Ignition.

* LOW , SUFFICIENT , HIGH

H.T Harvey & Associates
983 University Ave
Building D
Los Gatos CA 95032

Soil & Plant Laboratory, Inc.
Leaders in Soil & Plant Testing Since 1946
352 Mathew Street Santa Clara, CA 95050 408-727-0330 (phone) 408-727-5125 (fax)
www.soilandplantlaboratory.com

Project : Stage Gulch
Job# 2855-01

COMPREHENSIVE SOIL ANALYSIS

Report No : **09-176-0013**
Purchase Order : 09-1378
Date Recd : 06/25/2009
Date Printed : 06/30/2009

Sample Description - Sample ID	Half Sat % / TEC	pH / Qual Lime	ECe dS/m	NO_3-N ppm	NH_4-N ppm	PO_4-P ppm	K ppm	Ca ppm	Mg ppm	Cu ppm	Zn ppm	Mn ppm	Fe ppm	Organic % dry wt.	Lab No.
				Sufficiency Factors											
Site 2B 0-12" Composite	31	6.0	0.3	3	8	16	61	5043	1753	3.8	0.8	10	78	2.1	20089
	405	None		0.2		0.4	0.2	1.0	2.6	0.9	0.1	0.3	0.5		
Site 3A- Upland 0-12" Composite	31	6.2	0.4	1	7	23	167	4015	1321	3.9	3.2	11	96	2.4	20090
	319	None		0.1		0.6	0.5	0.9	2.2	1.0	0.2	0.4	0.7		
Site 5- Upstream 0-12" Composite	40	5.6	0.3	39	13	40	340	5180	1218	4.1	2.4	25	115	3.0	20091
	371	None		0.7		0.8	0.8	0.9	1.7	0.9	0.1	0.7	0.7		
Site 6- Overlying Soil 0-40" Composite	25	7.1	0.5	3	5	28	110	4679	772	3.3	1.9	9	35	1.6	20092
	297	None		0.2		1.0	0.3	1.1	1.4	1.0	0.1	0.3	0.3		

Saturation Extract Values						SAR	Gravel %		Percent of Sample Passing 2 mm Screen					USDA Soil Classification	Lab No.
									Sand						
Ca meq/L	Mg meq/L	Na meq/L	K meq/L	B ppm	SO_4 meq/L		Coarse 5 - 12	Fine 2 - 5	Very Coarse 1 - 2	Coarse 0.5 - 1	Med. to Very Fine 0.05 - 0.5	Silt .002-.05	Clay 0-.002		
1.2	0.6	1.4	0.2	0.06	1.4	1.5	2.4	0.6	2.0	2.2	17.8	26.5	51.4	Clay	20089
1.2	0.8	1.6	1.2	0.12	1.9	1.6	38.0	5.4	10.0	7.8	21.9	22.8	37.4	Very Gravelly Clay Loam	20090
1.3	0.8	1.2	0.3	0.11	1.0	1.2	1.6	3.2	3.2	3.0	17.4	27.0	49.4	Clay	20091
4.1	1.7	1.1	0.4	0.04	1.0	0.6	11.0	7.2	9.8	11.8	30	22.8	25.4	Gravelly Sandy Clay Loam	20092

Sufficiency factor (1.0=sufficient for average crop) below each nutrient value. N factor based on 200 ppm constant feed. SAR = Sodium adsorption ratio. Half Saturation %=approx field moisture capacity. Nitrogen(N), Potassium(K), Calcium(Ca) and Magnesium(Mg) by sodium chloride extraction. Phosphorus(P) by sodium bicarbonate extraction. Copper(Cu), Zinc(Zn), Manganese(Mn) & Iron(Fe) by DTPA extraction. Sat. ext. method for salinity (ECe as dS/m),Boron (B), Sulfate(SO_4), Sodium(Na). Gravel fraction expressed as percent by weight of oven-dried sample passing a 12mm(1/2 inch) sieve. Particle sizes in millimeters. Organic percentage determined by Walkley-Black or Loss on Ignition.

* LOW , SUFFICIENT , HIGH

UNITED STATES DEPARTMENT OF COMMERCE
National Oceanic and Atmospheric Administration
NATIONAL MARINE FISHERIES SERVICE
Southwest Region
501 West Ocean Boulevard, Suite 4200
Long Beach, California 90802- 4213

November 22, 2004

In Response Refer To:
151422SWR2004SR9191:MEM

Jeffrey Jensen, Office Chief
Office of Biological Sciences and Permits
California Department of Transportation
District 4 – Oakland
111 Grand Avenue
Oakland, California, 94623-0660

Dear Mr. Jensen:

Thank you for your letter of February 24, 2004, requesting initiation of informal section 7 consultation under the Endangered Species Act with the National Marine Fisheries Service (NOAA Fisheries) regarding the proposed improvements to State Route 116 (Stage Gulch Road), in Sonoma County, California. The Federal Highway Administration is the Federal partner for the California Department of Transportation (Caltrans), and will authorize the project.

Caltrans is proposing to widen shoulders to current design standards, and straighten curves for a length of 1.2 kilometers. Existing conditions have been implicated in a high accident rate along this stretch of highway, and the project will improve public safety. Widening will require modifications to existing culverts that convey Champlin Creek under the highway at several locations. A section of road will be relocated out of the riparian corridor, and the riparian habitat will be restored. Retaining walls will be constructed to stabilize and protect oak and riparian woodlands. Although the proposed new alignment has been designed to minimize tree removal, approximately 234 trees will be lost due to the realignment and widening.

NOAA Fisheries provided technical assistance during the design phase, and attended a site review on May 18, 2004. Further review was conducted during a meeting on August 8, 2004, and final project plans were received on November 4, 2004. Measures to avoid and minimize impacts to Champlin Creek, the riparian corridor, and threatened Central California Coast (CCC) steelhead were discussed and adopted by Caltrans for this project. These include limiting work in the creek to the period between June and October, restoring the riparian corridor once the highway section is relocated, and replacement of riparian and oak woodland trees a 5 to 1 ratio.

Champlin Creek is an intermittent stream that drains to Rodgers Creek, then Fowler Creek, then Sonoma Creek, and eventually to San Pablo Bay. Champlin Creek may support threatened CCC steelhead in its lower reaches near the confluence with Rodgers Creek. In the project reach

however, low or nonexistent summer flows, and high summer temperatures act to preclude summer rearing. Naturally occurring barriers may prevent anadromy under all but the highest flows. No records of steelhead occurring in the project reach have been found.

Based on the project description and the best available information, I concur with your determination that this project is not likely to adversely affect threatened CCC steelhead. This concludes consultation in accordance with 50 CFR §402.14(b)(1) for the proposed improvements to State Route 116 (Stage Gulch Road). However, further consultation may be required if (1) new information becomes available indicating that listed species or critical habitat may be adversely affected by the project in a manner not previously considered, (2) current project plans change in a manner that affects listed species or critical habitat, or (3) impact minimization and mitigation measures are not strictly adhered to.

If you have questions concerning this consultation, please contact Maura Eagan Moody at (707) 575-6092, or by email at maura.e.moody@noaa.gov.

Sincerely,

Rodney R. McInnis For
Regional Administrator

cc: James H. Lecky, NOAA Fisheries, Long Beach
Dan Buford, USFWS, Sacramento
R.C. Slovensky, FHWA, Sacramento
Greg Martinelli, CDFG, Yountville

Final Comprehensive Mitigation and Monitoring Plan for On-Site Restoration Activities

Stage Gulch Road Curve Correction and Realignment Project

Caltrans District 04
Sonoma County
Route 116
PM 41.8/44.7
EAs 04-283811 and 04-283821

December 2009

For individuals with sensory disabilities, this document is available in Braille, large print, on audiocassette, or computer disk. To obtain a copy in one of these alternate formats, please call or write to Caltrans, Attn: Christopher States, District Branch Chief, Office of Biological Sciences and Permits, District 4, 111 Grand Avenue, Mail Station 8A, Oakland, California, 94612; (510) 286-7185. Voice, or use the California Relay Service TTY number, (510) 286-4454.

Final Comprehensive Mitigation and Monitoring Plan for On-Site Restoration Activities

Caltrans District 04

Sonoma County, Route 116, EA 04-28380

December 2009

Prepared By: _____ Date: _____

Kirsten Leising, District Biologist
Office of Biological Sciences and Permits
California Department of Transportation, Oakland
(510) 286-5645

Reviewed By: _____ Date: _____

Christopher States, Senior Biologist
Office of Biological Sciences and Permits
California Department of Transportation, Oakland
(510) 286-7185

Approved By: _____ Date: _____

Jeffrey G. Jensen, Office Chief
Office of Biological Sciences and Permits
California Department of Transportation, Oakland
(510) 622-8729

Approved By: _____ Date: _____

Hardeep Takhar, Office Chief
Office of Water Quality
California Department of Transportation, Oakland
(510) 286-7182

Summary

This plan outlines the strategy for on-site mitigation, restoration and enhancement of habitat for impacts to wetland and riparian habitat from the Stage Gulch Road Curve Correction and Realignment Project. A discussion of agency requirements, mitigation design and schedule, success criteria, maintenance activities, monitoring methods, reporting requirements, and proposed contingency measures is included. This plan does not address any off-site mitigation associated with the project.

The Stage Gulch Road Curve Correction and Realignment Project is located in Sonoma County along State Route (SR) 116 between Post Miles 41.8 and 44.7. It is a safety project that includes the widening and realignment of the existing roadway, the relocation of a portion of the roadway in the vicinity of the Sonoma County Transfer Station Road, the replacement of culverts, temporary water diversions and the restoration of a portion of Champlin Creek. The Project is scheduled to begin construction in January 2010 and will last approximately 36 months.

Post Miles 41.8 through 44.7 of SR 116 pass through the Champlin Creek watershed. Champlin Creek is an intermittent drainage that meanders along State Route 116 and passes through a series of five culverts within the Project area. Non-native grassland, valley wildrye grassland, Central Coast arroyo willow riparian forest, Central Coast live oak riparian forest, and coast live oak woodland habitats dominate the Project area, with vineyards, pasture, and limited residential housing also present. Implementation of this Project will result in temporary and permanent impacts to all of these habitats.

The permitting agencies that require mitigation for impacts to habitat from this Project include the California Department of Fish and Game, the San Francisco Bay Regional Water Quality Control Board and the United States Army Corps of Engineers. Additionally, the United States Fish and Wildlife Service has identified terms and conditions to enforce reasonable and prudent measures to minimize and avoid take of federally-listed species in its Biological Opinion. The National Marine Fisheries Service has concurred that the project description, which includes reasonable and prudent measures to minimize and avoid take of listed fish, may affect, but is not likely to adversely affect listed fish. As noted in the USFWS and NOAA Endangered Species Consultation Handbook, “Section 7 requires minimization of the level of take. It is not appropriate to require mitigation for the impacts of incidental take.” Caltrans proposes to implement reasonable and prudent

measures to minimize and avoid take of federally-listed species and meet the habitat mitigation requirements of federal and state agencies for temporary and permanent impacts on-site through the re-alignment of Champlin Creek and restoration of riparian habitat. Caltrans will also mitigate for the impacts to Waters of the U.S. and Waters of the State by purchasing wetland credits at a mitigation bank.

The goal of the proposed mitigation is to restore and replace lost habitat with new habitat having a similar species composition and density. Replacement habitat is expected to provide equivalent or better functional values for wildlife compared to the existing site conditions. Habitat is to be restored and enhanced in a manner that it will establish quickly and be self-sustaining after the 5-year plant establishment period.

Contents

Summary v
Contents vii
List of Figures xi
List of Tables xiii
Abbreviated Terms xv
Chapter 1. Introduction 1
1.1. Roadway Project History 1
1.2. Roadway Project Description 1
Chapter 2. Environmental Setting 5
2.1. Project Location 5
2.2. Physical Conditions 5
2.3. Biotic Habitat Conditions 9
2.3.1. Central Coast Live Oak Riparian Forest 10
2.3.2. Central Coast Arroyo Willow Riparian Forest 11
2.3.3. Coast Live Oak Woodland 11
2.3.4. Non-native Grassland 11
2.3.5. Valley Wildrye Grassland 12
Chapter 3. Mitigation Requirements 13
3.1. Impact Areas 16
3.1.1. Impacts to USACE-, RWQCB-, and CDFG- Jurisdictional Areas 16
3.1.2. CDFG Jurisdictional Areas 17
3.1.3. Special-status Species 18
3.2. Mitigation Measures 18
3.2.1. Goal of Mitigation 18
3.2.2. Mitigation Requirements 19
Chapter 4. On-Site Mitigation Design 23
4.1. Location and Size of Mitigation Sites 23
4.2. Ownership Status 24
4.3. On-Site Restoration of Temporarily Impacted Areas 24
4.4. On-Site Restoration of Permanent Impacts 24
4.4.1. On-Site Restoration of Riparian Habitat 27
4.4.2. Tree Replacement 28
4.4.3. Rock Slope Protection Plantings 28
4.4.4. Channel Restoration and Enhancement 30
4.4.5. RWQCB Jurisdictional Unlined Ditches 30
Chapter 5. Implementation Strategy and Schedule 31
5.1. Schedule 31
5.2. Responsible Parties 32
5.3. Site Preparation 32
5.3.1. Soil Amendments 32

5.3.2. Topsoil and Stream Bedload Material 33
5.3.3. Incorporation of Coarse Woody Debris 33

5.4. Site Design 34
5.4.1. Site 1A 34
5.4.2. Site 1B 34
5.4.3. Site 2 35
5.4.4. Site 3 38
5.4.5. Site 4 39
5.4.6. Site 5 40
5.4.7. Site 6 40

5.5. Planting Plan 41

5.6. Erosion Control 41

5.7. Nature and Source of Propagules 41

5.8. Plant Installation Methods 42

5.9. Natural Recruitment of Native Plants 42

5.10. Plant Protection 42

5.11. Weed Control 43

5.12. Irrigation 44

Chapter 6. Success Criteria, Monitoring Period, and Monitoring Measures 47

6.1. Success Criteria for Riparian Habitat 47

6.2. Success Criteria for the Mitigation of Permanently Impacted Jurisdictional Resources 49
6.2.1. California Department of Fish and Game 49
6.2.2. Regional Water Quality Control Board 50
6.2.3. U.S. Army Corps of Engineers 50

6.3. Success Criteria for the Mitigation of Temporary Impacts 51

Chapter 7. Plant Establishment and Maintenance and Monitoring 53

7.1. Plant Establishment Maintenance Activities 53
7.1.1. Replanting 53
7.1.2. Irrigation 53
7.1.3. Weed Control 54
7.1.4. Plant Protection 54
7.1.5. Natural Recruitment 54

7.2. Monitoring Methods 54
7.2.1. As-Built Plan 55
7.2.2. Woody Plant Species Per Acre 55
7.2.3. Survival 55
7.2.4. Vigor 55
7.2.5. Signs of Reproduction 56
7.2.6. RSP Areas 56
7.2.7. Temporary Impact Areas 56
7.2.8. Trees Damaged During Construction 57
7.2.9. Photographic Documentation 57
7.2.10. Geomorphic Stability and Water Quality 57

7.3. Data Analysis 58
7.4. Maintenance and Monitoring Schedule 58
7.4.1. Maintenance Schedule 58
7.4.2. Monitoring Schedule 58
7.5. Long-term Management 59
Chapter 8. Reporting 61
8.1. As-Built Report 61
8.2. Monitoring Reports 61
8.3. Reporting Schedule 62
8.4. Completion of Mitigation 62
Chapter 9. Potential Contingency Measures
Chapter 10. Document Preparers
Chapter 11. References
Appendix A Project Permitting Compliance Documentation
Appendix A1 USFWS Biological Opinion
Appendix A2 NMFS Informal Consultation
Appendix A3 CDFG Streambed Alteration Agreement
Appendix A4 RWQCB Water Quality Certification
Appendix A5 USACE Nationwide Permit
Appendix B Baseline Soils Report
Appendix C Baseline Biotic Characterization Report
Appendix D Impact Mapping
Appendix D1 Impacts to Potential Waters of the U.S. and State
Appendix D2 Impacts to Potential CDFG Jurisdictional Area Maps
Appendix E Detailed Impact Table
Appendix F Tree Survey Report
Appendix G Burdell Ranch Wetland Mitigation Map
Appendix H Mitigation Design Plans
Appendix H1 Designs Applicable to All Mitigation Sites
Appendix H2 Site 1A Mitigation Design Plans
Appendix H3 Site 1B Mitigation Design Plans
Appendix H4 Site 2 Mitigation Design Plans
Appendix H5 Site 3 Mitigation Design Plans
Appendix H6 Site 4 Mitigation Design Plans
Appendix H7 Site 5 Mitigation Design Plans
Appendix H8 Site 6 Mitigation Design Plans
Appendix I NMFS Correspondence Regarding Fish Passage Requirements
Appendix J Letter Documenting Non-operable Right-of-way
Appendix K Rapid Assessment Forms
Appendix L Initial Geomorphic Assessment
Appendix M Geomorphic Monitoring Plan 1

List of Figures

Figure 1: Project Site Location and Vicinity Map 7

Figure 2: Mitigation Site Map..... 25

List of Tables

Table 1: Culvert Designs. 3

Table 2: Summary of Estimated Riparian Tree Impacts. 18

Table 3: Summary of Proposed Mitigation Measures to Compensate for Temporary Impacts to Jurisdictional Resources. 19

Table 4: Erosion Control Seed Mix for Upland Habitats. 20

Table 5: Erosion Control Seed Mix for Wetland/Riparian Habitats. 21

Table 6: Summary of Proposed Mitigation Measures to Compensate for Permanent Impacts to Jurisdictional Resources. 22

Table 7: Riparian Restoration Species Planting Palette. 27

Table 8: Rock Slope Protection Areas Proposed and Not Proposed for Planting 29

Table 9: On-site Mitigation Schedule 31

Table 10. Noxious Weed Species as Defined by the California Department of Food and Agriculture 43

Table 11: Proposed Agency-Specific Monitoring Periods, Success Criteria, and Monitoring Measures 51

Table 12: Woody Plant Species Per Acre Performance Criteria 55

Table 13: Vigor Criteria 56

Table 14: Monitoring Schedule 59

Abbreviated Terms

BA	Biological Assessment
BMP	Best Management Practices
BO	Biological Opinion
Caltrans	California Department of Transportation
CDFG	California Department of Fish and Game
CRLF	California Red-legged Frog
CCCS	Central California Coastal Steelhead
DBH	diameter at breast height (~4 ft)
ESA	Environmental Sensitive Area
ft	foot/feet
MMP	Mitigation and Monitoring Plan
NMFS	National Marine Fisheries Service
NWP	Nationwide Permit
PM	Post Mile
ROW	Caltrans Right-of-Way
RSP	rock slope protection
RWQCB	Regional Water Quality Control Board (San Francisco Bay Region)
SAA	Streambed Alteration Agreement
SCTSR	Sonoma County Transfer Station Road
SR	State Route
USACE	United States Army Corps of Engineers
USFWS	United States Fish and Wildlife Service
USGS	United States Geological Survey

Chapter 1. Introduction

This plan outlines the strategy that the California Department of Transportation (Caltrans) will use for on-site mitigation measures proposed to compensate for permanent and temporary impacts to jurisdictional resources associated with the Stage Gulch Road Curve Correction and Realignment Project (herein referred to as the Stage Gulch Project, or Roadway Project). The mitigation described below is intended to meet permit requirements associated with the United States Fish and Wildlife Service (USFWS), National Marine Fisheries Service (NMFS), United States Army Corps of Engineers (USACE), San Francisco Bay Regional Water Quality Control Board (RWQCB), and the California Department of Fish and Game (CDFG). Appendix A contains copies of the USFWS Biological Opinion (Appendix A1), the NMFS letter of concurrence (Appendix A2), the CDFG Streambed Alteration Agreement (Appendix A3), the RWQCB Water Quality Certification (Appendix A4) and the USACE Nationwide Permit (Appendix A5).

1.1. Roadway Project History

Within the proposed Project area, the existing alignment and shoulder widths of State Route (SR) 116 do not meet current Caltrans' Highway design standards. Caltrans has determined that this portion of the roadway should be widened and realigned to reduce the possibility of traffic accidents. The proposed Project will enhance the safety of drivers entering and exiting the Sonoma County Transfer Station Road (SCTSR).

1.2. Roadway Project Description

The proposed Roadway Project includes: (1) widening the shoulders along SR 116, (2) correction of non-standard horizontal and vertical curves on SR 116, (3) relocation of the intersection of SR 116 and the SCTSR, and (4) general highway improvements.

Caltrans proposes to widen the roadway to achieve standard lane (12 feet) and shoulder (8 feet) widths. All non-standard horizontal curves will be corrected to a minimum of 850-ft radius to provide sufficient sight distance for a design speed of 50 miles per hour.

The vertical curve on the SCTSR will also be corrected to improve the transition to SR 116. A 1,312-ft section of the highway between Post Mile (PM) 42.9 and PM 43.34 near the SCTSR will be realigned to the east side of Champlin Creek to avoid and minimize effects to the riparian corridor. The realignment of the roadway along this section will also include a left-turn pocket to facilitate access and egress to the SCTSR. To mitigate potential Project-related effects to aquatic species, the proposed Project includes restoration of Champlin Creek along the realigned corridor of SR 116. Where the existing portion of SR 116 is abandoned near the SCTSR, Caltrans will remove the old pavement, roadbed, and two pipes/culverts, and will restore the creek to a more natural condition. Caltrans will also remove the existing culverts under SCTSR and will replace them with two oversized culverts with modified headwalls designed to minimize the permanent impacts and improve habitat conditions within this portion of Champlin Creek.

The proposed Roadway Project will require the replacement or extension of 21 culverts to accommodate highway improvements. Of the 21 culverts, 8 culverts are new (i.e., installation of new culverts will occur in locations where no culverts previously existing), 9 will be replaced (i.e., culvert replacements will occur in locations where culvert upgrades are needed, where existing culverts have failed, or are inadequate), and 4 will be extended (i.e. culvert extensions will occur in locations where the roadway is being realigned and/or shoulders are being widened which would require a longer culvert). Along the new alignment near SCTSR, 2 culverts backfilled with native material will be installed to improve hydraulic flow, reduce erosion, and improve dispersal of aquatic species. Culvert designs were sized using FHWA basic hydraulic design criteria for cross culverts. They were sized to pass the 1% annual change (100-year) storm without over topping the road and to pass the 10% (10-year) annual chance storm with space between the design water surface and the culvert soffit. Two of the culvert designs (28+64 – 28+67 and 53+53 – 53+61) were oversized to accommodate the placement of native materials in the bottom of the culverts to enhance movement of terrestrial and aquatic species. The sizes were determined per the hydraulic analysis conducted for the Project. The design for each of the 21 culverts is provided in Table 1.

Table 1: Culvert Designs.

Upstream Station	Downstream Station	New/ Extend/ Replace	Existing Length (ft)	Proposed Length (ft)	Diameter (in)	Native Backfill?
15.4 m Rt A 10+43	20.5 m Rt A 9+71	Replace	236	236	36	-
8.0 m Lt A 12+48	16 m Rt A 12+40	Extend	46	85	24	-
14.5 m Rt A 13+10	14.5 m Rt A 12+97	Replace	33	44	24	-
9.5 m Rt A 17+30	10.3 m Lt A 17+30	Replace	35	65	18	-
8 m Lt A 22+47	7.9 m Rt A 22+56	Extend	38	61	36 x 24	-
12.63 m Lt A 25+55	21.0 m Rt A 25+55	New	-	108	18	-
14.0 m Lt A 27+19	16.7 m Rt A 27+20	Replace	66	102	48	-
6.5 m Rt A 28+64	7.5 m Lt A 28+67	Replace	52	39	96 x 84	Yes
8.5 m Rt A 29+50	8.0 m Lt A 29+50	Replace	36	56	48	-
7 m Rt A 30+05	12 m Lt A 30+05	New	-	61	42	-
7 m Rt A 30+21.5	10.5 m Lt A 30+21.5	New	-	57	18	-
7 m Rt A 30+38	10.1 m Lt A 30+38	New	-	56	18	-
9.47 m Rt A 31+01	6.0 m Lt A 31+01	New	-	49	18	-
10.68 m Rt A 32+41	6.0 m Lt A 32+41	New	-	52	18	-
7.0 m Lt D 10+47	6.9 m Rt D 10+48	Replace	64	46	96 x 60	-
12.6 m Rt A 36+11.4	9 m Lt A 35+94	Extend	83	91	84	-
5.4 m Lt A 36+20	5.4 m Rt A 36+20	New	-	33	18	-
7.5 m Lt A 41+03	12.7 m Rt A 41+16	Replace	75	80	66	-
6 m Lt A 46+51	8.5 m Rt A 46+64	Replace	37	62	36	-
6.5 m Rt A 53+53	6.5 m Lt A 53+61	Extend	43	52	120 x 60	-
6.5 m Rt A 53+53	6.5 m Lt A 53+61	New	-	52	48	Yes

General highway improvements include the repair of failing road base and pavement. The existing pavement will be removed and new base material with a pavement overlay will be installed. In addition, all metal beam guardrails will be upgraded to meet current standards.

Retaining walls will be built at specific locations to stabilize slopes while minimizing slope disturbance, tree impacts and the need for right-of-way acquisition.

Chapter 2. Environmental Setting

2.1. Project Location

The Stage Gulch Project is in Sonoma County, between PM 41.8 and PM 44.7 between Adobe Road and Arnold Drive (Figure 1). The Project is located within the Petaluma River, Glen Ellen, Sears Point, and Sonoma 7.5-minute United States Geological Survey (USGS) quadrangles (Township 5N, Range 4W and 5W, 38.25598° N / 122.36371° W to 38.25632° N/ 122.35108° W).

2.2. Physical Conditions

The environmental conditions adjacent to the Project area consist mainly of vineyards and grazing pasture. The natural environment of the Project site and the immediately surrounding area has been greatly modified by mixed agricultural practices, past highway construction and highway maintenance. However, Champlin Creek supports substantial riparian vegetation throughout the Project area.

The elevation of the Project area ranges from 43 to 328 feet. The climate in this area is typical of northern California's Mediterranean climate with warm summers and cool wet winters. The average annual air temperature is 58 to 60 degrees Fahrenheit and the average rainfall is 22.0 to 35.0 inches. Brief periods of flooding can occur from December through April.

According to the Sonoma County Soil Survey (SCS 1972), the soils in the vicinity of the proposed Project are dominated by Diablo clay, with some areas of Clear Lake clay, Laniger loam, and Goulding cobbly clay loam. The Diablo clays are located along much of the Champlin Creek corridor through the Project reach, with a portion of the downstream end of the reach mapped as Clear Lake clay. There is a small area at the upstream extent of the Project reach that is mapped as Laniger loam and the uplands to the east are mapped as Goulding cobbly clay loam.

To meet agency requirements and to inform the mitigation design, a baseline soils investigation was completed for the mitigation and reference sites and is discussed in Appendix B. The soils investigation was conducted to evaluate the soils present at the mitigation sites for their suitability for the proposed habitat restoration. The soils were evaluated for the mitigation planting areas and the 2 reference areas that support

the target vegetation to be restored. The results were used to identify any constraints to vegetation establishment and to provide soil amendment/augmentation recommendations to improve soil conditions for the target habitat to be established.

Most of the soil conditions observed in the proposed mitigation planting sites do not exhibit similar characteristics to the reference sites. The reference site soils are in general coarser grained materials that have higher infiltration rates than the heavier clays observed at most of the proposed mitigation sites. Therefore, it is anticipated that the finer textured soils observed at the proposed mitigation sites, which are currently dominated by annual grasses and forbs, may inhibit rooting of the target oak and bay dominated woodlands and limit access to deeper, later-season soil moisture. This may likely result in slower growth and potentially higher mortality than would typically be found in riparian mitigation sites with highly productive soils. Given the limited number of reference samples and the identified differences in soil conditions within the mitigation areas, additional sampling within other reference areas both along the existing Champlin Creek riparian corridor, as well as in the adjacent uplands that support oak woodlands should be conducted. This more in-depth soils investigate should be undertaken with the aid of a backhoe to excavate pits particularly in Site 2 where significant cuts are proposed.

The information gathered during this preliminary soils investigation suggests that soil amendment/augmentation should occur at most of the sites to increase the likelihood of successful target vegetation establishment. Potential amendment/augmentation is described in detail for each site in Appendix B. The amendment/augmentation recommendations generally include incorporating organic matter and gypsum into the soils and potentially importing topsoil in areas with deep cuts, particularly at Site 2. However, these recommendations will not be implemented in areas where the soils will not be disturbed (i.e., native topsoil is left in place) per the recommendations of CDFG. It is anticipated that native mycorrhizae will be present in sufficient levels within the soils. Therefore, mycorrhizae inoculants are not being proposed as a soil amendment. Prior to the final design phase of the Project, preliminary amendment/augmentation recommendations will be developed through the additional sampling described above, to determine what amendments will be incorporated and whether they are intended to improve rooting ability or nutrient availability of the installed plants. Following additional sampling, the actual types, amounts, and methods of amendments for each of the sites can be established based on the specific site needs.

Figure 1: Project Site Location and Vicinity Map

2.3. Biotic Habitat Conditions

Vegetation communities found within the Project vicinity are typical of those found within riparian and upland habitats along the edge of California's central coast range. Vegetation communities identified on site include non-native grassland, valley wildrye grassland, Central Coast arroyo willow riparian forest, Central Coast live oak riparian forest, and coast live oak woodland. Non-native grassland habitat was identified primarily along roadsides and on upland hillsides adjacent to oak woodland. Valley wildrye grassland habitat dominated by native species was found in patches along drainages within the Project area. Central Coast live oak riparian forest was the primary vegetation community associated with Champlin Creek and its tributaries, with small inclusions of Central Coast arroyo willow riparian forest and coast live oak woodland. Coast live oak woodland was also found in patches on the hillsides within the Project area.

To meet agency requirements and to inform the mitigation design, baseline habitat characterization studies of the mitigation sites and reference sites were completed for the Project. These studies included a baseline investigation of the existing vegetation communities and an assessment of existing and potential habitat for CRLF within the proposed mitigation (Appendix C).

In June 2009, H. T. Harvey & Associates and Caltrans conducted a baseline vegetation characterization study to document the existing habitats present at each of the mitigation sites and to guide the selection of appropriate plant species and percent cover targets for the proposed habitat restoration. To determine pre-Project habitat conditions, vegetation communities were mapped at each of the mitigation sites and photographs were taken from permanent photo-documentation points. Two reference locations were chosen with the target habitat to be established. These reference locations were the same reference areas used in the soils investigation. Vegetation communities were mapped at these sites and data on plant species composition and percent cover were collected. Six biotic communities were mapped within these areas including developed, non-native grassland, valley wildrye grassland, Central Coast arroyo willow riparian forest, Central Coast live oak riparian forest, and coast live oak woodland. The percent cover of native woody species within the Central Coast live oak riparian forest and coast live oak woodland reference sites was 100%. Percent cover information by species is provided in Appendix C.

In addition, a habitat assessment for CRLF habitat was conducted to evaluate the Project area for potential CRLF habitat. The baseline characterization report provided in Appendix C provides a report prepared by Rana Resources. The habitat at the proposed stilling basin at the Sonoma County Transfer Station Road and the other mitigation sites within the Project area was examined for potential CRLF habitat. The proposed stilling basin is considered "occupied habitat" due to an historic occurrence at this site. This location provides dense willow riparian cover. All the other mitigation sites within the Project area provide marginal CRLF habitat due to the shallow nature of the pools within the stream and lack of dense riparian vegetation along the channel. Additional details on methods and results of the CRLF habitat assessment are provided in Appendix C.

The baseline habitat conditions were considered when developing the final design and planting plans. The concept was to restore disturbed soil areas with the appropriate native vegetation commensurate with the habitat found adjacent to the Project area. The revegetation planting effort is intended to restore an appropriate habitat community that reflects the species found in each area where disturbance occurs. Based on the tree survey and baseline survey data, species were added to the original list developed in the Conceptual Mitigation and Monitoring Plan which was submitted to the Resource Agencies in April 2009. Species were deleted from the original list if they were not found at the Project site or in the immediate vicinity during the baseline surveys.

The following describes the plant communities present within the mitigation and reference sites. Figures in Appendix C show the location of each of these vegetation communities.

2.3.1. Central Coast Live Oak Riparian Forest

Vegetation throughout the Champlin Creek riparian corridor is characterized as Central Coast live oak riparian forest. The shaded riverine aquatic habitat (riparian plant cover) is present along a significant portion of Champlin Creek both within and outside of the proposed Project area. The dominant riparian species along Champlin Creek are coast live oak (*Quercus agrifolia*), California bay laurel (*Umbellularia californica*), valley oak (*Quercus lobata*), California buckeye (*Aesculus californica*), big-leaf maple (*Acer macrophyllum*), madrone (*Arbutus menziesii*), and California black walnut (*Juglans hindsii*). Understory species that dominate the banks of Champlin Creek include thistle (*Cirsium* sp.), Fuller's teasel (*Dipsacus fullonum*),

fennel (*Foeniculum vulgare*), poison oak (*Toxicodendron diversilobium*), California blackberry (*Rubus ursinus*), Himalayan blackberry (*Rubus discolor*), and curly dock (*Rumex crispus*). Central Coast live oak riparian forest is present within Mitigation Sites 1B, 2, 4, and 5 as shown in Figures 2a-2d in Appendix C.

2.3.2. Central Coast Arroyo Willow Riparian Forest

Pockets of willow riparian habitat are found within the riparian corridor of Champlin Creek within Mitigation Site 3 as shown on Figure 2b of Appendix C. This community type is dominated by dense thickets of arroyo willow (*Salix lasiolepis*). Understory species include California blackberry, Himalayan blackberry, pennyroyal (*Mentha pulegium*), annual beard grass (*Polypogon monspeliensis*), Harding grass (*Phalaris aquatica*), and Santa Barbara sedge (*Carex barbarae*).

2.3.3. Coast Live Oak Woodland

Coast live oak woodland is found in pockets along Champlin Creek and on upland hillsides within the mitigation sites. The most prevalent mature native trees within the coast live oak woodland include coast live oak, valley oak, California bay laurel, and California buckeye. This community type is present within Mitigation Site 2 as shown on Figures 2b in Appendix C.

2.3.4. Non-native Grassland

Non-native grassland habitat is present in areas primarily along roadsides and on upland hillsides. Most of the drainage ditches, which occur along the annual grassland areas, are either unvegetated or are very sparsely vegetated within the channel. Most features are lined with upland vegetation, including thistle, black mustard (*Brassica nigra*), poison hemlock (*Conium maculatum*), fennel, teasel, cut-leaved geranium (*Geranium dissectum)*, and wild oats (*Avena fatua*).

Non-native grassland habitat on site is dominated by non-native annual grasses including slender oat (*Avena barbata*), soft chess (*Bromus hordeaceus*), Medusa-head (*Taeniatherum caput-medusae*), and Italian ryegrass (*Lolium multiflorum*), interspersed with forbs including yellow star thistle (*Centaurea solstitialis*), black mustard (*Brassica nigra*), Italian plumeless thistle (*Carduus pycnocephalus*), hayfield tarweed (*Hemizonia congesta* ssp. *congesta*), and coast tarweed (*Madia sativa*). This community type is present within Mitigation Sites 1A, 2, 3, and 6 as shown in Figures 2a, 2b, and 2e in Appendix C.

2.3.5. Valley Wildrye Grassland

Valley wildrye grassland habitat is dominated by a native grass species, creeping wildrye (*Leymus triticoides*) that is interspersed with small patches of slender oat, ripgut brome (*Bromus diandrus*), field bindweed (*Convolvulus arvensis*), black mustard, Fuller's teasel, Italian plumeless thistle, and wild lettuce (*Lactuca serriola*). This community type is present within Mitigation Site 5, as shown in Figure 2d of Appendix C.

Chapter 3. Mitigation Requirements

The purpose of the proposed mitigation is to compensate for temporary and permanent impacts to habitat pursuant to the following permits:

- California Department of Fish and Game *Streambed Alteration Agreement* received on May 6, 2009 (see Appendix A3).
- California Regional Water Quality Control Board *Water Quality Certification* received May 28, 2009 (see Appendix A4).
- United States Army Corps of Engineers *Nationwide Permit* received on June 2, 2009 (see Appendix A5).

Additionally, the consulting agencies have completed informal and formal consultations to address the proposed Project's effects on endangered species. The proposed project includes reasonable and prudent measures to minimize and avoid take of federally-listed species pursuant to these consultations:

- National Marine Fisheries Service *Informal Consultation Letter of Concurrence.* Received on November 22, 2004. File Number: 151422SWR2004SR9191:MEM (see Appendix A2).
- United States Fish and Wildlife Service *Formal Consultation and Conference* on the Stage Gulch Road (State Route 116) Curve Correction and Realignment Project, Sonoma County, California (HAD-CA 04-Son-116, PM 41.8-44.7, Document #P51361) received on July 12, 2005 (see Appendix A1).

The terms and conditions of the July 12, 2005 Biological Opinion include:

- Caltrans shall minimize the potential for harm, harassment, injury, or killing of the California red-legged frog resulting from Project related activities by implementation of the avoidance and minimization measures as described in the Route 116 Stage Gulch Road Curve Improvement and Realignment Project Initial Study with Proposed Mitigated Negative Declaration; Stage Gulch Road Curve Correction and Realignment Project Natural Environment Study Report; Stage Gulch Road Curve Correction and Realignment Project Biological Assessment for the California Red-legged Frog (*Rana aurora draytonii*); and the Project Description of this Biological Opinion.
- Caltrans shall include Special Provisions that include the avoidance and minimization measures of this biological opinion in the solicitation for bid

information. In addition, Caltrans will educate and inform contractors involved in the project as to the requirements of the Biological Opinion.

- The Caltrans biologist shall have oversight over implementation of all the Terms and Conditions in the biological opinion, and shall have the authority to stop project activities, through communication with the Caltrans Resident Engineer, if any of the requirements associated with these Terms and Conditions are not being fulfilled. If biologist/construction liaison has requested a stop work due to take of any of the listed species the USFWS and the CDFG will be notified within one (1) working day via electronic mail or telephone.
- All construction activity shall be confined within the boundaries of the Project, which may include temporary access roads, haul roads, and staging areas specifically designated and marked for these purposes. At no time shall equipment or personnel be allowed to adversely affect areas outside the Project site without authorization from the USFWS.
- Tightly woven fiber netting or similar material shall be used for erosion control or other purposes at the Stage Gulch Road Project site to ensure that the red-legged frog does not get trapped. This limitation will be communicated to the contractor through use of Special Provisions included in the bid solicitation package.
- Use of pesticides at the proposed project site shall be utilized in such a manner to prevent primary or secondary poisoning of listed species, and the depletion of prey populations on which they depend. All uses of such compounds shall observe label and other restrictions mandated by the U.S. Environmental Protection Agency, California Department of Pesticide Regulation, and other appropriate State and Federal regulations, as well as additional project-related restrictions deemed necessary by the USFWS or the CDFG.
- Project employees shall be directed to exercise caution when commuting within the habitats of the red-legged frog. A 20-mile per hour speed limit will be strongly encouraged on unpaved roads within listed species habitats.
- Cross-country travel by vehicles shall be prohibited, unless authorized by the USFWS.
- Project employees shall be provided with written guidance governing vehicle use, speed limits on unpaved roads, fire prevention, and other hazards.
- The Resident Engineer or their designee shall be responsible for implementing these conservation measures and shall be the point of contact for the proposed Project.

- All grindings and asphaltic-concrete waste shall be stored within previously disturbed areas absent of habitat and as a minimum of 150 feet from any culvert, wash, pond, vernal pool, or stream crossing.
- The Stage Gulch Road Project construction area shall be delineated with high visibility temporary fencing at least four (4) feet in height, flagging, or other barrier to prevent encroachment of construction personnel and equipment onto any sensitive areas during project work activities. Such fencing shall be inspected and maintained daily until completion of the Project. The fencing will be removed only when all construction equipment is removed from the site. Actions within the project area shall be limited to vehicle and equipment operation on existing roads. No Project activities will occur outside the delineated Project construction area.
- Maintenance and construction excavations greater than two (2) feet deep either shall be covered or filled in at the end of each working day. The trench or pit shall be surveyed in the morning and late afternoon hours to ascertain whether the California red-legged frog has fallen into the trench or pit. If a California red-legged frog is discovered trapped in a trench or pit, the animal shall be carefully captured by the Caltrans biologist and released at a secure location, such as the entrance to a ground squirrel burrow, within walking distance and is outside of the construction area. The USFWS shall be notified by telephone and electronic mail within one (1) working day of the incident.
- As described in the Project Description and other documents provided by Caltrans, the permanent effects to red-legged frog habitat will be compensated for at a 3:1 ratio (13.23. acres) and the temporary effects to red-legged frog habitat will be compensated for at a 0.1:1 ratio (0.587) for a total of 13.817 acres. A successful restoration of Champlin Creek will reduce the needed compensation by 4.77 acres, for a total of 9.04 acres of off-site compensation. At least sixty (60) calendar days prior to ground breaking, the Caltrans shall permanently protect 9.04 acres for the California red-legged frog from a USFWS-approved conservation bank or other location approved by the USFWS.
- As described in the Project Description of the Biological Opinion and other documents provide by Caltrans, Caltrans shall complete a USFWS-approved restoration plan for the 4.77 acres of temporarily affected habitat at least six (6) calendar months prior to the date that ground breaking is initiated at the proposed project. The plan shall include restoration and revegetation work associated with temporary effects using native California plant species from on-site or local sources (i.e., local ecotype). Plant materials from non-local sources shall be

allowed only with written authorization from the Service. To the maximum extent practicable (i.e., presence of natural lands), topsoil shall be removed, cached, and returned to the site according to successful restoration protocols. Loss of soil from run-off or erosion shall be prevented with straw bales, straw wattles, or similar means provided they do not entangle, block escape or dispersal routes of listed animal species. The restoration plan shall contain specific quantifiable criteria to evaluate the success of the restoration and include annual reports for a period of at least three growing seasons after the restoration plan is implemented.

- Only a Caltrans biologist who is familiar with the biology and ecology of the California red-legged frog, or a Service-approved biologist will be allowed to trap or capture listed species.
- If requested, during or upon completion of construction activities, the on-site biologist, and/or a representative from Caltrans shall accompany USFWS or CDFG personnel on an on-site inspection of the site to review project effects to the California red-legged frog and its habitat.
- The FHWA shall ensure Caltrans complies with the Reporting Requirements of this biological opinion.

In each of these documents, temporary impacts include all areas that are disturbed during construction, but which will not have any permanent structures placed upon them, will not be further disturbed after construction, and have the potential to be revegetated within the same growing season as construction. Temporarily impacted areas include, but are not limited to embankment and excavation slopes and all other disturbed soil areas that do not support woody vegetation. Permanent impacts include all habitat impacted that will require more than one growing season to revegetate (i.e., areas that support woody vegetation). Construction activities that will result in permanent impacts include placement of rock slope protection (RSP), installation of pavement, shoulder widening, installation of culverts, or access roads required for more than one growing season.

3.1. Impact Areas

3.1.1. Impacts to USACE-, RWQCB-, and CDFG- Jurisdictional Areas

As outlined in the USACE Nationwide Permit Pre-Construction Notification Package (submitted on September 16, 2008), RWQCB Water Quality Certification application

package (submitted on September 15, 2008) and the CDFG Lake and Streambed Alteration Agreement, Caltrans completed impact analyses based on 95% PS&E design drawings. The impacts analyses for the USACE- and RWQCB-jurisdictional areas addressed features verified by the USACE (USACE File no. SPN-2003-282630, which was verified on March 24, 2009). As permitted by USACE, RWQCB and CDFG, the proposed Project will have permanent and temporary impacts to USACE/RWQCB/CDFG habitat. As a result of construction activities, approximately 6,766 sq ft (0.156 ac) of USACE/RWQCB/CDFG jurisdictional waters, 4,794 sq ft (0.111 ac) of USACE/RWQCB jurisdictional wetlands, and 543 sq ft (0.012 ac) of RWQCB jurisdictional ditches will be permanently impacted. These areas are primarily located between existing pavement and the cut/fill design line or where RSP is being installed. Maps showing all anticipated temporary and permanent impacts to USACE-jurisdictional Waters of the U.S. (including wetlands) and RWQCB-jurisdictional Waters of the State are included in Appendix D1. A table summarizing Project impacts to USACE-, RWQCB- and CDFG- jurisdictional areas is provided in Appendix E.

Temporary impacts include approximately 7459 sq ft (0.172 ac) of USACE/RWQCB/CDFG jurisdictional waters, 3880 sq ft (0.089 ac) of USACE/RWQCB jurisdictional wetlands, and 941 sq ft (0.022 ac) of RWQCB jurisdictional ditches. These areas are primarily located within approximately 15 linear feet of the cut/fill design line or where temporary work areas (including temporary equipment staging areas, temporary access roads, etc) have been proposed.

No impacts will occur outside of Caltrans' proposed right-of-way boundary.

3.1.2. CDFG Jurisdictional Areas

Caltrans conducted an impact analysis for all CDFG jurisdictional areas within the Project area based on 100% PS&E design drawings and a tree survey conducted by H. T. Harvey & Associates (Appendix F). Permanent impact areas include the removal of riparian shrubs and trees, installation of culverts and headwalls/wingwalls and any areas that will be converted to permanent structures. Temporary impacts include all disturbances to herbaceous habitat within the bed and banks that will be revegetated. These include work areas necessary for the installation/replacement of culverts, temporary equipment staging areas and temporary access roads. During clearing and grubbing activities, vegetation in areas of temporary impact not within the limits of excavation or embankment construction will be trimmed above ground to

leave the root structures intact to the maximum extent practicable and conforming to Caltrans standards for clearing and grubbing. An estimated total of 142 riparian trees that have a diameter at breast height (DBH) in excess of 4 inches have been identified within the potential impact area of the Project (Table 2). Maps 1 through 6 in Appendix D2 detail the locations of where riparian tree impacts are proposed. Permanent impacts to CDFG-jurisdictional riparian habitat total approximately 1.56 acres.

Table 2: Summary of Estimated Riparian Tree Impacts.

Species	Common Name	Estimated Removal
Aesculus californica	California buckeye	13
*Juglans hindsii**	Black walnut	1
*Prunus sp.**	Plum	2
Quercus agrifolia	Coast live oak	53
Quercus kelloggii	Black oak	7
Quercus lobata	Valley oak	36
Salix laevigata	Red willow	4
Salix lasiolepis	Arroyo willow	8
Umbellularia californica	California bay laurel	8
Estimated Total		142

*Non-native

3.1.3. Special-status Species

Biological Assessments for California red-legged frog (CRLF; *Rana aurora draytonii*) and Central California coastal steelhead (CCCS; *Oncorhynchus mykiss*) were prepared for the Project. A Biological Opinion was issued by USFWS (Appendix A1) and NMFS issued a Letter of Occurrence (Appendix A2). As addressed in these documents, it is expected that there will be permanent impacts to approximately 4.41 acres and temporary impacts to approximately 5.87 acres of CRLF habitat. It was determined that, due to an existing barrier to CCCS downstream of the Project area, that there are no CCCS within the Project area.

3.2. Mitigation Measures

3.2.1. Goal of Mitigation

The goal of this on-site mitigation plan is to detail how Caltrans will compensate for both temporary and permanent impacts to USACE, RWQCB, and CDFG jurisdictional areas and implement reasonable and prudent measures to minimize and avoid take of federally-listed, endangered species resulting from implementation of the Project. The on-site mitigation measures are being proposed to fulfill the

Project's permit requirements. Mitigation requirements that are not met on-site through the implementation of the MMP (Mitigation and Monitoring Plan) will be addressed either through purchase of off-site mitigation bank credits, in the Off-site Tree Replacement Plan, or under the conservation agreement on the Martinelli property. A letter of intent for proof of purchase of mitigation bank credits will be provided in Appendix G in the final MMP. The Off-site Tree Replacement Plan is discussed in Section 3.2.2.3. On-site mitigation for temporary impacts to USACE, RWQCB, and CDFG jurisdictional areas and endangered species habitats will be accomplished through contour grading some areas, erosion control, and revegetation throughout. On-site mitigation for permanent impacts to USACE, RWQCB, and CDFG jurisdictional areas and endangered species habitats will be accomplished through riparian restoration, stream restoration and enhancement, and establishment of vegetation in RSP areas where conditions allow. This mitigation plan only describes the on-site mitigation.

3.2.2. Mitigation Requirements

3.2.2.1. ON-SITE MITIGATION FOR TEMPORARILIY IMPACTED JURISDICITONAL RESOURCES

Temporarily impacted areas are expected to include approximately 5.87 acres of CRLF dispersal habitat, 0.261 acres of USACE/RWQCB/CDFG jurisdictional waters (Waters of the U.S. including wetlands), and 0.022 acres of RWQCB –jurisdictional Waters of the State (ditches). Temporary impacts to CRLF dispersal habitat are proposed to be mitigated with a 0.1:1 mitigation/impact ratio resulting in 0.587 acres of mitigation (Table 3). Temporary impacts to USACE/RWQCB/CDFG jurisdictional waters, RWQCB-jurisdictional Waters of the State, and CDFG-jurisdictional riparian habitat are proposed to be mitigated with a 1:1 mitigation/impact ratio (Table 3) resulting in 0.261acres of USACE/RWQCB/CDFG habitat and 0.022 of RWQCB-jurisdictional Waters of the State habitat.

Table 3: Summary of Proposed Mitigation Measures to Compensate for Temporary Impacts to Jurisdictional Resources.

Habitat/Resource Type	Impact (Type)	Relevant Agencies	Proposed Mitigation Ratio	Proposed On-Site Mitigation Measure(s)
USACE-, RWQCB-, and CDFG-Jurisdictional Waters of the U.S. (Including Wetlands)	0.177 acres Waters + 0.089 acres Wetlands = 0.261 acres (Temporary)	USACE, RWQCB, CDFG	1:1	0.261 acres

Habitat/Resource Type	Impact (Type)	Relevant Agencies	Proposed Mitigation Ratio	Proposed On-Site Mitigation Measure(s)
RWQCB-Jurisdictional Waters of the State (Ditches)	0.022 (Temporary)	RWQCB	1:1	0.022 acres
California red-legged frog dispersal habitat	5.87 acres (Temporary)	USFWS	0.1:1	0.587 acres

All areas temporarily disturbed during construction will be recontoured if appropriate, stabilized with erosion control materials, and revegetated with appropriate native grass, legume, and shrub species commensurate with pre-Project conditions and in accordance with Condition 14 of the USFWS Biological Opinion issued July 12, 2005 (see Appendix A1). Following the completion of construction, all embankment and excavation slopes and other disturbed areas will be hydro-seeded at a rate of 57 lbs/acre. Two different seed mixes were developed to accommodate upland and wetland/riparian habitats on site. Tables 4 and 5 list the species that will be included in these seed mixes. These species lists were developed to reflect the vegetative composition and structure, which currently exists on-site (as determined during the preparation of the Baseline Vegetation Characterization Memo) (Appendix C). Additional details regarding erosion control are provided in Appendix H9.

Table 4: Erosion Control Seed Mix for Upland Habitats.

Scientific Name	Common Name	Pounds Pure Live Seed Per Acre (Slope Measurement)
Artemisia californica	California sagebrush	1.5
Bromus carinatus	California brome	6.0
Elymus glaucus	Blue wild rye	10.0
Eschscholzia californica	California poppy	2.0
Festuca idahoensis	Idaho fescue	8.0
Hordeum brachyantherum californicum	California barley	8.0
Lupinus nanus	Sky lupine	3.0
Nassella cernua	Nodding needlegrass	8.0
Nassella pulchra	Purple needlegrass	12.0
Poa secunda	Native pine bluegrass	4.0
Trifolium wildenovii	Tomcat clover	3.0
Vulpia microstachys	Three weeks fescue	6.0

Table 5: Erosion Control Seed Mix for Wetland/Riparian Habitats.

Scientific Name	Common Name	Pounds Pure Live Seed Per Acre (Slope Measurement)
Carex barbarae	White root sedge	15.0
Carex praegracilis	Slender sedge	12.0
Deschampsia caespitosa	Tufted hairgrass	6.0
Elymus trachycaulus	Slender wheatgrass	12.0
Elymus X *Triticus*	Hybrid sterile wheatgrass	8.0
Hordeum brachyantherum, californicum	California barley	8.0
Leymus triticoides	Creeping wildrye	6.0
Sisyrinchium bellum	Blue eyed grass	8.0

3.2.2.2. ON-SITE MITIGATION FOR PERMANENTLY IMPACTED JURISDICTIONAL RESOURCES

Permanently impacted areas are expected to include approximately 4.41 acres of CRLF dispersal habitat, 0.267 acres of USACE/RWQCB/CDFG jurisdictional waters, 1.56 acres of CDFG-jurisdictional riparian habitat, and 0.012 acres of RWQCB jurisdictional ditches. To mitigate for permanent impacts to CRLF dispersal habitat, approximately 2.712 acres of on-site riparian and stream channel habitat will be restored and enhanced to provide dispersal habitat for CRLF (Table 6). Additional acreage will be mitigated through preservation of CRLF habitat through agreements with USFWS in accordance with Condition 14 of the USFWS issued 12 July 2005. This and all other off-site mitigation is not covered in this plan. A 1.2:1 mitigation/impact ratio is proposed for USACE-, RWQCB-, and CDFG-jurisdictional Waters of the U.S. impacts resulting in 0.32 acres (Table 6). A portion of this requirement will be fulfilled by creating approximately 0.15 acres of Champlin Creek channel restoration and 0.12 acres of enhancement to existing portions of Champlin Creek. Impacts to 0.012 acres of RWQCB-Jurisdictional Waters of the State will be mitigated through the creation of 5,199 linear feet of new jurisdictional ditches (Table 6). Impacts to CDFG jurisdictional riparian habitat will be partially fulfilled by the 2.712 acres of on-site riparian and stream channel habitat restoration and enhancement (Table 6).

Table 6: Summary of Proposed Mitigation Measures to Compensate for Permanent Impacts to Jurisdictional Resources.

Habitat/Resource Type	Impact (Type)	Relevant Agencies	Proposed Mitigation Ratio	Proposed On-Site Mitigation Measure(s)
USACE-, RWQCB-, and CDFG-Jurisdictional Waters of the U.S. (Including Wetlands)	0.156 Waters + 0.111 acres Wetlands = 0.267 acres (Permanent)	USACE, RWQCB, CDFG	1.2:1	0.15 acres (on-site creek restoration) + 0.12 acres (on-site existing creek enhancement)
RWQCB-Jurisdictional Waters of the State (Ditches)	0.012 acres (Permanent)	RWQCB	n/a	5,199 linear feet
CDFG Jurisdictional Riparian Habitat	1.56 acres (Permanent)	CDFG	1.7:1	2.712 acres
California red-legged frog dispersal habitat	4.41 acres (Permanent)	USFWS	*	2.712 acres

* The proposed compensation levels will be discussed with the USFWS.

3.2.2.3. OFF-SITE MITIGATION AND MITIGATION BANK PURCHASES

Off-Site Mitigation

Condition 7 of the CDFG Streambed Alteration Agreement issued May 6, 2009 requires 5:1 replacement of native riparian trees and 1:1 replacement of non-native riparian trees. If the required number of trees cannot be accommodated within the on-site riparian mitigation areas, an Off-Site Tree Replacement Plan will be prepared by Caltrans for submittal to CDFG prior to construction. This Tree Replacement Plan will also address mitigation plantings for impacted upland trees with a DBH in excess of 4 inches. Since this plan only covers on-site mitigation, the tree replacement plan is not covered in this MMP.

Mitigation Bank Purchases

Caltrans is currently investigating the purchase of 0.2 acres of wetland mitigation credits from the Burdell Ranch Wetland Mitigation Bank to compensate for permanent impacts to RWQCB-jurisdictional Waters of the State. The bank is located in Marin County and the service area includes the Project site. The Water Quality Certification is conditioned upon receipt of purchase of mitigation bank credits. Proof of purchase will be provided to the agencies prior to construction. A map of the Burdell Ranch Wetland Mitigation Bank is provided in Appendix G.

Chapter 4. On-Site Mitigation Design

The goal of the proposed on-site mitigation measures is to compensate for permanent and temporary impacts to USACE-, RWQCB-, and CDFG-jurisdictional resources and implement reasonable and prudent measures to minimize and avoid take of federally-listed, endangered species to the maximum extent possible within existing State Right-of-Way. To meet this goal, Caltrans is proposing to restore temporarily impacted jurisdictional resources and to replace lost habitat with new habitat having a similar species composition and density. Revegetation will be done using native plant species that have been identified on site or are known to occur in the Champlin Creek watershed and are appropriate to each proposed restoration site. Habitat is to be restored in such a manner that it will establish quickly and be self-sustaining after the 5-year plant establishment period. Condition 14 of the CDFG Streambed Alteration Agreement issued May 6, 2009 requires that all new culverts enhance fish passage. NMFS correspondence stating that the installation of a low-flow culvert and natural-bottom culverts will suffice is included in Appendix I.

4.1. Location and Size of Mitigation Sites

The locations of the proposed mitigation sites are shown on Figure 2. There are 6 proposed mitigation sites. The mitigation sites are numbered from upstream to downstream on Champlin Creek or its tributaries. Site 1A, the most upstream site is located on the east side of Hwy 116 along an unnamed tributary to Champlin Creek. Site 1B is located on the west side of Hwy 116 within the riparian corridor of Champlin Creek. Site 2, the largest of the mitigation sites, occurs along Champlin Creek and straddles both sides of the creek channel. Site 3 is located along Champlin Creek immediately downstream of the SCTSR access road and straddles both sides of the creek. Site 4 is located on the north side of Hwy 116, within the corridor of Champlin Creek. Site 5 is located downstream along an unnamed tributary to Champlin Creek on both sides of Hwy 116. Site 6 is located on both sides of Hwy 116, along Champlin Creek. A minimum of 0.15 acres of stream restoration and enhancement and 2.712 acres of riparian and upland habitat will be restored on site. The size of the mitigation sites range from 0.005 to 2.300 acres.

4.2. Ownership Status

The proposed mitigation sites are owned by Caltrans or accessible by means of permanent easements by Caltrans and will be designated as non-operable State Right of Way, as discussed in Appendix J. This designation determination was based on concerns of the permitting agency. These areas have been reviewed and determined not to be in conflict with future roadway projects and were therefore, designated as non-operable State Right of Way. As a result these areas are not subject to future roadway improvements and will be preserved in perpetuity. Caltrans expects to retain ownership following mitigation implementation. The letters presented in Appendix J are to serve as a notification to the resource agencies that the compensation will be set aside as non-operational right-of-way. During preparation of the as-built plans immediately following construction, Caltrans will designate the Mitigation Site as "to be protected in perpetuity". However, should a future Caltrans safety project be planned which would unavoidably require impacts to the area, Caltrans will consult with permitting agencies at that time to address those impacts.

4.3. On-Site Restoration of Temporarily Impacted Areas

Following the completion of construction, all embankment and excavation slopes and other disturbed areas will be treated with erosion control materials in combination with hydro-seeding with a native mix of grasses, shrubs, and legumes. Two different seed mixes were developed to accommodate upland and wetland/riparian habitats on site (Tables 4 and 5). Additional details regarding erosion control are provided in Appendix H9.

Existing contours will be returned to their pre-construction condition at the end of Project activities to the extent practicable. In areas with appropriate conditions (high soil moisture, adequate sunlight and appropriate soils) willow stakes will be harvested from nearby populations as needed to enhance the restoration of temporarily impacted areas.

4.4. On-Site Restoration of Permanent Impacts

The following section describes the on-site restoration activities including (1) on-site restoration of 2.712 acres of riparian habitat, (2) replacing native and non-native riparian trees removed during construction that have a DBH greater than 4 inches with native species, (3) rock slope protection plantings, (4) approximately 0.15 acres

Figure 2: Mitigation Site Map

of Champlin Creek channel restoration and enhancement, and (5) installing 5,199 linear feet of new unlined ditches.

4.4.1. On-Site Restoration of Riparian Habitat

Approximately 2.712 acres of riparian habitat will be restored on-site as shown in Figure 2 and Appendix H. These on-site locations have been identified as having appropriate space and field conditions to support the type of woodland habitats as described in the following sections. A letter documenting the restriction of the use of these areas for future roadway construction is included as Appendix J.

Approximately 850 linear feet of riparian habitat along Champlin Creek will be restored and enhanced where the roadway is being realigned. Approximately 1,450 linear feet (lf) of existing roadway will be abandoned, the base and surfacing removed, and the footprint contour graded to provide planting areas. In areas where existing roadway is immediately adjacent to mature tree trunks and the trees' roots could potentially be damaged by removal of base materials, the base will remain in place. The new planting areas created with roadway removal will include benches, at the approximate elevation of the bankfull water surface elevation in Champlin Creek. These benches will enhance planting survival within the riparian area by allowing the plantings to have year-round access to ground water. In addition, the proposed roadway drainage system will drain to a swale that will direct runoff to the bench. Also, a portion of Champlin Creek will be realigned to create sinuosity. Restoration will occur using the locally occurring riparian species listed in Table 7. Final planting plans and typical cross sections within the 65% designs by Mitigation Site are shown in Appendix H to provide additional detail on the restoration approach.

Table 7: Riparian Restoration Species Planting Palette.

Scientific Name	Common Name
*Acer macrophyllum**	Big-leaf maple
*Aesculus californica**	California buckeye
*Arbutus menziesii**	Madrone
Apocynum cannabinum	Dogbane
*Artemisia douglasiana**	Mugwort
*Baccharis pilularis**	Coyote brush
*Heteromeles arbutifolia**	Toyon
*Mimulus aurantiacus**	Sticky monkeyflower
Physocarpus capitatus	Nine bark
*Quercus agrifolia**	Coast live oak
*Quercus kelloggii**	California black oak
*Quercus lobata**	Valley oak

Scientific Name	Common Name
*Rhamnus californica**	Coffee berry
*Rubus ursinus**	California blackberry
*Salix exigua**	Narrow-leaved willow
*Salix laevigata**	Red willow
*Salix lasiolepis**	Arroyo willow
*Symphoricarpos albus laevigatus**	Snowberry
*Umbellularia californica**	California bay laurel

* Species identified within the Project area.

4.4.2. Tree Replacement

An estimated total of 142 riparian trees that have a DBH in excess of 4 inches have been identified within the potential impact area of the Project (Table 2). Native riparian trees will be replaced at a ratio of 5:1 and non-native riparian trees will be replaced at a ratio of 1:1, as required by Condition 7 of the CDFG Streambed Alteration Agreement issued May 6, 2009. Therefore, 710 riparian trees are required to mitigate for the expected tree loss. Trees that later die as a result of excavation or construction activities will be mitigated at the aforementioned ratios. Currently, approximately 420 trees are proposed to be planted within the mitigation sites. If the required number of trees cannot be accommodated within the on-site riparian mitigation areas, an Off-site Tree Replacement Plan will be prepared by Caltrans to accommodate the remaining tree replacement mitigation as described in Section 3.2.2.3. However, this MMP only addresses on-site mitigation. Therefore, the Off-site Tree Replacement Plan will be covered in a separate document.

During clearing and grubbing in areas of temporary impact, vegetatively-propagated species such as willows, not within the limits of excavation or embankment construction, will be trimmed above ground leaving the root portions intact to allow resprouting. Where this is not feasible, and the tree is removed or otherwise irreparably damaged, the tree will be replaced (by the placement of willow stakes).

4.4.3. Rock Slope Protection Plantings

Newly placed RSP will be planted with willow stakes gathered from the state Right-of-Way or other local populations as needed. Three rooted cuttings of red willow *(Salix lasiolepis*) and arroyo willow (*Salix laevigata*) will be placed in a perforated cardboard tube and will be installed according to the plans shown in Appendix H9.

Locations of proposed RSP within riparian corridors will be planted where Caltrans roadway planting setbacks requirements will be met, where a clay layer is not being proposed, and where permanent drainage easements exist. There are several locations

where planting of the RSP areas are not proposed including areas outside of existing riparian corridors (too dry for willows), areas that do not meet Caltrans roadway setback standards, or in areas where roots would damage a proposed clay layer. Table 8 includes the locations of proposed RSP and the areas not being proposed for planting and the specific reason why. Design plans for those areas with proposed RSP are provided in Appendices H2, H6, and H8.

Table 8: Rock Slope Protection Areas Proposed and Not Proposed for Planting

RSP (Drainage System)	Station	Reason Not Proposed for Planting*
1a	9+60	Reason A
2g	12+45	Reason A
3a	12+95	Reason A
4b	17+30	Reason A
5h	19+50	Reason A
7v	25+55	Reason A
10d and 11d	27+18	Reason A
12k	28+65	Planted where possible. Areas that were not proposed for planting: Reason B.
12n	28+65	Reason B
14f	29+50	Reason B
14a	29+50	RSP is only 10 ft wide. Willows adjacent to RSP not proposed due to potential conflict with flows.
15h	30+10	Reasons A & B
18a	31+00	Reasons B
19j	32+40	Reasons B
21b	34+10	Planted where possible. Areas that were not proposed for planting: Reason B.
23r	36+20	Planted where possible. Areas that were not proposed for planting: Reason B.
24d	36+00	Planted where possible. Areas that were not proposed for planting: Reason B
26g	41+10	Planted where possible. Areas that were not proposed for planting: Reason B.
27e	46+65	Reason B
28j	49+80	Reason A
29b	53+60	Reason B
29h	53+60	Planted where possible. Areas that were not proposed for planting: Reason B.

* Reason A: Outside of existing quality riparian corridors; Reason B: Conflicts with the Caltrans Highway Planting and Design Standard minimum setbacks for tree planting.

4.4.4. Channel Restoration and Enhancement

The restoration approach will consist of removing two culverts from the Champlin Creek channel and restoring geomorphic stability in the restored reach by either restoring sinuosity to the channel plan form. Where culverts will be removed, the restoration design includes grading the channel and banks in the vicinity of the culvert removal sites so as to leave a geomorphically stable condition, including the construction of biotechnical toe and bank protection as necessary.

The restoration design includes increasing channel length and sinuosity in two portions of the channel reach, by restoration of a meandering plan form where the channel was likely straightened in the past. The approach includes realignment only where realignment will leave mature oak and bay trees undisturbed. This will stabilize the channel's geomorphology by restoring length and sinuosity, which will create a gentler longitudinal slope and dissipate energy by lateral movement through the restored meanders, rather than by erosion of the streambanks. Rapid assessment forms were completed for Champlin Creek as part of the channel design process. These forms are provided in Appendix K.

4.4.5. RWQCB Jurisdictional Unlined Ditches

Approximately 5,199 linear feet of new unlined ditches will be installed in uplands during Project construction to capture what is currently overland flow. These ditches are shown on drainage plans for the highway Project provided in Appendix H. Specifications language and design details regarding erosion control treatments in these areas are included in Appendix H9.

Chapter 5. Implementation Strategy and Schedule

5.1. Schedule

All habitat restoration, creation, and channel re-alignment activities will be done as part of a follow-up construction contract following the completion of the Stage Gulch Road Curve Correction and Realignment Project. At the completion of construction in any one area, permanent erosion control measures will be applied to disturbed soil areas according to the special provisions to minimize erosion prior to the implementation of the mitigation plan.

A revegetation contract will start prior to June 15, 2011. The contract will cover the implementation of all channel realignment grading work during the summer months, followed by planting in the fall. Fall is the preferred time for planting native plant species because moisture is supplied naturally and the weather is cooler and less stressful for the plants. Fall planting also enables the plants to establish their roots prior to the summer heat and drought.

The mitigation effort will occur in stages, including plant and infrastructure installation, a 5-year plant establishment period, and an overlapping 10-year monitoring period. During the first 5 years, Caltrans will contract out the 5-year plant establishment period to implement plant care and routine maintenance. During, the second 5 year period, Caltrans will continue to provide an Expenditure Account (EA) and fund maintenance, remediation and monitoring activities as necessary to meet the specific mitigation success criteria. The approximate timing of the on-site mitigation activities is presented in Table 9.

Table 9: On-site Mitigation Schedule

Task	Projected Construction Schedule
End Roadway Construction	January 2013
Start Revegetation Contract	Prior to June 15, 2011
Complete on-site channel realignment	September 2012
Complete on-site planting work	November 2012
End 5-Year Plant Establishment Period	November 2017
10-Year Monitoring and Maintenance Period	November 2012 through November 2022

5.2. Responsible Parties

Caltrans will develop final planting plans and special provisions for the mitigation Project and then put the Project out to bid. A landscape contractor will do the revegetation and plant establishment per plan and special provisions, creating as-builts after the installation is complete. The contract will extend over the 5-year plant establishment period, with irrigation and additional regular maintenance performed over the life of the contract. Caltrans will perform all monitoring and reporting as proposed in this plan.

5.3. Site Preparation

The site preparation required for each of the 6 habitat restoration sites will vary considerably between sites (Appendix H). Some sites such as Site 4 and Site 1B are located in areas that already support the existing target riparian habitat and as a result already have appropriate soil and hydrologic conditions for the target habitats. Thus, with the potential exception of ripping to reduce compaction from tree removal activities site preparation should be minimal in these areas. In other areas such as at Site 2, site preparation will be a complex endeavor that involves multiple measures including the removal of existing roadway, grading to lower floodplains, grading to expand and create new stream channel habitat and grading to create depressional areas designed to provide potential wet season CRLF refugia and dispersal habitat areas among many others. Descriptions of general site preparation activities are found below and site specific site preparation activities are described in the Site Design section below.

5.3.1. Soil Amendments

The preliminary soils investigation (Appendix B), although only cursory in nature, revealed that in most cases the mitigation site soils should be amended with organic matter and potentially gypsum to improve soil conditions for the establishment of the target habitats. This will likely involve the incorporation of amendments across most of the sites to a minimum depth of 6 inches. However, it should be noted that the amendment recommendations will not be implemented in sites where the soils will not be disturbed (i.e., native topsoil is left in place) per the recommendations of CDFG. It is anticipated that native mycorrhizae will be present in sufficient levels within the soils. Therefore, mycorrhizae inoculants are not being proposed as a soil amendment. The specific preliminary soil amendment recommendations are provided

for each site in Appendix B. More detailed soil amendments will be developed when the soils are investigated in greater detail as part of the development of the final plans and specifications. The soils analysis will be completed prior to construction to evaluate what amendments will be incorporated and whether they are intended to aid in improving rooting ability or nutrient availability.

5.3.2. Topsoil and Stream Bedload Material

In some locations, primarily at Site 2, there will be cuts as deep as 6 to 10 feet or more. In these cases, subsoils (at a minimum) and potentially weathered bedrock will be exposed with rough grading activities. In these areas topsoil may have to be applied to create soil conditions appropriate to establish the target habitat type. The depth of topsoil applied would likely vary from approximately 12-24 inches depending upon what is exposed by rough grading and the target habitat restoration type. In these locations, the sites would be over-excavated to accommodate the placement of topsoil so the final design grade is achieved following topsoil placement. Topsoil would carefully be applied to minimize compaction and the topsoil may have to be amended as described in section 5.3.1. During excavation activities, topsoil will be stockpiled for use within the mitigation areas. In addition, stream bedload material will be harvested from the areas where the creek will be filled and later utilized during the new creek channel restoration. Topsoil and bedload material will be stockpiled in an approved off-site location. If topsoil is imported, Caltrans will make diligent efforts to obtain weed-free topsoil. However, Caltrans has investigated the possibility of obtaining certified weed-free topsoil and there does not appear to be a certification program which addresses this issue. Additional details regarding topsoil and bedload use at the mitigation sites will be developed with the final plans and specifications.

5.3.3. Incorporation of Coarse Woody Debris

Coarse woody debris harvested from the impacted trees will be incorporated into the riparian mitigation sites to increase the structural complexity of the sites and hasten establishment of high quality riparian habitat. The coarse woody debris will include large (up to 16 feet in length) and complex (multiple trunks and branches) pieces of wood that will be spread out across the sites to the extent feasible. The placement of coarse woody debris will include the partial burial of some pieces of wood to create opportunities for wildlife species to find refuge under and adjacent to the wood, speed the decomposition process, improve long-term soils conditions for the target riparian

habitats and to improve the aesthetics of the restoration sites. Coarse woody debris will be stockpiled in an approved off-site location. A typical design for placement of the woody debris within the riparian habitat is provided in Appendix H4.

5.4. Site Design

Six mitigation sites are proposed for the on-site mitigation. The locations of these sites are provided in Figure 2. The following is a description of the design at each mitigation site.

5.4.1. Site 1A

Mitigation Site 1A is approximately 0.129 acres. Activities in this area will consist of culvert removal and replacement, excavation and placement of rock slope protection planted with willow. The culvert at this location will be replaced with an oversized culvert that will be partially backfilled with native material to simulate a natural channel bottom condition within the culverts. Willows will be planted along the lower floodplain terrace and riparian habitat will be created on the banks and up and over the top of bank. It is recommended that the soils on the lower floodplain terrace be amended with organic matter and gypsum to increase infiltration rates and aid in the establishment of target vegetation. However, this recommendation will not be implemented where the soils will not be disturbed (i.e. native topsoil is left in place) per the recommendations of CDFG. If grading on the banks and/or above the top of bank exposes soils that are nutrient deficient, the appropriate amendments will be incorporated in the soil. Detailed information on the design and planting plan is provided in Appendix H2.

5.4.2. Site 1B

Mitigation Site 1B is approximately 0.005 acres. Activities in this area will consist of culvert removal and replacement, excavation and placement of rock slope protection planted with willow and planting of riparian habitat species. Riparian habitat will be created on the west side of the road where trees are removed from construction activities. No soil amendments are required because the area currently supports existing riparian habitat. However if grading exposes subsoils that are nutrient deficient, the appropriate amendments will be incorporated in the soil. Detailed information on the design and planting plan is provided in Appendix H3.

5.4.3. Site 2

Mitigation at Site 2 includes: the removal of existing roadway and revegetation; creek restoration and enhancement; filling of existing creek and revegetation; establishing riparian benches; grading and reseeding; habitat conservation; and establishment of depressional areas for CRLF refugia and dispersal habitat as shown in Appendix H4. Each of these components of the Site 2 creation and restoration are described in more detail below and detailed designs and planting plans are provided in Appendix H4.

5.4.3.1. EXISTING ROADWAY – REMOVE AND REVEGETATE (2A)

Approximately 0.25 acres of existing roadway will be removed and revegetated. Activities in this area will consist of asphalt removal, roadway subgrade excavation, and revegetation. The Project will remove existing asphalt concrete and, in most of the area, the roadway subgrade, as well. These are generally parts of the site where the presence of trees or limits on grading constructability are such that simply removing the roadway with no further grading will be the best way to maintain existing habitat value while enhancing new planting survivability and community diversity. In addition, in certain areas excavation beneath the roadway would disturb the roots of existing trees because the roots have grown into the roadway subgrade. In these locations, activity will be limited to asphalt concrete removal and surface planting only and will not include roadway subgrade excavation.

It is anticipated that the existing soil beneath the roadway footprint will be compacted and structural fill from previous roadway construction. It is anticipated that the soils below structural fill areas will be similar in texture to the adjacent soils examined in the soils investigation, but may be nutrient deficient and require amendments. Therefore, a soils investigation will occur prior to construction to determine whether the soils need to be ripped to reduce compaction, and whether suitable topsoil needs to be imported or the subsoils amended to provide appropriate conditions for plant establishment. In areas where the trees are not stressed and growing under the road base, soils will simply be decompacted, per the recommendations of CDFG. Riparian habitat will be installed in these areas following soil amendment/augmentation. Detailed information on the design and planting plan is provided in Appendix H4.

5.4.3.2. NEW CREEK (2B)

Approximately 0.15 acres of new creek will be constructed. Activities in this area will consist of removal of existing culverts, excavation, placement of fill, installation of biotechnical bank stabilization, and re-vegetation. Although the restoration reach primarily begins at the upstream daylighted culvert and ends at the downstream

daylighted culvert, some of this work will extend upstream and downstream of the nominal restoration reach in order to allow for a stabilized transition from the undisturbed channel to the restoration reach.

The Project will excavate into the existing channel banks creating re-aligned reaches of the channel in two locations with the same approximate dimensions as the existing channel (Appendix H4). The Project will re-use some of the excavated bank and bedload material to construct low floodplains along the new right bank in the "Existing Creek Filled and Revegetated" areas. The design intention is to achieve geomorphic stability primarily by re-aligning the channel to improve sinuosity and by creating new floodplains and a new low-flow channel. The design approach is to maintain channel stability by preserving the overall thalweg longitudinal slope in Champlin Creek upstream and downstream of the restoration reach.

It is anticipated that, once vegetation and roots have established on the banks, they will be stable enough to resist erosion from normal shear stresses. The design will deploy biotechnical bank stabilization approaches including brush layering and stone toe protection, as shown in the 65% design plans (Appendix H4) Project drainage details, at locations where resistance to erosion will be necessary during the plant establishment period. A typical design of the biotechnical bank stabilization is provided in Appendix H4, Detail DD-2.

5.4.3.3. EXISTING CREEK FILLED AND REVEGETATED (2C)

Approximately 0.06 acres of existing creek will be filled and revegetated. Activities in this area will consist of filling, re-compacting, and re-vegetation. The Project will place native material excavated from the excavation in the "New Channel" area following the design plans and will re-compact this soil to an appropriate compaction for growth of new plants. The Project will amend the soil to be planted, if it is determined necessary to augment the plants rooting ability or aid in reducing or eliminating nutrient deficiencies to enhance planting survivability. Following re-compaction, the newly constructed right bank will be planted with native riparian species.

The designs include construction of new banks at the insides of two meanders. These will be constructed at an elevation approximately 3 inches below bank-full water surface elevation for the respective locations. The design intention is to encourage point bar formation and to create an area of active floodplain. Detailed information on the design and planting plan is provided in Appendix H4.

5.4.3.4. RIPARIAN BENCH (2D)

Approximately 0.33 acres of riparian benches will be created. Activities in these areas will generally consist of asphalt concrete removal, excavation and re-vegetation. These areas along the left bank will be excavated down to the approximate bank full elevation of the nearest reach of channel. The objective of this excavation will be to provide the plants placed in these areas the best possible access to groundwater. Excavation will be bound by maintaining a side slope no steeper than 2:1 and will conform to existing grade at the boundaries of the areas - including against the existing hillside and the drip lines of existing trees to remain.

The Project will also place woody debris within these areas. This will be debris harvested and stockpiled during the clearing and grubbing of the Roadway Project. The woody debris that the Project will place in these areas will be up to 6 to 15 feet length, have a minimum diameter of 8 inches and will be selected for the greatest available complexity in shape and branching (i.e., the more irregular the shape of the pieces and the more branching in each given piece, the better). This material will specifically include main trunks as well as secondary and tertiary branches originating from the trunks. Detailed information on the design and planting plan is provided in Appendix H4. In addition, a typical design of woody debris placement on these riparian benches is provided in Appendix H4.

5.4.3.5. EXISTING CREEK ENHANCEMENT (2E)

Approximately 0.12 acres of existing creek will be enhanced. Activities in this area will consist of providing a shallow low flow guidance channel that follows the centerline of the channel to allow the creek to refine its geometry. This will aid in keeping erosion of recently denuded/reconstructed banks to a minimum during year one (Pers. Comm. K. Vyverberg 2009). Detailed design information is provided in Appendix H4.

5.4.3.6. GRADED AND RE-SEEDED (2F)

Approximately 0.99 acres of Site 2 will be graded and re-seeded. Activity in these areas will consist of grading (excavation/fill), placement of erosion control features and re-seeding. The Project will grade these areas to match the proposed grade as shown in the design sheets (Appendix H4). Following grading, the Project will place Caltrans erosion control, Type B, which largely consists of placing coir erosion control fabric and securing it with wood stakes and placing straw rolls following the contour of the proposed grade at 20 foot slope distance intervals. Along with the erosion control fabric, the Project will re-seed the area by spraying an emulsion of

seeds and tackifier. Riparian habitat restoration will occur within these areas. Detailed information on the design and planting plan is provided in Appendix H4. In addition, the soil in this area will be evaluated in order to determine its ability to successfully support the proposed plantings. Based on the results, the soil will be amended or replaced with suitable topsoil, as necessary, to provide appropriate conditions for plant establishment.

5.4.3.7. EXISTING HABITAT TO REMAIN (2G)

Approximately 0.28 acres of existing habitat will be preserved. Activities in this area will include placement of a temporary ESA fence to discourage entry during construction, non-native species eradication, as necessary, and providing a shallow low flow guidance channel. This channel will follow the centerline of the main channel to allow the creek to refine its geometry. This will aid in keeping erosion of recently denuded/reconstructed banks to a minimum during year one (Pers. Comm. K. Vyverberg 2009). Detailed design information is provided in Appendix H4.

5.4.3.8. CRLF REFUGIA AND DISPERSAL AREAS (2H)

There will be approximately 0.12 acres of CRLF refugia and dispersal habitat restoration on-site. Activity in this area will consist of grading (excavation) depressions, installation of stepped spillways and re-vegetation. The Project will grade these areas to create recessed areas with, in general, 2(H):1(V) side slopes. These depressions will be approximately 0.5 feet deep and will serve as CRLF refugia and dispersal habitat. The new roadway storm drain system will be configured to direct runoff into these areas and will serve as sources of water for the refugia and dispersal areas. Starting the winter after construction, these areas will become ephemerally wet and provide depressions within upland areas with high moisture that can serve as refugia and dispersal habitat. These areas will be drained by spillways that will consist of a series of step pools created with log cross vanes. It is very likely that after excavation these areas may expose harsh soil conditions or bedrock. Therefore, these areas will be overexcavated to allow for placement of a 2-foot layer of topsoil to provide adequate rooting depth for the target vegetation. Detailed information on the design and planting plan including a typical design is provided in Appendix H4.

5.4.4. Site 3

Mitigation Site 3 is approximately 0.070 acres. At this location, two existing poorly configured and clogged corrugated metal pipe culverts and a plunge pool that is lined with stone ranging in size from 1.4 ton up to 2 tons will be removed. The Project will

install retaining walls and a single appropriately-sized reinforced concrete box culvert. The dug-out basin will then be lined with a uniformly thick layer of compacted clay and lined with rip-rap. This will allow for a 3 foot deep pool within the basin. Riparian habitat will be created at the edges of this pool and designed so that, over time, overhanging trees will shade the basin. This will provide branches near the water surface to create desirable conditions for CRLF seeking to avoid predation. Cuttings of woody riparian species will be installed between the stones with native fill material. These cuttings will be installed such that 75-80% of the cutting is in contact with either the underlying soil or the native fill soil between the stones. The soils adjacent to the proposed basin at this site currently support native riparian vegetation and can be expected to provide adequate soil conditions to support the riparian plantings proposed. If grading within the upland area that currently supports grassland habitat exposes soils that are nutrient deficient, they may require amendments. Detailed information on the design and planting plan is provided in Appendix H5.

The stilling basin was designed to protect the culvert where Champlin Creek passes beneath the Dump Station Road from being undermined by scour. The existing scour hole and failed culvert outfall structure are evidence of the significant scour potential at this location. Even after replacement with a more appropriately sized culvert, the flows will, without protection, scour both down into the channel bottom and upstream into the earth beneath the culvert as well as below and behind the retaining wall that will support the reconstructed roadway, eventually exposing enough of the culvert and wall that they will lose structural integrity and collapse.

The energy dissipation function of the stilling basin is also necessary for geomorphic stability. This is because the basin will slow down flow emerging from the culvert before it reaches the unprotected portion of the creek thereby protecting both the culvert and the portions of the creek channel downstream of the culvert.

5.4.5. Site 4

Mitigation Site 4 is approximately 0.022 acres in size. Riparian habitat will be removed at this location to accommodate road widening, culvert extension, and placement of RSP. Riparian habitat will be established in the area where riparian canopy was lost by tree removal. Site 4 includes willow planting in RSP. The site previously supported riparian vegetation making it reasonable to assume that the soils

and hydrology are appropriate for riparian restoration. Detailed information on the planting plan is provided in Appendix H6.

5.4.6. Site 5

Mitigation Site 5 is approximately 0.076 acres in size. At this location, the Project will extend an existing corrugated steel pipe culvert and replace a failed concrete culvert apron. The plunge pool will be replaced with a boulder plunge pool outfall structure that will be planted with willow and other riparian species. Riparian habitat will be created in the areas adjacent to the plunge pools. The soils in these areas currently support riparian habitat and are expected to be appropriate for the proposed plantings. On the west side of Highway 116, riparian habitat will be created along the banks and up and over top of bank. The heavy clay soils in planting areas beyond top of bank may limit root growth of the target vegetation and will exhibit very slow infiltration rates. Therefore, it is recommended that soil amendments including organic matter and gypsum be incorporated into the soils prior to planting. However, this recommendation will not be implemented where the soils are not disturbed (i.e., native topsoil is left in place). Detailed information on the design and planting plan including a typical design is provided in Appendix H7.

The stilling basin was designed to protect the culvert where an unnamed tributary to Champlin Creek passes beneath SR 116 at Station “A”41 +07 from being undermined by scour. The existing scour hole and failed culvert outfall structure is evidence of the significant scour potential. The flows will, without protection, scour both down into channel bottom and upstream into the earth beneath the culvert and the roadway, eventually exposing enough of the culvert and road that they will lose structural integrity and collapse.

The stilling basin will protect the culvert by energy dissipation. It will, in other words, significantly slow down the water coming out of culvert. The stilling basin is also necessary for geomorphic stability because slowing down the flow emerging from the culvert will also protect the creek downstream of the culvert.

5.4.7. Site 6

Mitigation Site 6 is approximately 0.110 acres. Work at this site would consist of the installation of a new culvert in parallel with an existing culvert and the new riparian habitat along the creek in the vicinity of the culvert crossing. The new culvert will be oversized and partially backfilled with native material. The plant species that are

proposed are drought tolerant due to the root constricting layer present, which limits plant available water. The proposed planting of drought tolerant trees and seeding of native grasses, legumes, and shrubs will supplement the sparse existing riparian habitat along this reach of Champlin Creek. Detailed information on the planting plan is provided in Appendix H8.

5.5. Planting Plan

Following site preparation and the addition of soil amendments (as determined from soil investigations), native plantings will be installed at the mitigation site. Table 7 lists the species to be planted at the site. The location of each species will depend upon a number of factors including soil texture, hydrology, and light availability. In addition, to increase the planting density, acorns will be installed between the plantings throughout the mitigation sites. Additionally, if specific local variants of a species are not available, then that species will be substituted with an alternative native species appropriate to the area. Detailed planting plans by mitigation site are provided in Appendix H.

5.6. Erosion Control

All bare ground exposed during construction activities will be hydroseeded with an erosion control seed mix of native grass, shrub, and legume species. Two different seed mixes were developed to accommodate upland and wetland/riparian habitats on site (Tables 4 and 5). Seeding will occur after grading is complete and before the onset of winter rains. Details regarding erosion control are provided in Appendix H9.

5.7. Nature and Source of Propagules

Native plant species that have been identified on site or are known to occur in the Champlin Creek watershed will be used. A mix of plant material will be employed, including seeds (possibly acorns) and container stock. All plant material will be of North Bay County origin and preferably be established from propagules collected from populations growing in similar environments in the Champlin Creek watershed area or immediately adjacent. Details on the planting plan are provided by Mitigation Site in Appendix H.

5.8. Plant Installation Methods

All recommended riparian container plants, to the extent possible, will be installed in fall or early winter when plant survival and growth is optimized. Holes, sufficient to receive root, will be dug for the tree and shrub container plants. Plants will be removed from containers in such a manner that the root ball is not broken and installed immediately after removal from the container. All plants will be installed so that their root crowns are at or slightly above (1.0 in) the soil surface following planting and soil settlement associated with the initial watering. The native soil will be amended and backfilled into the hole and lightly compacted to remove air spaces between the roots and soil.

A 2-foot diameter basin will be constructed around each woody plant or cutting, and the basins will be surrounded by 3-inch high and 6-inch wide berms. Plants will be watered immediately after planting. Typical details on planting methods are provided in Appendix H9.

The recommended willow cuttings will be harvested and installed between January and February. Cuttings shall be reasonably straight and a minimum 24 inches long and ¾ to 1.5-inch in diameter. Cuttings shall be installed perpendicular to the soil surface such that approximately ¾ of the cutting length (~18 inches) is below ground and ¼ (~6 inches) is above ground.

5.9. Natural Recruitment of Native Plants

Native plant species naturally recruiting within the riparian restoration site will be encouraged. Plant establishment crews will be trained to recognize native woody plant species that may naturally recruit at the site to avoid inadvertent removal of these plants during weed control efforts.

5.10. Plant Protection

Browse damage to the riparian plantings from wildlife could be severe if protective measures are not taken. All plantings, with the exception of RSP plantings, will be caged with a wire foliage protector. The protective cages will be constructed of one inch, hexagonal pattern, 20-gage, wire mesh. Each protector will be installed flush to the ground, approximately 4-feet high and 2-feet in diameter, and will be supported by 3/4-inch diameter rebar posts a minimum of 5 feet long. All protective cages will

be installed immediately following planting. A typical design on plant protection is provided in Appendix H9.

5.11. Weed Control

Weeds around individual plant basins in the mitigation site will be controlled by hand pulling and suppressed by placement of wood chip mulch placed around each plant in plant basins. The mulch will be installed to a depth of 3 inches within each plant's basin. In addition, herbaceous vegetation will be controlled throughout the Mitigation Sites through periodic mechanical methods such as line trimming to ensure the height of the herbaceous vegetation is generally kept to a height of 12 inches or less year round.

Following the 10 year monitoring period, Caltrans will perform standard maintenance activities within the ROW associated with the Project's limits (excluding ESAs), which could include the killing and removal of noxious weeds. Noxious weed species shall be as defined by the California Department of Food and Agriculture, and shall include the following:

Table 10. Noxious Weed Species as Defined by the California Department of Food and Agriculture

Botanical Name	Common Name
Arundo donax	Giant reed
Centaurea solstitialis	Yellow star thistle
Chondrilla juncea	Skeletonweed
Cynara cardunculus	Artichoke thistle
Cytisus scoparius	Scotch broom
Dittrichia graveolens	Stinkwort
Foeniculum vulgare	Fennel
Genista monspessulana	French broom
Bulbous canarygrass	Phalaris aquatica
Spartium junceum	Spanish broom
Xanthium spinosum	Spiny cocklebur

Seed pods or seed heads that are present or develop during the course of removal of noxious weeds will be covered with plastic bags, and tightly secured to prevent the dispersal of individual seeds.

After the initial roadside clearing is complete, additional roadside clearing work shall be performed as necessary to maintain the areas, as specified above, in a neat appearance until the acceptance of the contract.

5.12. Irrigation

All plantings will be watered at the time of planting and will receive additional water thereafter during the first 3 years of the 5-year plant establishment period. The water regime will be based on natural rainfall levels and will decrease over the 3-year period. Irrigation details are currently being developed by Caltrans. The potential options being considered include bubbler, drip irrigation, or hand watering. Each potential irrigation system has advantages and disadvantages. Sprinkler irrigation, for example, is the least expensive to install and maintain. However, it promotes weed growth whose required control costs generally exceed the installation and maintenance cost savings. Drip irrigation provides water directly to the plants, which substantially reduces weed control costs and is cheaper to install than a bubbler system. However, it is generally more expensive to maintain and has greater failure rates than a bubbler system. A bubbler system is often the preferred irrigation system for riparian restoration projects. However, because of the slow infiltration rates in the site's soils, the rapid output of water associated with a bubbler system may not be appropriate for this Project. All of these factors are currently being considered by Caltrans as they develop the final design of the irrigation system

Regardless of the irrigation method used, the goal will be to provide the necessary water to successfully establish deep-rooted plants that will quickly be able to survive on their own without supplemental watering. The objective is to wean the plants off of supplemental water while still within the plant establishment period. Doing so will ensure that the plants have adapted to the site and will be self-sustaining thereafter. Compost placed in the soil hole at the time of planting and mulch applied around the base of the plants will help retain moisture between waterings. Two years with reduced or no watering after the first three years of plant establishment and before the end of the 5-year plant establishment period (see Chapter 7) will ensure that the final success criteria reflect the ability of the plantings to persist on their own. The irrigation system will be maintained during the plant establishment period as described in section 7.1.2.

Chapter 6. Success Criteria, Monitoring Period, and Monitoring Measures

To meet the goals of the habitat mitigation effort, specific success criteria and monitoring periods are being proposed. These success criteria, monitoring periods, and monitoring measures are discussed further in the sections below and summarized in Table 11.

6.1. Success Criteria for Riparian Habitat

Caltrans will monitor the riparian plantings for 10 years following the completion of construction, with a success criterion of 70 percent survival of woody species (with the exception of RSP plantings) by the 10th year. Quantitative measures used to evaluate the success of the restoration effort during the monitoring period will include percent survival and density of woody plants. Qualitative measures will consist of vigor, signs of reproduction, and photo documentation of revegetation progress over time. To achieve the success criteria, Caltrans will ensure that the restoration sites are properly maintained as described in Chapter 7. Per the Project's Biological Opinion, riparian habitat restoration is part of the mitigation required for the California red-legged frog. Thus, the riparian habitat success criteria described below applies to the riparian mitigation provided for California red-legged frog.

Success will be achieved when the following conditions are met at the prescribed intervals during the 10-year monitoring period:

At the end of 2 years

- There shall be 70% or greater survival for all individual plantings established within RSP-planted areas.

At the end of 3 years

- There shall be 70% or greater survival of all planted woody species (with the exception of RSP plantings). If at the end of 3 years there is less than the 70% survival, all dead plants shall be replaced.
- No excessive erosion or unanticipated sedimentation is observed that interferes with the function of the habitat restoration or establishment of healthy vegetation.
- Woody plant species density will equal or exceed 430 plants per acre.

At the end of 5 years

- All plantings (with the exception of RSP plantings) must have 70% or greater survival. Any individual planting will not be considered successfully established if 2 or fewer growing seasons have passed from the time of planting and/or the termination of supplemental irrigation.
- There shall be 50% or greater survival for all individual plantings established within RSP-planted areas.
- No excessive erosion or unanticipated sedimentation is observed that interferes with the function of the habitat restoration or establishment of healthy vegetation.
- Woody plant species density will equal or exceed 330 plants per acre.

At the end of year 10

- Woody plant species density will equal or exceed 270 plants per acre.
- A geomorphic assessment of the Champlin Creek restoration will verify that the restoration will result in adaptability of the channel to the dynamic state of Champlin Creek, improvement of the ecosystem, a self-sustaining channel, and that restoration did not further impact the ecosystem.

The following remedial measures will be taken if riparian success criteria are not met:

- At the end of Year 5, if survival is less than 70%, all failed tree and shrub plantings (with the exception of the RSP plantings) on the mitigation site should be replanted with live plantings and monitored an additional 3 years to achieve at least 70% total survival.
- If a particular species suffers 100% mortality at any point during plant establishment, it will be replaced in totality, unless a more appropriate substitution is recommended, and approved by the CDFG based on specific environmental factors of the site conditions.
- If sedimentation increases as discussed in the Geomorphic Stability section (7.2.10) and/or the riparian plant species fail to establish along the bank area, Caltrans will work with the agencies to remediate the problems and stabilize the site.
- If success is not achieved, measures will be developed and discussed with the resource agencies prior to implementation of remedial measures to establish appropriate remedial measures proportionate with the failure.

- Should the on-site mitigation become well-established and meet the identified success criteria prior to the completion of the proposed 10 year monitoring period, Caltrans will consult with the resource agencies to determine if the remainder of the monitoring and reporting period should be waived.

It should be noted that natural catastrophes such as fire, flooding, and land slides that are outside of the control of Caltrans and would otherwise impact existing native habitat shall not be the responsibility of Caltrans. If a natural disaster does occur that prevents Caltrans from meeting any of the success criteria, the resource agencies will be informed.

6.2. Success Criteria for the Mitigation of Permanently Impacted Jurisdictional Resources

By applying the following agency-specific success criteria, monitoring periods, and monitoring measures to the revegetation effort, Caltrans will be in compliance with all existing permits and permits to be obtained prior to construction. However, it should be noted that each agency requires that all elements of the on-site mitigation and monitoring plan, including the success criteria and monitoring metrics be met and carried out to remain in compliance.

6.2.1. California Department of Fish and Game

Caltrans will adhere to the success criteria described above. Quantitative measures used to evaluate the success of the restoration effort during the monitoring period will include survival and woody plant species per acre. Qualitative measures will consist of vigor, signs of reproduction, and photo documentation of revegetation progress over time.

Caltrans will visually inspect one upstream and one downstream area in the Project area following the completion of construction and for two subsequent rainy seasons to monitor the new structures and ensure that they are not causing erosion, which may influence the quality of the riparian habitat.

Caltrans will also perform periodic longitudinal surveys within mitigation reaches as described in Section 7.2.10.

6.2.2. Regional Water Quality Control Board

Specific measures to assist in monitoring the progress of the revegetation effort over time include vigor, signs of reproduction, and photo documentation of revegetation progress over time. Caltrans will also monitor percent survival of woody species and provide photo documentation.

Caltrans will visually inspect one upstream and one downstream area in the Project area following the completion of construction and for two subsequent rainy seasons to monitor the new structures and ensure that they are not causing excessive erosion.

6.2.3. U.S. Army Corps of Engineers

Caltrans will adhere to the success criteria described above. Quantitative measures used to evaluate the success of the restoration effort during the monitoring period will include survival and woody plant species density.

Caltrans will monitor Champlin Creek restoration area through photo-monitoring and geomorphic stability surveys as required by Conditions 2 and 4 of the CDFG Streambed Alteration Agreement and Condition 8a of the USACE Nationwide Permit issued June 2, 2009.

Table 11: Proposed Agency-Specific Monitoring Periods, Success Criteria, and Monitoring Measures

Agency	Restoration Activity	Monitoring Period	Success Criterion	Monitoring Metrics
USACE	Riparian Plantings (with the exception of RSP plantings)	10 Years	70% Survival at 5 years	% Survival
			270 plants per acre at 10 years	Woody Plant Species Density *
				Vigor Signs of reproduction Photo documentation
RWQCB	Riparian Plantings (with the exception of RSP plantings)	10 years		Photo documentation
RWQCB CDFG USACE	Champlin Creek Restoration	10 Years	No evidence of negative effects on water quality	Photo documentation Geomorphic stability
			270 plants per acre at 10 years	Woody Plant Species Density *

* Based upon CDFG's requirement to substitute woody plant density for percent cover.

6.3. Success Criteria for the Mitigation of Temporary Impacts

The establishment of nearly continuous herbaceous vegetation will be established with no more than 30% bare soil areas.

Chapter 7. Plant Establishment and Maintenance and Monitoring

The Contractor will maintain all plantings throughout the 5-year plant establishment period. During the 10-year monitoring period, Caltrans will employ specific monitoring methods to evaluate the success of restoration and creation efforts mitigating permanent impacts to riparian habitat. Maintenance activities and monitoring methods and schedule are described below.

7.1. Plant Establishment Maintenance Activities

All plants will be watered, cleared of debris, protected from herbivory, and otherwise maintained on a regular basis in accordance with the revegetation Project contract Special Provisions during the 5-year plant establishment period. Dead plants will be replaced with the same species unless Caltrans concludes that another species from the species list included in this plan with a better chance of establishing should be substituted.

Plant basins will be mulched to facilitate the retention of soil moisture and reduce encroachment by weeds. Invasive exotic plant species will be controlled to the maximum extent practicable in the planting basins, in accordance with Conservation Measure 14 in the USFWS Biological Opinion (see Appendix A1).

7.1.1. Replanting

During the 5-year plant establishment period, plants that die will be replaced during routine maintenance activities. Plant replacement is typically required during the full duration of the plant establishment period. The target number of trees, along with an additional number of trees, will be planted to account for some mortality. The objective is to keep as many trees alive during the 5-year plant establishment period. This will be accomplished by replacing dead trees and shrubs annually during the 5-year period and modify planting species accordingly if certain species experience greater mortality than anticipated.

7.1.2. Irrigation

The precise method of watering the plants has not yet been established. The potential irrigation options include drip-irrigation, bubbler irrigation or hand watering. The

pros and cons of each system are described in Chapter 5. Caltrans will determine the final design prior to construction. However, if an irrigation system is installed, the system at each site should be regularly maintained during the 5-year plant establishment period. It is possible that the irrigation system will be damaged from vandalism or rodent activity. Any component of the systems deemed non-functioning will be subsequently repaired as part of regular site maintenance.

7.1.3. Weed Control

Weeds within the site will be controlled around each planting basin. Each planting basin should be kept weed free by maintaining the wood chip mulch layer and removing the weeds that become established in the mulch. Weeds in the planting basins should be removed by hand. Weed control activities within the planting basins will occur before seed set. Care will be taken to avoid impacting any native woody species that colonize the gaps between plantings. In addition, herbaceous vegetation will be controlled throughout the mitigation sites through periodic mechanical methods such as line trimming to ensure the height of the herbaceous vegetation is generally kept to a height of 12 inches or less year round.

7.1.4. Plant Protection

Foliage protectors around the riparian plantings, with the exception of the RSP plantings, which will not have protectors, will be regularly maintained during the 5-year establishment period. If a plant outgrows its cage prior to the end of the 5-year period, the plant protection will be removed as soon as possible to ensure that growth is unhindered.

7.1.5. Natural Recruitment

Measures will be taken to protect native woody plant species that have established through natural recruitment. At a minimum, these species will be identified and avoided during weed control activities.

7.2. Monitoring Methods

To comply with all permits and agreements, Caltrans will employ the measures presented in Table 11 to monitor the success of habitat restoration and creation in mitigating permanent impacts to riparian habitat. These measures include plant survival, woody plant species density, vigor, and signs of reproduction.

7.2.1. As-Built Plan

An as-built plan will be developed within 8 weeks following the completion of the riparian mitigation site construction. The as-built plan will include as-built figures and show any significant deviations from the final plans and specifications for the mitigation sites. Deviations that will be documented include changes in the numbers and species of plants installed, change in site size or configuration, and any additional design elements added to the site (i.e., RSP, roadway, retaining walls, etc.). All future analysis of the site will be based on this as-built plan.

7.2.2. Woody Plant Species Per Acre

Permanent transects will be established at the mitigation sites and will be marked with metal t-posts. Density (woody plants per acre) will be determined for all woody shrub and tree species using plant density measures such as random-pairs or point-center quarter (Bonham 1989). The success criteria for this will be based on the sampled plants per acre including both naturally recruited and planted shrub and tree species. The results will be compared to the respective woody plant density performance criteria shown in Table 12 for each monitoring year. Comparisons between monitoring years will be presented in successive monitoring reports.

Table 12: Woody Plant Species Per Acre Performance Criteria

Year 1	Year 3	Year 5	Year 8	Year 10
500	430	330	300	270

7.2.3. Survival

Once all revegetation is complete, as-builts of the planted area will be drafted. Using the as-builts to locate individual plants, all container-grown plants will be evaluated annually to determine if they are alive or dead. The contractor will be required to replace dead plants throughout the plant establishment period.

7.2.4. Vigor

A qualitative assessment of overall plant health and vigor will be recorded for approximately 5% of individual plantings in Years 1, 2, and 3. Individual plants will be randomly selected. The same sample will be evaluated at each monitoring event, with note taken if any individuals are replaced in Years 2 and 3 due to mortality. Characters such as leaf color, number of new leaders, evidence of reproduction, and damage from herbivory, fungal/insect infestation, or other factors will be taken into

consideration. Overall health and vigor will be rated as healthy to thriving, surviving, unhealthy, or dead (Table 13). Vigor will be monitored primarily to determine whether plants are in need of replacement during the 5-year plant establishment period.

Table 13: Vigor Criteria

Vigor/Health Category	Indicators	Score
Healthy to Thriving	Two-thirds or greater of plant in foliage; new buds or new growth; healthy (little evidence of drought stress or disease)	3
Moderately Healthy	One-third to two-thirds of plant in foliage; foliage present is generally healthy	2
Unhealthy	One third or less of plant in foliage during growing season; evidence of severe stress or disease	1
Dead	No live foliage or growth	0

7.2.5. Signs of Reproduction

Signs of reproduction will be recorded on the plantings along the transects in Years 1, 3, 5, 8 and 10.

7.2.6. RSP Areas

Once all revegetation is complete, as-builts of the RSP areas will be drafted. Using the as-builts to locate individual plants, all stakes planted in RSP will be evaluated annually to determine if they are alive or dead. The contractor will be required to replace dead plants throughout the plant establishment period. Individual plantings may not be considered successfully established until two growing seasons have passed from their initial planting, and, individual RSP-planted areas may not be considered successful any sooner than five years from initial planting.

7.2.7. Temporary Impact Areas

A qualitative assessment will be performed to determine whether near continuous herbaceous vegetation has established in the temporary impact areas. The assessment will identify any significant bare soil areas and significant signs of erosion during Years 1, 2, and 3.

All trees that are trimmed during clearing and grubbing activities in temporarily impacted areas, and are assumed capable of resprouting within one growing season, will be monitored. Once construction is complete, these individuals will be mapped on as-built plans. Using the as-builts to locate plants, all individuals will be evaluated

to determine whether they resprouted to pre-construction conditions. If the tree has not resprouted and grown to pre-construction conditions, the tree will be replaced at the ratios described in the Tree Replacement section above.

7.2.8. Trees Damaged During Construction

All residual trees whose canopy extends beyond the ESA fence and are within cut and fill limits will be monitored at Year 5 to make a final determination on impacts. If there is construction related tree mortality prior to Year 5, an arborist will evaluate the cause of death and include this in the annual monitoring report. Once construction is complete, these individuals will be mapped on as-built plans. Using the as-builts to locate plants, health and vigor of those trees will be evaluated to determine whether they were impacted by Project activities. If it is determined that the cause of death is from construction activities, the tree will be replaced using the same ratios employed for trees removed during construction.

7.2.9. Photographic Documentation

Color photographic documentation of the revegetated areas will be conducted at the completion of the initial planting and in Years 1, 3, 5, 8 and 10 of the monitoring period. Permanent photographic stations will be established in the restored riparian habitat. Photographs will also be taken prior to the start of restoration work and upon the completion of construction. These photographs will be sent to CDFG and RWQCB within 5 days of completing the Project.

7.2.10. Geomorphic Stability and Water Quality

Geomorphic elements to be monitored include formation of a functional base-flow channel and sediment continuity through the restored reach. An initial geomorphic assessment was conducted for the Project area and is provided in Appendix L. Pre-construction longitudinal surveys of the flowline of Champlin Creek from 100 feet downstream and 100 feet upstream from culverts within each mitigation site of the restoration area were completed and are provided by Mitigation Site in Appendix H. As requested at the 28 October 2009 interagency meeting, Caltrans will investigate options for collecting data up and downstream from the project limits that is outside of the State ROW. As a separate submittal to the agencies, a slaking test will be undertaken on the tuff layer at Site 6, a general risk analysis will be conducted, and a conceptual plan will be prepared to address future headcuts. Post-construction surveys will be completed for the as-built report and used as a baseline for future

monitoring years. As required by Conditions 2 and 4 of the CDFG Streambed Alteration Agreement issued May 6, 2009 and Condition 8a of the USACE Nationwide Permit issued June 2, 2009, geomorphic processes will be monitored through cross-section and longitudinal profile measurements and photographs in Years 1, 5, and 10, as well as dictated by significant storm events during the monitoring period defined as a rainfall event with an intensity equaling or exceeding the 4% annual probability of exceedance (i.e., the 25-year). These cross-section and longitudinal measurements shall provide information on the channel's adjustment after construction of the Project and performance of the channel design. Channel cross-sections, longitudinal profiles, and photographs conducted over time can be used to evaluate the performance of restoration projects (Harrelson et al. 1994; Kondolf 2000). More details on the methods for monitoring are provided in Appendix M.

7.3. Data Analysis

Annual monitoring results will be compared across years to evaluate revegetation progress. Percent survival of the plants within the planted areas will be calculated for each planted species to determine overall planting success. Survival rates will be based on the original number of plants installed as documented in the as-builts. Woody plant species density will be calculated for all trees and shrubs across all sites combined. Vigor will be averaged for each species in order to inform replacement planting efforts.

7.4. Maintenance and Monitoring Schedule

7.4.1. Maintenance Schedule

Throughout the 5 year plant establishment period, the Contractor will visit the site at least once a month during the growing season (March-October) to assess any major problems with the installation and to perform routine maintenance on the plantings and irrigation system. Plant establishment and routine maintenance activities are described in greater detail in Section 7.1.

7.4.2. Monitoring Schedule

Caltrans will monitor the plantings according to the schedule presented in Table 14. Vegetation monitoring will be completed in Fall. In Year 1 only, however, survival

will be monitored twice, once in early spring and once in early autumn. Survival monitoring will target woody species and assess die-off after the first dry season and provide information in time for replanting before the winter rains arrive to water in new plants. If a rainfall event with an intensity equaling or exceeding the 4% annual probability of exceedance (i.e., 25-year) rainfall intensity occurs geomorphic stability monitoring will occur.

Table 14: Monitoring Schedule

Metric	Year 0	Year 1	Year 3	Year 5	Year 8	Year 10
Riparian Habitat Monitoring						
Survivorship		X	X	X		
Woody Plant Species Density		X	X	X	X	X
Vigor		X	X	X		
Reproductive Signs		X	X	X	X	X
Photo documentation	X	X	X	X	X	X
Champlin Creek Restoration Monitoring						
Geomorphic Stability	X	X		X		X

7.5. Long-term Management

After the initial 5-year plant establishment period has been completed, Caltrans will continue to provide an EA to fund the maintenance and monitoring activities necessary to meet the specific mitigation success criteria. Other typical maintenance activities that may be conducted within the right-of-way by Caltrans Maintenance may include, but not limited to: weed management within the right-of way, maintenance and repair/replacement of drainage facilities to include drainage ditches, repair and/or replacement of damaged right-of-way fences, tree and shrub pruning and limb removal, and repair of storm damage. These activities are described in more detail in the Caltrans storm water quality handbook maintenance staff guide (Caltrans 2003) and are subject to the availability of Maintenance resources.

Chapter 8. Reporting

8.1. As-Built Report

Caltrans will submit an as-built report to the agencies within 8 weeks of Project completion. This report will include as-built figures and describe any significant deviations from the final plans and specifications including changes in the numbers and species of plants installed, changes in the size and configuration of the mitigation sites, and any additional hardscape features. This report will contain the post-construction baseline geomorphic monitoring as-built design drawings, longitudinal profiles, a description of the activities that occurred during construction and a summary of the objectives of the channel design. The as-built report will provide the baseline for future monitoring reports. Photographs of the restoration sites will be provided to the agencies within 5 days of the completion of construction.

8.2. Monitoring Reports

Caltrans will submit monitoring reports in compliance with all permits received from CDFG, RWQCB and USACE and with the Biological Opinion issued by USFWS.

Each of monitoring reports will include, at a minimum, the following information: (a) a description of all monitoring activities performed that year (including dates, names of personnel, locations visited and purpose of each monitoring event); (b) a summary of the data collection methods used during each monitoring event; (c) a summary of the data collected on survival, woody plant species density, vigor, and signs of reproduction as described in Chapter 7; (d) a description of the location, species, and justification for all replacement plantings installed on-site and how they will be monitored for success during the remaining monitored period; (e) a geomorphic stability analysis as described in Chapter 7; (f) photographic documentation of vegetation and geomorphic stability monitoring transects.

If a rainfall event with an intensity equaling or exceeding the 4% annual probability of exceedance (i.e., 25-year) rainfall intensity occurs within the monitoring period, a monitoring report will be prepared and submitted to CDFG, RWQCB, USACE and USFWS for that year. According to the National Oceanic and Atmospheric Administration (NOAA), the 25-year 24-hour storm for the Project area is 4.5 inches.

A detailed geomorphic monitoring plan for Champlin Creek is provided in Appendix M.

8.3. Reporting Schedule

An as-built report will be submitted to the appropriate agencies within 8 weeks of Project completion and pre- and post-restoration construction photographs will be sent to the agencies within 5 days of completion of restoration construction. All annual monitoring reports, including the geomorphic stability monitoring report, will be submitted to the appropriate agencies by January 31 of monitoring years 0, 1, 3, 5, 8 and 10.

8.4. Completion of Mitigation

Following receipt of the final monitoring report Resource Agencies may request to inspect the site with a Caltrans representative to confirm that mitigation requirements have been achieved. It is anticipated that the Project will be considered a success by the Resources Agencies and “signed off” at this time.

Should the on-site mitigation become well-established and meet the identified success criteria prior to the completion of the proposed 10 year monitoring period and final monitoring report, Caltrans will consult with the resource agencies to determine if the remainder of the monitoring and reporting period should be waived.

Chapter 9. Potential Contingency Measures

If any of the final success criteria required by the permitting agencies is not met, Caltrans will undertake additional efforts to meet the criteria. Caltrans will evaluate the causes for not meeting the criteria and, in consultation with the relevant Resource Agencies, develop appropriate remedial measures.

If, after all remedial measures are implemented, it becomes evident that mitigation success cannot be achieved at the on-site locations as proposed in this document, Caltrans will investigate alternative sites or methods for satisfying permit conditions regarding mitigation for impacts to jurisdictional resources and endangered species habitats.

Monitoring and reporting efforts as described in sections 7 and 8 will continue until the final success criteria are met or as determined by the Resource Agencies.

Chapter 10. Document Preparers

Text

Jeffrey Jensen, California Department of Transportation

Christopher States, California Department of Transportation

Kirsten Leising, California Department of Transportation

Mitigation Design Plans

Alex McDonald, California Department of Transportation

Ulysses Hillard, WRECO

Irene Liu, WRECO

Chapter 11. References

Bonham, C. D. 1989. Measurements for Terrestrial Vegetation. John Wiley & Sons, New York, 338 pp.

California Department of Fish and Game (CDFG). 1998. California Salmonid Stream Habitat Restoration Manual. Inland Fisheries Division. 3rd edition. January 1998.

_____. 2009. Email correspondence between Kris Vyverberg, Kirsten Leising (Caltrans) and Ulysses Hillard (WRECO). December 2009.

Caltrans. 2003. Storm water quality handbook maintenance staff guide.

Caltrans. 2004. Stage Gulch road curve correction and realignment project natural environment study report.

Caltrans. 2009. Conceptual mitigation and monitoring plan for onsite restoration activities, Stage Gulch road curve correction and realignment project. April 2009.

CH2M Hill. 2007. Stage Gulch road curve correction and realignment project wetland delineation.

Chin, A., Anderson, S., Collinson, A., Ellis-Sugai, B.J., Haltiner, J.P., Hogervorst, J.B., Kondolf, G.M., O'Hirok, L.S., Purcell, A.H., Riley, A.L., and Wohl, E. 2008. Linking Theory and Practice for Restoration of Step-Pool Streams. Environmental Management, Vol. 43, No. 4.

Kondolf, G.M. 2000. Some Suggested Guidelines for Geomorphic Aspects of Anadramous Salmonid Habitat Restoration Proposals. Restoration Ecology, Vol. 8, No. 1.

Harrelson, C. C., Rawlins, C. L., and Potyondy, J. P. 1994. Stream Channel Reference Sites: An Illustrated Guide to Field Techniques. Gen Tech. Rep. RM-245. Fort Collins, CO: U.S. Department of Agriculture, Forest Service, Rocky Mountain Forest and Range Experiment Station. 61.

National Marine Fisheries Service (NMFS). 2004. Letter of Concurrence of Informal Consultation. File Number 151422SWR2004SR919:MEM. November 22, 2004.

United States Department of Agriculture Soil Conservation Service (SCS). 1972. Sonoma County California Soil Survey.

United States Fish and Wildlife Service (USFWS). 2005. Formal Consultation and Conference on the Stage Gulch Road (State Route 116) Curve Correction and Realignment Project, Sonoma County, California (HAD-CA File # 04-Son-116, PM 41.8-44.7, Document #P51361. July 12, 2005.

Appendix A Project Permitting Compliance Documentation

Appendix A1 USFWS Biological Opinion

Appendix A2 NMFS Informal Consultation

Appendix A3 CDFG Streambed Alteration Agreement

Appendix A4 RWQCB Water Quality Certification

Appendix A5 USACE Nationwide Permit

Appendix B Baseline Soils Report

Appendix C Baseline Biotic Characterization Report

Appendix D Impact Mapping

Appendix D1 Impacts to Potential Waters of the U.S. and Waters of the State Maps

Appendix D2 Impacts to Potential CDFG Jurisdictional Area Maps

Appendix E Detailed Impact Table

Appendix F Tree Survey Report

Appendix G Burdell Ranch Wetland Mitigation Map

Appendix H Mitigation Design Plans

Appendix H1 Designs Applicable to All Mitigation Sites

Appendix H2 Site 1A Mitigation Design Plans

Appendix H3 Site 1B Mitigation Design Plans

Appendix H4 Site 2 Mitigation Design Plans

Appendix H5 Site 3 Mitigation Design Plans

Appendix H6 Site 4 Mitigation Design Plans

Appendix H7 Site 5 Mitigation Design Plans

Appendix H8 Site 6 Mitigation Design Plans

Appendix I NMFS Correspondence Regarding Fish Passage Requirements

Appendix J Letter Documenting Non-operable Right-of-way

Appendix K Rapid Assessment Forms

Appendix L Initial Geomorphic Assessment

Appendix M Geomorphic Monitoring Plan

N:\Projects\2855-01\Reports\MMP

H. T. HARVEY & ASSOCIATES
ECOLOGICAL CONSULTANTS

Figure 2: Mitigation Sites Map

Stage Gulch Road Curve Correction and Realignment Project Mitigation and Monitoring Report (2855-01)
July 2009

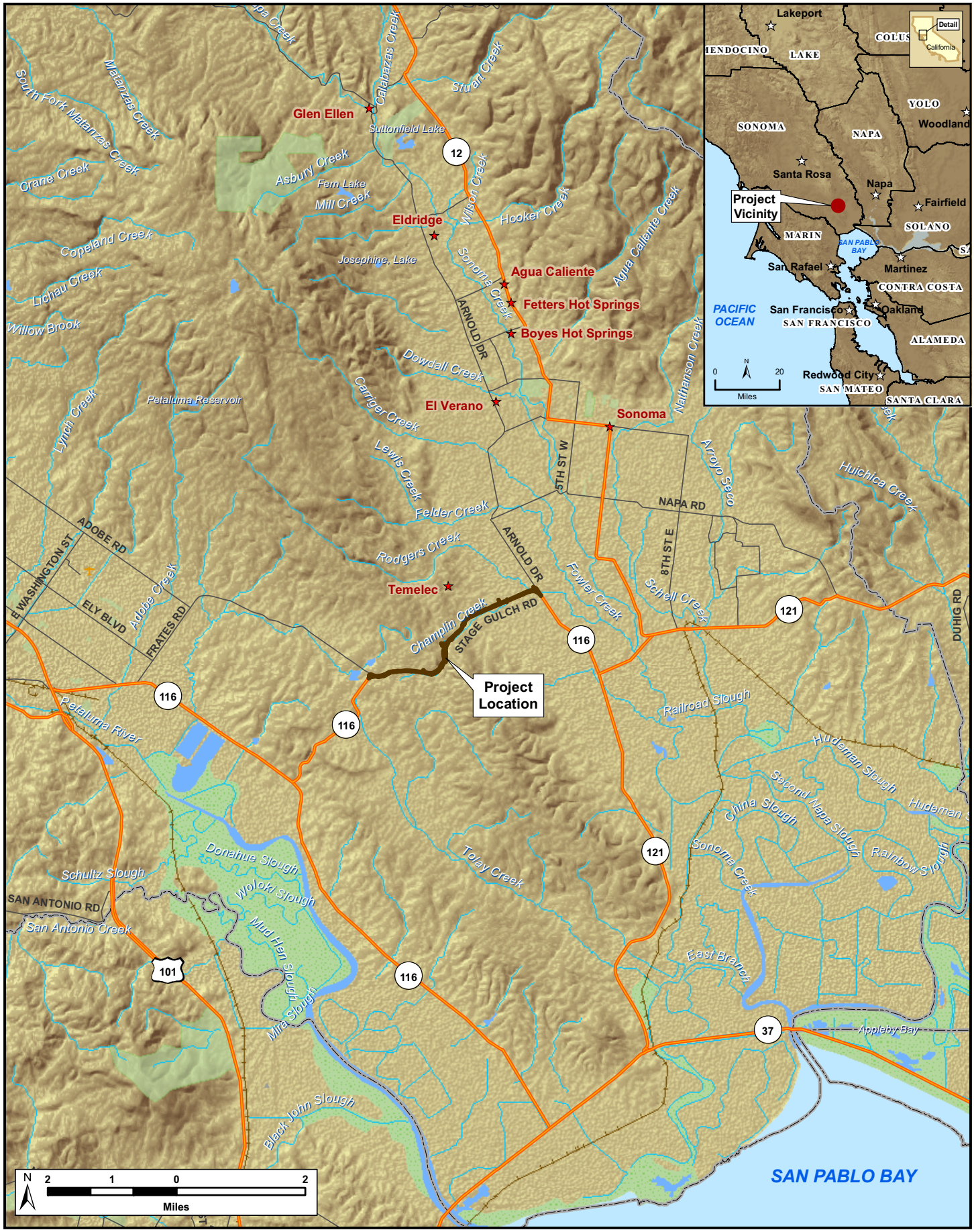

N:\Projects\2855-01\Reports\MMP

H. T. HARVEY & ASSOCIATES
ECOLOGICAL CONSULTANTS

Figure 1: Vicinity Map
Stage Gulch Road Curve Correction and Realignment Project
Mitigation and Monitoring Report (2855-01)
July 2009

Geomorphic Monitoring Plan for Champlin Creek

INTRODUCTION

Monitoring of river restoration projects is critical for early identification of excessive scour, deposition, lateral migration, or other channel adjustments in the project area and allows managers to make adjustments to the project to improve performance. Monitoring is also an important tool to advance the understanding of river restoration techniques and improve performance of future restoration projects. The geomorphic processes to be monitored in Champlin Creek include formation of a functional base-flow channel and sediment continuity through the restored reach. Stable channels typically achieve a dynamic equilibrium that balances discharge, sediment load, channel bed material, and channel geometry and slope. When in a dynamic equilibrium, a channel can still erode, deposit, and migrate while maintaining long term channel stability within natural or imposed lateral boundaries.

This monitoring plan for the restored section of Champlin Creek was developed to evaluate the completed project with respect to general success criteria for river restoration projects recommended by Palmer et al. (2005). Using the monitoring approaches described in the following sections of this plan, the Champlin Creek project will be evaluated for its:

- Adaptability to the dynamic characteristics of Champlin Creek;
- Overall improvement of the river corridor ecosystem;
- Ability to support a self-sustaining channel;
- Minimization of impacts on the river corridor ecosystem upstream and downstream of the project area.

Assessment of the criteria listed above shall be based on comparison of the project performance with the design objectives. In addition to the general success criteria indentified above, channel performance shall be compared with the key objectives and design elements of the project. Key objectives for the channel design include:

- Maintenance of a dynamically stable channel;
- Protection of the Stage Gulch Road alignment;
- Creation of a floodplain;
- Use of natural materials during channel construction, flood protection, and enhancement of the riparian buffer along the creek.

The objective of the design for the restored section of Champlin Creek is not to completely fix the channel in place, but rather to establish conditions that support development of a channel in dynamic equilibrium such that the channel is allowed to scour and deposit sediment, but does not excessively erode the channel banks or degrade or incise the channel bed. A channel in this condition maintains sediment continuity between the downstream and upstream reaches and provides complex habitat. A dynamically stable channel also minimizes bed and bank erosion and sediment aggradation over the long term. Examples of excessive channel migration include lateral or vertical undermining of in-channel structures, slumping of bank material into the channel, a change in bank slope from the toe of the floodplain to the next higher surface or the

top of bank (i.e. a change in slope from 1:3 to 1:2 due to bank erosion), and systematic bed scour or deposition. Scour of the channel that is greater than 1 foot and is sustained over numerous geomorphic units may be indicative of a reach-wide adjustment to the channel slope. However, cyclical scour and deposition of pools should be expected during high flows.

Adaptive management, such as installation of additional grade control structures or step pools complexes, may be required if scour were to extend from a pool to the riffle/run/cascade upstream and downstream of the pool. Signals for adaptive management of channel banks include migration towards the toe of the slope supporting Stage Gulch Road, erosion of the outside bank of a bend without establishment of a point bar on the inside bank, and erosion of the floodplain surface without deposition of material on the opposite bank. The channel design includes a low-flow channel that is expected to migrate across the floodplain bench. If the channel erodes the floodplain, or if channel migration begins to destabilize the toe of the bank at the base of the floodplain, bioengineering or other armoring of the channel banks may be required.

MONITORING PLAN DESCRIPTION

This monitoring plan is designed to identify the occurrence of the important changes described above and to inform development of adaptive management actions necessary to maintain the restored conditions of Champlin Creek in the project area. Monitoring and assessment during the first ten years after construction is expected to be sufficient to identify any problems likely to develop in response to natural processes as the newly constructed system reaches equilibrium. Monitoring of Champlin Creek shall be conducted post-construction and 1, 5, and 10 years after construction, as well as after significant storm events during the monitoring period. For the purposes of this monitoring program, a significant storm event is defined as a rainfall event with an intensity equaling or exceeding the 4% annual probability of exceedance (i.e. the 25-year recurrence interval). According to the National Oceanic and Atmospheric Administration (NOAA) Precipitation-Frequency Atlas of the Western United States Volume XI—California (Miller et al., 1973), the 25-year 24-hour storm for the project area is 4.5 inches. The closest real-time precipitation gage is the Petaluma River at D Street Bridge gage located in the City of Petaluma, 7 miles from the study site. This gage is operated by the City of Petaluma and is accessible online at http://cdec.water.ca.gov/cgi-progs/staMeta?station_id=PTB.

Geomorphic processes in Champlin Creek shall be monitored through cross-section and longitudinal profile measurements and photographs. Channel cross-sections, longitudinal profiles, and photographs conducted over time can be used to evaluate the performance of restoration projects (Harrelson et al. 1994; Kondolf 2000). The cross-section and longitudinal profile surveys on Champlin Creek will provide quantitative information on channel adjustment after construction of the project and performance of the channel design. Methods for geomorphic monitoring of Champlin Creek are discussed below.

Geomorphology Monitoring Methods

Changes to the constructed channel resulting from geomorphic processes are detectable through periodic documentation of channel features at established, permanent field locations. The

methods for documenting channel change include cross-sections, longitudinal profiles, field observations, and photographs. A time series of channel cross-sections and field observations taken in the same locations can be used to quantify and document the following geomorphic processes:

- Incision
- Aggradation
- Channel migration
- Creation or abandonment of high flow or backwater channels
- Point bar formation
- Bank erosion
- Surface and floodplain development (deposition) or scour

A time series of longitudinal profiles and field observations can be used to quantify and document the following geomorphic processes:

- Incision
- Aggradation
- Pool scour or deposition
- Upstream or downstream migration of knick points
- Bedrock outcrops or channel controlling structures such as weirs, bridge abutments, and flood control infrastructure

Cross-sections

The Project reach shall be divided into sub-reaches based on geomorphic attributes of the channel such as channel slope, form, sinuosity, bank material, and bed material. Based on the proposed design drawings at least four sub-reaches shall be delineated. At least one cross-section shall be surveyed in each sub-reach. Standard cross-section survey procedures shall be followed as documented in Harrelson et al. (1994). Cross-sections shall be surveyed with an auto level, stadia rod, and survey tape stretched between rebar endpins, or with a total station. Permanent monitoring endpins shall be established to facilitate future data collection in consistent locations. Each end pin shall consist of a rebar stake driven into the ground, or a concrete monument on each side of the channel. Monitoring cross-sections shall be orientated perpendicular to the flow. A survey quality Global Positioning System (GPS) or total station referenced to a known benchmark shall be used to record the x, y, and z coordinates of each end pin or monument when first placed. If a rebar pin or monument is removed by vandalism, inadvertently removed or disturbed, or altered during maintenance operations, the pin must be reset at the same location by either of the methods given for placement of the original placement.

Monitoring cross-sections shall be surveyed with station zero on the left bank (looking downstream). Elevations shall be recorded along the cross-section at breaks in slope and at significant geomorphic features (i.e. features that potentially could affect the channel form through scour, deposition, or by altering the flow path).

To assess changes in channel configuration, newly collected cross-section data shall be

compared with historical cross-section data. Pre-construction and post-construction cross-sections shall be obtained from an as-built survey, or if no as-built survey is available, from final design drawings. Each cross-section (historical and post-construction) shall be fitted to a common axis and plotted to facilitate a visual comparison.

Longitudinal Profile

A longitudinal profile shall be surveyed from 100 ft downstream of the downstream end of the project area to 100 ft upstream of the upstream end of the project area. Survey procedures documented in Harrelson et al. (1994) shall be followed to develop a longitudinal profile for the project area. A longitudinal profile is a survey of the deepest part of the channel (i.e. the thalweg) along the longitudinal flow path traversed by the channel. Longitudinal slope and hydraulic and sediment transport control features can be identified and quantified using the longitudinal profile survey. Survey points shall be collected at visible changes in channel morphology units, such as riffles, cascades, steps, pools, and runs or breaks in slope. The longitudinal survey shall be conducted with a total station or auto level referenced to a known benchmark. If an auto level is used for the survey, a survey tape shall be stretched along the channel thalweg to determine stationing. Each longitudinal profile survey shall begin at a stable, easily re-occupied location, such as a bridge footing or grade control structure, and shall include similar spacing between survey points to allow comparison of profiles. In addition, areas with significant bank erosion, scour, or deposition shall be documented during the longitudinal profile survey. The station and dimensions of observed erosion, scour, or deposition shall be recorded and each location shall be documented with digital photographs.

Photographic Monitoring Stations

Digital photographs shall be taken in the field to document channel conditions during each monitoring inspection. Permanent photographic monitoring stations shall be established at each of the monumented monitoring cross-sections. Photographs shall be taken at both cross-section end pins and from the thalweg of the channel to capture the channel banks and views looking upstream and downstream. Photographs shall also be taken of the channel during the longitudinal profile survey and referenced to geographic coordinates or a channel station on the longitudinal profile that can be replicated during subsequent monitoring surveys. Photographs shall also be taken of bank erosion, scour, and deposition and referenced to geographic coordinates or a channel station and delineated on an aerial base map of the project reach.

Monitoring Reports

Monitoring reports shall be produced after field data collocation and analysis. Additionally, if a rainfall event with an intensity equaling or exceeding the 4% annual probability of exceedance (i.e., 25-year) rainfall intensity occurs during the monitoring period, monitoring shall be conducted and a monitoring report completed. A baseline report should be completed after construction that includes the as-built design drawings, survey of the longitudinal profile, a description of the activities that occurred during construction, and a summary of the objectives of the channel design. Monitoring reports shall contain the following information: purpose of the report, review of the design goals of the project, summary of the methods used for geomorphic monitoring, presentation of the results from the data collected in the field, summary of field observations, and recommendations for future monitoring events. Cross-

sections and longitudinal profiles shall be plotted on a common axis so that changes can easily be identified. Monitoring reports shall include an appendix that contains photographs from each of the permanent photo monitoring stations with captions describing the location and direction of view of each photograph. A separate appendix shall include the x, y, and z coordinates or station and elevation for each cross-section and longitudinal profile.

Geomorphology Monitoring Schedule

Regionally, the Champlin Creek project area experiences a Mediterranean climate, characterized by warm summers and mild, wet winters. Monitoring activities shall be conducted during the summer months from June to August when little to no water is in the channel. Monitoring reports shall be completed each monitoring year and shall be distributed to the appropriate agencies. Baseline monitoring shall be conducted post-construction and periodic monitoring shall be conducted 1, 5, and 10 years post-construction. In addition, if a rainfall with an intensity equaling or exceeding the 4% annual probability of exceedance occurs in years 2, 3, 4, 6, 7, 8, or 9, additional geomorphic monitoring shall be conducted and an additional geomorphic monitoring report shall be completed. In order to know of such events, the records of the Petaluma River at D Street gage will be examined in May of each of these years in order to determine if the 24-hour rain depth recorded by the gage has exceeded 4.5 inches at any time in the previous twelve months.

Success Criteria

A baseline geomorphic assessment of the project reach concluded that the creek is actively adjusting in response to a legacy of human alterations to the regional and local landscape (CH2M HILL 2008, Dawson 2009). The channel appears to be actively eroding along the majority of the project reach. It is likely that the historical channel was realigned and straightened as part of the original installation of State Route 116. Analysis of historical maps shows that the channel sinuosity has decreased (Dawson 2009). Other potential sources of instability include historical changes in land cover and land use in the watershed, including the construction of two reservoirs upstream of the project reach. The evidence for active channel adjustment is manifested in vertical, raw, and sometimes undercut banks, mass wasting on steeper channel banks as a result of the removal of bank toe material, and channel incision and aggradation (CH2M HILL 2008a). Given this assessment of the pre-construction condition of the project reach, success of the channel restoration will be influenced by the dynamic nature of the system. Therefore, post-project performance monitoring should be performed by a fluvial geomorphologist with experience evaluating channel change in dynamic river systems. As a result, specific success criteria such as changes beyond identified thresholds in bed form or cross- section are not applicable.

References

CH2M HILL. 2008. Champlin Creek Geomorphic Assessment. Technical Memorandum. August.

Dawson, A. 2009. Historical Alignment Study of Champlin Creek for the Stage Gulch Road Curve Improvement and Realignment Project. Sonoma Ecology Center. September

Kondolf, G.M. 2000. Some Suggested Guidelines for Geomorphic Aspects of Anadromous

Salmonid Habitat Restoration Proposals. Restoration Ecology, Vol. 8, No. 1.

Harrelson, C. C., Rawlins, C. L., and Potyondy, J. P. 1994. Stream Channel Reference Sites: An Illustrated Guide to Field Techniques. Gen Tech. Rep. RM-245. Fort Collins, CO: U.S. Department of Agriculture, Forest Service, Rocky Mountain Forest and Range Experiment Station. 61.

Miller J.F., R.H. Fredrick, and R.J. Tracey. 1973. Precipitation-Frequency Atlas of the Western United States Volume XI—California. National Oceanic and Atmospheric Administration, US Department of Commerce. Silver Spring, MD.

Palmer, M.A., E.S. Bernhardt, J.D. Allan, P.S. Lake, G. Alexander, S. Brooks, J. Carr, S. Clayton, C.N. Dahm, J. Follstad Shah, D.L. Galat, S. Loss, P. Goodwin, D.D. Hart, B. Hassett, R. Jenkinson, G.M. Kondolf, R. Leave, J.L. Meyer, T.K. O'Donnell, L. Pagano, and E. Sudduth. 2005. Standards for ecologically successful river restoration. Journal of Applied Ecology, 42, 208-217.

6) Storm Water Information Handout, Contract 04-283821, 04-Son-116-PM 41.8/44.7, Mitigation - Tree Planting and Creek Channelization.

STORM WATER INFORMATION HANDOUT

CONTRACT NO. 04-283824

04-Sonoma-116-PM 41.8/44.7

MITIGATION - TREE PLANTING AND CREEK CHANNELIZATION

To Contractor

California Department of Transportation
District 4
Water Quality Program
111 Grand Avenue
Oakland, California 94612

Disclaimer

A “Disclaimer” is required specifying that the information provided in the Storm Water Information Handout is just a guideline and is to be used for information purposes only and should not be considered a sole source document to adhere to the requirements of the new National Pollutant Discharge Elimination System (NPDES) Construction General Permit (CGP), Number CAS000002, adopted on September 2, 2009. The contractor is required to provide water quality monitoring, sampling and implement best management practices (BMPs) based on standard industry operations, field conditions and conditions encountered based on the contractor’s means and methods. The information in this handout is not to be construed in any way as a waiver of the provisions in the CGP. Bidders and contractors are cautioned to make independent investigations and examinations as they deem necessary to satisfy the conditions encountered in performance of work, with respect to the following: sampling and monitoring locations, distribution of watershed areas for sizing of BMPs, and selection of BMPs in order to conform to the requirement of the contract documents and the CGP.

PROJECT VICINITY

Dist	COUNTY	ROUTE	POST MILES TOTAL PROJECT	SHEET No.	TOTAL SHEETS
04	Son	116	41.8/44.7	1	40

INDEX OF PLANS

SHEET No.	DESCRIPTION
1	TITLE AND LOCATION MAP
2-4	TYPICAL CROSS SECTION
5	LAYOUT
6-7	PROFILE
8-15	CONSTRUCTION DETAILS
16	TEMPORARY WATER POLLUTION CONTROL PLAN
17	TEMPORARY WATER POLLUTION CONTROL DETAILS
18-19	CONTOUR GRADING
20	DRAINAGE PLAN
21	DRAINAGE PROFILES
22-27	DRAINAGE DETAILS
28-29	DRAINAGE QUANTITIES
30-37	UTILITY PLAN
38	CONSTRUCTION AREA SIGNS
39-40	SUMMARY OF QUANTITIES
41-	REVISED AND NEW STANDARD PLANS

THE STANDARD PLANS LIST APPLICABLE TO THIS CONTRACT IS INCLUDED IN THE NOTICE TO BIDDERS AND SPECIAL PROVISIONS BOOK.

STATE OF CALIFORNIA

DEPARTMENT OF TRANSPORTATION

PROJECT PLANS FOR CONSTRUCTION ON

STATE HIGHWAY

IN SONOMA COUNTY
NEAR SCHELLVILLE
AT
VARIOUS LOCATIONS
FROM ADOBE ROAD TO 0.4 MILE WEST OF ARNOLD DRIVE

TO BE SUPPLEMENTED BY STANDARD PLANS DATED MAY 2006

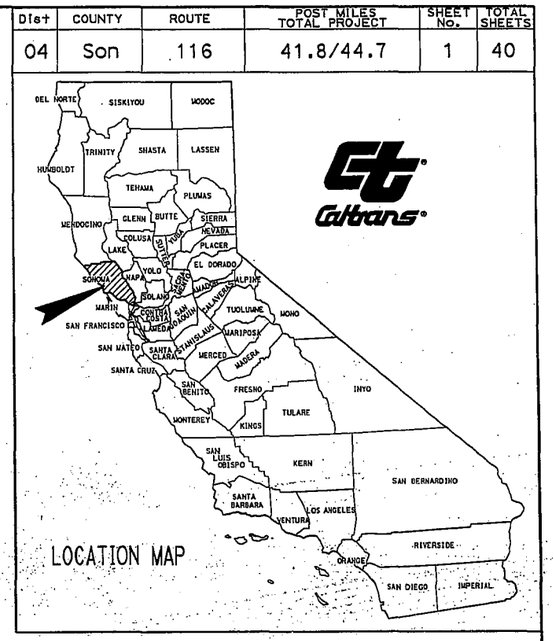

BEGIN CONSTRUCTION
STA A 10+00 PM 41.8

END CONSTRUCTION
STA A 175+00 PM 44.7

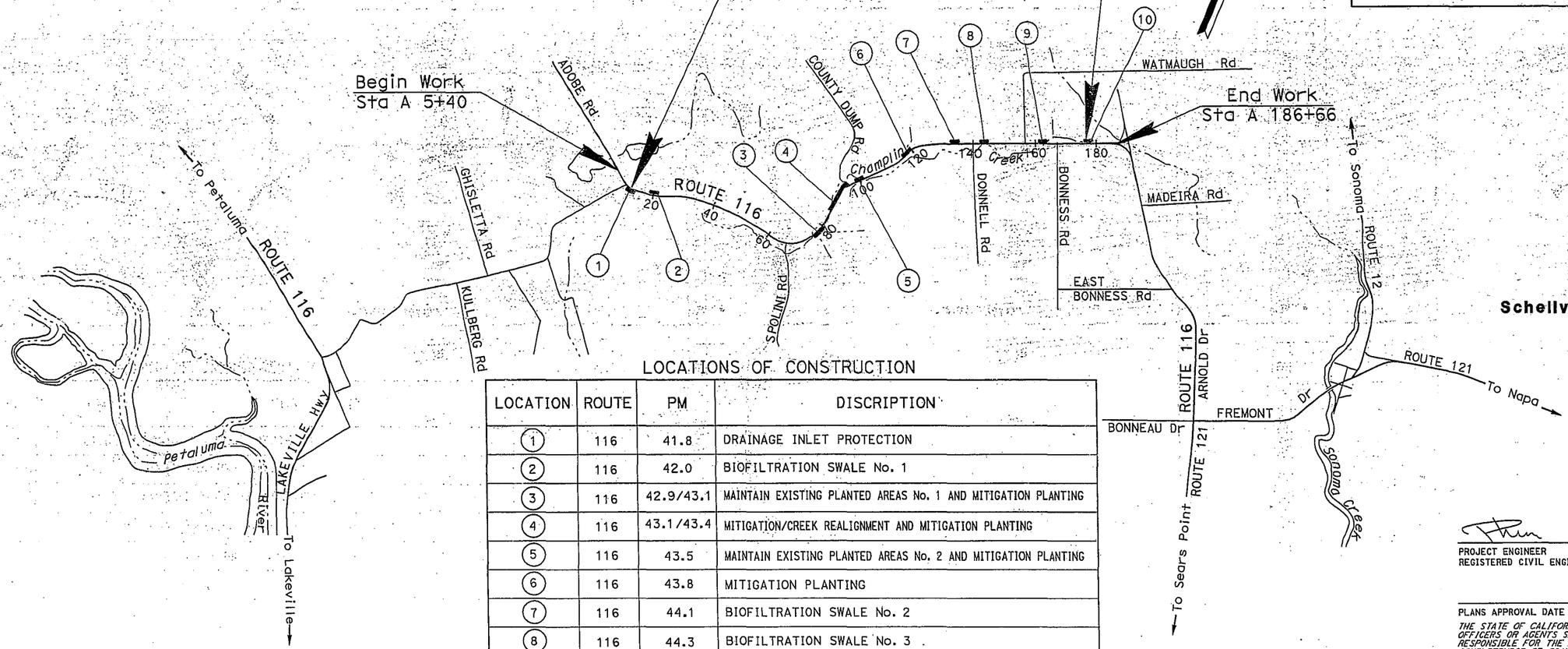

LOCATIONS OF CONSTRUCTION

LOCATION	ROUTE	PM	DISCRIPTION
1	116	41.8	DRAINAGE INLET PROTECTION
2	116	42.0	BIOFILTRATION SWALE No. 1
3	116	42.9/43.1	MAINTAIN EXISTING PLANTED AREAS No. 1 AND MITIGATION PLANTING
4	116	43.1/43.4	MITIGATION/CREEK REALIGNMENT AND MITIGATION PLANTING
5	116	43.5	MAINTAIN EXISTING PLANTED AREAS No. 2 AND MITIGATION PLANTING
6	116	43.8	MITIGATION PLANTING
7	116	44.1	BIOFILTRATION SWALE No. 2
8	116	44.3	BIOFILTRATION SWALE No. 3
9	116	44.7	MITIGATION PLANTING
10	116	44.9	LOCAL MATERIAL SITE - LOCAL TOPSOIL (RDA)

NO SCALE

PROJECT MANAGER: Jason Mac
DESIGN ENGINEER: Stewart Lee

THE CONTRACTOR SHALL POSSESS THE CLASS (OR CLASSES) OF LICENSE AS SPECIFIED IN THE "NOTICE TO BIDDERS."

2/23/11
PROJECT ENGINEER DATE
REGISTERED CIVIL ENGINEER

REGISTERED PROFESSIONAL ENGINEER Jason R. Phoen No. 57553 Exp. 12-31-11 CIVIL STATE OF CALIFORNIA

PLANS APPROVAL DATE

THE STATE OF CALIFORNIA OR ITS OFFICERS OR AGENTS SHALL NOT BE RESPONSIBLE FOR THE ACCURACY OR COMPLETENESS OF SCANNED COPIES OF THIS PLAN SHEET.

CONTRACT No.	04-283824
PROJECT ID	0400000772

LAST REVISION 06-30-11
DATE PLOTTED => 30-JUN-2011
TIME PLOTTED => 07:39

RISK ASSESSMENT

	A	B	C
1	**Sediment Risk Factor Worksheet**		**Entry**
2	**A) R Factor**		
3	Analyses of data indicated that when factors other than rainfall are held constant, soil loss is directly proportional to a rainfall factor composed of total storm kinetic energy (E) times the maximum 30-min intensity (I30) (Wischmeier and Smith, 1958). The numerical value of R is the average annual sum of EI30 for storm events during a rainfall record of at least 22 years. "Isoerodent" maps were developed based on R values calculated for more than 1000 locations in the Western U.S. Refer to the link below to determine the R factor for the project site.		
4	http://cfpub.epa.gov/npdes/stormwater/LEW/lewCalculator.cfm		
5	**R Factor Value**		31.28
6	**B) K Factor (weighted average, by area, for all site soils)**		
7	The soil-erodibility factor K represents: (1) susceptibility of soil or surface material to erosion, (2) transportability of the sediment, and (3) the amount and rate of runoff given a particular rainfall input, as measured under a standard condition. Fine-textured soils that are high in clay have low K values (about 0.05 to 0.15) because the particles are resistant to detachment. Coarse-textured soils, such as sandy soils, also have low K values (about 0.05 to 0.2) because of high infiltration resulting in low runoff even though these particles are easily detached. Medium-textured soils, such as a silt loam, have moderate K values (about 0.25 to 0.45) because they are moderately susceptible to particle detachment and they produce runoff at moderate rates. Soils having a high silt content are especially susceptible to erosion and have high K values, which can exceed 0.45 and can be as large as 0.65. Silt-size particles are easily detached and tend to crust, producing high rates and large volumes of runoff. Use Site-specific data must be submitted.		
8	Site-specific K factor guidance		
9	**K Factor Value**		0.27
10	**C) LS Factor (weighted average, by area, for all slopes)**		
11	The effect of topography on erosion is accounted for by the LS factor, which combines the effects of a hillslope-length factor, L, and a hillslope-gradient factor, S. Generally speaking, as hillslope length and/or hillslope gradient increase, soil loss increases. As hillslope length increases, total soil loss and soil loss per unit area increase due to the progressive accumulation of runoff in the downslope direction. As the hillslope gradient increases, the velocity and erosivity of runoff increases. Use the LS table located in separate tab of this spreadsheet to determine LS factors. Estimate the weighted LS for the site prior to construction.		
12	LS Table		
13	**LS Factor Value**		0.758
14			
15	**Watershed Erosion Estimate (=RxKxLS) in tons/acre**		6.4017648
16	**Site Sediment Risk Factor**		**Low**
17	Low Sediment Risk: < 15 tons/acre		
18	Medium Sediment Risk: >=15 and <75 tons/acre		
19	High Sediment Risk: >= 75 tons/acre		
20			

Receiving Water (RW) Risk Factor Worksheet	Entry	Score
A. Watershed Characteristics	**yes/no**	
A.1. Does the disturbed area discharge (either directly or indirectly) to a **303(d)-listed waterbody impaired by sediment**? For help with impaired waterbodies please check the attached worksheet or visit the link below: 2006 Approved Sediment-impared WBs Worksheet http://www.waterboards.ca.gov/water_issues/programs/tmdl/303d_lists2006_epa.shtml **OR** A.2. Does the disturbed area discharge to a waterbody with designated beneficial uses of SPAWN & COLD & MIGRATORY? http://www.ice.ucdavis.edu/geowbs/asp/wbquse.asp	**Yes**	**High**

Combined Risk Level Matrix

Receiving Water Risk	Sediment Risk: Low	Sediment Risk: Medium	Sediment Risk: High
Low	Level 1	Level 2	
High	Level 2		Level 3

Project Sediment Risk: **Low**

Project RW Risk: **High**

Project Combined Risk: **Level 2**

SAMPLING LOCATION PLANS

Dist	COUNTY	LOCATION CODE	POST MILES TOTAL PROJECT	SHEET No.	TOTAL SHEETS

REGISTERED CIVIL ENGINEER DATE

PLANS APPROVAL DATE

REGISTERED PROFESSIONAL ENGINEER No. Exp. CIVIL STATE OF CALIFORNIA

THE STATE OF CALIFORNIA OR ITS OFFICERS OR AGENTS SHALL NOT BE RESPONSIBLE FOR THE ACCURACY OR COMPLETENESS OF SCANNED COPIES OF THIS PLAN SHEET.

NOTES:

1. FOR ACCURATE RIGHT OF WAY DATA, CONTACT RIGHT OF WAY ENGINEERING AT THE DISTRICT OFFICE.

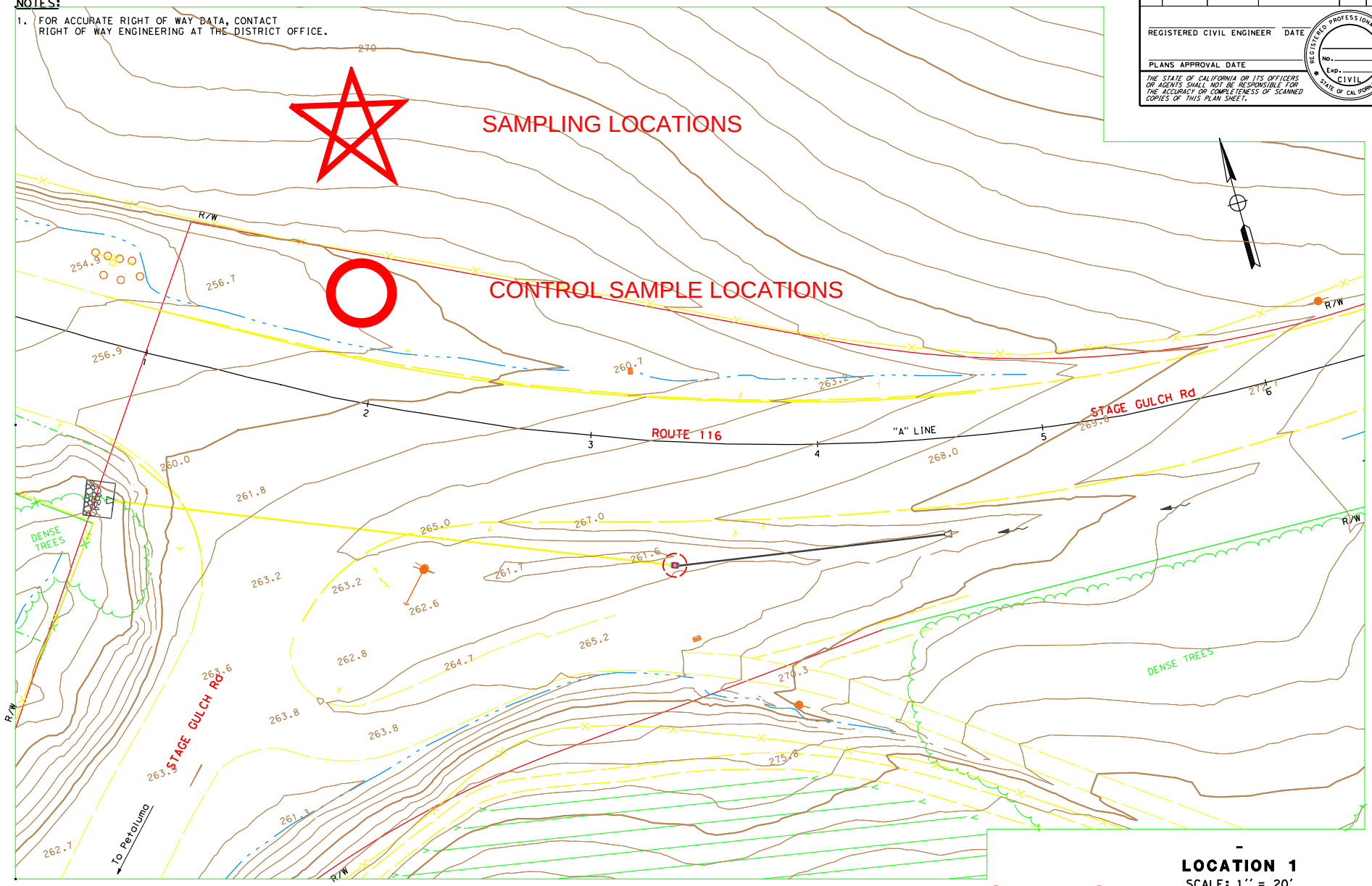

LOCATION 1

SCALE: 1'' = 20'

SAMPLING PLAN 1

REVISED BY	DATE REVISED

CALCULATED-DESIGNED BY	CHECKED BY

FUNCTIONAL SUPERVISOR

STATE OF CALIFORNIA - DEPARTMENT OF TRANSPORTATION

Caltrans

LAST REVISION 00-00-00 | DATE PLOTTED => $DATE | TIME PLOTTED => $TIME

BORDER LAST REVISED 7/2/2010 | USERNAME => $USER | DGN FILE => $REQUEST | RELATIVE BORDER SCALE IS IN INCHES 0 1 2 3 | UNIT 0000 | PROJECT NUMBER & PHASE 00000000001

Dist	COUNTY	LOCATION CODE	POST MILES TOTAL PROJECT	SHEET No.	TOTAL SHEETS

REGISTERED CIVIL ENGINEER DATE

PLANS APPROVAL DATE

REGISTERED PROFESSIONAL ENGINEER No. Exp. CIVIL STATE OF CALIFORNIA

THE STATE OF CALIFORNIA OR ITS OFFICERS OR AGENTS SHALL NOT BE RESPONSIBLE FOR THE ACCURACY OR COMPLETENESS OF SCANNED COPIES OF THIS PLAN SHEET.

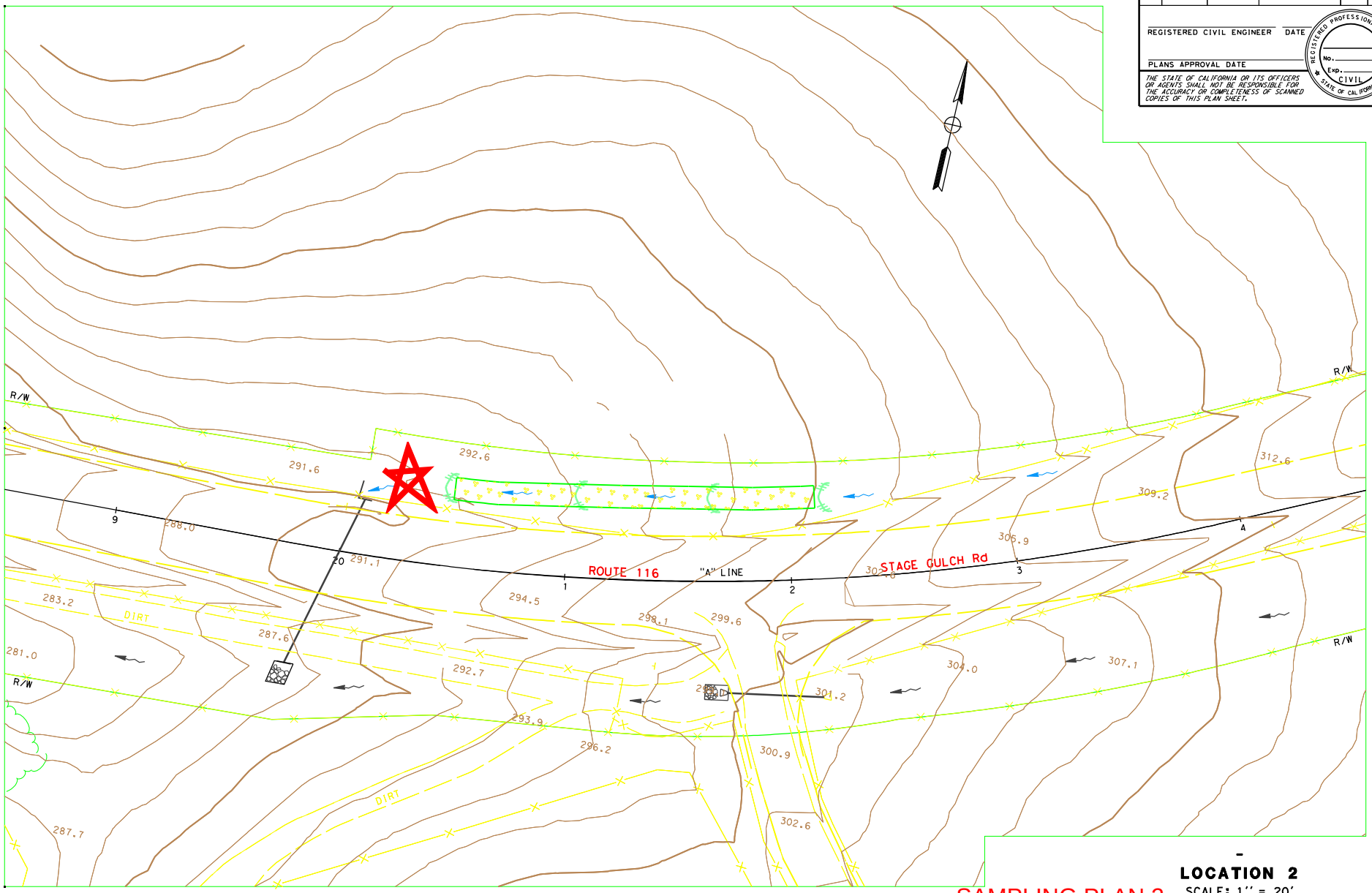

SAMPLING PLAN 2

LOCATION 2

SCALE: 1'' = 20'

STATE OF CALIFORNIA - DEPARTMENT OF TRANSPORTATION

Caltrans

FUNCTIONAL SUPERVISOR

CALCULATED-DESIGNED BY

CHECKED BY

REVISED BY

DATE REVISED

LAST REVISION 00-00-00

DATE PLOTTED => $DATE

TIME PLOTTED => $TIME

BORDER LAST REVISED 7/2/2010

USERNAME => $USER

DGN FILE => $REQUEST

RELATIVE BORDER SCALE IS IN INCHES 0 1 2 3

UNIT 0000

PROJECT NUMBER & PHASE 00000000001

NOTES:

1. FOR ACCURATE RIGHT OF WAY DATA, CONTACT RIGHT OF WAY ENGINEERING AT THE DISTRICT OFFICE.

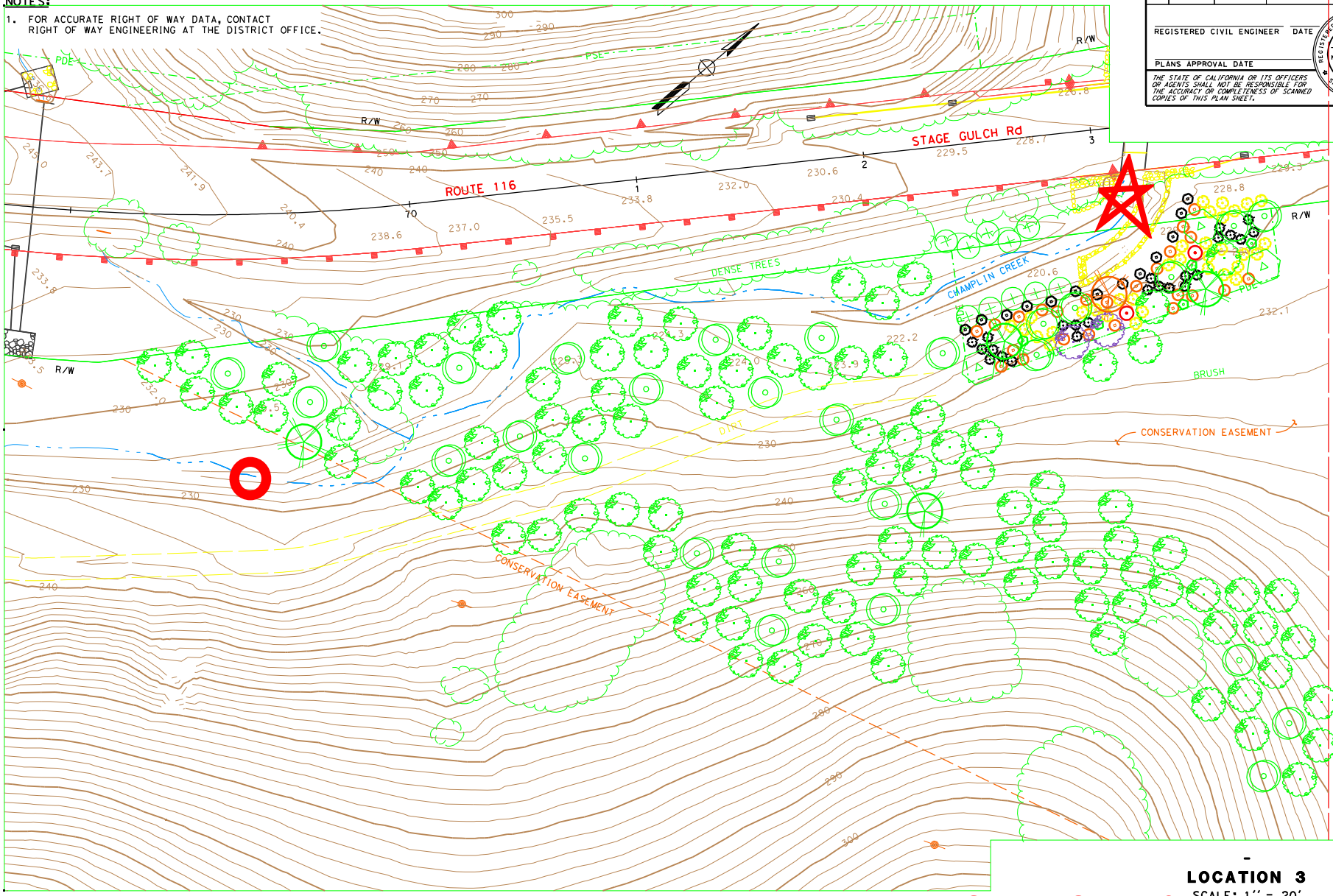

DIst	COUNTY	LOCATION CODE	POST MILES TOTAL PROJECT	SHEET No.	TOTAL SHEETS

REGISTERED CIVIL ENGINEER DATE

PLANS APPROVAL DATE

THE STATE OF CALIFORNIA OR ITS OFFICERS OR AGENTS SHALL NOT BE RESPONSIBLE FOR THE ACCURACY OR COMPLETENESS OF SCANNED COPIES OF THIS PLAN SHEET.

REGISTERED PROFESSIONAL ENGINEER No. Exp. CIVIL STATE OF CALIFORNIA

LOCATION 3

SCALE: 1'' = 20'

SAMPLING PLAN 3

REVISED BY | DATE REVISED

CALCULATED-DESIGNED BY | CHECKED BY

FUNCTIONAL SUPERVISOR

STATE OF CALIFORNIA - DEPARTMENT OF TRANSPORTATION

Caltrans

LAST REVISION 00-00-00 | DATE PLOTTED => $DATE | TIME PLOTTED => $TIME

BORDER LAST REVISED 7/2/2010 | USERNAME => $USER | DGN FILE => $REQUEST | RELATIVE BORDER SCALE IS IN INCHES 0 1 2 3 | UNIT 0000 | PROJECT NUMBER & PHASE 00000000001

Dist	COUNTY	LOCATION CODE	POST MILES TOTAL PROJECT	SHEET No.	TOTAL SHEETS

REGISTERED CIVIL ENGINEER DATE

PLANS APPROVAL DATE

THE STATE OF CALIFORNIA OR ITS OFFICERS OR AGENTS SHALL NOT BE RESPONSIBLE FOR THE ACCURACY OR COMPLETENESS OF SCANNED COPIES OF THIS PLAN SHEET.

REGISTERED PROFESSIONAL ENGINEER No. Exp. CIVIL STATE OF CALIFORNIA

NOTE:

FOR ACCURATE RIGHT OF WAY DATA, CONTACT RIGHT OF WAY ENGINEERING AT THE DISTRICT OFFICE.

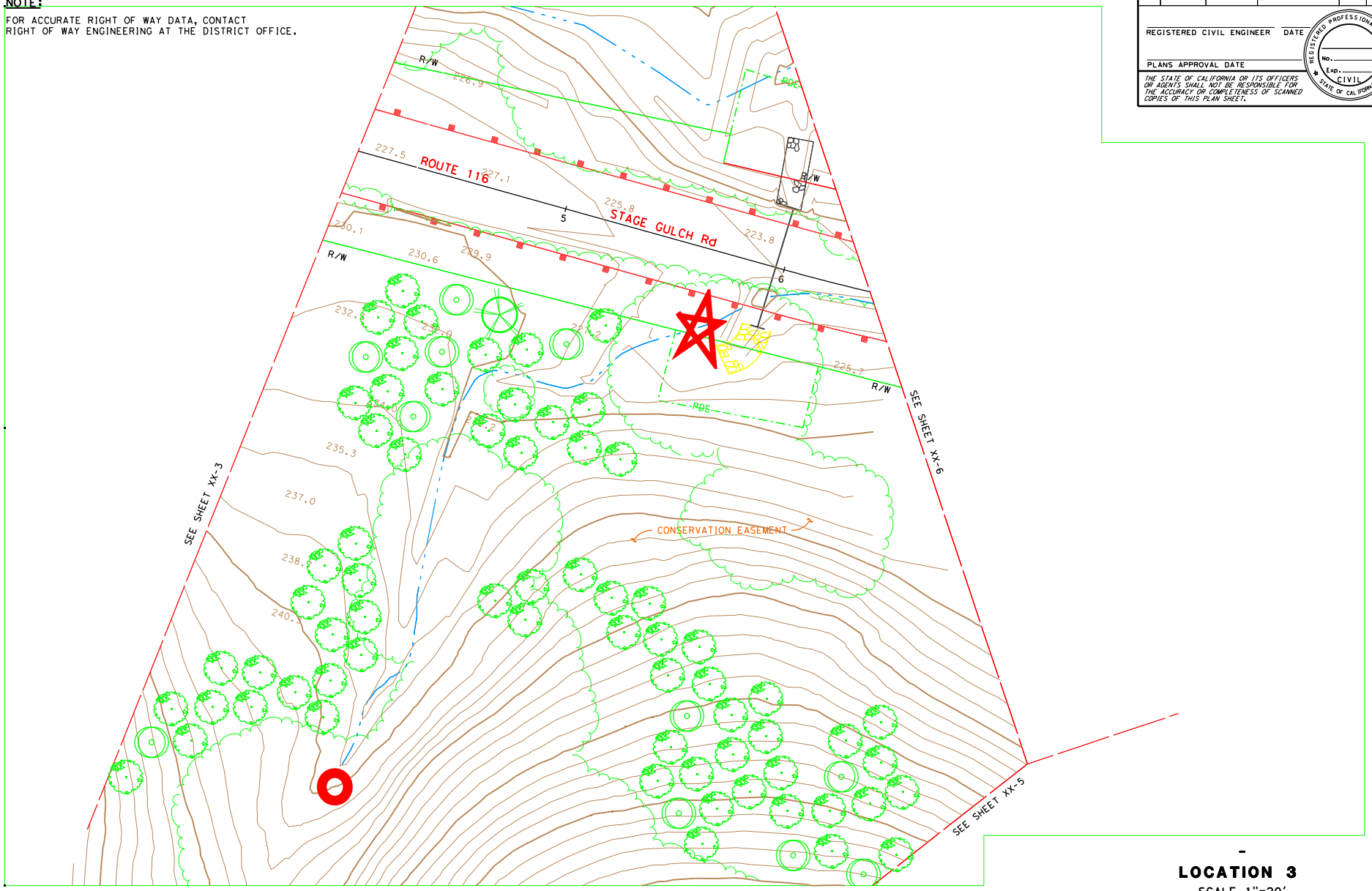

LOCATION 3

SCALE 1"=20'

SAMPLING PLAN 4

STATE OF CALIFORNIA - DEPARTMENT OF TRANSPORTATION

Caltrans

FUNCTIONAL SUPERVISOR

CALCULATED-DESIGNED BY

CHECKED BY

REVISED BY

DATE REVISED

LAST REVISION 00-00-00

DATE PLOTTED => $DATE

TIME PLOTTED => $TIME

BORDER LAST REVISED 7/2/2010

USERNAME => $USER

DGN FILE => $REQUEST

RELATIVE BORDER SCALE IS IN INCHES 0 1 2 3

UNIT 0000

PROJECT NUMBER & PHASE 00000000001

Dist	COUNTY	LOCATION CODE	POST MILES TOTAL PROJECT	SHEET No.	TOTAL SHEETS

REGISTERED CIVIL ENGINEER DATE

PLANS APPROVAL DATE

REGISTERED PROFESSIONAL ENGINEER No. Exp. CIVIL STATE OF CALIFORNIA

THE STATE OF CALIFORNIA OR ITS OFFICERS OR AGENTS SHALL NOT BE RESPONSIBLE FOR THE ACCURACY OR COMPLETENESS OF SCANNED COPIES OF THIS PLAN SHEET.

NOTE:

FOR ACCURATE RIGHT OF WAY DATA, CONTACT RIGHT OF WAY ENGINEERING AT THE DISTRICT OFFICE.

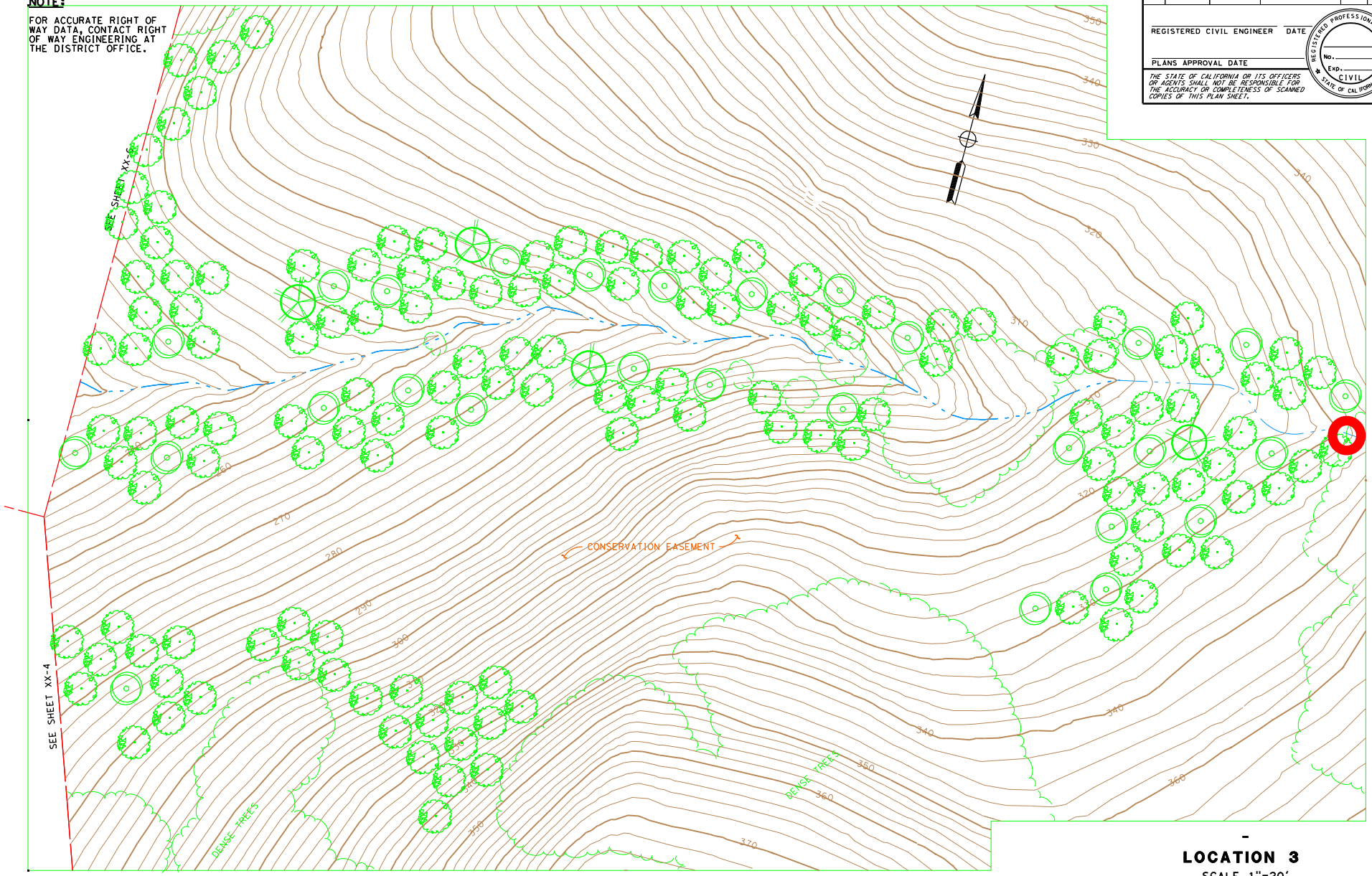

LOCATION 3

SCALE 1"=20'

SAMPLING PLAN 5

REVISED BY	DATE REVISED

CALCULATED-DESIGNED BY	CHECKED BY

FUNCTIONAL SUPERVISOR

STATE OF CALIFORNIA - DEPARTMENT OF TRANSPORTATION

Caltrans

LAST REVISION 00-00-00 | DATE PLOTTED => $DATE | TIME PLOTTED => $TIME

BORDER LAST REVISED 7/2/2010 | USERNAME => $USER | DGN FILE => $REQUEST | RELATIVE BORDER SCALE IS IN INCHES 0 1 2 3 | UNIT 0000 | PROJECT NUMBER & PHASE 00000000001

Dist	COUNTY	LOCATION CODE	POST MILES TOTAL PROJECT	SHEET No.	TOTAL SHEETS

REGISTERED CIVIL ENGINEER DATE

PLANS APPROVAL DATE

REGISTERED PROFESSIONAL ENGINEER No. Exp. CIVIL STATE OF CALIFORNIA

THE STATE OF CALIFORNIA OR ITS OFFICERS OR AGENTS SHALL NOT BE RESPONSIBLE FOR THE ACCURACY OR COMPLETENESS OF SCANNED COPIES OF THIS PLAN SHEET.

NOTE:

FOR ACCURATE RIGHT OF WAY DATA, CONTACT RIGHT OF WAY ENGINEERING AT THE DISTRICT OFFICE.

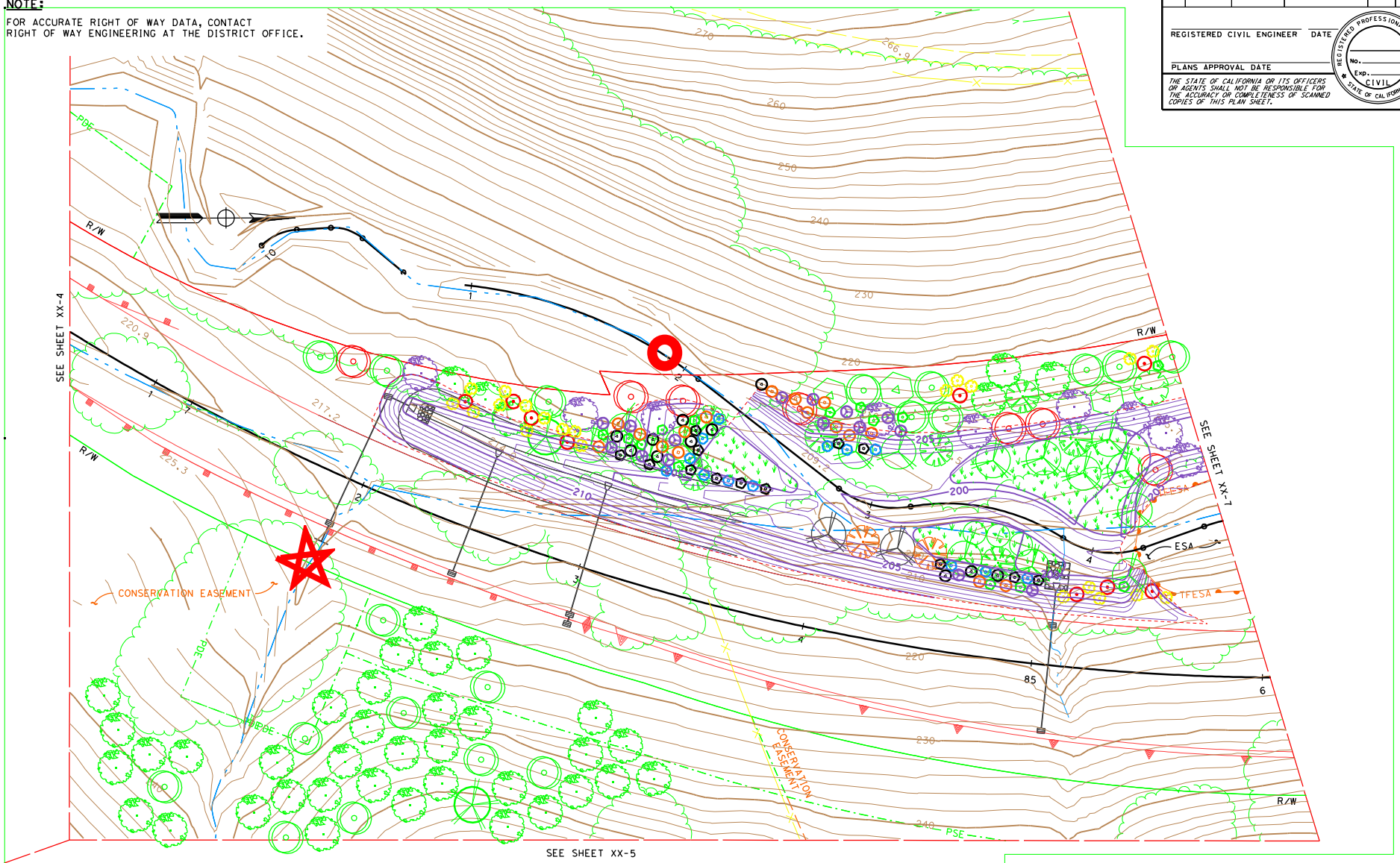

LOCATION 4

SCALE: 1'' = 20'

SAMPLING PLAN 6

REVISED BY | DATE REVISED

CALCULATED-DESIGNED BY | CHECKED BY

FUNCTIONAL SUPERVISOR

STATE OF CALIFORNIA - DEPARTMENT OF TRANSPORTATION

Caltrans

LAST REVISION 00-00-00 | DATE PLOTTED => $DATE | TIME PLOTTED => $TIME

BORDER LAST REVISED 7/2/2010 | USERNAME => $USER | DGN FILE => $REQUEST | RELATIVE BORDER SCALE IS IN INCHES 0 1 2 3 | UNIT 0000 | PROJECT NUMBER & PHASE 00000000001

Dist	COUNTY	LOCATION CODE	POST MILES TOTAL PROJECT	SHEET No.	TOTAL SHEETS

REGISTERED CIVIL ENGINEER DATE

PLANS APPROVAL DATE

THE STATE OF CALIFORNIA OR ITS OFFICERS OR AGENTS SHALL NOT BE RESPONSIBLE FOR THE ACCURACY OR COMPLETENESS OF SCANNED COPIES OF THIS PLAN SHEET.

REGISTERED PROFESSIONAL ENGINEER No. Exp. CIVIL STATE OF CALIFORNIA

NOTE:

FOR ACCURATE RIGHT OF WAY DATA, CONTACT RIGHT OF WAY ENGINEERING AT THE DISTRICT OFFICE.

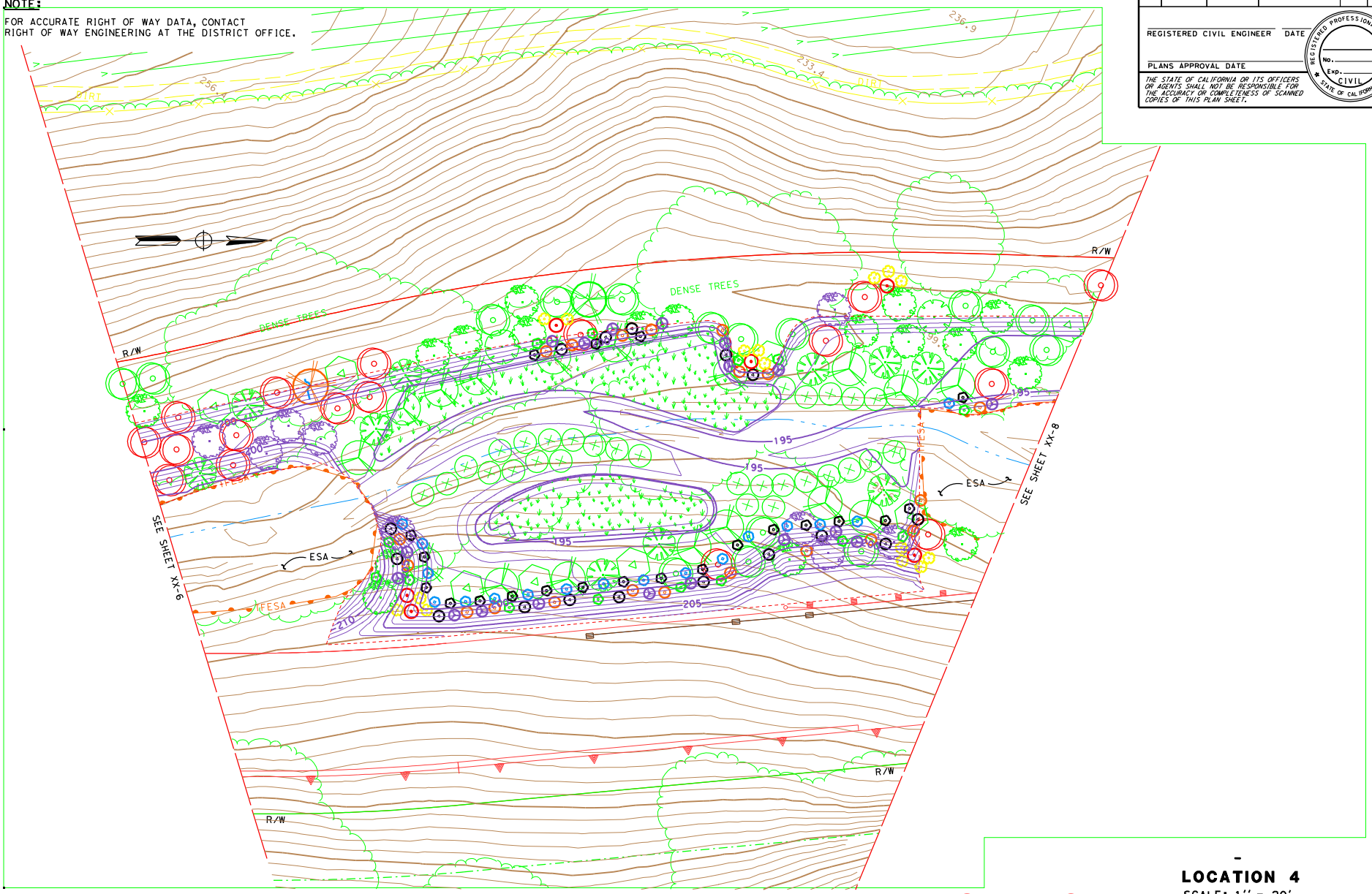

LOCATION 4

SCALE: 1'' = 20'

SAMPLING PLAN 7

REVISED BY | DATE REVISED

CALCULATED-DESIGNED BY | CHECKED BY

FUNCTIONAL SUPERVISOR

STATE OF CALIFORNIA - DEPARTMENT OF TRANSPORTATION

Caltrans

LAST REVISION 00-00-00 | DATE PLOTTED => $DATE | TIME PLOTTED => $TIME

BORDER LAST REVISED 7/2/2010 | USERNAME => $USER | DGN FILE => $REQUEST | RELATIVE BORDER SCALE IS IN INCHES 0 1 2 3 | UNIT 0000 | PROJECT NUMBER & PHASE 00000000001

Dist	COUNTY	LOCATION CODE	POST MILES TOTAL PROJECT	SHEET No.	TOTAL SHEETS

REGISTERED CIVIL ENGINEER DATE

PLANS APPROVAL DATE

THE STATE OF CALIFORNIA OR ITS OFFICERS OR AGENTS SHALL NOT BE RESPONSIBLE FOR THE ACCURACY OR COMPLETENESS OF SCANNED COPIES OF THIS PLAN SHEET.

REGISTERED PROFESSIONAL ENGINEER No. Exp. CIVIL STATE OF CALIFORNIA

NOTE:

FOR ACCURATE RIGHT OF WAY DATA, CONTACT RIGHT OF WAY ENGINEERING AT THE DISTRICT OFFICE.

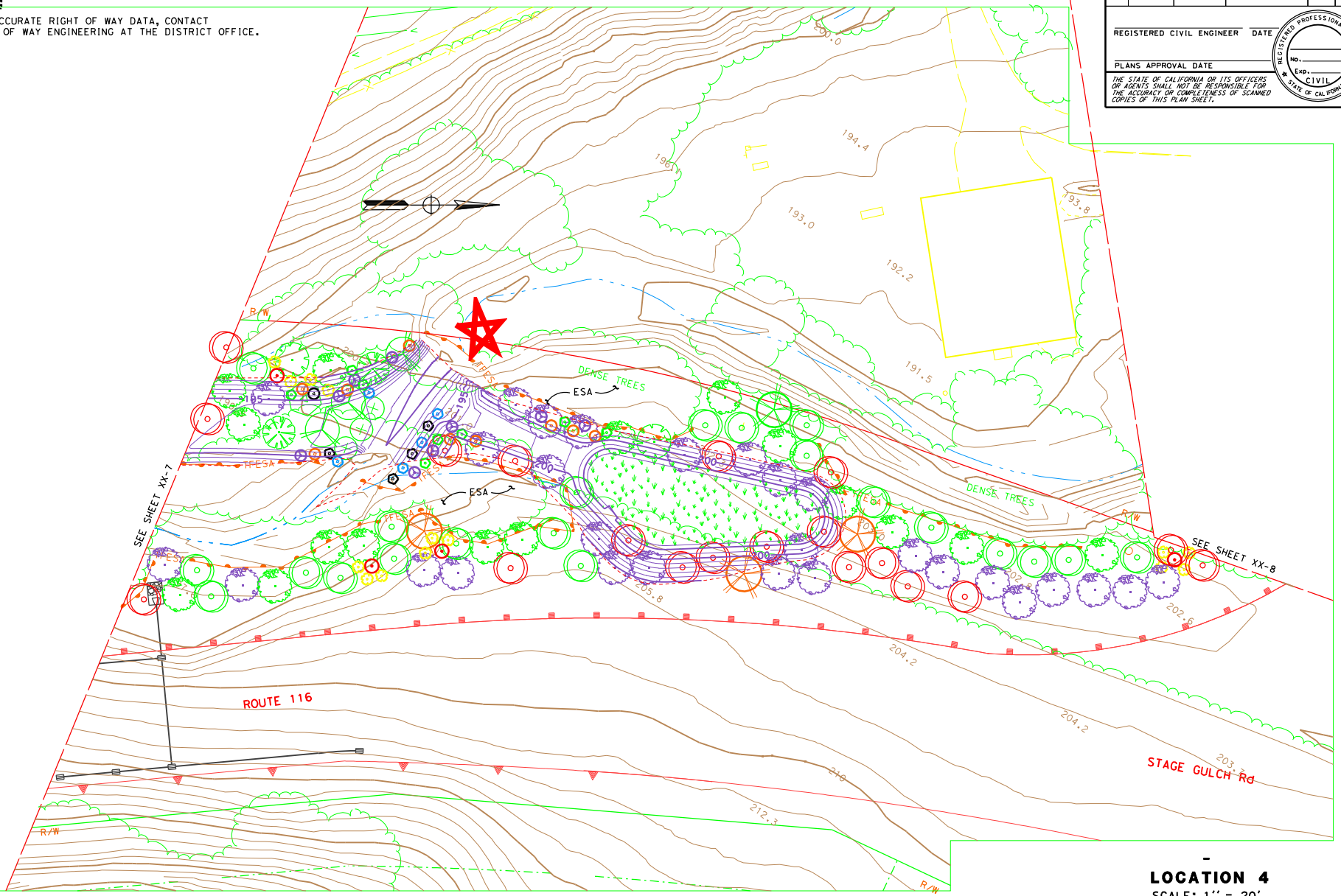

LOCATION 4

SCALE: 1'' = 20'

SAMPLING PLAN 8

STATE OF CALIFORNIA - DEPARTMENT OF TRANSPORTATION

Caltrans

FUNCTIONAL SUPERVISOR

CALCULATED-DESIGNED BY

CHECKED BY

REVISED BY

DATE REVISED

LAST REVISION 00-00-00

DATE PLOTTED => $DATE

TIME PLOTTED => $TIME

BORDER LAST REVISED 7/2/2010

USERNAME => $USER

DGN FILE => $REQUEST

RELATIVE BORDER SCALE IS IN INCHES 0 1 2 3

UNIT 0000

PROJECT NUMBER & PHASE 00000000001

Dist	COUNTY	LOCATION CODE	POST MILES TOTAL PROJECT	SHEET No.	TOTAL SHEETS

REGISTERED CIVIL ENGINEER DATE

PLANS APPROVAL DATE

THE STATE OF CALIFORNIA OR ITS OFFICERS OR AGENTS SHALL NOT BE RESPONSIBLE FOR THE ACCURACY OR COMPLETENESS OF SCANNED COPIES OF THIS PLAN SHEET.

REGISTERED PROFESSIONAL ENGINEER No. Exp. CIVIL STATE OF CALIFORNIA

NOTE:

FOR ACCURATE RIGHT OF WAY DATA, CONTACT RIGHT OF WAY ENGINEERING AT THE DISTRICT OFFICE.

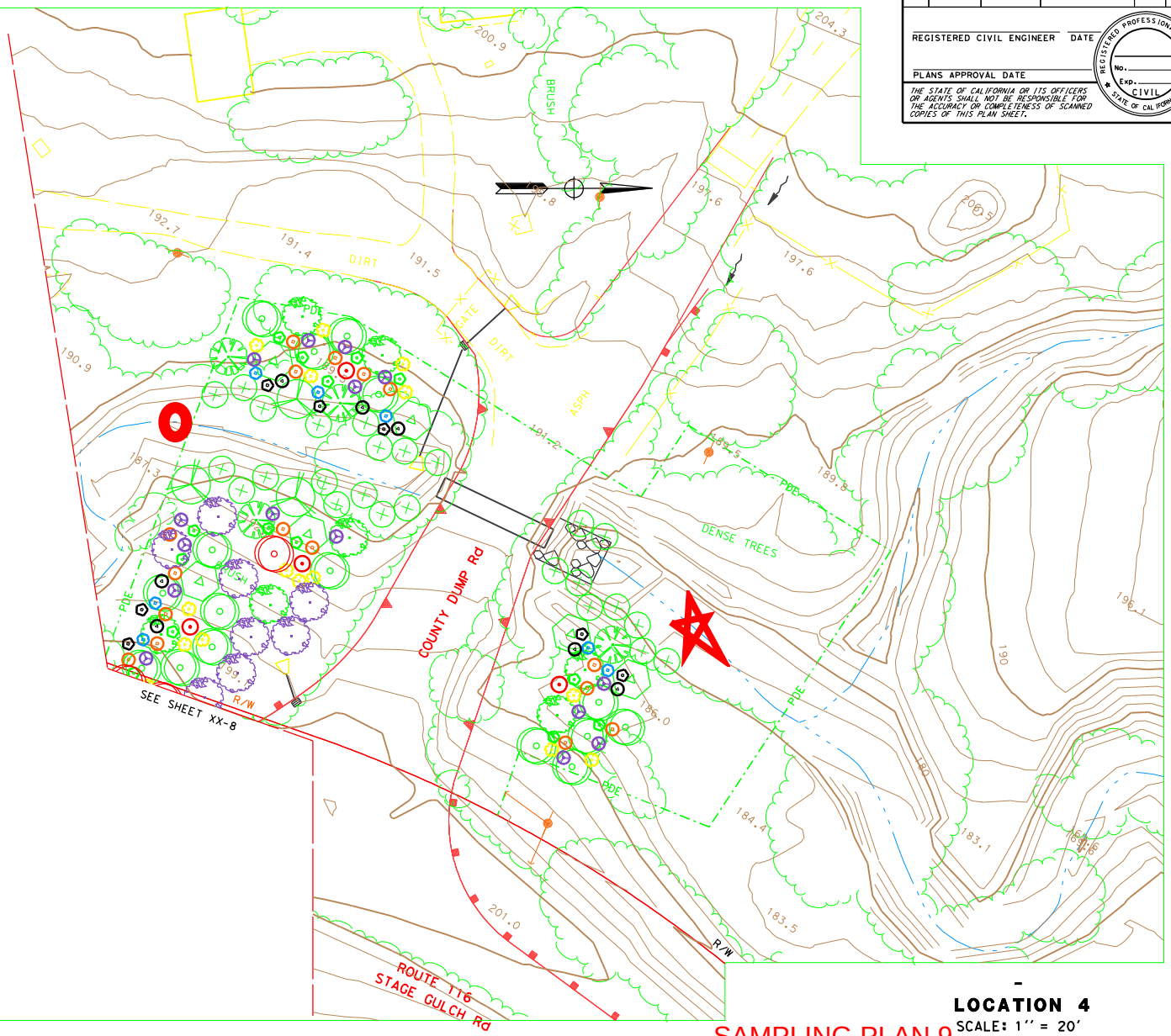

LOCATION 4

SCALE: 1'' = 20'

SAMPLING PLAN 9

XX-9

STATE OF CALIFORNIA - DEPARTMENT OF TRANSPORTATION

Caltrans

FUNCTIONAL SUPERVISOR

CALCULATED-DESIGNED BY

CHECKED BY

REVISED BY

DATE REVISED

LAST REVISION 00-00-00

DATE PLOTTED => $DATE

TIME PLOTTED => $TIME

BORDER LAST REVISED 7/2/2010

USERNAME => $USER

DGN FILE => $REQUEST

RELATIVE BORDER SCALE IS IN INCHES 0 1 2 3

UNIT 0000

PROJECT NUMBER & PHASE 00000000001

Dist	COUNTY	LOCATION CODE	POST MILES TOTAL PROJECT	SHEET No.	TOTAL SHEETS

REGISTERED CIVIL ENGINEER DATE

PLANS APPROVAL DATE

THE STATE OF CALIFORNIA OR ITS OFFICERS OR AGENTS SHALL NOT BE RESPONSIBLE FOR THE ACCURACY OR COMPLETENESS OF SCANNED COPIES OF THIS PLAN SHEET.

REGISTERED PROFESSIONAL ENGINEER No. Exp. CIVIL STATE OF CALIFORNIA

NOTE:

FOR ACCURATE RIGHT OF WAY DATA, CONTACT RIGHT OF WAY ENGINEERING AT THE DISTRICT OFFICE.

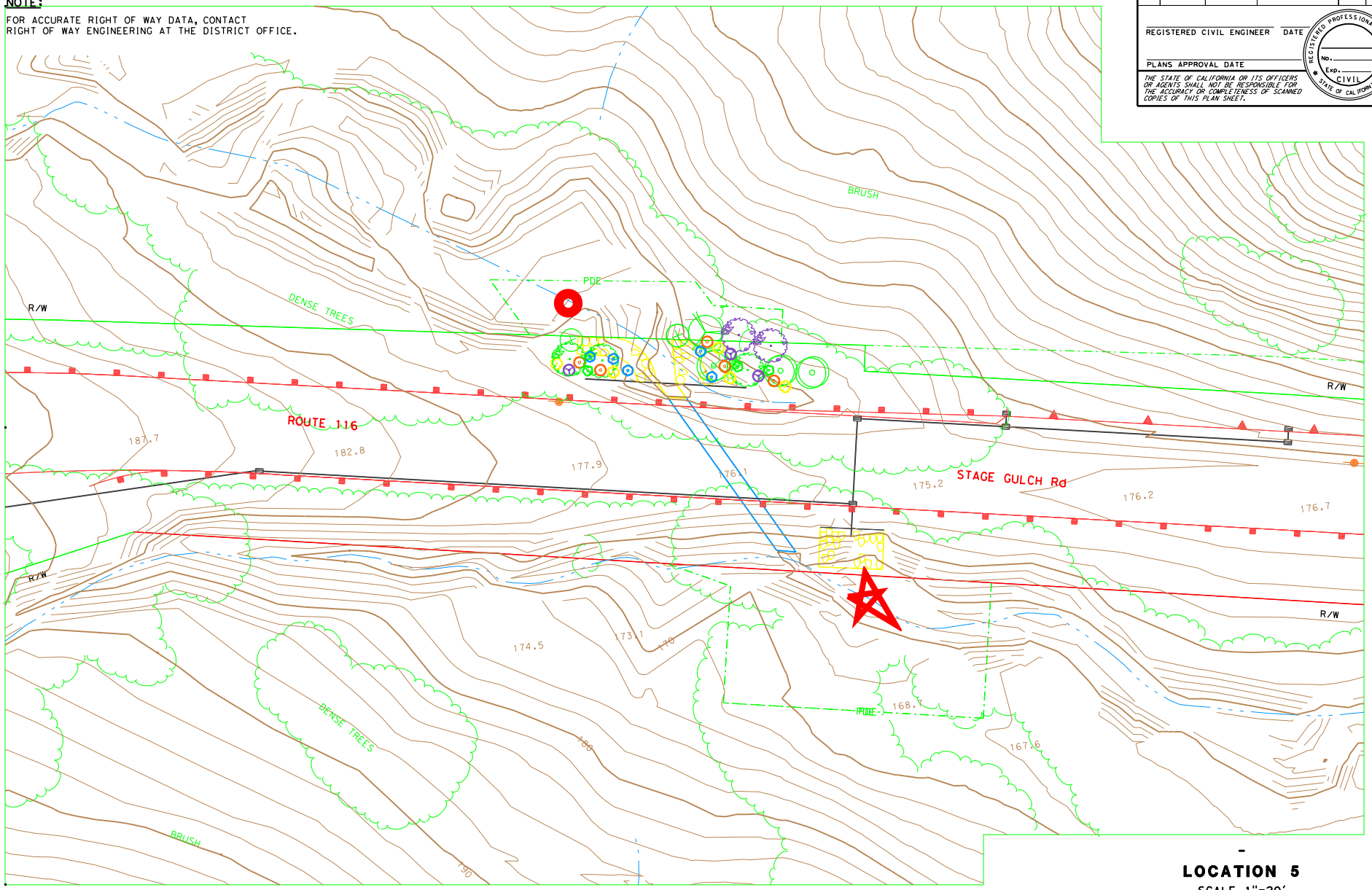

LOCATION 5

SCALE 1"=20'

SAMPLING PLAN 10

XX-10

REVISED BY	DATE REVISED

CALCULATED-DESIGNED BY	CHECKED BY

FUNCTIONAL SUPERVISOR

STATE OF CALIFORNIA - DEPARTMENT OF TRANSPORTATION

Caltrans

LAST REVISION 00-00-00 | DATE PLOTTED => $DATE | TIME PLOTTED => $TIME

BORDER LAST REVISED 7/2/2010 | USERNAME => $USER | DGN FILE => $REQUEST | RELATIVE BORDER SCALE IS IN INCHES 0 1 2 3 | UNIT 0000 | PROJECT NUMBER & PHASE 00000000001

Dis+	COUNTY	LOCATION CODE	POST MILES TOTAL PROJECT	SHEET No.	TOTAL SHEETS

REGISTERED CIVIL ENGINEER DATE

PLANS APPROVAL DATE

THE STATE OF CALIFORNIA OR ITS OFFICERS OR AGENTS SHALL NOT BE RESPONSIBLE FOR THE ACCURACY OR COMPLETENESS OF SCANNED COPIES OF THIS PLAN SHEET.

REGISTERED PROFESSIONAL ENGINEER No. Exp. CIVIL STATE OF CALIFORNIA

NOTE:

FOR ACCURATE RIGHT OF WAY DATA, CONTACT RIGHT OF WAY ENGINEERING AT THE DISTRICT OFFICE.

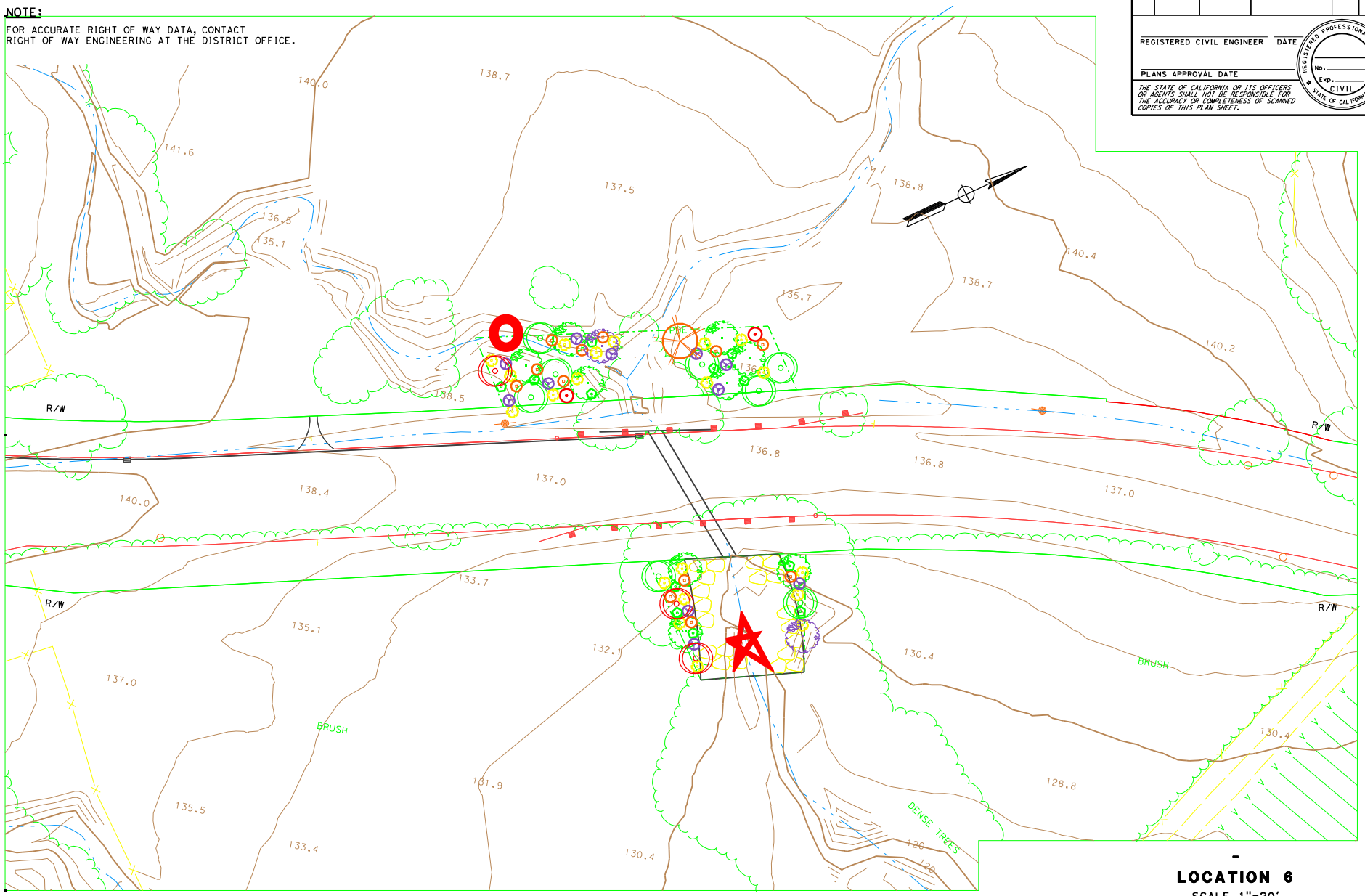

LOCATION 6

SCALE 1"=20'

SAMPLING PLAN 11

XX-11

STATE OF CALIFORNIA - DEPARTMENT OF TRANSPORTATION

Caltrans

FUNCTIONAL SUPERVISOR

CALCULATED-DESIGNED BY | CHECKED BY

REVISED BY | DATE REVISED

LAST REVISION 00-00-00 | DATE PLOTTED => $DATE | TIME PLOTTED => $TIME

BORDER LAST REVISED 7/2/2010 | USERNAME => $USER | DGN FILE => $REQUEST | RELATIVE BORDER SCALE IS IN INCHES 0 1 2 3 | UNIT 0000 | PROJECT NUMBER & PHASE 00000000001

Dist	COUNTY	LOCATION CODE	POST MILES TOTAL PROJECT	SHEET No.	TOTAL SHEETS

REGISTERED CIVIL ENGINEER DATE

PLANS APPROVAL DATE

THE STATE OF CALIFORNIA OR ITS OFFICERS OR AGENTS SHALL NOT BE RESPONSIBLE FOR THE ACCURACY OR COMPLETENESS OF SCANNED COPIES OF THIS PLAN SHEET.

REGISTERED PROFESSIONAL ENGINEER No. Exp. CIVIL STATE OF CALIFORNIA

NOTE:

FOR ACCURATE RIGHT OF WAY DATA, CONTACT RIGHT OF WAY ENGINEERING AT THE DISTRICT OFFICE.

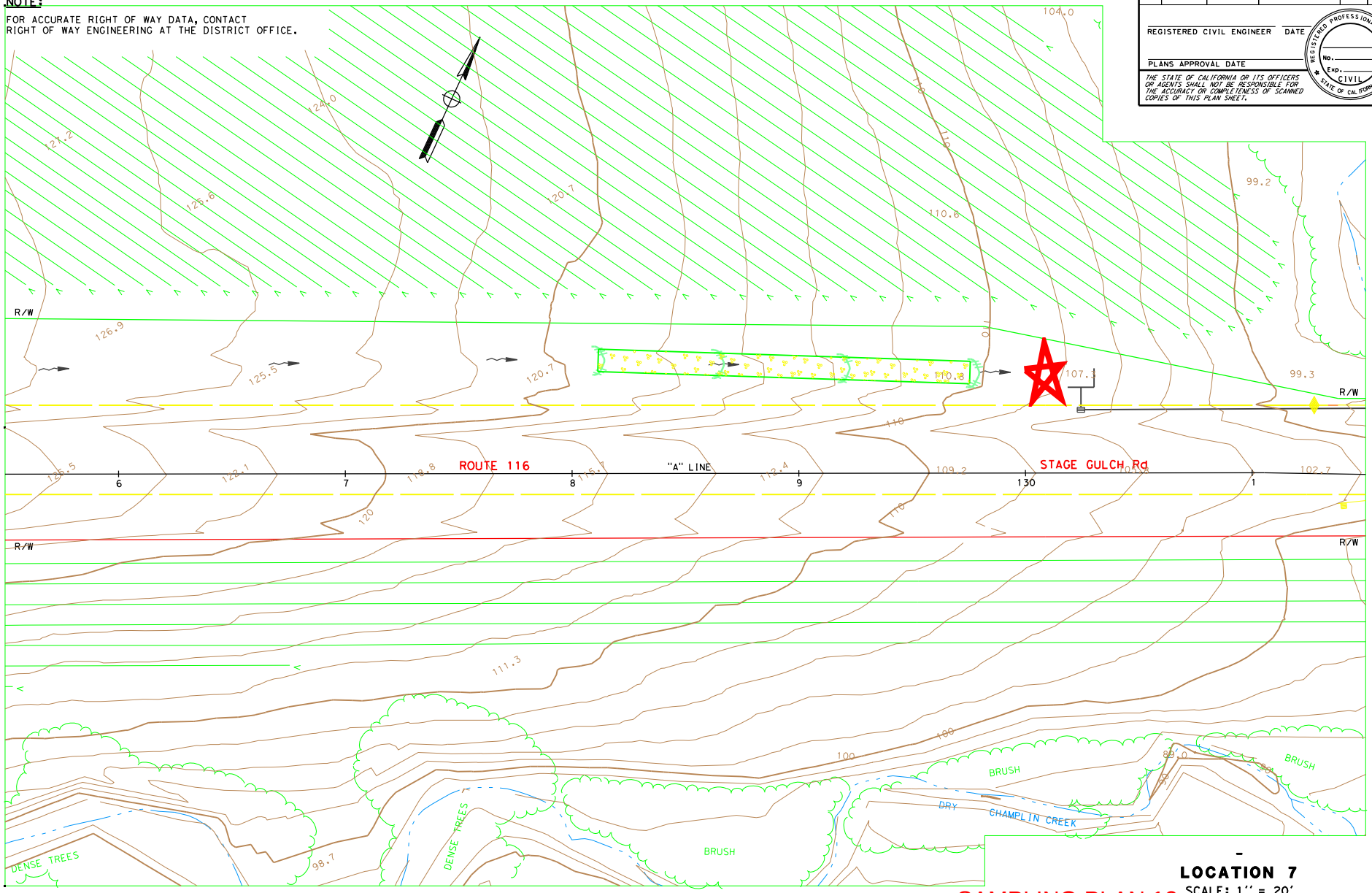

LOCATION 7

SCALE: 1'' = 20'

SAMPLING PLAN 12

XX-12

REVISED BY	DATE REVISED

CALCULATED-DESIGNED BY	CHECKED BY

FUNCTIONAL SUPERVISOR

STATE OF CALIFORNIA - DEPARTMENT OF TRANSPORTATION

Caltrans

LAST REVISION 00-00-00 | DATE PLOTTED => $DATE | TIME PLOTTED => $TIME

BORDER LAST REVISED 7/2/2010 | USERNAME => $USER | DGN FILE => $REQUEST | RELATIVE BORDER SCALE IS IN INCHES 0 1 2 3 | UNIT 0000 | PROJECT NUMBER & PHASE 00000000001

Dist	COUNTY	LOCATION CODE	POST MILES TOTAL PROJECT	SHEET No.	TOTAL SHEETS

REGISTERED CIVIL ENGINEER DATE

PLANS APPROVAL DATE

THE STATE OF CALIFORNIA OR ITS OFFICERS OR AGENTS SHALL NOT BE RESPONSIBLE FOR THE ACCURACY OR COMPLETENESS OF SCANNED COPIES OF THIS PLAN SHEET.

REGISTERED PROFESSIONAL ENGINEER No. Exp. CIVIL STATE OF CALIFORNIA

NOTE:

FOR ACCURATE RIGHT OF WAY DATA, CONTACT RIGHT OF WAY ENGINEERING AT THE DISTRICT OFFICE.

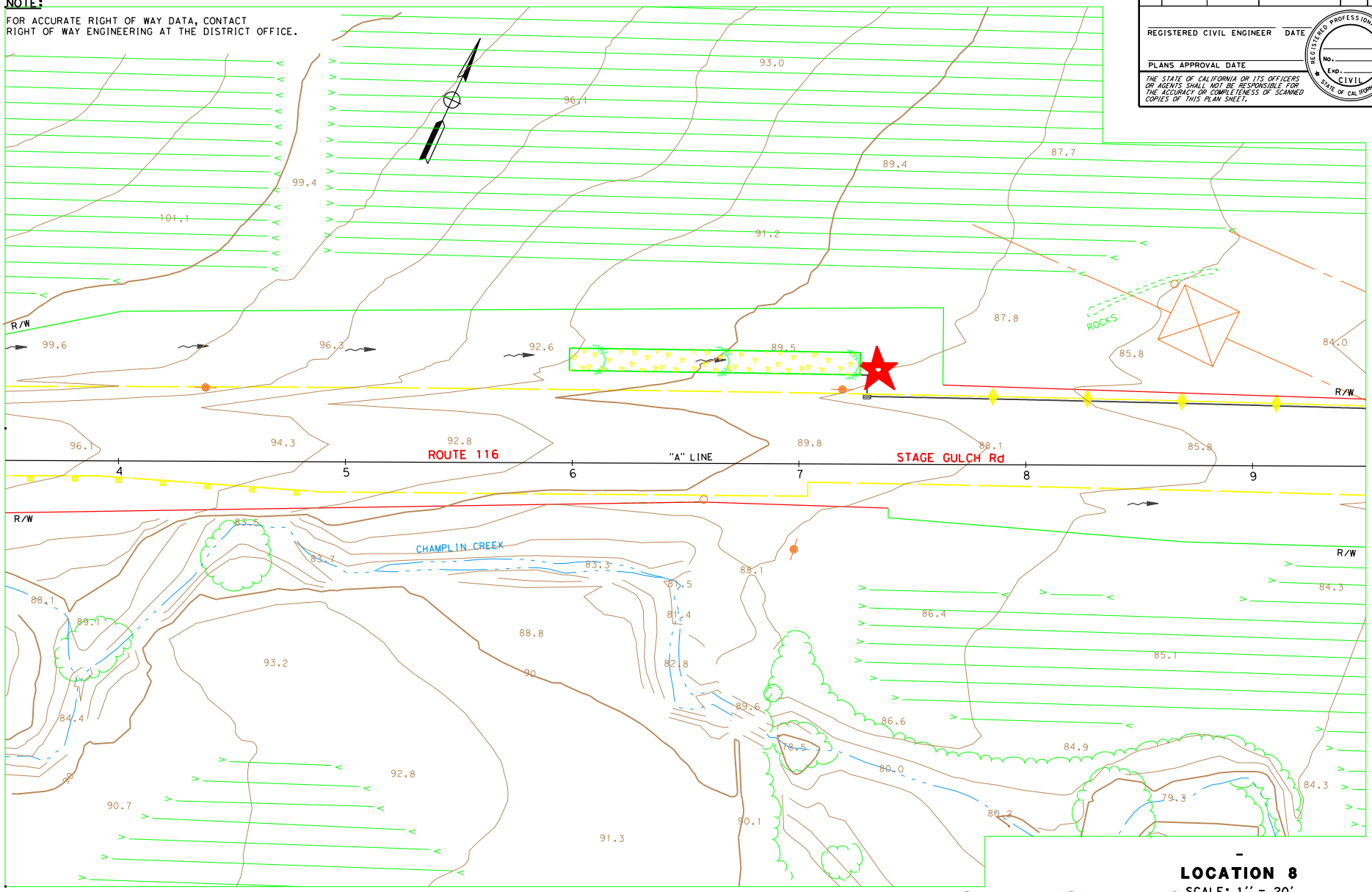

LOCATION 8

SCALE: 1'' = 20'

SAMPLING PLAN 13

XX-13

STATE OF CALIFORNIA - DEPARTMENT OF TRANSPORTATION

Caltrans

FUNCTIONAL SUPERVISOR

CALCULATED-DESIGNED BY

CHECKED BY

REVISED BY

DATE REVISED

LAST REVISION 00-00-00

DATE PLOTTED => $DATE

TIME PLOTTED => $TIME

BORDER LAST REVISED 7/2/2010

USERNAME => $USER

DGN FILE => $REQUEST

RELATIVE BORDER SCALE IS IN INCHES 0 1 2 3

UNIT 0000

PROJECT NUMBER & PHASE 00000000001

Dist	COUNTY	LOCATION CODE	POST MILES TOTAL PROJECT	SHEET No.	TOTAL SHEETS

REGISTERED CIVIL ENGINEER DATE

PLANS APPROVAL DATE

THE STATE OF CALIFORNIA OR ITS OFFICERS OR AGENTS SHALL NOT BE RESPONSIBLE FOR THE ACCURACY OR COMPLETENESS OF SCANNED COPIES OF THIS PLAN SHEET.

REGISTERED PROFESSIONAL ENGINEER No. Exp. CIVIL STATE OF CALIFORNIA

NOTE:

FOR ACCURATE RIGHT OF WAY DATA, CONTACT RIGHT OF WAY ENGINEERING AT THE DISTRICT OFFICE.

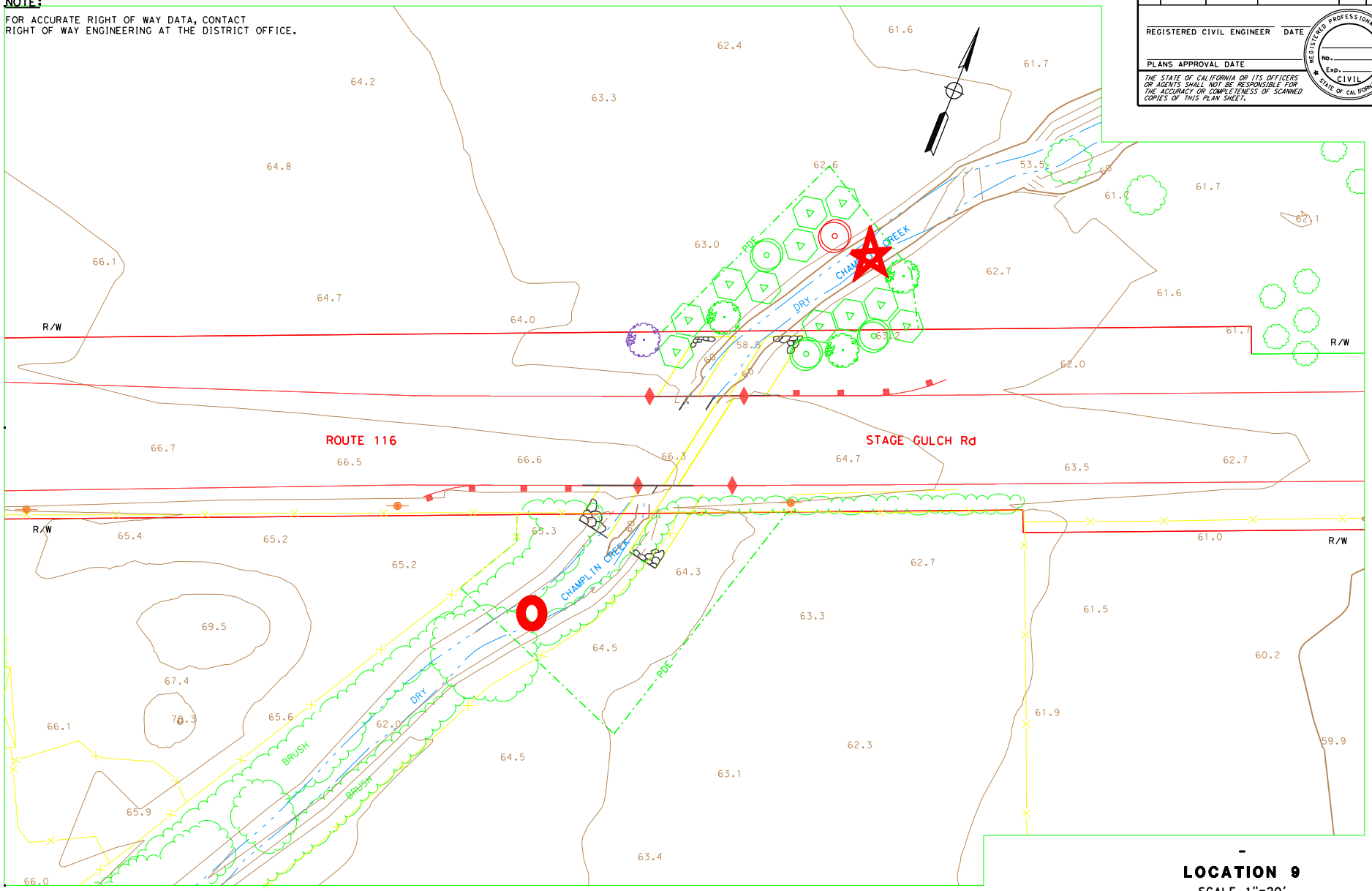

LOCATION 9

SCALE 1"=20'

SAMPLING PLAN 14

XX-14

STATE OF CALIFORNIA - DEPARTMENT OF TRANSPORTATION

Caltrans

FUNCTIONAL SUPERVISOR

CALCULATED-DESIGNED BY

CHECKED BY

REVISED BY

DATE REVISED

LAST REVISION 00-00-00

DATE PLOTTED => $DATE

TIME PLOTTED => $TIME

BORDER LAST REVISED 7/2/2010

USERNAME => $USER

DGN FILE => $REQUEST

RELATIVE BORDER SCALE IS IN INCHES 0 1 2 3

UNIT 0000

PROJECT NUMBER & PHASE 00000000001

Dis+	COUNTY	LOCATION CODE	POST MILES TOTAL PROJECT	SHEET No.	TOTAL SHEETS

REGISTERED CIVIL ENGINEER DATE

PLANS APPROVAL DATE

REGISTERED PROFESSIONAL ENGINEER No. Exp. CIVIL STATE OF CALIFORNIA

THE STATE OF CALIFORNIA OR ITS OFFICERS OR AGENTS SHALL NOT BE RESPONSIBLE FOR THE ACCURACY OR COMPLETENESS OF SCANNED COPIES OF THIS PLAN SHEET.

NOTE:

FOR ACCURATE RIGHT OF WAY DATA, CONTACT RIGHT OF WAY ENGINEERING AT THE DISTRICT OFFICE.

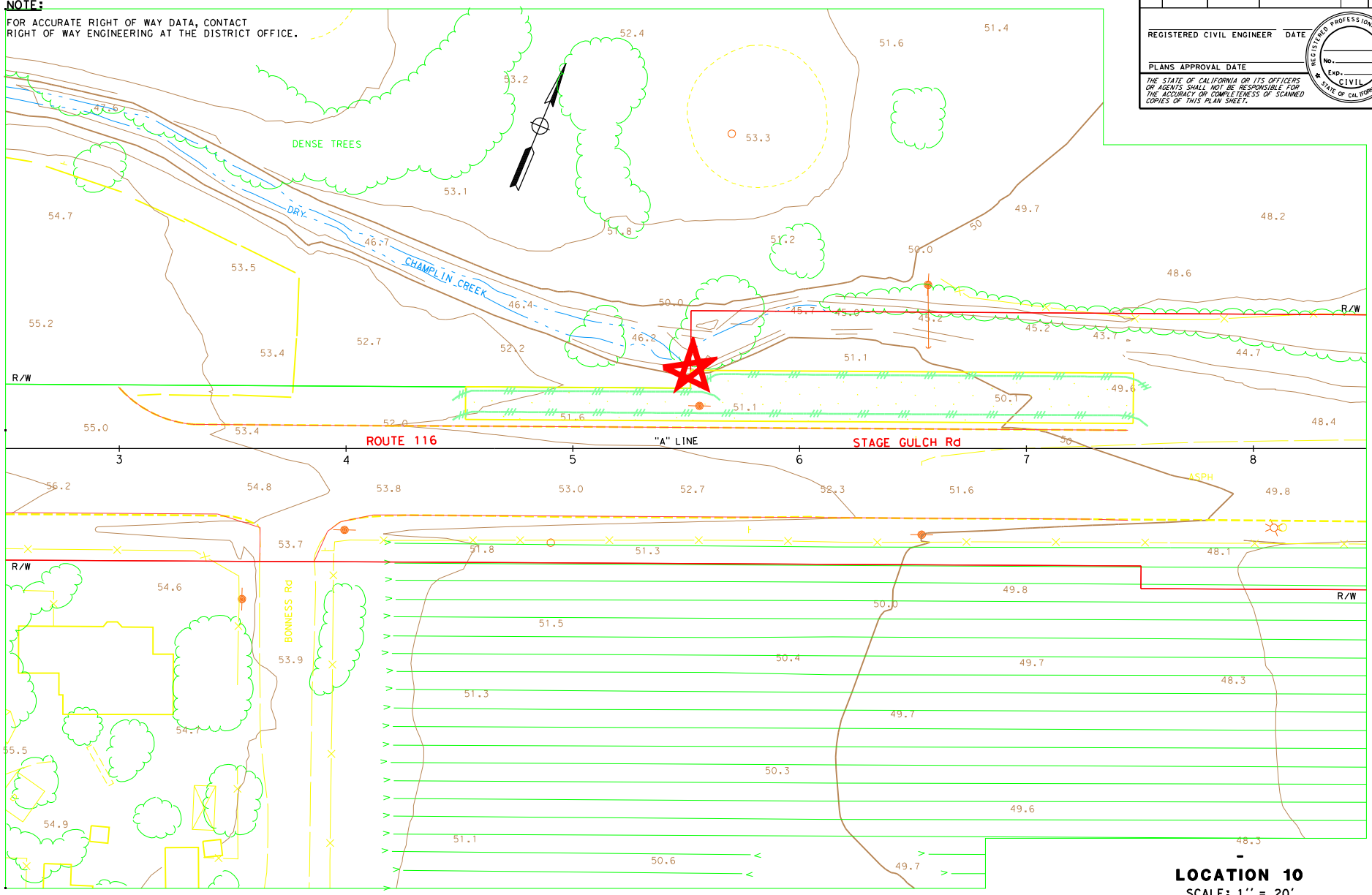

LOCATION 10

SCALE: 1'' = 20'

SAMPLING PLAN 15

XX-15

REVISED BY | DATE REVISED

CALCULATED-DESIGNED BY | CHECKED BY

FUNCTIONAL SUPERVISOR

STATE OF CALIFORNIA - DEPARTMENT OF TRANSPORTATION

Caltrans

LAST REVISION 00-00-00 | DATE PLOTTED => $DATE | TIME PLOTTED => $TIME

BORDER LAST REVISED 7/2/2010 | USERNAME => $USER | DGN FILE => $REQUEST | RELATIVE BORDER SCALE IS IN INCHES 0 1 2 3 | UNIT 0000 | PROJECT NUMBER & PHASE 00000000001

RAINFALL DATA

Rainfall Intensity can be obtained by the following link:

http://www.wrcc.dri.edu/pcpnfreq/nca5y24.gif

Refer to Chapters 800, Highway Drainage Design of Highway Design Manual for information on runoff coefficient and shed map. The weighted runoff coefficient of 0.55 is recommended is recommended for the project area.

COPY OF 401 PERMIT

California Regional Water Quality Control Board
San Francisco Bay Region

Linda S. Adams
Agency Secretary

1515 Clay Street, Suite 1400, Oakland, California 94612
(510) 622-2300 • Fax (510) 622-2460
http://www.waterboards.ca.gov/sanfranciscobay

Arnold Schwarzenegger
Governor

May 28, 2009
Site No.: 02-49-C0198 (BT)
CIWQS Place No.: 725448

Sent via electronic mail: No hard copy to follow

California Department of Transportation
Attn: Mr. Jason Mac
Jason_Mac@dot.ca.gov
111 Grand Ave.
Oakland, CA 94623

Subject: Water Quality Certification for the State Route 116 Stage Gulch Road Curve Correction and Realignment Project, Sonoma County

Caltrans Project No.: EA 04-283801

Dear Mr. Mac:

We have reviewed and hereby issue water quality certification to the California Department of Transportation (Department) for the project referenced above (hereinafter Project). The Department has applied to the U.S. Army Corps of Engineers (Corps) for Nationwide Permit Nos. 13, *Bank Stabilization,* 14, *Linear Transportation Projects,* 27, *Wetland and Riparian Restoration and Creation Activities, and,* 33, *Temporary Construction, Access and Dewatering*, pursuant to Section 404 of the Clean Water Act (33 U.S.C. 1344). As such, the Department has applied to the Water Board for a Clean Water Act Section 401 water quality certification that the Project will not violate State water quality standards.

Project: The Department proposes to realign and widen State Route 116 (SR 116) between Old Adobe Road and Arnold Drive in unincorporated Sonoma County to reduce the frequency of traffic accidents. Also, the intersection of SR 116 and County Dump Road will be reconfigured to improve the ingress and egress. The Project is proposed to begin construction in January 2010 and last approximately 36 months.

The Project area is characterized by grazing and vineyard land uses, and hilly topography with upland oak and high-quality oak-bay riparian woodlands. SR 116 and intermittent Champlin Creek are adjacent each other throughout the approximately 3-mile Project length, and cross each other at several locations.

SR 116 will be widened, reworked, and realigned. An approximately 1,275 linear foot segment of SR 116 west of the Sonoma County Transfer Station Road will be completely removed from the riparian corridor and relocated east to the adjacent upland area. The Department will abandon and remove this portion of SR 116 and restore the riparian corridor.

Impacts: The proposed project will result in permanent fill to approximately 1,436 linear feet (0.16 acres) of jurisdictional waters, 0.11 acres of jurisdictional wetlands, and, 165 linear feet (0.012) acres of state jurisdictional roadside ditches as a result of culvert extensions and roadway widening and realignment. The Project will also result in temporary impacts to approximately 1,065 linear feet (0.17 acres) of jurisdictional waters, 0.089 acres of jurisdictional wetlands, and 475 linear feet (0.022 acres) of state jurisdictional roadside ditches.

Project implementation would result in approximately 8.14 acres of added impervious area. Stormwater runoff from impervious areas may contain hydrocarbons, metals, volatile organic compounds, trash, and sediment at levels that may significantly impact jurisdictional waters if left untreated.

Mitigation: To compensate for permanent impacts to approximately 1,436 linear feet (0.16 acres of jurisdictional waters), the Department shall remove 1,274 linear feet of the existing SR 116 from the riparian zone of Champlin Creek and restore the area to riparian habitat. Two culverts shall be removed at the upper and lower limits of the restoration area. Also, two creek meanders may be altered to better-suit the site conditions. Restoration activities (i.e., removal of roadway and construction of riparian bench, meander re-build) through the Champlin Creek corridor shall total approximately 1.2 acres.

The Department shall mitigate for permanent impacts to jurisdictional wetlands by the purchase of 0.2 acres of seasonal freshwater wetland mitigation credits at the Burdell Ranch Wetland Mitigation Bank.

Because the Department shall be constructing approximately 5,200 linear feet of new roadside drainage ditches on-site that shall be vegetated using native grass mix, additional mitigation is not required for permanent impacts to state jurisdictional roadside drainage ditches. The approximately 5,200 linear feet of ditches shall be placed in areas where ditches do not currently exist.

To mitigate for temporary impacts to jurisdictional wetlands, waters, and state jurisdictional drainage ditches, all areas disturbed during construction shall be stabilized and revegetated using any combination of native grasses, shrubs, and legumes.

As mitigation for increased pollutant loads associated with impervious areas, the Department shall provide treatment of stormwater runoff from an area equivalent to the added and reworked impervious areas (8.75 acres). The Department shall install three biofiltration swales and 14 biofiltration strips at the following locations:

- **Biofiltration swale 1** shall be located adjacent westbound SR 116 between post miles 41.98 and 42.01. The swale will treat approximately 0.53 acres of impervious area;

- **Biofiltration swale 2** shall be located adjacent westbound SR 116 stations 44.02 and 44.05. The swale will treat approximately 0.48 acres of impervious area;

- **Biofiltration swale 3** shall be located adjacent westbound SR 116 stations 44.17 and 44.19. The swale will treat approximately 0.32 acres of impervious area;

- **Biofiltration strip 1** shall be located adjacent westbound SR 116 between post miles 41.81 and 41.87. The strip will treat approximately 0.40 acres of impervious area;

- **Biofiltration strip 2** shall be located adjacent eastbound SR 116 between post miles 42.08 and 42.18. The strip will treat approximately 0.48 acres of impervious area;

- **Biofiltration Strip 3** shall be located adjacent westbound SR 116 between post miles 42.22 and 42.30. The strip will treat approximately 0.21 acres of impervious area;

- **Biofiltration Strip 4** shall be located adjacent eastbound SR 116 between post miles 42.42 and 42.50. The strip will treat approximately 0.27 acres of impervious area;

- **Biofiltration Strip 5** shall be located adjacent westbound SR 116 between post miles 42.48 and 42.54. The strip will treat approximately 0.16 acres of impervious area;

- **Biofiltration Strip 6** shall be located adjacent westbound SR 116 between post miles 42.74 and 42.87. The strip will treat approximately 0.66 acres of impervious area;

- **Biofiltration Strip 7** shall be located adjacent westbound SR 116 between post miles 43.04 and 43.09. The strip will treat approximately 0.28 acres of impervious area;

- **Biofiltration Strip 8** shall be located adjacent eastbound SR 116 between post miles 43.25 and 43.38. The strip will treat approximately 1.38 acres of impervious area;

- **Biofiltration Strip 9** shall be located adjacent eastbound SR 116 between post miles 43.73 and 44.09. The strip will treat approximately 1.35 acres of impervious area;

- **Biofiltration Strip 10** shall be located adjacent eastbound SR 116 between post miles 44.19 and 44.43. The strip will treat approximately 0.67 acres of impervious area;

- **Biofiltration Strip 11** shall be located adjacent westbound SR 116 between post miles 44.29 and 44.42. The strip will treat approximately 0.48 acres of impervious area;

- **Biofiltration Strip 12** shall be located adjacent westbound SR 116 between post miles 44.42 and 44.52. The strip will treat approximately 0.35 acres of impervious area;

- **Biofiltration Strip 13** shall be located adjacent westbound SR 116 between post miles 44.54 and 44.78. The strip will treat approximately 0.57 acres of impervious area; and,

- **Biofiltration Strip 14** shall be located adjacent eastbound SR 116 between post miles 44.76 and 44.82. The strip will treat approximately 0.14 acres of impervious area.

CEQA Compliance: A Mitigated Negative Declaration for the Project was filed by the California Department of Transportation on July 28, 2005.

Wetland Tracker System: It has been determined through regional, state, and national studies that tracking of mitigation/restoration projects must be improved to better assess the performance of these projects, following monitoring periods that last several years. In addition, to effectively carry out the State's No Net Loss Policy for wetlands, the state needs to closely track both wetland losses and mitigation/restoration project success. Therefore, we require that the Authority use a standard form to provide Project information related to impacts and mitigation/restoration measures. An electronic copy of the form and instructions can be downloaded at: http://www.waterboards.ca.gov/sanfranciscobay/certs.shtml. Project information concerning impacts and mitigation/restoration will be made available at the web link: http://www.wetlandtracker.org.

Certification: I hereby issue an order certifying that any discharge from the referenced project will comply with the applicable provisions of sections 301 (Effluent Limitations), 302 (Water Quality Related Effluent Limitations), 303 (Water Quality Standards and Implementation Plans), 306 (National Standards of Performance), and 307 (Toxic and Pretreatment Effluent Standards) of the Clean Water Act, and with other applicable requirements of State law. This discharge is also regulated under State Water Resources Control Board Order No. 2003 - 0017 – DWQ, "General Waste Discharge Requirements for Dredge and Fill Discharges That Have Received State Water Quality Certification" which requires compliance with all conditions of this Water Quality Certification. The following conditions are associated with this certification:

1. The Agency shall adhere to the Standard and Regional conditions imposed by Nationwide Permit Nos. 13, 24, 27, and 33, issued to the Department by the Corps and to the conditions

of the California Department of Fish and Game (CDFG) Final Streambed Alteration Agreement (Agreement);

2. The Department shall submit a Final Mitigation and Monitoring Plan (Plan) no later than September 1, 2009. The Plan shall include, at a minimum, all of the following:

Riparian Restoration

a. A riparian restoration plan that includes:
   i. Restoration and enhancement of an approximately 2.9 acre riparian area;
   ii. Complete removal of asphalt concrete from 1,274 linear feet of the existing SR 116 and subsequent revegetation in and adjacent this area;
   iii. A survey supported proposal to sub-excavate areas of roadway removal for purposes of restoring riparian habitat;
   iv. A detailed riparian planting plan based upon baseline conditions documented from thriving riparian areas within or nearby the Project area.
   v. Use of biostabilization or biotechnical bank stabilization where bank stabilization is proposed;
   vi. Removal of the two Champlin Creek culverts from the abandoned section of SR 116 and restoration of the creek channel at these locations;
   vii. Realignment of Champlin Creek meanders where justified by survey data.

b. A maintenance and monitoring plan for riparian restoration activities. The maintenance and monitoring plan shall include success criteria and require that:
   i. Any individual planting not be considered successfully established if two or fewer growing seasons have passed from the time of planting and/or the termination of supplemental irrigation;
   ii. Photographic monitoring points be used during the monitoring period, with color photos included in every monitoring report; and,
   iii. Final success criteria shall not be considered achieved on any element of the riparian restoration plan until ten years have passed from the time of mitigation construction.

Annual Monitoring Reports

c. A time schedule for submittal of annual monitoring reports to the Water Board;

Temporary Impacts

d. A planting and mitigation plan for onsite restoration of temporary impacts. The planting plan shall include a diversity of native oak species. The planting plan shall also include maple, buckeye, laurel, willow, snowberry, California blackberry, coffee berry, sticky monkeyflower, mugwort, and dogbane. The Department shall also include a plan to ensure that temporarily impacted areas revegetate successfully;

Supporting Surveys

e. Survey data, including longitudinal profiles, to support proposed work in Champlin Creek that may significantly change the existing creek grade, direction,

dimensions, or resilience to down-cutting (i.e., installation of impermeable creek bed liner[1]); and,

Planted Rock-Slope Protection

f. A plan to install appropriate woody riparian vegetation within all areas where rock slope protection is being proposed at culvert outfalls; in these areas where vegetation is not being proposed, the Department shall explain why inclusion of vegetation is not feasible. The Plan shall also include a maintenance and monitoring plan that ensures successful establishment of rock slope protection-planted vegetation. Individual plantings may not be considered successfully established until two growing seasons have passed from their initial planting, and, individual RSP-planted areas may not be considered successful any sooner than five years from the initial planting episode.

3. The Final Mitigation and Monitoring Plan shall be found acceptable to the Water Board Executive Officer before any Project-related construction may commence;

4. On-site riparian restoration mitigation shall not be considered complete until the Final Mitigation Report is found acceptable to the Executive Officer, in writing;

5. Certification is conditioned upon submission to the Water Board a receipt for purchase of 0.2 acres of seasonal freshwater wetland mitigation credits at Burdell Ranch Wetland Mitigation Bank;

6. The Department shall commence onsite riparian restoration construction activities no later than June 15, 2011. Failure to meet this deadline shall result in an enforcement action by the Water Board;

7. Project construction within waters of the state shall be restricted to the dry season, specifically, April 15 to October 15, or the end of any extension granted by CDFG;

8. All temporarily disturbed areas shall be revegetated with a combination of grass, shrub, and legume species native to the project area, and, restored to improved or pre-construction conditions;

9. During clearing and grubbing activities in areas of temporary impact, which are not within the limits of excavation or embankment construction, the Department shall trim vegetatively-propagating tree species, such as willows, above ground, without damaging their root structures. Where this is not feasible, and the tree is removed or otherwise

[1] The Department has proposed an in-stream California red-legged frog "stilling basin" with an impermeable bed liner as mitigation for potential impacts to the frog. At the time of certification issuance, the Department has not provided evidence that the proposed stilling basin will not be deleterious to the long-term stability of Champlin Creek. As such, installation of the stilling basin is not accepted under this certification.

irreparably damaged, the Department shall replace the damaged tree no later than fourteen days from the time of impact and report this activity in the annual report;

10. Biofiltration swales shall be equipped with underdrains to ensure vertical infiltration of stormwater. In locations where biofiltration strips and swales are proposed in Type C and D soils, the strips and/or swales shall be compost-amended to enhance infiltration;

11. Not later than 30 days prior to the beginning of construction of any Project component, the Department shall submit, acceptable to the Executive Officer, a final SWPPP to address the Project's expected construction stage impacts, prepared pursuant to the State Water Resources Control Board Water Quality Order No. 99-06-DWQ, the NPDES Statewide Permit for Storm Water Discharges From the State of California City of Transportation Properties, Facilities, and Activities. If the Department is proposing rainy season construction activities, the Department shall provide a detailed schedule of activities and the associated pollution prevention measures that shall be in place to protect Champlin Creek;

12. The Department shall maintain a copy of this Water Quality Certification at the Project site so as to be available at all times to site operating personnel. It is the responsibility of the Department to assure that all personnel (employees, contractors, and subcontractors) are adequately informed and trained regarding the conditions of this certification;

13. This certification does not allow for the take, or incidental take, of any special status species. The Department shall use the appropriate protocols, as approved by the California Department of Fish and Game and the U.S. Fish and Wildlife Service, to ensure that Project activities do not impact the Beneficial Use of the Preservation of Rare and Endangered Species;

14. No fueling, cleaning, or maintenance of vehicles or equipment shall take place within any areas where an accidental discharge to Champlin Creek may occur. Construction materials and heavy equipment must be stored outside the active flow of Champlin Creek;

15. The Department is required to use the standard Wetland Tracker form to provide Project information describing impacts and mitigation/restoration measures not later than September 15, 2009, to the Executive Officer. The completed Wetland Tracker form shall be submitted electronically to wetlandtracker@waterboards.ca.gov, or, shall be submitted as a hard copy to both: 1) San Francisco Bay Regional Water Quality Control Board (see letterhead for address), to the attention of Wetland Tracker, and, 2) San Francisco Estuary Institute, 7770 Pardee Lane, Oakland, CA 94621-1424, to the attention of Mike May;

16. Except as expressly allowed in this Certification, the discharge, or creation of the potential for discharge, of debris, rubbish, or any soil materials including fresh concrete, cement, silts, clay, sand and other organic materials to Champlin Creek is prohibited. Any of these materials placed within or where they may enter Champlin Creek by the Department or any party working under contract, or with the permission of the Department, shall be removed

immediately. When construction is completed, any excess material shall be removed from the work area and any areas adjacent to the work area where such material may be washed into Champlin Creek. During construction, the Department and the contractor shall not dump any litter or construction debris within the riparian/stream zone. All such debris and waste shall be picked up daily and properly disposed of at an appropriate site;

17. This certification action is subject to modification or revocation upon administrative or judicial review, including review and amendment pursuant to Section 13330 of the California Water Code (CWC) and Section 3867 of Title 23 of the California Code of Regulations (23 CCR);

18. This certification action does not apply to any discharge from any activity involving a hydroelectric facility requiring a Federal Energy Regulatory Commission (FERC) license or an amendment to a FERC license, unless the pertinent certification application was filed pursuant to California Code of Regulations (CCR) Title 23, Subsection 3855(b) and that application specifically identified that a FERC license or amendment to a FERC license for a hydroelectric facility was being sought; and,

19. Certification is conditioned upon total payment of the full fee required in State regulations (23 CCR Section 3833). Water Board staff received full payment of $27,615.60 on November 20, 2008.

We anticipate your cooperation in implementing these conditions. However, please be advised that any violation of water quality certification conditions is a violation of State law and subject to administrative civil liability pursuant to California Water Code (CWC) section 13350. Failure to respond, inadequate response, late response, or failure to meet any condition of this certification may subject you to civil liability imposed by the Water Board to a maximum of $5,000 per day per violation or $10 for each gallon of waste discharged in violation of this certification.

Condition Nos. 2, 5, 11 and 15 are requirements for submittal of information or reports. Any requirement for a report made as a condition to this action is a formal requirement pursuant to CWC section 13267, and failure or refusal to provide, or falsification of such required report is subject to civil liability as described in CWC section 13268.

Should new information come to our attention that indicates a water quality problem with this project, the Water Board may issue Waste Discharge Requirements pursuant to 23 CCR Section 3857.

If you have any question, please contact Brendan Thompson of my staff at (510) 622-2506, or via e-mail to BThompson@waterboards.ca.gov.

Sincerely,

2009.05.28
16:56:08 -07'00'

Bruce H. Wolfe
Executive Officer

cc (via e-mail): Mr. Bill Orme SWRCB-DWQ
Mr. Hal Durio, Regulatory Branch, USACE
Ms. Jane Hicks, Regulatory Branch, USACE
Ms. Holly Costa, Regulatory Branch, USACE
Mr. Cameron Johnson, Regulatory Branch, USACE
Mr. Dale Bowyer, Water Board
Ms. Melissa Escaron, CDFG
Mr. Hardeep Takhar, Caltrans
Mr. David Smith, USEPA