Dist	COUNTY	ROUTE	POST MILES TOTAL PROJECT	SHEET No.	TOTAL SHEETS
04	Ala	880	28.2/29.9	1	183

ACIM-880-1(064)E

STATE OF CALIFORNIA
DEPARTMENT OF TRANSPORTATION

PROJECT PLANS FOR CONSTRUCTION ON
STATE HIGHWAY
IN ALAMEDA COUNTY
IN OAKLAND
FROM 0.5 MILE NORTH OF THE HIGH STREET SEPARATION OVERHEAD TO 0.5 MILE SOUTH OF THE FIFTH AVENUE OVERHEAD

TO BE SUPPLEMENTED BY STANDARD PLANS DATED MAY 2006

INDEX OF PLANS

SHEET No.	DESCRIPTION
1	TITLE AND LOCATION MAP
2-6	TYPICAL CROSS SECTIONS
7-14	LAYOUTS
15-24	PROFILES AND SUPERELEVATION DIAGRAMS
25-33	CONSTRUCTION DETAILS
34-38	EROSION CONTROL PLANS, DETAILS AND QUANTITIES
39-74	DRAINAGE PLANS, DETAILS AND QUANTITIES
75-82	UTILITY PLANS, DETAILS AND QUANTITIES
83-90	CONSTRUCTION AREA SIGNS
91-104	STAGE CONSTRUCTION AND TRAFFIC HANDLING PLANS, DETAILS AND QUANTITIES
105-115	PAVEMENT DELINEATION PLANS, DETAILS AND QUANTITIES
116-128	SIGN PLANS, DETAILS AND QUANTITIES
129-131	SUMMARY OF QUANTITIES
132-136	ELECTRICAL PLANS AND DETAILS
137-138	LOG OF TEST BORINGS (FRUITVALE Ave OH WIDENING)
139-143	LOG OF TEST BORINGS (16TH Ave OH OVERCROSSING)
144-175	REVISED AND NEW STANDARD PLANS

STRUCTURE PLANS

176-179	TYPE 2 BARRIER REPLACEMENT
180-183	RETAINING WALL No. 4 BARRIER AND CHAIN LINK RAILING REPLACEMENT

THE STANDARD PLANS LIST APPLICABLE TO THIS CONTRACT IS INCLUDED IN THE NOTICE TO BIDDERS AND SPECIAL PROVISIONS BOOK.

LOCATION MAP

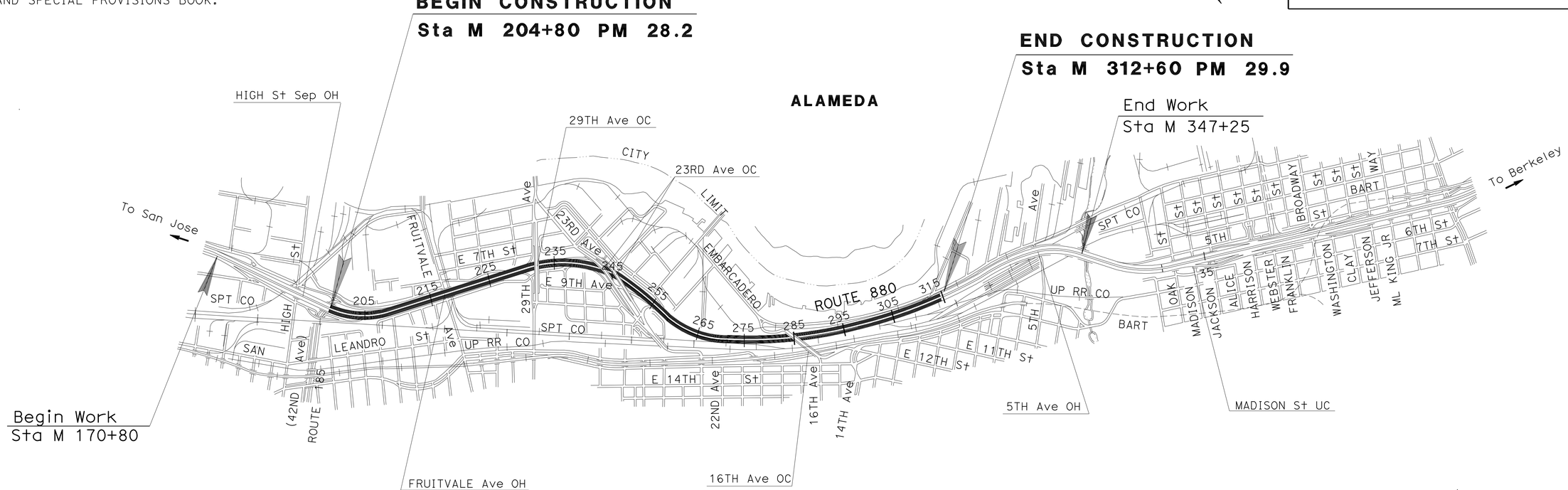

NO SCALE

THE CONTRACTOR SHALL POSSESS THE CLASS (OR CLASSES) OF LICENSE AS SPECIFIED IN THE "NOTICE TO BIDDERS."

PROJECT MANAGER: STANLEY GEE

DESIGN ENGINEER: KENNETH D. NHIEU

PROJECT/ ENGINEER REGISTERED CIVIL ENGINEER — DATE 3-23-11

June 20, 2011
PLANS APPROVAL DATE

REGISTERED PROFESSIONAL ENGINEER — K.D. Nhieu — No. 55948 — Exp. 12-31-12 — CIVIL — STATE OF CALIFORNIA

THE STATE OF CALIFORNIA OR ITS OFFICERS OR AGENTS SHALL NOT BE RESPONSIBLE FOR THE ACCURACY OR COMPLETENESS OF SCANNED COPIES OF THIS PLAN SHEET.

CONTRACT No.	04-1A6824
PROJECT ID	0400020137

LAST REVISION 03-24-11 — DATE PLOTTED => 03-AUG-2011 — TIME PLOTTED => 06:54

Dist	COUNTY	ROUTE	POST MILES TOTAL PROJECT	SHEET No.	TOTAL SHEETS
04	Ala	880	28.2/29.9	2	183

REGISTERED CIVIL ENGINEER 3-23-11 DATE

6-20-11
PLANS APPROVAL DATE

REGISTERED PROFESSIONAL ENGINEER K.D. Nhieu No. 55948 Exp. 12-31-12 CIVIL STATE OF CALIFORNIA

THE STATE OF CALIFORNIA OR ITS OFFICERS OR AGENTS SHALL NOT BE RESPONSIBLE FOR THE ACCURACY OR COMPLETENESS OF SCANNED COPIES OF THIS PLAN SHEET.

STRUCTURAL SECTION NOTES:

1. 0.10′ HMA (OG)
   0.50′ TO 2.33′ HMA
   GPI
   0.10′ HMA
2. 1.00′ CONCRETE BASE
3. 0.95′ CONCRETE BASE
   0.35′ CI 2 AS
4. 1.25′ HMA
5. 0.10′ HMA (OG)
   0.60′ TO 1.33′ HMA
   GPI
   0.10′ HMA
6. 1.17′ REPLACE CONCRETE PAVEMENT (RSC)
7. 0.84′ REPLACE CONCRETE PAVEMENT
   BOND BREAKER (RSC)
   0.33′ REPLACE CONCRETE PAVEMENT (RSC)
8. 0.10′ - 0.7′ HMA

NOTES:

1. DIMENSIONS OF STRUCTURAL SECTIONS ARE SUBJECT TO TOLERANCES SPECIFIED IN THE STANDARD SPECIFICATIONS.
2. SUPERELEVATION AS SHOWN OR AS DIRECTED BY THE ENGINEER.
3. REMOVE ANY EXISTING OGAC PRIOR TO OVERLAY AND REPLACE WITH HMA.
4. FOR STRUCTURAL SECTION 6, FOR FURTHER DETAILS, SEEREVISED Std PLAN RSP P8.
5. FOR STRUCTURAL SECTION 6, FOR FURTHER DETAILS, SEEREVISED Std PLAN RSP P8, EXCEPT NOTE 6 OF Std PLAN DOES NOT APPLY.

ABBREVIATIONS:

HMA (OG)	HOT MIX ASHPALT (OPEN GRADED)
GPI	GEOSYNTHETIC PAVEMENT INTERLAYER
RSC	RAPID STRENGTH CONCRETE

DESIGN DESIGNATION:

2008 TWO-WAY AADT = 224,000
2008 TWO-WAY AADTT = 22,400
2032 TWO-WAY AADT = 264,200
2032 TWO-WAY AADTT = 26,948
DHV = 29,060
D = 50%
T = 10%
V = 65 MPH
TI (20-YEAR) = 15.5
ESAL (20-YEAR) = 86,219,000

DESIGN DESIGNATION EXPRESSION:

AADT = ANNUAL AVERAGE DAILY TRAFFIC
AADTT = ANNUAL AVERAGE DAILY TRUCK TRAFFIC
DHV = TWO-WAY DESIGN HOURLY VOLUME, VEHICLES
D = PERCENTAGE OF DHV IN THE DIRECTION OF HEAVIER FLOW
T = TRUCK TRAFFIC VOLUME EXPRESSED AS A PERCENTAGE OF THE DHV
V = DESIGN SPEED IN MPH
TI = TRAFFIC INDEX
ESAL = TOTAL No. OF CUMULATIVE 18 KIP EQUIVALENT SINGLE AXLE LOADS

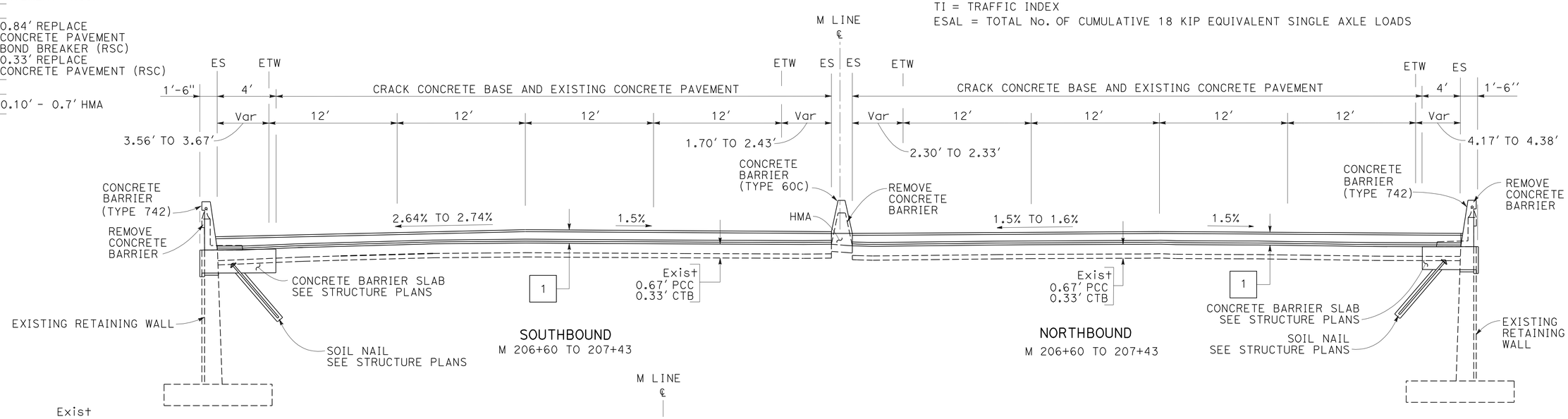

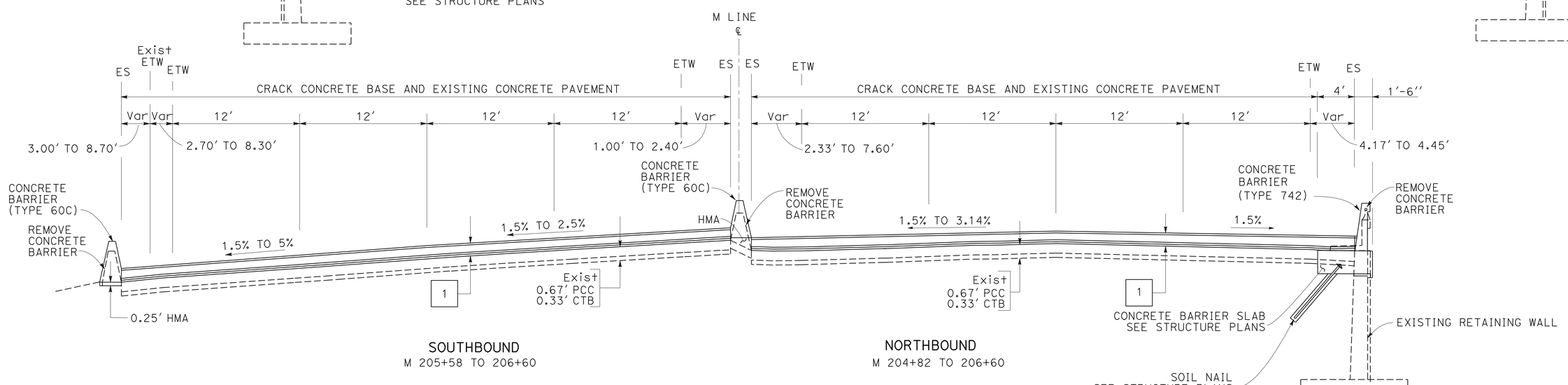

TYPICAL CROSS SECTIONS

NO SCALE

X-1

REVISED BY | DATE REVISED
ROWAIDA HASHIMI | KENNETH D. NHIEU
CALCULATED-DESIGNED BY | CHECKED BY
FUNCTIONAL SUPERVISOR
EDMUND CHOY

STATE OF CALIFORNIA - DEPARTMENT OF TRANSPORTATION
Caltrans®
DESIGN

LAST REVISION 03-24-11 | DATE PLOTTED => 22-JUN-2011 | TIME PLOTTED => 13:03

Dist	COUNTY	ROUTE	POST MILES TOTAL PROJECT	SHEET No.	TOTAL SHEETS
04	Ala	880	28.2/29.9	3	183

REGISTERED CIVIL ENGINEER 3-23-11 DATE

6-20-11
PLANS APPROVAL DATE

REGISTERED PROFESSIONAL ENGINEER K.D. Nhieu No. 55948 Exp. 12-31-12 CIVIL STATE OF CALIFORNIA

THE STATE OF CALIFORNIA OR ITS OFFICERS OR AGENTS SHALL NOT BE RESPONSIBLE FOR THE ACCURACY OR COMPLETENESS OF SCANNED COPIES OF THIS PLAN SHEET.

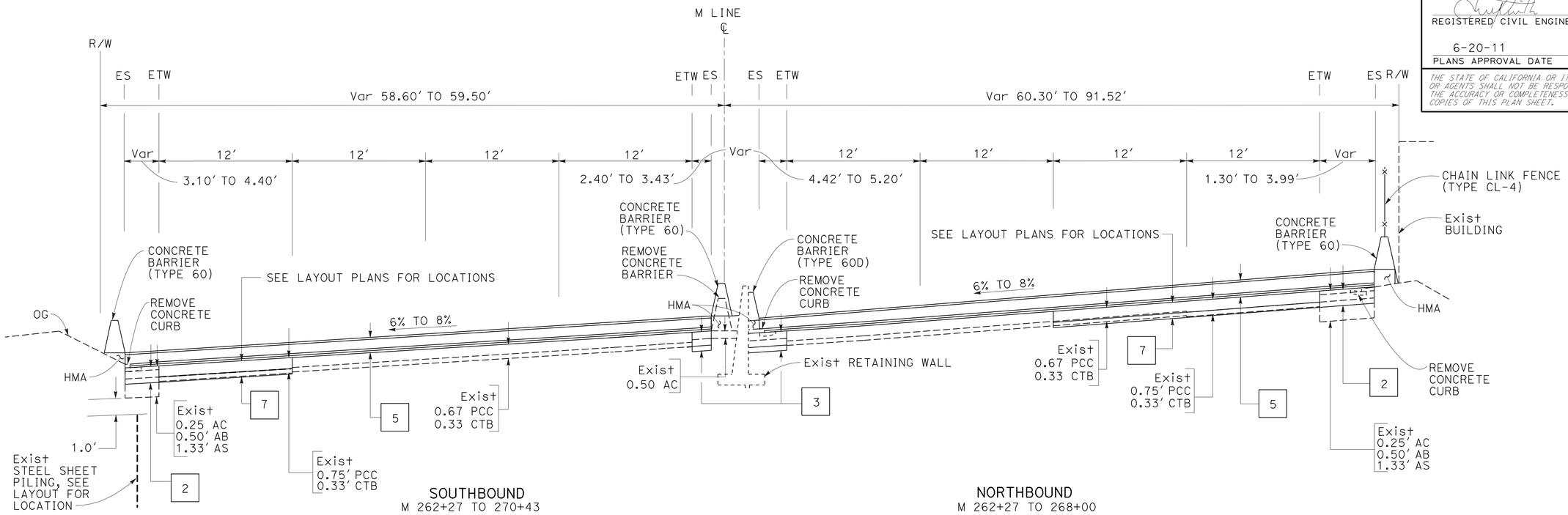

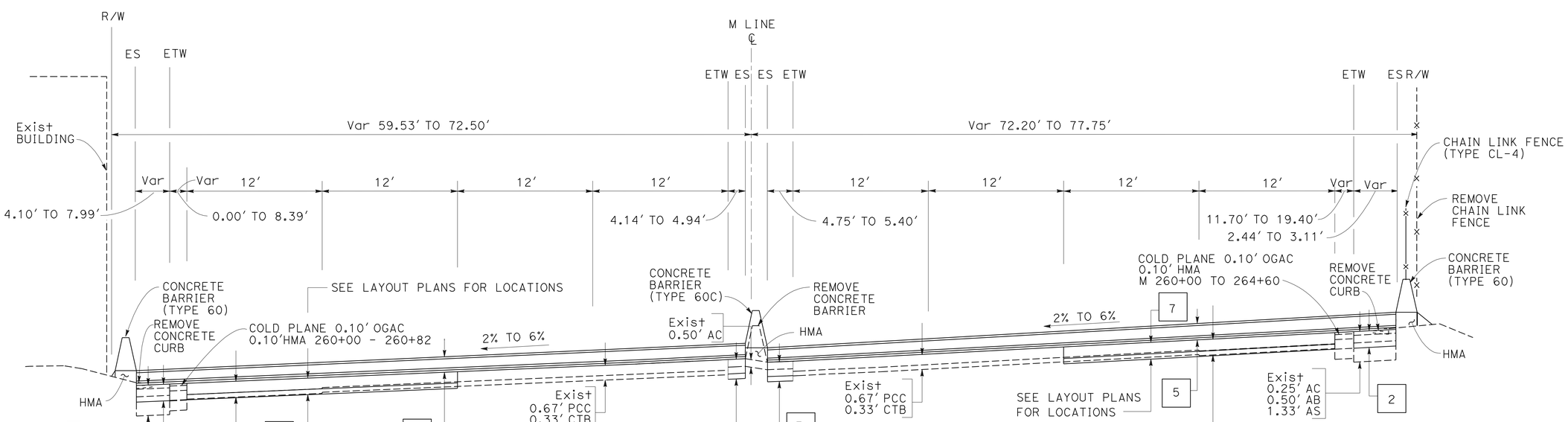

TYPICAL CROSS SECTIONS

NO SCALE

FOR NOTES, AND ABBREVIATIONS SEE SHEET X-1

X-2

REVISED BY | DATE REVISED
ROWAIDE HASHIMI | KENNETH D. NHIEU
CALCULATED-DESIGNED BY | CHECKED BY
FUNCTIONAL SUPERVISOR | EDMUND CHOY

STATE OF CALIFORNIA - DEPARTMENT OF TRANSPORTATION
Caltrans
DESIGN

LAST REVISION 03-24-11 | DATE PLOTTED => 22-JUN-2011 | TIME PLOTTED => 13:03

Dist	COUNTY	ROUTE	POST MILES TOTAL PROJECT	SHEET No.	TOTAL SHEETS
04	Ala	880	28.2/29.9	4	183

REGISTERED CIVIL ENGINEER 3-23-11 DATE

6-20-11
PLANS APPROVAL DATE

REGISTERED PROFESSIONAL ENGINEER K.D. Nhieu No. 55948 Exp. 12-31-12 CIVIL STATE OF CALIFORNIA

THE STATE OF CALIFORNIA OR ITS OFFICERS OR AGENTS SHALL NOT BE RESPONSIBLE FOR THE ACCURACY OR COMPLETENESS OF SCANNED COPIES OF THIS PLAN SHEET.

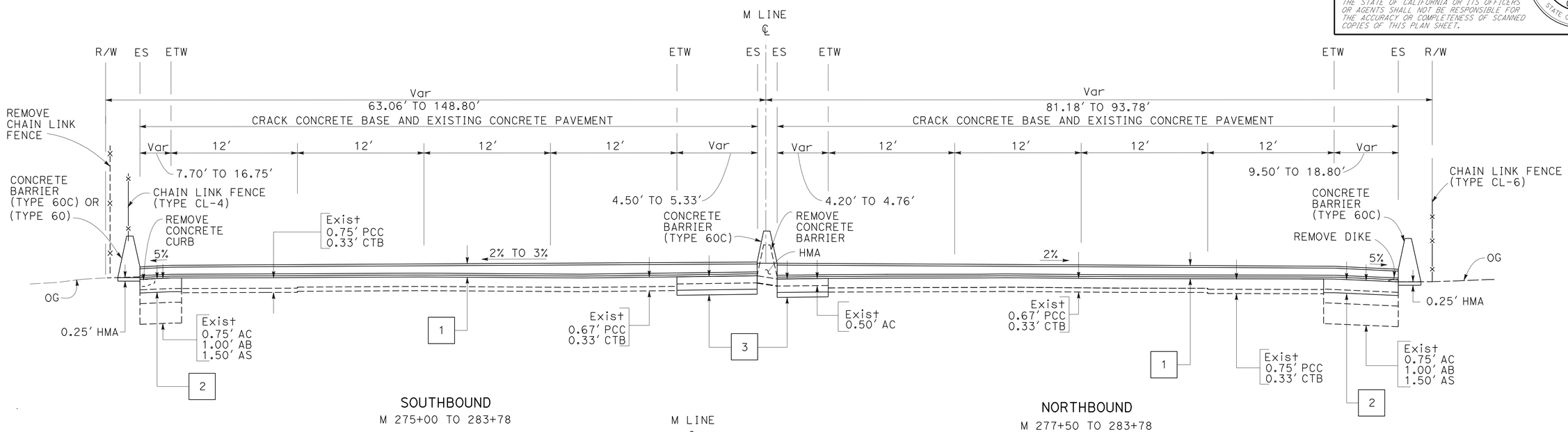

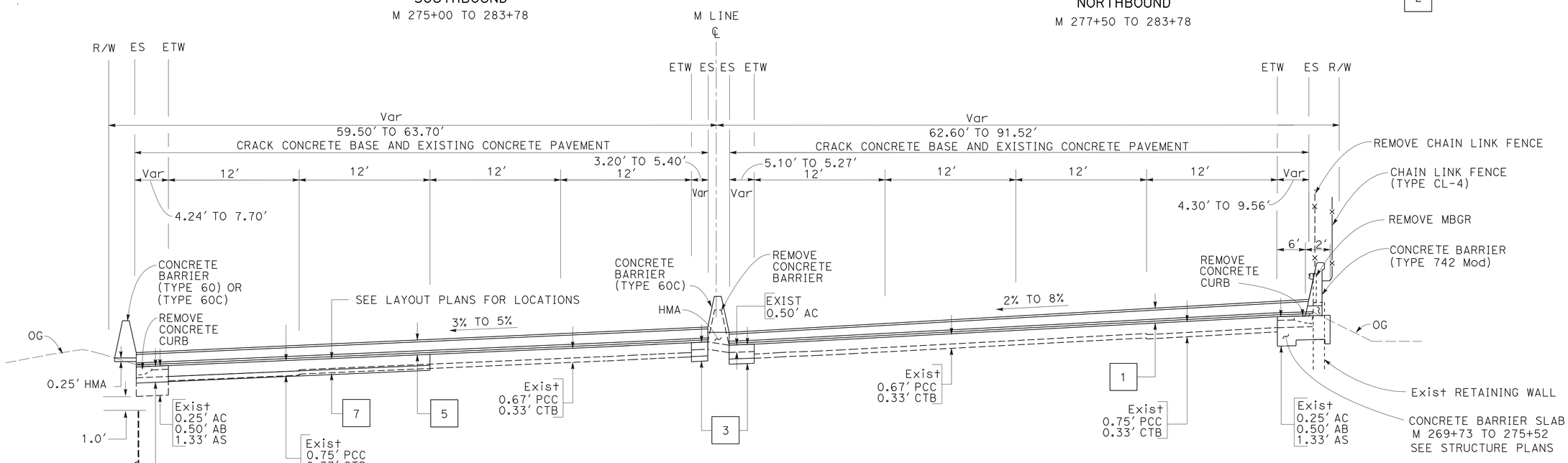

TYPICAL CROSS SECTIONS

NO SCALE

FOR NOTES AND ABBREVIATIONS SEE SHEET X-1

X-3

REVISED BY | DATE REVISED
ROWAIDA HASHIMI | KENNETH D. NHIEU
CALCULATED-DESIGNED BY | CHECKED BY
FUNCTIONAL SUPERVISOR: EDMUND CHOY

STATE OF CALIFORNIA - DEPARTMENT OF TRANSPORTATION
Caltrans
DESIGN

LAST REVISION 03-24-11 | DATE PLOTTED => 22-JUN-2011 | TIME PLOTTED => 13:03

Dist	COUNTY	ROUTE	POST MILES TOTAL PROJECT	SHEET No.	TOTAL SHEETS
04	Ala	880	28.2/29.9	5	183

REGISTERED CIVIL ENGINEER 3-23-11 DATE

6-20-11
PLANS APPROVAL DATE

REGISTERED PROFESSIONAL ENGINEER K.D. Nhieu No. 55948 Exp. 12-31-12 CIVIL STATE OF CALIFORNIA

THE STATE OF CALIFORNIA OR ITS OFFICERS OR AGENTS SHALL NOT BE RESPONSIBLE FOR THE ACCURACY OR COMPLETENESS OF SCANNED COPIES OF THIS PLAN SHEET.

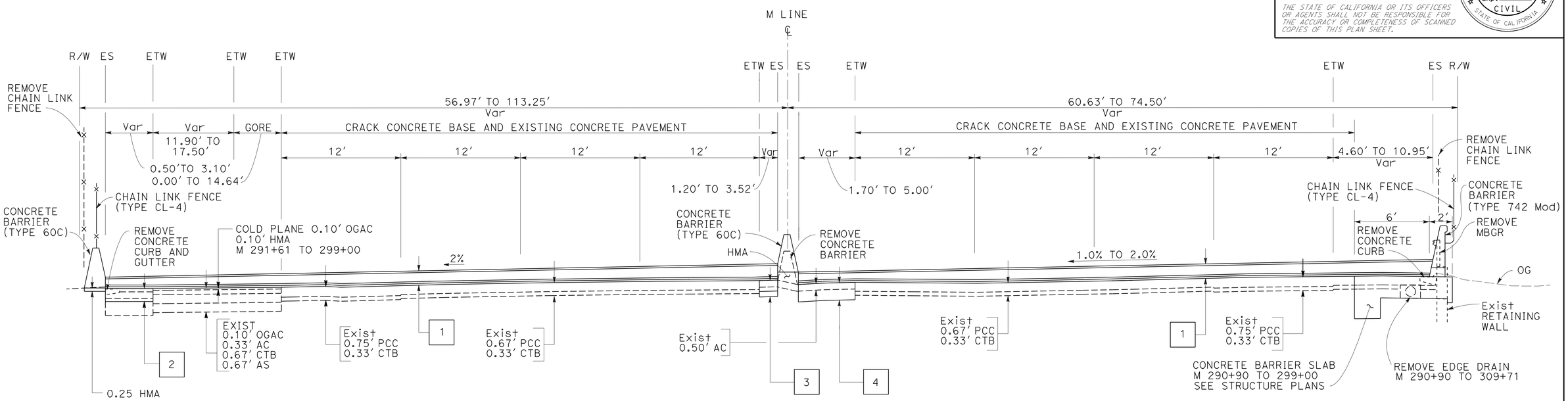

SOUTHBOUND
M 289+84 TO 299+00

NORTHBOUND
M 288+50 TO 299+00

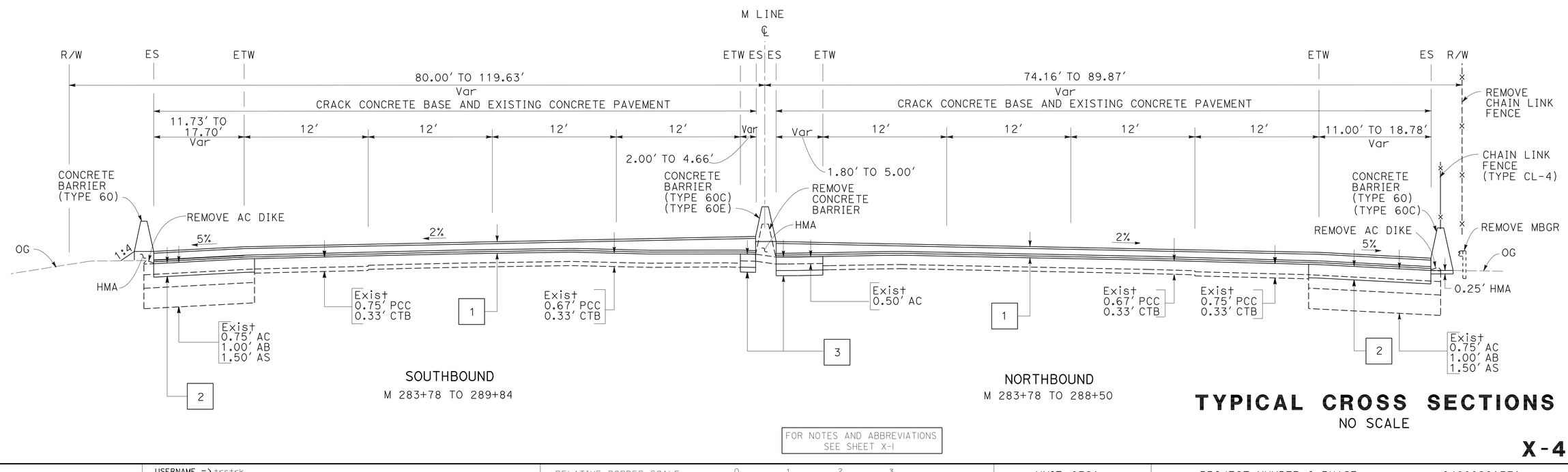

SOUTHBOUND
M 283+78 TO 289+84

NORTHBOUND
M 283+78 TO 288+50

TYPICAL CROSS SECTIONS

NO SCALE

FOR NOTES AND ABBREVIATIONS SEE SHEET X-1

X-4

STATE OF CALIFORNIA - DEPARTMENT OF TRANSPORTATION
DESIGN
FUNCTIONAL SUPERVISOR: EDMUND CHOY
CALCULATED-DESIGNED BY: ROWAIDA HASHIM
CHECKED BY: KENNETH D. NHIEU
REVISED BY
DATE REVISED

LAST REVISION 03-23-11
DATE PLOTTED => 22-JUN-2011
TIME PLOTTED => 13:03

Dist	COUNTY	ROUTE	POST MILES TOTAL PROJECT	SHEET No.	TOTAL SHEETS
04	Ala	880	28.2/29.9	6	183

REGISTERED CIVIL ENGINEER 3-23-11 DATE

6-20-11
PLANS APPROVAL DATE

REGISTERED PROFESSIONAL ENGINEER K.D. Nhieu No. 55948 Exp. 12-31-12 CIVIL STATE OF CALIFORNIA

THE STATE OF CALIFORNIA OR ITS OFFICERS OR AGENTS SHALL NOT BE RESPONSIBLE FOR THE ACCURACY OR COMPLETENESS OF SCANNED COPIES OF THIS PLAN SHEET.

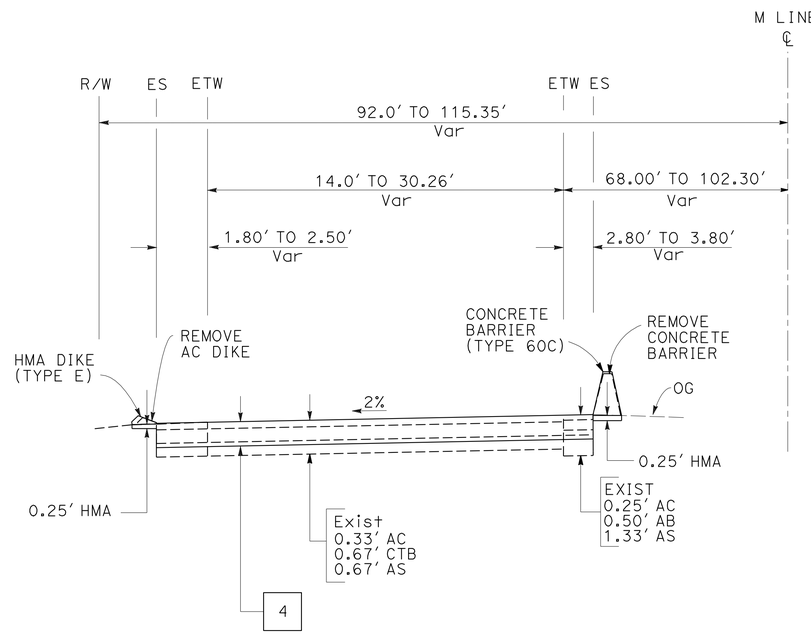

M 289+45 TO 290+25

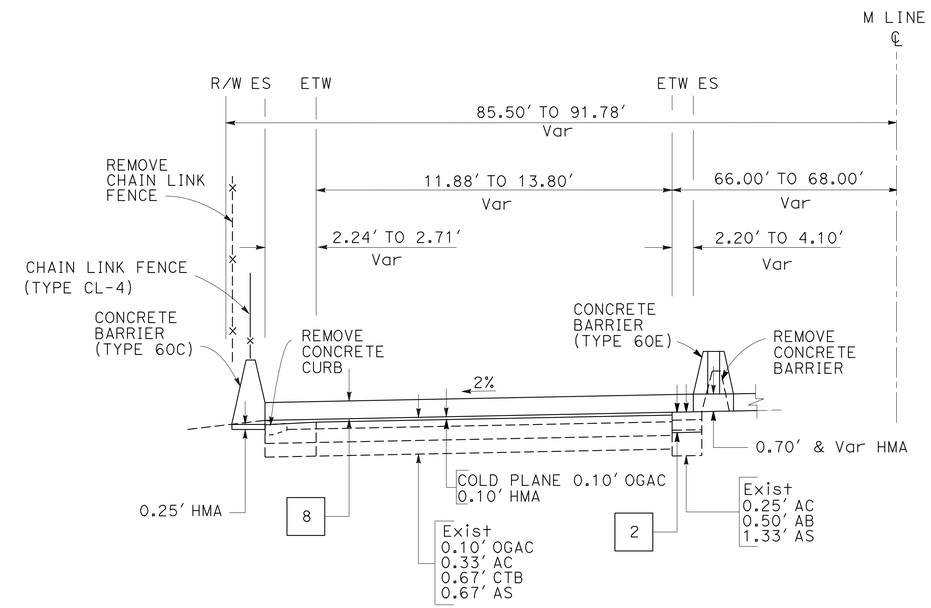

SB OFF-RAMP TO EMBARCADERO/16TH Ave

M 290+25 TO 291+61

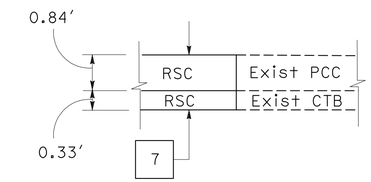

DETAIL OF REPLACE CONCRETE PAVEMENT
(RAPID STRENGTH CONCRETE)

M 224+20 TO 258+40

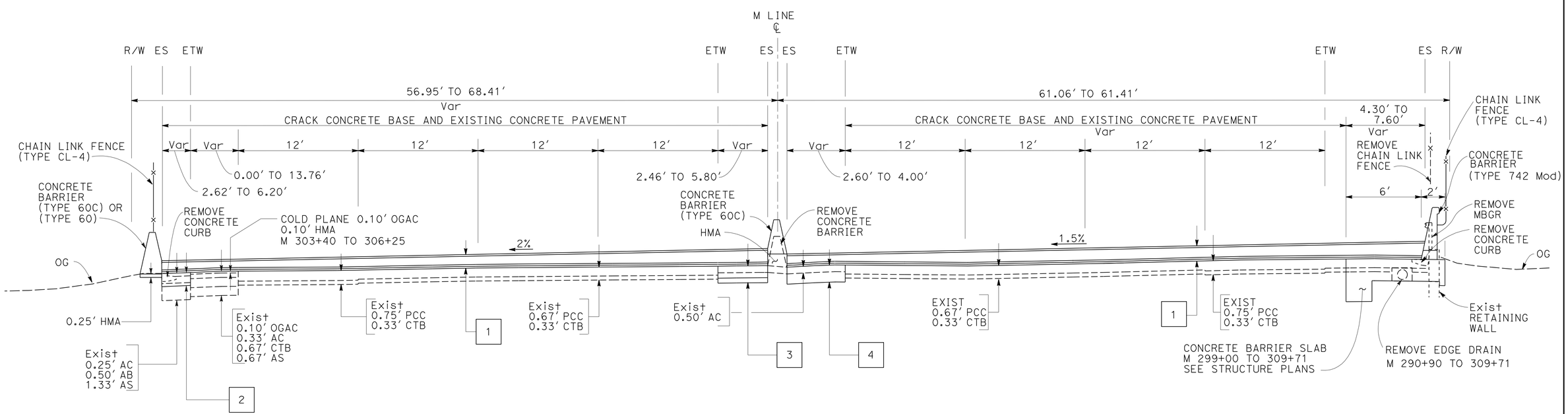

SOUTHBOUND

M 299+00 TO 306+25

NORTHBOUND

TYPICAL CROSS SECTIONS

NO SCALE

FOR NOTES AND ABBREVIATIONS SEE SHEET X-1

X-5

STATE OF CALIFORNIA - DEPARTMENT OF TRANSPORTATION
DESIGN
FUNCTIONAL SUPERVISOR: EDMUND CHOY
CALCULATED-DESIGNED BY: ROWAIDA HASHIMI
CHECKED BY: KENNETH D. NHIEU
REVISED BY
DATE REVISED

LAST REVISION 03-24-11
DATE PLOTTED => 22-JUN-2011
TIME PLOTTED => 13:03

Dist	COUNTY	ROUTE	POST MILES TOTAL PROJECT	SHEET No.	TOTAL SHEETS
04	Ala	880	28.2/29.9	7	183

REGISTERED CIVIL ENGINEER 3-23-11 DATE

6-20-11
PLANS APPROVAL DATE

REGISTERED PROFESSIONAL ENGINEER K.D. Nhieu No. 55948 Exp. 12-31-12 CIVIL STATE OF CALIFORNIA

THE STATE OF CALIFORNIA OR ITS OFFICERS OR AGENTS SHALL NOT BE RESPONSIBLE FOR THE ACCURACY OR COMPLETENESS OF SCANNED COPIES OF THIS PLAN SHEET.

NOTE:

FOR ACCURATE RIGHT OF WAY DATA, CONTACT RIGHT OF WAY ENGINEERING AT THE DISTRICT OFFICE.

LEGEND:

- No. — STRUCTURAL SECTION NUMBER
- CRACK CONCRETE BASE AND EXISTING CONCRETE PAVEMENT
- PAVING CONFORM
- REPLACE CONCRETE PAVEMENT (RAPID STRENGTH CONCRETE)
- COLD PLANE ASPHALT CONCRETE PAVEMENT AND PAVING CONFORM
- COLD PLANE ASPHALT CONCRETE PAVEMENT

ABBREVIATION:

TCE Temp CONSTRUCTION EASEMENT

NOTE:

FOR CHAIN LINK FENCE MOUNTED ON CONCRETE BARRIER, SEE CONSTRUCTION DETAILS.

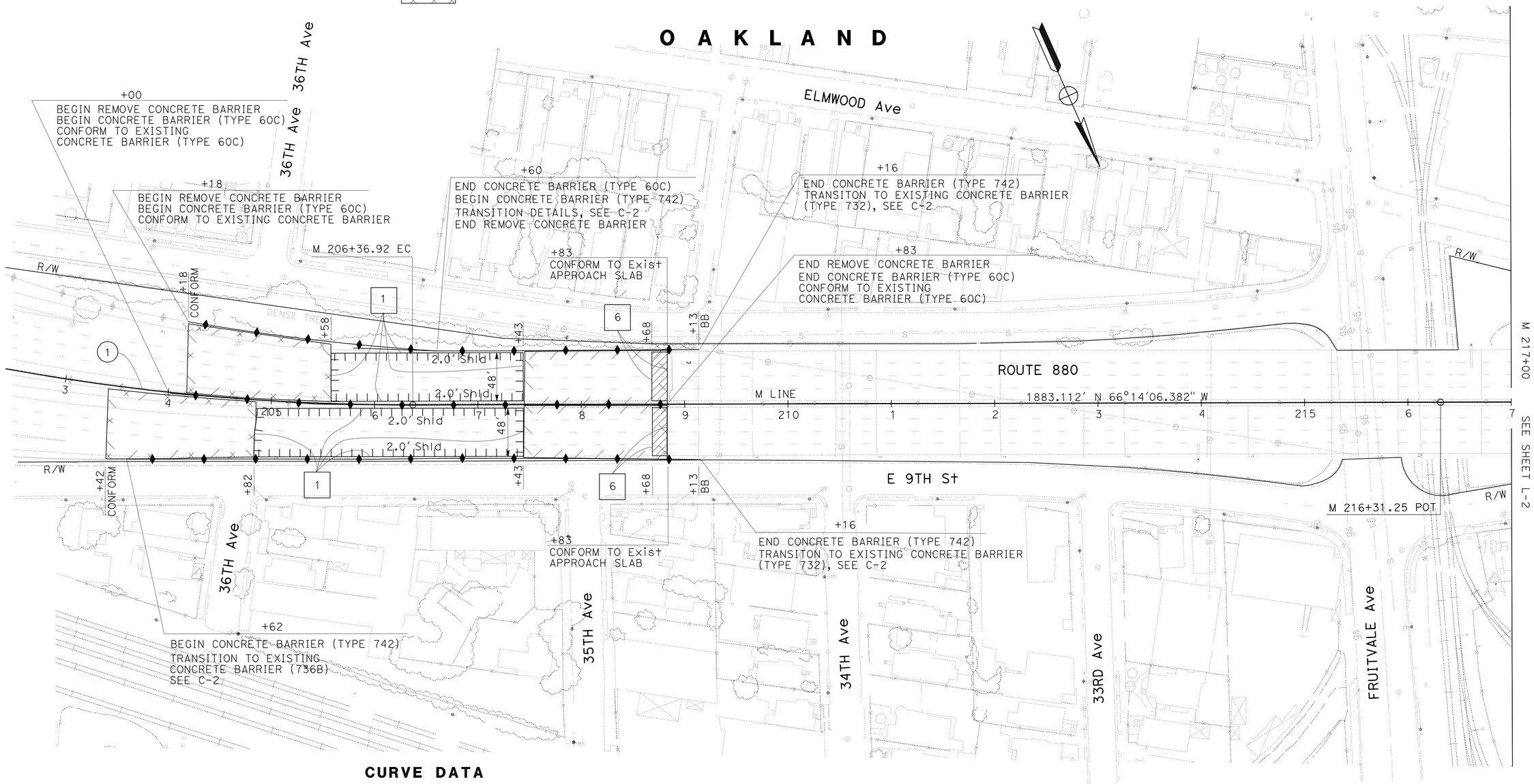

CURVE DATA

No.	R	Δ	T	L	N-COORDINATE	E-COORDINATE
1	2179.374′	19°06′9.610"	366.709′	726.613′	2106247.109	6062229.151

LAYOUT
SCALE: 1" = 50′

L-1

REVISED BY | DATE REVISED
ERIC K. WONG | KENNETH D. NHIEU
CALCULATED-DESIGNED BY | CHECKED BY
FUNCTIONAL SUPERVISOR | EDMUND CHOY

STATE OF CALIFORNIA - DEPARTMENT OF TRANSPORTATION
Caltrans
DESIGN

LAST REVISION 03-24-11 | DATE PLOTTED => 22-JUN-2011 | TIME PLOTTED => 13:03

Dist	COUNTY	ROUTE	POST MILES TOTAL PROJECT	SHEET No.	TOTAL SHEETS
04	Ala	880	28.2/29.9	8	183

REGISTERED CIVIL ENGINEER 3-23-11 DATE

6-20-11
PLANS APPROVAL DATE

REGISTERED PROFESSIONAL ENGINEER K.D. Nhieu No. 55948 Exp. 12-31-12 CIVIL STATE OF CALIFORNIA

THE STATE OF CALIFORNIA OR ITS OFFICERS OR AGENTS SHALL NOT BE RESPONSIBLE FOR THE ACCURACY OR COMPLETENESS OF SCANNED COPIES OF THIS PLAN SHEET.

NOTE:
FOR ACCURATE RIGHT OF WAY DATA, CONTACT RIGHT OF WAY ENGINEERING AT THE DISTRICT OFFICE.

CURVE DATA

No.	R	Δ	T	L	N-COORDINATE	E-COORDINATE
2	67571.650′	0°33′40.914″	331.025′	662.045′	2170781.759	6088752.440
3	9056.224′	1°14′31.866″	98.174′	196.341′	2117461.652	6064648.057

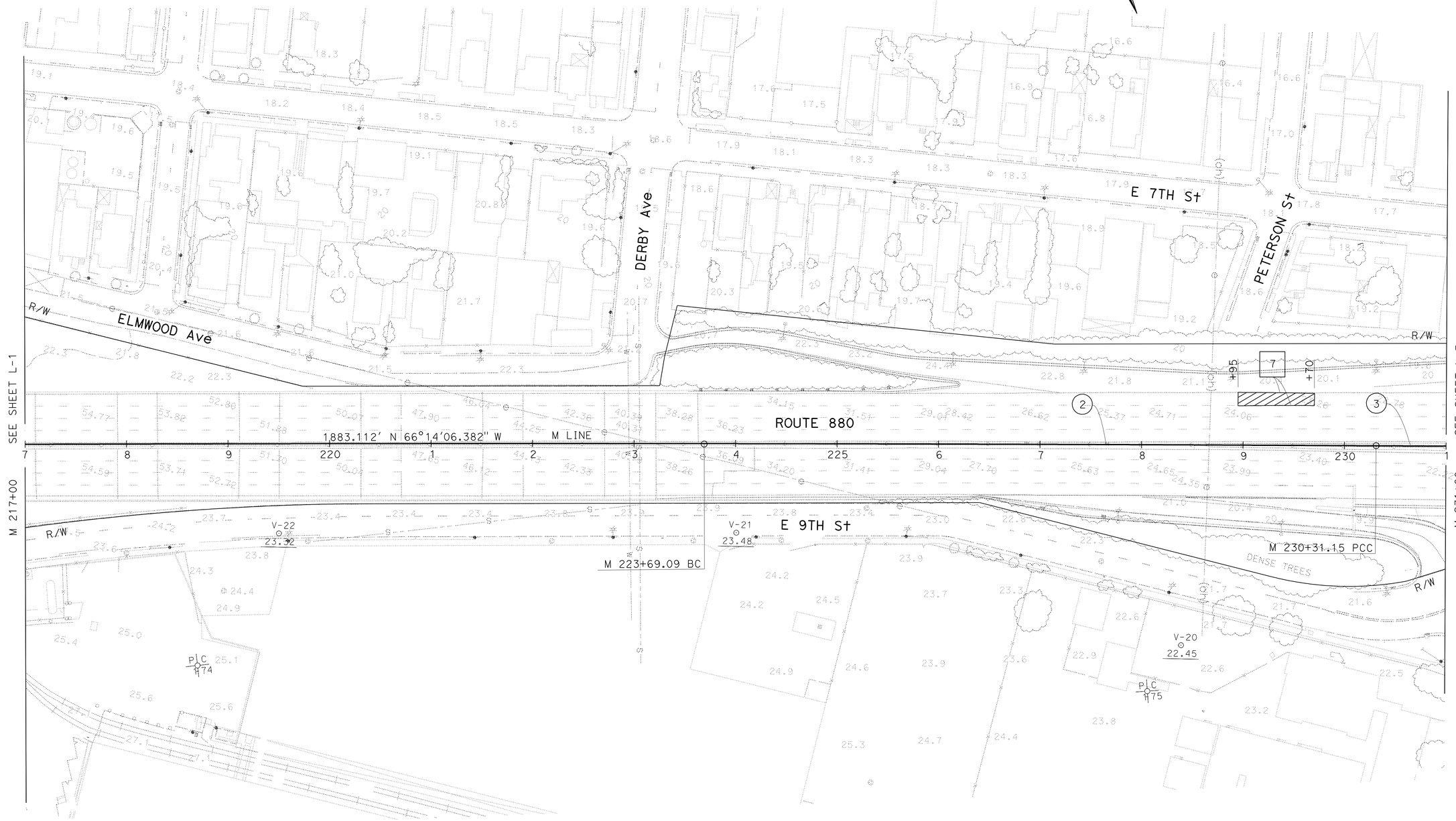

FOR NOTE, ABBREVIATIONS AND LEGEND, SEE SHEET L-1

LAYOUT
SCALE: 1" = 50′

L-2

REVISED BY	DATE REVISED
ERIC K. WONG	KENNETH D. NHIEU
CALCULATED-DESIGNED BY	CHECKED BY
FUNCTIONAL SUPERVISOR	EDMUND CHOY

STATE OF CALIFORNIA - DEPARTMENT OF TRANSPORTATION
Caltrans
DESIGN

LAST REVISION 03-23-11 | DATE PLOTTED => 22-JUN-2011 | TIME PLOTTED => 13:04

Dist	COUNTY	ROUTE	POST MILES TOTAL PROJECT	SHEET No.	TOTAL SHEETS
04	Ala	880	28.2/29.9	9	183

REGISTERED CIVIL ENGINEER 3-23-11 DATE

6-20-11
PLANS APPROVAL DATE

REGISTERED PROFESSIONAL ENGINEER K.D. Nhieu No. 55948 Exp. 12-31-12 CIVIL STATE OF CALIFORNIA

THE STATE OF CALIFORNIA OR ITS OFFICERS OR AGENTS SHALL NOT BE RESPONSIBLE FOR THE ACCURACY OR COMPLETENESS OF SCANNED COPIES OF THIS PLAN SHEET.

NOTE:

FOR ACCURATE RIGHT OF WAY DATA, CONTACT RIGHT OF WAY ENGINEERING AT THE DISTRICT OFFICE.

CURVE DATA

No.	R	Δ	T	L	N-COORDINATE	E-COORDINATE
3	9056.224′	1°14′31.866″	98.174′	196.341′	2117461.652	6064648.057
4	2465.000′	26°25′47.827″	578.840′	1137.079′	2111515.904	6061803.357
5	2531.476′	5°1′17.138″	111.001′	221.860′	2111556.832	6061855.740

FOR NOTE, ABBREVIATIONS AND LEGEND, SEE SHEET L-1

LAYOUT

SCALE: 1" = 50′

L-3

STATE OF CALIFORNIA - DEPARTMENT OF TRANSPORTATION
Caltrans
DESIGN

FUNCTIONAL SUPERVISOR: EDMUND CHOY

CALCULATED-DESIGNED BY: ERIC K. WONG
CHECKED BY: KENNETH D. NHIEU

REVISED BY
DATE REVISED

LAST REVISION 03-23-11
DATE PLOTTED => 22-JUN-2011
TIME PLOTTED => 13:04

Dist	COUNTY	ROUTE	POST MILES TOTAL PROJECT	SHEET No.	TOTAL SHEETS
04	Ala	880	28.2/29.9	10	183

REGISTERED CIVIL ENGINEER 3-23-11 DATE

6-20-11
PLANS APPROVAL DATE

REGISTERED PROFESSIONAL ENGINEER K.D. Nhieu No. 55948 Exp. 12-31-12 CIVIL STATE OF CALIFORNIA

THE STATE OF CALIFORNIA OR ITS OFFICERS OR AGENTS SHALL NOT BE RESPONSIBLE FOR THE ACCURACY OR COMPLETENESS OF SCANNED COPIES OF THIS PLAN SHEET.

NOTE:
FOR ACCURATE RIGHT OF WAY DATA, CONTACT RIGHT OF WAY ENGINEERING AT THE DISTRICT OFFICE.

CURVE DATA

No.	R	Δ	T	L	N-COORDINATE	E-COORDINATE
5	2531.476′	5°1′17.112"	111.001′	221.860′	2111556.832	6061855.740
6	1544.142′	5°30′1.203"	74.175′	148.236′	2111056.085	6061003.687
7	2291.091′	9°15′57.804"	185.666′	370.523′	2111458.963	6061636.084
8	3407.722′	3°9′23.385"	93.892′	187.736′	2111807.981	6062696.768

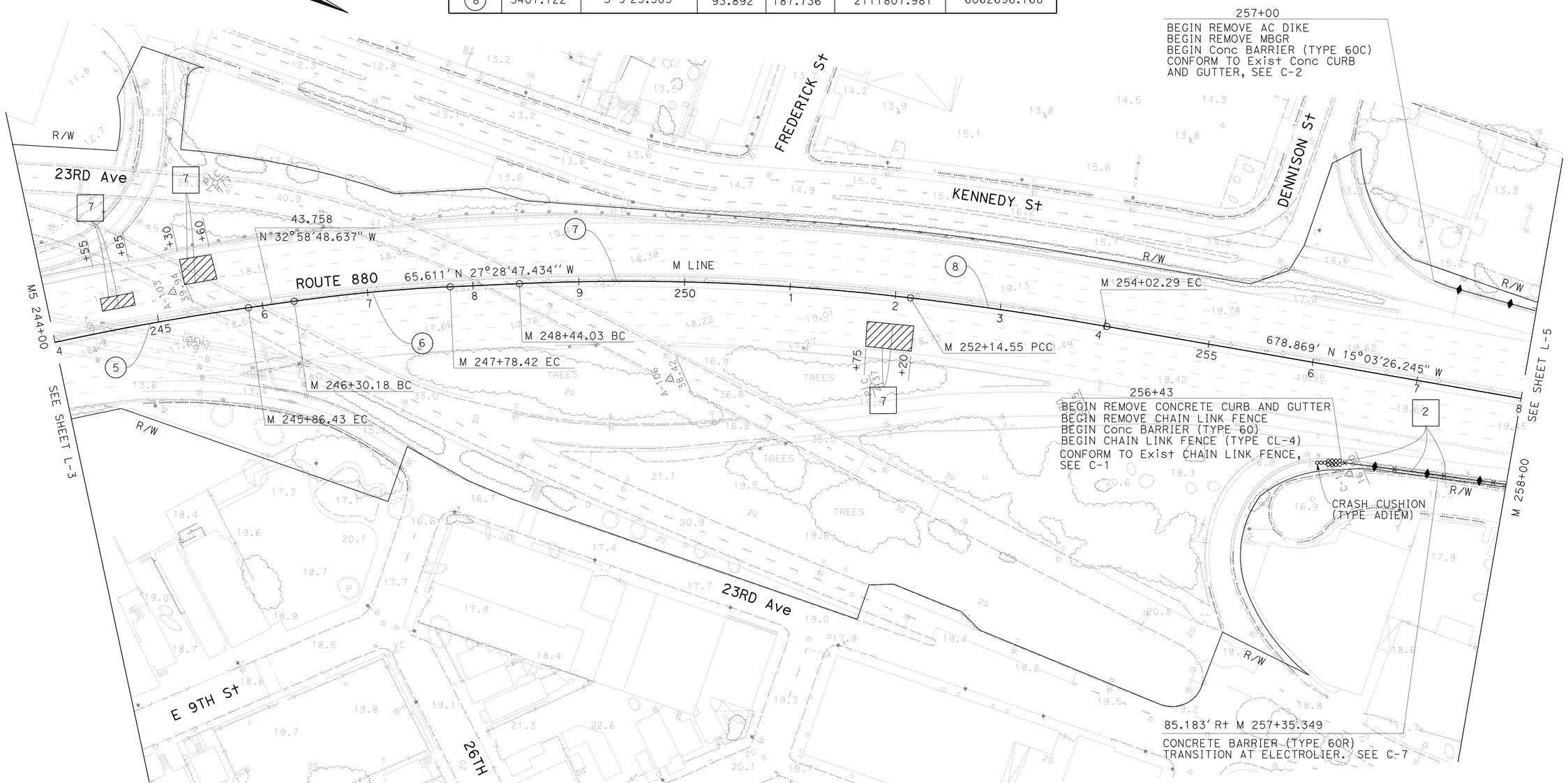

FOR NOTES, ABBREVIATIONS AND LEGEND, SEE SHEET L-1

LAYOUT
SCALE: 1" = 50′

L-4

STATE OF CALIFORNIA - DEPARTMENT OF TRANSPORTATION
Caltrans® DESIGN

FUNCTIONAL SUPERVISOR: EDMUND CHOY
CALCULATED-DESIGNED BY: ERIC K. WONG
CHECKED BY: KENNETH D. NHIEU
REVISED BY
DATE REVISED

LAST REVISION 03-23-11
DATE PLOTTED => 22-JUN-2011
TIME PLOTTED => 13:04

Dist	COUNTY	ROUTE	POST MILES TOTAL PROJECT	SHEET No.	TOTAL SHEETS
04	Ala	880	28.2/29.9	11	183

REGISTERED CIVIL ENGINEER 3-23-11 DATE

6-20-11
PLANS APPROVAL DATE

REGISTERED PROFESSIONAL ENGINEER K.D. Nhieu No. 55948 Exp. 12-31-12 CIVIL STATE OF CALIFORNIA

THE STATE OF CALIFORNIA OR ITS OFFICERS OR AGENTS SHALL NOT BE RESPONSIBLE FOR THE ACCURACY OR COMPLETENESS OF SCANNED COPIES OF THIS PLAN SHEET.

NOTE:

FOR ACCURATE RIGHT OF WAY DATA, CONTACT
RIGHT OF WAY ENGINEERING AT THE DISTRICT OFFICE.

CURVE DATA

No.	R	Δ	T	L	N-COORDINATE	E-COORDINATE
9	3908.019′	02° 50′ 26.712″	96.901′	193.762′	2110563.024	6055455.842
10	1490.000′	27° 10′ 32.434″	360.134′	706.714′	2111306.140	6057756.841
11	3630.170′	10° 00′ 18.473″	317.762′	633.909′	2109790.865	6056245.461

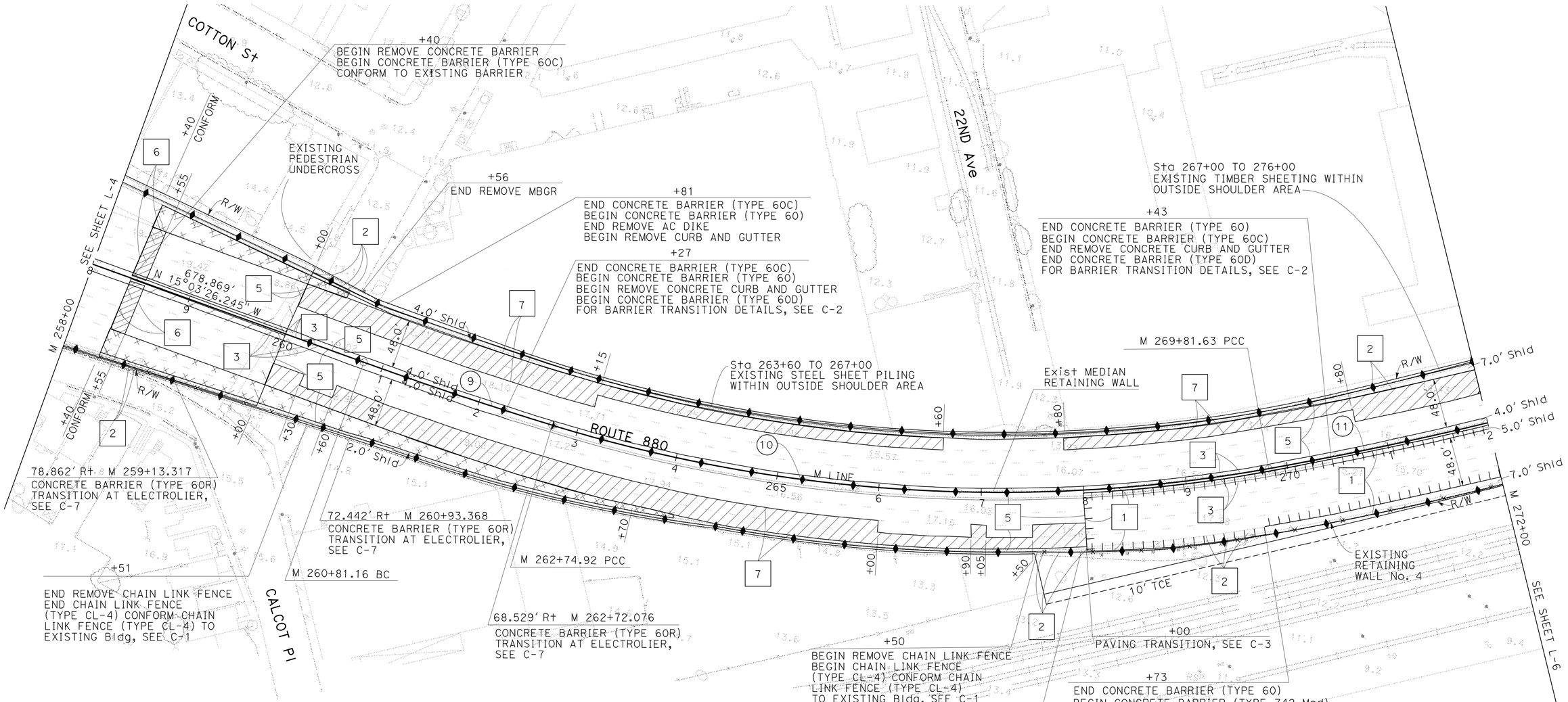

FOR NOTE, ABBREVIATIONS AND LEGEND, SEE SHEET L-1

LAYOUT

SCALE: 1″ = 50′

L-5

REVISED BY | DATE REVISED
ERIC K. WONG | KENNETH D. NHIEU
CALCULATED-DESIGNED BY | CHECKED BY
FUNCTIONAL SUPERVISOR | EDMUND CHOY

STATE OF CALIFORNIA - DEPARTMENT OF TRANSPORTATION
Caltrans
DESIGN

LAST REVISION 03-25-11 | DATE PLOTTED => 22-JUN-2011 | TIME PLOTTED => 13:05

NOTE:

FOR ACCURATE RIGHT OF WAY DATA, CONTACT
RIGHT OF WAY ENGINEERING AT THE DISTRICT OFFICE.

Dist	COUNTY	ROUTE	POST MILES TOTAL PROJECT	SHEET No.	TOTAL SHEETS
04	Ala	880	28.2/29.9	12	183

REGISTERED CIVIL ENGINEER 3-23-11 DATE

6-20-11
PLANS APPROVAL DATE

REGISTERED PROFESSIONAL ENGINEER K.D. Nhieu No. 55948 Exp. 12-31-12 CIVIL STATE OF CALIFORNIA

THE STATE OF CALIFORNIA OR ITS OFFICERS OR AGENTS SHALL NOT BE RESPONSIBLE FOR THE ACCURACY OR COMPLETENESS OF SCANNED COPIES OF THIS PLAN SHEET.

CURVE DATA

No.	R	Δ	T	L	N-COORDINATE	E-COORDINATE
11	3630.170′	10° 00′ 18.473″	317.762′	633.909′	2109790.865	6056245.461

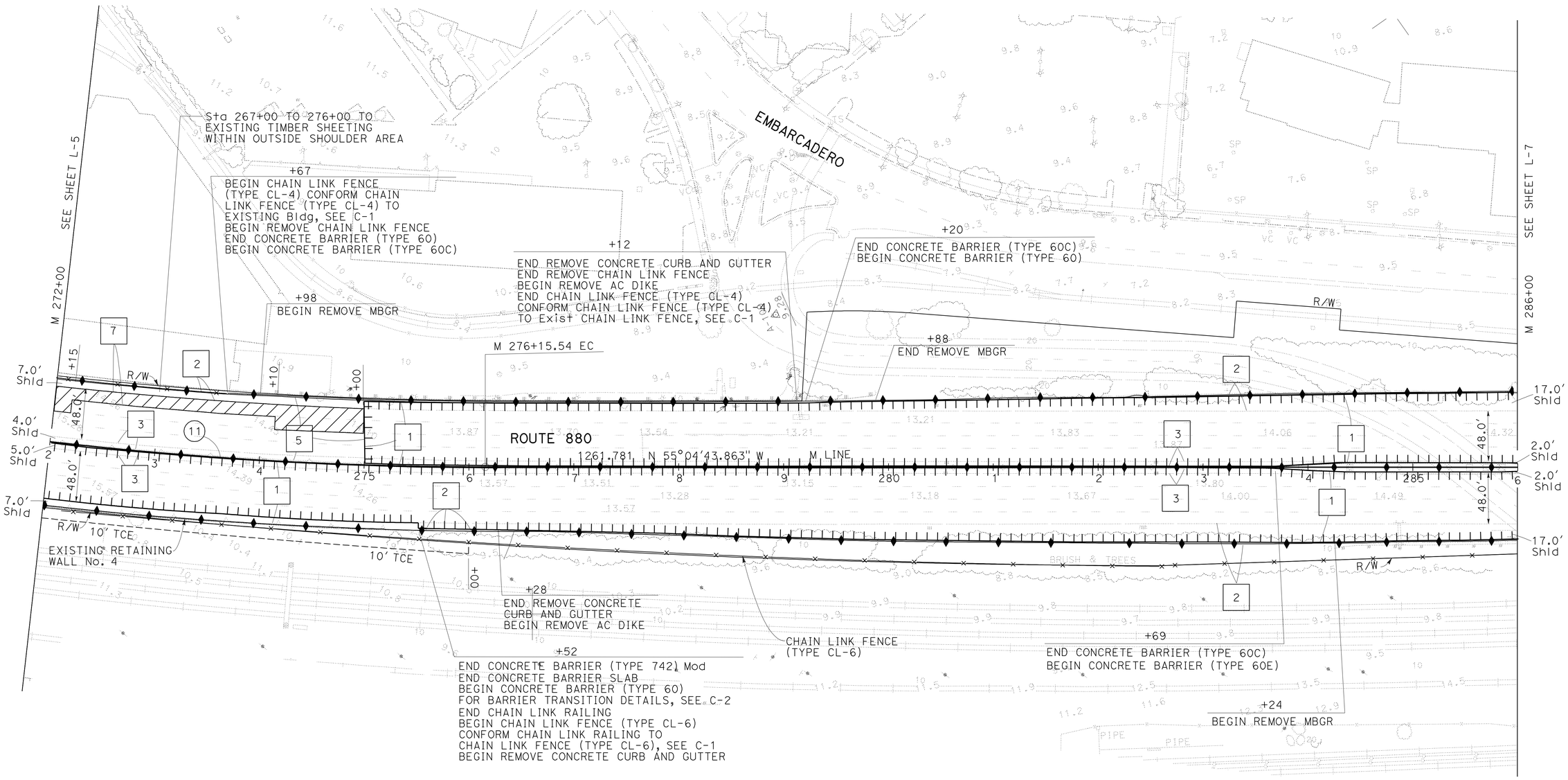

FOR NOTE, ABBREVIATIONS AND LEGEND, SEE SHEET L-1

LAYOUT

SCALE: 1″ = 50′

L-6

STATE OF CALIFORNIA - DEPARTMENT OF TRANSPORTATION
DESIGN
FUNCTIONAL SUPERVISOR: EDMUND CHOY
CALCULATED-DESIGNED BY: ERIC K. WONG
CHECKED BY: KENNETH D. NHIEU
REVISED BY
DATE REVISED

LAST REVISION 03-24-11
DATE PLOTTED => 22-JUN-2011
TIME PLOTTED => 13:05

Dist	COUNTY	ROUTE	POST MILES TOTAL PROJECT	SHEET No.	TOTAL SHEETS
04	Ala	880	28.2/29.9	13	183

REGISTERED CIVIL ENGINEER 3-23-11 DATE

6-20-11
PLANS APPROVAL DATE

REGISTERED PROFESSIONAL ENGINEER K.D. Nhieu No. 55948 Exp. 12-31-12 CIVIL STATE OF CALIFORNIA

THE STATE OF CALIFORNIA OR ITS OFFICERS OR AGENTS SHALL NOT BE RESPONSIBLE FOR THE ACCURACY OR COMPLETENESS OF SCANNED COPIES OF THIS PLAN SHEET.

NOTE:

FOR ACCURATE RIGHT OF WAY DATA, CONTACT RIGHT OF WAY ENGINEERING AT THE DISTRICT OFFICE.

CURVE DATA

No.	R	Δ	T	L	N-COORDINATE	E-COORDINATE
12	4560.000′	06° 29′ 26.716′′	258.566′	516.580′	2109750.765	6054678.595
13	10000.000′	02°35′ 21.166′′	225.990′	451.903′	2104980.000	6052064.372
17	60.000′	40°26′ 6.049′′	22.097′	42.343′	2113454.823	6057113.216

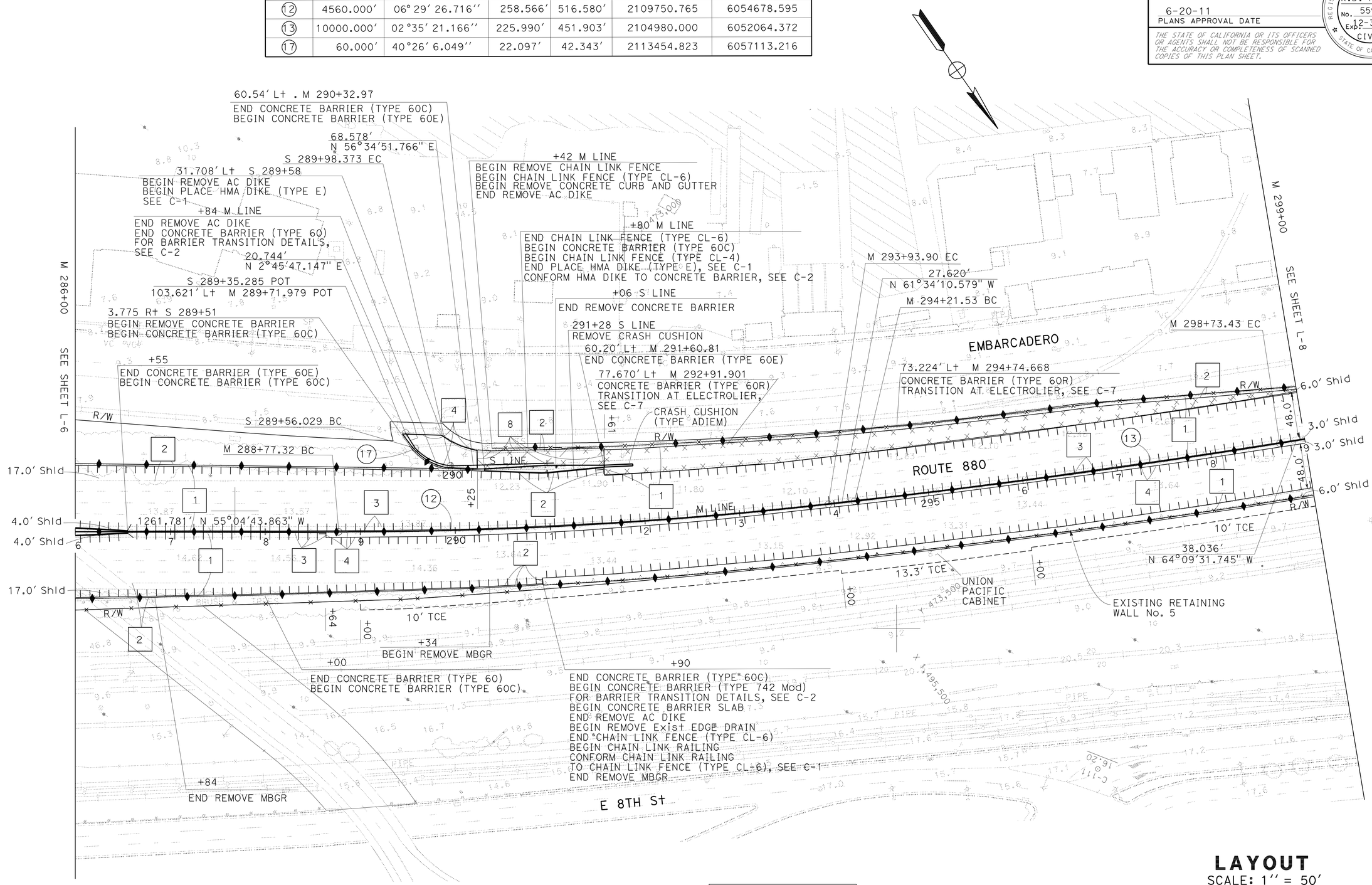

LAYOUT
SCALE: 1′′ = 50′

FOR NOTE, ABBREVIATIONS AND LEGEND, SEE SHEET L-1

L-7

STATE OF CALIFORNIA - DEPARTMENT OF TRANSPORTATION
Caltrans DESIGN

FUNCTIONAL SUPERVISOR: EDMUND CHOY
CALCULATED-DESIGNED BY: ERIC K. WONG
CHECKED BY: KENNETH D. NHIEU
REVISED BY
DATE REVISED

LAST REVISION 03-25-11
DATE PLOTTED => 22-JUN-2011
TIME PLOTTED => 13:05

Dist	COUNTY	ROUTE	POST MILES TOTAL PROJECT	SHEET No.	TOTAL SHEETS
04	Ala	880	28.2/29.9	14	183

REGISTERED CIVIL ENGINEER 3-23-11 DATE

6-20-11
PLANS APPROVAL DATE

REGISTERED PROFESSIONAL ENGINEER K.D. Nhieu No. 55948 Exp. 12-31-12 CIVIL STATE OF CALIFORNIA

THE STATE OF CALIFORNIA OR ITS OFFICERS OR AGENTS SHALL NOT BE RESPONSIBLE FOR THE ACCURACY OR COMPLETENESS OF SCANNED COPIES OF THIS PLAN SHEET.

NOTE:

FOR ACCURATE RIGHT OF WAY DATA, CONTACT RIGHT OF WAY ENGINEERING AT THE DISTRICT OFFICE.

CURVE DATA

No.	R	Δ	T	L	N-COORDINATE	E-COORDINATE
14	9000.000′	02° 27′ 47.078″	193.479′	386.899′	2105896.584	6052466.018
15	80000.000′	01° 53′ 9.952″	131.698′	263.349′	2106842.667	6052797.633
16	4982.905′	02° 39′ 37.520″	115.707′	231.372′	2109700.806	6053773.928

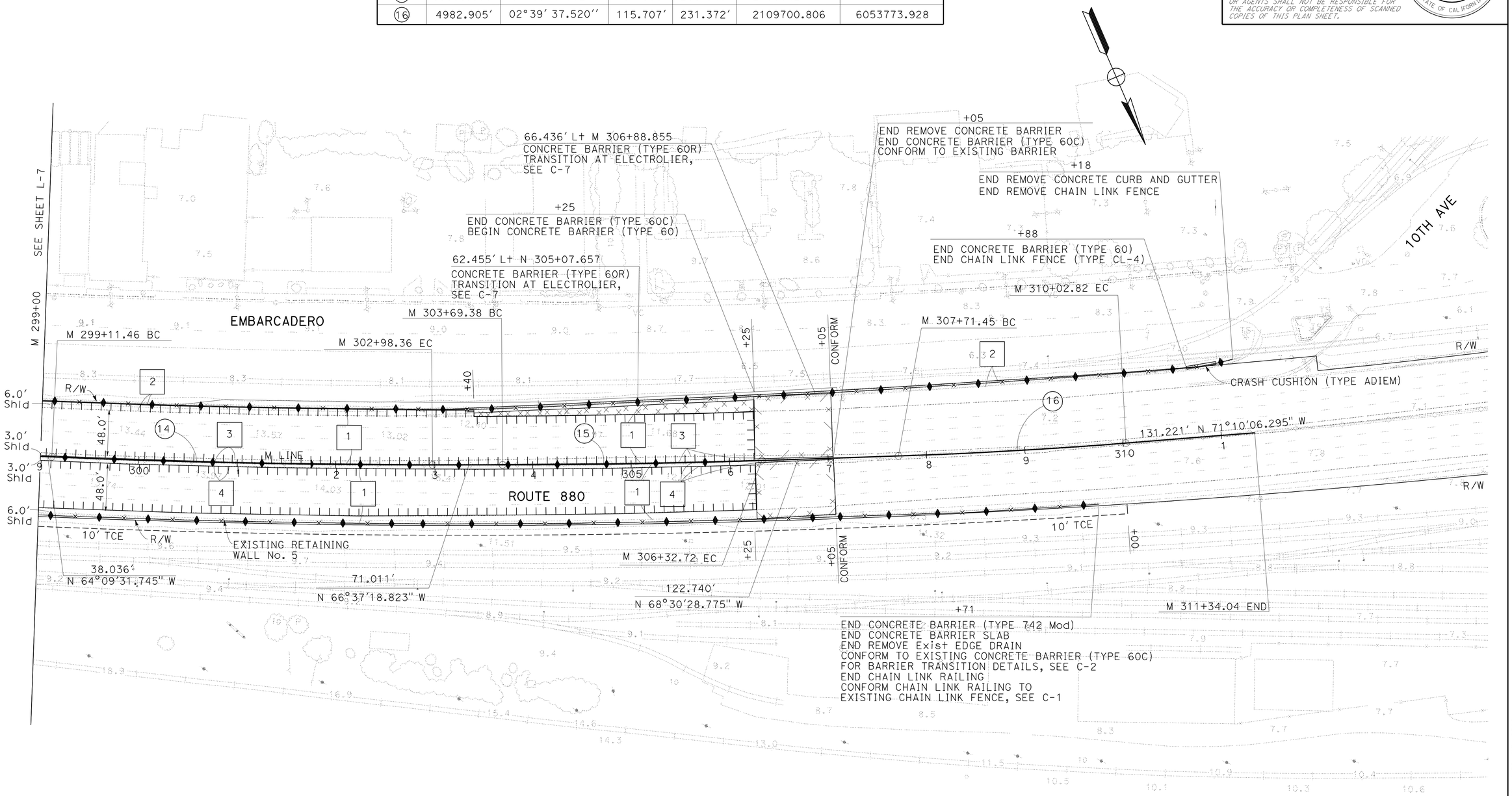

FOR NOTE, ABBREVIATIONS AND LEGEND, SEE SHEET L-1

LAYOUT

SCALE: 1″ = 50′

L-8

STATE OF CALIFORNIA - DEPARTMENT OF TRANSPORTATION

Caltrans

DESIGN

FUNCTIONAL SUPERVISOR: EDMUND CHOY

CALCULATED-DESIGNED BY: ERIC K. WONG

CHECKED BY: KENNETH D. NHIEU

REVISED BY

DATE REVISED

LAST REVISION 03-24-11

DATE PLOTTED => 22-JUN-2011

TIME PLOTTED => 13:05

Dist	COUNTY	ROUTE	POST MILES TOTAL PROJECT	SHEET No.	TOTAL SHEETS
04	Ala	880	28.2/29.9	15	183

REGISTERED CIVIL ENGINEER 3-23-11 DATE

6-20-11
PLANS APPROVAL DATE

REGISTERED PROFESSIONAL ENGINEER K.D. Nhieu No. 55948 Exp. 12-31-12 CIVIL STATE OF CALIFORNIA

THE STATE OF CALIFORNIA OR ITS OFFICERS OR AGENTS SHALL NOT BE RESPONSIBLE FOR THE ACCURACY OR COMPLETENESS OF SCANNED COPIES OF THIS PLAN SHEET.

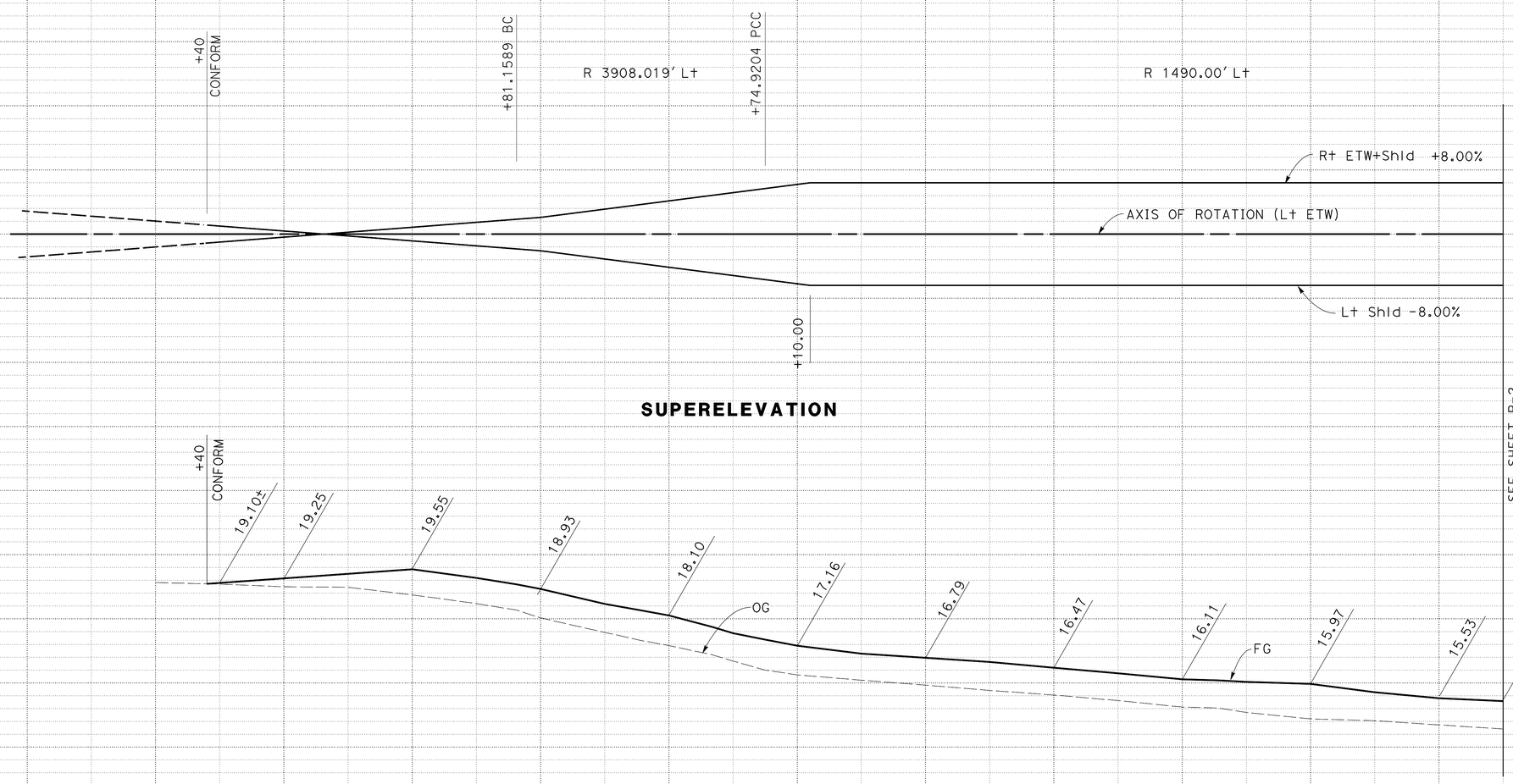

PROFILE AND SUPERELEVATION DIAGRAM

SCALE: HORIZ 1" = 50'
VERT 1" = 2'

PS-1

STATION	258	259	260	261	262	263	264	265	266	267	268	+50	TOTAL
CY Exc													
CY Emb													

STATE OF CALIFORNIA - DEPARTMENT OF TRANSPORTATION
Caltrans DESIGN

FUNCTIONAL SUPERVISOR: EDMUND W. CHOY
CALCULATED-DESIGNED BY: BHUPENDRA SHAH
CHECKED BY: ERIC K. WONG
REVISED BY
DATE REVISED

LAST REVISION 03-23-11
DATE PLOTTED => 22-JUN-2011
TIME PLOTTED => 13:06

Dist	COUNTY	ROUTE	POST MILES TOTAL PROJECT	SHEET No.	TOTAL SHEETS
04	Ala	880	28.2/29.9	16	183

REGISTERED CIVIL ENGINEER 3-23-11 DATE

6-20-11
PLANS APPROVAL DATE

REGISTERED PROFESSIONAL ENGINEER K.D. Nhieu No. 55948 Exp. 12-31-12 CIVIL STATE OF CALIFORNIA

THE STATE OF CALIFORNIA OR ITS OFFICERS OR AGENTS SHALL NOT BE RESPONSIBLE FOR THE ACCURACY OR COMPLETENESS OF SCANNED COPIES OF THIS PLAN SHEET.

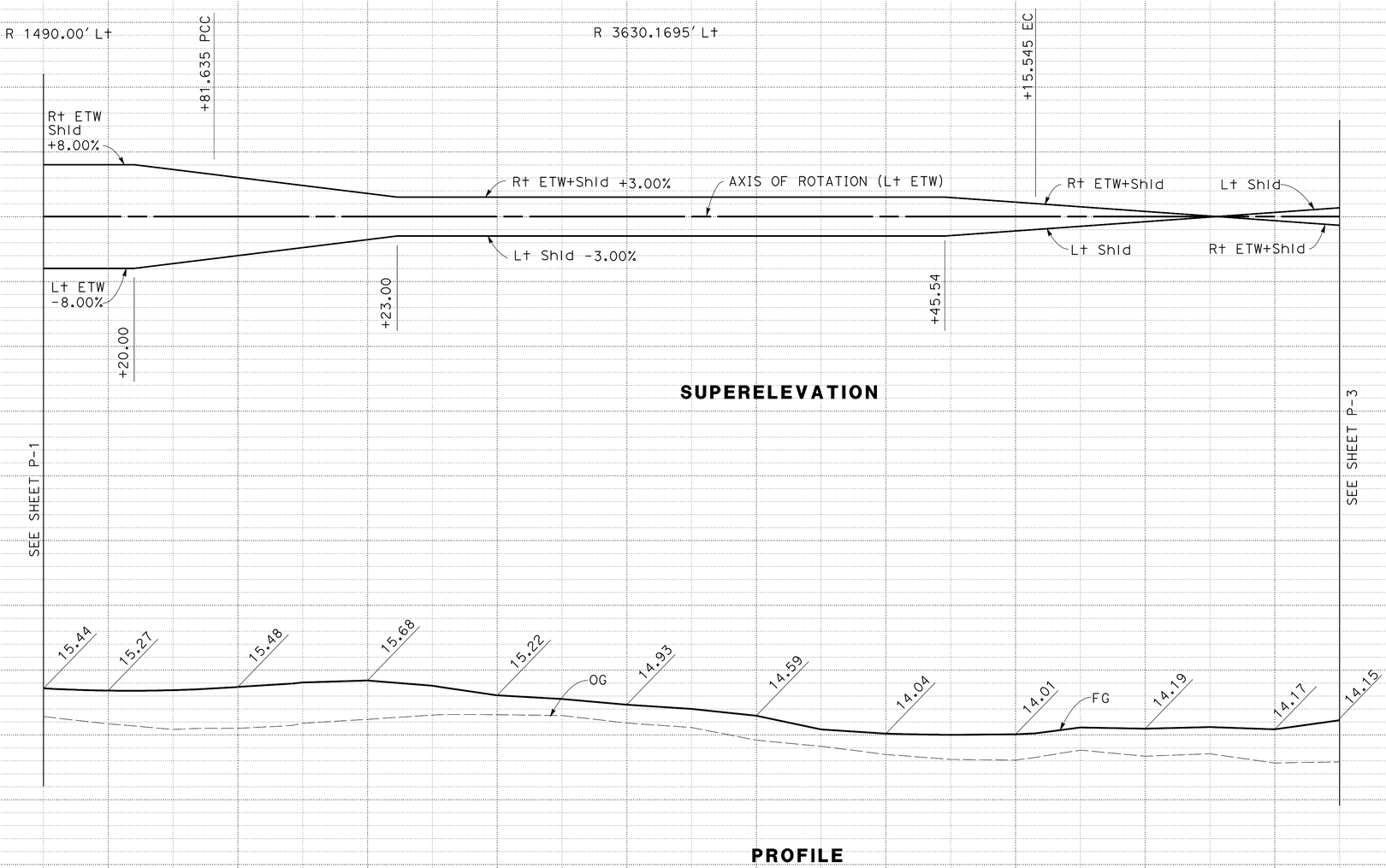

SUPERELEVATION

PROFILE

NB 880 (Lt ETW)

PROFILE AND SUPERELEVATION DIAGRAM

SCALE: HORIZ 1" = 50'
VERT 1" = 2'

PS-2

STATION		+50	269	270	271	272	273	274	275	276	277	278	+50	TOTAL
CY	Exc													
	Emb													

STATE OF CALIFORNIA - DEPARTMENT OF TRANSPORTATION
Caltrans DESIGN

FUNCTIONAL SUPERVISOR: EDMUND W. CHOY
CALCULATED-DESIGNED BY: BHUPENDRA SHAH
CHECKED BY: ERIC K. WONG
REVISED BY
DATE REVISED

LAST REVISION 03-23-11
DATE PLOTTED => 22-JUN-2011
TIME PLOTTED => 13:06

Dist	COUNTY	ROUTE	POST MILES TOTAL PROJECT	SHEET No.	TOTAL SHEETS
04	Ala	880	28.2/29.9	17	183

REGISTERED CIVIL ENGINEER 3-23-11 DATE

6-20-11
PLANS APPROVAL DATE

REGISTERED PROFESSIONAL ENGINEER K.D. Nhieu No. 55948 Exp. 12-31-12 CIVIL STATE OF CALIFORNIA

THE STATE OF CALIFORNIA OR ITS OFFICERS OR AGENTS SHALL NOT BE RESPONSIBLE FOR THE ACCURACY OR COMPLETENESS OF SCANNED COPIES OF THIS PLAN SHEET.

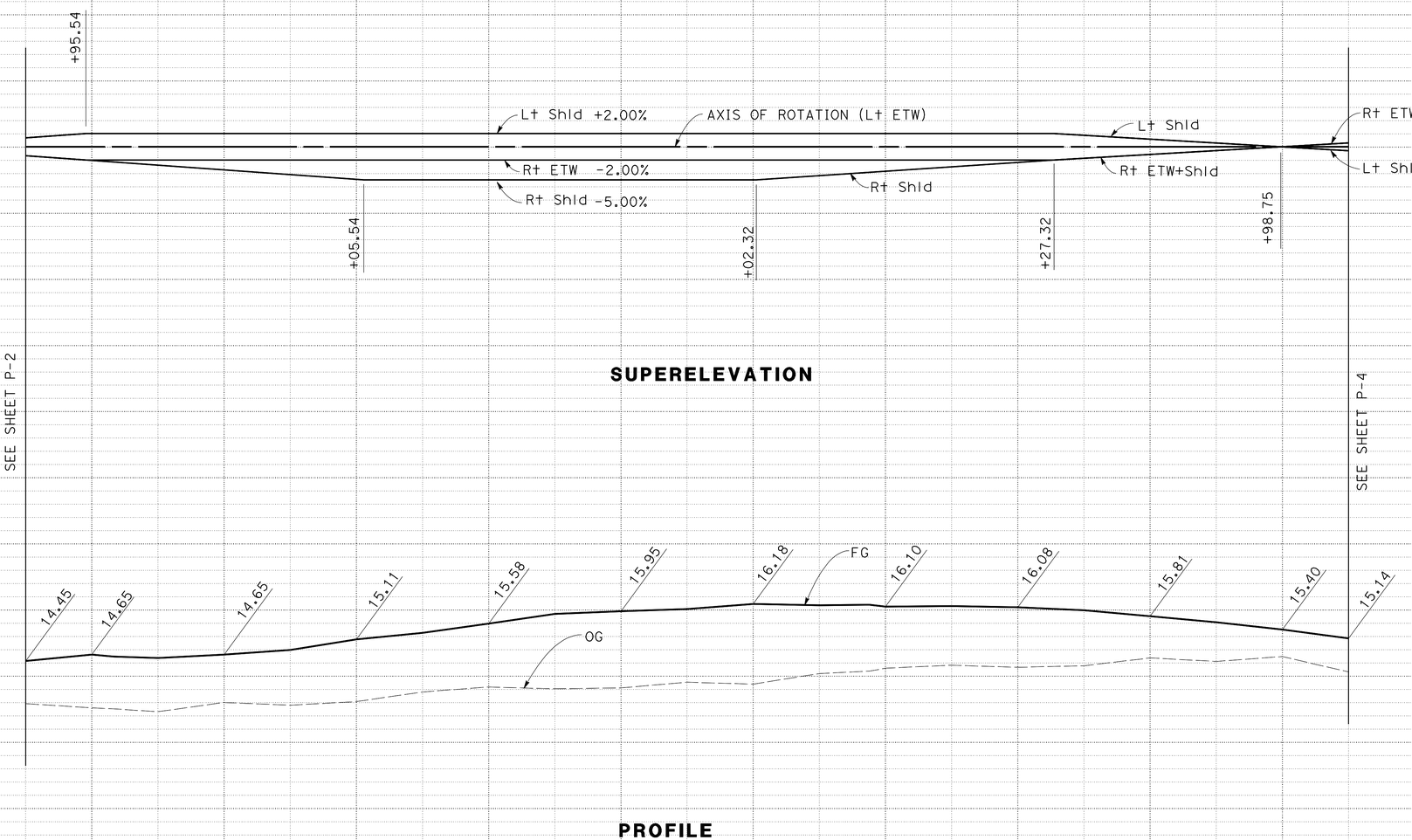

NB 880 (Lt ETW)

PROFILE AND SUPERELEVATION DIAGRAM

SCALE: HORIZ 1" = 50'
VERT 1" = 2'

PS-3

STATION		+50	279	280	281	282	283	284	285	286	287	288	+50	TOTAL
CY	Exc													
	Emb													

STATE OF CALIFORNIA - DEPARTMENT OF TRANSPORTATION
Caltrans® DESIGN

FUNCTIONAL SUPERVISOR: EDMUND W. CHOY
CALCULATED-DESIGNED BY: BHUPENDRA SHAH
CHECKED BY: ERIC K. WONG
REVISED BY
DATE REVISED

LAST REVISION 03-23-11
DATE PLOTTED => 22-JUN-2011
TIME PLOTTED => 13:06

Dist	COUNTY	ROUTE	POST MILES TOTAL PROJECT	SHEET No.	TOTAL SHEETS
04	Ala	880	28.2/29.9	18	183

REGISTERED CIVIL ENGINEER 3-23-11 DATE

6-20-11
PLANS APPROVAL DATE

REGISTERED PROFESSIONAL ENGINEER K.D. Nhieu No. 55948 Exp. 12-31-12 CIVIL STATE OF CALIFORNIA

THE STATE OF CALIFORNIA OR ITS OFFICERS OR AGENTS SHALL NOT BE RESPONSIBLE FOR THE ACCURACY OR COMPLETENESS OF SCANNED COPIES OF THIS PLAN SHEET.

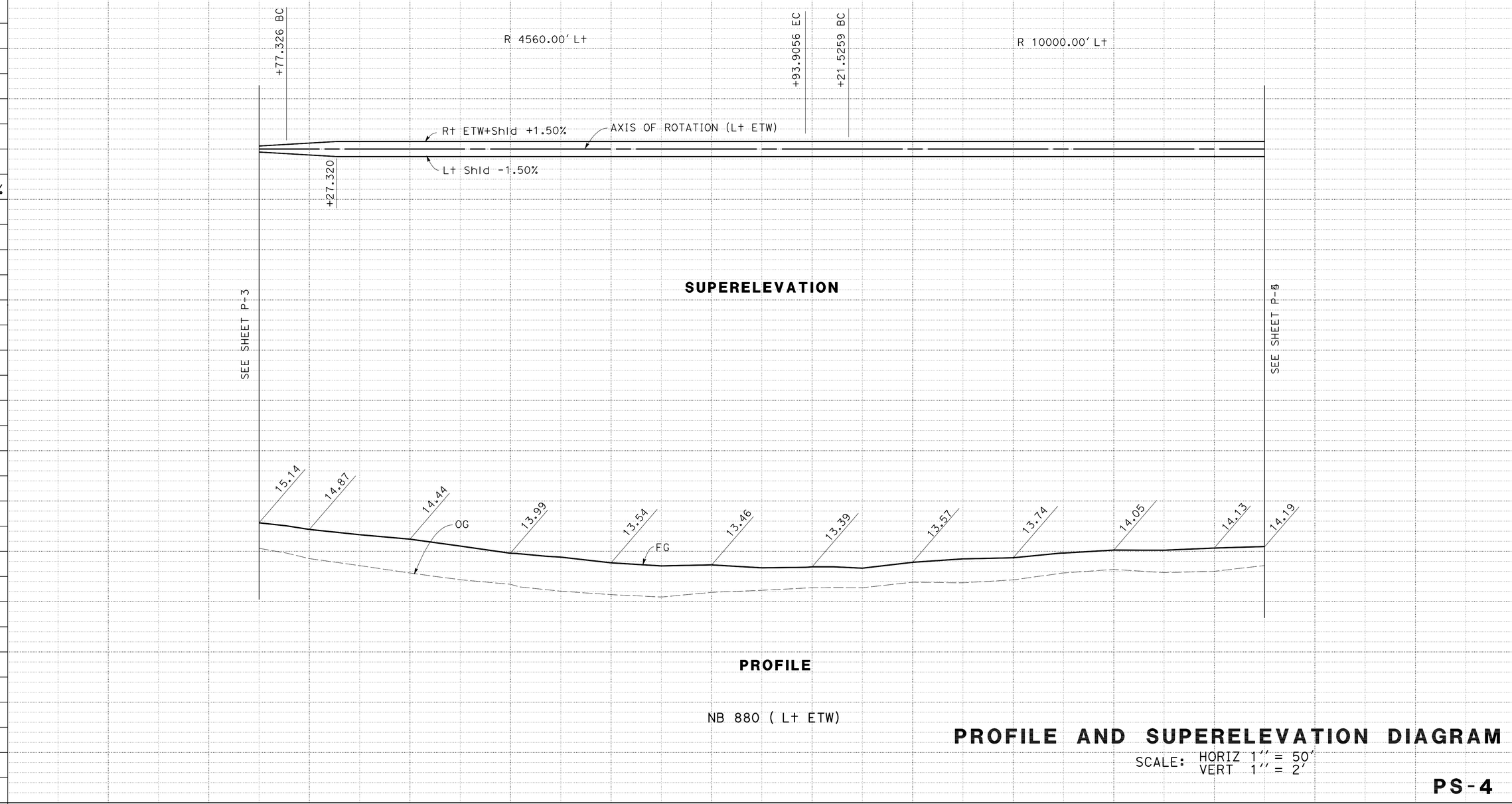

PROFILE AND SUPERELEVATION DIAGRAM

SCALE: HORIZ 1" = 50'
VERT 1" = 2'

PS-4

STATE OF CALIFORNIA - DEPARTMENT OF TRANSPORTATION
Caltrans
DESIGN

FUNCTIONAL SUPERVISOR: EDMUND W. CHOY
CALCULATED-DESIGNED BY: BHUPENDRA SHAH
CHECKED BY: ERIC K. WONG
REVISED BY
DATE REVISED

LAST REVISION 03-24-11
DATE PLOTTED => 22-JUN-2011
TIME PLOTTED => 13:06

Dist	COUNTY	ROUTE	POST MILES TOTAL PROJECT	SHEET No.	TOTAL SHEETS
04	Ala	880	28.2/29.9	19	183

REGISTERED CIVIL ENGINEER 3-23-11 DATE

6-20-11
PLANS APPROVAL DATE

REGISTERED PROFESSIONAL ENGINEER K.D. Nhieu No. 55948 Exp. 12-31-12 CIVIL STATE OF CALIFORNIA

THE STATE OF CALIFORNIA OR ITS OFFICERS OR AGENTS SHALL NOT BE RESPONSIBLE FOR THE ACCURACY OR COMPLETENESS OF SCANNED COPIES OF THIS PLAN SHEET.

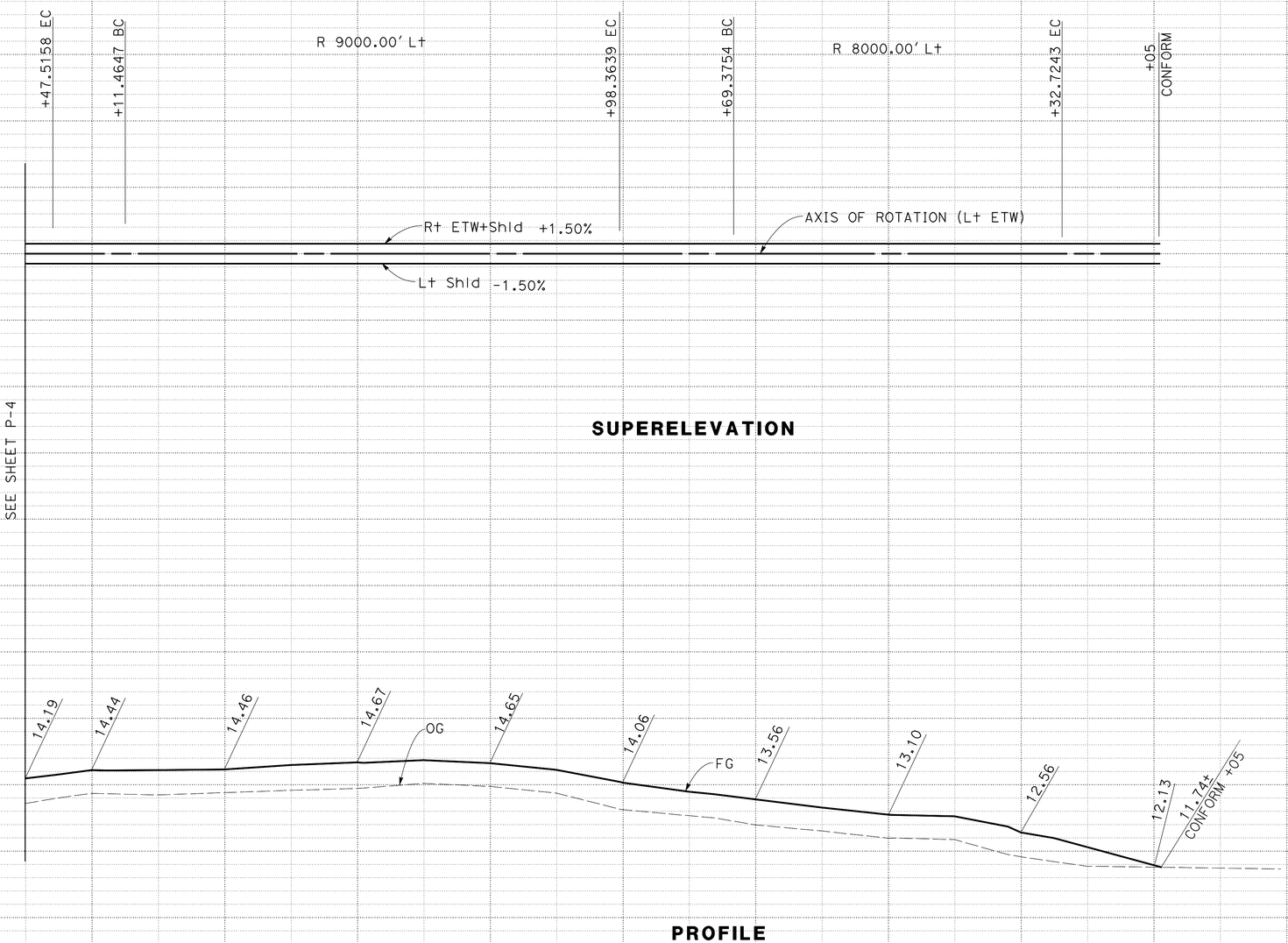

PROFILE AND SUPERELEVATION DIAGRAM

SCALE: HORIZ 1" = 50'
VERT 1" = 2'

PS-5

STATION	+50	299	300	301	302	303	304	305	306	307	TOTAL
CY Exc											
CY Emb											

STATE OF CALIFORNIA - DEPARTMENT OF TRANSPORTATION
Caltrans DESIGN

FUNCTIONAL SUPERVISOR: EDMUND W. CHOY
CALCULATED-DESIGNED BY: BHUPENDRA SHAH
CHECKED BY: ERIC K. WONG
REVISED BY / DATE REVISED

LAST REVISION 03-24-11 DATE PLOTTED => 22-JUN-2011 TIME PLOTTED => 13:06

Dist	COUNTY	ROUTE	POST MILES TOTAL PROJECT	SHEET No.	TOTAL SHEETS
04	Ala	880	28.2/29.9	20	183

REGISTERED CIVIL ENGINEER 3-23-11 DATE

6-20-11
PLANS APPROVAL DATE

REGISTERED PROFESSIONAL ENGINEER K.D. Nhieu No. 55948 Exp. 12-31-12 CIVIL STATE OF CALIFORNIA

THE STATE OF CALIFORNIA OR ITS OFFICERS OR AGENTS SHALL NOT BE RESPONSIBLE FOR THE ACCURACY OR COMPLETENESS OF SCANNED COPIES OF THIS PLAN SHEET.

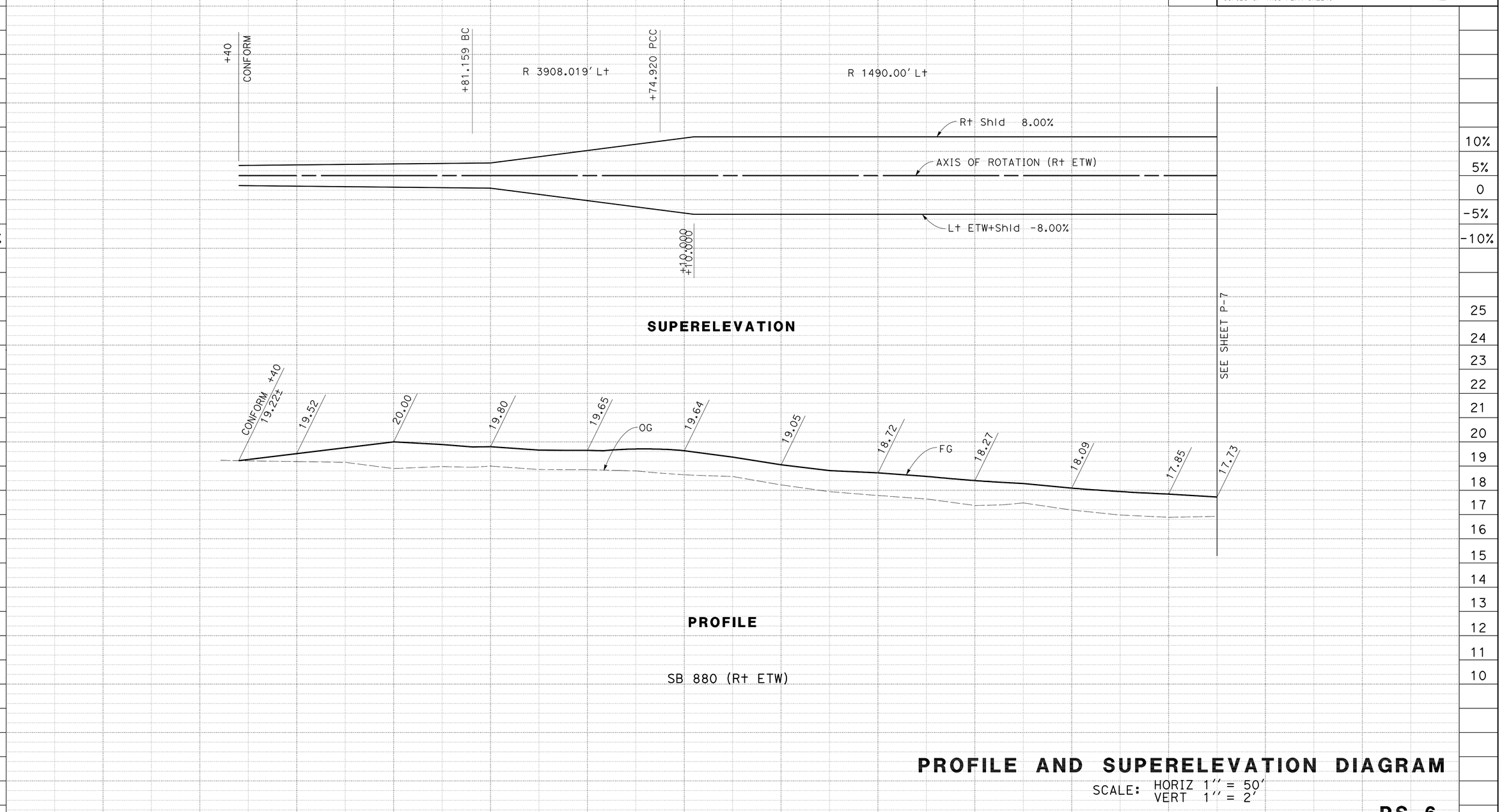

PROFILE AND SUPERELEVATION DIAGRAM

SCALE: HORIZ 1" = 50'
VERT 1" = 2'

PS-6

STATE OF CALIFORNIA - DEPARTMENT OF TRANSPORTATION
Caltrans
DESIGN

FUNCTIONAL SUPERVISOR: EDMUND W. CHOY
CALCULATED-DESIGNED BY: BHUPENDRA SHAH
CHECKED BY: ERIC K. WONG
REVISED BY
DATE REVISED

LAST REVISION 03-24-11
DATE PLOTTED => 22-JUN-2011
TIME PLOTTED => 13:06

Dist	COUNTY	ROUTE	POST MILES TOTAL PROJECT	SHEET No.	TOTAL SHEETS
04	Ala	880	28.2/29.9	21	183

REGISTERED/CIVIL ENGINEER 3-23-11 DATE

6-20-11
PLANS APPROVAL DATE

REGISTERED PROFESSIONAL ENGINEER K.D. Nhieu No. 55948 Exp. 12-31-12 CIVIL STATE OF CALIFORNIA

THE STATE OF CALIFORNIA OR ITS OFFICERS OR AGENTS SHALL NOT BE RESPONSIBLE FOR THE ACCURACY OR COMPLETENESS OF SCANNED COPIES OF THIS PLAN SHEET.

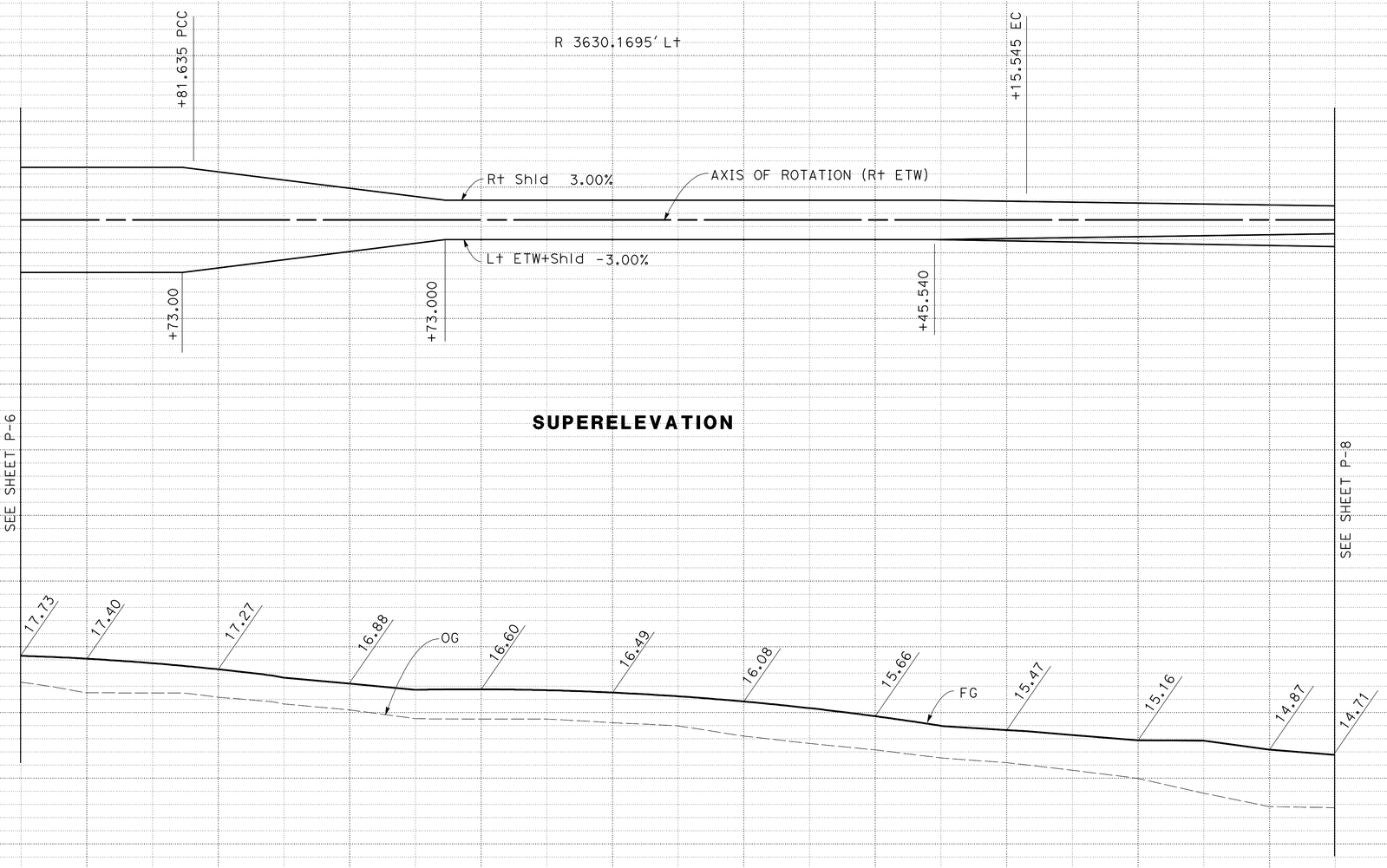

PROFILE AND SUPERELEVATION DIAGRAM

SCALE: HORIZ 1" = 50'
VERT 1" = 2'

PS-7

STATION	+50	269	270	271	272	273	274	275	276	277	278	+50	TOTAL
CY Exc													
CY Emb													

STATE OF CALIFORNIA - DEPARTMENT OF TRANSPORTATION
Caltrans DESIGN

FUNCTIONAL SUPERVISOR: EDMUND W. CHOY
CALCULATED-DESIGNED BY: BHUPENDRA SHAH
CHECKED BY: ERIC K. WONG
REVISED BY / DATE REVISED

LAST REVISION 03-24-11
DATE PLOTTED => 22-JUN-2011
TIME PLOTTED => 13:06

Dist	COUNTY	ROUTE	POST MILES TOTAL PROJECT	SHEET No.	TOTAL SHEETS
04	Ala	880	28.2/29.9	22	183

REGISTERED CIVIL ENGINEER 3-23-11 DATE

6-20-11
PLANS APPROVAL DATE

REGISTERED PROFESSIONAL ENGINEER K.D. Nhieu No. 55948 Exp. 12-31-12 CIVIL STATE OF CALIFORNIA

THE STATE OF CALIFORNIA OR ITS OFFICERS OR AGENTS SHALL NOT BE RESPONSIBLE FOR THE ACCURACY OR COMPLETENESS OF SCANNED COPIES OF THIS PLAN SHEET.

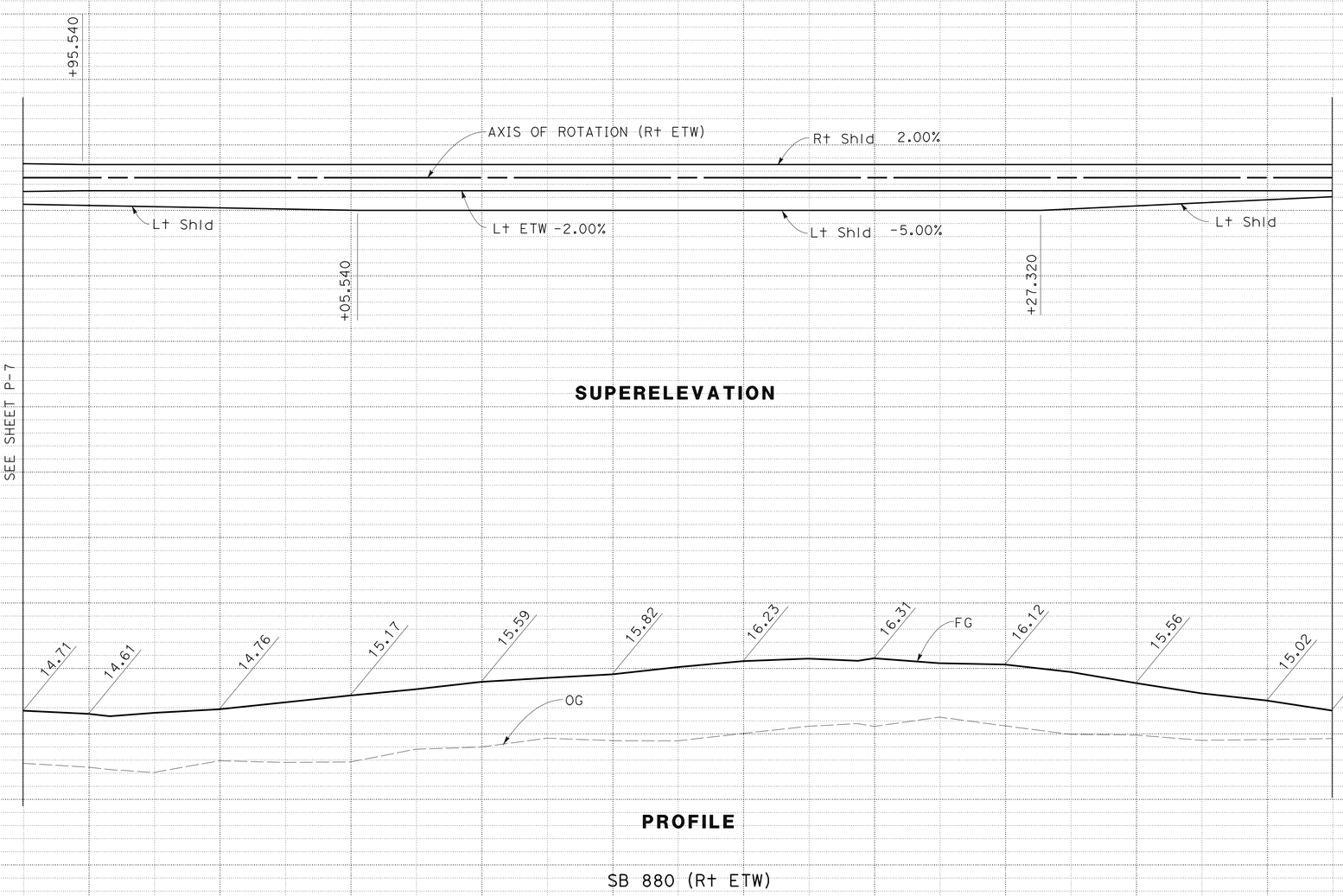

SUPERELEVATION

PROFILE

SB 880 (Rt ETW)

PROFILE AND SUPERELEVATION DIAGRAM

SCALE: HORIZ 1" = 50'
VERT 1" = 2'

PS-8

STATION: +50, 279, 280, 281, 282, 283, 284, 285, 286, 287, 288, +50 — TOTAL

CY Exc
CY Emb

STATE OF CALIFORNIA - DEPARTMENT OF TRANSPORTATION
Caltrans®
DESIGN

FUNCTIONAL SUPERVISOR: EDMUND W. CHOY
CALCULATED-DESIGNED BY: BHUPENDRA SHAH
CHECKED BY: ERIC K. WONG
REVISED BY
DATE REVISED

LAST REVISION 03-24-11
DATE PLOTTED => 22-JUN-2011
TIME PLOTTED => 13:06

Dist	COUNTY	ROUTE	POST MILES TOTAL PROJECT	SHEET No.	TOTAL SHEETS
04	Ala	880	28.2/29.9	23	183

REGISTERED CIVIL ENGINEER 3-23-11 DATE

6-20-11
PLANS APPROVAL DATE

REGISTERED PROFESSIONAL ENGINEER K.D. Nhieu No. 55948 Exp. 12-31-12 CIVIL STATE OF CALIFORNIA

THE STATE OF CALIFORNIA OR ITS OFFICERS OR AGENTS SHALL NOT BE RESPONSIBLE FOR THE ACCURACY OR COMPLETENESS OF SCANNED COPIES OF THIS PLAN SHEET.

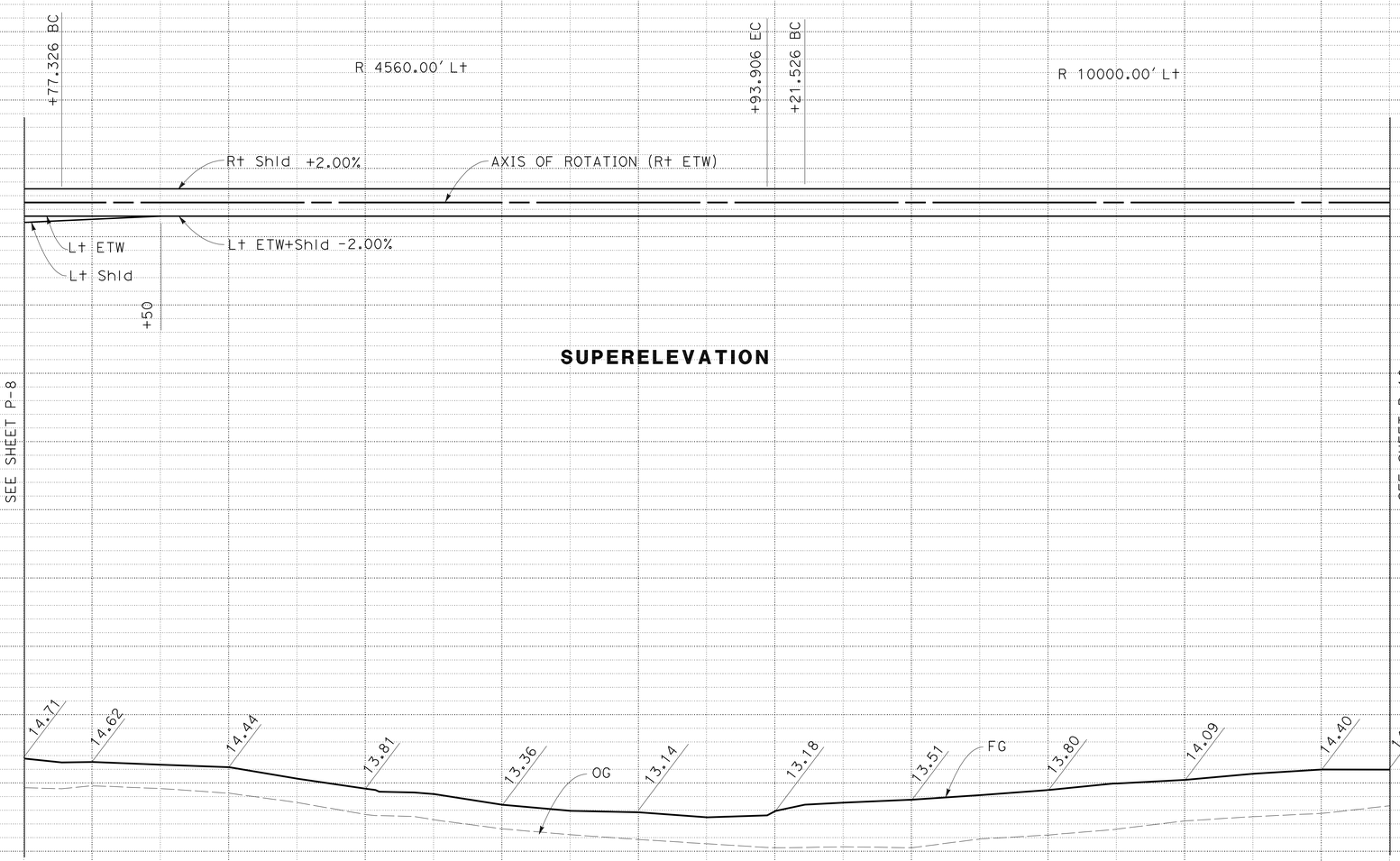

SUPERELEVATION

PROFILE

SB 880 (Rt ETW)

PROFILE AND SUPERELEVATION DIAGRAM

SCALE: HORIZ 1" = 50'
VERT 1" = 2'

PS-9

STATION		+50	289	290	291	292	293	294	295	296	297	298	+50	TOTAL
CY	Exc													
	Emb													

STATE OF CALIFORNIA - DEPARTMENT OF TRANSPORTATION
Caltrans DESIGN

FUNCTIONAL SUPERVISOR: EDMUND W. CHOY
CALCULATED-DESIGNED BY: BHUPENDRA SHAH
CHECKED BY: ERIC K. WONG
REVISED BY / DATE REVISED

LAST REVISION 03-24-11
DATE PLOTTED => 22-JUN-2011
TIME PLOTTED => 13:09

Dist	COUNTY	ROUTE	POST MILES TOTAL PROJECT	SHEET No.	TOTAL SHEETS
04	Ala	880	28.2/29.9	24	183

REGISTERED CIVIL ENGINEER 3-23-11 DATE

6-20-11
PLANS APPROVAL DATE

REGISTERED PROFESSIONAL ENGINEER K.D. Nhieu No. 55948 Exp. 12-31-12 CIVIL STATE OF CALIFORNIA

THE STATE OF CALIFORNIA OR ITS OFFICERS OR AGENTS SHALL NOT BE RESPONSIBLE FOR THE ACCURACY OR COMPLETENESS OF SCANNED COPIES OF THIS PLAN SHEET.

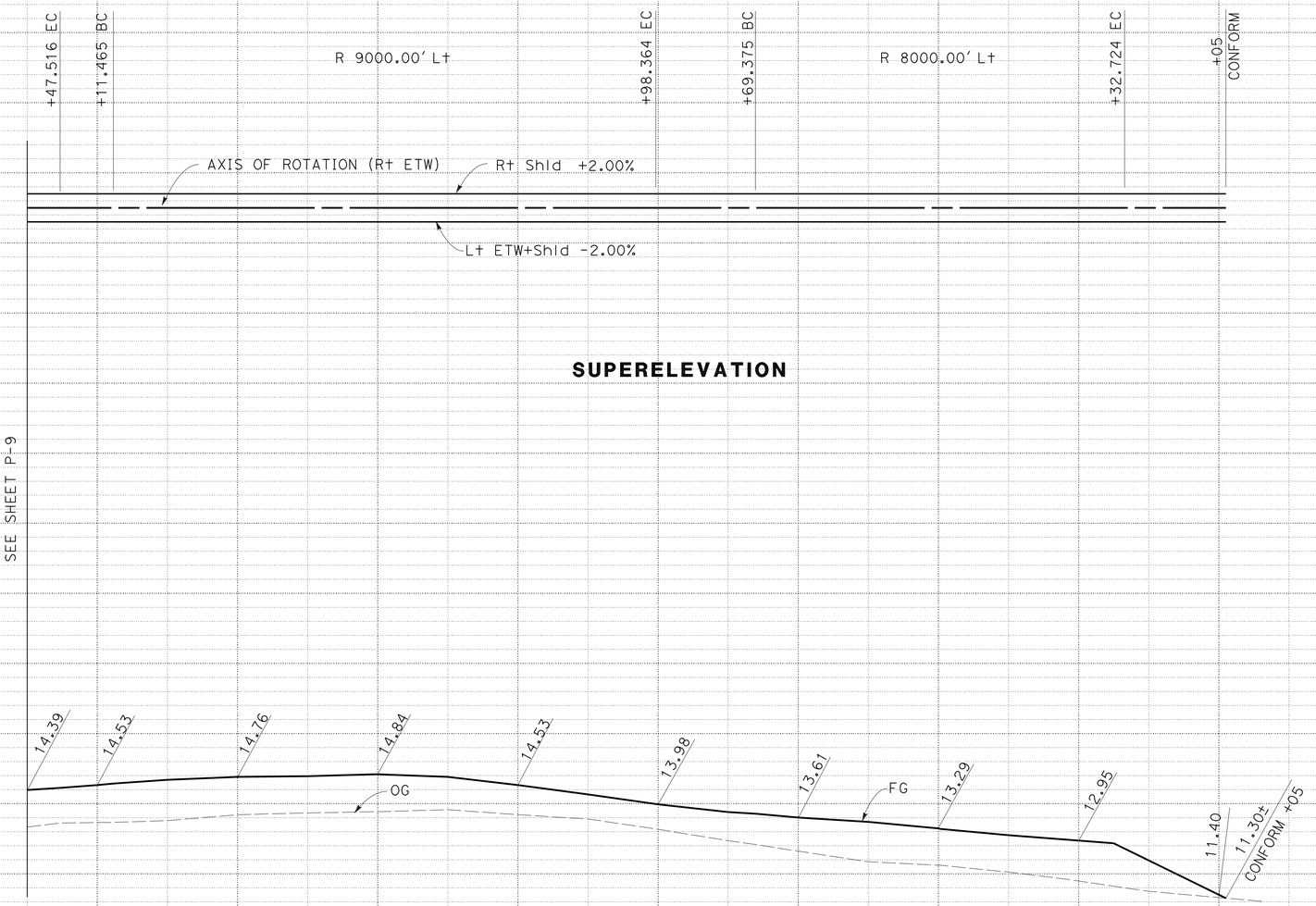

SUPERELEVATION

PROFILE

SB 880 (Rt ETW)

PROFILE AND SUPERELEVATION DIAGRAM

SCALE: HORIZ 1" = 50'
VERT 1" = 2'

PS-10

STATION		+50	299	300	301	302	303	304	305	306	307	+50	TOTAL
CY	Exc												
	Emb												

STATE OF CALIFORNIA - DEPARTMENT OF TRANSPORTATION
Caltrans® DESIGN

FUNCTIONAL SUPERVISOR: EDMUND W. CHOY
CALCULATED-DESIGNED BY: BHUPENDRA SHAH
CHECKED BY: ERIC K. WONG
REVISED BY / DATE REVISED

LAST REVISION 03-23-11 DATE PLOTTED => 22-JUN-2011 TIME PLOTTED => 13:09

Dist	COUNTY	ROUTE	POST MILES TOTAL PROJECT	SHEET No.	TOTAL SHEETS
04	Ala	880	28.2/29.9	25	183

REGISTERED CIVIL ENGINEER 3-23-11 DATE

6-20-11
PLANS APPROVAL DATE

REGISTERED PROFESSIONAL ENGINEER K.D. Nhieu No. 55948 Exp. 12-31-12 CIVIL STATE OF CALIFORNIA

THE STATE OF CALIFORNIA OR ITS OFFICERS OR AGENTS SHALL NOT BE RESPONSIBLE FOR THE ACCURACY OR COMPLETENESS OF SCANNED COPIES OF THIS PLAN SHEET.

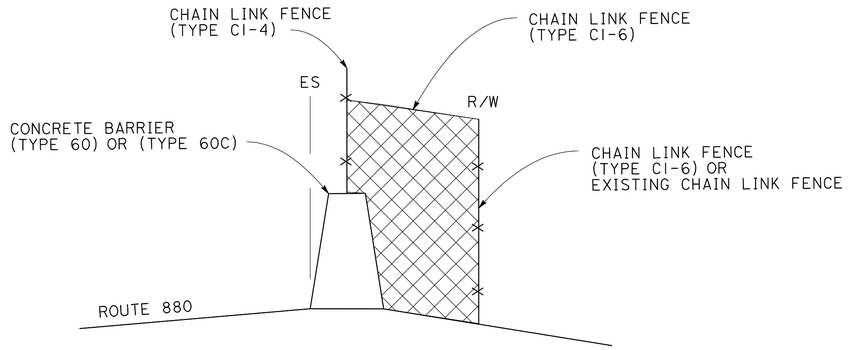

CONFORM CHAIN LINK FENCE (TYPE CI-4) TO CHAIN LINK FENCE (TYPE CI-6) OR EXISTING CHAIN LINK FENCE

STATION M 256+43 & M 279+12

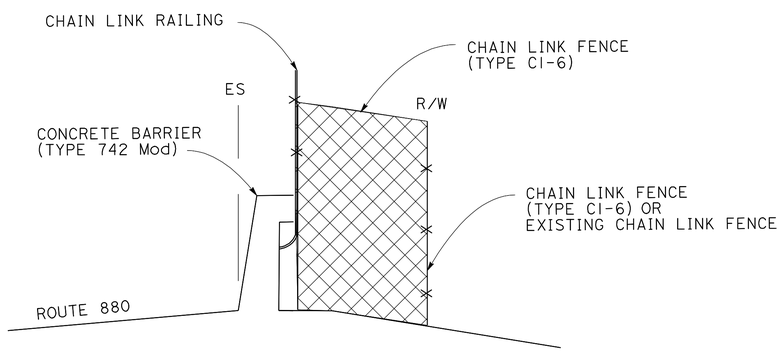

CONFORM CHAIN LINK FENCE (TYPE CI-4) TO CHAIN LINK FENCE (TYPE CI-6) OR EXISTING CHAIN LINK FENCE

STATION M 274+00, M 290+90, & 307+00

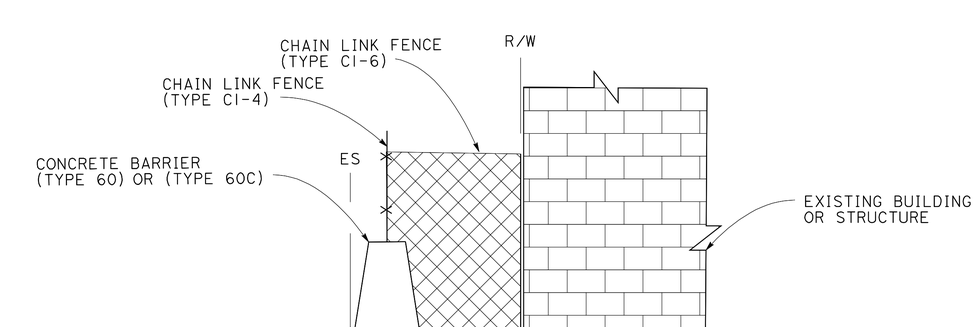

CONFORM CHAIN LINK FENCE (TYPE CI-4) TO EXISTING BUILDING OR STRUCTURE

STATION M 260+51, M 267+50, M 273+67

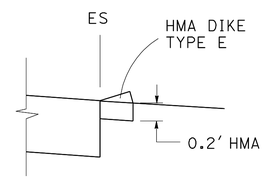

PLACE HMA DIKE (TYPE E)

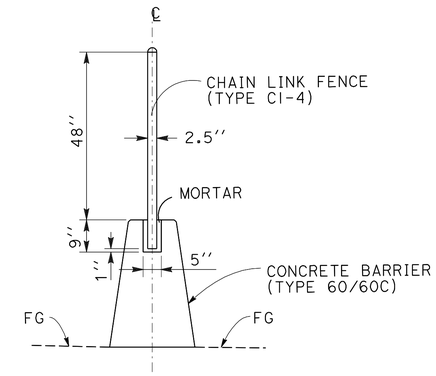

POST ANCHORAGE DETAIL

FOR DETAILS NOT SHOWN SEE STANDARD PLANS A76A,, A85, AND B11-47.

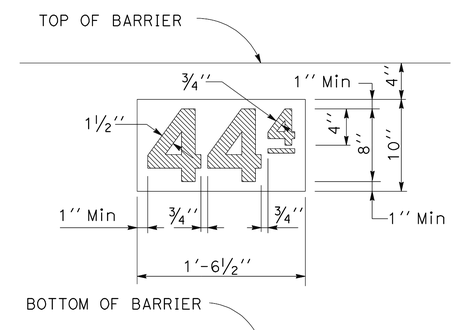

CENTER BLACK NUMBERS IN WHITE RECTANGLE

CONCRETE BARRIER POST MILE MARKING

NOTES:

1. POST MILE MARKING SHALL BE PAINTED ON EACH SIDE OF BARRIER.
2. WHOLE NUMBERS SHALL BE PAINTED USING A STENCIL SIZE DESIGNATION OF "BD" TENTHS SHALL PAINTED USING A STENCIL SIZE DESIGNATION OF "4D"
3. THE POST MILE TENTH NUMERAL SHOULD BE STENCILED ON THE CONC BARRIER EVERY ONE-TENTH OF A MILE.

CONSTRUCTION DETAILS

NO SCALE

C-1

STATE OF CALIFORNIA - DEPARTMENT OF TRANSPORTATION
Caltrans® DESIGN

FUNCTIONAL SUPERVISOR: EDMUND CHOY
CALCULATED-DESIGNED BY: ERIC K. WONG
CHECKED BY: KENNETH D. NHIEU
REVISED BY
DATE REVISED

LAST REVISION 03-23-11
DATE PLOTTED => 22-JUN-2011
TIME PLOTTED => 13:10

Dist	COUNTY	ROUTE	POST MILES TOTAL PROJECT	SHEET No.	TOTAL SHEETS
04	Ala	880	28.2/29.9	26	183

REGISTERED CIVIL ENGINEER 3-23-11 DATE

6-20-11
PLANS APPROVAL DATE

REGISTERED PROFESSIONAL ENGINEER K.D. Nhieu No. 55948 Exp. 12-31-12 CIVIL STATE OF CALIFORNIA

THE STATE OF CALIFORNIA OR ITS OFFICERS OR AGENTS SHALL NOT BE RESPONSIBLE FOR THE ACCURACY OR COMPLETENESS OF SCANNED COPIES OF THIS PLAN SHEET.

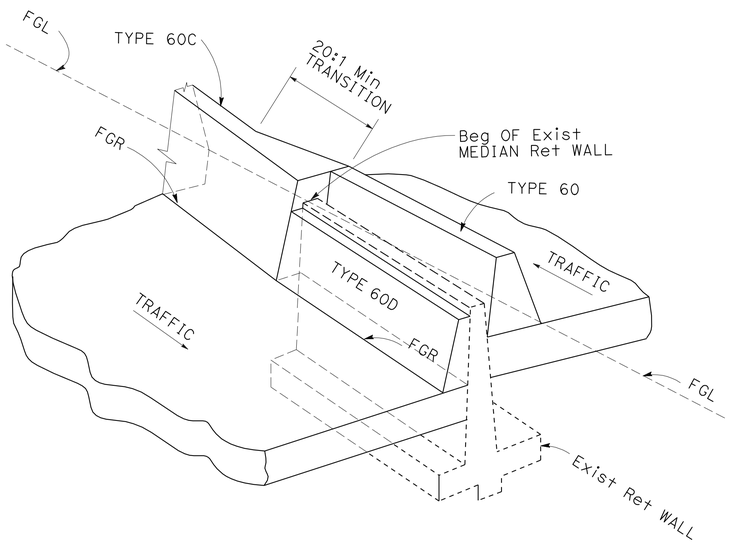

TRANSITION Conc BARRIER TYPE 60C TO TYPE 60 & 60D

AT SOUTH END, STATION M 262+27

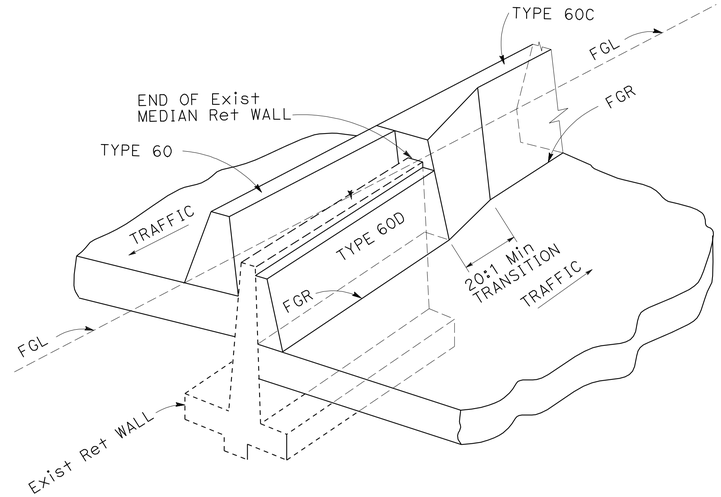

TRANSITION Conc BARRIER TYPE 60 & 60D TO TYPE 60C

AT NORTH END, STATION M 270+43

ABBREVIATIONS

FGR	FINISHED GRADE RIGHT
FGL	FINISHED GRADE LEFT

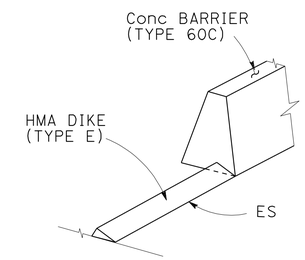

CONFORM DETAIL

HMA DIKE (TYPE E) TO
Conc BARRIER (TYPE 60C)
AT STATION M 290+80

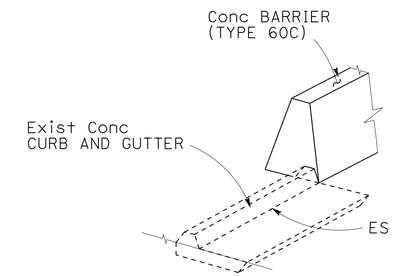

CONFORM DETAIL

Exist Conc CURB AND GUTTER TO
Conc BARRIER (TYPE 60C)
AT STATION M 257+00

RELATION OF EXISTING MEDIAN RETAINING WALL AND Conc BARRIERS

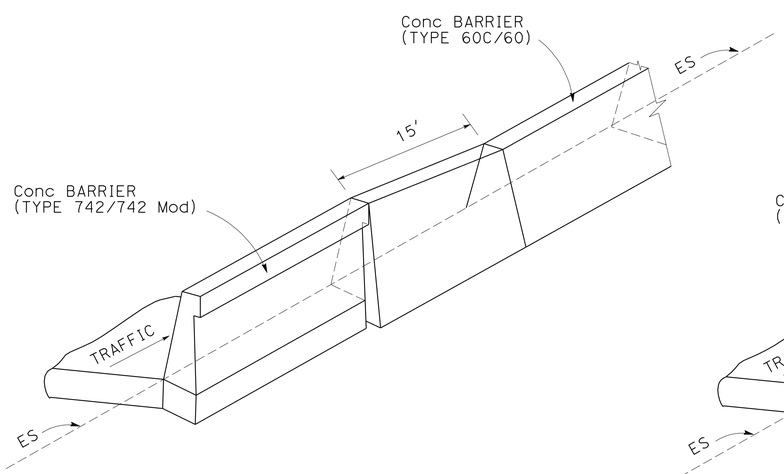

TRANSITION Conc BARRIER TYPE 742/742 Mod TO TYPE 60C/60

STATION M 206+60, M 269+73,
M 275+52, M 290+90, AND M 309+71

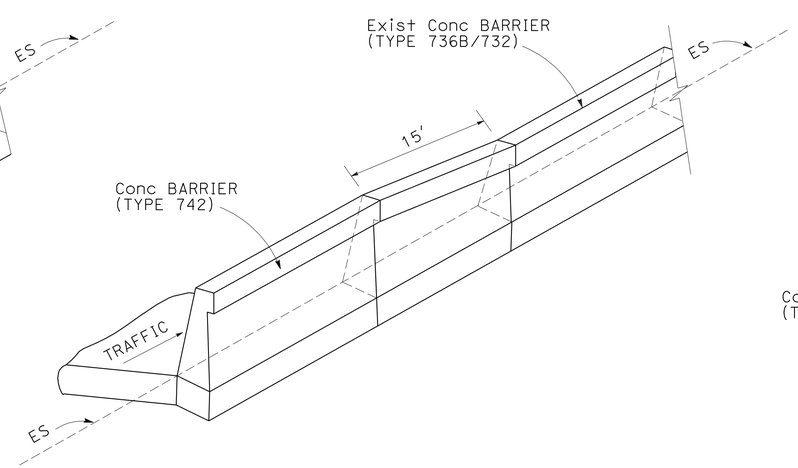

TRANSITION Conc BARRIER TYPE 742 TO Exist TYPE 736B/732

STATION M 203+62 & M 209+16

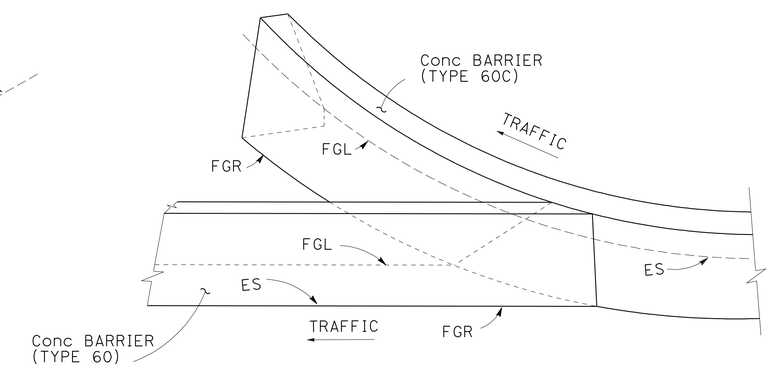

TRANSITION Conc BARRIER TYPE 60 TO TYPE 60C

STATION M 289+84

CONSTRUCTION DETAILS

NO SCALE

C-2

STATE OF CALIFORNIA - DEPARTMENT OF TRANSPORTATION
Caltrans® DESIGN

FUNCTIONAL SUPERVISOR: EDMUND CHOY
CALCULATED-DESIGNED BY: ERIC K. WONG
CHECKED BY: KENNETH D. NHIEU
REVISED BY
DATE REVISED

LAST REVISION 03-24-11
DATE PLOTTED => 22-JUN-2011
TIME PLOTTED => 13:10

Dist	COUNTY	ROUTE	POST MILES TOTAL PROJECT	SHEET No.	TOTAL SHEETS
04	Ala	880	28.2/29.9	27	183

REGISTERED CIVIL ENGINEER 3-23-11 DATE

6-20-11
PLANS APPROVAL DATE

REGISTERED PROFESSIONAL ENGINEER K.D. Nhieu No. 55948 Exp. 12-31-12 CIVIL STATE OF CALIFORNIA

THE STATE OF CALIFORNIA OR ITS OFFICERS OR AGENTS SHALL NOT BE RESPONSIBLE FOR THE ACCURACY OR COMPLETENESS OF SCANNED COPIES OF THIS PLAN SHEET.

LEGEND:

COLD PLANE AC OR PCC

GPI GEOSYNTHETIC PAVEMENT INTERLAYER

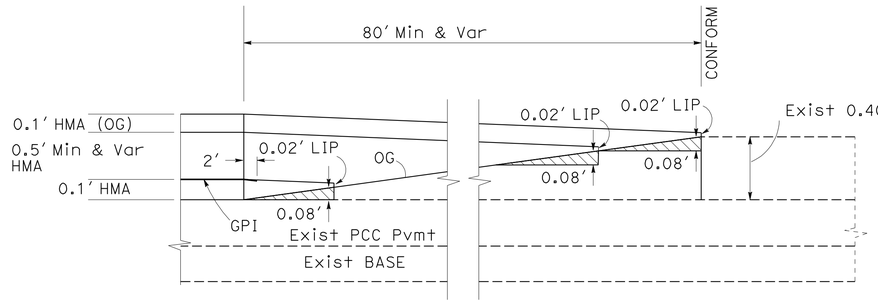

PAVING CONFORM
STATION M 306+25 TO 307+05

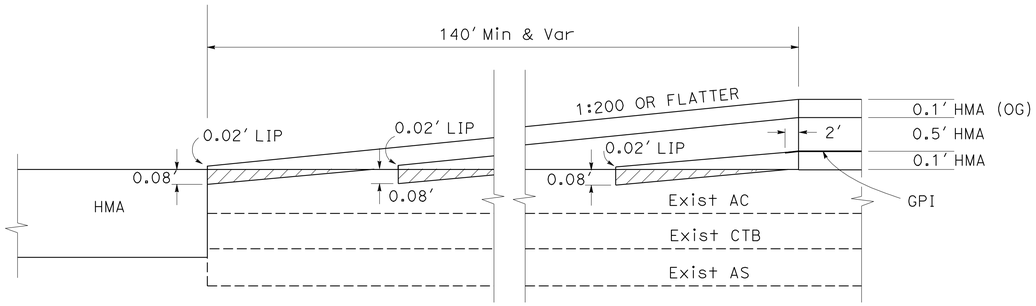

PAVING CONFORM AT 16TH Ave OFF-RAMP
STATION S 290+25 TO 291+61

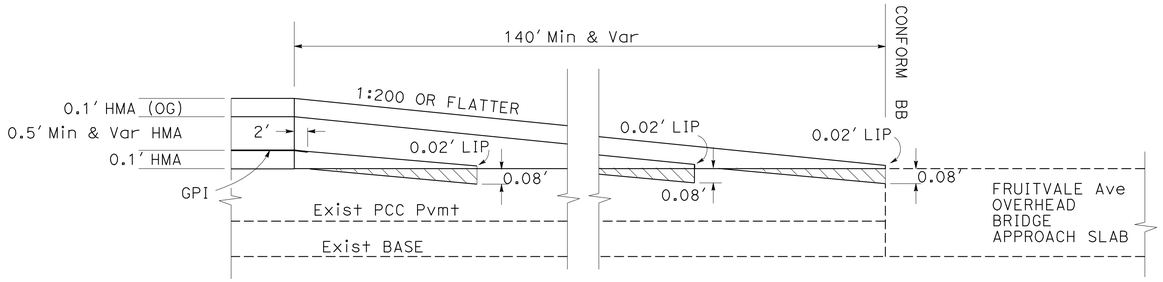

PAVING CONFORM
STATION M 207+43 TO 208+83

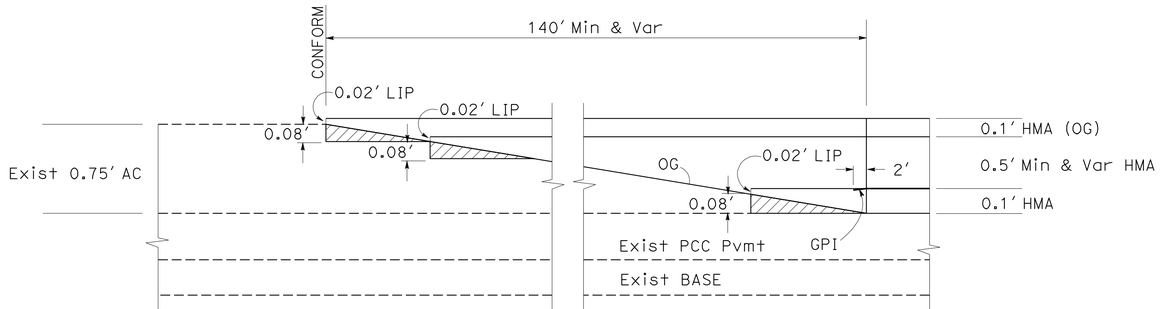

PAVING CONFORM
STATION M 203+42 TO 204+82
STATION M 204+18 TO 205+58

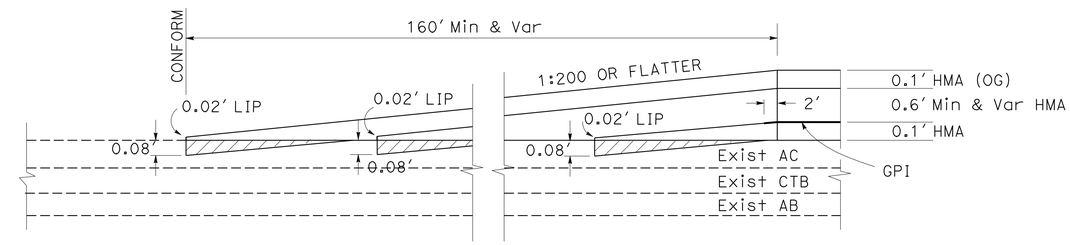

PAVING CONFORM AT Exist RAMP
STATION M 258+40 TO 260+00

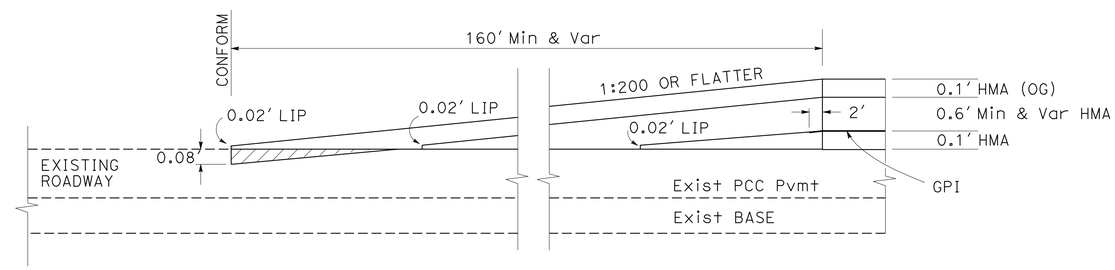

PAVING CONFORM AT Exist PCC PAVEMENT
STATION M 207+43 TO 208+83
STATION M 258+40 TO 260+00

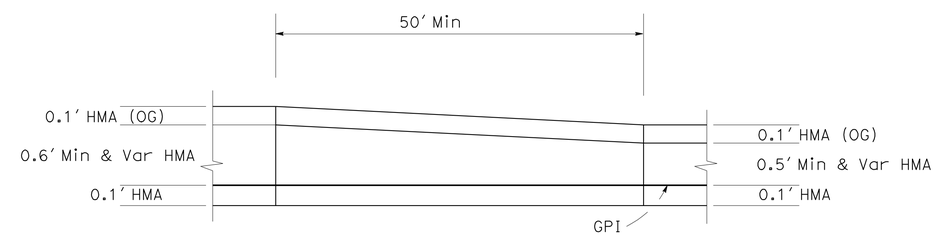

PAVING TRANSITION
STATION M 268+00 to 268+50
STATION M 275+00 TO 275+50

CONSTRUCTION DETAILS
NO SCALE

C-3

STATE OF CALIFORNIA - DEPARTMENT OF TRANSPORTATION
Caltrans
DESIGN

FUNCTIONAL SUPERVISOR: EDMUND CHOY
CALCULATED-DESIGNED BY: ERIC K. WONG
CHECKED BY: KENNETH D. NHIEU
REVISED BY
DATE REVISED

LAST REVISION 03-23-11
DATE PLOTTED => 22-JUN-2011
TIME PLOTTED => 13:10

Dist	COUNTY	ROUTE	POST MILES TOTAL PROJECT	SHEET No.	TOTAL SHEETS
04	Ala	880	28.2/29.9	28	183

REGISTERED CIVIL ENGINEER 3-23-11 DATE

6-20-11
PLANS APPROVAL DATE

REGISTERED PROFESSIONAL ENGINEER K.D. Nhieu No. 55948 Exp. 12-31-12 CIVIL STATE OF CALIFORNIA

THE STATE OF CALIFORNIA OR ITS OFFICERS OR AGENTS SHALL NOT BE RESPONSIBLE FOR THE ACCURACY OR COMPLETENESS OF SCANNED COPIES OF THIS PLAN SHEET.

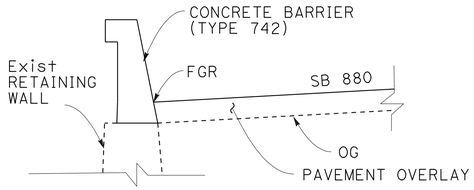

TYPICAL CROSS SECTION

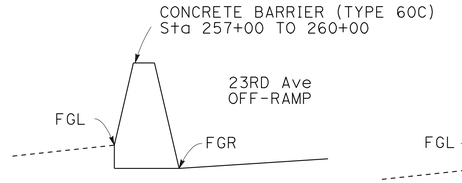

TYPICAL CROSS SECTION

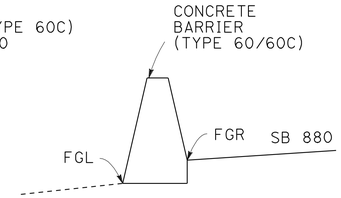

TYPICAL CROSS SECTION

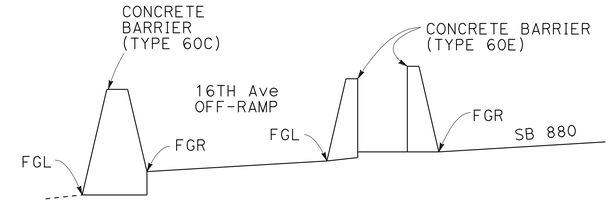

TYPICAL CROSS SECTION

SOUTHBOUND OUTSIDE SHOULDER CONCRETE BARRIER PAVEMENT ELEVATIONS

STATION M	FGL (FT)	FGR (FT)	TYPE OF CONCRETE BARRIER	REMARKS
204+18	24.08	24.37	60C	CONFORM TO EXISTING CONCRETE BARRIER
204+50	25.04	25.53		
205+00	25.84	27.34		
205+50	26.91	28.41		
206+00	29.06	30.57		TRANSITION FROM TYPE 60C TO TYPE 742 Mod, SEE C-2
206+50	30.99	32.49		
206+60		32.79	742	
207+00		33.97		
207+43		35.43		
208+00		36.82		
208+50		38.04		
208+83		38.84		TRANSITION TO EXISTING BARRIER (TYPE 732 Mod), SEE C-2
209+00		39.34		
209+16		39.93	742	
257+00	18.12	17.32	60C	
257+50	18.23	17.43	60C	
257+51			60R	BEGIN TYPE 60R
258+00	18.34	17.54	60R	
258+34			60R	END TYPE 60R
258+50	18.72	17.92	60C	
259+00	18.94	18.40	60C	
259+30			60R	BEGIN TYPE 60R
259+50	18.99	18.89	60R	
260+00	18.11	19.37	60R	
260+13			60R	END TYPE 60R
260+50	17.62	18.82	60C	
260+81	18.54	18.54	60	
261+00	18.40	18.40		
261+50	17.56	17.56		
262+00	16.92	16.92		
262+50	16.25	16.25		
263+00	15.65	15.65		
263+50	15.23	15.23		
264+00	14.91	14.91		
264+50	14.71	14.71		
265+00	14.58	14.58		
265+50	14.47	14.47		
266+00	14.17	14.17		
266+50	14.14	14.14		
267+00	13.95	13.95		
267+50	13.67	13.67		
268+00	13.70	13.70		
268+50	13.59	13.59		
269+00	13.27	13.27		
269+50	13.63	13.63		
270+00	14.15	14.15		
270+50	14.53	14.53		
271+00	14.95	14.95		
271+50	15.03	15.03		
272+00	14.94	14.94		
272+50	14.93	14.93		
273+00	14.82	14.82	60	

SOUTHBOUND OUTSIDE SHOULDER CONCRETE BARRIER PAVEMENT ELEVATIONS

STATION M	FGL (FT)	FGR (FT)	TYPE OF CONCRETE BARRIER	REMARKS
273+50	14.74	14.74	60C	
273+67	14.63	14.63		
274+00	12.92	14.42		
274+50	12.71	14.21		
275+00	12.53	14.03		
275+50	12.46	13.96		
276+00	12.38	13.88		
276+50	12.27	13.77		
277+00	12.24	13.74		
277+50	12.21	13.71		
278+00	11.99	13.49		
278+50	11.89	13.39		
279+00	11.84	13.34		
279+20	13.26	13.26	60	
279+50	13.30	13.30		
280+00	13.36	13.36		
280+50	13.51	13.51		
281+00	13.66	13.66		
281+50	13.81	13.81		
282+00	14.00	14.00		
282+50	14.06	14.06		
283+00	14.11	14.11		
283+50	14.28	14.28		
284+00	14.42	14.42		
284+50	14.46	14.46		
285+00	14.46	14.46		
285+50	14.32	14.32		
286+00	14.30	14.30		
286+50	14.11	14.11		
287+00	13.87	13.87		
287+50	13.66	13.66		
288+00	13.55	13.55		
288+50	13.34	13.34		
289+00	13.34	13.34		
289+50	13.32	13.32		
289+84	13.23	13.23	60	
289+53	11.09	12.16	60C	
290+00	12.08	13.15	60C	
+32.97	12.57	13.00	60E	
+50	12.84	12.91		16TH Ave OFF-RAMP
291+00	12.51	12.66		
+50	12.11	12.28		
+60.81	12.00	12.18	60E	
290+80	10.99	12.12	60C	
291+00	11.10	12.23		
291+50	11.02	11.79		
292+00	10.09	11.49		
292+50	9.98	11.38	60C	
292+79			60R	BEGIN TYPE 60R
293+00	9.98	11.38	60R	

SOUTHBOUND OUTSIDE SHOULDER CONCRETE BARRIER PAVEMENT ELEVATIONS

STATION M	FGL (FT)	FGR (FT)	TYPE OF CONCRETE BARRIER	REMARKS
293+50	9.87	11.27	60R	
293+62			60R	END TYPE 60R
294+00	11.08	11.78	60C	
294+50	11.26	11.96	60C	
294+61			60R	BEGIN TYPE 60R
295+00	11.38	12.08	60R	
295+44			60R	END TYPE 60R
295+50	11.52	12.22	60C	
296+00	11.69	12.39		
296+50	11.87	12.57		
297+00	12.10	12.70		
297+50	12.39	12.95		
298+00	12.57	13.13		
298+50	12.65	13.22		
299+00	12.85	13.41		
299+50	12.90	13.47		
300+00	12.97	13.53		
300+50	13.00	13.56		
301+00	13.04	13.60		
301+50	12.98	13.54		
302+00	12.74	13.30		
302+50	12.48	13.04		
303+00	12.21	12.77		
303+50	12.09	12.74		
304+00	12.11	12.57		
304+50	11.92	12.41	60C	
304+63			60R	BEGIN TYPE 60R
305+00	11.51	12.20	60R	
305+46			60R	END TYPE 60R
305+50	11.51	11.99	60C	
306+00	11.36	11.78	60C	
306+25	11.65	11.65	60	
306+44			60R	BEGIN TYPE 60R
306+50	11.32	11.32	60R	
307+00	10.65	10.65	60R	
307+27			60R	END TYPE 60R
307+50	10.43	10.43	60	
308+00	10.39	10.39		
308+50	10.08	10.08		
309+00	9.55	9.55		
309+50	9.01	9.01		
310+00	8.48	8.48		
310+50	8.20	8.20		
310+88	8.33	8.33	60	

CONSTRUCTION DETAILS

NO SCALE

C-4

STATE OF CALIFORNIA - DEPARTMENT OF TRANSPORTATION
Caltrans® DESIGN

FUNCTIONAL SUPERVISOR: EDMUND CHOY
CALCULATED-DESIGNED BY: KENNETH D. NHIEU
CHECKED BY
REVISED BY
DATE REVISED

LAST REVISION 06-09-11 | DATE PLOTTED => 22-JUN-2011 | TIME PLOTTED => 13:10

Dist	COUNTY	ROUTE	POST MILES TOTAL PROJECT	SHEET No.	TOTAL SHEETS
04	Ala	880	28.2/29.9	29	183

REGISTERED CIVIL ENGINEER 3-23-11 DATE

6-20-11
PLANS APPROVAL DATE

REGISTERED PROFESSIONAL ENGINEER K.D. Nhieu No. 55948 Exp. 12-31-12 CIVIL STATE OF CALIFORNIA

THE STATE OF CALIFORNIA OR ITS OFFICERS OR AGENTS SHALL NOT BE RESPONSIBLE FOR THE ACCURACY OR COMPLETENESS OF SCANNED COPIES OF THIS PLAN SHEET.

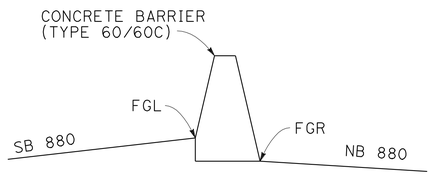

TYPICAL CROSS SECTION

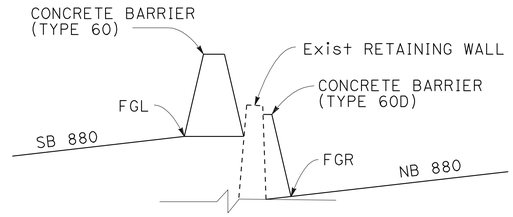

TYPICAL CROSS SECTION

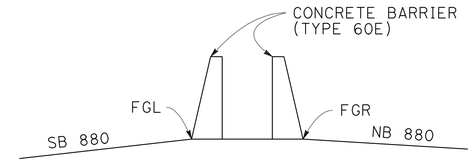

TYPICAL CROSS SECTION

MEDIAN CONCRETE BARRIER PAVEMENT ELEVATIONS

STATION M	FGL (FT)	FGR (FT)	TYPE OF CONCRETE BARRIER	REMARKS
204+00	27.74	26.30	60C	CONFORM TO EXISTING BARRIER
204+50	28.79	27.87		
205+00	29.84	29.43		
205+50	30.89	30.61		
206+00	31.71	31.75		
206+50	32.85	32.87		
207+00	34.36	34.19		
207+43	35.79	35.31		
208+00	37.17	36.77		
208+50	38.38	38.05		CONFORM TO EXISTING BARRIER
208+83	39.18	38.89		
258+40	19.40	19.20	60C	
258+50	19.44	19.22		
259+00	19.64	19.31		
259+50	19.85	19.40		
260+00	20.05	19.49		
260+50	19.97	19.19		
261+00	19.93	18.81		
261+50	19.84	18.27		
262+00	19.88	17.82	60C	TRANSITION DETAILS, SEE C-2
262+27	19.86	17.53	60 & 60D	
262+50	19.78	17.19		
263+00	19.86	16.75		FROM Sta 262+27 TO 270+43, FGL AT LEFT TOE OF TYPE 60 FGR AT RIGHT TOE OF TYPE 60D
263+50	19.58	16.51		
264+00	19.25	16.35		
264+50	19.05	16.22		
265+00	18.93	16.03		
265+50	18.82	15.85		
266+00	18.52	15.66		
266+50	18.49	15.59		
267+00	18.30	15.52		
267+50	18.01	15.27		
268+00	18.04	15.06		
268+50	17.93	15.00		
269+00	17.62	14.85		
269+50	17.59	14.66		
270+00	17.47	15.15		TRANSITION DETAILS, SEE C-2
270+43	17.26	15.33	60 & 60D	
270+50	17.24	15.36	60C	
271+00	17.02	15.49		
271+50	16.80	15.36		
272+00	16.73	15.07		
272+50	16.72	14.96		
273+00	16.62	14.80		
273+50	16.54	14.66		
274+00	16.22	14.45		

MEDIAN CONCRETE BARRIER PAVEMENT ELEVATIONS

STATION M	FGL (FT)	FGR (FT)	TYPE OF CONCRETE BARRIER	REMARKS
274+50	16.00	14.02	60C	
275+00	15.82	13.90		
275+50	15.74	13.88		
276+00	15.60	13.90		
276+50	15.44	14.15		
277+00	15.28	14.15		
277+50	15.25	14.24		
278+00	14.97	14.20		
278+50	14.81	14.51		
279+00	14.71	14.74		
279+50	14.75	14.63		
280+00	14.85	14.73		
280+50	15.06	14.88		
281+00	15.27	15.20		
281+50	15.47	15.39		
282+00	15.68	15.67		
282+50	15.80	15.97		
283+00	15.92	16.04		
283+50	16.13	16.12	60C	
283+69	16.20	16.18	60E	
284+00	16.32	16.27		CONCRETE BARRIER (TYPE 60E)
284+50	16.36	16.19		
285+00	16.37	16.17		
285+50	16.22	16.17		
286+00	16.19	16.14	60E	
286+55	15.99	16.06	60C	
287+00	15.64	15.86		
287+50	15.33	15.65		
288+00	15.11	15.40		
288+50	14.81	15.11		
289+00	14.70	14.82		
289+50	14.61	14.59		
290+00	14.53	14.42		
290+50	14.19	14.14		
291+00	13.89	13.86		
290+50	13.72	13.72		
292+00	13.39	13.49		
292+50	13.25	13.37		
293+00	13.21	13.41		
293+50	13.05	13.31		
294+00	13.24	13.32		
294+50	13.49	13.29		
295+00	13.56	13.53		
295+50	13.70	13.67		
296+00	13.86	13.72		
296+50	14.04	13.90		
297+00	14.15	14.02		
297+50	14.33	14.00		
298+00	14.45	14.09		

MEDIAN CONCRETE BARRIER PAVEMENT ELEVATIONS

STATION M	FGL (FT)	FGR (FT)	TYPE OF CONCRETE BARRIER	REMARKS
298+50	14.45	14.15	60C	
299+00	14.59	14.40		
299+50	14.73	14.40		
300+00	14.82	14.42		
300+50	14.84	14.55		
301+00	14.89	14.63		
301+50	14.82	14.70		
302+00	14.58	14.61		
302+50	14.33	14.41		
303+00	14.05	14.02		
303+50	13.84	13.74		
304+00	13.58	13.27		
304+50	13.40	13.05		
305+00	13.39	13.11		
305+50	13.22	13.00		
306+00	13.03	12.52		

CONSTRUCTION DETAILS

NO SCALE

C-5

STATE OF CALIFORNIA - DEPARTMENT OF TRANSPORTATION

Caltrans® DESIGN

FUNCTIONAL SUPERVISOR: EDMUND CHOY

CALCULATED-DESIGNED BY: ERIC K. WONG

CHECKED BY: KENNETH D. NHIEU

REVISED BY | DATE REVISED

LAST REVISION 03-23-11 | DATE PLOTTED => 22-JUN-2011 | TIME PLOTTED => 13:10

Dist	COUNTY	ROUTE	POST MILES TOTAL PROJECT	SHEET No.	TOTAL SHEETS
04	Ala	880	28.2/29.9	30	183

REGISTERED CIVIL ENGINEER 3-23-11 DATE

6-20-11
PLANS APPROVAL DATE

REGISTERED PROFESSIONAL ENGINEER K.D. Nhieu No. 55948 Exp. 12-31-12 CIVIL STATE OF CALIFORNIA

THE STATE OF CALIFORNIA OR ITS OFFICERS OR AGENTS SHALL NOT BE RESPONSIBLE FOR THE ACCURACY OR COMPLETENESS OF SCANNED COPIES OF THIS PLAN SHEET.

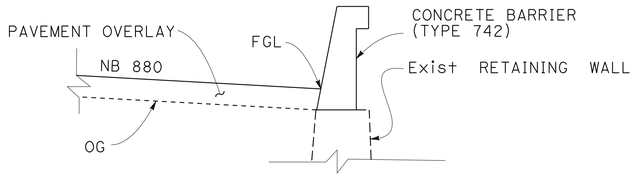

TYPICAL CROSS SECTION

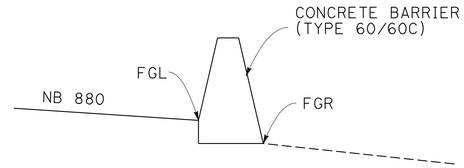

TYPICAL CROSS SECTION

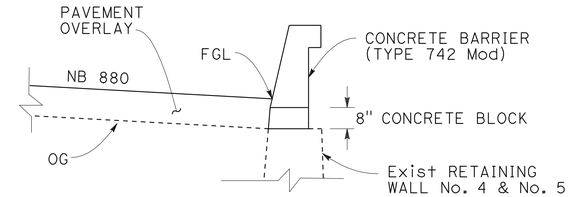

TYPICAL CROSS SECTION

NORTHBOUND OUTSIDE SHOULDER CONCRETE BARRIER PAVEMENT ELEVATIONS

STATION M	FGL (FT)	FGR (FT)	TYPE OF CONCRETE BARRIER	REMARKS
203+42	29.00		742	CONFORM TO EXISTING CONCRETE BARRIER (TYPE 736B), SEE C-2
204+00	29.29			
204+50	29.55			
205+00	29.80			
205+50	30.82			
206+00	31.87			
206+50	32.92			
207+00	34.14			
207+43	35.29			
208+00	36.67			
208+50	37.89			
208+83	38.69			CONFORM TO EXISTING CONCRETE BARRIER (TYPE 732), SEE C-2
209+00	39.22			
209+13	39.82		742	
256+43	18.60	18.60	60	
256+50	18.57	18.57	60	
256+85			60R	BEGIN TYPE 60R
257+00	18.44	18.44	60R	
257+50	18.31	18.31	60R	
257+68			60R	END TYPE 60R
258+00	18.14	18.14	60	
258+40	18.09	18.09	60	
258+50	18.22	18.22	60	
258+65			60R	BEGIN TYPE 60R
259+00	18.91	18.91	60R	
259+48			60R	END TYPE 60R
259+50	19.60	19.60	60	
260+00	20.28	20.28	60	
260+44			60R	BEGIN TYPE 60R
260+50	20.49	20.49	60R	
261+00	20.61	20.61	60R	
261+27			60R	END TYPE 60R
261+50	20.90	20.90	60	
262+00	21.29	21.29	60	
262+21			60R	BEGIN TYPE 60R
262+50	21.51	21.51	60R	
263+00	21.73	21.73	60R	
263+04			60R	END TYPE 60R
263+50	21.41	21.41	60	
264+00	21.05	21.05		
264+50	20.73	20.73		
265+00	20.48	20.48		
265+50	20.30	20.30		
266+00	20.11	20.11		
266+50	20.03	20.03		
267+00	19.97	19.97		
267+50	19.73	19.73		
268+00	19.69	19.69		
268+50	19.48	19.48		

NORTHBOUND OUTSIDE SHOULDER CONCRETE BARRIER PAVEMENT ELEVATIONS

STATION M	FGL (FT)	FGR (FT)	TYPE OF CONCRETE BARRIER	REMARKS
269+00	19.40	19.40	60	
269+50	19.21	19.21	60	TRANSITION FROM TYPE 60 TO TYPE 742 Mod, SEE C-2
269+73	18.99		742 Mod	
270+00	18.81			
270+50	18.28			
271+00	17.66			
271+50	17.18			
272+00	16.88			
271+50	16.65			
273+00	16.49			
273+50	16.35			
274+00	16.13			
274+50	15.82			
275+00	15.59			
275+50	15.36		742 Mod	
275+52	15.35	15.35	60	TRANSITION FROM TYPE 742 Mod TO TYPE 60, SEE C-2
276+00	15.24	15.24		
276+50	15.06	15.06		
277+00	14.63	14.63		
277+50	14.28	14.28		
278+00	13.79	13.79		
278+50	13.63	13.63		
279+00	13.40	13.40		
279+50	13.15	13.15		
280+00	13.10	13.10		
280+50	13.11	13.11		
281+00	13.30	13.30		
281+50	13.45	13.45		
282+00	13.71	13.71		
282+50	13.98	13.98		
283+00	14.04	14.04		
283+50	14.11	14.11		
283+78	14.22	14.22		
284+00	14.29	14.29		
284+50	14.39	14.39		
285+00	14.50	14.50		
285+55	14.64	14.64		
286+00	14.73	14.73		
286+50	14.88	14.88		
287+00	15.08	15.08		
287+50	15.27	15.27	60	
288+00	15.41	14.27	60C	
288+50	15.49	14.83		
289+00	15.55	14.70		
289+50	15.51	14.80		TRANSITION FROM TYPE 60C TO TYPE 742 Mod, SEE C-2
290+00	15.32	14.53		
290+50	15.04	14.25	60C	
290+90	14.86		742 Mod	
291+00	14.82			
291+50	14.60			

NORTHBOUND OUTSIDE SHOULDER CONCRETE BARRIER PAVEMENT ELEVATIONS

STATION M	FGL (FT)	FGR (FT)	TYPE OF CONCRETE BARRIER	REMARKS
292+00	14.37		742 Mod	
292+50	14.24			
293+00	14.28			
293+50	14.17			
294+00	14.21			
294+50	14.15			
295+00	14.40			
295+50	14.53			
296+00	14.58			
296+50	14.76			
297+00	14.88			
297+50	14.87			
298+00	14.96			
298+50	15.02			
299+00	15.27			
299+50	15.26			
300+00	15.29			
300+50	15.42			
301+00	15.50			
301+50	15.57			
302+00	15.48			
302+50	15.28			
303+00	14.89			
303+50	14.61			
304+00	14.39			
304+50	14.14			
305+00	13.92			
305+50	13.87			
306+00	13.39			
306+25	13.28			
306+50	13.16			
307+00	12.93			
307+50	11.98			
308+00	11.82			
308+50	11.77			TRANSITION FROM TYPE 742 Mod TO EXISTING TYPE 60C, SEE C-2
309+00	11.83			
309+50	11.83			
309+71	11.77			

CONSTRUCTION DETAILS

NO SCALE

C-6

STATE OF CALIFORNIA - DEPARTMENT OF TRANSPORTATION
Caltrans® DESIGN

FUNCTIONAL SUPERVISOR: EDMUND CHOY
CALCULATED-DESIGNED BY: ERIC K. WONG
CHECKED BY: KENNETH D. NHIEU
REVISED BY
DATE REVISED

LAST REVISION 03-23-11
DATE PLOTTED => 22-JUN-2011
TIME PLOTTED => 13:11

Dist	COUNTY	ROUTE	POST MILES TOTAL PROJECT	SHEET No.	TOTAL SHEETS
04	Ala	880	28.2/29.9	31	183

REGISTERED CIVIL ENGINEER 3-23-11 DATE

6-20-11
PLANS APPROVAL DATE

REGISTERED PROFESSIONAL ENGINEER K.D. Nhieu No. 55948 Exp. 12-31-12 CIVIL STATE OF CALIFORNIA

THE STATE OF CALIFORNIA OR ITS OFFICERS OR AGENTS SHALL NOT BE RESPONSIBLE FOR THE ACCURACY OR COMPLETENESS OF SCANNED COPIES OF THIS PLAN SHEET.

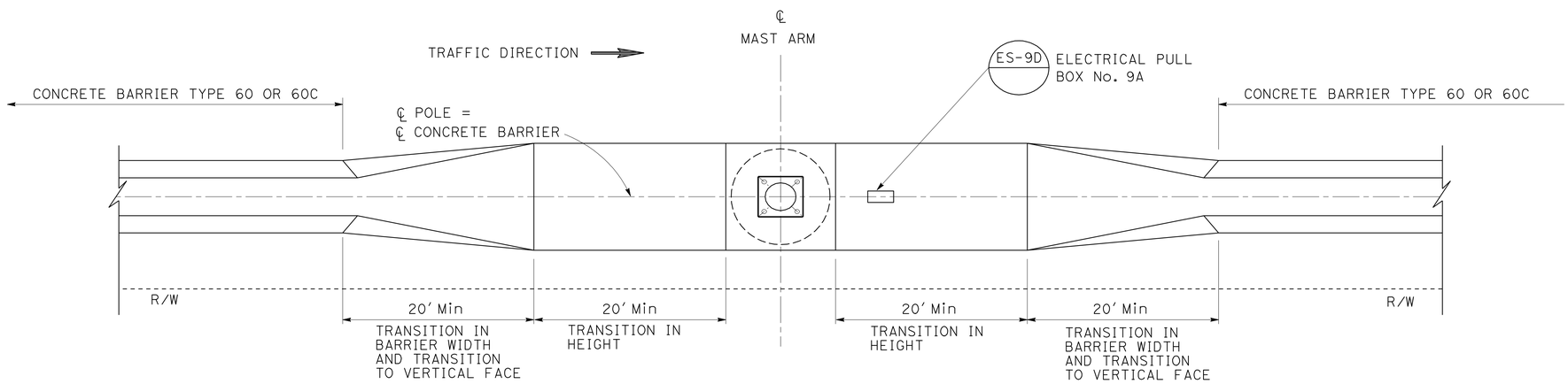

ROUTE 880 (SOUTHBOUND & NORTHBOUND)
CONCRETE BARRIER (TYPE 60R)
TRANSITION AT ELECTROLIER

LOCATION OF TYPE 21 ELECTROLIER

No.	OFFSET AND STATION
1	85.461' Rt M 257+26.265
2	79.097' Rt M 259+06.152
3	72.586' Rt M 260+85.943
4	68.955' Rt M 262+62.720
5	77.189' Lt M 293+20.438
6	73.346' Lt M 295+02.196
7	62.367' Lt M 305+04.589
8	66.284' Lt M 306+85.568
9	86.377' Lt M 257+92.271
10	69.226' Lt M 259+71.496

CONSTRUCTION DETAILS
NO SCALE

C-7

STATE OF CALIFORNIA - DEPARTMENT OF TRANSPORTATION
Caltrans DESIGN

FUNCTIONAL SUPERVISOR: EDMUND CHOY
CALCULATED-DESIGNED BY: ERIC K. WONG
CHECKED BY: KENNETH D. NHIEU
REVISED BY
DATE REVISED

LAST REVISION 03-23-11
DATE PLOTTED => 22-JUN-2011
TIME PLOTTED => 13:11

Dist	COUNTY	ROUTE	POST MILES TOTAL PROJECT	SHEET No.	TOTAL SHEETS
04	Ala	880	28.2/29.9	32	183

REGISTERED CIVIL ENGINEER 3-23-11 DATE

6-20-11
PLANS APPROVAL DATE

REGISTERED PROFESSIONAL ENGINEER K.D. Nhieu No. 55948 Exp. 12-31-12 CIVIL STATE OF CALIFORNIA

THE STATE OF CALIFORNIA OR ITS OFFICERS OR AGENTS SHALL NOT BE RESPONSIBLE FOR THE ACCURACY OR COMPLETENESS OF SCANNED COPIES OF THIS PLAN SHEET.

NOTE

1. ALL OUTSIDE SHOULDER ALONG THE RADII HAVE -5.00% CROSS SLOPE

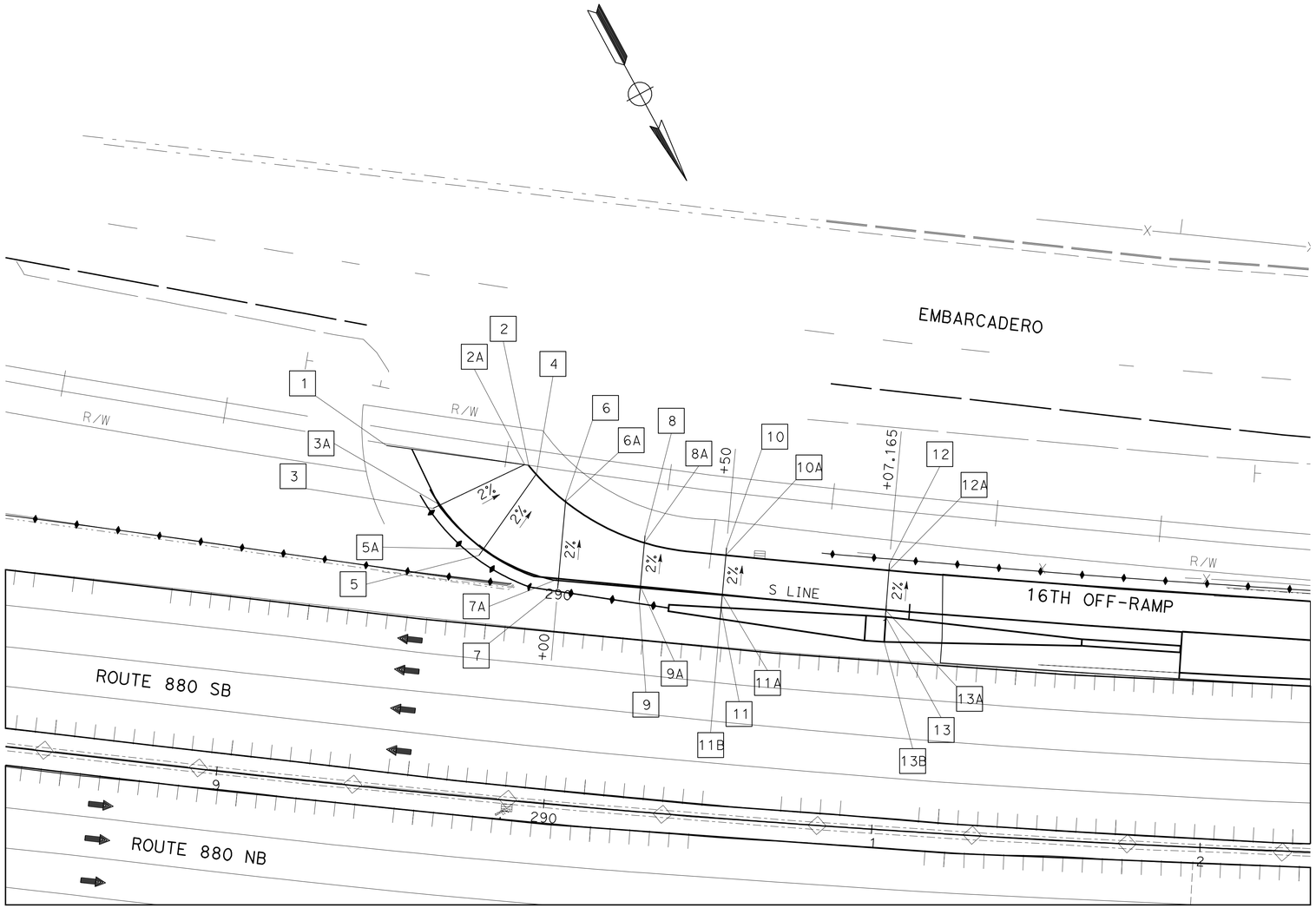

PAVEMENT ELEVATIONS

No.	STATION	ELEVATION
1	7.75′ Rt S 289+36	11.790
2	35.90′ Lt S 289+36	11.733
2A	28.88′ Lt S 289+56	11.733
3	1.97′ Rt S 289+56	12.250
3A	0.40′ Lt S 289+56	12.200
4	28.10′ Lt S 289+75	11.830
5	2.39′ Rt S 289+75	12.430
5A	0.1′ Rt S 289+56	12.390
6	24.85′ Lt S 290+00	12.000
6A	24.03′ Lt S 290+00	12.040
7	2.45′ Rt S 290+00	12.570
7A	0.55′ Rt S 290+00	12.510
8	15.577′ Lt S 290+25	12.130
8A	13.76′ Lt S 290+50	12.240
9	3.83′ Rt S 290+25	12.591
9A	15.97′ Lt S 290+50	12.507
10	14.51′ Lt S 290+50	12.264
10A	12.20′ Lt S 290+50	12.392
11	3.78′ Rt S 290+50	12.712
11A	0.19′ Lt S 290+50	12.637
11B	60.38′ Lt M 290+50	12.910
12	14.07′ Lt S 291+00	12.032
12A	12.00′ Lt S 291+00	12.140
13	2.00′ Rt. "S" 291+00	12.430
13A	ON S 291+00	12.386
13B	57.41′ Lt M 291+07.165	12.710

CONSTRUCTION DETAILS
PAVEMENT ELEVATION
SCALE: 1″ = 20′

FOR NOTES, ABBREVIATIONS AND LEGEND, SEE SHEET C-1

THIS PLAN ACCURATE FOR PAVEMENT ELEVATION WORK ONLY

C-8

STATE OF CALIFORNIA - DEPARTMENT OF TRANSPORTATION
Caltrans DESIGN

FUNCTIONAL SUPERVISOR: EDMUND CHOY
CALCULATED-DESIGNED BY: ERIC K. WONG
CHECKED BY: KENNETH D. NHIEU
REVISED BY
DATE REVISED

LAST REVISION 03-23-11
DATE PLOTTED => 22-JUN-2011
TIME PLOTTED => 13:11

Dist	COUNTY	ROUTE	POST MILES TOTAL PROJECT	SHEET No.	TOTAL SHEETS
04	Ala	880	28.2/29.9	33	183

REGISTERED CIVIL ENGINEER 3-23-11 DATE

6-20-11
PLANS APPROVAL DATE

REGISTERED PROFESSIONAL ENGINEER KHANH HA No. C57995 Exp. 06-30-12 CIVIL STATE OF CALIFORNIA

THE STATE OF CALIFORNIA OR ITS OFFICERS OR AGENTS SHALL NOT BE RESPONSIBLE FOR THE ACCURACY OR COMPLETENESS OF SCANNED COPIES OF THIS PLAN SHEET.

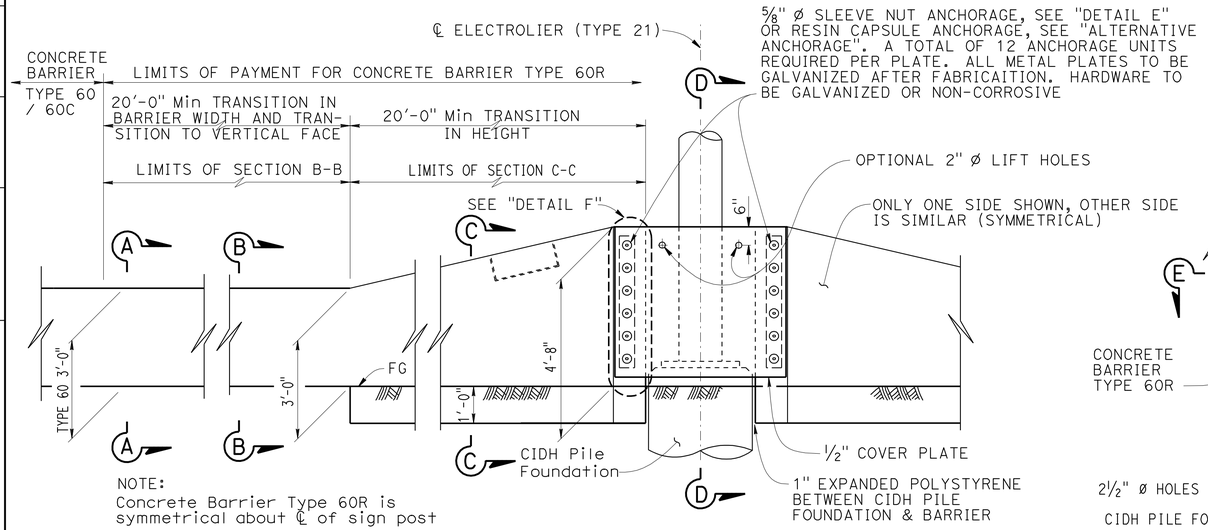

NOTE:
Concrete Barrier Type 60R is symmetrical about ℄ of sign post

ELEVATION
NO SCALE

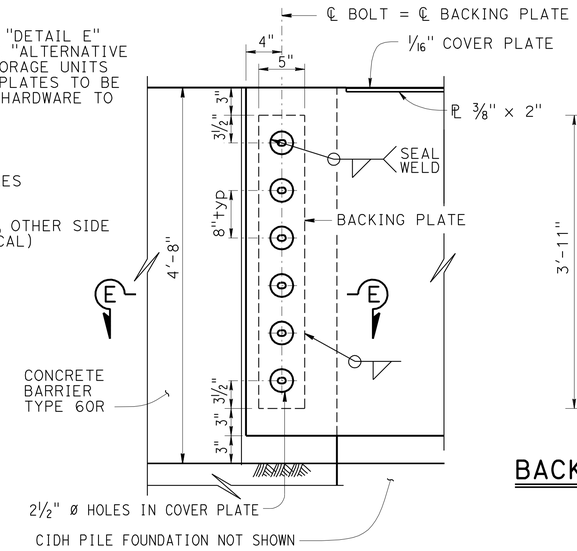

DETAIL F
NO SCALE

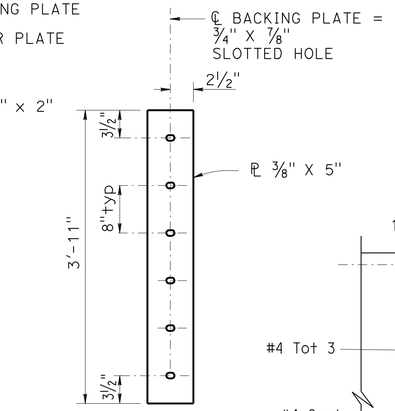

BACKING PLATE
NO SCALE

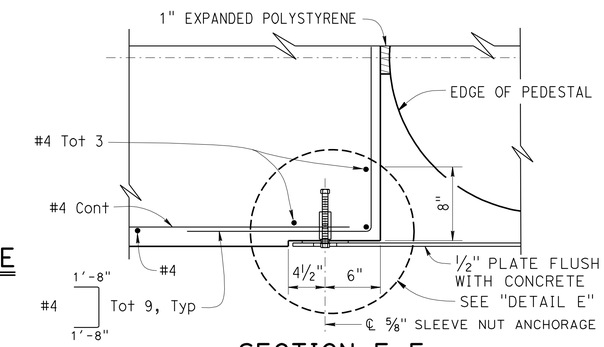

SECTION E-E
NO SCALE

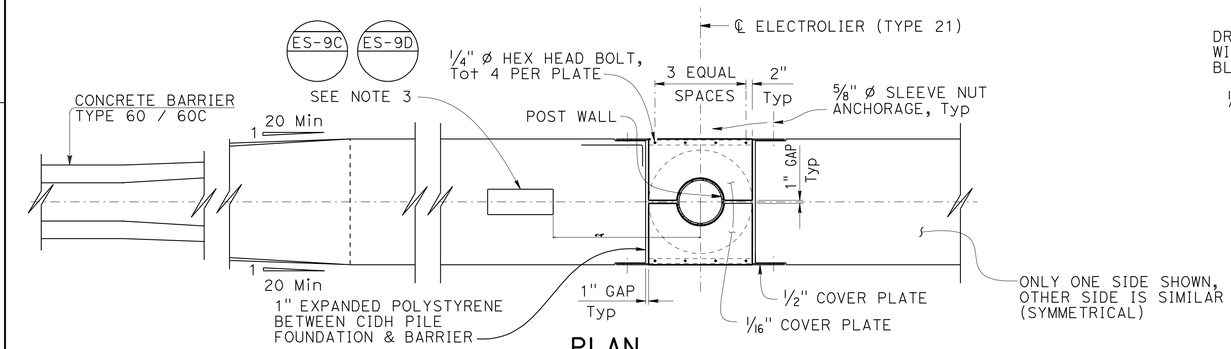

PLAN
NO SCALE

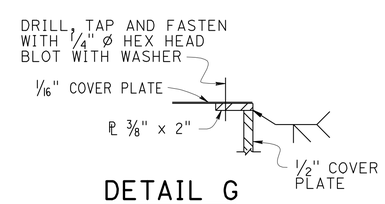

DETAIL G
NO SCALE

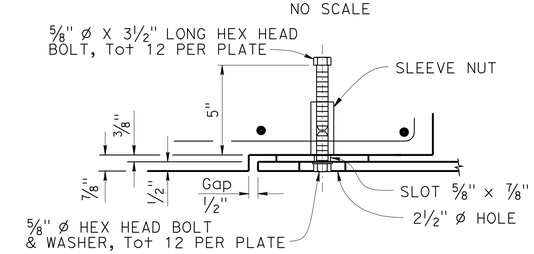

DETAIL E
NO SCALE

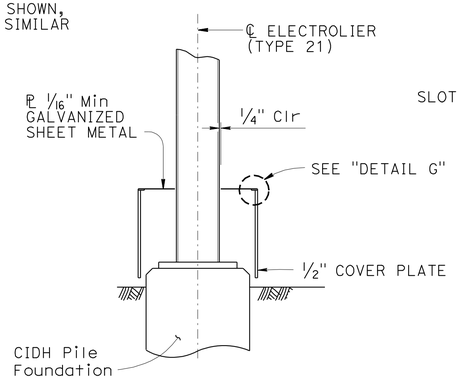

SECTION D-D
NO SCALE

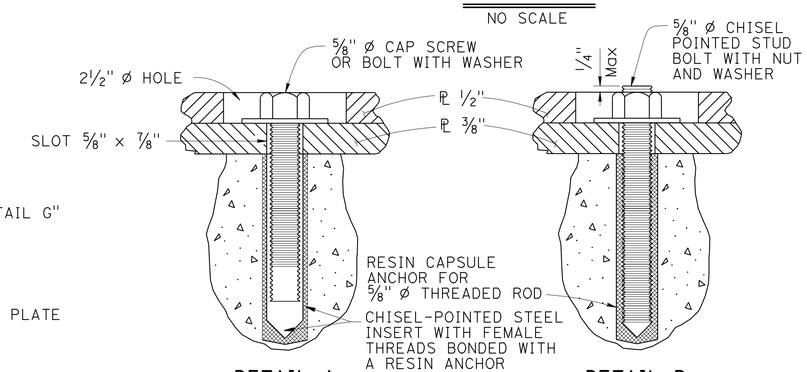

ALTERNATIVE ANCHORAGE

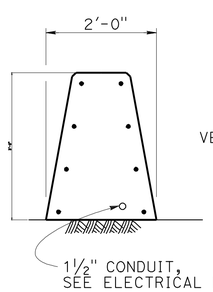

SECTION A-A
NO SCALE

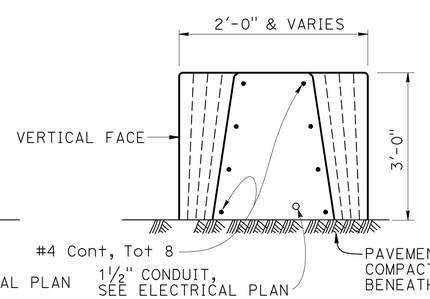

SECTION B-B
NO SCALE

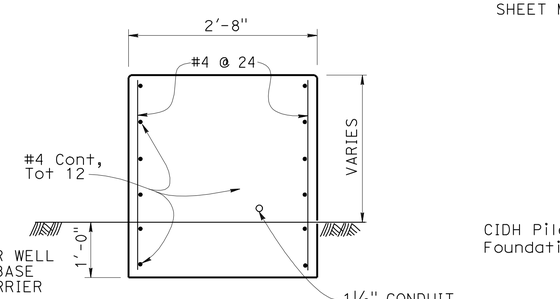

SECTION C-C
NO SCALE

NOTES:
1. Resin capsule anchorage is subject to approval of the Engineer. Installation procedures shall comply with manufacturer's instructions.
2. "DETAIL B" similar to "DETAIL A" except for anchorage devices.
3. Electrical Pull Box No. 9A, see "Road Plans".

CONSTRUCTION DETAILS
CONCRETE BARRIER TYPE 60R
NO SCALE

C-9

STATE OF CALIFORNIA - DEPARTMENT OF TRANSPORTATION
DESIGN
FUNCTIONAL SUPERVISOR: EDMUND CHOY
CALCULATED-DESIGNED BY: NIRAV SHAH
CHECKED BY: KHANH HA
REVISED BY / DATE REVISED

LAST REVISION 03-23-11
DATE PLOTTED => 22-JUN-2011
TIME PLOTTED => 13:11

Dist	COUNTY	ROUTE	POST MILES TOTAL PROJECT	SHEET No.	TOTAL SHEETS
04	Ala	880	28.2/29.9	34	183

Sally Bang
LICENSED LANDSCAPE ARCHITECT

6-20-11
PLANS APPROVAL DATE

LICENSED LANDSCAPE ARCHITECT
SALLY BANG No. 3060
Sally Bang
Signature
11-30-11
Renewal Date
04-05-11
Date
STATE OF CALIFORNIA

THE STATE OF CALIFORNIA OR ITS OFFICERS OR AGENTS SHALL NOT BE RESPONSIBLE FOR THE ACCURACY OR COMPLETENESS OF SCANNED COPIES OF THIS PLAN SHEET.

NOTE:

FOR ACCURATE RIGHT OF WAY DATA, CONTACT RIGHT OF WAY ENGINEERING AT THE DISTRICT OFFICE.

LEGEND:

EROSION CONTROL (HYDROSEED)

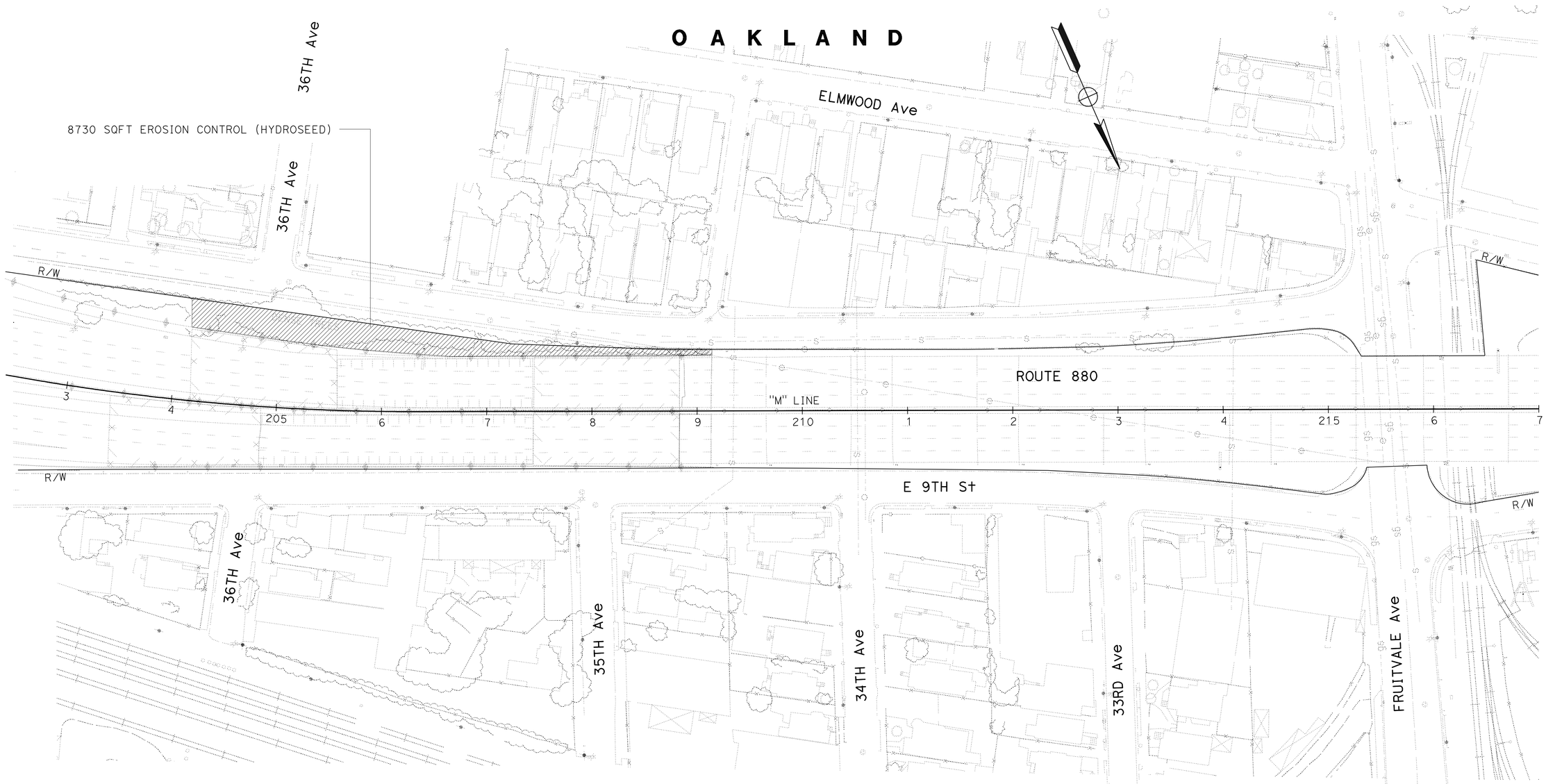

THIS PLAN ACCURATE FOR EROSION CONTROL WORK ONLY

EROSION CONTROL PLAN

SCALE: 1" = 50'

EC-1

STATE OF CALIFORNIA - DEPARTMENT OF TRANSPORTATION
Caltrans®
WATER QUALITY

SENIOR LANDSCAPE ARCHITECT: DAVID YAM

CALCULATED-DESIGNED BY: ANGELA KWAN
CHECKED BY: SALLY BANG

REVISED BY
DATE REVISED

LAST REVISION 04-05-11
DATE PLOTTED => 22-JUN-2011
TIME PLOTTED => 13:11

NOTE:

FOR ACCURATE RIGHT OF WAY DATA, CONTACT
RIGHT OF WAY ENGINEERING AT THE DISTRICT OFFICE.

Dist	COUNTY	ROUTE	POST MILES TOTAL PROJECT	SHEET No.	TOTAL SHEETS
04	Ala	880	28.2/29.9	35	183

Sally Bang
LICENSED LANDSCAPE ARCHITECT

6-20-11
PLANS APPROVAL DATE

LICENSED LANDSCAPE ARCHITECT
SALLY BANG No. 3060
Sally Bang
Signature
11-30-11
Renewal Date
04-05-11
Date
STATE OF CALIFORNIA

THE STATE OF CALIFORNIA OR ITS OFFICERS OR AGENTS SHALL NOT BE RESPONSIBLE FOR THE ACCURACY OR COMPLETENESS OF SCANNED COPIES OF THIS PLAN SHEET.

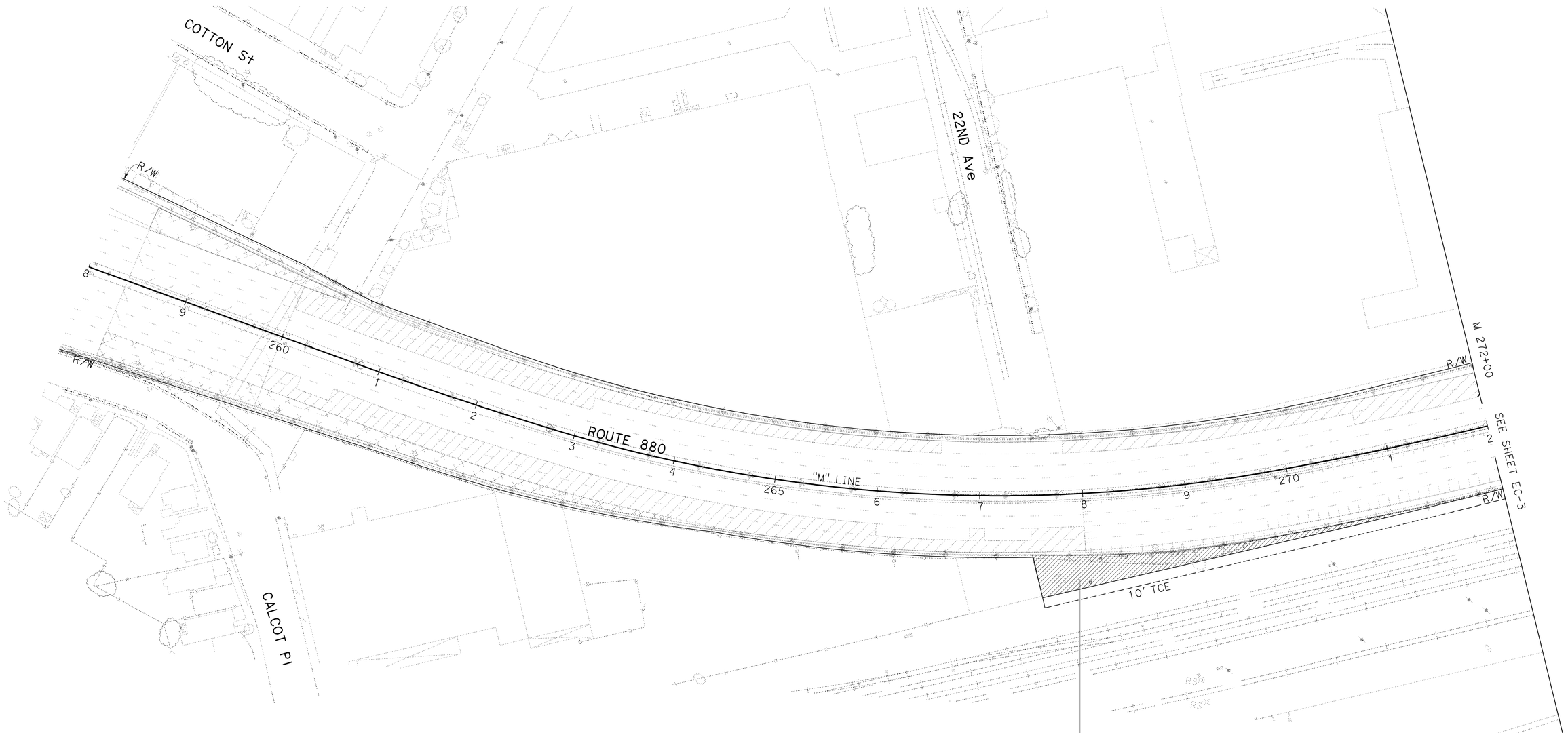

THIS PLAN ACCURATE FOR EROSION CONTROL WORK ONLY

EROSION CONTROL PLAN

SCALE: 1" = 50'

EC-2

REVISED BY | DATE REVISED
ANGELA KWAN | SALLY BANG
CALCULATED-DESIGNED BY | CHECKED BY
SENIOR LANDSCAPE ARCHITECT | DAVID YAM
STATE OF CALIFORNIA - DEPARTMENT OF TRANSPORTATION
Caltrans
WATER QUALITY

LAST REVISION 04-05-11 | DATE PLOTTED => 22-JUN-2011 | TIME PLOTTED => 13:12

Dist	COUNTY	ROUTE	POST MILES TOTAL PROJECT	SHEET No.	TOTAL SHEETS
04	Ala	880	28.2/29.9	36	183

Sally Bang
LICENSED LANDSCAPE ARCHITECT

6-20-11
PLANS APPROVAL DATE

LICENSED LANDSCAPE ARCHITECT
SALLY BANG No. 3000
Sally Bang
Signature
11-30-11
Renewal Date
04-05-11
Date
STATE OF CALIFORNIA

THE STATE OF CALIFORNIA OR ITS OFFICERS OR AGENTS SHALL NOT BE RESPONSIBLE FOR THE ACCURACY OR COMPLETENESS OF SCANNED COPIES OF THIS PLAN SHEET.

NOTE:

FOR ACCURATE RIGHT OF WAY DATA, CONTACT
RIGHT OF WAY ENGINEERING AT THE DISTRICT OFFICE.

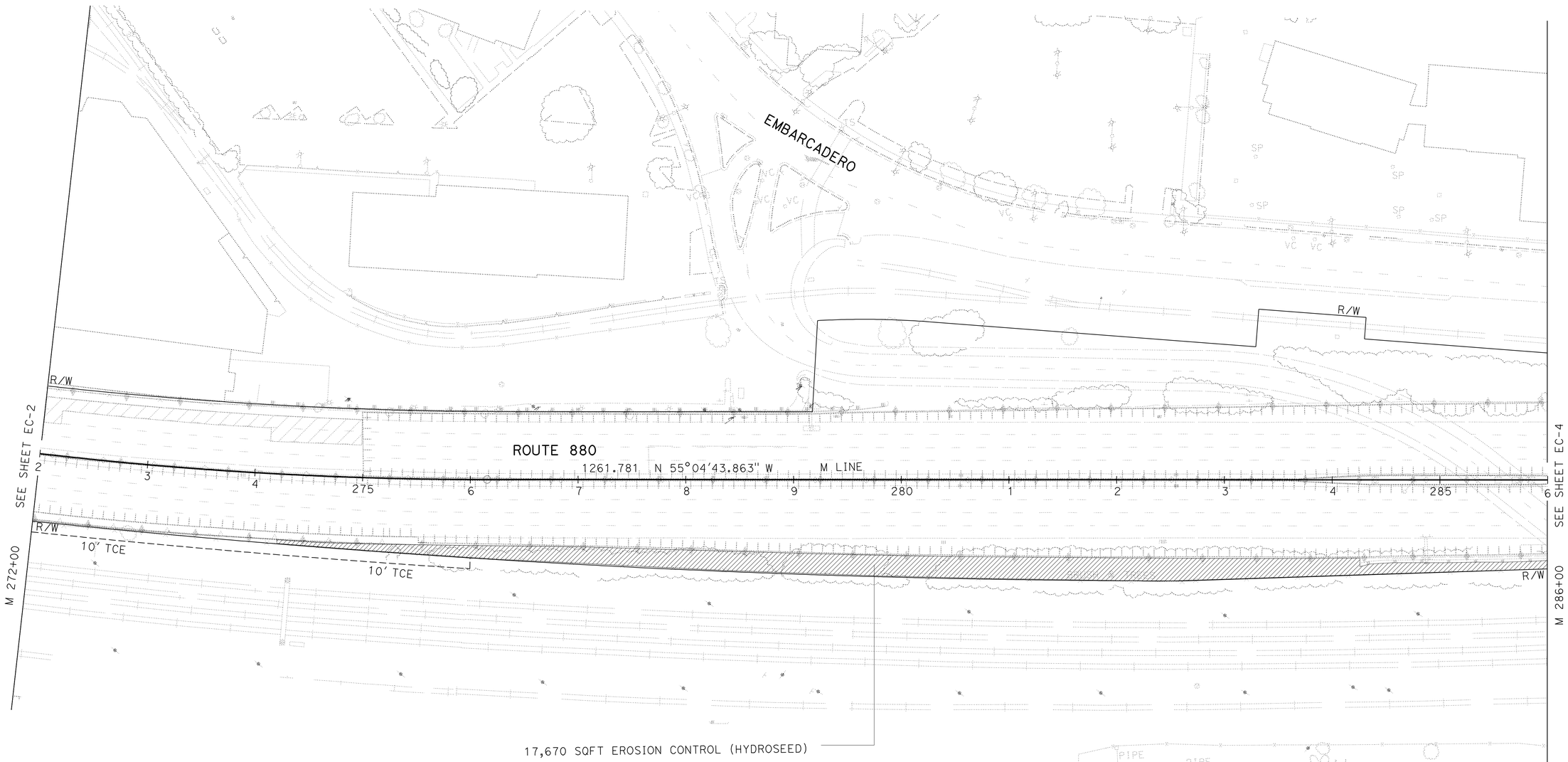

THIS PLAN ACCURATE FOR EROSION CONTROL WORK ONLY

EROSION CONTROL PLAN

SCALE: 1" = 50'

EC-3

STATE OF CALIFORNIA - DEPARTMENT OF TRANSPORTATION
Caltrans
WATER QUALITY

SENIOR LANDSCAPE ARCHITECT: DAVID YAM
CALCULATED-DESIGNED BY: SALLY BANG
CHECKED BY: ANGELA KWAN
REVISED BY
DATE REVISED

LAST REVISION 04-05-11
DATE PLOTTED => 22-JUN-2011
TIME PLOTTED => 13:12

Dist	COUNTY	ROUTE	POST MILES TOTAL PROJECT	SHEET No.	TOTAL SHEETS
04	Ala	880	28.2/29.9	37	183

LICENSED LANDSCAPE ARCHITECT

6-20-11
PLANS APPROVAL DATE

LICENSED LANDSCAPE ARCHITECT
SALLY BANG No. 3060
Signature
11-30-11
Renewal Date
04-05-11
Date
STATE OF CALIFORNIA

THE STATE OF CALIFORNIA OR ITS OFFICERS OR AGENTS SHALL NOT BE RESPONSIBLE FOR THE ACCURACY OR COMPLETENESS OF SCANNED COPIES OF THIS PLAN SHEET.

NOTE:

FOR ACCURATE RIGHT OF WAY DATA, CONTACT
RIGHT OF WAY ENGINEERING AT THE DISTRICT OFFICE.

THIS PLAN ACCURATE FOR EROSION CONTROL WORK ONLY

EROSION CONTROL PLAN

SCALE: 1" = 50'

EC-4

STATE OF CALIFORNIA - DEPARTMENT OF TRANSPORTATION
Caltrans® WATER QUALITY

SENIOR LANDSCAPE ARCHITECT: DAVID YAM

CALCULATED-DESIGNED BY: ANGELA KWAN
CHECKED BY: SALLY BANG

REVISED BY
DATE REVISED

LAST REVISION 04-05-11
DATE PLOTTED => 22-JUN-2011
TIME PLOTTED => 13:12

Dist	COUNTY	ROUTE	POST MILES TOTAL PROJECT	SHEET No.	TOTAL SHEETS
04	Ala	880	28.2/29.9	38	183

LICENSED LANDSCAPE ARCHITECT

6-20-11
PLANS APPROVAL DATE

LICENSED LANDSCAPE ARCHITECT
SALLY BANG No. 3060
Signature
11-30-11
Renewal Date
04-05-11
Date
STATE OF CALIFORNIA

THE STATE OF CALIFORNIA OR ITS OFFICERS OR AGENTS SHALL NOT BE RESPONSIBLE FOR THE ACCURACY OR COMPLETENESS OF SCANNED COPIES OF THIS PLAN SHEET.

EROSION CONTROL QUANTITIES

SHEET No.	EROSION CONTROL (HYDROSEED)
	SQFT
EC-1	8730
EC-2	5290
EC-3	17,670
EC-4	3950
TOTAL	35,640

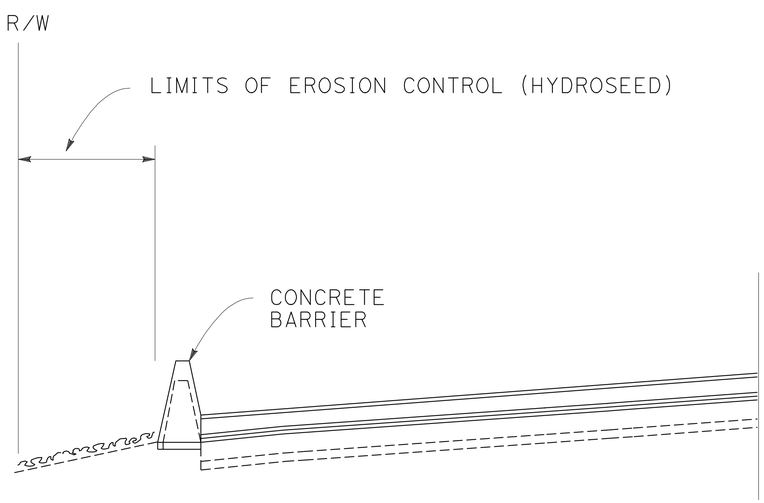

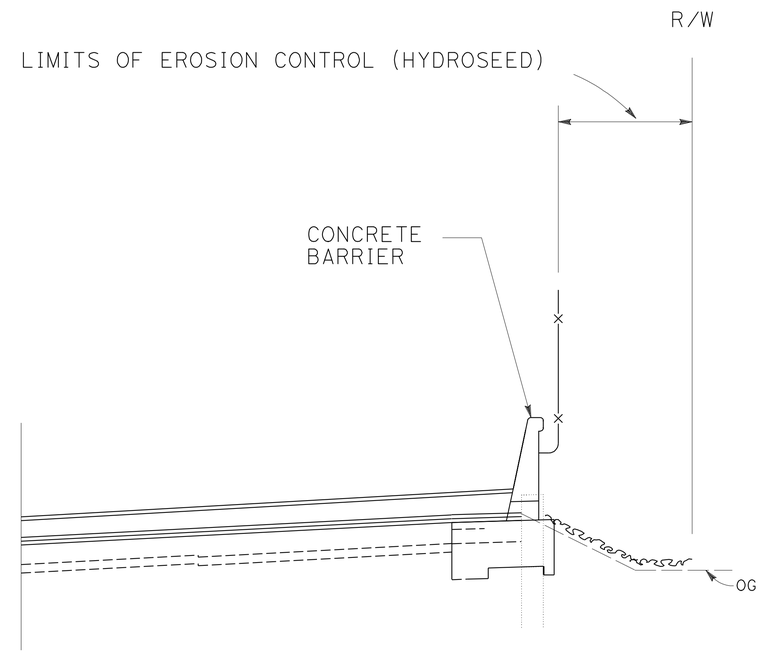

TYPICAL EROSION CONTROL (HYDROSEED)

EROSION CONTROL DETAILS

NO SCALE

ECD-1

STATE OF CALIFORNIA - DEPARTMENT OF TRANSPORTATION
Caltrans® WATER QUALITY

SENIOR LANDSCAPE ARCHITECT: DAVID YAM
CALCULATED-DESIGNED BY: ANGELA KWAN
CHECKED BY: SALLY BANG
REVISED BY
DATE REVISED

LAST REVISION 04-05-11
DATE PLOTTED => 22-JUN-2011
TIME PLOTTED => 13:12

Dist	COUNTY	ROUTE	POST MILES TOTAL PROJECT	SHEET No.	TOTAL SHEETS
04	Ala	880	28.2/29.9	39	183

Craig M Tomimatsu 3-28-11
REGISTERED CIVIL ENGINEER DATE

6-20-11
PLANS APPROVAL DATE

REGISTERED PROFESSIONAL ENGINEER Craig M. Tomimatsu No. 43072 Exp. 3-31-12 CIVIL STATE OF CALIFORNIA

THE STATE OF CALIFORNIA OR ITS OFFICERS OR AGENTS SHALL NOT BE RESPONSIBLE FOR THE ACCURACY OR COMPLETENESS OF SCANNED COPIES OF THIS PLAN SHEET.

NOTE:

FOR ACCURATE RIGHT OF WAY DATA, CONTACT RIGHT OF WAY ENGINEERING AT THE DISTRICT OFFICE.

NOTES:

1. PROJECT VERTICAL DATUM IS NAVD88.
2. UNLESS OTHERWISE NOTED, STATION AND OFFSET TIES TO DRAINAGE STRUCTURES ARE AS SHOWN ON DRAINAGE DETAIL SHEET DD-1.
3. OFFSET TIES TO STORM DRAIN MANHOLES AND JUNCTION BOXES ARE TO THE CENTER OF BASE OF THE STRUCTURE.
4. LOCATIONS OF EXISTING DRAINAGE FACILITES SHOWN ARE APPROXIMATE ONLY. WHERE DRAINAGE ITEM CONNECTS TO AN EXISTING DRAINAGE FACILITY, THE CONTRACTOR SHALL FIELD VERIFY THE LOCATION AND INVERT ELEVATION OF THE EXISTING FACILITY. ANY DISCREPANCIES SHALL BE BROUGHT TO THE ENGINEERS ATTENTION PRIOR TO ORDERING OF FABRICATING ANY PARTS, OR CONSTRUCTING ANY PORTION OF THE DRAINAGE SYSTEM.

LEGEND:

- (No.) DRAINAGE SYSTEM NUMBER
- (a) DRAINAGE UNIT

ABBREVIATIONS:

w/	WITH
Bkfl	BACKFILL
RSC	RAPID STRENGTH CONCRETE

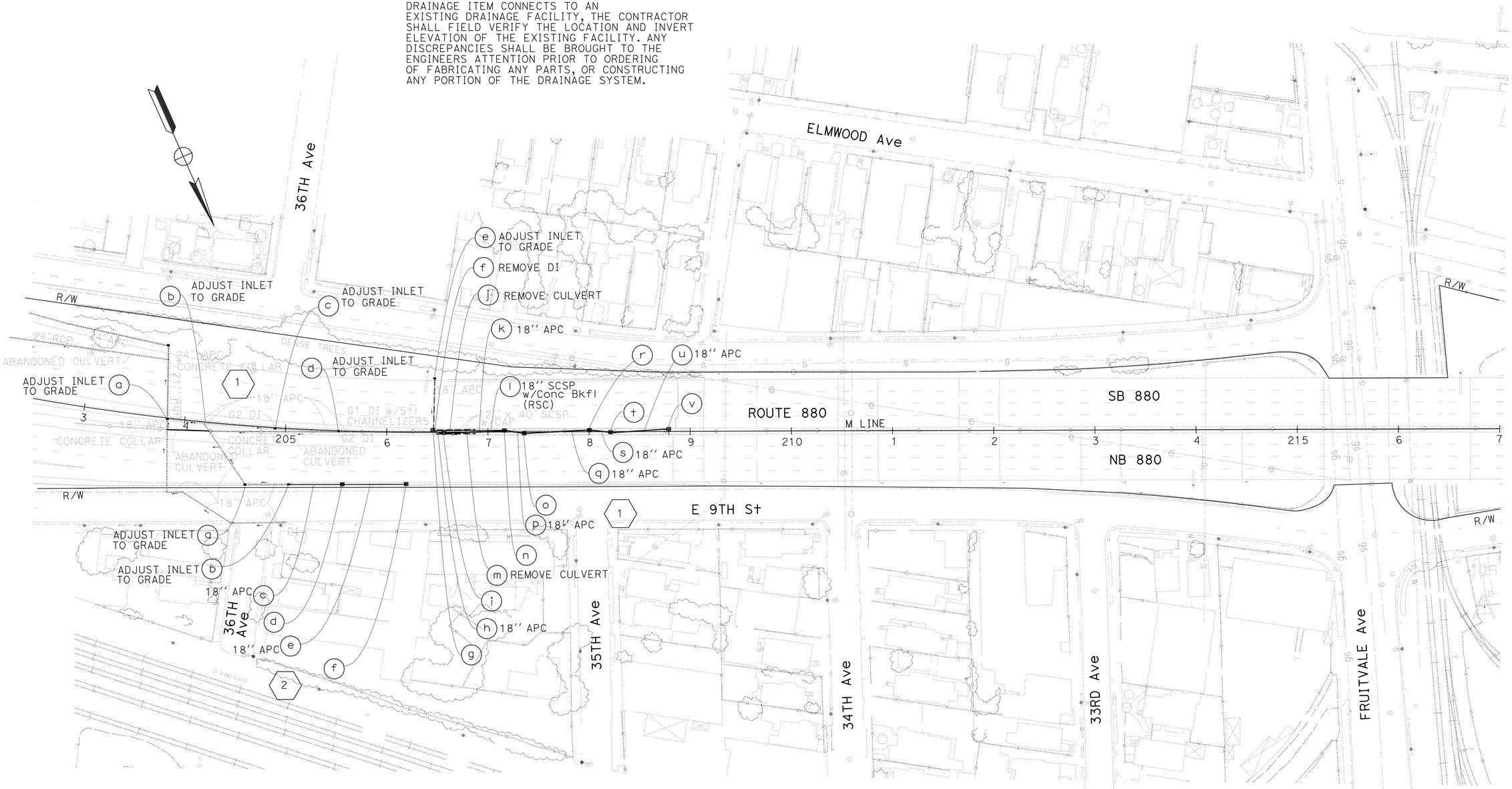

DRAINAGE PLAN

SCALE: 1" = 50'

THIS PLAN FOR DRAINAGE WORK ONLY

D-1

STATE OF CALIFORNIA - DEPARTMENT OF TRANSPORTATION
Caltrans
HYDRAULICS

FUNCTIONAL SUPERVISOR: CRAIG TOMIMATSU
CALCULATED-DESIGNED BY: ROWAIDA HASHIMI
CHECKED BY: CRAIG TOMIMATSU
REVISED BY
DATE REVISED

LAST REVISION 03-21-11
DATE PLOTTED => 22-JUN-2011
TIME PLOTTED => 13:12

Dist	COUNTY	ROUTE	POST MILES TOTAL PROJECT	SHEET No.	TOTAL SHEETS
04	Ala	880	28.2/29.9	40	183

Craig M Tomimatsu 3-28-11
REGISTERED CIVIL ENGINEER DATE

6-20-11
PLANS APPROVAL DATE

REGISTERED PROFESSIONAL ENGINEER
Craig M. Tomimatsu
No. 43072
Exp. 3-31-12
CIVIL
STATE OF CALIFORNIA

THE STATE OF CALIFORNIA OR ITS OFFICERS OR AGENTS SHALL NOT BE RESPONSIBLE FOR THE ACCURACY OR COMPLETENESS OF SCANNED COPIES OF THIS PLAN SHEET.

NOTE:

FOR ACCURATE RIGHT OF WAY DATA, CONTACT RIGHT OF WAY ENGINEERING AT THE DISTRICT OFFICE.

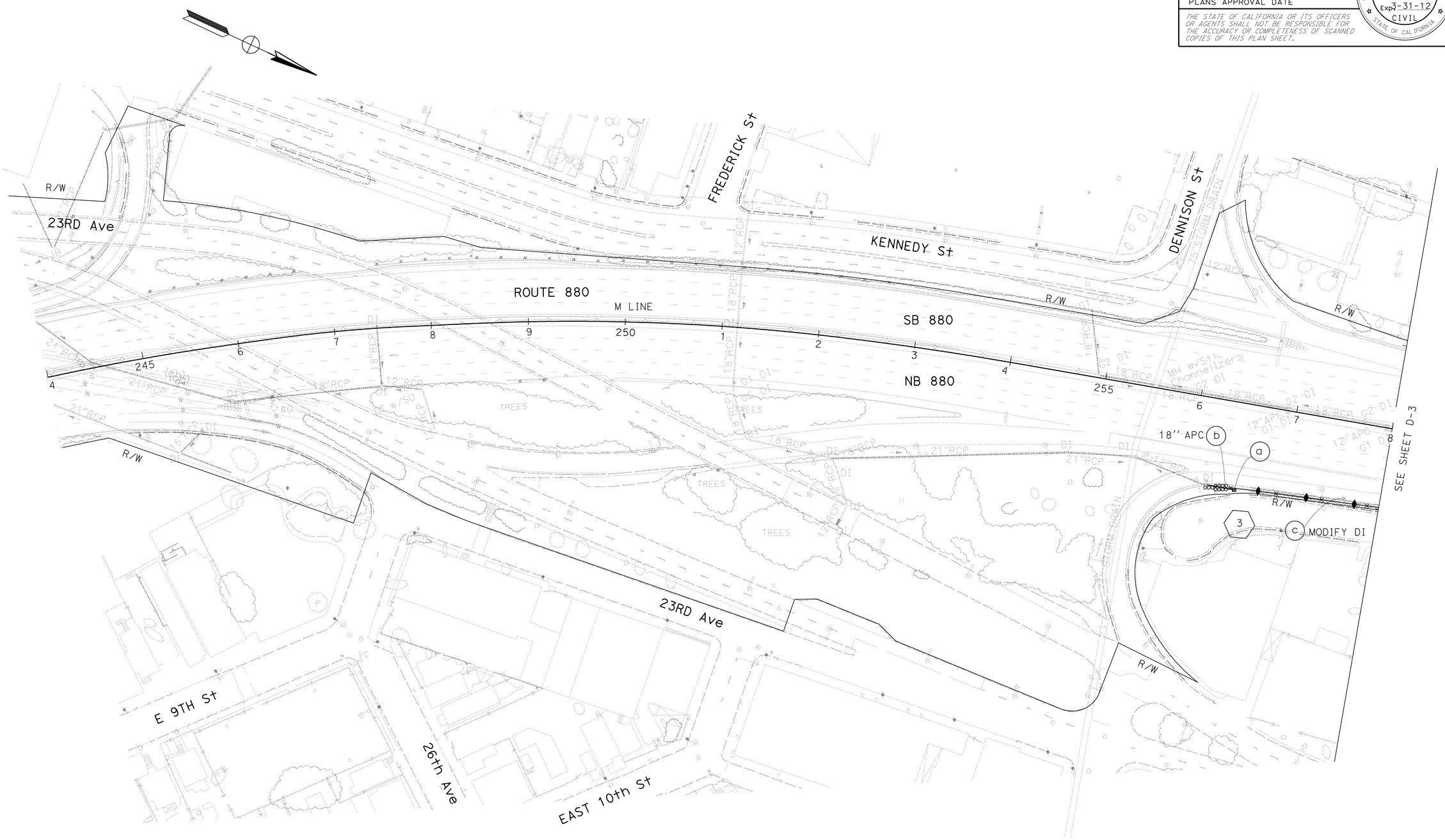

FOR NOTES, ABBREVIATIONS AND LEGEND, SEE SHEET D-1

THIS PLAN FOR DRAINAGE WORK ONLY

DRAINAGE PLAN

SCALE: 1" = 50'

D-2

STATE OF CALIFORNIA - DEPARTMENT OF TRANSPORTATION
Caltrans
HYDRAULICS

FUNCTIONAL SUPERVISOR: CRAIG TOMIMATSU

CALCULATED-DESIGNED BY: ROWAIDA HASHIMI
CHECKED BY: CRAIG TOMIMATSU

REVISED BY
DATE REVISED

LAST REVISION 03-15-11
DATE PLOTTED => 22-JUN-2011
TIME PLOTTED => 13:12

Dist	COUNTY	ROUTE	POST MILES TOTAL PROJECT	SHEET No.	TOTAL SHEETS
04	Ala	880	28.2/29.9	41	183

Craig M Tomimatsu 3-28-11
REGISTERED CIVIL ENGINEER DATE

6-20-11
PLANS APPROVAL DATE

REGISTERED PROFESSIONAL ENGINEER Craig M. Tomimatsu No. 43072 Exp. 3-31-12 CIVIL STATE OF CALIFORNIA

THE STATE OF CALIFORNIA OR ITS OFFICERS OR AGENTS SHALL NOT BE RESPONSIBLE FOR THE ACCURACY OR COMPLETENESS OF SCANNED COPIES OF THIS PLAN SHEET.

NOTE:

FOR ACCURATE RIGHT OF WAY DATA, CONTACT RIGHT OF WAY ENGINEERING AT THE DISTRICT OFFICE.

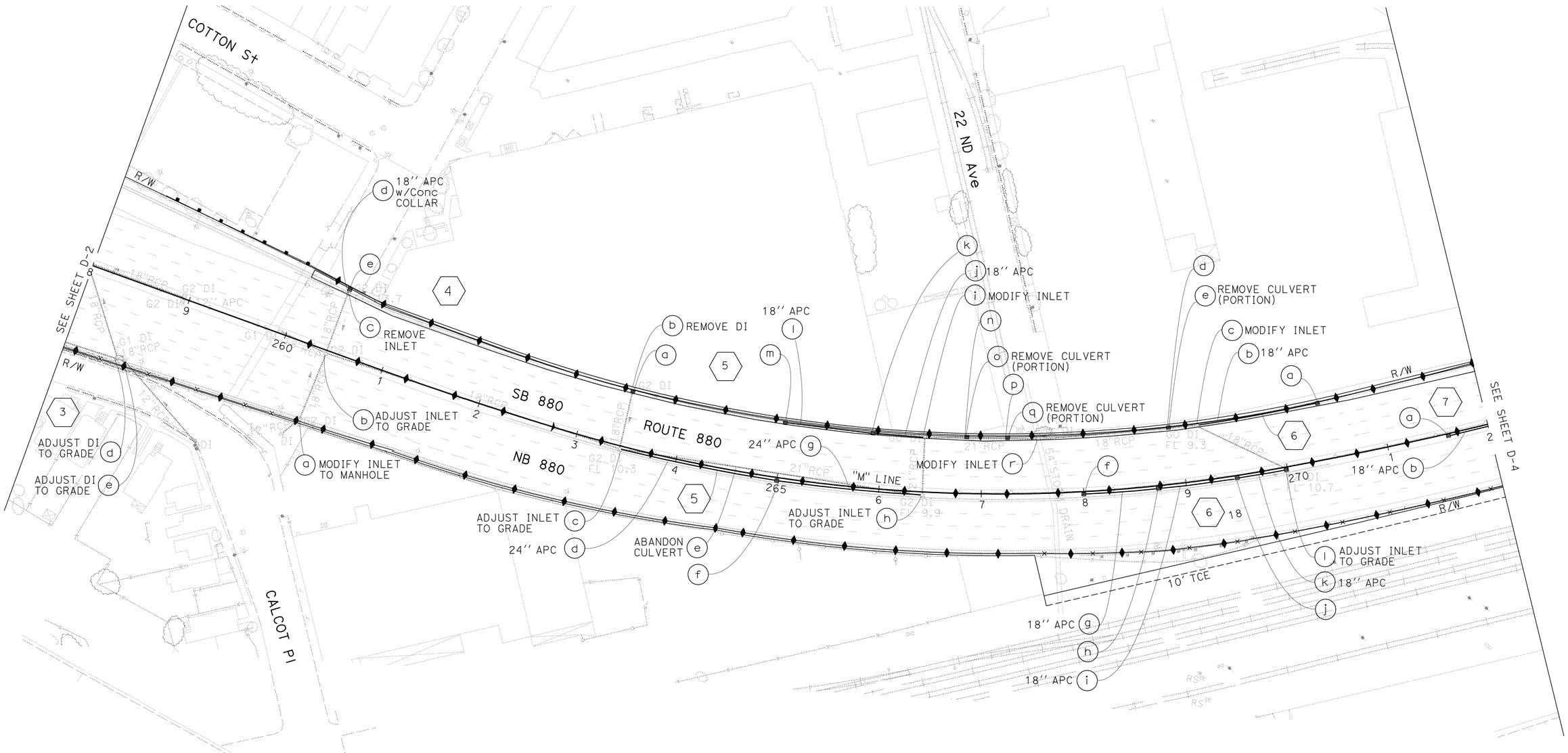

FOR NOTES, ABBREVIATIONS AND LEGEND, SEE SHEET D-1

THIS PLAN FOR DRAINAGE WORK ONLY

DRAINAGE PLAN

SCALE: 1" = 50'

D-3

STATE OF CALIFORNIA - DEPARTMENT OF TRANSPORTATION

Caltrans DESIGN

FUNCTIONAL SUPERVISOR: EDMUND CHOY

CALCULATED-DESIGNED BY: ROWAIDA HASHIMI

CHECKED BY: KENNETH D. NHIEU

REVISED BY / DATE REVISED

LAST REVISION 03-21-11

DATE PLOTTED => 22-JUN-2011
TIME PLOTTED => 13:13

Dist	COUNTY	ROUTE	POST MILES TOTAL PROJECT	SHEET No.	TOTAL SHEETS
04	Ala	880	28.2/29.9	42	183

Craig M Tomimatsu 3-28-11
REGISTERED CIVIL ENGINEER DATE

6-20-11
PLANS APPROVAL DATE

REGISTERED PROFESSIONAL ENGINEER
Craig M. Tomimatsu
No. 43072
Exp. 3-31-12
CIVIL
STATE OF CALIFORNIA

THE STATE OF CALIFORNIA OR ITS OFFICERS OR AGENTS SHALL NOT BE RESPONSIBLE FOR THE ACCURACY OR COMPLETENESS OF SCANNED COPIES OF THIS PLAN SHEET.

NOTE:

FOR ACCURATE RIGHT OF WAY DATA, CONTACT
RIGHT OF WAY ENGINEERING AT THE DISTRICT OFFICE.

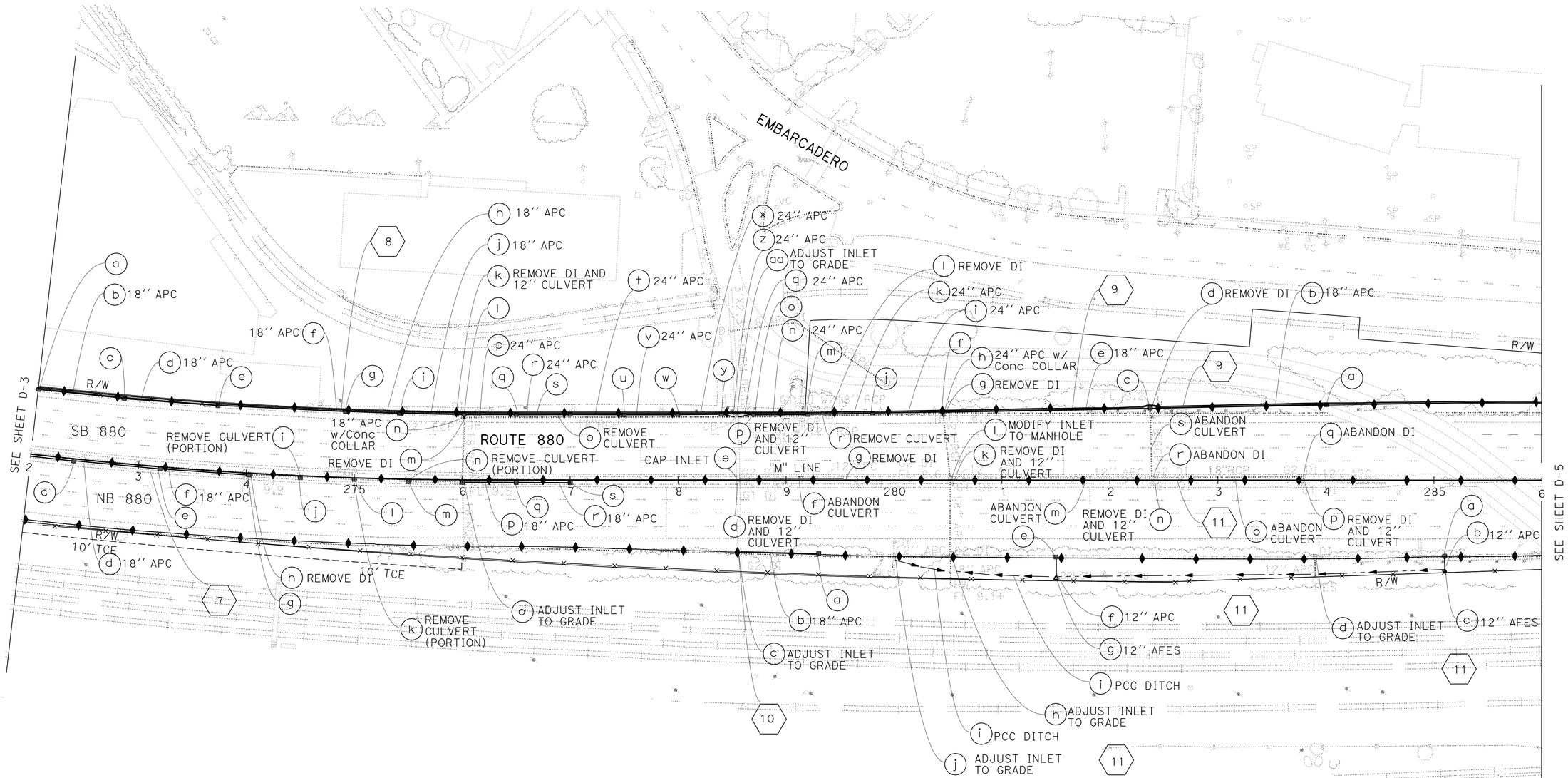

FOR NOTES, ABBREVIATIONS AND LEGEND, SEE SHEET D-1

THIS PLAN FOR DRAINAGE WORK ONLY

DRAINAGE PLAN

SCALE: 1" = 50'

D-4

STATE OF CALIFORNIA - DEPARTMENT OF TRANSPORTATION
Caltrans
DESIGN

FUNCTIONAL SUPERVISOR: CRAIG TOMIMATSU
CALCULATED-DESIGNED BY: ROWAIDA HASHIMI
CHECKED BY: KENNETH D. NHIEU
REVISED BY
DATE REVISED

LAST REVISION 03-21-11
DATE PLOTTED => 22-JUN-2011
TIME PLOTTED => 13:13

Dist	COUNTY	ROUTE	POST MILES TOTAL PROJECT	SHEET No.	TOTAL SHEETS
04	Ala	880	28.2/29.9	43	183

Craig M Tomimatsu 3-28-11
REGISTERED CIVIL ENGINEER DATE

6-20-11
PLANS APPROVAL DATE

REGISTERED PROFESSIONAL ENGINEER Craig M. Tomimatsu No. 43072 Exp. 3-31-10 CIVIL STATE OF CALIFORNIA

THE STATE OF CALIFORNIA OR ITS OFFICERS OR AGENTS SHALL NOT BE RESPONSIBLE FOR THE ACCURACY OR COMPLETENESS OF SCANNED COPIES OF THIS PLAN SHEET.

NOTE:

FOR ACCURATE RIGHT OF WAY DATA, CONTACT RIGHT OF WAY ENGINEERING AT THE DISTRICT OFFICE.

FOR NOTES, ABBREVIATIONS AND LEGEND, SEE SHEET D-1

THIS PLAN FOR DRAINAGE WORK ONLY

DRAINAGE PLAN

SCALE: 1" = 50'

D-5

STATE OF CALIFORNIA - DEPARTMENT OF TRANSPORTATION
Caltrans DESIGN

FUNCTIONAL SUPERVISOR: CRAIG TOMIMATSU
CALCULATED-DESIGNED BY: ROWAIDA HASHIMI
CHECKED BY: CRAIG TOMIMATSU
REVISED BY
DATE REVISED

LAST REVISION 04-05-11
DATE PLOTTED => 22-JUN-2011
TIME PLOTTED => 13:13

Dist	COUNTY	ROUTE	POST MILES TOTAL PROJECT	SHEET No.	TOTAL SHEETS
04	Ala	880	28.2/29.9	44	183

Craig M Tomimatsu 3-28-11
REGISTERED CIVIL ENGINEER DATE

6-20-11
PLANS APPROVAL DATE

REGISTERED PROFESSIONAL ENGINEER Craig M. Tomimatsu No. 43072 Exp. 3-31-12 CIVIL STATE OF CALIFORNIA

THE STATE OF CALIFORNIA OR ITS OFFICERS OR AGENTS SHALL NOT BE RESPONSIBLE FOR THE ACCURACY OR COMPLETENESS OF SCANNED COPIES OF THIS PLAN SHEET.

NOTE:

FOR ACCURATE RIGHT OF WAY DATA, CONTACT RIGHT OF WAY ENGINEERING AT THE DISTRICT OFFICE.

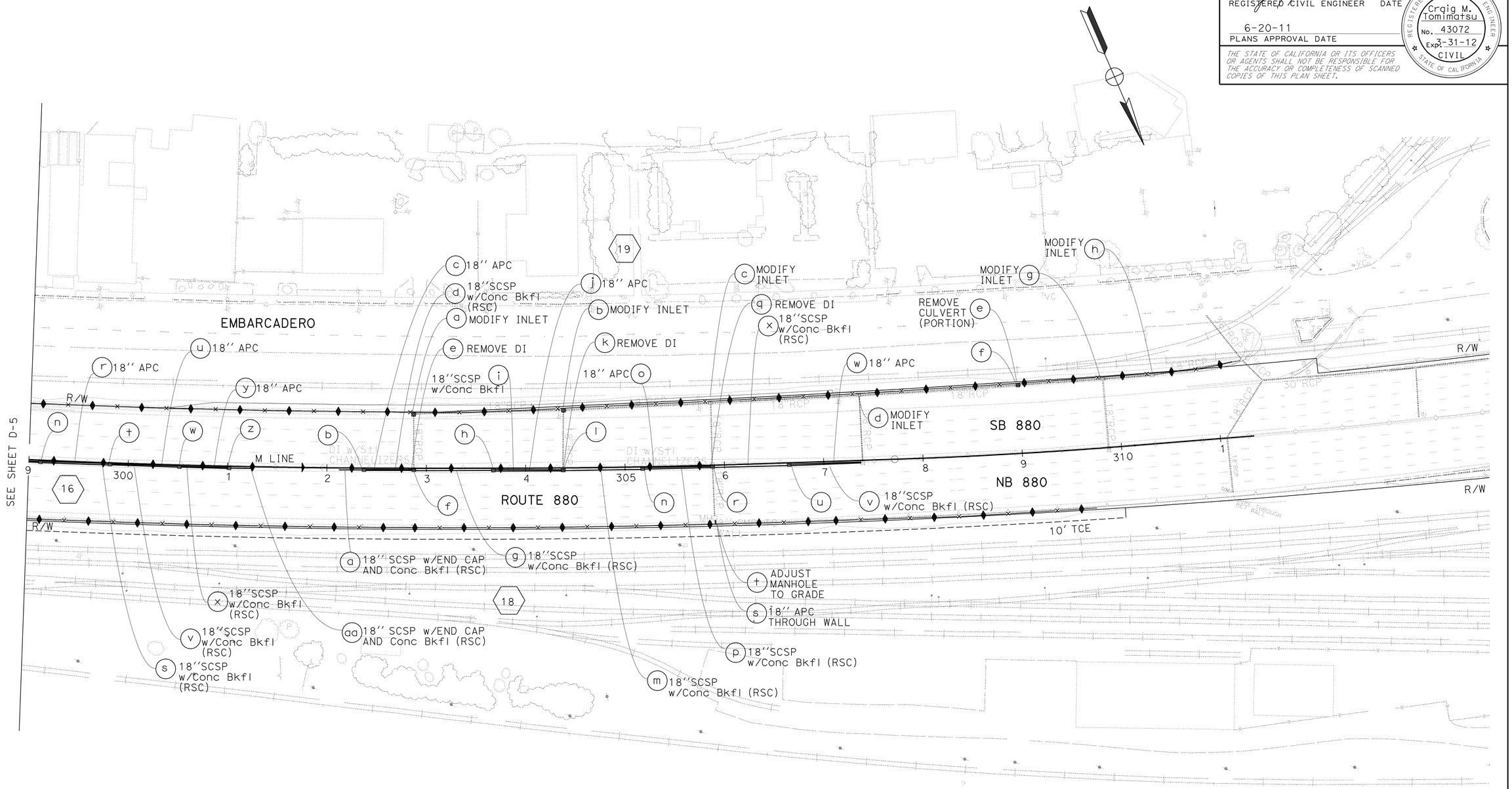

FOR NOTES, ABBREVIATIONS AND LEGEND, SEE SHEET D-1

THIS PLAN FOR DRAINAGE WORK ONLY

DRAINAGE PLAN

SCALE: 1" = 50'

D-6

STATE OF CALIFORNIA - DEPARTMENT OF TRANSPORTATION
Caltrans
DESIGN

FUNCTIONAL SUPERVISOR: CRAIG TOMIMATSU
CALCULATED-DESIGNED BY: ROWAIDA HASHIMI
CHECKED BY: CRAIG TOMIMATSU
REVISED BY
DATE REVISED

LAST REVISION 04-05-11
DATE PLOTTED => 22-JUN-2011
TIME PLOTTED => 13:14

Dist	COUNTY	ROUTE	POST MILES TOTAL PROJECT	SHEET No.	TOTAL SHEETS
04	Ala	880	28.2/29.9	45	183

REGISTERED CIVIL ENGINEER 3-23-11 DATE

6-20-11
PLANS APPROVAL DATE

REGISTERED PROFESSIONAL ENGINEER K.D. Nhieu No. 55948 Exp. 12-31-12 CIVIL STATE OF CALIFORNIA

THE STATE OF CALIFORNIA OR ITS OFFICERS OR AGENTS SHALL NOT BE RESPONSIBLE FOR THE ACCURACY OR COMPLETENESS OF SCANNED COPIES OF THIS PLAN SHEET.

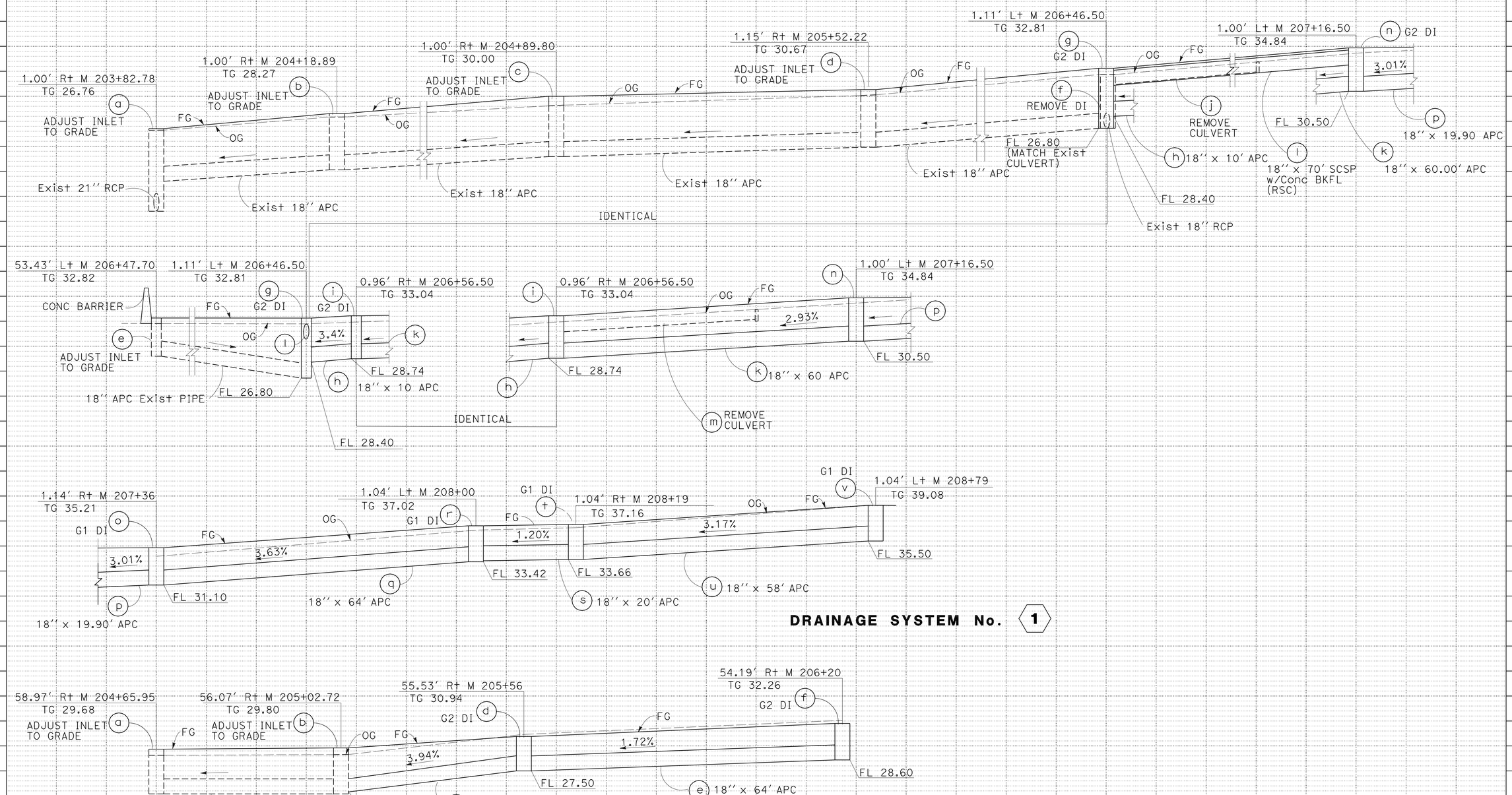

DRAINAGE PROFILES

SCALE: Horiz 1" = 10'
Vert 1" = 5'

DP-1

REVISED BY: RH — DATE REVISED: 3/24/11

CALCULATED-DESIGNED BY: ROWAIDA HASHIMI — CHECKED BY: KENNETH D. NHIEU

FUNCTIONAL SUPERVISOR: EDMUND W. CHOY

STATE OF CALIFORNIA - DEPARTMENT OF TRANSPORTATION — Caltrans — HYDRAULICS

LAST REVISION — DATE PLOTTED => 22-JUN-2011 — TIME PLOTTED => 13:11 — 04-05-11

Dist	COUNTY	ROUTE	POST MILES TOTAL PROJECT	SHEET No.	TOTAL SHEETS
04	Ala	880	28.2/29.9	46	183

REGISTERED CIVIL ENGINEER 3-23-11 DATE

6-20-11
PLANS APPROVAL DATE

REGISTERED PROFESSIONAL ENGINEER K.D. Nhieu No. 55948 Exp. 12-31-12 CIVIL STATE OF CALIFORNIA

THE STATE OF CALIFORNIA OR ITS OFFICERS OR AGENTS SHALL NOT BE RESPONSIBLE FOR THE ACCURACY OR COMPLETENESS OF SCANNED COPIES OF THIS PLAN SHEET.

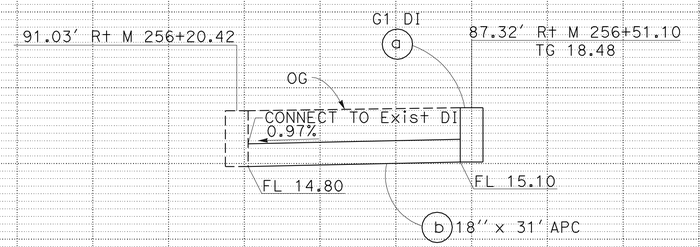

DRAINAGE SYSTEM No. 3

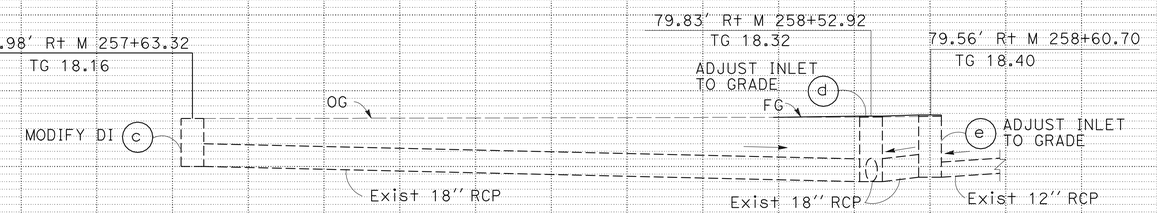

DRAINAGE SYSTEM No. 3

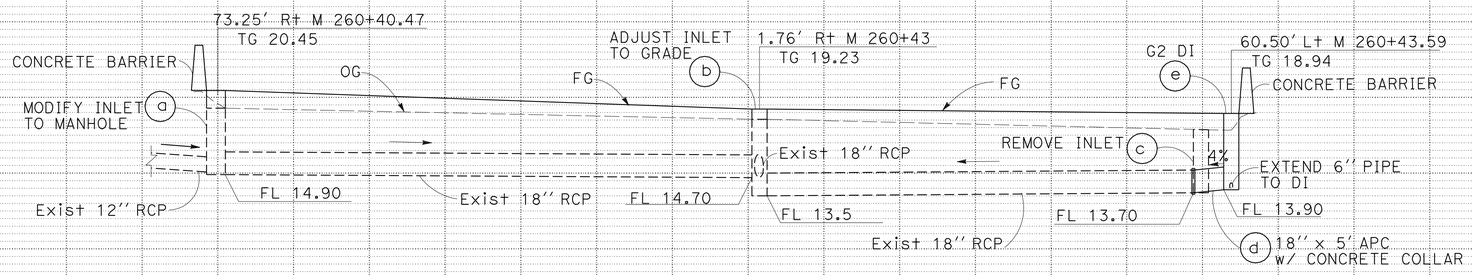

DRAINAGE SYSTEM No. 4

DRAINAGE PROFILES

SCALE: Horiz 1" = 10'
Vert 1" = 5'

DP-2

STATE OF CALIFORNIA - DEPARTMENT OF TRANSPORTATION
Caltrans
HYDRAULICS

FUNCTIONAL SUPERVISOR: EDMUND W. CHOY

CALCULATED-DESIGNED BY: ROWAIDA HASHIMI
CHECKED BY: NAM NGO

REVISED BY: RH
DATE REVISED: 3/24/11

LAST REVISION
DATE PLOTTED => 22-JUN-2011
TIME PLOTTED => 13:11
04-05-11

Dist	COUNTY	ROUTE	POST MILES TOTAL PROJECT	SHEET No.	TOTAL SHEETS
04	Ala	880	28.2/29.9	47	183

REGISTERED CIVIL ENGINEER 3-23-11 DATE

6-20-11
PLANS APPROVAL DATE

REGISTERED PROFESSIONAL ENGINEER K.D. Nhieu No. 55948 Exp. 12-31-12 CIVIL STATE OF CALIFORNIA

THE STATE OF CALIFORNIA OR ITS OFFICERS OR AGENTS SHALL NOT BE RESPONSIBLE FOR THE ACCURACY OR COMPLETENESS OF SCANNED COPIES OF THIS PLAN SHEET.

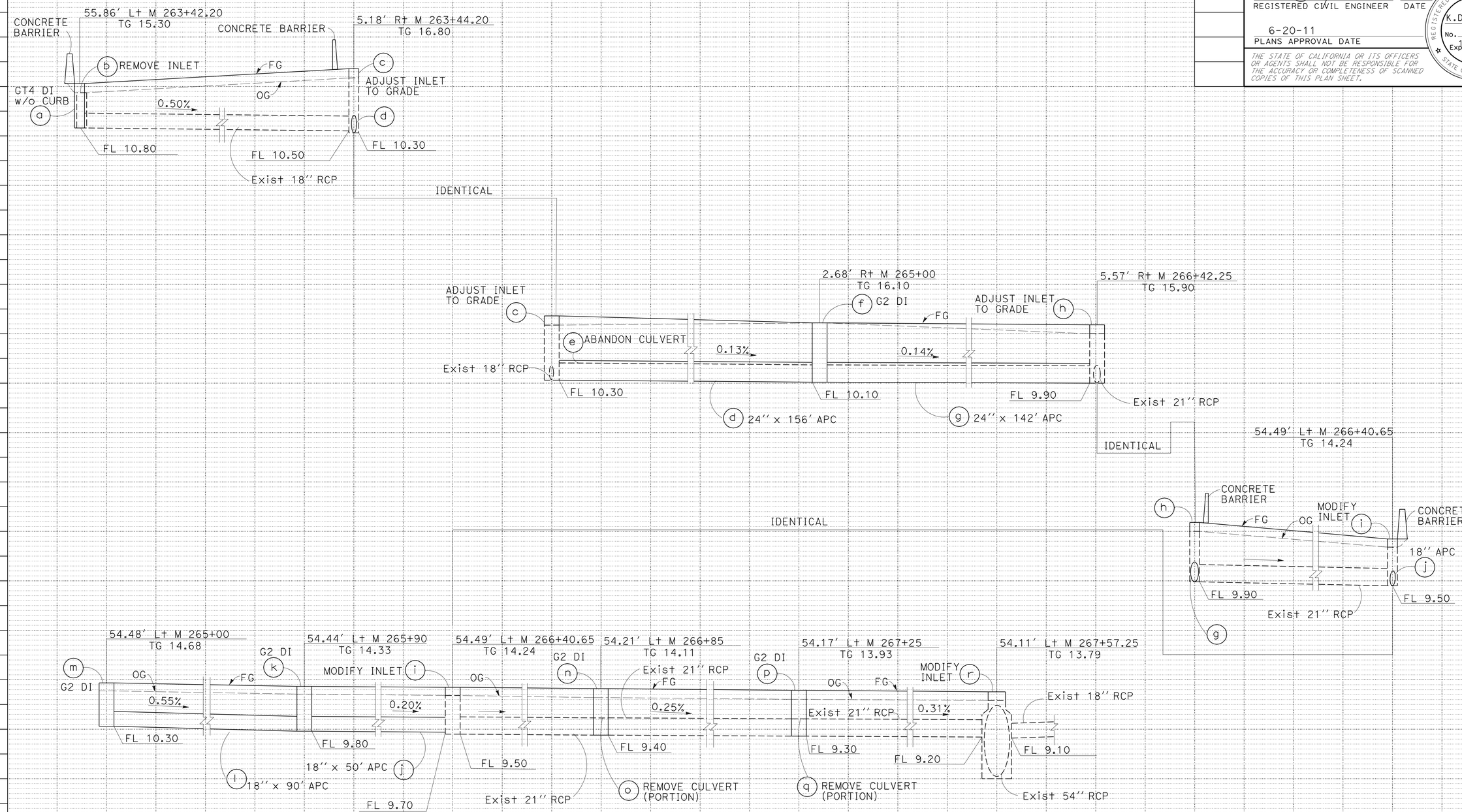

DRAINAGE SYSTEM No. 5

DRAINAGE PROFILES

SCALE: Horiz 1" = 10'
Vert 1" = 5'

DP-3

REVISED BY	DATE REVISED
RH	3/24/11

CALCULATED-DESIGNED BY: ROWAIDA HASHIMI
CHECKED BY: NAM NGO
FUNCTIONAL SUPERVISOR: EDMUND W. CHOY

STATE OF CALIFORNIA - DEPARTMENT OF TRANSPORTATION
Caltrans
HYDRAULICS

LAST REVISION 03-21-11 | DATE PLOTTED => 22-JUN-2011 | TIME PLOTTED => 13:11

Dist	COUNTY	ROUTE	POST MILES TOTAL PROJECT	SHEET No.	TOTAL SHEETS
04	Ala	880	28.2/29.9	48	183

REGISTERED CIVIL ENGINEER 3-23-11 DATE

6-20-11
PLANS APPROVAL DATE

REGISTERED PROFESSIONAL ENGINEER K.D. Nhieu No. 55948 Exp. 12-31-12 CIVIL STATE OF CALIFORNIA

THE STATE OF CALIFORNIA OR ITS OFFICERS OR AGENTS SHALL NOT BE RESPONSIBLE FOR THE ACCURACY OR COMPLETENESS OF SCANNED COPIES OF THIS PLAN SHEET.

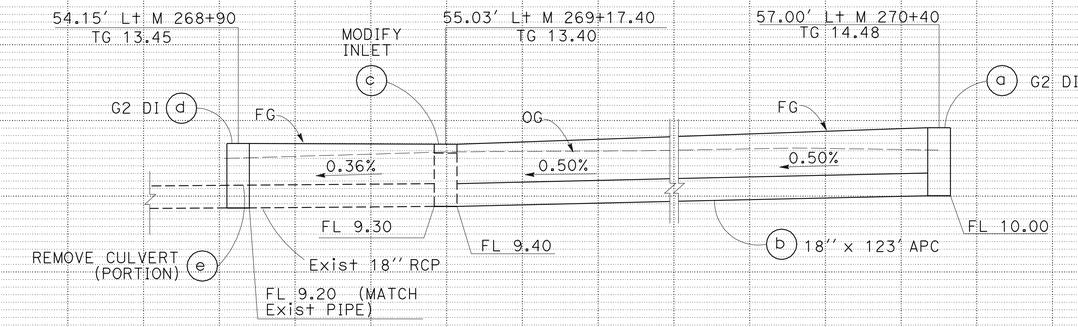

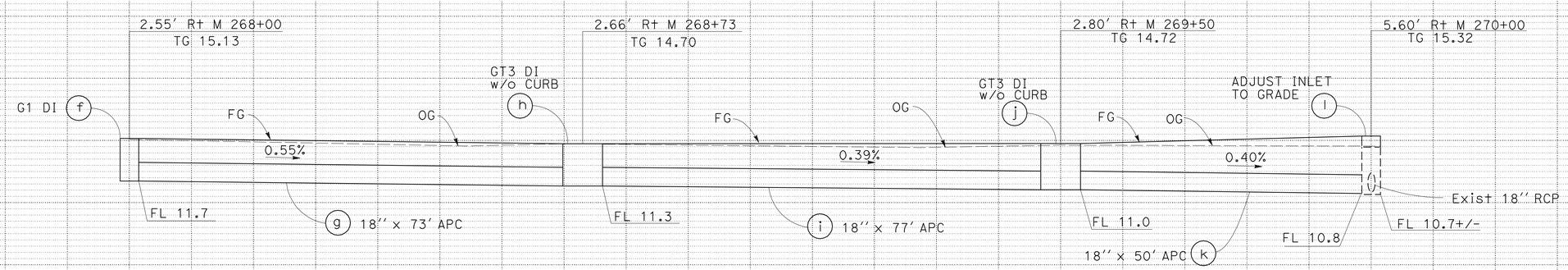

DRAINAGE SYSTEM No. 6

DRAINAGE PROFILES

SCALE: Horiz 1" = 10'
Vert 1" = 5'

DP-4

REVISED BY	RH
DATE REVISED	3/24/11
ROWAIDA HASHIMI	
NAM NGO	
CALCULATED-DESIGNED BY	
CHECKED BY	
FUNCTIONAL SUPERVISOR	EDMUND W. CHOY

STATE OF CALIFORNIA - DEPARTMENT OF TRANSPORTATION
Caltrans
HYDRAULICS

LAST REVISION 03-23-11
DATE PLOTTED => 22-JUN-2011
TIME PLOTTED => 13:11

Dist	COUNTY	ROUTE	POST MILES TOTAL PROJECT	SHEET No.	TOTAL SHEETS
04	Ala	880	28.2/29.9	49	183

REGISTERED CIVIL ENGINEER 3-23-11 DATE

6-20-11
PLANS APPROVAL DATE

REGISTERED PROFESSIONAL ENGINEER K.D. Nhieu No. 55948 Exp. 12-31-12 CIVIL STATE OF CALIFORNIA

THE STATE OF CALIFORNIA OR ITS OFFICERS OR AGENTS SHALL NOT BE RESPONSIBLE FOR THE ACCURACY OR COMPLETENESS OF SCANNED COPIES OF THIS PLAN SHEET.

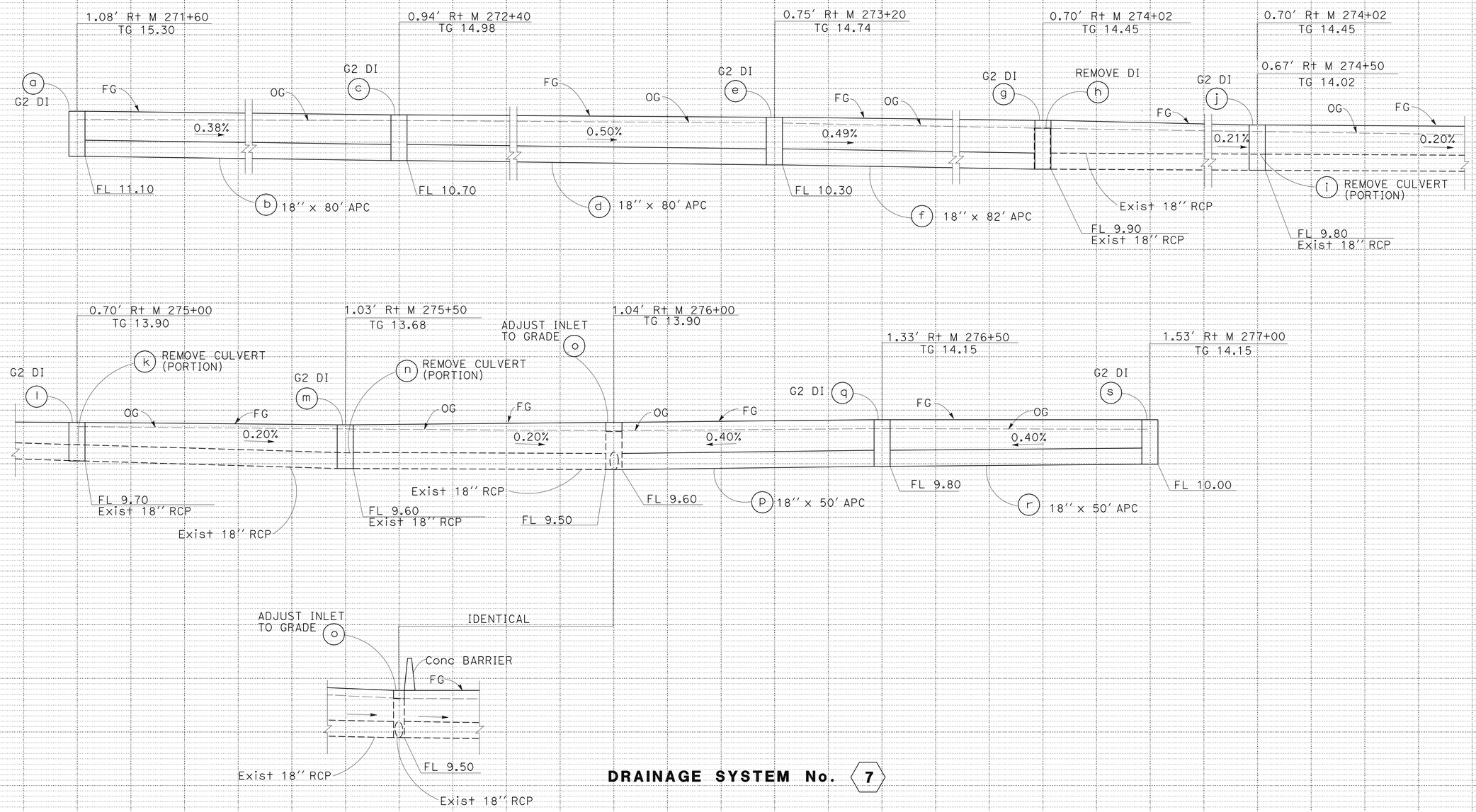

DRAINAGE SYSTEM No. 7

DRAINAGE PROFILES

SCALE: Horiz 1" = 10'
Vert 1" = 5'

DP-5

STATE OF CALIFORNIA - DEPARTMENT OF TRANSPORTATION
Caltrans
HYDRAULICS

FUNCTIONAL SUPERVISOR: EDMUND W. CHOY

CALCULATED-DESIGNED BY: ROWAIDA HASHIMI
CHECKED BY: NAM NGO

REVISED BY: RH
DATE REVISED: 3/24/11

LAST REVISION 03-21-11
DATE PLOTTED => 22-JUN-2011
TIME PLOTTED => 13:11

Dist	COUNTY	ROUTE	POST MILES TOTAL PROJECT	SHEET No.	TOTAL SHEETS
04	Ala	880	28.2/29.9	50	183

REGISTERED CIVIL ENGINEER 3-23-11 DATE

6-20-11
PLANS APPROVAL DATE

REGISTERED PROFESSIONAL ENGINEER K.D. Nhieu No. 55948 Exp. 12-31-12 CIVIL STATE OF CALIFORNIA

THE STATE OF CALIFORNIA OR ITS OFFICERS OR AGENTS SHALL NOT BE RESPONSIBLE FOR THE ACCURACY OR COMPLETENESS OF SCANNED COPIES OF THIS PLAN SHEET.

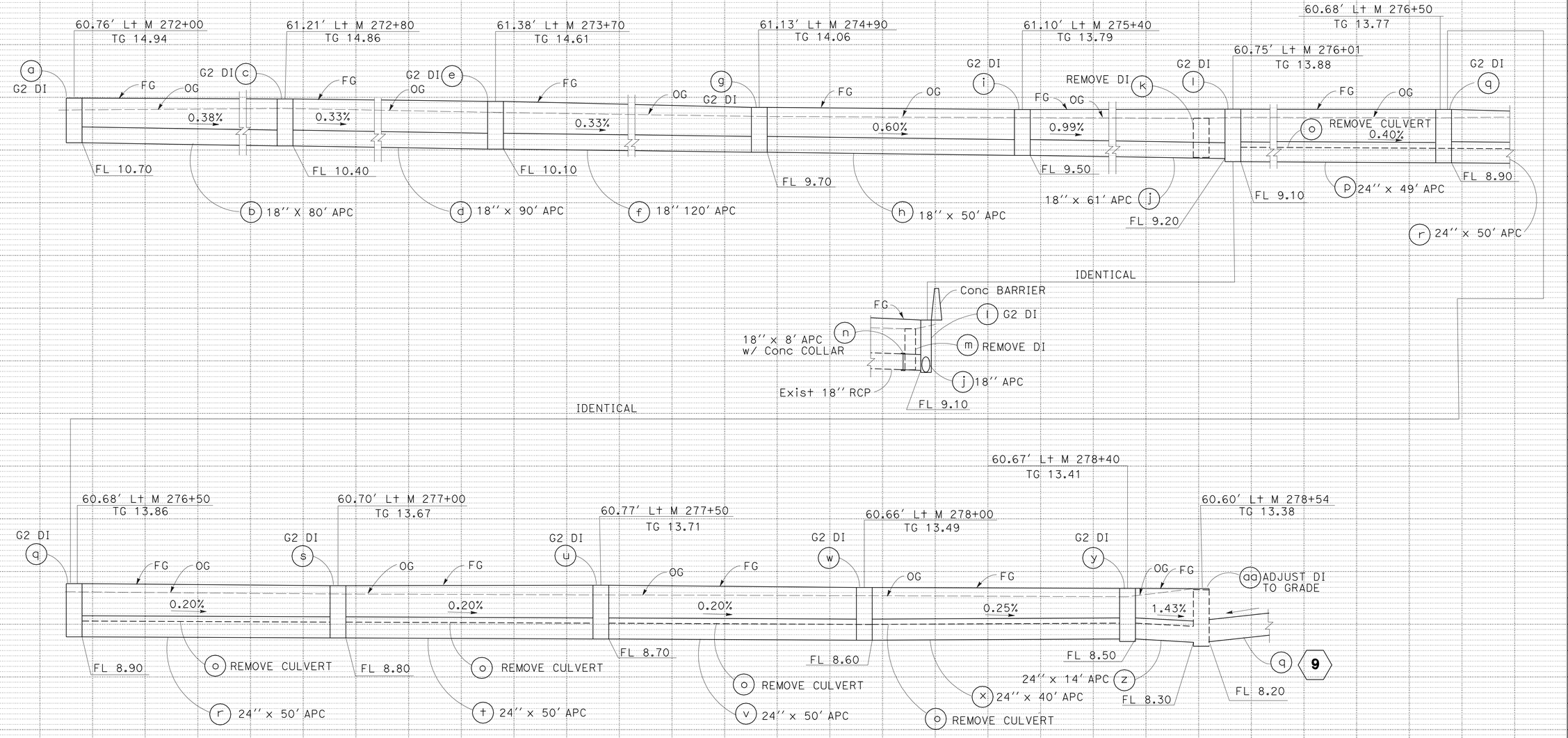

DRAINAGE SYSTEM No. 8

DRAINAGE PROFILES

SCALE: Horiz 1" = 10'
Vert 1" = 5'

DP-6

REVISED BY	DATE REVISED
RH	3/24/11

ROWAIDA HASHIMI — NAM NGO — CALCULATED-DESIGNED BY — CHECKED BY

FUNCTIONAL SUPERVISOR: EDMUND W. CHOY

STATE OF CALIFORNIA - DEPARTMENT OF TRANSPORTATION — HYDRAULICS — Caltrans

LAST REVISION 04-05-11 — DATE PLOTTED => 22-JUN-2011 — TIME PLOTTED => 13:11

Dist	COUNTY	ROUTE	POST MILES TOTAL PROJECT	SHEET No.	TOTAL SHEETS
04	Ala	880	28.2/29.9	51	183

REGISTERED CIVIL ENGINEER 3-23-11 DATE

6-20-11
PLANS APPROVAL DATE

REGISTERED PROFESSIONAL ENGINEER K.D. Nhieu No. 55948 Exp. 12-31-12 CIVIL STATE OF CALIFORNIA

THE STATE OF CALIFORNIA OR ITS OFFICERS OR AGENTS SHALL NOT BE RESPONSIBLE FOR THE ACCURACY OR COMPLETENESS OF SCANNED COPIES OF THIS PLAN SHEET.

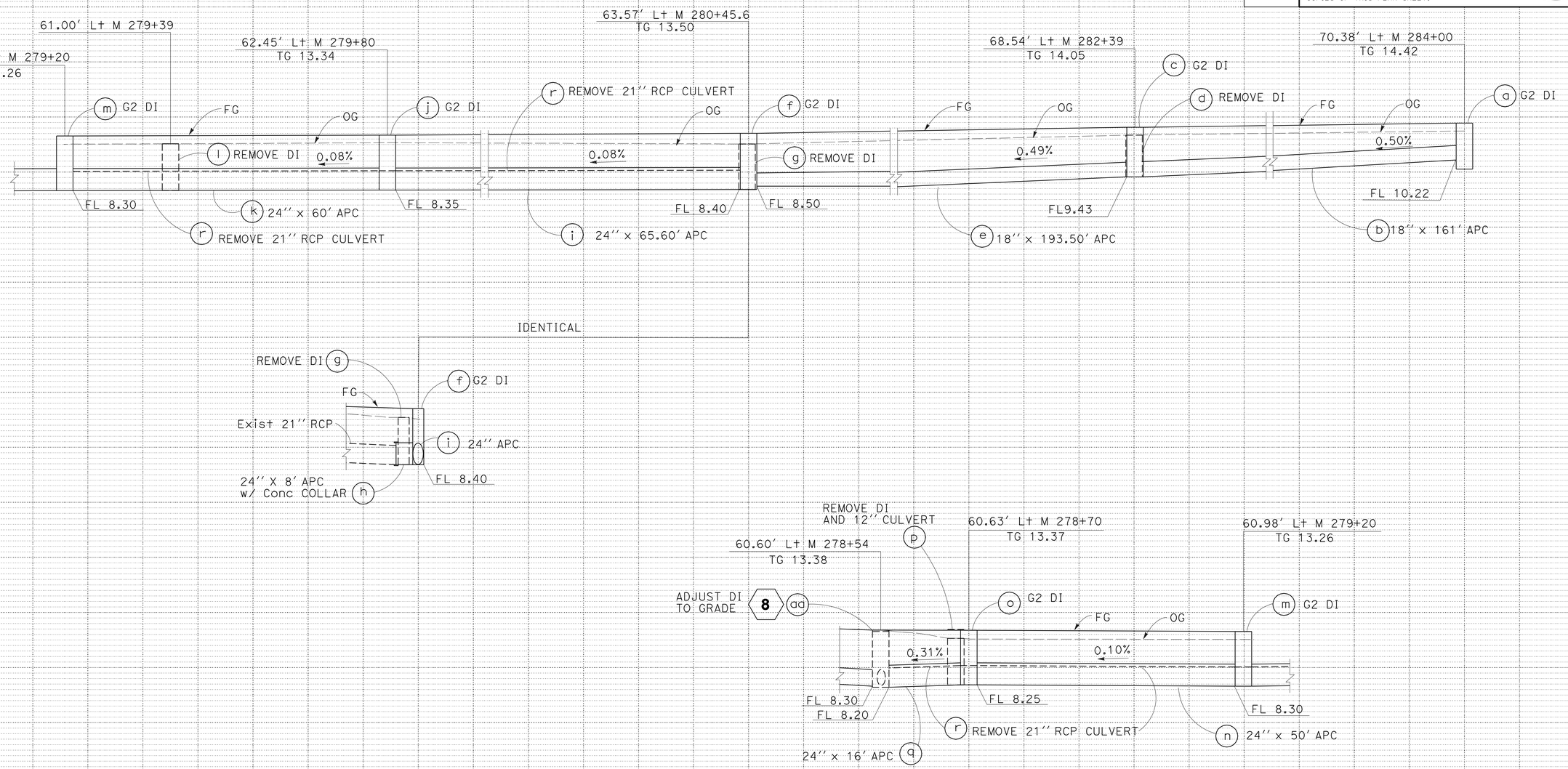

DRAINAGE SYSTEM No. 9

DRAINAGE PROFILES

SCALE: Horiz 1" = 10'
Vert 1" = 5'

DP-7

REVISED BY	DATE REVISED
RH	3/24/11

CALCULATED-DESIGNED BY	CHECKED BY
ROWAIDA HASHIMI	NAM NGO

FUNCTIONAL SUPERVISOR: EDMUND W. CHOY

STATE OF CALIFORNIA - DEPARTMENT OF TRANSPORTATION
Caltrans
HYDRAULICS

LAST REVISION 03-23-11 | DATE PLOTTED => 22-JUN-2011 | TIME PLOTTED => 13:11

Dist	COUNTY	ROUTE	POST MILES TOTAL PROJECT	SHEET No.	TOTAL SHEETS
04	Ala	880	28.2/29.9	52	183

REGISTERED CIVIL ENGINEER 3-23-11 DATE

6-20-11
PLANS APPROVAL DATE

REGISTERED PROFESSIONAL ENGINEER K.D. Nhieu No. 55948 Exp. 12-31-12 CIVIL STATE OF CALIFORNIA

THE STATE OF CALIFORNIA OR ITS OFFICERS OR AGENTS SHALL NOT BE RESPONSIBLE FOR THE ACCURACY OR COMPLETENESS OF SCANNED COPIES OF THIS PLAN SHEET.

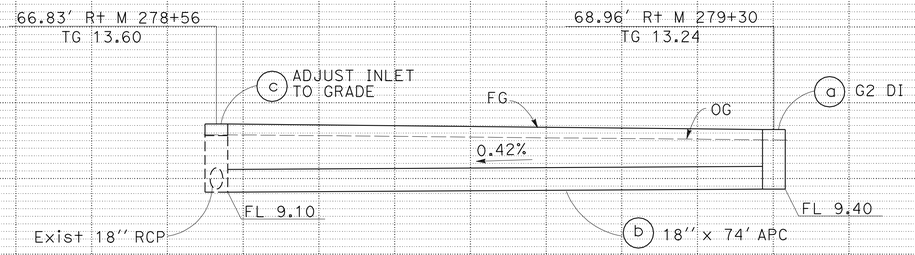

DRAINAGE SYSTEM No. 10

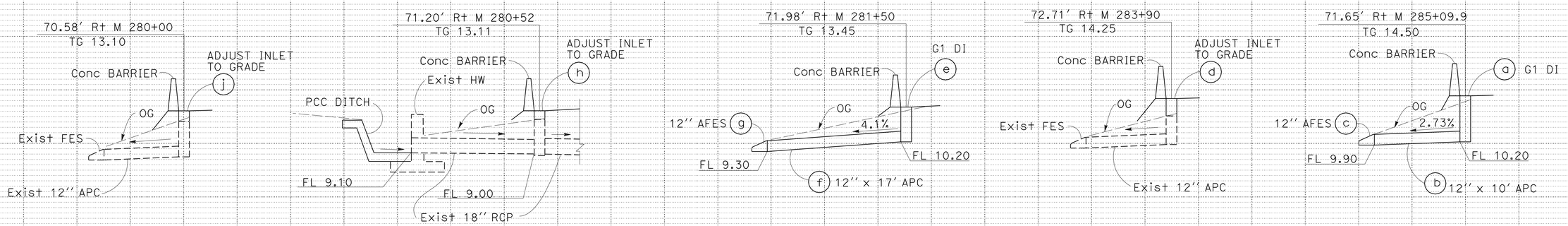

DRAINAGE SYSTEM No. 11

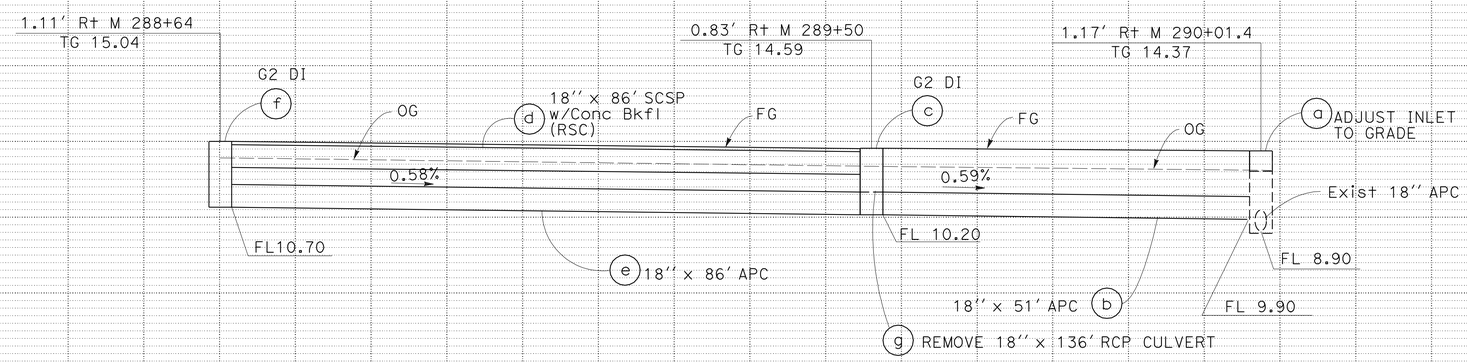

DRAINAGE SYSTEM No. 12

DRAINAGE PROFILES

SCALE: Horiz 1" = 10'
Vert 1" = 5'

DP-8

REVISED BY	DATE REVISED
RH	3/24/11

CALCULATED-DESIGNED BY: ROWAIDA HASHIMI
CHECKED BY: NAM NGO
FUNCTIONAL SUPERVISOR: EDMUND W. CHOY

STATE OF CALIFORNIA - DEPARTMENT OF TRANSPORTATION
Caltrans
HYDRAULICS

LAST REVISION 04-05-11
DATE PLOTTED => 22-JUN-2011
TIME PLOTTED => 13:12

Dist	COUNTY	ROUTE	POST MILES TOTAL PROJECT	SHEET No.	TOTAL SHEETS
04	Ala	880	28.2/29.9	53	183

REGISTERED CIVIL ENGINEER 3-23-11 DATE

6-20-11
PLANS APPROVAL DATE

REGISTERED PROFESSIONAL ENGINEER K.D. Nhieu No. 55948 Exp. 12-31-12 CIVIL STATE OF CALIFORNIA

THE STATE OF CALIFORNIA OR ITS OFFICERS OR AGENTS SHALL NOT BE RESPONSIBLE FOR THE ACCURACY OR COMPLETENESS OF SCANNED COPIES OF THIS PLAN SHEET.

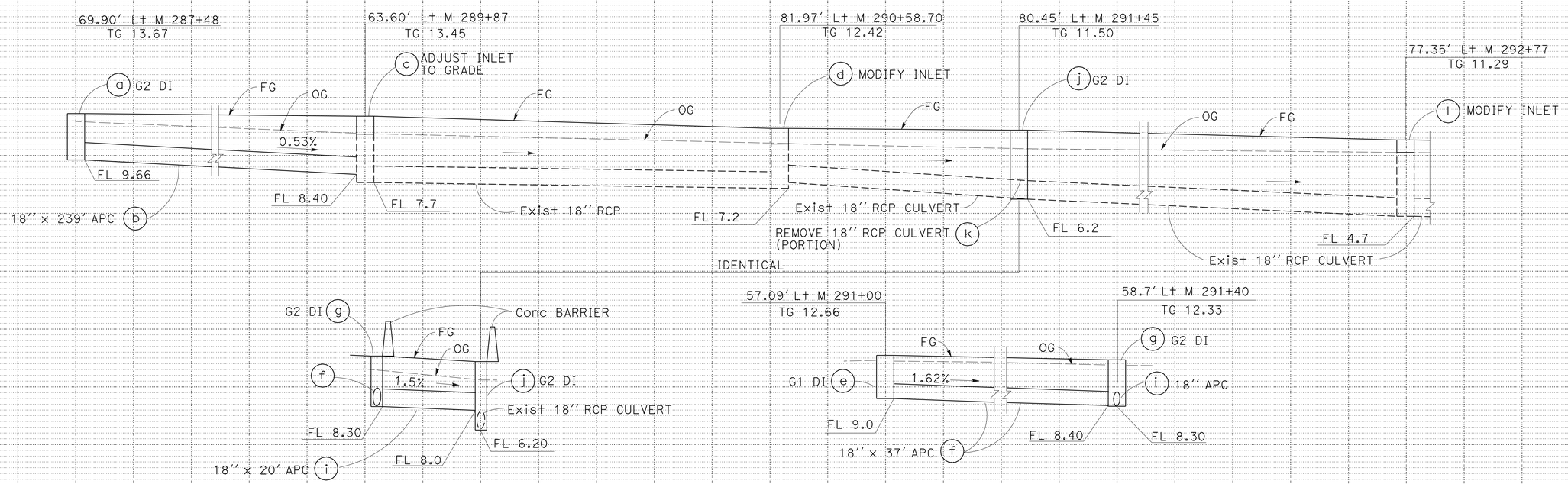

DRAINAGE SYSTEM No. 13

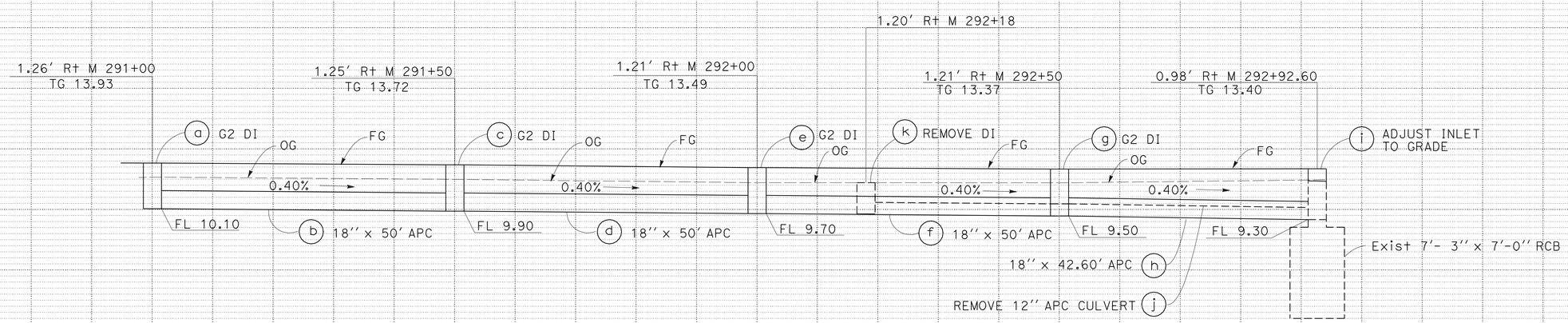

DRAINAGE SYSTEM No. 14

DRAINAGE PROFILES

SCALE: Horiz 1" = 10'
Vert 1" = 5'

DP-9

REVISED BY	DATE REVISED
RH	3/24/11

ROWAIDA HASHIMI — NAM NGO

CALCULATED-DESIGNED BY — CHECKED BY

FUNCTIONAL SUPERVISOR: EDMUND W. CHOY

STATE OF CALIFORNIA - DEPARTMENT OF TRANSPORTATION
Caltrans® HYDRAULICS

LAST REVISION 04-05-11 | DATE PLOTTED => 22-JUN-2011 | TIME PLOTTED => 13:12

Dist	COUNTY	ROUTE	POST MILES TOTAL PROJECT	SHEET No.	TOTAL SHEETS
04	Ala	880	28.2/29.9	54	183

REGISTERED CIVIL ENGINEER 3-23-11 DATE

6-20-11
PLANS APPROVAL DATE

REGISTERED PROFESSIONAL ENGINEER K.D. Nhieu No. 55948 Exp. 12-31-12 CIVIL STATE OF CALIFORNIA

THE STATE OF CALIFORNIA OR ITS OFFICERS OR AGENTS SHALL NOT BE RESPONSIBLE FOR THE ACCURACY OR COMPLETENESS OF SCANNED COPIES OF THIS PLAN SHEET.

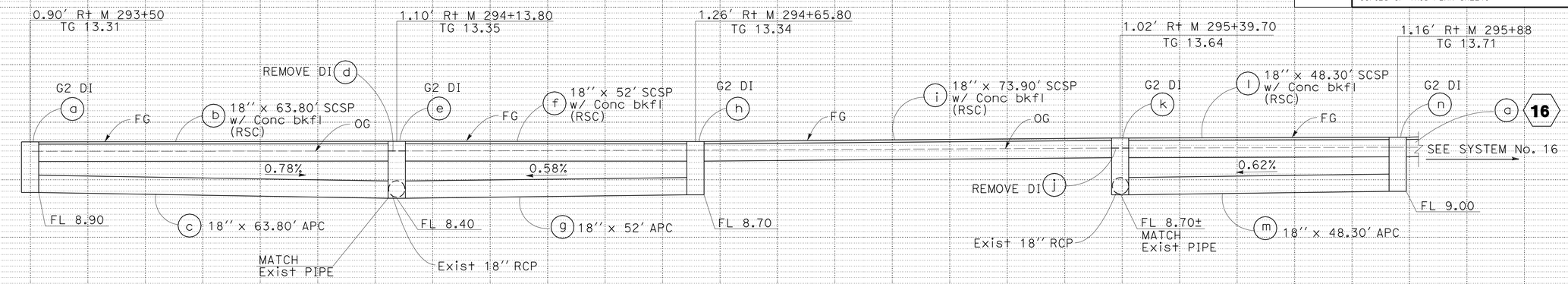

DRAINAGE SYSTEM No. 15

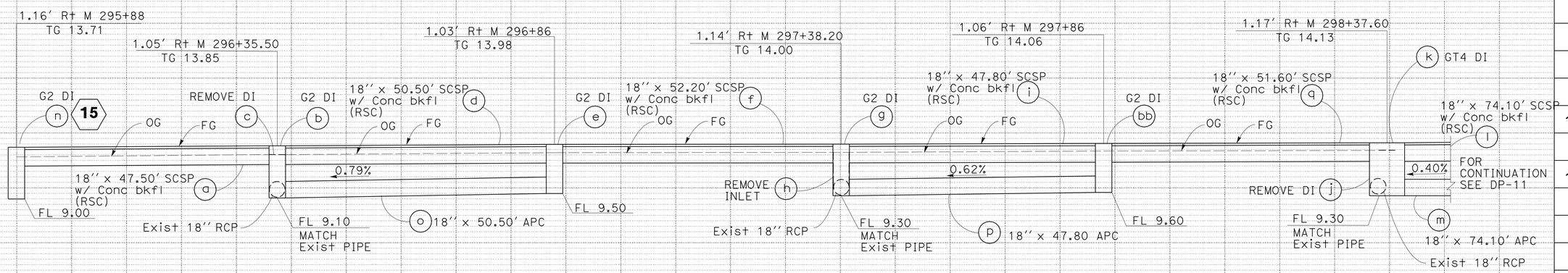

DRAINAGE SYSTEM No. 16

DRAINAGE PROFILES

SCALE: Horiz 1" = 10'
Vert 1" = 5'

DP-10

REVISED BY	DATE REVISED
RH	3/24/11

ROWAIDA HASHIMI — NAM NGO

CALCULATED-DESIGNED BY — CHECKED BY

FUNCTIONAL SUPERVISOR: EDMUND W. CHOY

STATE OF CALIFORNIA - DEPARTMENT OF TRANSPORTATION
Caltrans
HYDRAULICS

LAST REVISION 04-05-11 | DATE PLOTTED => 22-JUN-2011 | TIME PLOTTED => 13:12

Dist	COUNTY	ROUTE	POST MILES TOTAL PROJECT	SHEET No.	TOTAL SHEETS
04	Ala	880	28.2/29.9	55	183

REGISTERED CIVIL ENGINEER 3-23-11 DATE

6-20-11
PLANS APPROVAL DATE

REGISTERED PROFESSIONAL ENGINEER K.D. Nhieu No. 55948 Exp. 12-31-12 CIVIL STATE OF CALIFORNIA

THE STATE OF CALIFORNIA OR ITS OFFICERS OR AGENTS SHALL NOT BE RESPONSIBLE FOR THE ACCURACY OR COMPLETENESS OF SCANNED COPIES OF THIS PLAN SHEET.

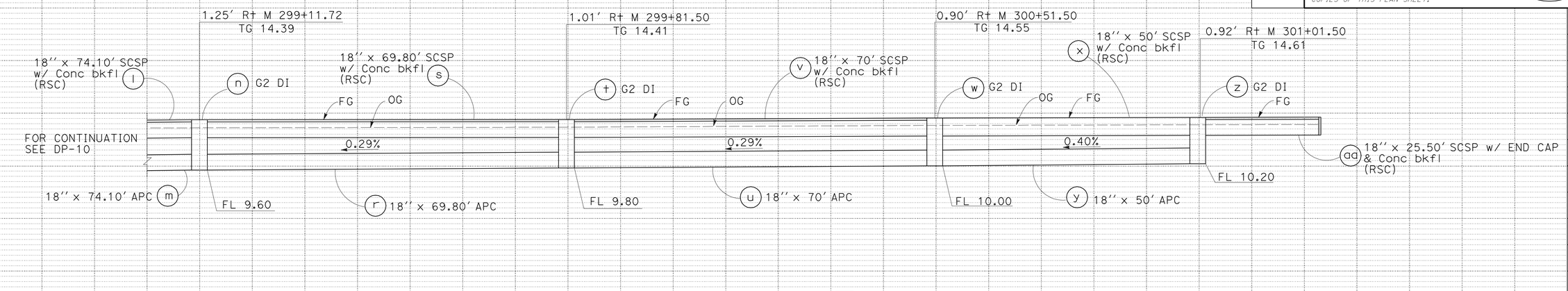

DRAINAGE SYSTEM No. 16

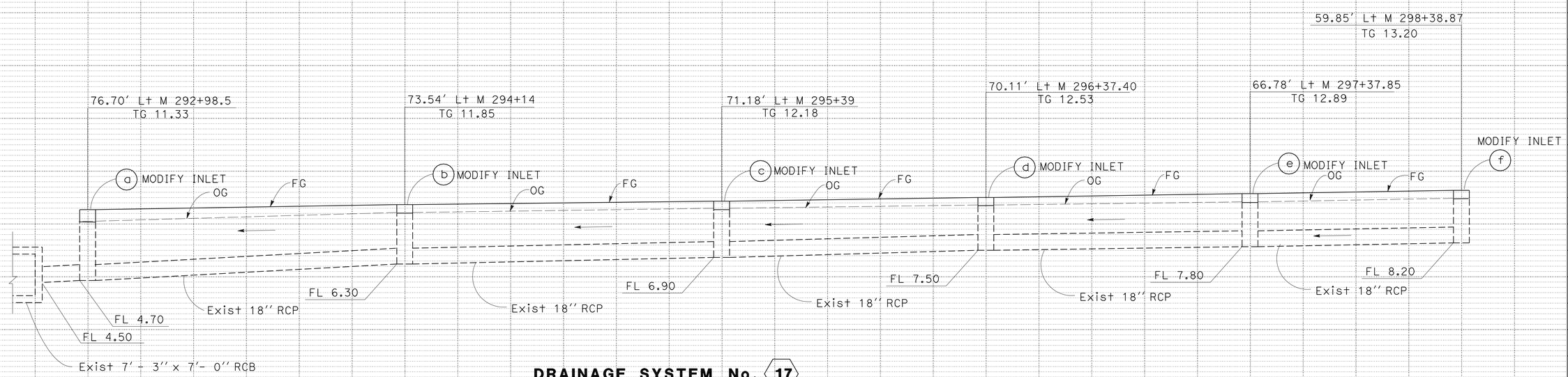

DRAINAGE SYSTEM No. 17

DRAINAGE PROFILES

SCALE: Horiz 1" = 10'
Vert 1" = 5'

DP-11

REVISED BY: RH — DATE REVISED: 3/24/11
CALCULATED-DESIGNED BY: ROWAIDA HASHIMI — CHECKED BY: NAM NGO
FUNCTIONAL SUPERVISOR: EDMUND W. CHOY

STATE OF CALIFORNIA - DEPARTMENT OF TRANSPORTATION
Caltrans
HYDRAULICS

LAST REVISION 04-05-11 — DATE PLOTTED => 22-JUN-2011 — TIME PLOTTED => 13:12

Dist	COUNTY	ROUTE	POST MILES TOTAL PROJECT	SHEET No.	TOTAL SHEETS
04	Ala	880	28.2/29.9	56	183

REGISTERED CIVIL ENGINEER 3-23-11 DATE

6-20-11
PLANS APPROVAL DATE

REGISTERED PROFESSIONAL ENGINEER K.D. Nhieu No. 55948 Exp. 12-31-12 CIVIL STATE OF CALIFORNIA

THE STATE OF CALIFORNIA OR ITS OFFICERS OR AGENTS SHALL NOT BE RESPONSIBLE FOR THE ACCURACY OR COMPLETENESS OF SCANNED COPIES OF THIS PLAN SHEET.

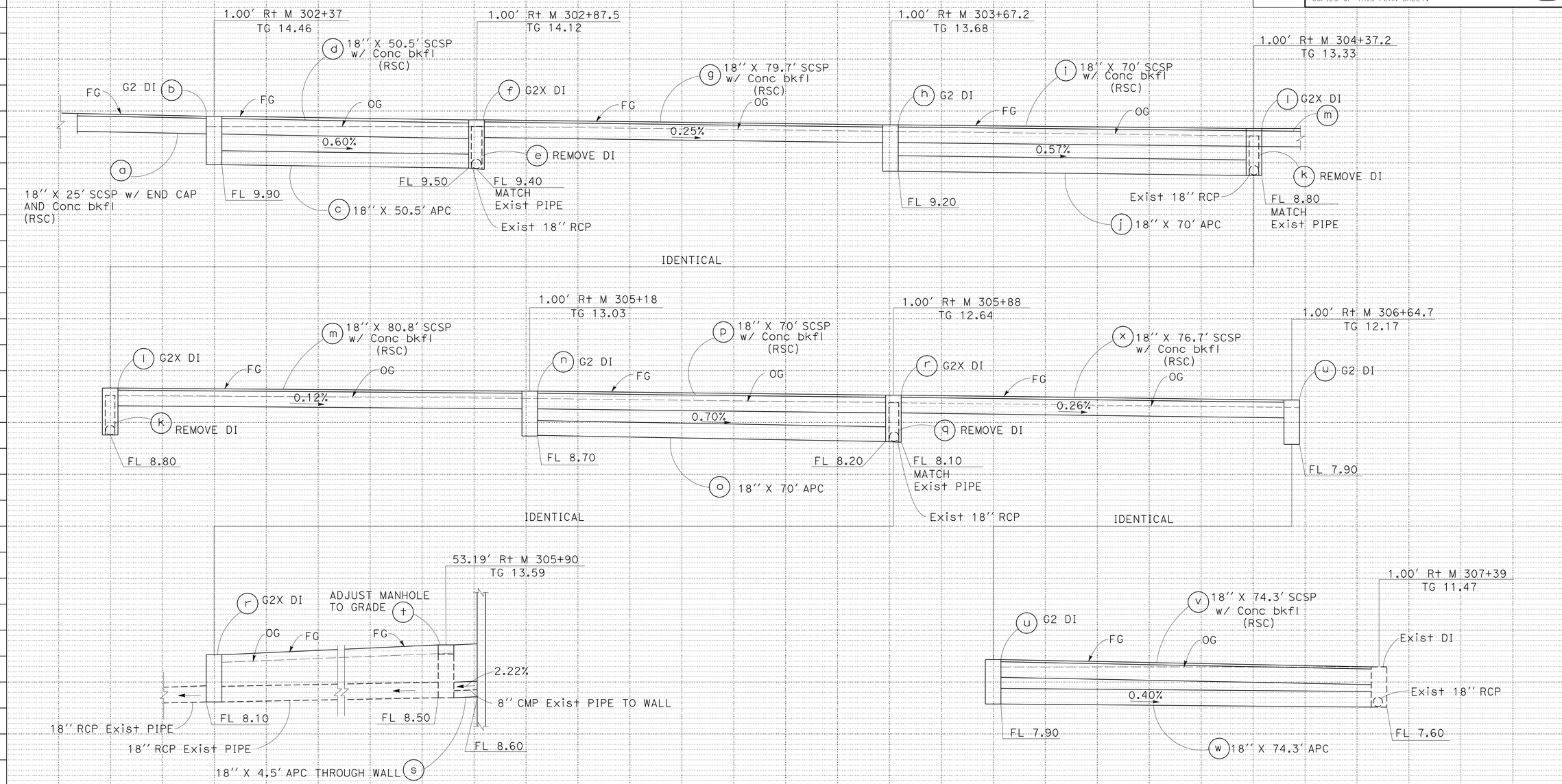

DRAINAGE SYSTEM No. 18

DRAINAGE PROFILES

SCALE: Horiz 1" = 10'
Vert 1" = 5'

DP-12

REVISED BY	DATE REVISED
RH	3/24/11

NAM NGO — NAM NGO

CALCULATED-DESIGNED BY — CHECKED BY

FUNCTIONAL SUPERVISOR: EDMUND W. CHOY

STATE OF CALIFORNIA - DEPARTMENT OF TRANSPORTATION

Caltrans

HYDRAULICS

LAST REVISION 03-22-11 — DATE PLOTTED => 22-JUN-2011 — TIME PLOTTED => 13:12

Dist	COUNTY	ROUTE	POST MILES TOTAL PROJECT	SHEET No.	TOTAL SHEETS
04	Ala	880	28.2/29.9	57	183

REGISTERED CIVIL ENGINEER 3-23-11 DATE

6-20-11
PLANS APPROVAL DATE

REGISTERED PROFESSIONAL ENGINEER K.D. Nhieu No. 55948 Exp. 12-31-12 CIVIL STATE OF CALIFORNIA

THE STATE OF CALIFORNIA OR ITS OFFICERS OR AGENTS SHALL NOT BE RESPONSIBLE FOR THE ACCURACY OR COMPLETENESS OF SCANNED COPIES OF THIS PLAN SHEET.

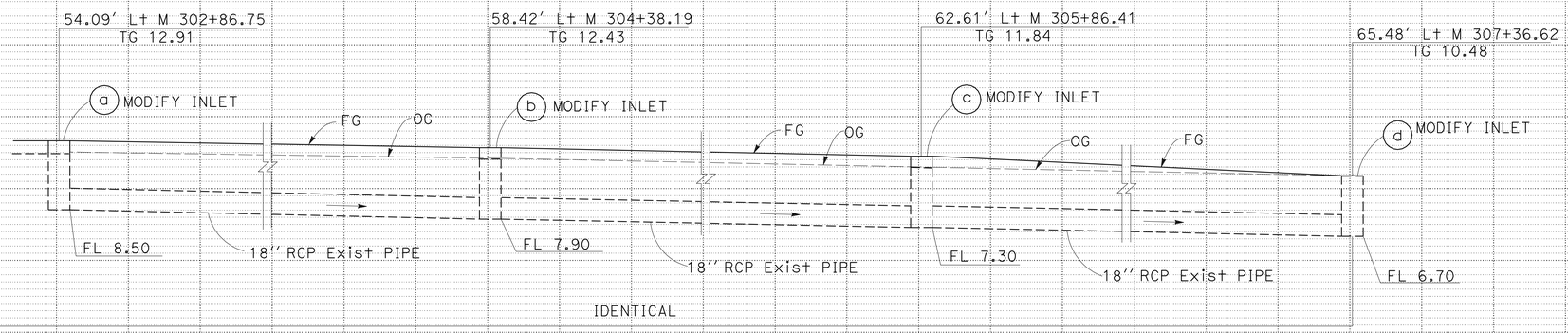

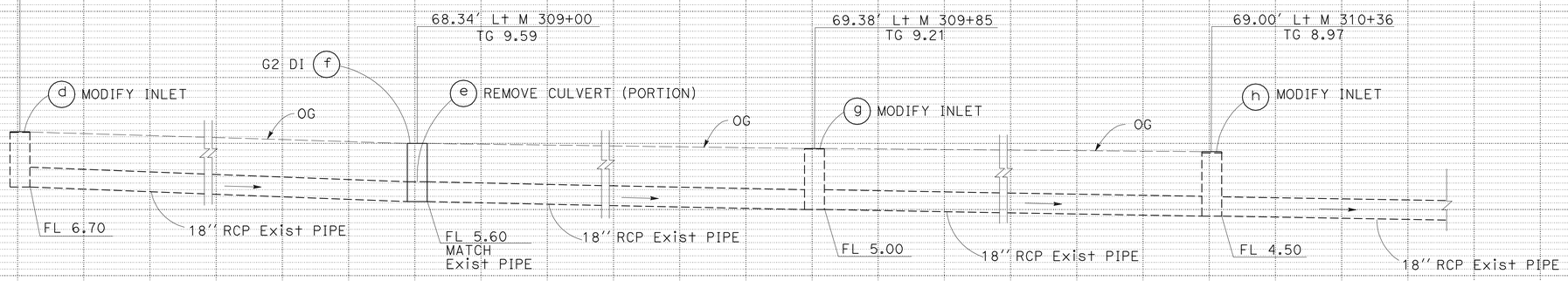

DRAINAGE SYSTEM No. 19

DRAINAGE PROFILES

SCALE: Horiz 1" = 10'
Vert 1" = 5'

DP-13

STATE OF CALIFORNIA - DEPARTMENT OF TRANSPORTATION
Caltrans
HYDRAULICS

FUNCTIONAL SUPERVISOR: EDMUND W. CHOY

CALCULATED-DESIGNED BY: NAM NGO
CHECKED BY: NAM NGO

REVISED BY: RH
DATE REVISED: 3/24/11

LAST REVISION 03-24-11
DATE PLOTTED => 22-JUN-2011
TIME PLOTTED => 13:12

Dist	COUNTY	ROUTE	POST MILES TOTAL PROJECT	SHEET No.	TOTAL SHEETS
04	Ala	880	28.2/29.9	58	183

Craig M Tomimatsu 3-28-11
REGISTERED CIVIL ENGINEER DATE

6-20-11
PLANS APPROVAL DATE

REGISTERED PROFESSIONAL ENGINEER
Craig M. Tomimatsu
No. 43072
Exp. 3-31-12
CIVIL
STATE OF CALIFORNIA

THE STATE OF CALIFORNIA OR ITS OFFICERS OR AGENTS SHALL NOT BE RESPONSIBLE FOR THE ACCURACY OR COMPLETENESS OF SCANNED COPIES OF THIS PLAN SHEET.

NOTES:

1. FOR INFORMATION NOT SHOWN, SEE Std PLAN D73 THRU D74B SHEETS.
2. ORIENTATION OF TYPE G1 INLETS SIMILAR.

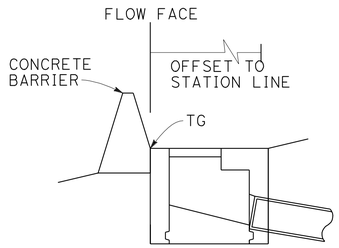

SECTION B-B

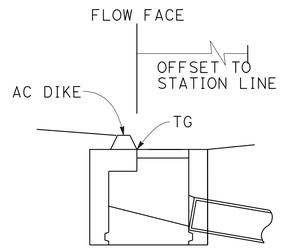

SECTION C-C

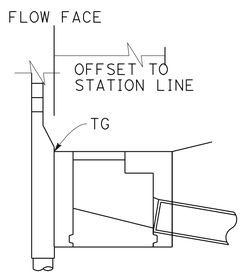

SECTION A-A

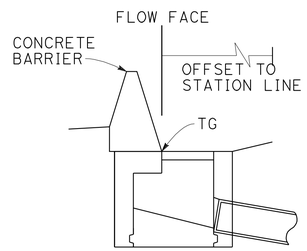

SECTION D-D

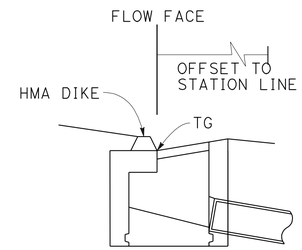

ELEVATION

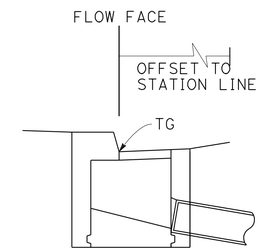

ELEVATION

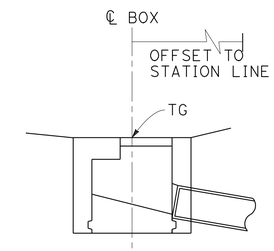

ELEVATION

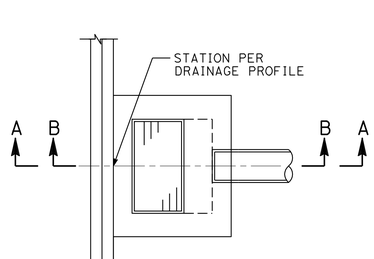

PLAN

INLET ADJACENT TO SOUNDWALL (SECTION A-A)(TYPES 736 S/SV)
OR CONCRETE BARRIER (SECTION B-B)
(TYPES 60E, 60GE, 60SC, 60SE, OR HIGH SIDE OF TYPES 60C, 60GC)

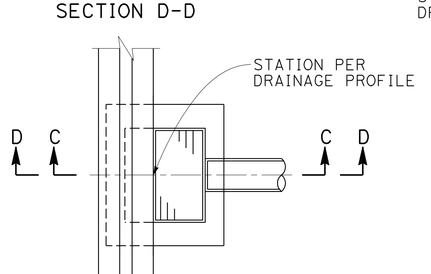

PLAN

INLET ADJACENT TO HMA DIKE (SECTION C-C)
OR CONCRETE BARRIER (SECTION D-D)
(TYPE 60C SHOWN, TYPES 60, 60G, 60GC SIMILAR)

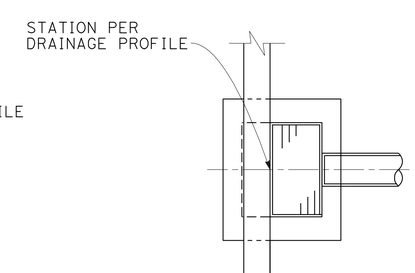

PLAN

INLET WITHIN HMA SIDE GUTTER

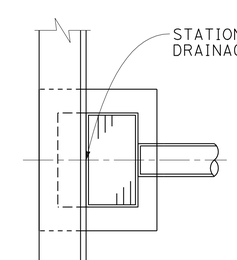

PLAN

INLET ADJACENT TO CURB

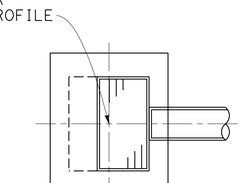

PLAN

FIELD INLET OR MANHOLE

DRAINAGE DETAILS

NO SCALE

DD-1

STATE OF CALIFORNIA - DEPARTMENT OF TRANSPORTATION
Caltrans®
HYDRAULICS

FUNCTIONAL SUPERVISOR: CRAIG TOMIMATSU
CALCULATED-DESIGNED BY: CRAIG TOMIMATSU
CHECKED BY
REVISED BY
DATE REVISED

LAST REVISION 03-09-11
DATE PLOTTED => 22-JUN-2011
TIME PLOTTED => 13:12

Dist	COUNTY	ROUTE	POST MILES TOTAL PROJECT	SHEET No.	TOTAL SHEETS
04	Ala	880	28.2/29.9	59	183

Craig M Tomimatsu 3-28-11
REGISTERED CIVIL ENGINEER DATE

6-20-11
PLANS APPROVAL DATE

REGISTERED PROFESSIONAL ENGINEER Craig M. Tomimatsu No. 43072 Exp. 3-31-12 CIVIL STATE OF CALIFORNIA

THE STATE OF CALIFORNIA OR ITS OFFICERS OR AGENTS SHALL NOT BE RESPONSIBLE FOR THE ACCURACY OR COMPLETENESS OF SCANNED COPIES OF THIS PLAN SHEET.

NOTES:

1. LOCATE MH OPENING AWAY FROM TRAVELLED WAY OR AS DIRECTED BY THE ENGINEER.
2. PLACE NEW STEP RUNGS WHERE REQUIRED AND REMOVE EXISTING.
3. FOR INLET DETAILS NOT SHOWN, SEE STD PLAN FOR G2 INLET.

LEGEND

REMOVE CONCRETE

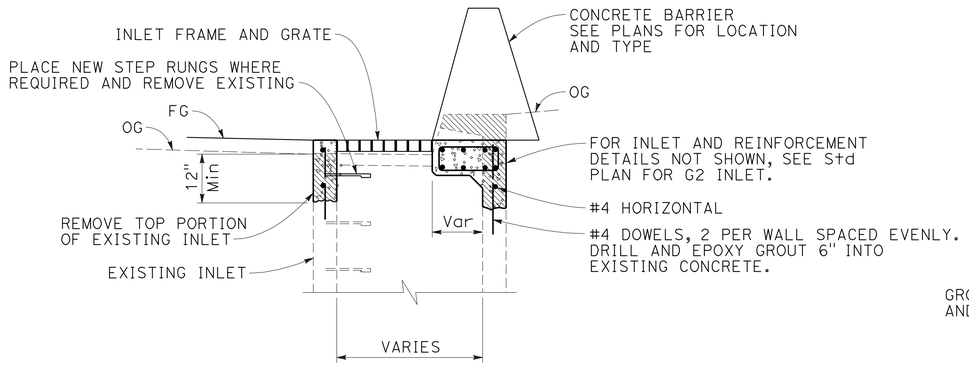

SECTIONAL VIEW

MODIFY INLET

3 c 5 i 6 c

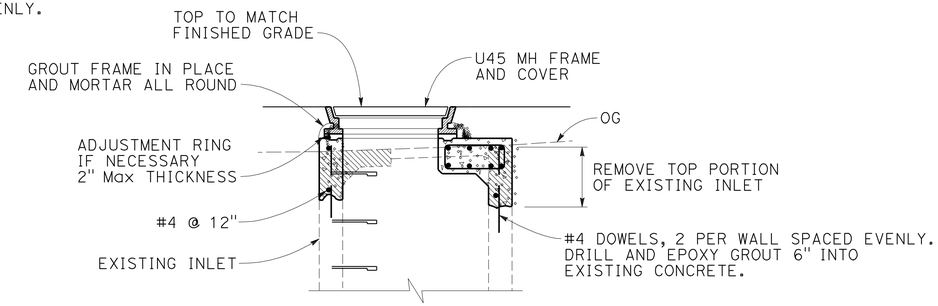

SECTION A-A

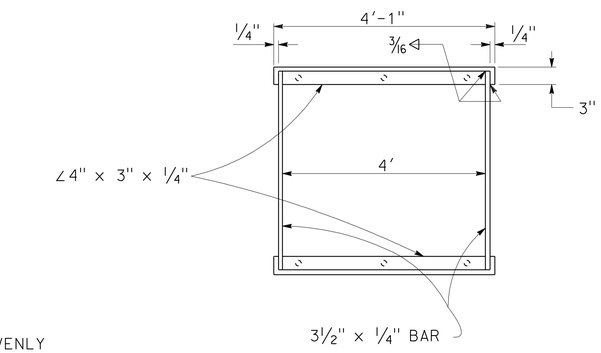

MODIFIED FRAME

FOR FRAME DETAILS NOT SHOWN, SEE Std PLAN D74B

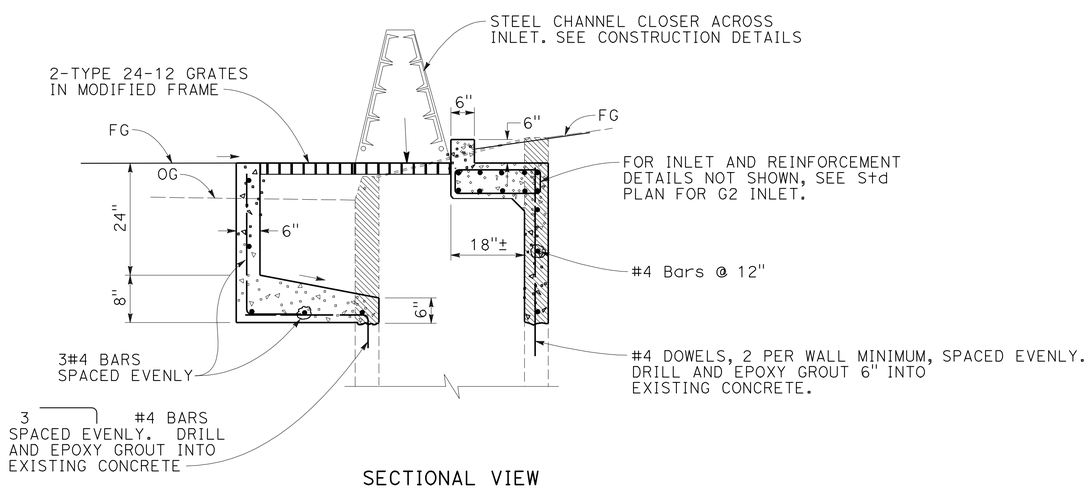

SECTIONAL VIEW

MODIFY INLET

5 r

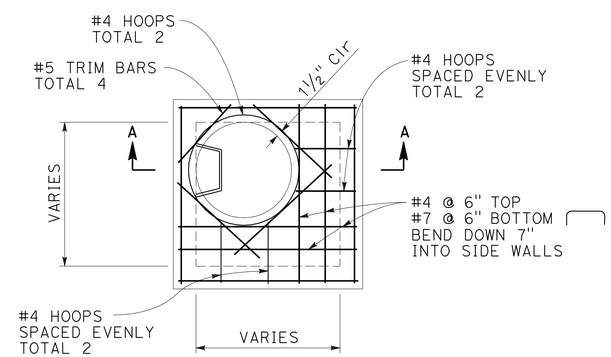

PLAN

MODIFY INLET TO MH

4 a 11 l

DRAINAGE DETAILS

NO SCALE

DD-2

STATE OF CALIFORNIA - DEPARTMENT OF TRANSPORTATION
Caltrans
HYDRAULICS

FUNCTIONAL SUPERVISOR: CRAIG TOMIMATSU
CALCULATED-DESIGNED BY: CRAIG TOMIMATSU
CHECKED BY
REVISED BY
DATE REVISED

LAST REVISION 03-25-11
DATE PLOTTED => 22-JUN-2011
TIME PLOTTED => 13:12

Dist	COUNTY	ROUTE	POST MILES TOTAL PROJECT	SHEET No.	TOTAL SHEETS
04	Ala	880	28.2/29.9	60	183

REGISTERED CIVIL ENGINEER 3-28-11 DATE

6-20-11
PLANS APPROVAL DATE

REGISTERED PROFESSIONAL ENGINEER Craig M. Tomimatsu No. 43072 Exp 3-31-12 CIVIL STATE OF CALIFORNIA

THE STATE OF CALIFORNIA OR ITS OFFICERS OR AGENTS SHALL NOT BE RESPONSIBLE FOR THE ACCURACY OR COMPLETENESS OF SCANNED COPIES OF THIS PLAN SHEET.

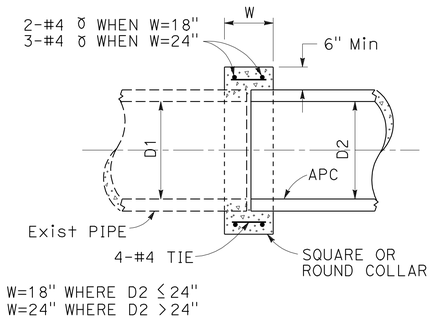

CONCRETE COLLAR

4 d 8 n 9 h

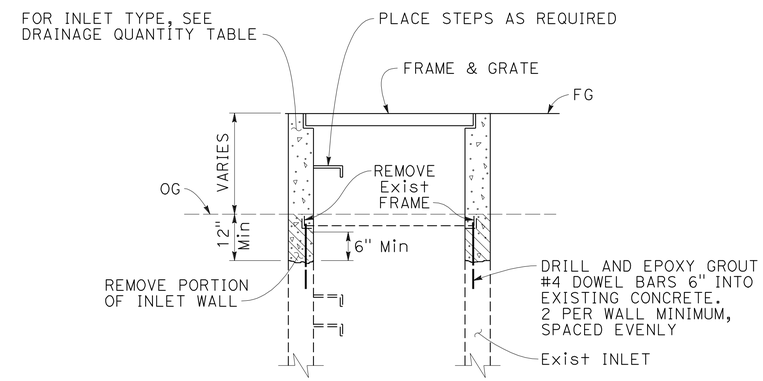

SECTIONAL VIEW

ADJUST INLET TO GRADE

1 a b c d e 2 a b 3 d e 4 b 5 c h 6 l

7 o 8 aa 10 c 11 d h j 12 b 13 c 14 i

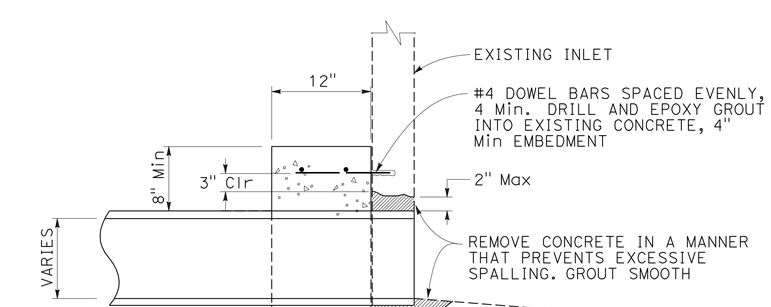

PIPE CONNECTION TO EXISTING INLET

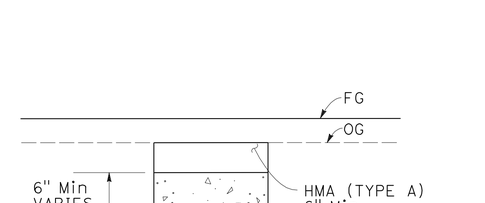

CONCRETE BACKFILL

13 i

DRAINAGE DETAILS

NO SCALE

DD-3

STATE OF CALIFORNIA - DEPARTMENT OF TRANSPORTATION
Caltrans
HYDRAULICS

FUNCTIONAL SUPERVISOR: CRAIG TOMIMATSU
CALCULATED-DESIGNED BY: CRAIG TOMIMATSU
CHECKED BY
REVISED BY
DATE REVISED

LAST REVISION 06-07-11 | DATE PLOTTED => 22-JUN-2011 | TIME PLOTTED => 13:12

Dist	COUNTY	ROUTE	POST MILES TOTAL PROJECT	SHEET No.	TOTAL SHEETS
04	Ala	880	28.2/29.9	61	183

Craig M Tomimatsu 3-23-11
REGISTERED CIVIL ENGINEER DATE

6-20-11
PLANS APPROVAL DATE

REGISTERED PROFESSIONAL ENGINEER Craig M. Tomimatsu No. 43072 Exp. 3-31-12 CIVIL STATE OF CALIFORNIA

THE STATE OF CALIFORNIA OR ITS OFFICERS OR AGENTS SHALL NOT BE RESPONSIBLE FOR THE ACCURACY OR COMPLETENESS OF SCANNED COPIES OF THIS PLAN SHEET.

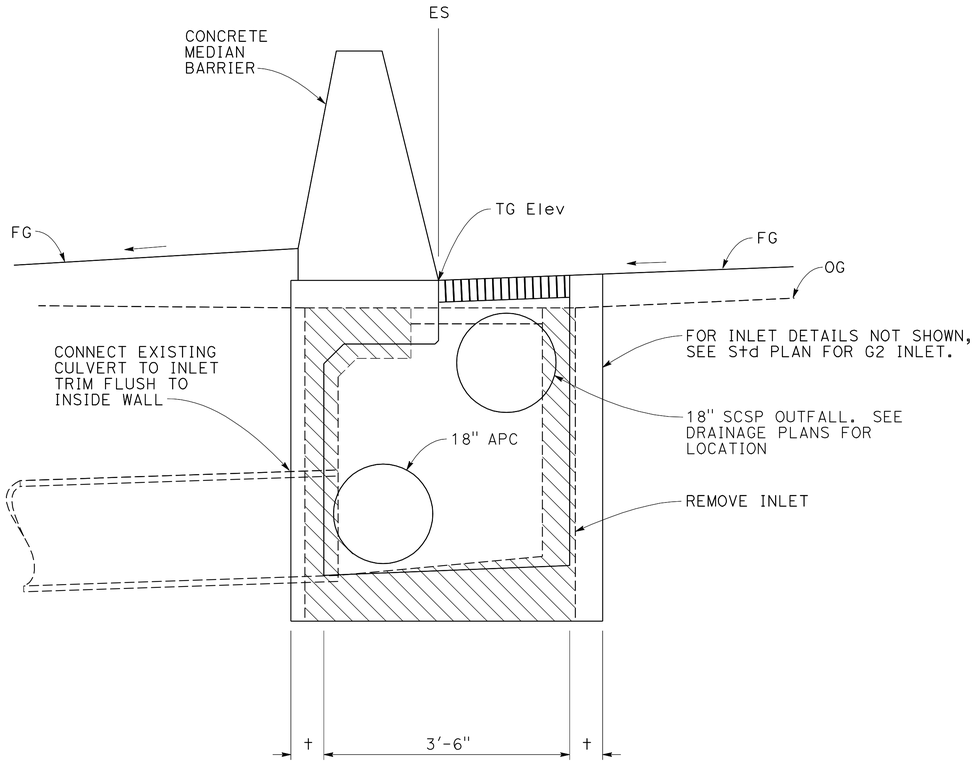

G2X INLET

18 f l r

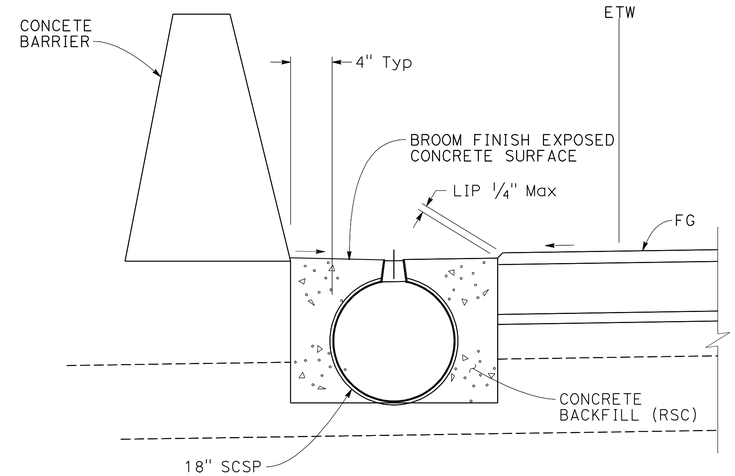

SLOTTED PIPE WITH CONCRETE BACKFILL

1 l 12 d 15 b f i l 16 a d f i l q s v x aa

18 a d g i m p v x

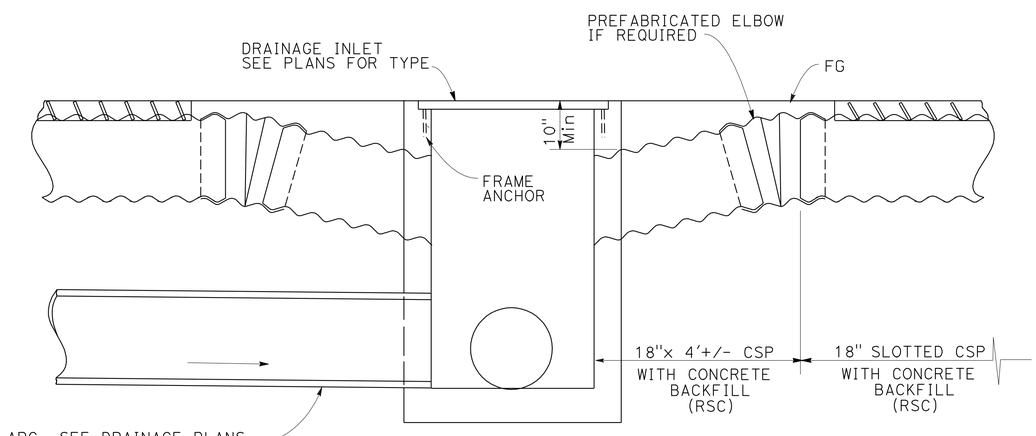

SLOTTED CSP PIPE CONNECTION TO INLET

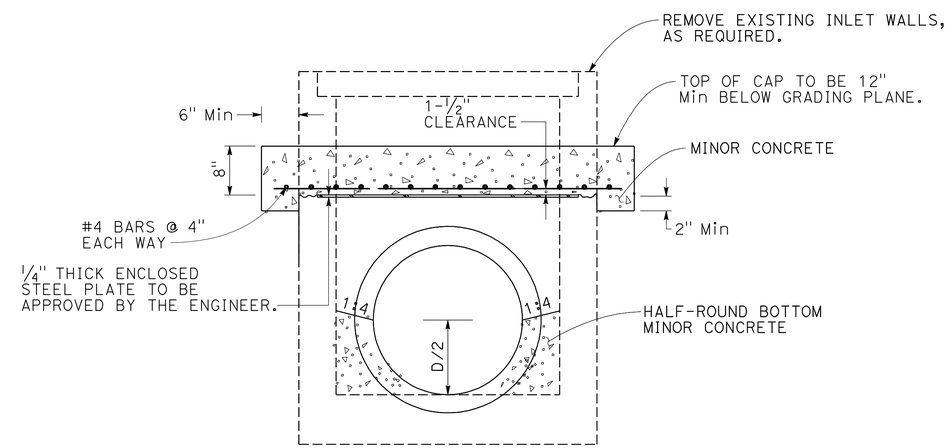

CAP INLET

10 e

DRAINAGE DETAILS

NO SCALE

DD-4

REVISED BY | DATE REVISED
CRAIG TOMIMATSU | CRAIG TOMIMATSU
CALCULATED-DESIGNED BY | CHECKED BY
FUNCTIONAL SUPERVISOR
CRAIG TOMIMATSU

STATE OF CALIFORNIA - DEPARTMENT OF TRANSPORTATION
Caltrans
HYDRAULICS

LAST REVISION 03-25-11 | DATE PLOTTED => 22-JUN-2011 | TIME PLOTTED => 13:13

Dist	COUNTY	ROUTE	POST MILES TOTAL PROJECT	SHEET No.	TOTAL SHEETS
04	Ala	880	28.2/29.9	62	183

Craig M Tomimatsu 3-28-11
REGISTERED CIVIL ENGINEER DATE

6-20-11
PLANS APPROVAL DATE

REGISTERED PROFESSIONAL ENGINEER Craig M. Tomimatsu No. 43072 Exp. 3-31-12 CIVIL STATE OF CALIFORNIA

THE STATE OF CALIFORNIA OR ITS OFFICERS OR AGENTS SHALL NOT BE RESPONSIBLE FOR THE ACCURACY OR COMPLETENESS OF SCANNED COPIES OF THIS PLAN SHEET.

LEGEND:

REMOVE CONCRETE

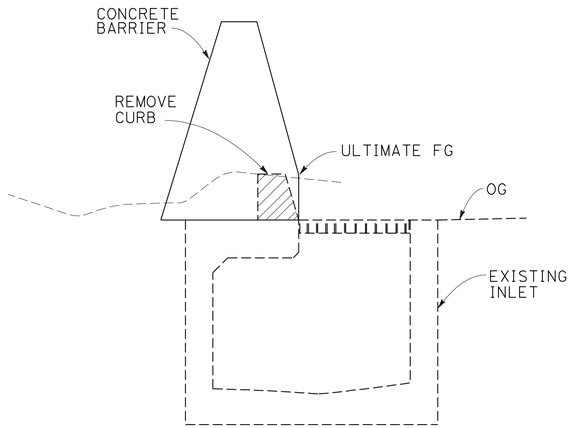

STEP 1

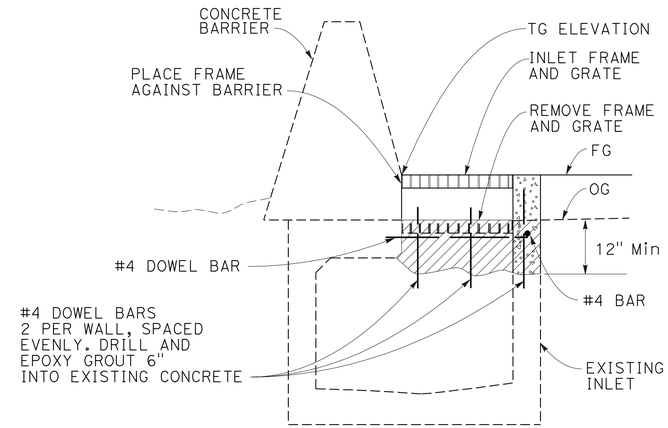

STEP 2

MODIFY INLET

13 d l 17 a b c d e f 19 a b c d h g

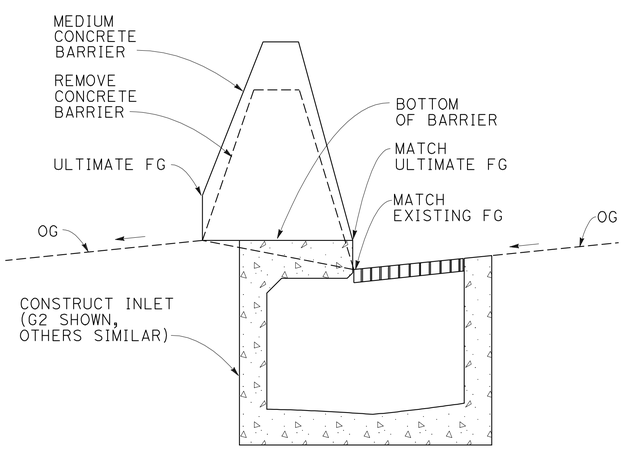

STEP 1

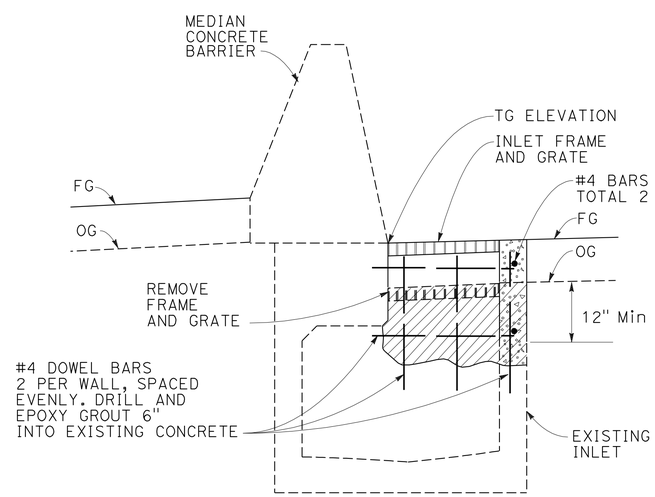

STEP 2

TYPICAL INLET CONSTRUCTION

DRAINAGE DETAILS

NO SCALE

DD-5

STATE OF CALIFORNIA - DEPARTMENT OF TRANSPORTATION
Caltrans®
HYDRAULICS

FUNCTIONAL SUPERVISOR: CRAIG TOMIMATSU
CALCULATED-DESIGNED BY: CRAIG TOMIMATSU
CHECKED BY:
REVISED BY:
DATE REVISED:

LAST REVISION 06-08-11
DATE PLOTTED => 22-JUN-2011
TIME PLOTTED => 13:13

Dist	COUNTY	ROUTE	POST MILES TOTAL PROJECT	SHEET No.	TOTAL SHEETS
04	Ala	880	28.2/29.9	63	183

Craig M Tomimatsu 3-28-11
REGISTERED CIVIL ENGINEER DATE

6-20-11
PLANS APPROVAL DATE

REGISTERED PROFESSIONAL ENGINEER
Craig M. Tomimatsu
No. 43072
Exp. 3-31-12
CIVIL
STATE OF CALIFORNIA

THE STATE OF CALIFORNIA OR ITS OFFICERS OR AGENTS SHALL NOT BE RESPONSIBLE FOR THE ACCURACY OR COMPLETENESS OF SCANNED COPIES OF THIS PLAN SHEET.

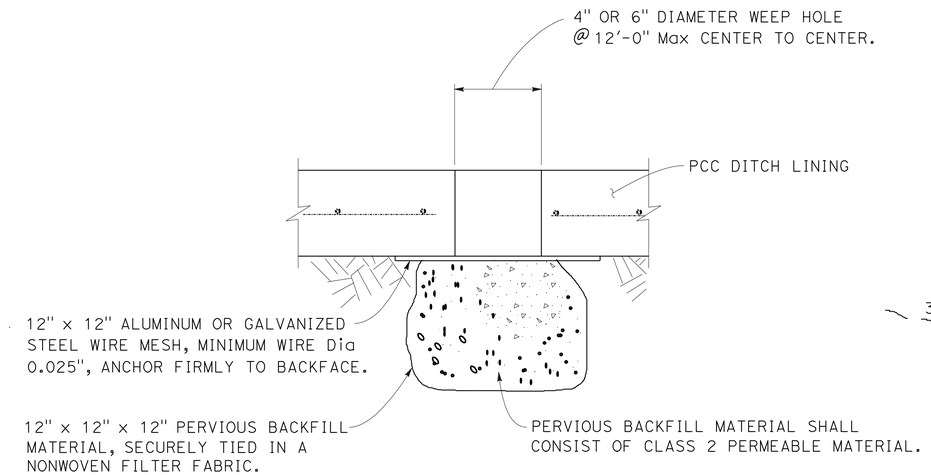

SECTION

WEEP HOLE AND PERVIOUS BACKFILL

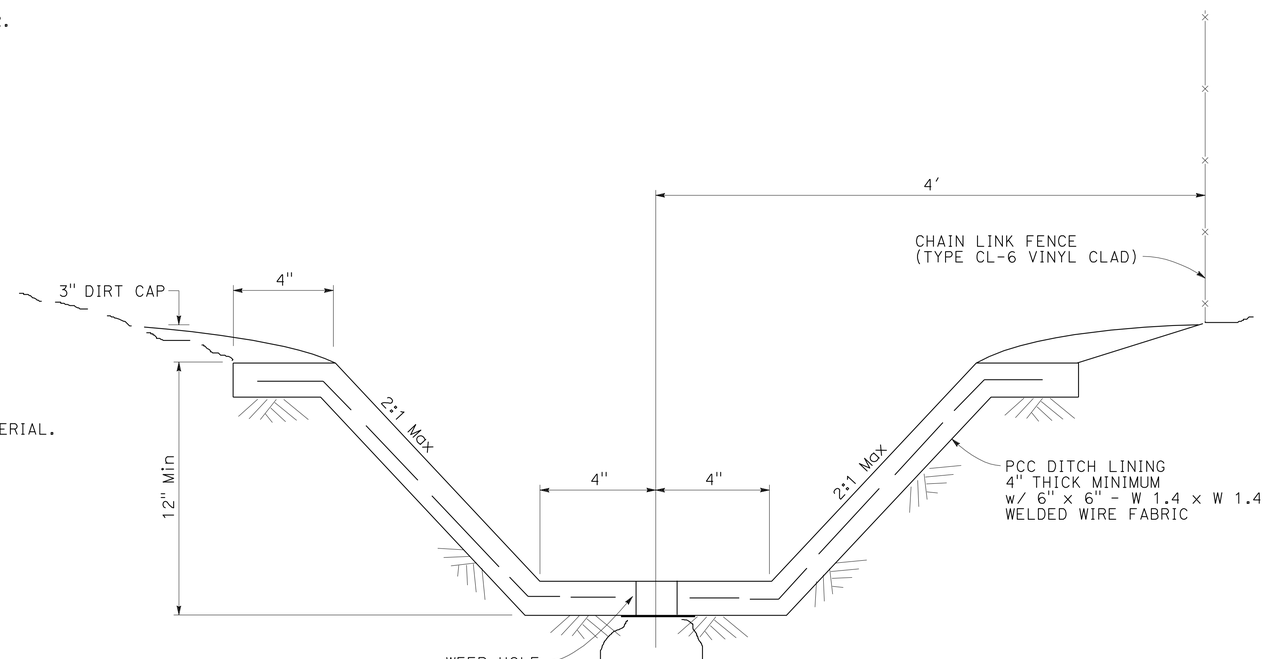

SECTIONAL VIEW

PCC LINED DITCH

11 i

DRAINAGE DETAILS

NO SCALE

DD-6

STATE OF CALIFORNIA - DEPARTMENT OF TRANSPORTATION
Caltrans
HYDRAULICS

FUNCTIONAL SUPERVISOR: CRAIG TOMIMATSU
CALCULATED-DESIGNED BY: CRAIG TOMIMATSU
CHECKED BY
REVISED BY
DATE REVISED

LAST REVISION 06-08-11
DATE PLOTTED => 22-JUN-2011
TIME PLOTTED => 13:13

Dist	COUNTY	ROUTE	POST MILES TOTAL PROJECT	SHEET No.	TOTAL SHEETS
04	Ala	880	28.2/29.9	64	183

REGISTERED CIVIL ENGINEER 3-23-11 DATE

6-20-11
PLANS APPROVAL DATE

REGISTERED PROFESSIONAL ENGINEER Kenneth D. Nhieu No. 55948 Exp. 12-31-12 CIVIL STATE OF CALIFORNIA

THE STATE OF CALIFORNIA OR ITS OFFICERS OR AGENTS SHALL NOT BE RESPONSIBLE FOR THE ACCURACY OR COMPLETENESS OF SCANNED COPIES OF THIS PLAN SHEET.

APC ALLOWABLE PIPE MATERIAL

DESIGNATION	RCP	PLASTIC PIPE
	SIZE (inches)	SIZE (inches)
12" APC	12"	12"
18" APC	18"	18"
24" APC	24"	24"

NOTES:

1. PLASTIC PIPE ALTERNATIVE SHALL BE SMOOTH INTERIOR WALL TYPE ONLY.
2. EXCEPT FOR SLOTTED CSP WHICH REQUIRE WATER TIGHT JOINTS. ALL JOINTS ARE STANDARD JOINT TYPE.

ABBREVIATIONS:

RSC	RAPID STRENGTH CONCRETE
S	STANDARD JOINT
W	WATER TIGHT JOINT
[N]	NOT A SEPARATE PAY ITEM, FOR INFORMATION ONLY

DRAINAGE QUANTITIES

DRAINAGE SYSTEM No.	DRAINAGE UNIT	ABANDON CULVERT (LF)	ABANDON INLET (EA)	REMOVE CULVERT (LF)	REMOVE INLET (EA)	CAP INLET (EA)	ADJUST INLET TO GRADE (EA)	MODIFY INLET (EA)	MODIFY INLET TO MANHOLE (EA)	ADJUST MANHOLE TO GRADE (EA)	SAND BACKFILL (CY)	DITCH EXCAVATION (CY)	APC 12" (LF)	APC 18" (LF)	APC 24" (LF)	18" SCSP (0.079" THICK) (LF)	12" AFES (EA)	[N] MAXIMUM COVER (LF)	[N] PIPE JOINT CLASSIFICATION	[N] CONCRETE COLLAR (EA)	[N] END CAP (EA)	CONCRETE BACKFILL (RSC) (CY)	MINOR CONCRETE (MINOR STRUCTURE) (CY)	[N] FRAME & GRATE (TYPE 24-12) (EA)	[N] U45 MANHOLE FRAME & COVER (EA)	Misc IRON AND STEEL (LB)	[N] HEIGHT OF INLET (LF)	DESCRIPTION	STATION	DRAINAGE PLAN SHEET No.	DRAINAGE SYSTEM No.	DRAINAGE UNIT
1	a						1																	1		326		ADJUST INLET TO GRADE, G2 INLET	1.00′ R+ M 203+82.78	D-1	1	a
	b						1																	1		326		ADJUST INLET TO GRADE, G2 INLET	1.00′ R+ M 204+18.89			b
	c						1																	1		326		ADJUST INLET TO GRADE, G2 INLET	1.00′ R+ M 204+89.80			c
	d						1																	1		326		ADJUST INLET TO GRADE, G2 INLET	1.15′ R+ M 205+52.22			d
	e						1																	1		326		ADJUST INLET TO GRADE, G2 INLET	53.43′ L+ M 206+47.70			e
	f				1																						5.3	REMOVE INLET	1.11′ L+ M 206+46.50			f
	g						1																2.08	2		652	6.0	G2 INLET	1.11′ L+ M 206+46.50			g
	h													10				4.4	S									18" APC	1.11′ L+ M 206+46.50 TO 0.96′ R+ M 206+56.50			h
	i						1																1.64	2		652	4.3	G2 INLET	0.96′ R+ M 206+56.50			i
	j			40																								REMOVE CULVERT	1.11′ L+ M 206+46.50 TO 1.11′ L+ M 206+86.50			j
	k													60				2.8	S									18" APC	0.96′ R+ M 206+56.50 TO 1.00′ L+ M 207+16.50			k
	l															70			W			4.95						18" SCSP W/ CONCRETE BACKFILL (RSC)	1.11′ L+ M 206+46.50 TO 1.00′ L+ M 207+16.50			l
	m			40																								REMOVE CULVERT	0.96′ R+ M 206+56.50 TO 0.96′ R+ M 206+96.50			m
	n						1																1.64	2		652	4.3	G2 INLET	1.00′ L+ M 207+16.50			n
	o						1																1.10	2		652	3.7	G1 INLET	1.14′ R+ M 207+36			o
	p													19.9				2.8	S									18" APC	1.00′ L+ M 207+16.50 TO 1.14′ RT M 207+36			p
	q													64				2.2	S									18" APC	1.14′ R+ M 207+36 TO 1.04′ R+ M 208+00			q
	r						1																1.08	2		652	3.6	G1 INLET	1.04′ L+ M 208+00			r
	s													20				2	S									18" APC	1.04′ L+ M 208+00 TO 1.04′ R+ M 208+19			s
	t						1																1.06	2		652	3.5	G1 INLET	1.04′ R+ M 208+19			t
	u													58				1.8	S									18" APC	1.04′ R+ M 208+19 TO 1.04′ L+ M 208+79			u
	v						1																1.08	2		652	3.6	G1 INLET	1.04′ L+ M 208+79			v
2	a						1																	1		326		ADJUST INLET TO GRADE, G2 INLET	58.97′ R+ M 204+65.95	D-1	2	a
	b						1																	1		326		ADJUST INLET TO GRADE, G2 INLET	56.07′ R+ M 205+02.72			b
	c													53.3				2.9	S									18" APC	56.07′ R+ M 205+02.72 TO 55.53′ R+ M 205+56			c
	d						1																1.41	2		652	3.4	G2 INLET	55.53′ R+ M 205+56			d
	e													64				2.2	S									18" APC	55.53′ R+ M 205+56 TO 54.19′ R+ M 206+20			e
	f						1																1.49	2		652	3.7	G2 INLET	54.19′ R+ M 206+20			f
3	a						1																1.02	2		652	3.3	G1 INLET	87.32′ R+ M 256+51.10	D-2	3	a
	b													31.0				1.8	S									18" APC	87.32′ R+ M 256+51.10 TO 91.03′ L+ M 256+20.42	D-2		b
	c							1																1		326		MODIFY INLET	82.98′ R+ M 257+63.32	D-2		c
	d						1																	1		326		ADJUST INLET TO GRADE, G1 INLET	79.83′ R+ M 258+52.92	D-3		d
	e						1																	1		326		ADJUST INLET TO GRADE, G1 INLET	79.56′ R+ M 258+60.70	D-3		e
SHEET TOTAL				80	1		19	1						380.2		70						4.95	13.60			9780						

REVISED BY | DATE REVISED
NAM NGO | NAM NGO
CALCULATED-DESIGNED BY | CHECKED BY
FUNCTIONAL SUPERVISOR
EDMUND CHOY

STATE OF CALIFORNIA - DEPARTMENT OF TRANSPORTATION
Caltrans
HYDRAULICS

DRAINAGE QUANTITIES DQ-1

LAST REVISION 06-07-11
DATE PLOTTED => 22-JUN-2011
TIME PLOTTED => 13:13

Dist	COUNTY	ROUTE	POST MILES TOTAL PROJECT	SHEET No.	TOTAL SHEETS
04	Ala	880	28.2/29.9	65	183

REGISTERED CIVIL ENGINEER 3-23-11 DATE

6-20-11
PLANS APPROVAL DATE

REGISTERED PROFESSIONAL ENGINEER Kenneth D. Nhieu No. 55948 Exp. 12-31-12 CIVIL STATE OF CALIFORNIA

THE STATE OF CALIFORNIA OR ITS OFFICERS OR AGENTS SHALL NOT BE RESPONSIBLE FOR THE ACCURACY OR COMPLETENESS OF SCANNED COPIES OF THIS PLAN SHEET.

DRAINAGE QUANTITIES

DRAINAGE SYSTEM No.	DRAINAGE UNIT	ABANDON CULVERT (LF)	ABANDON INLET (EA)	REMOVE CULVERT (LF)	REMOVE INLET (EA)	CAP INLET (EA)	ADJUST INLET TO GRADE (EA)	MODIFY INLET (EA)	MODIFY INLET TO MANHOLE (EA)	ADJUST MANHOLE TO GRADE (EA)	SAND BACKFILL (CY)	DITCH EXCAVATION (CY)	APC 12" (LF)	APC 18" (LF)	APC 24" (LF)	18" SCSP (0.079" THICK) (LF)	12" AFES (EA)	[N] MAXIMUM COVER (LF)	[N] PIPE JOINT CLASSIFICATION	[N] CONCRETE COLLAR (EA)	[N] END CAP (EA)	CONCRETE BACKFILL (RSC) (CY)	MINOR CONCRETE (MINOR STRUCTURE) (CY)	[N] FRAME & GRATE (TYPE 24-12) (EA)	[N] U45 MANHOLE FRAME & COVER (EA)	MISC IRON AND STEEL (LB)	[N] HEIGHT OF INLET (LF)	DESCRIPTION	STATION	DRAINAGE PLAN SHEET No.	DRAINAGE SYSTEM No.	DRAINAGE UNIT
4	a								1																1	435		MODIFY INLET TO MANHOLE	73.25′ R+ M 260+40.47	D-3	4	a
	b						1																	1		326		ADJUST INLET TO GRADE, G2 INLET	1.76′ R+ M 260+43			b
	c				1																						4.6	REMOVE INLET	60.54′ L+ M 260+43.59			c
	d													5				3.5	S	1								18" APC W/ CONC COLLAR	74.91′ L+ M 259+00			d
	e						1																1.82	2		652	5.0	G2 INLET	74.91′ L+ M 259+00			e
5	a						1																2.77	4		1304	4.5	GT4 INLET W/O CURB	55.86′ L+ M 263+42.20	D-3	5	a
	b				1																						3.8	REMOVE INLET	55.86′ L+ M 263+42.20			b
	c						1																	1		326		ADJUST INLET TO GRADE, G2 INLET	5.18′ R+ M 263+44.20			c
	d														156			4.3	S									24" APC	1.97′ R+ M 263+44.20 TO 2.89′ R+ M 265+00			d
	e	298.1									26.54																	ABANDON CULVERT	1.97′ R+ M 263+44.20 TO 2.76′ R+ M 266+42.25			e
	f						1																2.08	2		652	6	G2 INLET	2.68′ R+ M 265+00			f
	g														142			4	S									24" APC	2.68′ R+ M 265+00 TO 5.59′ R+ M 266+42.25			g
	h						1																	1		326		ADJUST INLET TO GRADE, G2 INLET	5.57′ R+ M 266+42.25			h
	i							1																1		326		MODIFY INLET	54.49′ L+ "m" 266+40.65			i
	j													50				3.1	S									18" APC	54.49′ L+ "m" 266+40.65 TO 54.44′ L+ M 265+90			j
	k						1																1.67	2		652	4.4	G2 INLET	54.44′ L+ M 265+90			k
	l													90				3.2	S									18" APC	54.44′ L+ M 265+90 TO 54.48′ L+ M 265+00			l
	m						1																1.64	2		652	4.3	G2 INLET	54.48′ L+ M 265+00			m
	n						1																1.72	2		652	4.6	G2 INLET	54.21′ L+ M 266+85			n
	o			6																								REMOVE CULVERT (PORTION)	54.21′ L+ M 266+85			o
	p						1																1.69	2		652	4.5	G2 INLET	54.17′ L+ M 267+25			p
	q			6																								REMOVE CULVERT (PORTION)	54.17′ L+ M 267+25			q
	r							1																2		652		MODIFY INLET	54.11′ L+ M 267+57.25			r
SHEET TOTAL		298.1		12	2		10	2	1		26.54			145	298								13.39			7607						

STATE OF CALIFORNIA - DEPARTMENT OF TRANSPORTATION
Caltrans
HYDRAULICS

FUNCTIONAL SUPERVISOR: EDMUNG CHOY
CALCULATED-DESIGNED BY: NAM NGO
CHECKED BY: NAM NGO
REVISED BY
DATE REVISED

DRAINAGE QUANTITIES DQ-2

LAST REVISION 06-07-11
DATE PLOTTED => 22-JUN-2011
TIME PLOTTED => 13:13

Dist	COUNTY	ROUTE	POST MILES TOTAL PROJECT	SHEET No.	TOTAL SHEETS
04	Ala	880	28.2/29.9	66	183

REGISTERED CIVIL ENGINEER 3-23-11 DATE

6-20-11
PLANS APPROVAL DATE

REGISTERED PROFESSIONAL ENGINEER Kenneth D. Nhieu No. 55948 Exp. 2-31-12 CIVIL STATE OF CALIFORNIA

THE STATE OF CALIFORNIA OR ITS OFFICERS OR AGENTS SHALL NOT BE RESPONSIBLE FOR THE ACCURACY OR COMPLETENESS OF SCANNED COPIES OF THIS PLAN SHEET.

DRAINAGE QUANTITIES

DRAINAGE SYSTEM No.	DRAINAGE UNIT	ABANDON CULVERT (LF)	ABANDON INLET (EA)	REMOVE CULVERT (LF)	REMOVE INLET (EA)	CAP INLET (EA)	ADJUST INLET TO GRADE (EA)	MODIFY INLET (EA)	MODIFY INLET TO MANHOLE (EA)	ADJUST MANHOLE TO GRADE (EA)	SAND BACKFILL (CY)	DITCH EXCAVATION (CY)	APC 12" (LF)	APC 18" (LF)	APC 24" (LF)	18" SCSP (0.079" THICK) (LF)	12" AFES (EA)	[N] MAXIMUM COVER (LF)	[N] PIPE JOINT CLASSIFICATION	[N] CONCRETE COLLAR (EA)	[N] END CAP (EA)	CONCRETE BACKFILL (RSC) (CY)	MINOR CONCRETE (MINOR STRUCTURE) (CY)	[N] FRAME & GRATE (TYPE 24-12) (EA)	[N] U45 MANHOLE FRAME & COVER (EA)	Misc IRON AND STEEL (LB)	[N] HEIGHT OF INLET (LF)	DESCRIPTION	STATION	DRAINAGE PLAN SHEET No.	DRAINAGE SYSTEM No.	DRAINAGE UNIT
6	a						1																1.69	2		652	4.5	G2 INLET	57.00′ L+ M 270+40	D-3	6	a
	b													123				3	S									18" APC	57.00′ L+ M 270+40 TO 55.03′ L+ M 269+17.40			b
	c							1																1		326		MODIFY INLET	55.03′ L+ M 269+17.40			c
	d						1																1.59	2		652	4.1	G2 INLET	54.15′ L+ M 268+90			d
	e			6																								REMOVE CULVERT (PORTION)	54.15′ L+ M 268+90			e
	f						1																1.04	2		652	3.4	G1 INLET	2.55′ R+ M 268+00			f
	g													73				1.9	S									18" APC	2.55′ R+ M 268+00 TO 2.66′ R+ M 268+73			g
	h						1																1.87	4		1304	3.4	GT3 INLET W/O CURB	2.66′ R+ M 268+73			h
	i													77				2.2	S									18" APC	2.66′ R+ M 268+73 TO 2.80′ R+ M 269+50			i
	j						1																1.97	4		1304	3.7	GT3 INLET W/O CURB	2.80′ R+ M 269+50			j
	k													50				3.1	S									18" APC	2.80′ R+ M 269+50 TO 2.91′ R+ M 270+00			k
	l						1																	1		326		ADJUST INLET TO GRADE, G2 INLET	2.91′ R+ M 270+00			l
7	a						1																1.62	2		652	4.2	G2 INLET	1.08′ R+ M 271+60	D-3	7	a
	b													80				2.8	S									18" APC	1.08′ R+ M 271+60 TO 0.94′ R+ M 272+40	D-3		b
	c						1																1.64	2		652	4.3	G2 INLET	0.94′ R+ M 272+40	D-4		c
	d													80				2.9	S									18" APC	0.94′ R+ M 272+40 TO 0.75′ R+ M 273+20			d
	e						1																1.67	2		652	4.4	G2 INLET	0.75′ R+ M 273+20			e
	f													82				3.1	S									18" APC	0.75′ R+ M 273+20 TO 0.70′ R+ M 274+02			f
	g						1																1.72	2		652	4.6	G2 INLET	0.70′ R+ M 274+02			g
	h				1																						3.9	REMOVE INLET	0.70′ R+ M 274+02			h
	i			6																								REMOVE CULVERT (PORTION)	0.68′ R+ M 274+50			i
	j						1																1.62	2		652	4.2	G2 INLET	0.68′ R+ M 274+50			j
	k			6																								REMOVE CULVERT (PORTION)	0.70′ R+ M 275+00			k
	l						1																1.62	2		652	4.2	G2 INLET	0.70′ R+ M 275+00			l
	m						1																1.59	2		652	4.1	G2 INLET	1.03′ R+ M 275+50			m
	n			6																								REMOVE CULVERT (PORTION)	1.03′ R+ M 275+50			n
	o						1																	1		326		ADJUST INLET TO GRADE, G2 INLET	1.04′ R+ M 276+00			o
	p													50				2.9	S									18" APC	1.04′ R+ M 276+00 TO 1.33′ R+ M 276+50			p
	q						1																1.65	2		652	4.4	G2 INLET	1.33′ R+ M 276+50			q
	r													50				2.9	S									18" APC	1.33′ R+ M 276+50 TO 1.53′ R+ M 277+00			r
	s						1																1.62	2		652	4.2	G2 INLET	1.53′ R+ M 277+00			s
SHEET TOTAL				24	1		16	1						665									22.91			11410						

DRAINAGE QUANTITIES DQ-3

STATE OF CALIFORNIA - DEPARTMENT OF TRANSPORTATION
Caltrans HYDRAULICS

FUNCTIONAL SUPERVISOR: EDMUND CHOY
CALCULATED-DESIGNED BY: NAM NGO
CHECKED BY: NAM NGO
REVISED BY
DATE REVISED

LAST REVISION 06-07-11
DATE PLOTTED => 22-JUN-2011
TIME PLOTTED => 13:13

Dist	COUNTY	ROUTE	POST MILES TOTAL PROJECT	SHEET No.	TOTAL SHEETS
04	Ala	880	28.2/29.9	67	183

REGISTERED CIVIL ENGINEER 3-23-11 DATE

6-20-11
PLANS APPROVAL DATE

REGISTERED PROFESSIONAL ENGINEER Kenneth D. Nhieu No. 55948 Exp. 12-31-12 CIVIL STATE OF CALIFORNIA

THE STATE OF CALIFORNIA OR ITS OFFICERS OR AGENTS SHALL NOT BE RESPONSIBLE FOR THE ACCURACY OR COMPLETENESS OF SCANNED COPIES OF THIS PLAN SHEET.

DRAINAGE QUANTITIES

DRAINAGE SYSTEM No.	DRAINAGE UNIT	ABANDON CULVERT (LF)	ABANDON INLET (EA)	REMOVE CULVERT (LF)	REMOVE INLET (EA)	CAP INLET (EA)	ADJUST INLET TO GRADE (EA)	MODIFY INLET (EA)	MODIFY INLET TO MANHOLE (EA)	ADJUST MANHOLE TO GRADE (EA)	SAND BACKFILL (CY)	DITCH EXCAVATION (CY)	APC 12" (LF)	APC 18" (LF)	APC 24" (LF)	18" SCSP (0.079" THICK) (LF)	12" AFES (EA)	[N] MAXIMUM COVER (LF)	[N] PIPE JOINT CLASSIFICATION	[N] CONCRETE COLLAR (EA)	[N] END CAP (EA)	CONCRETE BACKFILL (RSC) (CY)	MINOR CONCRETE (MINOR STRUCTURE) (CY)	[N] FRAME & GRATE (TYPE 24-12) (EA)	[N] U45 MANHOLE FRAME & COVER (EA)	Misc IRON AND STEEL (LB)	[N] HEIGHT OF INLET (LF)	DESCRIPTION	STATION	DRAINAGE PLAN SHEET No.	DRAINAGE SYSTEM No.	DRAINAGE UNIT
8	a						1																1.62	2		652	4.2	G2 INLET	60.76′ L+ M 272+00	D-4	8	a
	b													80				3	S									18" APC	60.76′ L+ M 272+00 61.21′ L+ M 272+80			b
	c						1																1.69	2		652	4.5	G2 INLET	61.21′ L+ M 272+80			c
	d													90				3	S									18" APC	61.21′ L+ M 272+80 TO 61.38′ L+ M 273+70			d
	e						1																1.69	2		652	4.5	G2 INLET	61.38′ L+ M 273+70			e
	f													120				3	S									18" APC	61.38′ L+ M 273+70 TO 61.13′ L+ M 274+90			f
	g						1																1.67	2		652	4.4	G2 INLET	61.13′ L+ M 274+90			g
	h													50				2.9	S									18" APC	61.13′ L+ M 274+90 TO 61.10′ L+ M 275+40			h
	i						1																1.67	2		652	4.4	G2 INLET	61.10′ L+ M 275+40			i
	j													61				2.9	S									18" APC	61.10′ L+ M 275+40 TO 60.75′ L+ M 276+01			j
	k			6	1																						3.7	REMOVE INLET AND 12" CULVERT	60.75′ L+ M 276+01			k
	l						1																1.77	2		652	4.8	G2 INLET	60.75′ L+ M 276+01			l
	m				1																						4.1	REMOVE INLET	60.75′ L+ M 276+01			m
	n													8				3.6	S	1								18" APC W/ CONCRETE COLLAR	60.75′ L+ M 276+01 TO 58.00′ L+ M 276+01			n
	o			253																								REMOVE CULVERT	60.75′ L+ M 276+01 TO 60.67′ L+ M 278+54			o
	p														49			3.6	S									24" APC	58.00′ L+ M 276+01 to 60.68′ L+ M 276+50			p
	q						1																1.82	2		652	5.0	G2 INLET	60.68′ L+ M 276+50			q
	r														50			3.6	S									24" APC	60.68′ L+ M 276+50 TO 60.70′ L+ M 277+00			r
	s						1																1.79	2		652	4.9	G2 INLET	60.70′ L+ M 277+00			s
	t														50			3.5	S									24" APC	60.70′ L+ M 277+00 TO 60.77′ L+ M 277+50			t
	u						1																1.82	2		652	5.0	G2 INLET	60.77′ L+ M 277+50			u
	v														50			3.6	S									24" APC	60.77′ L+ M 277+50 TO 60.66′ L+ M 278+00			v
	w						1																1.79	2		652	4.9	G2 INLET	60.66′ L+ M 278+00			w
	x														40			3.5	S									24" APC	60.66′ L+ M 278+00 TO 60.67′ L+ M 278+40			x
	y						1																1.79	2		652	4.9	G2 INLET	60.67′ L+ M 278+40			y
	z														14			3.6	S									24" APC	60.67′ L+ M 278+40 TO 60.60′ L+ M 278+54			z
8	aa						1																	1		326		ADJUST INLET TO GRADE, G2 INLET	60.60′ L+ M 278+54			aa
9	a						1																1.62	2		652	4.2	G2 INLET	70.38′ L+ M 284+00	D-4	9	a
	b													161				3.8	S									18" APC	70.38′ L+ M 284+00 TO 68.54′ L+ M 282+39			b
	c						1																1.72	2		652	4.6	G2 INLET	68.54′ L+ M 282+39			c
	d				1																						3.9	REMOVE INLET	68.54′ L+ M 282+39			d
	e													193.5				3.6	S									18" APC	68.54′ L+ M 282+39 TO 63.57′ L+ M 280+45.6			e
SHEET TOTAL				259	3		14							763.5	253								22.46			8802					

STATE OF CALIFORNIA - DEPARTMENT OF TRANSPORTATION

Caltrans® HYDRAULICS

FUNCTIONAL SUPERVISOR: EDMUND CHOY

CALCULATED-DESIGNED BY: NAM NGO

CHECKED BY: NAM NGO

REVISED BY

DATE REVISED

DATE PLOTTED => 22-JUN-2011
TIME PLOTTED => 13:08

LAST REVISION 06-07-11

DRAINAGE QUANTITIES DQ-4

Dist	COUNTY	ROUTE	POST MILES TOTAL PROJECT	SHEET No.	TOTAL SHEETS
04	Ala	880	28.2/29.9	68	183

REGISTERED CIVIL ENGINEER 3-23-11 DATE

6-20-11
PLANS APPROVAL DATE

REGISTERED PROFESSIONAL ENGINEER Kenneth D. Nhieu No. 55948 Exp. 12-31-12 CIVIL STATE OF CALIFORNIA

THE STATE OF CALIFORNIA OR ITS OFFICERS OR AGENTS SHALL NOT BE RESPONSIBLE FOR THE ACCURACY OR COMPLETENESS OF SCANNED COPIES OF THIS PLAN SHEET.

DRAINAGE QUANTITIES

DRAINAGE SYSTEM No.	DRAINAGE UNIT	ABANDON CULVERT (LF)	ABANDON INLET (EA)	REMOVE CULVERT (LF)	REMOVE INLET (EA)	CAP INLET (EA)	ADJUST INLET TO GRADE (EA)	MODIFY INLET (EA)	MODIFY INLET TO MANHOLE (EA)	ADJUST MANHOLE TO GRADE (EA)	SAND BACKFILL (CY)	DITCH EXCAVATION (CY)	APC 12" (LF)	APC 18" (LF)	APC 24" (LF)	18" SCSP (0.079" THICK) (LF)	12" AFES (EA)	[N] MAXIMUM COVER (LF)	[N] PIPE JOINT CLASSIFICATION	[N] CONCRETE COLLAR (EA)	[N] END CAP (EA)	CONCRETE BACKFILL (RSC) (CY)	MINOR CONCRETE (MINOR STRUCTURE) (CY)	[N] FRAME & GRATE (TYPE 24-12) (EA)	[N] U45 MANHOLE FRAME & COVER (EA)	Misc IRON AND STEEL (LB)	[N] HEIGHT OF INLET (LF)	DESCRIPTION	STATION	DRAINAGE PLAN SHEET No.	DRAINAGE SYSTEM No.	DRAINAGE UNIT
9	f						1																1.85	2		652	5.0	G2 INLET	63.57′ Lt M 280+45.6	D-4	9	f
	g				1																						4.3	REMOVE INLET	63.57′ Lt M 280+45.6			g
	h														8			3	S	1								24" APC W/ CONCRETE COLLAR	63.57′ Lt M 280+45.6			h
	i														65.6			3	S									24" APC	63.57′ Lt M 280+45.6 TO 62.45′ Lt M 279+80			i
	j						1																1.82	2		652	5	G2 INLET	62.45′ Lt M 279+80			j
	k														60.0			3	S									24" APC	62.45′ Lt M 279+80 TO 60.98′ Lt M 279+20			k
	l				1																						4.3	REMOVE INLET	61.00′ Lt M 279+40			l
	m						1																1.82	2		652	5	G2 INLET	60.98′ Lt M 279+20			m
	n														50			3.1	S									24" APC	60.98′ Lt M 279+20 TO 60.63′ Lt M 278+70			n
	o						1																1.85	2		652	5.1	G2 INLET	60.63′ Lt M 278+70			o
	p			2	1																						4.4	REMOVE INLET AND 12" CULVERT	60.63′ Lt M 278+70			p
	q														16			3.1	S									24" APC	60.63′ Lt M 278+70 TO 60.60 Lt M 278+54			q
	r			191.6																								REMOVE CULVERT	63.57′ Lt M 280+45.6 TO 60.60′ Lt M 278+54			r
10	a						1																1.51	2		652	3.8	G2 INLET	68.96′ Rt M 279+30	D-4	10	a
	b													74				2.4	S									18" APC	68.96′ Rt M 279+30 TO 66.83′ Rt M 278+56			b
	c						1																	1		326		ADJUST INLET TO GRADE, G2 INLET	66.83′ Rt M 278+56			c
	d			3	1																						3.8	REMOVE INLET AND 12" CULVERT	2.42′ Rt M 278+56			d
	e					1																						CAP INLET	1.92′ Lt " M" 278+56			e
	f	99									2.88																	ABANDON CULVERT	1.92′ Lt " M" 278+56 TO 1.92′ Lt M 279+55			f
	g				1																						3.8	REMOVE INLET	1.92′ Lt M 279+55			g
11	a						1																1.24	2		652	4.3	G1 INLET	71.65′ Rt M 285+09.9	D-4	11	a
	b												11					3.3	S									12" APC	71.65′ Rt M 285+09.9			b
	c																1											12" AFES	86.65′ Rt M 285+09.9			c
	d						1																	1		326		ADJUST INLET TO GRADE, G1 INLET	72.71′ Rt M 283+90			d
	e						1																1.02	2		652	3.3	G1 INLET	71.98′ Rt M 281+50			e
	f												22					3.3	S									12" APC	71.98′ Rt M 281+50			f
	g																1											12" AFES	97.98′ Rt M 281+50			g
	h						1																	1		326		ADJUST INLET TO GRADE, G2 INLET	71.20′ Rt M 280+52			h
	i											50.37											36.55					PCC DITCH	86.65′ Rt M 285+09.9 TO 88.97′ Rt M 280+00			i
	j						1																	1		326		ADJUST INLET TO GRADE, G1 INLET	70.58′ Rt M 280+00			j
	k			3	1																						5.0	REMOVE INLET AND 12" CULVERT	3.00′ Rt M 280+52			k
SHEET TOTAL		99		199.6	6	1	11				2.88	50.37	33	74	199.6		2						47.66			5868						

REVISED BY | DATE REVISED | NAM NGO | NAM NGO | CALCULATED-DESIGNED BY | CHECKED BY | FUNCTIONAL SUPERVISOR | EDMUND CHOY

STATE OF CALIFORNIA - DEPARTMENT OF TRANSPORTATION
Caltrans
HYDRAULICS

LAST REVISION 06-07-11 | DATE PLOTTED => 22-JUN-2011 | TIME PLOTTED => 13:08

Dist	COUNTY	ROUTE	POST MILES TOTAL PROJECT	SHEET No.	TOTAL SHEETS
04	Ala	880	28.2/29.9	69	183

REGISTERED CIVIL ENGINEER 3-23-11 DATE

6-20-11
PLANS APPROVAL DATE

REGISTERED PROFESSIONAL ENGINEER Kenneth D. Nhieu No. 55948 Exp. 12-31-12 CIVIL STATE OF CALIFORNIA

THE STATE OF CALIFORNIA OR ITS OFFICERS OR AGENTS SHALL NOT BE RESPONSIBLE FOR THE ACCURACY OR COMPLETENESS OF SCANNED COPIES OF THIS PLAN SHEET.

DRAINAGE QUANTITIES

DRAINAGE SYSTEM No.	DRAINAGE UNIT	ABANDON CULVERT (LF)	ABANDON INLET (EA)	REMOVE CULVERT (LF)	REMOVE INLET (EA)	CAP INLET (EA)	ADJUST INLET TO GRADE (EA)	MODIFY INLET (EA)	MODIFY INLET TO MANHOLE (EA)	ADJUST MANHOLE TO GRADE (EA)	SAND BACKFILL (CY)	DITCH EXCAVATION (CY)	APC 12" (LF)	APC 18" (LF)	APC 24" (LF)	18" SCSP (0.079" THICK) (LF)	12" AFES (EA)	[N] MAXIMUM COVER (LF)	[N] PIPE JOINT CLASSIFICATION	[N] CONCRETE COLLAR (EA)	[N] END CAP (EA)	CONCRETE BACKFILL (RSC) (CY)	MINOR CONCRETE (MINOR STRUCTURE) (CY)	[N] FRAME & GRATE (TYPE 24-12) (EA)	[N] U45 MANHOLE FRAME & COVER (EA)	Misc IRON AND STEEL (LB)	[N] HEIGHT OF INLET (LF)	DESCRIPTION	STATION	DRAINAGE PLAN SHEET No.	DRAINAGE SYSTEM No.	DRAINAGE UNIT
11	l								1																1	435		MODIFY INLET TO MANHOLE	2.00′ Lt M 280+52	D-4	11	l
	m	187									5.44																	ABANDON CULVERT	2.00′ Lt M 280+52 TO 2.00′ Lt M 282+39			m
	n			2	1																						5	REMOVE INLET AND 12" CULVERT	2.00′ Rt M 282+39			n
	o	141									9.22																	ABANDON CULVERT	2.00′ Lt M 282+39 TO 2.00′ Lt M 283+80			o
	p			3	1																						5	REMOVE INLET AND 12" CULVERT	3.00′ Rt M 283+80			p
	q		1																									ABANDON INLET				q
	r		1																									ABANDON INLET	2.00′ Lt M 282+39			r
	s	73									4.78																	ABANDON CULVERT	2.00′ Lt M 282+39 TO 75.00′ Lt M 282+39			s
12	a						1																	1		326		ADJUST INLET TO GRADE, G2 INLET	1.17′ Rt M 290+01.4	D-5	12	a
	b												51				3	S										18" APC	1.17′ Rt M 290+01.4 TO 0.83′ Rt M 289+50			b
	c						1																1.67	2		652	4.4	G2 INLET	0.83′ Rt M 289+50			c
	d														86			W			6.08							18" SCSP W/ CONCRETE BACKFILL (RSC)	0.83′ Rt M 289+50 TO 1.11′ Rt M 288+64			d
	e												86				2.9	S										18" APC	0.83′ Rt M 289+50 TO 1.11′ Rt M 288+64			e
	f						1																1.64	2		652	4.3	G2 INLET	1.11′ Rt M 288+64			f
	g			136																								REMOVE CULVERT (136′)	1.18′ Rt M 290+01 TO 1.18′ Rt M 288+65			g
	h	120									7.85																	ABANDON CULVERT (120′)	2.15′ Lt M 287+40 TO 2.15′ Lt M 288+60			h
	i			2	1																						4.3	REMOVE INLET AND 12" CULVERT	2.00′ Rt M 287+40			i
	j	91									5.95																	ABANDON CULVERT	2.15′ Lt M 287+40 TO 3.00′ Rt M 286+49			j
	k		1																									ABANDON INLET	3.00′ Rt M 286+49			k
	l		1																									ABANDON INLET	2.15′ Lt M 287+40			l
	m	66									4.32																	ABANDON CULVERT	2.15′ Lt M 287+40 TO 68.38′ Lt M 287+40			m
	n		1																									ABANDON INLET	68.38′ Lt M 287+40			n
13	a						1																1.57	2		652	4	G2 INLET	69.90′ Lt M 287+48	D-5	13	a
	b												239				3.6	S										18" APC	69.90′ Lt M 287+48 TO 63.60′ Lt M 289+87			b
	c						1																	1		326		ADJUST INLET TO GRADE, G2 INLET	63.60′ Lt M 289+87			c
	d							1																1		326		MODIFY INLET	81.98′ Lt M 290+58.68			d
	e						1																1.43	2		652	3.7	G1 INLET	57.09′ Lt M 291+00			e
	f												37				2.5	S										18" APC	57.09′ Lt M 291+00 TO 58.70′ Lt M 291+40			f
	g						1																1.57	2		652	4.0	G2 INLET	58.70′ Lt M 291+40			g
	h																											NOT USED				h
	i												18				2.8	S			1.75							18" APC W/ CONCRETE BACKFILL (RSC)	58.70′ Lt M 291+40 TO 80.45′ Lt M 291+45			i
	j						1																2.10	2		652	6.1	G2 INLET	80.45′ Lt M 291+45			j
	k			6																								REMOVE CULVERT (PORTION)	80.45′ Lt M 291+45			k
	l							1																1		326		MODIFY INLET	77.35′ Lt M 292+77			l
SHEET TOTAL		678	5	149	3		8	2	1		37.56		431		86						7.83	9.98			5651							

NAM NGO | REVISED BY | DATE REVISED

NAM NGO | CALCULATED-DESIGNED BY | CHECKED BY

EDMUND CHOY | FUNCTIONAL SUPERVISOR

STATE OF CALIFORNIA - DEPARTMENT OF TRANSPORTATION

Caltrans® HYDRAULICS

DRAINAGE QUANTITIES DQ-6

LAST REVISION 06-09-11 | DATE PLOTTED => 22-JUN-2011 | TIME PLOTTED => 13:08

Dist	COUNTY	ROUTE	POST MILES TOTAL PROJECT	SHEET No.	TOTAL SHEETS
04	Ala	880	28.2/29.9	70	183

REGISTERED CIVIL ENGINEER 3-23-11 DATE

6-20-11
PLANS APPROVAL DATE

REGISTERED PROFESSIONAL ENGINEER Kenneth D. Nhieu No. 55948 Exp. 12-31-12 CIVIL STATE OF CALIFORNIA

THE STATE OF CALIFORNIA OR ITS OFFICERS OR AGENTS SHALL NOT BE RESPONSIBLE FOR THE ACCURACY OR COMPLETENESS OF SCANNED COPIES OF THIS PLAN SHEET.

DRAINAGE QUANTITIES

DRAINAGE SYSTEM No.	DRAINAGE UNIT	ABANDON CULVERT (LF)	ABANDON INLET (EA)	REMOVE CULVERT (LF)	REMOVE INLET (EA)	CAP INLET (EA)	ADJUST INLET TO GRADE (EA)	MODIFY INLET (EA)	MODIFY INLET TO MANHOLE (EA)	ADJUST MANHOLE TO GRADE (EA)	SAND BACKFILL (CY)	DITCH EXCAVATION (CY)	APC 12" (LF)	APC 18" (LF)	APC 24" (LF)	18" SCSP (0.079" THICK) (LF)	12" AFES (EA)	[N] MAXIMUM COVER (LF)	[N] PIPE JOINT CLASSIFICATION	[N] CONCRETE COLLAR (EA)	[N] END CAP (EA)	CONCRETE BACKFILL (RSC) (CY)	MINOR CONCRETE (MINOR STRUCTURE) (CY)	[N] FRAME & GRATE (TYPE 24-12) (EA)	[N] U45 MANHOLE FRAME & COVER (EA)	Misc IRON AND STEEL (LB)	[N] HEIGHT OF INLET (LF)	DESCRIPTION	STATION	DRAINAGE PLAN SHEET No.	DRAINAGE SYSTEM No.	DRAINAGE UNIT
14	a						1																1.51	2		652	3.8	G2 INLET	1.26′ R+ M 291+00	D-5	14	a
	b													50				2.3	S									18" APC	1.26′ R+ M 291+00 TO 1.25′ R+ M 291+50			b
	c						1																1.51	2		652	3.8	G2 INLET	1.25′ R+ M 291+50			c
	d													50				2.3	S									18" APC	1.25′ R+ M 291+50 TO 1.21′ R+ M 292+00			d
	e						1																1.51	2		652	3.8	G2 INLET	1.21′ R+ M 292+00			e
	f													50				2.4	S									18" APC	1.21′ R+ M 292+00 TO 1.21′ R+ M 292+50			f
	g						1																1.54	2		652	3.9	G2 INLET	1.21′ R+ M 292+50			g
	h													42.6				2.4	S									18" APC	1.21′ R+ M 292+50 TO 0.99′ R+ M 292+92.6			h
	i						1																	1		326		ADJUST INLET TO GRADE, G2 INLET	0.99′ R+ M 292+92.6			i
	j			74.6																								REMOVE CULVERT	0.99′ R+ M 292+92.6 TO 1.20′ R+ M 292+18			j
	k				1																						3.9	REMOVE INLET	1.20′ R+ M 292+18			k
15	a						1																1.67	2		652	4.4	G2 INLET	0.89′ R+ M 293+50	D-5	15	a
	b															63.8			W			4.51						18" SCSP W/ CONCRETE BACKFILL (RSC)	0.89′ R+ M 293+50 TO 1.1′ R+ M 294+13.80			b
	c													63.8				3.4	S									18" APC	0.89′ R+ M 293+50 TO 1.1′ R+ M 294+13.80			c
	d				1																						4.2	REMOVE INLET	1.1′ R+ M 294+13.80			d
	e						1																1.79	2		652	4.9	G2 INLET	1.1′ R+ M 294+13.80			e
	f															52			W			3.68						18" SCSP W/ CONCRETE BACKFILL (RSC)	1.1′ R+ M 294+13.80 TO 1.26′ R+ M 294+65.8			f
	g													52				3.4	S									18" APC	1.1′ R+ M 294+13.80 TO 1.26′ R+ M 294+65.8			g
	h						1																1.74	2		652	4.7	G2 INLET	1.26′ R+ M 294+65.8			h
	i															73.9			W			5.23						18" SCSP W/ CONCRETE BACKFILL (RSC)	1.26′ R+ M 294+65.8 TO 1.02′ R+ M 295+39.7			i
	j				1																						4.2	REMOVE INLET	1.02′ R+ M 295+39.7			j
	k						1																1.79	2		652	4.9	G2 INLET	1.02′ R+ M 295+39.7			k
	l															48.3			W			3.42						18" SCSP W/ CONCRETE BACKFILL (RSC)	1.02′ R+ M 295+39.7 TO 1.16′ R+ M 295+88			l
	m													48.3				3.4	S									18" APC	1.02′ R+ M 295+39.7 TO 1.16′ R+ M 295+88			m
	n						1																1.74	2		652	4.7	G2 INLET	1.16′ R+ M 295+88			n
SHEET TOTAL				74.6	3		10							356.7		238						16.84	14.8			6194						

REVISED BY | DATE REVISED

NAM NGO | NAM NGO

CALCULATED-DESIGNED BY | CHECKED BY

FUNCTIONAL SUPERVISOR | EDMUND CHOY

STATE OF CALIFORNIA - DEPARTMENT OF TRANSPORTATION

Caltrans® HYDRAULICS

DRAINAGE QUANTITIES DQ-7

LAST REVISION 06-07-11 | DATE PLOTTED => 22-JUN-2011 | TIME PLOTTED => 13:08

Dist	COUNTY	ROUTE	POST MILES TOTAL PROJECT	SHEET No.	TOTAL SHEETS
04	Ala	880	28.2/29.9	71	183

REGISTERED CIVIL ENGINEER 3-23-11 DATE

6-20-11
PLANS APPROVAL DATE

REGISTERED PROFESSIONAL ENGINEER Kenneth D. Nhieu No. 55948 Exp. 12-31-12 CIVIL STATE OF CALIFORNIA

THE STATE OF CALIFORNIA OR ITS OFFICERS OR AGENTS SHALL NOT BE RESPONSIBLE FOR THE ACCURACY OR COMPLETENESS OF SCANNED COPIES OF THIS PLAN SHEET.

DRAINAGE QUANTITIES

DRAINAGE SYSTEM No.	DRAINAGE UNIT	ABANDON CULVERT (LF)	ABANDON INLET (EA)	REMOVE CULVERT (LF)	REMOVE INLET (EA)	CAP INLET (EA)	ADJUST INLET TO GRADE (EA)	MODIFY INLET (EA)	MODIFY INLET TO MANHOLE (EA)	ADJUST MANHOLE TO GRADE (EA)	SAND BACKFILL (CY)	DITCH EXCAVATION (CY)	APC 12" (LF)	APC 18" (LF)	APC 24" (LF)	18" SCSP (0.079" THICK) (LF)	12" AFES (EA)	[N] MAXIMUM COVER (LF)	[N] PIPE JOINT CLASSIFICATION	[N] CONCRETE COLLAR (EA)	[N] END CAP (EA)	CONCRETE BACKFILL (RSC) (CY)	MINOR CONCRETE (MINOR STRUCTURE) (CY)	[N] FRAME & GRATE (TYPE 24-12) (EA)	[N] U45 MANHOLE FRAME & COVER (EA)	Misc IRON AND STEEL (LB)	[N] HEIGHT OF INLET (LF)	DESCRIPTION	STATION	DRAINAGE PLAN SHEET No.	DRAINAGE SYSTEM No.	DRAINAGE UNIT
16	a															47.5			W			3.36						18" SCSP W/ CONCRETE BACKFILL (RSC)	1.16' R+ M 295+88 TO 1.05' R+ M 296+35.5	D-5	16	a
	b						1																1.77	2		652	4.8	G2 INLET	1.05' R+ M 296+35.5			b
	c				1																						4.1	REMOVE INLET	1.05' R+ M 296+35.5			c
	d															50.5			W			3.57						18" SCSP W/ CONCRETE BACKFILL (RSC)	1.05' R+ M 296+35.5 TO 1.03' R+ M 296+86			d
	e						1																1.69	2		652	4.5	G2 INLET	1.03' R+ M 296+86			e
	f															52.2			W			3.69						18" SCSP W/ CONCRETE BACKFILL (RSC)	1.03' R+ M 296+86 TO 1.14' R+ M 297+38.2			f
	g						1																1.74	2		652	4.7	G2 INLET	1.14' R+ M 297+38.2			g
	h				1																						4.0	REMOVE INLET	1.14' R+ M 297+38.2			h
	i															47.8			W			3.38						18" SCSP W/ CONCRETE BACKFILL (RSC)	1.14' R+ M 297+38.2 TO 1.06' R+ M 297+86			i
	j				1																						4.1	REMOVE INLET	1.17' R+ M 298+37.6			j
	k						1																2.87	4		1304	4.8	GT4 INLET W/O CURB	1.17' R+ M 298+37.6			k
	l															74.1			W			5.24						18" SCSP W/ CONCRETE BACKFILL (RSC)	1.17' R+ M 298+37.6 TO 1.25' R+ M 299+11.72			l
	m												74.1					3.3	S									18" APC	1.17' R+ M 298+37.6 TO 1.25' R+ M 299+11.72			m
	n						1																1.77	2		652	4.8	G2 INLET	1.25' R+ M 299+11.72	D-6		n
	o												50.5					3.3	S									18" APC	1.05' R+ M 296+35.5 TO 1.03' R+ M 296+86	D-5		o
	p												47.8					3.2	S									18" APC	1.14' R+ M 297+38.2 TO 1.06' R+ M 297+86			p
	q															51.6			W			3.65						18" SCSP W/ CONCRETE BACKFILL (RSC)	1.06' R+ M 297+86 TO 1.17' R+ M 298+37.6			q
	r												69.8					3.3	S									18" APC	1.25' R+ M 299+11.72 TO 1.01' R+ M 299+81.5	D-6		r
	s															69.8			W			4.94						18" SCSP W/ CONCRETE BACKFILL (RSC)	1.25' R+ M 299+11.72 TO 1.01' R+ M 299+81.5			s
	t						1																1.72	2		652	4.6	G2 INLET	1.01' R+ M 299+81.5			t
	u												70					3.1	S									18" APC	1.01' R+ M 299+81.5 TO 0.90' R+ M 300+51.5			u
	v															70			W			4.95						18" SCSP W/ CONCRETE BACKFILL (RSC)	1.01' R+ M 299+81.5 TO 0.90' R+ M 300+51.5			v
	w						1																1.72	2		652	4.6	G2 INLET	0.90' R+ M 300+51.5			w
	x															50			W			3.54						18" SCSP W/ CONCRETE BACKFILL (RSC)	0.90' R+ M 300+51.5 TO 0.92' R+ M 301+01.5			x
	y												50					3.1	S									18" APC	0.90' R+ M 300+51.5 TO 0.92' R+ M 301+01.5			y
	z						1																1.67	2		652	4.4	G2 INLET	0.92' R+ M 301+01.5			z
	aa															25.5			W		1	1.80						18" SCSP W/ END CAP AND CONC BKFL (RSC)	0.92' R+ M 301+01.5 TO 301+27			aa
	bb						1																1.69	2		652	4.5	G2 INLET	1.06' R+ M 297+86	D-5		bb
SHEET TOTAL					3		9						362.2			539						38.12	16.64			6520						

STATE OF CALIFORNIA - DEPARTMENT OF TRANSPORTATION

Caltrans® HYDRAULICS

FUNCTIONAL SUPERVISOR: EDMUND CHOY

CALCULATED-DESIGNED BY: NAM NGO

CHECKED BY: NAM NGO

REVISED BY

DATE REVISED

LAST REVISION 06-07-11

DATE PLOTTED => 22-JUN-2011
TIME PLOTTED => 13:09

Dist	COUNTY	ROUTE	POST MILES TOTAL PROJECT	SHEET No.	TOTAL SHEETS
04	Ala	880	28.2/29.9	72	183

REGISTERED CIVIL ENGINEER 3-23-11 DATE

6-20-11
PLANS APPROVAL DATE

REGISTERED PROFESSIONAL ENGINEER Kenneth D. Nhieu No. 55948 Exp. 12-31-12 CIVIL STATE OF CALIFORNIA

THE STATE OF CALIFORNIA OR ITS OFFICERS OR AGENTS SHALL NOT BE RESPONSIBLE FOR THE ACCURACY OR COMPLETENESS OF SCANNED COPIES OF THIS PLAN SHEET.

DRAINAGE QUANTITIES

DRAINAGE SYSTEM No.	DRAINAGE UNIT	ABANDON CULVERT (LF)	ABANDON INLET (EA)	REMOVE CULVERT (LF)	REMOVE INLET (EA)	CAP INLET (EA)	ADJUST INLET TO GRADE (EA)	MODIFY INLET (EA)	MODIFY INLET TO MANHOLE (EA)	ADJUST MANHOLE TO GRADE (EA)	SAND BACKFILL (CY)	DITCH EXCAVATION (CY)	APC 12" (LF)	APC 18" (LF)	APC 24" (LF)	18" SCSP (0.079" THICK) (LF)	12" AFES (EA)	[N] MAXIMUM COVER (LF)	[N] PIPE JOINT CLASSIFICATION	[N] CONCRETE COLLAR (EA)	[N] END CAP (EA)	CONCRETE BACKFILL (RSC) (CY)	MINOR CONCRETE (MINOR STRUCTURE) (CY)	[N] FRAME & GRATE (TYPE 24-12) (EA)	[N] U45 MANHOLE FRAME & COVER (EA)	Misc IRON AND STEEL (LB)	[N] HEIGHT OF INLET (LF)	DESCRIPTION	STATION	DRAINAGE PLAN SHEET No.	DRAINAGE SYSTEM No.	DRAINAGE UNIT
17	a							1																1		326		MODIFY INLET	76.70' Lt M 292+98.5	D-5	17	a
	b							1																1		326		MODIFY INLET	73.54' Lt M 294+14			b
	c							1																1		326		MODIFY INLET	71.18 Lt M 295+39			c
	d							1																1		326		MODIFY INLET	70.11 Lt M 296+37.4			d
	e							1																1		326		MODIFY INLET	66.78 Lt M 297+37.85			e
	f							1																1		326		MODIFY INLET	59.85' Lt M 298+38.87			f
18	a															25			W		1	1.77						18" SCSP W/ END CAP AND CONC BKFL (RSC)	1.00' Rt M 302+12 TO 1.00' Rt M 302+37	D-6	18	a
	b						1																1.72	2		652	4.6	G2 INLET	1.00' Rt M 302+37			b
	c													50.5				3.4	S									18" APC	1.00' Rt M 302+37 TO 1.00' Rt M 302+87.5			c
	d															50.5			W			3.57						18" SCSP W/ CONCRETE BACKFILL (RSC)	1.00' Rt M 302+37 TO 1.00' Rt M 302+87.5			d
	e				1																						4.0	REMOVE INLET	1.00' Rt M 302+87.5			e
	f						1																1.72	2		652	4.6	G2X INLET	1.00' Rt M 302+87.5			f
	g															79.7			W			5.64						18" SCSP W/ CONCRETE BACKFILL (RSC)	1.00' Rt M 302+87.5 TO 1.00' Rt M 303+67.2			g
	h						1																1.69	2		652	4.5	G2 INLET	1.00' Rt M 303+67.2			h
	i															70			W			4.95						18" SCSP W/ CONCRETE BACKFILL (RSC)	1.00' Rt M 303+67.2 TO 1.00' Rt M 304+37.2			i
	j													70				3	S									18" APC	1.00' Rt M 303+67.2 TO 1.00' Rt M 304+37.2			j
	k				1																						3.8	REMOVE INLET	1.00' Rt M 304+37.2			k
	l						1																1.69	2		652	4.5	G2X INLET	1.00' Rt M 304+37.2			l
	m															80.8			W			5.71						18" SCSP W/ CONCRETE BACKFILL (RSC)	1.00' Rt M 304+37.2 TO 1.00' Rt M 305+18			m
	n						1																1.64	2		652	4.3	G2 INLET	1.00' Rt M 305+18			n
	o													70				3	S									18" APC	1.00' Rt M 305+18 TO 1.00' Rt M 305+88			o
	p															70			W			4.95						18" SCSP W/ CONCRETE BACKFILL (RSC)	1.00' Rt M 305+18 TO 1.00' Rt M 305+88			p
	q				1																						3.8	REMOVE INLET	1.00' Rt M 305+88			q
	r						1																1.67	2		652	4.4	G2X INLET	1.00' Rt M 305+88			r
	s													4.5				3.6	S									18" APC THROUGH WALL	53.19' Rt M 305+90			s
	t									1															1	435		ADJUST MANHOLE TO GRADE	53.19' Rt M 305+90			t
	u						1																1.64	2		652	4.3	G2 INLET	1.00' Rt M 306+64.7			u
	v															74.3			W			5.25						18" SCSP W/ CONCRETE BACKFILL (RSC)	1.00' Rt M 306+64.7 TO 1.50' Rt M 307+39			v
	w													74.3				2.8	S									18" APC	1.00' Rt M 306+64.7 TO 1.50' Rt M 307+39			w
	x															76.7			W			5.42						18" SCSP W/ CONCRETE BACKFILL (RSC)	1.00' Rt M 305+88 TO 1.00' Rt M 306+64.7			x
SHEET TOTAL					3		7	6		1				269.3		527						37.26	11.77			6955						

REVISED BY | DATE REVISED

NAM NGO | NAM NGO

CALCULATED-DESIGNED BY | CHECKED BY

FUNCTIONAL SUPERVISOR: EDMUND CHOY

STATE OF CALIFORNIA - DEPARTMENT OF TRANSPORTATION

Caltrans® HYDRAULICS

DRAINAGE QUANTITIES DQ-9

LAST REVISION 06-07-11 | DATE PLOTTED => 22-JUN-2011 | TIME PLOTTED => 13:09

Dist	COUNTY	ROUTE	POST MILES TOTAL PROJECT	SHEET No.	TOTAL SHEETS
04	Ala	880	28.2/29.9	73	183

REGISTERED CIVIL ENGINEER 3-23-11 DATE

6-20-11
PLANS APPROVAL DATE

REGISTERED PROFESSIONAL ENGINEER Kenneth D. Nhieu No. 55948 Exp. 12-31-12 CIVIL STATE OF CALIFORNIA

THE STATE OF CALIFORNIA OR ITS OFFICERS OR AGENTS SHALL NOT BE RESPONSIBLE FOR THE ACCURACY OR COMPLETENESS OF SCANNED COPIES OF THIS PLAN SHEET.

DRAINAGE QUANTITIES

DRAINAGE SYSTEM No.	DRAINAGE UNIT	ABANDON CULVERT (LF)	ABANDON INLET (EA)	REMOVE CULVERT (LF)	REMOVE INLET (EA)	CAP INLET (EA)	ADJUST INLET TO GRADE (EA)	MODIFY INLET (EA)	MODIFY INLET TO MANHOLE (EA)	ADJUST MANHOLE TO GRADE (EA)	SAND BACKFILL (CY)	DITCH EXCAVATION (CY)	APC 12" (LF)	APC 18" (LF)	APC 24" (LF)	18" SCSP (0.079" THICK) (LF)	12" AFES (EA)	[N] MAXIMUM COVER (LF)	[N] PIPE JOINT CLASSIFICATION	[N] CONCRETE COLLAR (EA)	[N] END CAP (EA)	CONCRETE BACKFILL (RSC) (CY)	MINOR CONCRETE (MINOR STRUCTURE) (CY)	[N] FRAME & GRATE (TYPE 24-12) (EA)	[N] U45 MANHOLE FRAME & COVER (EA)	Misc IRON AND STEEL (LB)	[N] HEIGHT OF INLET (LF)	DESCRIPTION	STATION	DRAINAGE PLAN SHEET No.	DRAINAGE SYSTEM No.	DRAINAGE UNIT
19	a							1																1		326		MODIFY INLET	54.09' Lt M 302+86.75	D-6	19	a
	b							1																1		326		MODIFY INLET	58.42' Lt M 304+38.19			b
	c							1																1		326		MODIFY INLET	62.61' Lt M 305+86.41			c
	d							1																1		326		MODIFY INLET	65.48' Lt M 307+36.62			d
	e			6																								REMOVE CULVERT (PORTION)	68.34' Lt M 309+00			e
	f						1																1.57	2		652	4	G2 INLET	68.34' Lt M 309+00			f
	g							1																1		326		MODIFY INLET	69.38' Lt M 309+85			g
	h							1																1		326		MODIFY INLET	69.00' Lt M 310+36			h
SHEET TOTAL				6			1	6															1.57			2608						

STATE OF CALIFORNIA - DEPARTMENT OF TRANSPORTATION

Caltrans

HYDRAULICS

FUNCTIONAL SUPERVISOR: EDMUND CHOY

CALCULATED-DESIGNED BY: NAM NGO

CHECKED BY: NAM NGO

REVISED BY

DATE REVISED

DRAINAGE QUANTITIES DQ-10

LAST REVISION 06-07-11

DATE PLOTTED => 22-JUN-2011
TIME PLOTTED => 13:09

Dist	COUNTY	ROUTE	POST MILES TOTAL PROJECT	SHEET No.	TOTAL SHEETS
04	Ala	880	28.2/29.9	74	183

REGISTERED CIVIL ENGINEER 3-23-11 DATE

6-20-11
PLANS APPROVAL DATE

REGISTERED PROFESSIONAL ENGINEER Kenneth D. Nhieu No. 55948 Exp. 12-31-12 CIVIL STATE OF CALIFORNIA

THE STATE OF CALIFORNIA OR ITS OFFICERS OR AGENTS SHALL NOT BE RESPONSIBLE FOR THE ACCURACY OR COMPLETENESS OF SCANNED COPIES OF THIS PLAN SHEET.

DRAINAGE QUANTITIES

DRAINAGE SYSTEM No.	DRAINAGE UNIT	ABANDON CULVERT	ABANDON INLET	REMOVE CULVERT	REMOVE INLET	CAP INLET	ADJUST INLET TO GRADE	MODIFY INLET	MODIFY INLET TO MANHOLE	ADJUST MANHOLE TO GRADE	SAND BACKFILL	DITCH EXCAVATION	APC 12"	APC 18"	APC 24"	18" SCSP (0.079" THICK)	12" AFES	[N] MAXIMUM COVER	[N] PIPE JOINT CLASSIFICATION	[N] CONCRETE COLLAR	[N] END CAP	CONCRETE BACKFILL (RSC)	MINOR CONCRETE (MINOR STRUCTURE)	[N] FRAME & GRATE (TYPE 24-12)	[N] U45 MANHOLE FRAME & COVER	MISC IRON AND STEEL	[N] HEIGHT OF INLET	DESCRIPTION	STATION	DRAINAGE PLAN SHEET No.	DRAINAGE SYSTEM No.	DRAINAGE UNIT
		LF	EA	LF	EA						CY			LF			EA	LF		EA		CY		EA		LB	LF					
				80	1		19	1						380.2		70						4.95	13.60	30		9780		SUBTOTAL FROM SHEET DQ-01				
		298.1		12	2		10	2	1		26.54			145	298					1			13.39	22	1	7607		SUBTOTAL FROM SHEET DQ-02				
				24	1		16	1						665									22.91	35		11410		SUBTOTAL FROM SHEET DQ-03				
				259	3		14							763.5	253					1			22.46	28		8802		SUBTOTAL FROM SHEET DQ-04				
		99		199.6	6	1	11				2.88	50.37	33	74	199.6		2			1			47.66	18		5868		SUBTOTAL FROM SHEET DQ-05				
		678	5	149	3		8	2	1		37.56			431		86						7.83	9.98	16	1	5651		SUBTOTAL FROM SHEET DQ-06				
				74.6	3		10							356.7		238						16.84	14.80	19		6194		SUBTOTAL FROM SHEET DQ-07				
					3		9							362.2		539					1	38.12	16.64	20		6520		SUBTOTAL FROM SHEET DQ-08				
					3		7	6		1				269.3		527					1	37.26	11.77	20	1	6955		SUBTOTAL FROM SHEET DQ-09				
				6			1	6															1.57	8		2608		SUBTOTAL FROM SHEET DQ-10				
SHEET TOTAL		1075.1	5	804.2	25	1	105	18	2	1	66.98	50.37	33	3446.9	750.6	1460	2					105	174.78			71395						

REVISED BY | DATE REVISED

NAM NGO | NAM NGO

CALCULATED-DESIGNED BY | CHECKED BY

FUNCTIONAL SUPERVISOR: EDMUND CHOY

STATE OF CALIFORNIA - DEPARTMENT OF TRANSPORTATION

Caltrans® HYDRAULICS

DRAINAGE QUANTITIES DQ-11

LAST REVISION 06-09-11 | DATE PLOTTED => 22-JUN-2011 | TIME PLOTTED => 13:09

Dist	COUNTY	ROUTE	POST MILES TOTAL PROJECT	SHEET No.	TOTAL SHEETS
04	Ala	880	28.2/29.9	75	183

REGISTERED CIVIL ENGINEER 3-23-11 DATE

6-20-11
PLANS APPROVAL DATE

REGISTERED PROFESSIONAL ENGINEER K.D. Nhieu No. 55948 Exp. 12-31-12 CIVIL STATE OF CALIFORNIA

THE STATE OF CALIFORNIA OR ITS OFFICERS OR AGENTS SHALL NOT BE RESPONSIBLE FOR THE ACCURACY OR COMPLETENESS OF SCANNED COPIES OF THIS PLAN SHEET.

NOTE:

FOR ACCURATE RIGHT OF WAY DATA, CONTACT RIGHT OF WAY ENGINEERING AT THE DISTRICT OFFICE.

NOTES:

1. UTILITIES SHOWN ARE EXISTING AND LOCATIONS ARE APPROXIMATE EXCEPT AS NOTED.
2. LOCATIONS OF UTILITIES SHOWN ON THESE PLANS ARE APPROXIMATE AND SHALL BE VERIFIED BY THE CONTRACTOR.
3. ALL ELEVATIONS SHOWN REFER TO THE TOP OF PIPE ELEVATION FROM EXISTING SURFACE UNLESS OTHERWISE INDICATED.
4. SEE ELECTRICAL PLANS FOR EXISTING CALTRANS ELECTRICAL LINES.
5. VEHICLES OR EQUIPMENT EXCEEDING 10,000 LB SHALL NOT TRAVERSE OVER THE SANTA FE PACIFIC PIPELINE (SFPP) FUEL LINES.

LEGEND:

UTILITIES	EXISTING UTILITIES	OWNERSHIP
NATURAL GAS	g	PACIFIC GAS & ELECTRIC
OH ELECTRIC AND POLE	e (oh)	PACIFIC GAS & ELECTRIC
UG ELECTRIC	e	PACIFIC GAS & ELECTRIC
WATER	w	EBMUD
Exist INTERCEPTER (SEWER)	i	EBMUD
OH TELEPHONE	t (oh)	AT&T
UG TELEPHONE	t	AT&T
FUEL	gs	SANTA FE PACIFIC PIPE LINE (SFPP) /KINDER-MORGAN, SHELL OIL Co.
SANITARY SEWER	s	CITY OF OAKLAND
FIBER OPTIC	fo	QWEST COMMUNICATIONS, PACIFIC GAS & ELECTRIC
TELEVISION	tv	COMCAST
ABANDONED EXISTING SYSTEM		

POTHOLE LOCATION TABLE

No.	UTILITY	OFFSET/STATION	DEPTH
1	8"-STEEL (GAS)	105' Lt M LINE 205+00	3.3'
2	2-4"-PVC (ELECTRIC)	64' Lt M LINE 207+93	4.1'
3	10"-STEEL (GAS)	56' Lt M LINE 210+60	5.9'
4	8"-STEEL (GAS)	57' Rt M LINE 204+89	4.6'
5	2-4"-PVC (ELECTRIC)	57' Rt M LINE 207+93	3.0'
6	10"-STEEL (GAS)	57' Rt M LINE 210+60	7.0'

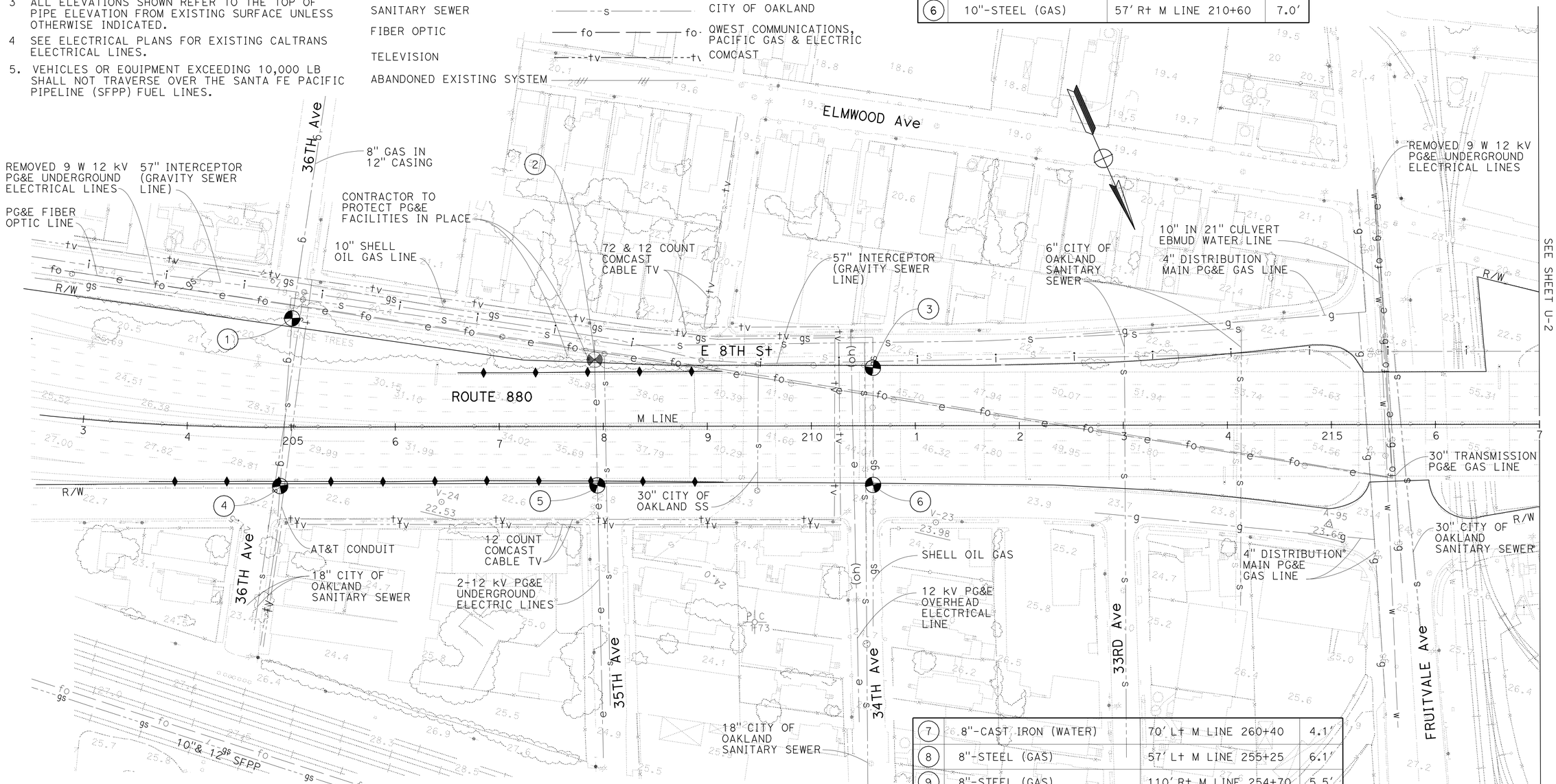

7	8"-CAST IRON (WATER)	70' Lt M LINE 260+40	4.1'
8	8"-STEEL (GAS)	57' Lt M LINE 255+25	6.1'
9	8"-STEEL (GAS)	110' Rt M LINE 254+70	5.5'
10	8"-CAST IRON (WATER)	137' Rt M LINE 260+40	3.4'
11	20"-STEEL (GAS)	74' Lt M LINE 278+71	5.8'
12	20"-STEEL (GAS)	67' Lt M LINE 278+71	6.4'

THIS PLAN FOR UTILITY INFORMATION ONLY

UTILITY PLAN

SCALE: 1" = 50'

U-1

STATE OF CALIFORNIA - DEPARTMENT OF TRANSPORTATION
Caltrans
DESIGN

FUNCTIONAL SUPERVISOR: EDMUND CHOY
CALCULATED-DESIGNED BY: HUDA NASSORI
CHECKED BY: KENNETH D. NHIEU
REVISED BY / DATE REVISED

LAST REVISION 03-24-11
DATE PLOTTED => 22-JUN-2011
TIME PLOTTED => 13:09

Dist	COUNTY	ROUTE	POST MILES TOTAL PROJECT	SHEET No.	TOTAL SHEETS
04	Ala	880	28.2/29.9	76	183

REGISTERED CIVIL ENGINEER 3-23-11 DATE

6-20-11
PLANS APPROVAL DATE

REGISTERED PROFESSIONAL ENGINEER K.D. Nhieu No. 55948 Exp. 12-31-12 CIVIL STATE OF CALIFORNIA

THE STATE OF CALIFORNIA OR ITS OFFICERS OR AGENTS SHALL NOT BE RESPONSIBLE FOR THE ACCURACY OR COMPLETENESS OF SCANNED COPIES OF THIS PLAN SHEET.

NOTE:

FOR ACCURATE RIGHT OF WAY DATA, CONTACT RIGHT OF WAY ENGINEERING AT THE DISTRICT OFFICE.

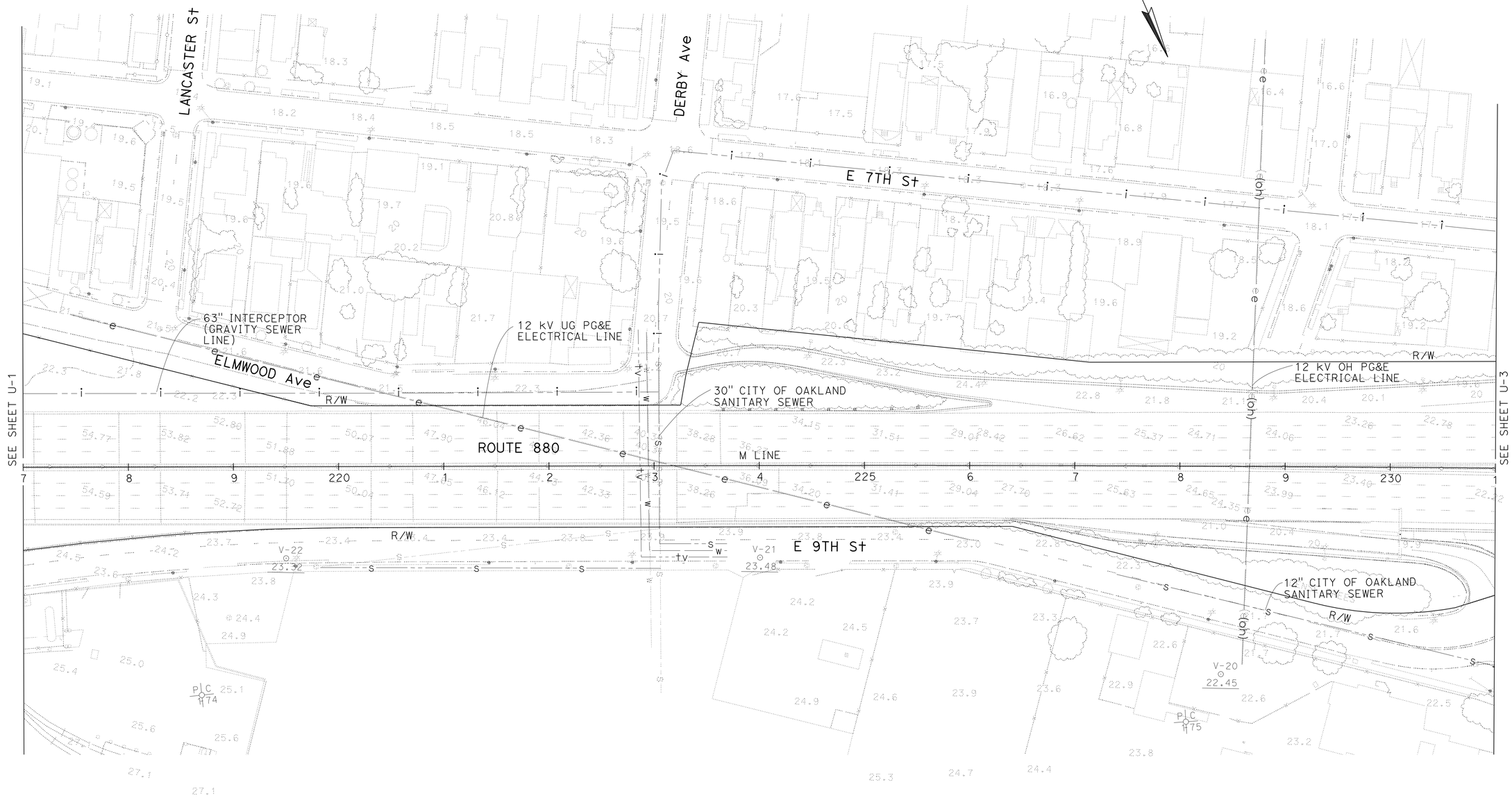

UTILITY PLAN

SCALE: 1" = 50'

U-2

FOR NOTES AND LEGEND, SEE SHEET U-1

THIS PLAN FOR UTILITY INFORMATION ONLY

STATE OF CALIFORNIA - DEPARTMENT OF TRANSPORTATION

Caltrans DESIGN

FUNCTIONAL SUPERVISOR: EDMUND CHOY

CALCULATED-DESIGNED BY: HUDA NASSORI

CHECKED BY: KENNETH D. NHIEU

REVISED BY / DATE REVISED

LAST REVISION 02-25-11 | DATE PLOTTED => 22-JUN-2011 | TIME PLOTTED => 13:09

BORDER LAST REVISED 7/2/2010

USERNAME => trmartin
DGN FILE => 0400020137ka002.dgn

RELATIVE BORDER SCALE IS IN INCHES 0 1 2 3

UNIT 0721

PROJECT NUMBER & PHASE 04000201371

Dist	COUNTY	ROUTE	POST MILES TOTAL PROJECT	SHEET No.	TOTAL SHEETS
04	Ala	880	28.2/29.9	77	183

REGISTERED CIVIL ENGINEER 3-23-11 DATE

6-20-11
PLANS APPROVAL DATE

REGISTERED PROFESSIONAL ENGINEER K.D. Nhieu No. 55948 Exp. 12-31-12 CIVIL STATE OF CALIFORNIA

THE STATE OF CALIFORNIA OR ITS OFFICERS OR AGENTS SHALL NOT BE RESPONSIBLE FOR THE ACCURACY OR COMPLETENESS OF SCANNED COPIES OF THIS PLAN SHEET.

NOTE:

FOR ACCURATE RIGHT OF WAY DATA, CONTACT RIGHT OF WAY ENGINEERING AT THE DISTRICT OFFICE.

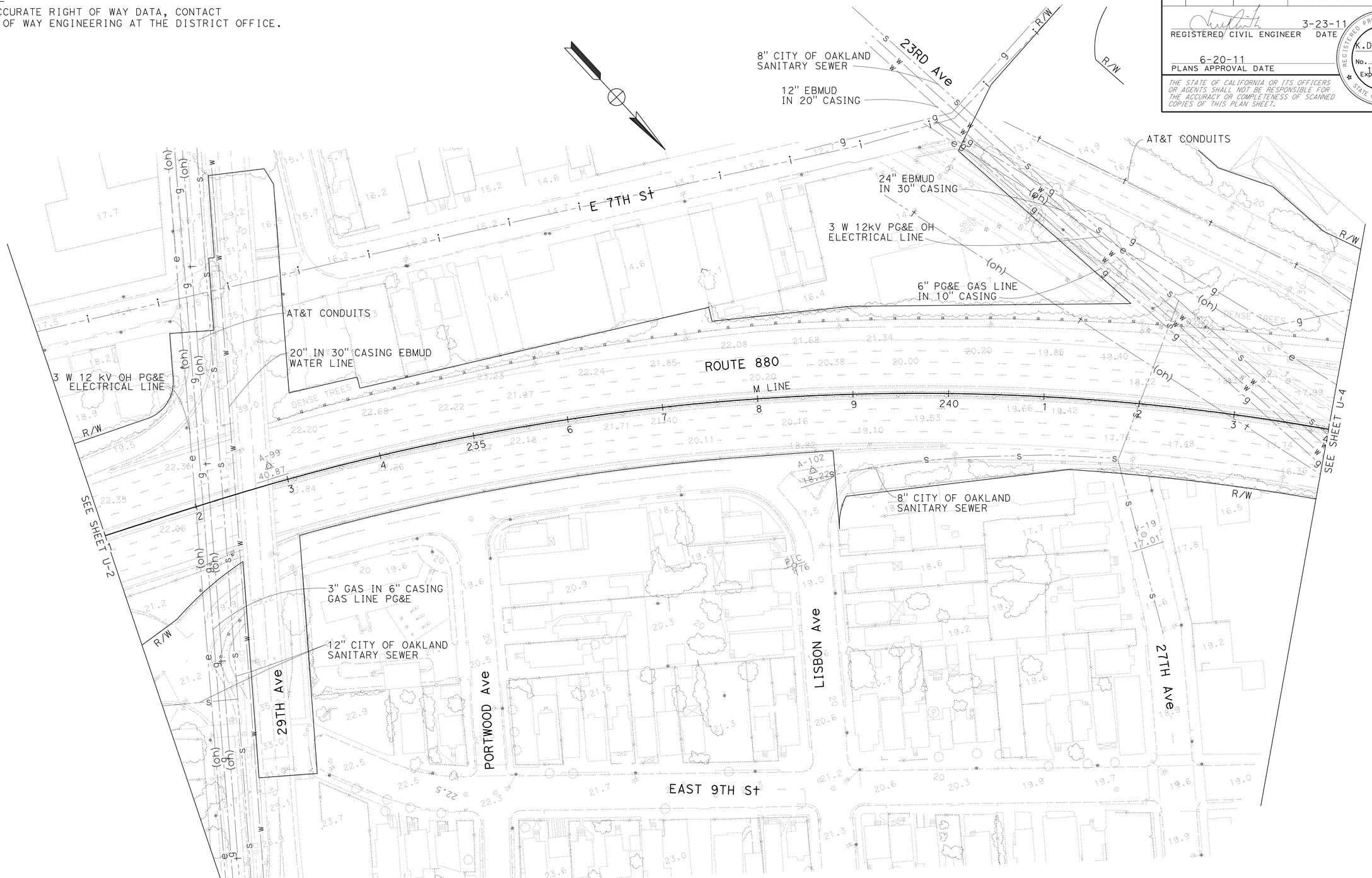

UTILITY PLAN

SCALE: 1" = 50'

U-3

FOR NOTES AND LEGEND, SEE SHEET U-1

THIS PLAN FOR UTILITY WORK ONLY

STATE OF CALIFORNIA - DEPARTMENT OF TRANSPORTATION

Caltrans

DESIGN

FUNCTIONAL SUPERVISOR: EDMUND CHOY

CALCULATED-DESIGNED BY: HUDA NASSORI

CHECKED BY: KENNETH D. NHIEU

REVISED BY

DATE REVISED

LAST REVISION 02-25-11

DATE PLOTTED => 22-JUN-2011
TIME PLOTTED => 13:10

Dist	COUNTY	ROUTE	POST MILES TOTAL PROJECT	SHEET No.	TOTAL SHEETS
04	Ala	880	28.2/29.9	78	183

REGISTERED CIVIL ENGINEER 3-23-11 DATE

6-20-11
PLANS APPROVAL DATE

REGISTERED PROFESSIONAL ENGINEER K.D. Nhieu No. 55948 Exp. 12-31-12 CIVIL STATE OF CALIFORNIA

THE STATE OF CALIFORNIA OR ITS OFFICERS OR AGENTS SHALL NOT BE RESPONSIBLE FOR THE ACCURACY OR COMPLETENESS OF SCANNED COPIES OF THIS PLAN SHEET.

NOTE:

FOR ACCURATE RIGHT OF WAY DATA, CONTACT RIGHT OF WAY ENGINEERING AT THE DISTRICT OFFICE.

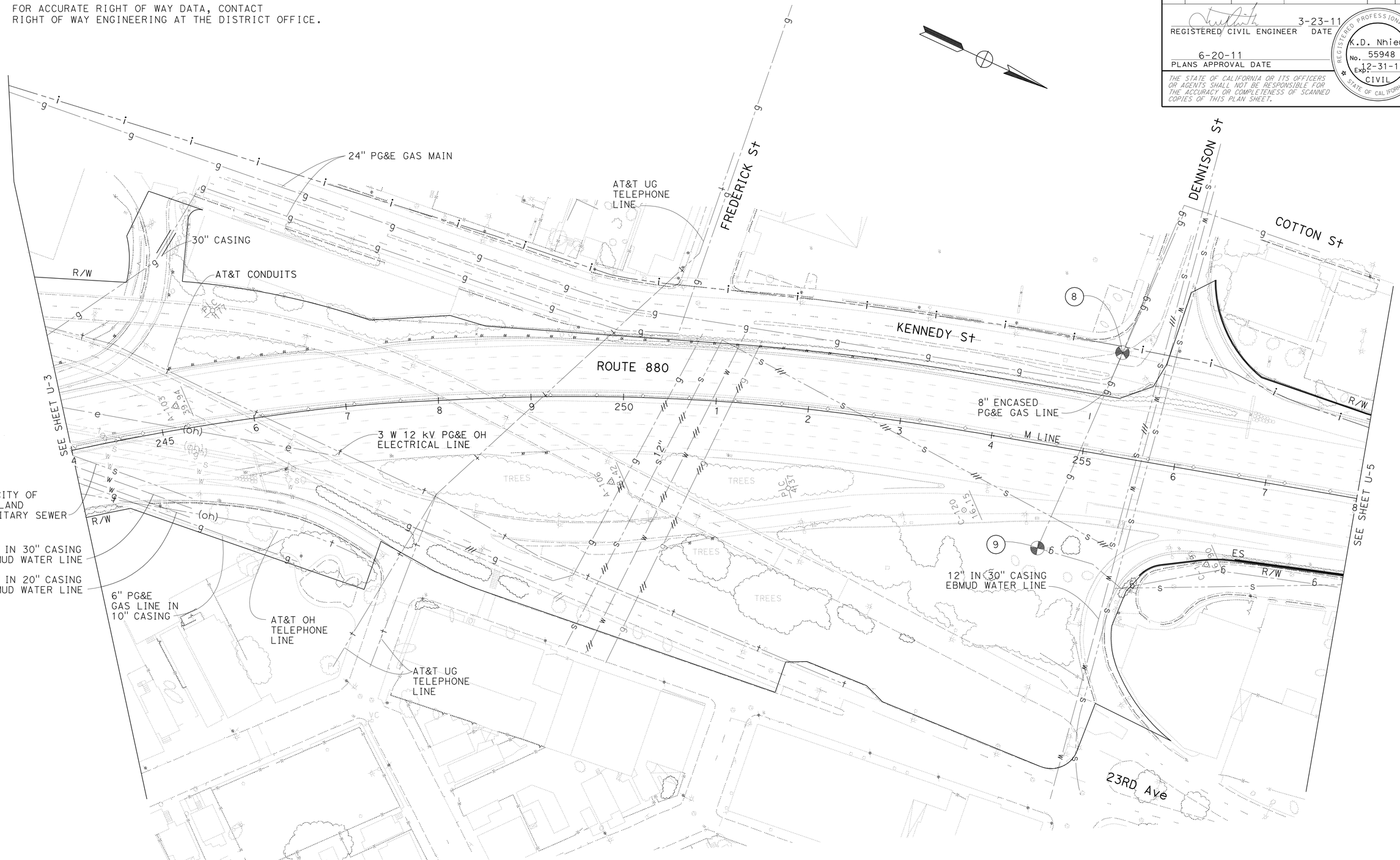

UTILITY PLAN

SCALE: 1" = 50'

U-4

FOR NOTES AND LEGEND, SEE SHEET U-1

THIS PLAN FOR UTILITY WORK ONLY

STATE OF CALIFORNIA - DEPARTMENT OF TRANSPORTATION

Caltrans DESIGN

FUNCTIONAL SUPERVISOR: EDMUND CHOY

CALCULATED-DESIGNED BY: HUDA NASSORI

CHECKED BY: KENNETH D. NHIEU

REVISED BY / DATE REVISED

LAST REVISION 03-17-11 | DATE PLOTTED => 22-JUN-2011 | TIME PLOTTED => 13:10

Dist	COUNTY	ROUTE	POST MILES TOTAL PROJECT	SHEET No.	TOTAL SHEETS
04	Ala	880	28.2/29.9	79	183

REGISTERED CIVIL ENGINEER 3-23-11 DATE

6-20-11
PLANS APPROVAL DATE

REGISTERED PROFESSIONAL ENGINEER
K.D. Nhieu
No. 55948
Exp. 12-31-12
CIVIL
STATE OF CALIFORNIA

THE STATE OF CALIFORNIA OR ITS OFFICERS OR AGENTS SHALL NOT BE RESPONSIBLE FOR THE ACCURACY OR COMPLETENESS OF SCANNED COPIES OF THIS PLAN SHEET.

NOTE:

FOR ACCURATE RIGHT OF WAY DATA, CONTACT RIGHT OF WAY ENGINEERING AT THE DISTRICT OFFICE.

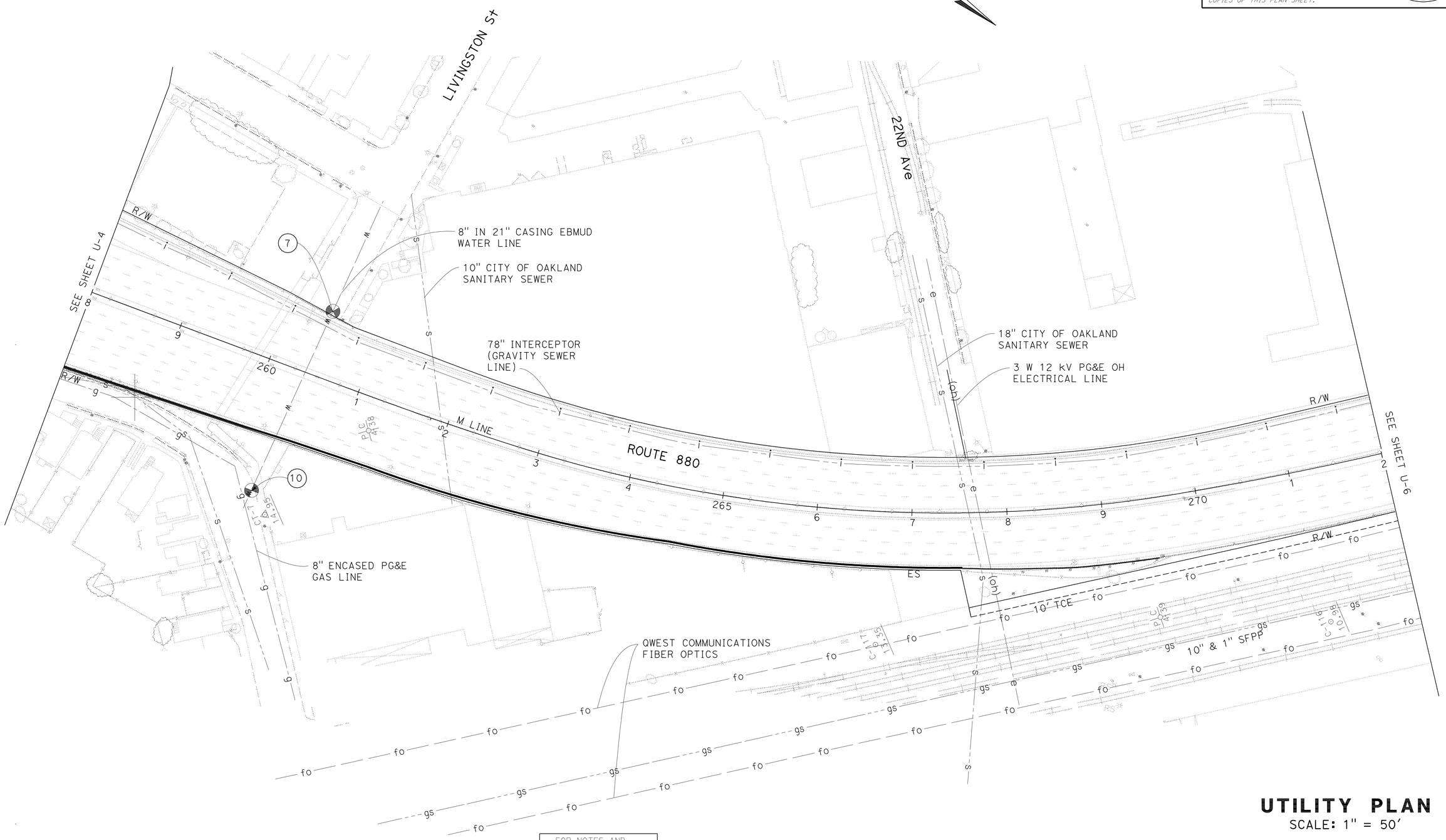

FOR NOTES AND LEGEND, SEE SHEET U-1

THIS PLAN FOR UTILITY WORK ONLY

UTILITY PLAN

SCALE: 1" = 50'

U-5

STATE OF CALIFORNIA - DEPARTMENT OF TRANSPORTATION
Caltrans DESIGN

FUNCTIONAL SUPERVISOR: EDMUND CHOY
CALCULATED-DESIGNED BY: HUDA NASSORI
CHECKED BY: KENNETH D. NHIEU
REVISED BY
DATE REVISED

LAST REVISION: DATE PLOTTED => 22-JUN-2011
03-24-11 TIME PLOTTED => 13:11

BORDER LAST REVISED 7/2/2010
USERNAME => trmartin
DGN FILE => 0400020137ka005.dgn
RELATIVE BORDER SCALE IS IN INCHES 0 1 2 3
UNIT 0721
PROJECT NUMBER & PHASE 04000201371

Dist	COUNTY	ROUTE	POST MILES TOTAL PROJECT	SHEET No.	TOTAL SHEETS
04	Ala	880	28.2/29.9	80	183

REGISTERED CIVIL ENGINEER 3-23-11 DATE

PLANS APPROVAL DATE 6-20-11

REGISTERED PROFESSIONAL ENGINEER K.D. Nhieu No. 55948 Exp. 12-31-12 CIVIL STATE OF CALIFORNIA

THE STATE OF CALIFORNIA OR ITS OFFICERS OR AGENTS SHALL NOT BE RESPONSIBLE FOR THE ACCURACY OR COMPLETENESS OF SCANNED COPIES OF THIS PLAN SHEET.

NOTES:

FOR ACCURATE RIGHT OF WAY DATA, CONTACT RIGHT OF WAY ENGINEERING AT THE DISTRICT OFFICE.

UNDER NO CIRCUMSTANCES SHALL THE CONTRACTOR ENCROACH UPON WITHIN 1' OF KINDER MORGAN TWO CASING VENTS.

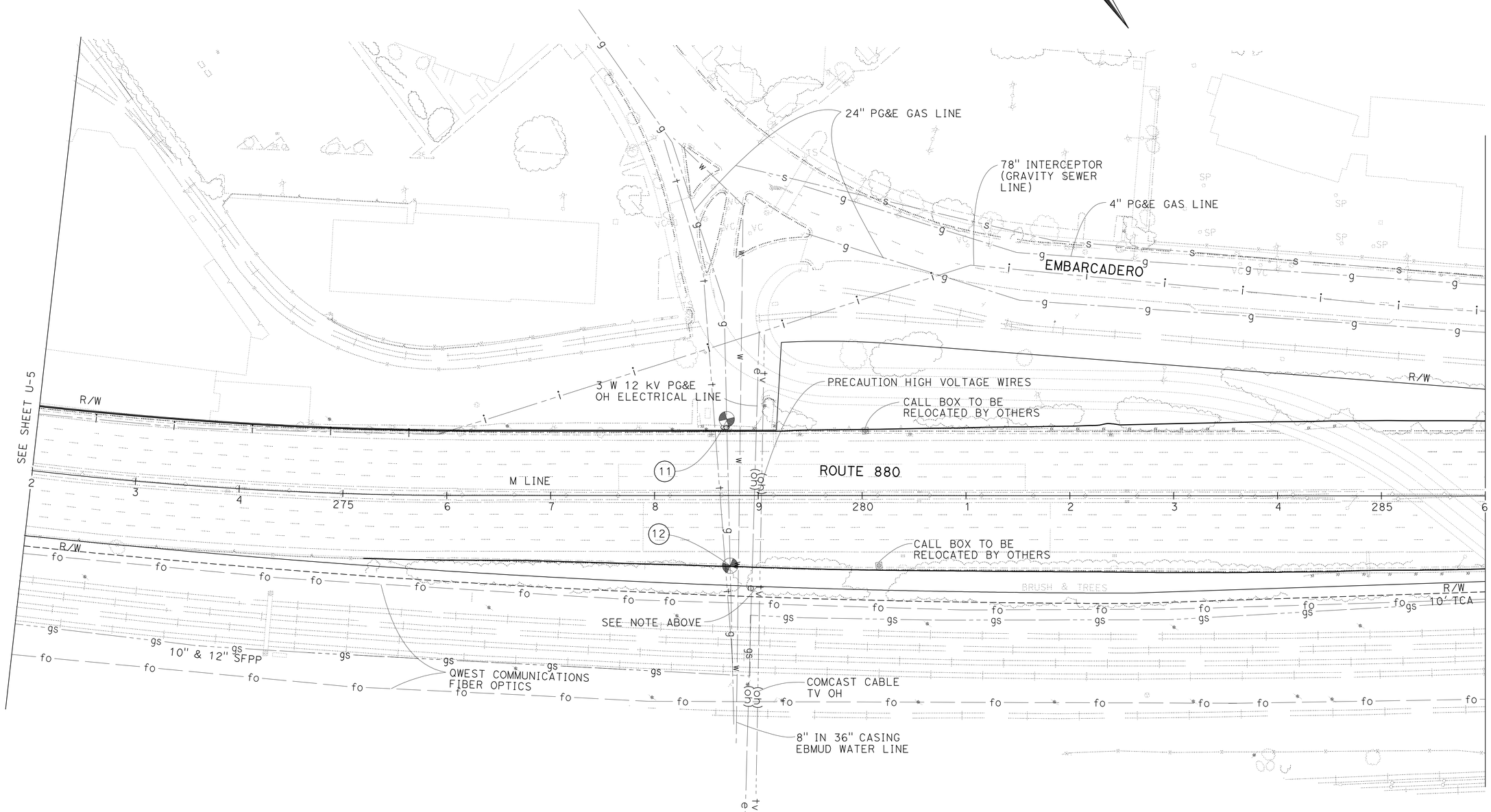

FOR NOTES AND LEGEND, SEE SHEET U-1

THIS PLAN FOR UTILITY WORK ONLY

UTILITY PLAN

SCALE: 1" = 50'

U-6

STATE OF CALIFORNIA - DEPARTMENT OF TRANSPORTATION

DESIGN

FUNCTIONAL SUPERVISOR: EDMUND CHOY

CALCULATED-DESIGNED BY: HUDA NASSORI

CHECKED BY: KENNETH D. NHIEU

REVISED BY

DATE REVISED

LAST REVISION 03-24-11

DATE PLOTTED => 22-JUN-2011

TIME PLOTTED => 13:11

Dist	COUNTY	ROUTE	POST MILES TOTAL PROJECT	SHEET No.	TOTAL SHEETS
04	Ala	880	28.2/29.9	81	183

REGISTERED CIVIL ENGINEER 3-23-11 DATE

6-20-11
PLANS APPROVAL DATE

K.D. Nhieu
No. 55948
EXP. 12-31-12
CIVIL
REGISTERED PROFESSIONAL ENGINEER
STATE OF CALIFORNIA

THE STATE OF CALIFORNIA OR ITS OFFICERS OR AGENTS SHALL NOT BE RESPONSIBLE FOR THE ACCURACY OR COMPLETENESS OF SCANNED COPIES OF THIS PLAN SHEET.

NOTE:

FOR ACCURATE RIGHT OF WAY DATA, CONTACT RIGHT OF WAY ENGINEERING AT THE DISTRICT OFFICE.

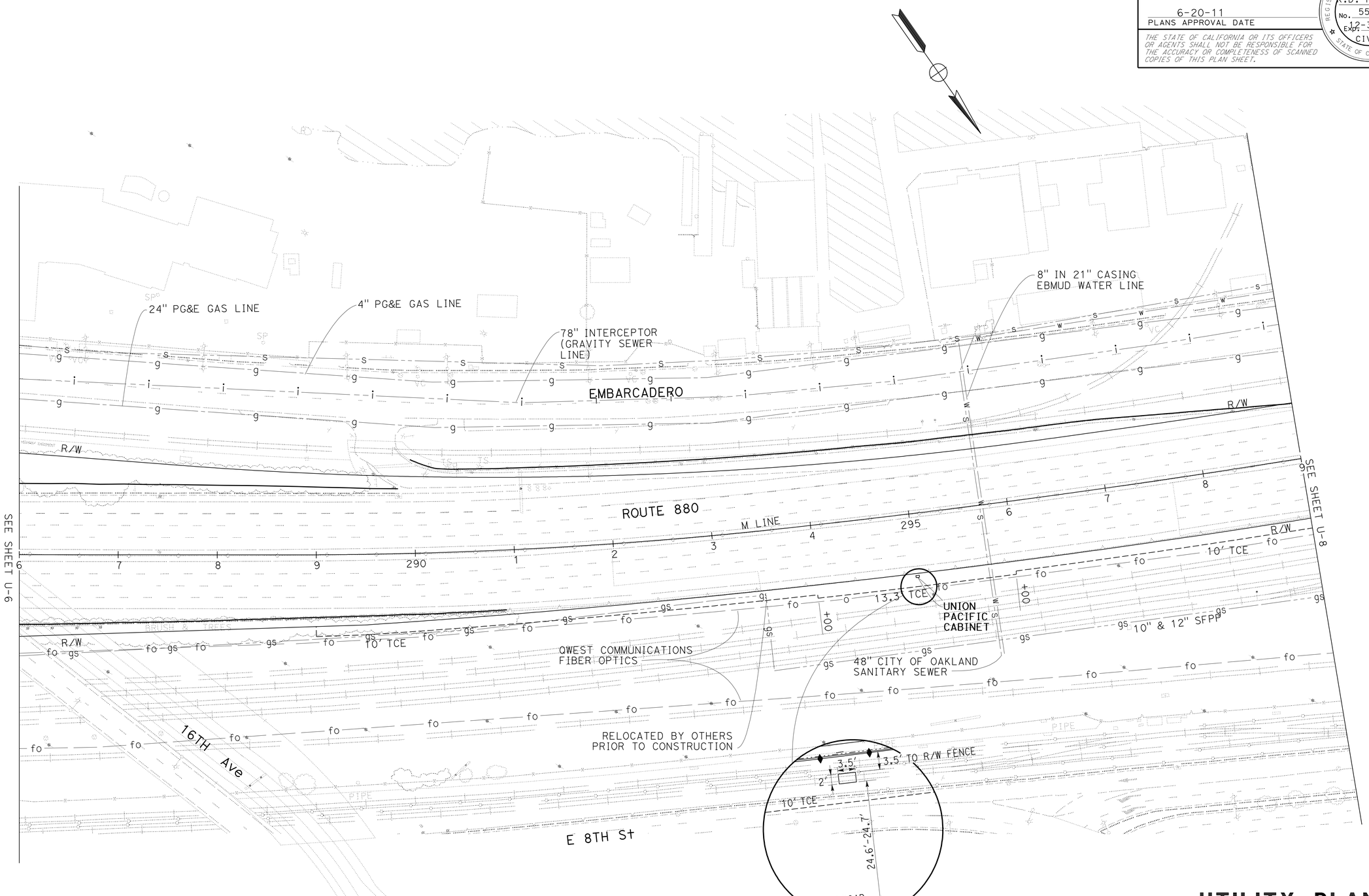

FOR NOTES AND LEGEND, SEE SHEET U-1

THIS PLAN FOR UTILITY WORK ONLY

UTILITY PLAN

SCALE: 1" = 50'

U-7

STATE OF CALIFORNIA - DEPARTMENT OF TRANSPORTATION
Caltrans
DESIGN

FUNCTIONAL SUPERVISOR: EDMUND CHOY
CALCULATED-DESIGNED BY: HUDA NASSORI
CHECKED BY: KENNETH D. NHIEU
REVISED BY
DATE REVISED

LAST REVISION 03-17-11
DATE PLOTTED => 22-JUN-2011
TIME PLOTTED => 13:11

Dist	COUNTY	ROUTE	POST MILES TOTAL PROJECT	SHEET No.	TOTAL SHEETS
04	Ala	880	28.2/29.9	82	183

REGISTERED CIVIL ENGINEER 3-23-11 DATE

6-20-11
PLANS APPROVAL DATE

REGISTERED PROFESSIONAL ENGINEER K.D. Nhieu No. 55948 Exp. 12-31-12 CIVIL STATE OF CALIFORNIA

THE STATE OF CALIFORNIA OR ITS OFFICERS OR AGENTS SHALL NOT BE RESPONSIBLE FOR THE ACCURACY OR COMPLETENESS OF SCANNED COPIES OF THIS PLAN SHEET.

NOTE:

FOR ACCURATE RIGHT OF WAY DATA, CONTACT RIGHT OF WAY ENGINEERING AT THE DISTRICT OFFICE.

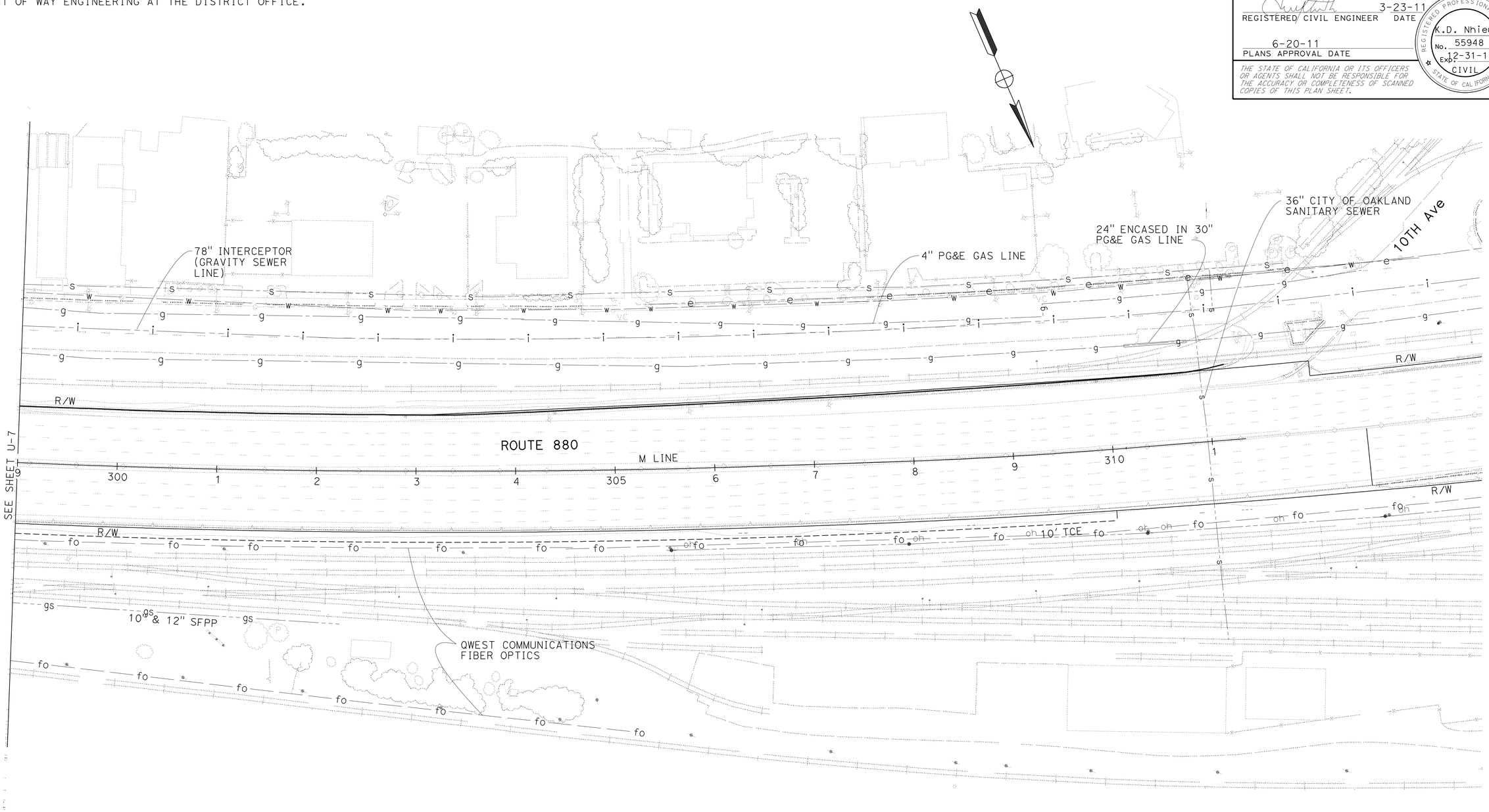

FOR NOTES AND LEGEND, SEE SHEET U-1

THIS PLAN FOR UTILITY INFORMATION ONLY

UTILITY PLAN

SCALE: 1" = 50'

U-8

STATE OF CALIFORNIA - DEPARTMENT OF TRANSPORTATION

Caltrans DESIGN

FUNCTIONAL SUPERVISOR: EDMUND CHOY

CALCULATED-DESIGNED BY: HUDA NASSORI

CHECKED BY: KENNETH D. NHIEU

REVISED BY

DATE REVISED

LAST REVISION 02-11-11

DATE PLOTTED => 22-JUN-2011
TIME PLOTTED => 13:11

Dist	COUNTY	ROUTE	POST MILES TOTAL PROJECT	SHEET No.	TOTAL SHEETS
04	Ala	880	28.2/29.9	83	183

REGISTERED CIVIL ENGINEER 3-23-11 DATE

6-20-11
PLANS APPROVAL DATE

REGISTERED PROFESSIONAL ENGINEER Florante P. Perez No. 41030 Exp. 3-31-13 CIVIL STATE OF CALIFORNIA

THE STATE OF CALIFORNIA OR ITS OFFICERS OR AGENTS SHALL NOT BE RESPONSIBLE FOR THE ACCURACY OR COMPLETENESS OF SCANNED COPIES OF THIS PLAN SHEET.

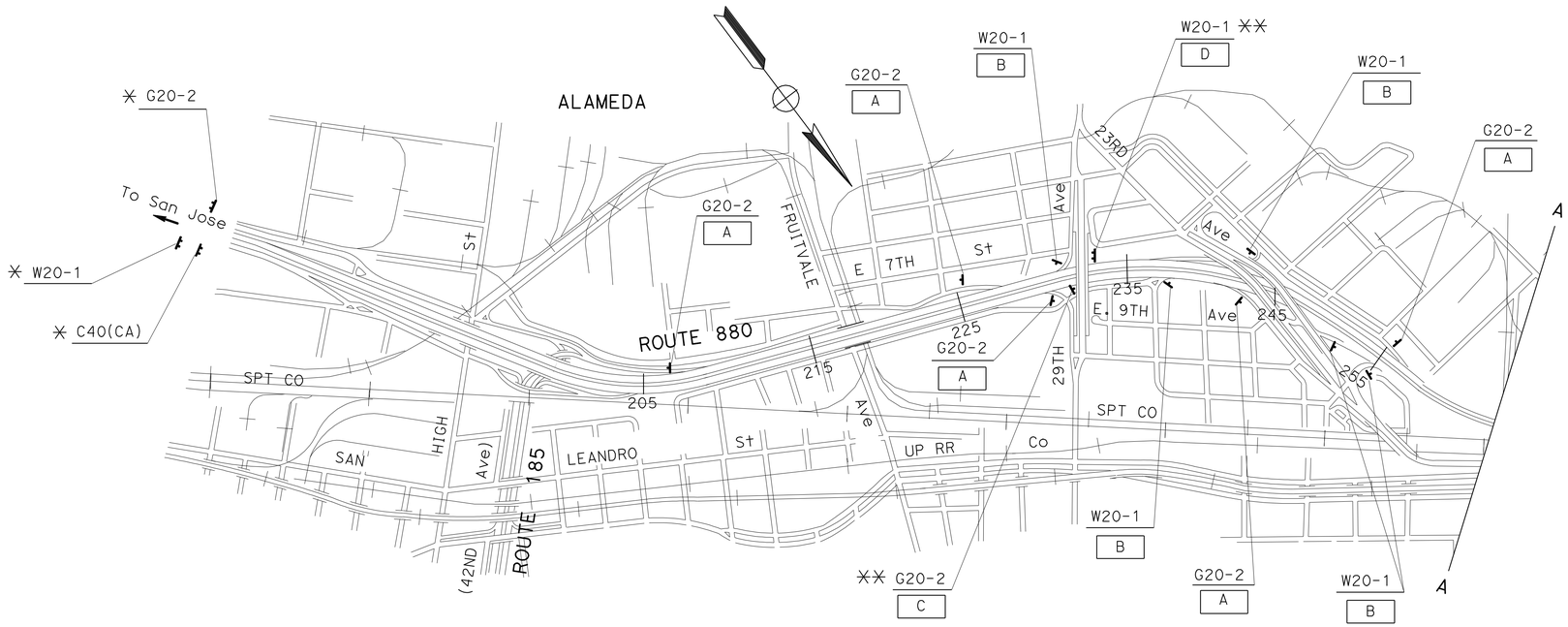

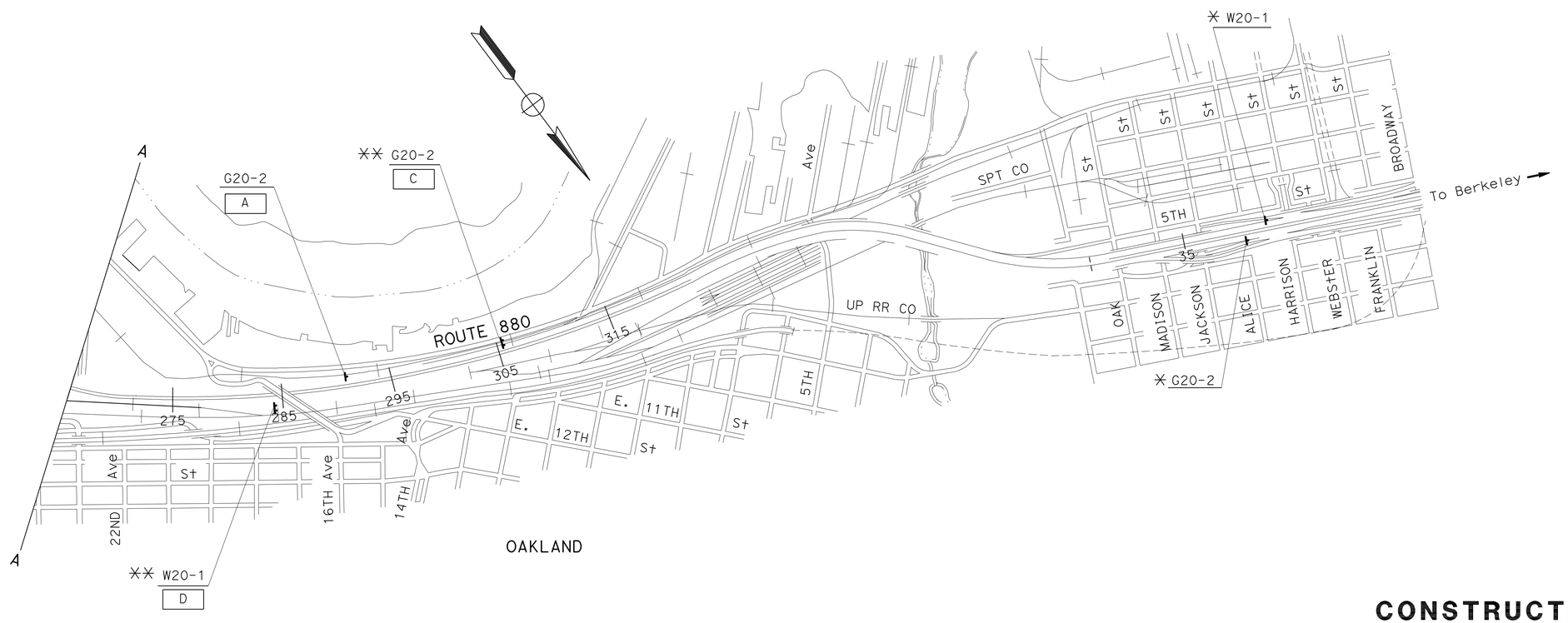

LEGEND:

C	CONSTRUCTION AREA SIGN LETTER
✳	EXISTING CONSTRUCTION AREA SIGNS TO REMAIN
✳✳	COVER EXISTING CONSTRUCTION AREA SIGNS
→	DIRECTION OF TRAFFIC

NOTE:

EXACT LOCATION AND POSITION OF CONSTRUCTION AREA SIGNS TO BE DETERMINED BY THE ENGINEER.

CONSTRUCTION AREA SIGNS

NO SCALE

THIS PLAN ACCURATE FOR CONSTRUCTION AREA SIGN WORK ONLY

CS-1

STATE OF CALIFORNIA - DEPARTMENT OF TRANSPORTATION
Caltrans TRAFFIC

FUNCTIONAL SUPERVISOR: LOURDES DAVID
CALCULATED-DESIGNED BY: PARWIN SARWARY
CHECKED BY: FLORANTE PEREZ
REVISED BY / DATE REVISED

LAST REVISION 02-10-11 | DATE PLOTTED => 22-JUN-2011 | TIME PLOTTED => 13:11

BORDER LAST REVISED 7/2/2010 | USERNAME => trmartin | DGN FILE => 04000201371a001.dgn | RELATIVE BORDER SCALE IS IN INCHES 0 1 2 3 | UNIT 0721 | PROJECT NUMBER & PHASE 04000201371

Dist	COUNTY	ROUTE	POST MILES TOTAL PROJECT	SHEET No.	TOTAL SHEETS
04	Ala	880	28.2/29.9	84	183

REGISTERED CIVIL ENGINEER 3-23-11 DATE

6-20-11
PLANS APPROVAL DATE

REGISTERED PROFESSIONAL ENGINEER Florante P. Perez No. 41030 Exp. 3-31-13 CIVIL STATE OF CALIFORNIA

THE STATE OF CALIFORNIA OR ITS OFFICERS OR AGENTS SHALL NOT BE RESPONSIBLE FOR THE ACCURACY OR COMPLETENESS OF SCANNED COPIES OF THIS PLAN SHEET.

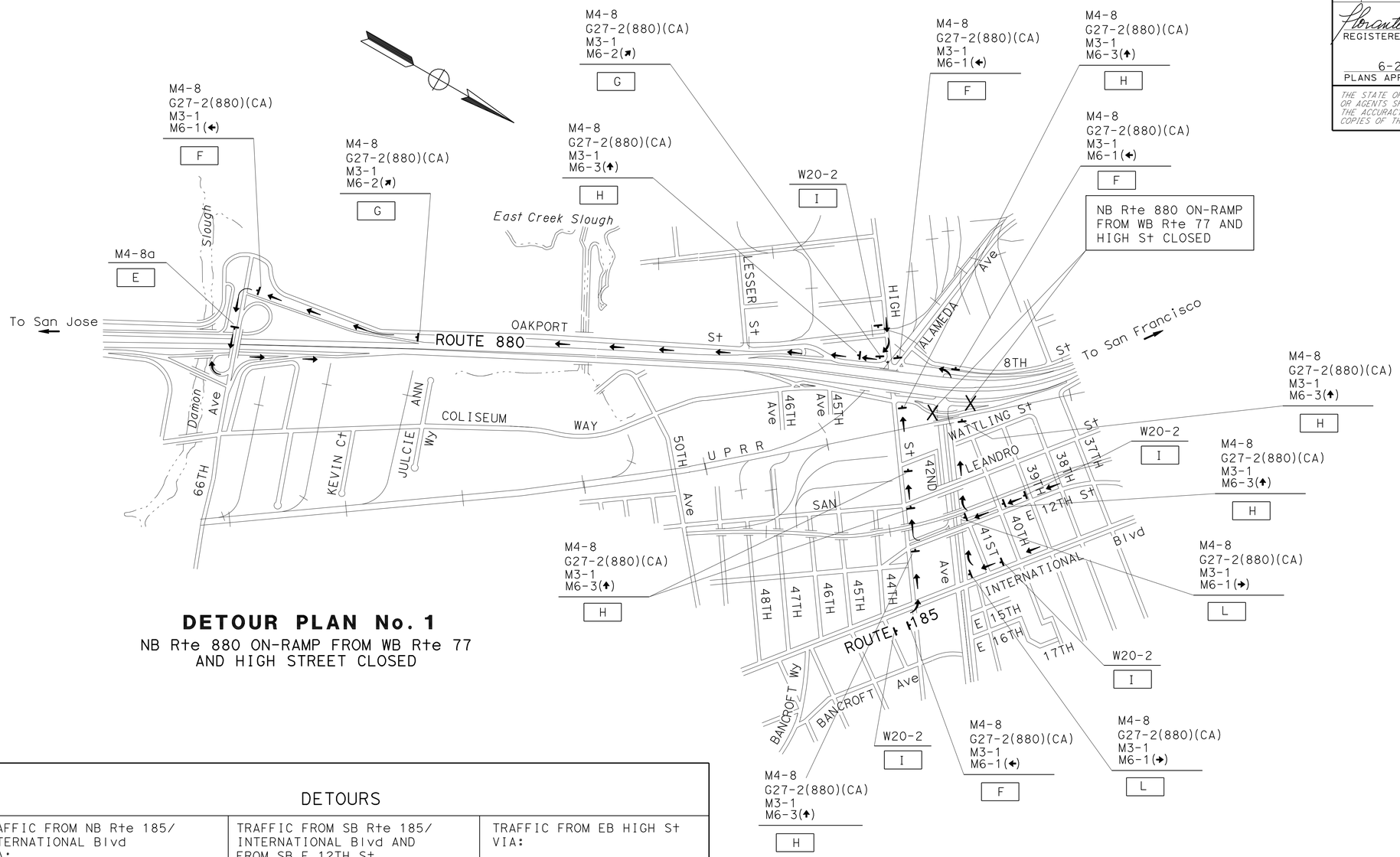

DETOUR PLAN No. 1

NB Rte 880 ON-RAMP FROM WB Rte 77
AND HIGH STREET CLOSED

DETOURS

TRAFFIC FROM NB Rte 185/ INTERNATIONAL Blvd VIA:	TRAFFIC FROM SB Rte 185/ INTERNATIONAL Blvd AND FROM SB E 12TH St VIA:	TRAFFIC FROM EB HIGH St VIA:
NB INTERNATIONAL Blvd; WB HIGH St; SB OAKPORT St: ON-RAMP TO SB Rte 880: SB Rte 880; 66TH Ave OFF-RAMP; EB 66TH Ave; LOOP ON-RAMP TO NB Rte 880	SB Rte 185/INTERNATIONAL Blvd AND SB E 12TH ST: WB Rte 77/42ND Ave: TURN LEFT TOWARDS; OAKPORT St: ON-RAMP TO SB Rte 880; SB Rte 880; 66TH Ave OFF-RAMP; EB 66TH Ave; LOOP ON-RAMP TO NB Rte 880	SB OAKPORT St; ON-RAMP TO SB Rte 880: SB Rte 880 66TH Ave OFF-RAMP; EB 66TH Ave; LOOP ON-RAMP TO NB Rte 880

FOR NOTES AND LEGEND, SEE SHEET CS-1

THIS PLAN ACCURATE FOR CONSTRUCTION AREA SIGN WORK ONLY

CONSTRUCTION AREA SIGNS
(DETOUR PLAN)

NO SCALE

CS-2

REVISED BY | DATE REVISED
PARWIN SARWARY | FLORANTE PEREZ
CALCULATED-DESIGNED BY | CHECKED BY
FUNCTIONAL SUPERVISOR: LOURDES DAVID

STATE OF CALIFORNIA - DEPARTMENT OF TRANSPORTATION
Caltrans
TRAFFIC

LAST REVISION 03-24-11 | DATE PLOTTED => 22-JUN-2011 | TIME PLOTTED => 13:12

Dist	COUNTY	ROUTE	POST MILES TOTAL PROJECT	SHEET No.	TOTAL SHEETS
04	Ala	880	28.2/29.9	85	183

REGISTERED CIVIL ENGINEER 3-23-11 DATE

6-20-11
PLANS APPROVAL DATE

REGISTERED PROFESSIONAL ENGINEER Florante P. Perez No. 41030 Exp. 3-31-13 CIVIL STATE OF CALIFORNIA

THE STATE OF CALIFORNIA OR ITS OFFICERS OR AGENTS SHALL NOT BE RESPONSIBLE FOR THE ACCURACY OR COMPLETENESS OF SCANNED COPIES OF THIS PLAN SHEET.

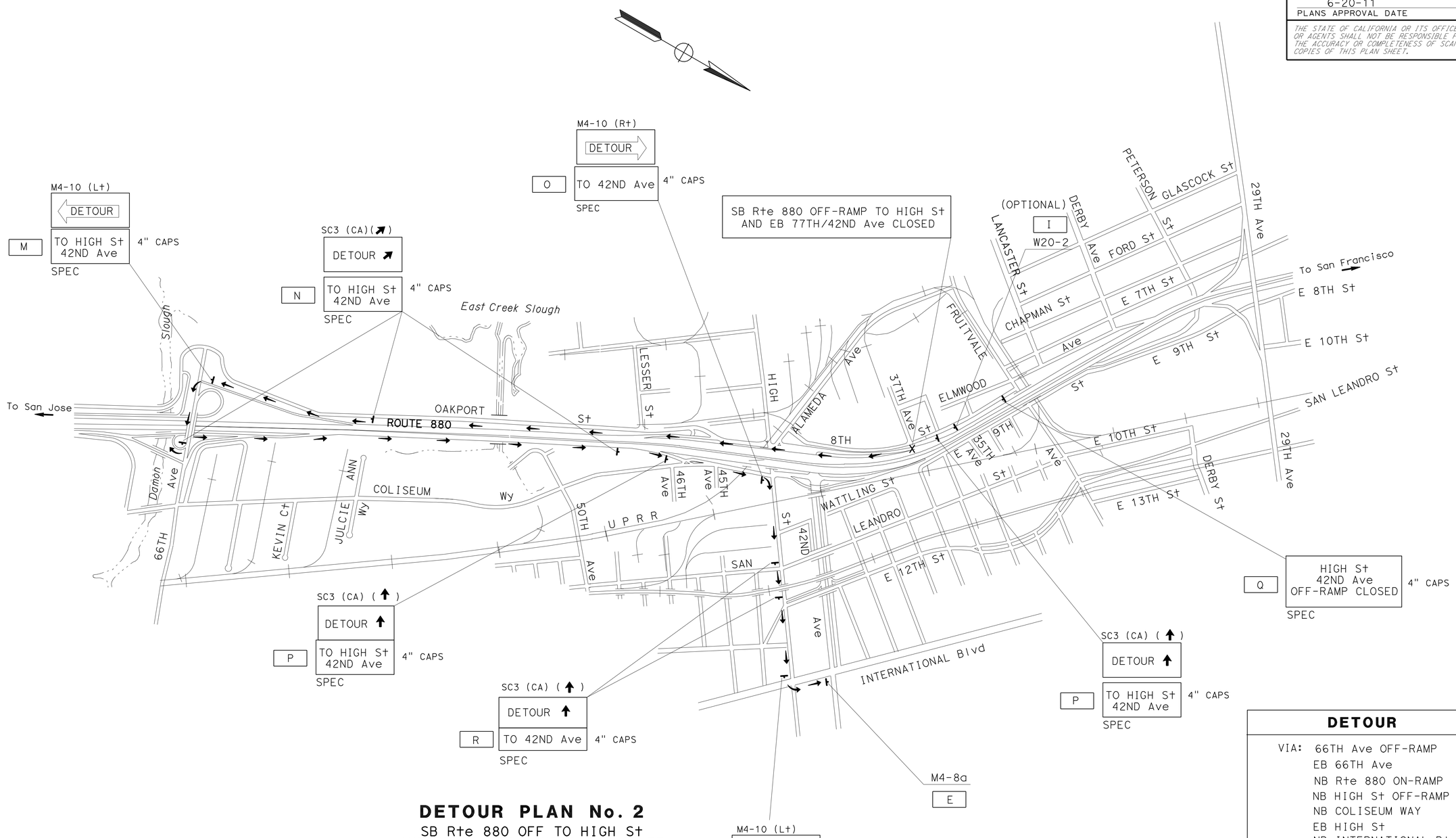

DETOUR PLAN No. 2

SB Rte 880 OFF TO HIGH St
AND EB Rte 77/42ND Ave CLOSURE

DETOUR

VIA: 66TH Ave OFF-RAMP
EB 66TH Ave
NB Rte 880 ON-RAMP
NB HIGH St OFF-RAMP
NB COLISEUM WAY
EB HIGH St
NB INTERNATIONAL Blvd

FOR NOTES AND LEGEND, SEE SHEET CS-1

THIS PLAN ACCURATE FOR CONSTRUCTION AREA SIGN WORK ONLY

CONSTRUCTION AREA SIGNS
(DETOUR PLAN)

NO SCALE

CS-3

STATE OF CALIFORNIA - DEPARTMENT OF TRANSPORTATION
Caltrans
TRAFFIC

FUNCTIONAL SUPERVISOR: LOURDES DAVID
CALCULATED-DESIGNED BY: PARWIN SARWARY
CHECKED BY: FLORANTE PEREZ
REVISED BY
DATE REVISED

LAST REVISION 02-11-11
DATE PLOTTED => 22-JUN-2011
TIME PLOTTED => 13:12

Dist	COUNTY	ROUTE	POST MILES TOTAL PROJECT	SHEET No.	TOTAL SHEETS
04	Ala	880	28.2/29.9	86	183

REGISTERED CIVIL ENGINEER 3-23-11 DATE

6-20-11
PLANS APPROVAL DATE

REGISTERED PROFESSIONAL ENGINEER Florante P. Perez No. 41030 Exp. 3-31-13 CIVIL STATE OF CALIFORNIA

THE STATE OF CALIFORNIA OR ITS OFFICERS OR AGENTS SHALL NOT BE RESPONSIBLE FOR THE ACCURACY OR COMPLETENESS OF SCANNED COPIES OF THIS PLAN SHEET.

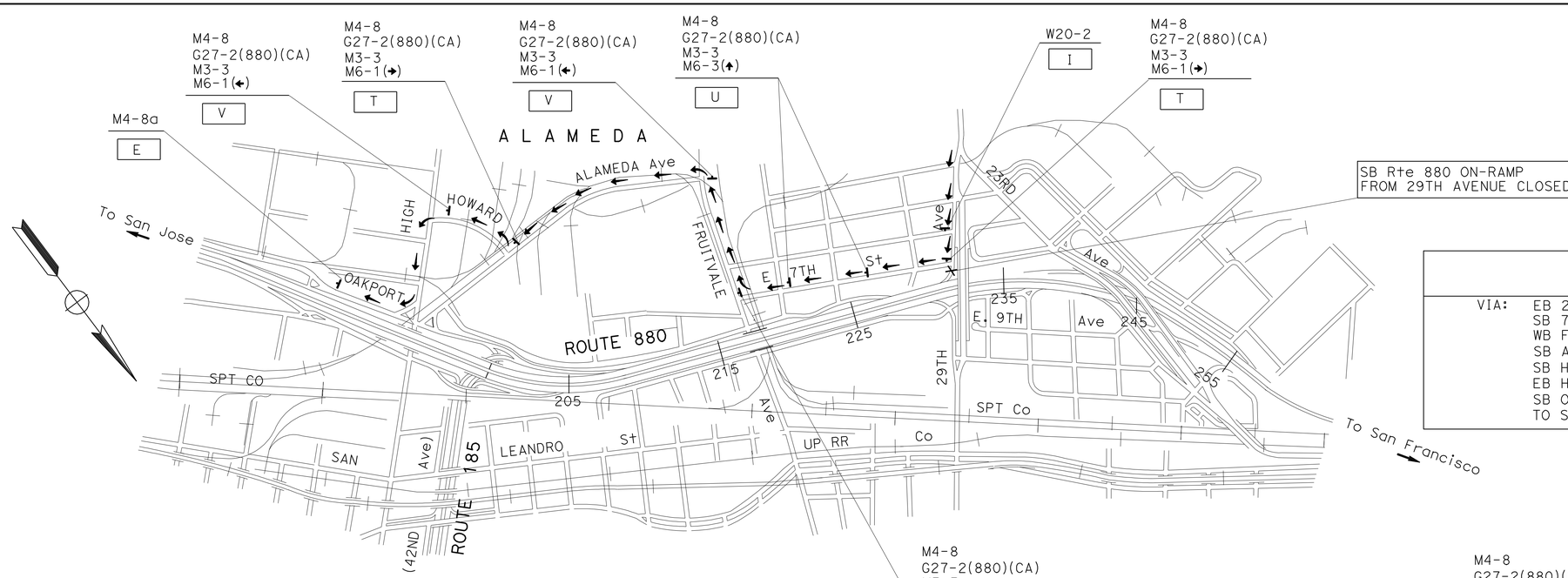

SB Rte 880 ON-RAMP
FROM 29TH AVENUE CLOSED

VIA:	
	EB 29TH Ave
	SB 7TH St
	WB FRUITVALE Ave
	SB ALAMEDA Ave
	SB HOWARD St
	EB HIGH St
	SB OAKPORT
	TO SB 880 ON-RAMP

DETOUR PLAN No. 3

SB Rte 880 ON-RAMP
FROM 29TH AVENUE CLOSURE

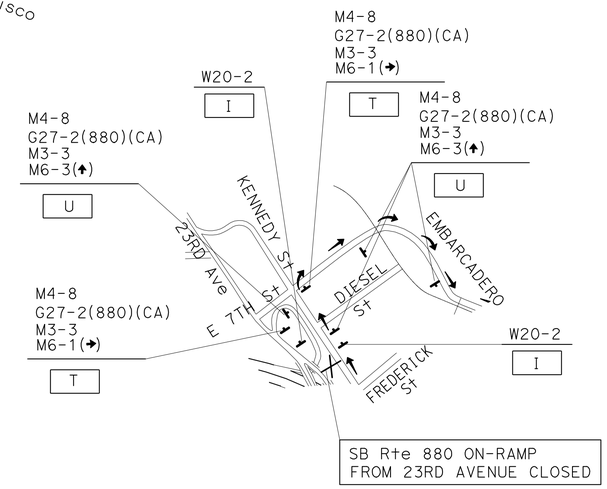

SB Rte 880 ON-RAMP
FROM 23RD AVENUE CLOSED

DETAIL

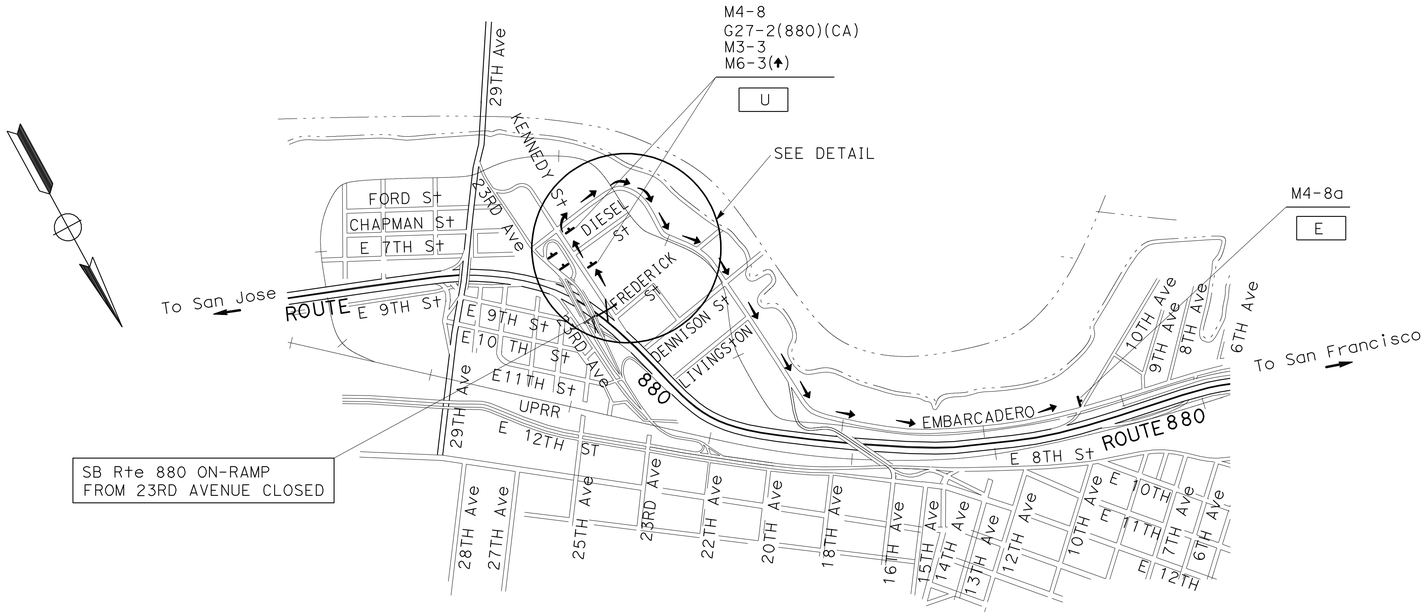

SB Rte 880 ON-RAMP
FROM 23RD AVENUE CLOSED

DETOUR PLAN No. 4

SB Rte 880 ON-RAMP
FROM 23RD AVENUE CLOSURE

DETOUR

VIA:
SB 23RD Ave OR SB KENNEDY St;
WB E 7TH St;
NB EMBARCADERO
ON-RAMP TO SB Rte 880

FOR NOTES AND LEGEND, SEE SHEET CS-1

THIS PLAN ACCURATE FOR CONSTRUCTION AREA SIGN WORK ONLY

CONSTRUCTION AREA SIGNS (DETOUR PLAN)

NO SCALE

CS-4

STATE OF CALIFORNIA - DEPARTMENT OF TRANSPORTATION
TRAFFIC

FUNCTIONAL SUPERVISOR: LOURDES DAVID
CALCULATED-DESIGNED BY: PARWIN SARWARY
CHECKED BY: FLORANTE PEREZ
REVISED BY / DATE REVISED

LAST REVISION 03-21-11
DATE PLOTTED => 22-JUN-2011
TIME PLOTTED => 13:12

Dist	COUNTY	ROUTE	POST MILES TOTAL PROJECT	SHEET No.	TOTAL SHEETS
04	Ala	880	28.2/29.9	87	183

REGISTERED CIVIL ENGINEER 3-23-11 DATE

6-20-11
PLANS APPROVAL DATE

REGISTERED PROFESSIONAL ENGINEER Florante P. Perez No. 41030 Exp. 3-31-13 CIVIL STATE OF CALIFORNIA

THE STATE OF CALIFORNIA OR ITS OFFICERS OR AGENTS SHALL NOT BE RESPONSIBLE FOR THE ACCURACY OR COMPLETENESS OF SCANNED COPIES OF THIS PLAN SHEET.

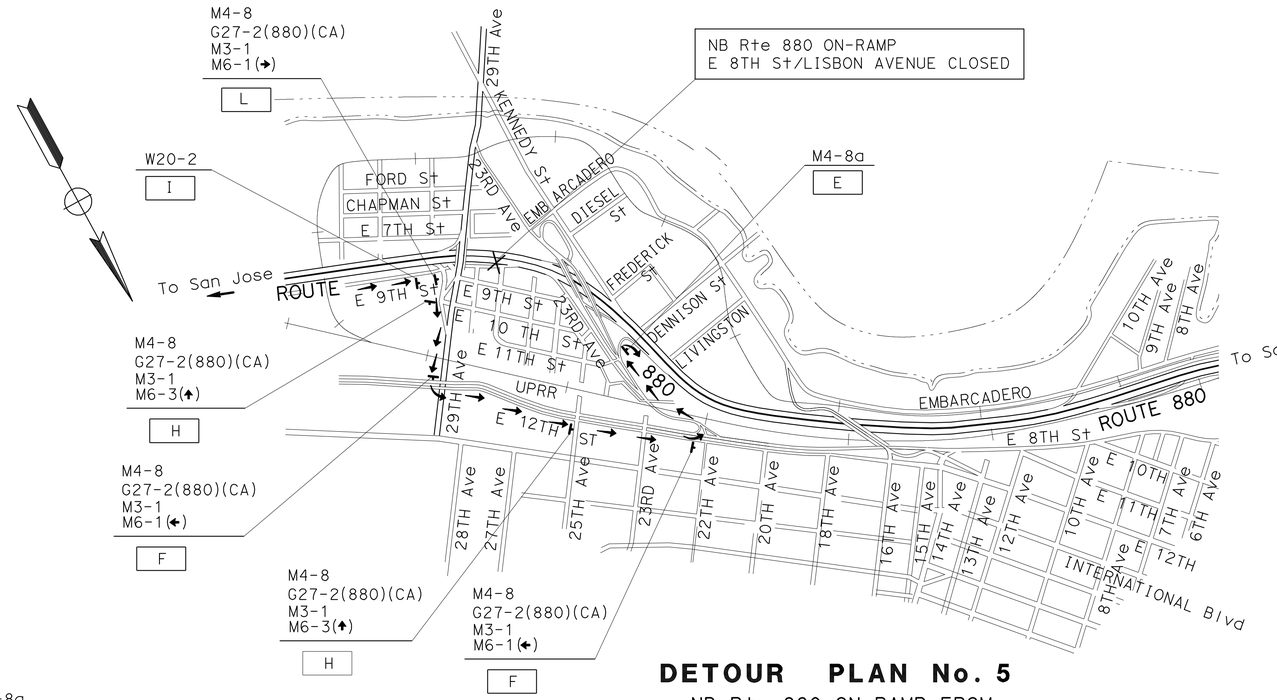

DETOUR

VIA: EB 29TH Ave
NB E 12th St
OVERPASS TO WB 23RD Ave
ON-RAMP TO NB Rte 880

DETOUR PLAN No. 5

NB Rte 880 ON-RAMP FROM
E 8TH St/LISBON AVENUE CLOSURE

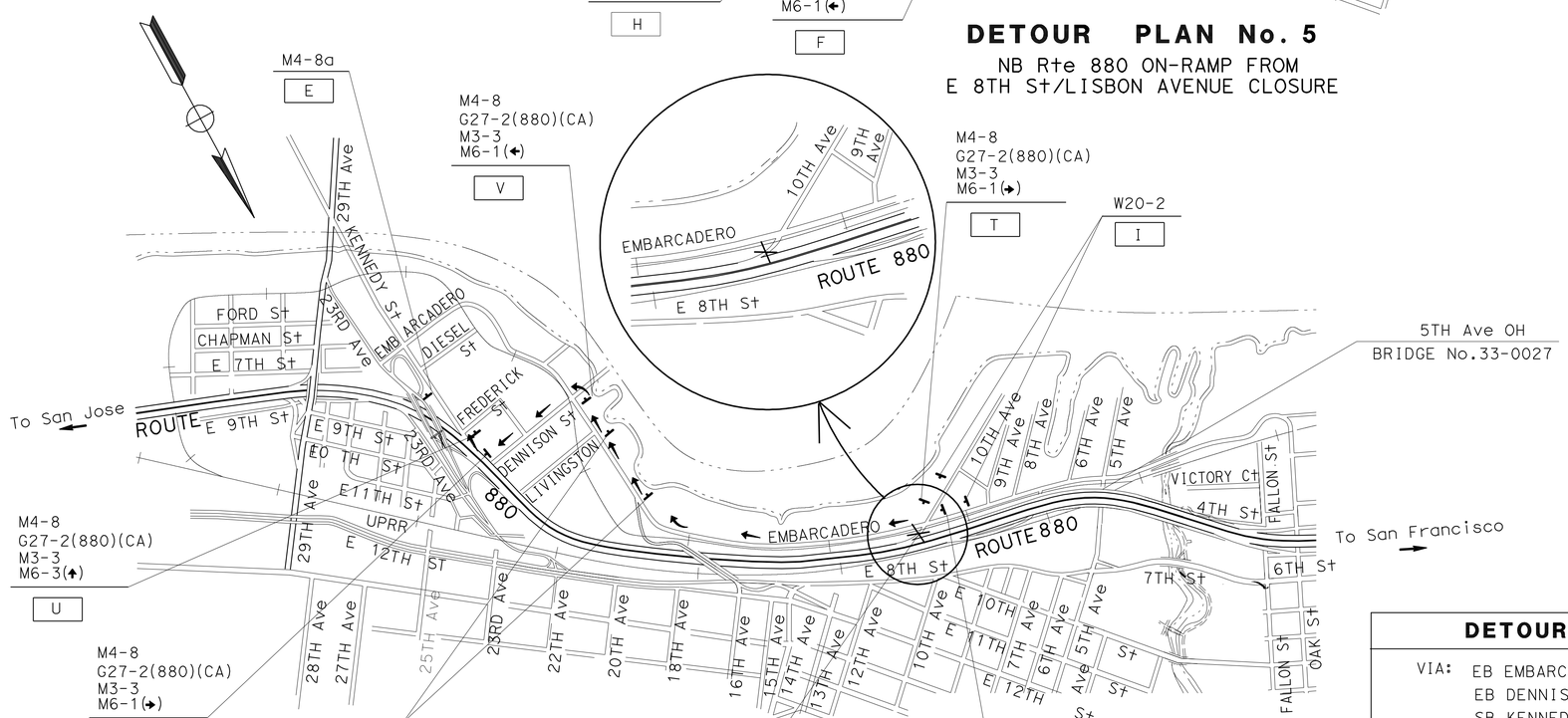

DETOUR

VIA: EB EMBARCADERO
EB DENNISON
SB KENNEDY
SB Rte 880 ON-RAMP

DETOUR PLAN No. 6

SB Rte 880 ON-RAMP
FROM 10TH AVENUE CLOSURE

FOR NOTES AND LEGEND, SEE SHEET CS-1

THIS PLAN ACCURATE FOR CONSTRUCTION AREA SIGN WORK ONLY

CONSTRUCTION AREA SIGNS
(DETOUR PLAN)

NO SCALE

CS-5

STATE OF CALIFORNIA - DEPARTMENT OF TRANSPORTATION
TRAFFIC
FUNCTIONAL SUPERVISOR: LOURDES DAVID
CALCULATED-DESIGNED BY: PARWIN SARWARY
CHECKED BY: FLORANTE PEREZ
REVISED BY
DATE REVISED

LAST REVISION 02-10-11
DATE PLOTTED => 22-JUN-2011
TIME PLOTTED => 13:12

Dist	COUNTY	ROUTE	POST MILES TOTAL PROJECT	SHEET No.	TOTAL SHEETS
04	Ala	880	28.2/29.9	88	183

REGISTERED CIVIL ENGINEER 3-23-11 DATE

6-20-11
PLANS APPROVAL DATE

REGISTERED PROFESSIONAL ENGINEER Florante P. Perez No. 41030 Exp. 3-31-13 CIVIL STATE OF CALIFORNIA

THE STATE OF CALIFORNIA OR ITS OFFICERS OR AGENTS SHALL NOT BE RESPONSIBLE FOR THE ACCURACY OR COMPLETENESS OF SCANNED COPIES OF THIS PLAN SHEET.

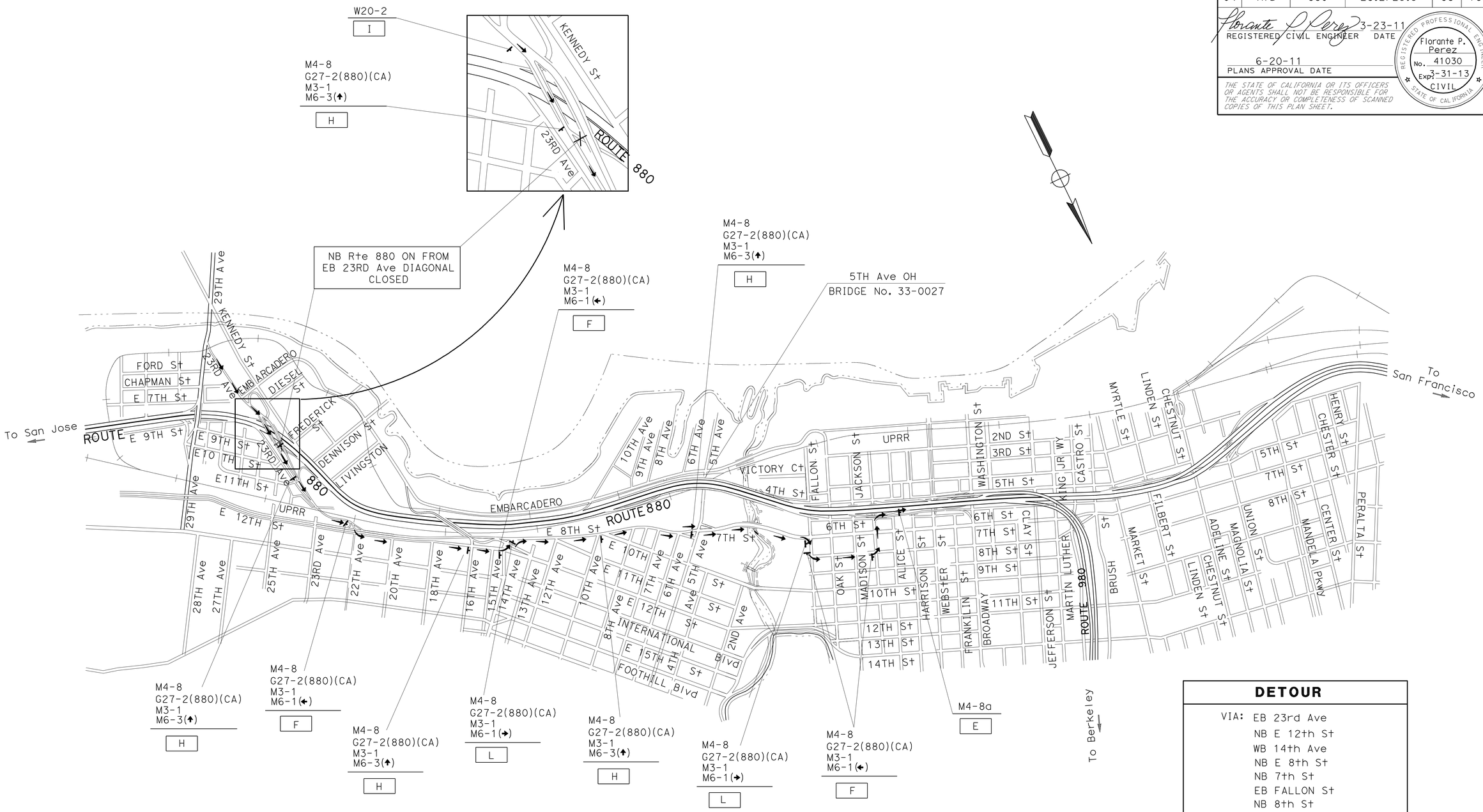

DETOUR

VIA: EB 23rd Ave
NB E 12th St
WB 14th Ave
NB E 8th St
NB 7th St
EB FALLON St
NB 8th St
WB JACKSON St
NB Rte 880 ON-RAMP

DETOUR PLAN No. 7

NB Rte 880 ON FROM EB 23RD Ave
DIAGONAL CLOSURE

CONSTRUCTION AREA SIGNS
(DETOUR PLAN)

NO SCALE

FOR NOTES AND LEGEND, SEE SHEET CS-1

THIS PLAN ACCURATE FOR CONSTRUCTION AREA SIGN WORK ONLY

CS-6

STATE OF CALIFORNIA - DEPARTMENT OF TRANSPORTATION
Caltrans
TRAFFIC

FUNCTIONAL SUPERVISOR: LOURDES DAVID
CALCULATED-DESIGNED BY: PARWIN SARWARY
CHECKED BY: FLORANTE PEREZ
REVISED BY
DATE REVISED

LAST REVISION 03-07-11
DATE PLOTTED => 22-JUN-2011
TIME PLOTTED => 13:12

Dist	COUNTY	ROUTE	POST MILES TOTAL PROJECT	SHEET No.	TOTAL SHEETS
04	Ala	880	28.2/29.9	89	183

Florante P. Perez 3-23-11
REGISTERED CIVIL ENGINEER DATE

6-20-11
PLANS APPROVAL DATE

REGISTERED PROFESSIONAL ENGINEER
Florante P. Perez
No. 41030
Exp. 3-31-13
CIVIL
STATE OF CALIFORNIA

THE STATE OF CALIFORNIA OR ITS OFFICERS OR AGENTS SHALL NOT BE RESPONSIBLE FOR THE ACCURACY OR COMPLETENESS OF SCANNED COPIES OF THIS PLAN SHEET.

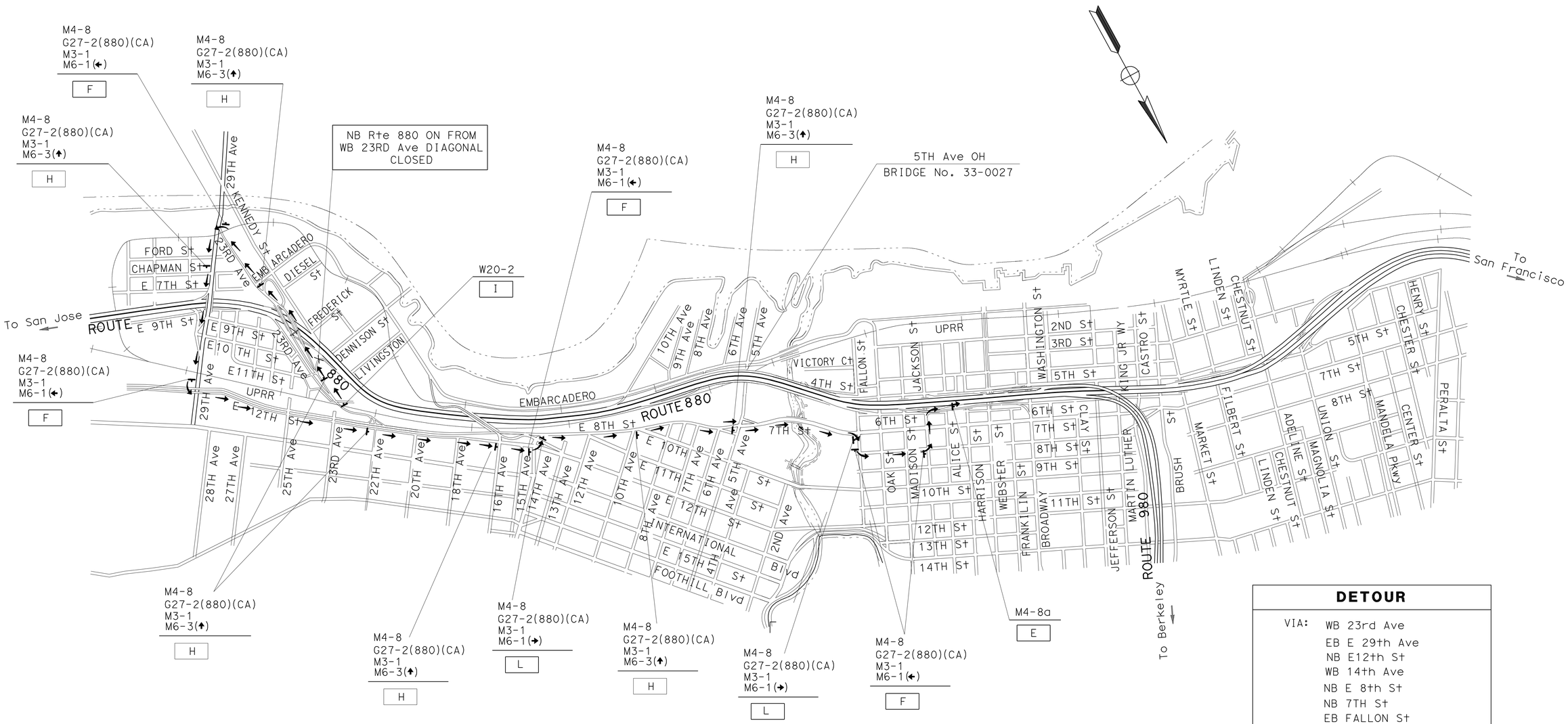

DETOUR PLAN No. 8

NB Rte 880 ON FROM WB 23RD Ave
DIAGONAL CLOSURE

DETOUR

VIA:
- WB 23rd Ave
- EB E 29th Ave
- NB E12th St
- WB 14th Ave
- NB E 8th St
- NB 7TH St
- EB FALLON St
- NB 8th St
- WB JACKSON St
- NB Rte 880 ON-RAMP

CONSTRUCTION AREA SIGNS
(DETOUR PLAN)

NO SCALE

FOR NOTES AND LEGEND, SEE SHEET CS-1

THIS PLAN ACCURATE FOR CONSTRUCTION AREA SIGN WORK ONLY

CS-7

STATE OF CALIFORNIA - DEPARTMENT OF TRANSPORTATION
Caltrans
TRAFFIC

FUNCTIONAL SUPERVISOR: LOURDES DAVID
CALCULATED-DESIGNED BY: PARWIN SARWARY
CHECKED BY: FLORANTE PEREZ
REVISED BY
DATE REVISED

LAST REVISION 03-07-11
DATE PLOTTED => 22-JUN-2011
TIME PLOTTED => 13:05

Dist	COUNTY	ROUTE	POST MILES TOTAL PROJECT	SHEET No.	TOTAL SHEETS
04	Ala	880	28.2/29.9	90	183

REGISTERED CIVIL ENGINEER 3-23-11 DATE

6-20-11
PLANS APPROVAL DATE

REGISTERED PROFESSIONAL ENGINEER Florante P. Perez No. 41030 Exp. 3-31-13 CIVIL STATE OF CALIFORNIA

THE STATE OF CALIFORNIA OR ITS OFFICERS OR AGENTS SHALL NOT BE RESPONSIBLE FOR THE ACCURACY OR COMPLETENESS OF SCANNED COPIES OF THIS PLAN SHEET.

STATIONARY MOUNTED CONSTRUCTION AREA SIGNS

SIGN	SIGN CODE	MESSAGE	PANEL SIZE	No. OF POSTS AND SIZE (EA)	No. OF SIGNS	REMARKS
A	G20-2	END ROAD WORK	36" x 18"	1-4" x 4"	5	
B	W20-1	ROAD WORK AHEAD	48" x 48"	1-4" x 6"	5	
C	G20-2	END ROAD WORK			2	COVER SIGNS
D	W20-1	ROAD WORK AHEAD			2	COVER SIGNS
E	M4-8a	END DETOUR	30" x 18"	1-4" x 4"	8	
F	M4-8	DETOUR	21" x 18"	1-4" x 6"	15	
	G27-2(CA)	ROUTE 880 SHIELD	30" x 25"			
	M3-1	NORTH	21" x 15"			
	M6-2(←)	LEFT ARROW	21" x 15"			
G	M4-8	DETOUR	21" x 18"	1-4" x 6"	2	
	G27-2(CA)	ROUTE 880 SHIELD	30" x 25"			
	M3-1	NORTH	21" x 15"			
	M6-2(↗)	UP-RIGHT ARROW	21" x 15"			
H	M4-8	DETOUR	21" x 18"	1-4" x 6"	23	
	G27-2(CA)	ROUTE 880 SHIELD	30" x 25"			
	M3-1	NORTH	21" x 15"			
	M6-3(↑)	UP ARROW	21" x 15"			
I	W20-2	DETOUR AHEAD	48" x 48"	1-4" x 6"	12	
L	M4-8	DETOUR	21" x 18"	1-89" x 140"	7	
	G27-2(CA)	ROUTE 880 SHIELD	30" x 25"			
	M3-1	NORTH	21" x 15"			
	M6-1(→)	RIGHT ARROW	21" x 15"			
M	M4-10(←)	DETOUR LEFT ARROW	48" x 18"	1-4" x 6"	1	
	SPECIAL	TO HIGH St 42ND Ave	48" x 21"			
N	SC3(↗)(CA)	DETOUR LEFT ARROW	48" x 18"	1-4" x 6"	3	
	SPECIAL	TO HIGH St 42ND Ave	48" x 21"			
O	M4-10(→)	DETOUR RIGHT ARROW	48" x 18"	1-4" x 6"	1	
	SPECIAL	TO 42ND Ave	48" x 12"			
P	SC3(↑)(CA)	DETOUR UP ARROW	48" x 21"	1-4" x 6"	2	
	SPECIAL	TO HIGH St 42ND Ave	48" x 21"			
Q	SPECIAL	TO HIGH St 42ND Ave OFF RAMP CLOSED	48" x 36"	1-4" x 6"	1	
R	SC3(↑)(CA)	DETOUR UP ARROW	48" x 21"	1-4" x 6"	2	
	SPECIAL	TO 42ND Ave	48" x 21"			
S	M4-10(←)	DETOUR LEFT ARROW	48" x 18"	1-4" x 6"	1	
	SPECIAL	TO 42ND Ave	48" x 12"			
T	M4-8	DETOUR	21" x 18"	1-4" x 6"	7	
	G27-2(CA)	ROUTE 880 SHIELD	30" x 25"			
	M3-3	SOUTH	21" x 15"			
	M6-1(→)	RIGHT ARROW	21" x 15"			
U	M4-8	DETOUR	21" x 18"	1-4" x 6"	11	
	G27-2(CA)	ROUTE 880 SHIELD	30" x 25"			
	M3-3	SOUTH	21" x 15"			
	M6-1(↑)	UP ARROW	21" x 15"			
V	M4-8	DETOUR	21" x 18"	1-4" x 6"	3	
	G27-2(CA)	ROUTE 880 SHIELD	30" x 25"			
	M3-3	SOUTH	21" x 15"			
	M6-1(←)	LEFT ARROW	21" x 15"			

FOR NOTES AND LEGEND, SEE SHEET CS-1

THIS PLAN ACCURATE FOR CONSTRUCTION AREA SIGN WORK ONLY

CONSTRUCTION AREA SIGNS

CS-8

STATE OF CALIFORNIA - DEPARTMENT OF TRANSPORTATION
Caltrans
TRAFFIC

FUNCTIONAL SUPERVISOR: LOURDES DAVID
CALCULATED-DESIGNED BY: PARWIN SARWARY
CHECKED BY: FLORANTE P. PEREZ
REVISED BY
DATE REVISED

LAST REVISION 03-21-11
DATE PLOTTED => 22-JUN-2011
TIME PLOTTED => 13:05

Dist	COUNTY	ROUTE	POST MILES TOTAL PROJECT	SHEET No.	TOTAL SHEETS
04	Ala	880	28.2/29.9	91	183

REGISTERED CIVIL ENGINEER 3-23-11 DATE

6-20-11
PLANS APPROVAL DATE

REGISTERED PROFESSIONAL ENGINEER K.D. Nhieu No. 55948 Exp. 12-31-12 CIVIL STATE OF CALIFORNIA

THE STATE OF CALIFORNIA OR ITS OFFICERS OR AGENTS SHALL NOT BE RESPONSIBLE FOR THE ACCURACY OR COMPLETENESS OF SCANNED COPIES OF THIS PLAN SHEET.

NOTE:

FOR ACCURATE RIGHT OF WAY DATA, CONTACT RIGHT OF WAY ENGINEERING AT THE DISTRICT OFFICE.

TRAFFIC
SHIFTING NB AND SB TRAFFIC TO THE MEDIAN SHOULDER AS SHOWN. ALL TRAFFIC LANES SHALL HAVE A Min WIDTH OF 11 FT AT ALL TIMES.

CONSTRUCTION

DESCRIPTION	LINE	STATION	REMARK
FREEWAY	M	203+62 TO 207+16 (Rt& Lt)	REMOVE CONCRETE BARRIER & BRIDGE RAIL. CONSTRUCT CONCRETE BARRIER TYPE 60C AND 742.
FREEWAY	M	256+43 TO 310+88 (Rt& Lt)	REMOVE CONCRETE CURB AND GUTTER, CHAIN LINK FENCE, MBGR, CONCRETE BARRIER. CONSTRUCT CHAIN LINK FENCE, CONCRETE BARRIER TYPE 60, 60C.
FREEWAY	M	257+00 TO 263+00 (Rt)	INSTALL 4 LIGHT POLES
FREEWAY	M	268+50 (Rt)	REMOVE SIGN POLE. CONSTRUCT SIGN POLE

LEGEND:

- CONSTRUCT THIS STAGE
- Temp RAILING (TYPE K)
- DIRECTION OF TRAVEL
- Temp INLINE CRASH CUSHION
- No. Temp PAVEMENT DELINEATION DETAIL
- CHANNELIZERS
- CHANGE OF PAVEMENT DELINEATION DETAILS

ABREVIATION:

TCE: TEMPORARY CONSTRUCTION EASEMENT

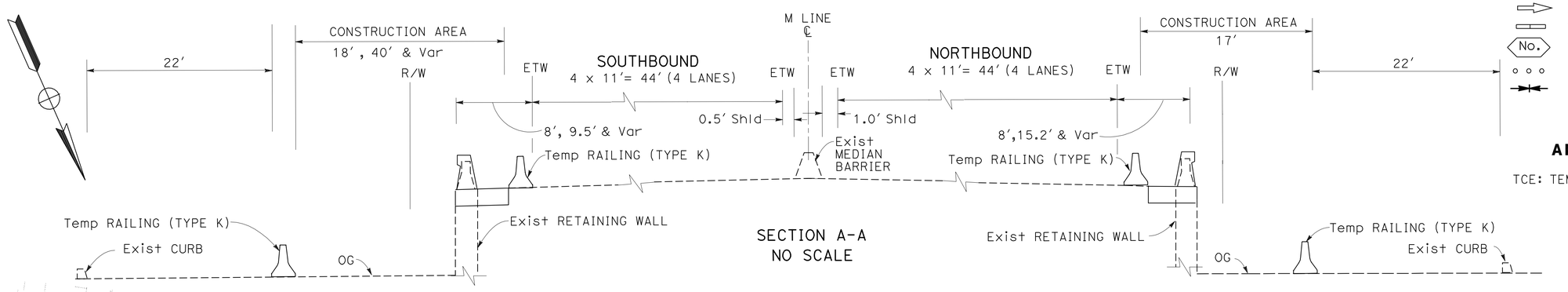

SECTION A-A
NO SCALE

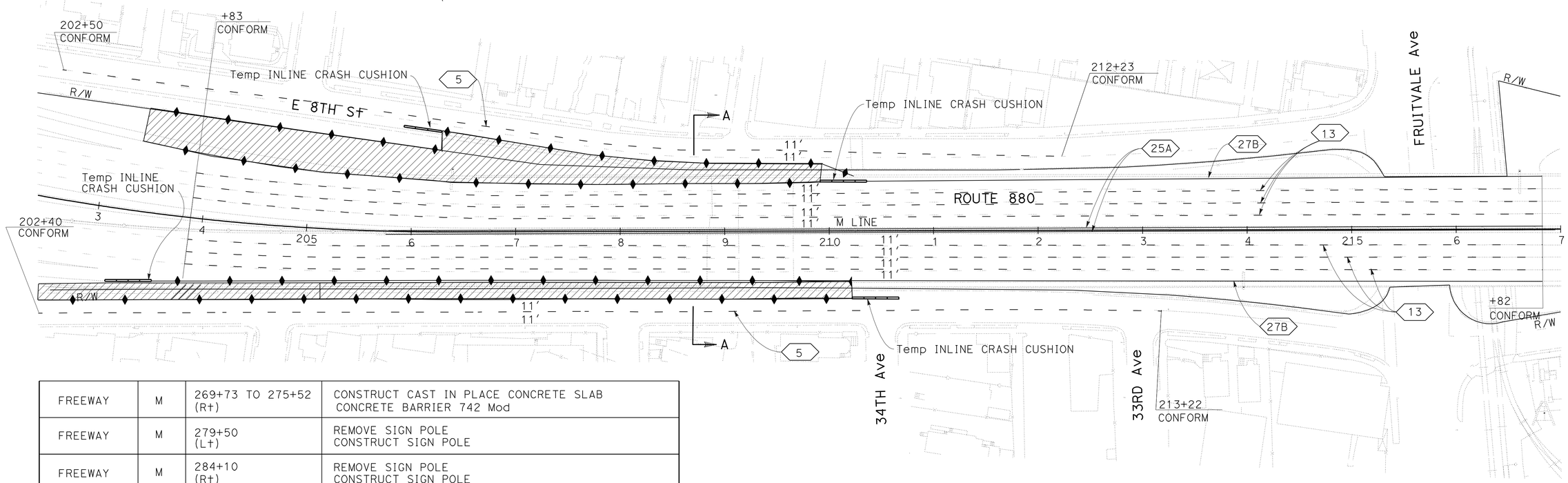

FREEWAY	M	269+73 TO 275+52 (Rt)	CONSTRUCT CAST IN PLACE CONCRETE SLAB CONCRETE BARRIER 742 Mod
FREEWAY	M	279+50 (Lt)	REMOVE SIGN POLE CONSTRUCT SIGN POLE
FREEWAY	M	284+10 (Rt)	REMOVE SIGN POLE CONSTRUCT SIGN POLE
FREEWAY	M	290+90 TO 309+71 (Rt)	CONSTRUCT CAST IN PLACE CONCRETE SLAB CONCRETE BARRIER 742 Mod
FREEWAY	M	293+00 TO 295+00 (Lt)	INSTALL 2 LIGHT POLES
FREEWAY	M	305+00 TO 307+00 (Lt)	INSTALL 2 LIGHT POLES

STAGE CONSTRUCTION AND TRAFFIC HANDLING PLAN

STAGE 1

SCALE: 1" = 50'

THIS PLAN ACCURATE FOR STAGE CONSTRUCTION AND TRAFFIC HANDLING WORK ONLY

SC-1

STATE OF CALIFORNIA - DEPARTMENT OF TRANSPORTATION
Caltrans DESIGN

FUNCTIONAL SUPERVISOR: EDMUND CHOY
CALCULATED-DESIGNED BY: THANH DOAN
CHECKED BY: KENNETH D. NHIEU
REVISED BY
DATE REVISED

LAST REVISION 04-04-11
DATE PLOTTED => 22-JUN-2011
TIME PLOTTED => 13:06

Dist	COUNTY	ROUTE	POST MILES TOTAL PROJECT	SHEET No.	TOTAL SHEETS
04	Ala	880	28.2/29.9	92	183

REGISTERED CIVIL ENGINEER 3-23-11 DATE

6-20-11
PLANS APPROVAL DATE

REGISTERED PROFESSIONAL ENGINEER K.D. Nhieu No. 55948 Exp. 12-31-12 CIVIL STATE OF CALIFORNIA

THE STATE OF CALIFORNIA OR ITS OFFICERS OR AGENTS SHALL NOT BE RESPONSIBLE FOR THE ACCURACY OR COMPLETENESS OF SCANNED COPIES OF THIS PLAN SHEET.

NOTE:

FOR ACCURATE RIGHT OF WAY DATA, CONTACT RIGHT OF WAY ENGINEERING AT THE DISTRICT OFFICE.

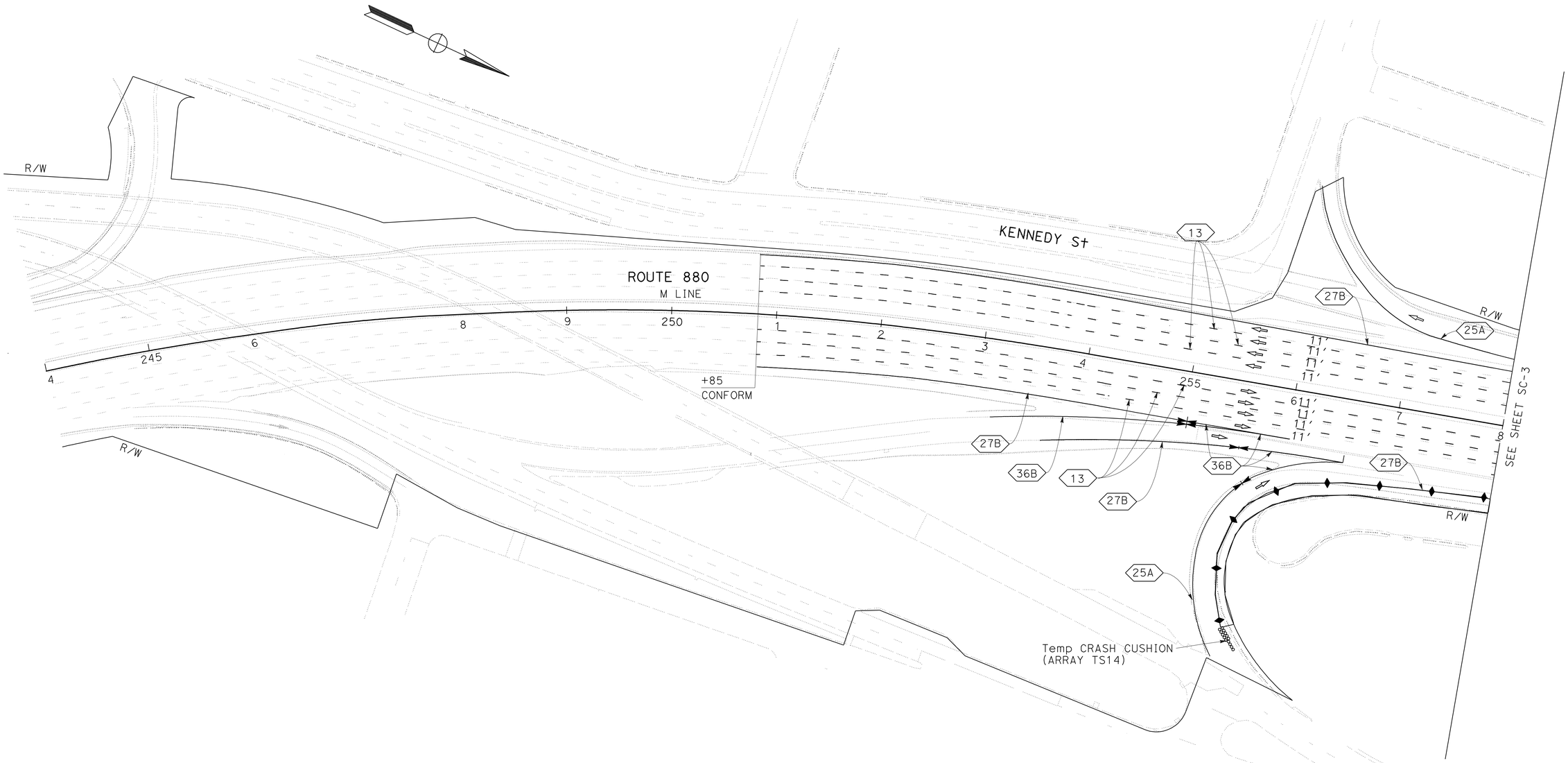

STAGE CONSTRUCTION AND TRAFFIC HANDLING PLAN

STAGE 1

SCALE: 1" = 50'

FOR NOTES, ABBREVIATIONS AND LEGEND, SEE SHEET SC-1

THIS PLAN ACCURATE FOR STAGE CONSTRUCTION AND TRAFFIC HANDLING WORK ONLY

SC-2

STATE OF CALIFORNIA - DEPARTMENT OF TRANSPORTATION
Caltrans
DESIGN

FUNCTIONAL SUPERVISOR: EDMUND CHOY
CALCULATED-DESIGNED BY: THANH DOAN
CHECKED BY: KENNETH D. NHIEU
REVISED BY
DATE REVISED

LAST REVISION 04-04-11
DATE PLOTTED => 22-JUN-2011
TIME PLOTTED => 13:06

Dist	COUNTY	ROUTE	POST MILES TOTAL PROJECT	SHEET No.	TOTAL SHEETS
04	Ala	880	28.2/29.9	93	183

REGISTERED CIVIL ENGINEER 3-23-11 DATE

6-20-11
PLANS APPROVAL DATE

REGISTERED PROFESSIONAL ENGINEER K.D. Nhieu No. 55948 Exp. 12-31-12 CIVIL STATE OF CALIFORNIA

THE STATE OF CALIFORNIA OR ITS OFFICERS OR AGENTS SHALL NOT BE RESPONSIBLE FOR THE ACCURACY OR COMPLETENESS OF SCANNED COPIES OF THIS PLAN SHEET.

NOTE:
FOR ACCURATE RIGHT OF WAY DATA, CONTACT RIGHT OF WAY ENGINEERING AT THE DISTRICT OFFICE.

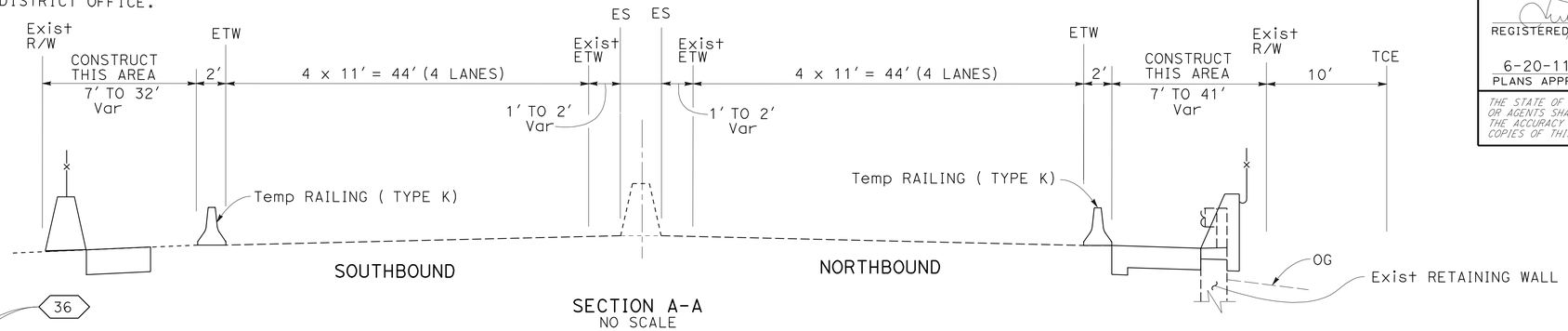

SECTION A-A
NO SCALE

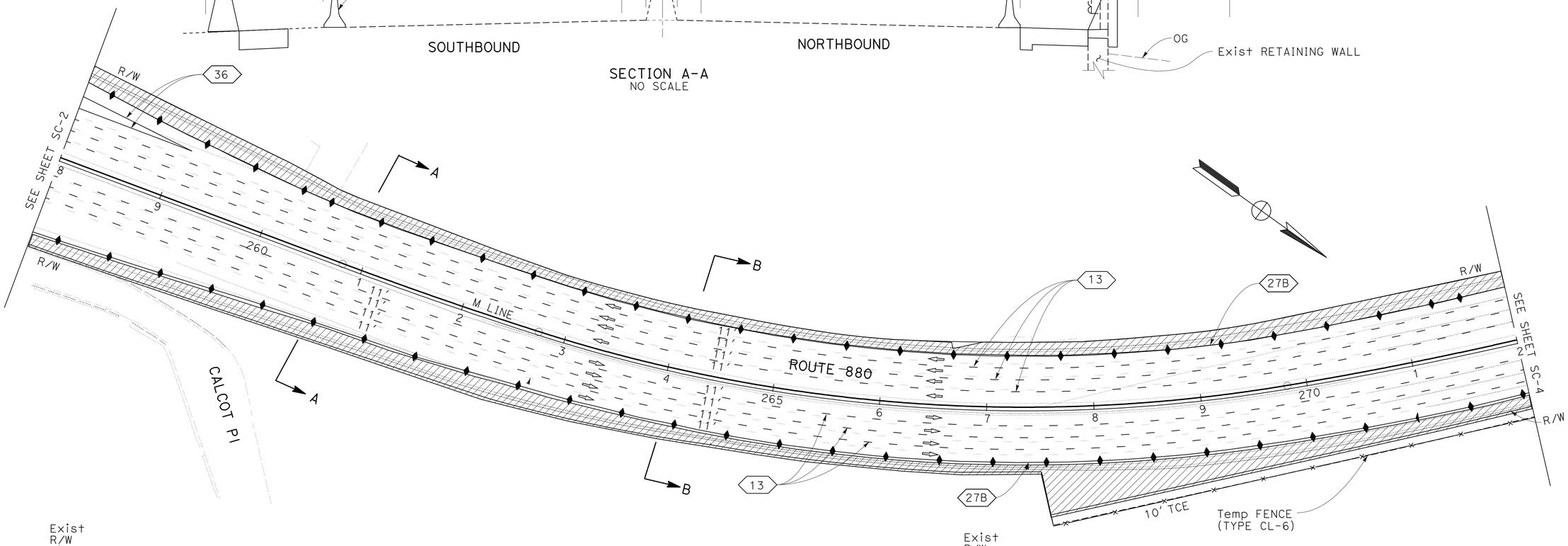

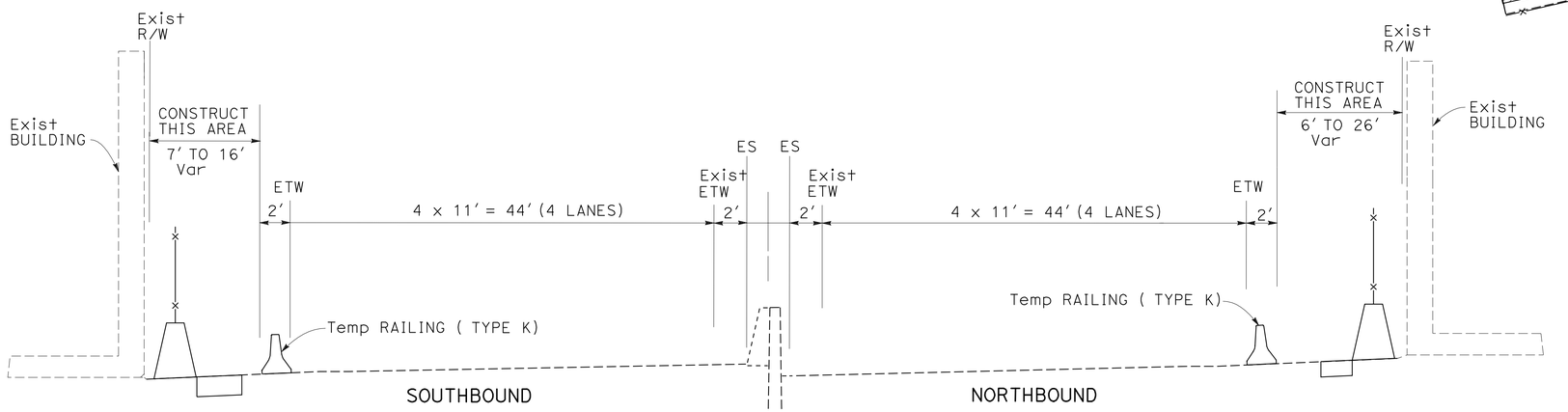

SECTION B-B
NO SCALE

STAGE CONSTRUCTION AND TRAFFIC HANDLING PLAN

STAGE 1

SCALE: 1" = 50'

FOR NOTES, ABBREVIATIONS AND LEGEND, SEE SHEET SC-1

THIS PLAN ACCURATE FOR STAGE CONSTRUCTION AND TRAFFIC HANDLING WORK ONLY

SC-3

STATE OF CALIFORNIA - DEPARTMENT OF TRANSPORTATION
Caltrans® DESIGN

FUNCTIONAL SUPERVISOR: EDMUND CHOY
CALCULATED-DESIGNED BY: THANH DOAN
CHECKED BY: KENNETH D. NHIEU
REVISED BY
DATE REVISED

LAST REVISION 04-04-11
DATE PLOTTED => 22-JUN-2011
TIME PLOTTED => 13:06

Dist	COUNTY	ROUTE	POST MILES TOTAL PROJECT	SHEET No.	TOTAL SHEETS
04	Ala	880	28.2/29.9	94	183

REGISTERED CIVIL ENGINEER 3-23-11 DATE

6-20-11
PLANS APPROVAL DATE

REGISTERED PROFESSIONAL ENGINEER K.D. Nhieu No. 55948 Exp. 12-31-12 CIVIL STATE OF CALIFORNIA

THE STATE OF CALIFORNIA OR ITS OFFICERS OR AGENTS SHALL NOT BE RESPONSIBLE FOR THE ACCURACY OR COMPLETENESS OF SCANNED COPIES OF THIS PLAN SHEET.

NOTE:

FOR ACCURATE RIGHT OF WAY DATA, CONTACT RIGHT OF WAY ENGINEERING AT THE DISTRICT OFFICE.

NOTE:

1. FOR TYPICAL CROSS SECTION, SEE SECTION A-A ON PAGE SC-3.

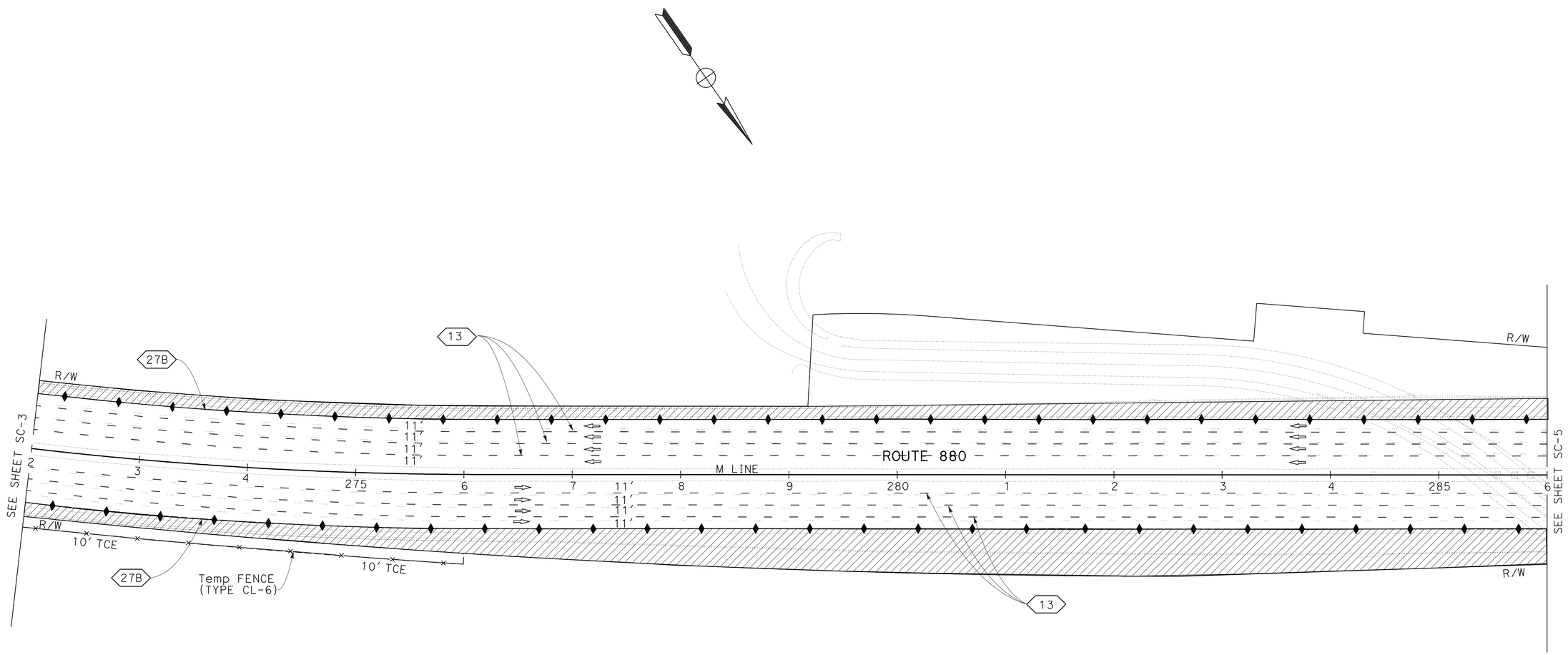

STAGE CONSTRUCTION AND TRAFFIC HANDLING PLAN

STAGE 1

SCALE: 1" = 50'

SC-4

FOR NOTES, ABBREVIATIONS AND LEGEND, SEE SHEET SC-1

THIS PLAN ACCURATE FOR STAGE CONSTRUCTION AND TRAFFIC HANDLING WORK ONLY

STATE OF CALIFORNIA - DEPARTMENT OF TRANSPORTATION

Caltrans

DESIGN

FUNCTIONAL SUPERVISOR: EDMUND CHOY

CALCULATED-DESIGNED BY: THANH DOAN

CHECKED BY: KENNETH D. NHIEU

REVISED BY

DATE REVISED

LAST REVISION DATE PLOTTED => 22-JUN-2011 TIME PLOTTED => 13:06

04-04-11

BORDER LAST REVISED 7/2/2010

USERNAME => s135318
DGN FILE => 0400020137ma004.dgn

RELATIVE BORDER SCALE IS IN INCHES 0 1 2 3

UNIT 0721

PROJECT NUMBER & PHASE 04000201371

Dist	COUNTY	ROUTE	POST MILES TOTAL PROJECT	SHEET No.	TOTAL SHEETS
04	Ala	880	28.2/29.9	95	183

REGISTERED CIVIL ENGINEER 3-23-11 DATE

6-20-11
PLANS APPROVAL DATE

REGISTERED PROFESSIONAL ENGINEER K.D. Nhieu No. 55948 Exp. 12-31-12 CIVIL STATE OF CALIFORNIA

THE STATE OF CALIFORNIA OR ITS OFFICERS OR AGENTS SHALL NOT BE RESPONSIBLE FOR THE ACCURACY OR COMPLETENESS OF SCANNED COPIES OF THIS PLAN SHEET.

NOTE:

FOR ACCURATE RIGHT OF WAY DATA, CONTACT RIGHT OF WAY ENGINEERING AT THE DISTRICT OFFICE.

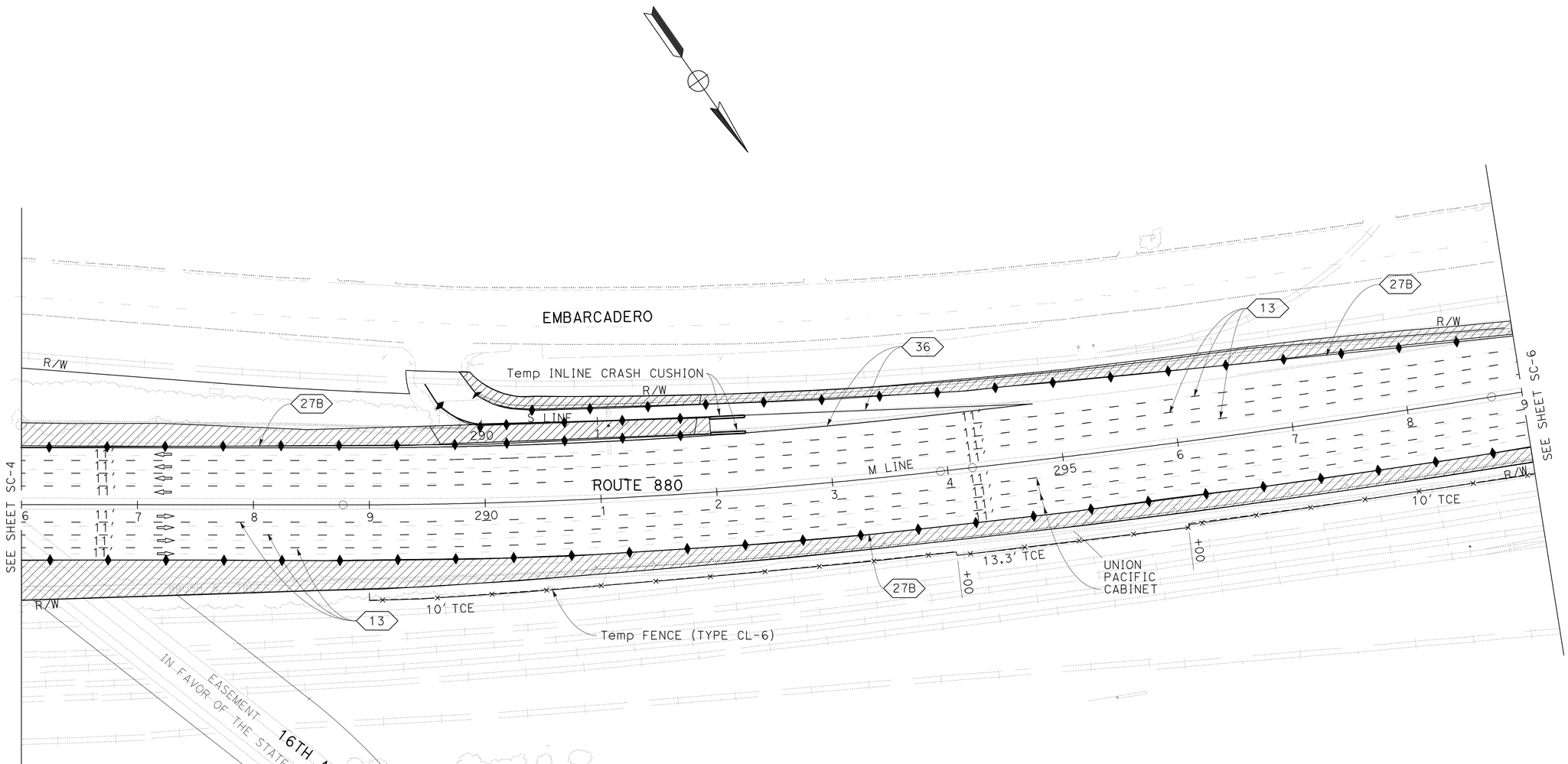

STAGE CONSTRUCTION AND TRAFFIC HANDLING PLAN

STAGE 1

SCALE: 1" = 50'

FOR NOTES, ABBREVIATIONS AND LEGEND, SEE SHEET SC-1

THIS PLAN ACCURATE FOR STAGE CONSTRUCTION AND TRAFFIC HANDLING WORK ONLY

SC-5

STATE OF CALIFORNIA - DEPARTMENT OF TRANSPORTATION
Caltrans
DESIGN

FUNCTIONAL SUPERVISOR: EDMUND CHOY
CALCULATED-DESIGNED BY: THANH DOAN
CHECKED BY: KENNETH D. NHIEU
REVISED BY
DATE REVISED

LAST REVISION DATE PLOTTED => 22-JUN-2011
TIME PLOTTED => 13:06
04-04-11

Dist	COUNTY	ROUTE	POST MILES TOTAL PROJECT	SHEET No.	TOTAL SHEETS
04	Ala	880	28.2/29.9	96	183

REGISTERED CIVIL ENGINEER 3-23-11 DATE

6-20-11
PLANS APPROVAL DATE

REGISTERED PROFESSIONAL ENGINEER K.D. Nhieu No. 55948 Exp. 12-31-12 CIVIL STATE OF CALIFORNIA

THE STATE OF CALIFORNIA OR ITS OFFICERS OR AGENTS SHALL NOT BE RESPONSIBLE FOR THE ACCURACY OR COMPLETENESS OF SCANNED COPIES OF THIS PLAN SHEET.

NOTE:

FOR ACCURATE RIGHT OF WAY DATA, CONTACT RIGHT OF WAY ENGINEERING AT THE DISTRICT OFFICE.

NOTE:

1. FOR TYPICAL CROSS SECTION, SEE SECTION A-A ON PAGE SC-3.

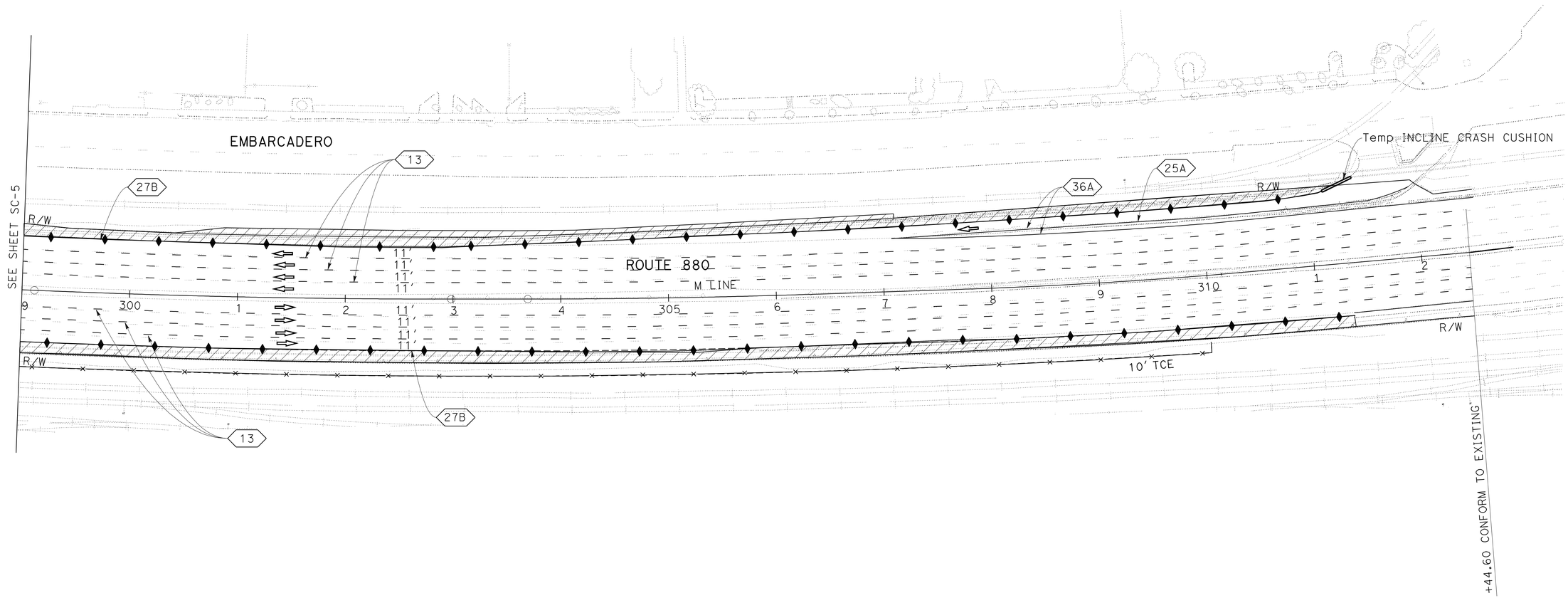

STAGE CONSTRUCTION AND TRAFFIC HANDLING PLAN

STAGE 1

SCALE: 1'' = 50'

FOR NOTES, ABBREVIATIONS AND LEGEND, SEE SHEET SC-1

THIS PLAN ACCURATE FOR STAGE CONSTRUCTION AND TRAFFIC HANDLING WORK ONLY

SC-6

STATE OF CALIFORNIA - DEPARTMENT OF TRANSPORTATION
Caltrans
DESIGN

FUNCTIONAL SUPERVISOR: EDMUND CHOY
CALCULATED-DESIGNED BY: THANH DOAN
CHECKED BY: KENNETH D. NHIEU
REVISED BY
DATE REVISED

LAST REVISION: DATE PLOTTED => 22-JUN-2011 TIME PLOTTED => 13:06
04-04-11

Dist	COUNTY	ROUTE	POST MILES TOTAL PROJECT	SHEET No.	TOTAL SHEETS
04	Ala	880	28.2/29.9	97	183

REGISTERED CIVIL ENGINEER 3-23-11 DATE

6-20-11
PLANS APPROVAL DATE

REGISTERED PROFESSIONAL ENGINEER K.D. Nhieu No. 55948 Exp. 12-31-12 CIVIL STATE OF CALIFORNIA

THE STATE OF CALIFORNIA OR ITS OFFICERS OR AGENTS SHALL NOT BE RESPONSIBLE FOR THE ACCURACY OR COMPLETENESS OF SCANNED COPIES OF THIS PLAN SHEET.

NOTE:

FOR ACCURATE RIGHT OF WAY DATA, CONTACT RIGHT OF WAY ENGINEERING AT THE DISTRICT OFFICE.

TRAFFIC			
SHIFTING NB AND SB TRAFFIC TO THE RIGHT SHOULDERS AS SHOWN. ALL TRAFFIC LANES SHALL HAVE A Min WIDTH OF 11 FT AT ALL TIMES.			
CONSTRUCTION			
DESCRIPTION	LINE	STATION	REMARK
FREEWAY	M	204+67 TO 208+13	REMOVE MEDIAN CONCRETE BARRIER CONSTRUCT CONCRETE BARRIER TYPE 60C
FREEWAY	M	258+40 TO 280+69	REMOVE MEDIAN CONCRETE BARRIER CONCRET CURB AND GUTTER CONSTRUCT CONCRETE BARRIER TYPE 60, 60C AND 60D
FREEWAY	M	280+69 TO 286+55	CONSTRUCT CONCRETE BARRIER TYPE 60E
FREEWAY	M	60 Ft Lt 290+32.97 TO 291+60.81	CONSTRUCT CONCRETE BARRIER TYPE 60E
FREEWAY	M	291+00 (Lt)	REMOVE SIGN POLE CONSTRUCT SIGN POLE
FREEWAY	M	286+55 TO 306+00	REMOVE MEDIAN CONCRETE BARRIER CONSTRUCT CONCRETE BARRIER TYPE 60C
FREEWAY	M	203+42 TO 209+00 258+00 TO 307+05	CRACK AND SEAT, LEVELING, AND FINAL STRIPING (SEE L AND PD SHEETS FOR MORE DETAILS)

NOTE: SEE LAYOUT SHEETS FOR MORE DETAILS.

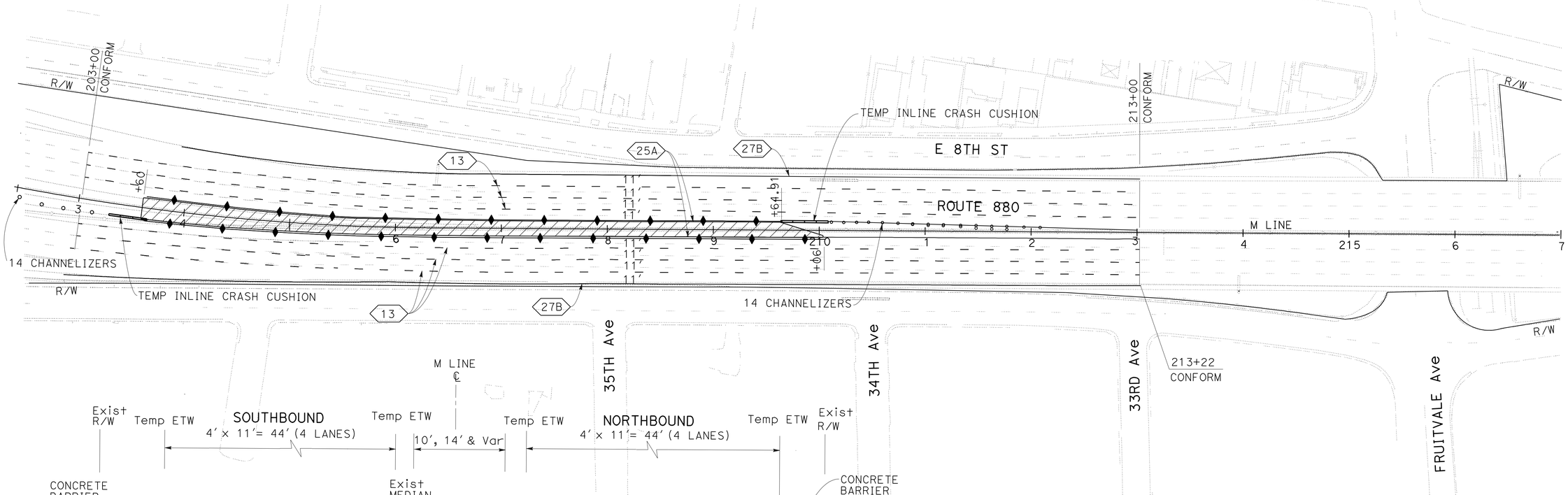

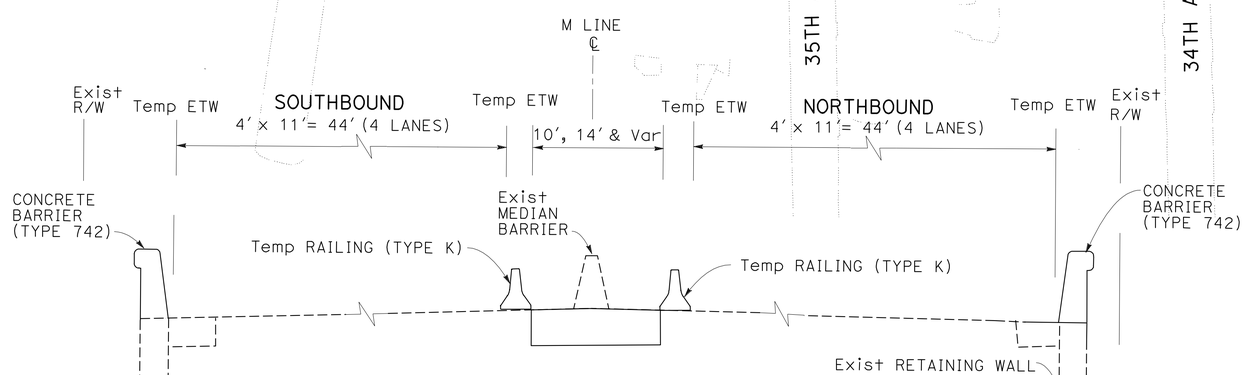

TYPICAL CROSS SECTION
NO SCALE

FOR NOTES, ABBREVIATIONS AND LEGEND, SEE SHEET SC-1

THIS PLAN ACCURATE FOR STAGE CONSTRUCTION AND TRAFFIC HANDLING WORK ONLY

STAGE CONSTRUCTION AND TRAFFIC HANDLING PLAN

STAGE 2

SCALE: 1" = 50'

SC-7

STATE OF CALIFORNIA - DEPARTMENT OF TRANSPORTATION
Caltrans® DESIGN

FUNCTIONAL SUPERVISOR: EDMUND CHOY
CALCULATED-DESIGNED BY: THANH DOAN
CHECKED BY: KENNETH D. NHIEU
REVISED BY
DATE REVISED

LAST REVISION DATE PLOTTED => 22-JUN-2011
TIME PLOTTED => 13:06
04-04-11

Dist	COUNTY	ROUTE	POST MILES TOTAL PROJECT	SHEET No.	TOTAL SHEETS
04	Ala	880	28.2/29.9	98	183

REGISTERED CIVIL ENGINEER 3-23-11 DATE

6-20-11
PLANS APPROVAL DATE

REGISTERED PROFESSIONAL ENGINEER K.D. Nhieu No. 55948 Exp. 12-31-12 CIVIL STATE OF CALIFORNIA

THE STATE OF CALIFORNIA OR ITS OFFICERS OR AGENTS SHALL NOT BE RESPONSIBLE FOR THE ACCURACY OR COMPLETENESS OF SCANNED COPIES OF THIS PLAN SHEET.

NOTE:

FOR ACCURATE RIGHT OF WAY DATA, CONTACT
RIGHT OF WAY ENGINEERING AT THE DISTRICT OFFICE.

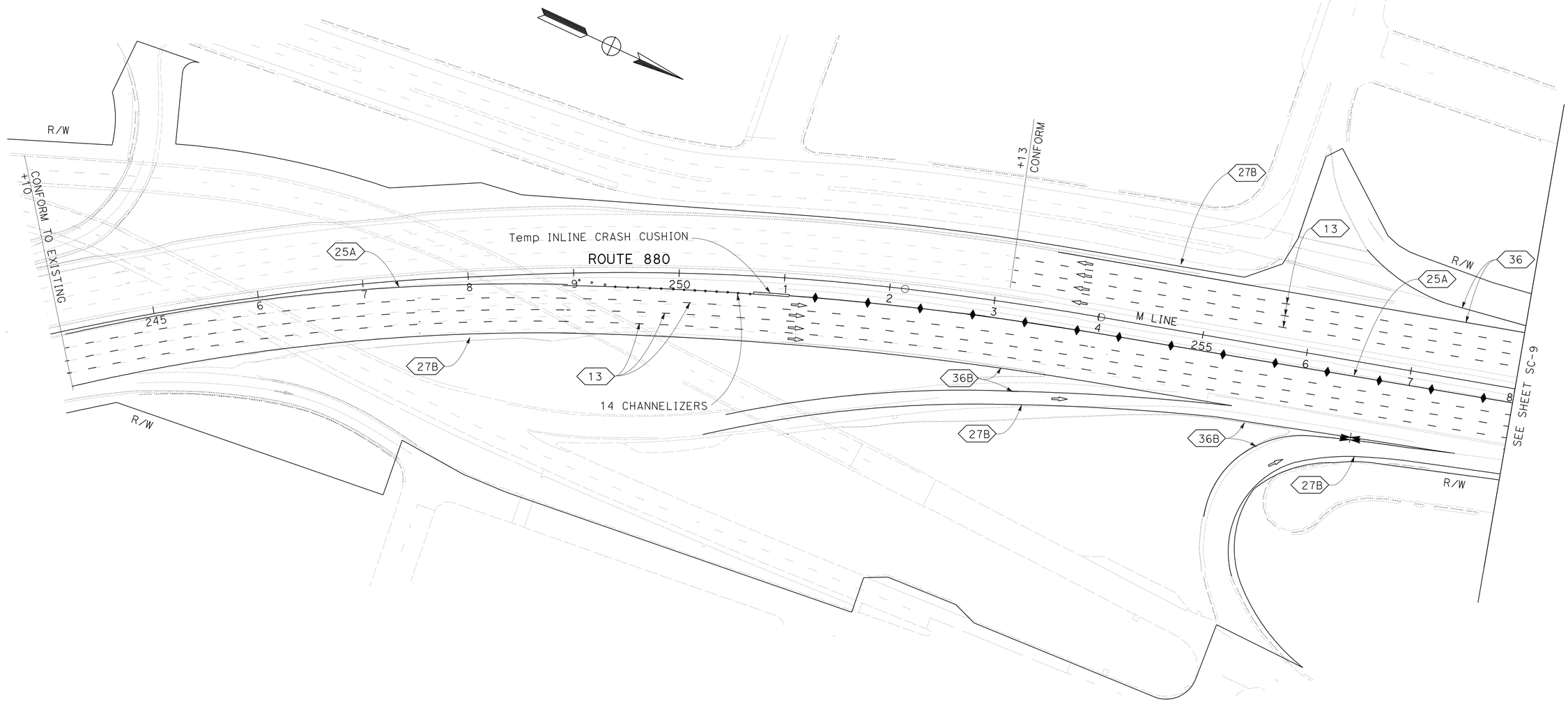

STAGE CONSTRUCTION AND TRAFFIC HANDLING PLAN

STAGE 2

SCALE: 1" = 50'

FOR NOTES, ABBREVIATIONS AND LEGEND, SEE SHEET SC-1

THIS PLAN ACCURATE FOR STAGE CONSTRUCTION AND TRAFFIC HANDLING WORK ONLY

SC-8

STATE OF CALIFORNIA - DEPARTMENT OF TRANSPORTATION
DESIGN

FUNCTIONAL SUPERVISOR: EDMUND CHOY
CALCULATED-DESIGNED BY: THANH DOAN
CHECKED BY: KENNETH D. NHIEU
REVISED BY
DATE REVISED

LAST REVISION 03-25-11
DATE PLOTTED => 22-JUN-2011
TIME PLOTTED => 13:06

Dist	COUNTY	ROUTE	POST MILES TOTAL PROJECT	SHEET No.	TOTAL SHEETS
04	Ala	880	28.2/29.9	99	183

REGISTERED CIVIL ENGINEER 3-23-11 DATE

6-20-11
PLANS APPROVAL DATE

REGISTERED PROFESSIONAL ENGINEER K.D. Nhieu No. 55948 Exp. 12-31-12 CIVIL STATE OF CALIFORNIA

THE STATE OF CALIFORNIA OR ITS OFFICERS OR AGENTS SHALL NOT BE RESPONSIBLE FOR THE ACCURACY OR COMPLETENESS OF SCANNED COPIES OF THIS PLAN SHEET.

NOTE:

FOR ACCURATE RIGHT OF WAY DATA, CONTACT RIGHT OF WAY ENGINEERING AT THE DISTRICT OFFICE.

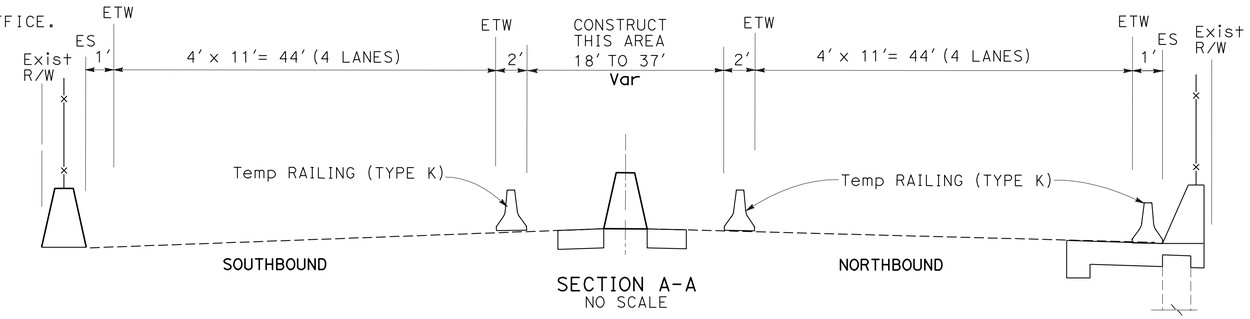

SECTION A-A
NO SCALE

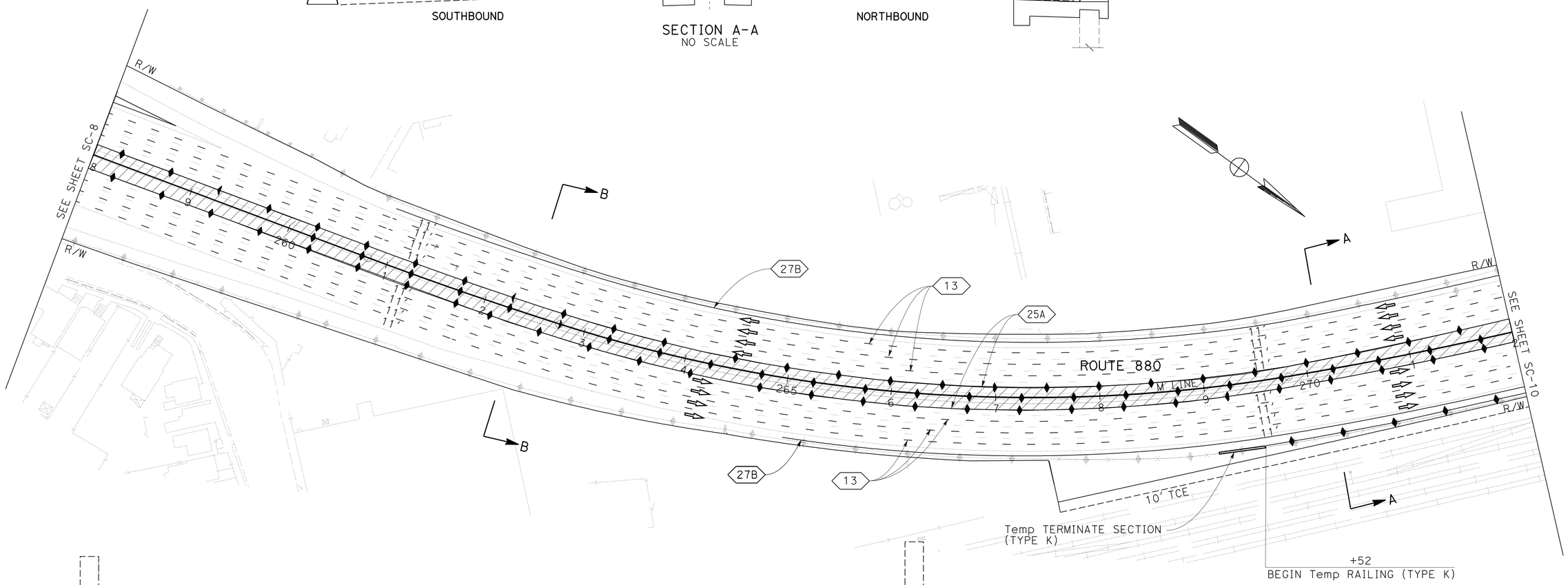

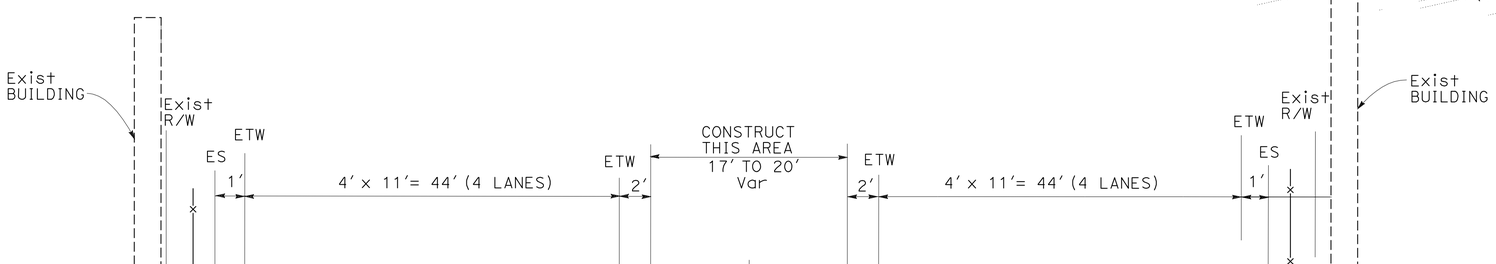

SECTION B-B
NO SCALE

FOR NOTES, ABBREVIATIONS AND LEGEND, SEE SHEET SC-1

THIS PLAN ACCURATE FOR STAGE CONSTRUCTION AND TRAFFIC HANDLING WORK ONLY

STAGE CONSTRUCTION AND TRAFFIC HANDLING PLAN

STAGE 2

SCALE: 1" = 50'

SC-9

STATE OF CALIFORNIA - DEPARTMENT OF TRANSPORTATION
DESIGN
Caltrans

FUNCTIONAL SUPERVISOR: EDMUND CHOY
CALCULATED-DESIGNED BY: THANH DOAN
CHECKED BY: KENNETH D. NHIEU
REVISED BY
DATE REVISED

LAST REVISION 04-04-11
DATE PLOTTED => 22-JUN-2011
TIME PLOTTED => 13:06

Dist	COUNTY	ROUTE	POST MILES TOTAL PROJECT	SHEET No.	TOTAL SHEETS
04	Ala	880	28.2/29.9	100	183

REGISTERED CIVIL ENGINEER 3-23-11 DATE

6-20-11
PLANS APPROVAL DATE

REGISTERED PROFESSIONAL ENGINEER K.D. Nhieu No. 55948 Exp. 12-31-12 CIVIL STATE OF CALIFORNIA

THE STATE OF CALIFORNIA OR ITS OFFICERS OR AGENTS SHALL NOT BE RESPONSIBLE FOR THE ACCURACY OR COMPLETENESS OF SCANNED COPIES OF THIS PLAN SHEET.

NOTE:

FOR ACCURATE RIGHT OF WAY DATA, CONTACT RIGHT OF WAY ENGINEERING AT THE DISTRICT OFFICE.

NOTE:

FOR TYPICAL CROSS SECTION, SEE SECTION A-A ON SHEET SC-9.

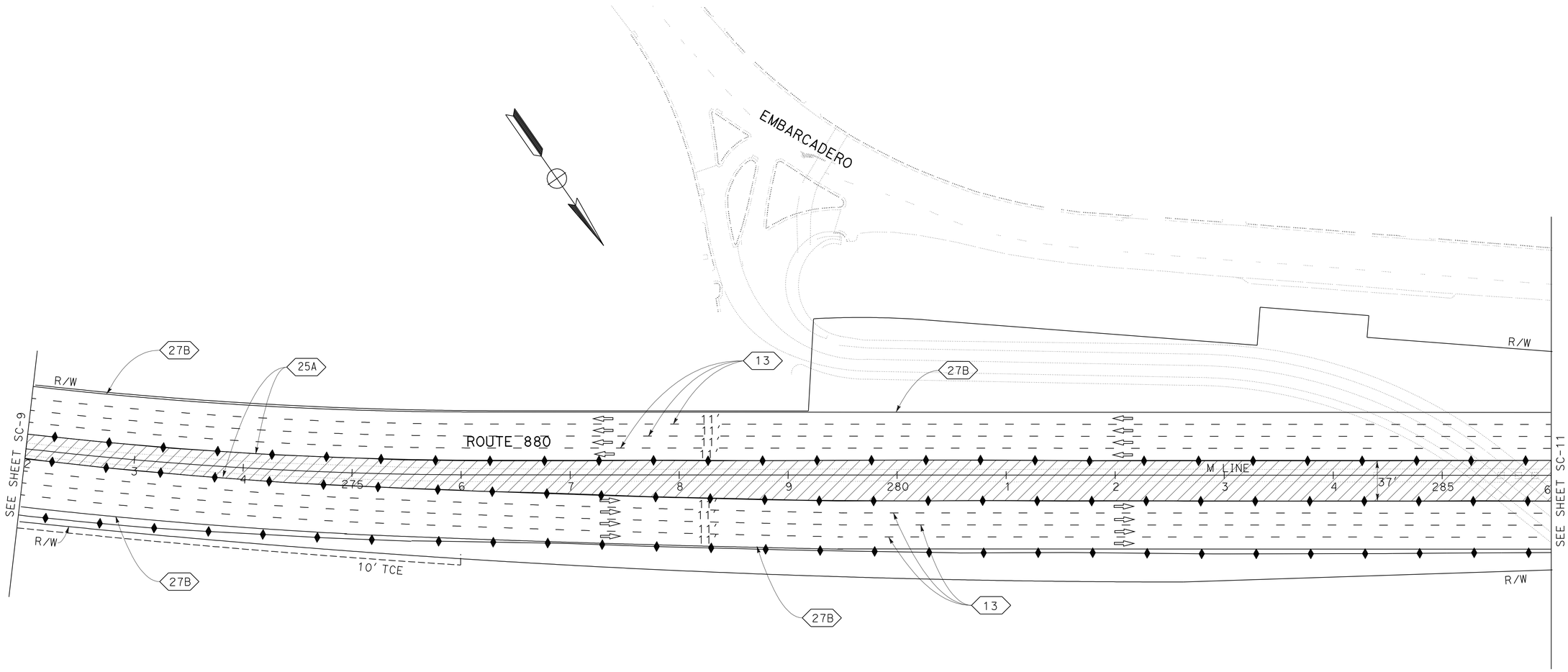

STAGE CONSTRUCTION AND TRAFFIC HANDLING PLAN

STAGE 2

SCALE: 1" = 50'

SC-10

FOR NOTES, ABBREVIATIONS AND LEGEND, SEE SHEET SC-1

THIS PLAN ACCURATE FOR STAGE CONSTRUCTION AND TRAFFIC HANDLING WORK ONLY

STATE OF CALIFORNIA - DEPARTMENT OF TRANSPORTATION

DESIGN

FUNCTIONAL SUPERVISOR: EDMUND CHOY

CALCULATED-DESIGNED BY: THANH DOAN

CHECKED BY: KENNETH D. NHIEU

REVISED BY

DATE REVISED

LAST REVISION 04-04-11

DATE PLOTTED => 22-JUN-2011

TIME PLOTTED => 13:06