Dist	COUNTY	ROUTE	KILOMETER POST TOTAL PROJECT	SHEET No.	TOTAL SHEETS
04	Ala	80	1.6/2.7	301	744

REGISTERED ELECTRICAL ENGINEER 5/02/11

10-3-11
PLANS APPROVAL DATE

REGISTERED PROFESSIONAL ENGINEER DAVID H. OTO No. 10699 Exp. 06/30/2011 ELECTRICAL STATE OF CALIFORNIA

THE STATE OF CALIFORNIA OR ITS OFFICERS OR AGENTS SHALL NOT BE RESPONSIBLE FOR THE ACCURACY OR COMPLETENESS OF ELECTRONIC COPIES OF THIS PLAN SHEET.

PB AMERICAS, Inc.
303 Second St., Suite 700N
San Francisco, CA 94107-1317

Caltrans Metric

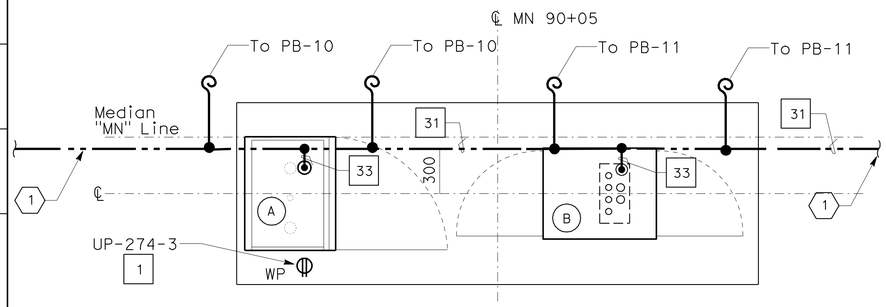

SERVICE PAD #25
EQUIPMENT ARRANGEMENT AND GROUNDING PLAN
SCALE: 1:20

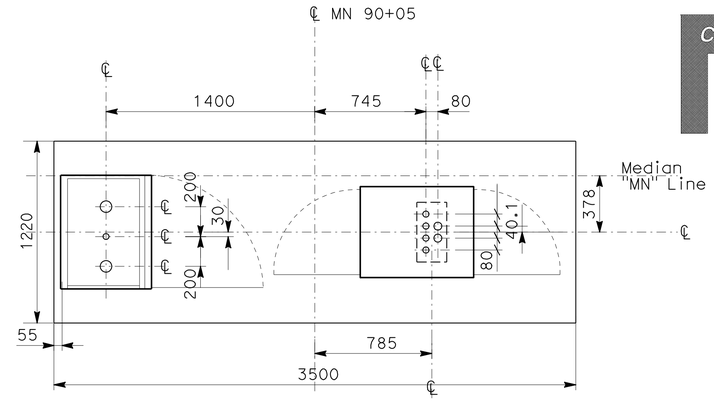

CONDUIT STUB-UP PLAN
SCALE: 1:20

NOTES:

1. References:
   - For location of Service Pad #25, see sheet E-69.
   - For UP-274 panel schedule, see sheet E-142.
   - TOS equipment is shown for routing only. For typical details of TOS controllers and devices, see sheets E-190 through E-197.
   - For pull box schedule, see sheet E-130.
   - For conduit and tray, cable and circuit schedules, see sheets starting at E-205.
   - For Service Pad #25 sections, see sheet E-112.
2. The Contractor shall verify all stub-up locations prior to pouring concrete.
3. Provide ground bushing on each conduit and install a bonding jumper with a #6 BCW inside manholes and pull boxes.

SHEET NOTES:

(1) Connect 250 kcmil through Manholes to Service Pad #25 and onwards to MH-54. Refer to sheet E-131 for grounding system.

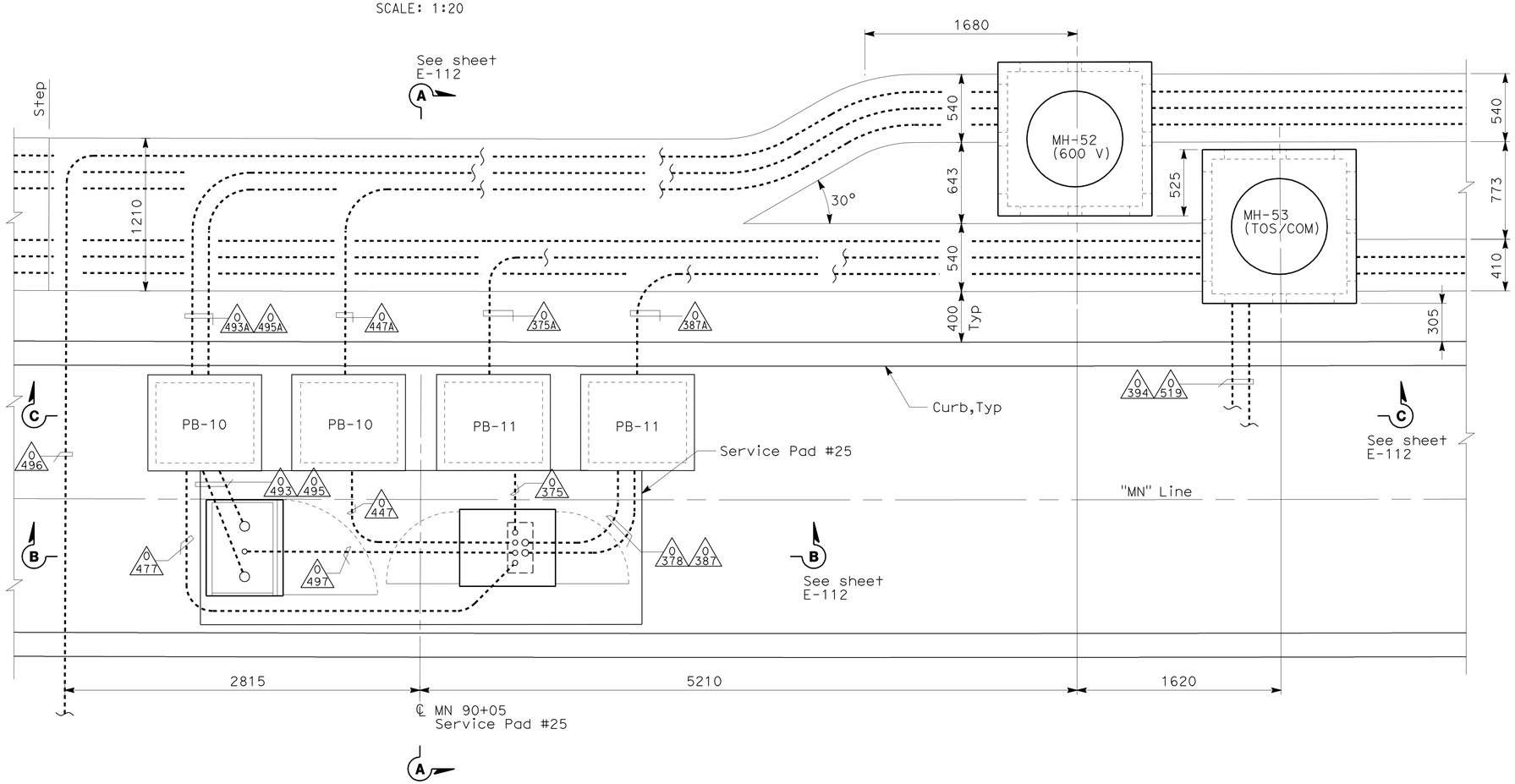

DUCT BANK AND CONDUIT PLAN
(See sheet E-69)
SCALE: 1:20

EQUIPMENT SCHEDULE	
(A)	Service Panel Enclosure No. (UP-274) Size: 1524 H x 762 W x 610 D
(B)	Controller Cabinet #TOS-25A Size: 1676 H x 610 W x 762 D

DETAILS
UNDERGROUND AND ROADWAY AT GRADE (SERVICE PAD #25 PLANS)
SCALE AS NOTED

E-111

THIS PLAN IS ACCURATE FOR ELECTRICAL WORK ONLY.

ALL DIMENSIONS ARE IN MILLIMETERS UNLESS OTHERWISE SHOWN

STATE OF CALIFORNIA - DEPARTMENT OF TRANSPORTATION
Caltrans
CONSULTANT FUNCTIONAL SUPERVISOR: BRADY NADELL
CALCULATED-DESIGNED BY: JEFFRI HALIM
CHECKED BY: ELLERY LUCAS
REVISED BY / DATE REVISED

LAST REVISION 08-17-09 DATE PLOTTED => 06-OCT-2011 TIME PLOTTED => 06:58

Dist	COUNTY	ROUTE	KILOMETER POST TOTAL PROJECT	SHEET No.	TOTAL SHEETS
04	Ala	80	1.6/2.7	302	744

REGISTERED ELECTRICAL ENGINEER 5/02/11

10-3-11
PLANS APPROVAL DATE

REGISTERED PROFESSIONAL ENGINEER DAVID H. OTO No. 10699 Exp. 06/30/2013 ELECTRICAL STATE OF CALIFORNIA

THE STATE OF CALIFORNIA OR ITS OFFICERS OR AGENTS SHALL NOT BE RESPONSIBLE FOR THE ACCURACY OR COMPLETENESS OF ELECTRONIC COPIES OF THIS PLAN SHEET.

PB AMERICAS, Inc.
303 Second St., Suite 700N
San Francisco, CA 94107-1317

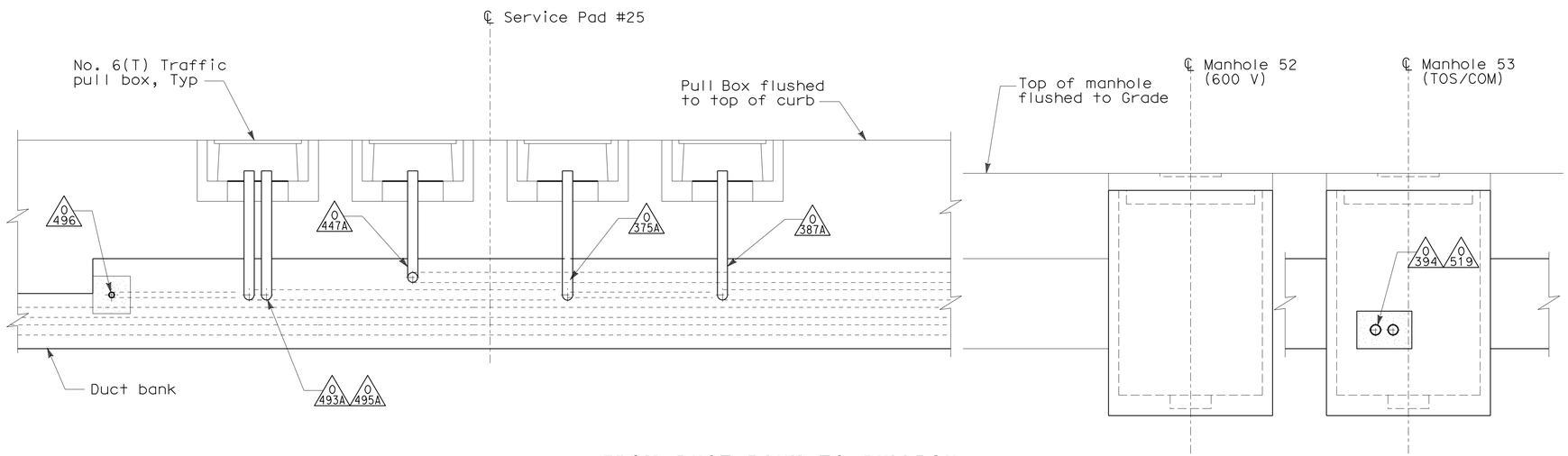

FROM DUCT BANK TO PULLBOX

SECTION C-C

NOTES:

1. References:
   - For location of Service Pad #25, see sheet E-69
   - For pull box schedule, see sheet E-130.
   - For Service Pad #25 plan, see sheet E-111.
   - For conduit and tray, cable and circuit schedules, see sheets starting at E-205.
   - TOS equipment is shown for routing only. For typical details of TOS controllers and devices, see sheets E-190 through E-197.
   - Standard plans RSP ES-2D and ES-3A.

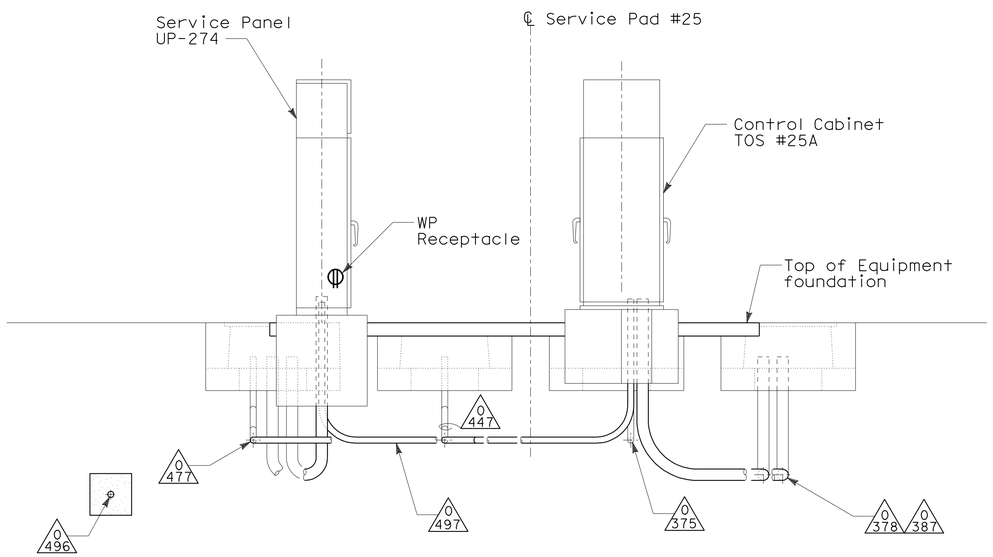

FROM PULLBOX TO CONTROL CABINET

SECTION B-B

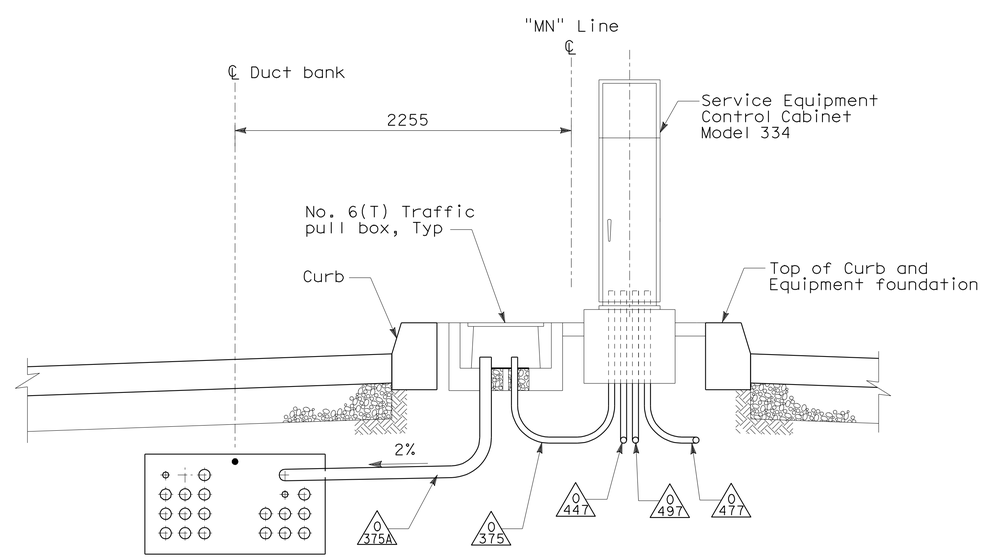

SECTION A-A

DETAILS
UNDERGROUND AND ROADWAY AT GRADE (SERVICE PAD #25 SECTIONS)

SCALE 1:20

E-112

THIS PLAN IS ACCURATE FOR ELECTRICAL WORK ONLY.

ALL DIMENSIONS ARE IN MILLIMETERS UNLESS OTHERWISE SHOWN

STATE OF CALIFORNIA - DEPARTMENT OF TRANSPORTATION

Caltrans

CONSULTANT FUNCTIONAL SUPERVISOR: BRADY NADELL

CALCULATED-DESIGNED BY: JEFFRI HALIM

CHECKED BY: ELLERY LUCAS

REVISED BY / DATE REVISED

LAST REVISION 08-17-09

DATE PLOTTED => 06-OCT-2011
TIME PLOTTED => 06:58

Dist	COUNTY	ROUTE	KILOMETER POST TOTAL PROJECT	SHEET No.	TOTAL SHEETS
04	Ala	80	1.6/2.7	303	744

REGISTERED ELECTRICAL ENGINEER 5/02/11

PLANS APPROVAL DATE 10-3-11

REGISTERED PROFESSIONAL ENGINEER DAVID H. OTO No. 10699 Exp. 06/30/2013 ELECTRICAL STATE OF CALIFORNIA

THE STATE OF CALIFORNIA OR ITS OFFICERS OR AGENTS SHALL NOT BE RESPONSIBLE FOR THE ACCURACY OR COMPLETENESS OF ELECTRONIC COPIES OF THIS PLAN SHEET.

PB AMERICAS, Inc.
303 Second St., Suite 700N
San Francisco, CA 94107-1317

Caltrans Metric

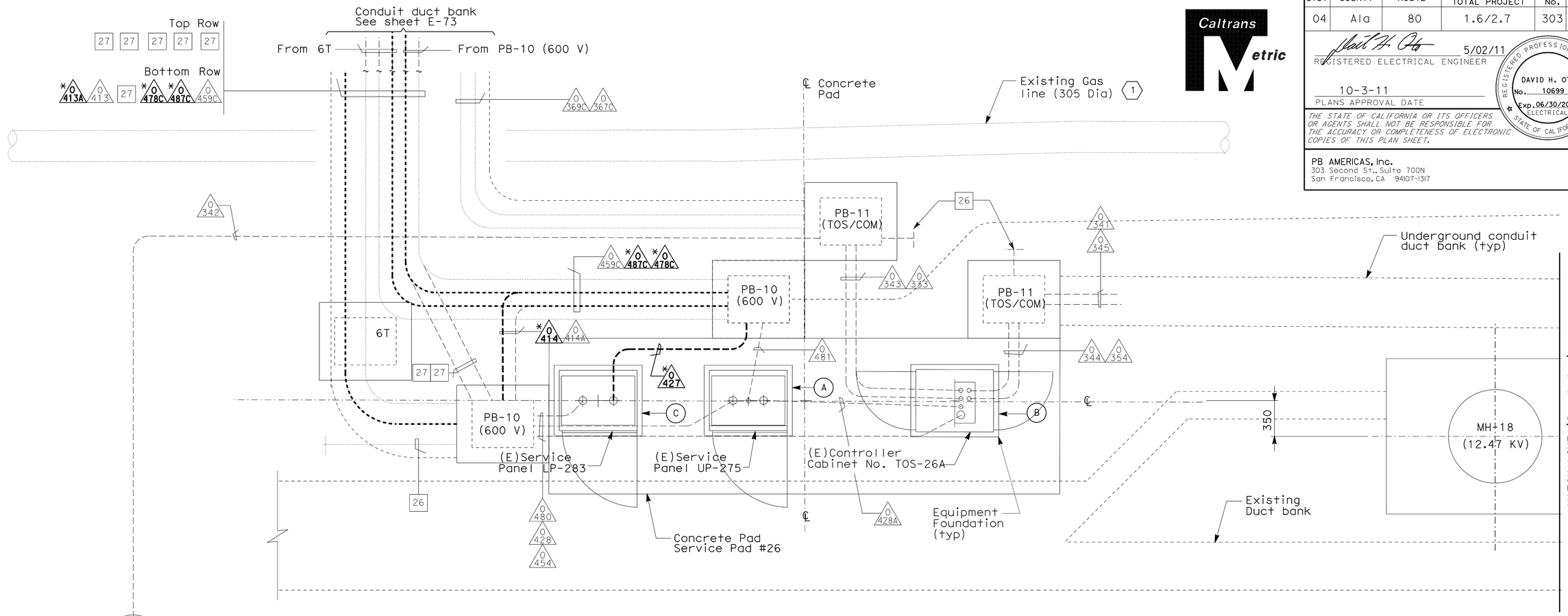

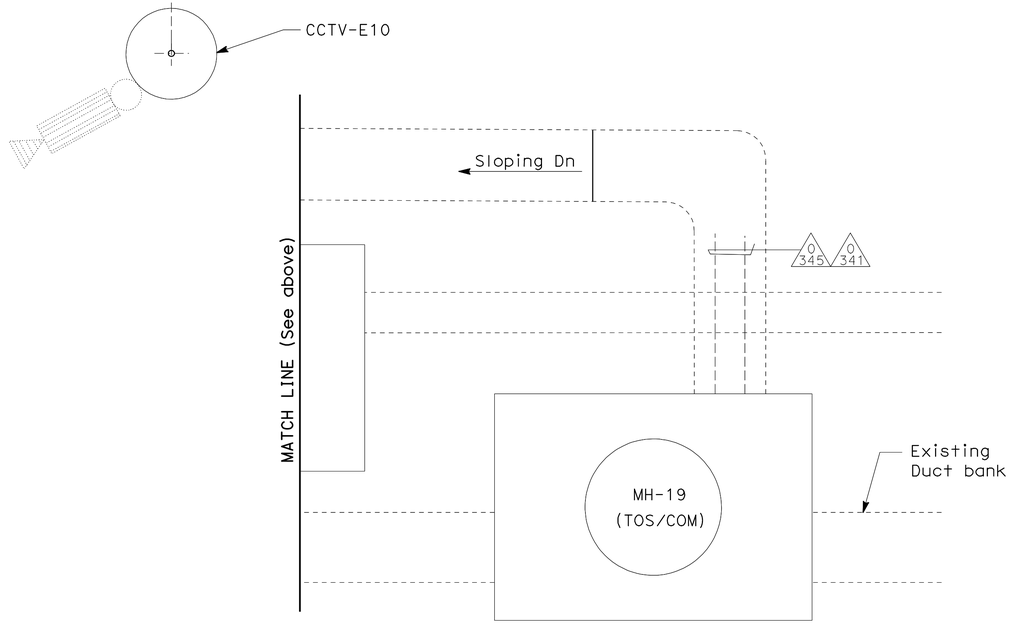

DUCT BANK AND CONDUIT PLAN

SCALE: 1:20

NOTES:

1. References:
   - For location of Service Pad #26, see sheet E-73.
   - For pull box schedule, see sheet E-130.
   - For conduit and tray, cable and circuit schedules, see sheets starting at E-205.

SHEET NOTE:

(1) High Risk Gas Line.

DETAILS
UNDERGROUND AND ROADWAY AT GRADE (SERVICE PAD #26 PLANS)

SCALE: 1:20

THIS PLAN IS ACCURATE FOR ELECTRICAL WORK ONLY.

ALL DIMENSIONS ARE IN MILLIMETERS UNLESS OTHERWISE SHOWN

E-113

REVISED BY	JEFFRI HALIM
DATE REVISED	ELLERY LUCAS
CALCULATED-DESIGNED BY	
CHECKED BY	
CONSULTANT FUNCTIONAL SUPERVISOR	BRADY NADELL

STATE OF CALIFORNIA - DEPARTMENT OF TRANSPORTATION

Caltrans

LAST REVISION 08-17-09 DATE PLOTTED => 06-OCT-2011 TIME PLOTTED => 06:59

Dist	COUNTY	ROUTE	KILOMETER POST TOTAL PROJECT	SHEET No.	TOTAL SHEETS
04	Ala	80	1.6/2.7	304	744

REGISTERED ELECTRICAL ENGINEER 5/02/11

10-3-11
PLANS APPROVAL DATE

REGISTERED PROFESSIONAL ENGINEER DAVID H. OTO No. 10699 Exp. 06/30/2013 ELECTRICAL STATE OF CALIFORNIA

THE STATE OF CALIFORNIA OR ITS OFFICERS OR AGENTS SHALL NOT BE RESPONSIBLE FOR THE ACCURACY OR COMPLETENESS OF ELECTRONIC COPIES OF THIS PLAN SHEET.

PB AMERICAS, Inc.
303 Second St., Suite 700N
San Francisco, CA 94107-1317

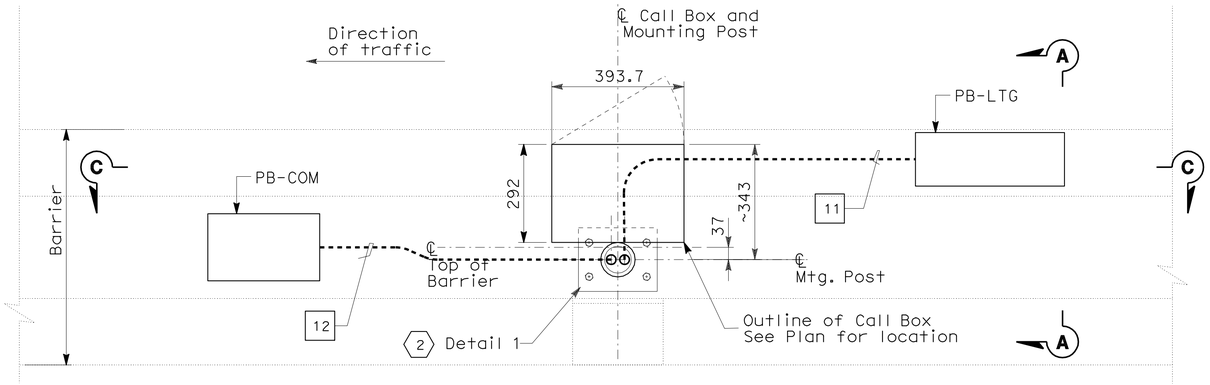

TYPICAL PLAN
(APPLICABLE FOR WB - SOUTH BARRIER)
NO SCALE

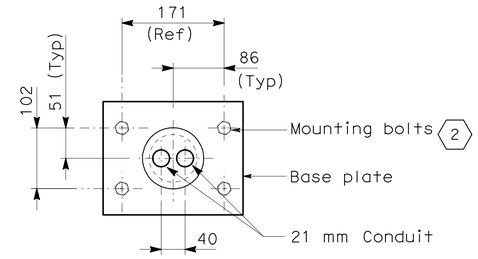

DETAIL 1
NO SCALE

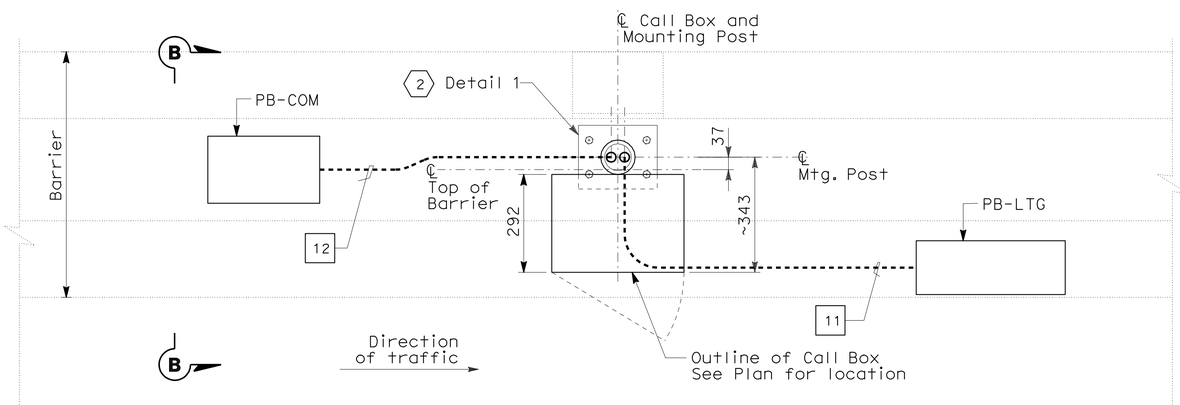

TYPICAL PLAN
(APPLICABLE FOR EB - NORTH BARRIER)
NO SCALE

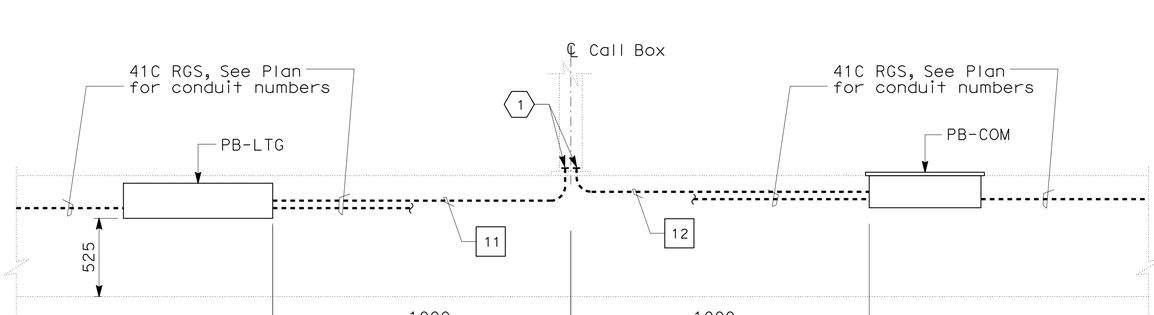

LONGITUDINAL SECTION C-C
TYPICAL CONDUIT ROUTING INSIDE CONCRETE BARRIER
NO SCALE

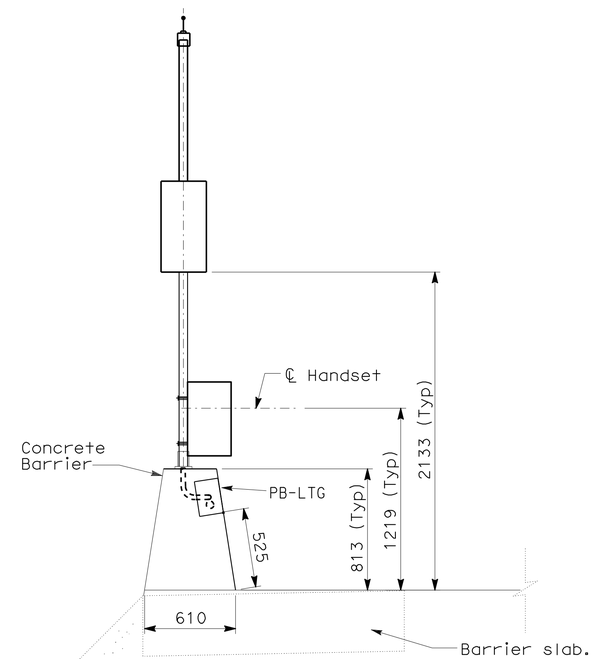

SECTION A-A
SCALE: 1:20

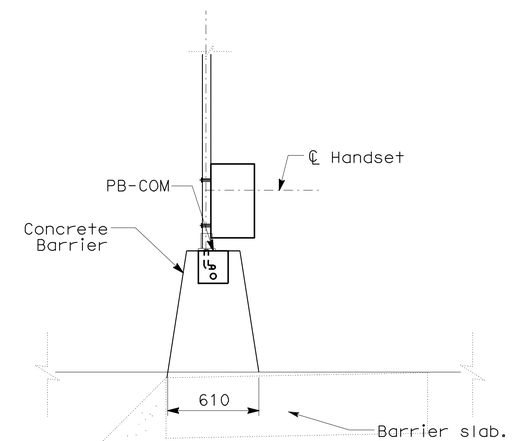

SECTION B-B
SCALE: 1:20

NOTES:

1. References:
   - For typical pull box schedule, see sheet E-130.
2. For PB-LTG, PB-COM and call box location plan, see sheets E-66 through E-71 and E-87 through E-88.
3. Call boxes furnished and installed by others.

SHEET NOTES:

(1) Provide grounding bushing and install bonding jumper with #6 BCW and to Call box post.

(2) (4) 19.05 Dia. HSB (ASTM A325) 180 mm concrete embedment, and 130 mm bolt projection from top of concrete. Prior to installation, the Contractor to verify the supplied Call box components for size of mounting hole diameter.

DETAILS
UNDERGROUND AND ROADWAY AT GRADE (BARRIER PULL BOX AND CALL BOX CONDUIT LOCATIONS)
SCALE AS NOTED

E-114

THIS PLAN IS ACCURATE FOR ELECTRICAL WORK ONLY.

ALL DIMENSIONS ARE IN MILLIMETERS UNLESS OTHERWISE SHOWN

STATE OF CALIFORNIA - DEPARTMENT OF TRANSPORTATION
Caltrans

CONSULTANT FUNCTIONAL SUPERVISOR: BRADY NADELL
CALCULATED-DESIGNED BY: JEFFRI HALIM
CHECKED BY: ELLERY LUCAS
REVISED BY / DATE REVISED

LAST REVISION 08-17-09 | DATE PLOTTED => 06-OCT-2011 | TIME PLOTTED => 06:59

Dist	COUNTY	ROUTE	KILOMETER POST TOTAL PROJECT	SHEET No.	TOTAL SHEETS
04	Ala	80	1.6/2.7	305	744

REGISTERED ELECTRICAL ENGINEER 5/02/11

10-3-11
PLANS APPROVAL DATE

REGISTERED PROFESSIONAL ENGINEER DAVID H. OTO No. 10699 Exp. 06/30/2013 ELECTRICAL STATE OF CALIFORNIA

THE STATE OF CALIFORNIA OR ITS OFFICERS OR AGENTS SHALL NOT BE RESPONSIBLE FOR THE ACCURACY OR COMPLETENESS OF ELECTRONIC COPIES OF THIS PLAN SHEET.

PB AMERICAS, Inc.
303 Second St., Suite 700N
San Francisco, CA 94107-1317

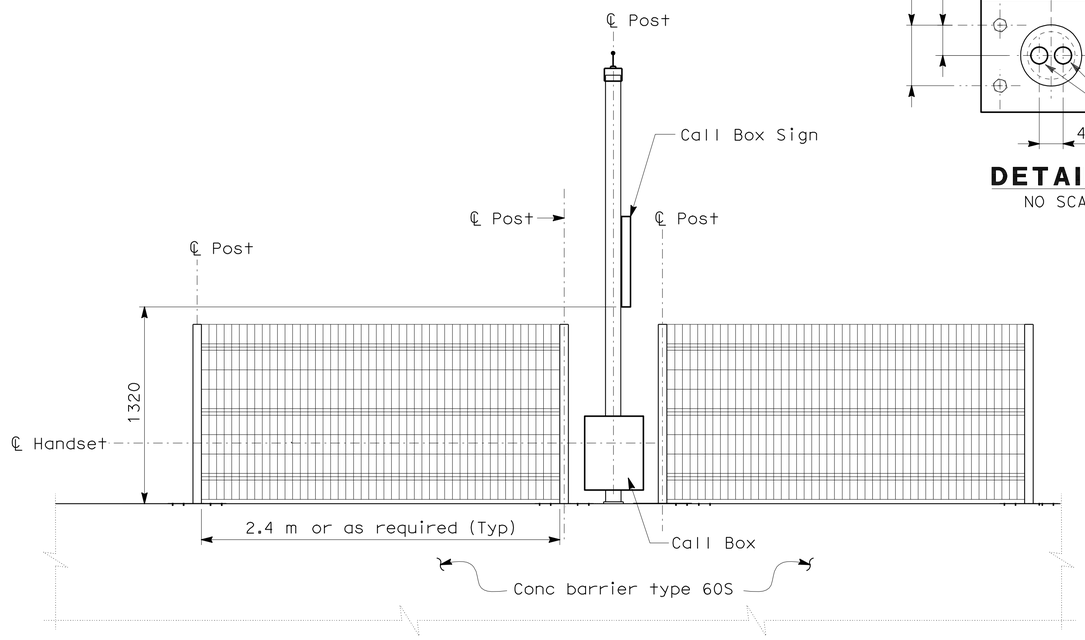

TYPICAL ELEVATION
(Eastbound South barrier)
1:20

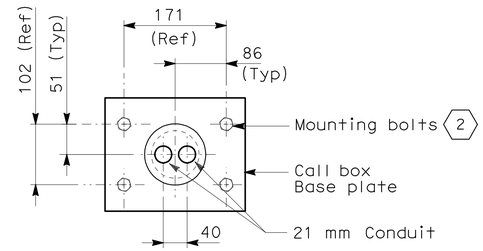

DETAIL 1
NO SCALE

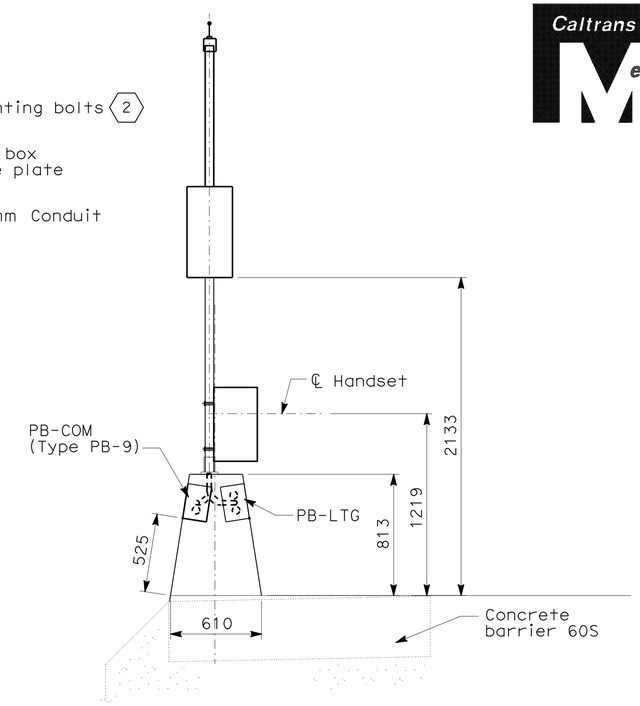

SECTION A-A
CALL BOX MOUNTING AND CONDUIT STUB UP LOCATION AT
CONCRETE BARRIER WITH WIRE STEEL RAILING
SCALE: 1:20

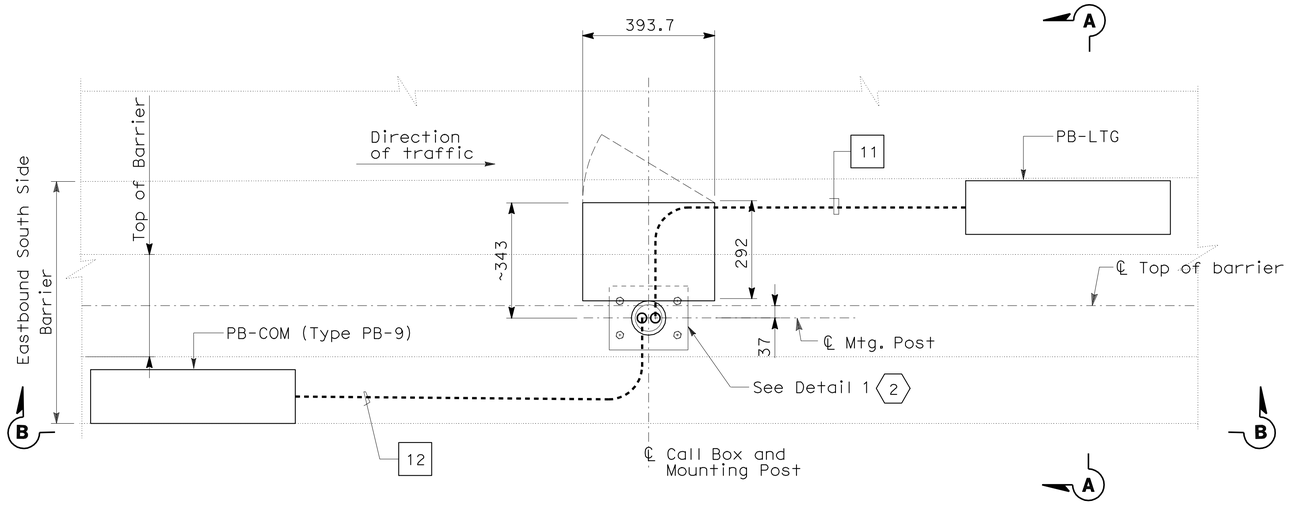

TYPICAL PLAN
CONDUIT STUB UP FOR CALL BOX ON CONCRETE
BARRIER WITH WIRE STEEL RAILING
NO SCALE

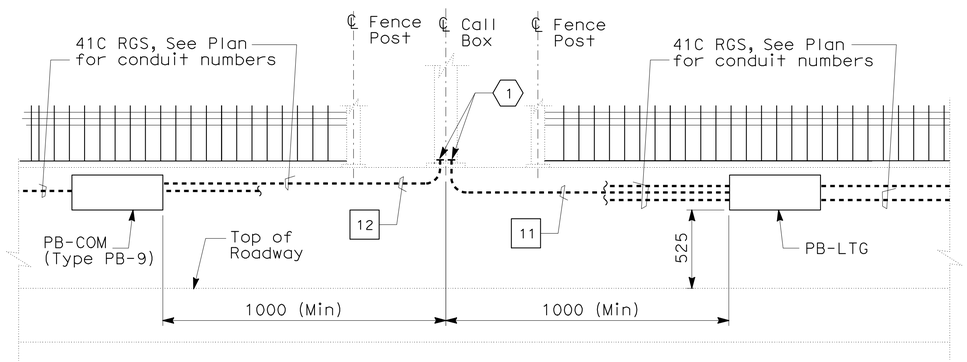

LONGITUDINAL SECTION B-B
TYPICAL CONDUIT ROUTING INSIDE
CONCRETE BARRIER WITH WIRE STEEL RAILING
NO SCALE

NOTES:

1. References:
   - For typical pull box schedule, see sheet E-130.
2. For PB-LTG, PB-COM and call box location plan, see sheets E-97 through E-103.
3. Call boxes furnished and installed by others.

SHEET NOTES:

1. Provide ground bushing and connect #6 ground conductor to Call box post.
2. (4) 19.05 Dia. HSB (ASTM A325) 180 mm concrete embedment, and 130 mm bolt projection from top of concrete. Prior to installation, the Contractor to verify the supplied Call box components for size of mounting hole diameter.

DETAILS
UNDERGROUND AND ROADWAY AT GRADE
(BARRIER PULL BOX AND CALL BOX CONDUIT LOCATIONS)
SCALE AS NOTED

E-115

THIS PLAN IS ACCURATE FOR ELECTRICAL WORK ONLY.

ALL DIMENSIONS ARE IN MILLIMETERS UNLESS OTHERWISE SHOWN

STATE OF CALIFORNIA - DEPARTMENT OF TRANSPORTATION
Caltrans

CONSULTANT FUNCTIONAL SUPERVISOR: BRADY NADELL
CALCULATED-DESIGNED BY: ELLERY LUCAS
CHECKED BY: JEFFRI HALIM
REVISED BY
DATE REVISED

LAST REVISION 08-17-09
DATE PLOTTED => 06-OCT-2011
TIME PLOTTED => 06:59

Dist	COUNTY	ROUTE	KILOMETER POST TOTAL PROJECT	SHEET No.	TOTAL SHEETS
04	Ala	80	1.6/2.7	306	744

REGISTERED ELECTRICAL ENGINEER 5/02/11

10-3-11
PLANS APPROVAL DATE

REGISTERED PROFESSIONAL ENGINEER DAVID H. OTO No. 10699 Exp. 06/30/2013 ELECTRICAL STATE OF CALIFORNIA

THE STATE OF CALIFORNIA OR ITS OFFICERS OR AGENTS SHALL NOT BE RESPONSIBLE FOR THE ACCURACY OR COMPLETENESS OF ELECTRONIC COPIES OF THIS PLAN SHEET.

PB AMERICAS, Inc.
303 Second St., Suite 700N
San Francisco, CA 94107-1317

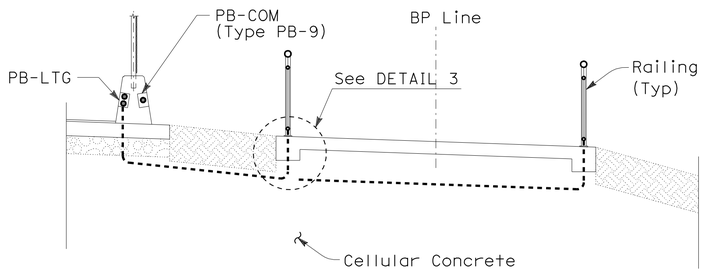

SECTION A-A
SCALE: 1:50

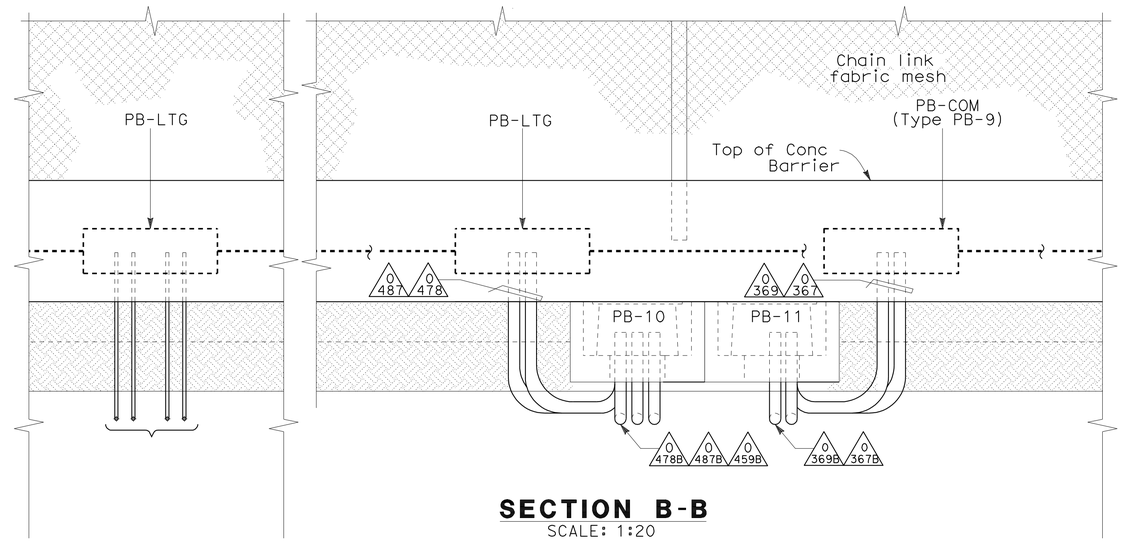

SECTION B-B
SCALE: 1:20

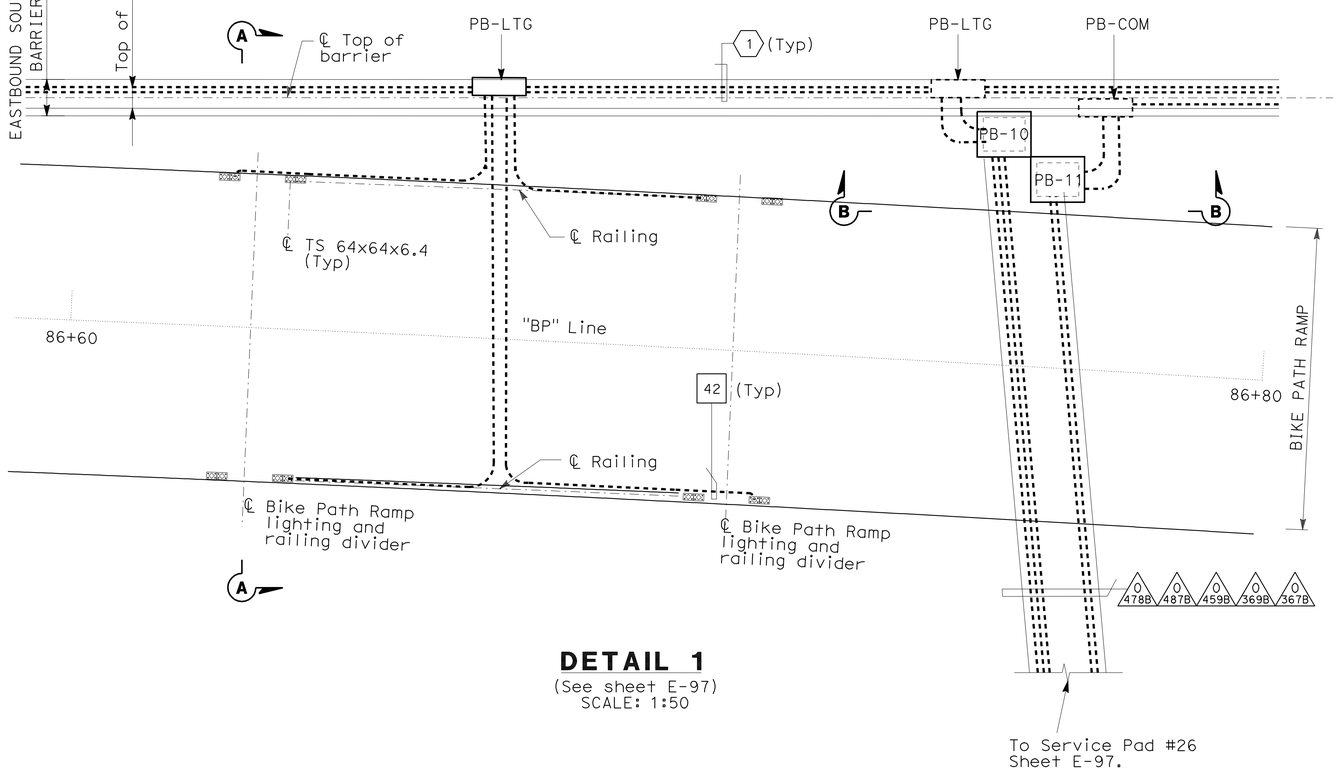

DETAIL 1
(See sheet E-97)
SCALE: 1:50

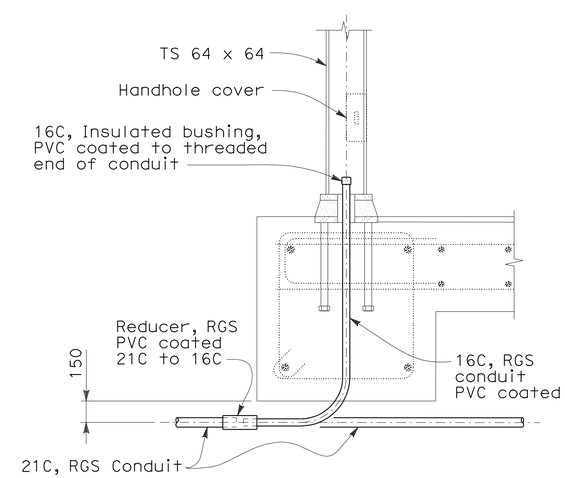

DETAIL 3
NO SCALE

NOTES:

1. References:
   - For bike path wiring diagram, see sheets E-145 and E-146.
   - For bike path lighting fixture schedule, see sheet E-145.
   - For pull box schedule, see sheet E-130.
   - For conduit and tray, cable and circuit schedules, see sheets starting at E-205.
2. For railing details, refer to structural drawings "Bike Path Railings Details".

DETAILS
UNDERGROUND AND ROADWAY AT GRADE (BIKE PATH RAMP CONDUIT PLAN)
SCALE AS NOTED

THIS PLAN IS ACCURATE FOR ELECTRICAL WORK ONLY.

ALL DIMENSIONS ARE IN MILLIMETERS UNLESS OTHERWISE SHOWN

E-116

REVISED BY	DATE REVISED

JEFFRI HALIM
ELLERY LUCAS
CALCULATED-DESIGNED BY
CHECKED BY
CONSULTANT FUNCTIONAL SUPERVISOR
BRADY NADELL

STATE OF CALIFORNIA - DEPARTMENT OF TRANSPORTATION
Caltrans

LAST REVISION 08-12-11
DATE PLOTTED => 06-OCT-2011
TIME PLOTTED => 06:59

Dist	COUNTY	ROUTE	KILOMETER POST TOTAL PROJECT	SHEET No.	TOTAL SHEETS
04	Ala	80	1.6/2.7	307	744

REGISTERED ELECTRICAL ENGINEER 5/02/11

10-3-11
PLANS APPROVAL DATE

REGISTERED PROFESSIONAL ENGINEER DAVID H. OTO No. 10699 Exp. 06/30/2013 ELECTRICAL STATE OF CALIFORNIA

THE STATE OF CALIFORNIA OR ITS OFFICERS OR AGENTS SHALL NOT BE RESPONSIBLE FOR THE ACCURACY OR COMPLETENESS OF ELECTRONIC COPIES OF THIS PLAN SHEET.

PB AMERICAS, Inc.
303 Second St., Suite 700N
San Francisco, CA 94107-1317

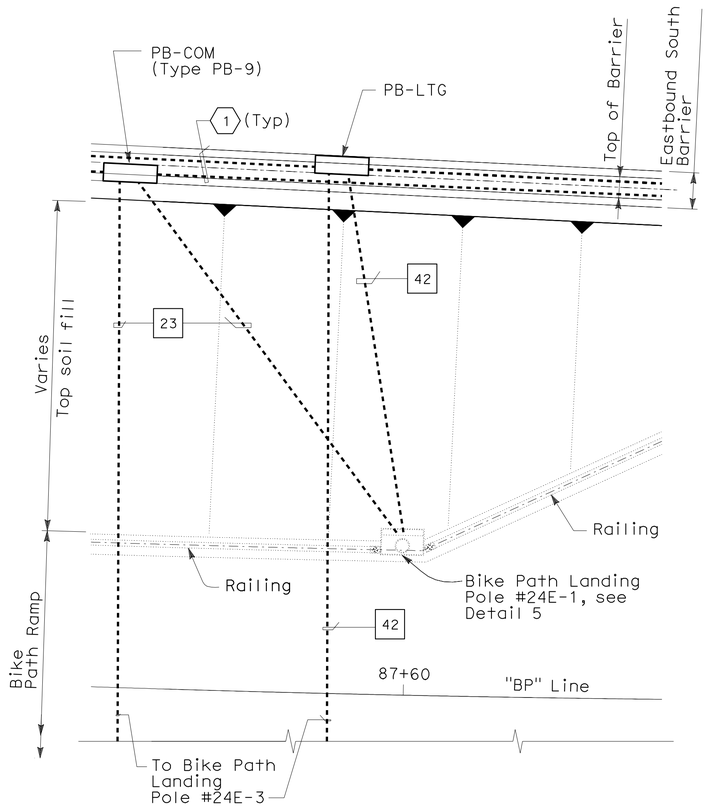

DETAIL 4
(See sheet E-98)
SCALE: 1:50

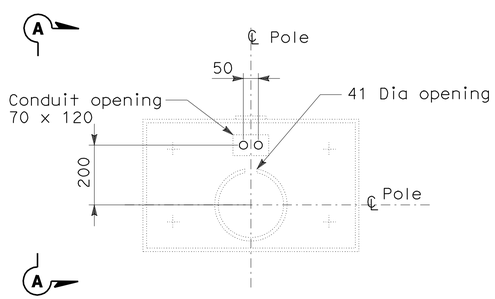

DETAIL 5
CONDUIT STUB UP PLAN
SCALE: 1:10

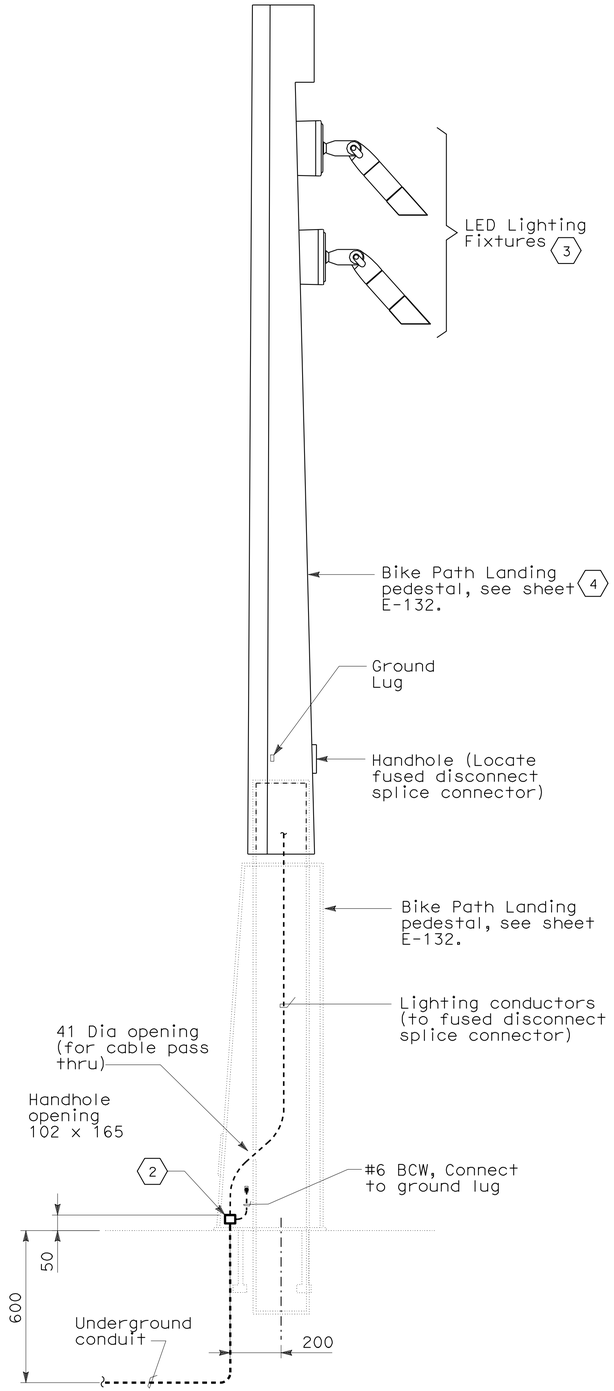

SECTION A-A
NO SCALE

NOTES:

1. References:
   - For bike path wiring diagram, see sheets E-145 and E-146.
   - For bike path lighting fixture schedule, see sheet E-145.
   - For pull box schedule, see sheet E-130.
   - For conduit and tray, cable and circuit schedules, see sheets starting at E-205.
2. For railing details, refer to structural drawings "Bike Path Railings Details".
3. Provide bonding jumper to each conduit with #6 BCW. Connect ground conductor to ground lug of Bike Path Landing pedestal.

SHEET NOTES:

1. 41C, conduit run located in roadway at grade barrier.
2. Exposed conduits and grounding bushing installed shall be RGS-PVC coated.
3. The type of lighting fixtures mounted on the lighting pole, the aiming point and directions of each lighting fixtures towards the Bike Path area shall be provided by the Lighting Pole manufacturer. This information shall be provided to the Contractor by the Engineer.
4. The 4.3 meter Lighting pole is State-furnished. Prior to installation, the Contractor shall inspect and verify the associated components of the Lighting Pole assembly which may require field installation.

DETAILS
UNDERGROUND AND ROADWAY AT GRADE (BIKE PATH LANDING CONDUIT PLAN)
SCALE AS NOTED

E-117

THIS PLAN IS ACCURATE FOR ELECTRICAL WORK ONLY.

ALL DIMENSIONS ARE IN MILLIMETERS UNLESS OTHERWISE SHOWN

STATE OF CALIFORNIA - DEPARTMENT OF TRANSPORTATION
Caltrans

CONSULTANT FUNCTIONAL SUPERVISOR: BRADY NADELL
CALCULATED-DESIGNED BY: JEFFRI HALIM
CHECKED BY: ELLERY LUCAS
REVISED BY / DATE REVISED

LAST REVISION 08-17-09 | DATE PLOTTED => 01-MAR-2012 | TIME PLOTTED => 13:53

Dist	COUNTY	ROUTE	KILOMETER POST TOTAL PROJECT	SHEET No.	TOTAL SHEETS
04	Ala	80	1.6/2.7	308	744

5/02/11
REGISTERED ELECTRICAL ENGINEER

10-3-11
PLANS APPROVAL DATE

REGISTERED PROFESSIONAL ENGINEER
DAVID H. OTO
No. 10699
Exp. 06/30/2013
ELECTRICAL
STATE OF CALIFORNIA

THE STATE OF CALIFORNIA OR ITS OFFICERS OR AGENTS SHALL NOT BE RESPONSIBLE FOR THE ACCURACY OR COMPLETENESS OF ELECTRONIC COPIES OF THIS PLAN SHEET.

PB AMERICAS, Inc.
303 Second St., Suite 700N
San Francisco, CA 94107-1317

BIKEWAY LIGHTING POLE SCHEDULE (2)

Circuit Number	Pole Number	Location	
		"BP LINE" Station	Offset (m)
A-2009	2009-1	88 + 32.80	3.60
A-2009	2009-2	88 + 69.30	3.60
A-2009	2009-3	89 + 05.80	3.60
A-2009	2009-4	89 + 42.30	3.60
A-2009	2009-5	89 + 78.80	3.60
A-2009	2009-6	90 + 15.30	3.60
A-2009	2009-7	90 + 51.80	3.60
A-2009	2009-8	90 + 88.30	3.60
A-2009	2009-9	91 + 24.80	3.60
A-2009	2009-10	91 + 61.30	3.60
A-2009	2009-11	91 + 00.02	3.60
A-2009	2009-12	92 + 34.30	3.60
A-2009	2009-13	92 + 70.80	3.60
A-2009	2009-14	93 + 07.31	3.60
A-2009	2009-15	93 + 43.80	3.60
A-2009	2009-16	93 + 80.30	3.51
A-2009	2009-17	92 + 70.80	3.10

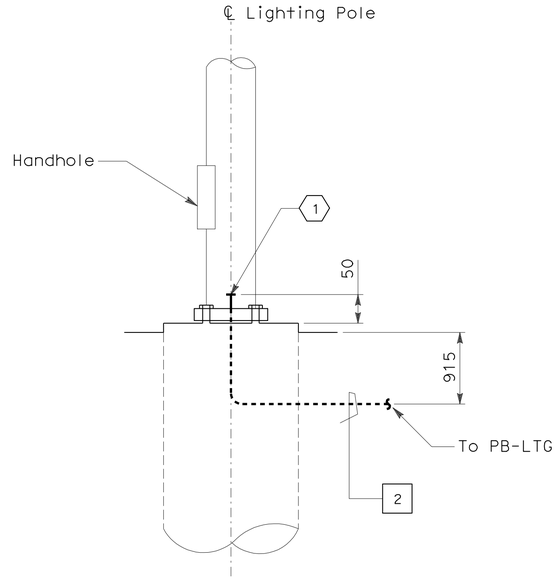

DETAIL 1
(TYPICAL CONDUIT LOCATION)
NONE

NOTES:

1. References:
   - For bikeway wiring diagram, see sheet E-146.
   - For conduit and tray, cable and circuit schedules, see sheets starting at E-205.
2. Exposed conduit and fitting installed shall be RGS PVC coated.

SHEET NOTES:

(1) Provide grounding bushing and install #6 BCW bonding jumper and connect to ground lug of lighting pole.

(2) For type of lighting fixture, see special provisions.

DETAILS
UNDERGROUND AND ROADWAY AT GRADE (BIKEWAY CONDUIT PLAN)
SCALE AS NOTED

E-118

THIS PLAN IS ACCURATE FOR ELECTRICAL WORK ONLY.

ALL DIMENSIONS ARE IN MILLIMETERS UNLESS OTHERWISE SHOWN

STATE OF CALIFORNIA - DEPARTMENT OF TRANSPORTATION
Caltrans

CONSULTANT FUNCTIONAL SUPERVISOR: BRADY NADELL
CALCULATED-DESIGNED BY: ELLERY LUCAS
CHECKED BY: JEFFRI HALIM
REVISED BY / DATE REVISED

LAST REVISION 08-17-09
DATE PLOTTED => 06-OCT-2011
TIME PLOTTED => 06:59

Dist	COUNTY	ROUTE	KILOMETER POST TOTAL PROJECT	SHEET No.	TOTAL SHEETS
04	Ala	80	1.6/2.7	309	744

REGISTERED ELECTRICAL ENGINEER 5/02/11

10-3-11
PLANS APPROVAL DATE

REGISTERED PROFESSIONAL ENGINEER DAVID H. OTO No. 10699 Exp. 06/30/2013 ELECTRICAL STATE OF CALIFORNIA

THE STATE OF CALIFORNIA OR ITS OFFICERS OR AGENTS SHALL NOT BE RESPONSIBLE FOR THE ACCURACY OR COMPLETENESS OF ELECTRONIC COPIES OF THIS PLAN SHEET.

PB AMERICAS, Inc.
303 Second St., Suite 700N
San Francisco, CA 94107-1317

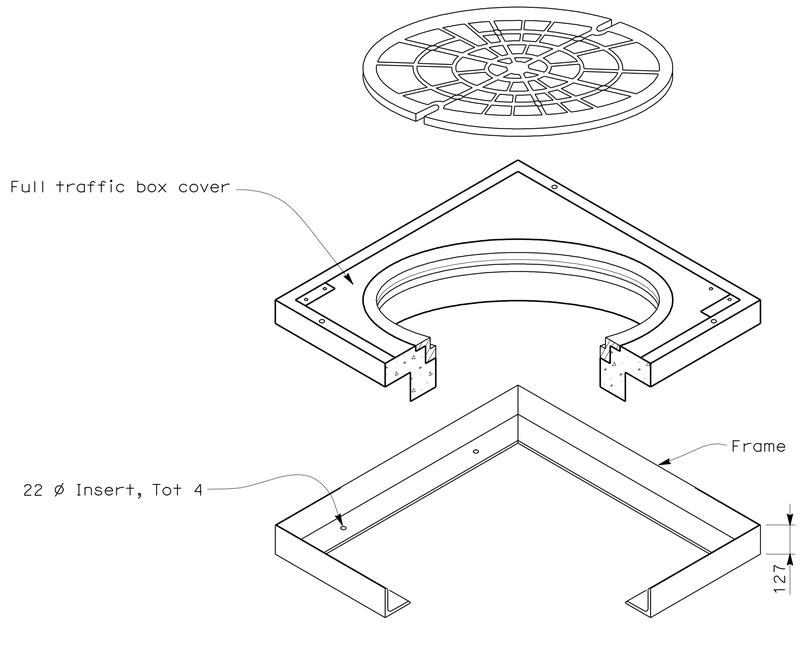

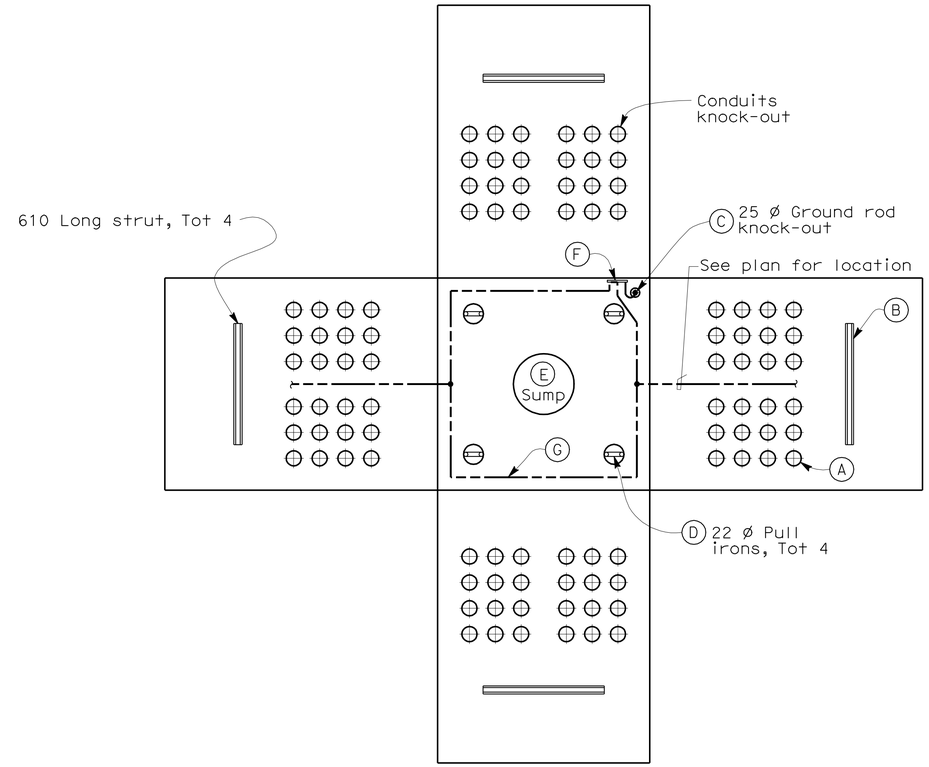

NOTES:

1. Manhole and cover shall be designed for HS-20 traffic loading.
2. Ultimate compressive strength Δ = 25 MPa.
3. Steel reinforcement yield strength f y = 414 MPa.
4. All joints shall be made watertight by the use of joint sealant.
5. Prior to setting the pull box, the Contractor shall prepare the site by providing a minimum 152 mm of sand or other suitable base material. The base material shall be compacted and graded to the required level.
6. Manhole shall comply with ASTM C478 and ASTM C858, as applicable.
7. Manhole cover engraved nameplates, see sheet E-130.
8. Neck extension shall be provided as required.
9. For duct bank plans and sections, see sheets E-121 through E-129.
10. For grounding interface, see sheet E-131.

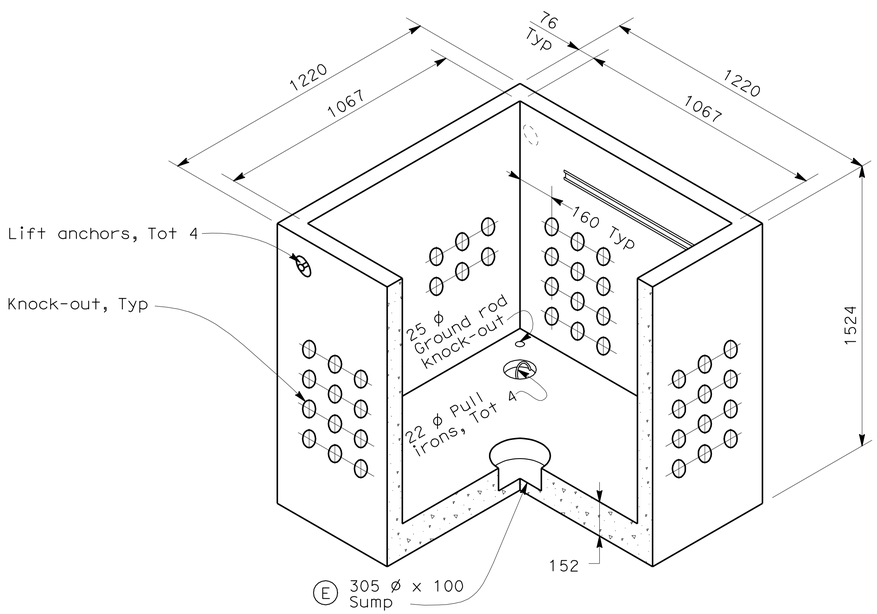

1220 x 1220 x 1524 MANHOLE DETAILS

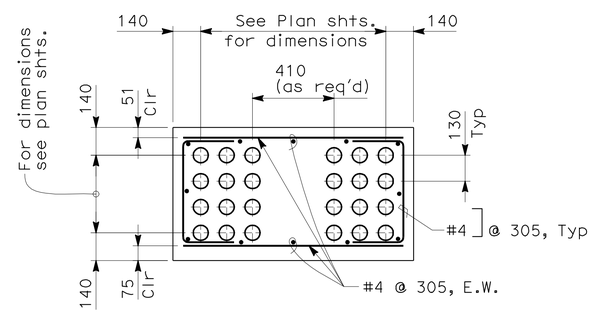

TYPICAL DUCT BANK DETAIL

List of Material

Item	Description	Remarks
A	Knockouts sized as shown on pull box plans and section drawings	Conduit end bell each conduit
B	41 mm x 41 mm insert strut channel (flush mount)	Hot dip galvanized
C	Copper clad ground rod 19 mm x 3050 mm	
D	Pulling iron	
E	305 mm round x 102 mm deep sump	
F	Copper ground bar 6 mm thick x 100 mm high x 600 mm long	
G	250 kcmil bare copper conductor	

DETAILS
UNDERGROUND AND ROADWAY AT GRADE (TYPICAL MANHOLE AND DUCT BANK)
NO SCALE

E-119

THIS PLAN IS ACCURATE FOR ELECTRICAL WORK ONLY.

ALL DIMENSIONS ARE IN MILLIMETERS UNLESS OTHERWISE SHOWN

STATE OF CALIFORNIA - DEPARTMENT OF TRANSPORTATION
Caltrans

CONSULTANT FUNCTIONAL SUPERVISOR: BRADY NADELL
CALCULATED-DESIGNED BY: JEFFRI HALIM
CHECKED BY: ELLERY LUCAS
REVISED BY / DATE REVISED

LAST REVISION 08-17-09
DATE PLOTTED => 06-OCT-2011
TIME PLOTTED => 06:59

Dist	COUNTY	ROUTE	KILOMETER POST TOTAL PROJECT	SHEET No.	TOTAL SHEETS
04	Ala	80	1.6/2.7	310	744

REGISTERED ELECTRICAL ENGINEER 5/02/11

10-3-11
PLANS APPROVAL DATE

REGISTERED PROFESSIONAL ENGINEER DAVID H. OTO No. 10699 Exp. 06/30/2013 ELECTRICAL STATE OF CALIFORNIA

THE STATE OF CALIFORNIA OR ITS OFFICERS OR AGENTS SHALL NOT BE RESPONSIBLE FOR THE ACCURACY OR COMPLETENESS OF ELECTRONIC COPIES OF THIS PLAN SHEET.

PB AMERICAS, Inc.
303 Second St., Suite 700N
San Francisco, CA 94107-1317

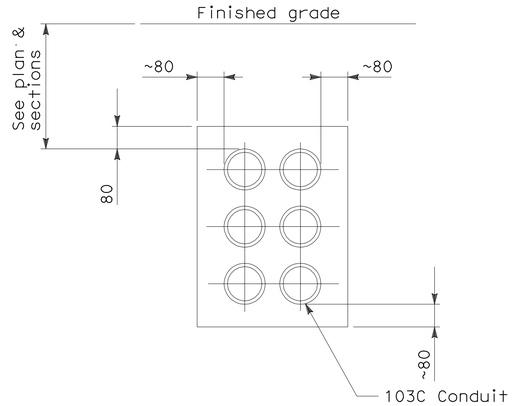

SECTION A-A

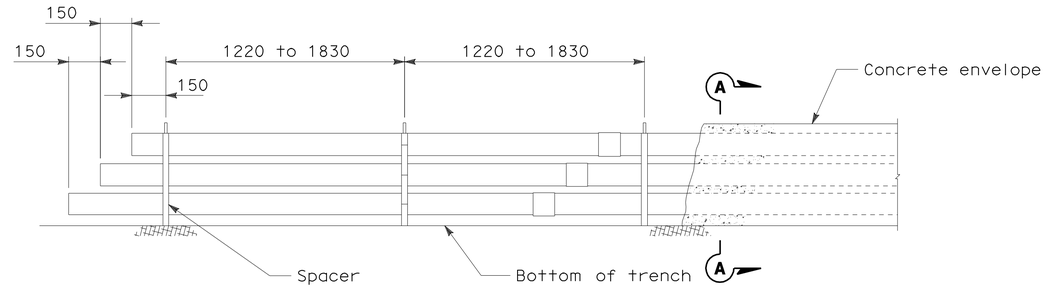

FRONT VIEW

TYPICAL STRAIGHT RUN INSTALLATION

(103 mm Conduit 6-Way Shown)

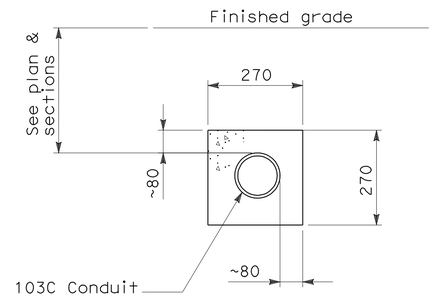

SINGLE DUCT

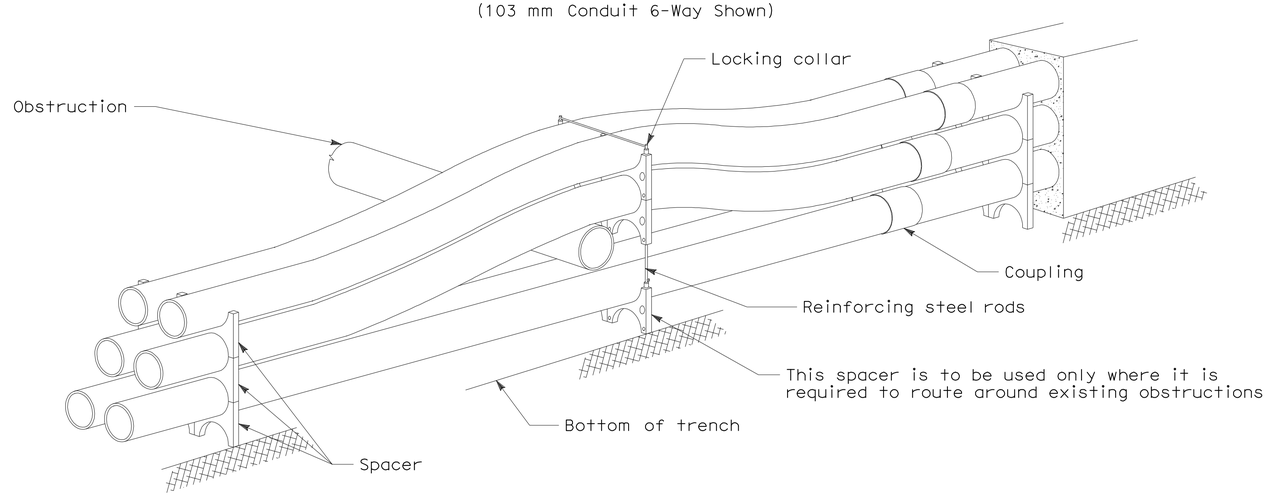

TYPICAL PERSPECTIVE VIEW OF INSTALLATION AROUND OBSTRUCTION

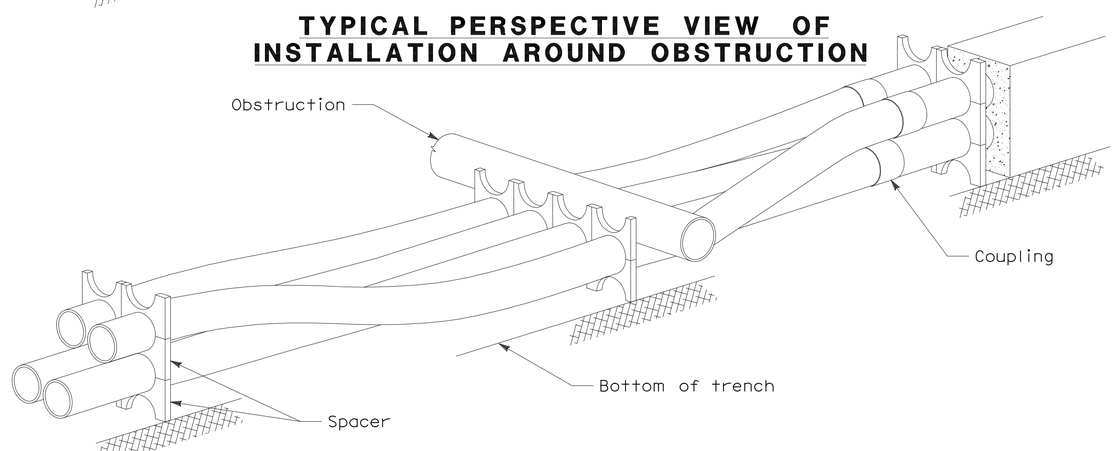

TYPICAL PERSPECTIVE VIEW OF INSTALLATION UNDER OBSTRUCTION

GENERAL NOTES:

1. Dimensions are approximate and include 10% added for variations encountered in construction.
2. Where width of trench is greater than the required width of the envelope, the horizontal spacing between conduits may be increased as long as 80 mm spacing between conduit and outside edge of envelope is maintained.

DETAILS
UNDERGROUND AND ROADWAY AT GRADE (TYPICAL DUCT BANK SECTIONS)

NO SCALE

THIS PLAN IS ACCURATE FOR ELECTRICAL WORK ONLY.

ALL DIMENSIONS IN MILIMETERS UNLESS OTHERWISE SHOWN

E-120

REVISED BY	DATE REVISED

CALCULATED-DESIGNED BY: JEFFRI HALIM
CHECKED BY: ELLERY LUCAS
CONSULTANT FUNCTIONAL SUPERVISOR: BRADY NADELL

STATE OF CALIFORNIA - DEPARTMENT OF TRANSPORTATION
Caltrans

LAST REVISION 08-17-09 | DATE PLOTTED => 06-OCT-2011 | TIME PLOTTED => 07:00

Dist	COUNTY	ROUTE	KILOMETER POST TOTAL PROJECT	SHEET No.	TOTAL SHEETS
04	Ala	80	1.6/2.7	311	744

REGISTERED ELECTRICAL ENGINEER 5/02/11

10-3-11
PLANS APPROVAL DATE

REGISTERED PROFESSIONAL ENGINEER DAVID H. OTO No. 10699 Exp. 06/30/2013 ELECTRICAL STATE OF CALIFORNIA

THE STATE OF CALIFORNIA OR ITS OFFICERS OR AGENTS SHALL NOT BE RESPONSIBLE FOR THE ACCURACY OR COMPLETENESS OF ELECTRONIC COPIES OF THIS PLAN SHEET.

PB AMERICAS, Inc.
303 Second St., Suite 700N
San Francisco, CA 94107-1317

Caltrans Metric

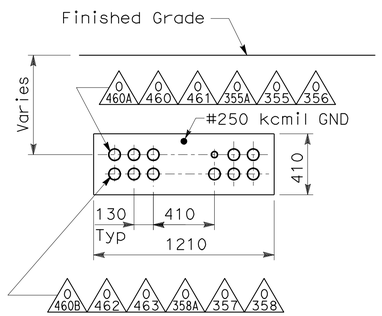

SECTION AA-AA
(See sheet E-66)

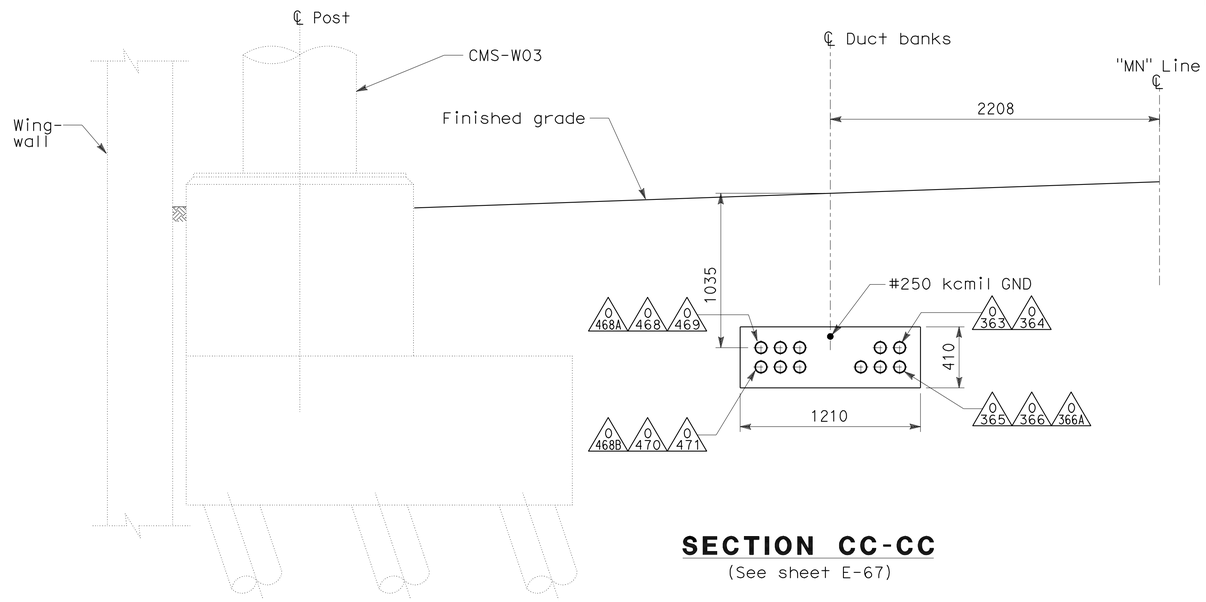

SECTION CC-CC
(See sheet E-67)

NOTE:

1. References:
   - For conduit and tray, cable and circuit schedules, see sheets starting at E-205.
   - For typical manhole and duct bank details, see sheet E-119.
   - For typical duct bank sections details, see Sheet E-120.

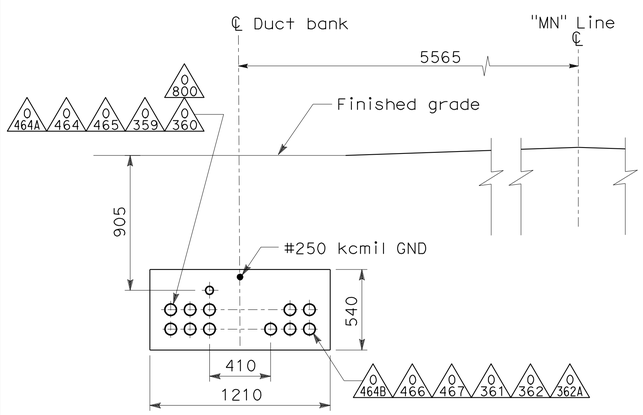

SECTION BB-BB
(See sheet E-66 and E-67)

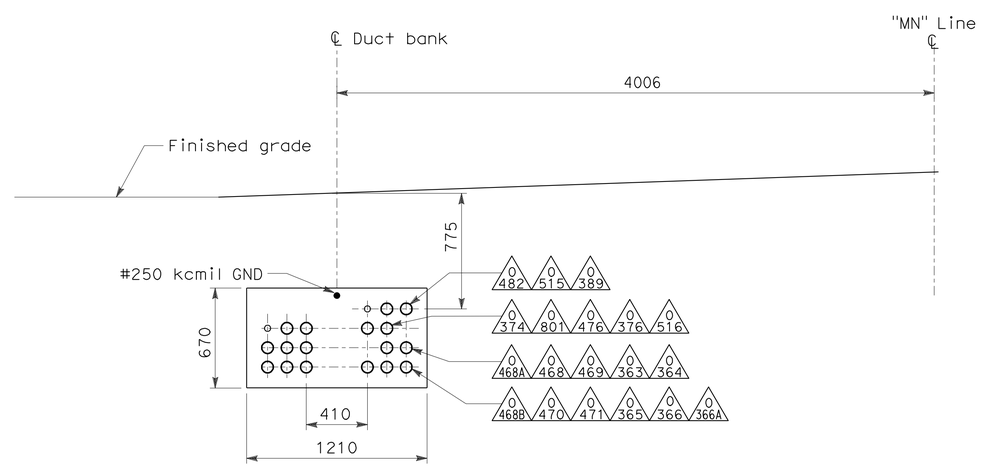

SECTION DD-DD
(See sheet E-68)

DETAILS
UNDERGROUND AND ROADWAY AT GRADE (CONDUIT DUCT BANK SECTIONS)

SCALE 1:20

E-121

THIS PLAN IS ACCURATE FOR ELECTRICAL WORK ONLY.

ALL DIMENSIONS ARE IN MILLIMETERS UNLESS OTHERWISE SHOWN

REVISED BY | DATE REVISED
JEFFRI HALIM | ELLERY LUCAS
CALCULATED-DESIGNED BY | CHECKED BY
CONSULTANT FUNCTIONAL SUPERVISOR
BRADY NADELL

STATE OF CALIFORNIA - DEPARTMENT OF TRANSPORTATION
Caltrans

LAST REVISION 08-17-09 | DATE PLOTTED => 06-OCT-2011 | TIME PLOTTED => 07:00

Dist	COUNTY	ROUTE	KILOMETER POST TOTAL PROJECT	SHEET No.	TOTAL SHEETS
04	Ala	80	1.6/2.7	312	744

REGISTERED ELECTRICAL ENGINEER 5/02/11

10-3-11
PLANS APPROVAL DATE

REGISTERED PROFESSIONAL ENGINEER DAVID H. OTO No. 10699 Exp. 06/30/2013 ELECTRICAL STATE OF CALIFORNIA

THE STATE OF CALIFORNIA OR ITS OFFICERS OR AGENTS SHALL NOT BE RESPONSIBLE FOR THE ACCURACY OR COMPLETENESS OF ELECTRONIC COPIES OF THIS PLAN SHEET.

PB AMERICAS, Inc.
303 Second St., Suite 700N
San Francisco, CA 94107-1317

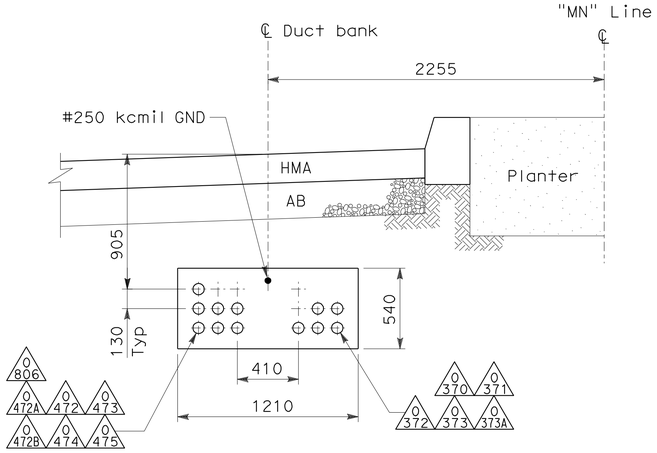

SECTION FF-FF
(See sheet E-68)

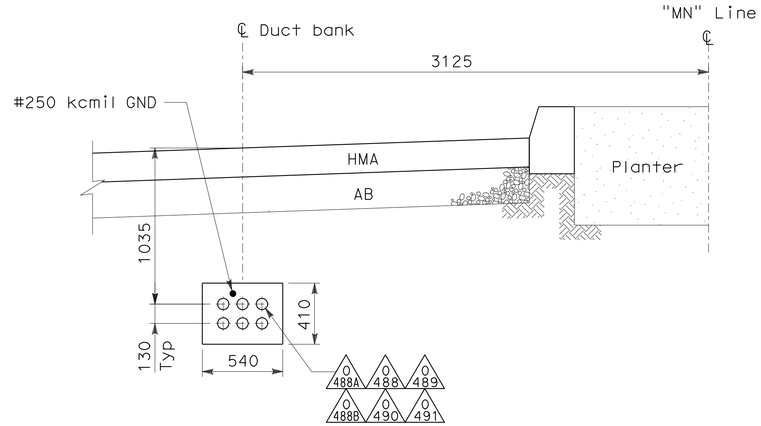

SECTION JJ-JJ
(See sheet E-95)

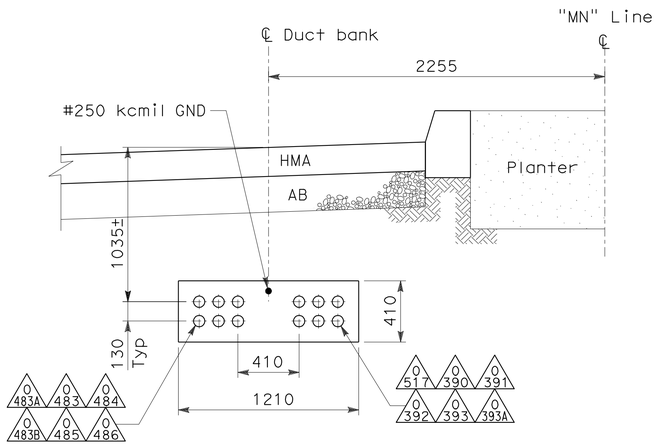

SECTION GG-GG
(See sheet E-69)

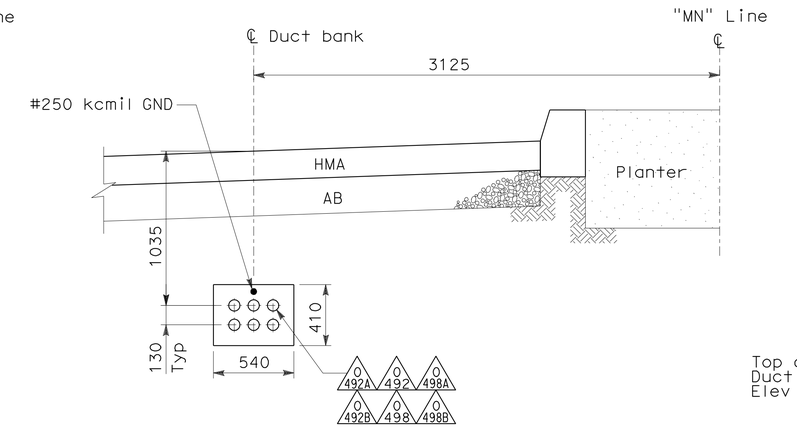

SECTION KK-KK
(See sheet E-96)

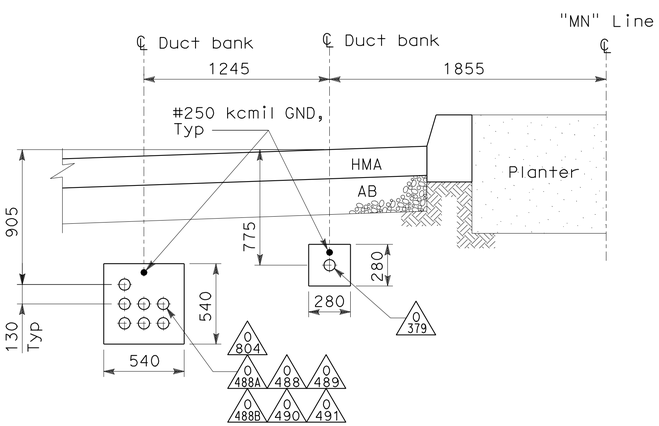

SECTION HH-HH
(See sheet E-70)

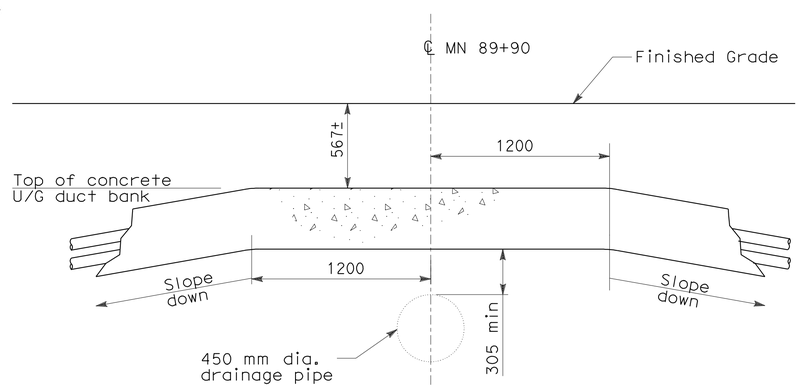

SECTION LL-LL
(See sheet E-69)

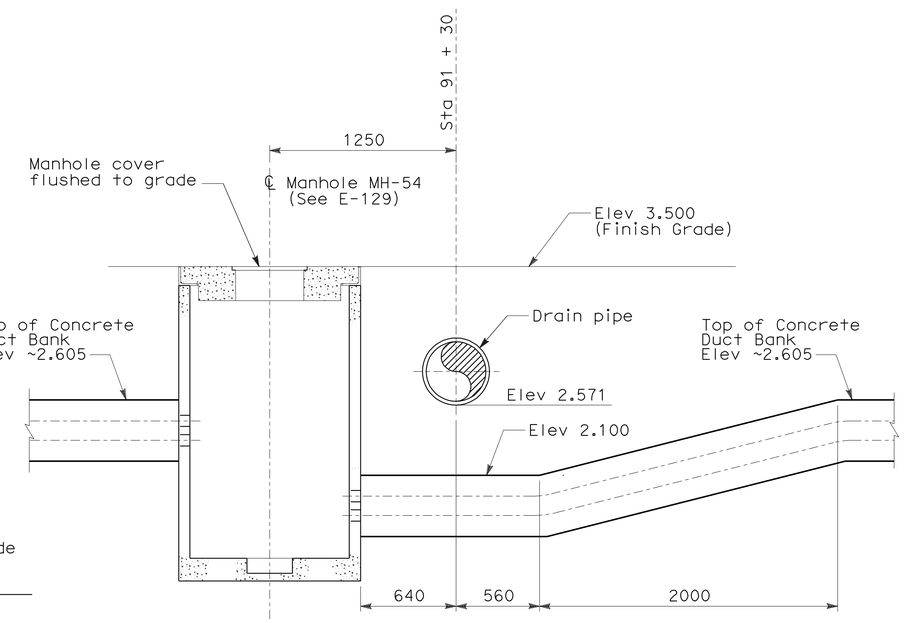

SECTION MM-MM
See Sheet E-95

NOTE:

1. References:
   - For duct banks and pull box plans, see sheets E-66 through E-71 and E-95 through E-96.
   - For conduit and tray, cable and circuit schedules, see sheets starting at E-205.

DETAILS
UNDERGROUND AND ROADWAY AT GRADE (CONDUIT DUCT BANK SECTIONS)

SCALE 1:20

THIS PLAN IS ACCURATE FOR ELECTRICAL WORK ONLY.

ALL DIMENSIONS IN MILIMETERS UNLESS OTHERWISE SHOWN

E-122

REVISED BY	DATE REVISED

CALCULATED-DESIGNED BY: JEFFRI HALIM
CHECKED BY: ELLERY LUCAS
CONSULTANT FUNCTIONAL SUPERVISOR: BRADY NADELL

STATE OF CALIFORNIA - DEPARTMENT OF TRANSPORTATION
Caltrans

LAST REVISION 08-31-11 DATE PLOTTED => 06-OCT-2011 TIME PLOTTED => 07:00

Dist	COUNTY	ROUTE	KILOMETER POST TOTAL PROJECT	SHEET No.	TOTAL SHEETS
04	Ala	80	1.6/2.7	313	744

5/02/11
REGISTERED ELECTRICAL ENGINEER

10-3-11
PLANS APPROVAL DATE

REGISTERED PROFESSIONAL ENGINEER
DAVID H. OTO
No. 10699
Exp. 06/30/2013
ELECTRICAL
STATE OF CALIFORNIA

THE STATE OF CALIFORNIA OR ITS OFFICERS OR AGENTS SHALL NOT BE RESPONSIBLE FOR THE ACCURACY OR COMPLETENESS OF ELECTRONIC COPIES OF THIS PLAN SHEET.

PB AMERICAS, Inc.
303 Second St., Suite 700N
San Francisco, CA 94107-1317

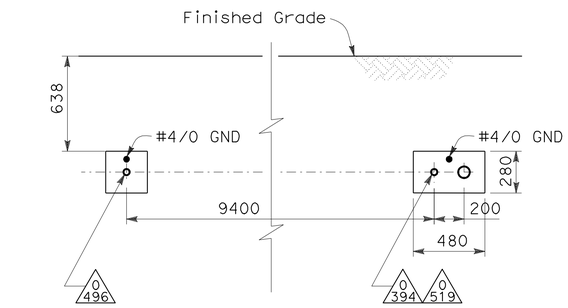

SECTION Z1-Z1
(See sheet E-69)

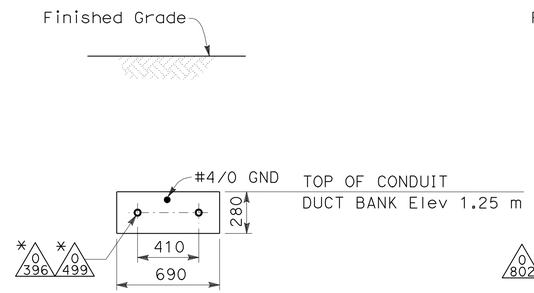

SECTION Z2-Z2
(See sheet E-86)

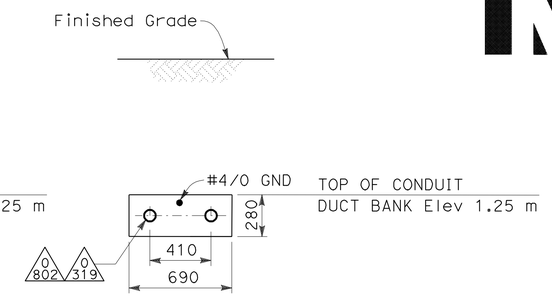

SECTION Z3-Z3
(See sheet E-69)

NOTE:

1. References:
   - For duct banks and manhole plans, see sheets E-66 through E-71 and E-95 through E-96.
   - For conduit and tray, cable and circuit schedules, see sheets starting at E-205.

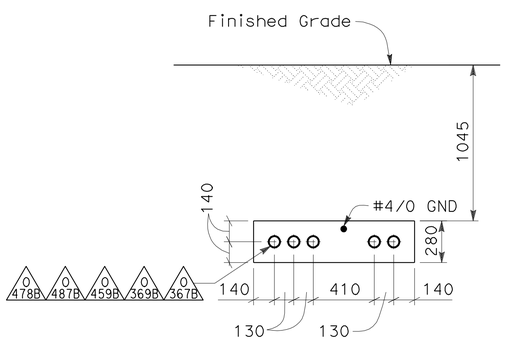

SECTION Q-Q
(See sheet E-97)

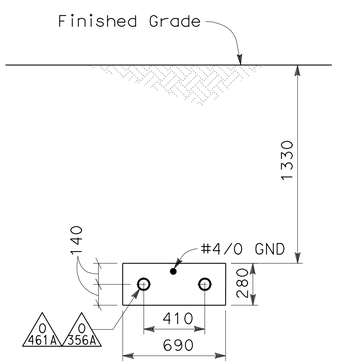

SECTION P-P
(See sheet E-66)

DETAILS
UNDERGROUND AND ROADWAY AT GRADE (CONDUIT DUCT BANK SECTIONS)

SCALE 1:20

E-123

THIS PLAN IS ACCURATE FOR ELECTRICAL WORK ONLY.

ALL DIMENSIONS IN MILIMETERS UNLESS OTHERWISE SHOWN

STATE OF CALIFORNIA - DEPARTMENT OF TRANSPORTATION
Caltrans

CONSULTANT FUNCTIONAL SUPERVISOR: BRADY NADELL
CALCULATED-DESIGNED BY: ELLERY LUCAS
CHECKED BY: JEFFRI HALIM
REVISED BY / DATE REVISED

LAST REVISION 08-05-11
DATE PLOTTED => 06-OCT-2011
TIME PLOTTED => 07:00

Dist	COUNTY	ROUTE	KILOMETER POST TOTAL PROJECT	SHEET No.	TOTAL SHEETS
04	Ala	80	1.6/2.7	314	744

REGISTERED ELECTRICAL ENGINEER 5/02/11

10-3-11
PLANS APPROVAL DATE

REGISTERED PROFESSIONAL ENGINEER DAVID H. OTO No. 10699 Exp. 06/30/2013 ELECTRICAL STATE OF CALIFORNIA

THE STATE OF CALIFORNIA OR ITS OFFICERS OR AGENTS SHALL NOT BE RESPONSIBLE FOR THE ACCURACY OR COMPLETENESS OF ELECTRONIC COPIES OF THIS PLAN SHEET.

PB AMERICAS, Inc.
303 Second St., Suite 700N
San Francisco, CA 94107-1317

Caltrans Metric

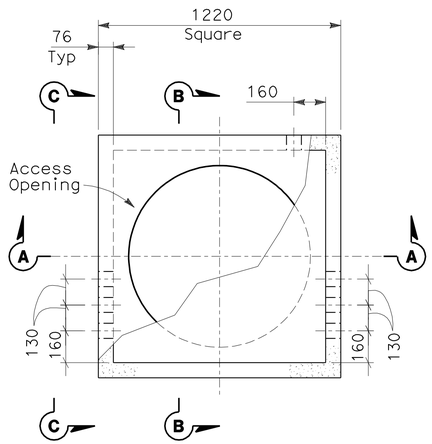

PLAN - MANHOLE-44
(600 V)

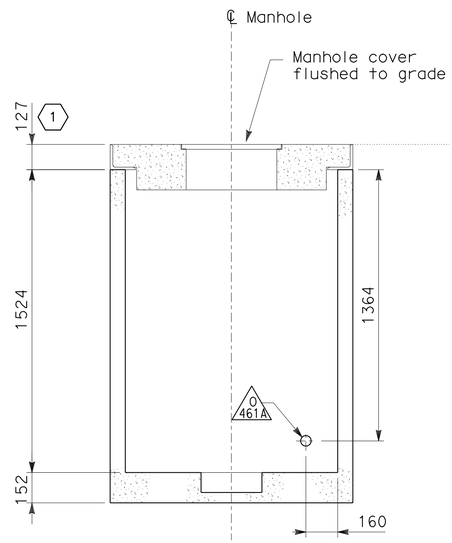

SECTION A-A

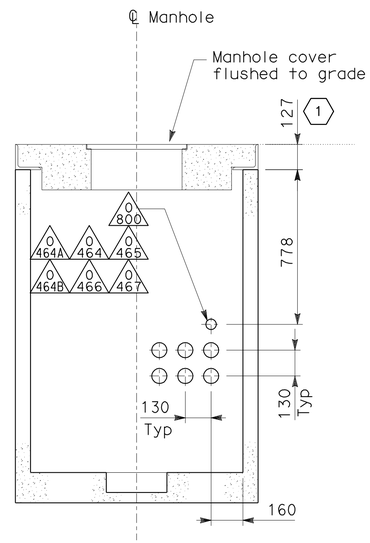

SECTION B-B

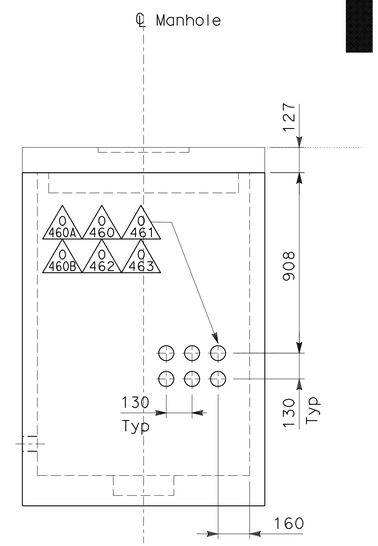

SECTION C-C

NOTES:

1. References:
   - For conduit duct bank sections, see sheets E-121 through E-123.
   - For typical manhole and duct bank details, see sheet E-119.
   - For conduit and tray, cable and circuit schedules, see sheets starting at E-205.
2. Conduit knockouts or opening shall be sealed water tight. Conduit end bell shall be provided.

SHEET NOTE:

(1) Additional rings for depth adjustments shall be installed as needed. For elevation and underground duct bank profile, see Utility drawings.

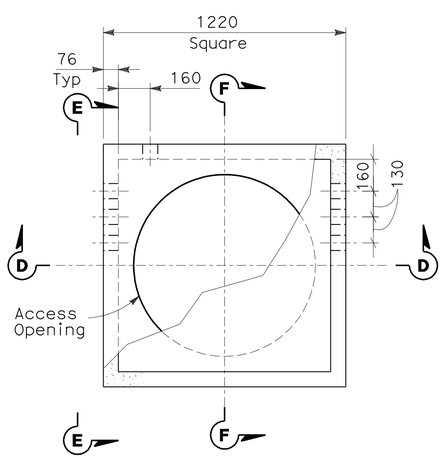

PLAN - MANHOLE-45
(TOS/COM)

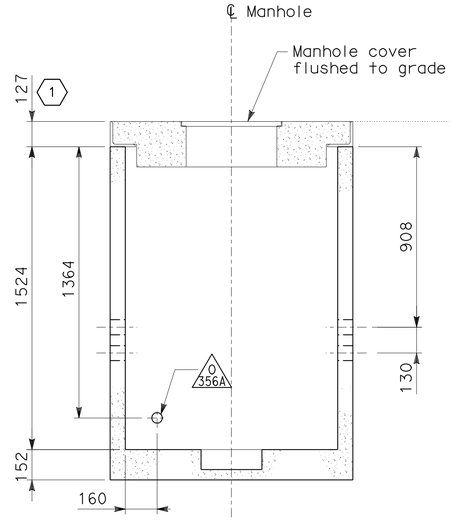

SECTION D-D

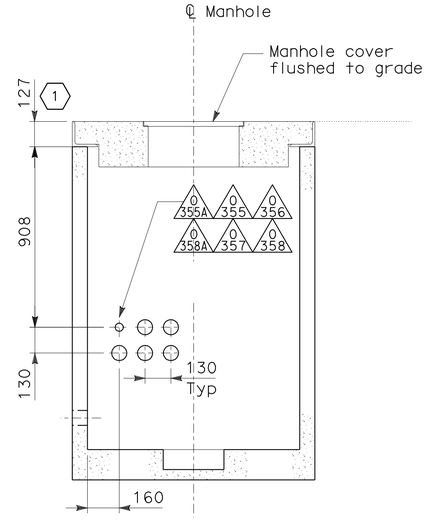

SECTION E-E

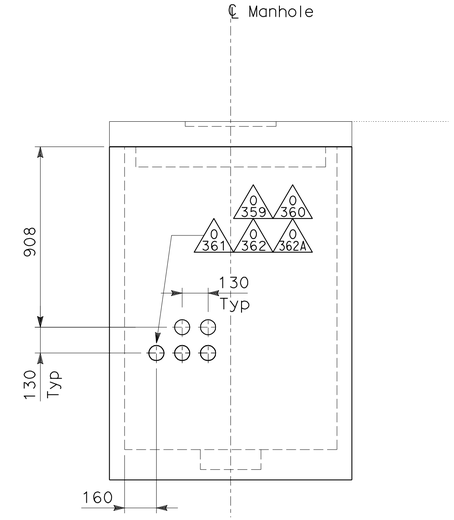

SECTION F-F

DETAILS
UNDERGROUND AND ROADWAY AT GRADE (MANHOLE PLANS AND SECTIONS)

SCALE 1:15

THIS PLAN IS ACCURATE FOR ELECTRICAL WORK ONLY.

ALL DIMENSIONS ARE IN MILLIMETERS UNLESS OTHERWISE SHOWN

E-124

STATE OF CALIFORNIA - DEPARTMENT OF TRANSPORTATION
Caltrans

CONSULTANT FUNCTIONAL SUPERVISOR: BRADY NADELL
CALCULATED-DESIGNED BY: JEFFRI HALIM
CHECKED BY: ELLERY LUCAS
REVISED BY / DATE REVISED

LAST REVISION 08-05-11 | DATE PLOTTED => 06-OCT-2011 | TIME PLOTTED => 07:00

Dist	COUNTY	ROUTE	KILOMETER POST TOTAL PROJECT	SHEET No.	TOTAL SHEETS
04	Ala	80	1.6/2.7	315	744

REGISTERED ELECTRICAL ENGINEER 5/02/11

10-3-11
PLANS APPROVAL DATE

REGISTERED PROFESSIONAL ENGINEER DAVID H. OTO No. 10699 Exp. 06/30/2013 ELECTRICAL STATE OF CALIFORNIA

THE STATE OF CALIFORNIA OR ITS OFFICERS OR AGENTS SHALL NOT BE RESPONSIBLE FOR THE ACCURACY OR COMPLETENESS OF ELECTRONIC COPIES OF THIS PLAN SHEET.

PB AMERICAS, Inc.
303 Second St., Suite 700N
San Francisco, CA 94107-1317

Caltrans Metric

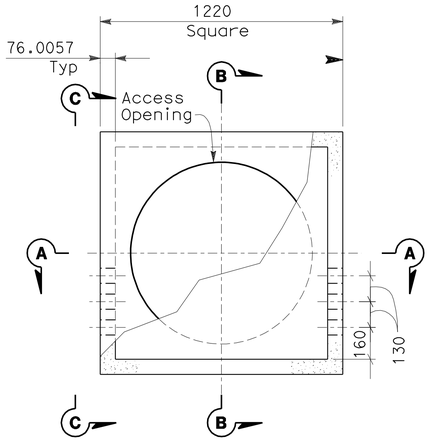

PLAN - MANHOLE-46

(600 V)

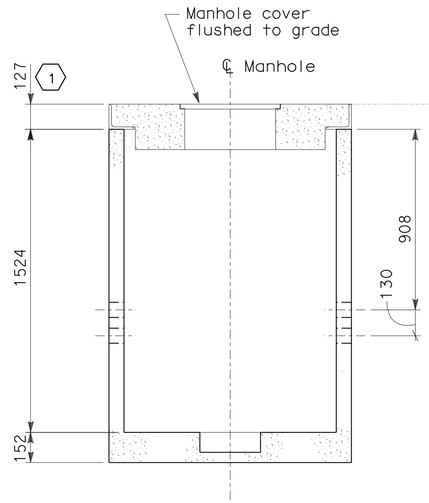

SECTION A-A

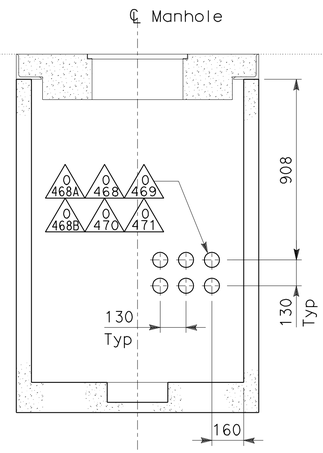

SECTION B-B

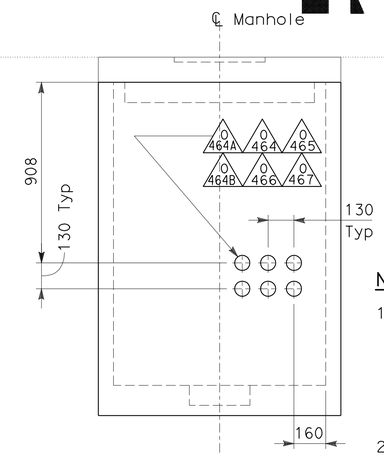

SECTION C-C

NOTES:

1. References:
   - For conduit duct bank sections, see sheets E-121 through E-123.
   - For typical manhole and duct bank details, see sheet E-119.
   - For conduit and tray, cable and circuit schedules, see sheets starting at E-205.
2. Conduit knockouts or opening shall be sealed water tight. Conduit end bell shall be provided.

SHEET NOTE:

(1) Additional rings for depth adjustments shall be installed as needed. For elevation and underground duct bank profile, see Utility drawings.

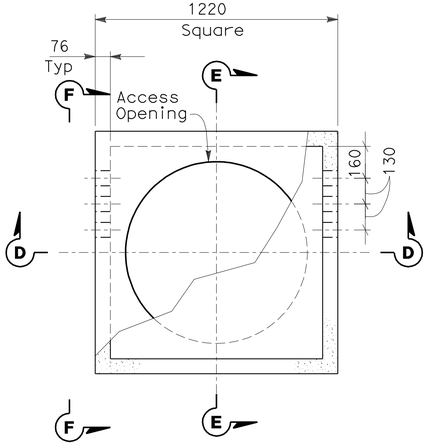

PLAN - MANHOLE-47

(TOS/COM)

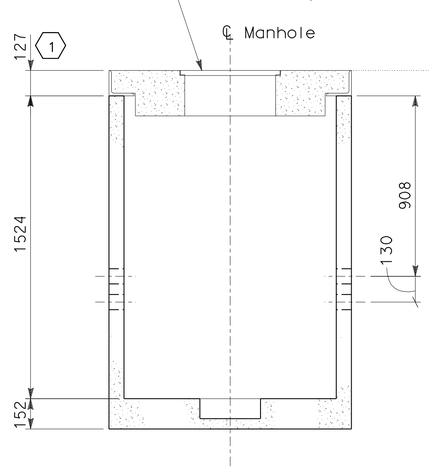

SECTION D-D

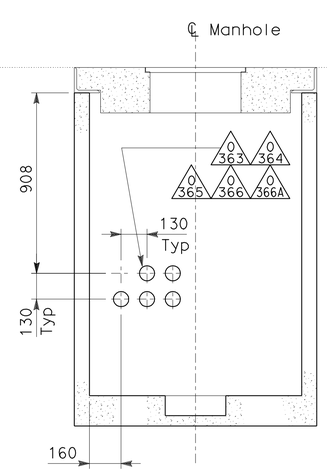

SECTION E-E

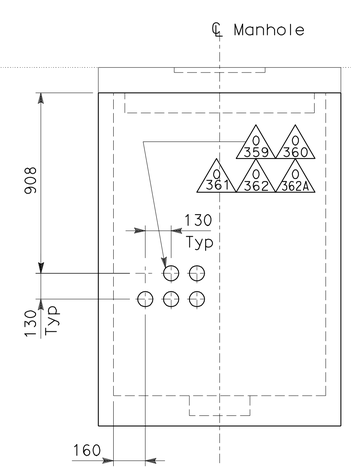

SECTION F-F

DETAILS
UNDERGROUND AND ROADWAY AT GRADE (MANHOLE PLANS AND SECTIONS)

SCALE 1:15

E-125

THIS PLAN IS ACCURATE FOR ELECTRICAL WORK ONLY.

ALL DIMENSIONS ARE IN MILLIMETERS UNLESS OTHERWISE SHOWN

STATE OF CALIFORNIA - DEPARTMENT OF TRANSPORTATION
Caltrans

CONSULTANT FUNCTIONAL SUPERVISOR: BRADY NADELL
CALCULATED-DESIGNED BY: JEFFRI HALIM
CHECKED BY: ELLERY LUCAS
REVISED BY / DATE REVISED

LAST REVISION 08-17-09
DATE PLOTTED => 06-OCT-2011
TIME PLOTTED => 07:00

Dist	COUNTY	ROUTE	KILOMETER POST TOTAL PROJECT	SHEET No.	TOTAL SHEETS
04	Ala	80	1.6/2.7	316	744

REGISTERED ELECTRICAL ENGINEER 5/02/11

10-3-11
PLANS APPROVAL DATE

REGISTERED PROFESSIONAL ENGINEER DAVID H. OTO No. 10699 Exp. 06/30/2013 ELECTRICAL STATE OF CALIFORNIA

THE STATE OF CALIFORNIA OR ITS OFFICERS OR AGENTS SHALL NOT BE RESPONSIBLE FOR THE ACCURACY OR COMPLETENESS OF ELECTRONIC COPIES OF THIS PLAN SHEET.

PB AMERICAS, Inc.
303 Second St., Suite 700N
San Francisco, CA 94107-1317

Caltrans Metric

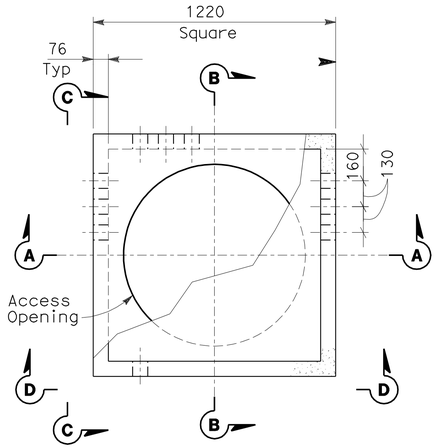

PLAN - MANHOLE-48

(600 V)

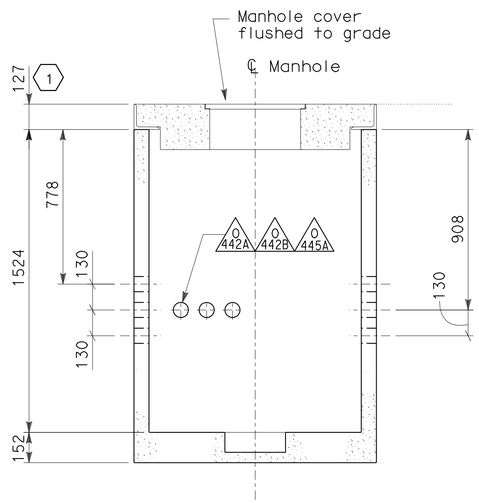

SECTION A-A

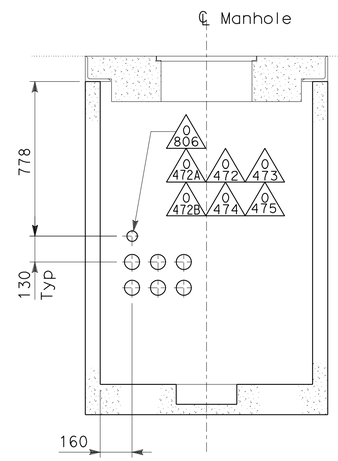

SECTION B-B

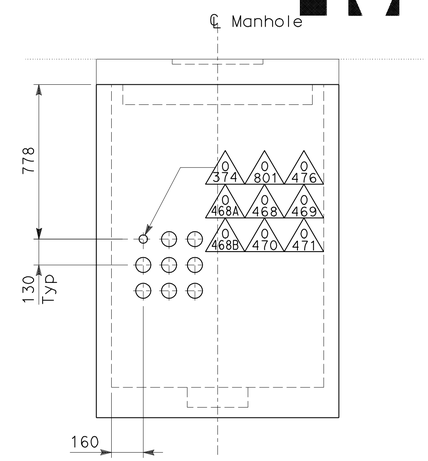

SECTION C-C

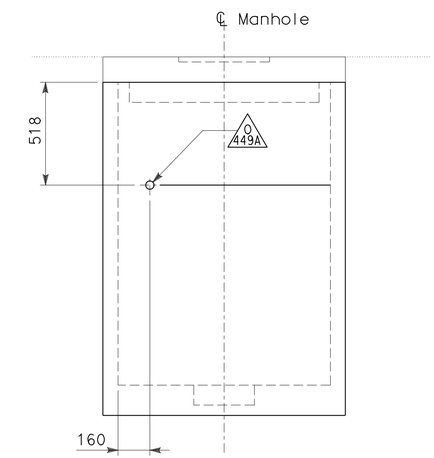

SECTION D-D

SCALE: 1:15

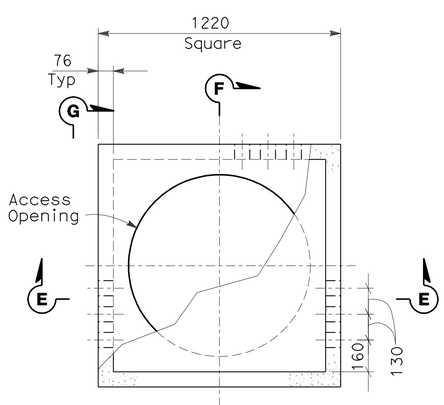

PLAN - MANHOLE-49

(TOS/COM)

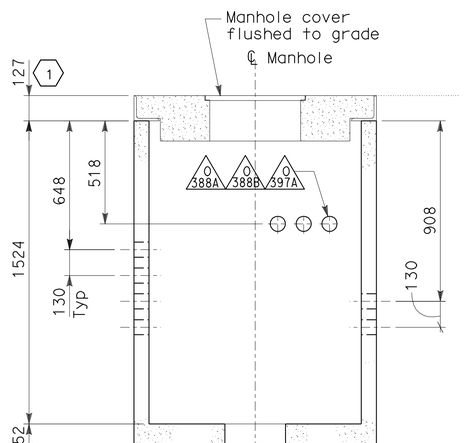

SECTION E-E

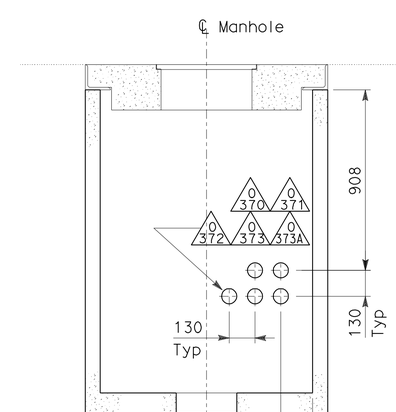

SECTION F-F

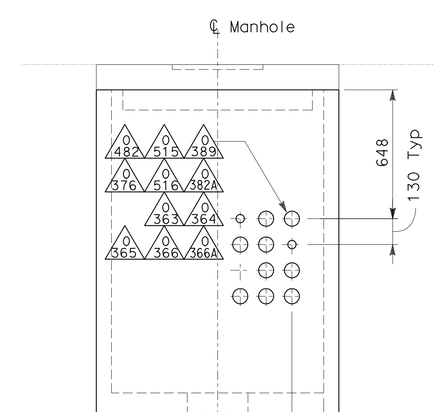

SECTION G-G

NOTES:

1. References:
   - For conduit duct bank sections, see sheets E-121 through E-123.
   - For typical manhole and duct bank details, see sheet E-119.
   - For conduit and tray, cable and circuit schedules, see sheets starting at E-205.
2. Conduit knockouts or opening shall be sealed water tight. Conduit end bell shall be provided.

SHEET NOTE:

(1) Additional rings for depth adjustments shall be installed as needed. For elevation and underground duct bank profile, see Utility drawings.

DETAILS
UNDERGROUND AND ROADWAY AT GRADE (MANHOLE PLANS AND SECTIONS)

SCALE 1:15

THIS PLAN IS ACCURATE FOR ELECTRICAL WORK ONLY.

ALL DIMENSIONS ARE IN MILLIMETERS UNLESS OTHERWISE SHOWN

E-126

REVISED BY	DATE REVISED
JEFFRI HALIM	ELLERY LUCAS
CALCULATED-DESIGNED BY	CHECKED BY
CONSULTANT FUNCTIONAL SUPERVISOR	BRADY NADELL

STATE OF CALIFORNIA - DEPARTMENT OF TRANSPORTATION
Caltrans

LAST REVISION 08-17-09 | DATE PLOTTED => 06-OCT-2011 | TIME PLOTTED => 07:00

Dist	COUNTY	ROUTE	KILOMETER POST TOTAL PROJECT	SHEET No.	TOTAL SHEETS
04	Ala	80	1.6/2.7	317	744

REGISTERED ELECTRICAL ENGINEER 5/02/11

10-3-11
PLANS APPROVAL DATE

REGISTERED PROFESSIONAL ENGINEER DAVID H. OTO No. 10699 Exp. 06/30/2013 ELECTRICAL STATE OF CALIFORNIA

THE STATE OF CALIFORNIA OR ITS OFFICERS OR AGENTS SHALL NOT BE RESPONSIBLE FOR THE ACCURACY OR COMPLETENESS OF ELECTRONIC COPIES OF THIS PLAN SHEET.

PB AMERICAS, Inc.
303 Second St., Suite 700N
San Francisco, CA 94107-1317

Caltrans Metric

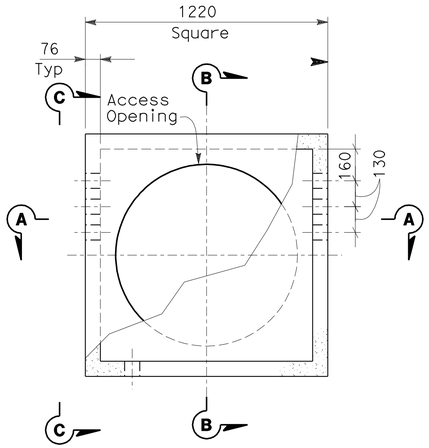

PLAN - MANHOLE-50

(600 V)

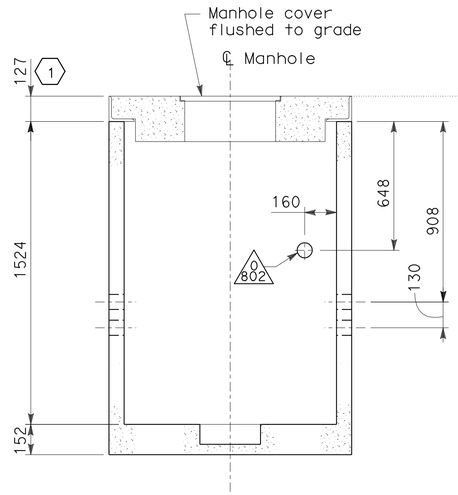

SECTION A-A

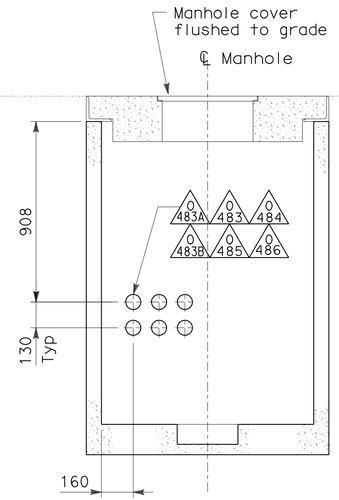

SECTION B-B

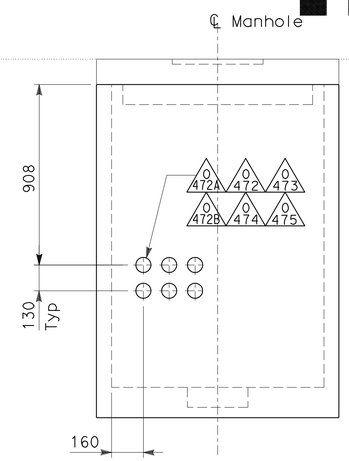

SECTION C-C

NOTES:

1. References:
   - For conduit duct bank sections, see sheets E-121 through E-123.
   - For typical manhole and duct bank details, see sheet E-119.
   - For conduit and tray, cable and circuit schedules, see sheets starting at E-205.
2. Conduit knockouts or opening shall be sealed water tight. Conduit end bell shall be provided.

SHEET NOTE:

(1) Additional rings for depth adjustments shall be installed as needed. For elevation and underground duct bank profile, see Utility drawings.

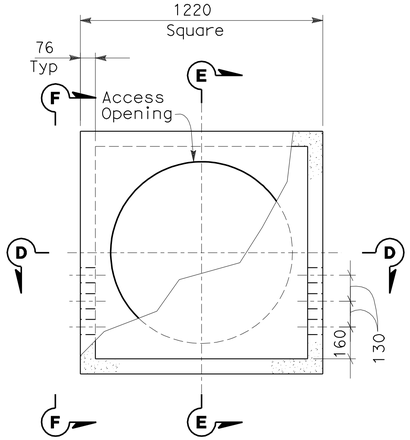

PLAN - MANHOLE-51

(TOS/COM)

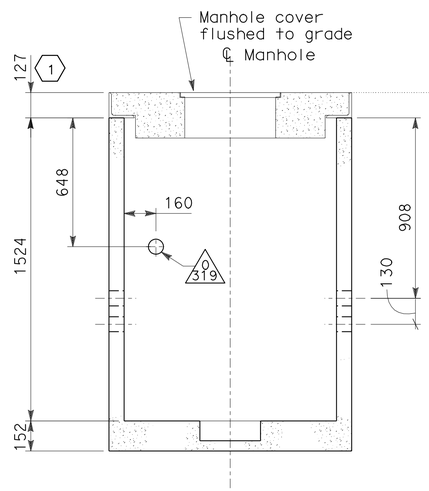

SECTION D-D

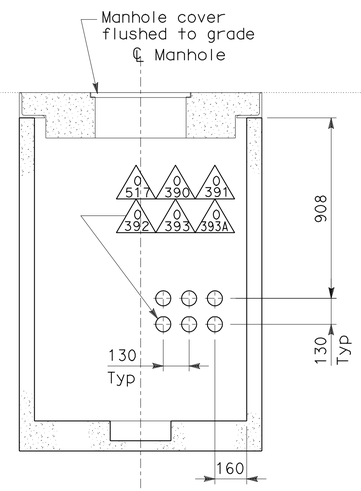

SECTION E-E

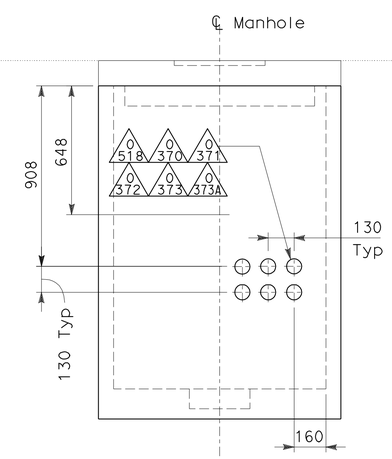

SECTION F-F

DETAILS
UNDERGROUND AND ROADWAY AT GRADE (MANHOLE PLANS AND SECTIONS)

SCALE 1:15

E-127

THIS PLAN IS ACCURATE FOR ELECTRICAL WORK ONLY.

ALL DIMENSIONS ARE IN MILLIMETERS UNLESS OTHERWISE SHOWN

STATE OF CALIFORNIA - DEPARTMENT OF TRANSPORTATION
Caltrans

CONSULTANT FUNCTIONAL SUPERVISOR: BRADY NADELL
CALCULATED-DESIGNED BY: JEFFRI HALIM
CHECKED BY: ELLERY LUCAS
REVISED BY / DATE REVISED

LAST REVISION 08-17-09
DATE PLOTTED => 06-OCT-2011
TIME PLOTTED => 07:01

Dist	COUNTY	ROUTE	KILOMETER POST TOTAL PROJECT	SHEET No.	TOTAL SHEETS
04	Ala	80	1.6/2.7	318	744

REGISTERED ELECTRICAL ENGINEER 5/02/11

10-3-11
PLANS APPROVAL DATE

REGISTERED PROFESSIONAL ENGINEER DAVID H. OTO No. 10699 Exp. 06/30/2013 ELECTRICAL STATE OF CALIFORNIA

THE STATE OF CALIFORNIA OR ITS OFFICERS OR AGENTS SHALL NOT BE RESPONSIBLE FOR THE ACCURACY OR COMPLETENESS OF ELECTRONIC COPIES OF THIS PLAN SHEET.

PB AMERICAS, Inc.
303 Second St., Suite 700N
San Francisco, CA 94107-1317

Caltrans Metric

NOTES:

1. References:
   - For conduit duct bank sections, see sheets E-121 through E-123.
   - For typical manhole and duct bank details, see sheet E-119.
   - For conduit and tray, cable and circuit schedules, see sheets starting at E-205.
2. Conduit knockouts or opening shall be water tight. Conduit end bell shall be provided.

SHEET NOTE:

(1) Additional rings for depth adjustments shall be installed as needed. For elevation and underground duct bank profile, see Utility drawings.

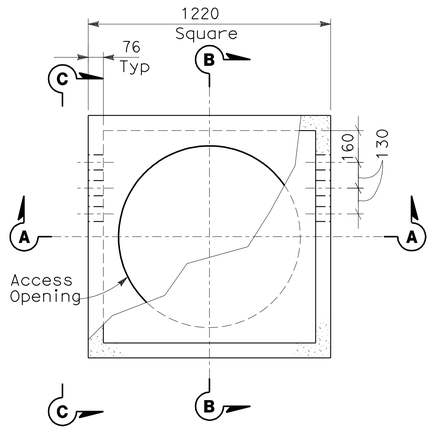

PLAN - MANHOLE-52
(600 V)

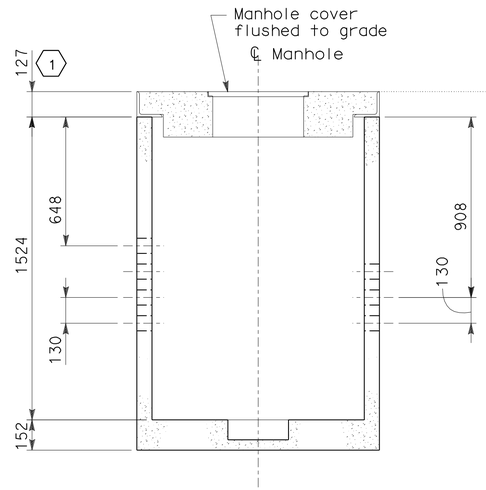

SECTION A-A

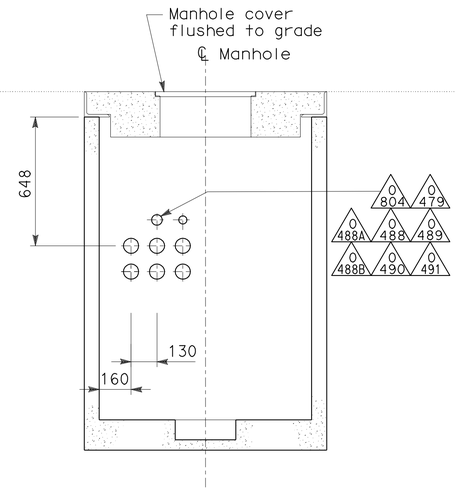

SECTION B-B

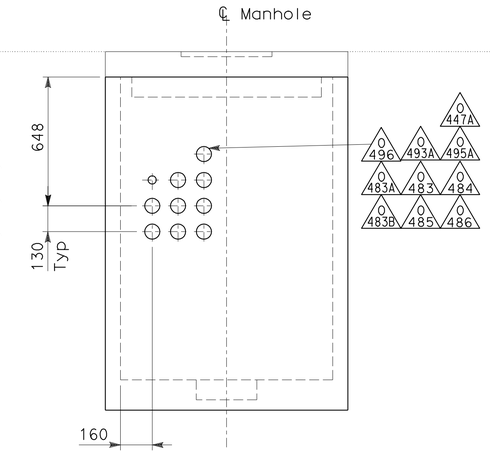

SECTION C-C

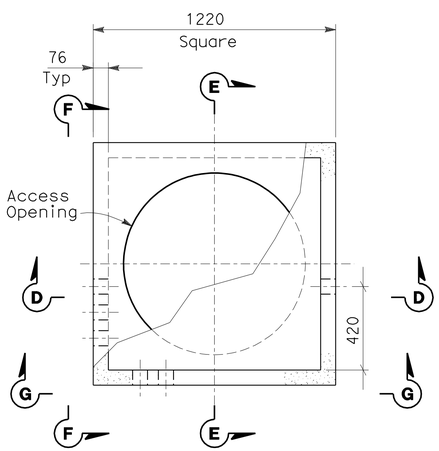

PLAN - MANHOLE-53
(TOS/COM)

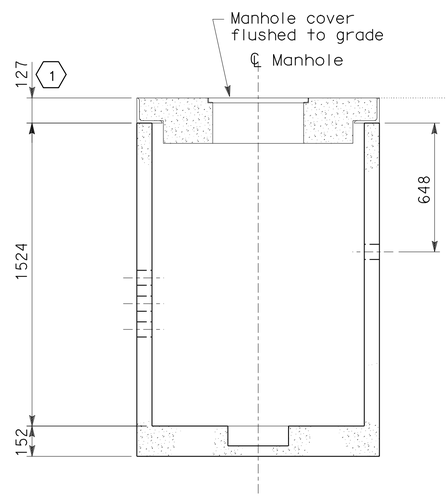

SECTION D-D

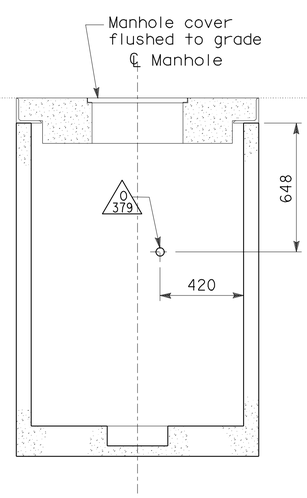

SECTION E-E

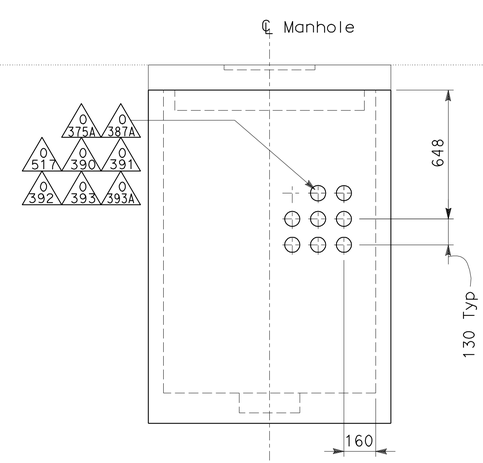

SECTION F-F

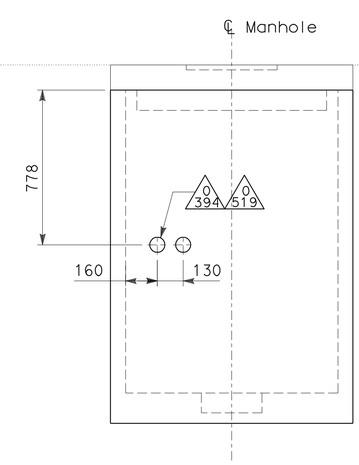

SECTION G-G

DETAILS
UNDERGROUND AND ROADWAY AT GRADE (MANHOLE PLANS AND SECTIONS)

SCALE 1:15

THIS PLAN IS ACCURATE FOR ELECTRICAL WORK ONLY.

ALL DIMENSIONS ARE IN MILLIMETERS UNLESS OTHERWISE SHOWN

E-128

REVISED BY	DATE REVISED

JEFFRI HALIM — CALCULATED-DESIGNED BY
ELLERY LUCAS — CHECKED BY
BRADY NADELL — CONSULTANT FUNCTIONAL SUPERVISOR

STATE OF CALIFORNIA - DEPARTMENT OF TRANSPORTATION
Caltrans

LAST REVISION 08-17-09 | DATE PLOTTED => 06-OCT-2011 | TIME PLOTTED => 07:01

Dist	COUNTY	ROUTE	KILOMETER POST TOTAL PROJECT	SHEET No.	TOTAL SHEETS
04	Ala	80	1.6/2.7	319	744

REGISTERED ELECTRICAL ENGINEER 5/02/11

10-3-11
PLANS APPROVAL DATE

REGISTERED PROFESSIONAL ENGINEER DAVID H. OTO No. 10699 Exp. 06/30/2013 ELECTRICAL STATE OF CALIFORNIA

THE STATE OF CALIFORNIA OR ITS OFFICERS OR AGENTS SHALL NOT BE RESPONSIBLE FOR THE ACCURACY OR COMPLETENESS OF ELECTRONIC COPIES OF THIS PLAN SHEET.

PB AMERICAS, Inc.
303 Second St., Suite 700N
San Francisco, CA 94107-1317

Caltrans Metric

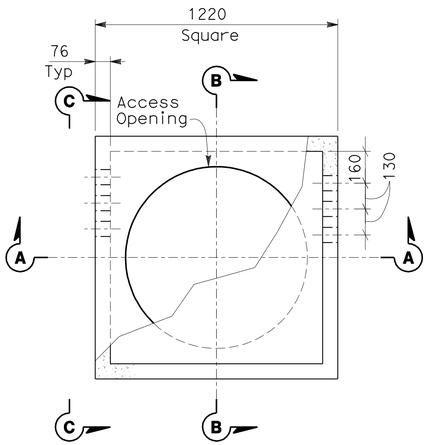

PLAN - MANHOLE-54
(600 V)

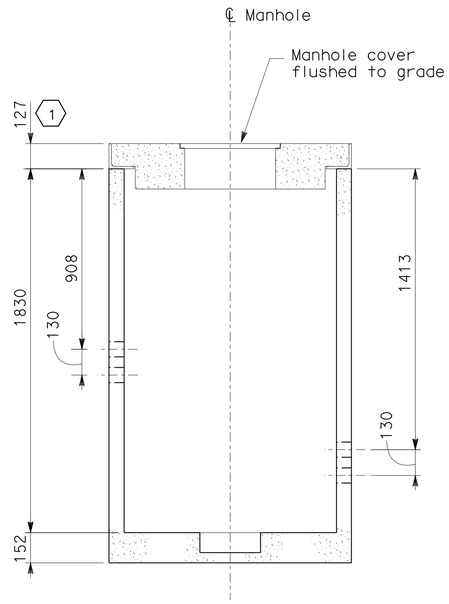

SECTION A-A

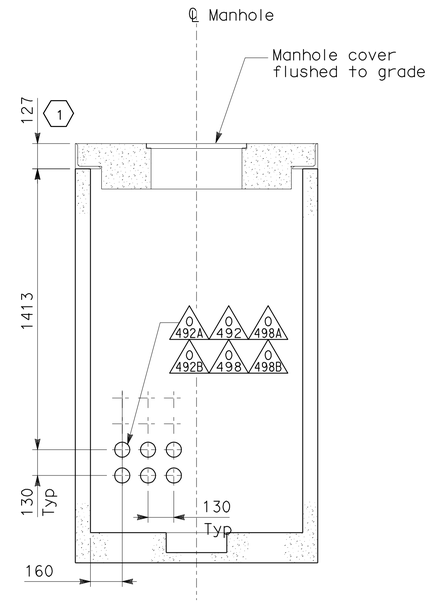

SECTION B-B

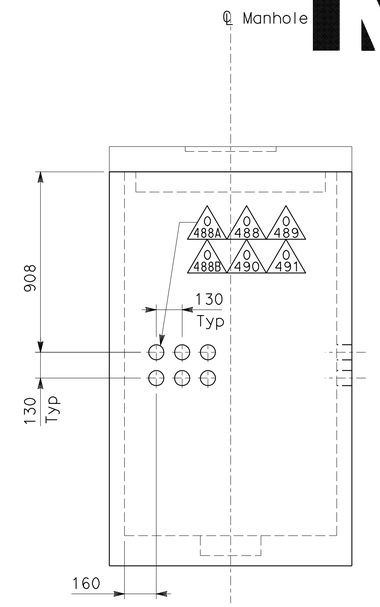

SECTION C-C

NOTES:

1. References:
   - For conduit duct bank sections, see sheets E-121 through E-123.
   - For typical manhole and duct bank details, see sheet E-119.
   - For conduit and tray, cable and circuit schedules, see sheets starting at E-205.
2. Conduit knockouts or opening shall be sealed water tight. Conduit end bell shall be provided.

SHEET NOTE:

(1) Additional rings for depth adjustments shall be installed as needed. For elevation and underground duct bank profile, see Utility drawings.

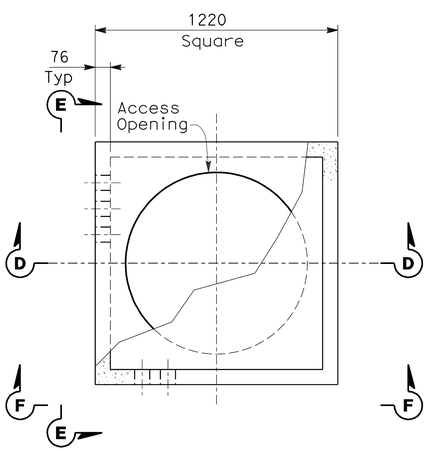

PLAN - MANHOLE-56
(TOS/COM)

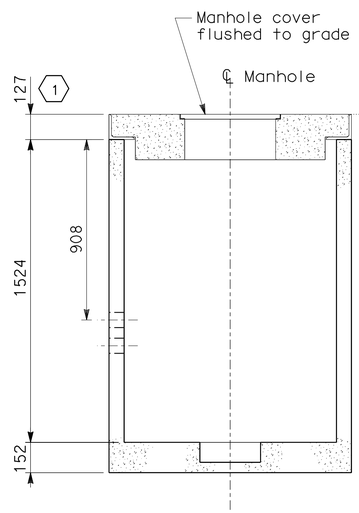

SECTION D-D

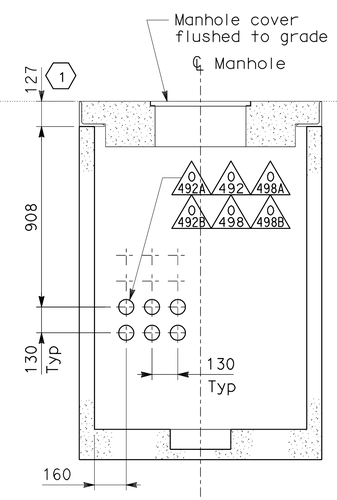

SECTION E-E

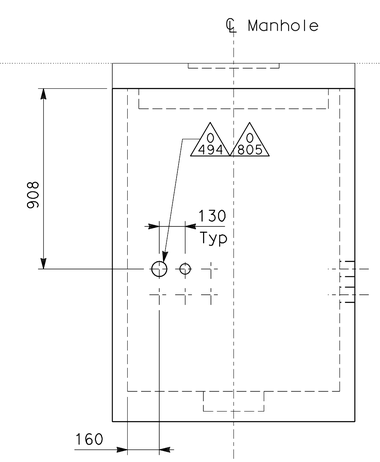

SECTION F-F

DETAILS
UNDERGROUND AND ROADWAY AT GRADE (MANHOLE PLANS AND SECTIONS)
SCALE 1:15

E-129

THIS PLAN IS ACCURATE FOR ELECTRICAL WORK ONLY.

ALL DIMENSIONS ARE IN MILLIMETERS UNLESS OTHERWISE SHOWN

STATE OF CALIFORNIA - DEPARTMENT OF TRANSPORTATION
Caltrans

CONSULTANT FUNCTIONAL SUPERVISOR: BRADY NADELL
CALCULATED-DESIGNED BY: JEFFRI HALIM
CHECKED BY: ELLERY LUCAS
REVISED BY / DATE REVISED

LAST REVISION 08-17-09 | DATE PLOTTED => 06-OCT-2011 | TIME PLOTTED => 07:01

Dist	COUNTY	ROUTE	KILOMETER POST TOTAL PROJECT	SHEET No.	TOTAL SHEETS
04	Ala	80	1.6/2.7	320	744

REGISTERED ELECTRICAL ENGINEER 5/02/11

10-3-11
PLANS APPROVAL DATE

REGISTERED PROFESSIONAL ENGINEER DAVID H. OTO No. 10699 Exp. 06/30/2013 ELECTRICAL STATE OF CALIFORNIA

THE STATE OF CALIFORNIA OR ITS OFFICERS OR AGENTS SHALL NOT BE RESPONSIBLE FOR THE ACCURACY OR COMPLETENESS OF ELECTRONIC COPIES OF THIS PLAN SHEET.

PB AMERICAS, Inc.
303 Second St., Suite 700N
San Francisco, CA 94107-1317

PULL BOXES

Location	Type	Pull Box Size	EXTENSION	TYPE OF COVER		Nameplate Pull Box Cover (See Note 1)	Remarks
				TRAFFIC	CONCRETE		
Concrete Barrier	PB-COM	CALTRANS 9A	NO	NO	NO	Low Voltage	Caltrans Type PB-9A (RSP ES-9C)
Concrete Barrier	PB-LTG	CALTRANS 9	NO	NO	NO	600 V-Electrical	Caltrans Type PB-9 (RSP ES-9C)
Concrete Barrier (Eastbound south barrier)	PB-COM	CALTRANS 9	NO	NO	NO	Low Voltage	Caltrans Type PB-9 (RSP ES-9C)
Roadway	PB-10	CALTRANS 6T	YES	YES	YES	600 V-Electrical	Caltrans Type 6 (T) (RSP ES-8)
Roadway	PB-11	FIBER OPTIC CALTRANS	YES	YES	YES	TOS/COM	
Roadway	PB-12	CALTRANS 5T	YES	YES	YES	600 V-Electrical	Caltrans Type 5 (T) (RSP ES-8) For High Mast Lighting)

UNDERGROUND MANHOLES

Manhole No.	NAMEPLATE (ENGRAVING (See Note 1)	Inside Dimensions			REMARKS
		Width	Length	Heigth	
MH-44	600 V	1220 mm	1220 mm	1524 mm	Traffic rated manhole cover
MH-45	TOS COMMUNICATION	1220 mm	1220 mm	1524 mm	Traffic rated manhole cover
MH-46	600 V	1220 mm	1220 mm	1524 mm	Traffic rated manhole cover
MH-47	TOS COMMUNICATION	1220 mm	1220 mm	1524 mm	Traffic rated manhole cover
MH-48	600 V	1220 mm	1220 mm	1524 mm	Traffic rated manhole cover
MH-49	TOS COMMUNICATION	1220 mm	1220 mm	1524 mm	Traffic rated manhole cover
MH-50	600 V	1220 mm	1220 mm	1524 mm	Traffic rated manhole cover
MH-51	TOS COMMUNICATION	1220 mm	1220 mm	1524 mm	Traffic rated manhole cover
MH-52	600 V	1220 mm	1220 mm	1524 mm	Traffic rated manhole cover
MH-53	TOS COMMUNICATION	1220 mm	1220 mm	1524 mm	Traffic rated manhole cover
MH-54	600 V	1220 mm	1220 mm	1524 mm	Traffic rated manhole cover
MH-56	600 V	1220 mm	1220 mm	1524 mm	Traffic rated manhole cover

NOTES:

1. Nameplate engraving shall be as follows:
   First Line - Caltrans
   Second Line - See Schedules
2. For typical detail of manhole, see sheet E-119.

DETAILS
UNDERGROUND AND ROADWAY AT GRADE (PULL BOX SCHEDULE)

E-130

THIS PLAN IS ACCURATE FOR ELECTRICAL WORK ONLY.

REVISED BY | DATE REVISED
JEFFRI HALIM | ELLERY LUCAS
CALCULATED-DESIGNED BY | CHECKED BY
CONSULTANT FUNCTIONAL SUPERVISOR
BRADY NADELL
STATE OF CALIFORNIA - DEPARTMENT OF TRANSPORTATION
Caltrans

LAST REVISION 08-17-09 | DATE PLOTTED => 06-OCT-2011 | TIME PLOTTED => 07:01

Dist	COUNTY	ROUTE	KILOMETER POST TOTAL PROJECT	SHEET No.	TOTAL SHEETS
04	Ala	80	1.6/2.7	321	744

REGISTERED ELECTRICAL ENGINEER 5/02/11

REGISTERED PROFESSIONAL ENGINEER DAVID H. OTO No. 10699 Exp. 06/30/2013 ELECTRICAL STATE OF CALIFORNIA

10-3-11
PLANS APPROVAL DATE

THE STATE OF CALIFORNIA OR ITS OFFICERS OR AGENTS SHALL NOT BE RESPONSIBLE FOR THE ACCURACY OR COMPLETENESS OF ELECTRONIC COPIES OF THIS PLAN SHEET.

PB AMERICAS, Inc.
303 Second St., Suite 700N
San Francisco, CA 94107-1317

Caltrans Metric

NOTE:

1. References:
   - For Pier E22L, see sheet E-24.
   - For Pier E22R, see sheet E-37.

SHEET NOTE:

(1) Intercept the (E) ground conductor from the manhole MH-10 duct bank with a 250 kcmil bare copper ground conductor. This grounding system shall be routed with the 600 V duct bank up to manhole MH-56.

(2) Connect to 250 kcmil, see sheet E-109.

(3) Connect to 250 kcmil, see sheet E-111.

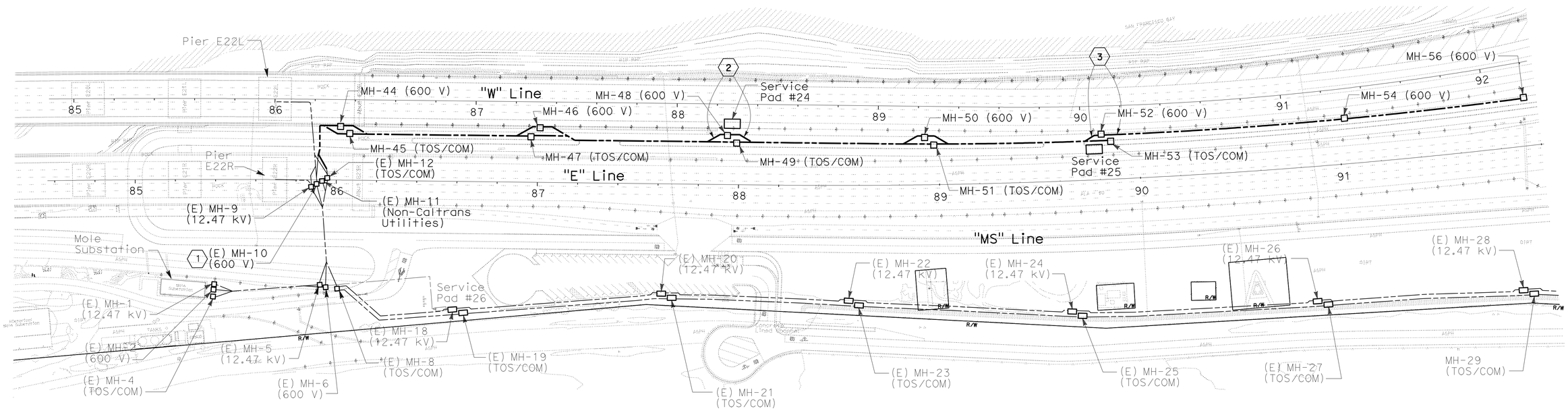

DETAILS
UNDERGROUND AND ROADWAY AT GRADE (GROUNDING SYSTEM INTERFACE)

SCALE 1:1000

E-131

THIS PLAN IS ACCURATE FOR ELECTRICAL WORK ONLY.

ALL DIMENSIONS ARE IN METERS UNLESS OTHERWISE SHOWN

STATE OF CALIFORNIA - DEPARTMENT OF TRANSPORTATION
Caltrans

CONSULTANT FUNCTIONAL SUPERVISOR: BRADY NADELL
CALCULATED-DESIGNED BY: JEFFRI HALIM
CHECKED BY: ELLERY LUCAS
REVISED BY / DATE REVISED

LAST REVISION 08-05-11
DATE PLOTTED => 06-OCT-2011
TIME PLOTTED => 07:01

Dist	COUNTY	ROUTE	KILOMETER POST TOTAL PROJECT	SHEET No.	TOTAL SHEETS
04	Ala	80	1.6/2.7	322	744

REGISTERED CIVIL ENGINEER DATE

10-3-11
PLANS APPROVAL DATE

REGISTERED PROFESSIONAL ENGINEER T.W. SPARKS No. E16039 Exp. 9-30-11 ELECTRICAL STATE OF CALIFORNIA

THE STATE OF CALIFORNIA OR ITS OFFICERS OR AGENTS SHALL NOT BE RESPONSIBLE FOR THE ACCURACY OR COMPLETENESS OF ELECTRONIC COPIES OF THIS PLAN SHEET.

T.Y. LIN / MOFFATT & NICHOL
TWO HARRISON STREET, SUITE 500
SAN FRANCISCO, CA 94105

Caltrans Metric

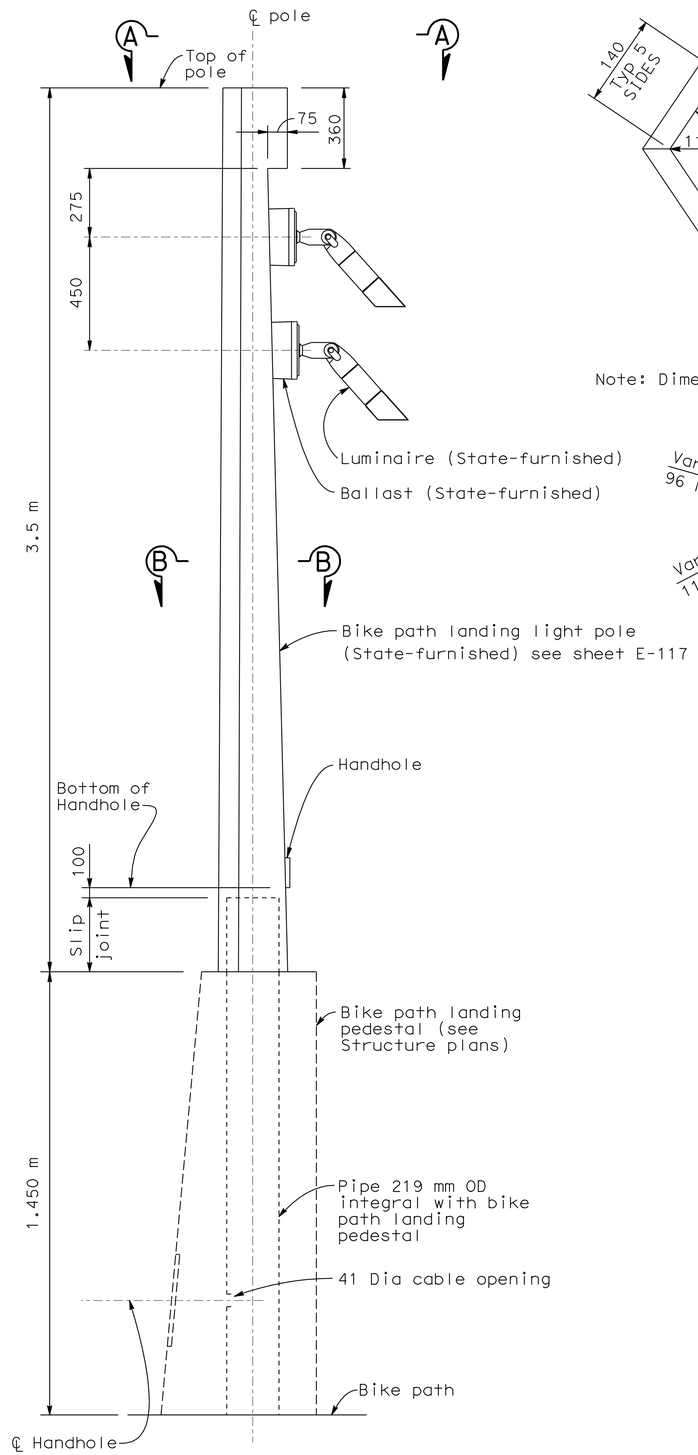

ELEVATION
POLE DETAIL

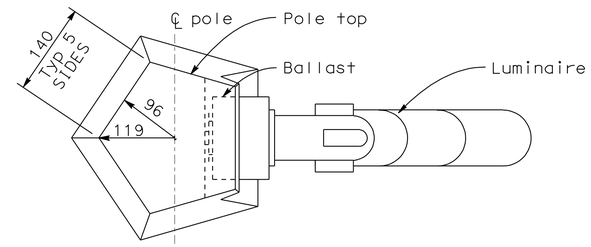

SECTION A-A

Note: Dimensions shown are at top of pole.

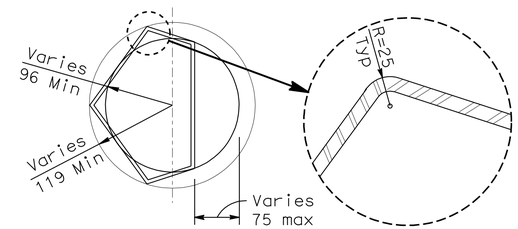

SECTION B-B

NOTE: FOR REFERENCE ONLY.

DETAILS
UNDERGROUND AND ROADWAY AT GRADE (BIKE PATH LANDING LIGHTING ASSEMBLY)

NO SCALE

ALL DIMENSIONS ARE IN MILLIMETERS UNLESS OTHERWISE SHOWN.

THIS PLAN IS ACCURATE FOR ELECTRICAL WORK ONLY.

E-132

STATE OF CALIFORNIA - DEPARTMENT OF TRANSPORTATION
Caltrans

CONSULTANT FUNCTIONAL SUPERVISOR: AL ELY
CALCULATED-DESIGNED BY: GAM
CHECKED BY: TYL
REVISED BY
DATE REVISED

LAST REVISION DATE PLOTTED => 06-OCT-2011
TIME PLOTTED => 07:01

Dist	COUNTY	ROUTE	KILOMETER POST TOTAL PROJECT	SHEET No.	TOTAL SHEETS
04	Ala	80	1.6/2.7	323	744

REGISTERED ELECTRICAL ENGINEER 5/02/11

10-3-11
PLANS APPROVAL DATE

REGISTERED PROFESSIONAL ENGINEER DAVID H. OTO No. 10699 Exp. 06/30/2013 ELECTRICAL STATE OF CALIFORNIA

THE STATE OF CALIFORNIA OR ITS OFFICERS OR AGENTS SHALL NOT BE RESPONSIBLE FOR THE ACCURACY OR COMPLETENESS OF ELECTRONIC COPIES OF THIS PLAN SHEET.

PB AMERICAS, Inc.
303 Second St., Suite 700N
San Francisco, CA 94107-1317

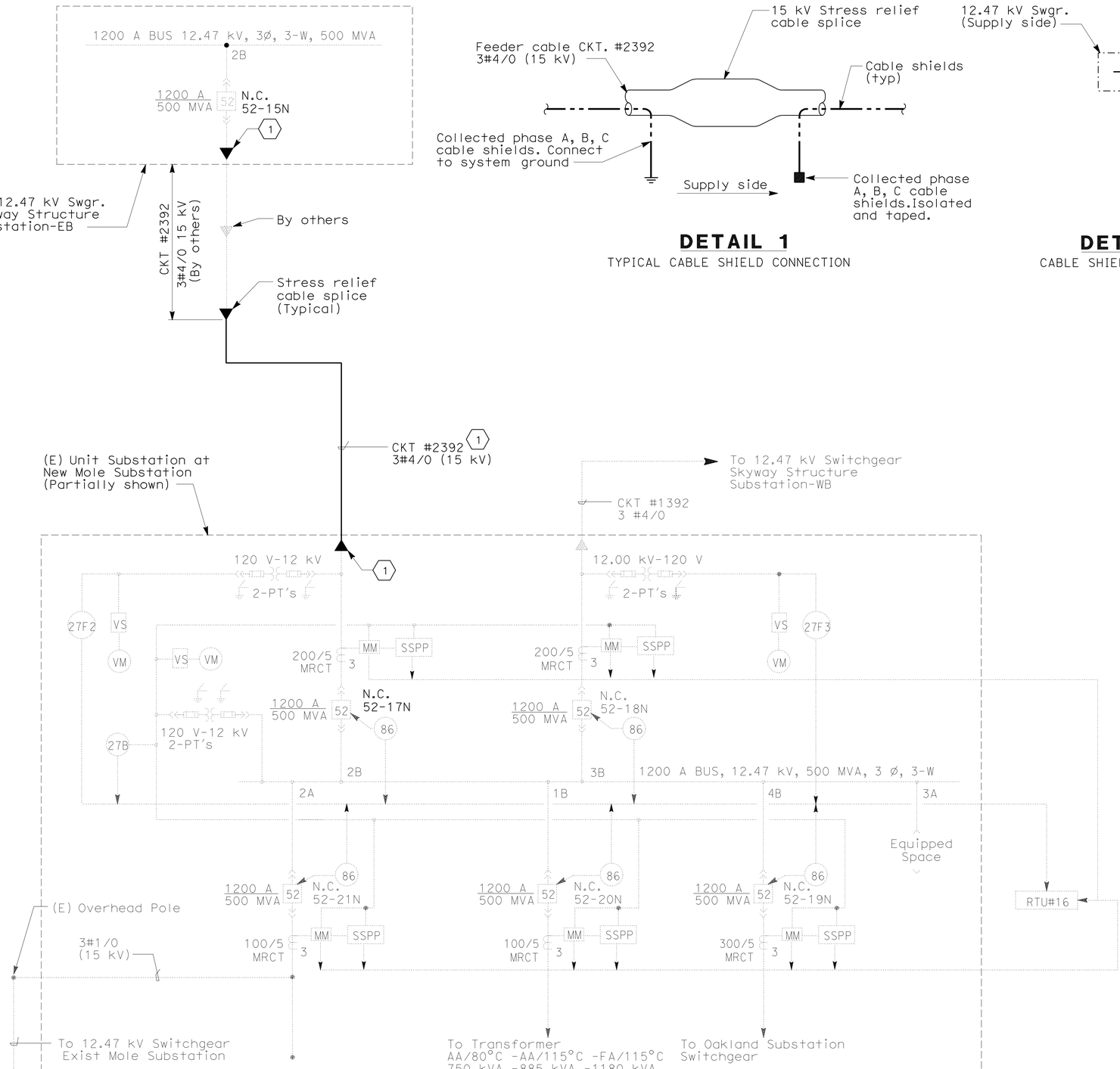

DETAIL 1
TYPICAL CABLE SHIELD CONNECTION

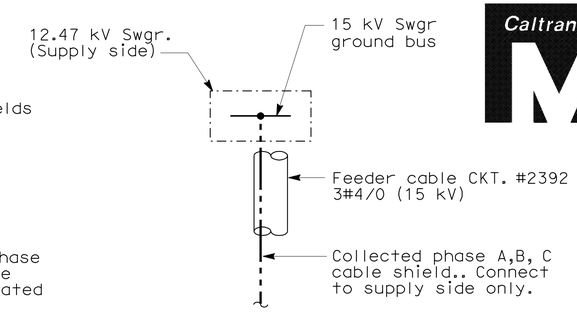

DETAIL 2
CABLE SHIELD TERMINATION

NOTES:

1. For cable shields termination details, see this drawing.
2. For 12.47 kV switchgear elevation, see sheet E-25.

SHEET NOTE:

(1) The Contractor shall coordinate the connection of this feeder cable to the (E) 12.47 kV switcgears. The bus tie-in to the 12.47 kV system shall be sequentially checked and verified with the Engineer.

DETAILS
UNDERGROUND AND ROADWAY AT GRADE (MOLE SUBSTATION)
12.47 kV TO 480 V SINGLE LINE DIAGRAM
NO SCALE

THIS PLAN IS ACCURATE FOR ELECTRICAL WORK ONLY.

E-133

STATE OF CALIFORNIA - DEPARTMENT OF TRANSPORTATION
Caltrans

CONSULTANT FUNCTIONAL SUPERVISOR: BRADY NADELL
CALCULATED-DESIGNED BY: JEFFRI HALIM
CHECKED BY: ELLERY LUCAS
REVISED BY / DATE REVISED

LAST REVISION 08-17-09
DATE PLOTTED => 06-OCT-2011
TIME PLOTTED => 07:01

Dist	COUNTY	ROUTE	KILOMETER POST TOTAL PROJECT	SHEET No.	TOTAL SHEETS
04	Ala	80	1.6/2.7	324	744

5/02/11
REGISTERED ELECTRICAL ENGINEER

10-3-11
PLANS APPROVAL DATE

REGISTERED PROFESSIONAL ENGINEER
DAVID H. OTO
No. 10699
Exp. 06/30/2013
ELECTRICAL
STATE OF CALIFORNIA

THE STATE OF CALIFORNIA OR ITS OFFICERS OR AGENTS SHALL NOT BE RESPONSIBLE FOR THE ACCURACY OR COMPLETENESS OF ELECTRONIC COPIES OF THIS PLAN SHEET.

PB AMERICAS, Inc.
303 Second St., Suite 700N
San Francisco, CA 94107-1317

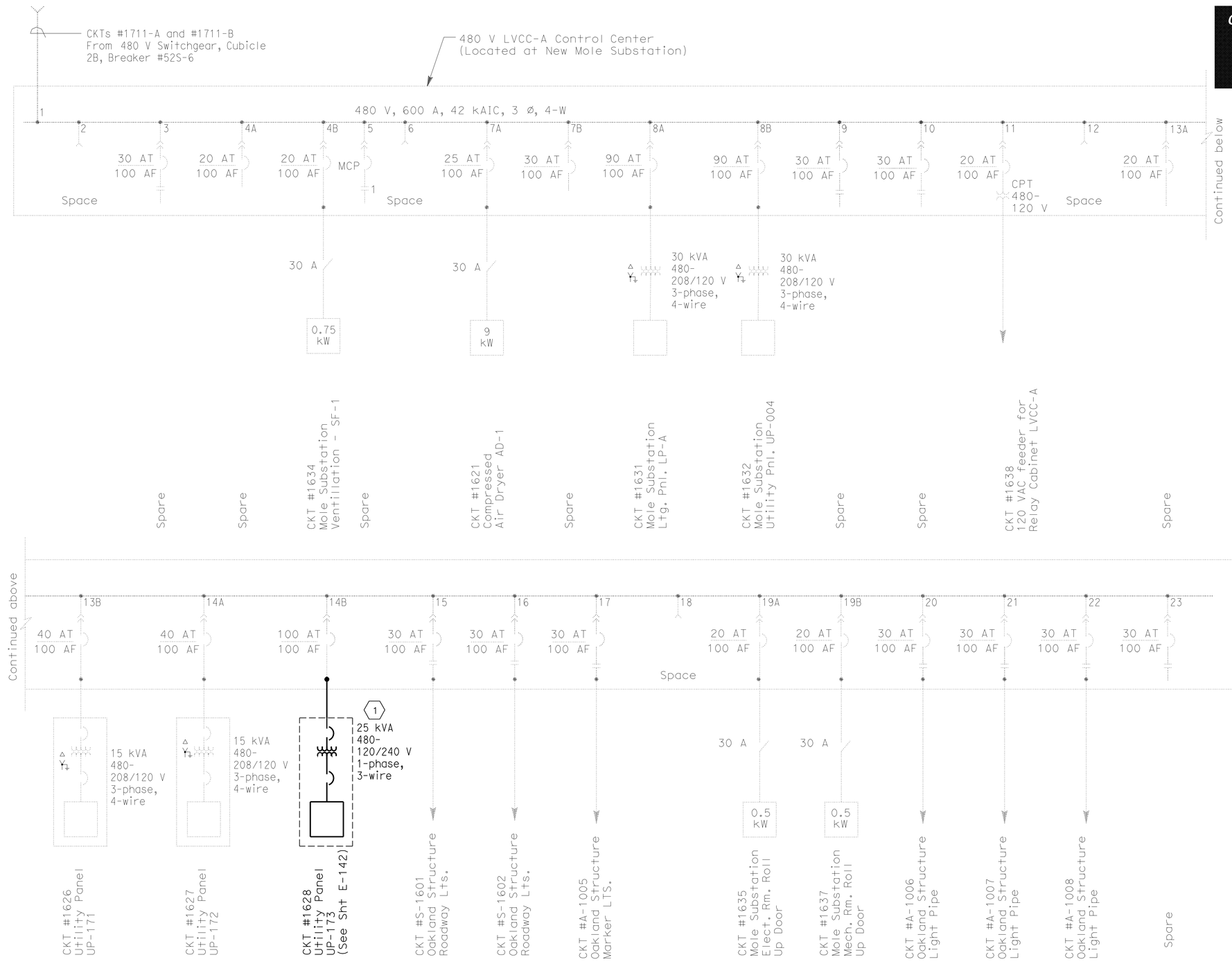

NOTES:

1. The combination starter units and thermal magnetic circuit breakers shall be suitable and coordinated for 42,000 RMS system fault current.
2. References:
   - For LVCC-A elevation and schedule, see sheet E-135.
   - For conduit and tray, cable and circuit schedules, see sheets starting at E-205.

SHEET NOTE:

(1) The transformer and panelboard shall be inside a type III-A enclosure, stainless steel service pedestal type.

DETAILS
UNDERGROUND AND ROADWAY AT GRADE (MOLE SUBSTATION)
480 V LVCC-A SINGLE LINE DIAGRAM

NO SCALE

THIS PLAN IS ACCURATE FOR ELECTRICAL WORK ONLY.

E-134

CALCULATED-DESIGNED BY	JEFFRI HALIM
CHECKED BY	ELLERY LUCAS
CONSULTANT FUNCTIONAL SUPERVISOR	BRADY NADELL
REVISED BY	
DATE REVISED	

STATE OF CALIFORNIA - DEPARTMENT OF TRANSPORTATION
Caltrans

LAST REVISION 08-17-09 | DATE PLOTTED => 06-OCT-2011 | TIME PLOTTED => 07:02

Dist	COUNTY	ROUTE	KILOMETER POST TOTAL PROJECT	SHEET No.	TOTAL SHEETS
04	Ala	80	1.6/2.7	325	744

REGISTERED ELECTRICAL ENGINEER 5/02/11

10-3-11
PLANS APPROVAL DATE

REGISTERED PROFESSIONAL ENGINEER
DAVID H. OTO
No. 10699
Exp. 06/30/2013
ELECTRICAL
STATE OF CALIFORNIA

THE STATE OF CALIFORNIA OR ITS OFFICERS OR AGENTS SHALL NOT BE RESPONSIBLE FOR THE ACCURACY OR COMPLETENESS OF ELECTRONIC COPIES OF THIS PLAN SHEET.

PB AMERICAS, Inc.
303 Second St., Suite 700N
San Francisco, CA 94107-1317

CUBICLE NO	VERTICAL SECTION	NAMEPLATE DESCRIPTION (SEE DETAIL)	DIAGRAM TYPE	REMARKS
1	1	CKTs #1711-A and 1711-B, 600 A Incoming Cubicle		
2	1	Space		
3	1	Spare	1A	
4A	1	Spare	3B	
4B	1	CKT #1634 Ventilation SF-1	3B	
5	1	Spare	4A	
6	2	Space		
7A	2	CKT #1621 Air Dryer AD-1	3B	
7B	2	Spare	3B	
8A	2	CKT #1631 Mole Substation building Ltg Pnl LP-A	3B	
8B	2	CKT #1632 Mole Substation Utility Panel UP-004	3B	
9	2	Spare	1A	
10	2	Spare	1A	
11	2	CKT #1638 120 V Feeder for Relay Cabinet LVCC-A	5A	
12	3	Space		
13A	3	Spare	3B	
13B	3	CKT #1626 Utility Panel UP-171	3B	
14A	3	CKT #1627 Utility Panel UP-172	3B	
14B	**3**	**CKT #1628 Utility Panel UP-173**	**3B**	1
15	3	CKT #S-1601 Oakland Structure Roadway Lts.	1A	
16	3	CKT #S-1602 Oakland Structure Roadway Lts.	1A	
17	3	CKT #A-1005 Oakland Structure Marker Lts.	1A	
18	4	Space		
19A	4	CKT #1635 Mole Substation Elect. Rm. Roll Up Door	3B	
19B	4	CKT #1637 Mole Substation Mech. Rm. Roll Up Door	3B	
20	4	CKT #A-1006 Oakland Structure Light Pipe	1A	
21	4	CKT #A-1007 Oakland Structure Light Pipe	1A	
22	4	CKT #A-1008 Oakland Structure Light Pipe	1A	
23	4	Spare	1A	
24	5	Relay Cabinet LVCC-A		

SCHEDULE

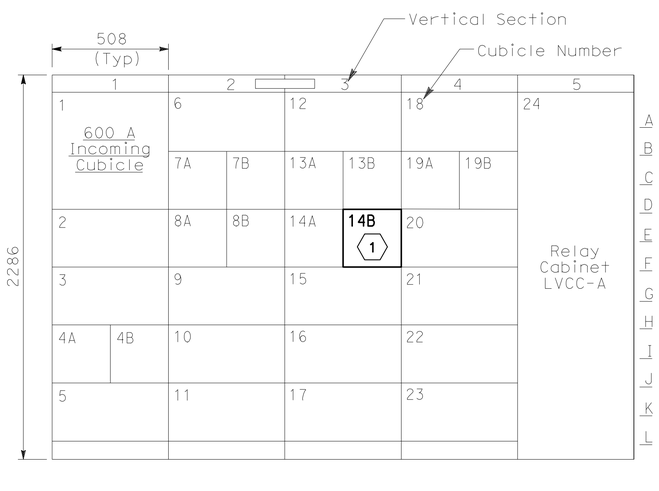

ELEVATION

NOTE:

1. References:
   - For single line diagram, see sheet E-134.

SHEET NOTE:

(1) Installed in previous contract. It is shown to as reference only to identify the circuit breaker to be used for cable connection.

DETAILS
UNDERGROUND AND ROADWAY AT GRADE (MOLE SUBSTATION)
480 V LVCC-A ELEVATION AND SCHEDULE

NO SCALE

E-135

THIS PLAN IS ACCURATE FOR ELECTRICAL WORK ONLY.

ALL DIMENSIONS ARE IN MILLIMETERS UNLESS OTHERWISE SHOWN

REVISED BY | DATE REVISED
JEFFRI HALIM | ELLERY LUCAS
CALCULATED-DESIGNED BY | CHECKED BY
CONSULTANT FUNCTIONAL SUPERVISOR
BRADY NADELL
STATE OF CALIFORNIA - DEPARTMENT OF TRANSPORTATION
Caltrans

LAST REVISION 08-17-09 | DATE PLOTTED => 06-OCT-2011 | TIME PLOTTED => 07:02

Dist	COUNTY	ROUTE	KILOMETER POST TOTAL PROJECT	SHEET No.	TOTAL SHEETS
04	Ala	80	1.6/2.7	326	744

REGISTERED ELECTRICAL ENGINEER 5/02/11

10-3-11
PLANS APPROVAL DATE

REGISTERED PROFESSIONAL ENGINEER DAVID H. OTO No. 10699 Exp. 06/30/2013 ELECTRICAL STATE OF CALIFORNIA

THE STATE OF CALIFORNIA OR ITS OFFICERS OR AGENTS SHALL NOT BE RESPONSIBLE FOR THE ACCURACY OR COMPLETENESS OF ELECTRONIC COPIES OF THIS PLAN SHEET.

PB AMERICAS, Inc.
303 Second St., Suite 700N
San Francisco, CA 94107-1317

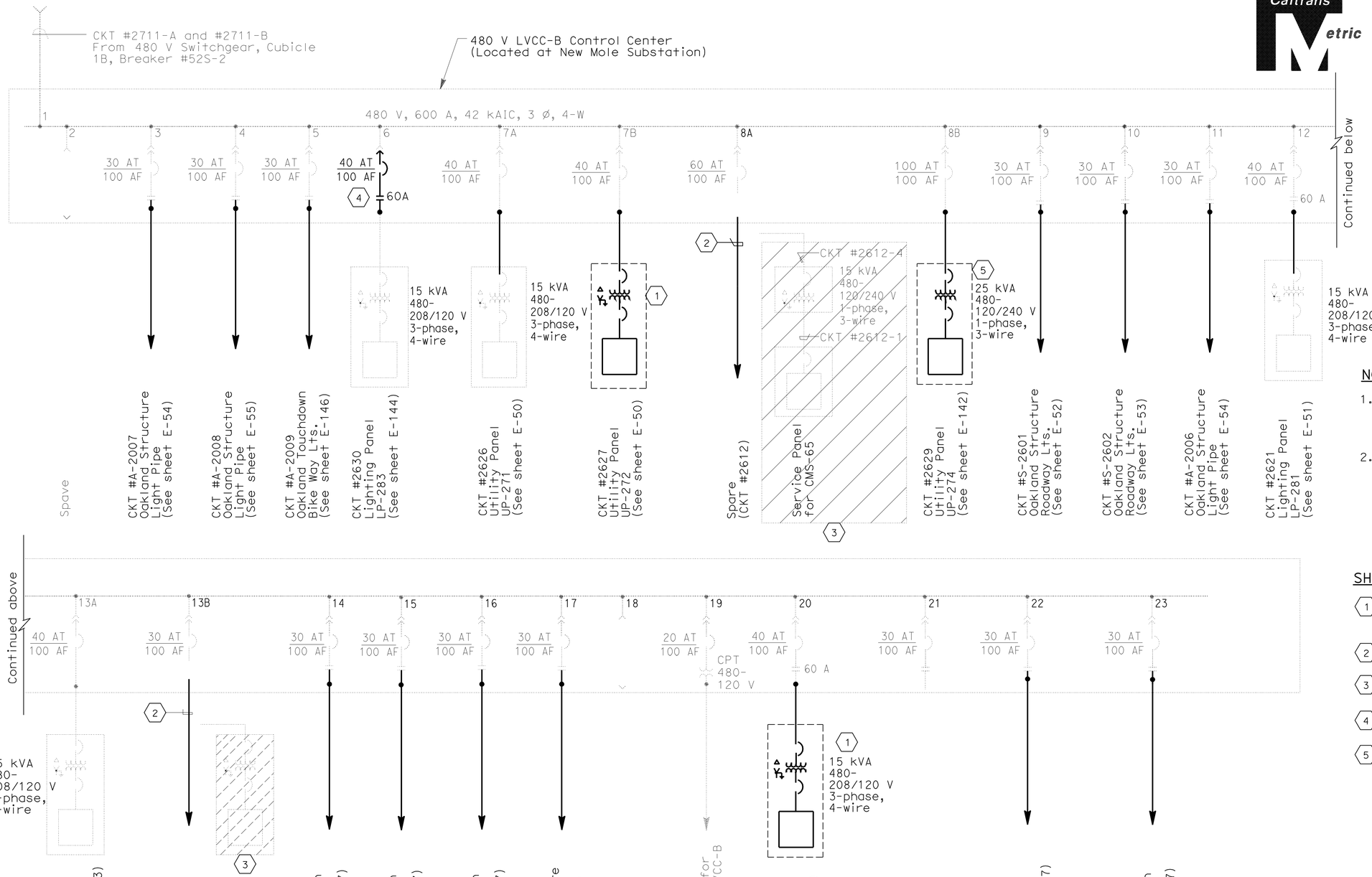

NOTES:

1. The combination starter units and thermal magnetic circuit breakers were previously installed in Mole Substation under another contract.
2. References:
   - For LVCC-B elevation and schedule, see sheet E-137.
   - For conduit and tray, cable and circuit schedules, see sheets starting at E-205.

SHEET NOTES:

1. Enclosed in three separate stainless steel enclosures located on the Service Platform.
2. Coil cables in PB-10 at Service Pad #26 and inside the cubicles #8A and #13B.
3. The Service Panels are removed on Stage 2 and Removal Electrical Stage.
4. Install new new circuit breaker/ contactor. Match existing.
5. The transformer and panelboard shall be inside a type III-A enclosure, stainless steel service pedestal type.

DETAILS
UNDERGOUND AND ROADWAY AT GRADE (MOLE SUBSTATION)
480 V LVCC-B SINGLE LINE DIAGRAM

NO SCALE

E-136

THIS PLAN IS ACCURATE FOR ELECTRICAL WORK ONLY.

STATE OF CALIFORNIA - DEPARTMENT OF TRANSPORTATION
Caltrans

CONSULTANT FUNCTIONAL SUPERVISOR: BRADY NADELL
CALCULATED-DESIGNED BY: JEFFRI HALIM
CHECKED BY: ELLERY LUCAS
REVISED BY
DATE REVISED

LAST REVISION 08-17-09
DATE PLOTTED => 06-OCT-2011
TIME PLOTTED => 07:02

Dist	COUNTY	ROUTE	KILOMETER POST TOTAL PROJECT	SHEET No.	TOTAL SHEETS
04	Ala	80	1.6/2.7	327	744

5/02/11
REGISTERED ELECTRICAL ENGINEER

10-3-11
PLANS APPROVAL DATE

REGISTERED PROFESSIONAL ENGINEER
DAVID H. OTO
No. 10699
Exp. 06/30/2013
STATE OF CALIFORNIA

THE STATE OF CALIFORNIA OR ITS OFFICERS OR AGENTS SHALL NOT BE RESPONSIBLE FOR THE ACCURACY OR COMPLETENESS OF ELECTRONIC COPIES OF THIS PLAN SHEET.

PB AMERICAS, Inc.
303 Second St., Suite 700N
San Francisco, CA 94107-1317

Caltrans Metric

SCHEDULE

	CUBICLE NO	VERTICAL SECTION	NAMEPLATE DESCRIPTION (SEE DETAIL)	DIAGRAM TYPE	REMARKS
	1	1	CKTs. 2711-A and 2711-B, 600 A Incoming Cubicle		
	2	1	Space		
	3	1	CKT #A-2007, Oakland Structure Light Pipe	1A	
	4	1	CKT #A-2008, Oakland Structure Light Pipe	1A	
1	5	1	**CKT #A-2009 Oakland Touchdown Bike Way Lts.**	1A	
2	6	2	CKT #2630 Lighting Panel LP-283	1A	
	7A	2	CKT #2626 Utility Panel UP-271	3B	
	7B	2	CKT #2627 Utility Panel UP-272	3B	
1	8A	2	**SPARE (Ckt #2612)**	3B	
	8B	2	CKT #2629 Utility Panel UP-274	3B	
	9	2	CKT #S-2601 Oakland Structure Roadway Lts.	1A	
	10	2	CKT #S-2602 Oakland Structure Roadway Lts.	1A	
	11	2	CKT #A-2006, Oakland Structure Light Pipe	1A	
	12	3	CKT #2621 Lighting Panel LP-281	1B	
	13A	3	CKT #2631 Utility Panel UP-275	3B	
1	13B	3	**SPARE (Ckt #2613)**	3B	
	14	3	CKT #S-2608 Oakland Approach High Mast Lts.	1A	
	15	3	CKT #S-2606 Oakland Approach High Mast Lts.	1A	
	16	3	CKT #S-2607 Oakland Approach High Mast Lts.	1A	
	17	3	CKT #A-2005 Oakland Structure Marker Lts.	1A	
	18	4	Space		
	19	4	CKT #2638 120 V Feeder for Relay Cabinet LVCC-B	5A	
	20	4	CKT #2622 Lighting Panel LP-282	1B	
1	21	4	**Spare**	1A	
	22	4	CKT #2610 Sign Lighting Sign No. 01622	1A	
1	23	4	**CKT #S-2609 Oakland Structure Roadway Lts.**	1A	
	24	5	Relay Cabinet LVCC-B		

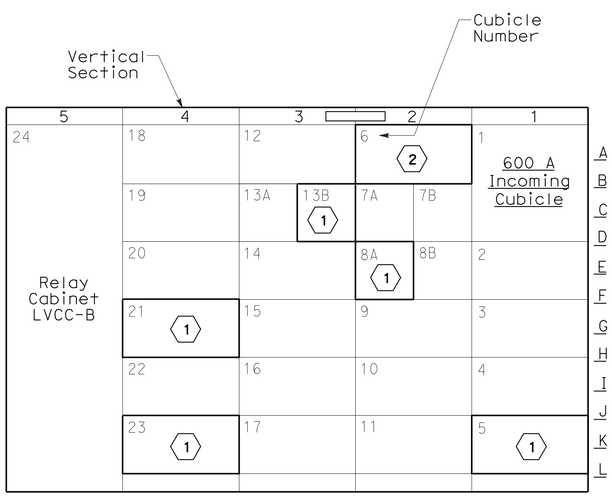

ELEVATION

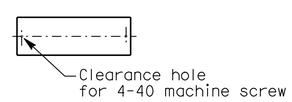

NOTE: Nameplates shall be mounted to the face of each cubicle door panel with 4-40 stainless steel machine screws. The control panel shall be drilled and tapped. (No self-tapping screws)

NAMEPLATE DETAIL

NOTE:

1. References:
   - For single line diagram, see sheet E-136.

SHEET NOTES:

1. Change nameplate description as noted.
2. Add new circuit breaker. Match existing.

DETAILS
UNDERGROUND AND ROADWAY AT GRADE (MOLE SUBSTATION)
480 V LVCC-B ELEVATION AND SCHEDULE

NO SCALE

THIS PLAN IS ACCURATE FOR ELECTRICAL WORK ONLY.

E-137

REVISED BY | DATE REVISED
JEFFRI HALIM | ELLERY LUCAS
CALCULATED-DESIGNED BY | CHECKED BY
CONSULTANT FUNCTIONAL SUPERVISOR
BRADY NADELL

STATE OF CALIFORNIA - DEPARTMENT OF TRANSPORTATION
Caltrans

LAST REVISION 08-17-09 | DATE PLOTTED => 06-OCT-2011 | TIME PLOTTED => 07:02

Dist	COUNTY	ROUTE	KILOMETER POST TOTAL PROJECT	SHEET No.	TOTAL SHEETS
04	Ala	80	1.6/2.7	328	744

REGISTERED ELECTRICAL ENGINEER 5/02/11

10-3-11
PLANS APPROVAL DATE

REGISTERED PROFESSIONAL ENGINEER
DAVID H. OTO
No. 10699
Exp. 06/30/2013
STATE OF CALIFORNIA

THE STATE OF CALIFORNIA OR ITS OFFICERS OR AGENTS SHALL NOT BE RESPONSIBLE FOR THE ACCURACY OR COMPLETENESS OF ELECTRONIC COPIES OF THIS PLAN SHEET.

PB AMERICAS, Inc.
303 Second St., Suite 700N
San Francisco, CA 94107-1317

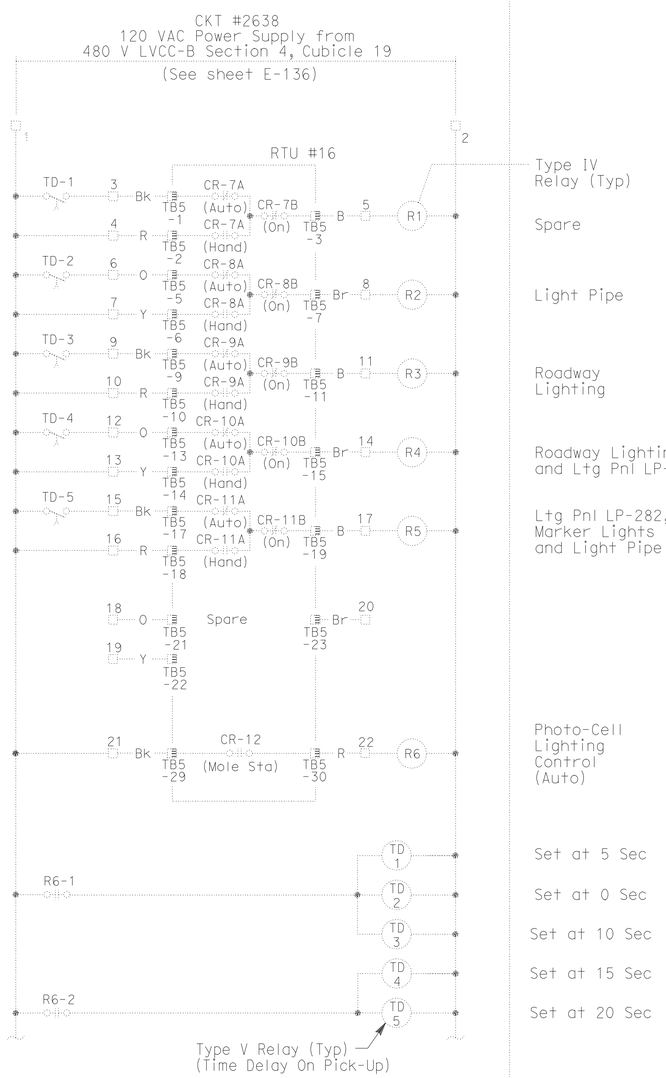

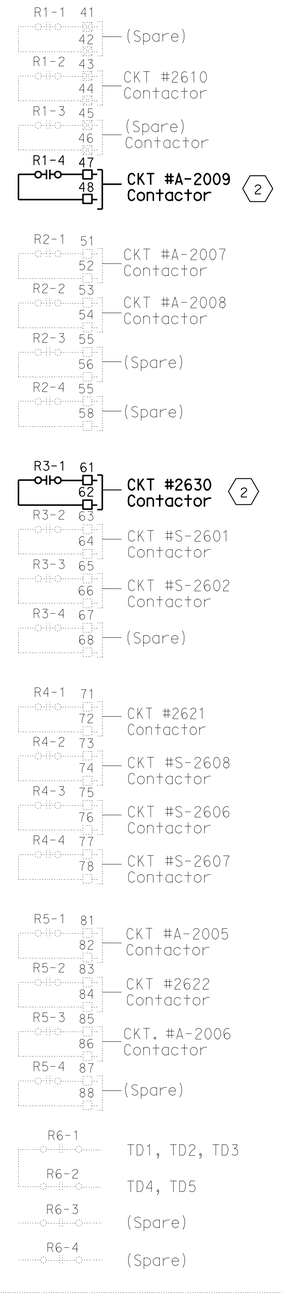

NOTE:

1. References:
   - For LVCC-B elevation and schedules, see sheet E-137.
   - For LVCC-B to RTU-16 connection diagram, see sheet E-139
   - For LVCC-B relay cabinet arrangement and connection diagram, see sheet E-140.

SHEET NOTES:

(1) Existing, installed in the previous contract.

(2) Existing contactor to be labeled and used.

DETAILS
UNDERGROUND AND ROADWAY AT GRADE (MOLE SUBSTATION)
LVCC-B RELAY CABINET ELEMENTARY DIAGRAM

NO SCALE

LVCC-B RELAY CABINET (1)

THIS PLAN IS ACCURATE FOR ELECTRICAL WORK ONLY.

E-138

STATE OF CALIFORNIA - DEPARTMENT OF TRANSPORTATION
Caltrans

CONSULTANT FUNCTIONAL SUPERVISOR: BRADY NADELL
CALCULATED-DESIGNED BY: ELLERY LUCAS
CHECKED BY: JEFFRI HALIM
REVISED BY / DATE REVISED

LAST REVISION 08-17-09 | DATE PLOTTED => 06-OCT-2011 | TIME PLOTTED => 07:02

Dist	COUNTY	ROUTE	KILOMETER POST TOTAL PROJECT	SHEET No.	TOTAL SHEETS
04	Ala	80	1.6/2.7	329	744

REGISTERED ELECTRICAL ENGINEER 5/02/11

PLANS APPROVAL DATE 10-3-11

REGISTERED PROFESSIONAL ENGINEER DAVID H. OTO No. 10699 Exp. 06/30/2013 STATE OF CALIFORNIA

THE STATE OF CALIFORNIA OR ITS OFFICERS OR AGENTS SHALL NOT BE RESPONSIBLE FOR THE ACCURACY OR COMPLETENESS OF ELECTRONIC COPIES OF THIS PLAN SHEET.

PB AMERICAS, Inc.
303 Second St., Suite 700N
San Francisco, CA 94107-1317

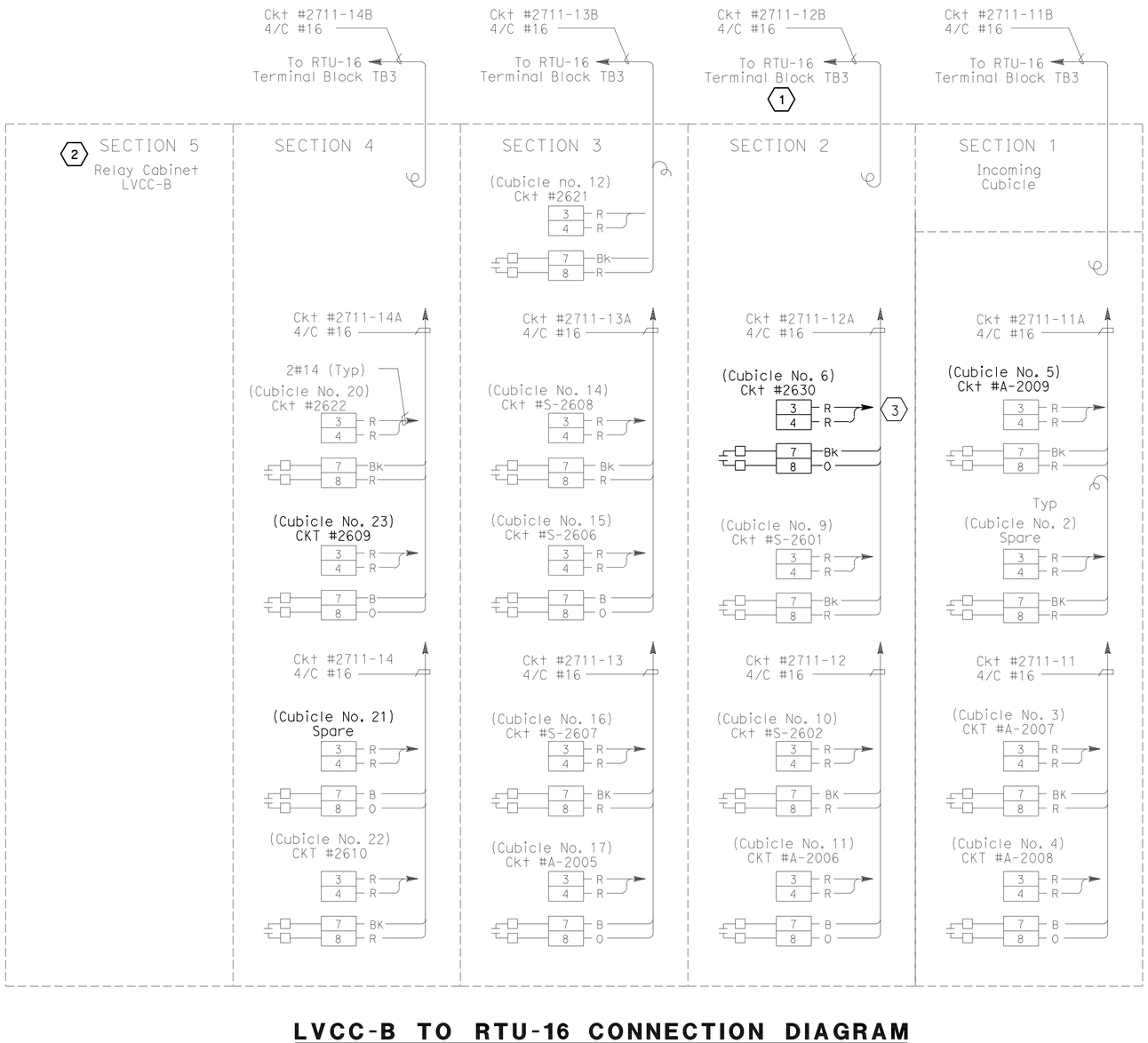

LVCC-B TO RTU-16 CONNECTION DIAGRAM

NOTES:

1. Each spare conductor shall be coiled and taped at conductor ends unless terminated.
2. References:
   - For LVCC-B single line diagram, see sheet E-136.
   - For conduit and tray, cable and circuit schedules, see sheets starting at E-205.
   - For LVCC-B relay cabinet elementary diagram, see sheet E-138.

SHEET NOTES:

(1) For connection to RTU#16, see sheet E-163.

(2) For connection diagram of LVCC-B Relay Cabinet, see sheet E-138.

(3) Field to add new wiring to LVCC-B relay cabinet, see sheet E-138. Match existing.

DETAILS
UNDERGROUND AND ROADWAY AT GRADE (MOLE SUBSTATION)
LVCC-B CONNECTION DIAGRAM

NO SCALE

THIS PLAN IS ACCURATE FOR ELECTRICAL WORK ONLY.

E-139

STATE OF CALIFORNIA - DEPARTMENT OF TRANSPORTATION

Caltrans

CONSULTANT FUNCTIONAL SUPERVISOR: BRADY NADELL

CALCULATED-DESIGNED BY: JEFFRI HALIM

CHECKED BY: ELLERY LUCAS

REVISED BY / DATE REVISED

LAST REVISION 08-17-09 | DATE PLOTTED => 06-OCT-2011 | TIME PLOTTED => 07:02

Dist	COUNTY	ROUTE	KILOMETER POST TOTAL PROJECT	SHEET No.	TOTAL SHEETS
04	Ala	80	1.6/2.7	330	744

REGISTERED ELECTRICAL ENGINEER 5/02/11

10-3-11
PLANS APPROVAL DATE

REGISTERED PROFESSIONAL ENGINEER DAVID H. OTO No. 10699 Exp. 06/30/2013 ELECTRICAL STATE OF CALIFORNIA

THE STATE OF CALIFORNIA OR ITS OFFICERS OR AGENTS SHALL NOT BE RESPONSIBLE FOR THE ACCURACY OR COMPLETENESS OF ELECTRONIC COPIES OF THIS PLAN SHEET.

PB AMERICAS, Inc.
303 Second St., Suite 700N
San Francisco, CA 94107-1317

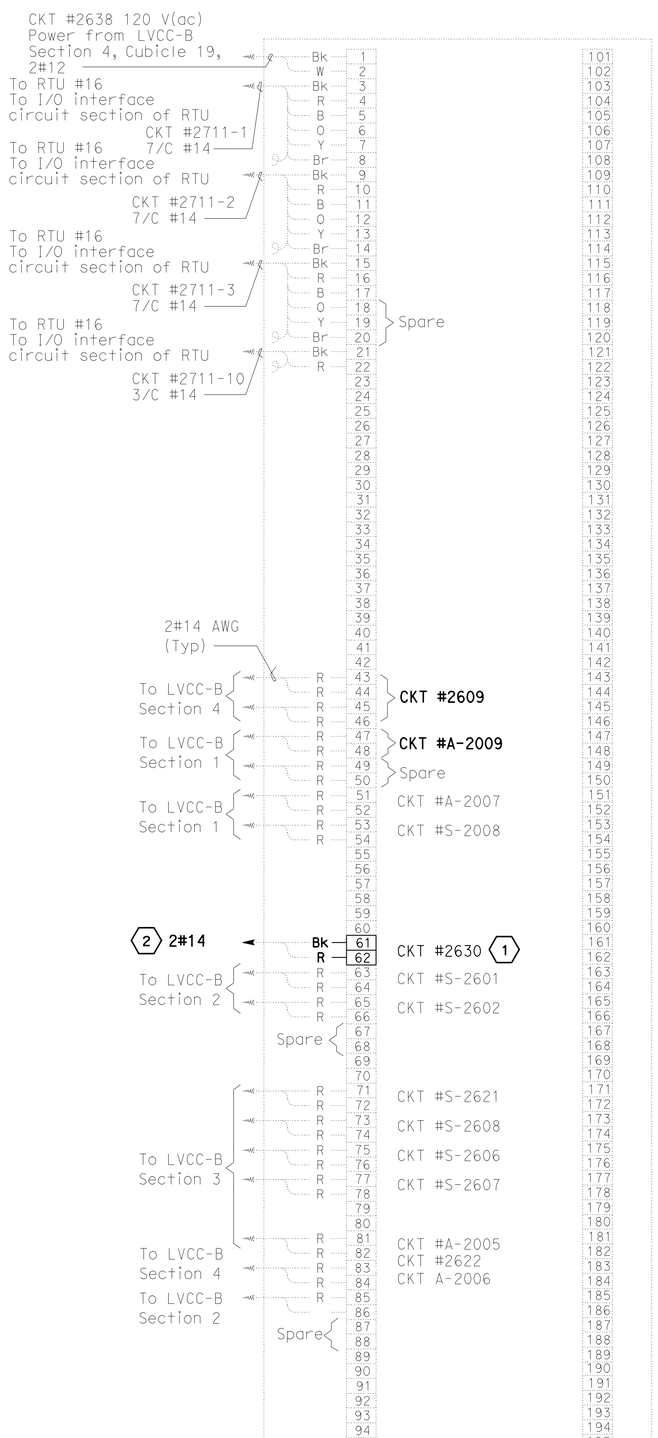

LVCC-B RELAY CABINET TERMINALS CONNECTION DIAGRAM

THIS PLAN IS ACCURATE FOR ELECTRICAL WORK ONLY.

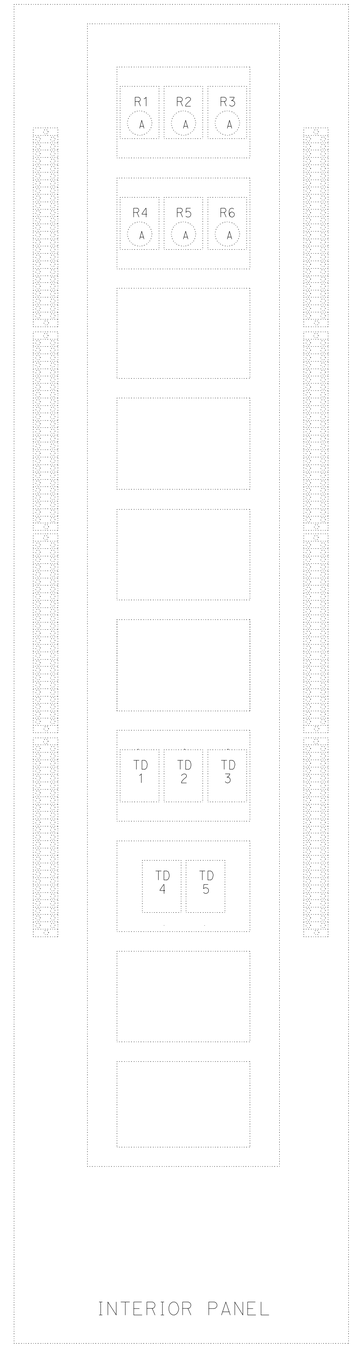

LVCC-B RELAY CABINET ARRANGEMENT

NOTES:

1. Each spare conductors shall be coiled and taped at conductor ends unless terminated.
2. References:
   - For LVCC-B relay cabinet elementary diagram, see sheet E-138.
   - For LVCC-B elevation and schedules, see sheet E-137.
   - For conduit and tray, cable and circuit schedules, see sheets starting at E-205.
   - For LVCC-B connection diagram, see sheet E-139.

SHEET NOTES:

1. For relay cabinet elementary, see sheet E-138.
2. Field to add new wiring to LVCC-B cubicle 6, see sheet E-139. Match Existing.

DETAILS
UNDERGROUND AND ROADWAY AT GRADE (MOLE SUBSTATION)
LVCC-B RELAY CABINET ARRANGEMENT AND CONNECTION DIAGRAM

NO SCALE

E-140

STATE OF CALIFORNIA - DEPARTMENT OF TRANSPORTATION
Caltrans

CONSULTANT FUNCTIONAL SUPERVISOR: BRADY NADELL
CALCULATED-DESIGNED BY: JEFFRI HALIM
CHECKED BY: ELLERY LUCAS
REVISED BY / DATE REVISED

LAST REVISION 08-17-09
DATE PLOTTED => 06-OCT-2011
TIME PLOTTED => 07:02

Dist	COUNTY	ROUTE	KILOMETER POST TOTAL PROJECT	SHEET No.	TOTAL SHEETS
04	Ala	80	1.6/2.7	331	744

REGISTERED ELECTRICAL ENGINEER 5/02/11

PLANS APPROVAL DATE 10-3-11

REGISTERED PROFESSIONAL ENGINEER DAVID H. OTO No. 10699 Exp. 06/30/2013 ELECTRICAL STATE OF CALIFORNIA

THE STATE OF CALIFORNIA OR ITS OFFICERS OR AGENTS SHALL NOT BE RESPONSIBLE FOR THE ACCURACY OR COMPLETENESS OF ELECTRONIC COPIES OF THIS PLAN SHEET.

PB AMERICAS, Inc.
303 Second St., Suite 700N
San Francisco, CA 94107-1317

(E) UTILITY PANEL UP-004 (CKT #1632)

LOCATION: MOLE SUBSTATION

LOAD DESCRIPTION	LTG	REC	OTH.	CB		CB	LTG	REC	OTH.	LOAD DESCRIPTION
Unit Substation Space Heaters			1575	30/1	1 A 2	20/1			900	**Strong Motion Recorder #1**
Battery Charger & Rectifier			4000	50/1	3 B 4	20			600	Substation Transformer Cooling Fans
Spare				20/1	5 C 6	2			600	
↓				20/1	7 A 8	20/1			600	Strong Motion Recorder #2
RTU #16 (PLC)			100	20/1	9 B 10	20/1			900	480 V LVCC-A Space Heater
RTU #16 (Lighting, Receptacle, Indicating lights)	105	180	365	20/1	11 C 12	20/1			900	480 V LVCC-B Space Heater
Spare				15/1	13 A 14	20/1				Spare
↓				20/1	15 B 16	20/1				↓
↓				20/1	17 C 18	20/1				↓
Space					19 A 20					Space
↓					21 B 22					↓
↓					23 C 24					↓
TOTAL VA	105	180	6040				-	-	4500	TOTAL VA

LOAD SUMMARY IN VA

Lighting (At 100%): 105 VA
Gen Use: (1st 10 kVA at 100% Plus 50% of remainder): 10.360 VA

TOTAL kVA: 10.825 kVA
TOTAL Amp: 30.05 A at 208 V, 3ø

BALANCE (kVA)

Phase A - 3.075
Phase B - 5.600
Phase C - 2.150

VOLTAGE: 208/120 V
PHASE/WIRES: 3-phase, 4-wire
BUS RATING: 100 A
MAIN: 100 A
MOUNTING: Surface
K.A.I.C.: 10

NOTES:

1. Not in contract. Installed in previous contract. It is shown to identify the circuit breakers to be used.
2. Reference:
   - For conduit and tray, cable and circuit schedules, see sheets starting at E-205.

(E) LIGHTING PANEL LP-A (CKT #1631)

Location: Mole Substation

LOAD DESCRIPTION	LTG	REC	OTH.	BKR		BKR	LTG	REC	OTH.	LOAD DESCRIPTION
Spare				20/1	1 A 2	20/1				Spare
Battery Room Hydrogen Ventilation EF-2 Circuit No. 1654			22	20/1	3 B 4	20/1		180		Recept-(1) Elect. Equip. and Air Compressor Room
Lighting-Battery Room	78			20/1	5 C 6	20/1			1000	Fire Alarm Local Control Panel
Lighting-Air Compressor Room	583			20/1	7 A 8	20/1		540		Recept.(3) Elect. Equip. and Air Compressor Room
Lighting-Electrical Room	700			20/1	9 B 10	20/1				Spare
Lighting-Electrical Room	700			20/1	11 C 12	20/1		900		Recept-(5) Electrical Equip. Room and Air Compressor Room
Spare				20/1	13 A 14	20/1		900		Recept-(5) Electrical Equip. Room and Air Compressor Room
Spare				20/1	15 B 16	20/1			53	Battery Room Cooling Ventilation Fan EF-1 Circuit No. 1650.
Outdoor Lighting and Control	1150			20/1	17 C 18	20/1		200		Security Intrusion Alarm Control Panel
Battery Room Unit Heater EH-1 Circuit No. 1633.			1666	30	19 A 20	20/1				Spare
			1666	2	21 B 22	20/1	187			Emergency Lighting
Spare				20/1	23 C 24	20/1				Spare
Spare				20/1	25 A 26	20/1				Spare
Spare				20	27 B 28	20/1			200	**Irrigation Controller Cabinet**
				2	29 C 30	20				Spare
TOTAL VA	3211		3354				187	2720	1253	TOTAL VA

LOAD SUMARY IN VA

LIGHTING: (at 100%) : 3.398 kVA
GEN USE: (1st 10 kVA at 100% + 50% OF REMAINDER) : 7.327

TOTAL kVA: 10.725
TOTAL A: 29.80 A at 208 V, 3ø

BALANCE (kVA)

PHASE A 3.689
PHASE B 3.008
PHASE C 4.028

VOLTAGE: 208/120 V
PHASE/WIRES: 3-phase, 4-wire
BUS RATING: 100 A
MAINS: 100 A
MOUNTING: SURFACE
k.A.I.C. = 10

DETAILS
UNDERGROUND AND ROADWAY AT GRADE (MOLE SUBSTATION)
UP-004 AND LP-A PANEL SCHEDULES

NO SCALE

E-141

THIS PLAN IS ACCURATE FOR ELECTRICAL WORK ONLY.

REVISED BY | DATE REVISED
JEFFRI HALIM | DAVID OTO
CALCULATED-DESIGNED BY | CHECKED BY
CONSULTANT FUNCTIONAL SUPERVISOR: BRADY NADELL
STATE OF CALIFORNIA - DEPARTMENT OF TRANSPORTATION
Caltrans

LAST REVISION 08-17-09 | DATE PLOTTED => 06-OCT-2011 | TIME PLOTTED => 07:02

Dist	COUNTY	ROUTE	KILOMETER POST TOTAL PROJECT	SHEET No.	TOTAL SHEETS
04	Ala	80	1.6/2.7	332	744

REGISTERED ELECTRICAL ENGINEER 5/02/11

PLANS APPROVAL DATE 10-3-11

REGISTERED PROFESSIONAL ENGINEER DAVID H. OTO No. 10699 Exp. 06/30/2013 ELECTRICAL STATE OF CALIFORNIA

THE STATE OF CALIFORNIA OR ITS OFFICERS OR AGENTS SHALL NOT BE RESPONSIBLE FOR THE ACCURACY OR COMPLETENESS OF ELECTRONIC COPIES OF THIS PLAN SHEET.

PB AMERICAS, Inc.
303 Second St., Suite 700N
San Francisco, CA 94107-1317

Caltrans Metric

UTILITY PANEL UP-173 (CKT #1628)

Location: OAKLAND APPROACH SERVICE PAD #24

LOAD DESCRIPTION	LTG	REC	OTH.	CB		CB	LTG	REC	OTH.	LOAD DESCRIPTION
CMS-W03			2880	60 /	1 A 2	20 / 1			960	CMS-W03
			2880	/ 2	3 B 4	30 / 1			2000	Controller Cabinet #TOS-24A
CMS-E03			2880	60 /	5 A 6	20 / 1			960	CMS-E03
			2880	/ 2	7 B 8	20 / 1			20	CB-159A, CB-161A
Rept. Service Pad #24		180		20 / 1	9 A 10	20 / 1				Spare
Spare				20 / 1	11 B 12	30 / 1			2000	Controller Cabinet #TOS-24B
Controller cabinet #TOS-24C			2000	30 / 1	13 A 14	20 / 1				Spare
Spare				20 / 1	15 B 16	20 / 1			20	CB-161B, CB-159B
TOTAL VA	-	180	13520				-	-	5960	TOTAL VA

LOAD SUMMARY IN VA

Lighting (At 100%): 0
Gen Use (1st 10 kVA at 100% Plus 50% of remainder): 14830 VA

TOTAL kVA: 14.83 kVA
TOTAL Amperes: 61.8 A at 240 V, 1Ø

BALANCE (kVA)

Phase A - 9.860
Phase B - 9.800

VOLTAGE: 120/240 V
PHASE/WIRES: 1-phase, 3-wire
BUS RATING: 150 A
MAIN: 125 A
MOUNTING: Pad Mounted
K.A.I.C.: 10

(1)

UTILITY PANEL UP-274 (CKT #2629)

Location: OAKLAND APPROACH SERVICE PAD #25

LOAD DESCRIPTION	LTG	REC	OTH.	CB		CB	LTG	REC	OTH.	LOAD DESCRIPTION
Controller Cabinet #TOS-25A			2000	30 / 1	1 A 2	20 / 1				Spare
Rept. Service Pad #25		180		20 / 1	3 B 4	20 / 1			20	CB-259A, CB-261A
Spare				20 / 1	5 A 6	20 / 1				Spare
				20 / 1	7 B 8	20 / 1			20	CB-259B, CB-261B
				20 / 1	9 A 10	20 / 1				Spare
				20 / 1	11 B 12	20 / 1			1920	CCTV-W03 Lowering Device
TOTAL VA	-	180	2000				-	-	1960	TOTAL VA

LOAD SUMMARY IN VA

Lighting (At 100%): 0 VA
Gen Use (1st 10 kVA at 100% Plus 50% of remainder): 4140 VA

TOTAL kVA: 4.14 kVA
TOTAL Amperes: 17.25 A at 240 V, 1Ø

BALANCE (kVA)

Phase A - 2.000
Phase B - 2.140

VOLTAGE: 120/240 V
PHASE/WIRES: 1-phase, 3-wire
BUS RATING: 150 A
MAIN: 125 A
MOUNTING: Pad mounted
K.A.I.C.: 10

(1)

THIS PLAN IS ACCURATE FOR ELECTRICAL WORK ONLY.

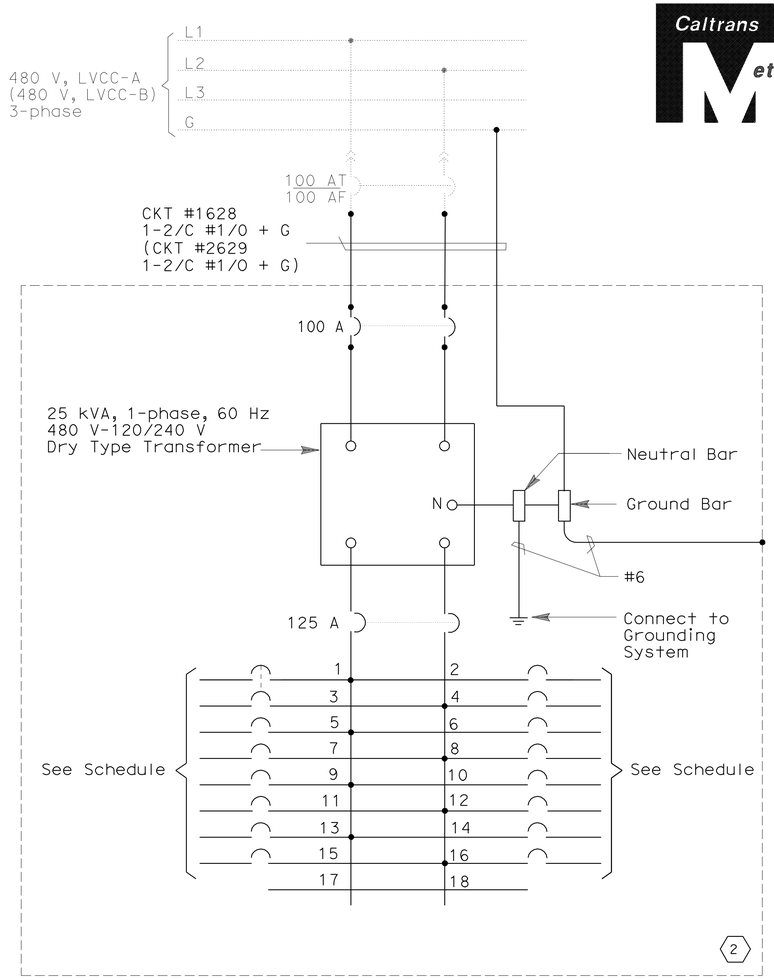

Utility Panel UP-173 (UP-274)

NOTE:

1. References:
   - For LVCC-A, LVCC-B single line diagram, see sheets E-134, E-136.
   - For service pad #24, service pad #25 plans, see sheets E-109, E-111.
   - For conduit and tray, cable and circuit schedules, see sheets starting at E-205.

SHEET NOTES:

(1) The Contractor shall provide Nameplate and Circuit Schedule as shown.

(2) The transformer and panelboard shall be inside a Type III-A enclosure, stainless steel service pedestal type.

DETAILS
UNDERGROUND AND ROADWAY AT GRADE (UP-173 AND UP-274 PANEL SCHEDULES)

NO SCALE

E-142

REVISED BY | DATE REVISED
JEFFRI HALIM | DAVID OTO
CALCULATED-DESIGNED BY | CHECKED BY
CONSULTANT FUNCTIONAL SUPERVISOR
BRADY NADELL

STATE OF CALIFORNIA - DEPARTMENT OF TRANSPORTATION
Caltrans

LAST REVISION 08-17-09 | DATE PLOTTED => 06-OCT-2011 | TIME PLOTTED => 07:03

Dist	COUNTY	ROUTE	KILOMETER POST TOTAL PROJECT	SHEET No.	TOTAL SHEETS
04	Ala	80	1.6/2.7	333	744

REGISTERED ELECTRICAL ENGINEER 5/02/11

10-3-11
PLANS APPROVAL DATE

REGISTERED PROFESSIONAL ENGINEER DAVID H. OTO No. 10699 Exp. 06/30/2013 ELECTRICAL STATE OF CALIFORNIA

THE STATE OF CALIFORNIA OR ITS OFFICERS OR AGENTS SHALL NOT BE RESPONSIBLE FOR THE ACCURACY OR COMPLETENESS OF ELECTRONIC COPIES OF THIS PLAN SHEET.

PB AMERICAS, Inc.
303 Second St., Suite 700N
San Francisco, CA 94107-1317

Caltrans Metric

UTILITY PANEL UP-275 (Ckt #2631)

Location: OAKLAND APPROACH SERVICE PAD #26

LOAD DESCRIPTION	LTG	REC	OTH.	CB		CB	LTG	REC	OTH.	LOAD DESCRIPTION
Spare				20/1	1 A 2	20/1			2000	Controller Cabinet #TOS-26A
Spare				20/1	3 B 4	20/1				Spare
Recept (1) Service PAD #26		180		20/1	5 C 6	20/1				
Spare				20/1	7 A 8	20/1				
Spare				20/1	9 B 10	30/1				
Spare				20/1	11 C 12	20/1				
TOTAL VA	-	180					-	-	2000	TOTAL VA

LOAD SUMMARY IN VA

Lighting (At 100%): 0 VA
Gen Use (1st 10 kVA at 100% Plus 50% of remainder): 2180 VA

TOTAL kVA: 2.18 kVA
TOTAL Amperes: 6.05 A at 208 V, 3ø

BALANCE (kVA)

Phase A - 2.000
Phase B - 0.000
Phase C - 0.180

VOLTAGE: 208/120V
PHASE/WIRES: 3-phase,4-wire
BUS RATING: 100 A
MAIN: 60 AT
MOUNTING: Surface
K.A.I.C.: 10

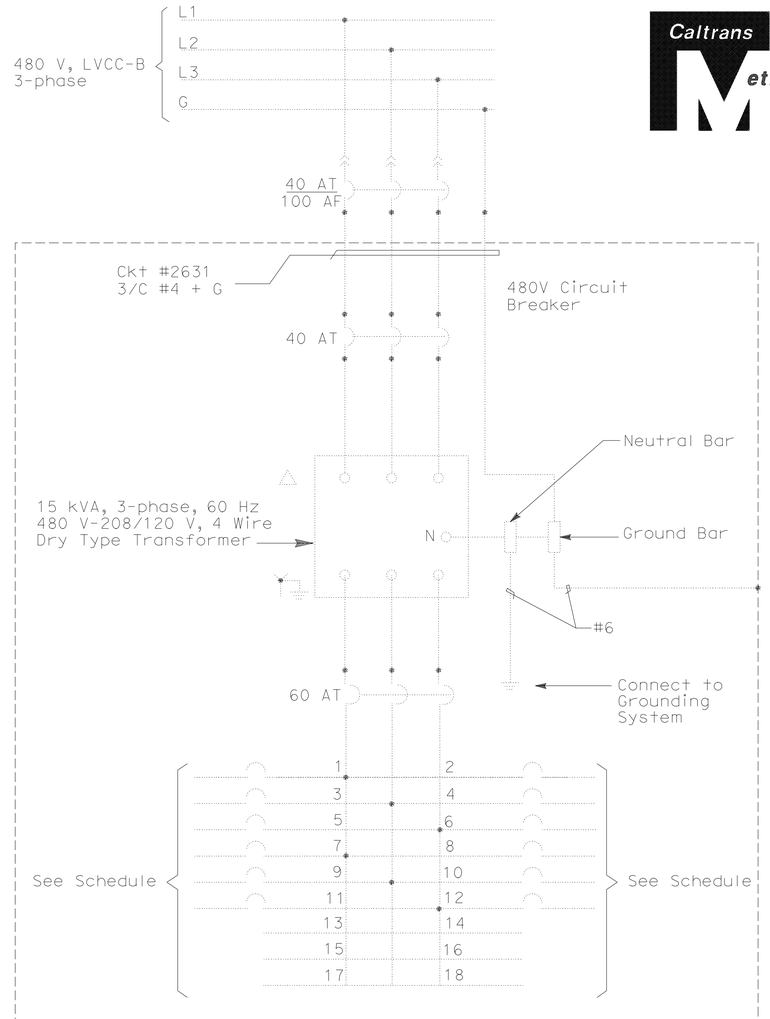

Utility Panel UP-275 (1)

NOTE:

1. References:
   - For LVCC-B single line diagram, see sheet E-136.
   - For service pad #26 plans, see sheets E-113.
   - For conduit and tray, cable and circuit schedules, see sheets starting at E-205.

SHEET NOTE:

(1) Utility Panel UP-275, components and wiring have been installed on the previous contract and for reference only. For location, see sheet E-97.

DETAILS
UNDERGROUND AND ROADWAY AT GRADE (UP-275 PANEL SCHEDULE)

NO SCALE

E-143

THIS PLAN IS ACCURATE FOR ELECTRICAL WORK ONLY.

STATE OF CALIFORNIA - DEPARTMENT OF TRANSPORTATION
Caltrans

CONSULTANT FUNCTIONAL SUPERVISOR: BRADY NADELL
CALCULATED-DESIGNED BY: JEFFRI HALIM
CHECKED BY: DAVID OTO
REVISED BY / DATE REVISED

LAST REVISION 08-17-09
DATE PLOTTED => 06-OCT-2011
TIME PLOTTED => 07:03

Dist	COUNTY	ROUTE	KILOMETER POST TOTAL PROJECT	SHEET No.	TOTAL SHEETS
04	Ala	80	1.6/2.7	334	744

REGISTERED ELECTRICAL ENGINEER 5/02/11

10-3-11
PLANS APPROVAL DATE

REGISTERED PROFESSIONAL ENGINEER DAVID H. OTO No. 10699 Exp. 06/30/2013 ELECTRICAL STATE OF CALIFORNIA

THE STATE OF CALIFORNIA OR ITS OFFICERS OR AGENTS SHALL NOT BE RESPONSIBLE FOR THE ACCURACY OR COMPLETENESS OF ELECTRONIC COPIES OF THIS PLAN SHEET.

PB AMERICAS, Inc.
303 Second St., Suite 700N
San Francisco, CA 94107-1317

Caltrans Metric

LIGHTING PANEL LP-283

CKT #2630

LOCATION: OAKLAND APPROACH SERVICE PAD #26

LOAD DESCRIPTION	LTG	CB		CB	LTG	LOAD DESCRIPTION
Bike Path Ramp Ltg (12)	636	20/1	1 A 2	20/1		Spare
Bike Path Ramp Ltg (12)	636	20/1	3 B 4	20/1		↓
Spare		20/1	5 C 6	20/1	694	Bike Path Ramp Ltg (10) Bike Path Landing Ltg (4)
↓		20/1	7 A 8	20/1	694	Bike Path Ramp Ltg (10) Bike Path Landing Ltg (4)
↓		20/1	9 B 10	20/1		Spare
↓		20/1	11 C 12	20/1		↓
Space			13 C 14			Space
↓			15 C 16			↓
↓			17 C 18			↓
TOTAL VA	1272				1388	TOTAL VA

LOAD SUMMARY IN VA

Lighting (AT 100%): 2660 VA

TOTAL kVA: 2.66 kVA
TOTAL Amperes: 7.4 A at 208 V, 3 ø

BALANCE (kVA)
Phase A - 1.330
Phase B - 0.636
Phase C - 0.694

VOLTAGE: 208/120 V
PHASE/WIRES: 3-phase,4-wire
BUS RATING: 100 A
MAIN: 60 AT
MOUNTING: SURFACE
K.A.I.C.: 10

(1)

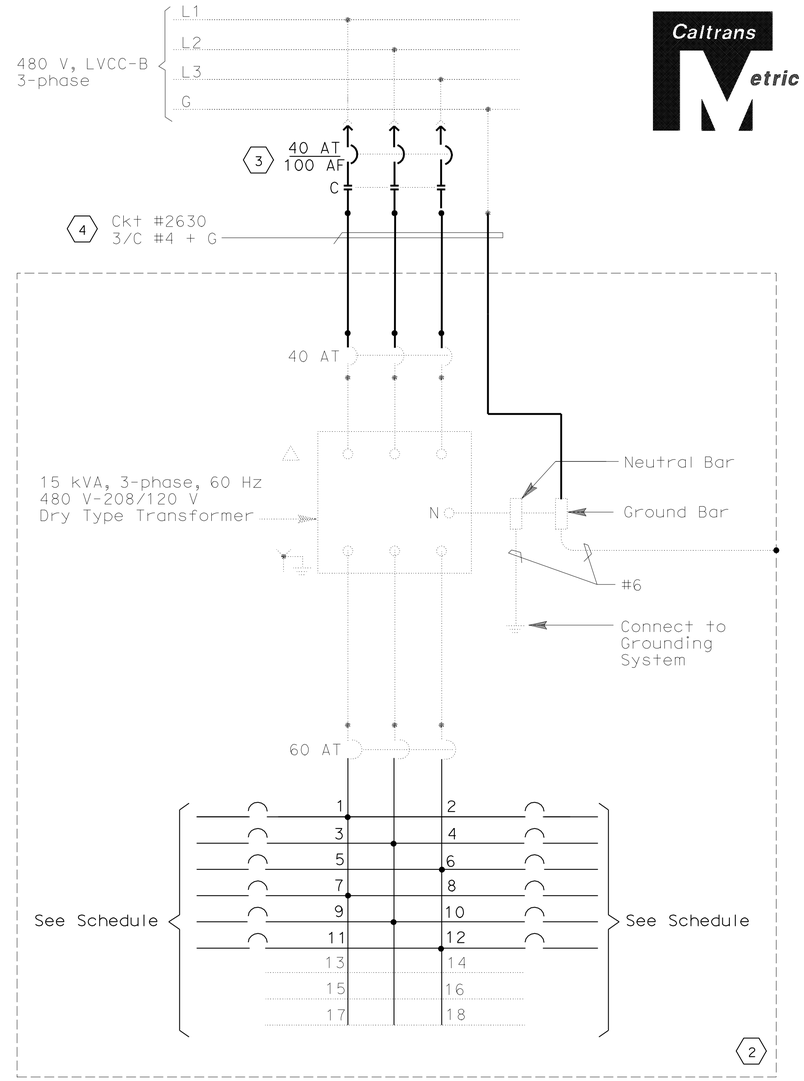

Lighting Panel LP-283

NOTE:

1. References:
   - For LVCC-B single line diagram, see sheet E-136.
   - For service pad #26 plans, see sheets E-113.
   - For conduit and tray, cable and circuit schedules, see sheets starting at E-205.

SHEET NOTES:

(1) The Contractor shall provide Nameplate and Circuit Schedule as shown.

(2) Lighting Panel LP-283 and components have been installed in the previous contract.

(3) The Contractor shall provide and install 40 AT circuit breaker/ contactor. Match existing.

(4) Terminate previously coiled cable (ckt. #2630).

DETAILS
UNDERGROUND AND ROADWAY AT GRADE
(LP-283 PANEL SCHEDULE)

NO SCALE

THIS PLAN IS ACCURATE FOR ELECTRICAL WORK ONLY.

E-144

REVISED BY | DATE REVISED
JEFFRI HALIM | DAVID OTO
CALCULATED-DESIGNED BY | CHECKED BY
CONSULTANT FUNCTIONAL SUPERVISOR
BRADY NADELL

STATE OF CALIFORNIA - DEPARTMENT OF TRANSPORTATION
Caltrans

LAST REVISION 08-17-09 | DATE PLOTTED => 06-OCT-2011 | TIME PLOTTED => 07:03

Dist	COUNTY	ROUTE	KILOMETER POST TOTAL PROJECT	SHEET No.	TOTAL SHEETS
04	Ala	80	1.6/2.7	335	744

REGISTERED ELECTRICAL ENGINEER 5/02/11

10-3-11
PLANS APPROVAL DATE

REGISTERED PROFESSIONAL ENGINEER DAVID H. OTO No. 10699 Exp. 06/30/2013 ELECTRICAL STATE OF CALIFORNIA

THE STATE OF CALIFORNIA OR ITS OFFICERS OR AGENTS SHALL NOT BE RESPONSIBLE FOR THE ACCURACY OR COMPLETENESS OF ELECTRONIC COPIES OF THIS PLAN SHEET.

PB AMERICAS, Inc.
303 Second St., Suite 700N
San Francisco, CA 94107-1317

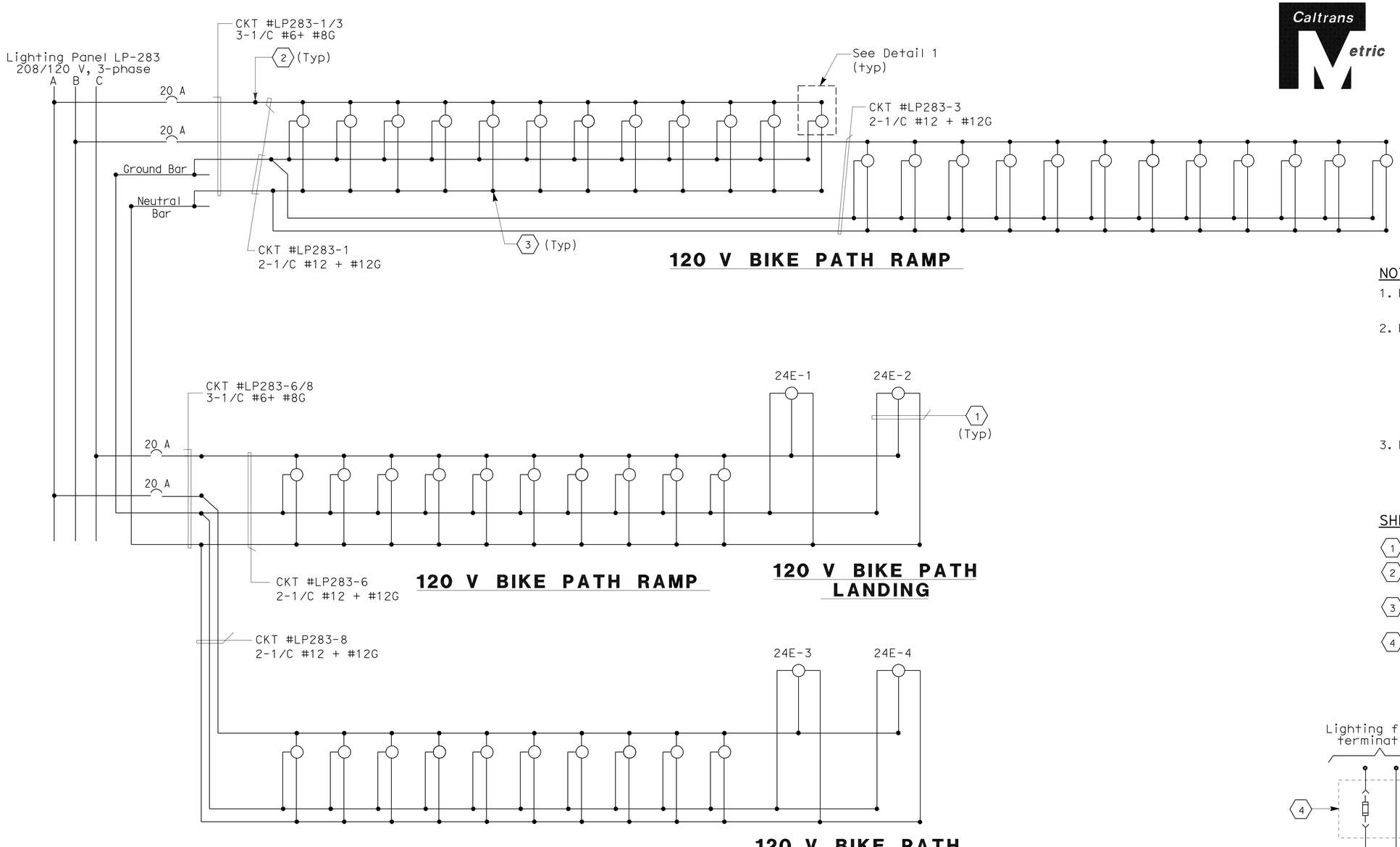

NOTES:

1. For panel schedule of lighting panel LP-283, see sheet E-144.
2. References:
   - For fixture descriptions, see Fixture Specification.
   - For 120 V bike path lighting conduit detail, see sheets E-116 through E-117.
   - For conduit and tray, cable and circuit schedules, see sheets starting at E-205.
3. Lighting poles shall be furnished by the State and installed by contractor as part of this Contract. Table shows fixture and conduit location.

SHEET NOTES:

1. 2#12 + #12G.
2. Conductors spliced inside PB-LTG located in barrier.
3. Conductors spliced inside PB-LTG located next to Bike Path.
4. Provide in-line fused disconnect, splice-connector (ungrounded line conductor only) located inside bike path lighting rail.

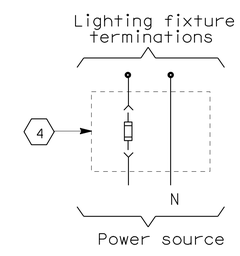

DETAIL-1
IN-LINE FUSING
(Typ. for each Lighting fixture)

BIKE PATH RAMP FIXTURE SCHEDULE

Location	Light Fixture Type	Number/ Wattage	Remarks (Mounting Provisions)
Bike Path at Grade	OSB-1	1-27 W	Railing mounted

BIKE PATH LANDING LIGHTING POLE AND FIXTURE SCHEDULE

Circuit Number	Pole Number	Location		Mounting Height (M)	Light Fixture Type	Number/ Wattage	Remarks (Mounting Provisions)
		Station	Bike Path Landing				
LP283-6	24E-1		North	4.3	OSV	2-35 W	Pole mounted
	24E-2		North	4.3	OSV	2-35 W	Pole mounted
LP283-8	24E-3		South	4.3	OSV	2-35 W	Pole mounted
	24E-4		South	4.3	OSV	2-35 W	Pole mounted

DETAILS
UNDERGROUND AND ROADWAY AT GRADE (BIKE PATH RAMP AND BIKE LANDING WIRING DIAGRAM)

NO SCALE

THIS PLAN IS ACCURATE FOR ELECTRICAL WORK ONLY.

E-145

REVISED BY | DATE REVISED
JEFFRI HALIM | DAVID OTO
CALCULATED-DESIGNED BY | CHECKED BY
CONSULTANT FUNCTIONAL SUPERVISOR
BRADY NADELL
STATE OF CALIFORNIA - DEPARTMENT OF TRANSPORTATION
Caltrans

LAST REVISION 08-17-09 | DATE PLOTTED => 06-OCT-2011 | TIME PLOTTED => 07:03

Dist	COUNTY	ROUTE	KILOMETER POST TOTAL PROJECT	SHEET No.	TOTAL SHEETS
04	Ala	80	1.6/2.7	336	744

REGISTERED ELECTRICAL ENGINEER 5/02/11

10-3-11
PLANS APPROVAL DATE

REGISTERED PROFESSIONAL ENGINEER DAVID H. OTO No. 10699 Exp. 06/30/2013 ELECTRICAL STATE OF CALIFORNIA

THE STATE OF CALIFORNIA OR ITS OFFICERS OR AGENTS SHALL NOT BE RESPONSIBLE FOR THE ACCURACY OR COMPLETENESS OF ELECTRONIC COPIES OF THIS PLAN SHEET.

PB AMERICAS, Inc.
303 Second St., Suite 700N
San Francisco, CA 94107-1317

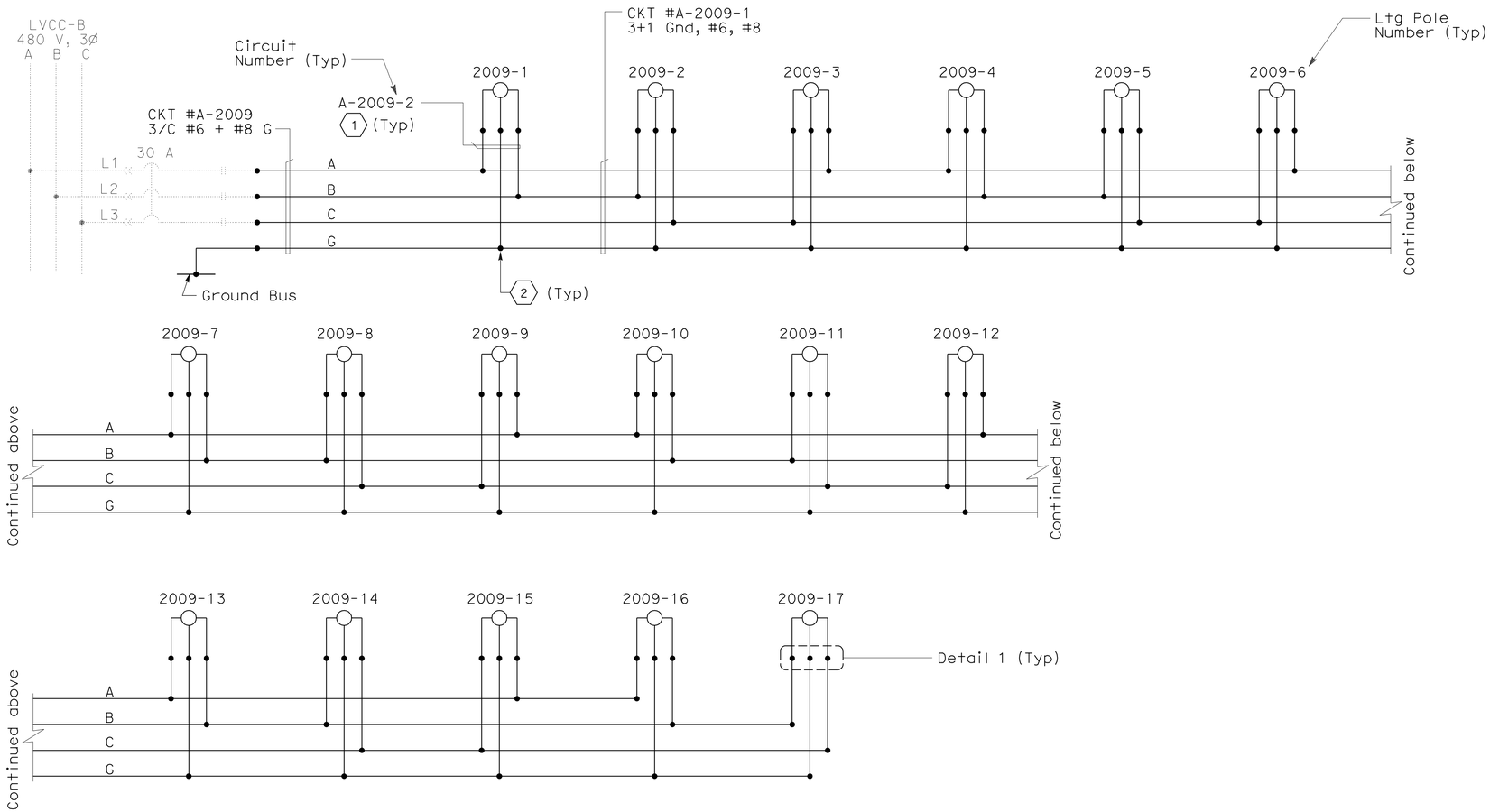

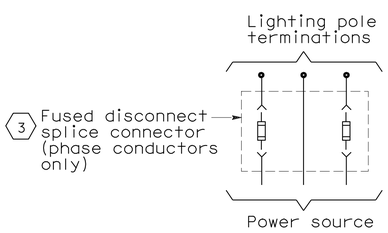

DETAIL-1
(Typ FOR EACH Ltg POLE)

NOTES:

1. References:
   - For LVCC-B single line diagram, see sheet E-136
   - For conduit and tray, cable and circuit schedules, see sheets starting at E-205.
2. For Bikeway lighting pole schedule, see sheet E-118.

SHEET NOTES:

1. 3#10 AWG single conductors, see Detail 1.
2. Conductors spliced in pull box PB-LTG.
3. For type and size of inline fusing, see Standard Plans. Locate inside lighting pole at the base of each bike path lighting pole.

DETAILS
UNDERGROUND AND ROADWAY AT GRADE (BIKEWAY WIRING DIAGRAM)
NO SCALE

THIS PLAN IS ACCURATE FOR ELECTRICAL WORK ONLY.

E-146

STATE OF CALIFORNIA - DEPARTMENT OF TRANSPORTATION
Caltrans

CONSULTANT FUNCTIONAL SUPERVISOR: BRADY NADELL
CALCULATED-DESIGNED BY: JEFFRI HALIM
CHECKED BY: DAVID OTO
REVISED BY / DATE REVISED

LAST REVISION 08-17-09
DATE PLOTTED => 06-OCT-2011
TIME PLOTTED => 07:03

Dist	COUNTY	ROUTE	KILOMETER POST TOTAL PROJECT	SHEET No.	TOTAL SHEETS
04	Ala	80	1.6/2.7	337	744

Caltrans Metric

REGISTERED ELECTRICAL ENGINEER 5/02/11

10-3-11
PLANS APPROVAL DATE

REGISTERED PROFESSIONAL ENGINEER DAVID H. OTO No. 10699 Exp. 06/30/2013 ELECTRICAL STATE OF CALIFORNIA

THE STATE OF CALIFORNIA OR ITS OFFICERS OR AGENTS SHALL NOT BE RESPONSIBLE FOR THE ACCURACY OR COMPLETENESS OF ELECTRONIC COPIES OF THIS PLAN SHEET.

PB AMERICAS, Inc.
303 Second St., Suite 700N
San Francisco, CA 94107-1317

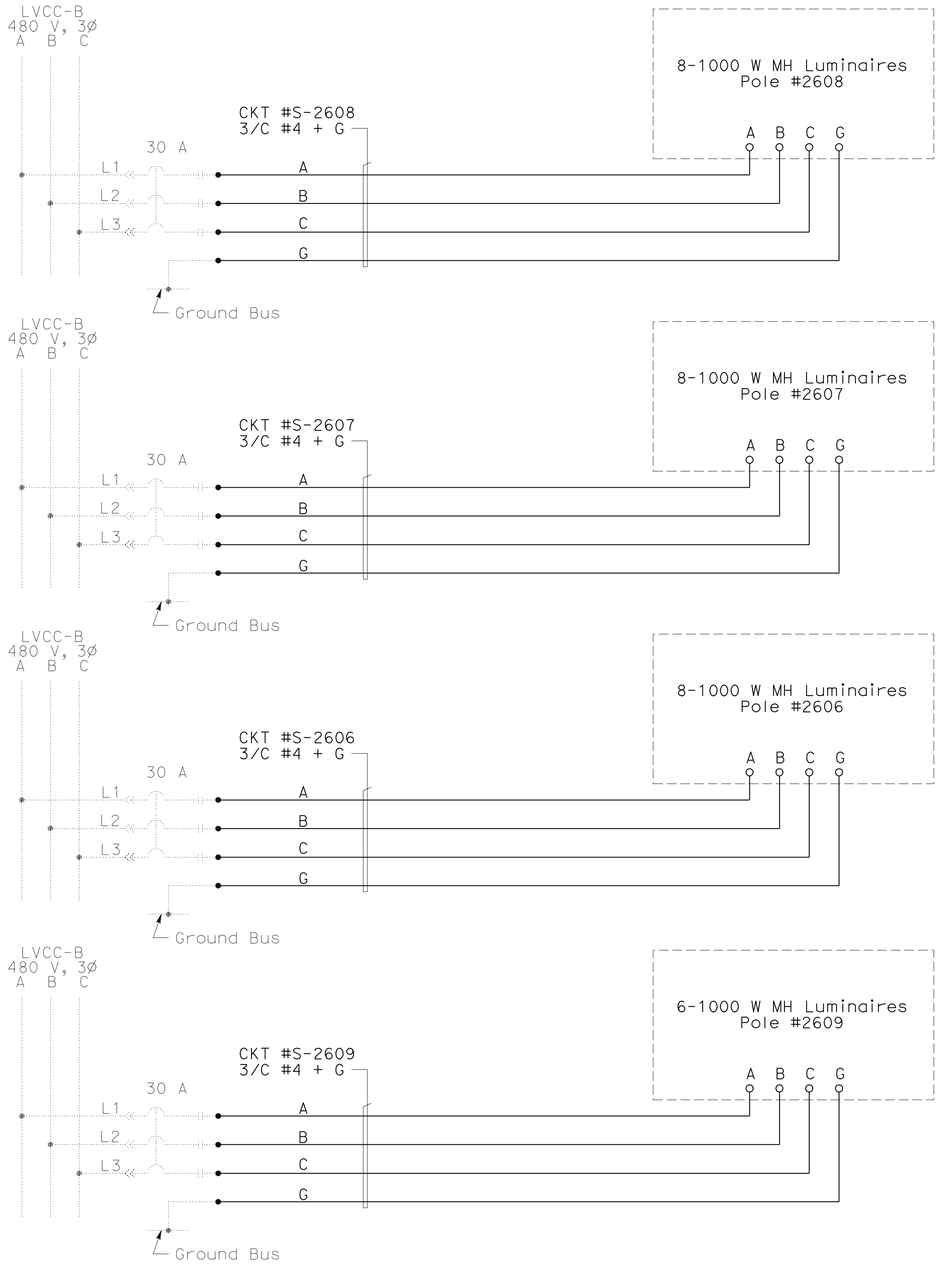

480 V HIGH MAST LIGHTING

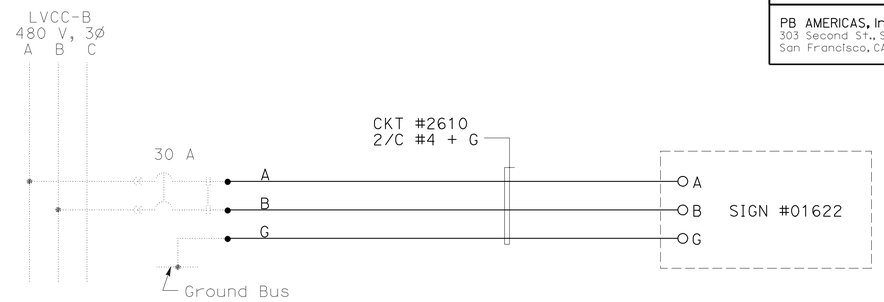

SIGN LIGHTING

NOTE:

1. References:
   - For LVCC-B mole substation single line diagram, see sheet E-136.
   - For High-mast fixture layout location plan, see sheets E-149 and E-150.
   - For High Mast lighting pole details, see sheet E-151.
   - For High Mast typical wiring diagram, see sheet E-152.
   - For conduit and tray, cable and circuit schedules, see sheets starting at E-205.

DETAILS
UNDERGROUND AND ROADWAY AT GRADE (HIGH MAST LIGHTING AND SIGN LIGHTING WIRING DIAGRAMS)

NO SCALE

THIS PLAN IS ACCURATE FOR ELECTRICAL WORK ONLY.

E-147

STATE OF CALIFORNIA - DEPARTMENT OF TRANSPORTATION
Caltrans

CONSULTANT FUNCTIONAL SUPERVISOR: BRADY NADELL
CALCULATED-DESIGNED BY: JEFFRI HALIM
CHECKED BY: ELLERY LUCAS
REVISED BY / DATE REVISED

LAST REVISION 08-17-09 DATE PLOTTED => 06-OCT-2011 TIME PLOTTED => 07:03

Dist	COUNTY	ROUTE	KILOMETER POST TOTAL PROJECT	SHEET No.	TOTAL SHEETS
04	Ala	80	1.6/2.7	338	744

REGISTERED ELECTRICAL ENGINEER 5/02/11

10-3-11
PLANS APPROVAL DATE

REGISTERED PROFESSIONAL ENGINEER DAVID H. OTO No. 10699 Exp. 06/30/2013 ELECTRICAL STATE OF CALIFORNIA

THE STATE OF CALIFORNIA OR ITS OFFICERS OR AGENTS SHALL NOT BE RESPONSIBLE FOR THE ACCURACY OR COMPLETENESS OF ELECTRONIC COPIES OF THIS PLAN SHEET.

PB AMERICAS, Inc.
303 Second St., Suite 700N
San Francisco, CA 94107-1317

Caltrans Metric

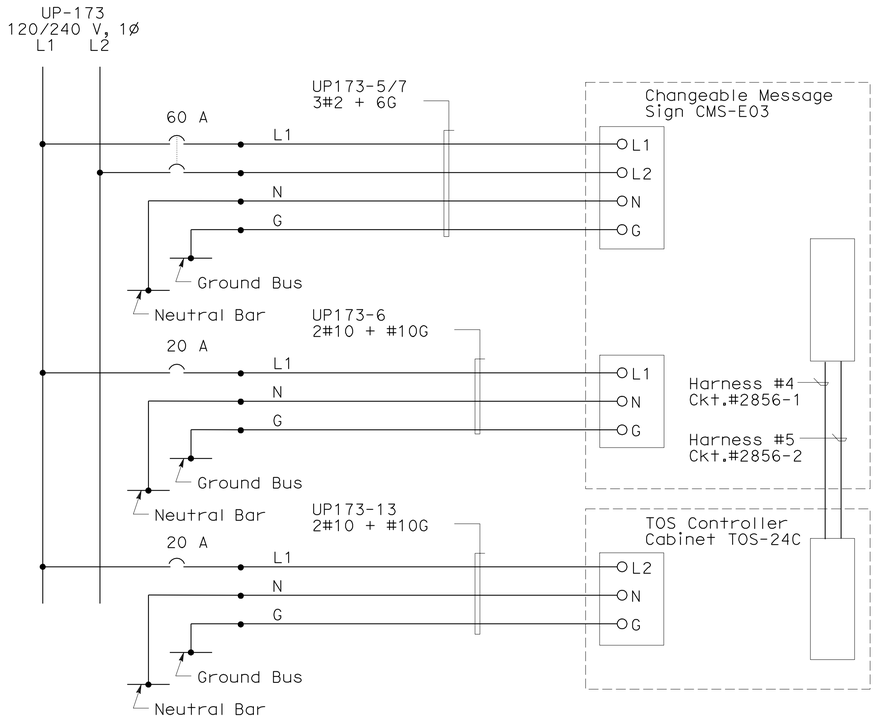

CHANGEABLE MESSAGE SIGN
(CMS-E03)

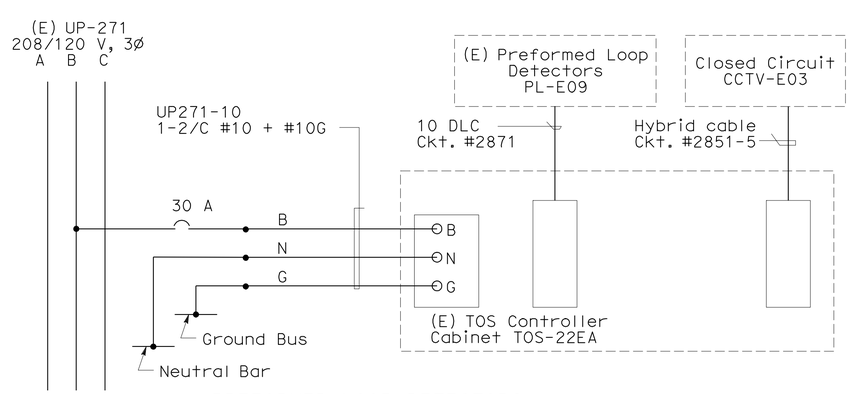

PREFORMED LOOP DETECTORS
AND CCTV

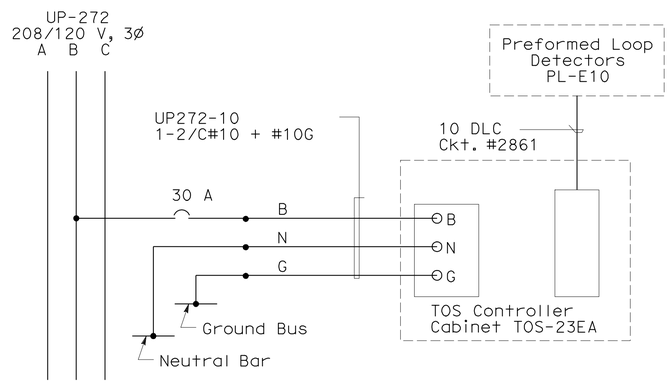

PREFORMED LOOP
DETECTORS

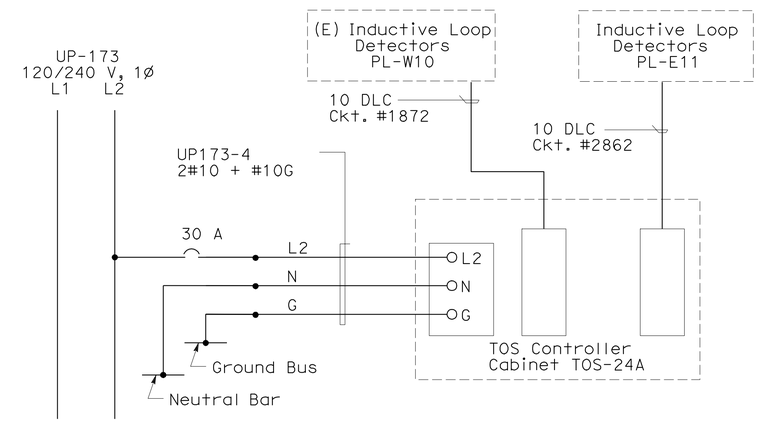

INDUCTIVE LOOP DETECTORS

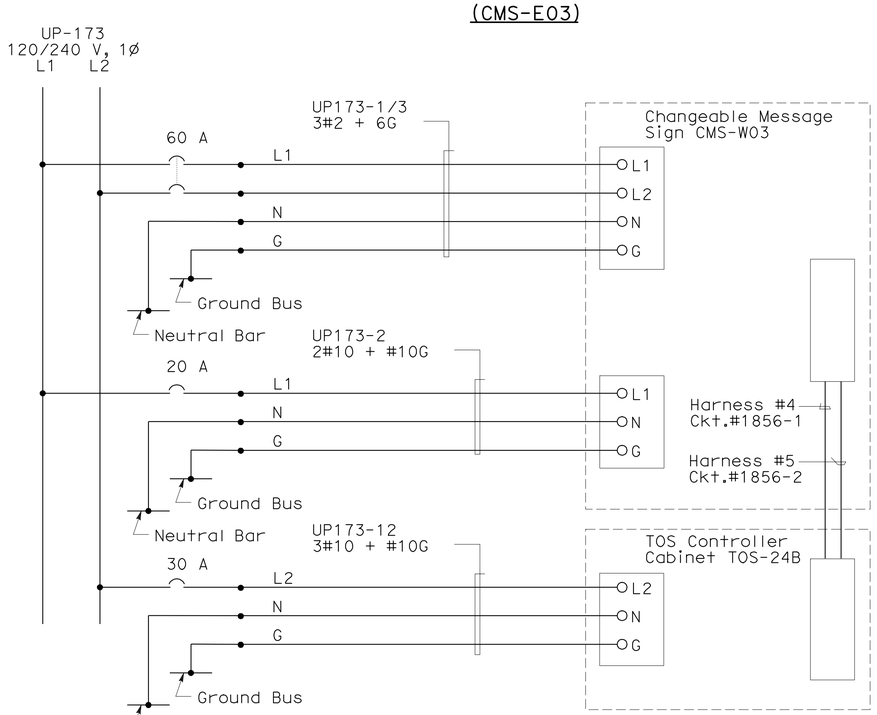

CHANGEABLE MESSAGE SIGN
CMS-W03

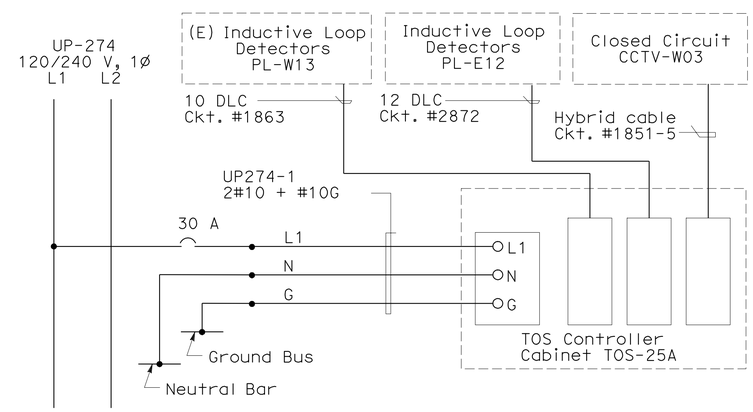

INDUCTIVE LOOP
DETECTORS AND CCTV

NOTE:

1. References:
   - For utility panel UP-271 and UP-272 panel schedules, see sheet E-50.
   - For utility panel UP-173 and UP-274 panel schedules, see sheet E-142.
   - For conduit and tray, cable and circuit schedules, see sheets starting at E-205.

DETAILS
UNDERGROUND AND ROADWAY AT GRADE (TOS DEVICE WIRING DIAGRAMS)

NO SCALE

THIS PLAN IS ACCURATE FOR ELECTRICAL WORK ONLY.

E-148

REVISED BY | DATE REVISED
JEFFRI HALIM | ELLERY LUCAS
CALCULATED-DESIGNED BY | CHECKED BY
CONSULTANT FUNCTIONAL SUPERVISOR
BRADY NADELL

STATE OF CALIFORNIA - DEPARTMENT OF TRANSPORTATION
Caltrans

LAST REVISION 08-17-09 | DATE PLOTTED => 06-OCT-2011 | TIME PLOTTED => 07:03

Dist	COUNTY	ROUTE	KILOMETER POST TOTAL PROJECT	SHEET No.	TOTAL SHEETS
04	Ala	80	1.6/2.7	339	744

REGISTERED ELECTRICAL ENGINEER 04/20/11

PLANS APPROVAL DATE 10-3-11

REGISTERED PROFESSIONAL ENGINEER CAROL LIGHT No. 10145 Exp. 09/30/11 ELECTRICAL STATE OF CALIFORNIA

THE STATE OF CALIFORNIA OR ITS OFFICERS OR AGENTS SHALL NOT BE RESPONSIBLE FOR THE ACCURACY OR COMPLETENESS OF ELECTRONIC COPIES OF THIS PLAN SHEET.

PB AMERICAS, INC.
303 SECOND ST., SUITE 700N
SAN FRANCISCO, CA 94107-1317

SILVERMAN & LIGHT
1201 PARK AVE., SUITE 100
EMERYVILLE, CA 94608-3632

SHEET NOTES:

1. For High Mast Lighting pull box location, see sheets E-107 and E-108.
2. Install permanent High Mast Lighting Standard with 30.5 m high pole, with lowering device and (8) 1000 W MH luminaires on stage 1 and put into operation before the removal of existing High Mast Lighting. Foundation shall be centered on new median. See Standard ES-6J for more information.
3. Install permanent No. 5 pull box with cover marked "High Mast Lighting, 480 V".
4. Install High Mast Lighting Standard with 30.5 m high pole, with lowering device and (6) 1000 W MH luminaires on stage 1 and put into operation. Foundation shall be centered on new median. See Standard ES-6J for more information.

NOTES:

1. For Notes, Abbreviations and Legends, see E-4.
2. References:
   - for High Mast Lighting wiring diagram and controls, see E-147 and E-152.

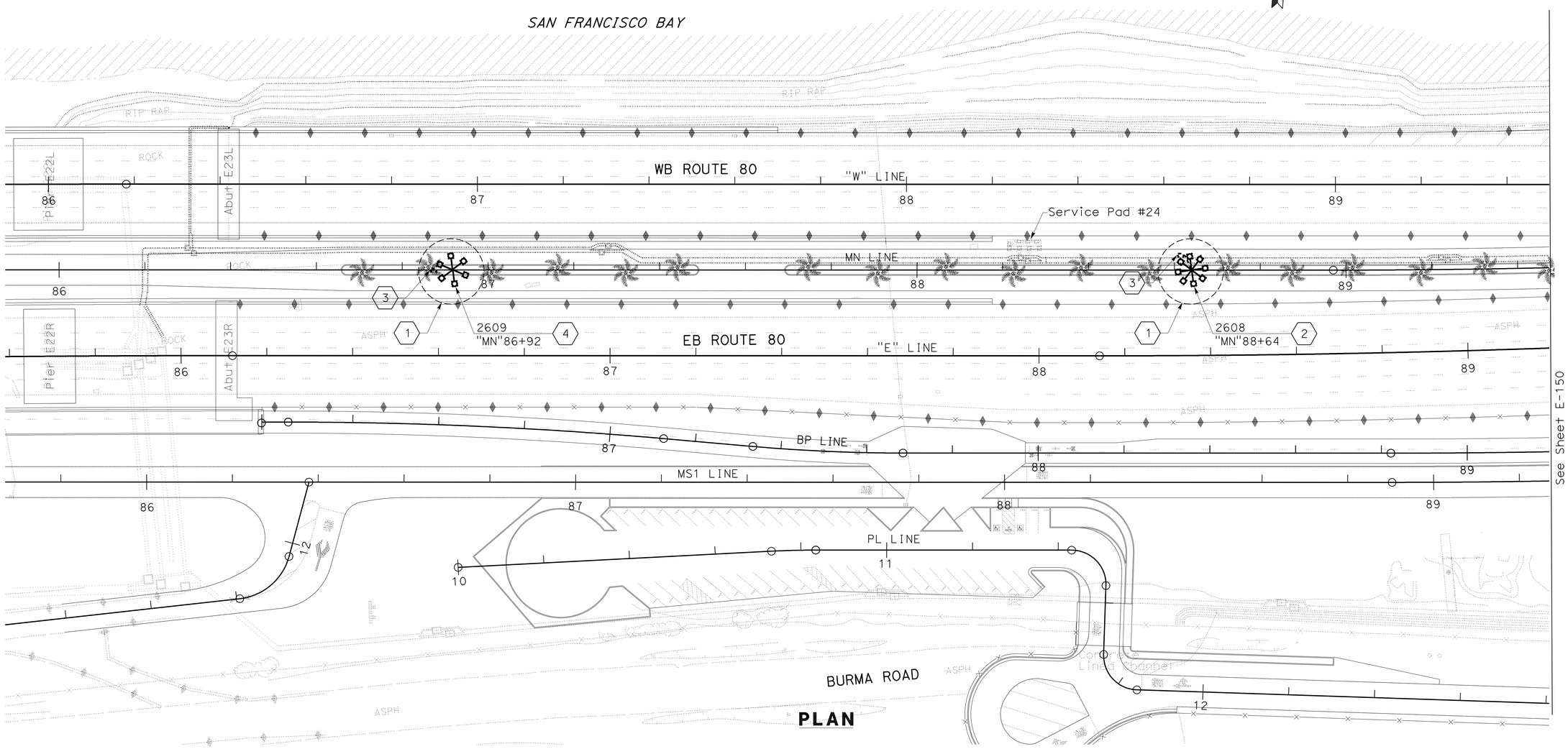

PLAN

DETAILS
UNDERGROUND AND ROADWAY AT GRADE HIGH MAST LIGHTING POLE LOCATION

SCALE 1:500

E-149

THIS PLAN IS ACCURATE FOR ELECTRICAL WORK ONLY.

ALL DIMENSIONS ARE IN METERS UNLESS OTHERWISE SHOWN

STATE OF CALIFORNIA - DEPARTMENT OF TRANSPORTATION
Caltrans

CONSULTANT FUNCTIONAL SUPERVISOR: BRADY NADELL
CALCULATED-DESIGNED BY: BEN JUDILLA
CHECKED BY: CAROL LIGHT
REVISED BY / DATE REVISED

LAST REVISION 08-05-11 | DATE PLOTTED => 06-OCT-2011 | TIME PLOTTED => 07:03

Dist	COUNTY	ROUTE	KILOMETER POST TOTAL PROJECT	SHEET No.	TOTAL SHEETS
04	Ala	80	1.6/2.7	340	744

REGISTERED ELECTRICAL ENGINEER 04/20/11

10-3-11
PLANS APPROVAL DATE

REGISTERED PROFESSIONAL ENGINEER CAROL LIGHT No. 10145 Exp. 09/30/11 ELECTRICAL STATE OF CALIFORNIA

THE STATE OF CALIFORNIA OR ITS OFFICERS OR AGENTS SHALL NOT BE RESPONSIBLE FOR THE ACCURACY OR COMPLETENESS OF ELECTRONIC COPIES OF THIS PLAN SHEET.

PB AMERICAS, INC.
303 SECOND ST., SUITE 700N
SAN FRANCISCO, CA 94107-1317

SILVERMAN & LIGHT
1201 PARK AVE., SUITE 100
EMERYVILLE, CA 94608-3632

Caltrans Metric

SHEET NOTES:

1. For High Mast lighting pull box location see sheet E-108.
2. Install High Mast Lighting Standard with 30.5 m high pole, with lowering device and (8) 1000 W MH luminaires on stage 1 and put into operation before the removal of existing High Mast Lighting. Foundation shall be centered on new median. See Standard ES-6J for more information.
3. Install No. 5 pull box with cover marked "High Mast Lighting, 480 V.
4. Install High Mast Lighting Standard with 30.5 m high pole, with lowering device and (8) 1000 W MH luminaires on stage 3 and put into operation before the removal of existing High Mast Lighting. Foundation shall be centered on new median. See Standard ES-6J for more information.

NOTES:

1. For Notes, Abbreviations and Legends, see E-4.
2. References:
   - for High Mast Lighting wiring diagram and controls, see E-147 and E-152.

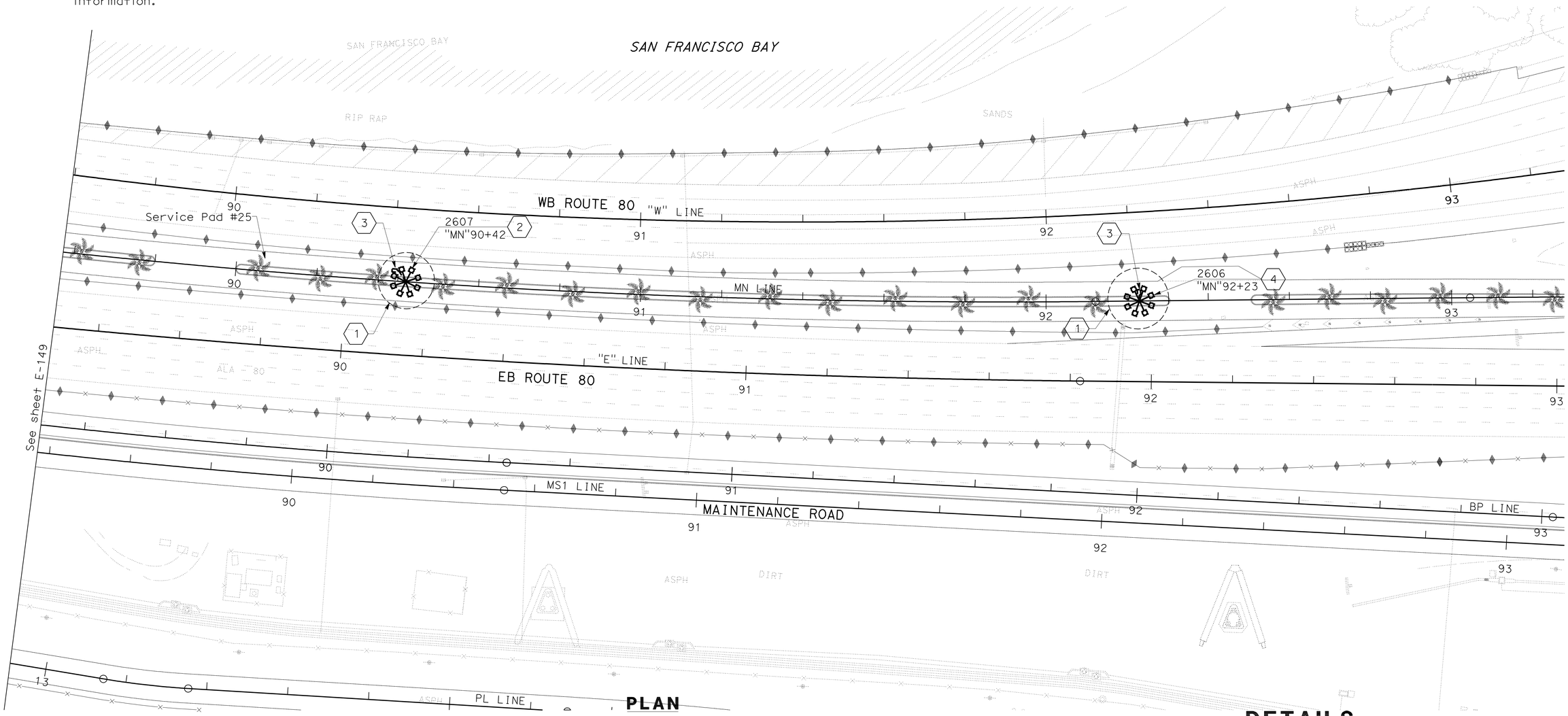

PLAN

DETAILS
UNDERGROUND AND ROADWAY AT GRADE HIGH MAST LIGHTING POLE LOCATION

SCALE 1:500

THIS PLAN IS ACCURATE FOR ELECTRICAL WORK ONLY.

ALL DIMENSIONS ARE IN METERS UNLESS OTHERWISE SHOWN

E-150

STATE OF CALIFORNIA - DEPARTMENT OF TRANSPORTATION
Caltrans

CONSULTANT FUNCTIONAL SUPERVISOR: BRADY NADELL
CALCULATED-DESIGNED BY: BEN JUDILLA
CHECKED BY: CAROL LIGHT
REVISED BY / DATE REVISED

LAST REVISION 09-17-09
DATE PLOTTED => 06-OCT-2011
TIME PLOTTED => 07:04

Dist	COUNTY	ROUTE	KILOMETER POST TOTAL PROJECT	SHEET No.	TOTAL SHEETS
04	Ala	80	1.6/2.7	341	744

REGISTERED ELECTRICAL ENGINEER 04/20/11

10-3-11
PLANS APPROVAL DATE

REGISTERED PROFESSIONAL ENGINEER CAROL LIGHT No. 10145 Exp. 09/30/11 ELECTRICAL STATE OF CALIFORNIA

THE STATE OF CALIFORNIA OR ITS OFFICERS OR AGENTS SHALL NOT BE RESPONSIBLE FOR THE ACCURACY OR COMPLETENESS OF ELECTRONIC COPIES OF THIS PLAN SHEET.

PB AMERICAS, INC.
303 SECOND ST., SUITE 700N
SAN FRANCISCO, CA 94107-1317

SILVERMAN & LIGHT
1201 PARK AVE., SUITE 100
EMERYVILLE, CA 94608-3632

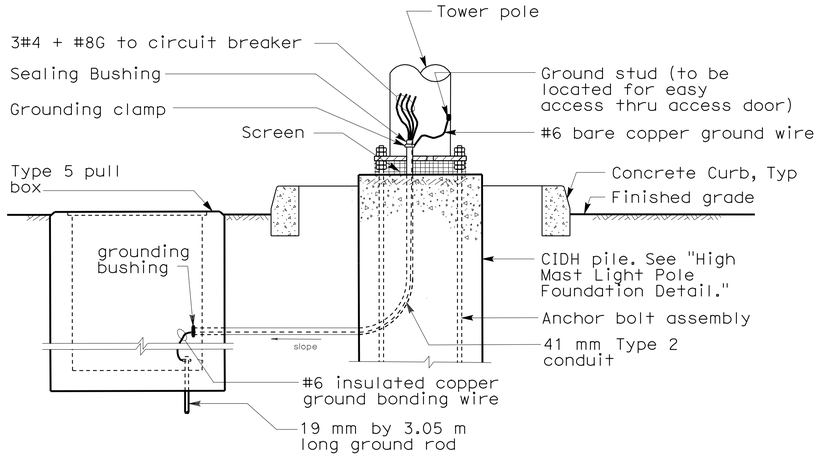

INSTALLATION AND DETAILS

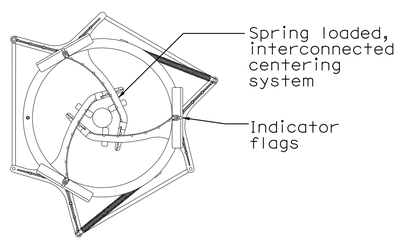

RING ASSEMBLY, WITH CENTERING SYSTEM

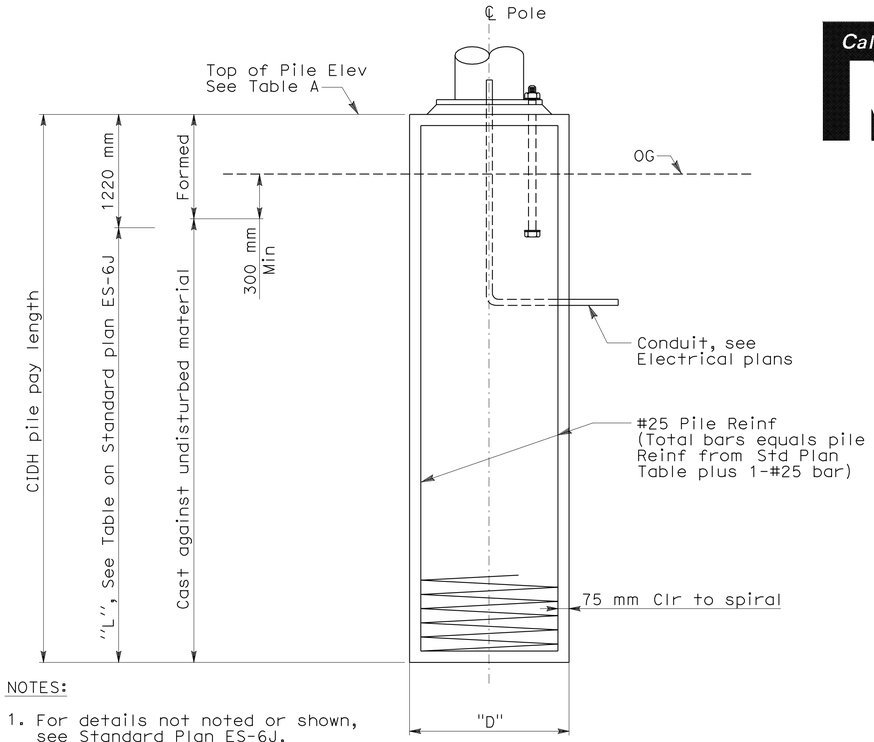

NOTES:

1. For details not noted or shown, see Standard Plan ES-6J, "Pole Type HM 120".
2. Detail as shown is existing site condition at required stage of contruction.

HIGH MAST LIGHT POLE FOUNDATION DETAIL

NOTES:

1. A bottom locking device will be provided to remove tension from the winch subject to the Engineer's approval.
2. The power cable shall be provided with an approved strain relief notice.
3. Each hoisting cable shall be provided with a spring loaded shock absorber to prevent cable stretch due to movement of the tower when ring is in the upper position.
4. There shall be spring loaded guide arms (Min of 3).
5. The luminaire ring assembly and support assembly shall be provided with suitable positioning devices. (minimum of three locating pins.
6. Head assembly will be provided with an aluminum cover.
7. The only openings on the head assembly shall be holes through which the luminaire ring hoisting cables and power cable pass.
8. All cables shall be adjusted from the access door.

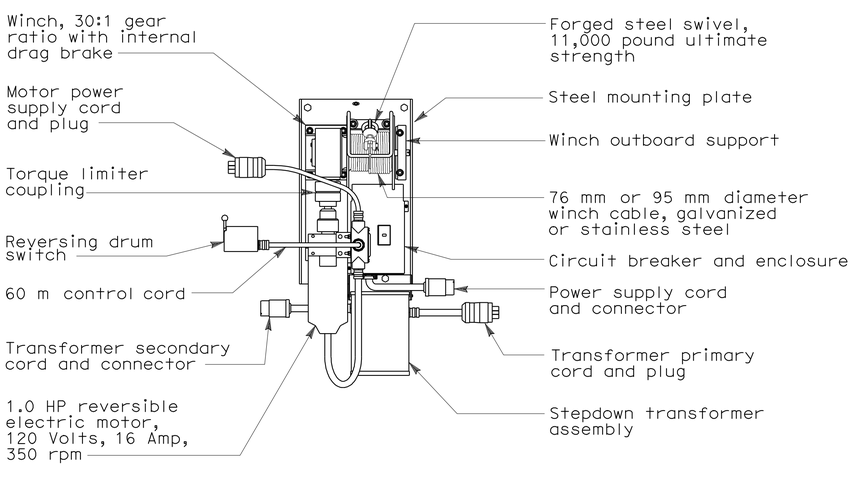

INTERNAL WINCH AND MOTOR

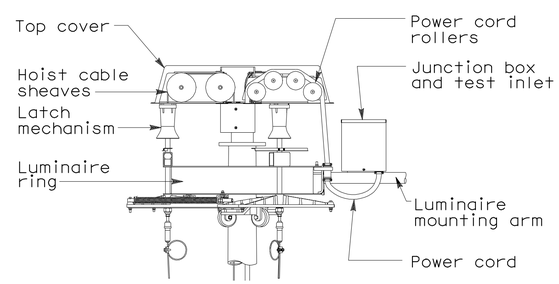

TOP LATCHING, CENTERING SYSTEM

TABLE A

Top of CIDH Pile Elevation	
"MN" Station	Elevation
86+92	3.175 m
88+64	4.075 m
90+42	3.850 m
92+23	4.045 m

THIS PLAN IS ACCURATE FOR ELECTRICAL WORK ONLY.

ALL DIMENSIONS ARE IN METERS UNLESS OTHERWISE SHOWN

DETAILS
UNDERGROUND AND ROADWAY AT GRADE HIGH MAST LIGHTING POLE DETAILS

NO SCALE

E-151

REVISED BY	DATE REVISED
BEN JUDILLA	CAROL LIGHT

CALCULATED-DESIGNED BY / CHECKED BY

CONSULTANT FUNCTIONAL SUPERVISOR: BRADY NADELL

SUBMITTAL (05/27/2011)

STATE OF CALIFORNIA - DEPARTMENT OF TRANSPORTATION

Caltrans

LAST REVISION 09-17-09 | DATE PLOTTED => 06-OCT-2011 | TIME PLOTTED => 07:04

Dist	COUNTY	ROUTE	KILOMETER POST TOTAL PROJECT	SHEET No.	TOTAL SHEETS
04	Ala	80	1.6/2.7	342	744

REGISTERED ELECTRICAL ENGINEER 04/20/11

10-3-11
PLANS APPROVAL DATE

REGISTERED PROFESSIONAL ENGINEER CAROL LIGHT No. 10145 Exp. 09/30/11 ELECTRICAL STATE OF CALIFORNIA

THE STATE OF CALIFORNIA OR ITS OFFICERS OR AGENTS SHALL NOT BE RESPONSIBLE FOR THE ACCURACY OR COMPLETENESS OF ELECTRONIC COPIES OF THIS PLAN SHEET.

PB AMERICAS, INC.
303 SECOND ST., SUITE 700N
SAN FRANCISCO, CA 94107-1317

SILVERMAN & LIGHT
1201 PARK AVE., SUITE 100
EMERYVILLE, CA 94608-3632

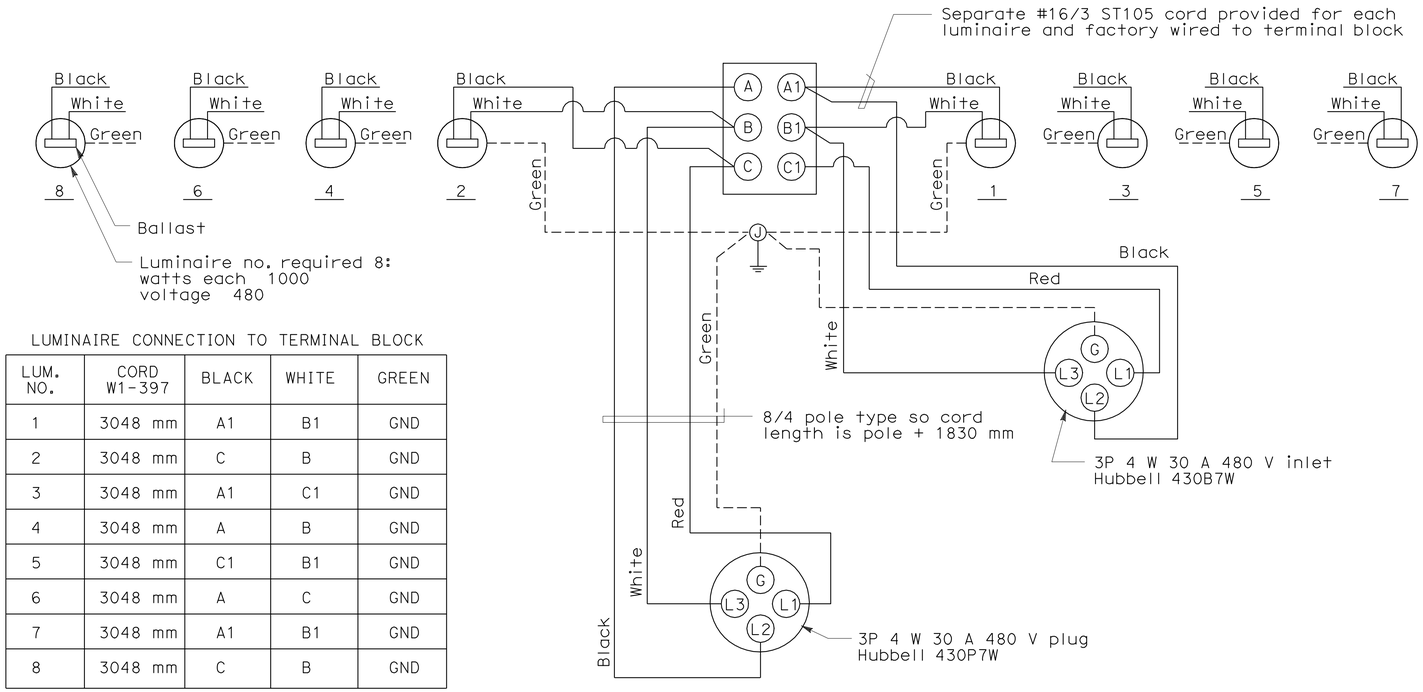

LUMINAIRE CONNECTION TO TERMINAL BLOCK

LUM. NO.	CORD W1-397	BLACK	WHITE	GREEN
1	3048 mm	A1	B1	GND
2	3048 mm	C	B	GND
3	3048 mm	A1	C1	GND
4	3048 mm	A	B	GND
5	3048 mm	C1	B1	GND
6	3048 mm	A	C	GND
7	3048 mm	A1	B1	GND
8	3048 mm	C	B	GND

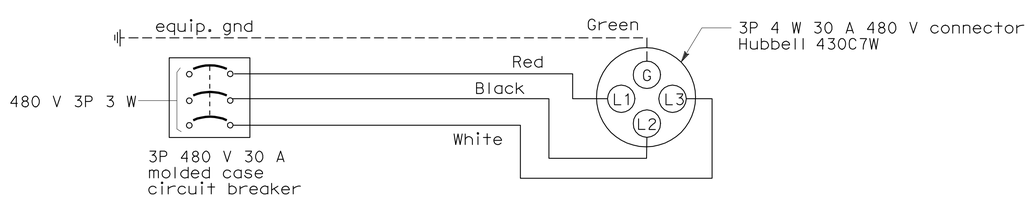

WIRING DIAGRAM

DETAILS
UNDERGROUND AND ROADWAY AT GRADE
HIGH MAST LIGHTING TYPICAL WIRING DIAGRAM

NO SCALE

THIS PLAN IS ACCURATE FOR ELECTRICAL WORK ONLY.

ALL DIMENSIONS ARE IN METERS UNLESS OTHERWISE SHOWN

E-152

STATE OF CALIFORNIA - DEPARTMENT OF TRANSPORTATION
Caltrans

CONSULTANT FUNCTIONAL SUPERVISOR: BRADY NADELL
CALCULATED-DESIGNED BY: BEN JUDILLA
CHECKED BY: CAROL LIGHT
REVISED BY / DATE REVISED

LAST REVISION 09-17-09 | DATE PLOTTED => 06-OCT-2011 | TIME PLOTTED => 07:04

Dist	COUNTY	ROUTE	KILOMETER POST TOTAL PROJECT	SHEET No.	TOTAL SHEETS
04	Ala	80	1.6/2.7	343	744

REGISTERED ELECTRICAL ENGINEER 05/02/11

10-3-11
PLANS APPROVAL DATE

REGISTERED PROFESSIONAL ENGINEER
DAVID H. OTO
No. 10699
Exp. 06/30/2013
ELECTRICAL
STATE OF CALIFORNIA

THE STATE OF CALIFORNIA OR ITS OFFICERS OR AGENTS SHALL NOT BE RESPONSIBLE FOR THE ACCURACY OR COMPLETENESS OF ELECTRONIC COPIES OF THIS PLAN SHEET.

PB AMERICAS, Inc.
303 Second St., Suite 700N
San Francisco, CA 94107-1317

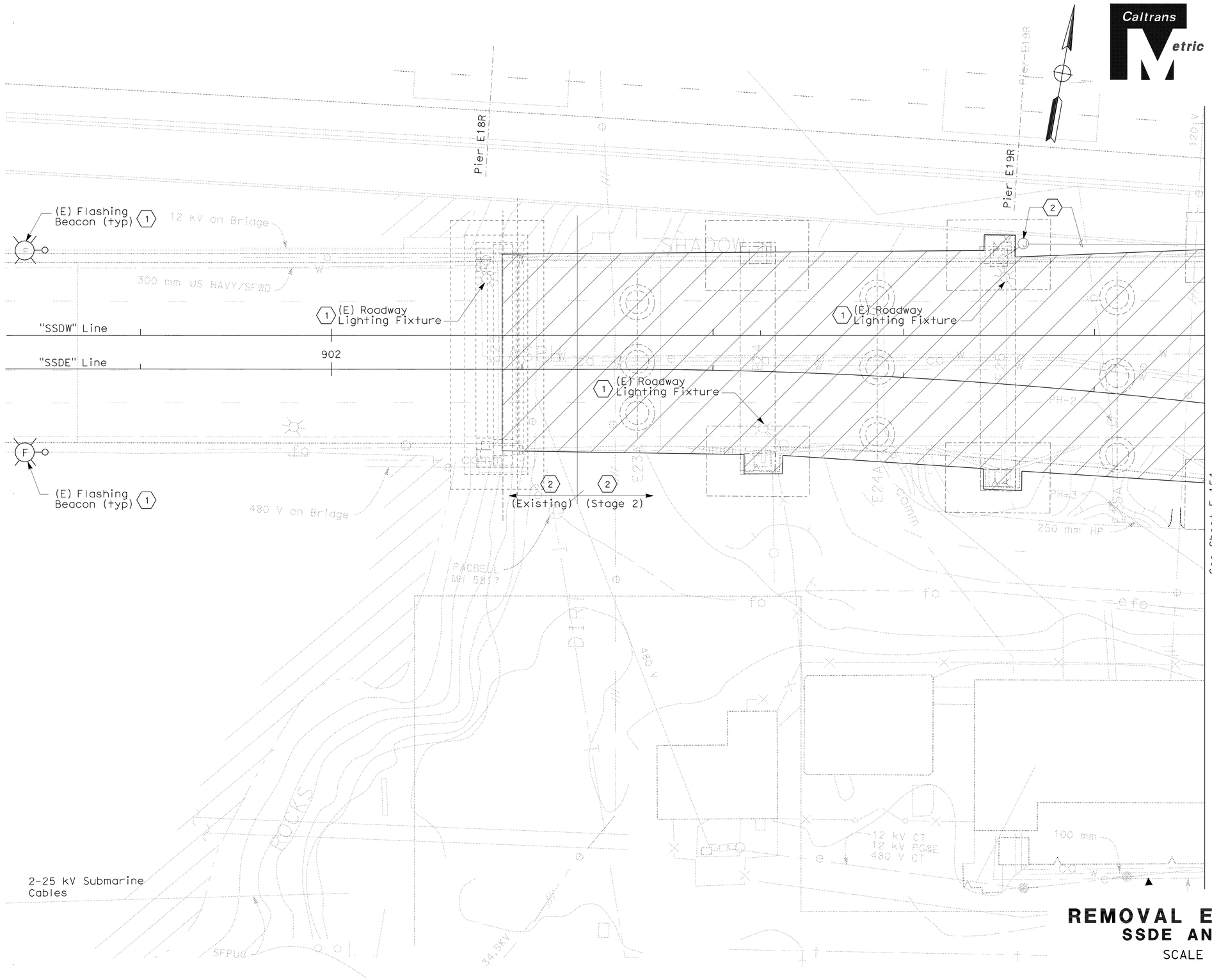

NOTE:

1. For drawing clarity, shown only on this drawing is removal of electrical equipment and devices. The associated conduit, pull box and etc., located on the bridge structure is part of bridge demolition or abandon as indicated on this plan sheet. For general notes, see sheet E-6.

SHEET NOTES:

1. Removed and salvaged on Stage 2.
2. Prior to demolition of the Westbound (Upper deck) Structure:
   a. The Contractor to survey and ensure the continuity of each existing system and function.
   b. The Contractor to completely understand the sequence and installation of the new electrical systems installed.
   c. The following systems not limited to items listed below must be closely coordinated with removal and connections of new system.
   d. (E) Longitudinal trunklines:
      - (2) 15 kV temporary feeders to Midspan Substations.
      - (1) 15 kV feeder to Substation E9.
      - (1) 50 pair #19 Scada/ Telephone communication cable
      - (1) 40/C #16 Communication cable
   e. Other (E) electrical systems on Stage 2 area shall be removed per direction of the Engineer.

LEGEND:

See Stage Construction and Traffic Handling Plan, for Details.

REMOVAL ELECTRICAL
SSDE AND SSDW
SCALE 1:200

E-153

THIS PLAN IS ACCURATE FOR ELECTRICAL WORK ONLY.

ALL DIMENSIONS ARE IN METERS UNLESS OTHERWISE SHOWN

STATE OF CALIFORNIA - DEPARTMENT OF TRANSPORTATION
Caltrans

CONSULTANT FUNCTIONAL SUPERVISOR: BRADY NADELL
CALCULATED-DESIGNED BY: JEFFRI HALIM
CHECKED BY: ELLERY LUCAS
REVISED BY / DATE REVISED

LAST REVISION 08-17-09
DATE PLOTTED => 06-OCT-2011
TIME PLOTTED => 07:04

Dist	COUNTY	ROUTE	KILOMETER POST TOTAL PROJECT	SHEET No.	TOTAL SHEETS
04	Ala	80	1.6/2.7	344	744

REGISTERED ELECTRICAL ENGINEER 05/02/11

10-3-11
PLANS APPROVAL DATE

REGISTERED PROFESSIONAL ENGINEER
DAVID H. OTO
No. 10699
Exp. 06/30/2013
ELECTRICAL
STATE OF CALIFORNIA

THE STATE OF CALIFORNIA OR ITS OFFICERS OR AGENTS SHALL NOT BE RESPONSIBLE FOR THE ACCURACY OR COMPLETENESS OF ELECTRONIC COPIES OF THIS PLAN SHEET.

PB AMERICAS, Inc.
303 Second St., Suite 700N
San Francisco, CA 94107-1317

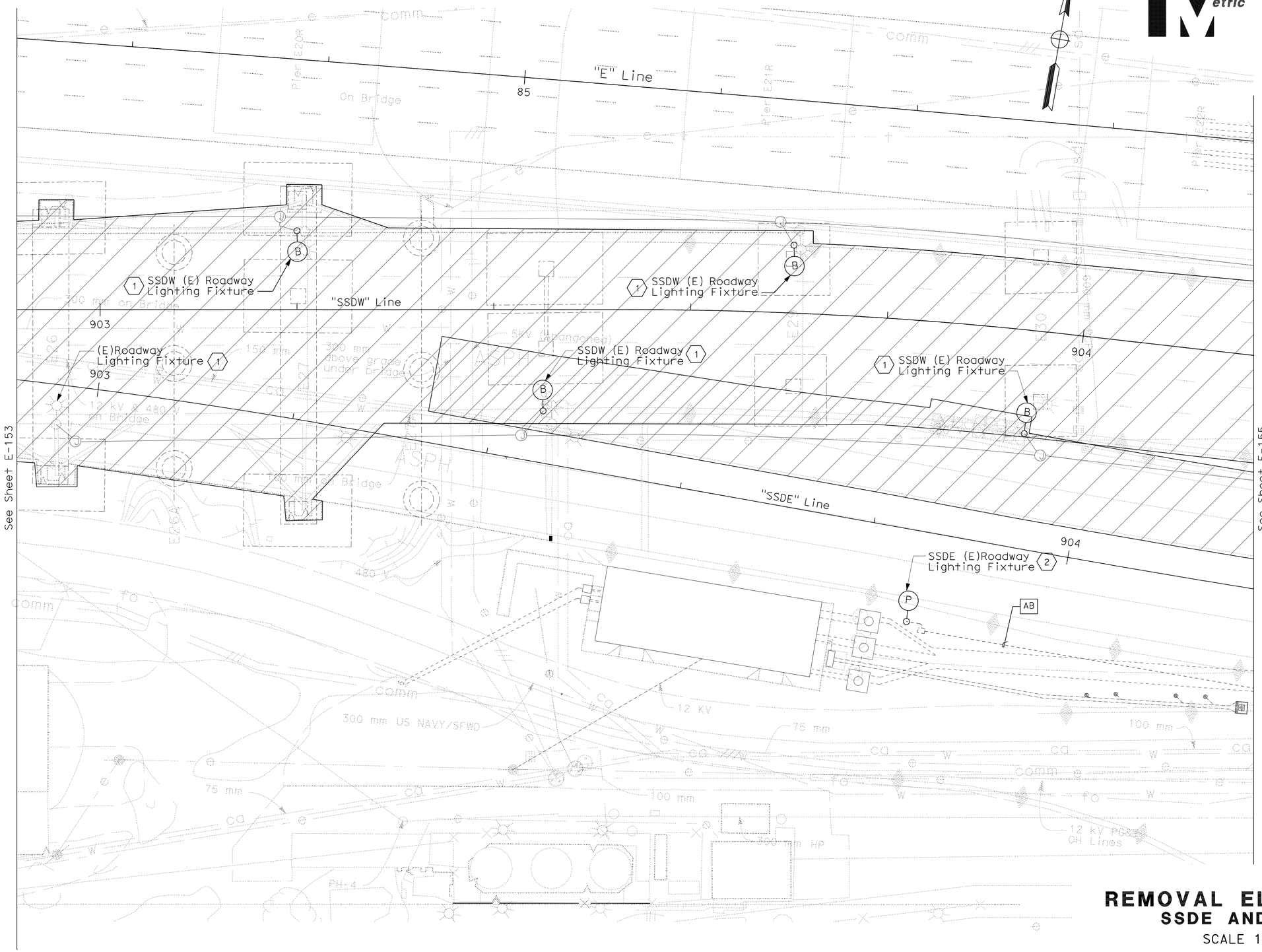

NOTE:

1. For drawing clarity, shown only on this drawing is removal of electrical equipment and devices. The associated conduit, pull box and etc., located on the bridge structure is part of bridge demolition or abandon as indicated on this plan sheet. For general notes, see sheet E-6.

SHEET NOTES:

1. Removed and salvaged on Stage 2.
2. Removed and salvaged on this Removal Electrical Stage.

LEGEND:

See Stage Construction and Traffic Handling Plan, for Details.

REMOVAL ELECTRICAL
SSDE AND SSDW
SCALE 1:200

E-154

THIS PLAN IS ACCURATE FOR ELECTRICAL WORK ONLY.

ALL DIMENSIONS ARE IN METERS UNLESS OTHERWISE SHOWN

REVISED BY	DATE REVISED
JEFFRI HALIM	
ELLERY LUCAS	

CALCULATED-DESIGNED BY
CHECKED BY

CONSULTANT FUNCTIONAL SUPERVISOR
BRADY NADELL

STATE OF CALIFORNIA - DEPARTMENT OF TRANSPORTATION
Caltrans

LAST REVISION 08-17-09 | DATE PLOTTED => 06-OCT-2011 | TIME PLOTTED => 07:05

Dist	COUNTY	ROUTE	KILOMETER POST TOTAL PROJECT	SHEET No.	TOTAL SHEETS
04	Ala	80	1.6/2.7	345	744

05/02/11
REGISTERED ELECTRICAL ENGINEER

10-3-11
PLANS APPROVAL DATE

REGISTERED PROFESSIONAL ENGINEER
DAVID H. OTO
No. 10699
Exp. 06/30/2013
ELECTRICAL
STATE OF CALIFORNIA

THE STATE OF CALIFORNIA OR ITS OFFICERS OR AGENTS SHALL NOT BE RESPONSIBLE FOR THE ACCURACY OR COMPLETENESS OF ELECTRONIC COPIES OF THIS PLAN SHEET.

PB AMERICAS, Inc.
303 Second St., Suite 700N
San Francisco, CA 94107-1317

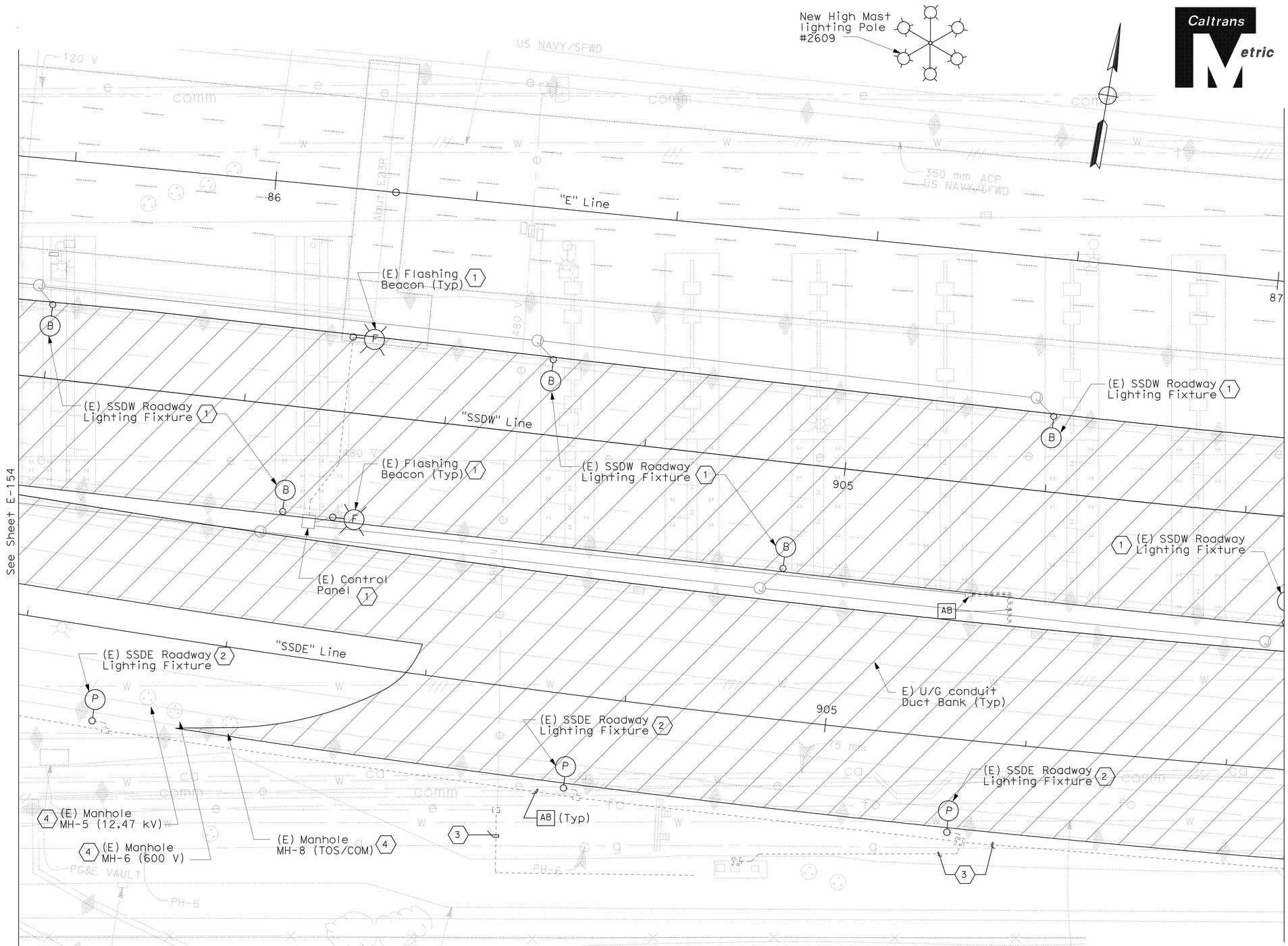

NOTE:

1. For drawing clarity, shown only on this drawing is removal of electrical equipment and devices. The associated conduit, pull box and etc., located on the bridge structure is part of bridge demolition or abandon as indicated on this plan sheet. For general notes, see sheet E-6.
2. For drawing clarity, the underground installed on this contract is not shown.

SHEET NOTES:

1. Removed and salvaged on Stage 2.
2. Removed and salvaged on Stage 3 or on this Removal Electrical Stage.
3. The (E) High Mast lighting pole conductors circuits #272 and #273 is routed inside this conduit. Coordinate the removal of the (E) High Mast lighting pole which shall remain energized until the new High Mast lighting poles are installed.
4. This work shall be coordinated with the demolition of the SSDE roadway to its original grade. The manhole cover shall be flushed to grade level as indicated below or per the direction of the Engineer.
   - MH-5 to El. 2.742 from El. 3.659
   - MH-6 to El. 2.772 from El. 3.701
   - MH-8 to El. 2.750 from El. 3.737

LEGEND:

See Stage Construction and Traffic Handling Plan, for Details.

REMOVAL ELECTRICAL
SSDE AND SSDW
SCALE 1:200

E-155

THIS PLAN IS ACCURATE FOR ELECTRICAL WORK ONLY.

ALL DIMENSIONS ARE IN METERS UNLESS OTHERWISE SHOWN

STATE OF CALIFORNIA - DEPARTMENT OF TRANSPORTATION
Caltrans

CONSULTANT FUNCTIONAL SUPERVISOR: BRADY NADELL
CALCULATED-DESIGNED BY: JEFFRI HALIM
CHECKED BY: ELLERY LUCAS
REVISED BY / DATE REVISED

LAST REVISION 08-17-09
DATE PLOTTED => 06-OCT-2011
TIME PLOTTED => 07:05

Dist	COUNTY	ROUTE	KILOMETER POST TOTAL PROJECT	SHEET No.	TOTAL SHEETS
04	Ala	80	1.6/2.7	346	744

REGISTERED ELECTRICAL ENGINEER 05/02/11

10-3-11
PLANS APPROVAL DATE

REGISTERED PROFESSIONAL ENGINEER DAVID H. OTO No. 10699 Exp. 06/30/2013 ELECTRICAL STATE OF CALIFORNIA

THE STATE OF CALIFORNIA OR ITS OFFICERS OR AGENTS SHALL NOT BE RESPONSIBLE FOR THE ACCURACY OR COMPLETENESS OF ELECTRONIC COPIES OF THIS PLAN SHEET.

PB AMERICAS, Inc.
303 Second St., Suite 700N
San Francisco, CA 94107-1317

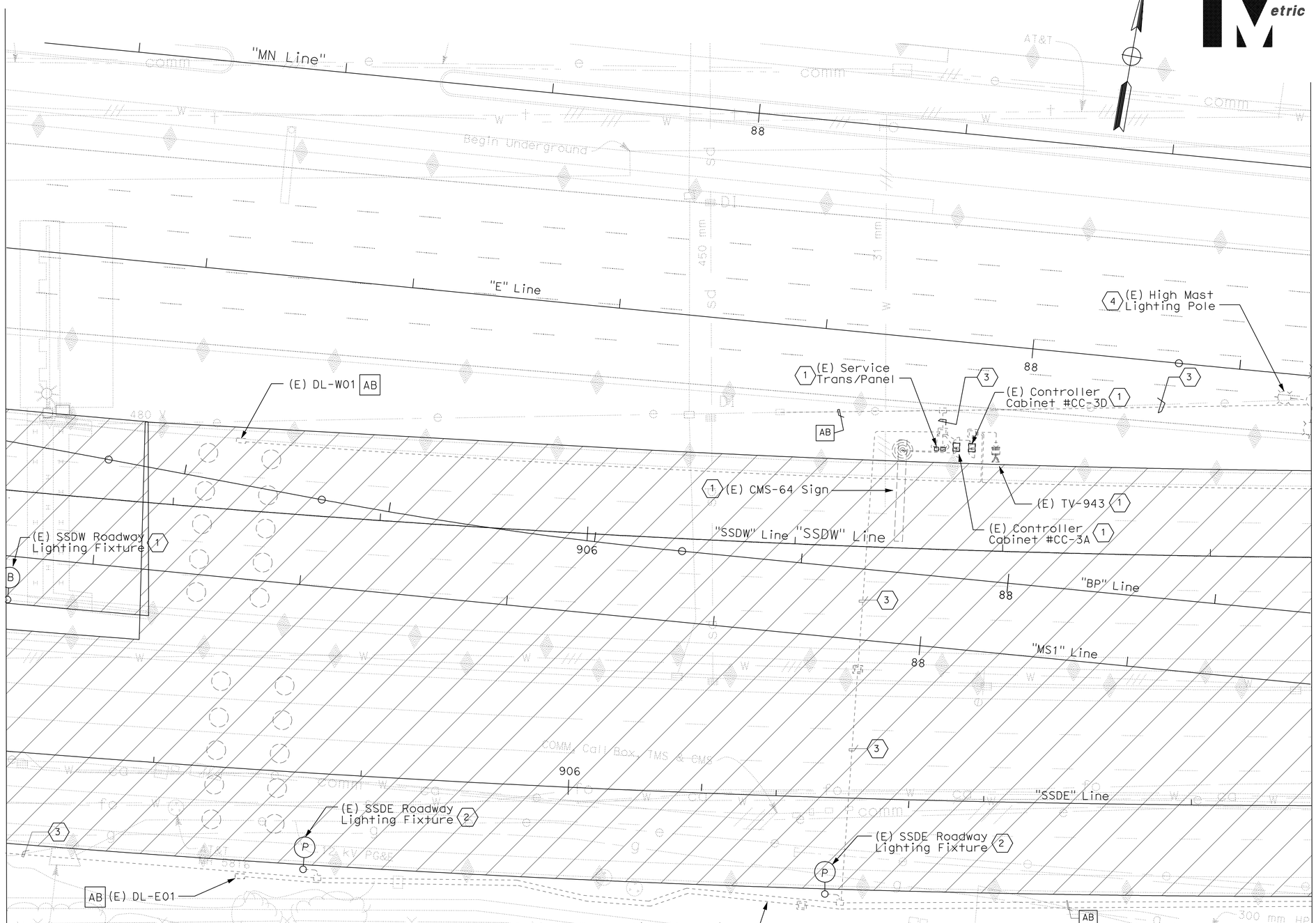

NOTE:

1. For drawing clarity, shown only on this drawing is removal of electrical equipment and devices. The associated conduit, pull box and etc., located on the bridge structure is part of bridge demolition or abandon as indicated on this plan sheet. For general notes, see sheet E-6.

SHEET NOTES:

1. Removed and salvaged on Stage 2.
2. Removed and salvaged on Stage 3 or on this Removal Electrical Stage.
3. The (E) High Mast lighting pole conductors circuits #272 and #273 is routed inside this conduit. Coordinate the removal of the (E) High Mast lighting pole which shall remain energized until the new High Mast poles are installed.
4. The (E) High Mast lighting pole shall be removed and salvaged.

LEGEND:

See Stage Construction and Traffic Handling Plan, for Details.

REMOVAL ELECTRICAL
SSDE AND SSDW
SCALE 1:200

E-156

THIS PLAN IS ACCURATE FOR ELECTRICAL WORK ONLY.

ALL DIMENSIONS ARE IN METERS UNLESS OTHERWISE SHOWN

STATE OF CALIFORNIA - DEPARTMENT OF TRANSPORTATION
Caltrans

CONSULTANT FUNCTIONAL SUPERVISOR: BRADY NADELL
CALCULATED-DESIGNED BY: JEFFRI HALIM
CHECKED BY: ELLERY LUCAS
REVISED BY / DATE REVISED

LAST REVISION 08-17-09
DATE PLOTTED => 06-OCT-2011
TIME PLOTTED => 07:05

Dist	COUNTY	ROUTE	KILOMETER POST TOTAL PROJECT	SHEET No.	TOTAL SHEETS
04	Ala	80	1.6/2.7	347	744

REGISTERED ELECTRICAL ENGINEER 05/02/11

10-3-11
PLANS APPROVAL DATE

REGISTERED PROFESSIONAL ENGINEER DAVID H. OTO No. 10699 Exp. 06/30/2013 ELECTRICAL STATE OF CALIFORNIA

THE STATE OF CALIFORNIA OR ITS OFFICERS OR AGENTS SHALL NOT BE RESPONSIBLE FOR THE ACCURACY OR COMPLETENESS OF ELECTRONIC COPIES OF THIS PLAN SHEET.

PB AMERICAS, Inc.
303 Second St., Suite 700N
San Francisco, CA 94107-1317

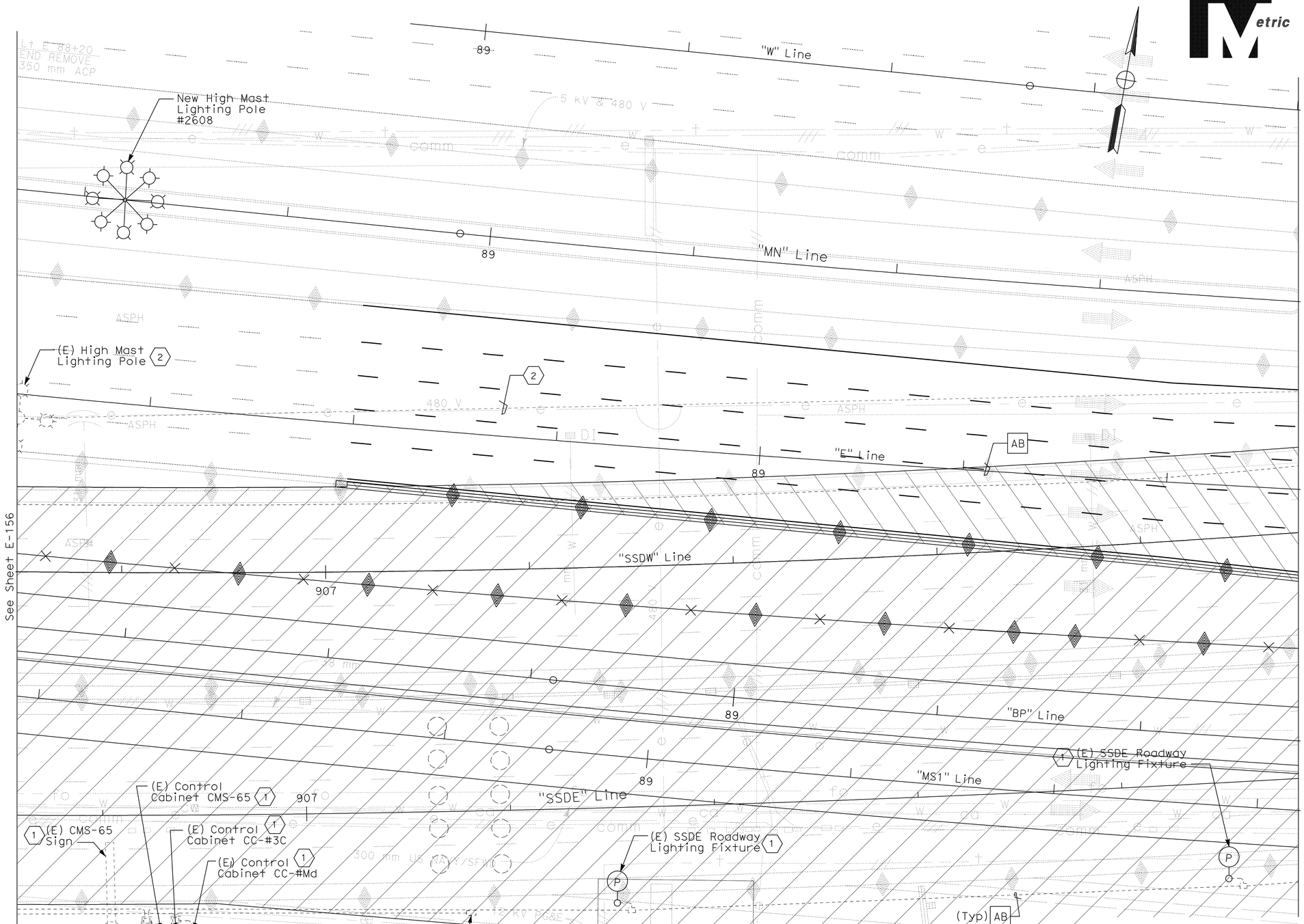

NOTE:

1. For drawing clarity, shown only on this drawing is removal of electrical equipment and devices. The associated conduit, pull box and etc., will be abandon as indicated on this plan sheet. For general notes, see sheet E-6.

SHEET NOTES:

1. Removed and salvaged on Stage 3 or on this Removal Electrical Stage.
2. The (E) High Mast lighting pole conductors circuits #272 and #273 is routed inside this conduit. Coordinate the removal of the (E) High Mast lighting pole which shall remain energized until the new High Mast lighting poles are installed.

LEGEND:

See Stage Construction and Traffic Handling Plan, for Details.

REMOVAL - ELECTRICAL
SSDE AND SSDW
SCALE 1:200

E-157

THIS PLAN IS ACCURATE FOR ELECTRICAL WORK ONLY.

ALL DIMENSIONS ARE IN METERS UNLESS OTHERWISE SHOWN

STATE OF CALIFORNIA - DEPARTMENT OF TRANSPORTATION

CONSULTANT FUNCTIONAL SUPERVISOR: BRADY NADELL

CALCULATED-DESIGNED BY: JEFFRI HALIM

CHECKED BY: ELLERY LUCAS

REVISED BY / DATE REVISED

LAST REVISION 08-17-09

DATE PLOTTED => 06-OCT-2011
TIME PLOTTED => 07:05

Dist	COUNTY	ROUTE	KILOMETER POST TOTAL PROJECT	SHEET No.	TOTAL SHEETS
04	Ala	80	1.6/2.7	348	744

REGISTERED ELECTRICAL ENGINEER 05/02/11

10-3-11
PLANS APPROVAL DATE

REGISTERED PROFESSIONAL ENGINEER DAVID H. OTO No. 10699 Exp. 06/30/2013 ELECTRICAL STATE OF CALIFORNIA

THE STATE OF CALIFORNIA OR ITS OFFICERS OR AGENTS SHALL NOT BE RESPONSIBLE FOR THE ACCURACY OR COMPLETENESS OF ELECTRONIC COPIES OF THIS PLAN SHEET.

PB AMERICAS, Inc.
303 Second St., Suite 700N
San Francisco, CA 94107-1317

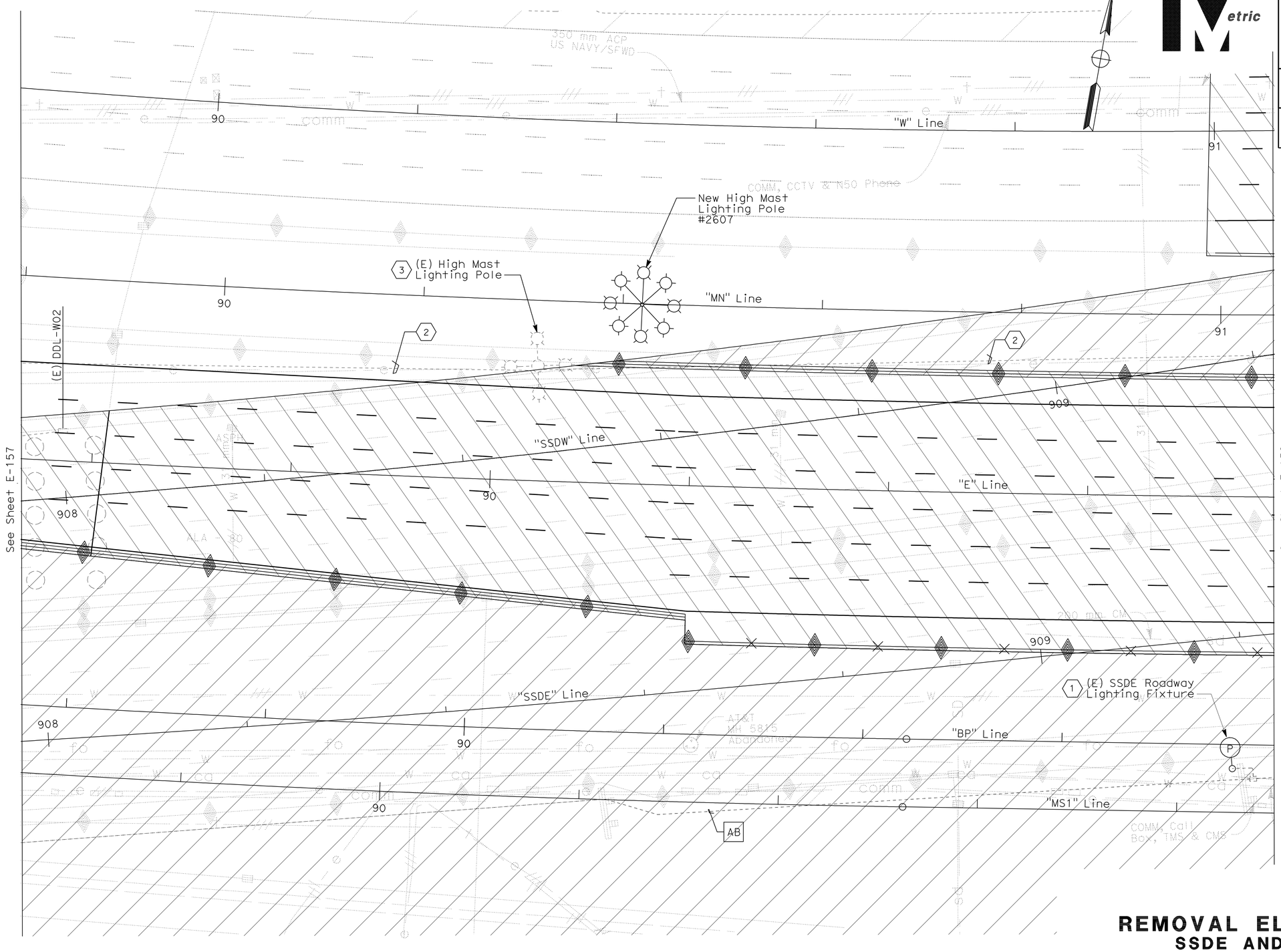

NOTE:

1. For drawing clarity, shown only on this drawing is removal of electrical equipment and devices. The associated conduit, pull box and etc., will be abandon as indicated on this plan sheet. For general notes, see sheet E-6.

SHEET NOTES:

1. Removed and salvaged on Stage 3 or on this Electrical Removal stage.
2. The (E) High Mast lighting pole conductors circuits #272 and #273 is routed inside this conduit. Coordinate the removal of the (E) High Mast lighting pole which shall remain energized until the new High Mast lighting poles are installed.
3. The (E) High Mast lighting pole shall be removed and salvaged.

LEGEND:

See Stage Construction and Traffic Handling Plan, for Details.

REMOVAL ELECTRICAL
SSDE AND SSDW
SCALE 1:200

E-158

THIS PLAN IS ACCURATE FOR ELECTRICAL WORK ONLY.

ALL DIMENSIONS ARE IN METERS UNLESS OTHERWISE SHOWN

STATE OF CALIFORNIA - DEPARTMENT OF TRANSPORTATION
Caltrans

CONSULTANT FUNCTIONAL SUPERVISOR: BRADY NADELL
CALCULATED-DESIGNED BY: JEFFRI HALIM
CHECKED BY: ELLERY LUCAS
REVISED BY / DATE REVISED

LAST REVISION 08-17-09 | DATE PLOTTED => 06-OCT-2011 | TIME PLOTTED => 07:05

Dist	COUNTY	ROUTE	KILOMETER POST TOTAL PROJECT	SHEET No.	TOTAL SHEETS
04	Ala	80	1.6/2.7	349	744

05/02/11
REGISTERED ELECTRICAL ENGINEER

10-3-11
PLANS APPROVAL DATE

REGISTERED PROFESSIONAL ENGINEER
DAVID H. OTO
No. 10699
Exp. 06/30/2013
ELECTRICAL
STATE OF CALIFORNIA

THE STATE OF CALIFORNIA OR ITS OFFICERS OR AGENTS SHALL NOT BE RESPONSIBLE FOR THE ACCURACY OR COMPLETENESS OF ELECTRONIC COPIES OF THIS PLAN SHEET.

PB AMERICAS, Inc.
303 Second St., Suite 700N
San Francisco, CA 94107-1317

Caltrans Metric

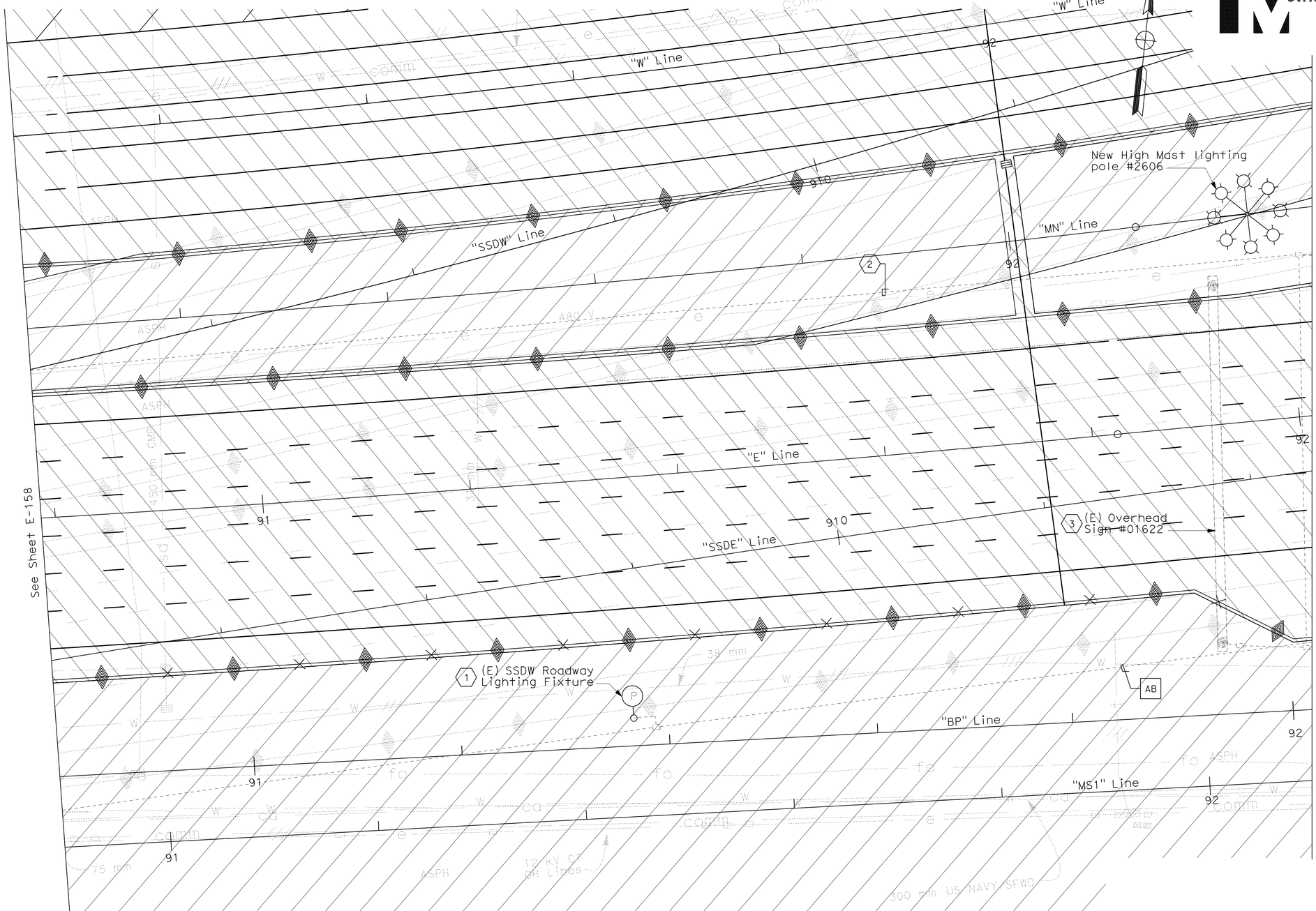

NOTE:

1. For drawing clarity, shown only on this drawing is removal of electrical equipment and devices. The associated conduit, pull box and etc., will be abandon as indicated on this plan sheet. For general notes, see sheet E-6.

SHEET NOTES:

1. Removed and salvaged on Stage 3 or on this Removal Electrical Stage.
2. The (E) High mast lighting pole conductors circuits #272 and #273 is routed inside this conduit. Coordinate the removal of the (E) High Mast lighting pole which shall remain energized until the new High Mast lighting poles are installed.
3. (E) Power supply is from the existing High Mast lighting pole. See sheet E-160.

LEGEND:

See Stage Construction and Traffic Handling Plan, for Details.

REMOVAL ELECTRICAL
SSDE AND SSDW
SCALE 1:200

THIS PLAN IS ACCURATE FOR ELECTRICAL WORK ONLY.

E-159

STATE OF CALIFORNIA - DEPARTMENT OF TRANSPORTATION
Caltrans

CONSULTANT FUNCTIONAL SUPERVISOR: BRADY NADELL
CALCULATED-DESIGNED BY: JEFFRI HALIM
CHECKED BY: ELLERY LUCAS
REVISED BY
DATE REVISED

LAST REVISION 08-17-09
DATE PLOTTED => 06-OCT-2011
TIME PLOTTED => 07:05

Dist	COUNTY	ROUTE	KILOMETER POST TOTAL PROJECT	SHEET No.	TOTAL SHEETS
04	Ala	80	1.6/2.7	350	744

REGISTERED ELECTRICAL ENGINEER 05/02/11

10-3-11
PLANS APPROVAL DATE

REGISTERED PROFESSIONAL ENGINEER
DAVID H. OTO
No. 10699
Exp. 06/30/2013
ELECTRICAL
STATE OF CALIFORNIA

THE STATE OF CALIFORNIA OR ITS OFFICERS OR AGENTS SHALL NOT BE RESPONSIBLE FOR THE ACCURACY OR COMPLETENESS OF ELECTRONIC COPIES OF THIS PLAN SHEET.

PB AMERICAS, Inc.
303 Second St., Suite 700N
San Francisco, CA 94107-1317

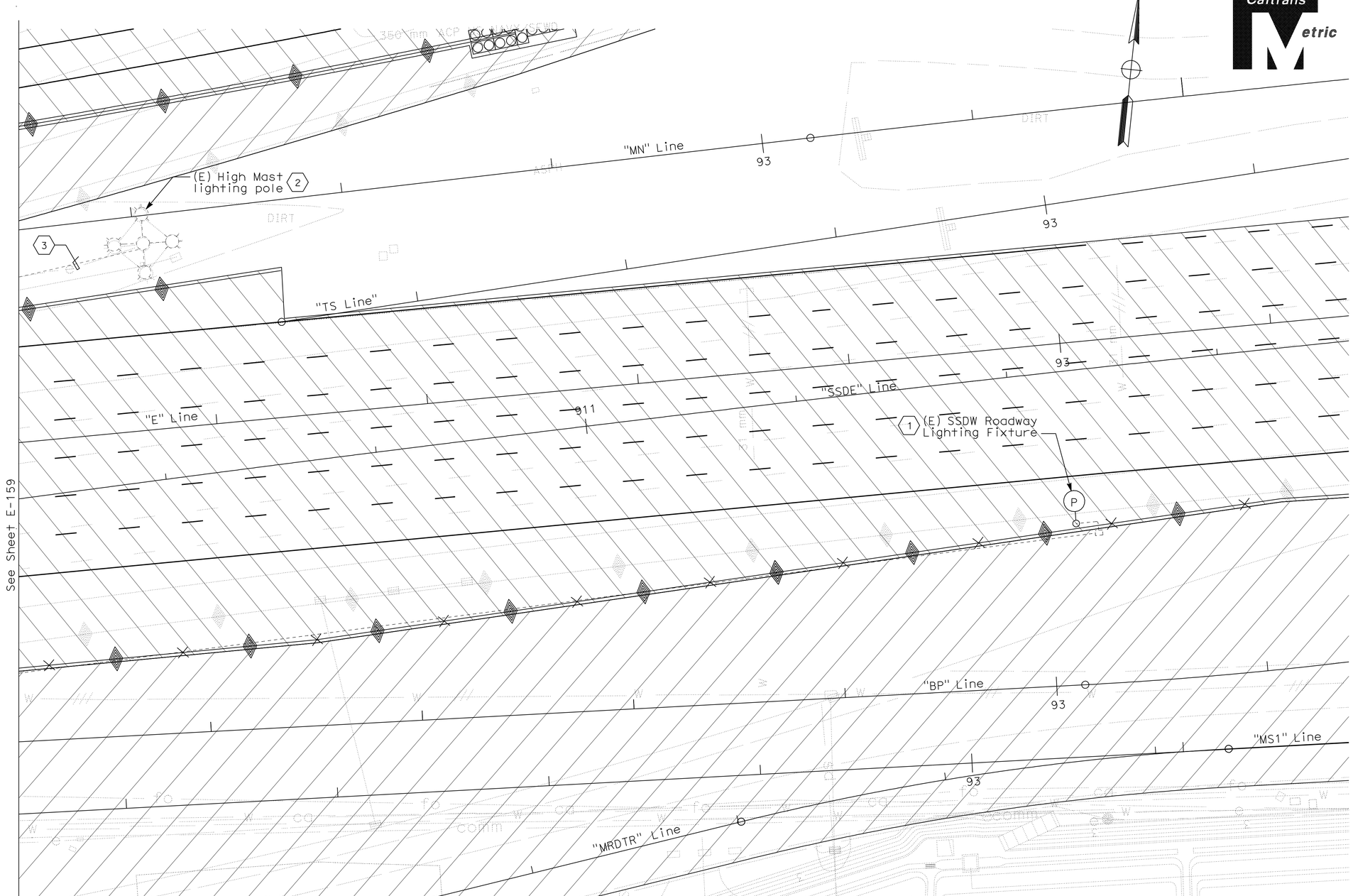

NOTE:

1. For drawing clarity, shown only on this drawing is removal of electrical equipment and devices. The associated conduit, pull box and etc., will be abandon as indicated on this plan sheet. For general notes, see sheet E-6.

SHEET NOTES:

1. Removed and salvaged on Stage 3 or on this Removal Electrical Stage.
2. The (E) High Mast lighting pole shown on this sheet shall remain energized until the new High Mast lighting pole is installed. This (E) High Mast lighting pole shall be removed and salvaged.
3. (E) Power supply for (E) Overhead Sign #01622 is from the existing High Mast lighting pole described on sheet notes 2.

LEGEND:

See Stage Construction and Traffic Handling Plan, for Details.

REMOVAL ELECTRICAL
SSDE AND SSDW
SCALE 1:200

THIS PLAN IS ACCURATE FOR ELECTRICAL WORK ONLY.

E-160

STATE OF CALIFORNIA - DEPARTMENT OF TRANSPORTATION
Caltrans

CONSULTANT FUNCTIONAL SUPERVISOR: BRADY NADELL
CALCULATED-DESIGNED BY: JEFFRI HALIM
CHECKED BY: ELLERY LUCAS
REVISED BY / DATE REVISED

LAST REVISION 08-17-09
DATE PLOTTED => 06-OCT-2011
TIME PLOTTED => 07:05

Dist	COUNTY	ROUTE	KILOMETER POST TOTAL PROJECT	SHEET No.	TOTAL SHEETS
04	Ala	80	1.6/2.7	351	744

5/02/11
REGISTERED ELECTRICAL ENGINEER

10-3-11
PLANS APPROVAL DATE

REGISTERED PROFESSIONAL ENGINEER
DAVID H. OTO
No. 10699
Exp. 06/30/2013
ELECTRICAL
STATE OF CALIFORNIA

THE STATE OF CALIFORNIA OR ITS OFFICERS OR AGENTS SHALL NOT BE RESPONSIBLE FOR THE ACCURACY OR COMPLETENESS OF ELECTRONIC COPIES OF THIS PLAN SHEET.

PB AMERICAS, Inc.
303 Second St., Suite 700N
San Francisco, CA 94107-1317

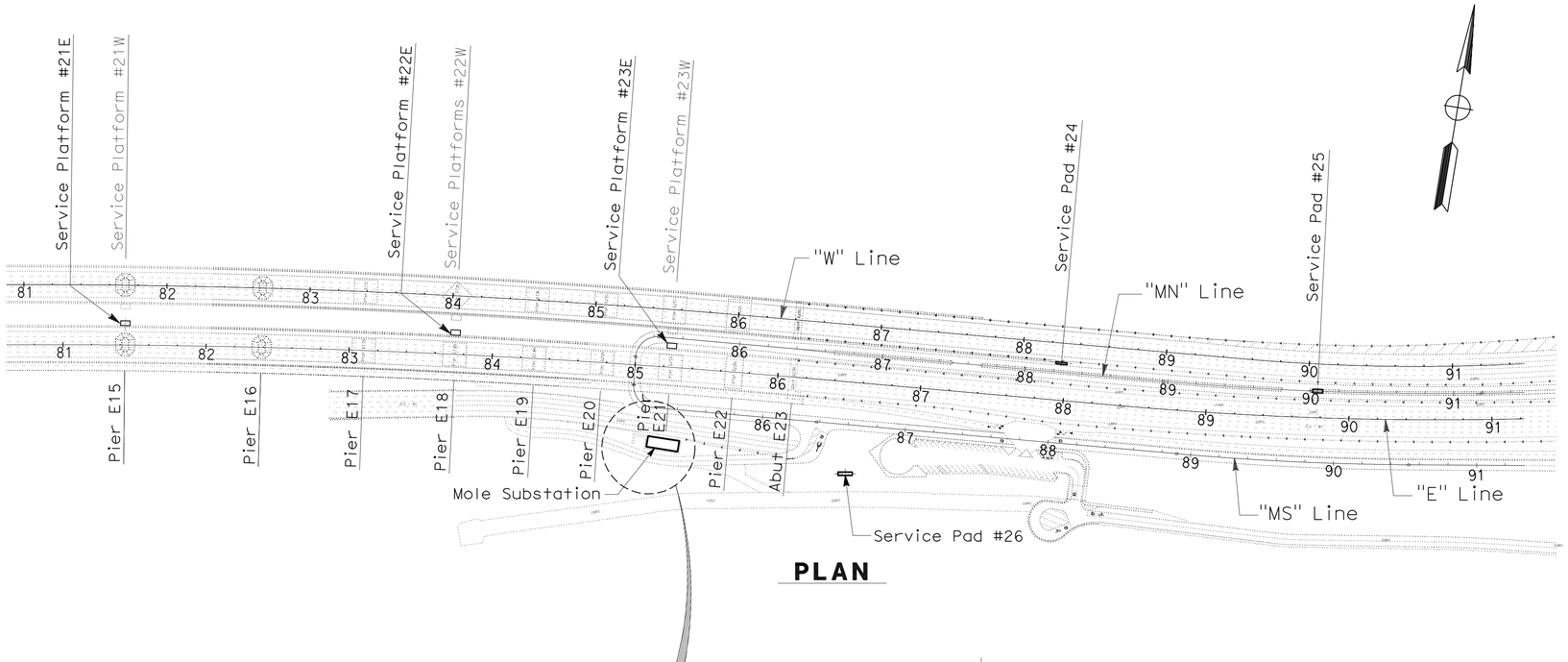

PLAN

NOTES:

1. RTU #16 is installed by others. Remote terminal unit (RTU), telephone and communication boxes located as shown.
2. For wiring terminations, see SCADA communication terminal box connection diagram sheets E-166 through E-173.
3. References:
   - For Service Pad #24 details, see sheet E-109.
   - For Service Pad #25 details, see sheet E-111.
   - For Service Platform #22E location, see sheet E-30.
   - For Service Platform #23E location, see sheet E-34.
   - For Mole Substation equipment arrangement, see sheet E-104.
   - For Service Pad #26 plan details, see sheets E-113.

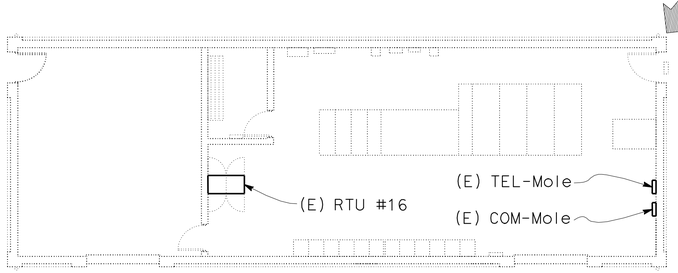

MOLE SUBSTATION

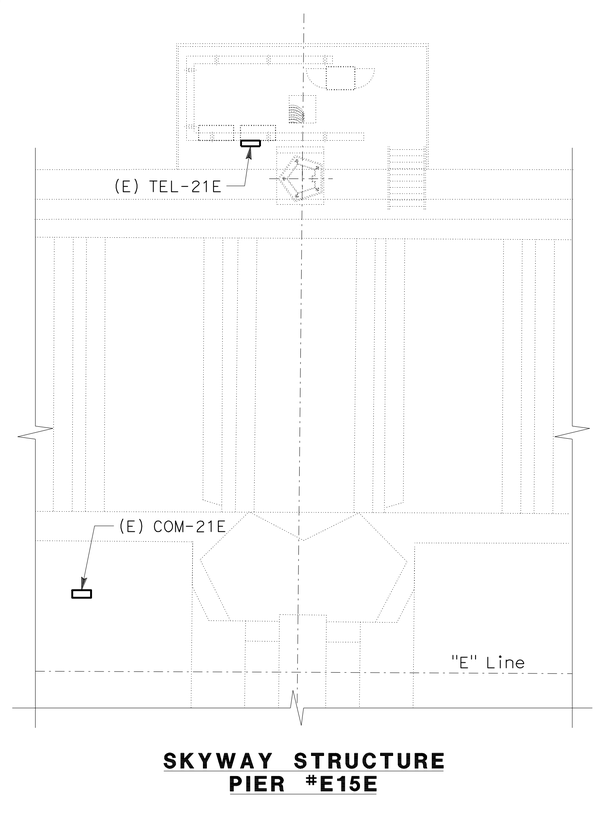

SKYWAY STRUCTURE PIER #E15E

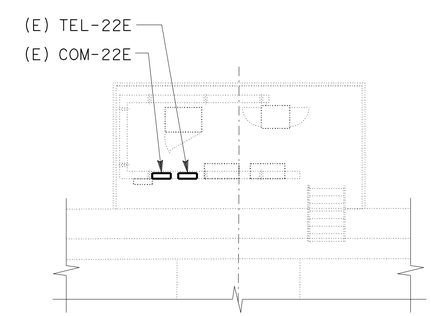

SERVICE PLATFORM #22E

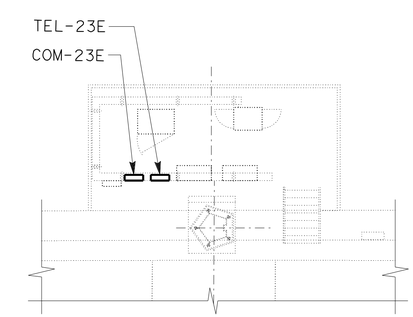

SERVICE PLATFORM #23E

SCADA REMOTE TERMINAL UNIT SYSTEM
(LOCATIONS)
NO SCALE

THIS PLAN IS ACCURATE FOR ELECTRICAL WORK ONLY.

ALL DIMENSIONS ARE IN METERS UNLESS OTHERWISE SHOWN

E-161

STATE OF CALIFORNIA - DEPARTMENT OF TRANSPORTATION
Caltrans
CONSULTANT FUNCTIONAL SUPERVISOR: BRADY NADELL
CALCULATED-DESIGNED BY: DAVID OTO
CHECKED BY: ELLERY LUCAS
REVISED BY
DATE REVISED

LAST REVISION 08-17-09
DATE PLOTTED => 06-OCT-2011
TIME PLOTTED => 07:12

Dist	COUNTY	ROUTE	KILOMETER POST TOTAL PROJECT	SHEET No.	TOTAL SHEETS
04	Ala	80	1.6/2.7	352	744

REGISTERED ELECTRICAL ENGINEER 5/02/11

10-3-11
PLANS APPROVAL DATE

REGISTERED PROFESSIONAL ENGINEER
DAVID H. OTO
No. 10699
Exp. 06/30/2013
ELECTRICAL
STATE OF CALIFORNIA

THE STATE OF CALIFORNIA OR ITS OFFICERS OR AGENTS SHALL NOT BE RESPONSIBLE FOR THE ACCURACY OR COMPLETENESS OF ELECTRONIC COPIES OF THIS PLAN SHEET.

PB AMERICAS, Inc.
303 Second St., Suite 700N
San Francisco, CA 94107-1317

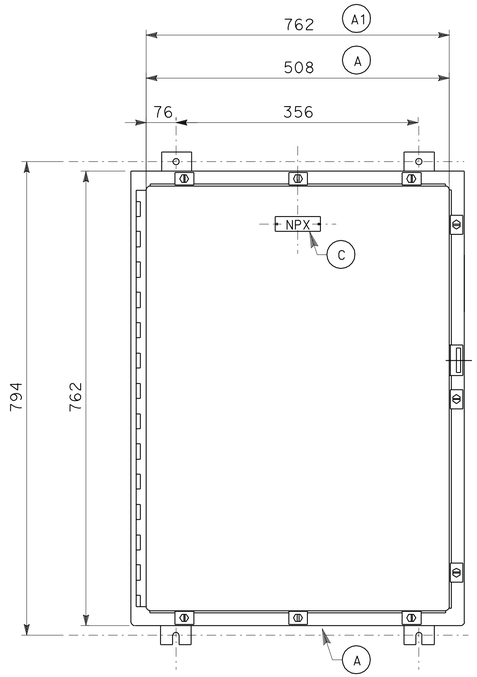

FRONT VIEW

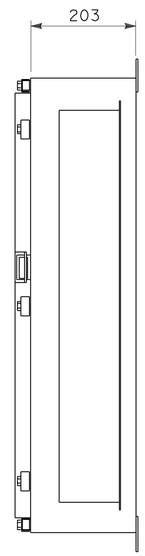

SIDE VIEW

FRONT PANEL

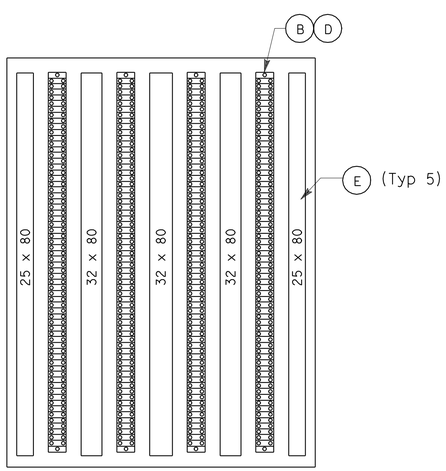

INSIDE PANEL LAYOUT

MATERIAL LIST (1)

ITEM	DESCRIPTION	QTY
A	Enclosure, Stainless Steel Nema 4X, 762 mm x 508 mm x 203 mm, with interior panel (375 mm x 327 mm)	1
A1	Enclosure, Stainless Steel, NEMA 4X 762 mm x 762mm x 203, with interior panel	1
B	65 Point terminal blocks, rated 300 V, barrier type with stop screw terminals	4
C	Nameplate to be white lamicore with black core, size 19 mm x 80 mm, lettering to be 3 mm condensed gothic. Legend to read (see nameplate schedule below)	1
D	Noise suppressor, termination resistor	50
E	Plastic wireway, size and length as required	5

NAMEPLATE SCHEDULE

ITEM	LINE No 1	LINE No 2	QTY
NP2	SCADA Communication	Term. Box COM-23E	1
NP10	Telephone System	Term. Box TEL-23E	1

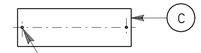

Threaded hole
for 4-40 machine screw

NOTE: Nameplates shall be mounted to the enclosure front panel with 4-40 stainless steel machine screws. The control panel to be drilled and tapped. (no self-tapping screws)

NOTE:

1. References:
   - For SCADA Communication Terminal Box wiring diagrams, see sheets E-166 through E-169.
   - For Telephone Terminal Box wiring diagram, see sheet E-170 through E-173.

SHEET NOTE:

(1) Material listed are quantities for each SCADA Communication and Telephone Terminal Box.

DETAILS
SCADA REMOTE TERMINAL UNIT SYSTEM (SCADA AND TELEPHONE TERMINAL BOX LAYOUT)

NO SCALE

E-162

THIS PLAN IS ACCURATE FOR ELECTRICAL WORK ONLY.

ALL DIMENSIONS ARE IN MILLIMETERS UNLESS OTHERWISE SHOWN

STATE OF CALIFORNIA - DEPARTMENT OF TRANSPORTATION
Caltrans

CONSULTANT FUNCTIONAL SUPERVISOR: BRADY NADELL
CALCULATED-DESIGNED BY: DAVID OTO
CHECKED BY: ELLERY LUCAS
REVISED BY / DATE REVISED

LAST REVISION 08-17-09
DATE PLOTTED => 06-OCT-2011
TIME PLOTTED => 07:13

Dist	COUNTY	ROUTE	KILOMETER POST TOTAL PROJECT	SHEET No.	TOTAL SHEETS
04	Ala	80	1.6/2.7	353	744

5/02/11
REGISTERED ELECTRICAL ENGINEER

10-3-11
PLANS APPROVAL DATE

REGISTERED PROFESSIONAL ENGINEER
DAVID H. OTO
No. 10699
Exp. 06/30/2013
ELECTRICAL
STATE OF CALIFORNIA

THE STATE OF CALIFORNIA OR ITS OFFICERS OR AGENTS SHALL NOT BE RESPONSIBLE FOR THE ACCURACY OR COMPLETENESS OF ELECTRONIC COPIES OF THIS PLAN SHEET.

PB AMERICAS, Inc.
303 Second St., Suite 700N
San Francisco, CA 94107-1317

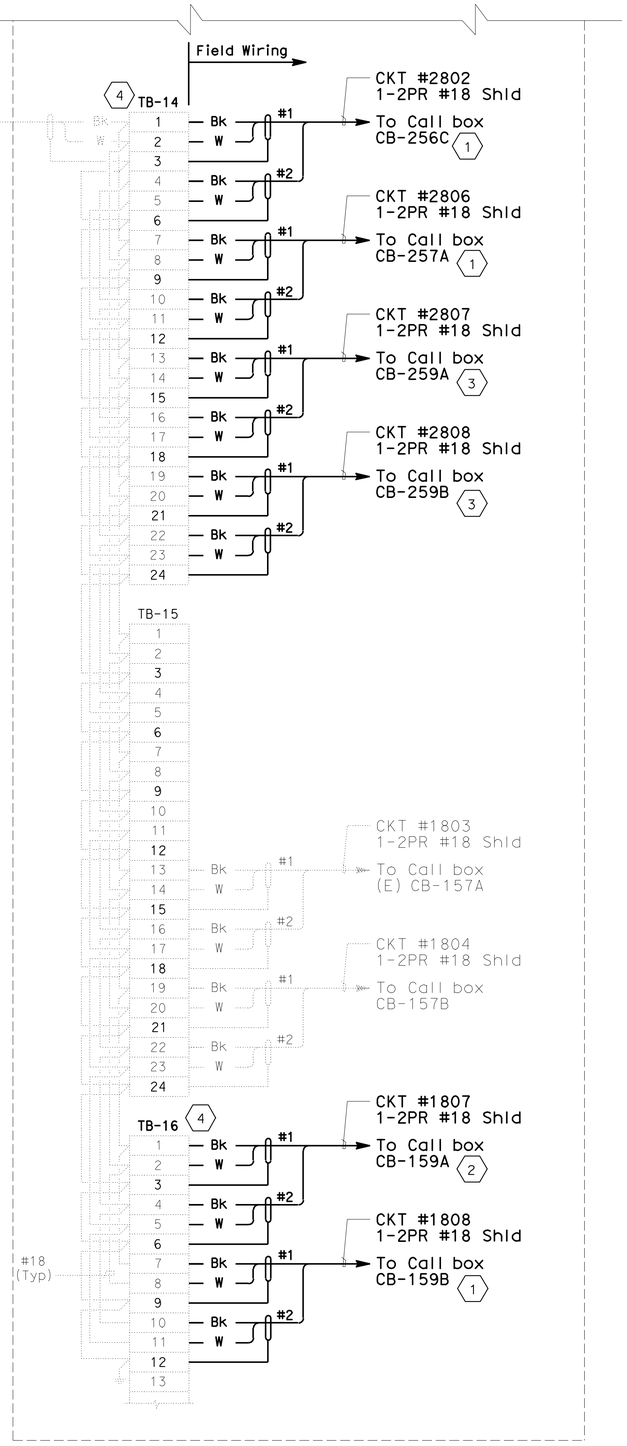

(E) RTU #16

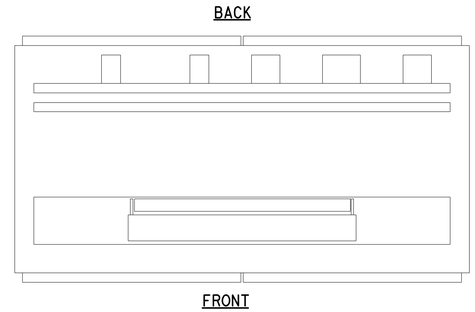

(E) RTU #16 CABINET

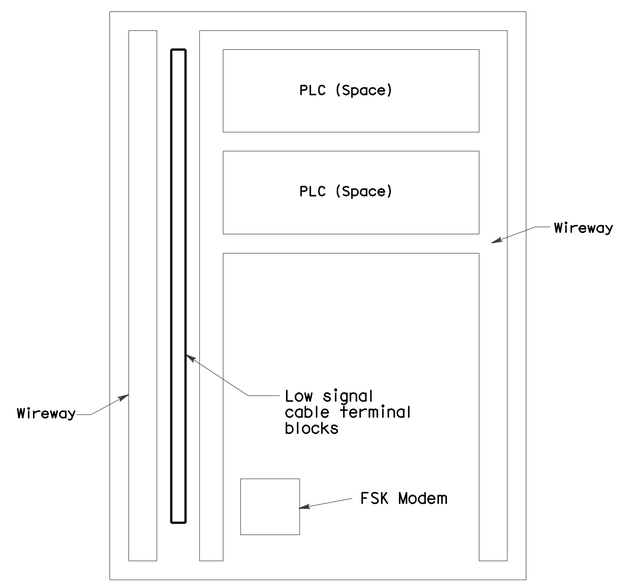

FRONT INTERNAL PAN ARRANGEMENT

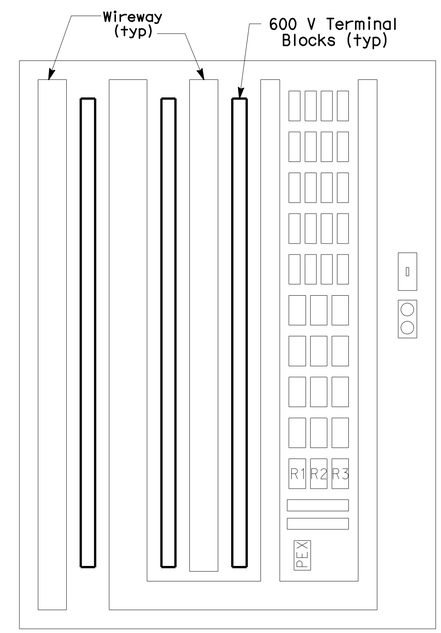

REAR INTERNAL PAN ARRANGEMENT

NOTE:

1. References:
   - For conduit and tray, cable and circuit schedules, see sheets starting at E-205.

SHEET NOTES:

1. For continuation, see sheet E-176.
2. For continuation, see sheet E-177.
3. For continuation, see sheet E-178.
4. (E) RTU #16, Contractor to verify actual location of termination points.

THIS PLAN IS ACCURATE FOR ELECTRICAL WORK ONLY.

DETAILS
SCADA REMOTE TERMINAL UNIT SYSTEM
(RTU #16 ELEMENTARY AND CONNECTION DIAGRAM)
NO SCALE

E-163

STATE OF CALIFORNIA - DEPARTMENT OF TRANSPORTATION
Caltrans

CONSULTANT FUNCTIONAL SUPERVISOR: BRADY NADELL
CALCULATED-DESIGNED BY: DAVID OTO
CHECKED BY: ELLERY LUCAS
REVISED BY / DATE REVISED

LAST REVISION 08-17-09
DATE PLOTTED => 06-OCT-2011
TIME PLOTTED => 07:13

Dist	COUNTY	ROUTE	KILOMETER POST TOTAL PROJECT	SHEET No.	TOTAL SHEETS
04	Ala	80	1.6/2.7	354	744

REGISTERED ELECTRICAL ENGINEER 5/02/11

DAVID H. OTO No. 10699 Exp. 06/30/2013 ELECTRICAL — REGISTERED PROFESSIONAL ENGINEER — STATE OF CALIFORNIA

10-3-11
PLANS APPROVAL DATE

THE STATE OF CALIFORNIA OR ITS OFFICERS OR AGENTS SHALL NOT BE RESPONSIBLE FOR THE ACCURACY OR COMPLETENESS OF ELECTRONIC COPIES OF THIS PLAN SHEET.

PB AMERICAS, Inc.
303 Second St., Suite 700N
San Francisco, CA 94107-1317

Caltrans Metric

SHEET NOTES:

1. (E) RTU #16, Contractor to verify actual location of termination points.
2. Install a new terminal block.

NOTE:

1. References:
   - For 480 V LVCC elevation and schedules, see sheets E-135 and E-137.
   - For conduit and tray, cable and circuit schedules, see sheets starting at E-205.

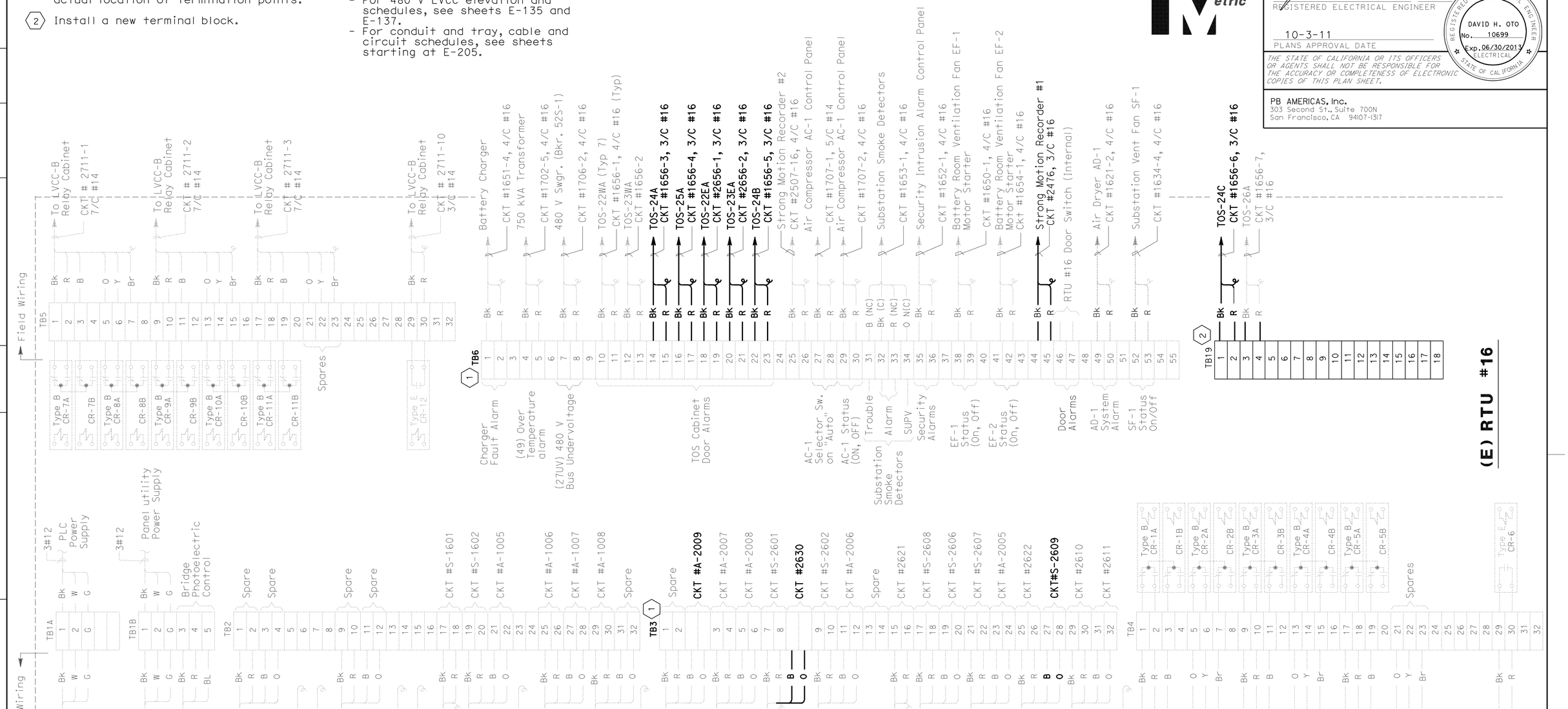

DETAILS
SCADA REMOTE TERMINAL UNIT SYSTEM
(RTU #16 ELEMENTARY AND CONNECTION DIAGRAM)

NO SCALE

E-164

THIS PLAN IS ACCURATE FOR ELECTRICAL WORK ONLY.

STATE OF CALIFORNIA - DEPARTMENT OF TRANSPORTATION
Caltrans

CONSULTANT FUNCTIONAL SUPERVISOR: BRADY NADELL
CALCULATED-DESIGNED BY: DAVID OTO
CHECKED BY: ELLERY LUCAS
REVISED BY
DATE REVISED

LAST REVISION 08-17-09
DATE PLOTTED => 06-OCT-2011
TIME PLOTTED => 07:13

Dist	COUNTY	ROUTE	KILOMETER POST TOTAL PROJECT	SHEET No.	TOTAL SHEETS
04	Ala	80	1.6/2.7	355	744

REGISTERED ELECTRICAL ENGINEER 5/02/11

10-3-11
PLANS APPROVAL DATE

REGISTERED PROFESSIONAL ENGINEER DAVID H. OTO No. 10699 Exp. 06/30/2013 ELECTRICAL STATE OF CALIFORNIA

THE STATE OF CALIFORNIA OR ITS OFFICERS OR AGENTS SHALL NOT BE RESPONSIBLE FOR THE ACCURACY OR COMPLETENESS OF ELECTRONIC COPIES OF THIS PLAN SHEET.

PB AMERICAS, Inc.
303 Second St., Suite 700N
San Francisco, CA 94107-1317

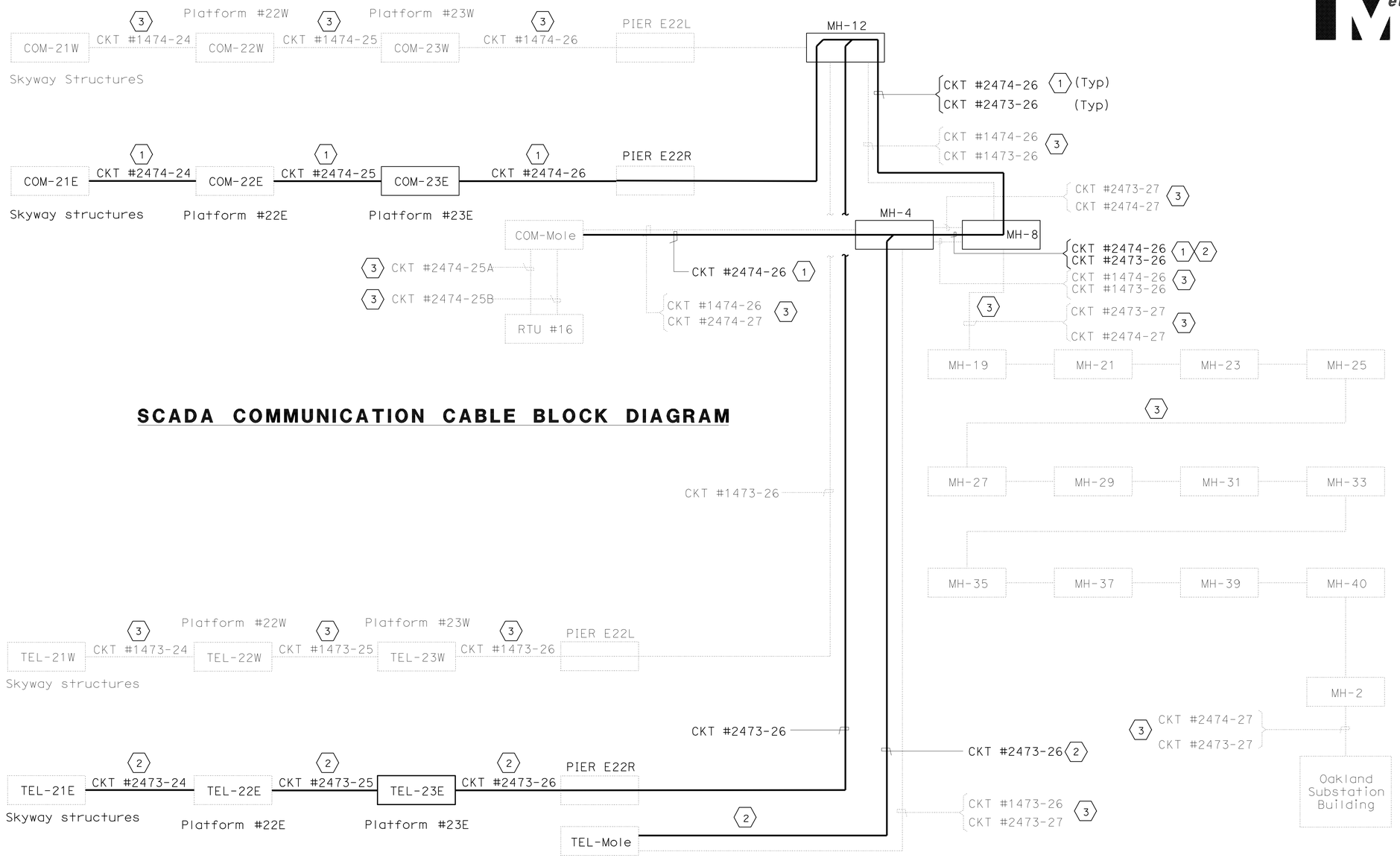

SCADA COMMUNICATION CABLE BLOCK DIAGRAM

TELEPHONE COMMUNICATION CABLE BLOCK DIAGRAM

NOTE:

1. References:
   - For conduit and tray, cable and circuit schedules, see sheets starting at E-205.
   - For (E) RTU #16 connection diagram, see sheets E-163 and E-164.
   - For (E) COM-Mole Terminal Box connection diagram, see sheet E-169.
   - For (E) Tel-Mole Terminal Box Connection diagram, see sheet E-173.

SHEET NOTES:

(1) SCADA communication cable 50 pairs #18, shielded pairs and overall shield.

(2) Telephone 50 pairs #18, shielded pairs with overall shield.

(3) Existing.

DETAILS
SCADA REMOTE TERMINAL UNIT SYSTEM (CABLE BLOCK DIAGRAM)
NO SCALE

E-165

THIS PLAN IS ACCURATE FOR ELECTRICAL WORK ONLY.

STATE OF CALIFORNIA - DEPARTMENT OF TRANSPORTATION
Caltrans

CONSULTANT FUNCTIONAL SUPERVISOR: BRADY NADELL
CALCULATED-DESIGNED BY: DAVID OTO
CHECKED BY: ELLERY LUCAS
REVISED BY / DATE REVISED

LAST REVISION 08-17-09 | DATE PLOTTED => 06-OCT-2011 | TIME PLOTTED => 07:13

Dist	COUNTY	ROUTE	KILOMETER POST TOTAL PROJECT	SHEET No.	TOTAL SHEETS
04	Ala	80	1.6/2.7	356	744

REGISTERED ELECTRICAL ENGINEER 5/02/11

10-3-11
PLANS APPROVAL DATE

REGISTERED PROFESSIONAL ENGINEER
DAVID H. OTO
No. 10699
Exp. 06/30/2013
ELECTRICAL
STATE OF CALIFORNIA

THE STATE OF CALIFORNIA OR ITS OFFICERS OR AGENTS SHALL NOT BE RESPONSIBLE FOR THE ACCURACY OR COMPLETENESS OF ELECTRONIC COPIES OF THIS PLAN SHEET.

PB AMERICAS, Inc.
303 Second St., Suite 700N
San Francisco, CA 94107-1317

(E) COMMUNICATION TERMINAL BOX

NOTE:

1. References:
   - For conduit and tray, cable and circuit schedules, see sheets starting at E-205.
   - For SCADA RTU cable block diagram, see sheet E-165.
   - For SCADA RTU system locations, see sheet E-161.

SHEET NOTES:

(1) For COM-22E connection diagram, see sheet E-167.

(2) Existing.

(3) Field to install. Do not ground shield.

(4) Remove existing jumper from terminals 60 and 61.

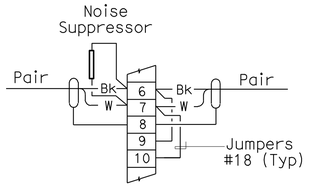

TYPICAL WIRING EACH PAIR

DETAILS
SCADA REMOTE TERMINAL UNIT SYSTEM (COM-21E TERMINAL BOX WIRING DIAGRAM)
NO SCALE

E-166

THIS PLAN IS ACCURATE FOR ELECTRICAL WORK ONLY.

STATE OF CALIFORNIA - DEPARTMENT OF TRANSPORTATION
Caltrans

CONSULTANT FUNCTIONAL SUPERVISOR: BRADY NADELL
CALCULATED-DESIGNED BY: DAVID OTO
CHECKED BY: ELLERY LUCAS
REVISED BY
DATE REVISED

LAST REVISION 08-17-09
DATE PLOTTED => 06-OCT-2011
TIME PLOTTED => 07:13

Dist	COUNTY	ROUTE	KILOMETER POST TOTAL PROJECT	SHEET No.	TOTAL SHEETS
04	Ala	80	1.6/2.7	357	744

REGISTERED ELECTRICAL ENGINEER 5/02/11

10-3-11
PLANS APPROVAL DATE

REGISTERED PROFESSIONAL ENGINEER DAVID H. OTO No. 10699 Exp. 06/30/2013 ELECTRICAL STATE OF CALIFORNIA

THE STATE OF CALIFORNIA OR ITS OFFICERS OR AGENTS SHALL NOT BE RESPONSIBLE FOR THE ACCURACY OR COMPLETENESS OF ELECTRONIC COPIES OF THIS PLAN SHEET.

PB AMERICAS, Inc.
303 Second St., Suite 700N
San Francisco, CA 94107-1317

3 To SCADA Communication Terminal Box COM-21E

CKT #2474-24
50 Pr's #18
Shielded Pairs
With Overall Shield

(E) COMMUNICATION TERMINAL BOX

1 To SCADA Communication Terminal Box COM-23E

CKT #2474-25
50 Pr's #18
Shielded Pairs
With Overall Shield

NOTE:

1. References:
   - For conduit and tray, cable and circuit schedules, see sheets starting at E-205.
   - For SCADA RTU cable block diagram, see sheet E-165.
   - For SCADA RTU system locations, see sheet E-161.

SHEET NOTES:

1. For COM-23E connection diagram, see sheet E-168.
2. Do not ground shield.
3. For COM-21E connection diagram, see sheet E-166.

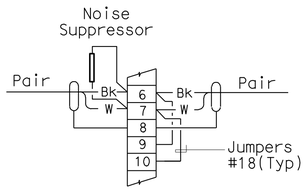

TYPICAL WIRING EACH PAIR

DETAILS
SCADA REMOTE TERMINAL UNIT SYSTEM (COM-22E TERMINAL BOX WIRING DIAGRAM)
NO SCALE

THIS PLAN IS ACCURATE FOR ELECTRICAL WORK ONLY.

E-167

STATE OF CALIFORNIA - DEPARTMENT OF TRANSPORTATION
Caltrans

CONSULTANT FUNCTIONAL SUPERVISOR: BRADY NADELL
CALCULATED-DESIGNED BY: DAVID OTO
CHECKED BY: ELLERY LUCAS
REVISED BY
DATE REVISED

LAST REVISION 08-17-09
DATE PLOTTED => 06-OCT-2011
TIME PLOTTED => 07:13

Dist	COUNTY	ROUTE	KILOMETER POST TOTAL PROJECT	SHEET No.	TOTAL SHEETS
04	Ala	80	1.6/2.7	358	744

REGISTERED ELECTRICAL ENGINEER 5/02/11

10-3-11
PLANS APPROVAL DATE

REGISTERED PROFESSIONAL ENGINEER
DAVID H. OTO
No. 10699
Exp. 06/30/2013
ELECTRICAL
STATE OF CALIFORNIA

THE STATE OF CALIFORNIA OR ITS OFFICERS OR AGENTS SHALL NOT BE RESPONSIBLE FOR THE ACCURACY OR COMPLETENESS OF ELECTRONIC COPIES OF THIS PLAN SHEET.

PB AMERICAS, Inc.
303 Second St., Suite 700N
San Francisco, CA 94107-1317

COMMUNICATION TERMINAL BOX

2 To SCADA Communication Terminal Box COM-22E

CKT #2474-25
50 Pr's #18
Shielded Pairs
With Overall Shield

1 To SCADA Communication Terminal Box COM-MOLE

CKT #2474-26
50 Pr's #18
Shielded Pairs
With Overall Shield

NOTE:

1. References:
   - For conduit and tray, cable and circuit schedules, see sheets starting at E-205.
   - For SCADA RTU cable block diagram, see sheet E-165.
   - For SCADA RTU system locations, see sheet E-161.

SHEET NOTES:

1. For COM-MOLE connection diagram, see sheet E-169.
2. For COM-22E connection diagram, see sheet E-167.
3. Do not ground shield.

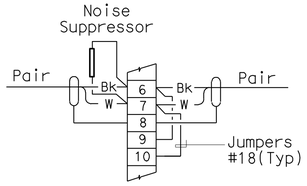

TYPICAL WIRING EACH PAIR

DETAILS
SCADA REMOTE TERMINAL UNIT SYSTEM (COM-23E TERMINAL BOX WIRING DIAGRAM)
NO SCALE

THIS PLAN IS ACCURATE FOR ELECTRICAL WORK ONLY.

E-168

STATE OF CALIFORNIA - DEPARTMENT OF TRANSPORTATION
Caltrans

CONSULTANT FUNCTIONAL SUPERVISOR: BRADY NADELL
CALCULATED-DESIGNED BY: DAVID OTO
CHECKED BY: ELLERY LUCAS
REVISED BY
DATE REVISED

LAST REVISION DATE PLOTTED => 06-OCT-2011
TIME PLOTTED => 07:13
08-17-09

Dist	COUNTY	ROUTE	KILOMETER POST TOTAL PROJECT	SHEET No.	TOTAL SHEETS
04	Ala	80	1.6/2.7	359	744

REGISTERED ELECTRICAL ENGINEER 5/02/11

10-3-11
PLANS APPROVAL DATE

REGISTERED PROFESSIONAL ENGINEER DAVID H. OTO No. 10699 Exp. 06/30/2013 ELECTRICAL STATE OF CALIFORNIA

THE STATE OF CALIFORNIA OR ITS OFFICERS OR AGENTS SHALL NOT BE RESPONSIBLE FOR THE ACCURACY OR COMPLETENESS OF ELECTRONIC COPIES OF THIS PLAN SHEET.

PB AMERICAS, Inc.
303 Second St., Suite 700N
San Francisco, CA 94107-1317

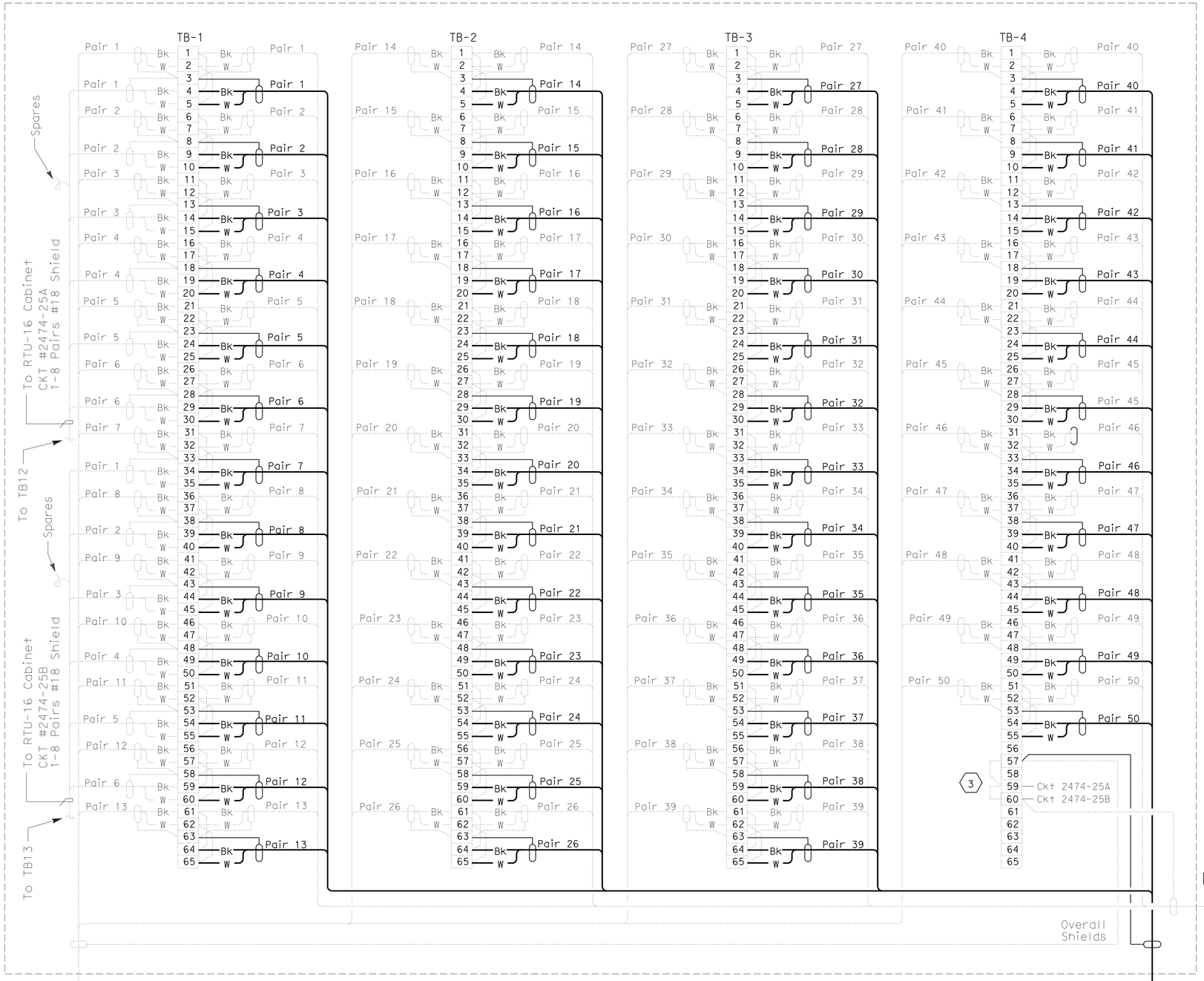

NOTE:

1. References:
   - For conduit and tray, cable and circuit schedules, see sheets starting at E-205.
   - For SCADA RTU cable block diagram, see sheet E-165.
   - For SCADA RTU system locations, see sheet E-161.

SHEET NOTES:

(1) Existing.

(2) For COM-23E connection diagram, see sheet E-168.

(3) Do not ground shield.

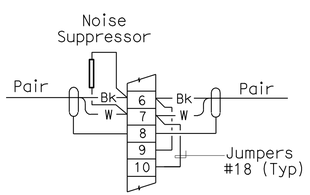

TYPICAL WIRING EACH PAIR

(1) To SCADA Communication Terminal Box COM-23W

CKT #1474-26
50 Pr's #18
Shielded Pairs
With Overall Shield

(E) COMMUNICATION TERMINAL BOX

(2) To SCADA Communication Terminal Box COM-23E

CKT #2474-26
50 Pr's #18
Shielded Pairs
With Overall Shield

DETAILS
SCADA REMOTE TERMINAL UNIT SYSTEM (COM-MOLE TERMINAL BOX WIRING DIAGRAM)
NO SCALE

THIS PLAN IS ACCURATE FOR ELECTRICAL WORK ONLY.

E-169

STATE OF CALIFORNIA - DEPARTMENT OF TRANSPORTATION
Caltrans

CONSULTANT FUNCTIONAL SUPERVISOR: BRADY NADELL
CALCULATED-DESIGNED BY: DAVID OTO
CHECKED BY: ELLERY LUCAS
REVISED BY / DATE REVISED

LAST REVISION DATE PLOTTED => 06-OCT-2011
08-17-09 TIME PLOTTED => 07:14

Dist	COUNTY	ROUTE	KILOMETER POST TOTAL PROJECT	SHEET No.	TOTAL SHEETS
04	Ala	80	1.6/2.7	360	744

5/02/11
REGISTERED ELECTRICAL ENGINEER

10-3-11
PLANS APPROVAL DATE

REGISTERED PROFESSIONAL ENGINEER
DAVID H. OTO
No. 10699
Exp. 06/30/2013
ELECTRICAL
STATE OF CALIFORNIA

THE STATE OF CALIFORNIA OR ITS OFFICERS OR AGENTS SHALL NOT BE RESPONSIBLE FOR THE ACCURACY OR COMPLETENESS OF ELECTRONIC COPIES OF THIS PLAN SHEET.

PB AMERICAS, Inc.
303 Second St., Suite 700N
San Francisco, CA 94107-1317

(E) TEL-21E TERMINAL BOX

1 To Telephone Terminal Box TEL-20E

CKT #2473-22
Telephone Communication Cable,
50 Pr's #18 Shielded Pairs
With Overall Shield

2 To Telephone Terminal Box TEL-22E

CKT #2473-24
Telephone Communication Cable,
50 Pr's #18 Shielded Pairs
With Overall Shield

THIS PLAN IS ACCURATE FOR ELECTRICAL WORK ONLY.

NOTE:

1. References:
   - For conduit and tray, cable and circuit schedules, see sheets starting at E-205.
   - For Telephone system cable block diagram, see sheet E-165.

SHEET NOTES:

1. Existing.
2. For TEL-22E connection diagram, see sheet E-171.
3. Field to install. Do not ground shield.

DETAILS
SCADA REMOTE TERMINAL UNIT SYSTEM
(TEL-21E TERMINAL BOX WIRING DIAGRAM)
NO SCALE

E-170

STATE OF CALIFORNIA - DEPARTMENT OF TRANSPORTATION
Caltrans

CONSULTANT FUNCTIONAL SUPERVISOR: BRADY NADELL
CALCULATED-DESIGNED BY: DAVID OTO
CHECKED BY: ELLERY LUCAS
REVISED BY / DATE REVISED

LAST REVISION 08-17-09 DATE PLOTTED => 06-OCT-2011 TIME PLOTTED => 07:14

Dist	COUNTY	ROUTE	KILOMETER POST TOTAL PROJECT	SHEET No.	TOTAL SHEETS
04	Ala	80	1.6/2.7	361	744

REGISTERED ELECTRICAL ENGINEER 5/02/11

10-3-11
PLANS APPROVAL DATE

REGISTERED PROFESSIONAL ENGINEER
DAVID H. OTO
No. 10699
Exp. 06/30/2013
ELECTRICAL
STATE OF CALIFORNIA

THE STATE OF CALIFORNIA OR ITS OFFICERS OR AGENTS SHALL NOT BE RESPONSIBLE FOR THE ACCURACY OR COMPLETENESS OF ELECTRONIC COPIES OF THIS PLAN SHEET.

PB AMERICAS, Inc.
303 Second St., Suite 700N
San Francisco, CA 94107-1317

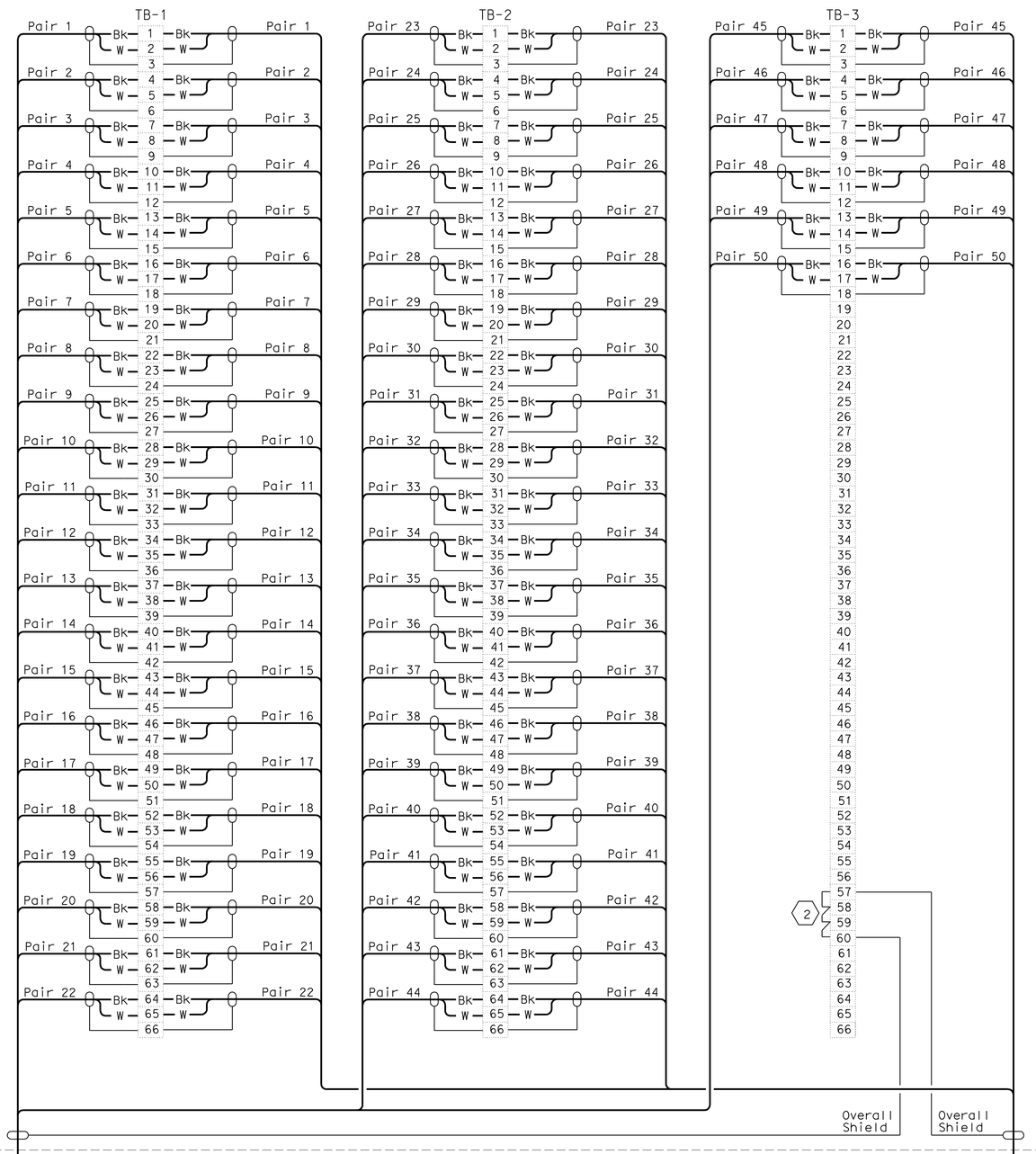

(E) TEL-22E TERMINAL BOX

NOTE:

1. References:
   - For conduit and tray, cable and circuit schedules, see sheets starting at E-205.

SHEET NOTES:

(1) For TEL-23E connection diagram, see sheet E-172.

(2) Do not ground shield.

(3) For TEL-21E connection diagram, see sheet E-170.

THIS PLAN IS ACCURATE FOR ELECTRICAL WORK ONLY.

DETAILS
SCADA REMOTE TERMINAL UNIT SYSTEM
(TEL-22E TERMINAL BOX WIRING DIAGRAM)
NO SCALE

E-171

STATE OF CALIFORNIA - DEPARTMENT OF TRANSPORTATION
Caltrans

CONSULTANT FUNCTIONAL SUPERVISOR: BRADY NADELL
CALCULATED-DESIGNED BY: DAVID OTO
CHECKED BY: ELLERY LUCAS
REVISED BY
DATE REVISED

LAST REVISION DATE PLOTTED => 06-OCT-2011
08-17-09 TIME PLOTTED => 07:14

Dist	COUNTY	ROUTE	KILOMETER POST TOTAL PROJECT	SHEET No.	TOTAL SHEETS
04	Ala	80	1.6/2.7	362	744

REGISTERED ELECTRICAL ENGINEER 5/02/11

10-3-11
PLANS APPROVAL DATE

REGISTERED PROFESSIONAL ENGINEER DAVID H. OTO No. 10699 Exp. 06/30/2013 ELECTRICAL STATE OF CALIFORNIA

THE STATE OF CALIFORNIA OR ITS OFFICERS OR AGENTS SHALL NOT BE RESPONSIBLE FOR THE ACCURACY OR COMPLETENESS OF ELECTRONIC COPIES OF THIS PLAN SHEET.

PB AMERICAS, Inc.
303 Second St., Suite 700N
San Francisco, CA 94107-1317

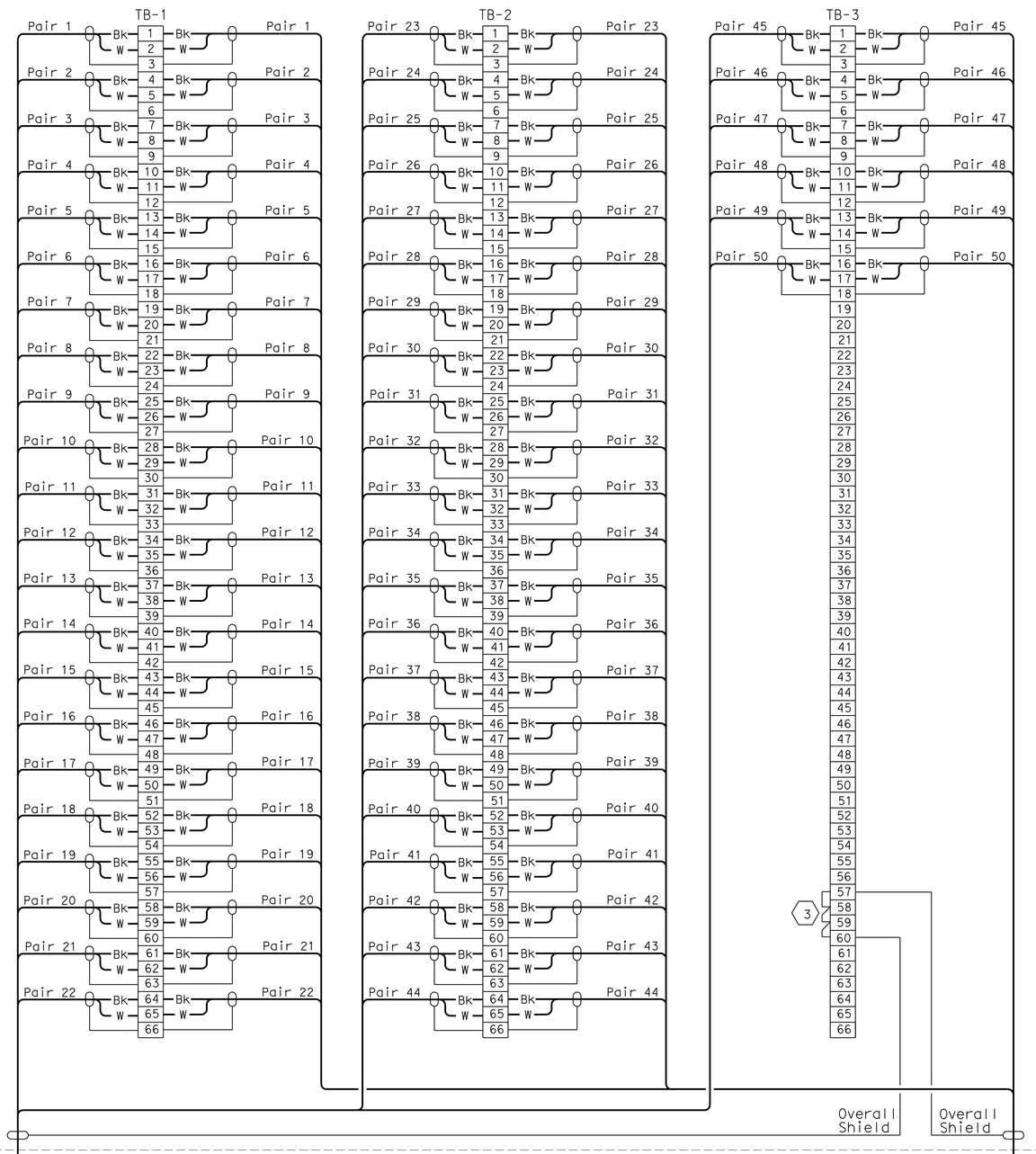

TEL-23E TERMINAL BOX

1 To Telephone Terminal Box TEL-22E

CKT #2473-25
Telephone Communication Cable,
50 Pr's #18 Shielded Pairs
With Overall Shield

2 To Telephone Terminal Box TEL-MOLE

CKT #2473-26
Telephone Communication Cable,
50 Pr's #18 Shielded Pairs
With Overall Shield

THIS PLAN IS ACCURATE FOR ELECTRICAL WORK ONLY.

NOTE:

1. References:
   - For conduit and tray, cable and circuit schedules, see sheets starting at E-205.

SHEET NOTES:

1. For TEL-22E connection diagram, see sheet E-171.
2. For TEL-MOLE connection diagram, see sheet E-173.
3. Do not ground shield.

DETAILS
SCADA REMOTE TERMINAL UNIT SYSTEM (TEL-23E TERMINAL BOX WIRING DIAGRAM)
NO SCALE

E-172

STATE OF CALIFORNIA - DEPARTMENT OF TRANSPORTATION
Caltrans

CONSULTANT FUNCTIONAL SUPERVISOR: BRADY NADELL
CALCULATED-DESIGNED BY: DAVID OTO
CHECKED BY: ELLERY LUCAS
REVISED BY
DATE REVISED

LAST REVISION DATE PLOTTED => 06-OCT-2011
08-17-09 TIME PLOTTED => 07:14

Dist	COUNTY	ROUTE	KILOMETER POST TOTAL PROJECT	SHEET No.	TOTAL SHEETS
04	Ala	80	1.6/2.7	363	744

REGISTERED ELECTRICAL ENGINEER 5/02/11

10-3-11
PLANS APPROVAL DATE

REGISTERED PROFESSIONAL ENGINEER
DAVID H. OTO
No. 10699
Exp. 06/30/2013
ELECTRICAL
STATE OF CALIFORNIA

THE STATE OF CALIFORNIA OR ITS OFFICERS OR AGENTS SHALL NOT BE RESPONSIBLE FOR THE ACCURACY OR COMPLETENESS OF ELECTRONIC COPIES OF THIS PLAN SHEET.

PB AMERICAS, Inc.
303 Second St., Suite 700N
San Francisco, CA 94107-1317

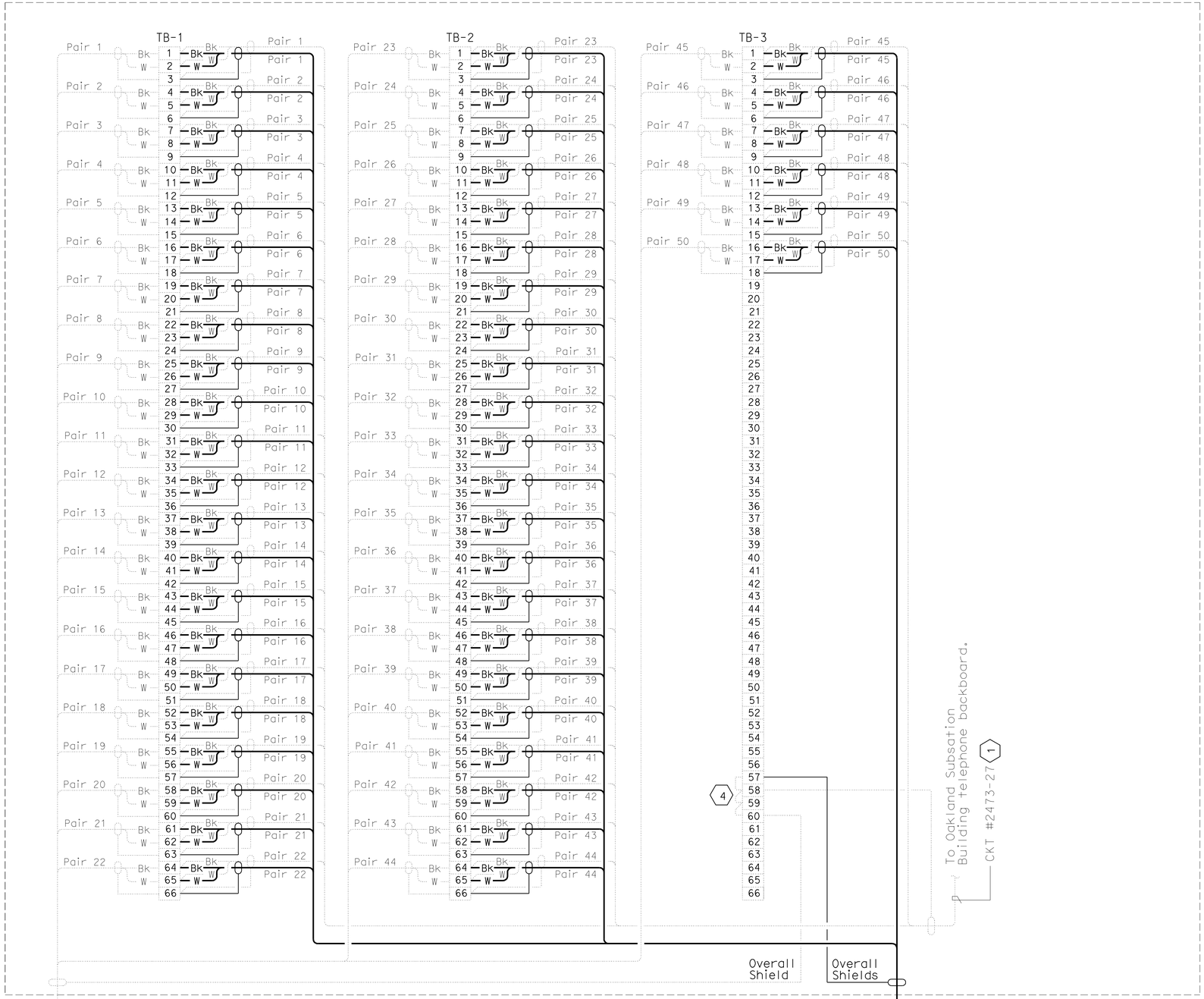

(E) TEL-MOLE TERMINAL BOX

NOTE:

1. References:
   - For cable/conduit schedules, see sheets starting at E-205.

SHEET NOTES:

1. Existing.
2. For TEL-23E connection diagram, see sheet E-172.
3. Do not ground shield.

THIS PLAN IS ACCURATE FOR ELECTRICAL WORK ONLY.

DETAILS
SCADA REMOTE TERMINAL UNIT SYSTEM (TEL-MOLE TERMINAL BOX WIRING DIAGRAM)
NO SCALE

E-173

STATE OF CALIFORNIA - DEPARTMENT OF TRANSPORTATION
Caltrans

CONSULTANT FUNCTIONAL SUPERVISOR: BRADY NADELL
CALCULATED-DESIGNED BY: DAVID OTO
CHECKED BY: ELLERY LUCAS
REVISED BY
DATE REVISED

LAST REVISION 08-17-09
DATE PLOTTED => 06-OCT-2011
TIME PLOTTED => 07:14

Dist	COUNTY	ROUTE	KILOMETER POST TOTAL PROJECT	SHEET No.	TOTAL SHEETS
04	Ala	80	1.6/2.7	364	744

05/02/11
REGISTERED ELECTRICAL ENGINEER

10-3-11
PLANS APPROVAL DATE

REGISTERED PROFESSIONAL ENGINEER
DAVID H. OTO
No. 10699
Exp. 06/30/2013
ELECTRICAL
STATE OF CALIFORNIA

THE STATE OF CALIFORNIA OR ITS OFFICERS OR AGENTS SHALL NOT BE RESPONSIBLE FOR THE ACCURACY OR COMPLETENESS OF ELECTRONIC COPIES OF THIS PLAN SHEET.

PB AMERICAS, Inc.
303 Second St., Suite 700N
San Francisco, CA 94107-1317

Caltrans Metric

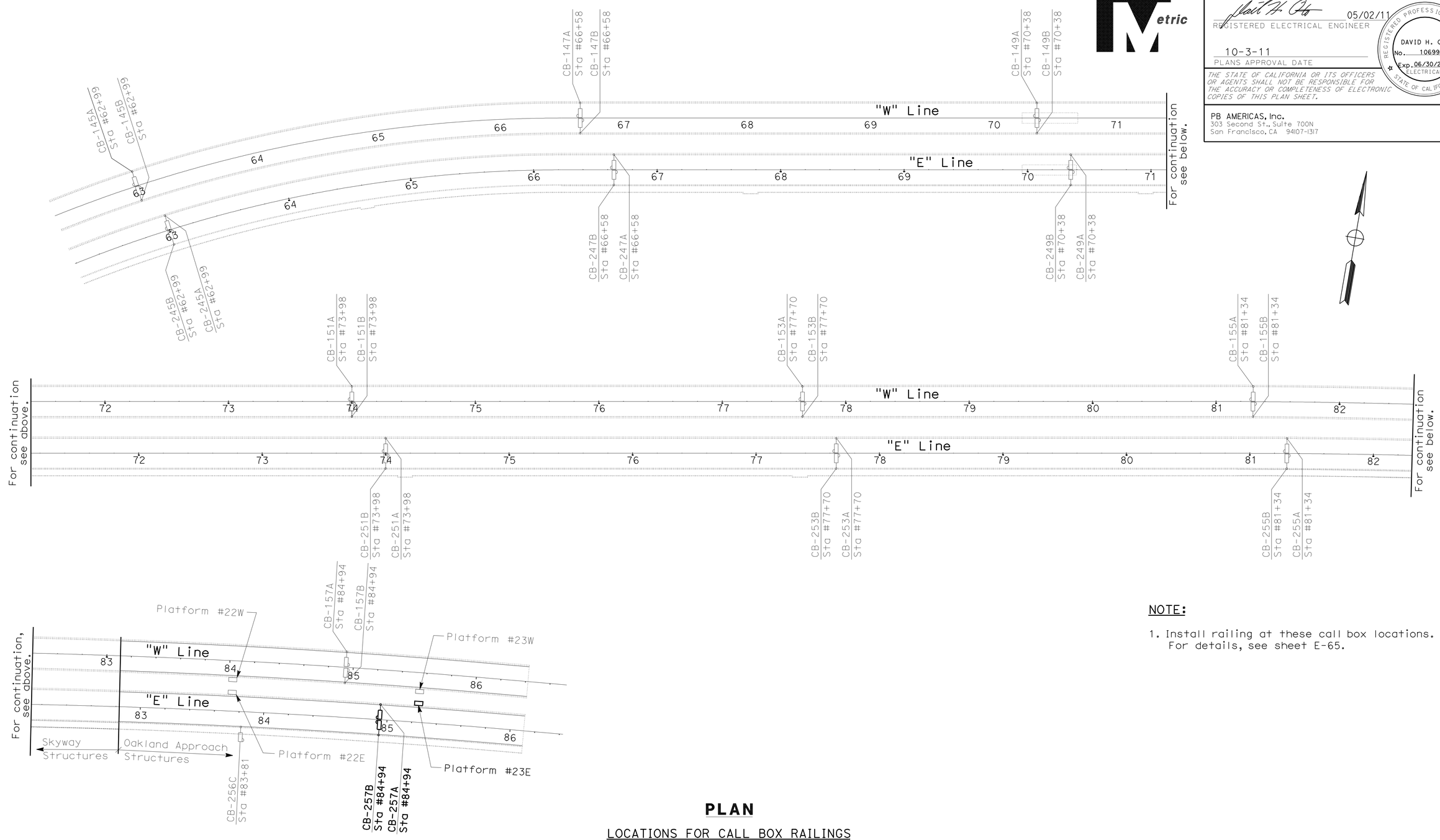

NOTE:

1. Install railing at these call box locations. For details, see sheet E-65.

PLAN

LOCATIONS FOR CALL BOX RAILINGS

CALL BOX SYSTEM
(BRIDGE STRUCTURE LOCATIONS)

SCALE: 1:1500

E-174

THIS PLAN IS ACCURATE FOR ELECTRICAL WORK ONLY.

ALL DIMENSIONS ARE IN METERS UNLESS OTHERWISE SHOWN

STATE OF CALIFORNIA - DEPARTMENT OF TRANSPORTATION
Caltrans

CONSULTANT FUNCTIONAL SUPERVISOR: BRADY NADELL
CALCULATED-DESIGNED BY: JEFFRI HALIM
CHECKED BY: ELLERY LUCAS
REVISED BY / DATE REVISED

LAST REVISION 08-17-09
DATE PLOTTED => 06-OCT-2011
TIME PLOTTED => 07:14

Dist	COUNTY	ROUTE	KILOMETER POST TOTAL PROJECT	SHEET No.	TOTAL SHEETS
04	Ala	80	1.6/2.7	365	744

05/02/11
REGISTERED ELECTRICAL ENGINEER

10-3-11
PLANS APPROVAL DATE

REGISTERED PROFESSIONAL ENGINEER
DAVID H. OTO
No. 10699
Exp. 06/30/2013
ELECTRICAL
STATE OF CALIFORNIA

THE STATE OF CALIFORNIA OR ITS OFFICERS OR AGENTS SHALL NOT BE RESPONSIBLE FOR THE ACCURACY OR COMPLETENESS OF ELECTRONIC COPIES OF THIS PLAN SHEET.

PB AMERICAS, Inc.
303 Second St., Suite 700N
San Francisco, CA 94107-1317

Caltrans Metric

CALL BOX SCHEDULE - OAKLAND TOUCHDOWN

Call Box Number	Station Number	Mounting Type	Location: Roadway side	RTU Connection	Remarks
CB-159A	88+59	Concrete Barrier (60 SC)	Westbound - North	RTU #16	At Grade
CB-159B	88+85	Concrete Barrier (60 SC)	Westbound - South	RTU #16	At Grade
CB-161A	92+14	Concrete Barrier	Westbound - North	Via CB-159A	At Grade
CB-161B	92+20	Concrete Barrier (60 S)	Westbound - South	Via CB-159B	At Grade
CB-256C	83+81	Bike Path Railing	Eastbound Bikeway	RTU #16	On Bikepath
CB-257A	84+94	Concrete Barrier (732 MOD)	Eastbound - North	RTU #16	On Bridge
CB-257B	84+94	Concrete Barrier (732 MOD)	Eastbound - South	Via CB-257A	On Bridge
CB-259A	88+54	Concrete Barrier (60 S)	Eastbound - North	RTU #16	At Grade
CB-259B	88+54	Concrete Barrier (60 S)	Eastbound - South	RTU #16	At Grade
CB-261A	92+30	Concrete Barrier (60 S)	Eastbound - North	Via CB-259A	At Grade
CB-261B	92+33	Concrete Barrier (60 S)	Eastbound - South	Via CB-259B	At Grade

NOTES:

1. The call boxes are State-furnished and shown for reference only. Installed by others.
2. The power conduit installation to the call boxes are staged and the conductors can only be installed when the conduit run is completed.
3. The signal conduit installation to call box are staged and the cable can only be pulled and functionally terminated on Stage 3.

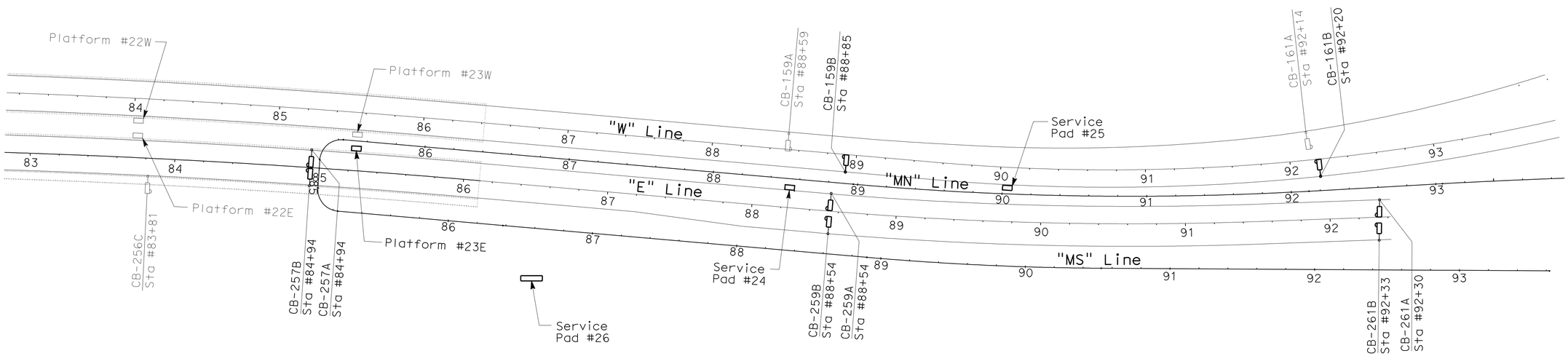

PLAN

CALL BOX SYSTEM
(LOCATIONS AND SCHEDULES)
SCALE: 1:1500

E-175

THIS PLAN IS ACCURATE FOR ELECTRICAL WORK ONLY.

ALL DIMENSIONS ARE IN METERS UNLESS OTHERWISE SHOWN

STATE OF CALIFORNIA - DEPARTMENT OF TRANSPORTATION
Caltrans

CONSULTANT FUNCTIONAL SUPERVISOR: BRADY NADELL
CALCULATED-DESIGNED BY: JEFFRI HALIM
CHECKED BY: ELLERY LUCAS
REVISED BY / DATE REVISED

LAST REVISION 08-17-09
DATE PLOTTED => 06-OCT-2011
TIME PLOTTED => 07:14

Dist	COUNTY	ROUTE	KILOMETER POST TOTAL PROJECT	SHEET No.	TOTAL SHEETS
04	Ala	80	1.6/2.7	366	744

REGISTERED ELECTRICAL ENGINEER 05/02/11

PLANS APPROVAL DATE 10-3-11

REGISTERED PROFESSIONAL ENGINEER DAVID H. OTO No. 10699 Exp. 06/30/2013 ELECTRICAL STATE OF CALIFORNIA

THE STATE OF CALIFORNIA OR ITS OFFICERS OR AGENTS SHALL NOT BE RESPONSIBLE FOR THE ACCURACY OR COMPLETENESS OF ELECTRONIC COPIES OF THIS PLAN SHEET.

PB AMERICAS, Inc.
303 Second St., Suite 700N
San Francisco, CA 94107-1317

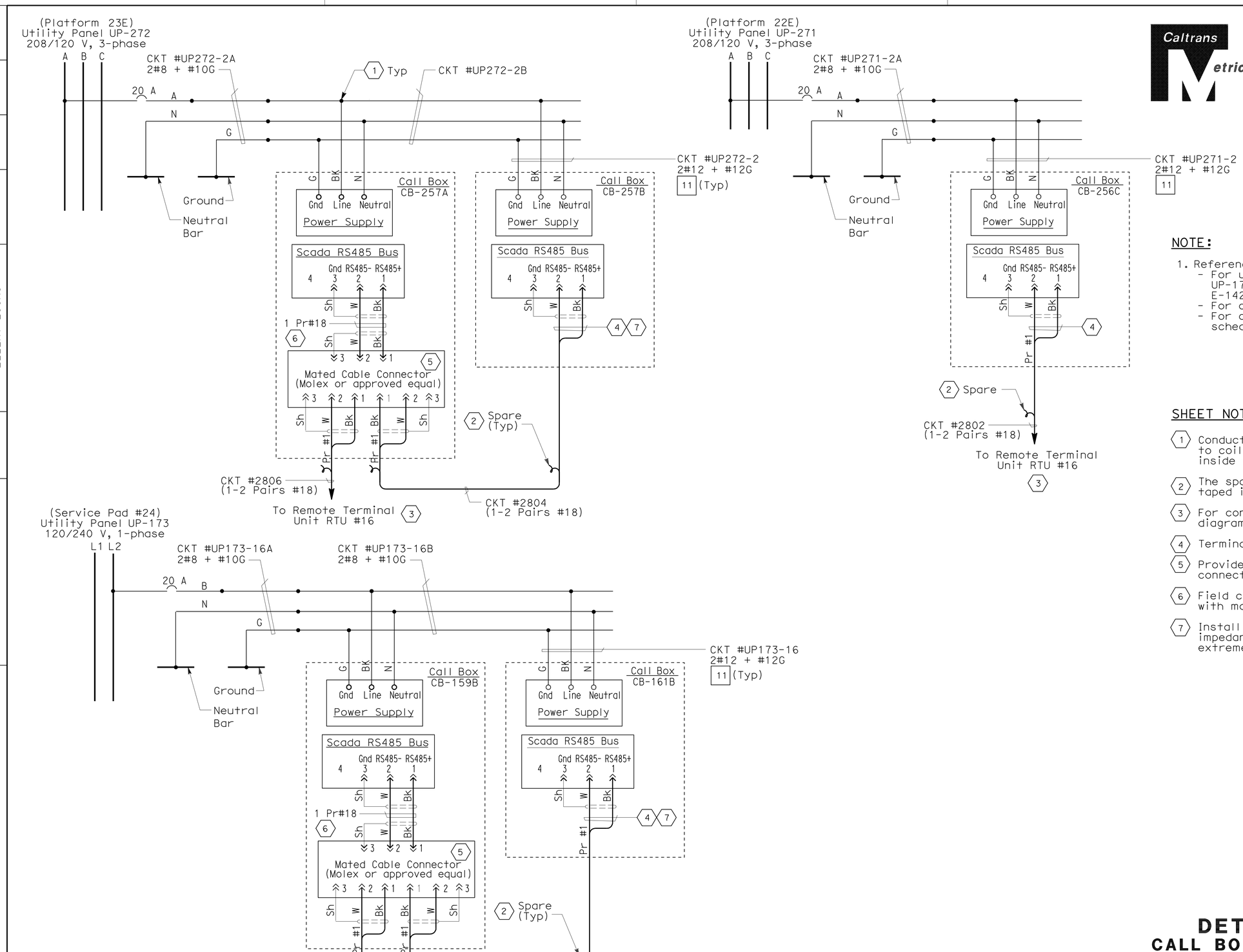

NOTE:

1. References:
   - For utility panel UP-272, UP-271 and UP-173 schedules, see sheets E-50 and E-142.
   - For call boxes schedule, see sheet E-175.
   - For conduit and tray, cable and circuit schedules, see sheets starting at E-205.

SHEET NOTES:

1. Conductors spliced inside PB-LTG. The Contractor to coil a sufficient length of power conductors inside the PB-LTG. Termination is by others.
2. The spare (pair #2) shall be coiled and taped inside PB-COM.
3. For continuation, see RTU #16 connection diagram sheet E-163.
4. Terminate conductor with mated male connector.
5. Provide cable and conductor connectors. Locate connectors inside Call Box enclosure.
6. Field cable, 1 pr #18, shielded. Terminate cables with mated male connectors.
7. Install resistor approximately equal to the impedance (Zo) of the twisted pair #1 at the extreme ends of each multidrop network.

DETAILS
CALL BOX SYSTEM
(CALL BOX WIRING DIAGRAMS)
NO SCALE

THIS PLAN IS ACCURATE FOR ELECTRICAL WORK ONLY.

E-176

REVISED BY	DATE REVISED
JEFFRI HALIM	ELLERY LUCAS

CALCULATED-DESIGNED BY / CHECKED BY

CONSULTANT FUNCTIONAL SUPERVISOR: BRADY NADELL

STATE OF CALIFORNIA - DEPARTMENT OF TRANSPORTATION

LAST REVISION 08-17-09 | DATE PLOTTED => 01-MAR-2012 | TIME PLOTTED => 13:53

Dist	COUNTY	ROUTE	KILOMETER POST TOTAL PROJECT	SHEET No.	TOTAL SHEETS
04	Ala	80	1.6/2.7	367	744

REGISTERED ELECTRICAL ENGINEER 05/02/11

PLANS APPROVAL DATE 10-3-11

REGISTERED PROFESSIONAL ENGINEER DAVID H. OTO No. 10699 Exp. 06/30/2013 ELECTRICAL STATE OF CALIFORNIA

THE STATE OF CALIFORNIA OR ITS OFFICERS OR AGENTS SHALL NOT BE RESPONSIBLE FOR THE ACCURACY OR COMPLETENESS OF ELECTRONIC COPIES OF THIS PLAN SHEET.

PB AMERICAS, Inc.
303 Second St., Suite 700N
San Francisco, CA 94107-1317

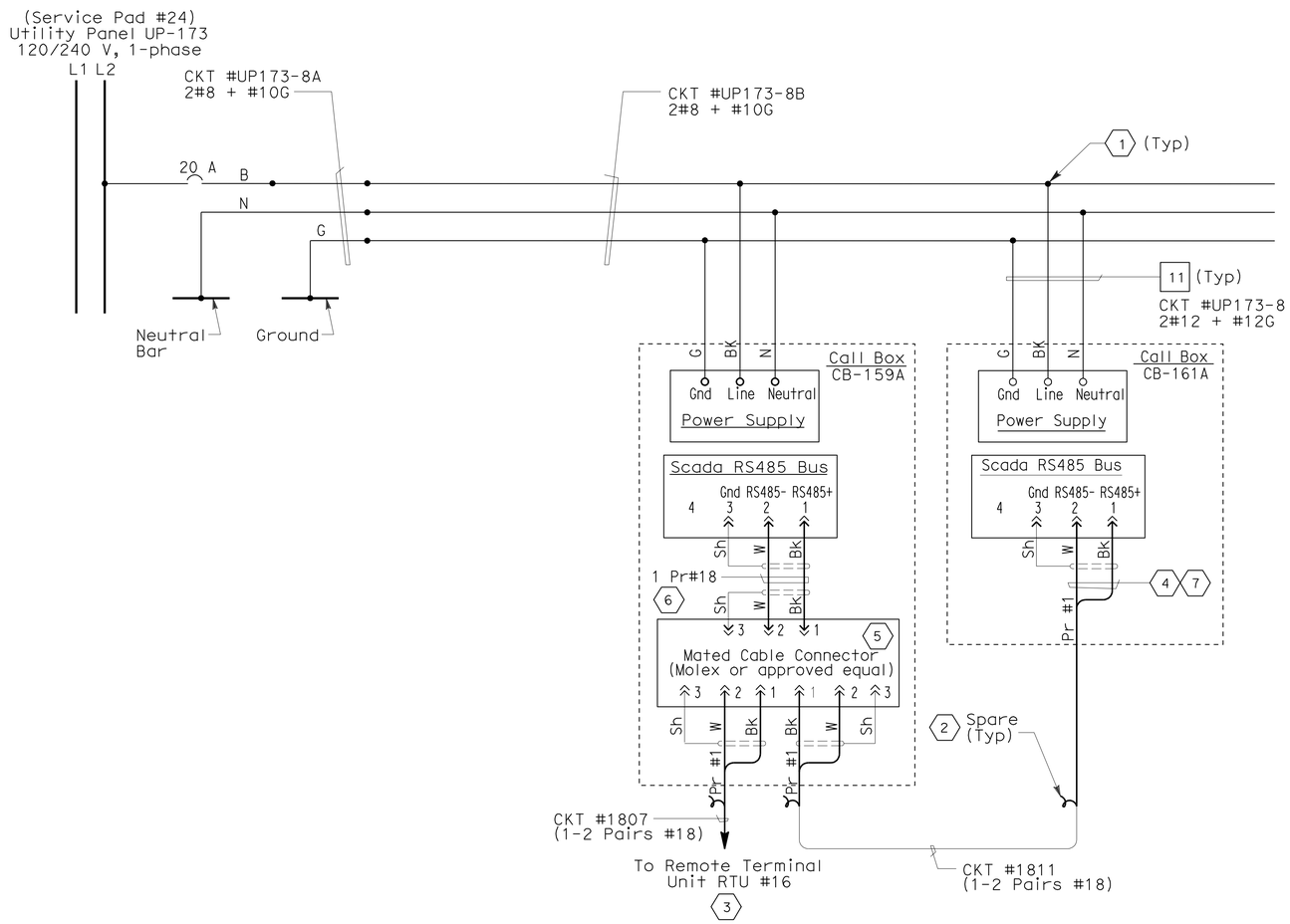

NOTE:

1. References:
   - For utility panel UP-173, see sheet E-142.
   - For call boxes schedule, see sheet E-175.
   - For conduit and tray, cable and circuit schedules, see sheets starting at E-205.

SHEET NOTES:

1. Conductors spliced inside PB-LTG. The Contractor to coil a sufficient length of power conductors inside the PB-LTG. Termination is by others.
2. The spare (pair #2) shall be coiled and taped inside PB-COM.
3. For continuation, see RTU #16 connection diagram sheet E-163.
4. Terminate conductor with mated male connector.
5. Provide cable and conductor connectors. Locate connectors inside Call Box enclosure.
6. Field cable, 1 pr #18, shielded. Terminate cables with mated male connectors.
7. Install resistor approximately equal to the impedance (Zo) of the twisted pair #1 at the extreme ends of each multidrop network.

DETAILS
CALL BOX SYSTEM
(CALL BOX WIRING DIAGRAMS)
NO SCALE

E-177

THIS PLAN IS ACCURATE FOR ELECTRICAL WORK ONLY.

STATE OF CALIFORNIA - DEPARTMENT OF TRANSPORTATION
Caltrans

CONSULTANT FUNCTIONAL SUPERVISOR: BRADY NADELL
CALCULATED-DESIGNED BY: JEFFRI HALIM
CHECKED BY: ELLERY LUCAS
REVISED BY / DATE REVISED

LAST REVISION 08-17-09 DATE PLOTTED => 01-MAR-2012 TIME PLOTTED => 13:53

Dist	COUNTY	ROUTE	KILOMETER POST TOTAL PROJECT	SHEET No.	TOTAL SHEETS
04	Ala	80	1.6/2.7	368	744

05/02/11
REGISTERED ELECTRICAL ENGINEER

10-3-11
PLANS APPROVAL DATE

REGISTERED PROFESSIONAL ENGINEER
DAVID H. OTO
No. 10699
Exp. 06/30/2013
ELECTRICAL
STATE OF CALIFORNIA

THE STATE OF CALIFORNIA OR ITS OFFICERS OR AGENTS SHALL NOT BE RESPONSIBLE FOR THE ACCURACY OR COMPLETENESS OF ELECTRONIC COPIES OF THIS PLAN SHEET.

PB AMERICAS, Inc.
303 Second St., Suite 700N
San Francisco, CA 94107-1317

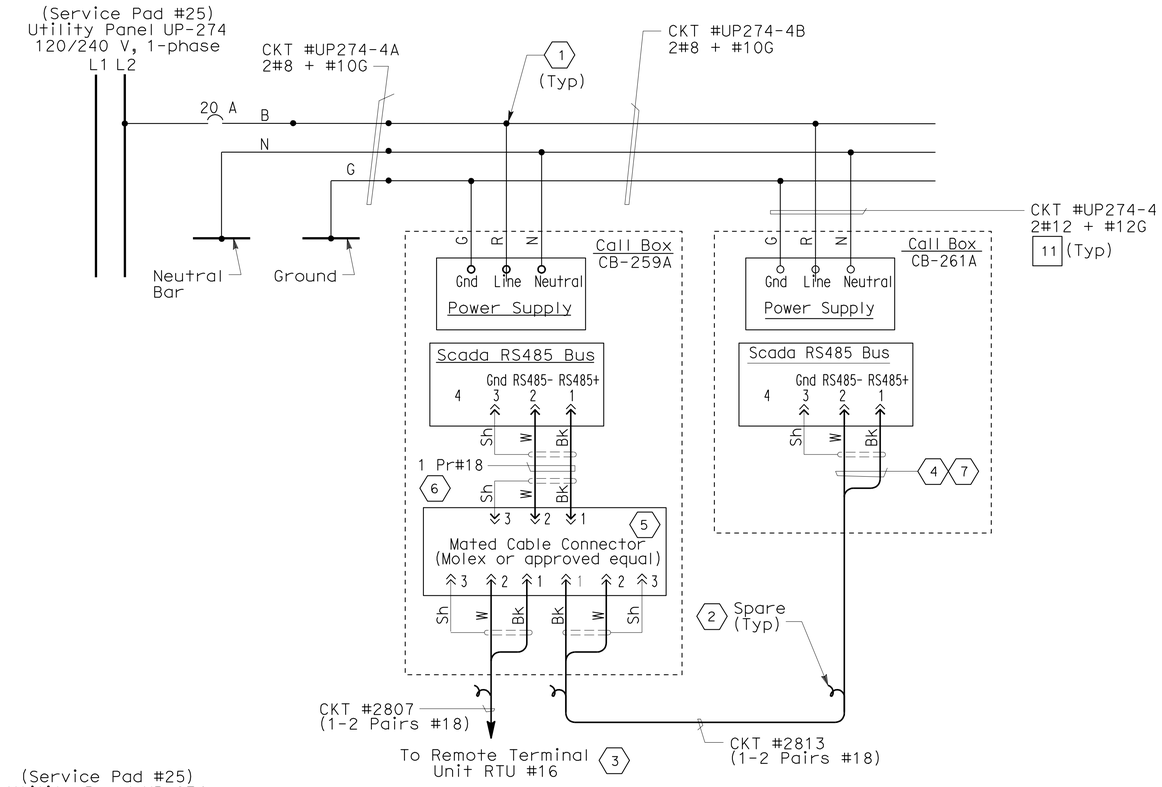

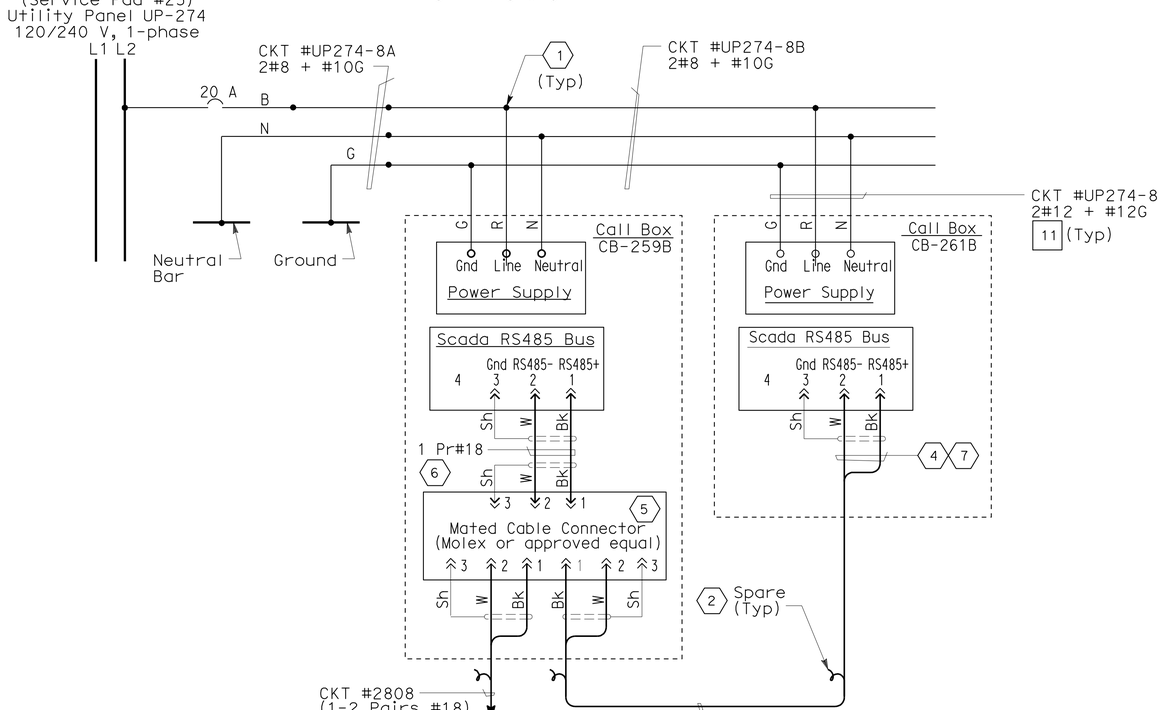

THIS PLAN IS ACCURATE FOR ELECTRICAL WORK ONLY.

NOTE:

1. References:
   - For utility panel UP-274 schedule, see sheet E-142.
   - For call boxes schedule, see sheet E-175.
   - For conduit and tray, cable and circuit schedules, see sheets starting at E-205.

SHEET NOTES:

(1) Conductors spliced inside PB-LTG. The Contractor to coil a sufficient length of power conductors inside the PB-LTG. Termination is by others.

(2) The spare (pair #2) shall be coiled and taped inside PB-COM.

(3) For continuation, see RTU #16 connection diagram sheet E-163.

(4) Terminate conductor with mated male connector.

(5) Provide cable and conductor connectors. Locate connectors inside Call Box enclosure.

(6) Field cable, 1 pr #18, shielded. Terminate cables with mated male connectors.

(7) Install resistor approximately equal to the impedance (Zo) of the twisted pair #1 at the extreme ends of each multidrop network.

DETAILS
CALL BOX SYSTEM
(CALL BOX WIRING DIAGRAMS)
NO SCALE

E-178

STATE OF CALIFORNIA - DEPARTMENT OF TRANSPORTATION
Caltrans

CONSULTANT FUNCTIONAL SUPERVISOR: BRADY NADELL
CALCULATED-DESIGNED BY: JEFFRI HALIM
CHECKED BY: ELLERY LUCAS
REVISED BY / DATE REVISED

LAST REVISION 08-17-09
DATE PLOTTED => 01-MAR-2012
TIME PLOTTED => 13:53

Dist	COUNTY	ROUTE	KILOMETER POST TOTAL PROJECT	SHEET No.	TOTAL SHEETS
04	Ala	80	1.6/2.7	369	744

REGISTERED ELECTRICAL ENGINEER 05/02/11

PLANS APPROVAL DATE 10-3-11

REGISTERED PROFESSIONAL ENGINEER DAVID H. OTO No. 10699 Exp. 06/30/2013 ELECTRICAL STATE OF CALIFORNIA

THE STATE OF CALIFORNIA OR ITS OFFICERS OR AGENTS SHALL NOT BE RESPONSIBLE FOR THE ACCURACY OR COMPLETENESS OF ELECTRONIC COPIES OF THIS PLAN SHEET.

PB AMERICAS, Inc.
303 Second St., Suite 700N
San Francisco, CA 94107-1317

Caltrans Metric

NOTE:

1. References:
   - For sensor and recorder schedule, see sheet E-186.
   - For strong motion sensor enclosures, see sheet E-187.

SHEET NOTES:

1. For locations of sensors at Hinge EE, and midspan Pier table E17R/E18R at the girder level, see plans on sheet E-180.
2. For locations of sensors at Pier E18R at the girder level, see plans on sheet E-181.
3. For locations of sensors at Pier table E19R at the girder level, see plans on sheet E-182.
4. For location of conduits in pier E22R, see plan sheet E-184.

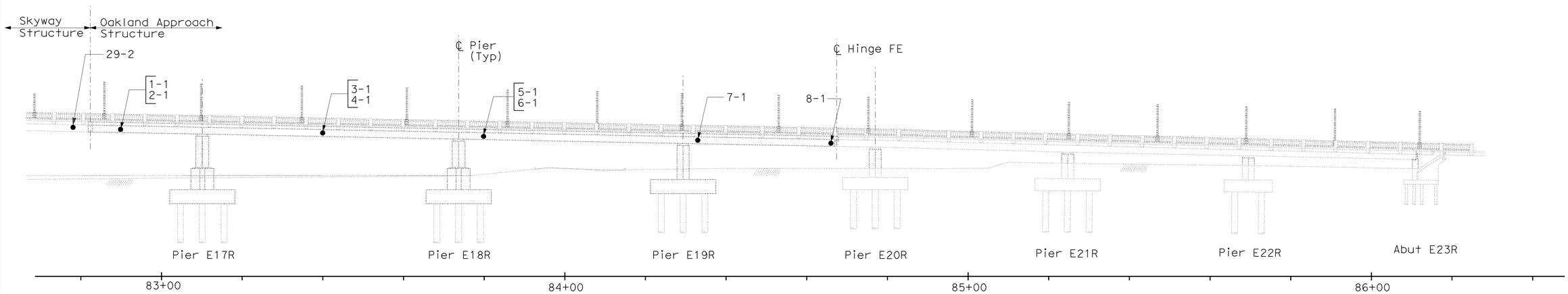

ELEVATION - EASTBOUND

1:400

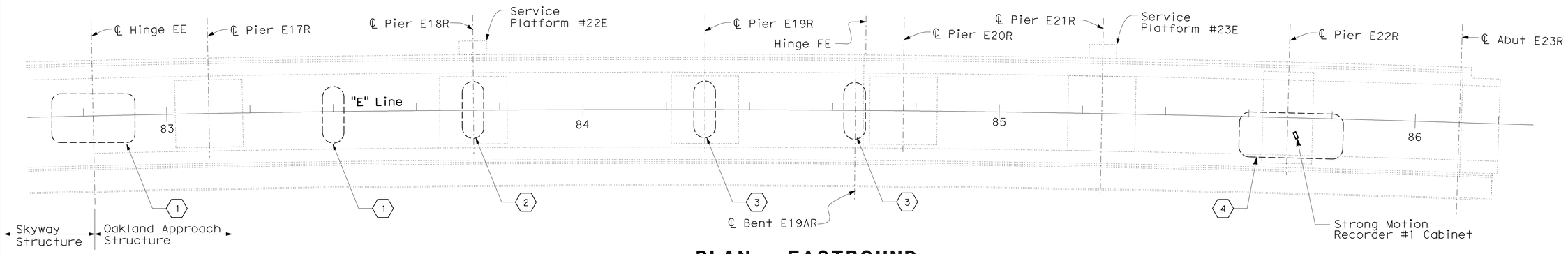

PLAN - EASTBOUND

1:400

STRONG MOTION DETECTION SYSTEM
(GENERAL PLAN)

SCALE: AS NOTED

E-179

THIS PLAN IS ACCURATE FOR ELECTRICAL WORK ONLY.

ALL DIMENSIONS ARE IN METERS UNLESS OTHERWISE SHOWN

REVISED BY	DATE REVISED

CALCULATED-DESIGNED BY: DAVID OTO
CHECKED BY: ELLERY LUCAS
CONSULTANT FUNCTIONAL SUPERVISOR: BRADY NADELL

STATE OF CALIFORNIA - DEPARTMENT OF TRANSPORTATION
Caltrans

LAST REVISION 08-17-09
DATE PLOTTED => 06-OCT-2011
TIME PLOTTED => 07:15

Dist	COUNTY	ROUTE	KILOMETER POST TOTAL PROJECT	SHEET No.	TOTAL SHEETS
04	Ala	80	1.6/2.7	370	744

REGISTERED ELECTRICAL ENGINEER 05/02/11

PLANS APPROVAL DATE 10-3-11

REGISTERED PROFESSIONAL ENGINEER DAVID H. OTO No. 10699 Exp. 06/30/2013 ELECTRICAL STATE OF CALIFORNIA

THE STATE OF CALIFORNIA OR ITS OFFICERS OR AGENTS SHALL NOT BE RESPONSIBLE FOR THE ACCURACY OR COMPLETENESS OF ELECTRONIC COPIES OF THIS PLAN SHEET.

PB AMERICAS, Inc.
303 Second St., Suite 700N
San Francisco, CA 94107-1317

Caltrans Metric

NOTES:

1. References:
   - For conduit and tray, cable and circuit schedules, see sheets starting at E-205.
   - For sensor and recorder schedule, see sheet E-186.
2. (*) Conduits and sensor enclosures shown are existing and installed in previous contract. This sheet is provided as reference for routing cable circuits only. Sensors sall be installed by CDMG.

SHEET NOTE:

(1) Enclosure 29-2 and sensors are existing.

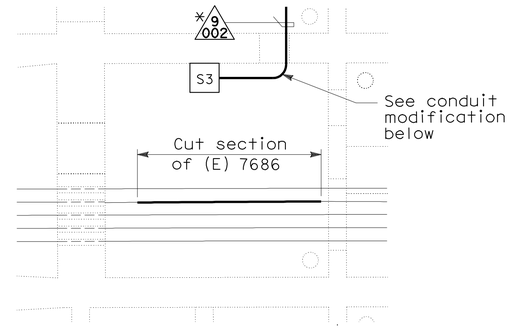

DETAIL 1
(E) CONDUIT PLAN

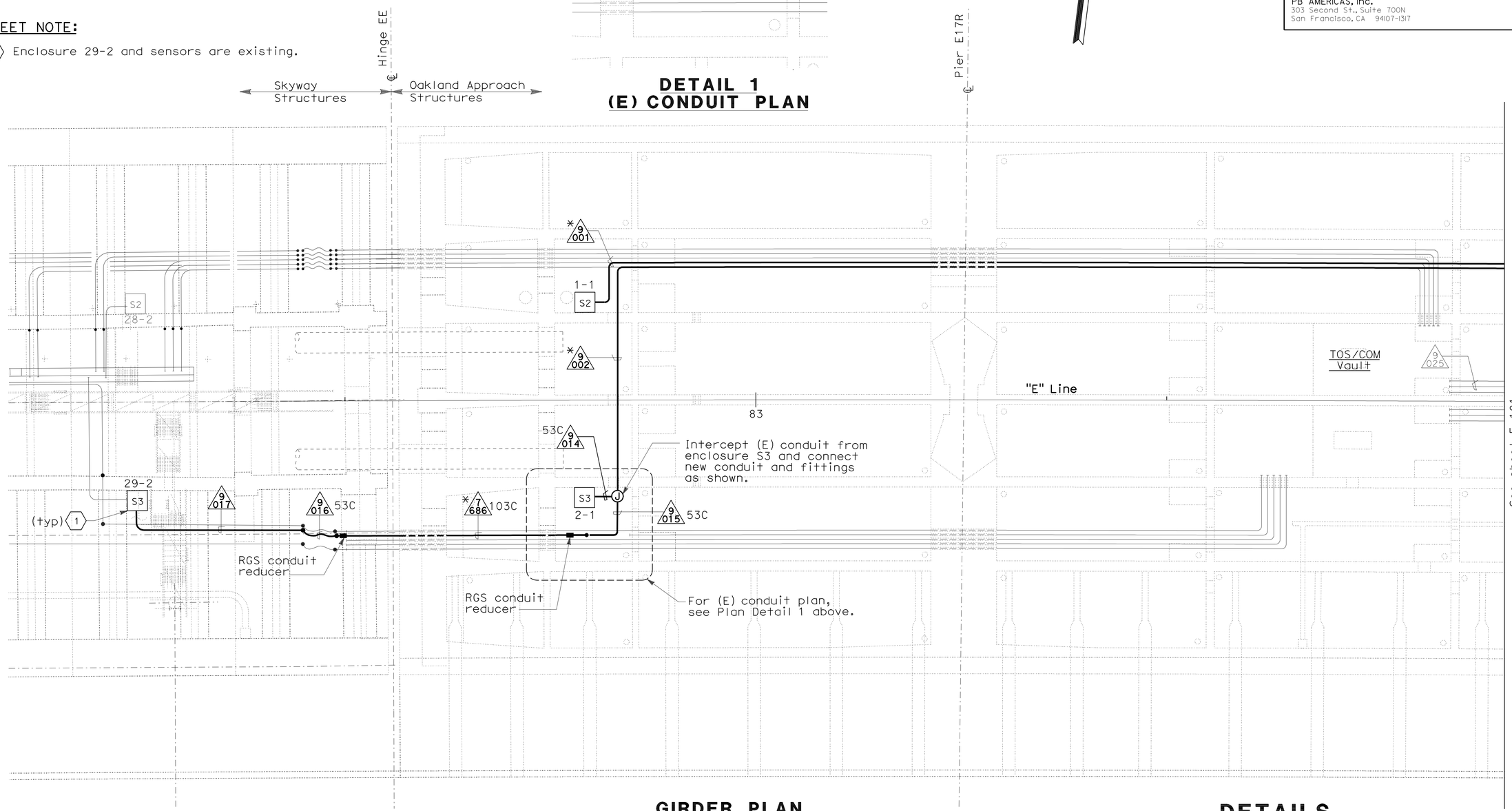

GIRDER PLAN
(Cables installed on Stage 1)

DETAILS
STRONG MOTION DETECTION SYSTEM
(GIRDER LEVEL PARTIAL PLAN)
FRAME 1
SCALE: 1:100

THIS PLAN IS ACCURATE FOR ELECTRICAL WORK ONLY.

ALL DIMENSIONS ARE IN METERS UNLESS OTHERWISE SHOWN

E-180

REVISED BY | DATE REVISED
DAVID OTO | ELLERY LUCAS
CALCULATED-DESIGNED BY | CHECKED BY
CONSULTANT FUNCTIONAL SUPERVISOR | BRADY NADELL
STATE OF CALIFORNIA - DEPARTMENT OF TRANSPORTATION
Caltrans

LAST REVISION 08-17-09 | DATE PLOTTED => 06-OCT-2011 | TIME PLOTTED => 07:15

Dist	COUNTY	ROUTE	KILOMETER POST TOTAL PROJECT	SHEET No.	TOTAL SHEETS
04	Ala	80	1.6/2.7	371	744

05/02/11
REGISTERED ELECTRICAL ENGINEER

10-3-11
PLANS APPROVAL DATE

REGISTERED PROFESSIONAL ENGINEER
DAVID H. OTO
No. 10699
Exp. 06/30/2013
ELECTRICAL
STATE OF CALIFORNIA

THE STATE OF CALIFORNIA OR ITS OFFICERS OR AGENTS SHALL NOT BE RESPONSIBLE FOR THE ACCURACY OR COMPLETENESS OF ELECTRONIC COPIES OF THIS PLAN SHEET.

PB AMERICAS, Inc.
303 Second St., Suite 700N
San Francisco, CA 94107-1317

Caltrans Metric

NOTES:

1. References:
   - For conduit and tray, cable and circuit schedules, see sheets starting at E-205.
   - For sensor and recorder schedule, see sheet E-186.
2. (*) Conduits and sensor enclosures shown are existing and installed in previous contract. This sheet is provided as reference for routing cable circuits only. Sensors shall be installed by CGS.

GIRDER PLAN
(CABLES INSTALLED ON STAGE 1)

DETAILS
STRONG MOTION DETECTION SYSTEM (GIRDER LEVEL PARTIAL PLAN) FRAME 1
SCALE: 1:100

THIS PLAN IS ACCURATE FOR ELECTRICAL WORK ONLY.

ALL DIMENSIONS ARE IN METERS UNLESS OTHERWISE SHOWN

E-181

REVISED BY | DATE REVISED
DAVID OTO | ELLERY LUCAS
CALCULATED-DESIGNED BY | CHECKED BY
CONSULTANT FUNCTIONAL SUPERVISOR
BRADY NADELL

STATE OF CALIFORNIA - DEPARTMENT OF TRANSPORTATION
Caltrans

LAST REVISION 08-17-09 | DATE PLOTTED => 06-OCT-2011 | TIME PLOTTED => 07:15

Dist	COUNTY	ROUTE	KILOMETER POST TOTAL PROJECT	SHEET No.	TOTAL SHEETS
04	Ala	80	1.6/2.7	372	744

05/02/11
REGISTERED ELECTRICAL ENGINEER

10-3-11
PLANS APPROVAL DATE

REGISTERED PROFESSIONAL ENGINEER
DAVID H. OTO
No. 10699
Exp. 06/30/2013
ELECTRICAL
STATE OF CALIFORNIA

THE STATE OF CALIFORNIA OR ITS OFFICERS OR AGENTS SHALL NOT BE RESPONSIBLE FOR THE ACCURACY OR COMPLETENESS OF ELECTRONIC COPIES OF THIS PLAN SHEET.

PB AMERICAS, Inc.
303 Second St., Suite 700N
San Francisco, CA 94107-1317

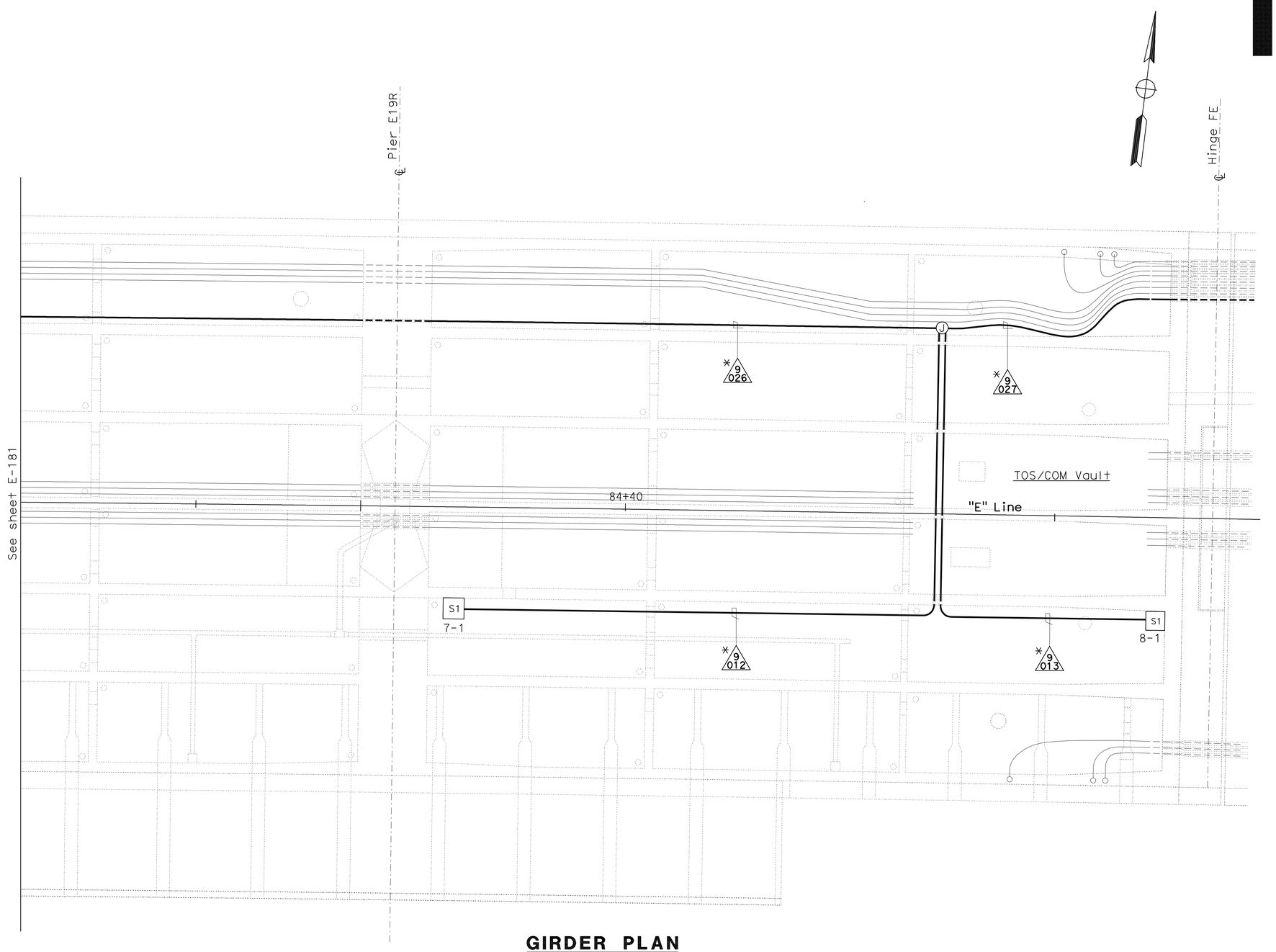

GIRDER PLAN
(Cables installed on Stage 1)

NOTES:

1. References:
   - For conduit and tray, cable and circuit schedules, see sheets starting at E-205.
   - For sensor and recorder schedule, see sheet E-186.
2. (*) Conduits and sensor enclosures shown are existing and installed in previous contract. This sheet is provided as reference for routing cable circuits only. Sensors shall be installed by CGS.

DETAILS
STRONG MOTION DETECTION SYSTEM
(GIRDER LEVEL PARTIAL PLAN)
FRAME 1
SCALE: 1:100

E-182

THIS PLAN IS ACCURATE FOR ELECTRICAL WORK ONLY.

ALL DIMENSIONS ARE IN METERS UNLESS OTHERWISE SHOWN

STATE OF CALIFORNIA - DEPARTMENT OF TRANSPORTATION
Caltrans

CONSULTANT FUNCTIONAL SUPERVISOR: BRADY NADELL
CALCULATED-DESIGNED BY: ELLERY LUCAS
CHECKED BY: DAVID OTO
REVISED BY
DATE REVISED

LAST REVISION 08-17-09
DATE PLOTTED => 06-OCT-2011
TIME PLOTTED => 07:15

Dist	COUNTY	ROUTE	KILOMETER POST TOTAL PROJECT	SHEET No.	TOTAL SHEETS
04	Ala	80	1.6/2.7	373	744

REGISTERED ELECTRICAL ENGINEER 05/02/11

PLANS APPROVAL DATE 10-3-11

REGISTERED PROFESSIONAL ENGINEER DAVID H. OTO No. 10699 Exp. 06/30/2013 ELECTRICAL STATE OF CALIFORNIA

THE STATE OF CALIFORNIA OR ITS OFFICERS OR AGENTS SHALL NOT BE RESPONSIBLE FOR THE ACCURACY OR COMPLETENESS OF ELECTRONIC COPIES OF THIS PLAN SHEET.

PB AMERICAS, Inc.
303 Second St., Suite 700N
San Francisco, CA 94107-1317

Caltrans Metric

NOTE:

1. References:
   - For conduit and tray, cable and circuit schedules, see sheets starting at E-205.

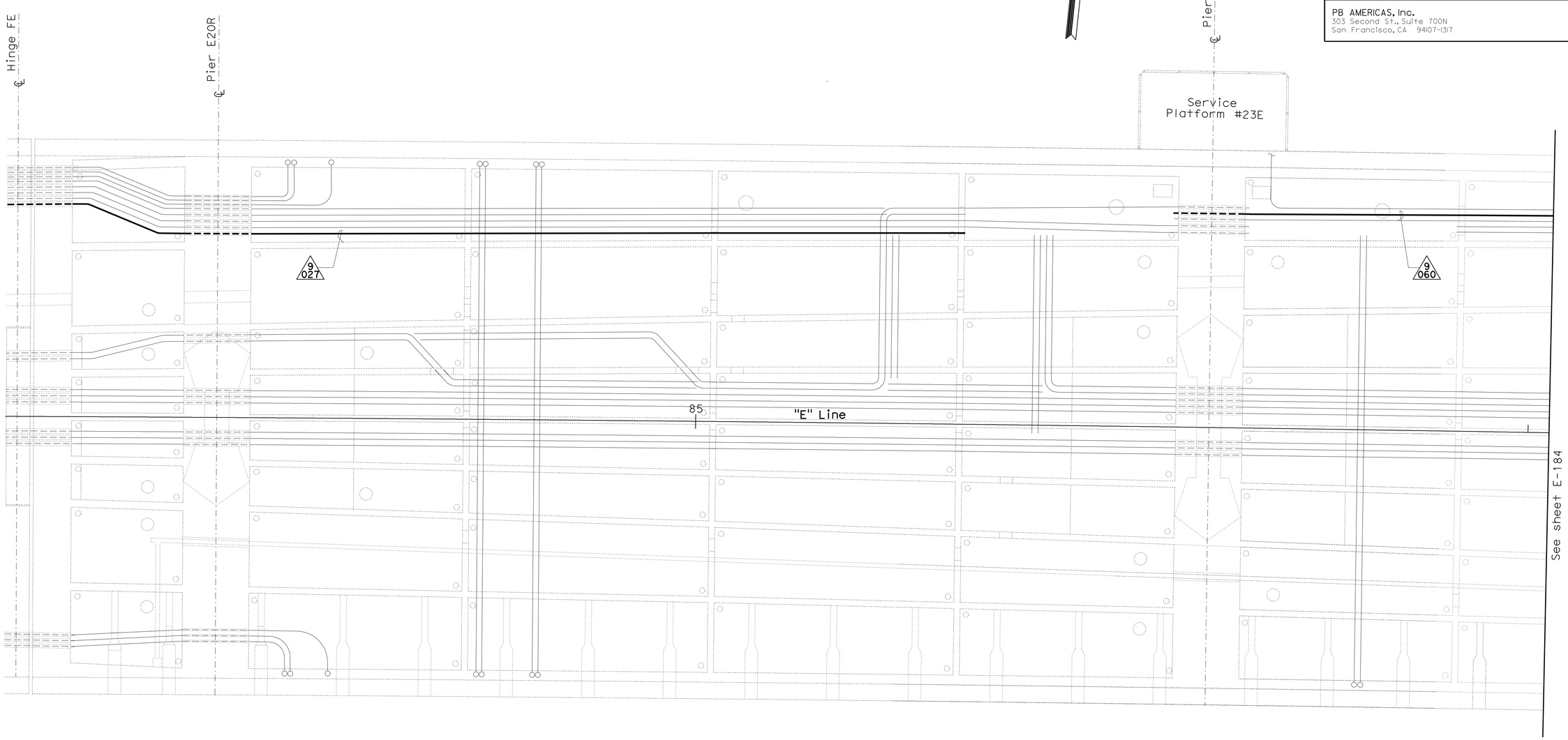

GIRDER PLAN

(CABLES INSTALLED ON STAGE 1)

DETAILS
STRONG MOTION DETECTION SYSTEM (GIRDER LEVEL PARTIAL PLAN) FRAME 2

SCALE: 1:100

E-183

THIS PLAN IS ACCURATE FOR ELECTRICAL WORK ONLY.

ALL DIMENSIONS ARE IN METERS UNLESS OTHERWISE SHOWN

REVISED BY	DATE REVISED

DAVID OTO — CALCULATED-DESIGNED BY
ELLERY LUCAS — CHECKED BY
BRADY NADELL — CONSULTANT FUNCTIONAL SUPERVISOR

STATE OF CALIFORNIA - DEPARTMENT OF TRANSPORTATION
Caltrans

LAST REVISION 08-17-09 DATE PLOTTED => 06-OCT-2011 TIME PLOTTED => 07:15

Dist	COUNTY	ROUTE	KILOMETER POST TOTAL PROJECT	SHEET No.	TOTAL SHEETS
04	Ala	80	1.6/2.7	374	744

REGISTERED ELECTRICAL ENGINEER 05/02/11

PLANS APPROVAL DATE 10-3-11

REGISTERED PROFESSIONAL ENGINEER DAVID H. OTO No. 10699 Exp. 06/30/2013 ELECTRICAL STATE OF CALIFORNIA

THE STATE OF CALIFORNIA OR ITS OFFICERS OR AGENTS SHALL NOT BE RESPONSIBLE FOR THE ACCURACY OR COMPLETENESS OF ELECTRONIC COPIES OF THIS PLAN SHEET.

PB AMERICAS, Inc.
303 Second St., Suite 700N
San Francisco, CA 94107-1317

Caltrans Metric

NOTE:

1. References:
   - For conduit and tray, cable and circuit schedules, see sheets starting at E-205.

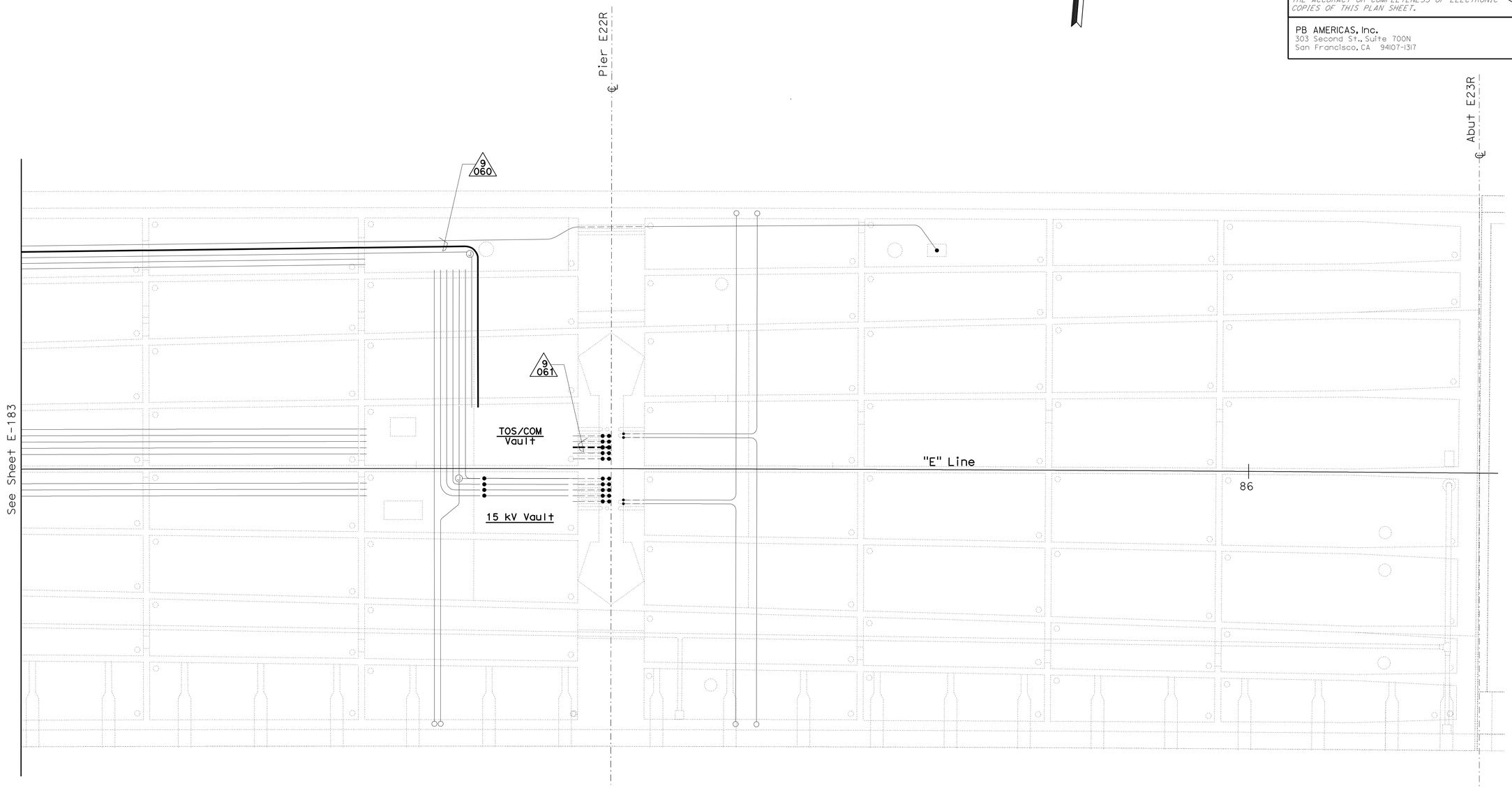

GIRDER PLAN
(CABLES INSTALLED ON STAGE 1)

DETAILS
STRONG MOTION DETECTION SYSTEM
(GIRDER LEVEL PARTIAL PLAN)
FRAME 2
SCALE: 1:100

E-184

THIS PLAN IS ACCURATE FOR ELECTRICAL WORK ONLY.

ALL DIMENSIONS ARE IN METERS UNLESS OTHERWISE SHOWN

STATE OF CALIFORNIA - DEPARTMENT OF TRANSPORTATION
Caltrans

CONSULTANT FUNCTIONAL SUPERVISOR: BRADY NADELL
CALCULATED-DESIGNED BY: DAVID OTO
CHECKED BY: ELLERY LUCAS
REVISED BY
DATE REVISED

LAST REVISION 08-17-09
DATE PLOTTED => 06-OCT-2011
TIME PLOTTED => 07:15

Dist	COUNTY	ROUTE	KILOMETER POST TOTAL PROJECT	SHEET No.	TOTAL SHEETS
04	Ala	80	1.6/2.7	375	744

05/02/11
REGISTERED ELECTRICAL ENGINEER

10-3-11
PLANS APPROVAL DATE

REGISTERED PROFESSIONAL ENGINEER
DAVID H. OTO
No. 10699
Exp. 06/30/2013
ELECTRICAL
STATE OF CALIFORNIA

THE STATE OF CALIFORNIA OR ITS OFFICERS OR AGENTS SHALL NOT BE RESPONSIBLE FOR THE ACCURACY OR COMPLETENESS OF ELECTRONIC COPIES OF THIS PLAN SHEET.

PB AMERICAS, Inc.
303 Second St., Suite 700N
San Francisco, CA 94107-1317

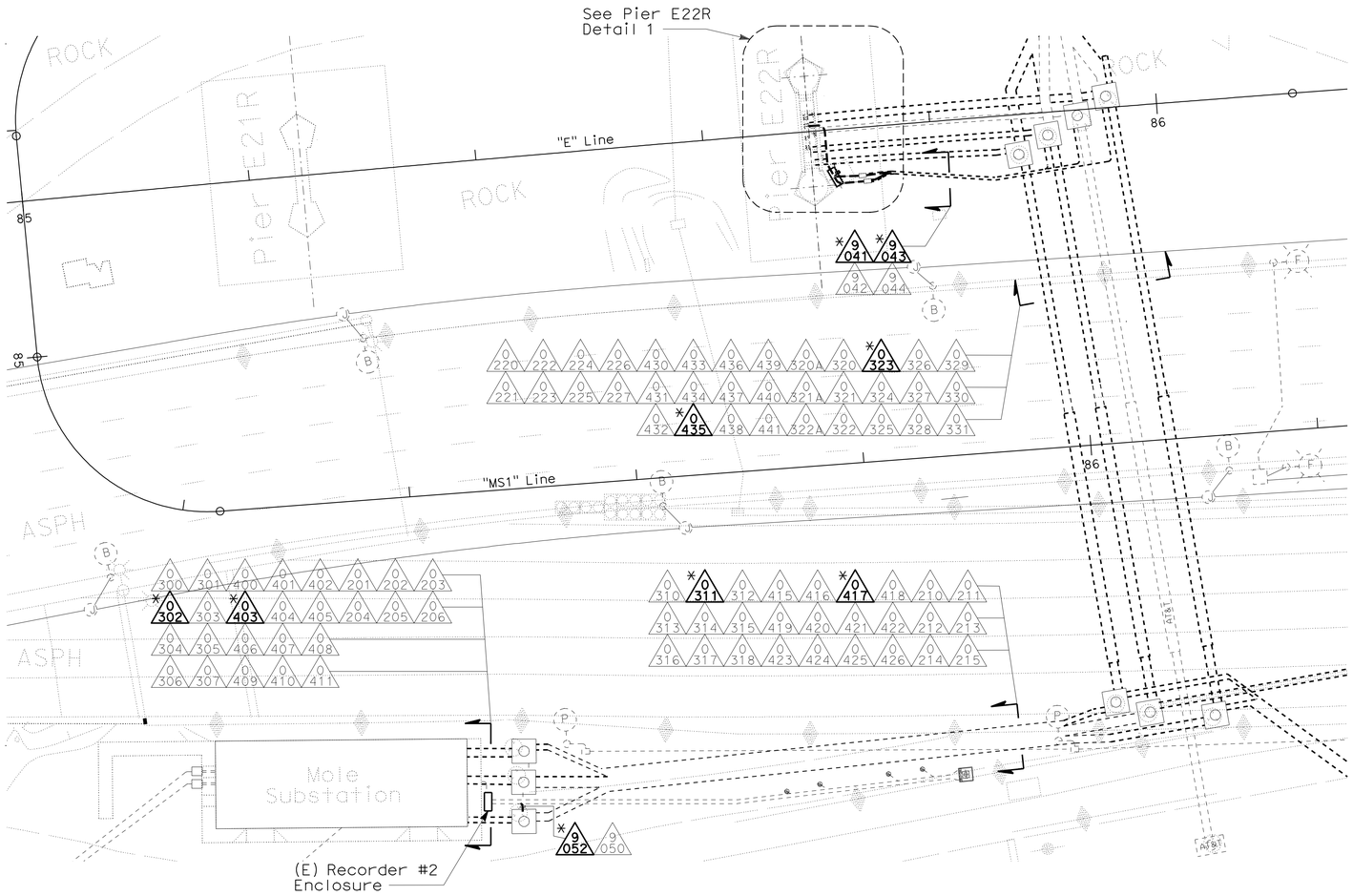

PLAN AT GRADE
NO SCALE

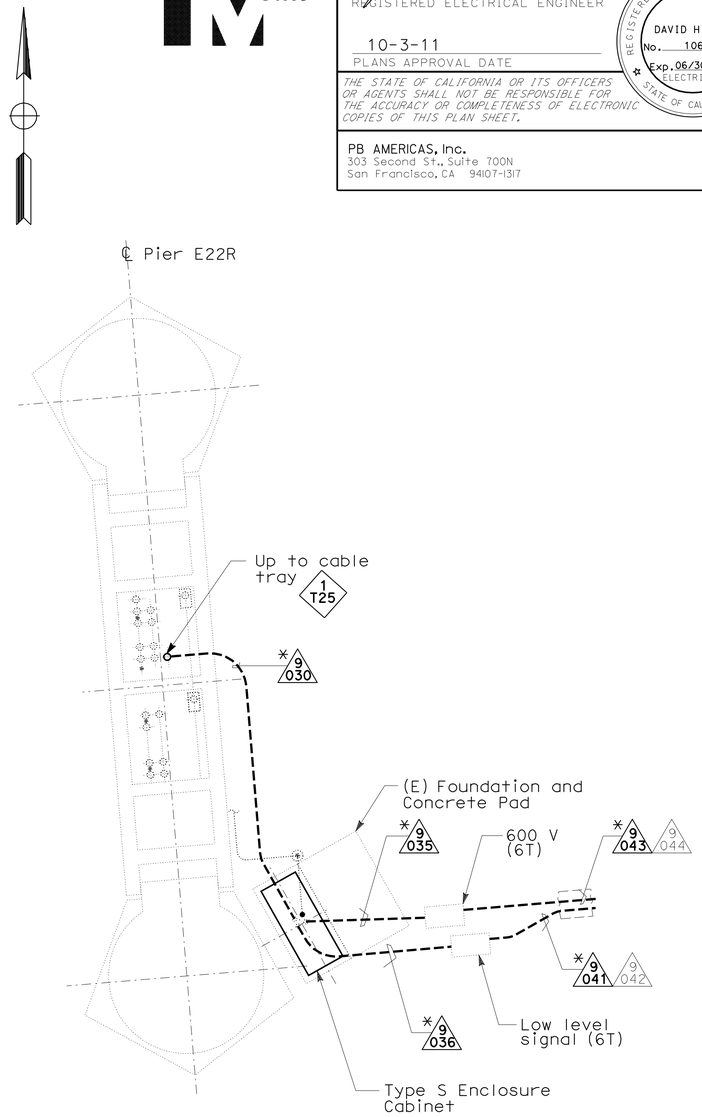

PIER E22R-DETAIL 1
SCALE: 1:50

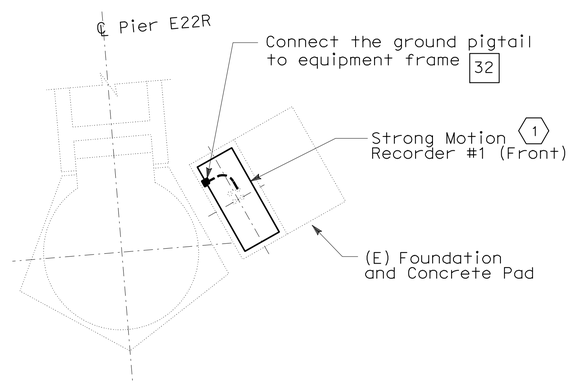

PLAN-DETAIL 2
Conduit stub up Arrangement
SCALE: 1:50

NOTES:

1. References:
   - For conduit and tray, cable and circuit schedules, see sheets starting at E-205.
   - For strong motion sensor enclosures, see sheet E-187.
2. (*) Conduits shown are existing and installed on previous contract. This sheet is provided as reference for routing cable circuits only.
3. The sensor recorder shall be installed inside the Seismic enclosure by CGS.

SHEET NOTE:

(1) The Contractor shall install Type S enclosure cabinet, per Standard Plan ES-3C.

DETAILS
STRONG MOTION DETECTION SYSTEM (PLAN AT GRADE)
SCALE AS NOTED

E-185

THIS PLAN IS ACCURATE FOR ELECTRICAL WORK ONLY.

ALL DIMENSIONS ARE IN METERS UNLESS OTHERWISE SHOWN

STATE OF CALIFORNIA - DEPARTMENT OF TRANSPORTATION
Caltrans

CONSULTANT FUNCTIONAL SUPERVISOR: BRADY NADELL
CALCULATED-DESIGNED BY: DAVID OTO
CHECKED BY: ELLERY LUCAS
REVISED BY / DATE REVISED

LAST REVISION 08-17-09 DATE PLOTTED => 06-OCT-2011 TIME PLOTTED => 07:16

Dist	COUNTY	ROUTE	KILOMETER POST TOTAL PROJECT	SHEET No.	TOTAL SHEETS
04	Ala	80	1.6/2.7	376	744

REGISTERED ELECTRICAL ENGINEER 05/02/11

10-3-11
PLANS APPROVAL DATE

REGISTERED PROFESSIONAL ENGINEER DAVID H. OTO No. 10699 Exp. 06/30/2013 ELECTRICAL STATE OF CALIFORNIA

THE STATE OF CALIFORNIA OR ITS OFFICERS OR AGENTS SHALL NOT BE RESPONSIBLE FOR THE ACCURACY OR COMPLETENESS OF ELECTRONIC COPIES OF THIS PLAN SHEET.

PB AMERICAS, Inc.
303 Second St., Suite 700N
San Francisco, CA 94107-1317

Caltrans Metric

STRONG MOTION DETECTION SYSTEM SENSOR SCHEDULE (1)

Number of Sensors	Sensor Enclosure No.	Enclosure Type No.	Mounting Location	Location	Hinge Direction	Remarks
2	1-1	5	north face of north girder wall at base	Hinge EE East Side	Down	
3	2-1	4	south face of south girder wall at base	Hinge EE East side	Down	
1	3-1	2	north face of north girder wall at base	Midspan between pier E17R and E18R	Down	
2	4-1	3	south face of south girder wall at base	Midspan between pier E17R and E18R	West	
1	5-1	2	north face of north girder wall at base	Platform #22E Table	Down	
1	6-1	2	south face of south girder wall at base	Pier E18R	Down	
1	7-1	2	south face of south girder wall at base	Pier E19R	Down	
1	8-1	2	south face of south girder wall at base	Hinge FE West side	Down	
3	29-2	4	south face of south girder wall at base	Hinge EE West side		(E) Strong Motion Recorder #2 located on Skyway Structes and (E) Sensor 2-1 located at Hinge EE East side

NAMEPLATE SCHEDULE

ENCLOSURE TYPE	ENGRAVINGS LINE NO. 1	ENGRAVINGS LINE NO. 2	QUANTITY
2	STRONG MOTION SENSOR	ENCLOSURE NO. 7-1	
	STRONG MOTION SENSOR	ENCLOSURE NO. 8-1	
	STRONG MOTION SENSOR	ENCLOSURE NO. 3-1	
	STRONG MOTION SENSOR	ENCLOSURE NO. 6-1	
	STRONG MOTION SENSOR	ENCLOSURE NO. 5-1	
3	STRONG MOTION SENSOR	ENCLOSURE NO. 4-1	
4	STRONG MOTION SENSOR	ENCLOSURE NO. 2-1	
5	STRONG MOTION SENSOR	ENCLOSURE NO. 1-1	
Caltrans Type S	STRONG MOTION	RECORDER #1	1

NOTE:
1. Nameplates shall be mounted to the enclosure front panel with 4-40 stainless steel machine screws. The front cover to be drilled and tapped. (no self-tapping screws)
2. Nameplates shall be laminated phenolic plastic with white core and black front and back. Engravings shall be in capital 25mm high letters etched through the outer layer of the nameplate material.

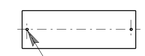

Threaded hole for 4-40 machine screw

NOTE:

1. References:
   -For general notes of the Strong Motion Detection System, see sheet E-179.

SHEET NOTE:

(1) Existing. For reference only.

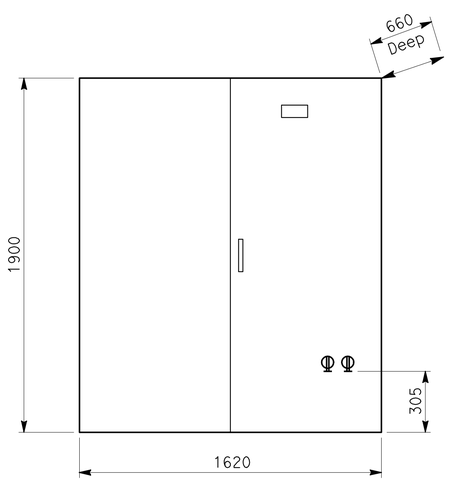

STRONG MOTION RECORDER ENCLOSURE

CALTRANS TYPE S

THIS PLAN IS ACCURATE FOR ELECTRICAL WORK ONLY.

ALL DIMENSIONS ARE IN MILLIMETERS UNLESS OTHERWISE SHOWN

DETAILS
STRONG MOTION DETECTION SYSTEM (SENSOR AND PULL BOX SCHEDULES)

NO SCALE

E-186

STATE OF CALIFORNIA - DEPARTMENT OF TRANSPORTATION
Caltrans

CONSULTANT FUNCTIONAL SUPERVISOR: BRADY NADELL
CALCULATED-DESIGNED BY: DAVID OTO
CHECKED BY: ELLERY LUCAS
REVISED BY
DATE REVISED

LAST REVISION 08-17-09
DATE PLOTTED => 06-OCT-2011
TIME PLOTTED => 07:16

Dist	COUNTY	ROUTE	KILOMETER POST TOTAL PROJECT	SHEET No.	TOTAL SHEETS
04	Ala	80	1.6/2.7	377	744

REGISTERED ELECTRICAL ENGINEER 05/02/11

10-3-11
PLANS APPROVAL DATE

REGISTERED PROFESSIONAL ENGINEER DAVID H. OTO No. 10699 Exp. 06/30/2013 ELECTRICAL STATE OF CALIFORNIA

THE STATE OF CALIFORNIA OR ITS OFFICERS OR AGENTS SHALL NOT BE RESPONSIBLE FOR THE ACCURACY OR COMPLETENESS OF ELECTRONIC COPIES OF THIS PLAN SHEET.

PB AMERICAS, Inc.
303 Second St., Suite 700N
San Francisco, CA 94107-1317

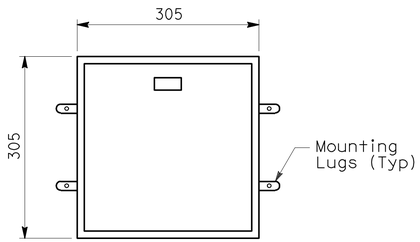

TYPE 1 (1)
CAST METAL BOX

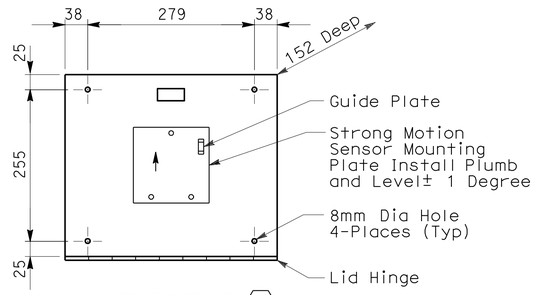

TYPE 2 (1)
GALVANIZED STEEL BOX

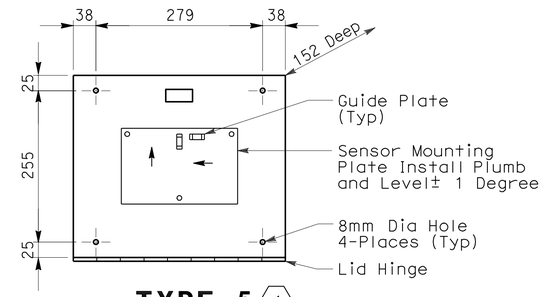

TYPE 5 (1)
GALVANIZED STEEL BOX

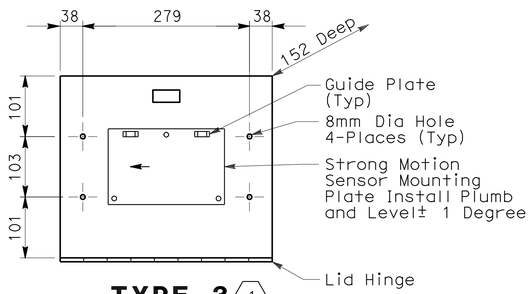

TYPE 3 (1)
GALVANIZED STEEL BOX

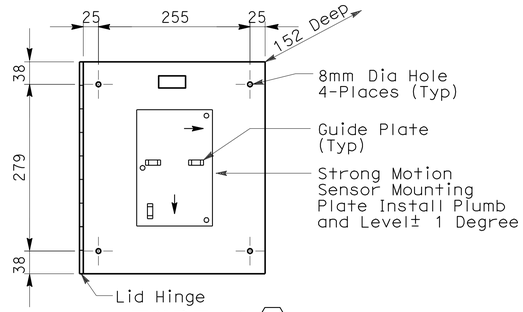

TYPE 4 (1)
GALVANIZED STEEL BOX

ENCLOSURE DETAILS
FRONT VIEW

NOTES:

1. The high and low vent sides shall be selected as required to facilitate conduit entrances and mounting location.
2. Strong motion sensor enclosures and mounting plates shall be installed level, plumb (+/-1°), parallel and perpendicular to the structure unless otherwise noted.
3. The sensor enclosures shown are existing installed on previous contract. It is shown as reference only for the installation of seismic sensors.

SHEET NOTE:

(1) Existing. For reference only.

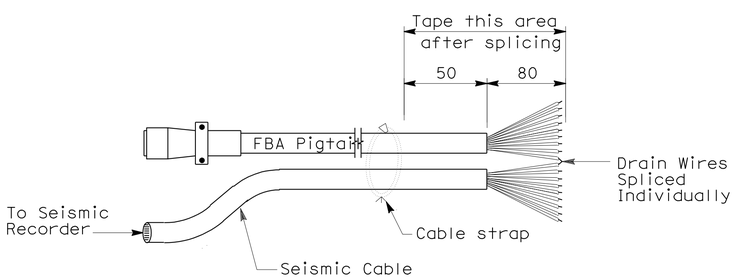

PIGTAIL SPLICING DETAIL
(THIS DETAIL IS APPLICABLE TO CABLE TYPES IC AND SSC IN ALL STRONG MOTION SENSOR ENCLOSURES)

PIGTAIL SPLICING INSTRUCTIONS:

1. Strip outer jacket cables back 80mm.
2. Separate individual conductors and drain wires and splice matching colored wires and drain wires using jelly-filled splice connectors and crimping tool.
3. Secure cables with cable straps approximately 50mm from end of outer jacket.
4. Tape from cable strap to splice with vinyl electrical tape (3M Scotch Super 88 or equal). Tape should cover all splices. Coat with sealing compound or equal, then tape with self- fusing tape and an outer layer of vinyl electrical tape.

   Note: Insure crimps are secure before taping.

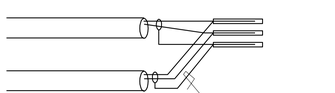

SPLICING DETAIL
1 PAIR SPLICED

DETAILS
STRONG MOTION DETECTION SYSTEM (SENSOR AND RECORDER ENCLOSURES)
NO SCALE

E-187

THIS PLAN IS ACCURATE FOR ELECTRICAL WORK ONLY.

ALL DIMENSIONS ARE IN MILLIMETERS UNLESS OTHERWISE SHOWN

STATE OF CALIFORNIA - DEPARTMENT OF TRANSPORTATION
Caltrans

CONSULTANT FUNCTIONAL SUPERVISOR: BRADY NADELL
CALCULATED-DESIGNED BY: DAVID OTO
CHECKED BY: ELLERY LUCAS
REVISED BY / DATE REVISED

LAST REVISION 08-17-09 | DATE PLOTTED => 06-OCT-2011 | TIME PLOTTED => 07:16

Dist	COUNTY	ROUTE	KILOMETER POST TOTAL PROJECT	SHEET No.	TOTAL SHEETS
04	Ala	80	1.6/2.7	378	744

05/02/11
REGISTERED ELECTRICAL ENGINEER

10-3-11
PLANS APPROVAL DATE

REGISTERED PROFESSIONAL ENGINEER
DAVID H. OTO
No. 10699
Exp. 06/30/2013
ELECTRICAL
STATE OF CALIFORNIA

THE STATE OF CALIFORNIA OR ITS OFFICERS OR AGENTS SHALL NOT BE RESPONSIBLE FOR THE ACCURACY OR COMPLETENESS OF ELECTRONIC COPIES OF THIS PLAN SHEET.

PB AMERICAS, Inc.
303 Second St., Suite 700N
San Francisco, CA 94107-1317

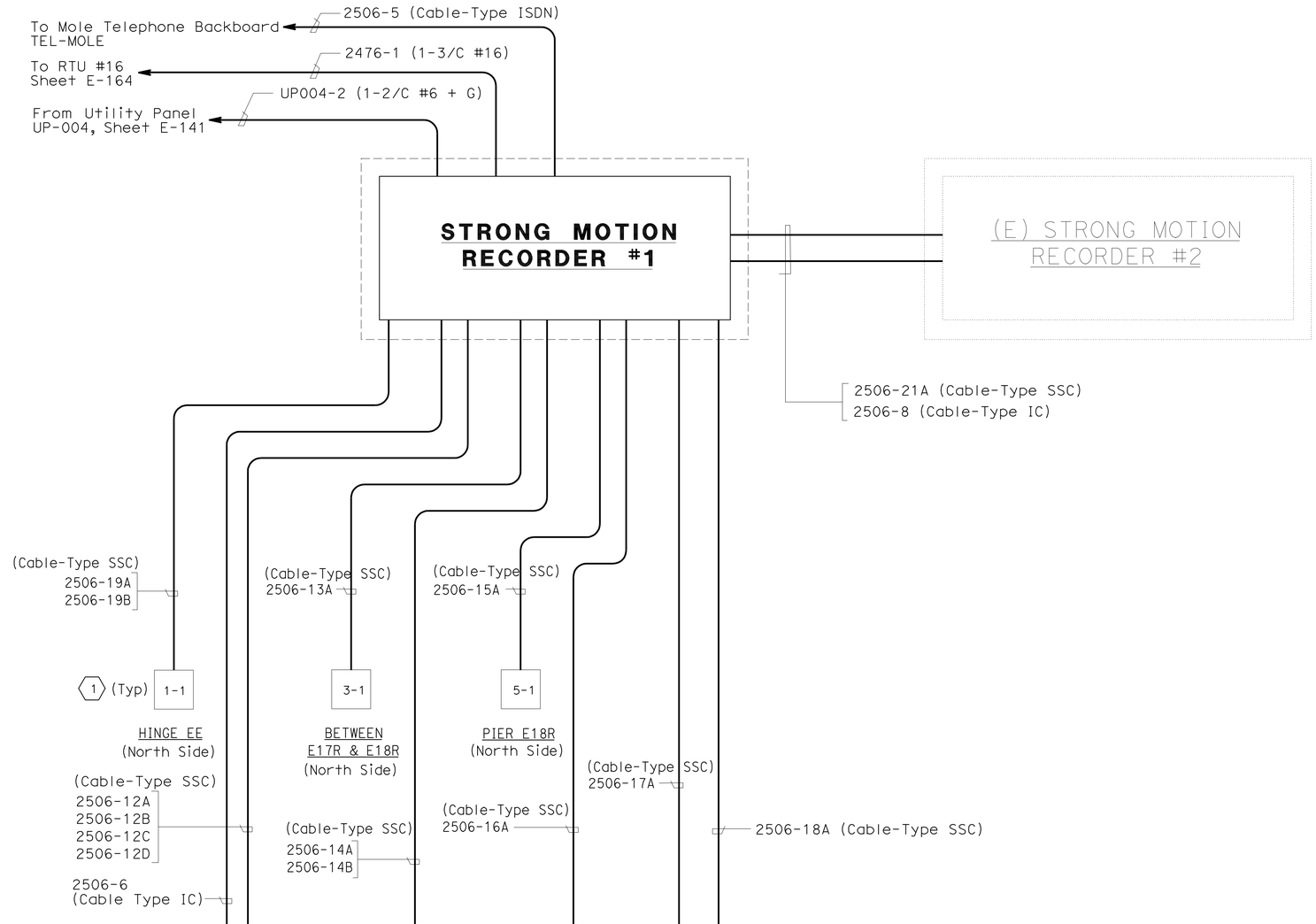

NOTES:

1. References:
   - For conduit and tray, cable and circuit schedules, see sheets starting at E-205.
   - For sensor and recorder schedule, see sheet E-186.
   - For general notes of the Strong Motion Detection System, see Sheet E-179.
2. Contractor to coil 2 m of Seismic Sensor Cable (SSC) at each seismic sensor enclosure.
3. Contractor to coil 6 m of Seismic Sensor Cable (SSC), ISDN & Interconnect Cable (IC) at each Seismic Recorder Cabinet.
4. All Seismic Sensor Cable (SSC), ISDN & Interconnect Cable (IC) shall be installed continuously without splices.

SHEET NOTE:

1. Sensor enclosure with identification number as shown are existing.

DETAILS
STRONG MOTION DETECTION SYSTEM (CABLE BLOCK DIAGRAM)
NO SCALE

THIS PLAN IS ACCURATE FOR ELECTRICAL WORK ONLY.

E-188

REVISED BY | DATE REVISED
DAVID OTO | ELLERY LUCAS
CALCULATED-DESIGNED BY | CHECKED BY
CONSULTANT FUNCTIONAL SUPERVISOR
BRADY NADELL
STATE OF CALIFORNIA - DEPARTMENT OF TRANSPORTATION
Caltrans

LAST REVISION 08-17-09 | DATE PLOTTED => 06-OCT-2011 | TIME PLOTTED => 07:16

Dist	COUNTY	ROUTE	POST MILES TOTAL PROJECT	SHEET No.	TOTAL SHEETS
04	Ala	80	1.6/2.7	379	744

REGISTERED ELECTRICAL ENGINEER 05/02/11

10-3-11
PLANS APPROVAL DATE

REGISTERED PROFESSIONAL ENGINEER M.P. Lee No. 13435 Exp. 9-30-12 ELECT STATE OF CALIFORNIA

THE STATE OF CALIFORNIA OR ITS OFFICERS OR AGENTS SHALL NOT BE RESPONSIBLE FOR THE ACCURACY OR COMPLETENESS OF ELECTRONIC COPIES OF THIS PLAN SHEET.

Caltrans Metric

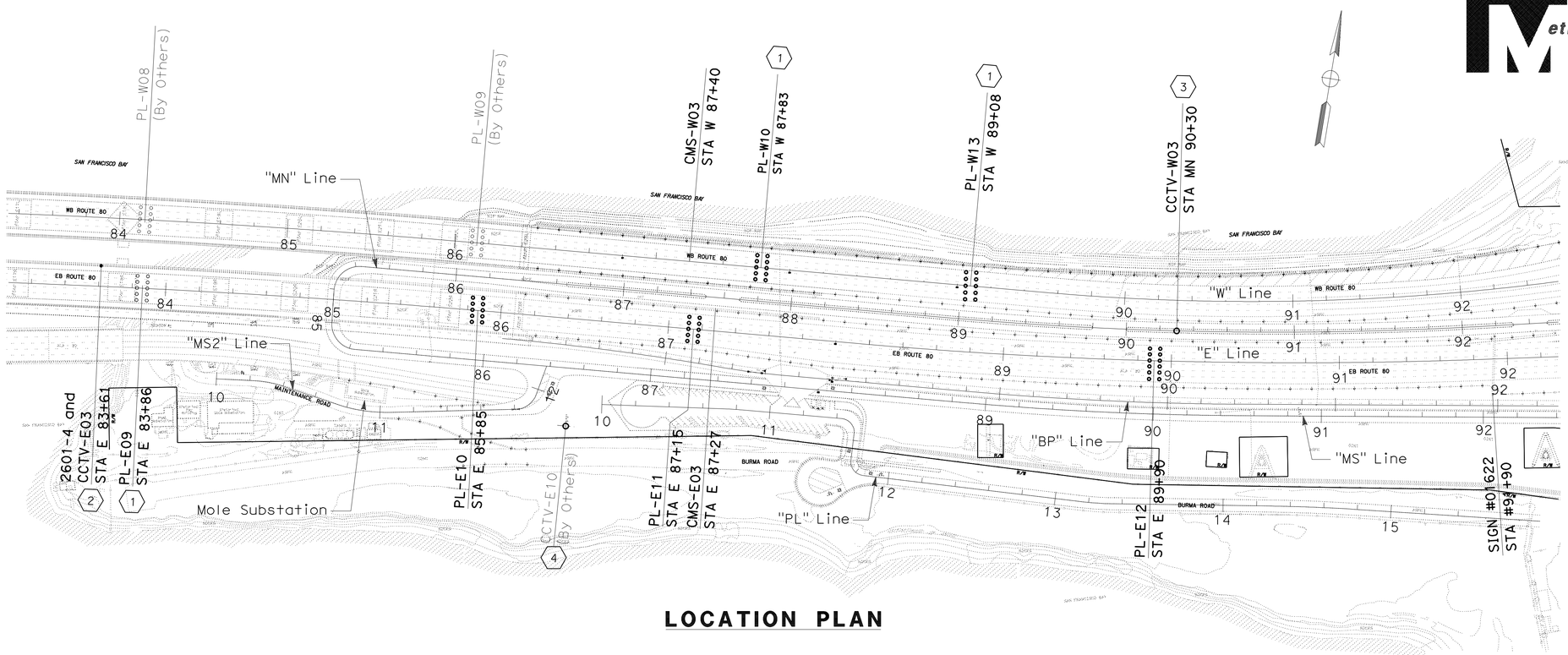

LOCATION PLAN

GENERAL NOTES:

1. All fiber optic cable shall be terminated in fiber distribution unit (FDU). All fiber strands shall have an ST connector on FDU.
2. The FDU-E located on TOS-A04 inside (E) Administration building shall have the termination capacity of 72 fibers. FDU in each TOS cabinet shall have the termination capacity of 12 fibers. Location of (E) Administration building is not shown.
3. The Contractor shall supply same number of fiber patch cords matching the termination capacity of each FDU.
4. Cable slack at each fiber splice closure shall be 9 meters minimum. Cable slack in each TOS cabinet shall be 3 meters.
5. The Contractor shall provide 72 fiber. Trunkline cable (FTC), 12 fiber strand of fiber pigtail cable (FPC) and fiber splice closures (FSC).
6. When fiber cables pass through a manhole, a minimum of 15 meter cable slack shall be coiled and placed on on the side of the manhole wall.
7. Each fiber cable sections shall be labeled per special provisions. In addition, each fiber link circuit number as shown on the plans shall be labeled at each end of fiber sections.
8. TOS installation includes cable installation from each TOS element to corresponding controller cabinet and all communications cable terminations inside controller cabinets, as detailed on sheets E-191 and E-197. For controller cabinet locations for corresponding TOS elements, refer to detail sheets listed in Schedule A.
9. Fiber optic cables routed inside each conduit shall be provided with high density polyethylene (HDPE) 4-25 mm diameter smoothwall innerduct.

FOR NOTES, ABBREVIATIONS AND LEGEND, SEE SHEETS E-4 AND E-6

THIS PLAN IS ACCURATE FOR ELECTRICAL WORK ONLY.

SHEET NOTES:

(1) Field device installed on previous contract (To be wired under this contract).

(2) CCTV-E03 is mounted on lighting pole provided by others. See sheet E-190.

(3) CCTV-W03 mounting height shall be type Caltrans type CCTV-90. See Standard plan ES-16C. See sheets E-193 and E-194.

(4) CCTV-E10 mounting height is Caltrans type CCTV-40 and installed on previous contract. See Standard plan ES-16A.

SCHEDULE A - TOS STATION

DESCRIPTION	No. OF STATION	DETAILS SHEET	CONTROLLER CABINET/ LOCATION
Closed Circuit Television (CCTV)	1	E-190	TOS-22EA/E-30
	1	E-193/E-194	TOS-25A/E-111
	1	-	TOS-26A/E-73
Preformed Loop Detector Station (PL)	2	E-195	TOS-22EA/E-30 TOS-23EA/E-34
Preformed Inductive Loop Station (PL)	4	E-196	TOS-24A/E-109 TOS-25A/E-111
Changeable Message Sign (CMS)	1	-	TOS-24B/E-109
	1	-	TOS-24C/E-109

ALL DIMENSIONS ARE IN METERS UNLESS OTHERWISE SHOWN

TRAFFIC OPERATIONS SYSTEM
(FIELD STATION LOCATION)
NO SCALE

E-189

STATE OF CALIFORNIA - DEPARTMENT OF TRANSPORTATION
Caltrans ELECTRICAL

FUNCTIONAL SUPERVISOR: BEHZAD GOLEMOHAMMADI
CALCULATED-DESIGNED BY: MICHAEL P. LEE
CHECKED BY: DAVID OTO
REVISED BY / DATE REVISED

RELATIVE BORDER SCALE IS IN MILLIMETERS 0 20 40 60 80

DGN FILE => 40120mua189.dgn
USERNAME => s121614

CU 04251 | EA 0120M1

LAST REVISION 00-00-00 | DATE PLOTTED => 06-OCT-2011 | TIME PLOTTED => 07:16

Dist	COUNTY	ROUTE	POST MILES TOTAL PROJECT	SHEET No.	TOTAL SHEETS
04	Ala	80	1.6/2.7	380	744

REGISTERED ELECTRICAL ENGINEER 05/02/11

10-3-11
PLANS APPROVAL DATE

REGISTERED PROFESSIONAL ENGINEER M.P. Lee No. 13435 Exp. 9-30-12 ELECT STATE OF CALIFORNIA

THE STATE OF CALIFORNIA OR ITS OFFICERS OR AGENTS SHALL NOT BE RESPONSIBLE FOR THE ACCURACY OR COMPLETENESS OF ELECTRONIC COPIES OF THIS PLAN SHEET.

Caltrans Metric

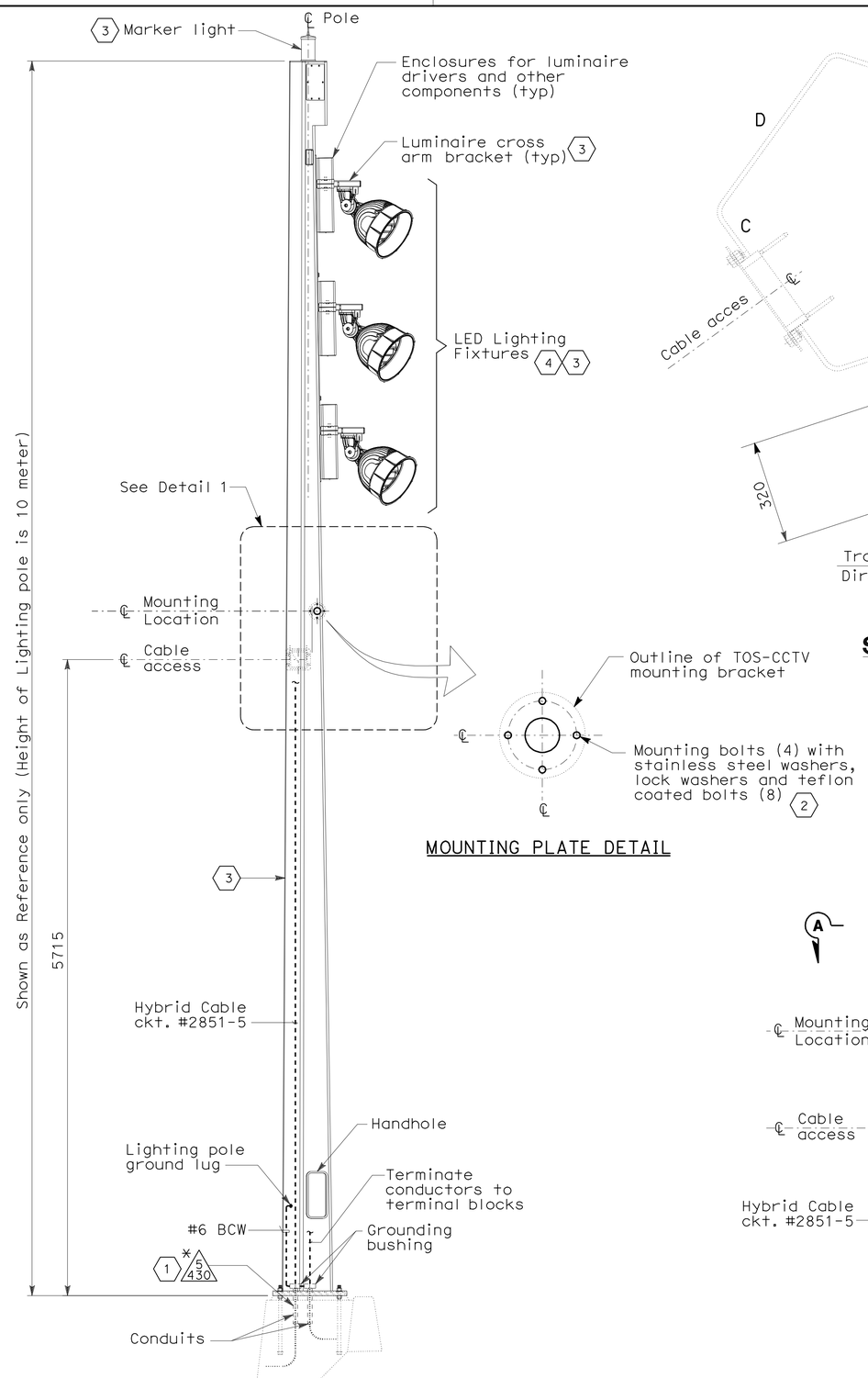

CCTV- E03 LOCATION

(LOCATED AT LIGHTING POLE #2601-4)

MOUNTING PLATE DETAIL

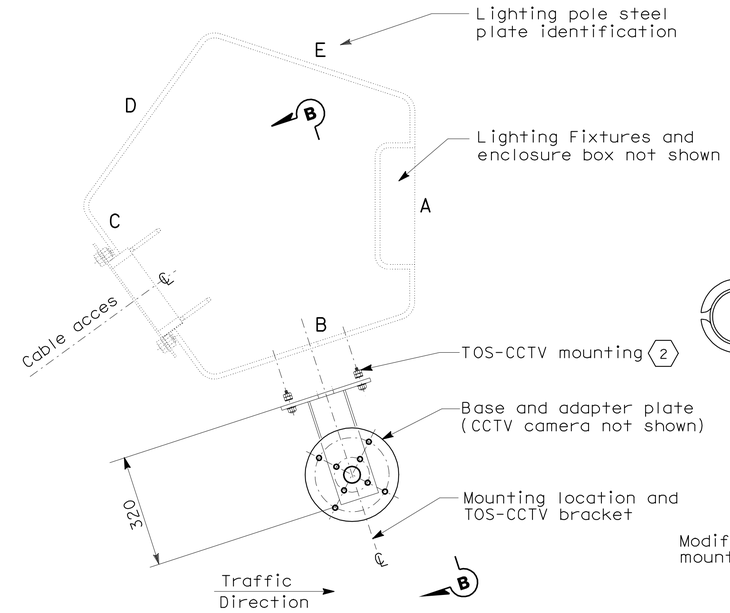

PLAN

SECTION A-A

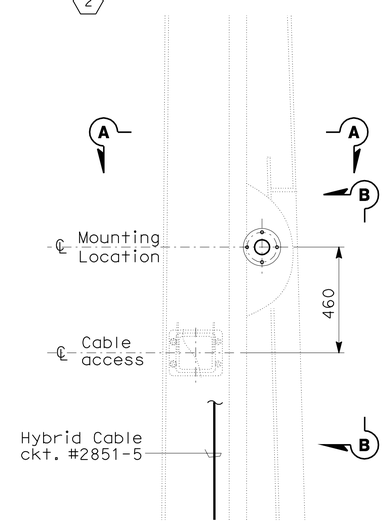

DETAIL 1

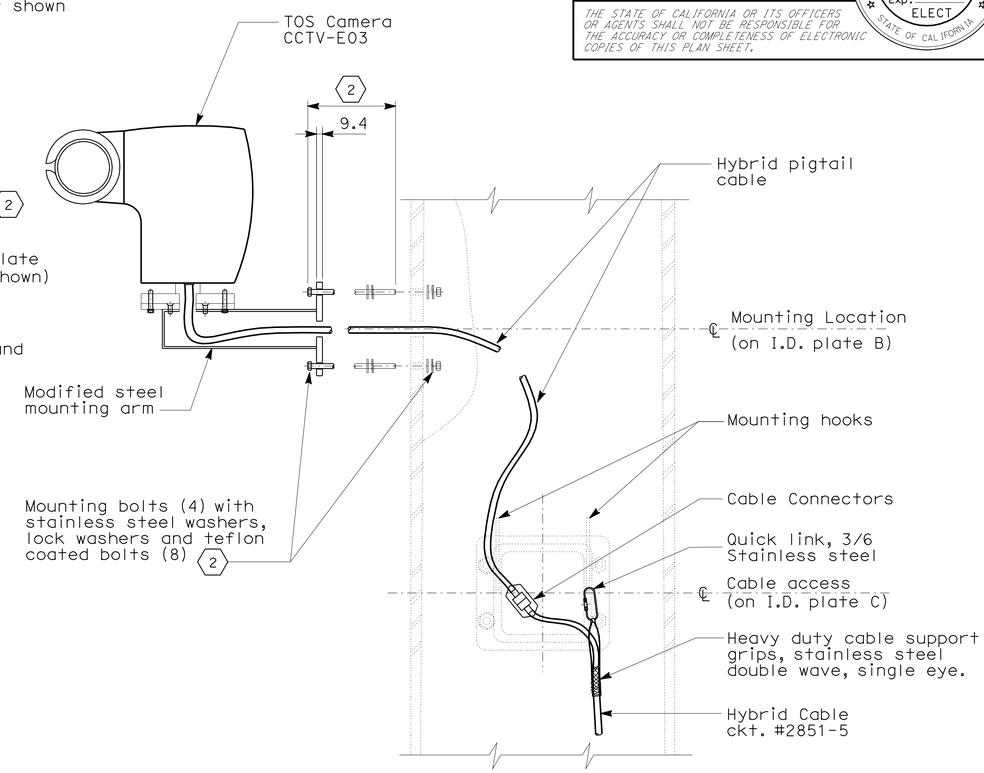

SECTION B-B

SHEET NOTES:

1. For conduit location, see sheet E-39.
2. Prior to installation, the Contractor to field verify the components provided with TOS-CCTV device for mounting.
3. The Roadway Lighting pole are State furnished. Prior to installation, the Contractor shall inspect and verify the associated components of the Lighting Pole assembly which may require field installation.
4. The type of lighting fixtures mounted on the lighting pole, the aiming point and directions of each lighting fixtures towards the roadway shall be provided by the lighting pole/fixture manufacturer. This information shall be provided to the Contractor by the Engineer.

NOTE:

1. References:
   - For conduit and tray, cable and circuit schedules, see sheets starting at E-205.
   - For typical wiring, see sheets E-191 and E-192.

DETAILS
TRAFFIC OPERATIONS SYSTEM
(CLOSED CIRCUIT TELEVISION CAMERA INSTALLATION)

NO SCALE

E-190

FOR NOTES, ABBREVIATIONS AND LEGEND, SEE SHEETS E-4 AND E-6

THIS PLAN IS ACCURATE FOR ELECTRICAL WORK ONLY.

ALL DIMENSIONS ARE IN MILLIMETERS UNLESS OTHERWISE SHOWN

STATE OF CALIFORNIA - DEPARTMENT OF TRANSPORTATION
Caltrans
ELECTRICAL

FUNCTIONAL SUPERVISOR: BEHZAD GOLEMOHAMMADI
CALCULATED-DESIGNED BY: MICHAEL P. LEE
CHECKED BY: DAVID OTO
REVISED BY
DATE REVISED

LAST REVISION 08-31-11
DATE PLOTTED => 01-MAR-2012
TIME PLOTTED => 13:53

RELATIVE BORDER SCALE IS IN MILLIMETERS 0 20 40 60 80

DGN FILE => 40120mua190.dgn
USERNAME => s124496

CU 04251
EA 0120M1

Dist	COUNTY	ROUTE	POST MILES TOTAL PROJECT	SHEET No.	TOTAL SHEETS
04	Ala	80	1.6/2.7	381	744

REGISTERED ELECTRICAL ENGINEER 05/02/11

10-3-11
PLANS APPROVAL DATE

REGISTERED PROFESSIONAL ENGINEER M.P. Lee No. 13435 Exp. 9-30-12 ELECT STATE OF CALIFORNIA

THE STATE OF CALIFORNIA OR ITS OFFICERS OR AGENTS SHALL NOT BE RESPONSIBLE FOR THE ACCURACY OR COMPLETENESS OF ELECTRONIC COPIES OF THIS PLAN SHEET.

Caltrans Metric

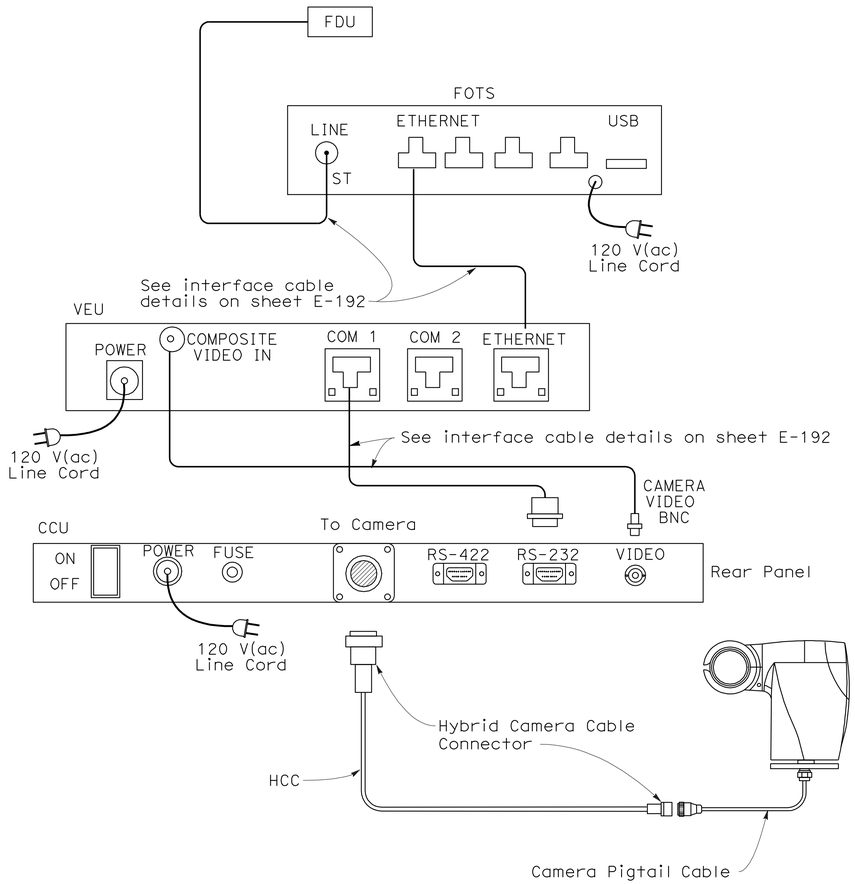

CCTV SYSTEM LAYOUT

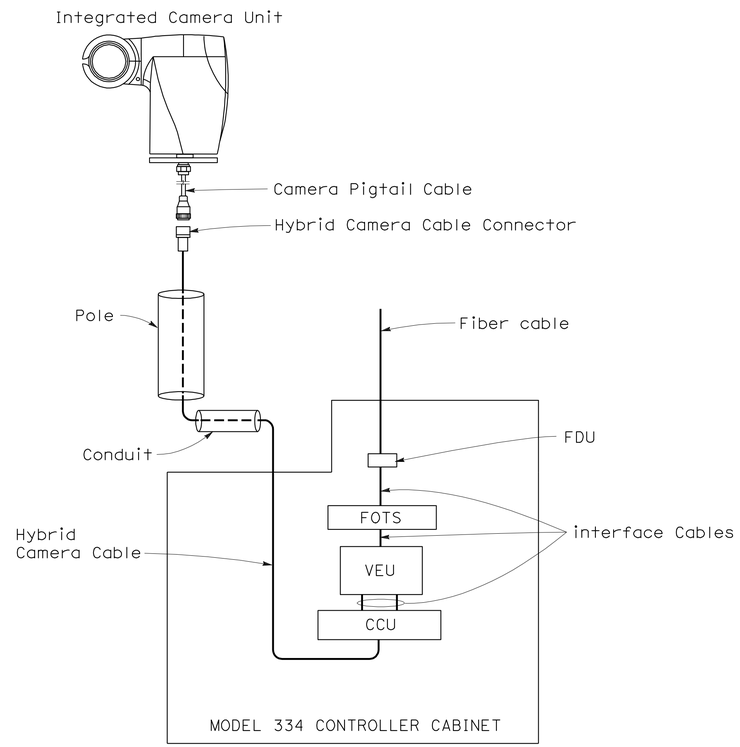

CCTV SYSTEM BLOCK DIAGRAM

HCC - HYBRID CAMERA CABLE
TBO - TERMINAL BLOCK O
PDA - POWER DISTRIBUTION ASSEMBLY
CCU - CAMERA CONTROL UNIT
VEU - VIDEO ENCODER UNIT
FOTS - FIBER OPTIC TRANSMITTERS
FDU - FIBER DISTRIBUTION UNIT

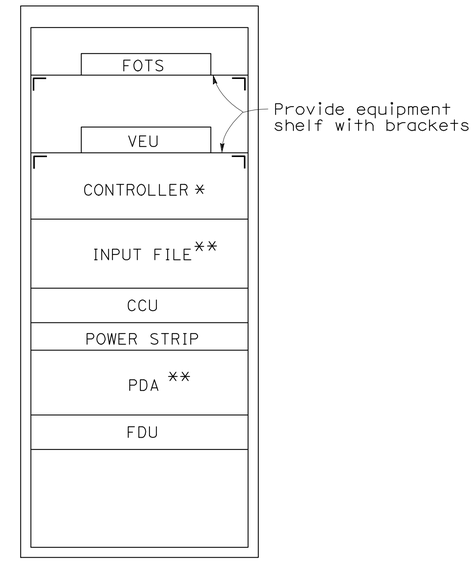

MODEL 334 CONTROLLER CABINET LAYOUT (FRONT VIEW)

* STATE-FURNISHED

** PDA AND INPUT FILE WILL BE INCLUDED ONLY WITH STATE-FURNISHED CONTROLLER CABINET.

DETAILS
TRAFFIC OPERATIONS SYSTEM (CLOSED CIRCUIT TELEVISION CAMERA EQUIPMENT AND SYSTEM LAYOUT)

NO SCALE

FOR NOTES, ABBREVIATIONS AND LEGEND, SEE SHEETS E-4 AND E-6

THIS PLAN IS ACCURATE FOR ELECTRICAL WORK ONLY.

E-191

REVISED BY	DATE REVISED

CALCULATED-DESIGNED BY	CHECKED BY
MICHAEL P. LEE	DAVID OTO

FUNCTIONAL SUPERVISOR: BEHZAD GOLEMOHAMMADI

STATE OF CALIFORNIA - DEPARTMENT OF TRANSPORTATION
Caltrans
ELECTRICAL

LAST REVISION 00-00-00 | DATE PLOTTED => 06-OCT-2011 | TIME PLOTTED => 07:16

RELATIVE BORDER SCALE IS IN MILLIMETERS 0 20 40 60 80

DGN FILE => 40120mua191.dgn
USERNAME => s121614

CU 04251 | EA 0120M1

Dist	COUNTY	ROUTE	POST MILES TOTAL PROJECT	SHEET No.	TOTAL SHEETS
04	Ala	80	1.6/2.7	382	744

REGISTERED ELECTRICAL ENGINEER 05/02/11

10-3-11
PLANS APPROVAL DATE

REGISTERED PROFESSIONAL ENGINEER M.P. Lee No. 13435 Exp. 9-30-12 ELECT STATE OF CALIFORNIA

THE STATE OF CALIFORNIA OR ITS OFFICERS OR AGENTS SHALL NOT BE RESPONSIBLE FOR THE ACCURACY OR COMPLETENESS OF ELECTRONIC COPIES OF THIS PLAN SHEET.

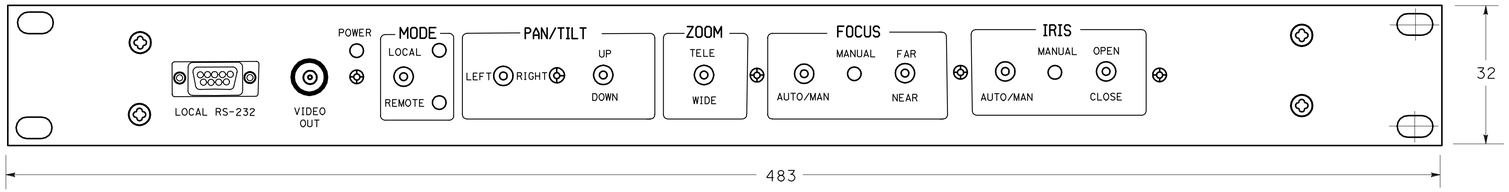

CCU FRONT PANEL LAYOUT

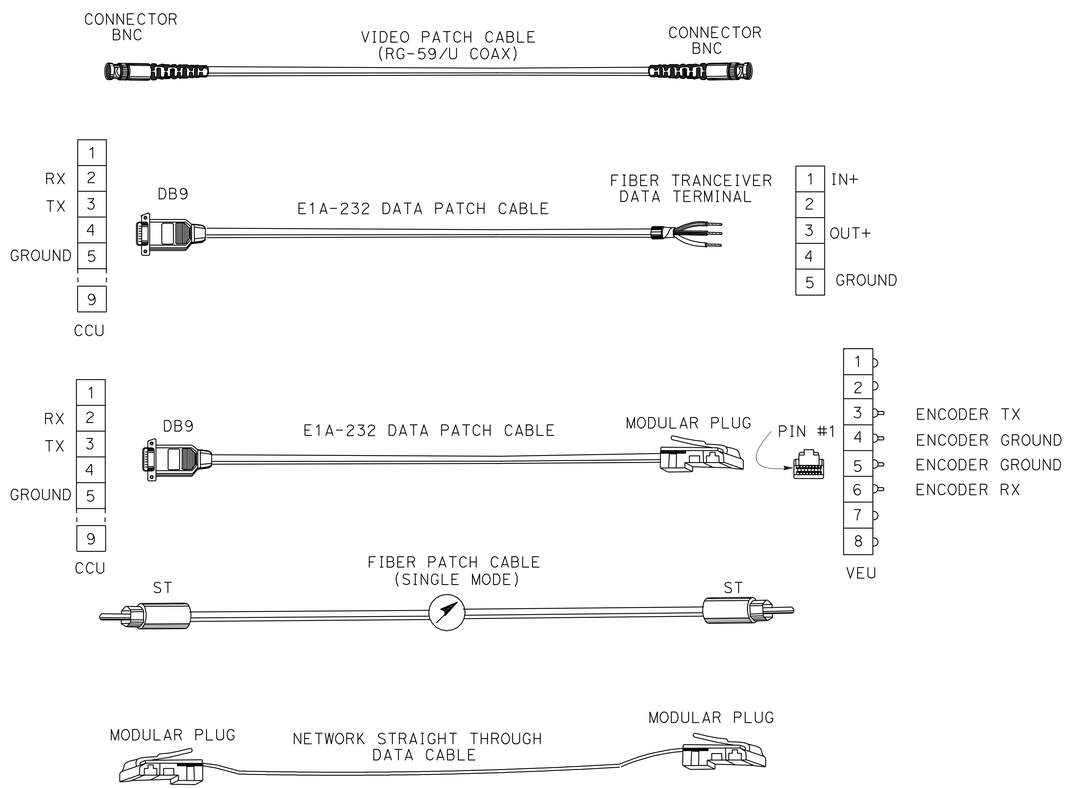

INTERFACE CABLE DETAILS

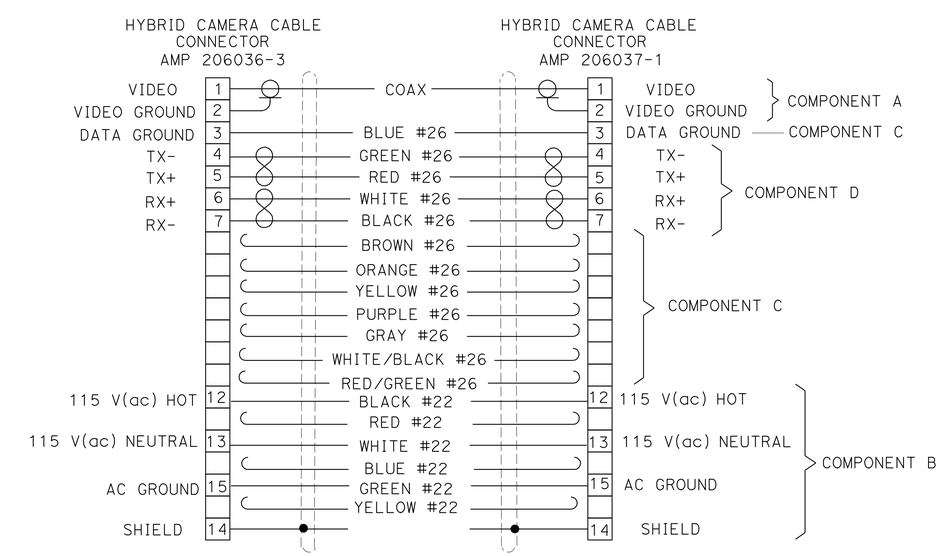

COMPONENT	CONDUCTOR	DESCRIPTION
A	COAX	75 OHM, RG-59/U TYPE, STANDARD ANALOG VIDEO CABLE, 6 MM NOMINAL DIAMETER
B	6 CONDUCTOR	22 AWG, COPPER INSULATED CONDUCTOR, 1.22 MM NOMINAL DIAMETER, COLOR CODED: B1-BLACK, B2-RED, B3-GREEN, B4-WHITE, B5-BLUE, B6-YELLOW
C	8 CONDUCTOR	26 AWG, COPPER INSULATED CONDUCTOR, 0.94 MM NOMINAL DIAMETER, COLOR CODED: C1-BROWN, C2-BLUE, C3-ORANGE, C4-YELLOW, C5-PURPLE, C6-GRAY, C7-WHITE/BLACK, C8-RED/GREEN
D	4 CONDUCTOR	26 AWG, COPPER INSULATED CONDUCTOR, 0.94 MM NOMINAL DIAMETER, COLOR CODED: D1-BLACK & WHITE, D2-RED & GREEN

HYBRID CAMERA CABLE AND CONNECTORS DETAIL

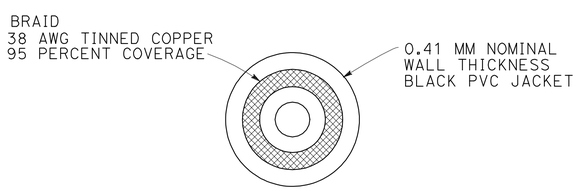

COMPONENT A

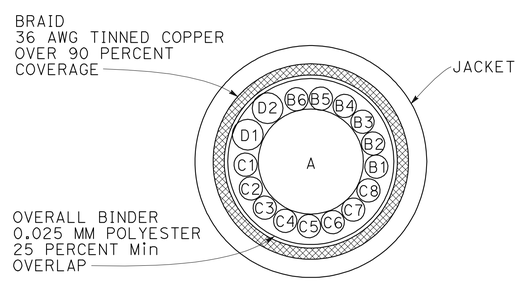

HYBRID CAMERA CABLE CROSS SECTION

DETAILS
TRAFFIC OPERATIONS SYSTEM (CLOSED CIRCUIT TELEVISION CAMERA EQUIPMENT AND SYSTEM LAYOUT)
NO SCALE

FOR NOTES, ABBREVIATIONS AND LEGEND, SEE SHEETS E-4 AND E-6

THIS PLAN IS ACCURATE FOR ELECTRICAL WORK ONLY.

ALL DIMENSIONS ARE IN MILLIMETERS UNLESS OTHERWISE SHOWN

E-192

STATE OF CALIFORNIA - DEPARTMENT OF TRANSPORTATION
Caltrans
ELECTRICAL

FUNCTIONAL SUPERVISOR: BEHZAD GOLEMOHAMMADI
CALCULATED-DESIGNED BY: MICHAEL P. LEE
CHECKED BY: DAVID OTO
REVISED BY
DATE REVISED

RELATIVE BORDER SCALE IS IN MILLIMETERS 0 20 40 60 80

DGN FILE => 40120mua192.dgn
USERNAME => s121614

CU 04251
EA 0120M1

LAST REVISION 00-00-00
DATE PLOTTED => 06-OCT-2011
TIME PLOTTED => 07:17

Dist	COUNTY	ROUTE	POST MILES TOTAL PROJECT	SHEET No.	TOTAL SHEETS
04	Ala	80	1.6/2.7	383	744

REGISTERED ELECTRICAL ENGINEER 05/02/11

10-3-11
PLANS APPROVAL DATE

REGISTERED PROFESSIONAL ENGINEER M.P. Lee No. 13435 Exp. 9-30-12 ELECT STATE OF CALIFORNIA

THE STATE OF CALIFORNIA OR ITS OFFICERS OR AGENTS SHALL NOT BE RESPONSIBLE FOR THE ACCURACY OR COMPLETENESS OF ELECTRONIC COPIES OF THIS PLAN SHEET.

Caltrans Metric

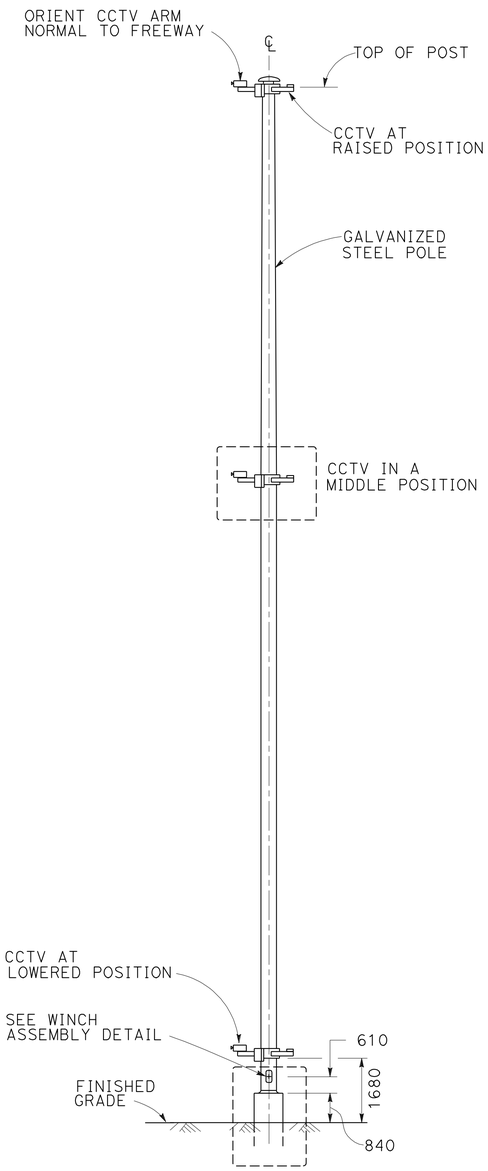

CCTV-W03 POLE DETAILS

(CALTRANS TYPE CCTV-90, STANDARD PLAN ES-16C)

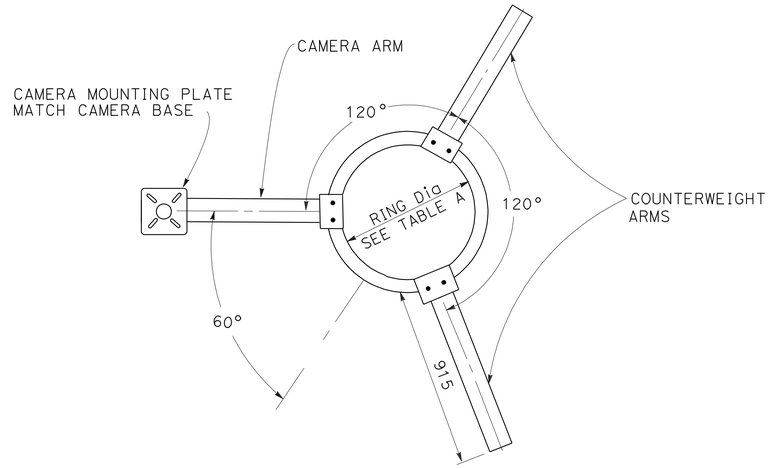

TOP VIEW OF RING AND ARM ASSEMBLIES

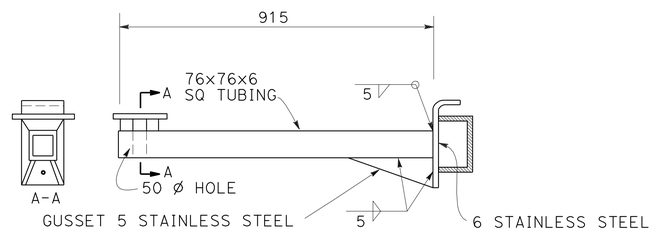

CAMERA ARM

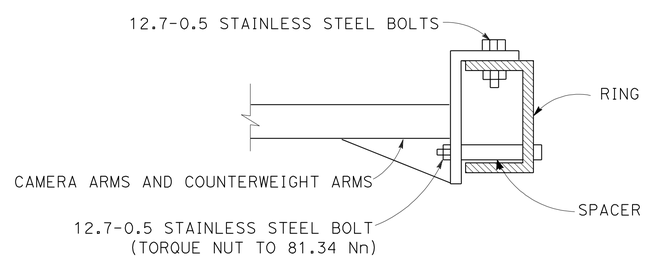

RING-ARM MOUNTING DETAIL

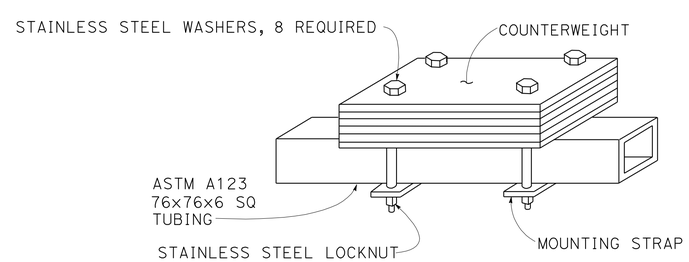

COUNTERWEIGHT DETAIL

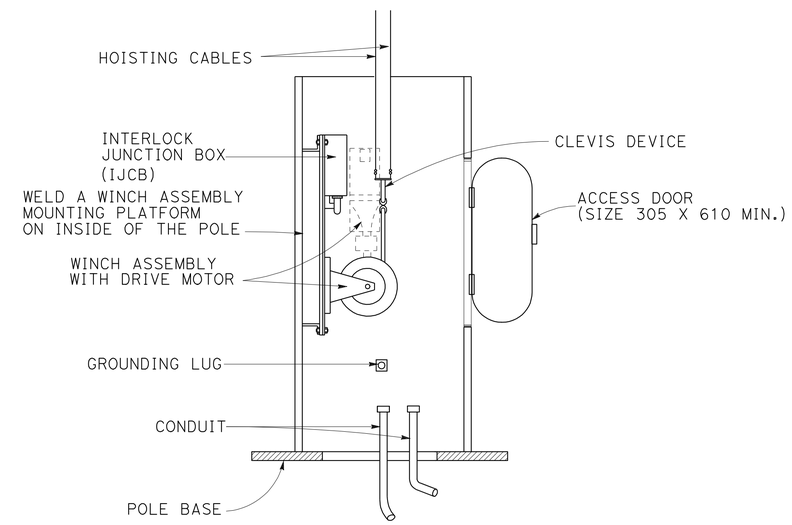

WINCH ASSEMBLY DETAIL

NOTES: (FOR THIS SHEET ONLY)

1. ALL MOUNTING PLATE WELDS AND CONNECTIONS BETWEEN RING AND ARMS, ARE SHOWN FOR EXAMPLE. THE CONTRACTOR SHALL SUBMIT ACTUAL MOUNTING DETAILS TO THE ENGINEER FOR APPROVAL PRIOR TO FABRICATION.
2. COUNTERWEIGHT AND CAMERA ARMS SHALL HAVE IDENTICAL MOUNTING ATTACHMENT TO RING.
3. COUNTERWEIGHT DETAIL IS SHOWN FOR EXAMPLE. MODIFY DETAIL TO BALANCE CCTV/RING/ARMS ASSEMBLY ABOUT THE CENTER OF THE RING.
4. EACH COUNTERWEIGHT SHALL HAVE ITS WEIGHT EQUAL TO THE WEIGHT OF INTEGRATED CAMERA UNIT.
5. ALL WELDS ARE METAL-ARC WITH E 6011 ROD WITH 72000 PSI TENSILE STRENGTH AS WELDED.
6. COUNTERWEIGHT AND RELATED HARDWARE SHALL BE GALVANIZED PER ASTM 123.
6. For other related details, see sheet E-194.

DETAILS
TRAFFIC OPERATIONS SYSTEM (CLOSED CIRCUIT TELEVISION CAMERA HIGH MAST INSTALLATION)

NO SCALE

FOR NOTES, ABBREVIATIONS AND LEGEND, SEE SHEETS E-4 AND E-6

THIS PLAN IS ACCURATE FOR ELECTRICAL WORK ONLY.

ALL DIMENSIONS ARE IN MILLIMETERS UNLESS OTHERWISE SHOWN

E-193

STATE OF CALIFORNIA - DEPARTMENT OF TRANSPORTATION
Caltrans
ELECTRICAL

FUNCTIONAL SUPERVISOR: BEHZAD GOLEMOHAMMADI
CALCULATED-DESIGNED BY: MICHAEL P. LEE
CHECKED BY: DAVID OTO
REVISED BY
DATE REVISED

LAST REVISION 00-00-00
DATE PLOTTED => 06-OCT-2011
TIME PLOTTED => 07:17

RELATIVE BORDER SCALE IS IN MILLIMETERS 0 20 40 60 80
DGN FILE => 40120mua193.dgn
USERNAME => s121614
CU 04251
EA 0120M1

Dist	COUNTY	ROUTE	POST MILES TOTAL PROJECT	SHEET No.	TOTAL SHEETS
04	Ala	80	1.6/2.7	384	744

REGISTERED ELECTRICAL ENGINEER 05/02/11

10-3-11
PLANS APPROVAL DATE

REGISTERED PROFESSIONAL ENGINEER M.P. Lee No. 13435 Exp. 9-30-12 ELECT STATE OF CALIFORNIA

THE STATE OF CALIFORNIA OR ITS OFFICERS OR AGENTS SHALL NOT BE RESPONSIBLE FOR THE ACCURACY OR COMPLETENESS OF ELECTRONIC COPIES OF THIS PLAN SHEET.

Caltrans Metric

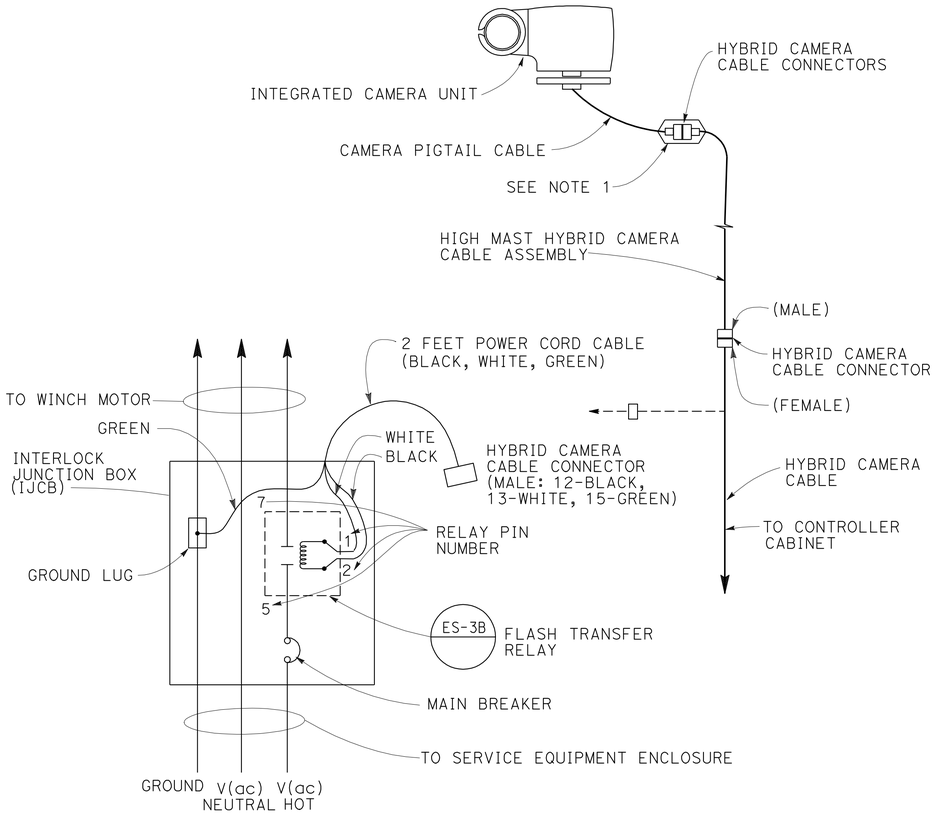

ELECTRICAL CIRCUIT DIAGRAM

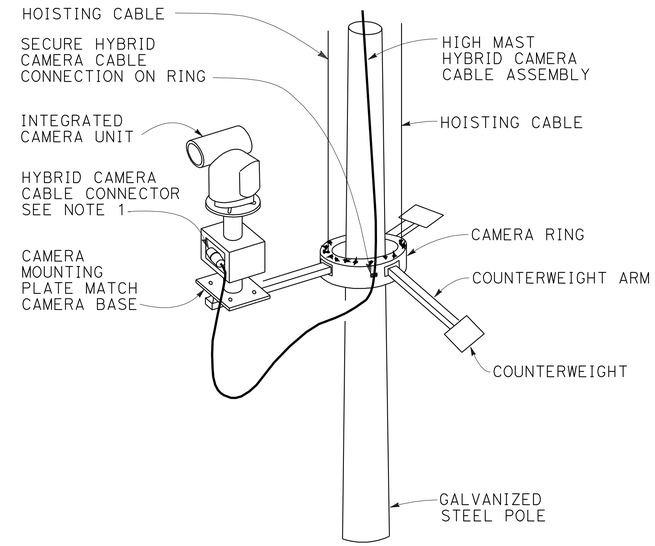

CAMERA RING AT MIDDLE POSITION

NOTES:

1. PLACE HYBRID CAMERA CABLE CONNECTIONS IN ADAPTOR JUNCTION BOX.
2. SEE STANDARD PLANS ES-16C FOR OTHER DETAILS.
3. PROVIDE PULL ROPE WITH LENGTH EQUAL TO POLE HEIGHT PLUS 10 METERS. TIE ONE END OF PULL ROPE TO HYBRID CAMERA CABLE CONNECTOR. COIL PULL ROPE INSIDE THE POLE WHEN CAMERA RING IS AT RAISED POSITION.

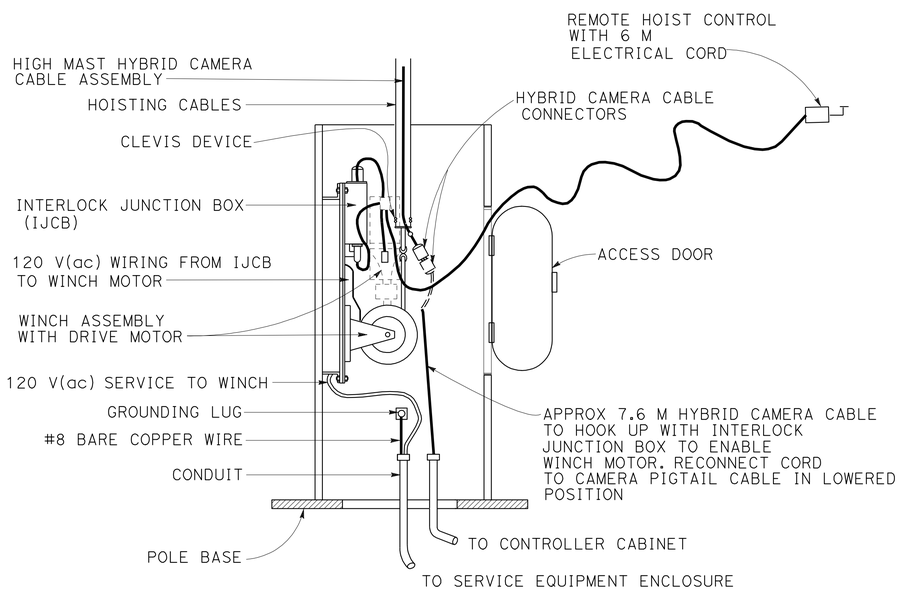

CABLE CONNECTION DETAIL

FOR NOTES, ABBREVIATIONS AND LEGEND, SEE SHEETS E-4 AND E-6

THIS PLAN IS ACCURATE FOR ELECTRICAL WORK ONLY.

DETAILS
TRAFFIC OPERATIONS SYSTEM (CLOSED CIRCUIT TELEVISION CAMERA HIGH MAST INSTALLATION)

NO SCALE

E-194

REVISED BY | DATE REVISED
MICHAEL P. LEE | DAVID OTO
CALCULATED-DESIGNED BY | CHECKED BY
FUNCTIONAL SUPERVISOR: BEHZAD GOLEMOHAMMADI

STATE OF CALIFORNIA - DEPARTMENT OF TRANSPORTATION
Caltrans
ELECTRICAL

LAST REVISION 00-00-00 | DATE PLOTTED => 06-OCT-2011 | TIME PLOTTED => 07:17

RELATIVE BORDER SCALE IS IN MILLIMETERS 0 20 40 60 80

DGN FILE => 40120mua194.dgn
USERNAME => s121614

CU 04251 | EA 0120M1

Dist	COUNTY	ROUTE	POST MILES TOTAL PROJECT	SHEET No.	TOTAL SHEETS
04	Ala	80	1.6/2.7	385	744

REGISTERED ELECTRICAL ENGINEER 05/02/11

10-3-11
PLANS APPROVAL DATE

REGISTERED PROFESSIONAL ENGINEER M.P. Lee No. 13435 Exp. 9-30-12 ELECT STATE OF CALIFORNIA

THE STATE OF CALIFORNIA OR ITS OFFICERS OR AGENTS SHALL NOT BE RESPONSIBLE FOR THE ACCURACY OR COMPLETENESS OF ELECTRONIC COPIES OF THIS PLAN SHEET.

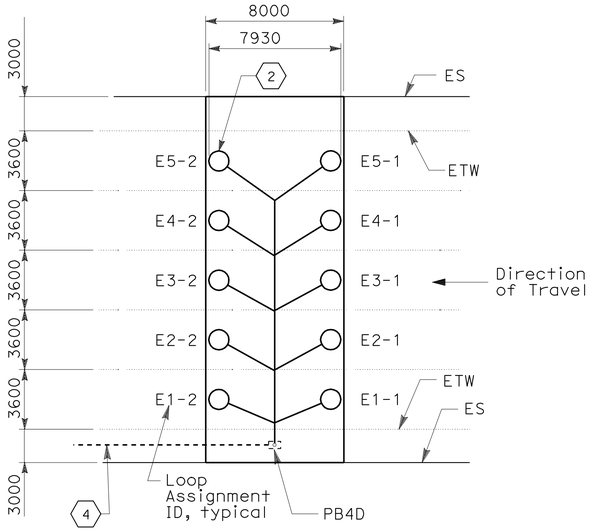

TYPICAL PREFORMED LOOP DETECTOR STATION CONFIGURATION

NO SCALE

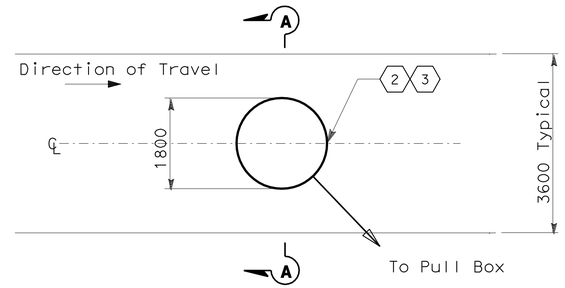

TYPICAL TYPE E LOOP DETECTOR PER LANE DETAIL

SEE SHEET ES-5B FOR ADDITIONAL DETAILS
(For PL-E09 and PL-E10)
NO SCALE

SHEET NOTES:

1. Loop installed in a previous contract. Loop wires were coiled in the pull box and are to be connected in this contract.
2. Type E Preformed Loops.
3. Loops shall be centered in each lane.
4. For conduit routing to service platform refer to Service Platform Reference Sheet listed in the Preformed Loop Schedule.
5. Refer to structure drawings.

LOOP ASSIGNMENT ID

E 4-1

- First row of loops
- Lane number
- Direction
  E-Eastbound
  W-Westbound

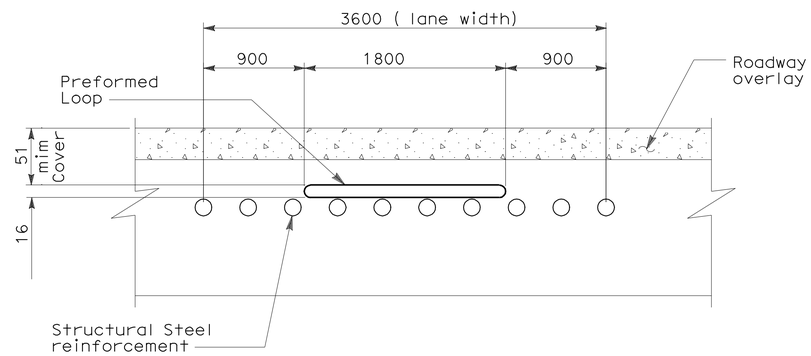

SECTION A-A

(For PL-E09 and PL-E10)
NO SCALE

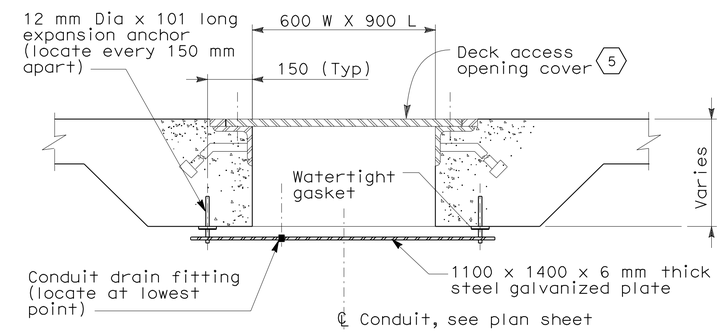

PULL BOX FOR PREFORMED LOOP

(For PL-E09 and PL-E10)
NO SCALE

PREFORMED LOOP SCHEDULE

	STATION	CABINET ID #	SERVICE PLATFORM REFERENCE SHEET	NO. OF LANES
PL-W08	W 84+15	TOS-22WA	Existing	5
PL-W09	W 86+13	TOS-23WA	Existing	5
(1) PL-E09	E 83+86	TOS-22EA	E-30	5
PL-E10	E 85+85	TOS-23EA	E-34	5

DETAILS
TRAFFIC OPERATIONS SYSTEM (PREFORMED LOOP DETECTOR STATION INSTALLATION)

NO SCALE

FOR NOTES, ABBREVIATIONS AND LEGEND, SEE SHEETS E-4 AND E-6

THIS PLAN IS ACCURATE FOR ELECTRICAL WORK ONLY.

ALL DIMENSIONS IN MILLIMETERS UNLESS OTHERWISE SHOWN

E-195

STATE OF CALIFORNIA - DEPARTMENT OF TRANSPORTATION
Caltrans ELECTRICAL

FUNCTIONAL SUPERVISOR: BEHZAD GOLEMOHAMMADI
CALCULATED-DESIGNED BY: MICHAEL P. LEE
CHECKED BY: DAVID OTO
REVISED BY
DATE REVISED

LAST REVISION 00-00-00
DATE PLOTTED => 06-OCT-2011
TIME PLOTTED => 07:17

RELATIVE BORDER SCALE IS IN MILLIMETERS 0 20 40 60 80
DGN FILE => 40120mua195.dgn
USERNAME => s121614
CU 04251
EA 0120M1

Dist	COUNTY	ROUTE	POST MILES TOTAL PROJECT	SHEET No.	TOTAL SHEETS
04	Ala	80	1.6/2.7	386	744

REGISTERED ELECTRICAL ENGINEER 05/02/11

10-3-11
PLANS APPROVAL DATE

REGISTERED PROFESSIONAL ENGINEER M.P. Lee No. 13435 Exp. 9-30-12 ELECT STATE OF CALIFORNIA

THE STATE OF CALIFORNIA OR ITS OFFICERS OR AGENTS SHALL NOT BE RESPONSIBLE FOR THE ACCURACY OR COMPLETENESS OF ELECTRONIC COPIES OF THIS PLAN SHEET.

Caltrans Metric

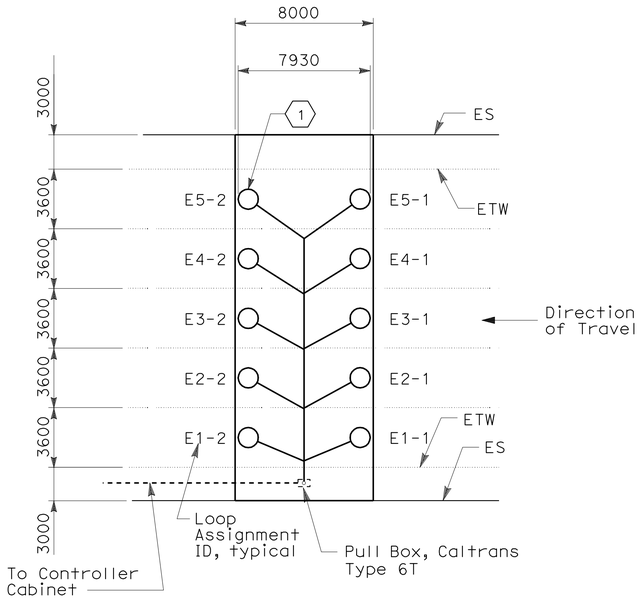

TYPICAL INDUCTIVE LOOP DETECTOR STATION CONFIGURATION

NO SCALE

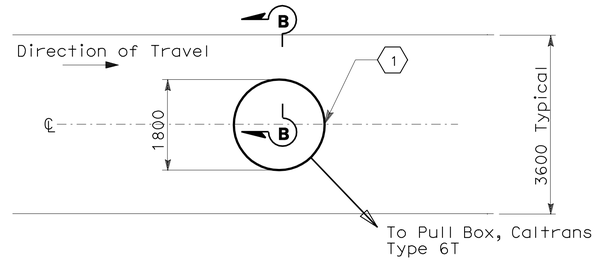

TYPICAL INDUCTIVE LOOP DETECTOR PER LANE DETECTOR

(For PL-E11 and PL-E12)
NO SCALE

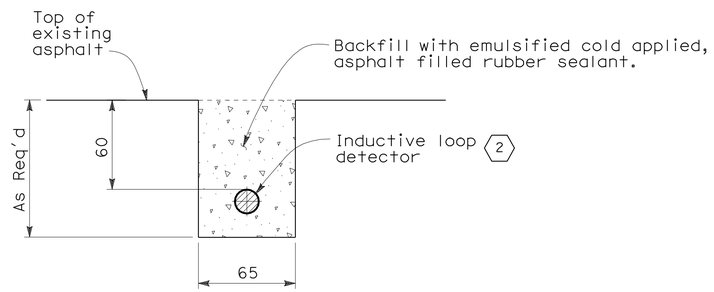

SECTION B-B

NO SCALE

SHEET NOTES:

1. Loop detectors shall be centered in each lane.
2. Inductive loop detector shall be suitable type for installation in hot asphalt overlay.
3. Loop detectors was installed in a previous contract and conductors were coiled inside the pull box. Connection to Controller Cabinet shall be on this contract.

LOOP ASSIGNMENT ID

E 4-1

- First row of loops
- Lane number
- Direction
  - E-Eastbound
  - W-Westbound

LOOP DETECTOR SCHEDULE

	STATION	CABINET ID #	SERVICE PAD REFERENCE SHEET	NO. OF LANES
PL-W10	W 87+83	TOS-24A	E-109	5
PL-W13	W 89+08	TOS-25A	E-111	5
PL-E11	E 87+15	TOS-24A	E-109	5
PL-E12	E 89+90	TOS-25A	E-111	6

3

DETAILS
TRAFFIC OPERATIONS SYSTEM (INDUCTIVE LOOP DETECTOR STATION INSTALLATION)

NO SCALE

FOR NOTES, ABBREVIATIONS AND LEGEND, SEE SHEETS E-4 AND E-6

THIS PLAN IS ACCURATE FOR ELECTRICAL WORK ONLY.

ALL DIMENSIONS ARE IN MILLIMETERS UNLESS OTHERWISE SHOWN

E-196

STATE OF CALIFORNIA - DEPARTMENT OF TRANSPORTATION
Caltrans ELECTRICAL

FUNCTIONAL SUPERVISOR: BEHZAD GOLEMOHAMMADI
CALCULATED-DESIGNED BY: MICHAEL P. LEE
CHECKED BY: DAVID OTO
REVISED BY
DATE REVISED

LAST REVISION 00-00-00
DATE PLOTTED => 06-OCT-2011
TIME PLOTTED => 07:17

RELATIVE BORDER SCALE IS IN MILLIMETERS 0 20 40 60 80
DGN FILE => 40120mua196.dgn
USERNAME => s121614
CU 04251
EA 0120M1

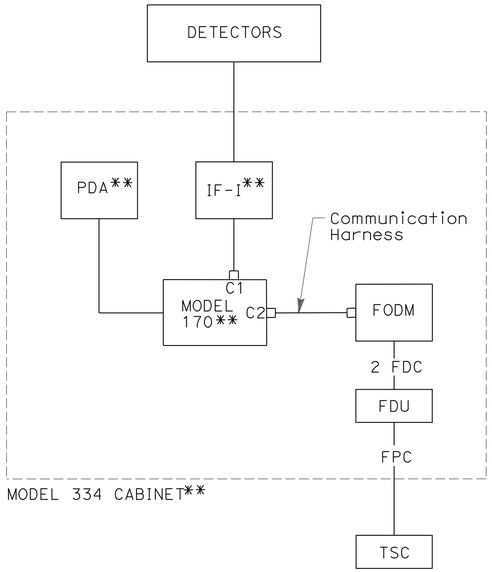

TYPE A

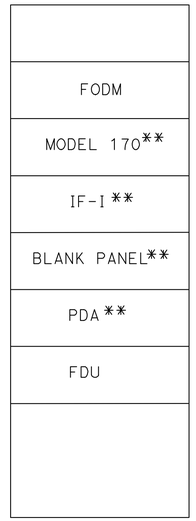

FIBER / DETECTORS

TYPE A

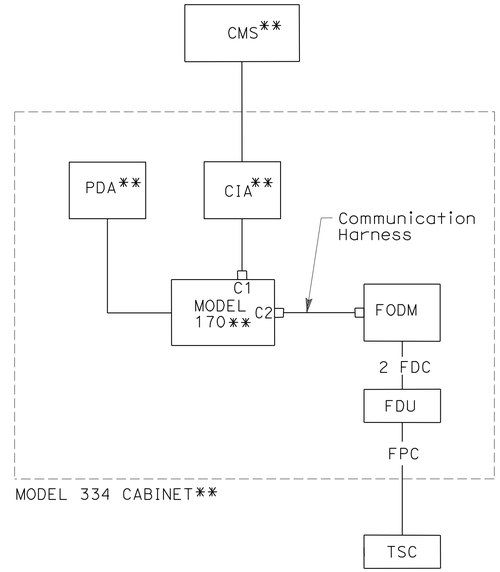

TYPE B

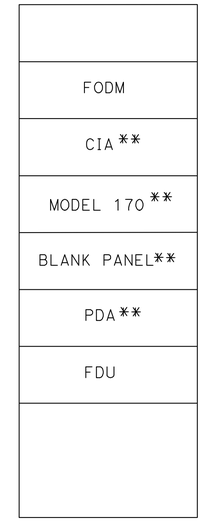

FIBER / CMS

TYPE B

Dist	COUNTY	ROUTE	POST MILES TOTAL PROJECT	SHEET No.	TOTAL SHEETS
04	Ala	80	1.6/2.7	387	744

REGISTERED ELECTRICAL ENGINEER 05/02/11

10-3-11
PLANS APPROVAL DATE

REGISTERED PROFESSIONAL ENGINEER M.P. Lee No. 13435 Exp. 9-30-12 ELECT STATE OF CALIFORNIA

THE STATE OF CALIFORNIA OR ITS OFFICERS OR AGENTS SHALL NOT BE RESPONSIBLE FOR THE ACCURACY OR COMPLETENESS OF ELECTRONIC COPIES OF THIS PLAN SHEET.

Caltrans Metric

SHEET NOTE:

** Equipment to be State-furnished.

FOR NOTES, ABBREVIATIONS AND LEGEND, SEE SHEETS E-4 AND E-6

THIS PLAN IS ACCURATE FOR ELECTRICAL WORK ONLY.

DETAILS
TRAFFIC OPERATIONS SYSTEM (CONTROLLER CABINET CONFIGURATION)
NO SCALE

E-197

STATE OF CALIFORNIA - DEPARTMENT OF TRANSPORTATION
Caltrans
ELECTRICAL

FUNCTIONAL SUPERVISOR: BEHZAD GOLEMOHAMMADI
CALCULATED-DESIGNED BY: MICHAEL P. LEE
CHECKED BY: DAVID OTO
REVISED BY
DATE REVISED

LAST REVISION 00-00-00
DATE PLOTTED => 06-OCT-2011
TIME PLOTTED => 07:17

RELATIVE BORDER SCALE IS IN MILLIMETERS 0 20 40 60 80

DGN FILE => 40120mua197.dgn
USERNAME => s121614

CU 04251
EA 0120M1

Dist	COUNTY	ROUTE	KILOMETER POST TOTAL PROJECT	SHEET No.	TOTAL SHEETS
04	Ala	80	1.6/2.7	388	744

REGISTERED ELECTRICAL ENGINEER 5/02/11

10-3-11
PLANS APPROVAL DATE

REGISTERED PROFESSIONAL ENGINEER DAVID H. OTO No. 10699 Exp. 06/30/2013 ELECTRICAL STATE OF CALIFORNIA

THE STATE OF CALIFORNIA OR ITS OFFICERS OR AGENTS SHALL NOT BE RESPONSIBLE FOR THE ACCURACY OR COMPLETENESS OF ELECTRONIC COPIES OF THIS PLAN SHEET.

PB AMERICAS, Inc.
303 Second St., Suite 700N
San Francisco, CA 94107-1317

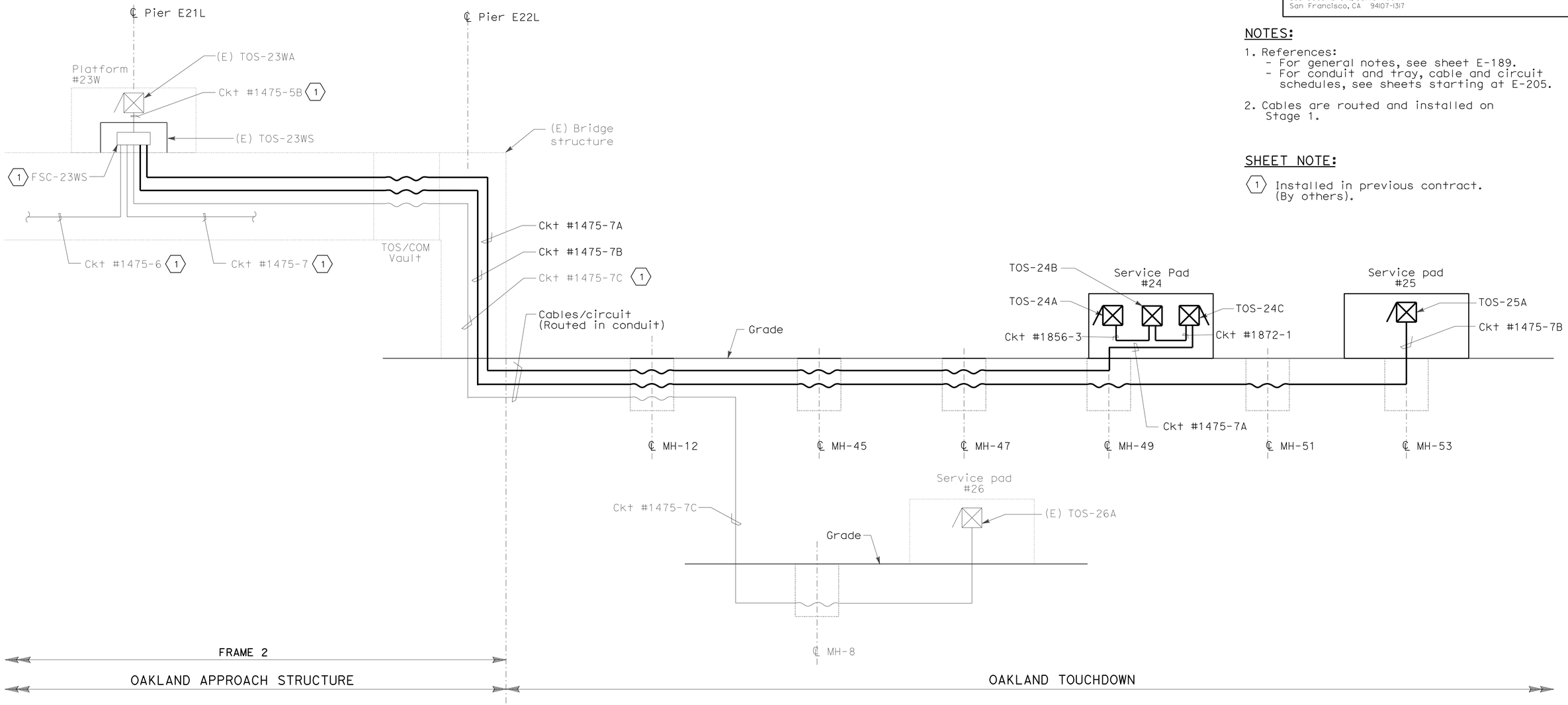

NOTES:

1. References:
   - For general notes, see sheet E-189.
   - For conduit and tray, cable and circuit schedules, see sheets starting at E-205.
2. Cables are routed and installed on Stage 1.

SHEET NOTE:

(1) Installed in previous contract. (By others).

DETAILS
TRAFFIC OPERATIONS SYSTEM (FIBER OPTIC RISER DIAGRAM FOR WESTBOUND)

NO SCALE

THIS PLAN IS ACCURATE FOR ELECTRICAL WORK ONLY.

E-198

STATE OF CALIFORNIA - DEPARTMENT OF TRANSPORTATION
Caltrans

CONSULTANT FUNCTIONAL SUPERVISOR: BRADY NADELL
CALCULATED-DESIGNED BY: JEFFRI HALIM
CHECKED BY: ELLERY LUCAS
REVISED BY / DATE REVISED

LAST REVISION 08-17-09 | DATE PLOTTED => 06-OCT-2011 | TIME PLOTTED => 07:17

Dist	COUNTY	ROUTE	KILOMETER POST TOTAL PROJECT	SHEET No.	TOTAL SHEETS
04	Ala	80	1.6/2.7	389	744

REGISTERED ELECTRICAL ENGINEER 5/02/11

10-3-11
PLANS APPROVAL DATE

REGISTERED PROFESSIONAL ENGINEER DAVID H. OTO No. 10699 Exp. 06/30/2013 ELECTRICAL STATE OF CALIFORNIA

THE STATE OF CALIFORNIA OR ITS OFFICERS OR AGENTS SHALL NOT BE RESPONSIBLE FOR THE ACCURACY OR COMPLETENESS OF ELECTRONIC COPIES OF THIS PLAN SHEET.

PB AMERICAS, Inc.
303 Second St., Suite 700N
San Francisco, CA 94107-1317

Caltrans Metric

NOTES:

1. References:
   - For general notes, see sheet E-189.
   - For conduit and tray, cable and circuit schedules, see sheets starting at E-205.
2. Cables are routed and installed on Stage 1.

SHEET NOTE:

(1) Installed in previous contract. (By others)

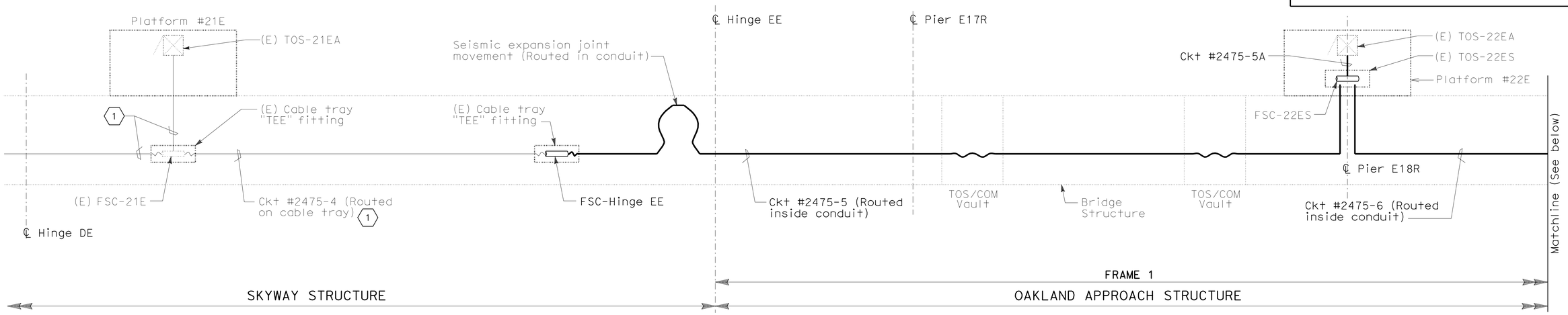

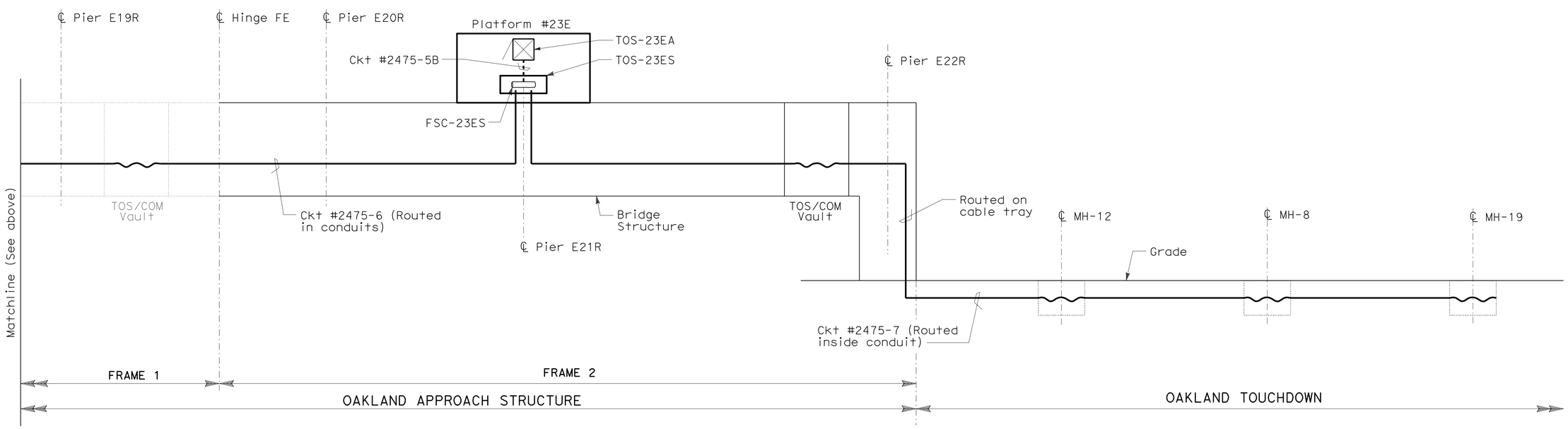

DETAILS
TRAFFIC OPERATIONS SYSTEM (FIBER OPTIC RISER DIAGRAM)
NO SCALE

THIS PLAN ACCURATE FOR ELECTRICAL WORK ONLY.

E-199

REVISED BY | DATE REVISED
JEFFRI HALIM | ELLERY LUCAS
CALCULATED-DESIGNED BY | CHECKED BY
CONSULTANT FUNCTIONAL SUPERVISOR
BRADY NADELL

100% SUBMITTAL (05/27/2011)
STATE OF CALIFORNIA - DEPARTMENT OF TRANSPORTATION
Caltrans

LAST REVISION 08-17-09 | DATE PLOTTED => 06-OCT-2011 | TIME PLOTTED => 07:18

Dist	COUNTY	ROUTE	POST MILES TOTAL PROJECT	SHEET No.	TOTAL SHEETS
04	Ala	80	1.6/2.7	390	744

REGISTERED ELECTRICAL ENGINEER 05/02/11

10-3-11
PLANS APPROVAL DATE

REGISTERED PROFESSIONAL ENGINEER M.P. Lee No. 13435 Exp. 9-30-12 ELECT STATE OF CALIFORNIA

THE STATE OF CALIFORNIA OR ITS OFFICERS OR AGENTS SHALL NOT BE RESPONSIBLE FOR THE ACCURACY OR COMPLETENESS OF ELECTRONIC COPIES OF THIS PLAN SHEET.

Caltrans Metric

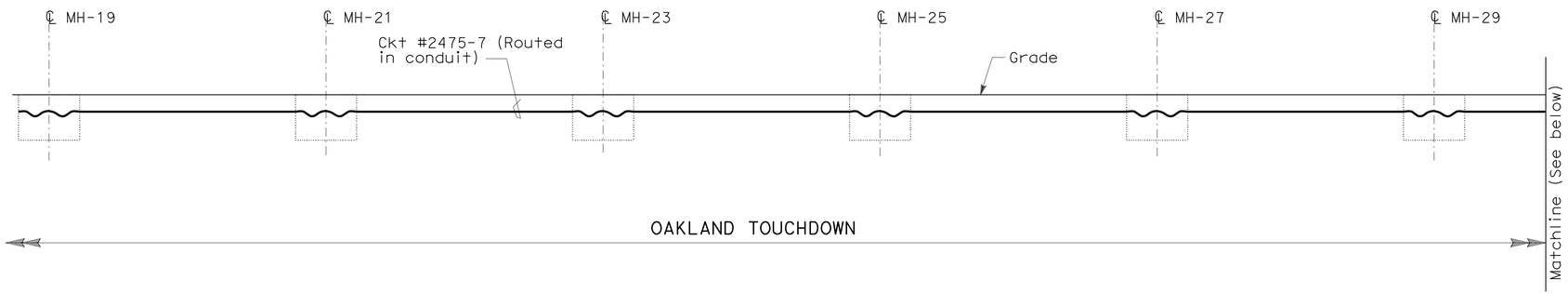

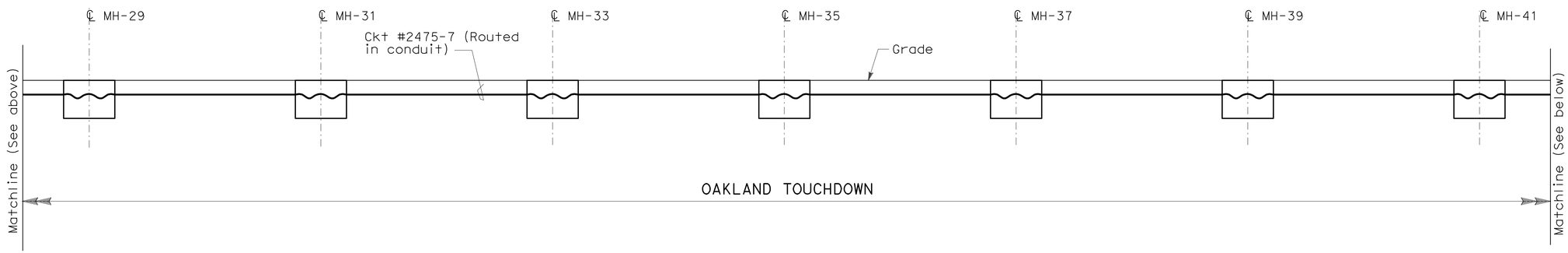

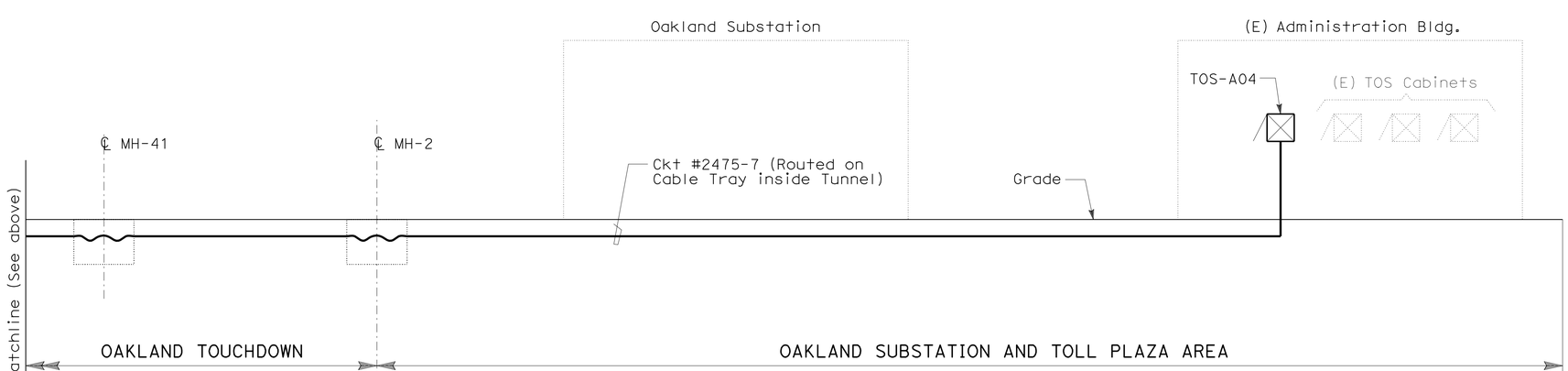

NOTES:

1. References:
   - For general notes, see sheet E-189.
   - For conduit and tray, cable and circuit schedules, see sheets starting at E-205.
2. Cables are routed and installed on Stage 1.

DETAILS
TRAFFIC OPERATIONS SYSTEM (FIBER OPTIC RISER DIAGRAM)
NO SCALE

E-200

FOR NOTES, ABBREVIATIONS AND LEGEND, SEE SHEETS E-4 AND E-6

THIS PLAN IS ACCURATE FOR ELECTRICAL WORK ONLY.

STATE OF CALIFORNIA - DEPARTMENT OF TRANSPORTATION
Caltrans
ELECTRICAL

FUNCTIONAL SUPERVISOR: BEHZAD GOLEMOHAMMADI
CALCULATED-DESIGNED BY: MICHAEL P. LEE
CHECKED BY: DAVID OTO
REVISED BY
DATE REVISED

RELATIVE BORDER SCALE IS IN MILLIMETERS 0 20 40 60 80

DGN FILE => 40120mua200.dgn
USERNAME => s121614

CU 04251
EA 0120M1

LAST REVISION 00-00-00
DATE PLOTTED => 06-OCT-2011
TIME PLOTTED => 07:18

Dist	COUNTY	ROUTE	POST MILES TOTAL PROJECT	SHEET No.	TOTAL SHEETS
04	Ala	80	1.6/2.7	391	744

REGISTERED ELECTRICAL ENGINEER 05/02/11

10-3-11
PLANS APPROVAL DATE

REGISTERED PROFESSIONAL ENGINEER M.P. Lee No. 13435 Exp. 9-30-12 ELECT STATE OF CALIFORNIA

THE STATE OF CALIFORNIA OR ITS OFFICERS OR AGENTS SHALL NOT BE RESPONSIBLE FOR THE ACCURACY OR COMPLETENESS OF ELECTRONIC COPIES OF THIS PLAN SHEET.

Caltrans Metric

		YBI-SUB TOS-Y04 (FDU)	01WA 01W W 52.18	03WA 03W W 54.44	CCTV-W01 03WB 03W W 54.44	04WA 04W W 56.38	CCTV-E01B 06WA 06W W 58.18	07WA 07W W 59.62	09WA 09W W 63.23	10WA 10WA W 64.83	11WA 11W W 66.43	11WB 11W W 66.43	CCTV-W04 12WA 12W W 68.03	13WA 13W W 69.63	15WA 15W W 72.83	16WA 16W W 74.43	17WA 17W W 76.03	CCTV-W02 18WA 18W W 77.63	20WA 20W W 80.51	21WA 21W W 81.71	22WA 22W W 84.04	23WA 23W W 85.55	CCTV-E10 26A 23W MS 86+70	24C 23W MN 88.25	CCTV-W03 25A 23W MN 90.50	SFOBB-HUB ADMIN BLDG TOS-A04 (FDU)	EQ ID cabinet ID FSC ID cabinet station
Tube 1	Fiber																										
	1	X			X X				X X				X X				X X				X X				X X	X	Circuit 1
	2	X			X X				X X				X X				X X				X X				X X	X	Circuit 1
	3	X			X X				X X				X X				X X				X X				X X	X	Circuit 2
	4	X			X X				X X				X X				X X				X X				X X	X	Circuit 2
	5	X			X X				X X				X X				X X				X X				X X	X	Circuit 3
	6	X			X X				X X				X X				X X				X X				X X	X	Circuit 3
	7	X																								X	SPARE
	8	X																								X	
	9	X																								X	
	10	X																								X	
	11	X																								X	
	12	X																								X	
Tube 2	13	X						X X				X X				X X				X X			X X			X	Circuit 4
	14	X						X X				X X				X X				X X			X X			X	Circuit 4
	15	X						X X				X X				X X				X X			X X			X	Circuit 5
	16	X						X X				X X				X X				X X			X X			X	Circuit 5
	17	X						X X				X X				X X				X X			X X			X	Circuit 6
	18	X						X X				X X				X X				X X			X X			X	Circuit 6
	19	X																								X	SPARE
	20	X																								X	
	21	X																								X	
	22	X																								X	
	23	X																								X	
	24	X																								X	
Tube 3	25	X		X X			X X				X X				X X				X X					X X		X	Circuit 7
	26	X		X X			X X				X X				X X				X X					X X		X	Circuit 7
	27	X		X X			X X				X X				X X				X X					X X		X	Circuit 8
	28	X		X X			X X				X X				X X				X X					X X		X	Circuit 8
	29	X		X X			X X				X X				X X				X X					X X		X	Circuit 9
	30	X		X X			X X				X X				X X				X X					X X		X	Circuit 9
	31	X																								X	SPARE
	32	X																								X	
	33	X																								X	
	34	X																								X	
	35	X																								X	
	36	X																								X	
Tube 4	37	X	X X			X X				X X				X X				X X				X X				X	Circuit 10
	38	X	X X			X X				X X				X X				X X				X X				X	Circuit 10
	39	X	X X			X X				X X				X X				X X				X X				X	Circuit 11
	40	X	X X			X X				X X				X X				X X				X X				X	Circuit 11
	41	X	X X			X X				X X				X X				X X				X X				X	Circuit 12
	42	X	X X			X X				X X				X X				X X				X X				X	Circuit 12
	43	X																X X								X	SPARE
	44	X																X X								X	
	45	X																X X								X	
	46	X																X X								X	
	47	X																X X								X	
	48	X																X X								X	
Tube 5	49~60	X																								X	SPARES (NOTE 1)
Tube 6	61~72	X																								X	SPARES (NOTE 1)

(E) FIBER OPTIC TERMINATIONS - WESTBOUND

NOTES:

1. Spares. Terminate each fiber on FDU.
2. X - Terminate each fiber FDU.

FOR NOTES, ABBREVIATIONS AND LEGEND, SEE SHEETS E-4 AND E-6

THIS PLAN IS ACCURATE FOR ELECTRICAL WORK ONLY.

DETAILS
TRAFFIC OPERATIONS SYSTEM (FIBER OPTIC TERMINATIONS FOR WESTBOUND)

E-201

STATE OF CALIFORNIA - DEPARTMENT OF TRANSPORTATION
Caltrans ELECTRICAL

FUNCTIONAL SUPERVISOR: BEHZAD GOLEMOHAMMADI
CALCULATED-DESIGNED BY: MICHAEL P. LEE
CHECKED BY: DAVID OTO
REVISED BY
DATE REVISED

LAST REVISION 00-00-00 | DATE PLOTTED => 06-OCT-2011 | TIME PLOTTED => 07:18

RELATIVE BORDER SCALE IS IN MILLIMETERS 0 20 40 60 80

DGN FILE => 40120mua201.dgn
USERNAME => s121614

CU 04251 | EA 0120M1

Dist	COUNTY	ROUTE	POST MILES TOTAL PROJECT	SHEET No.	TOTAL SHEETS
04	Ala	80	1.6/2.7	392	744

REGISTERED ELECTRICAL ENGINEER 05/02/11

10-3-11
PLANS APPROVAL DATE

REGISTERED PROFESSIONAL ENGINEER M.P. Lee No. 13435 Exp. 9-30-12 ELECT STATE OF CALIFORNIA

THE STATE OF CALIFORNIA OR ITS OFFICERS OR AGENTS SHALL NOT BE RESPONSIBLE FOR THE ACCURACY OR COMPLETENESS OF ELECTRONIC COPIES OF THIS PLAN SHEET.

		YBI-SUB TOS-Y04 (FDU)	01EA 01E E 52.16	RM01 01E R1 51.80	02EA 02E E 53.70	03EA 03E E 54.38	04EA 04E E 56.29	CCTV-E01A 06EA 06E E 58.10	07EA 07E E 59.54	09EA 09E E 63.08	10EA 10E E 64.62	11EA 11E E 66.15	12EA 12E E 67.75	13EA 13E E 69.36	CCTV-E02 13EB 13E E 69.36	15EA 15E E 72.55	16EA 16E E 74.16	17EA 17E E 75.75	18EA 18E E 77.36	CCTV-E04 20EA 20E E 80.24	21EA 21E E 81.43	CCTV-E03 22EA 22E E 83.75	23EA 23E E 85.24	SFOBB-HUB ADMIN BLDG TOS-A04 (FDU)	EQ ID cabinet ID FSC ID cabinet station
Tube 1	Fiber																								
	1	X	X X				X X				X X				X X				X X				X X	X	Circuit 1
	2	X	X X				X X				X X				X X				X X				X X	X	Circuit 1
	3	X	X X				X X				X X				X X				X X				X X	X	Circuit 2
	4	X	X X				X X				X X				X X				X X				X X	X	Circuit 2
	5	X	X X				X X				X X				X X				X X				X X	X	Circuit 3
	6	X	X X				X X				X X				X X				X X				X X	X	Circuit 3
	7	X													X X									X	SPARE
	8	X													X X									X	
	9	X													X X									X	
	10	X													X X									X	
	11	X													X X									X	
	12	X													X X									X	
Tube 2	13	X		X X				X X				X X				X X				X X				X	Circuit 4
	14	X		X X				X X				X X				X X				X X				X	Circuit 4
	15	X		X X				X X				X X				X X				X X				X	Circuit 5
	16	X		X X				X X				X X				X X				X X				X	Circuit 5
	17	X		X X				X X				X X				X X				X X				X	Circuit 6
	18	X		X X				X X				X X				X X				X X				X	Circuit 6
	19	X																						X	SPARE
	20	X																						X	
	21	X																						X	
	22	X																						X	
	23	X																						X	
	24	X																						X	
Tube 3	25	X			X X				X X				X X				X X				X X			X	Circuit 7
	26	X			X X				X X				X X				X X				X X			X	Circuit 7
	27	X			X X				X X				X X				X X				X X			X	Circuit 8
	28	X			X X				X X				X X				X X				X X			X	Circuit 8
	29	X			X X				X X				X X				X X				X X			X	Circuit 9
	30	X			X X				X X				X X				X X				X X			X	Circuit 9
	31	X																						X	SPARE
	32	X																						X	
	33	X																						X	
	34	X																						X	
	35	X																						X	
	36	X																						X	
Tube 4	37	X				X X				X X				X X				X X				X X		X	Circuit 10
	38	X				X X				X X				X X				X X				X X		X	Circuit 10
	39	X				X X				X X				X X				X X				X X		X	Circuit 11
	40	X				X X				X X				X X				X X				X X		X	Circuit 11
	41	X				X X				X X				X X				X X				X X		X	Circuit 12
	42	X				X X				X X				X X				X X				X X		X	Circuit 12
	43	X																						X	SPARE
	44	X																						X	
	45	X																						X	
	46	X																						X	
	47	X																						X	
	48	X																						X	
Tube 5	49~60	X																						X	SPARES (NOTE 1)
Tube 6	61~72	X																						X	SPARES (NOTE 1)

FIBER OPTIC TERMINATIONS - EASTBOUND

NOTE:

1. Spares. Terminate each fiber on FDU.

FOR NOTES, ABBREVIATIONS AND LEGEND, SEE SHEETS E-4 AND E-6

THIS PLAN IS ACCURATE FOR ELECTRICAL WORK ONLY.

DETAILS
TRAFFIC OPERATIONS SYSTEM (FIBER OPTIC TERMINATIONS FOR EASTBOUND)

E-202

STATE OF CALIFORNIA - DEPARTMENT OF TRANSPORTATION
Caltrans ELECTRICAL

FUNCTIONAL SUPERVISOR: BEHZAD GOLEMOHAMMADI
CALCULATED-DESIGNED BY: MICHAEL P. LEE
CHECKED BY: DAVID OTO
REVISED BY / DATE REVISED

LAST REVISION 00-00-00 | DATE PLOTTED => 06-OCT-2011 | TIME PLOTTED => 07:18

RELATIVE BORDER SCALE IS IN MILLIMETERS 0 20 40 60 80

DGN FILE => 40120mua202.dgn
USERNAME => s121614

CU 04251 | EA 0120M1

Dist	COUNTY	ROUTE	POST MILES TOTAL PROJECT	SHEET No.	TOTAL SHEETS
04	Ala	80	1.6/2.7	393	744

REGISTERED ELECTRICAL ENGINEER 05/02/11

10-3-11
PLANS APPROVAL DATE

REGISTERED PROFESSIONAL ENGINEER M.P. Lee No. 13435 Exp. 9-30-12 ELECT STATE OF CALIFORNIA

THE STATE OF CALIFORNIA OR ITS OFFICERS OR AGENTS SHALL NOT BE RESPONSIBLE FOR THE ACCURACY OR COMPLETENESS OF ELECTRONIC COPIES OF THIS PLAN SHEET.

Caltrans Metric

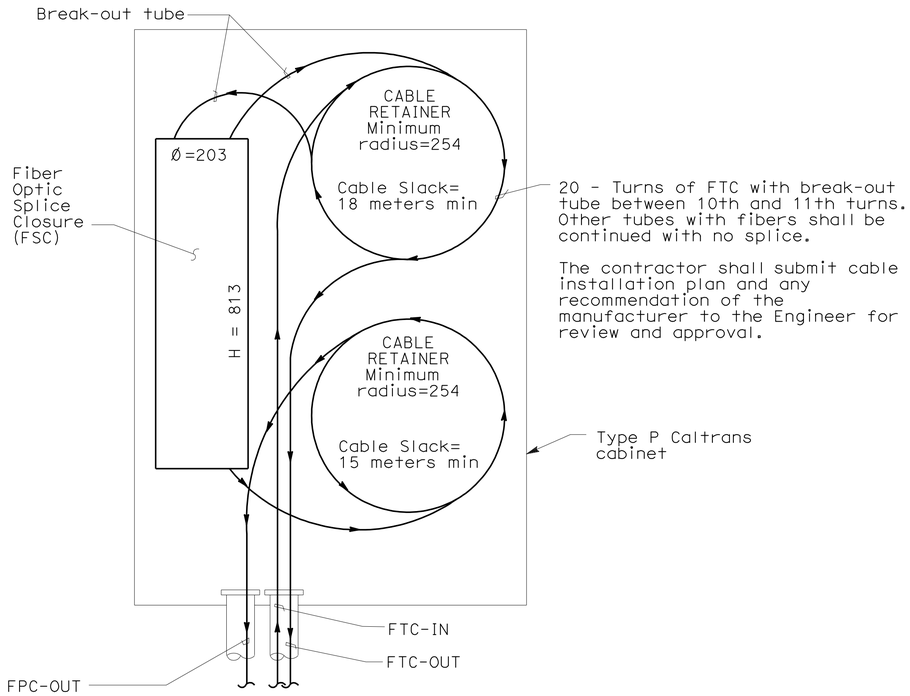

FIBER SPLICE INSIDE CABINET

TYPICAL AT SERVICE PLATFORM

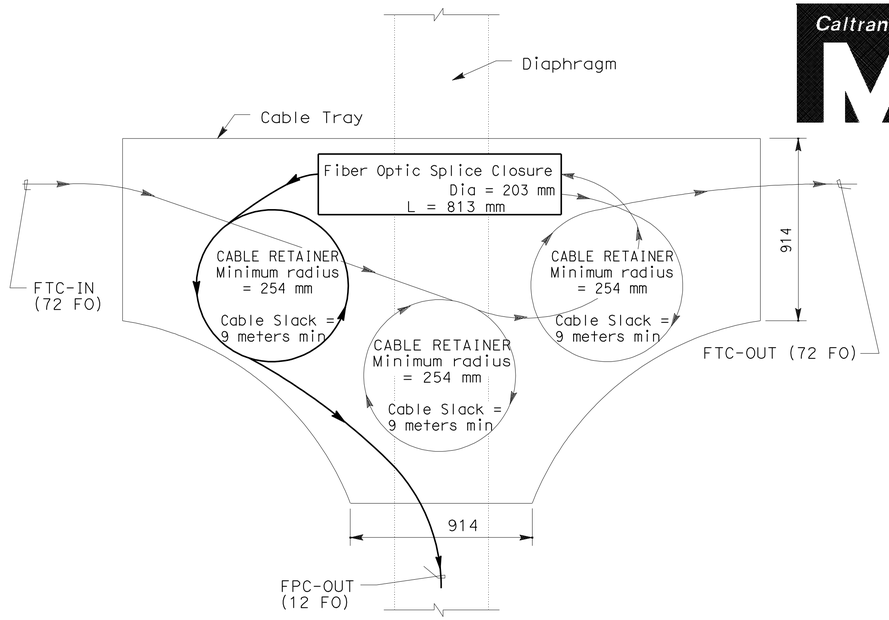

FIBER SPLICE ON CABLE TRAY

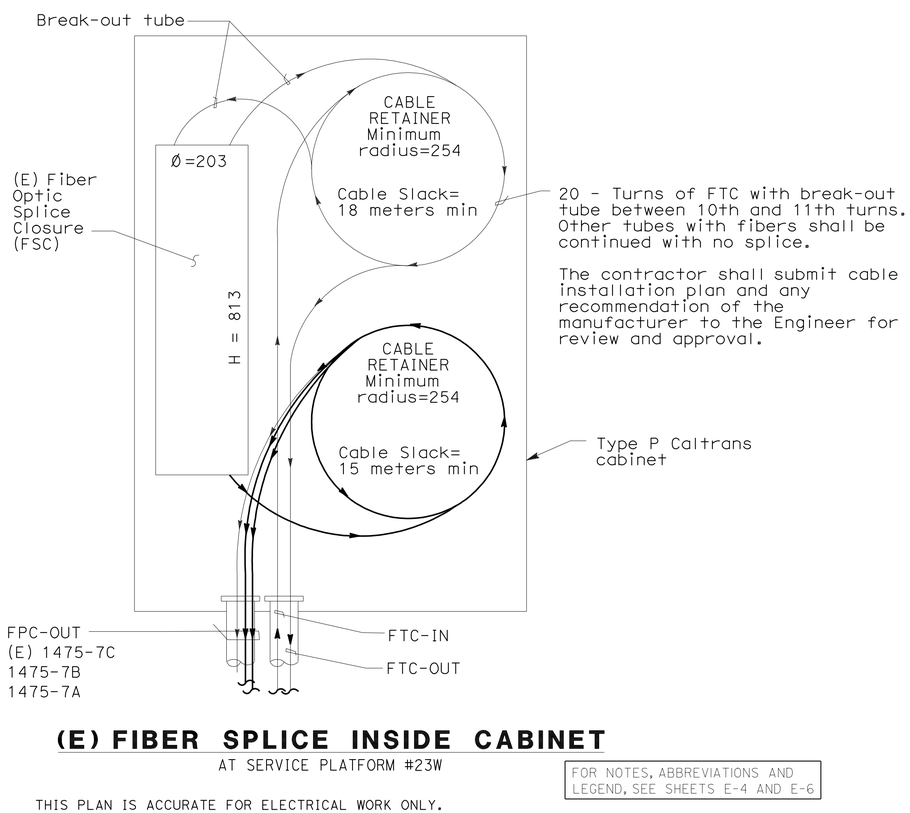

(E) FIBER SPLICE INSIDE CABINET

AT SERVICE PLATFORM #23W

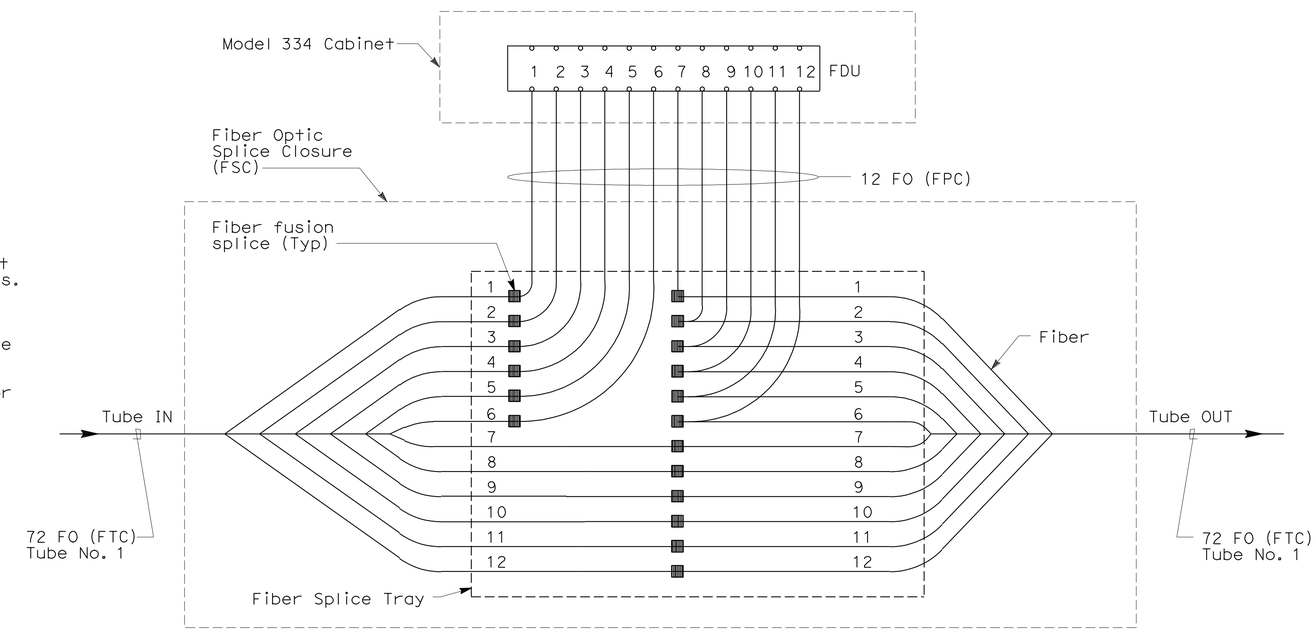

FIBER OPTIC SPLICE CLOSURE DETAIL (TYPICAL EACH TUBE)

DETAILS
TRAFFIC OPERATIONS SYSTEM (TYPICAL FIBER OPTIC SPLICE)

NO SCALE

FOR NOTES, ABBREVIATIONS AND LEGEND, SEE SHEETS E-4 AND E-6

THIS PLAN IS ACCURATE FOR ELECTRICAL WORK ONLY.

ALL DIMENSIONS ARE IN MILLIMETERS UNLESS OTHERWISE SHOWN

E-203

STATE OF CALIFORNIA - DEPARTMENT OF TRANSPORTATION
Caltrans
ELECTRICAL

FUNCTIONAL SUPERVISOR: BEHZAD GOLEMOHAMMADI
CALCULATED-DESIGNED BY: MICHAEL P. LEE
CHECKED BY: DAVID OTO
REVISED BY
DATE REVISED

LAST REVISION 00-00-00
DATE PLOTTED => 06-OCT-2011
TIME PLOTTED => 07:18

RELATIVE BORDER SCALE IS IN MILLIMETERS 0 20 40 60 80
DGN FILE => 40120mua203.dgn
USERNAME => s121614
CU 04251
EA 0120M1

Dist	COUNTY	ROUTE	POST MILES TOTAL PROJECT	SHEET No.	TOTAL SHEETS
04	Ala	80	1.6/2.7	394	744

REGISTERED ELECTRICAL ENGINEER 05/02/11

10-3-11
PLANS APPROVAL DATE

REGISTERED PROFESSIONAL ENGINEER M.P. Lee No. 13435 Exp. 9-30-12 ELECT STATE OF CALIFORNIA

THE STATE OF CALIFORNIA OR ITS OFFICERS OR AGENTS SHALL NOT BE RESPONSIBLE FOR THE ACCURACY OR COMPLETENESS OF ELECTRONIC COPIES OF THIS PLAN SHEET.

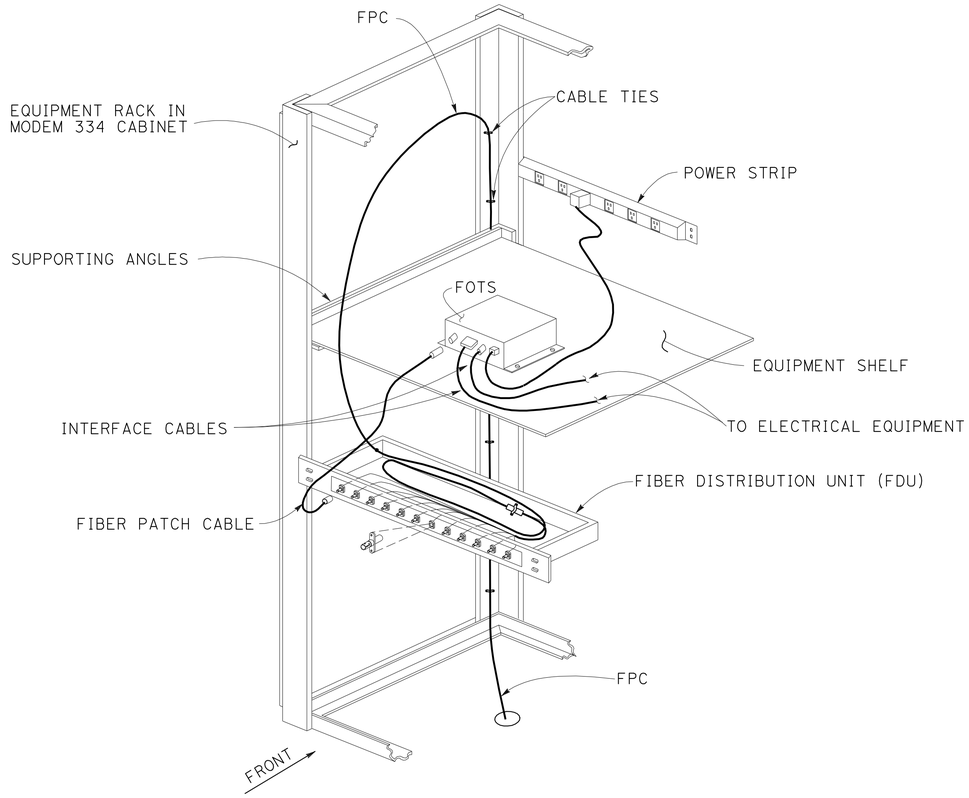

PARTIAL TOS CABINET EQUIPMENT LAYOUT

DEFINITIONS:

FDU - FIBER DISTRIBUTION UNIT
FORS - FIBER OPTIC RECEIVING SYSTEM
FOTS - FIBER OPTIC TRANSMISSION SYSTEM
FPC - FIBER OPTIC PATCH CORD
FSC - FIBER SPLICE CLOSURE

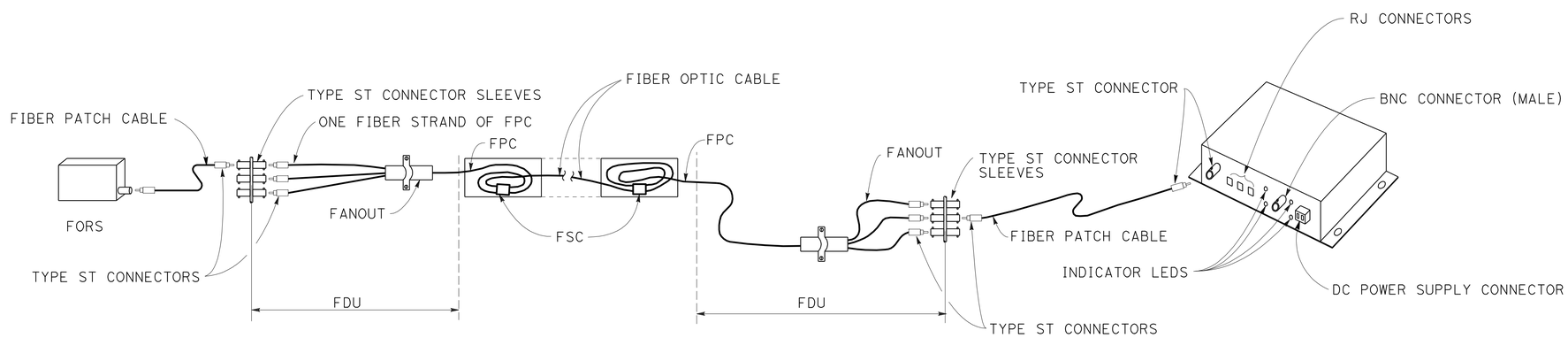

TYPICAL FIBER OPTIC LINK CIRCUIT

DETAILS
TRAFFIC OPERATIONS SYSTEM (TYPICAL FIBER OPTIC LINK CIRCUIT)
NO SCALE

FOR NOTES, ABBREVIATIONS AND LEGEND, SEE SHEETS E-4 AND E-6

THIS PLAN IS ACCURATE FOR ELECTRICAL WORK ONLY.

E-204

STATE OF CALIFORNIA - DEPARTMENT OF TRANSPORTATION
Caltrans
ELECTRICAL

FUNCTIONAL SUPERVISOR: BEHZAD GOLEMOHAMMADI
CALCULATED-DESIGNED BY: MICHAEL P. LEE
CHECKED BY: DAVID OTO
REVISED BY
DATE REVISED

LAST REVISION 00-00-00
DATE PLOTTED => 06-OCT-2011
TIME PLOTTED => 07:18

RELATIVE BORDER SCALE IS IN MILLIMETERS 0 20 40 60 80
DGN FILE => 40120mua204.dgn
USERNAME => s121614
CU 04251
EA 0120M1

Dist	COUNTY	ROUTE	KILOMETER POST TOTAL PROJECT	SHEET No.	TOTAL SHEETS
04	Ala	80	1.6/2.7	395	744

Caltrans Metric

REGISTERED ELECTRICAL ENGINEER 05/02/11

10-3-11
PLANS APPROVAL DATE

REGISTERED PROFESSIONAL ENGINEER DAVID H. OTO No. 10699 Exp. 06/30/2013 ELECTRICAL STATE OF CALIFORNIA

THE STATE OF CALIFORNIA OR ITS OFFICERS OR AGENTS SHALL NOT BE RESPONSIBLE FOR THE ACCURACY OR COMPLETENESS OF ELECTRONIC COPIES OF THIS PLAN SHEET.

PB AMERICAS, Inc.
303 Second St., Suite 700N
San Francisco, CA 94107-1317

Conduit/Tray No: *1T25 | Reference: E-24
Size: 610 | Type: 152 mm siderail ladder tray
From: Pier E22L column | To: Pier E22L column
Total Fill (mm2): 1751.54 | Remarks: (E) conduit and innerduct(s). For routed cables, see circuit schedule.
Allowable Fill (mm2): 16774.16
Description of Changes:

Included Cable No.	Conductor Type	Area (mm2)
*2494-ID-A	25.4 mm, Black, Smooth innerduct, HDPE w/ pull rope	875.77
*2494-ID-B	25.4 mm, Brown, Smooth innerduct, HDPE w/ pull rope	875.77

Conduit/Tray No: *2300 | Reference: E-8
Size: 41 | Type: RGS conduit
From: PB-LTG | To: PB-LTG
Total Fill (mm2): 388.74 | Remarks: (E) conduit, add new cable (s) as listed below.
Allowable Fill (mm2): 534.55
Description of Changes:

Included Cable No.	Conductor Type	Area (mm2)
A-2005-2	3-1/C #6, 600 V, RHH/RHW insulation	175.89
Pull Rope	Soft-Fiber Polyester	0.00
S-2601-1	3 + 1 Gnd, #6, #8, 600 V, RHH/RHW insulation	212.85

Conduit/Tray No: *2302 | Reference: E-8
Size: 41 | Type: RGS conduit
From: PB-LTG | To: PB-LTG
Total Fill (mm2): 388.74 | Remarks: (E) conduit, add new cable (s) as listed below.
Allowable Fill (mm2): 534.55
Description of Changes:

Included Cable No.	Conductor Type	Area (mm2)
A-2005-2	3-1/C #6, 600 V, RHH/RHW insulation	175.89
Pull Rope	Soft-Fiber Polyester	0.00
S-2601-1	3 + 1 Gnd, #6, #8, 600 V, RHH/RHW insulation	212.85

Conduit/Tray No: *2303 | Reference: E-8
Size: 41 | Type: RGS conduit
From: PB-LTG | To: PB-LTG
Total Fill (mm2): 388.74 | Remarks: (E) conduit, add new cable (s) as listed below.
Allowable Fill (mm2): 534.55
Description of Changes:

Included Cable No.	Conductor Type	Area (mm2)
A-2005-2	3-1/C #6, 600 V, RHH/RHW insulation	175.89
Pull Rope	Soft-Fiber Polyester	0.00
S-2601-1	3 + 1 Gnd, #6, #8, 600 V, RHH/RHW insulation	212.85

Conduit/Tray No: *2304 | Reference: E-8
Size: 41 | Type: RGS conduit
From: PB-LTG | To: PB-LTG
Total Fill (mm2): 388.74 | Remarks: (E) conduit, add new cable (s) as listed below.
Allowable Fill (mm2): 534.55
Description of Changes:

Included Cable No.	Conductor Type	Area (mm2)
A-2005-2	3-1/C #6, 600 V, RHH/RHW insulation	175.89
Pull Rope	Soft-Fiber Polyester	0.00
S-2601-1	3 + 1 Gnd, #6, #8, 600 V, RHH/RHW insulation	212.85

Conduit/Tray No: *2305 | Reference: E-9
Size: 41 | Type: RGS conduit
From: PB-LTG | To: PB-LTG
Total Fill (mm2): 388.74 | Remarks: (E) conduit, add new cable (s) as listed below.
Allowable Fill (mm2): 534.55
Description of Changes:

Included Cable No.	Conductor Type	Area (mm2)
A-2005-2	3-1/C #6, 600 V, RHH/RHW insulation	175.89
Pull Rope	Soft-Fiber Polyester	0.00
S-2601-2	3 + 1 Gnd, #6, #8, 600 V, RHH/RHW insulation	212.85

Conduit/Tray No: *2306 | Reference: E-9
Size: 41 | Type: RGS conduit
From: PB-LTG | To: PB-LTG
Total Fill (mm2): 388.74 | Remarks: (E) conduit, add new cable (s) as listed below.
Allowable Fill (mm2): 534.55
Description of Changes:

Included Cable No.	Conductor Type	Area (mm2)
A-2005-2	3-1/C #6, 600 V, RHH/RHW insulation	175.89
Pull Rope	Soft-Fiber Polyester	0.00
S-2601-2	3 + 1 Gnd, #6, #8, 600 V, RHH/RHW insulation	212.85

CONDUIT AND TRAY SCHEDULE
ROADWAY AND GIRDER LEVEL EASTBOUND

THIS PLAN IS ACCURATE FOR ELECTRICAL WORK ONLY.

E-205

REVISED BY | DATE REVISED
JEFFRI HALIM | ELLERY LUCAS
CALCULATED-DESIGNED BY | CHECKED BY
CONSULTANT FUNCTIONAL SUPERVISOR
BRADY NADELL
STATE OF CALIFORNIA - DEPARTMENT OF TRANSPORTATION
Caltrans

LAST REVISION 08-17-09 | DATE PLOTTED => 06-OCT-2011 | TIME PLOTTED => 07:18

Dist	COUNTY	ROUTE	KILOMETER POST TOTAL PROJECT	SHEET No.	TOTAL SHEETS
04	Ala	80	1.6/2.7	396	744

REGISTERED ELECTRICAL ENGINEER 05/02/11

10-3-11
PLANS APPROVAL DATE

REGISTERED PROFESSIONAL ENGINEER DAVID H. OTO No. 10699 Exp. 06/30/2013 ELECTRICAL STATE OF CALIFORNIA

THE STATE OF CALIFORNIA OR ITS OFFICERS OR AGENTS SHALL NOT BE RESPONSIBLE FOR THE ACCURACY OR COMPLETENESS OF ELECTRONIC COPIES OF THIS PLAN SHEET.

PB AMERICAS, Inc.
303 Second St., Suite 700N
San Francisco, CA 94107-1317

Caltrans Metric

Conduit/Tray No:	*2307	Reference:	E-9
Size:	41	Type:	RGS conduit
From:	PB-LTG	To:	PB-LTG
Total Fill (mm2):	388.74	Remarks:	(E) conduit, add new cable (s) as listed below.
Allowable Fill (mm2):	534.55		
Description of Changes:			

Included Cable No.	Conductor Type	Area (mm2)
A-2005-2	3-1/C #6, 600 V, RHH/RHW insulation	175.89
Pull Rope	Soft-Fiber Polyester	0.00
S-2601-2	3 + 1 Gnd, #6, #8, 600 V, RHH/RHW insulation	212.85

Conduit/Tray No:	*2308	Reference:	E-9
Size:	41	Type:	RGS conduit
From:	PB-LTG	To:	PB-LTG
Total Fill (mm2):	388.74	Remarks:	(E) conduit, add new cable (s) as listed below.
Allowable Fill (mm2):	534.55		
Description of Changes:			

Included Cable No.	Conductor Type	Area (mm2)
A-2005-2	3-1/C #6, 600 V, RHH/RHW insulation	175.89
Pull Rope	Soft-Fiber Polyester	0.00
S-2601-2	3 + 1 Gnd, #6, #8, 600 V, RHH/RHW insulation	212.85

Conduit/Tray No:	*2309	Reference:	E-9
Size:	41	Type:	RGS conduit
From:	PB-LTG	To:	PB-LTG
Total Fill (mm2):	175.89	Remarks:	(E) conduit, add new cable (s) as listed below.
Allowable Fill (mm2):	534.55		
Description of Changes:			

Included Cable No.	Conductor Type	Area (mm2)
A-2005-2	3-1/C #6, 600 V, RHH/RHW insulation	175.89
Pull Rope	Soft-Fiber Polyester	0.00

Conduit/Tray No:	*2493-ID-A	Reference:	
Size:	25.4	Type:	Black, Smooth Innerduct, HDPE w/ pull rope
From:	Splice Cabinet TOS-23WS	To:	TOS/COM Cell at Pier E21L
Total Fill (mm2):	60.38	Remarks:	(E) Innerduct, add new cable (s) as listed below.
Allowable Fill (mm2):	197.29		
Description of Changes:			

Included Cable No.	Conductor Type	Area (mm2)
1475-7A	TOS 12 Fiber, SMFO , Black outer covering	30.19
1475-7B	TOS 12 Fiber, SMFO , Black outer covering	30.19

Conduit/Tray No:	*2494-ID-A	Reference:	
Size:	25.4	Type:	Black, Smooth Innerduct, HDPE w/ pull rope
From:	TOS/COM Cell at Pier E21L	To:	*Manhole MH-19
Total Fill (mm2):	60.38	Remarks:	(E) Innerduct, add new cable (s) as listed below. Innerduct shall be cut at Manhole-12.
Allowable Fill (mm2):	197.29		
Description of Changes:			

Included Cable No.	Conductor Type	Area (mm2)
1475-7A	TOS 12 Fiber, SMFO , Black outer covering	30.19
1475-7B	TOS 12 Fiber, SMFO , Black outer covering	30.19

Conduit/Tray No:	*2494-ID-B	Reference:	
Size:	25.4	Type:	Brown, Smooth Innerduct, HDPE w/ pull rope
From:	TOS/COM Cell at Pier E21L	To:	*Manhole MH-19
Total Fill (mm2):	323.65	Remarks:	(E) Innerduct, add new cable (s) as listed below. Innerduct shall be cut at Manhole-12.
Allowable Fill (mm2):	337.31		
Description of Changes:			

Included Cable No.	Conductor Type	Area (mm2)
2475-7	TOS 72 Fiber, SMFO, Black outer covering	323.65

Conduit/Tray No:	*2593	Reference:	E-27
Size:	103	Type:	Liquidtight flex metal conduit
From:	*2T11	To:	*2594
Total Fill (mm2):	2628.48	Remarks:	(E) conduit and cables. For information only.
Allowable Fill (mm2):	3275.44		
Description of Changes:			

Included Cable No.	Conductor Type	Area (mm2)
2392	3-1/C #4/0, 15 KV, EPR insulation	2628.48
Pull Rope	Soft-Fiber Polyester	0.00

Conduit/Tray No:	*2593A	Reference:	
Size:	103	Type:	Liquidtight flex metal conduit
From:	*2T11	To:	15 kV Splice Cable Tray
Total Fill (mm2):	2628.48	Remarks:	(E) conduit and cables. For information only.
Allowable Fill (mm2):	3275.44		
Description of Changes:			

Included Cable No.	Conductor Type	Area (mm2)
2392	3-1/C #4/0, 15 KV, EPR insulation	2628.48
Pull Rope	Soft-Fiber Polyester	0.00

THIS PLAN IS ACCURATE FOR ELECTRICAL WORK ONLY.

CONDUIT AND TRAY SCHEDULE
ROADWAY AND GIRDER LEVEL EASTBOUND

E-206

STATE OF CALIFORNIA - DEPARTMENT OF TRANSPORTATION
Caltrans

CONSULTANT FUNCTIONAL SUPERVISOR: BRADY NADELL
CALCULATED-DESIGNED BY: JEFFRI HALIM
CHECKED BY: ELLERY LUCAS
REVISED BY
DATE REVISED

LAST REVISION 08-17-09
DATE PLOTTED => 06-OCT-2011
TIME PLOTTED => 07:18

Dist	COUNTY	ROUTE	KILOMETER POST TOTAL PROJECT	SHEET No.	TOTAL SHEETS
04	Ala	80	1.6/2.7	397	744

Caltrans Metric

05/02/11
REGISTERED ELECTRICAL ENGINEER

10-3-11
PLANS APPROVAL DATE

REGISTERED PROFESSIONAL ENGINEER DAVID H. OTO No. 10699 Exp. 06/30/2013 ELECTRICAL STATE OF CALIFORNIA

THE STATE OF CALIFORNIA OR ITS OFFICERS OR AGENTS SHALL NOT BE RESPONSIBLE FOR THE ACCURACY OR COMPLETENESS OF ELECTRONIC COPIES OF THIS PLAN SHEET.

PB AMERICAS, Inc.
303 Second St., Suite 700N
San Francisco, CA 94107-1317

Conduit/Tray No:	*2593B
Reference:	
Size:	103
Type:	Liquidtight flex metal conduit
From:	*2T11
To:	15 kV Splice Cable Tray
Total Fill (mm2):	2628.48
Allowable Fill (mm2):	3275.44
Remarks:	(E) conduit and cables. For information only.
Description of Changes:	

Included Cable No.	Conductor Type	Area (mm2)
2392	3-1/C #4/0, 15 KV, EPR insulation	2628.48
Pull Rope	Soft-Fiber Polyester	0.00

Conduit/Tray No:	*2594
Reference:	E-27
Size:	103
Type:	RGS conduit
From:	*2593
To:	*2595
Total Fill (mm2):	2628.48
Allowable Fill (mm2):	3324.51
Remarks:	(E) conduit and cables. For information only.
Description of Changes:	

Included Cable No.	Conductor Type	Area (mm2)
2392	3-1/C #4/0, 15 KV, EPR insulation	2628.48
Pull Rope	Soft-Fiber Polyester	0.00

Conduit/Tray No:	*2595
Reference:	E-27
Size:	103
Type:	Liquidtight flex metal conduit
From:	*2594
To:	*2T12
Total Fill (mm2):	2628.48
Allowable Fill (mm2):	3275.44
Remarks:	(E) conduit and cables. For information only.
Description of Changes:	

Included Cable No.	Conductor Type	Area (mm2)
2392	3-1/C #4/0, 15 KV, EPR insulation	2628.48
Pull Rope	Soft-Fiber Polyester	0.00

Conduit/Tray No:	*2603
Reference:	E-9
Size:	41
Type:	RGS conduit
From:	PB-COM
To:	PB-COM
Total Fill (mm2):	98.10
Allowable Fill (mm2):	708.28
Remarks:	(E) conduit, add new cable (s) as listed below.
Description of Changes:	

Included Cable No.	Conductor Type	Area (mm2)
2802	1 - 2 pair, shielded #18 with IS/OA, 600 V, PVC jacket	98.10
Pull Rope	Soft-Fiber Polyester	0.00

Conduit/Tray No:	*2605
Reference:	E-9
Size:	41
Type:	RGS conduit
From:	PB-COM
To:	PB-COM
Total Fill (mm2):	98.10
Allowable Fill (mm2):	708.28
Remarks:	(E) conduit, add new cable (s) as listed below.
Description of Changes:	

Included Cable No.	Conductor Type	Area (mm2)
2802	1 - 2 pair, shielded #18 with IS/OA, 600 V, PVC jacket	98.10
Pull Rope	Soft-Fiber Polyester	0.00

Conduit/Tray No:	*2705
Reference:	E-9
Size:	41
Type:	RGS conduit
From:	PB-LTG
To:	PB-LTG
Total Fill (mm2):	133.19
Allowable Fill (mm2):	534.55
Remarks:	(E) conduit, add new cable (s) as listed below.
Description of Changes:	

Included Cable No.	Conductor Type	Area (mm2)
LP281-1/3	3 + 1 Gnd, #8, #10, 600 V, RHH/RHW insulation	133.19
Pull Rope	Soft-Fiber Polyester	0.00

Conduit/Tray No:	*2709
Reference:	E-9
Size:	53
Type:	RGS conduit
From:	PB-LTG
To:	Junction Box - Bike Path
Total Fill (mm2):	133.19
Allowable Fill (mm2):	879.42
Remarks:	(E) conduit, add new cable (s) as listed below.
Description of Changes:	

Included Cable No.	Conductor Type	Area (mm2)
LP281-6/8	3 + 1 Gnd, #8, #10, 600 V, RHH/RHW insulation	133.19
Pull Rope	Soft-Fiber Polyester	0.00

Conduit/Tray No:	*2714
Reference:	E-9
Size:	53
Type:	RGS conduit
From:	PB-LTG
To:	Junction Box - Bike Path
Total Fill (mm2):	133.19
Allowable Fill (mm2):	879.42
Remarks:	(E) conduit, add new cable (s) as listed below.
Description of Changes:	

Included Cable No.	Conductor Type	Area (mm2)
LP281-1/3	3 + 1 Gnd, #8, #10, 600 V, RHH/RHW insulation	133.19
Pull Rope	Soft-Fiber Polyester	0.00

CONDUIT AND TRAY SCHEDULE
ROADWAY AND GIRDER LEVEL EASTBOUND

THIS PLAN IS ACCURATE FOR ELECTRICAL WORK ONLY.

E-207

REVISED BY | DATE REVISED
JEFFRI HALIM | ELLERY LUCAS
CALCULATED-DESIGNED BY | CHECKED BY
CONSULTANT FUNCTIONAL SUPERVISOR
BRADY NADELL
STATE OF CALIFORNIA - DEPARTMENT OF TRANSPORTATION
Caltrans

LAST REVISION 08-17-09 | DATE PLOTTED => 06-OCT-2011 | TIME PLOTTED => 07:18

Dist	COUNTY	ROUTE	KILOMETER POST TOTAL PROJECT	SHEET No.	TOTAL SHEETS
04	Ala	80	1.6/2.7	398	744

REGISTERED ELECTRICAL ENGINEER 05/02/11

PLANS APPROVAL DATE 10-3-11

REGISTERED PROFESSIONAL ENGINEER DAVID H. OTO No. 10699 Exp. 06/30/2013 ELECTRICAL STATE OF CALIFORNIA

THE STATE OF CALIFORNIA OR ITS OFFICERS OR AGENTS SHALL NOT BE RESPONSIBLE FOR THE ACCURACY OR COMPLETENESS OF ELECTRONIC COPIES OF THIS PLAN SHEET.

PB AMERICAS, Inc.
303 Second St., Suite 700N
San Francisco, CA 94107-1317

Caltrans Metric

Conduit/Tray No:	*2800
Reference:	E-8
Size:	41
Type:	RGS conduit
From:	PB-LTG
To:	PB-LTG
Total Fill (mm2):	133.19
Allowable Fill (mm2):	534.55
Remarks:	(E) conduit, add new cable (s) as listed below.
Description of Changes:	

Included Cable No.	Conductor Type	Area (mm2)
A-2006-1	3 + 1 Gnd, #8, #10, 600 V, RHH/RHW insulation	133.19
Pull Rope	Soft-Fiber Polyester	0.00

Conduit/Tray No:	*2802
Reference:	E-8
Size:	41
Type:	RGS conduit
From:	PB-LTG
To:	PB-LTG
Total Fill (mm2):	133.19
Allowable Fill (mm2):	534.55
Remarks:	(E) conduit, add new cable (s) as listed below.
Description of Changes:	

Included Cable No.	Conductor Type	Area (mm2)
A-2006-1	3 + 1 Gnd, #8, #10, 600 V, RHH/RHW insulation	133.19
Pull Rope	Soft-Fiber Polyester	0.00

Conduit/Tray No:	*2802A
Reference:	E-8
Size:	41
Type:	RGS conduit
From:	PB-LTG
To:	PB-LTG
Total Fill (mm2):	133.19
Allowable Fill (mm2):	534.55
Remarks:	(E) conduit, add new cable (s) as listed below.
Description of Changes:	

Included Cable No.	Conductor Type	Area (mm2)
A-2006-1	3 + 1 Gnd, #8, #10, 600 V, RHH/RHW insulation	133.19
Pull Rope	Soft-Fiber Polyester	0.00

Conduit/Tray No:	*2802B
Reference:	E-8
Size:	41
Type:	RGS conduit
From:	PB-LTG
To:	PB-LTG
Total Fill (mm2):	133.19
Allowable Fill (mm2):	534.55
Remarks:	(E) conduit, add new cable (s) as listed below.
Description of Changes:	

Included Cable No.	Conductor Type	Area (mm2)
A-2006-1	3 + 1 Gnd, #8, #10, 600 V, RHH/RHW insulation	133.19
Pull Rope	Soft-Fiber Polyester	0.00

Conduit/Tray No:	*2803
Reference:	E-8
Size:	41
Type:	RGS conduit
From:	PB-LTG
To:	PB-LTG
Total Fill (mm2):	133.19
Allowable Fill (mm2):	534.55
Remarks:	(E) conduit, add new cable (s) as listed below.
Description of Changes:	

Included Cable No.	Conductor Type	Area (mm2)
A-2006-1	3 + 1 Gnd, #8, #10, 600 V, RHH/RHW insulation	133.19
Pull Rope	Soft-Fiber Polyester	0.00

Conduit/Tray No:	*2805
Reference:	E-9
Size:	41
Type:	RGS conduit
From:	PB-LTG
To:	PB-LTG
Total Fill (mm2):	266.38
Allowable Fill (mm2):	534.55
Remarks:	(E) conduit, add new cable (s) as listed below.
Description of Changes:	

Included Cable No.	Conductor Type	Area (mm2)
A-2006-1	3 + 1 Gnd, #8, #10, 600 V, RHH/RHW insulation	133.19
A-2007-1	3 + 1 Gnd, #8, #10, 600 V, RHH/RHW insulation	133.19
Pull Rope	Soft-Fiber Polyester	0.00

Conduit/Tray No:	*2806
Reference:	E-9
Size:	41
Type:	RGS conduit
From:	PB-LTG
To:	PB-LTG
Total Fill (mm2):	266.38
Allowable Fill (mm2):	534.55
Remarks:	(E) conduit, add new cable (s) as listed below.
Description of Changes:	

Included Cable No.	Conductor Type	Area (mm2)
A-2006-1	3 + 1 Gnd, #8, #10, 600 V, RHH/RHW insulation	133.19
A-2007-1	3 + 1 Gnd, #8, #10, 600 V, RHH/RHW insulation	133.19
Pull Rope	Soft-Fiber Polyester	0.00

Conduit/Tray No:	*2806A
Reference:	E-9
Size:	41
Type:	RGS conduit
From:	PB-LTG
To:	PB-LTG
Total Fill (mm2):	266.38
Allowable Fill (mm2):	534.55
Remarks:	(E) conduit, add new cable (s) as listed below.
Description of Changes:	

Included Cable No.	Conductor Type	Area (mm2)
A-2006-1	3 + 1 Gnd, #8, #10, 600 V, RHH/RHW insulation	133.19
A-2007-1	3 + 1 Gnd, #8, #10, 600 V, RHH/RHW insulation	133.19
Pull Rope	Soft-Fiber Polyester	0.00

CONDUIT AND TRAY SCHEDULE
ROADWAY AND GIRDER LEVEL EASTBOUND

THIS PLAN IS ACCURATE FOR ELECTRICAL WORK ONLY.

REVISED BY | DATE REVISED
JEFFRI HALIM | ELLERY LUCAS
CALCULATED-DESIGNED BY | CHECKED BY
CONSULTANT FUNCTIONAL SUPERVISOR
BRADY NADELL

STATE OF CALIFORNIA - DEPARTMENT OF TRANSPORTATION
Caltrans

LAST REVISION 08-17-09 | DATE PLOTTED => 06-OCT-2011 | TIME PLOTTED => 07:19

E-208

Dist	COUNTY	ROUTE	KILOMETER POST TOTAL PROJECT	SHEET No.	TOTAL SHEETS
04	Ala	80	1.6/2.7	399	744

Caltrans Metric

REGISTERED ELECTRICAL ENGINEER 05/02/11

PLANS APPROVAL DATE 10-3-11

REGISTERED PROFESSIONAL ENGINEER DAVID H. OTO No. 10699 Exp. 06/30/2013 ELECTRICAL STATE OF CALIFORNIA

THE STATE OF CALIFORNIA OR ITS OFFICERS OR AGENTS SHALL NOT BE RESPONSIBLE FOR THE ACCURACY OR COMPLETENESS OF ELECTRONIC COPIES OF THIS PLAN SHEET.

PB AMERICAS, Inc.
303 Second St., Suite 700N
San Francisco, CA 94107-1317

Conduit/Tray No: *2823 | Reference: E-9
Size: 41 | Type: RGS conduit
From: PB-LTG | To: PB-LTG
Total Fill (mm2): 266.38 | Remarks: (E) conduit, add new cable (s) as listed below.
Allowable Fill (mm2): 534.55
Description of Changes:

Included Cable No.	Conductor Type	Area (mm2)
A-2006-1	3 + 1 Gnd, #8, #10, 600 V, RHH/RHW insulation	133.19
A-2007-1	3 + 1 Gnd, #8, #10, 600 V, RHH/RHW insulation	133.19
Pull Rope	Soft-Fiber Polyester	0.00

Conduit/Tray No: *2823A | Reference: E-9
Size: 41 | Type: RGS conduit
From: PB-LTG | To: PB-LTG
Total Fill (mm2): 266.38 | Remarks: (E) conduit, add new cable (s) as listed below.
Allowable Fill (mm2): 534.55
Description of Changes:

Included Cable No.	Conductor Type	Area (mm2)
A-2006-1	3 + 1 Gnd, #8, #10, 600 V, RHH/RHW insulation	133.19
A-2007-1	3 + 1 Gnd, #8, #10, 600 V, RHH/RHW insulation	133.19
Pull Rope	Soft-Fiber Polyester	0.00

Conduit/Tray No: *2934 | Reference: E-17
Size: 103 | Type: RGS conduit
From: Hinge EE Skyway Interface | To: 15 kV Vault at Pier E17R
Total Fill (mm2): 2628.48 | Remarks: (E) conduit, add new cable (s) as listed below.
Allowable Fill (mm2): 3324.51
Description of Changes:

Included Cable No.	Conductor Type	Area (mm2)
2392	3-1/C #4/0, 15 KV, EPR insulation	2628.48
Pull Rope	Soft-Fiber Polyester	0.00

Conduit/Tray No: *2T11 | Reference: E-13, E-25, E-27
Size: 305 | Type: 152 mm siderail ladder tray
From: Hinge BE | To: Hinge CE
Total Fill (mm2): 2628.48 | Remarks: (E) tray and cables. For information only.
Allowable Fill (mm2): 8387.08
Description of Changes:

Included Cable No.	Conductor Type	Area (mm2)
2392	3-1/C #4/0, 15 KV, EPR insulation	2628.48

Conduit/Tray No: *2T12 | Reference: E-14, E-15, E-26, E-27
Size: 305 | Type: 152 mm siderail ladder tray
From: Hinge CE | To: Hinge DE
Total Fill (mm2): 2628.48 | Remarks: (E) tray and cables. For information only.
Allowable Fill (mm2): 8387.08
Description of Changes:

Included Cable No.	Conductor Type	Area (mm2)
2392	3-1/C #4/0, 15 KV, EPR insulation	2628.48

Conduit/Tray No: *2T13 | Reference: E-15, E-27, E-28
Size: 305 | Type: 152 mm siderail ladder tray
From: Pier E15E | To: Skyway Interface EB
Total Fill (mm2): 2628.48 | Remarks: (E) tray and cables. For information only
Allowable Fill (mm2): 8387.08
Description of Changes:

Included Cable No.	Conductor Type	Area (mm2)
2392	3-1/C #4/0, 15 KV, EPR insulation	2628.48

Conduit/Tray No: *2T42 | Reference: E-14, E-15, , E-26, E-27
Size: 305 | Type: 152 mm siderail solid bottom tray
From: Hinge CE | To: Hinge DE
Total Fill (mm2): 875.77 | Remarks: (E) tray. Add innerducts. For routed cables, see circuit schedule
Allowable Fill (mm2): 8387.08
Description of Changes:

Included Cable No.	Conductor Type	Area (mm2)
2483-ID-B	25.4 mm, Brown, Smooth innerduct, HDPE w/ pull rope	875.77

Conduit/Tray No: *2T43 | Reference: E-15, E-16, E-27, E-28, E-29
Size: 305 | Type: 152 mm siderail solid bottom tray
From: Pier E15E | To: Skyway Interface EB
Total Fill (mm2): 3602.84 | Remarks: (E) conduit, add new cable (s) and innerduct (s) as listed below.
Allowable Fill (mm2): 8387.08
Description of Changes:

Included Cable No.	Conductor Type	Area (mm2)
2473-24	50 pair #18, shielded pairs, IS/OS shield 600 V, XLPE insul., PVC jacket	1201.71
2474-24	50 pair #18, shielded pairs, IS/OS shield 600 V, XLPE insul., PVC jacket	1201.71
2475-5	TOS 72 Fiber, SMFO, Black outer covering	323.65
2483-ID-B	25.4 mm, Brown, Smooth innerduct, HDPE w/ pull rope	875.77

THIS PLAN IS ACCURATE FOR ELECTRICAL WORK ONLY.

CONDUIT AND TRAY SCHEDULE
ROADWAY AND GIRDER LEVEL EASTBOUND

E-209

REVISED BY	DATE REVISED
JEFFRI HALIM	ELLERY LUCAS
CALCULATED-DESIGNED BY	CHECKED BY
CONSULTANT FUNCTIONAL SUPERVISOR	BRADY NADELL

STATE OF CALIFORNIA - DEPARTMENT OF TRANSPORTATION
Caltrans

LAST REVISION 08-17-09 | DATE PLOTTED => 06-OCT-2011 | TIME PLOTTED => 07:19

Dist	COUNTY	ROUTE	KILOMETER POST TOTAL PROJECT	SHEET No.	TOTAL SHEETS
04	Ala	80	1.6/2.7	400	744

Caltrans Metric

REGISTERED ELECTRICAL ENGINEER 05/02/11

10-3-11
PLANS APPROVAL DATE

REGISTERED PROFESSIONAL ENGINEER DAVID H. OTO No. 10699 Exp. 06/30/2013 ELECTRICAL STATE OF CALIFORNIA

THE STATE OF CALIFORNIA OR ITS OFFICERS OR AGENTS SHALL NOT BE RESPONSIBLE FOR THE ACCURACY OR COMPLETENESS OF ELECTRONIC COPIES OF THIS PLAN SHEET.

PB AMERICAS, Inc.
303 Second St., Suite 700N
San Francisco, CA 94107-1317

Conduit/Tray No:	*4356A	Reference:	E-22
Size:	103	Type:	Liquidtight flex metal conduit
From:	Splice Cabinet TOS-23WS	To:	TOS/COM Cell at Pier E21L
Total Fill (mm2):	875.77	Remarks:	(E) conduit and innerduct(s).For routed cables, see circuit schedule.
Allowable Fill (mm2):	3275.44		
Description of Changes:			

Included Cable No.	Conductor Type	Area (mm2)
*2493-ID-A	25.4 mm, Black, Smooth innerduct, HDPE w/ pull rope	875.77
Pull Rope	Soft-Fiber Polyester	0.00

Conduit/Tray No:	*4393	Reference:	E-12, E-21, E-23
Size:	103	Type:	RGS conduit
From:	TOS/COM Cell at Pier E21L	To:	TOS/COM Vault at Pier E22L
Total Fill (mm2):	1751.54	Remarks:	(E) conduit and innerduct(s).For routed cables, see circuit schedule.
Allowable Fill (mm2):	3324.51		
Description of Changes:			

Included Cable No.	Conductor Type	Area (mm2)
*2494-ID-A	25.4 mm, Black, Smooth innerduct, HDPE w/ pull rope	875.77
*2494-ID-B	25.4 mm, Brown, Smooth innerduct, HDPE w/ pull rope	875.77
Pull Rope	Soft-Fiber Polyester	0.00

Conduit/Tray No:	*4397	Reference:	E-23, E-24
Size:	103	Type:	RGS conduit
From:	TOS/COM Vault at Pier E22L	To:	*1T25
Total Fill (mm2):	1751.54	Remarks:	(E) conduit and innerduct(s).For routed cables, see circuit schedule.
Allowable Fill (mm2):	3324.51		
Description of Changes:			

Included Cable No.	Conductor Type	Area (mm2)
*2494-ID-A	25.4 mm, Black, Smooth innerduct, HDPE w/ pull rope	875.77
*2494-ID-B	25.4 mm, Brown, Smooth innerduct, HDPE w/ pull rope	875.77
Pull Rope	Soft-Fiber Polyester	0.00

Conduit/Tray No:	*5301	Reference:	E-17
Size:	103	Type:	RGS conduit
From:	15 kV Vault at Pier E17R	To:	15 kV Vault at Pier E18R
Total Fill (mm2):	2628.48	Remarks:	(E) conduit, add new cable (s) as listed below.
Allowable Fill (mm2):	3324.51		
Description of Changes:			

Included Cable No.	Conductor Type	Area (mm2)
2392	3-1/C #4/0, 15 KV, EPR insulation	2628.48
Pull Rope	Soft-Fiber Polyester	0.00

Conduit/Tray No:	*5303	Reference:	E-18
Size:	103	Type:	RGS conduit
From:	15 kV Vault at Pier E18R	To:	15 kV Vault at Hinge FE
Total Fill (mm2):	2628.48	Remarks:	(E) conduit, add new cable (s) as listed below.
Allowable Fill (mm2):	3324.51		
Description of Changes:			

Included Cable No.	Conductor Type	Area (mm2)
2392	3-1/C #4/0, 15 KV, EPR insulation	2628.48
Pull Rope	Soft-Fiber Polyester	0.00

THIS PLAN IS ACCURATE FOR ELECTRICAL WORK ONLY.

Conduit/Tray No:	*5350	Reference:	E-17
Size:	103	Type:	RGS conduit
From:	TOS/COM Vault at Pier E17R	To:	TOS/COM Vault at Pier E18R
Total Fill (mm2):	2403.42	Remarks:	(E) conduit, add new cable (s) as listed below.
Allowable Fill (mm2):	2576.49		
Description of Changes:			

Included Cable No.	Conductor Type	Area (mm2)
2473-24	50 pair #18, shielded pairs, IS/OS shield 600 V, XLPE insul., PVC jacket	1201.71
2474-24	50 pair #18, shielded pairs, IS/OS shield 600 V, XLPE insul., PVC jacket	1201.71
Pull Rope	Soft-Fiber Polyester	0.00

Conduit/Tray No:	*5351	Reference:	E-18
Size:	103	Type:	RGS conduit
From:	TOS/COM Vault at Pier E18R	To:	TOS/COM Vault at Hinge FE
Total Fill (mm2):	2403.42	Remarks:	(E) conduit, add new cable (s) as listed below.
Allowable Fill (mm2):	2576.49		
Description of Changes:			

Included Cable No.	Conductor Type	Area (mm2)
2473-25	50 pair #18, shielded pairs, IS/OS shield 600 V, XLPE insul., PVC jacket	1201.71
2474-25	50 pair #18, shielded pairs, IS/OS shield 600 V, XLPE insul., PVC jacket	1201.71
Pull Rope	Soft-Fiber Polyester	0.00

Conduit/Tray No:	*5360	Reference:	E-17
Size:	103	Type:	RGS conduit
From:	TOS/COM Vault at Pier E17R	To:	TOS/COM Vault at Pier E18R
Total Fill (mm2):	3503.08	Remarks:	(E) conduit. Add innerducts. For routed cables, see circuit schedule
Allowable Fill (mm2):	4404.97		
Description of Changes:			

Included Cable No.	Conductor Type	Area (mm2)
2483-ID-B	25.4 mm, Brown, Smooth innerduct, HDPE w/ pull rope	875.77
2485-ID-A	25.4 mm, Black, Smooth innerduct, HDPE w/ pull rope	875.77
2485-ID-C	25.4 mm, White, Smooth innerduct, HDPE w/ pull rope	875.77
2485-ID-D	25.4 mm, Blue, Smooth innerduct, HDPE w/ pull rope	875.77
Pull Rope	Soft-Fiber Polyester	0.00

CONDUIT AND TRAY SCHEDULE
ROADWAY AND GIRDER LEVEL EASTBOUND

E-210

REVISED BY | DATE REVISED
JEFFRI HALIM | ELLERY LUCAS
CALCULATED-DESIGNED BY | CHECKED BY
CONSULTANT FUNCTIONAL SUPERVISOR
BRADY NADELL
STATE OF CALIFORNIA - DEPARTMENT OF TRANSPORTATION
Caltrans

LAST REVISION 08-17-09 | DATE PLOTTED => 06-OCT-2011 | TIME PLOTTED => 07:19