Dist	COUNTY	ROUTE	KILOMETER POST TOTAL PROJECT	SHEET No.	TOTAL SHEETS
04	Ala	80	1.6/2.7	201	744

REGISTERED ELECTRICAL ENGINEER 05/02/11

10-3-11
PLANS APPROVAL DATE

REGISTERED PROFESSIONAL ENGINEER DAVID H. OTO No. 10699 Exp. 06/30/2013 ELECTRICAL STATE OF CALIFORNIA

THE STATE OF CALIFORNIA OR ITS OFFICERS OR AGENTS SHALL NOT BE RESPONSIBLE FOR THE ACCURACY OR COMPLETENESS OF ELECTRONIC COPIES OF THIS PLAN SHEET.

PB AMERICAS, Inc.
303 Second St., Suite 700N
San Francisco, CA 94107-1317

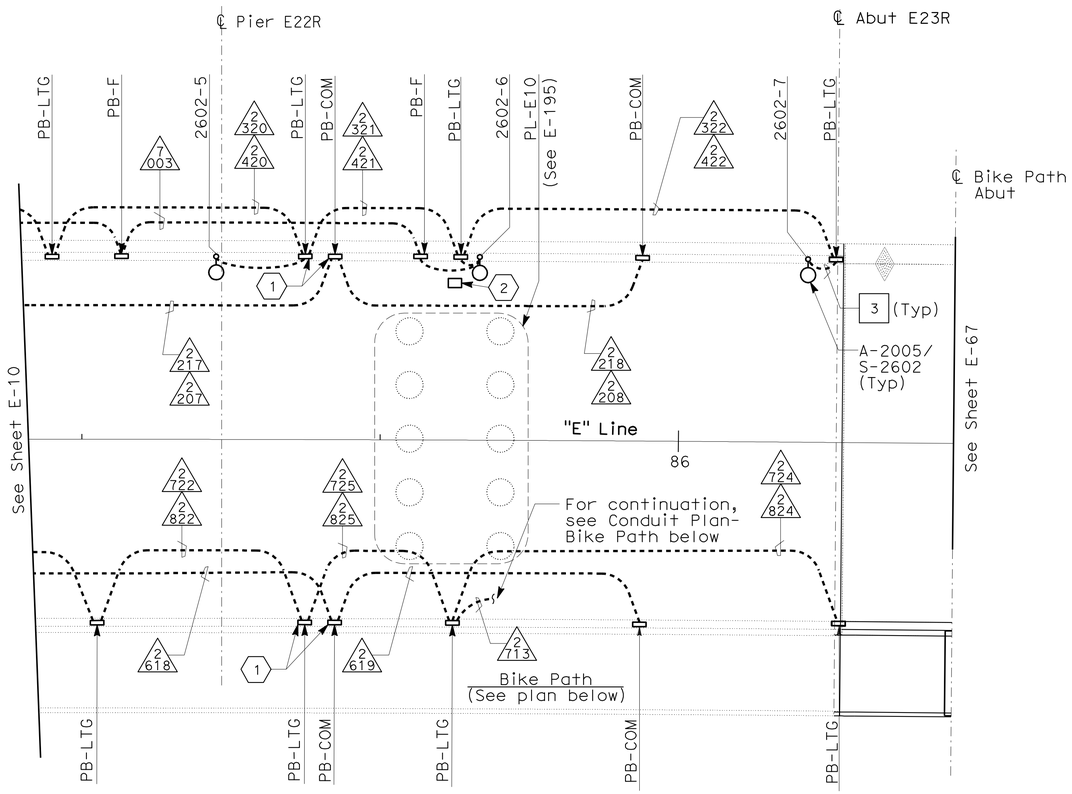

CONDUIT PLAN - ROADWAY

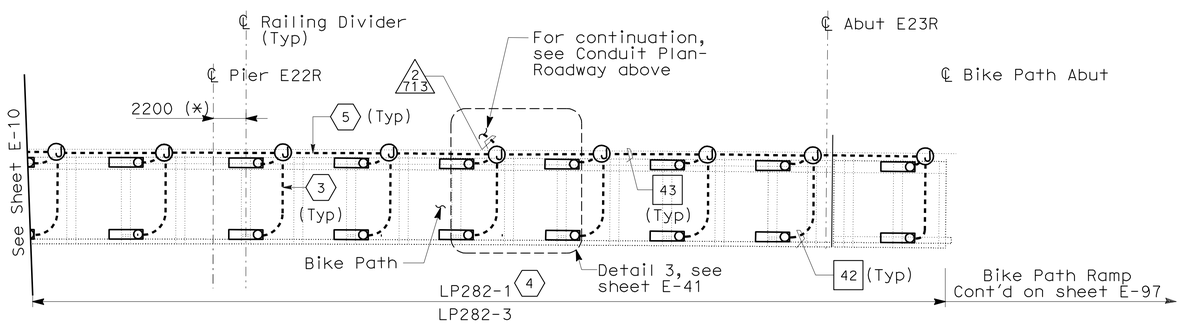

CONDUIT PLAN - BIKE PATH

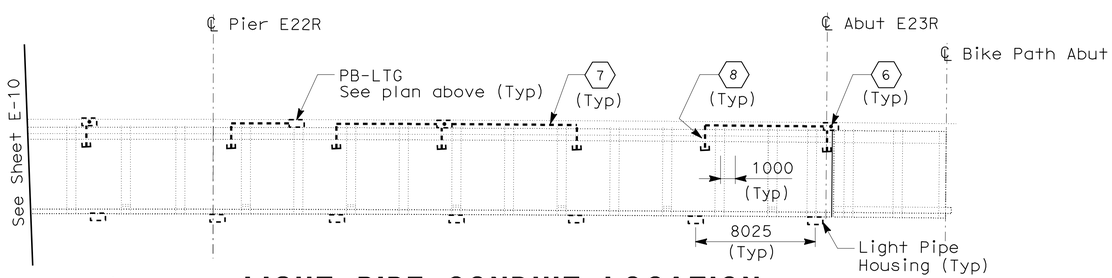

LIGHT PIPE CONDUIT LOCATION

NOTES:

1. References:
   - For typical details and locations of conduit connections to light poles, barrier outlet boxes, and call boxes, see sheets E-38 through E-40.
   - TOS equipment is shown for conduit routing only. For typical details of TOS controller and devices, see sheets starting at E-190.
   - For types of pull boxes and enclosures, see sheet E-43.
   - For conduit and tray, cable and circuit schedules, see sheets starting at E-205.
   - For Roadway Level, Bike Path and Light Pipe Fixture Wiring Diagram, see sheets E-52 through E-56.
   - For Roadway Level, and Bike Path Lighting Fixture Schedule, see sheet E-57.
   - For Bike Path Plan and Sections, see sheets E-41 and E-42.
   - For LP-282 panel schedule, refer to E-51.
2. For electrical equipment or devices removed, see sheets E-153 through E-160.

SHEET NOTES:

1. Conduit down into Girder Level. See sheet E-20.
2. Pull box PB-4D for preformed loop PL-E10.
3. For locations of conduit inside the Bike Path Railing, see sheets E-41 and E-42.
4. Panel and circuit number in top line apply to lights located in the railing on the north side of the Bike Path. Panel and circuit numbers in the bottom of the line apply to lights located in the railing on the south side of the Bike Path.
5. All conduits and fittings routed exposed between the Bike path and the Roadway shall be rigid galvanized steel, PVC coated.
6. Down, conduit stub-out for future light pipe.
7. All conduit stub outs shall be 21 mm rigid steel conduit.
8. Extend conduit minimum 150 mm from exterior face of the roadway barrier. Exposed conduit shall be rigid galvanized steel, PVC coated. The end of conduit shall be capped for future use.

ROADWAY AND GIRDER LEVEL EASTBOUND
(LIGHTING AND ELECTRICAL SYSTEMS)
FRAME 2

SCALE 1:200

E-11

THIS PLAN IS ACCURATE FOR ELECTRICAL WORK ONLY.

ALL DIMENSIONS ARE IN MILLIMETERS UNLESS OTHERWISE SHOWN

STATE OF CALIFORNIA - DEPARTMENT OF TRANSPORTATION
Caltrans

CONSULTANT FUNCTIONAL SUPERVISOR: BRADY NADELL
CALCULATED-DESIGNED BY: JEFFRI HALIM
CHECKED BY: DAVID OTO
REVISED BY / DATE REVISED

LAST REVISION 08-17-09
DATE PLOTTED => 06-OCT-2011
TIME PLOTTED => 06:43

Dist	COUNTY	ROUTE	KILOMETER POST TOTAL PROJECT	SHEET No.	TOTAL SHEETS
04	Ala	80	1.6/2.7	202	744

05/02/11
REGISTERED ELECTRICAL ENGINEER

10-3-11
PLANS APPROVAL DATE

REGISTERED PROFESSIONAL ENGINEER
DAVID H. OTO
No. 10699
Exp. 06/30/2013
ELECTRICAL
STATE OF CALIFORNIA

THE STATE OF CALIFORNIA OR ITS OFFICERS OR AGENTS SHALL NOT BE RESPONSIBLE FOR THE ACCURACY OR COMPLETENESS OF ELECTRONIC COPIES OF THIS PLAN SHEET.

PB AMERICAS, Inc.
303 Second St., Suite 700N
San Francisco, CA 94107-1317

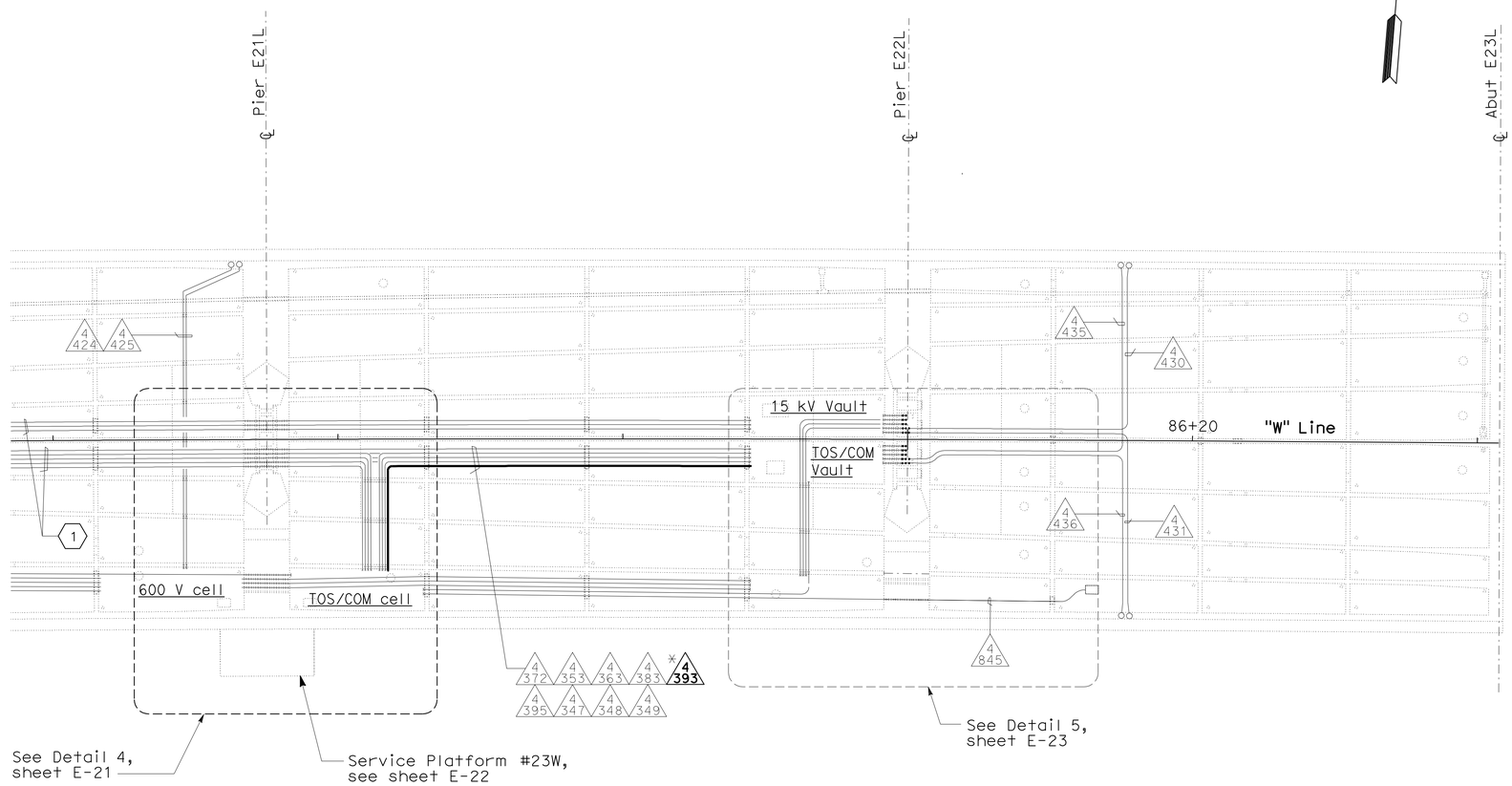

NOTES:

1. The conduit/trays are existing. Conduits/trays with (*) prefixed is provided as reference for routing the cable/circuits only.
2. References:
   - For conduit and tray, cable and circuit schedules, see sheets starting at E-205.

SHEET NOTE:

(1) For conduit numbers, see sheet E-21.

PARTIAL GIRDER CONDUIT PLAN

ROADWAY AND GIRDER LEVEL EASTBOUND
(LIGHTING AND ELECTRICAL SYSTEMS)
WESTBOUND FIBER OPTIC INSTALLATION
FRAME 2

SCALE 1:200

E-12

THIS PLAN IS ACCURATE FOR ELECTRICAL WORK ONLY.

ALL DIMENSIONS ARE IN METERS UNLESS OTHERWISE SHOWN

STATE OF CALIFORNIA - DEPARTMENT OF TRANSPORTATION
Caltrans

CONSULTANT FUNCTIONAL SUPERVISOR: BRADY NADELL
CALCULATED-DESIGNED BY: JEFFRI HALIM
CHECKED BY: DAVID OTO
REVISED BY
DATE REVISED

LAST REVISION 08-17-09
DATE PLOTTED => 06-OCT-2011
TIME PLOTTED => 06:43

Dist	COUNTY	ROUTE	KILOMETER POST TOTAL PROJECT	SHEET No.	TOTAL SHEETS
04	Ala	80	1.6/2.7	203	744

REGISTERED ELECTRICAL ENGINEER 05/02/11

10-3-11
PLANS APPROVAL DATE

REGISTERED PROFESSIONAL ENGINEER DAVID H. OTO No. 10699 Exp. 06/30/2013 ELECTRICAL STATE OF CALIFORNIA

THE STATE OF CALIFORNIA OR ITS OFFICERS OR AGENTS SHALL NOT BE RESPONSIBLE FOR THE ACCURACY OR COMPLETENESS OF ELECTRONIC COPIES OF THIS PLAN SHEET.

PB AMERICAS, Inc.
303 Second St., Suite 700N
San Francisco, CA 94107-1317

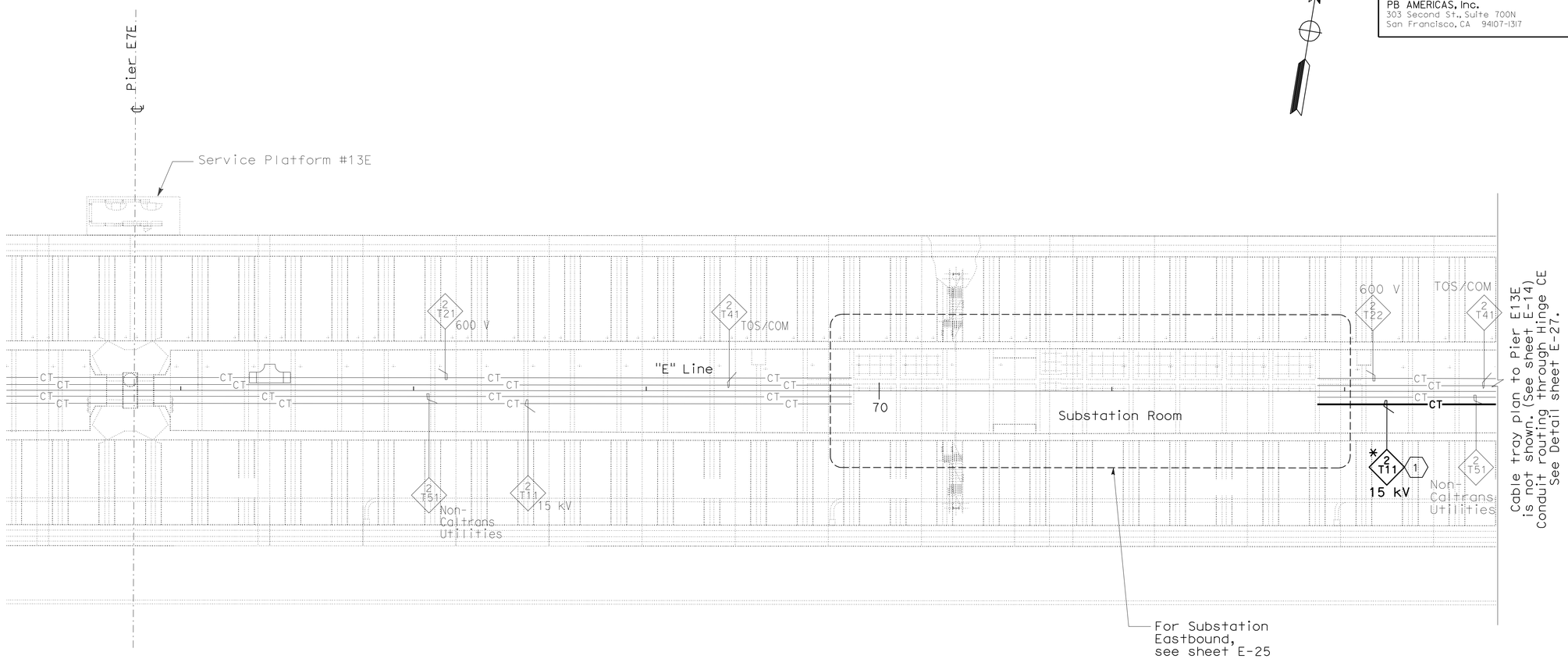

CONDUIT AND CABLE TRAY PLAN

NOTES:

1. This plan sheet is a record drawing from Skyway Structures contract. The Contractor shall verify the existing installation. Refer to Skyway Structures, Contract No. 04-012024.
2. The conduit/trays are existing. Conduits/trays with (*) prefixed is provided as reference for routing the cable/circuits only.
3. References:
   - For conduit and tray, cable and circuit schedules, see sheets starting at E-205.

SHEET NOTE:

(1) The 12.47 kV feeder cable is coiled inside the (E) cable tray, installed by others. The feeder cable shall be terminated to the 12.47 kV switchgear on this contract.

ROADWAY AND GIRDER LEVEL EASTBOUND
(LIGHTING AND ELECTRICAL SYSTEMS)
SKYWAY STRUCTURES PLAN

SCALE 1:200

E-13

THIS PLAN IS ACCURATE FOR ELECTRICAL WORK ONLY.

ALL DIMENSIONS ARE IN METERS UNLESS OTHERWISE SHOWN

STATE OF CALIFORNIA - DEPARTMENT OF TRANSPORTATION
Caltrans

CONSULTANT FUNCTIONAL SUPERVISOR: BRADY NADELL
CALCULATED-DESIGNED BY: JEFFRI HALIM
CHECKED BY: ELLERY LUCAS
REVISED BY
DATE REVISED

LAST REVISION 08-17-09 | DATE PLOTTED => 06-OCT-2011 | TIME PLOTTED => 06:43

Dist	COUNTY	ROUTE	KILOMETER POST TOTAL PROJECT	SHEET No.	TOTAL SHEETS
04	Ala	80	1.6/2.7	204	744

REGISTERED ELECTRICAL ENGINEER 05/02/11

10-3-11
PLANS APPROVAL DATE

REGISTERED PROFESSIONAL ENGINEER DAVID H. OTO No. 10699 Exp. 06/30/2013 ELECTRICAL STATE OF CALIFORNIA

THE STATE OF CALIFORNIA OR ITS OFFICERS OR AGENTS SHALL NOT BE RESPONSIBLE FOR THE ACCURACY OR COMPLETENESS OF ELECTRONIC COPIES OF THIS PLAN SHEET.

PB AMERICAS, Inc.
303 Second St., Suite 700N
San Francisco, CA 94107-1317

Caltrans Metric

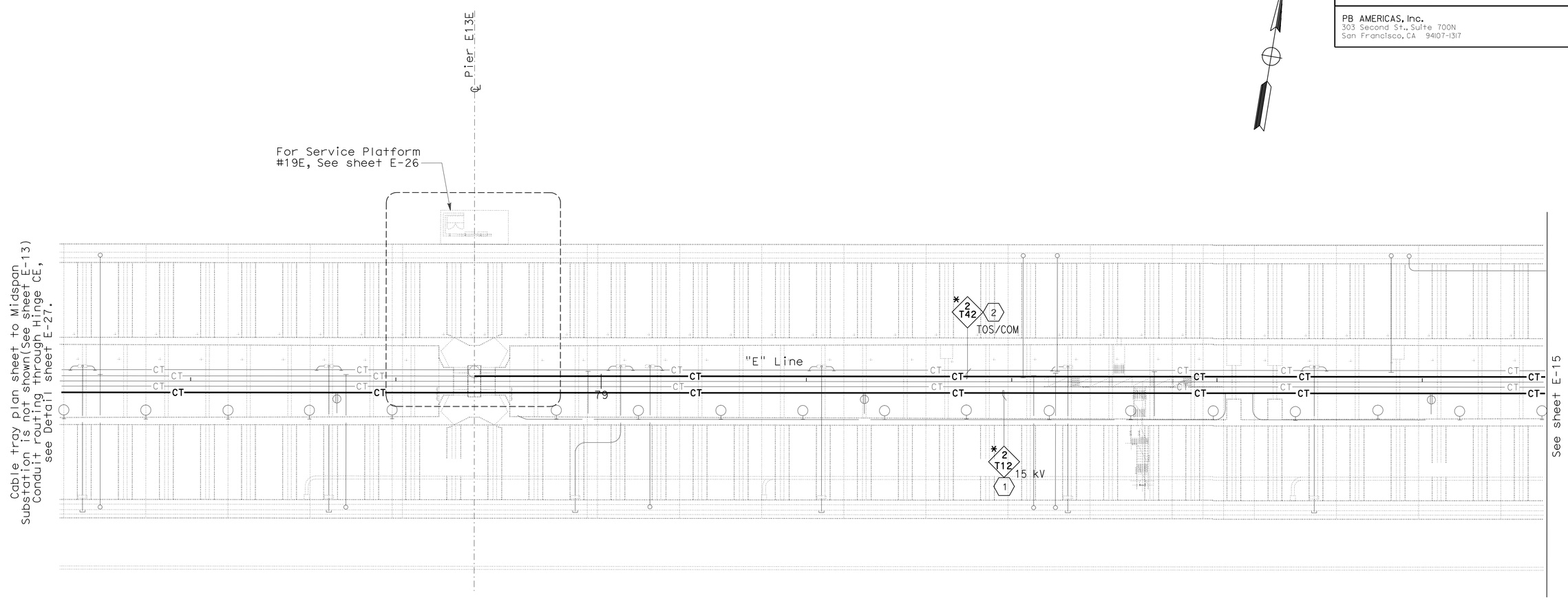

CONDUIT AND CABLE TRAY PLAN

NOTES:

1. This plan sheet is a record drawing from Skyway Structures contract. The Contractor shall verify the existing installation. Refer to the Skyway Structures Contract No. 04-012024.
2. The conduit/trays are existing. Conduits/trays with (*) prefixed is provided as reference for routing the cable/circuits only.
3. References:
   - For conduit and tray, cable and circuit schedules, see sheets starting at E-205.

SHEET NOTES:

(1) The 12.47 kV feeder cable is installed by others, shown for reference only.

(2) Install Base CCTV fiber optic trunkline inside a brown innerduct located inside (E) cable tray.

ROADWAY AND GIRDER LEVEL EASTBOUND
(LIGHTING AND ELECTRICAL SYSTEMS)
SKYWAY STRUCTURES PLAN
SCALE 1:200

E-14

THIS PLAN IS ACCURATE FOR ELECTRICAL WORK ONLY.

ALL DIMENSIONS ARE IN METERS UNLESS OTHERWISE SHOWN

STATE OF CALIFORNIA - DEPARTMENT OF TRANSPORTATION
Caltrans

CONSULTANT FUNCTIONAL SUPERVISOR: BRADY NADELL
CALCULATED-DESIGNED BY: JEFFRI HALIM
CHECKED BY: ELLERY LUCAS
REVISED BY
DATE REVISED

LAST REVISION 08-17-09
DATE PLOTTED => 06-OCT-2011
TIME PLOTTED => 0643

Dist	COUNTY	ROUTE	KILOMETER POST TOTAL PROJECT	SHEET No.	TOTAL SHEETS
04	Ala	80	1.6/2.7	205	744

REGISTERED ELECTRICAL ENGINEER 05/02/11

10-3-11
PLANS APPROVAL DATE

REGISTERED PROFESSIONAL ENGINEER DAVID H. OTO No. 10699 Exp. 06/30/2013 ELECTRICAL STATE OF CALIFORNIA

THE STATE OF CALIFORNIA OR ITS OFFICERS OR AGENTS SHALL NOT BE RESPONSIBLE FOR THE ACCURACY OR COMPLETENESS OF ELECTRONIC COPIES OF THIS PLAN SHEET.

PB AMERICAS, Inc.
303 Second St., Suite 700N
San Francisco, CA 94107-1317

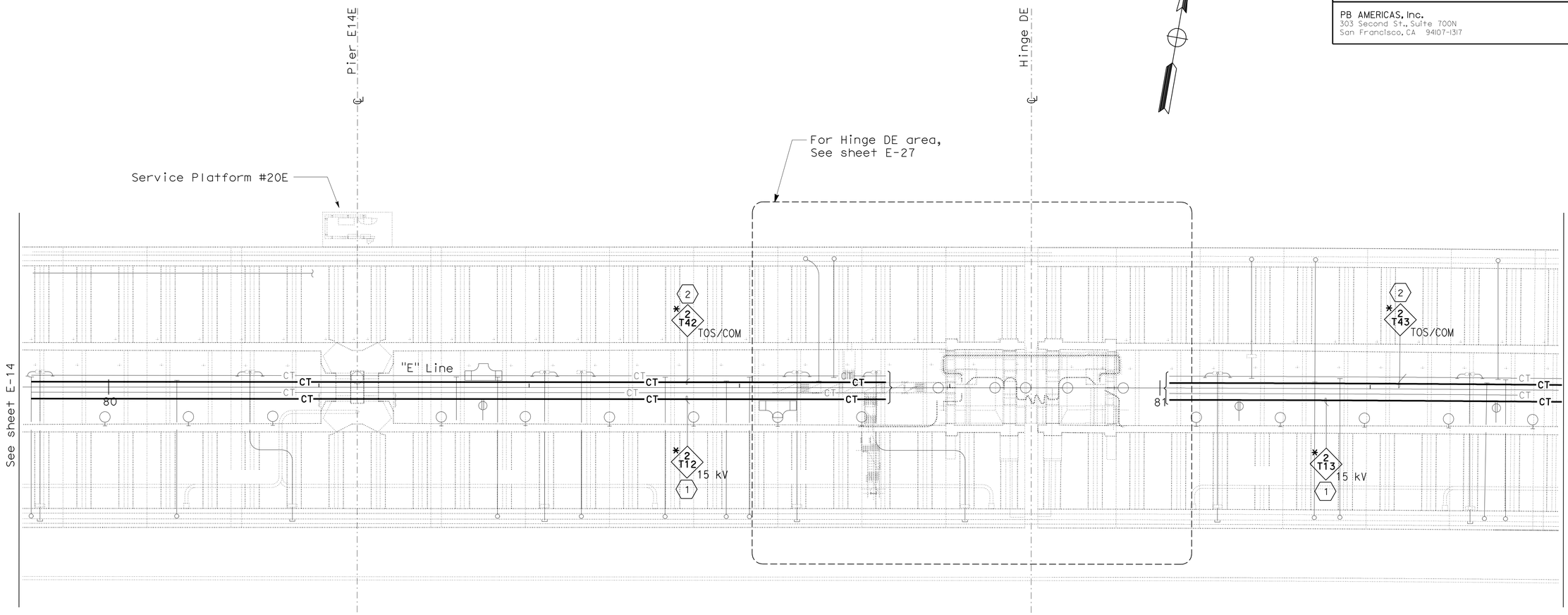

CONDUIT AND CABLE TRAY PLAN

NOTES:

1. This plan sheet is a record drawing from Skyway Structures contract. The Contractor shall verify the existing installation. Refer to the Skyway Structures Contract No. 04-012024.
2. The conduit/trays are existing. Conduits/trays with (*) prefixed is provided as reference for routing the cable/circuits only.
3. References:
   - For conduit and tray, cable and circuit schedules, see sheets starting at E-205.

SHEET NOTES:

(1) The 12.47 kV feeder cable is installed by others, shown for reference only.

(2) Install Base CCTV fiber optic trunkline inside a brown innerduct located inside (E) cable tray.

ROADWAY AND GIRDER LEVEL EASTBOUND
(LIGHTING AND ELECTRICAL SYSTEMS)
SKYWAY STRUCTURES PLAN

SCALE 1:200

E-15

THIS PLAN IS ACCURATE FOR ELECTRICAL WORK ONLY.

ALL DIMENSIONS ARE IN METERS UNLESS OTHERWISE SHOWN

STATE OF CALIFORNIA - DEPARTMENT OF TRANSPORTATION
Caltrans

CONSULTANT FUNCTIONAL SUPERVISOR: BRADY NADELL
CALCULATED-DESIGNED BY: JEFFRI HALIM
CHECKED BY: ELLERY LUCAS
REVISED BY
DATE REVISED

LAST REVISION 08-17-09
DATE PLOTTED => 06-OCT-2011
TIME PLOTTED => 0643

Dist	COUNTY	ROUTE	KILOMETER POST TOTAL PROJECT	SHEET No.	TOTAL SHEETS
04	Ala	80	1.6/2.7	206	744

REGISTERED ELECTRICAL ENGINEER 05/02/11

10-3-11
PLANS APPROVAL DATE

REGISTERED PROFESSIONAL ENGINEER DAVID H. OTO No. 10699 Exp. 06/30/2013 ELECTRICAL STATE OF CALIFORNIA

THE STATE OF CALIFORNIA OR ITS OFFICERS OR AGENTS SHALL NOT BE RESPONSIBLE FOR THE ACCURACY OR COMPLETENESS OF ELECTRONIC COPIES OF THIS PLAN SHEET.

PB AMERICAS, Inc.
303 Second St., Suite 700N
San Francisco, CA 94107-1317

Caltrans Metric

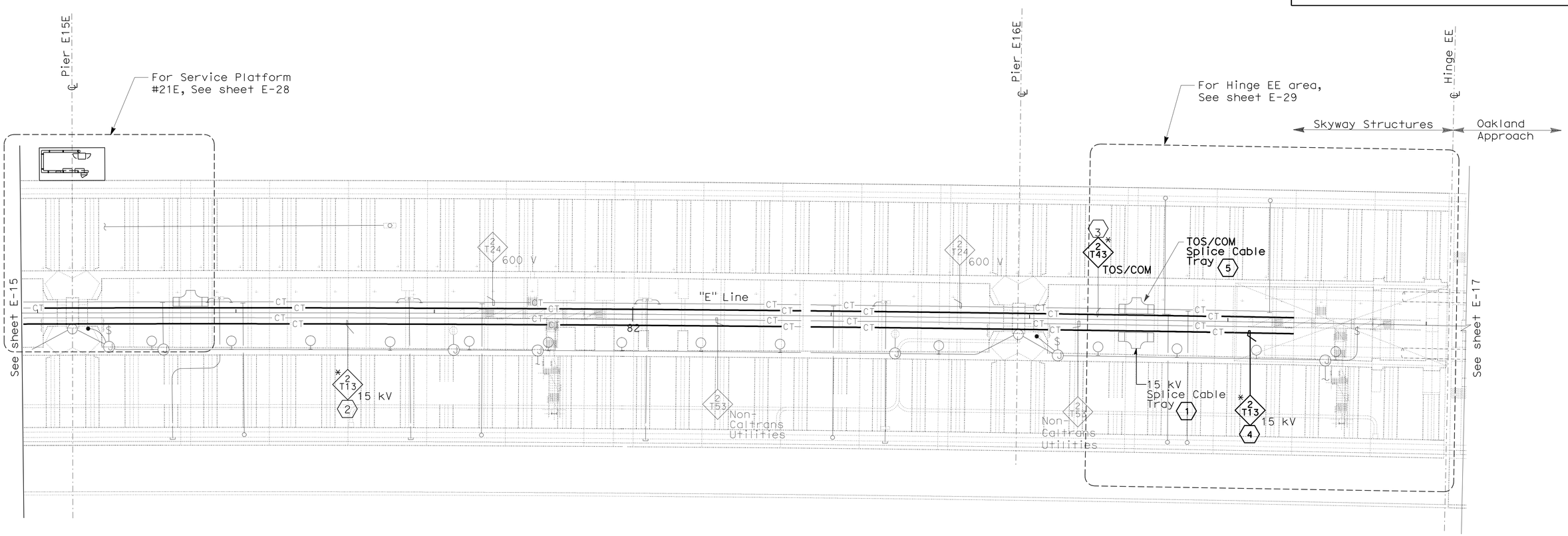

CONDUIT AND CABLE TRAY PLAN

NOTES:

1. This plan sheet is a record drawing from Skyway Structures contract. The Contractor shall verify the existing installation. Refer to the Skyway Structures Contract No. 04-012024.
2. The conduit/trays are existing. Conduits/trays with (*) prefixed is provided as reference for routing the cable/circuits only.
3. References:
   - For conduit and tray, cable and circuit schedules, see sheets starting at E-205.

SHEET NOTES:

(1) The Contractor to furnish and install the 12.47 kV cable stress relief. Connect cables inside the (E) splice cable tray.

(2) The 12.47 kV feeder cable is installed by others, shown for reference only.

(3) Install Base CCTV fiber optic trunkline inside a brown innerduct located inside (E) cable tray.

(4) Install new 12.47 kV feeder cable starting from the (E) cable splice tray.

(5) The Contractor to furnish and install the fiber optic closure (FSC). Connect cables inside the existing splice cable tray.

ROADWAY AND GIRDER LEVEL EASTBOUND
(LIGHTING AND ELECTRICAL SYSTEMS)
SKYWAY STRUCTURES PLAN

SCALE 1:200

E-16

THIS PLAN IS ACCURATE FOR ELECTRICAL WORK ONLY.

ALL DIMENSIONS ARE IN METERS UNLESS OTHERWISE SHOWN

STATE OF CALIFORNIA - DEPARTMENT OF TRANSPORTATION
Caltrans

CONSULTANT FUNCTIONAL SUPERVISOR: BRADY NADELL
CALCULATED-DESIGNED BY: JEFFRI HALIM
CHECKED BY: ELLERY LUCAS
REVISED BY / DATE REVISED

LAST REVISION DATE PLOTTED => 06-OCT-2011
TIME PLOTTED => 06:44
08-17-09

Dist	COUNTY	ROUTE	KILOMETER POST TOTAL PROJECT	SHEET No.	TOTAL SHEETS
04	Ala	80	1.6/2.7	207	744

05/02/11
REGISTERED ELECTRICAL ENGINEER

10-3-11
PLANS APPROVAL DATE

REGISTERED PROFESSIONAL ENGINEER
DAVID H. OTO
No. 10699
Exp. 06/30/2013
ELECTRICAL
STATE OF CALIFORNIA

THE STATE OF CALIFORNIA OR ITS OFFICERS OR AGENTS SHALL NOT BE RESPONSIBLE FOR THE ACCURACY OR COMPLETENESS OF ELECTRONIC COPIES OF THIS PLAN SHEET.

PB AMERICAS, Inc.
303 Second St., Suite 700N
San Francisco, CA 94107-1317

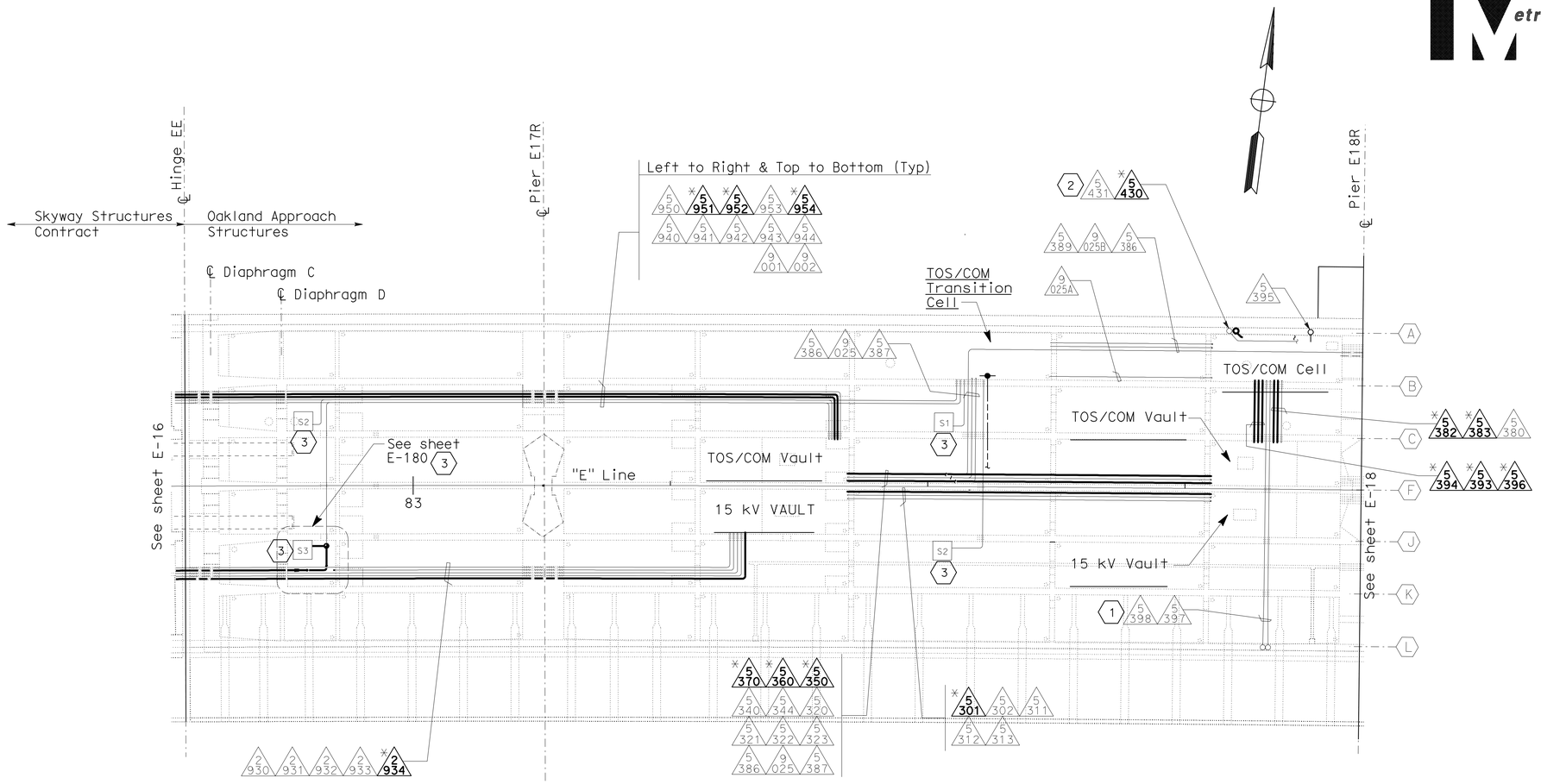

GIRDER CONDUIT PLAN

NOTES:

1. References:
   - For conduit and tray, cable and circuit schedules, see sheets starting at E-205.
2. The conduits are existing. Conduits with (*) prefixeed is provided as reference for routing the cable/circuits only.

SHEET NOTES:

1. Conduit up to PB-COM located in barrier.
2. Conduit up to Ltg. Pole with CCTV-E03.
3. Strong motion detectiojn system sensors. See sheets E-180 through E-182.

ROADWAY AND GIRDER LEVEL EASTBOUND
(LIGHTING AND ELECTRICAL SYSTEMS)
FRAME 1

SCALE 1:200

E-17

THIS PLAN IS ACCURATE FOR ELECTRICAL WORK ONLY.

ALL DIMENSIONS ARE IN METERS UNLESS OTHERWISE SHOWN

REVISED BY | DATE REVISED
ELLERY LUCAS | DAVID OTO
CALCULATED-DESIGNED BY | CHECKED BY
CONSULTANT FUNCTIONAL SUPERVISOR
BRADY NADELL

STATE OF CALIFORNIA - DEPARTMENT OF TRANSPORTATION
Caltrans

LAST REVISION 08-17-09 | DATE PLOTTED => 06-OCT-2011 | TIME PLOTTED => 06:44

Dist	COUNTY	ROUTE	KILOMETER POST TOTAL PROJECT	SHEET No.	TOTAL SHEETS
04	Ala	80	1.6/2.7	208	744

REGISTERED ELECTRICAL ENGINEER 05/02/11

10-3-11
PLANS APPROVAL DATE

REGISTERED PROFESSIONAL ENGINEER DAVID H. OTO No. 10699 Exp. 06/30/2013 ELECTRICAL STATE OF CALIFORNIA

THE STATE OF CALIFORNIA OR ITS OFFICERS OR AGENTS SHALL NOT BE RESPONSIBLE FOR THE ACCURACY OR COMPLETENESS OF ELECTRONIC COPIES OF THIS PLAN SHEET.

PB AMERICAS, Inc.
303 Second St., Suite 700N
San Francisco, CA 94107-1317

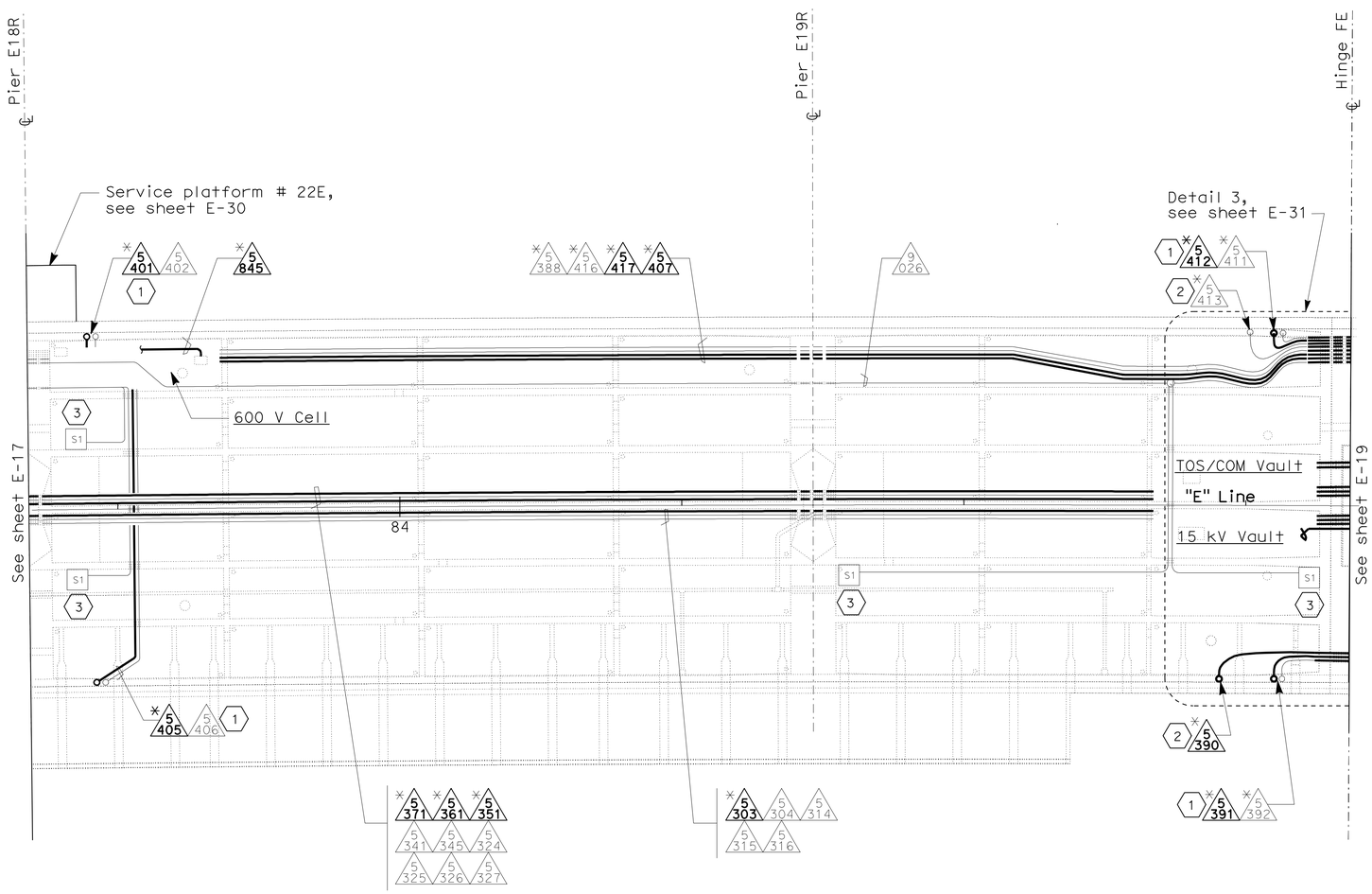

GIRDER CONDUIT PLAN

NOTES:

1. Refrences:
   - For conduit and tray, cable and circuit schedules, see sheets starting at E-205.
2. The conduits are existing. Conduits with (*) prefixed is provided as reference for routing the cable/circuits only.

SHEET NOTES:

1. Conduits up to PB-LTG located in barrier.
2. Conduit up to PB-COM located in barrier.
3. Strong motion detection system sensors. See sheets E-180 through E-182.

ROADWAY AND GIRDER LEVEL EASTBOUND
(LIGHTING AND ELECTRICAL SYSTEMS)
FRAME 1

SCALE 1:200

E-18

THIS PLAN IS ACCURATE FOR ELECTRICAL WORK ONLY.

ALL DIMENSIONS ARE IN METERS UNLESS OTHERWISE SHOWN

REVISED BY	DATE REVISED

ELLERY LUCAS — DAVID OTO

CALCULATED-DESIGNED BY — CHECKED BY

CONSULTANT FUNCTIONAL SUPERVISOR — BRADY NADELL

STATE OF CALIFORNIA - DEPARTMENT OF TRANSPORTATION

Caltrans

LAST REVISION 08-17-09 — DATE PLOTTED => 06-OCT-2011 TIME PLOTTED => 06:44

Dist	COUNTY	ROUTE	KILOMETER POST TOTAL PROJECT	SHEET No.	TOTAL SHEETS
04	Ala	80	1.6/2.7	209	744

REGISTERED ELECTRICAL ENGINEER 05/02/11

PLANS APPROVAL DATE 10-3-11

REGISTERED PROFESSIONAL ENGINEER DAVID H. OTO No. 10699 Exp. 06/30/2013 ELECTRICAL STATE OF CALIFORNIA

THE STATE OF CALIFORNIA OR ITS OFFICERS OR AGENTS SHALL NOT BE RESPONSIBLE FOR THE ACCURACY OR COMPLETENESS OF ELECTRONIC COPIES OF THIS PLAN SHEET.

PB AMERICAS, Inc.
303 Second St., Suite 700N
San Francisco, CA 94107-1317

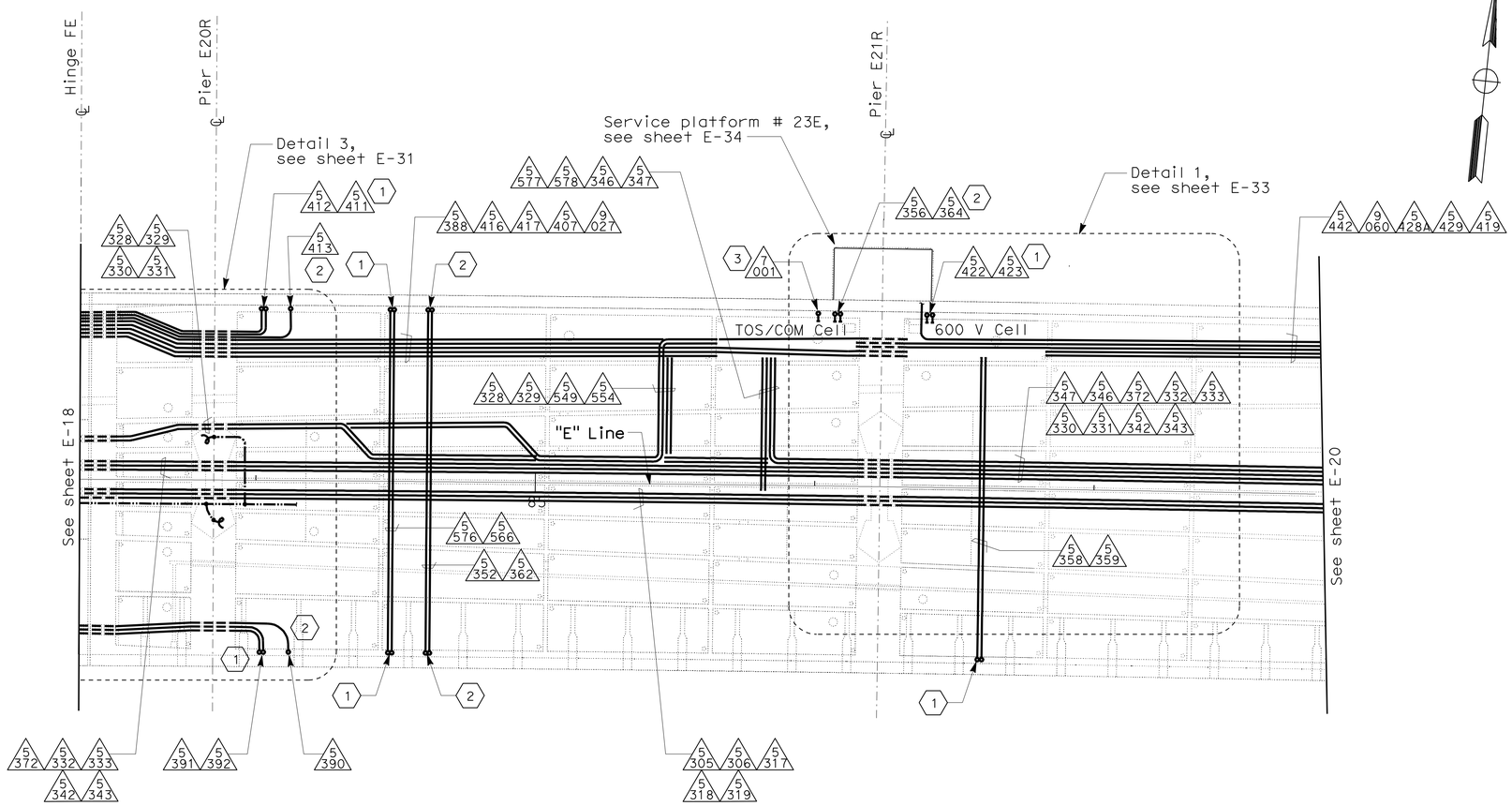

GIRDER CONDUIT PLAN

NOTES:

1. References:
   - TOS equipment is shown for conduit routing only. For typical details of TOS controller and devices, see sheets starting from E-190.
   - For types of pull boxes, and enclosures, see sheet E-43.
   - For conduit and tray, cable and circuit schedules, see sheets starting at E-205.
   - For additional conduit support, see sheets E-44 through E-49.

SHEET NOTES:

(1) Conduit up to PB-LTG located in barrier, see sheet E-10.

(2) Conduit up to PB-COM located in barrier, see sheet E-10.

(3) Conduit up to PB-F located in barrier, see sheet E-10.

ROADWAY AND GIRDER LEVEL EASTBOUND
(LIGHTING AND ELECTRICAL SYSTEMS)
FRAME 2
SCALE 1:200

E-19

THIS PLAN IS ACCURATE FOR ELECTRICAL WORK ONLY.

ALL DIMENSIONS ARE IN METERS UNLESS OTHERWISE SHOWN

STATE OF CALIFORNIA - DEPARTMENT OF TRANSPORTATION

Caltrans

CONSULTANT FUNCTIONAL SUPERVISOR: BRADY NADELL

CALCULATED-DESIGNED BY: ELLERY LUCAS

CHECKED BY: DAVID OTO

REVISED BY / DATE REVISED

LAST REVISION DATE PLOTTED => 06-OCT-2011
TIME PLOTTED => 06:44

08-17-09

Dist	COUNTY	ROUTE	KILOMETER POST TOTAL PROJECT	SHEET No.	TOTAL SHEETS
04	Ala	80	1.6/2.7	210	744

REGISTERED ELECTRICAL ENGINEER 05/02/11

10-3-11
PLANS APPROVAL DATE

REGISTERED PROFESSIONAL ENGINEER DAVID H. OTO No. 10699 Exp. 06/30/2013 ELECTRICAL STATE OF CALIFORNIA

THE STATE OF CALIFORNIA OR ITS OFFICERS OR AGENTS SHALL NOT BE RESPONSIBLE FOR THE ACCURACY OR COMPLETENESS OF ELECTRONIC COPIES OF THIS PLAN SHEET.

PB AMERICAS, Inc.
303 Second St., Suite 700N
San Francisco, CA 94107-1317

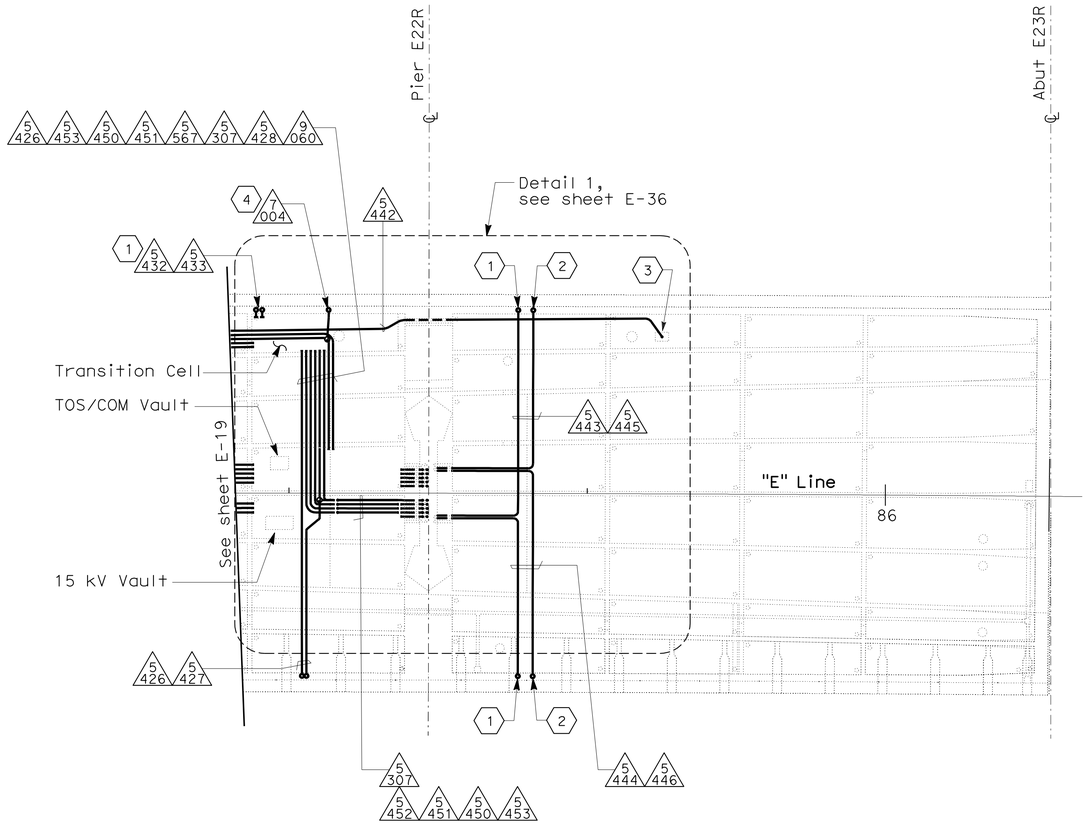

GIRDER CONDUIT PLAN

NOTES:

1. References:
   - TOS equipment is shown for conduit routing only. For typical details of TOS controller and devices, see sheets starting at E-190.
   - For types of pull boxes, splice boxes and enclosures, see sheet E-43.
   - For overall girder grounding plan, see sheet E-58.
   - For conduit and tray, cable and circuit schedules, see sheets starting at E-205.
   - For additional conduit support, see sheets E-44 through E-49.

SHEET NOTES:

(1) Conduit up to PB-LTG located in barrier, see sheet E-11.

(2) Conduit up to PB-COM located in barrier, see sheet E-11.

(3) Preformed Loop Splicebox PB-4D. See sheet E-179.

(4) Conduit up to PB-F located in barrier, see sheet E-11.

ROADWAY AND GIRDER LEVEL EASTBOUND
(LIGHTING AND ELECTRICAL SYSTEMS)
FRAME 2

SCALE 1:200

E-20

THIS PLAN IS ACCURATE FOR ELECTRICAL WORK ONLY.

ALL DIMENSIONS ARE IN METERS UNLESS OTHERWISE SHOWN

STATE OF CALIFORNIA - DEPARTMENT OF TRANSPORTATION

CONSULTANT FUNCTIONAL SUPERVISOR: BRADY NADELL

CALCULATED-DESIGNED BY: ELLERY LUCAS

CHECKED BY: DAVID OTO

REVISED BY / DATE REVISED

LAST REVISION 08-17-09 DATE PLOTTED => 06-OCT-2011 TIME PLOTTED => 06:44

Dist	COUNTY	ROUTE	KILOMETER POST TOTAL PROJECT	SHEET No.	TOTAL SHEETS
04	Ala	80	1.6/2.7	211	744

REGISTERED ELECTRICAL ENGINEER 05/02/11

10-3-11
PLANS APPROVAL DATE

REGISTERED PROFESSIONAL ENGINEER DAVID H. OTO No. 10699 Exp. 06/30/2013 ELECTRICAL STATE OF CALIFORNIA

THE STATE OF CALIFORNIA OR ITS OFFICERS OR AGENTS SHALL NOT BE RESPONSIBLE FOR THE ACCURACY OR COMPLETENESS OF ELECTRONIC COPIES OF THIS PLAN SHEET.

PB AMERICAS, Inc.
303 Second St., Suite 700N
San Francisco, CA 94107-1317

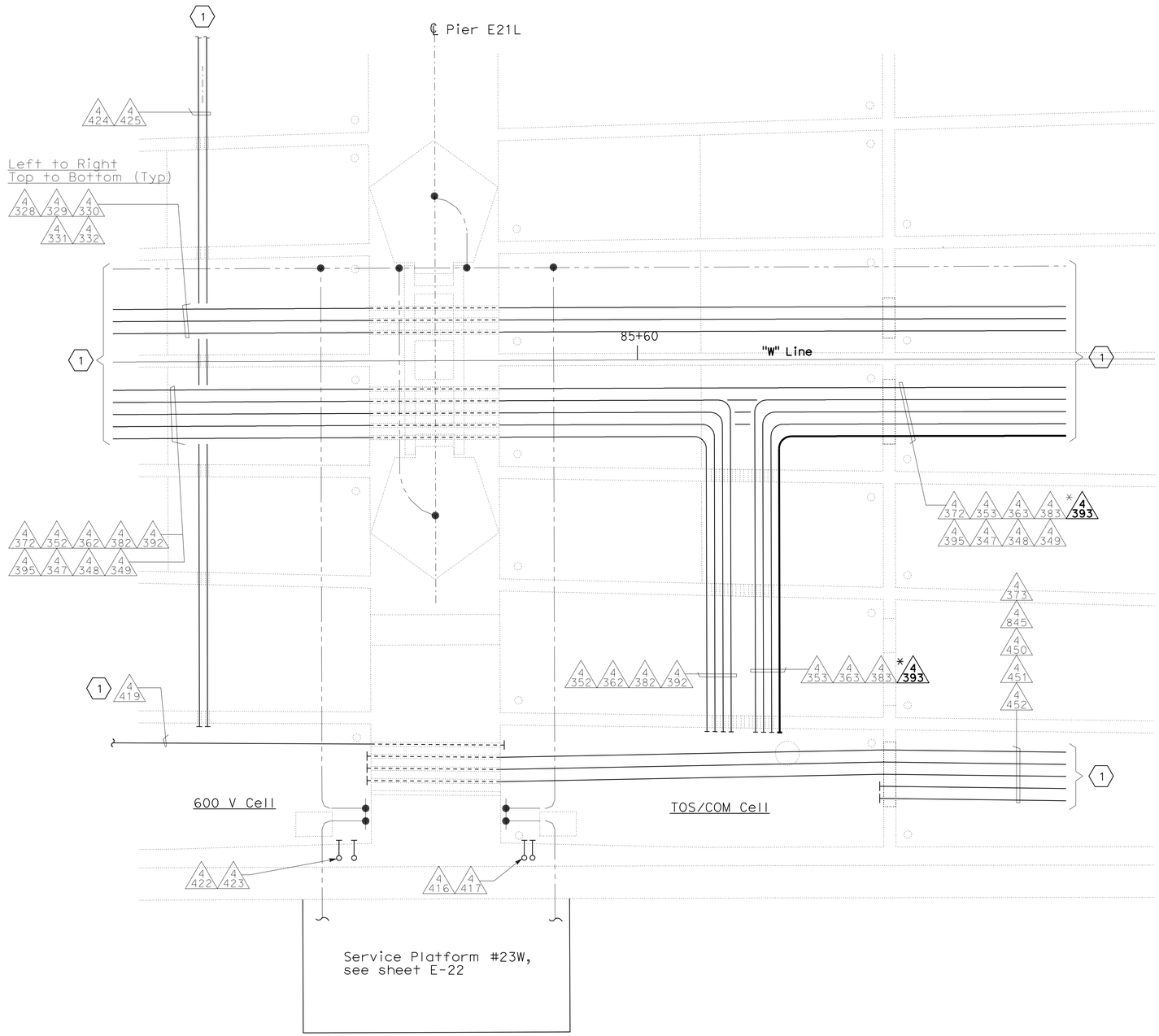

NOTES:

1. References:
   - For conduit and tray, cable and circuit schedules, see sheets starting at E-205.
2. The conduits are existing. Conduits with (*) prefixed is provided as reference for routing the cable/circuits only.

SHEET NOTE:

(1) See sheet E-12 for continuation.

DETAIL 4 - PIER E21L

DETAILS
ROADWAY AND GIRDER LEVEL EASTBOUND (PIER E21L) FIBER OPTIC INSTALLATION
SCALE 1:60

E-21

THIS PLAN IS ACCURATE FOR ELECTRICAL WORK ONLY.

ALL DIMENSIONS ARE IN METERS UNLESS OTHERWISE SHOWN

STATE OF CALIFORNIA - DEPARTMENT OF TRANSPORTATION
Caltrans

CONSULTANT FUNCTIONAL SUPERVISOR: BRADY NADELL
CALCULATED-DESIGNED BY: JEFFRI HALIM
CHECKED BY: DAVID OTO
REVISED BY / DATE REVISED

LAST REVISION 08-17-09
DATE PLOTTED => 06-OCT-2011
TIME PLOTTED => 06:44

Dist	COUNTY	ROUTE	KILOMETER POST TOTAL PROJECT	SHEET No.	TOTAL SHEETS
04	Ala	80	1.6/2.7	212	744

REGISTERED ELECTRICAL ENGINEER 05/02/11

10-3-11
PLANS APPROVAL DATE

REGISTERED PROFESSIONAL ENGINEER DAVID H. OTO No. 10699 Exp. 06/30/2013 ELECTRICAL STATE OF CALIFORNIA

THE STATE OF CALIFORNIA OR ITS OFFICERS OR AGENTS SHALL NOT BE RESPONSIBLE FOR THE ACCURACY OR COMPLETENESS OF ELECTRONIC COPIES OF THIS PLAN SHEET.

PB AMERICAS, Inc.
303 Second St., Suite 700N
San Francisco, CA 94107-1317

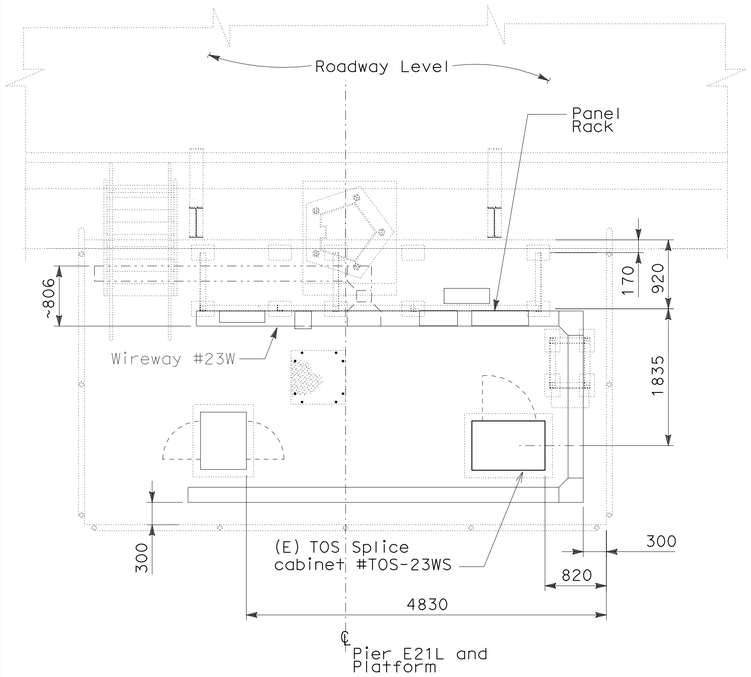

SERVICE PLATFORM #23W EQUIPMENT ARRANGEMENT PLAN (1)

SCALE 1:40

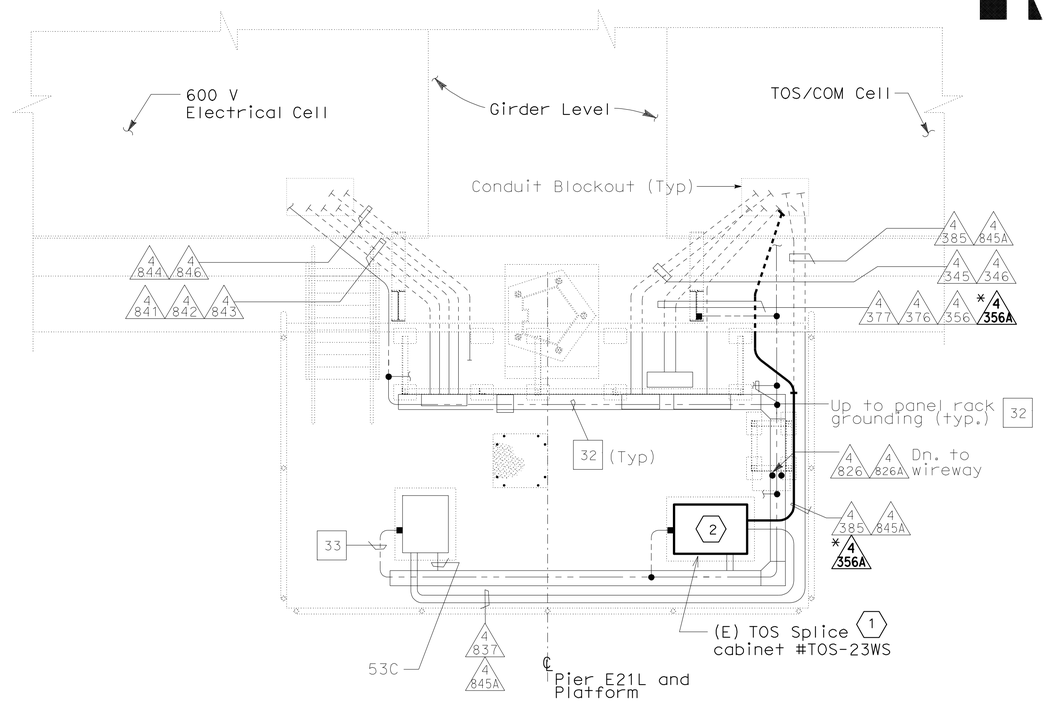

CONDUIT AND GROUNDING PLAN (1)

SCALE 1:40

NOTES:

1. The conduit/trays are existing. Conduits/trays with (*) prefixed is provided as reference for routing the cable/circuits only.
2. References:
   - For conduit and tray, cable and circuit schedules, see sheets starting at E-205.

SHEET NOTES:

(1) Existing equipment installed on previous contract. Location is for reference only.

(2) The Contractor to splice the fiber optic cables inside the (E) FSC inside controller cabinet.

DETAILS
ROADWAY AND GIRDER LEVEL EASTBOUND (SERVICE PLATFORM #23W) FIBER OPTIC INSTALLATION

SCALE AS NOTED

E-22

THIS PLAN IS ACCURATE FOR ELECTRICAL WORK ONLY.

ALL DIMENSIONS ARE IN MILLIMETERS UNLESS OTHERWISE SHOWN

REVISED BY	DATE REVISED

CALCULATED-DESIGNED BY: JEFFRI HALIM
CHECKED BY: DAVID OTO
CONSULTANT FUNCTIONAL SUPERVISOR: BRADY NADELL
STATE OF CALIFORNIA - DEPARTMENT OF TRANSPORTATION

LAST REVISION 08-17-09 | DATE PLOTTED => 06-OCT-2011 | TIME PLOTTED => 06:44

Dist	COUNTY	ROUTE	KILOMETER POST TOTAL PROJECT	SHEET No.	TOTAL SHEETS
04	Ala	80	1.6/2.7	213	744

REGISTERED ELECTRICAL ENGINEER 05/02/11

10-3-11
PLANS APPROVAL DATE

REGISTERED PROFESSIONAL ENGINEER
DAVID H. OTO
No. 10699
Exp. 06/30/2013
ELECTRICAL
STATE OF CALIFORNIA

THE STATE OF CALIFORNIA OR ITS OFFICERS OR AGENTS SHALL NOT BE RESPONSIBLE FOR THE ACCURACY OR COMPLETENESS OF ELECTRONIC COPIES OF THIS PLAN SHEET.

PB AMERICAS, Inc.
303 Second St., Suite 700N
San Francisco, CA 94107-1317

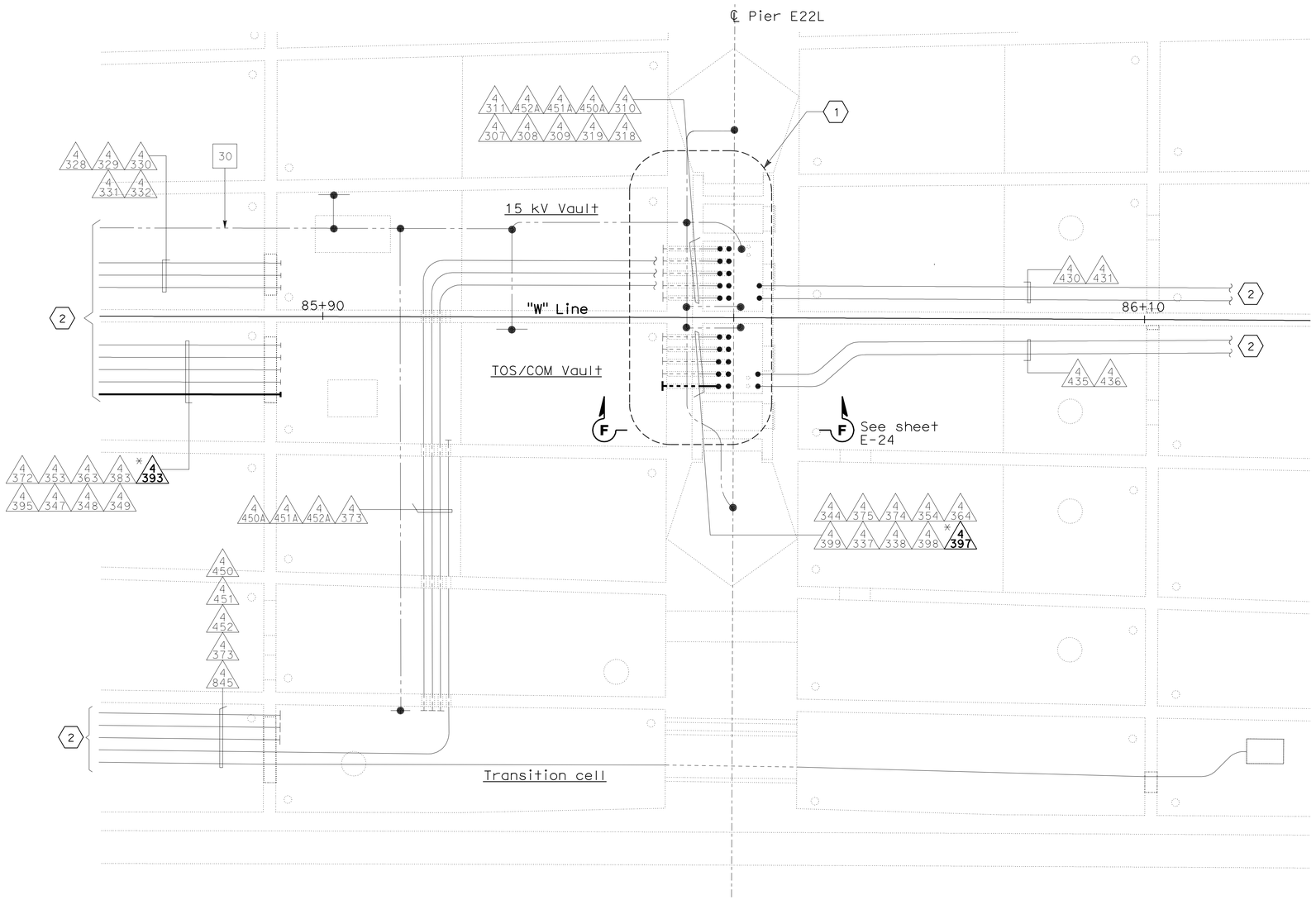

DETAIL 5 - PIER E22L CONDUIT PLAN

NOTES:

1. References:
   - For conduit and tray, cable and circuit schedules, see sheets starting at E-205.
2. The conduit are existing. Conduits with (*) prefixed is provided as reference for routing the cable/circuits only.

SHEET NOTES:

(1) For Pier E22L conduit plan, see E-24.

(2) See sheet E-12 for continuation.

DETAILS
ROADWAY AND GIRDER LEVEL EASTBOUND (PIER E22L) FIBER OPTIC INSTALLATION

SCALE 1:60

E-23

THIS PLAN IS ACCURATE FOR ELECTRICAL WORK ONLY.

ALL DIMENSIONS ARE IN METERS UNLESS OTHERWISE SHOWN

STATE OF CALIFORNIA - DEPARTMENT OF TRANSPORTATION
Caltrans

CONSULTANT FUNCTIONAL SUPERVISOR: BRADY NADELL
CALCULATED-DESIGNED BY: JEFFRI HALIM
CHECKED BY: DAVID OTO
REVISED BY / DATE REVISED

LAST REVISION 08-17-09
DATE PLOTTED => 06-OCT-2011
TIME PLOTTED => 06:44

Dist	COUNTY	ROUTE	KILOMETER POST TOTAL PROJECT	SHEET No.	TOTAL SHEETS
04	Ala	80	1.6/2.7	214	744

REGISTERED ELECTRICAL ENGINEER 05/02/11

PLANS APPROVAL DATE 10-3-11

REGISTERED PROFESSIONAL ENGINEER DAVID H. OTO No. 10699 Exp. 06/30/2013 ELECTRICAL STATE OF CALIFORNIA

THE STATE OF CALIFORNIA OR ITS OFFICERS OR AGENTS SHALL NOT BE RESPONSIBLE FOR THE ACCURACY OR COMPLETENESS OF ELECTRONIC COPIES OF THIS PLAN SHEET.

PB AMERICAS, Inc.
303 Second St., Suite 700N
San Francisco, CA 94107-1317

Caltrans Metric

SHEET NOTE:

(1) For continuation, see conduit layout plan, refer to sheet E-23.

NOTES:

1. The conduit/trays are existing. Conduits/trays with (*) prefixed is provided as reference for routing the cable/circuits only.
2. References:
   - For conduit and tray, cable and circuit schedules, see sheets starting at E-205.

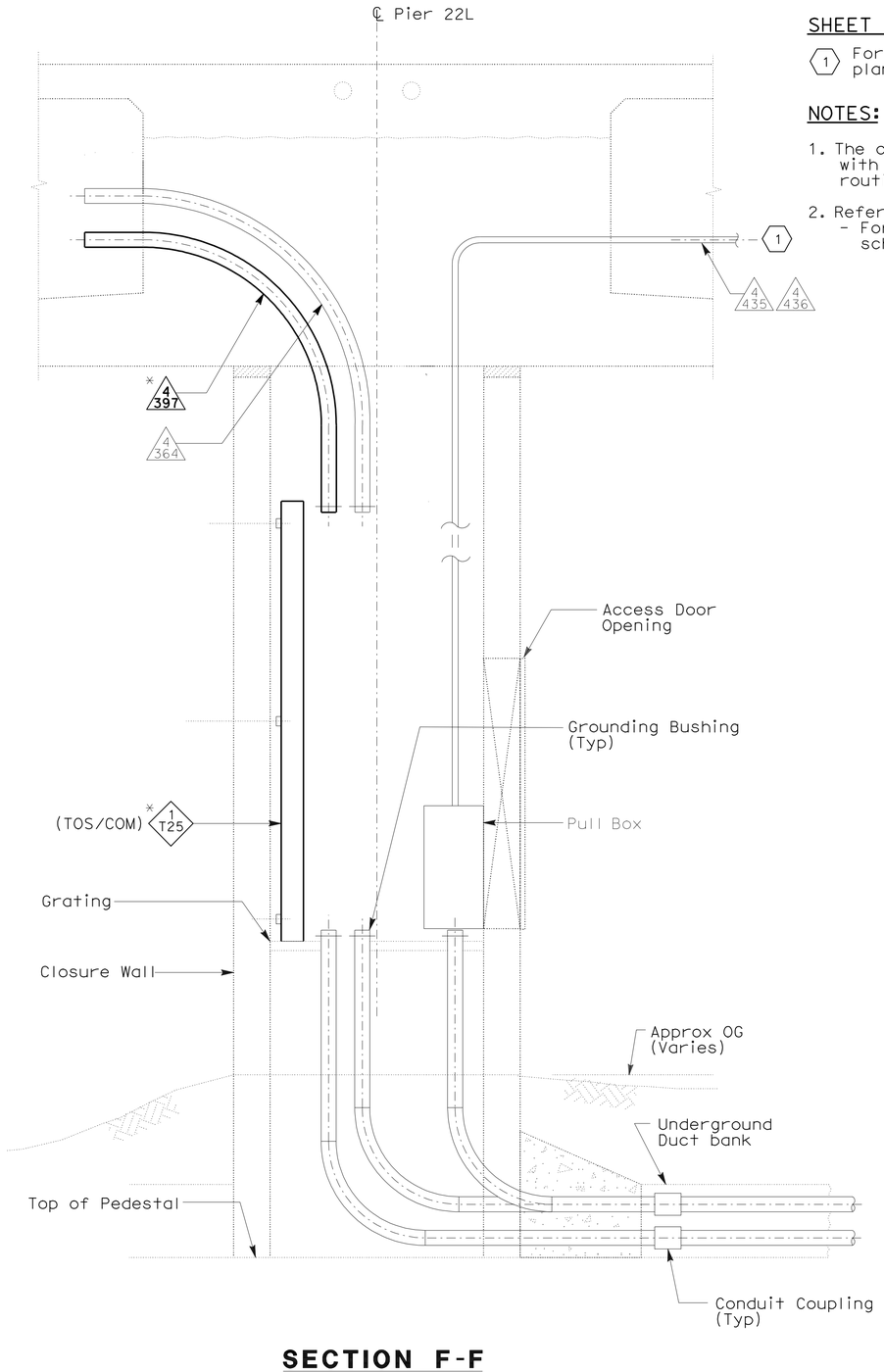

SECTION F-F
PIER E22L
SCALE 1:20

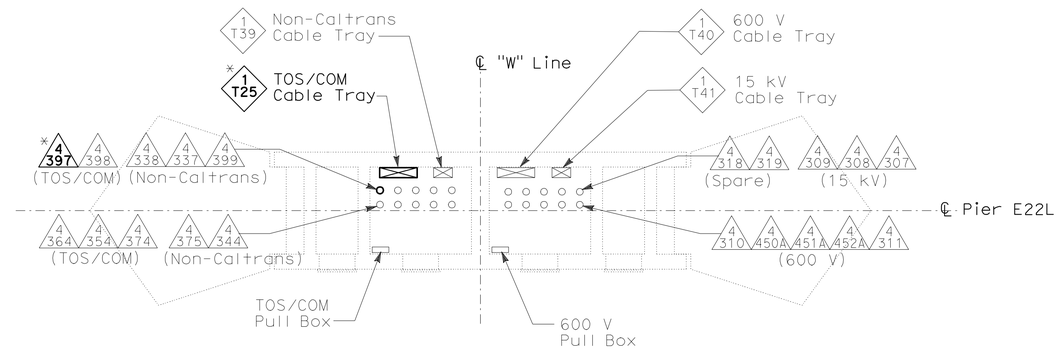

PIER E22L- PLAN
INSIDE PIER
SCALE: 1:50

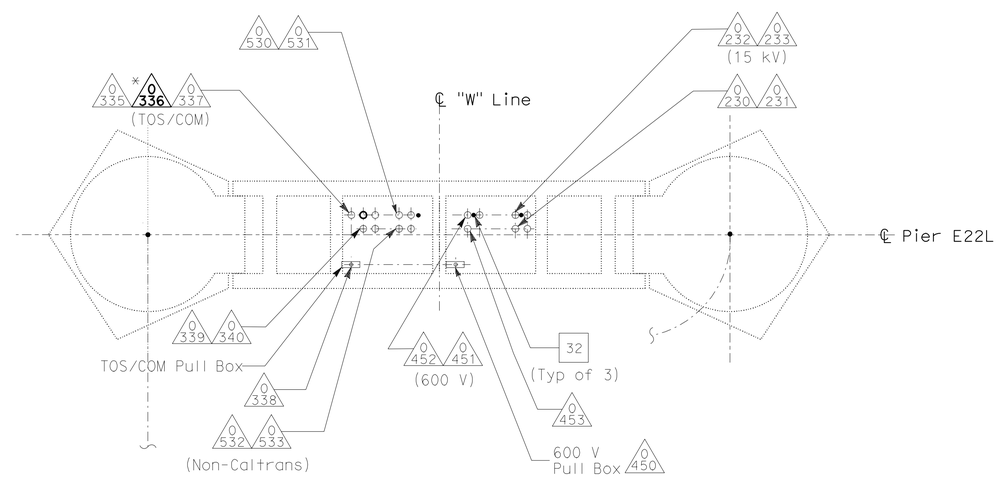

PIER E22L
PLAN AT GRADE
SCALE: 1:50

DETAILS
ROADWAY AND GIRDER LEVEL EASTBOUND (PIER E22L AT GRADE) FIBER OPTIC INSTALLATION
SCALE: AS NOTED

E-24

THIS PLAN IS ACCURATE FOR ELECTRICAL WORK ONLY.

ALL DIMENSIONS ARE IN MILLIMETERS UNLESS OTHERWISE SHOWN

REVISED BY	DATE REVISED

JEFFRI HALIM — DAVID OTO — CALCULATED-DESIGNED BY — CHECKED BY

CONSULTANT FUNCTIONAL SUPERVISOR: BRADY NADELL

STATE OF CALIFORNIA - DEPARTMENT OF TRANSPORTATION — Caltrans

LAST REVISION 08-17-09 — DATE PLOTTED => 06-OCT-2011 — TIME PLOTTED => 06:45

Dist	COUNTY	ROUTE	KILOMETER POST TOTAL PROJECT	SHEET No.	TOTAL SHEETS
04	Ala	80	1.6/2.7	215	744

REGISTERED ELECTRICAL ENGINEER 05/02/11

PLANS APPROVAL DATE 10-3-11

REGISTERED PROFESSIONAL ENGINEER DAVID H. OTO No. 10699 Exp. 06/30/2013 ELECTRICAL STATE OF CALIFORNIA

THE STATE OF CALIFORNIA OR ITS OFFICERS OR AGENTS SHALL NOT BE RESPONSIBLE FOR THE ACCURACY OR COMPLETENESS OF ELECTRONIC COPIES OF THIS PLAN SHEET.

PB AMERICAS, Inc.
303 Second St., Suite 700N
San Francisco, CA 94107-1317

Caltrans Metric

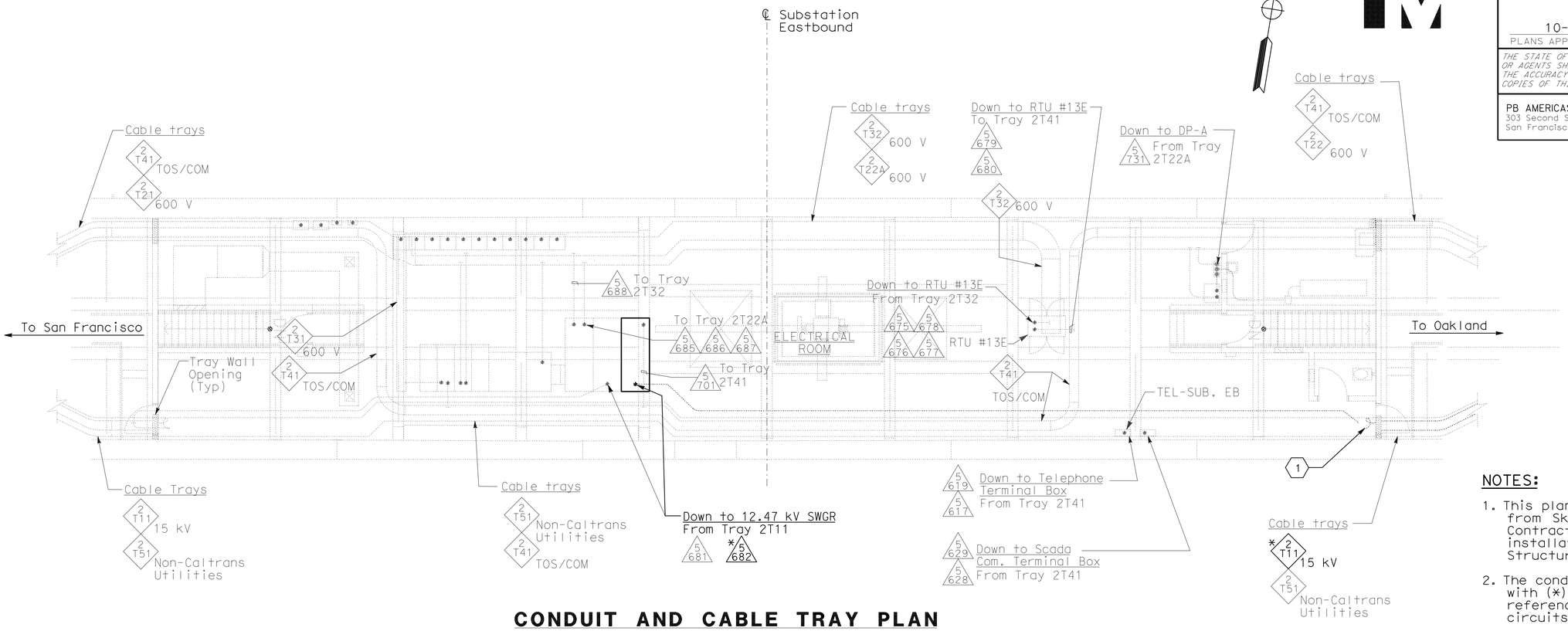

CONDUIT AND CABLE TRAY PLAN

SCALE: 1:75

NOTES:

1. This plan sheet is a record drawing from Skyway Structures contract. The Contractor shall verify the existing installation. Refer to Skyway Structures, Contract No. 04-012024.
2. The conduits are existing. Conduits with (*) prefixed is provided as reference for routing the cable/ circuits only.
3. References:
   - For conduit and tray, cable and circuit schedules, see sheets starting at E-205.

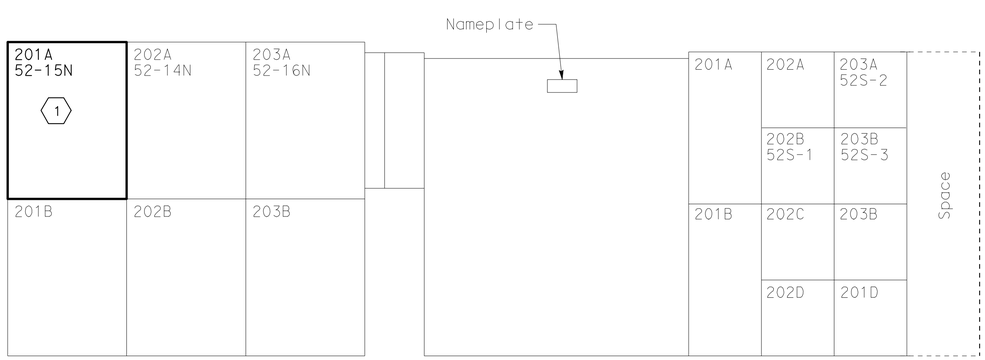

12.47 kV SWITCHGEAR FRONT ELEVATION

NO SCALE

BREAKER NO.	VERTICAL SECTION	NAMEPLATE DESCRIPTION (See Detail)	REMARKS
		12.47 kV Switchgear	
1 52-15N	201A	12.47 kV Feeder from Mole Substation	
	201B	Equipped Space	
52-14N	202A	12.47 kV Feeder from YBI Substation	
	202B	PT's	
52-16N	203A	Feeder to 750 kVA Transformer	
	203B	PT's	
		480 V Switchgear	
	201A		
	201B		
	202A	PT's	
52S-1	202B	Incoming Breaker	
	202C	Equipped Space	
	202D	Equipped Space	
52S-2	203A	Main Breaker for LVCC-A	
52S-3	203B	Spare	
	203C	Equipped Space	
	203D	Equipped Space	

SHEET NOTE:

1. The cable coiled inside the (E) cable tray shall be routed to (E) conduit 5682. The Contractor to terminate the feeder cable ckt. No. 2392 inside this section.

DETAILS

ROADWAY AND GIRDER LEVEL EASTBOUND (SKYWAY STRUCTURES - SUBSTATION EASTBOUND)

SCALE: AS NOTED

E-25

THIS PLAN IS ACCURATE FOR ELECTRICAL WORK ONLY.

ALL DIMENSIONS ARE IN METERS UNLESS OTHERWISE SHOWN

STATE OF CALIFORNIA - DEPARTMENT OF TRANSPORTATION

Caltrans

CONSULTANT FUNCTIONAL SUPERVISOR: BRADY NADELL

CALCULATED-DESIGNED BY: JEFFRI HALIM

CHECKED BY: ELLERY LUCAS

REVISED BY / DATE REVISED

LAST REVISION 08-17-09

DATE PLOTTED => 06-OCT-2011

TIME PLOTTED => 06:45

Dist	COUNTY	ROUTE	KILOMETER POST TOTAL PROJECT	SHEET No.	TOTAL SHEETS
04	Ala	80	1.6/2.7	216	744

05/02/11
REGISTERED ELECTRICAL ENGINEER

10-3-11
PLANS APPROVAL DATE

REGISTERED PROFESSIONAL ENGINEER
DAVID H. OTO
No. 10699
Exp. 06/30/2013
STATE OF CALIFORNIA

THE STATE OF CALIFORNIA OR ITS OFFICERS OR AGENTS SHALL NOT BE RESPONSIBLE FOR THE ACCURACY OR COMPLETENESS OF ELECTRONIC COPIES OF THIS PLAN SHEET.

PB AMERICAS, Inc.
303 Second St., Suite 700N
San Francisco, CA 94107-1317

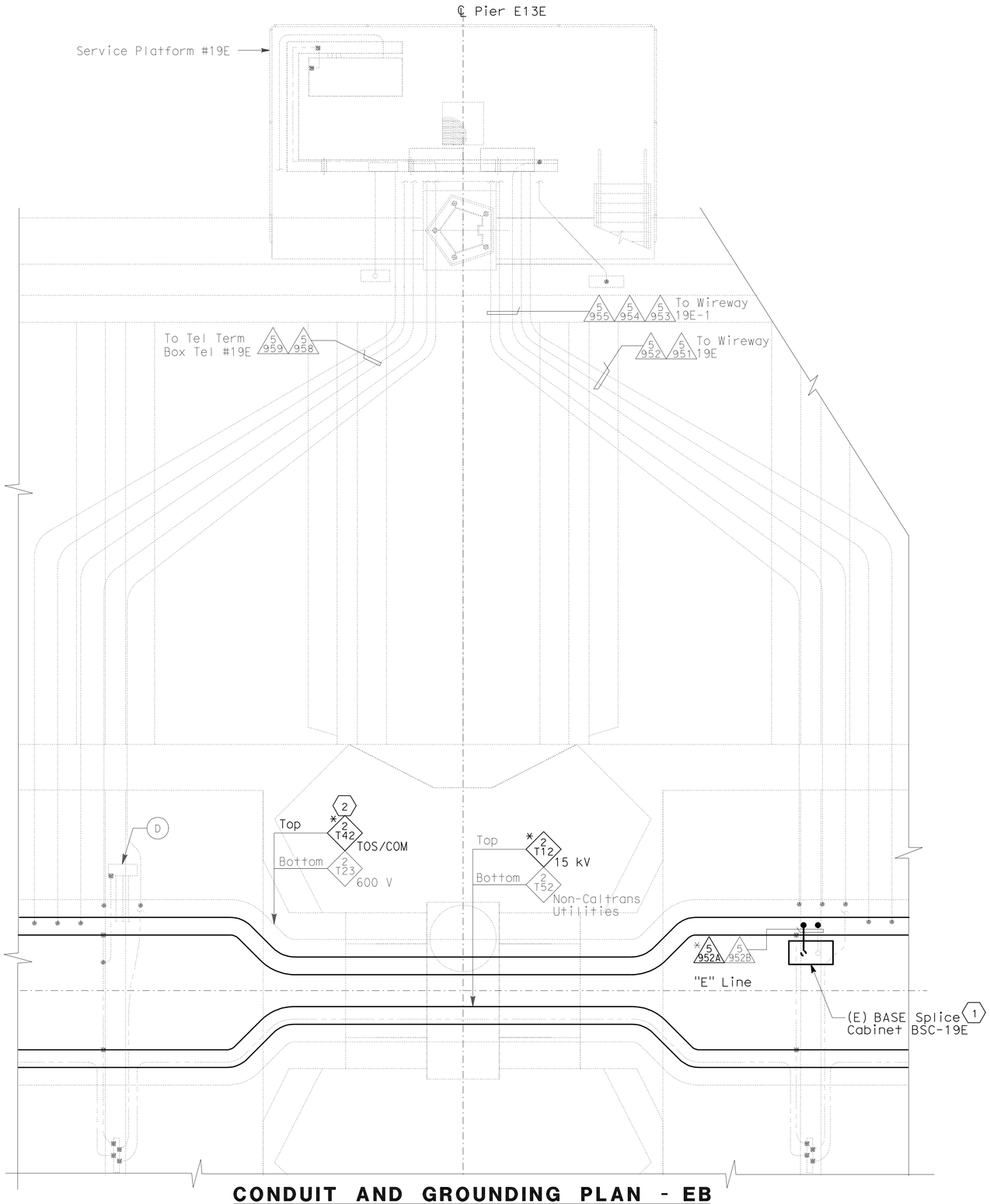

CONDUIT AND GROUNDING PLAN - EB

SCALE: 1:40

THIS PLAN IS ACCURATE FOR ELECTRICAL WORK ONLY.

ALL DIMENSIONS ARE IN METERS UNLESS OTHERWISE SHOWN

NOTES:

1. This plan sheet is a record drawing from Skyway Structures contract. The Contractor shall verify the existing installation. Refer to the Skyway Structures Contract No. 04-012024.
2. The conduit/trays are existing. Conduits/trays with (*) prefixed is provided as reference for routing the cable/circuits only.
3. References:
   - For conduit and tray, cable and circuit schedules, see sheets starting at E-205.

SHEET NOTES:

(1) Coil 4 meter length of cable inside (E) cabinet. Termination is by others.

(2) The 12.47 kV fedder cable is installed by others and shown as reference only.

DETAILS
ROADWAY AND GIRDER LEVEL EASTBOUND (SKYWAY STRUCTURES - SERVICE PLATFORM #19E)

SCALE AS NOTED

E-26

STATE OF CALIFORNIA - DEPARTMENT OF TRANSPORTATION
Caltrans

CONSULTANT FUNCTIONAL SUPERVISOR: BRADY NADELL
CALCULATED-DESIGNED BY: JEFFRI HALIM
CHECKED BY: ELLERY LUCAS
REVISED BY
DATE REVISED

LAST REVISION 08-17-09
DATE PLOTTED => 06-OCT-2011
TIME PLOTTED => 06:45

Dist	COUNTY	ROUTE	KILOMETER POST TOTAL PROJECT	SHEET No.	TOTAL SHEETS
04	Ala	80	1.6/2.7	217	744

05/02/11
REGISTERED ELECTRICAL ENGINEER

10-3-11
PLANS APPROVAL DATE

REGISTERED PROFESSIONAL ENGINEER
DAVID H. OTO
No. 10699
Exp. 06/30/2013
ELECTRICAL
STATE OF CALIFORNIA

THE STATE OF CALIFORNIA OR ITS OFFICERS OR AGENTS SHALL NOT BE RESPONSIBLE FOR THE ACCURACY OR COMPLETENESS OF ELECTRONIC COPIES OF THIS PLAN SHEET.

PB AMERICAS, Inc.
303 Second St., Suite 700N
San Francisco, CA 94107-1317

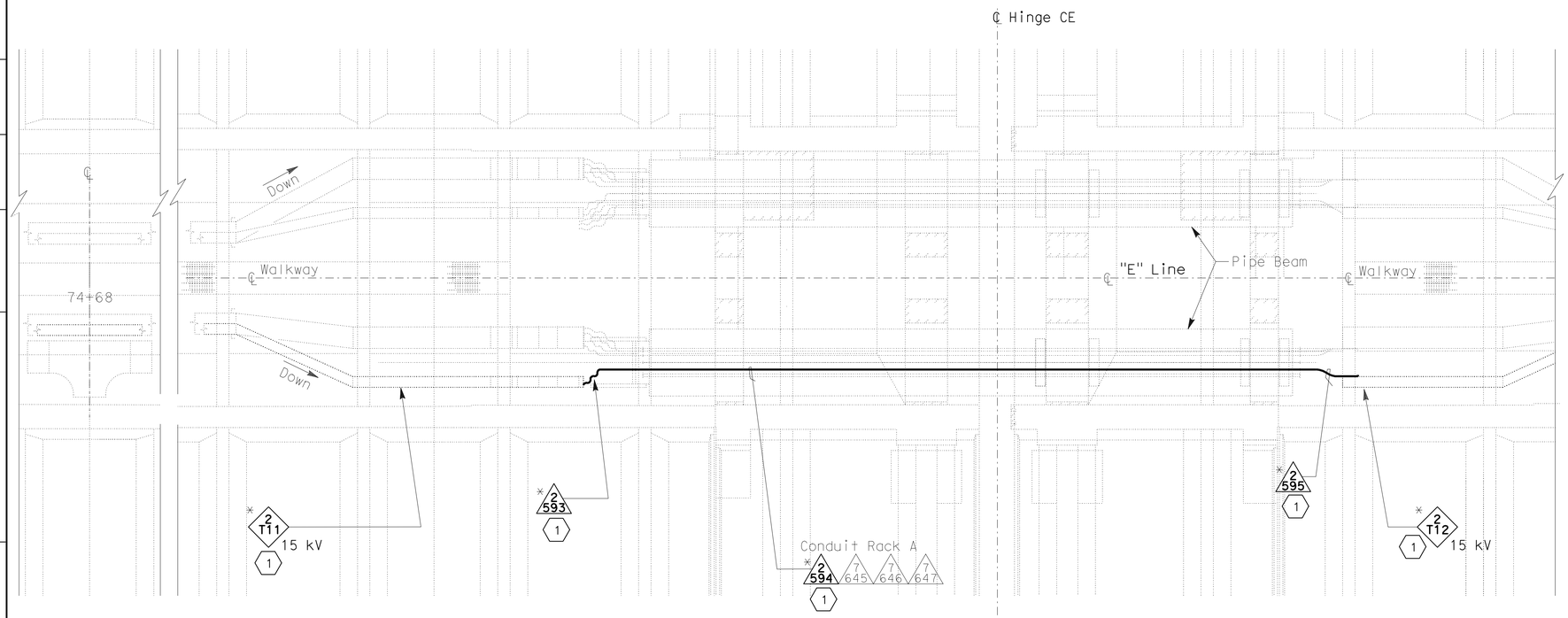

PLAN - HINGE CE
SCALE: 1:75

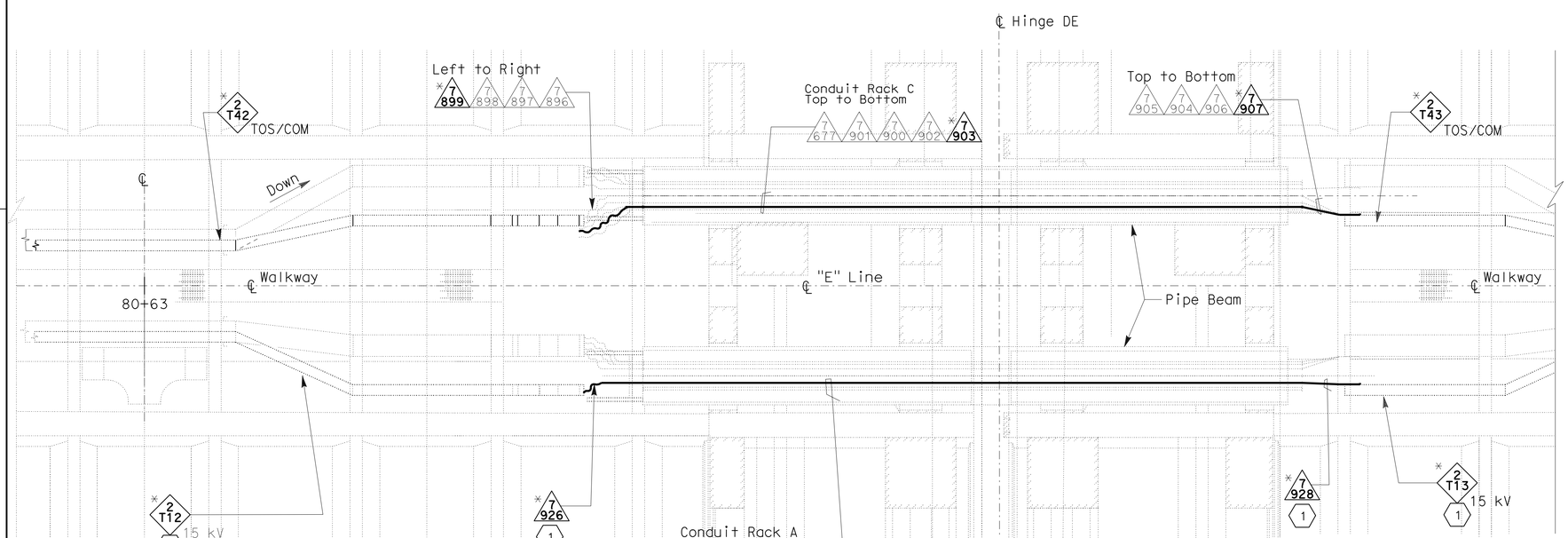

PLAN - HINGE DE
SCALE: 1:75

NOTES:

1. Cables/circuits passing through the hinge locations shall be provided with cable identification tag at both ends of Hinge. For conduit and tray, cable and circuit schedules, see sheets starting at E-205.
2. The conduit/trays are existing. Conduits/trays with (*) prefixed is provided as reference for routing the cable/circuits only.

SHEET NOTE:

(1) The 12.47 kV feeder cable is installed by others and shown as reference only.

DETAILS
ROADWAY AND GIRDER LEVEL EASTBOUND (SKYWAY STRUCTURES - HINGES CE AND DE)
SCALE AS NOTED

E-27

THIS PLAN IS ACCURATE FOR ELECTRICAL WORK ONLY.

ALL DIMENSIONS ARE IN METERS UNLESS OTHERWISE SHOWN

STATE OF CALIFORNIA - DEPARTMENT OF TRANSPORTATION
Caltrans

CONSULTANT FUNCTIONAL SUPERVISOR: BRADY NADELL
CALCULATED-DESIGNED BY: JEFFRI HALIM
CHECKED BY: ELLERY LUCAS
REVISED BY / DATE REVISED

LAST REVISION 08-17-09
DATE PLOTTED => 06-OCT-2011
TIME PLOTTED => 06:45

Dist	COUNTY	ROUTE	KILOMETER POST TOTAL PROJECT	SHEET No.	TOTAL SHEETS
04	Ala	80	1.6/2.7	218	744

REGISTERED ELECTRICAL ENGINEER 05/02/11

10-3-11
PLANS APPROVAL DATE

REGISTERED PROFESSIONAL ENGINEER DAVID H. OTO No. 10699 Exp. 06/30/2013 ELECTRICAL STATE OF CALIFORNIA

THE STATE OF CALIFORNIA OR ITS OFFICERS OR AGENTS SHALL NOT BE RESPONSIBLE FOR THE ACCURACY OR COMPLETENESS OF ELECTRONIC COPIES OF THIS PLAN SHEET.

PB AMERICAS, Inc.
303 Second St., Suite 700N
San Francisco, CA 94107-1317

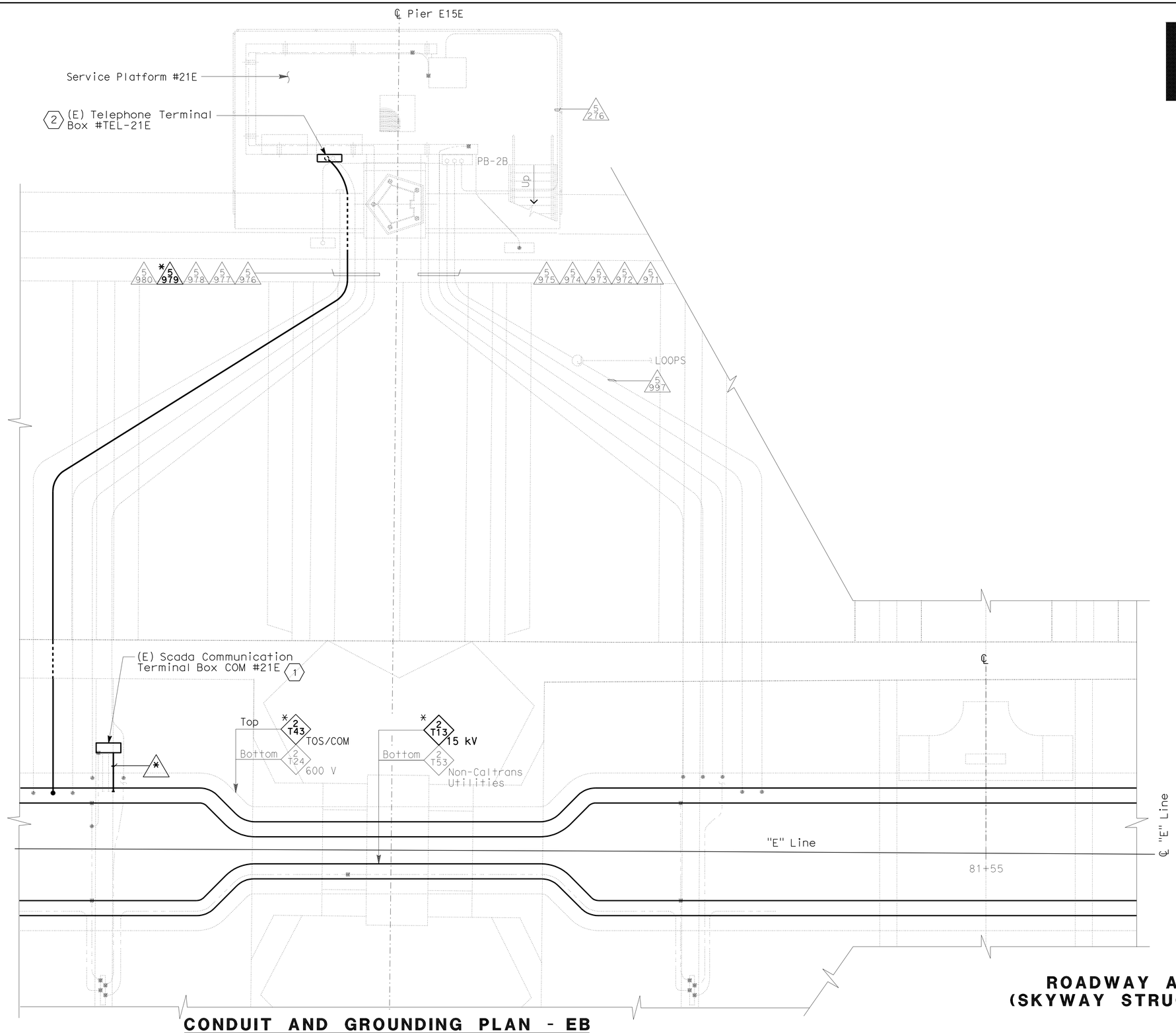

CONDUIT AND GROUNDING PLAN - EB

SCALE: 1:40

THIS PLAN IS ACCURATE FOR ELECTRICAL WORK ONLY.

ALL DIMENSIONS ARE IN METERS UNLESS OTHERWISE SHOWN

NOTES:

1. This plan sheet is a record drawing from Skyway Structures contract. The Contractor shall verify the existing installation. Refer to Skyway Structures, Contract No. 04-012024.
2. The conduits are existing. Conduits with (*) prefixed is provided as reference for routing the cable/ circuits only.
3. References:
   - For conduit and tray, cable and circuit schedules, see sheets starting at E-205.

SHEET NOTES:

(1) The Contractor to install and terminate SCADA cable into (E) Communication Cabinet 21E.

(2) The Contractor to install and terminate TEL cable into (E) TEL-21E.

DETAILS
ROADWAY AND GIRDER LEVEL EASTBOUND (SKYWAY STRUCTURES-SERVICE PLATFORM #21E)

SCALE AS NOTED

E-28

STATE OF CALIFORNIA - DEPARTMENT OF TRANSPORTATION
Caltrans

CONSULTANT FUNCTIONAL SUPERVISOR: BRADY NADELL
CALCULATED-DESIGNED BY: JEFFRI HALIM
CHECKED BY: ELLERY LUCAS
REVISED BY
DATE REVISED

LAST REVISION DATE PLOTTED => 06-OCT-2011
TIME PLOTTED => 06:45
08-17-09

BORDER LAST REVISED 3/1/2007
RELATIVE BORDER SCALE IS IN MILLIMETERS 0 20 40 60 80
DGN FILE => 40120mua028.dgn
USERNAME => s121614
CU 04251
EA 0120M1

Dist	COUNTY	ROUTE	KILOMETER POST TOTAL PROJECT	SHEET No.	TOTAL SHEETS
04	Ala	80	1.6/2.7	219	744

REGISTERED ELECTRICAL ENGINEER 05/02/11

PLANS APPROVAL DATE 10-3-11

REGISTERED PROFESSIONAL ENGINEER DAVID H. OTO No. 10699 Exp. 06/30/2013 ELECTRICAL STATE OF CALIFORNIA

THE STATE OF CALIFORNIA OR ITS OFFICERS OR AGENTS SHALL NOT BE RESPONSIBLE FOR THE ACCURACY OR COMPLETENESS OF ELECTRONIC COPIES OF THIS PLAN SHEET.

PB AMERICAS, Inc.
303 Second St., Suite 700N
San Francisco, CA 94107-1317

Caltrans Metric

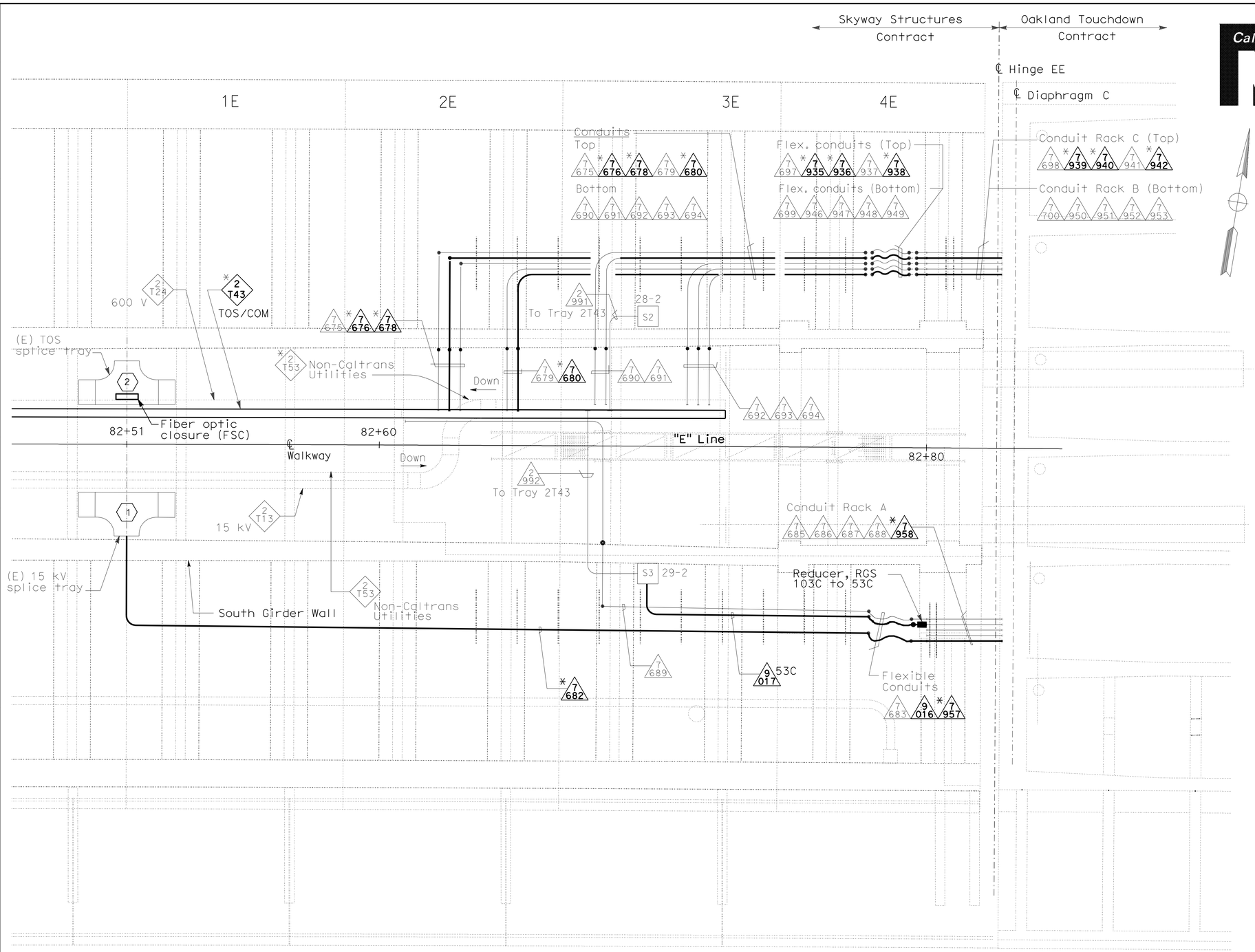

NOTES:

1. Cables/circuits passing through the hinge locations shall be provided with cable identification tag at both ends of Hinge. For conduit and tray, cable and circuit schedules, see sheets starting at E-205.
2. The conduit/trays are existing. Conduits/trays with (*) prefixed is provided as reference for routing the cable/circuits only.

SHEET NOTES:

(1) The Contractor to install, furnish the 12.47 kV stress relief and splice inside the (E) 15 kV cable splice tray.

(2) The Contractor to furnish and install the fiber splice closure (FSC) inside (E) splice cable tray. The Contractor shall splice to existing 72 fiber looped inside cable tray provided by others.

DETAILS
ROADWAY AND GIRDER LEVEL EASTBOUND (HINGE EE INTERFACE SKYWAY AND OAKLAND APPROACH STRUCTURES)
NO SCALE

E-29

THIS PLAN IS ACCURATE FOR ELECTRICAL WORK ONLY.

ALL DIMENSIONS ARE IN METERS UNLESS OTHERWISE SHOWN

STATE OF CALIFORNIA - DEPARTMENT OF TRANSPORTATION
Caltrans

CONSULTANT FUNCTIONAL SUPERVISOR: BRADY NADELL
CALCULATED-DESIGNED BY: JEFFRI HALIM
CHECKED BY: DAVID OTO
REVISED BY / DATE REVISED

LAST REVISION 08-17-09 DATE PLOTTED => 06-OCT-2011 TIME PLOTTED => 06:45

Dist	COUNTY	ROUTE	KILOMETER POST TOTAL PROJECT	SHEET No.	TOTAL SHEETS
04	Ala	80	1.6/2.7	220	744

REGISTERED ELECTRICAL ENGINEER 05/02/11

10-3-11
PLANS APPROVAL DATE

REGISTERED PROFESSIONAL ENGINEER DAVID H. OTO No. 10699 Exp. 06/30/2013 ELECTRICAL STATE OF CALIFORNIA

THE STATE OF CALIFORNIA OR ITS OFFICERS OR AGENTS SHALL NOT BE RESPONSIBLE FOR THE ACCURACY OR COMPLETENESS OF ELECTRONIC COPIES OF THIS PLAN SHEET.

PB AMERICAS, Inc.
303 Second St., Suite 700N
San Francisco, CA 94107-1317

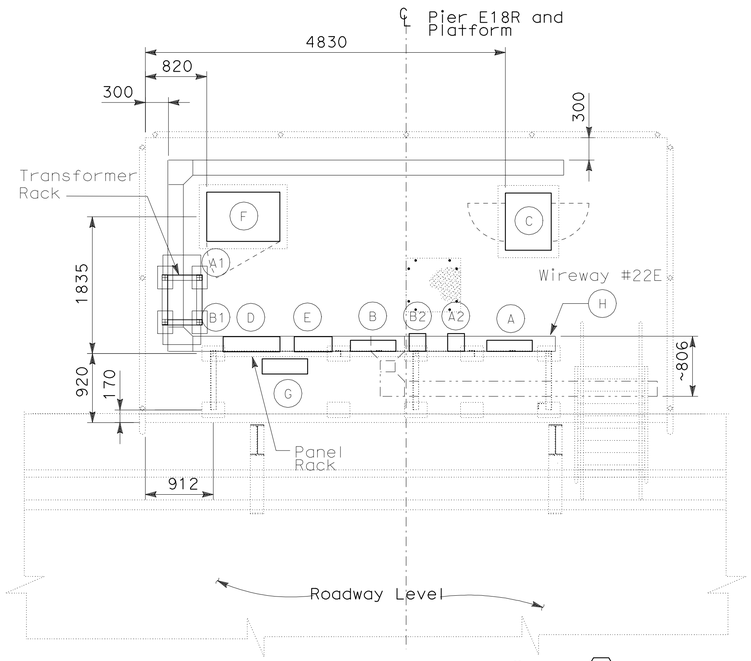

SERVICE PLATFORM #22E (1)
EQUIPMENT ARRANGEMENT PLAN

SCALE: 1:40

EQUIPMENT SCHEDULE: (1)

- (A) Utility Panel UP-271
  208/120 V, 3 Phase, 4 wire. (NEMA 4X)
  Size: 914 H x 610 W x 152 D. (PB-8A)
- (A1) 15 kVA Transformer, 3 Phase, 4 wire
  480 V - 208/120 V,60 Hz, (NEMA 4X)
  Size: 441 H x 508 W x 267 D
- (A2) Enclosed molded case circuit breaker,(NEMA 4X)
  Size: 506 H x 225 W x 237 D
- (B) Lighting Panel LP-281,
  208/120 V, 3 Phase, 4 wire, (NEMA 4X),
  Size: 914 H x 610 W x 152 D. (PB-8A)
- (B1) 15 kVA Transformer, 3 Phase, 4 wire
  480 V - 208/120 V, 60 Hz, (NEMA 4X)
  Size: 441 H x 508 W x 267 D
- (B2) Enclosed molded case circuit breaker, Nema 4X)
  Size: 506 H x 225 W x 237 D
- (C) Controller Cabinet #TOS-22EA
  Size: 1625 H x 615 W x 768 D
- (D) SCADA Communication Terminal Box #COM-22E. (PB-7B)
  Size: 762 H x 762 W x 203D
- (E) Telephone Terminal Box #TEL-22E. (PB-7C)
  Size: 762 H x 508 W x 203 D
- (F) TOS splice cabinet #TOS-22ES
  Size: 1400 H x 980 W x 660 D
  Caltrans Type P (Similar)
- (G) PB-2B for TOS/COM, mounted on panel rack
  Size: 762 H x 610 W x 203 D
- (H) 600 V, Wireway (NEMA 4X)
  Size: 203 H x 203 W

NOTES:

1. The conduit/trays are existing. Conduits /trays with (*) prefixed is provided as reference for routing the cable/circuits only.
2. References:
   - For location of service platform #22E, see sheet E-18.
   - For schedule of utility panel UP-271 and lighting panel LP-281 see sheets E-50 and E-51.
   - For conduit and tray, cable and circuit schedules, see sheets starting at E-205.

SHEET NOTES:

(1) Existing equipment. Location is for reference only.

(2) Furnish and install fiber splice closure in existing TOS splice cabinet.

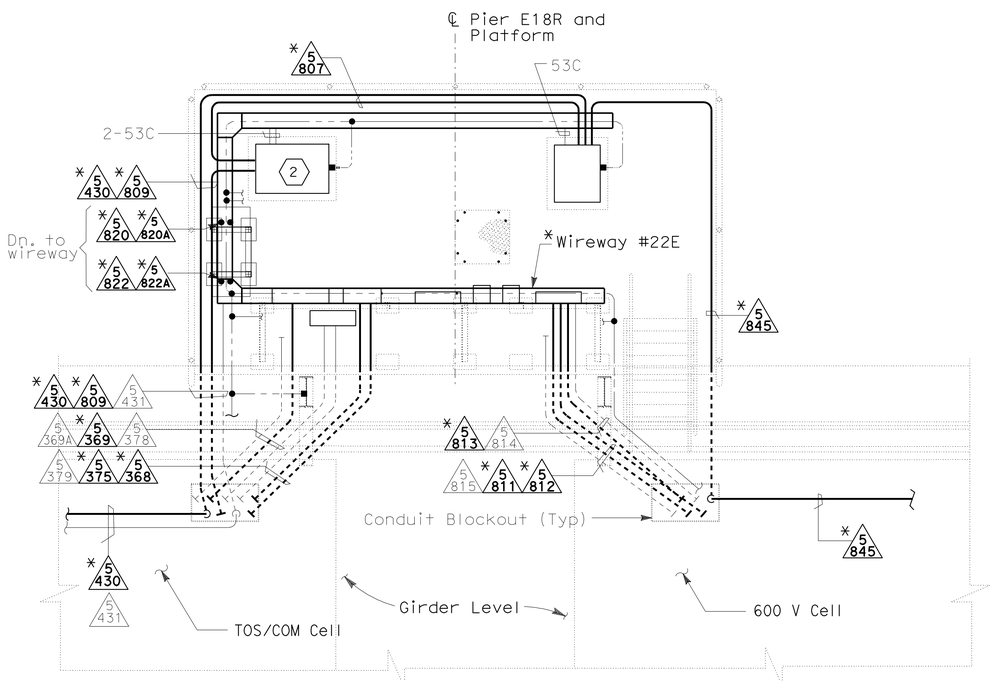

CONDUIT AND GROUNDING PLAN (1)

SCALE: 1:40

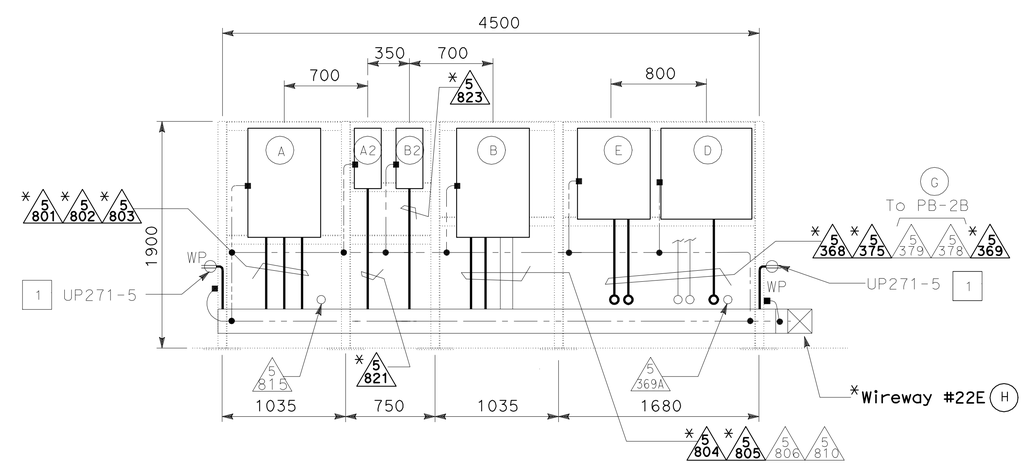

PANEL RACK ELEVATION (1)

SCALE 1:25

DETAILS
ROADWAY AND GIRDER LEVEL EASTBOUND (SERVICE PLATFORM #22E)

SCALE AS NOTED

E-30

THIS PLAN IS ACCURATE FOR ELECTRICAL WORK ONLY.

ALL DIMENSIONS ARE IN MILLIMETERS UNLESS OTHERWISE SHOWN

STATE OF CALIFORNIA - DEPARTMENT OF TRANSPORTATION
Caltrans

CONSULTANT FUNCTIONAL SUPERVISOR: BRADY NADELL
CALCULATED-DESIGNED BY: JEFFRI HALIM
CHECKED BY: DAVID OTO
REVISED BY | DATE REVISED

LAST REVISION 08-17-09 | DATE PLOTTED => 06-OCT-2011 | TIME PLOTTED => 06:45

Dist	COUNTY	ROUTE	KILOMETER POST TOTAL PROJECT	SHEET No.	TOTAL SHEETS
04	Ala	80	1.6/2.7	221	744

REGISTERED ELECTRICAL ENGINEER 05/02/11

10-3-11
PLANS APPROVAL DATE

REGISTERED PROFESSIONAL ENGINEER
DAVID H. OTO
No. 10699
Exp. 06/30/2013
ELECTRICAL
STATE OF CALIFORNIA

THE STATE OF CALIFORNIA OR ITS OFFICERS OR AGENTS SHALL NOT BE RESPONSIBLE FOR THE ACCURACY OR COMPLETENESS OF ELECTRONIC COPIES OF THIS PLAN SHEET.

PB AMERICAS, Inc.
303 Second St., Suite 700N
San Francisco, CA 94107-1317

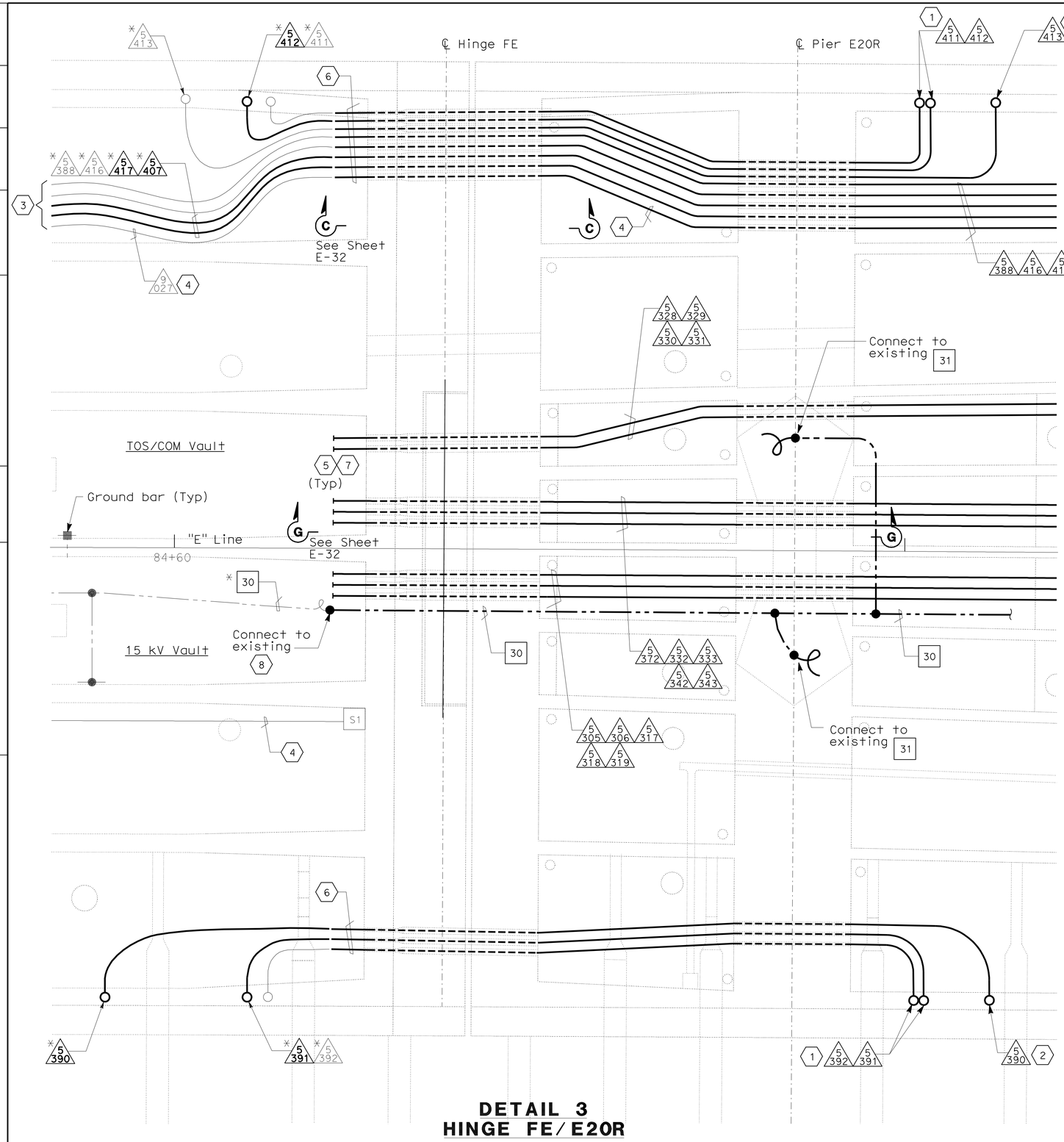

DETAIL 3
HINGE FE/E20R

NOTES:

1. The conduit/trays are existing. Conduits/trays with (*) prefixed is provided as reference for routing the cable/circuits only.
2. References:
   - For conduit and tray, cable and circuit schedules, see sheets starting at E-205.
3. For overall plan of this area, see sheet E-19.
4. Refer to sheet E-44 for conduit support location. Refer to sheets E-18 and E-19 for conduit plans.

SHEET NOTES:

(1) Conduit up to PB-LTG located in Barrier. See sheet E-10.

(2) Conduit up to PB-COM located in Barrier. See sheet E-10.

(3) See sheet E-18 for continuation.

(4) Conduits for Strong Motion Detection System, see sheet E-182.

(5) Conduit ends shall be provided with ground bushing. Bond all conduits with #2 AWG bare copper wire, connected to the ground bar. See Detail 1 on sheet E-59.

(6) The Contractor to connect new conduits to existing conduits.

(7) The ground conductor connected to the ground bar, shall be provided for a seismic expansion of 520 mm movement. Conductor may rest on vault floor.

(8) The system ground, #500 kcmil shall be routed along the 15 kV conduit run.

DETAILS
ROADWAY AND GIRDER LEVEL EASTBOUND (HINGE FE AND PIER E20R CONDUIT INSTALLATION)
SCALE 1:60

E-31

THIS PLAN IS ACCURATE FOR ELECTRICAL WORK ONLY.

ALL DIMENSIONS ARE IN METERS UNLESS OTHERWISE SHOWN

STATE OF CALIFORNIA - DEPARTMENT OF TRANSPORTATION
Caltrans

CONSULTANT FUNCTIONAL SUPERVISOR: BRADY NADELL
CALCULATED-DESIGNED BY: JEFFRI HALIM
CHECKED BY: DAVID OTO
REVISED BY / DATE REVISED

LAST REVISION 08-17-09 | DATE PLOTTED => 06-OCT-2011 | TIME PLOTTED => 06:46

Dist	COUNTY	ROUTE	KILOMETER POST TOTAL PROJECT	SHEET No.	TOTAL SHEETS
04	Ala	80	1.6/2.7	222	744

REGISTERED ELECTRICAL ENGINEER 05/02/11

PLANS APPROVAL DATE 10-3-11

REGISTERED PROFESSIONAL ENGINEER DAVID H. OTO No. 10699 Exp. 06/30/2013 ELECTRICAL STATE OF CALIFORNIA

THE STATE OF CALIFORNIA OR ITS OFFICERS OR AGENTS SHALL NOT BE RESPONSIBLE FOR THE ACCURACY OR COMPLETENESS OF ELECTRONIC COPIES OF THIS PLAN SHEET.

PB AMERICAS, Inc.
303 Second St., Suite 700N
San Francisco, CA 94107-1317

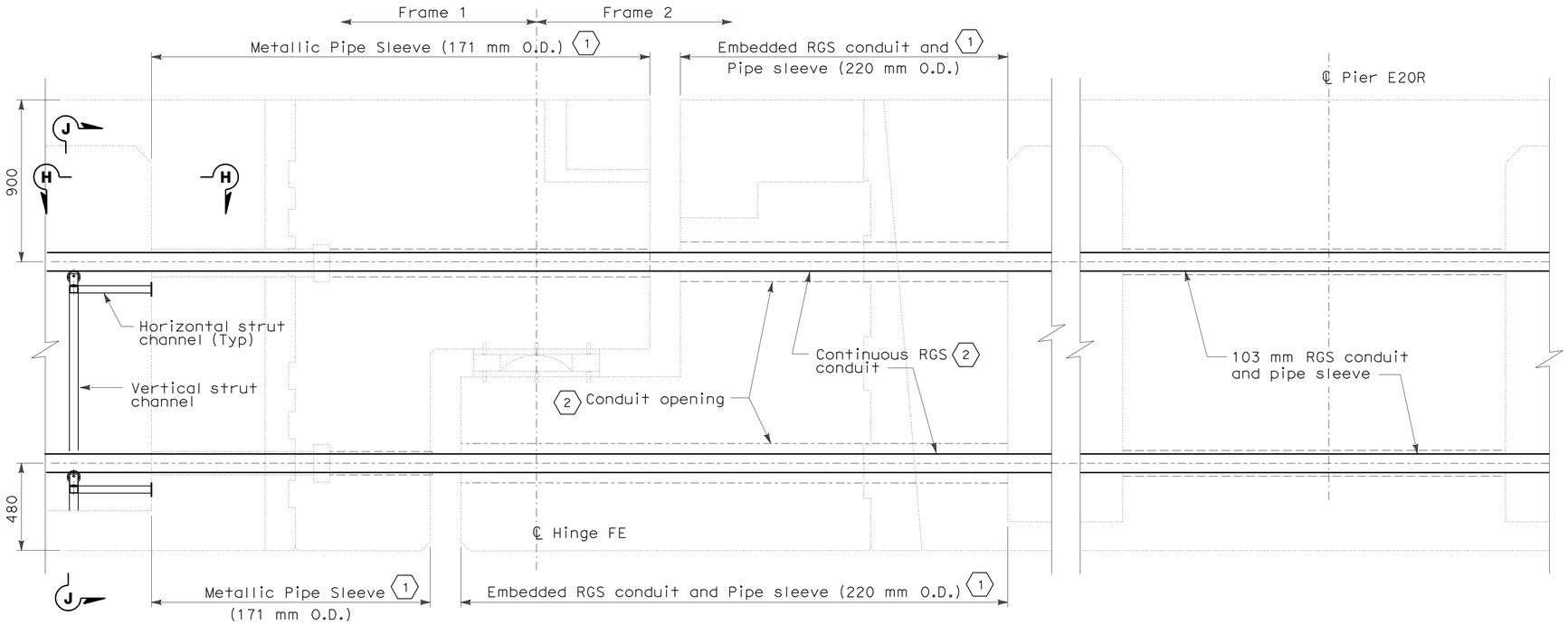

SECTION G-G

HINGE FE AND PIER E20R CONDUIT INTERFACE
SCALE 1:15

NOTES:

1. For hinge FE expansion joint displacement, details, sleeve location and dimensions, see "Structures" Eastbound Hinge FE detail sheets.
2. For conduit layout plan, see sheets E-18 and E-19.

SHEET NOTES:

1. To ensure proper functionality of the electrical conduit seismic movement design, the installation of the pipe sleeves shall be aligned straight and parallel to both structures. The pipe sleeve shall be use for the RGS conduit to pass through as shown.
2. The installation of the RGS conduit must be sequentially coordinated with the "Structures" pre-stressing to achieve electrical design intent.
   a- Before prestressing, provide and locate the continuous RGS conduit in a retracted position inside the pipe sleeves and conduit opening.
   b- Once prestressing is completed, align and install the conduit in the final position.
   c- Grout the embedded conduit opening on Frame 2, For details, see "Structures Plans".

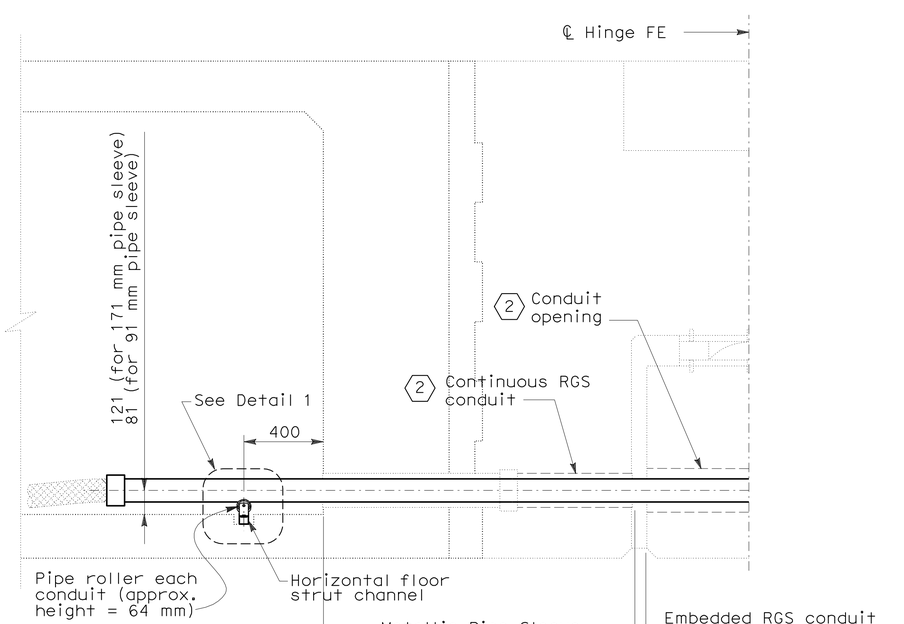

SECTION C-C

PIPE SLEEVE/CONDUIT THROUGH HINGE FE
SCALE 1:15

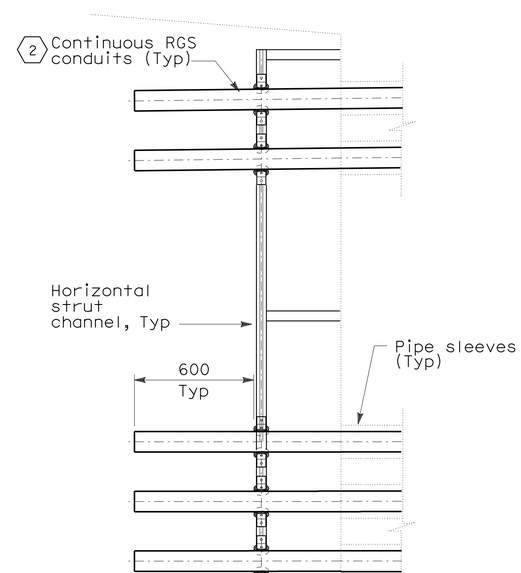

SECTION H-H

SCALE 1:15

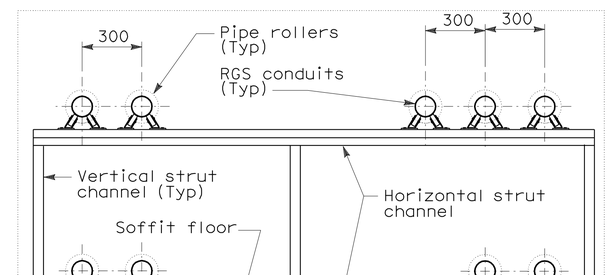

SECTION J-J

SCALE 1:15

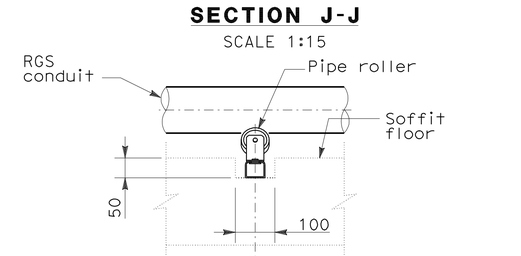

DETAIL 1

NO SCALE

DETAILS
ROADWAY AND GIRDER LEVEL EASTBOUND (HINGE FE AND PIER E20R SECTION)

SCALE AS NOTED

THIS PLAN IS ACCURATE FOR ELECTRICAL WORK ONLY.

ALL DIMENSIONS ARE IN MILLIMETERS UNLESS OTHERWISE SHOWN

E-32

REVISED BY	DATE REVISED
JEFFRI HALIM	DAVID OTO
CALCULATED-DESIGNED BY	CHECKED BY
CONSULTANT FUNCTIONAL SUPERVISOR	BRADY NADELL

STATE OF CALIFORNIA - DEPARTMENT OF TRANSPORTATION

LAST REVISION 08-17-09 | DATE PLOTTED => 06-OCT-2011 | TIME PLOTTED => 06:46

Dist	COUNTY	ROUTE	KILOMETER POST TOTAL PROJECT	SHEET No.	TOTAL SHEETS
04	Ala	80	1.6/2.7	223	744

05/02/11
REGISTERED ELECTRICAL ENGINEER

10-3-11
PLANS APPROVAL DATE

REGISTERED PROFESSIONAL ENGINEER
DAVID H. OTO
No. 10699
Exp. 06/30/2013
ELECTRICAL
STATE OF CALIFORNIA

THE STATE OF CALIFORNIA OR ITS OFFICERS OR AGENTS SHALL NOT BE RESPONSIBLE FOR THE ACCURACY OR COMPLETENESS OF ELECTRONIC COPIES OF THIS PLAN SHEET.

PB AMERICAS, Inc.
303 Second St., Suite 700N
San Francisco, CA 94107-1317

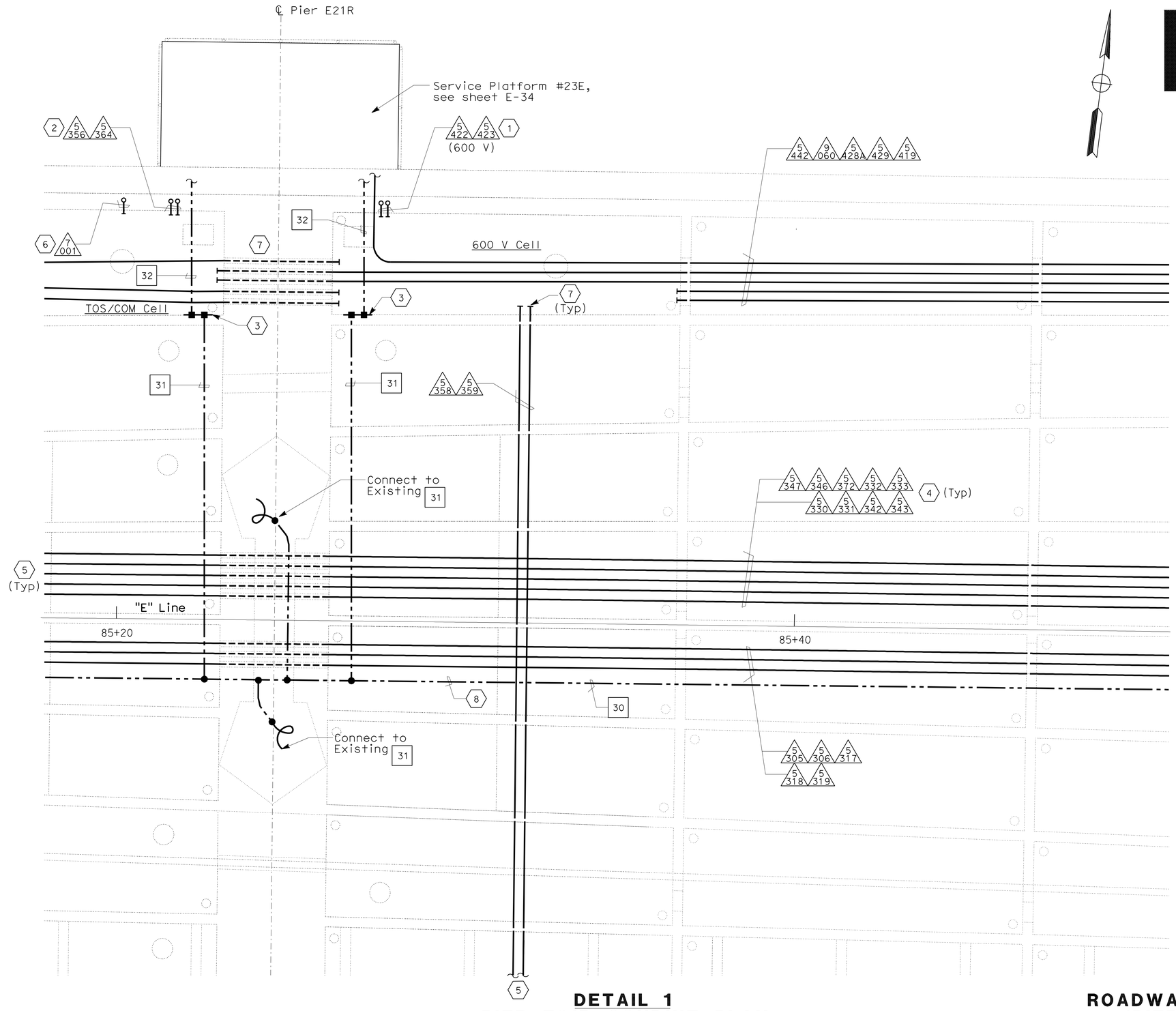

DETAIL 1
PIER E21R CONDUIT PLAN

NOTES:

1. References:
   - TOS equipment is shown for conduit routing only, for typical details of TOS controller and devices see sheets starting at E-190.
   - For overall girder grounding plan, see sheet E-58.
   - For conduit and tray, cable and circuit schedules, see sheets starting at E-205.
2. For overall plan of this area, see sheet E-19.

SHEET NOTES:

1. Conduit up to PB-LTG located in Barrier. See sheet E-10.
2. Conduit up to PB-COM located in Barrier. See sheet E-10.
3. See Detail 1 on sheet E-59.
4. Refer to sheets E-44 and E-45 for conduit support location. Refer to E-46 through E-49 for conduit support details.
5. See sheet E-19 for continuation.
6. Conduit up to PB-F located in Barrier. See sheet E-10.
7. Conduit ends shall be provided with ground bushing. Bond all conduits with #2 AWG bare copper wire, connected to the ground bar. See Detail 1 on sheet E-59.
8. The system ground, #500 kcmil shall be routed along the 15 kV conduit run.

DETAILS
ROADWAY AND GIRDER LEVEL EASTBOUND (PIER E21R CONDUIT INSTALLATION)

SCALE 1:60

E-33

THIS PLAN IS ACCURATE FOR ELECTRICAL WORK ONLY.

ALL DIMENSIONS ARE IN METERS UNLESS OTHERWISE SHOWN

STATE OF CALIFORNIA - DEPARTMENT OF TRANSPORTATION
Caltrans

CONSULTANT FUNCTIONAL SUPERVISOR: BRADY NADELL
CALCULATED-DESIGNED BY: JEFFRI HALIM
CHECKED BY: DAVID OTO
REVISED BY / DATE REVISED

LAST REVISION 08-17-09
DATE PLOTTED => 06-OCT-2011
TIME PLOTTED => 06:46

Dist	COUNTY	ROUTE	KILOMETER POST TOTAL PROJECT	SHEET No.	TOTAL SHEETS
04	Ala	80	1.6/2.7	224	744

REGISTERED ELECTRICAL ENGINEER 05/02/11

10-3-11
PLANS APPROVAL DATE

REGISTERED PROFESSIONAL ENGINEER DAVID H. OTO No. 10699 Exp. 06/30/2013 ELECTRICAL STATE OF CALIFORNIA

THE STATE OF CALIFORNIA OR ITS OFFICERS OR AGENTS SHALL NOT BE RESPONSIBLE FOR THE ACCURACY OR COMPLETENESS OF ELECTRONIC COPIES OF THIS PLAN SHEET.

PB AMERICAS, Inc.
303 Second St., Suite 700N
San Francisco, CA 94107-1317

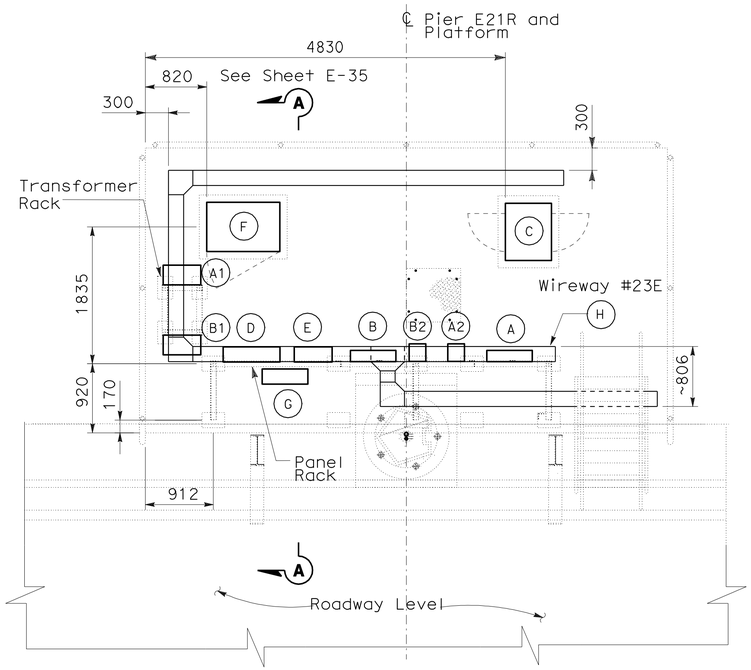

SERVICE PLATFORM #23E EQUIPMENT ARRANGEMENT PLAN (5)

SCALE 1:40

EQUIPMENT SCHEDULE: (5)

- (A) Utility Panel UP-272
  208/120 V, 3 Phase, 4 wire. (NEMA 4X)
  Size: 914 H x 610 W x 152 D. (PB-8A)
- (A1) 15 kVA Transformer, 3 Phase, 4 wire
  480 V - 208/120 V,60 Hz, (NEMA 4X)
  Size: 441 H x 508 W x 267 D
- (A2) Enclosed molded case circuit breaker,(NEMA 4X)
  Size: 506 H x 225 W x 237 D
- (B) Lighting Panel LP-282,
  208/120 V, 3 Phase, 4 wire, (NEMA 4X)
  Size: 914 H x 610 W x 152 D. (PB-8A)
- (B1) 15 kVA Transformer, 3 Phase, 4 wire
  480 V - 208/120 V, 60 Hz, (NEMA 4X)
  Size: 441 H x 508 W x 267 D
- (B2) Enclosed molded case circuit breaker, (NEMA 4X)
  Size: 506 H x 225 W x 237 D
- (C) Controller Cabinet #TOS-23EA
  Size: 1625 H x 615 W x 768 D
- (D) SCADA Communication Terminal Box #COM-23E. (PB-7B)
  Size: 762 H x 762 W x 203D
- (E) Telephone Terminal Box #TEL-23E. (PB-7C)
  Size: 762 H x 508 W x 203 D
- (F) TOS splice cabinet #TOS-23ES with fiber splice closure #FSC-23E inside.
  Size: 1400 H x 980 W x 660 D
  Caltrans Type P (Similar)
- (G) PB-2B for TOS/COM, mounted on panel rack
  Size: 762 H x 610 W x 203 D
- (H) 600 V, Wireway (NEMA 4X)
  Size: 203 H x 203 W

NOTES:

1. References:
   - For location of service platform #23E, see sheet E-19.
   - For schedule of utility panel UP-272 and lighting panel LP-282 see sheets E-50 and E-51.
   - TOS equipment are shown for conduit routing only. For typical details of TOS controller and devices, see sheets starting at E-190.
   - For typical panel arrangement details of SCADA Communication Terminal Box, see sheet E-162.
   - For typical installation grounding details, see sheet E-59.
   - For Pull Box Schedule, see sheet E-43.
   - For typical platform sections, see Sheet E-35.
   - For conduit and tray, cable and circuit schedules, see sheets starting at E-205.

SHEET NOTES:

(1) See sheet E-19 for continuation.

(2) For service platform grounding, use #4/0 AWG bare copper ground cables tapped from ground bars. See sheet E-33.

(3) Metal and panel enclosure grounding.

(4) The Contractor to locate to suit.

(5) Equipment dimensions and sizes shall be verified by the Contractor prior to installation. The arrangement are in compliance with NEC guidelines, the Contractor shall maintain panel sizes as indicated.

(6) Connect to transformer neutral.

(7) Conduit end shall be provided with ground bushings. Bond all conduits with #2 AWG bare copper wire, connected to the ground bar, see Detail 1, sheet E-59.

(8) Once the conduits are installed through the conduit blockout, refer to structures plan sheets for details.

(9) This space reserved for future equipment.

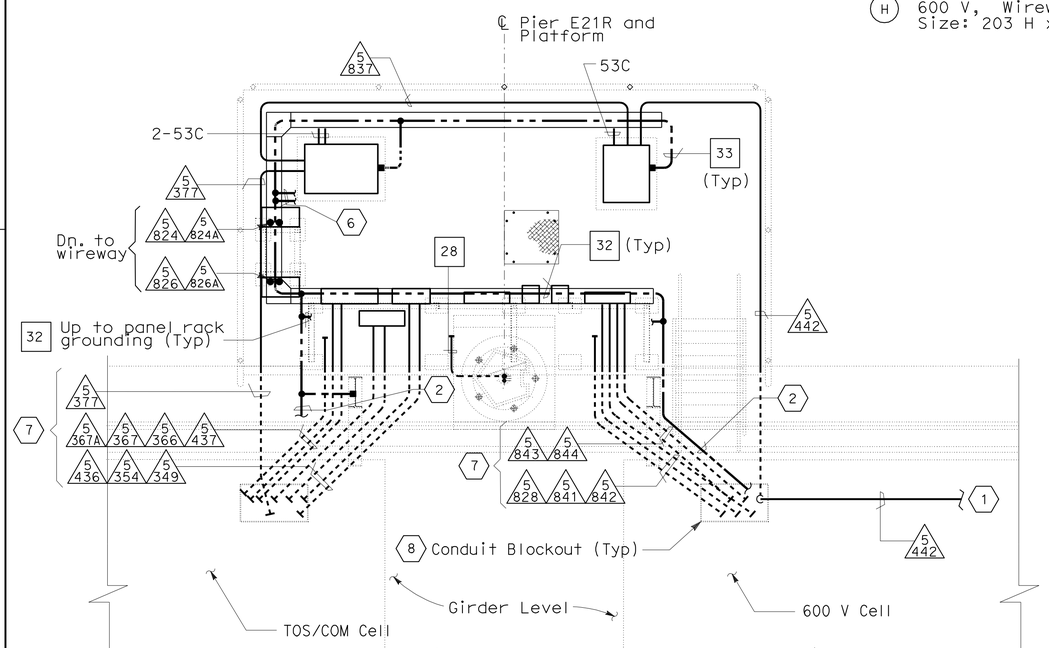

CONDUIT AND GROUNDING PLAN

SCALE 1:40

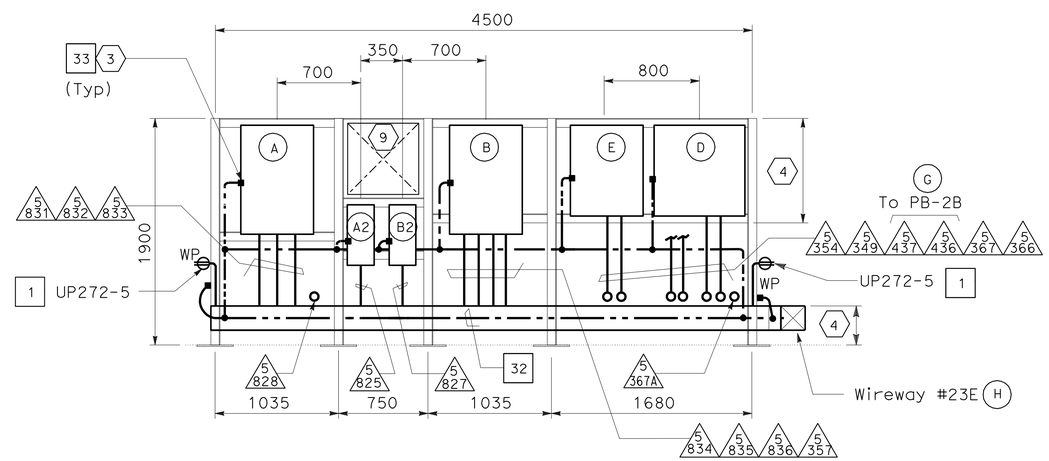

PANEL RACK ELEVATION

SCALE 1:25

DETAILS
ROADWAY AND GIRDER LEVEL EASTBOUND (SERVICE PLATFORM #23E)

SCALE AS NOTED

E-34

THIS PLAN IS ACCURATE FOR ELECTRICAL WORK ONLY.

ALL DIMENSIONS ARE IN MILLIMETERS UNLESS OTHERWISE SHOWN

STATE OF CALIFORNIA - DEPARTMENT OF TRANSPORTATION
Caltrans

CONSULTANT FUNCTIONAL SUPERVISOR: BRADY NADELL
CALCULATED-DESIGNED BY: JEFFRI HALIM
CHECKED BY: DAVID OTO
REVISED BY / DATE REVISED

LAST REVISION 08-17-09 DATE PLOTTED => 06-OCT-2011 TIME PLOTTED => 06:46

Dist	COUNTY	ROUTE	KILOMETER POST TOTAL PROJECT	SHEET No.	TOTAL SHEETS
04	Ala	80	1.6/2.7	225	744

05/02/11
REGISTERED ELECTRICAL ENGINEER

10-3-11
PLANS APPROVAL DATE

REGISTERED PROFESSIONAL ENGINEER
DAVID H. OTO
No. 10699
Exp. 06/30/2013
ELECTRICAL
STATE OF CALIFORNIA

THE STATE OF CALIFORNIA OR ITS OFFICERS OR AGENTS SHALL NOT BE RESPONSIBLE FOR THE ACCURACY OR COMPLETENESS OF ELECTRONIC COPIES OF THIS PLAN SHEET.

PB AMERICAS, Inc.
303 Second St., Suite 700N
San Francisco, CA 94107-1317

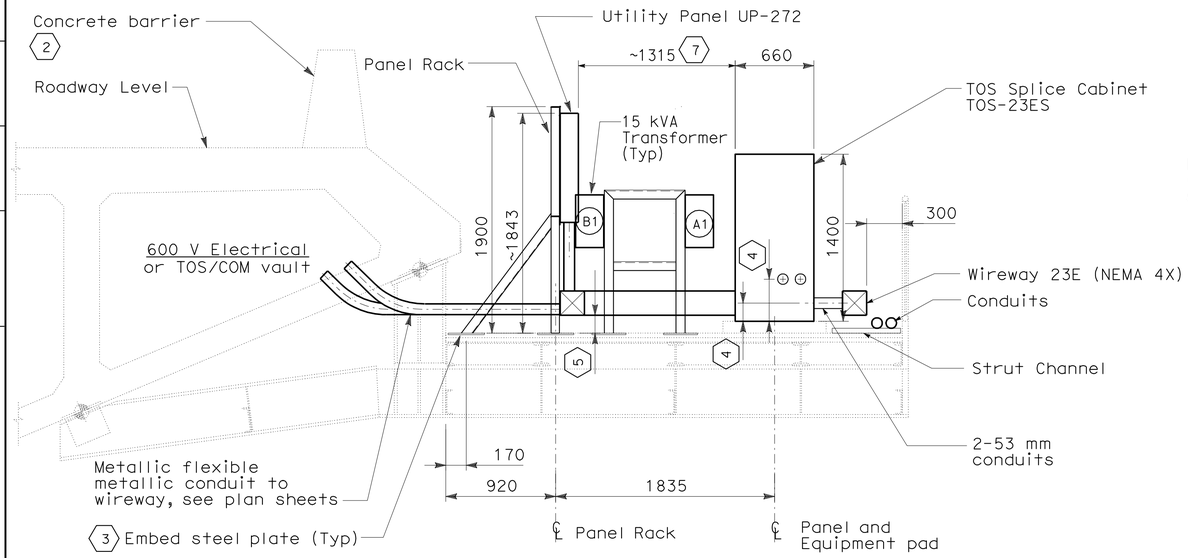

7 1 PLATFORM 23E SECTION A-A

SCALE 1:25

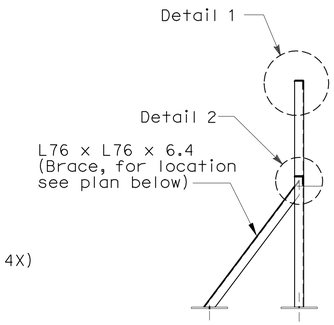

SIDE VIEW

NO SCALE

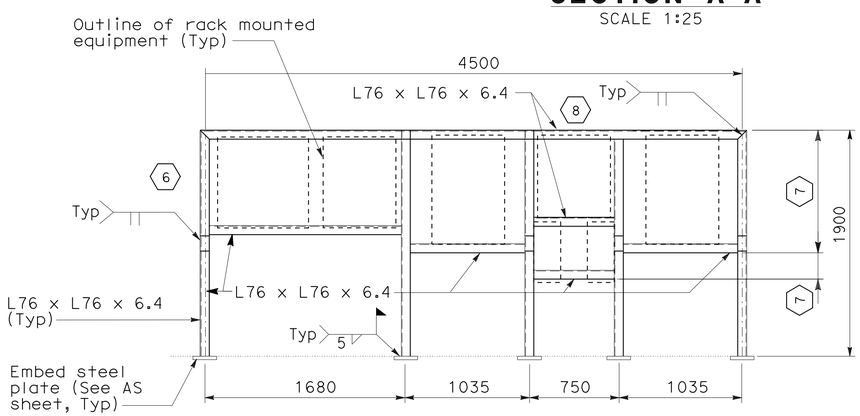

PANEL RACK ELEVATION

SCALE 1:25

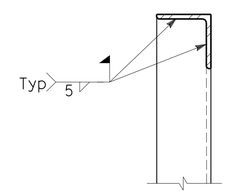

DETAIL 1

NO SCALE

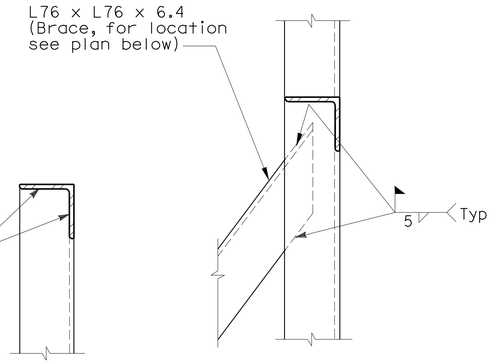

DETAIL 2

NO SCALE

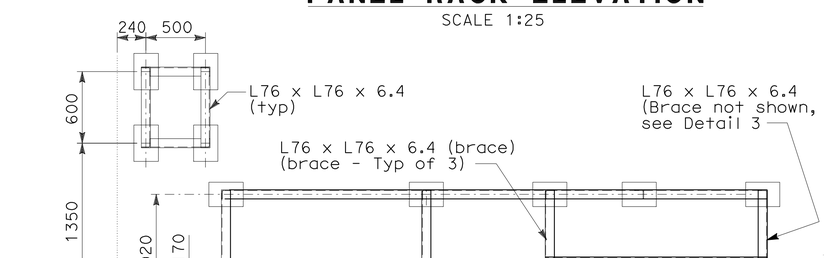

LOCATION PLAN OF EMBED PLATES

SCALE 1:25

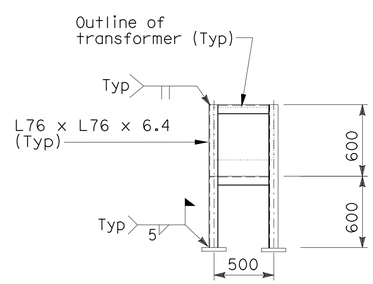

SIDE ELEVATION TRANSFORMERS SUPPORT

SCALE 1:25

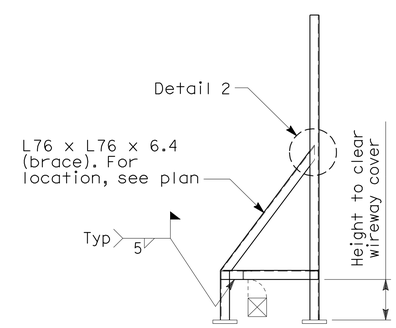

DETAIL 3

SCALE 1:25

NOTE:

1. References:
   - For equipment arrangement and conduit numbers, see service platform plans, sheet E-34.
   - For platform location, see roadway level plan, sheet E-10.

SHEET NOTES:

1. Section A-A shown is from service platform #23E, see sheet E-34.
2. For conduit plan, barrier sections, lighting pole and TOS, see sheets E-38 and E-39.
3. Locations shall be provided by structural drawings.
4. Centerline mounting height of wireway and conduits to equipments shall be verified by the Contractor. The location shall be between the base and the lowest device mounting plate or device inside the panel.
5. The Contractor to locate to suit.
6. Equipment dimensions mounted on panel rack shall be verified by the Contractor prior to purchase and fabrication of panel rack.
7. To ensure that working clearances are in compliance with NEC guidelines, the Contractor shall maintain panel sizes as indicated.
8. Space for future equipment.

DETAILS
ROADWAY AND GIRDER LEVEL EASTBOUND (SERVICE PLATFORM #23E SECTIONS)

SCALE AS NOTED

THIS PLAN IS ACCURATE FOR ELECTRICAL WORK ONLY.

ALL DIMENSIONS ARE IN MILLIMETERS UNLESS OTHERWISE SHOWN

E-35

REVISED BY	DATE REVISED

JEFFRI HALIM — DAVID OTO — CALCULATED-DESIGNED BY — CHECKED BY

CONSULTANT FUNCTIONAL SUPERVISOR: BRADY NADELL

STATE OF CALIFORNIA - DEPARTMENT OF TRANSPORTATION

LAST REVISION 08-17-09 — DATE PLOTTED => 06-OCT-2011 — TIME PLOTTED => 06:46

Dist	COUNTY	ROUTE	KILOMETER POST TOTAL PROJECT	SHEET No.	TOTAL SHEETS
04	Ala	80	1.6/2.7	226	744

05/02/11
REGISTERED ELECTRICAL ENGINEER

10-3-11
PLANS APPROVAL DATE

REGISTERED PROFESSIONAL ENGINEER
DAVID H. OTO
No. 10699
Exp. 06/30/2013
ELECTRICAL
STATE OF CALIFORNIA

THE STATE OF CALIFORNIA OR ITS OFFICERS OR AGENTS SHALL NOT BE RESPONSIBLE FOR THE ACCURACY OR COMPLETENESS OF ELECTRONIC COPIES OF THIS PLAN SHEET.

PB AMERICAS, Inc.
303 Second St., Suite 700N
San Francisco, CA 94107-1317

Caltrans Metric

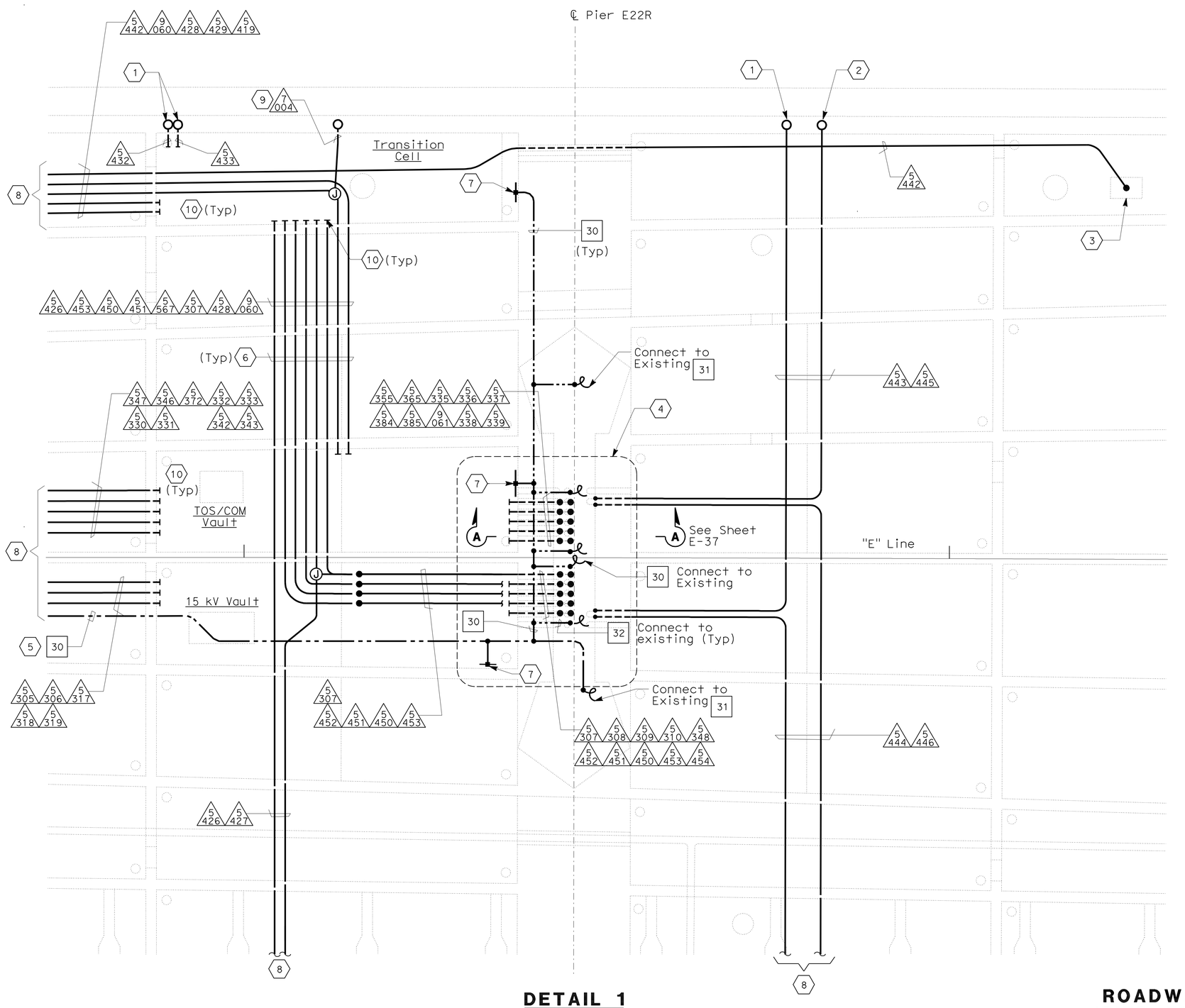

DETAIL 1
GIRDER CONDUIT PLAN

NOTES:

1. References:
   - TOS equipment is shown for conduit routing only. For typical details of TOS controller and devices, see sheets starting at E-190.
   - For typical pull box schedules, see sheet E-43.
   - For conduit and tray, cable and circuit schedules, see sheets starting at E-205.
2. For overall plan of this area, see sheet E-20.
3. Minimum conduit bending radius of 103 mm conduits shall be 610 mm.

SHEET NOTES:

(1) Conduit up to PB-LTG located in Barrier. See sheet E-11.

(2) Conduit up to PB-COM located in Barrier. See sheet E-11.

(3) Pull Box PB-4D, see sheet E-195.

(4) For Pier E22R Conduit installation, see sheet E-37.

(5) The system ground, #500 kcmil shall be routed along the 15 kv conduit run or conduit as shown.

(6) Refer to sheet E-20 for the conduit girder plan. Refer to sheet E-45 for the conduit support details.

(7) Refer to sheet E-59, Detail 1.

(8) See sheets E-11 and E-19 for continuation.

(9) Conduit up to PB-F located in Barrier. See sheet E-11.

(10) Conduit ends shall be provided with ground bushing. Bond all conduits with #2 AWG bare copper wire, connected to the ground bar.

DETAILS
ROADWAY AND GIRDER LEVEL EASTBOUND (PIER E22R GIRDER CONDUIT INSTALLATION)
SCALE 1:60

THIS PLAN IS ACCURATE FOR ELECTRICAL WORK ONLY.

ALL DIMENSIONS ARE IN METERS UNLESS OTHERWISE SHOWN

E-36

REVISED BY	DATE REVISED
JEFFRI HALIM	DAVID OTO
CALCULATED-DESIGNED BY	CHECKED BY
CONSULTANT FUNCTIONAL SUPERVISOR	BRADY NADELL

STATE OF CALIFORNIA - DEPARTMENT OF TRANSPORTATION
Caltrans

LAST REVISION 08-17-09 | DATE PLOTTED => 06-OCT-2011 | TIME PLOTTED => 06:47

Dist	COUNTY	ROUTE	KILOMETER POST TOTAL PROJECT	SHEET No.	TOTAL SHEETS
04	Ala	80	1.6/2.7	227	744

REGISTERED ELECTRICAL ENGINEER 05/02/11

PLANS APPROVAL DATE 10-3-11

REGISTERED PROFESSIONAL ENGINEER DAVID H. OTO No. 10699 Exp. 06/30/2013 ELECTRICAL STATE OF CALIFORNIA

THE STATE OF CALIFORNIA OR ITS OFFICERS OR AGENTS SHALL NOT BE RESPONSIBLE FOR THE ACCURACY OR COMPLETENESS OF ELECTRONIC COPIES OF THIS PLAN SHEET.

PB AMERICAS, Inc.
303 Second St., Suite 700N
San Francisco, CA 94107-1317

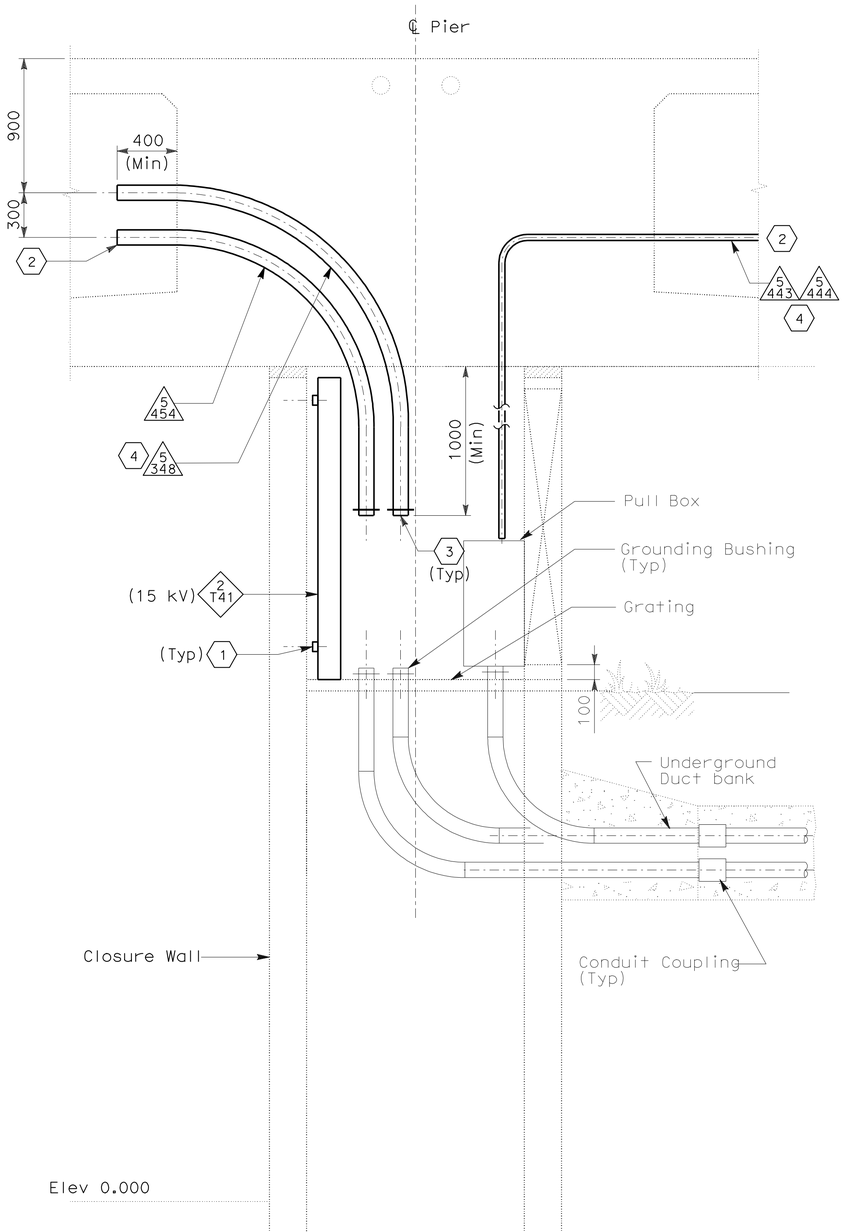

SECTION A-A
PIER E22R
SCALE 1:20

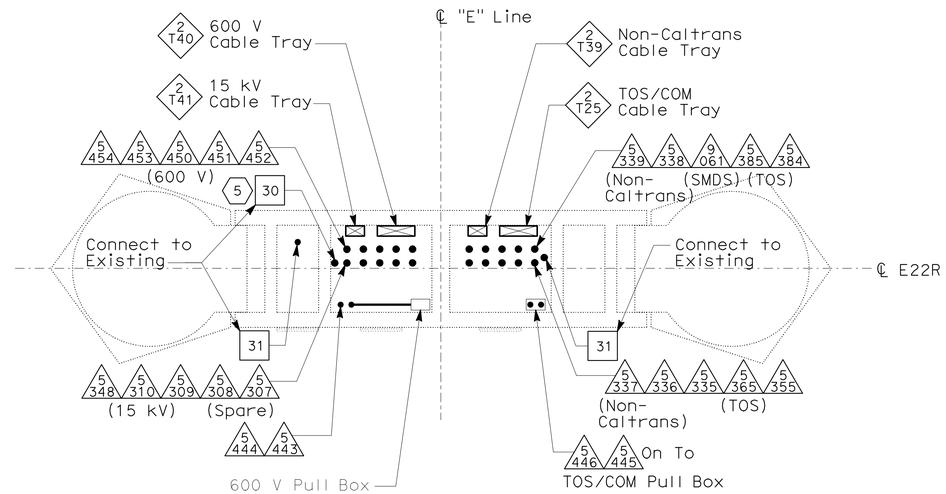

EB PIER E22R- PLAN
INSIDE PIER
SCALE 1:50

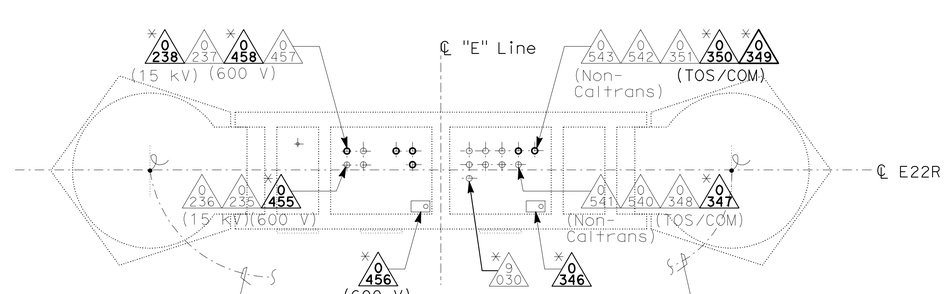

EB PIER E22R
PLAN AT GRADE (6)
SCALE 1:50

NOTE:

1. References:
   - For plan where section A-A is taken, see sheet E-36.
   - For typical pull box schedules, see sheet E-43.
   - For conduit and tray, cable and circuit schedules, see sheets starting at E-205.

SHEET NOTES:

(1) Cable tray support, wall mounted.

(2) For continuation, refer to sheet E-20.

(3) Provide grounding bushing to conduit end, size as req'd.

(4) For conduit layout details, refer to sheet E-36.

(5) Exothermically weld ground pigtails to grounding conductor coming from Manhole-10. Refer to sheets E-59 and E-131.

(6) Conduits are existing. Conduits with (*) prefixed is provided as reference for routing the cable/circuits only.

DETAILS
ROADWAY AND GIRDER LEVEL EASTBOUND (PIER E22R CONDUIT PLAN AND ELEVATIONS)
SCALE AS NOTED

STATE OF CALIFORNIA - DEPARTMENT OF TRANSPORTATION
Caltrans

CONSULTANT FUNCTIONAL SUPERVISOR: BRADY NADELL
CALCULATED-DESIGNED BY: JEFFRI HALIM
CHECKED BY: DAVID OTO
REVISED BY / DATE REVISED

LAST REVISION 08-17-09 DATE PLOTTED => 06-OCT-2011 TIME PLOTTED => 06:47

E-37

THIS PLAN IS ACCURATE FOR ELECTRICAL WORK ONLY.

ALL DIMENSIONS ARE IN MILLIMETERS UNLESS OTHERWISE SHOWN

Dist	COUNTY	ROUTE	KILOMETER POST TOTAL PROJECT	SHEET No.	TOTAL SHEETS
04	Ala	80	1.6/2.7	228	744

REGISTERED ELECTRICAL ENGINEER 05/02/11

10-3-11
PLANS APPROVAL DATE

REGISTERED PROFESSIONAL ENGINEER DAVID H. OTO No. 10699 Exp. 06/30/2013 ELECTRICAL STATE OF CALIFORNIA

THE STATE OF CALIFORNIA OR ITS OFFICERS OR AGENTS SHALL NOT BE RESPONSIBLE FOR THE ACCURACY OR COMPLETENESS OF ELECTRONIC COPIES OF THIS PLAN SHEET.

PB AMERICAS, Inc.
303 Second St., Suite 700N
San Francisco, CA 94107-1317

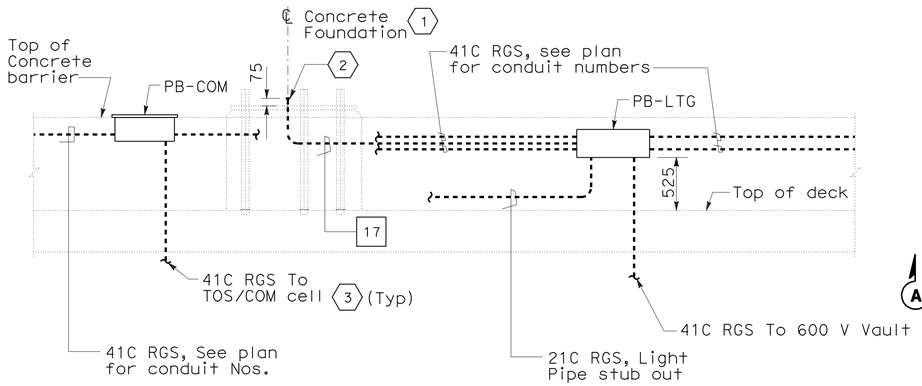

TYPICAL LONGITUDINAL SECTION A-A

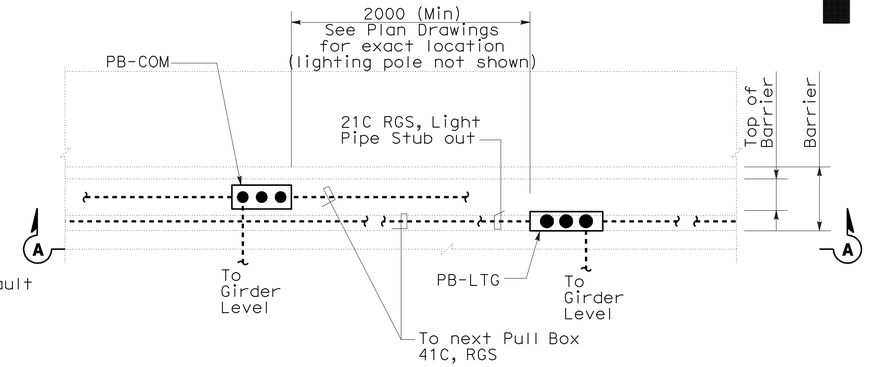

PARTIAL PLAN

NOTES:

1. References:
   - For concrete foundations and lighting pole mounting, see Structural Plans.
   - For pull box schedule, see sheet E-43.
   - For PB-LTG & PB-COM location plan, see sheet E-10 and E-11.
2. For pull box installation, refer to Standard Plan details drawing RSP ES-9C.

SHEET NOTES:

1. For location and details of Lighting foundation and Lighting Poles, see Structural Plans.
2. Provide conduit grounding bushing.
3. Conduits continued to 600 V and TOS/COM girder. See sheets E-19 and E-20 for continuation.

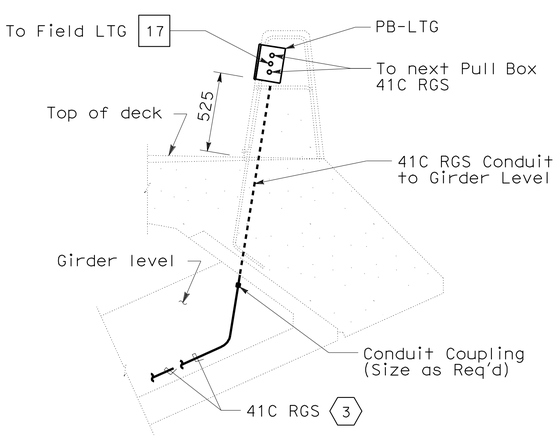

TYPICAL SECTION B-B

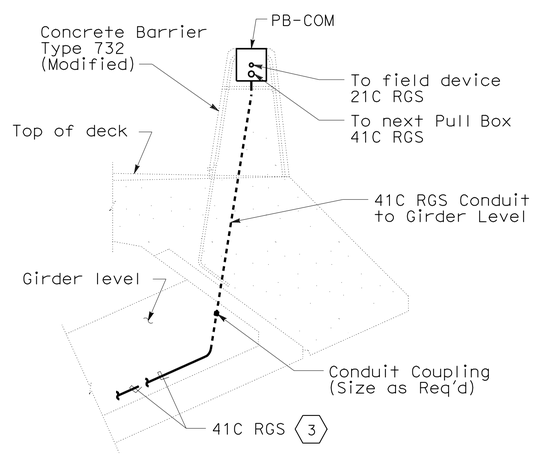

TYPICAL SECTION C-C

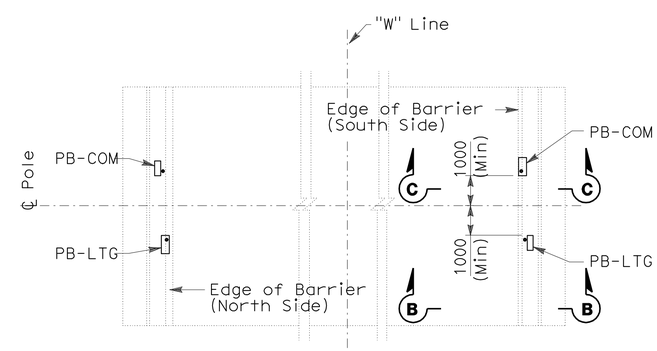

PARTIAL PLAN

DETAILS
ROADWAY AND GIRDER LEVEL EASTBOUND (TYPICAL BARRIER PULL BOX AND CONDUIT LOCATIONS)
NO SCALE

THIS PLAN IS ACCURATE FOR ELECTRICAL WORK ONLY.

ALL DIMENSIONS ARE IN MILLIMETERS UNLESS OTHERWISE SHOWN

E-38

STATE OF CALIFORNIA - DEPARTMENT OF TRANSPORTATION
Caltrans

CONSULTANT FUNCTIONAL SUPERVISOR: BRADY NADELL
CALCULATED-DESIGNED BY: JEFFRI HALIM
CHECKED BY: DAVID OTO
REVISED BY / DATE REVISED

LAST REVISION 08-17-09 | DATE PLOTTED => 06-OCT-2011 | TIME PLOTTED => 06:47

Dist	COUNTY	ROUTE	KILOMETER POST TOTAL PROJECT	SHEET No.	TOTAL SHEETS
04	Ala	80	1.6/2.7	229	744

05/02/11
REGISTERED ELECTRICAL ENGINEER

10-3-11
PLANS APPROVAL DATE

REGISTERED PROFESSIONAL ENGINEER
DAVID H. OTO
No. 10699
Exp. 06/30/2013
ELECTRICAL
STATE OF CALIFORNIA

THE STATE OF CALIFORNIA OR ITS OFFICERS OR AGENTS SHALL NOT BE RESPONSIBLE FOR THE ACCURACY OR COMPLETENESS OF ELECTRONIC COPIES OF THIS PLAN SHEET.

PB AMERICAS, Inc.
303 Second St., Suite 700N
San Francisco, CA 94107-1317

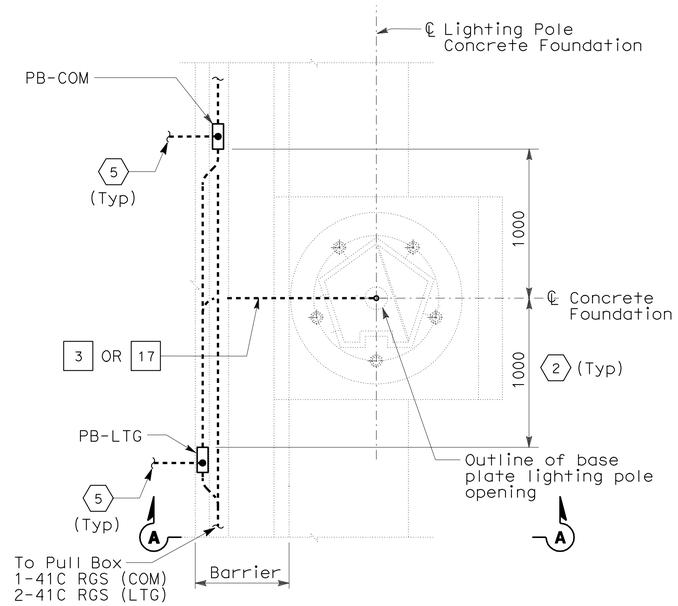

CONDUIT STUB UP PLAN

(FOR UP TO 15 HIGH METER LIGHTING POLES)
SCALE 1:20

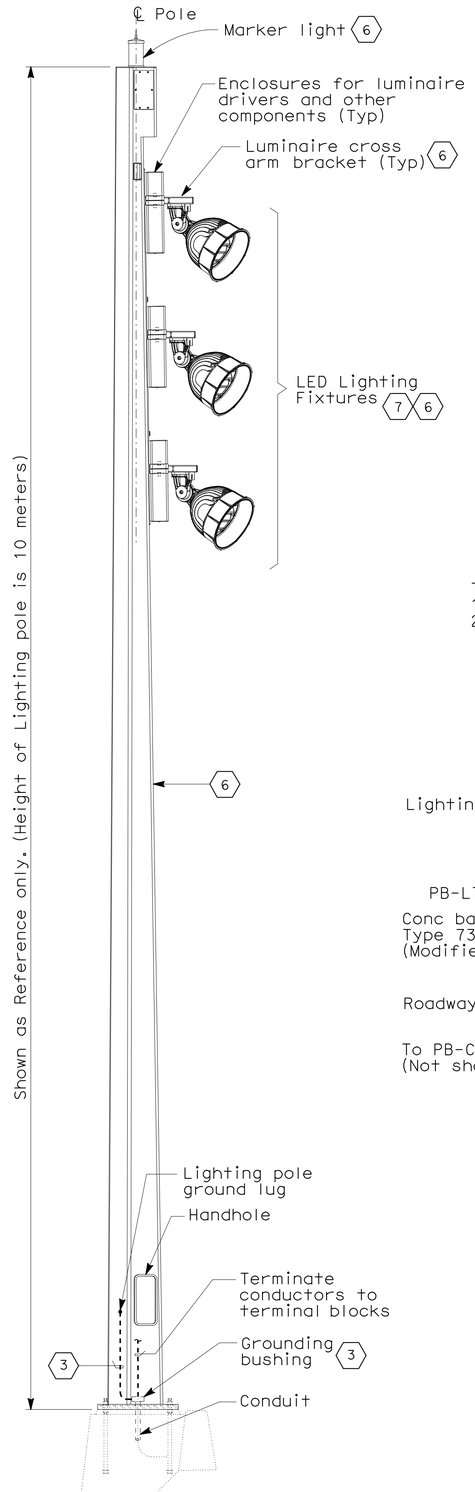

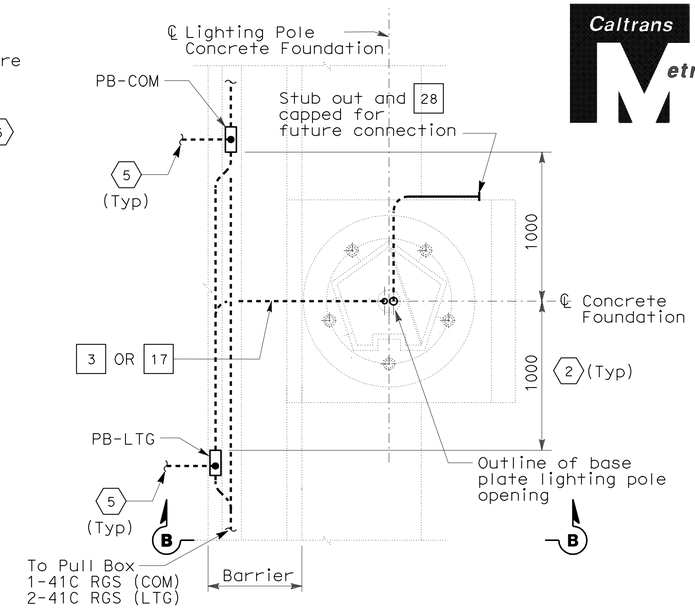

CONDUIT STUB UP PLAN

(FOR LIGHTING POLE 2602-3)
SCALE 1:20

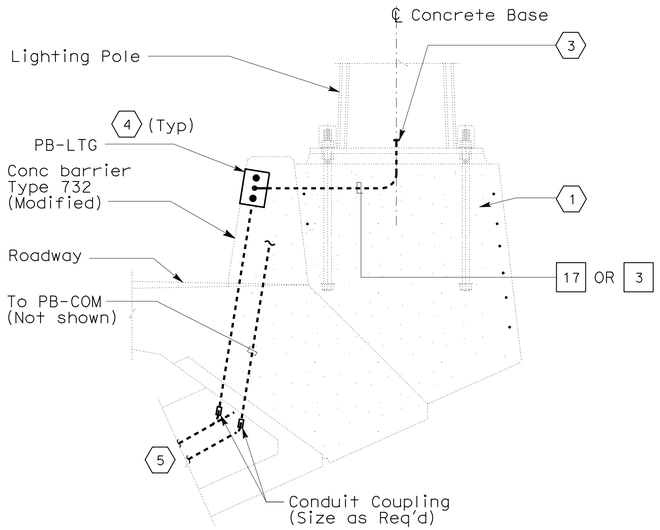

CONCRETE BARRIER AT
LIGHTING POLE

SECTION A-A

SCALE 1:20

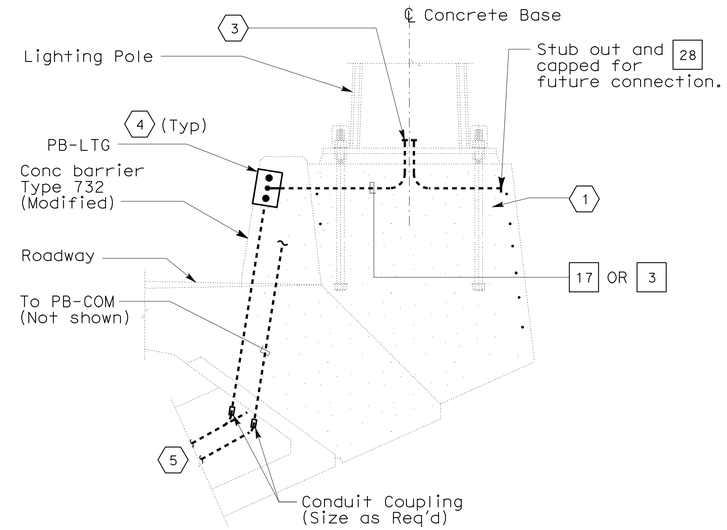

CONCRETE BARRIER AT
LIGHTING POLE

SECTION B-B

SCALE 1:20

NOTE:

1. References:
   - For typical pull box schedules, see sheet E-43.
   - For additional details, see sheet E-190.

SHEET NOTES:

1. For Roadway lighting pole foundation, refer to Structural details.
2. Typical distance from centerline of poles to closest edge of pull box in barrier. See sheet E-10 and E-11, for actual distance.
3. Conduit ends shall be provided with ground bushing. Bond all conduits with #6 AWG bare copper wire, connected to a ground lug provided on the lighting pole.
4. For typical conduit stub up and pull box/call box locations in barrier, refer to plan layout and see sheet E-38.
5. Continued inside girder level, see sheets E-17 through E-20.
6. The Roadway Lighting pole are State furnished. Prior to installation, the Contractor shall inspect and verify the associated components of the Lighting Pole assembly which may require field installation.
7. The type of lighting fixtures mounted on the lighting pole, the aiming point and directions of each lighting fixtures towards the roadway shall be provided by the lighting pole/fixture manufacturer. This information shall be provided to the Contractor by the Engineer.

CONDUIT PLANS AND BARRIER SECTIONS WITH ELECTRICAL SYSTEMS

ROADWAY LIGHTING POLE

NOT TO SCALE

DETAILS
ROADWAY AND GIRDER LEVEL EASTBOUND (LIGHTING POLE AND CONDUIT LOCATION)

SCALE AS NOTED

E-39

THIS PLAN IS ACCURATE FOR ELECTRICAL WORK ONLY.

ALL DIMENSIONS ARE IN MILLIMETERS UNLESS OTHERWISE SHOWN

STATE OF CALIFORNIA - DEPARTMENT OF TRANSPORTATION
Caltrans

CONSULTANT FUNCTIONAL SUPERVISOR: BRADY NADELL
CALCULATED-DESIGNED BY: JEFFRI HALIM
CHECKED BY: DAVID OTO
REVISED BY
DATE REVISED

LAST REVISION 08-17-09
DATE PLOTTED => 01-MAR-2012
TIME PLOTTED => 13:53

Dist	COUNTY	ROUTE	KILOMETER POST TOTAL PROJECT	SHEET No.	TOTAL SHEETS
04	Ala	80	1.6/2.7	230	744

REGISTERED ELECTRICAL ENGINEER 05/02/11

10-3-11
PLANS APPROVAL DATE

REGISTERED PROFESSIONAL ENGINEER DAVID H. OTO No. 10699 Exp. 06/30/2013 ELECTRICAL STATE OF CALIFORNIA

THE STATE OF CALIFORNIA OR ITS OFFICERS OR AGENTS SHALL NOT BE RESPONSIBLE FOR THE ACCURACY OR COMPLETENESS OF ELECTRONIC COPIES OF THIS PLAN SHEET.

PB AMERICAS, Inc.
303 Second St., Suite 700N
San Francisco, CA 94107-1317

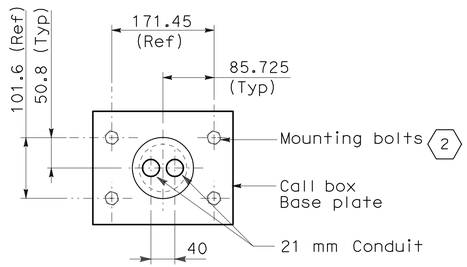

DETAIL 1

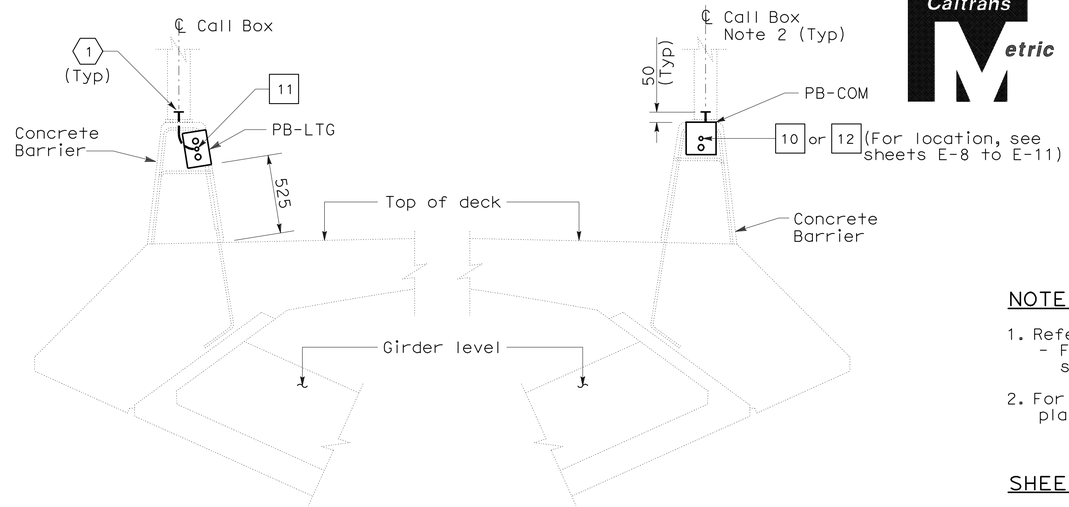

SECTION A-A

NOTES:

1. References:
   - For typical pull box schedules, see sheet E-43.
2. For PB-LTG, PB-COM and call box location plan, see sheets E-10 and E-11.

SHEET NOTES:

1. Provide ground bushing and connect #6 ground conductor to Call box post.
2. (4) 19.05 Dia. HSB (ASTM A325) 180 mm concrete embedment, and 130 mm bolt projection from top of concrete. Prior to installation, the Contractor to verify the supplied Call box components for size of mounting hole diameter.

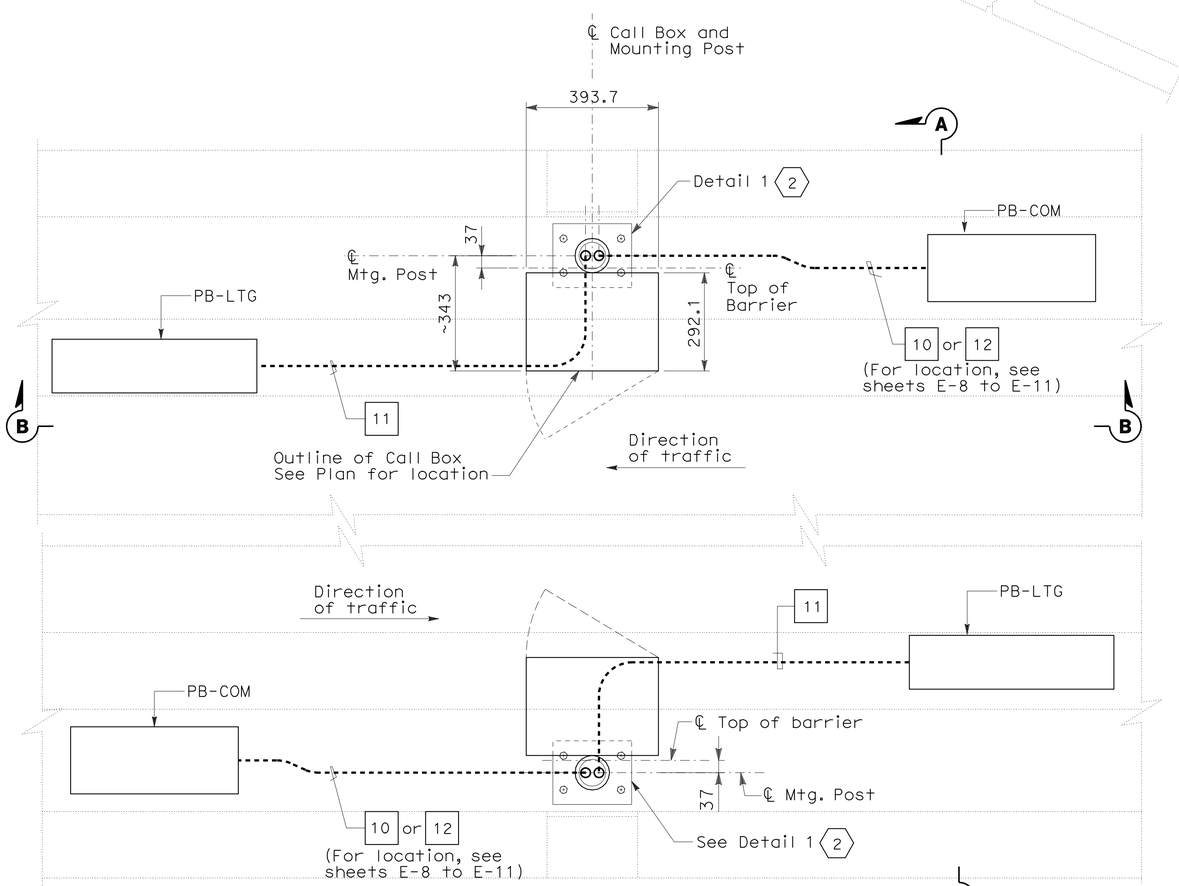

TYPICAL PLAN

CONDUIT STUB UP FOR CALL BOX

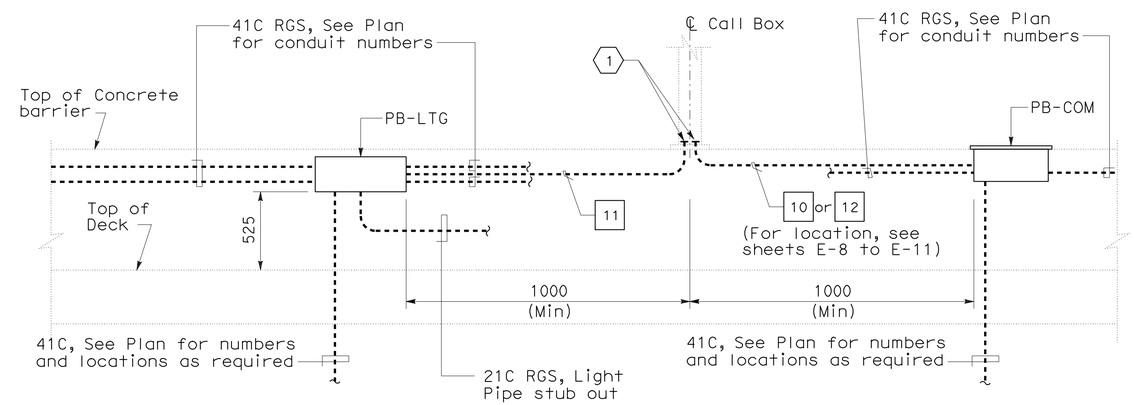

LONGITUDINAL SECTION B-B

TYPICAL CONDUIT ROUTING INSIDE CONCRETE BARRIER

CONDUIT PLAN AND BARRIER SECTIONS
CALL BOX

DETAILS
ROADWAY AND GIRDER LEVEL EASTBOUND
(CALL BOX CONDUIT LOCATION)

NO SCALE

E-40

THIS PLAN IS ACCURATE FOR ELECTRICAL WORK ONLY.

ALL DIMENSIONS ARE IN MILLIMETERS UNLESS OTHERWISE SHOWN

STATE OF CALIFORNIA - DEPARTMENT OF TRANSPORTATION
Caltrans

CONSULTANT FUNCTIONAL SUPERVISOR: BRADY NADELL
CALCULATED-DESIGNED BY: JEFFRI HALIM
CHECKED BY: DAVID OTO
REVISED BY / DATE REVISED

LAST REVISION 08-17-09 | DATE PLOTTED => 06-OCT-2011 | TIME PLOTTED => 06:47

Dist	COUNTY	ROUTE	KILOMETER POST TOTAL PROJECT	SHEET No.	TOTAL SHEETS
04	Ala	80	1.6/2.7	231	744

05/02/11
REGISTERED ELECTRICAL ENGINEER

10-3-11
PLANS APPROVAL DATE

REGISTERED PROFESSIONAL ENGINEER
DAVID H. OTO
No. 10699
Exp. 06/30/2013
ELECTRICAL
STATE OF CALIFORNIA

THE STATE OF CALIFORNIA OR ITS OFFICERS OR AGENTS SHALL NOT BE RESPONSIBLE FOR THE ACCURACY OR COMPLETENESS OF ELECTRONIC COPIES OF THIS PLAN SHEET.

PB AMERICAS, Inc.
303 Second St., Suite 700N
San Francisco, CA 94107-1317

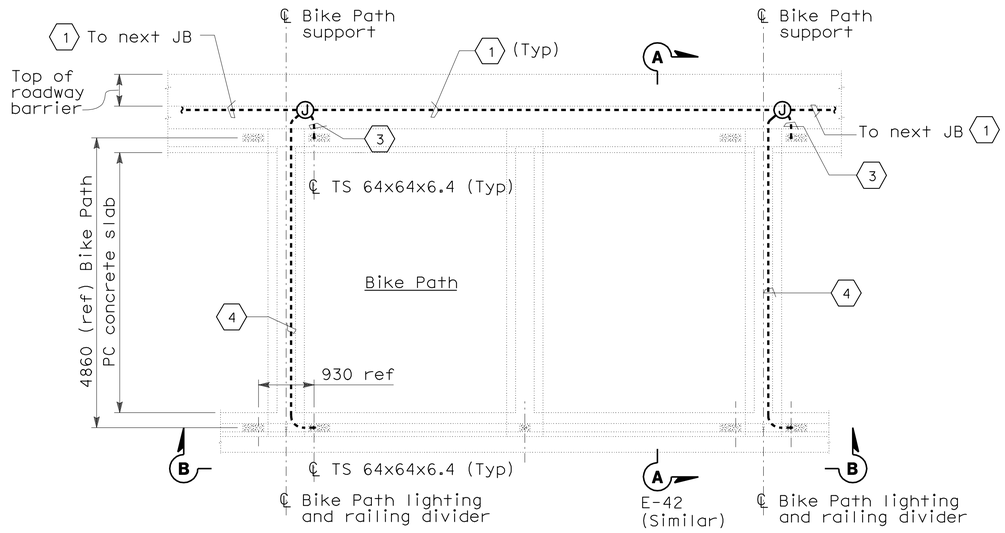

DETAIL 1
BIKE PATH LIGHTING PLAN

TYPICAL CONDUIT ARRANGEMENT (See sheet E-10)
NO SCALE

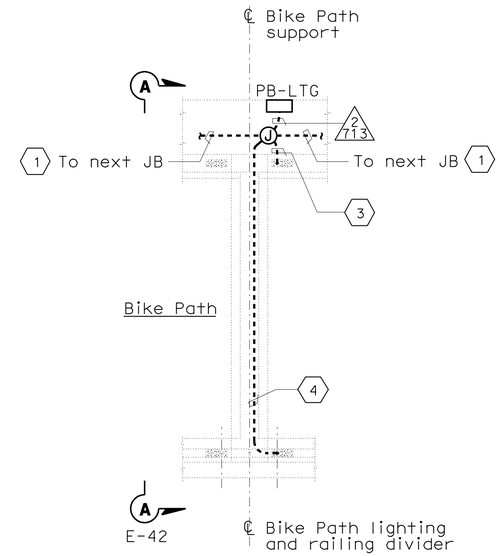

DETAIL 3
BIKE PATH LIGHTING PLAN

CONDUIT ARRANGEMENT (See sheet E-11)
NO SCALE

NOTES:

1. All exposed conduits and fittings installed between the Roadway and the Bike Path shall be PVC coated galvanized steel.
2. References:
   - For Bike Path schedule, see sheet E-57.
   - For pull box schedule, see sheet E-43.
   - For locations of PB-LTG and PB-COM at the Roadway concrete/steel barrier, see sheets E-10 and E-11.
3. For railing details, refer to structural drawings "Bike Path Railings Details".

SHEET NOTES:

1. 41C, Main conduit run located between roadway barrier and bike path.
2. For connection and mounting details, see sheets E-42 and E-61.
3. 21C, Flexible metallic conduit (2#12 + #12G).
4. 21C, RGS Conduit (2#12 + #12G).
5. Typical 21C RGS PVC coated future light pipe stub out from PB-LTG, For location of stub out and light pipe housing, see sheets E-10 and E-11.

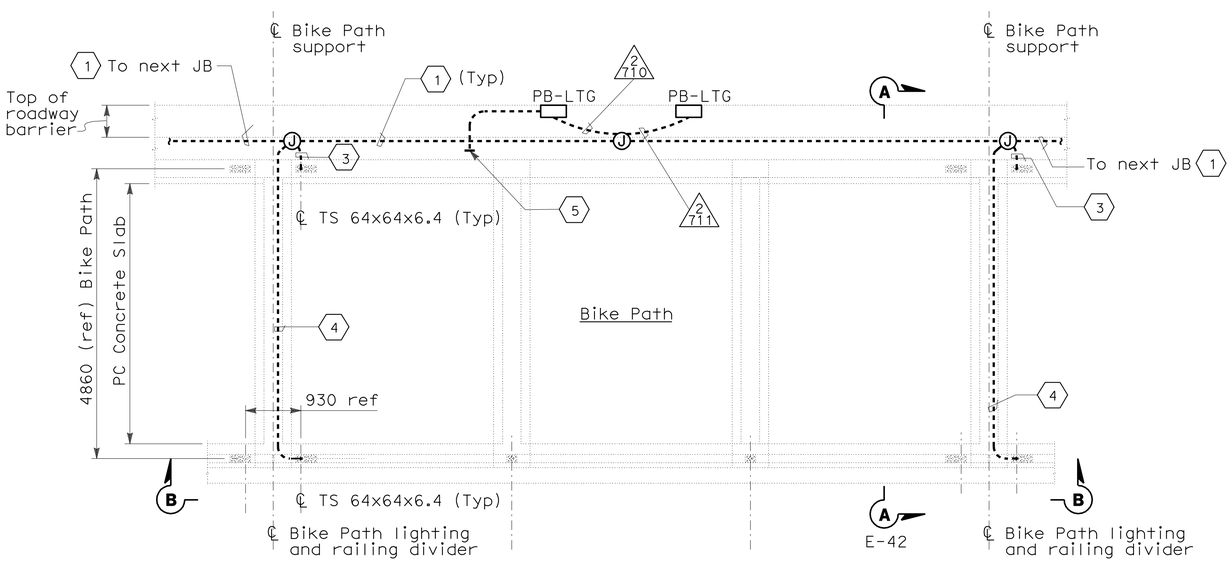

DETAIL 2
BIKE PATH LIGHTING PLAN

TYPICAL CONDUIT ARRANGEMENT (See sheet E-10)
NO SCALE

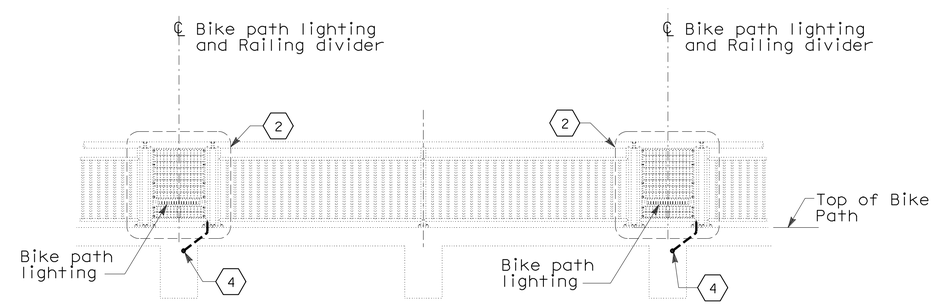

ELEVATION B-B
BIKE PATH RAILING

SCALE 1:40

DETAILS
ROADWAY AND GIRDER LEVEL EASTBOUND (TYPICAL BIKE PATH PLAN AND ELEVATION)

SCALE AS NOTED

THIS PLAN IS ACCURATE FOR ELECTRICAL WORK ONLY.

ALL DIMENSIONS ARE IN MILLIMETERS UNLESS OTHERWISE SHOWN

E-41

STATE OF CALIFORNIA - DEPARTMENT OF TRANSPORTATION
Caltrans

CONSULTANT FUNCTIONAL SUPERVISOR: BRADY NADELL
CALCULATED-DESIGNED BY: JEFFRI HALIM
CHECKED BY: DAVID OTO
REVISED BY / DATE REVISED

LAST REVISION 08-17-09
DATE PLOTTED => 06-OCT-2011
TIME PLOTTED => 08:48

Dist	COUNTY	ROUTE	KILOMETER POST TOTAL PROJECT	SHEET No.	TOTAL SHEETS
04	Ala	80	1.6/2.7	232	744

05/02/11
REGISTERED ELECTRICAL ENGINEER

10-3-11
PLANS APPROVAL DATE

REGISTERED PROFESSIONAL ENGINEER
DAVID H. OTO
No. 10699
Exp. 06/30/2013
ELECTRICAL
STATE OF CALIFORNIA

THE STATE OF CALIFORNIA OR ITS OFFICERS OR AGENTS SHALL NOT BE RESPONSIBLE FOR THE ACCURACY OR COMPLETENESS OF ELECTRONIC COPIES OF THIS PLAN SHEET.

PB AMERICAS, Inc.
303 Second St., Suite 700N
San Francisco, CA 94107-1317

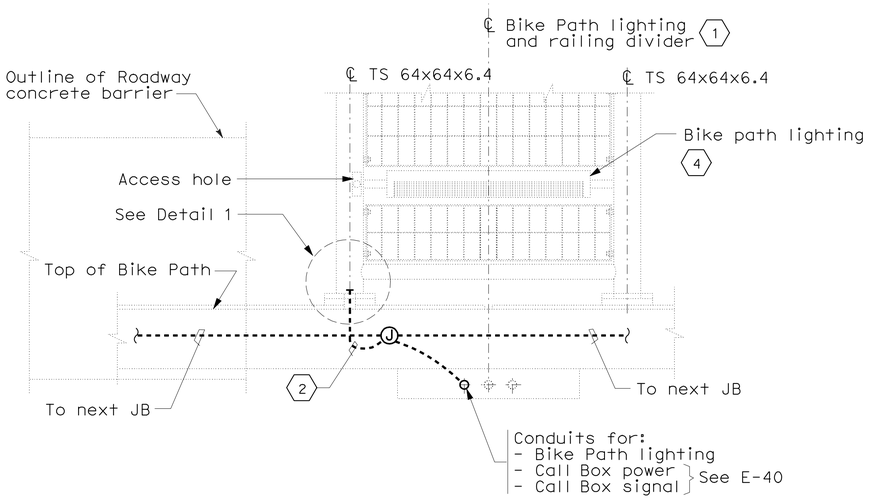

SECTION B-B
(TYPICAL BIKE PATH CONDUIT CONNECTIONS-NORTH SIDE)
NO SCALE

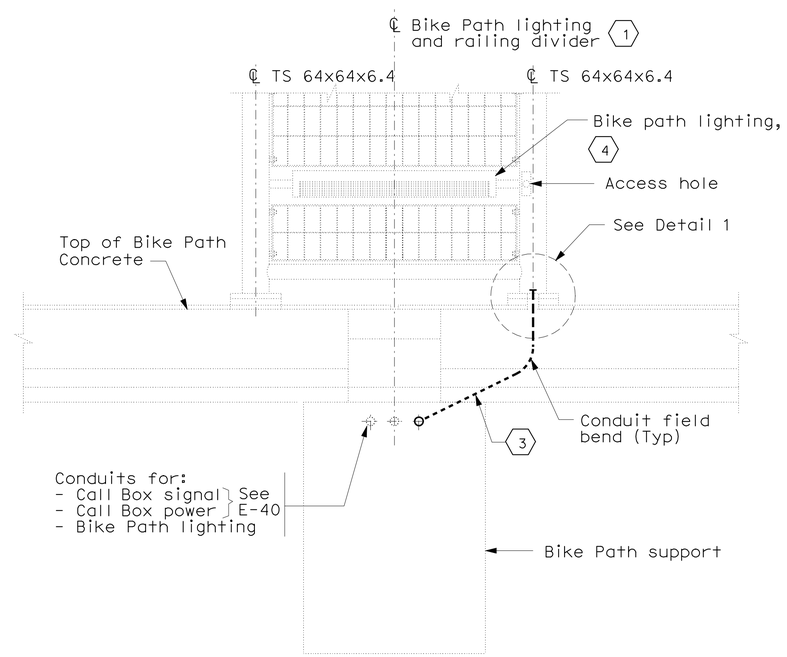

SECTION C-C
(TYPICAL BIKE PATH CONDUIT CONNECTIONS-SOUTH SIDE)
NO SCALE

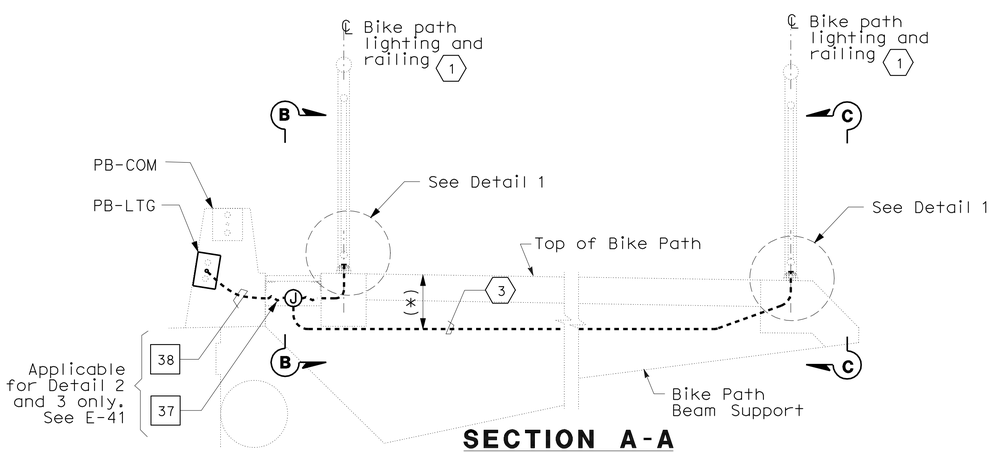

SECTION A-A
SCALE 1:20 (See sheet E-41)

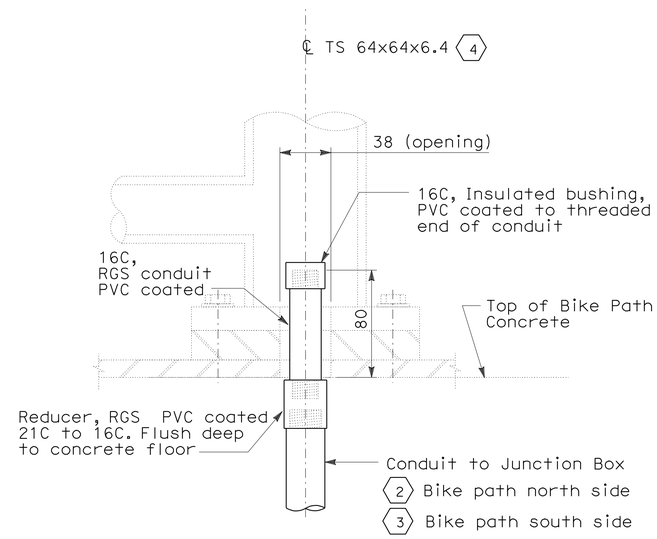

DETAIL 1
NO SCALE

NOTES:

1. All exposed conduit and fittings installed including between Roadway barrier and Bike Path shall be PVC coated RGS.
2. For locations of PB-LTG and PB-COM at the concrete barriers, see Sheets E-8 through E-11.
3. References:
   - For pull box schedule, see Sheet E-43.
   - For Bike Path schedule, see Sheet E-57.
4. (*) Dimensions to be provided by Structural.
5. TS refers to tubular steel.

SHEET NOTES:

(1) For details of Bike railing and Lighting Fixtures mounting, see Structures plan sheets and sheet E-61.

(2) 21C, Flexible metallic conduit (2#12 + #12G).

(3) 21C, RGS Conduit (2#12 + #12G).

(4) Prior to installing the bike path railing to the structure, the Contractor shall provide a pull rope inside the conduit. The pull rope end shall be inside the bike path lighting housing.

DETAILS
ROADWAY AND GIRDER LEVEL EASTBOUND (TYPICAL BIKE PATH LIGHTING DETAILS)
SCALE AS NOTED

E-42

THIS PLAN IS ACCURATE FOR ELECTRICAL WORK ONLY.

ALL DIMENSIONS ARE IN MILLIMETERS UNLESS OTHERWISE SHOWN

STATE OF CALIFORNIA - DEPARTMENT OF TRANSPORTATION
Caltrans

CONSULTANT FUNCTIONAL SUPERVISOR: BRADY NADELL
CALCULATED-DESIGNED BY: JEFFRI HALIM
CHECKED BY: DAVID OTO
REVISED BY
DATE REVISED

LAST REVISION 08-17-09
DATE PLOTTED => 06-OCT-2011
TIME PLOTTED => 06:48

Dist	COUNTY	ROUTE	KILOMETER POST TOTAL PROJECT	SHEET No.	TOTAL SHEETS
04	Ala	80	1.6/2.7	233	744

Caltrans Metric

05/02/11
REGISTERED ELECTRICAL ENGINEER

10-3-11
PLANS APPROVAL DATE

REGISTERED PROFESSIONAL ENGINEER
DAVID H. OTO
No. 10699
Exp. 06/30/2013
ELECTRICAL
STATE OF CALIFORNIA

THE STATE OF CALIFORNIA OR ITS OFFICERS OR AGENTS SHALL NOT BE RESPONSIBLE FOR THE ACCURACY OR COMPLETENESS OF ELECTRONIC COPIES OF THIS PLAN SHEET.

PB AMERICAS, Inc.
303 Second St., Suite 700N
San Francisco, CA 94107-1317

PULL BOXES

Location	Type	Pull Box Size	Enclosure Type	Nameplate Pull Box Cover	Remarks
Roadway Barrier	PB-COM			Low Voltage - Call Box	Caltrans standard PB-9A (ES-9C)
Roadway Barrier	PB-LTG			600 V - Electrical	Caltrans standard PB-9 (ES-9C)
Bike Path	PB-1D	152L x 203W x 102D	NEMA 4X	600 V - Electrical	
Inside Girder Box	PB-4D	600W x 900L	See sheet E-195	Caltrans	Deck access opening
Service Platform	PB-2B	762L x 610W x 203H	NEMA 4X	Low Voltage - TOS/COM	

PANEL ENCLOSURES (1)

Location	Type	Cabinet/Terminal Box Size	Enclosure Type	Nameplate Cabinet/Terminal Cover	Remarks
Service Platform	PB-7B	762H x 762W x 203D	NEMA 4X	Caltrans-COM 23E	For SCADA Communication Term. Box
Service Platform	PB-7C	762H x 508W x 203D	NEMA 4X	Caltrans Telephone TEL #23E	For Telephone Terminal Box
Service Platform		914H x 610W x 152D	NEMA 4X	See Panel Schedules	

NOTES:

1. Roadway access covers, and access covers for precast manholes located in the roadway, shall have anti-skid surface and counter-sunk mounting bolts.
2. Nameplate Detail-For Metallic Box or Cabinet only.

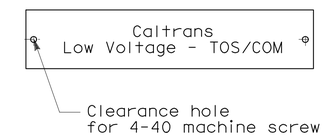

Nameplates shall be mounted to the face of each cubicle door panel with 4-40 stainless steel machine screws. The control panel shall be drilled and tapped. (No self-tapping screws)

SHEET NOTE:

(1) Panel enclosures shall have provisions for padlock.

DETAILS
ROADWAY AND GIRDER LEVEL EASTBOUND (TYPICAL PULL BOX SCHEDULES)
NO SCALE

E-43

THIS PLAN IS ACCURATE FOR ELECTRICAL WORK ONLY.

ALL DIMENSIONS ARE IN MILLIMETERS UNLESS OTHERWISE SHOWN

STATE OF CALIFORNIA - DEPARTMENT OF TRANSPORTATION
Caltrans

CONSULTANT FUNCTIONAL SUPERVISOR: BRADY NADELL
CALCULATED-DESIGNED BY: JEFFRI HALIM
CHECKED BY: DAVID OTO
REVISED BY / DATE REVISED

LAST REVISION 08-17-09
DATE PLOTTED => 06-OCT-2011
TIME PLOTTED => 06:48

Dist	COUNTY	ROUTE	KILOMETER POST TOTAL PROJECT	SHEET No.	TOTAL SHEETS
04	Ala	80	1.6/2.7	234	744

REGISTERED ELECTRICAL ENGINEER 05/02/11

PLANS APPROVAL DATE 10-3-11

REGISTERED PROFESSIONAL ENGINEER DAVID H. OTO No. 10699 Exp. 06/30/2013 ELECTRICAL STATE OF CALIFORNIA

THE STATE OF CALIFORNIA OR ITS OFFICERS OR AGENTS SHALL NOT BE RESPONSIBLE FOR THE ACCURACY OR COMPLETENESS OF ELECTRONIC COPIES OF THIS PLAN SHEET.

PB AMERICAS, Inc.
303 Second St., Suite 700N
San Francisco, CA 94107-1317

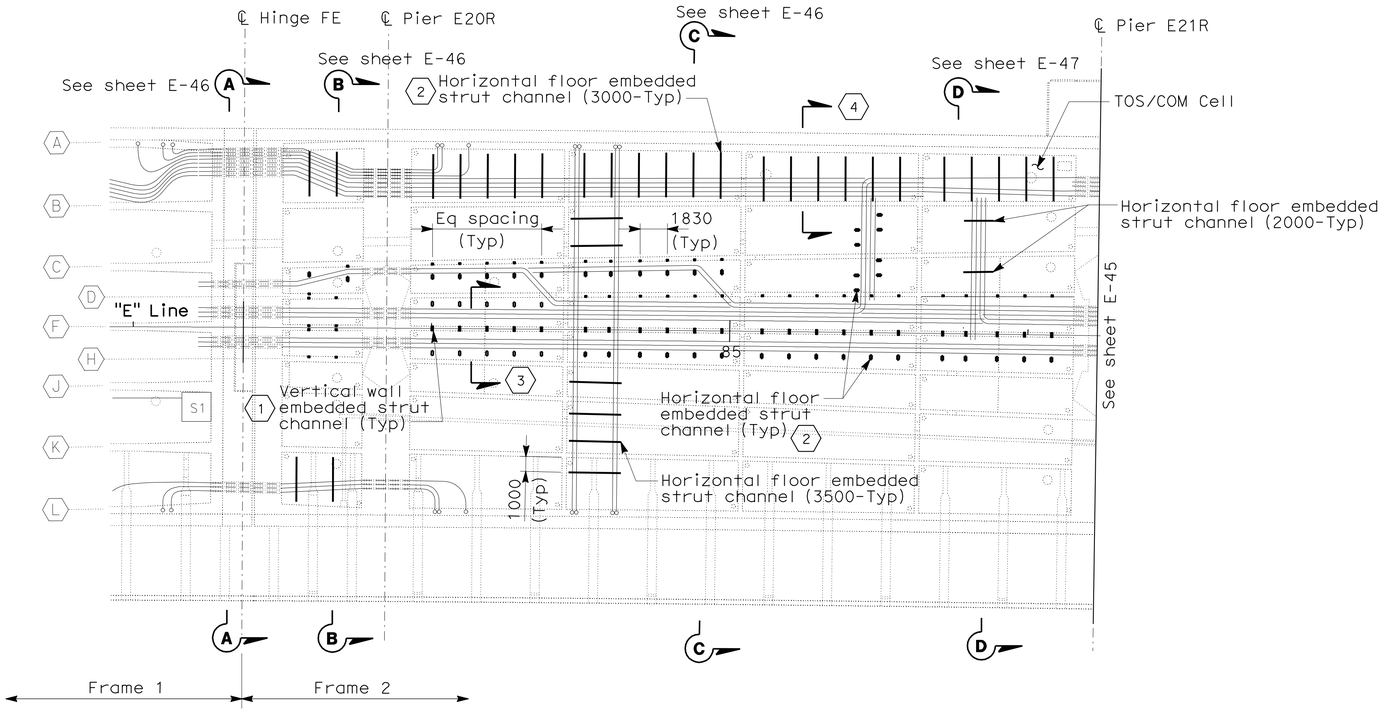

GIRDER CONDUIT SUPPORT PLAN

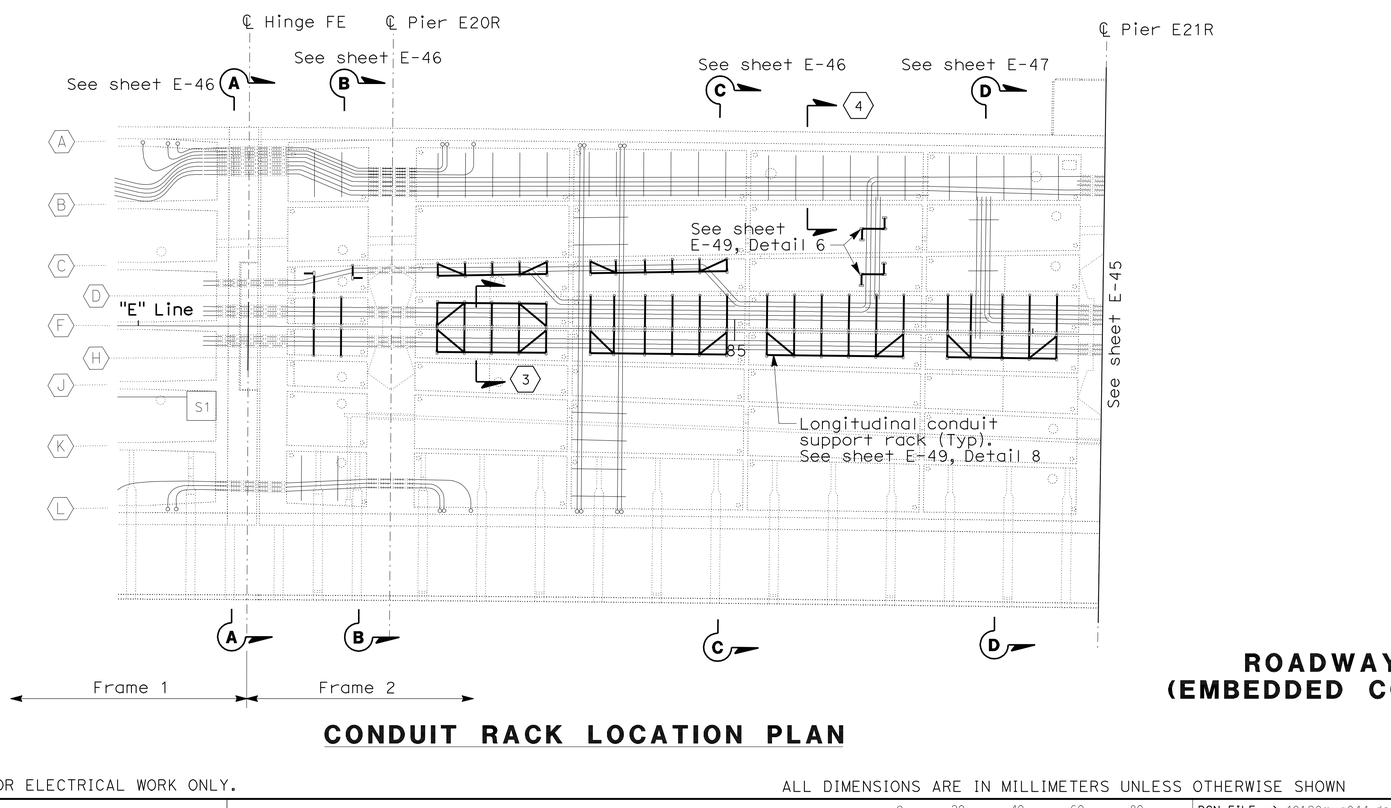

CONDUIT RACK LOCATION PLAN

NOTES:

1. The Contractor shall field adjust location of concrete insert to avoid interference with bridge reinforcement.
2. Structural channel location shall correspond to conduit plan as shown on sheet E-19, and Structural Drawings.
3. For details, see sheet E-46 and E-47.

SHEET NOTES:

1. Install vertical embedded strut channel between intermediate diaphragms in girder wall.
2. Install horizontal embedded strut channel between intermediate diaphragms in girder floor.
3. Detail 2C, see sheet E-48.
4. Detail 2D, see sheet E-48.

DETAILS
ROADWAY AND GIRDER LEVEL EASTBOUND (EMBEDDED CONCRETE INSERT AND CONDUIT RACK)

SCALE 1:200

THIS PLAN IS ACCURATE FOR ELECTRICAL WORK ONLY.

ALL DIMENSIONS ARE IN MILLIMETERS UNLESS OTHERWISE SHOWN

E-44

STATE OF CALIFORNIA - DEPARTMENT OF TRANSPORTATION

CONSULTANT FUNCTIONAL SUPERVISOR: BRADY NADELL

CALCULATED-DESIGNED BY: ELLERY LUCAS

CHECKED BY: DAVID OTO

REVISED BY / DATE REVISED

LAST REVISION 08-17-09 DATE PLOTTED => 06-OCT-2011 TIME PLOTTED => 06:48

Dist	COUNTY	ROUTE	KILOMETER POST TOTAL PROJECT	SHEET No.	TOTAL SHEETS
04	Ala	80	1.6/2.7	235	744

REGISTERED ELECTRICAL ENGINEER 05/02/11

10-3-11
PLANS APPROVAL DATE

REGISTERED PROFESSIONAL ENGINEER DAVID H. OTO No. 10699 Exp. 06/30/2013 ELECTRICAL STATE OF CALIFORNIA

THE STATE OF CALIFORNIA OR ITS OFFICERS OR AGENTS SHALL NOT BE RESPONSIBLE FOR THE ACCURACY OR COMPLETENESS OF ELECTRONIC COPIES OF THIS PLAN SHEET.

PB AMERICAS, Inc.
303 Second St., Suite 700N
San Francisco, CA 94107-1317

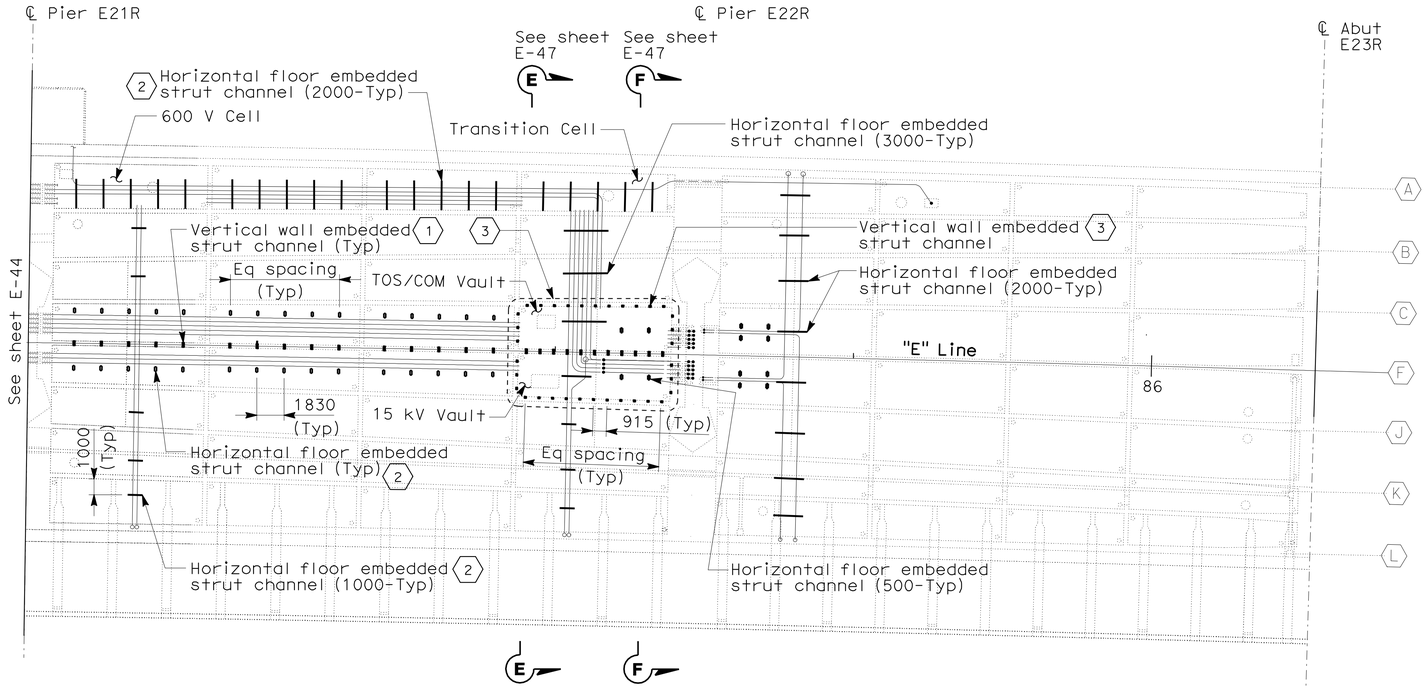

GIRDER CONDUIT SUPPORT PLAN

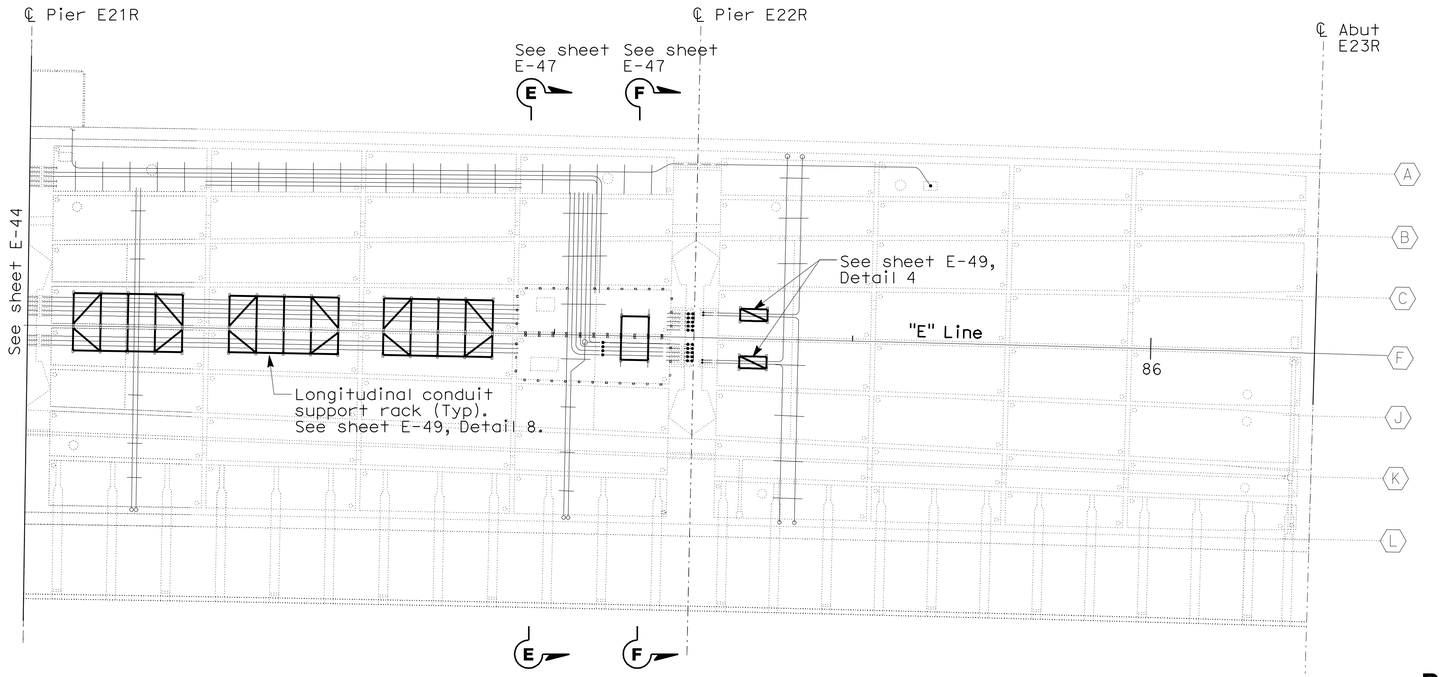

CONDUIT RACK LOCATION PLAN

NOTES:

1. The Contractor shall field adjust location of concrete inserts to avoid interference with bridge reinforcement.
2. Structural channel location shall correspond to conduit plan as shown on sheet E-20 and Structural Drawings.
3. For details, see sheet E-49.

SHEET NOTES:

(1) Install vertical embedded strut channel between intermediate diaphragms in girder wall.

(2) Install horizontal embedded strut channel between intermediate diaphragms in girder floor.

(3) Install vertical embedded strut channel in all utility vaults.

DETAILS
ROADWAY AND GIRDER LEVEL EASTBOUND (EMBEDDED CONCRETE INSERT AND CONDUIT RACK)

SCALE 1:200

THIS PLAN IS ACCURATE FOR ELECTRICAL WORK ONLY.

ALL DIMENSIONS ARE IN MILLIMETERS UNLESS OTHERWISE SHOWN

E-45

REVISED BY | DATE REVISED
ELLERY LUCAS | DAVID OTO
CALCULATED-DESIGNED BY | CHECKED BY
CONSULTANT FUNCTIONAL SUPERVISOR | BRADY NADELL
STATE OF CALIFORNIA - DEPARTMENT OF TRANSPORTATION

LAST REVISION 08-17-09 | DATE PLOTTED => 06-OCT-2011 | TIME PLOTTED => 06:48

Dist	COUNTY	ROUTE	KILOMETER POST TOTAL PROJECT	SHEET No.	TOTAL SHEETS
04	Ala	80	1.6/2.7	236	744

REGISTERED ELECTRICAL ENGINEER 05/02/11

PLANS APPROVAL DATE 10-3-11

REGISTERED PROFESSIONAL ENGINEER DAVID H. OTO No. 10699 Exp. 06/30/2013 ELECTRICAL STATE OF CALIFORNIA

THE STATE OF CALIFORNIA OR ITS OFFICERS OR AGENTS SHALL NOT BE RESPONSIBLE FOR THE ACCURACY OR COMPLETENESS OF ELECTRONIC COPIES OF THIS PLAN SHEET.

PB AMERICAS, Inc.
303 Second St., Suite 700N
San Francisco, CA 94107-1317

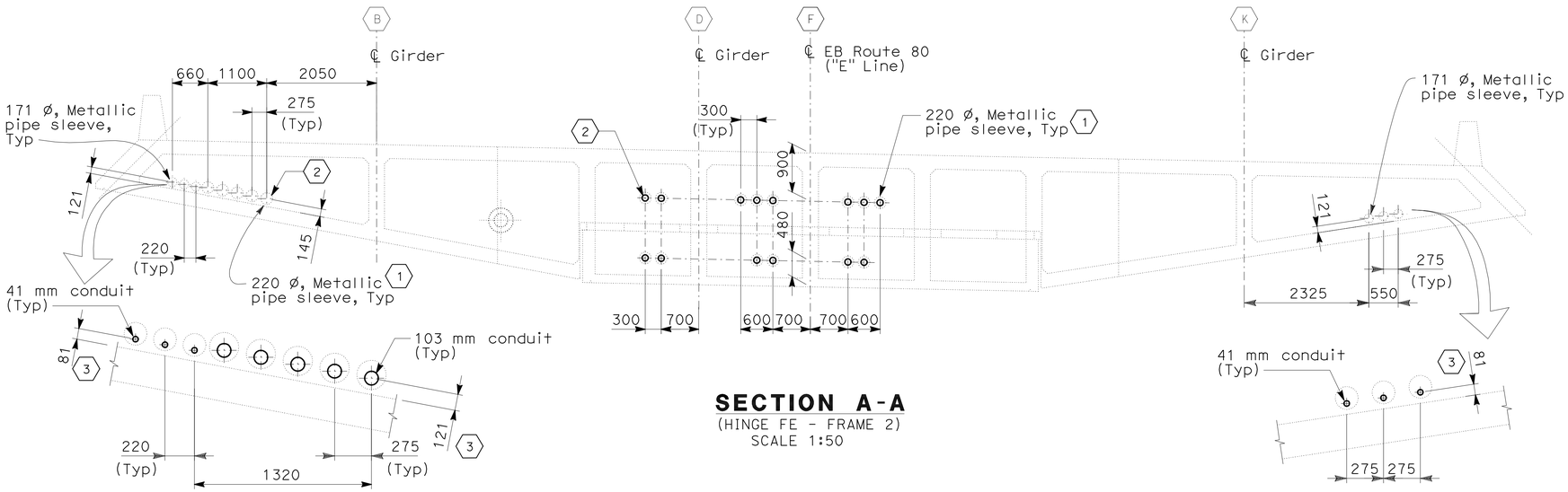

SECTION A-A
(HINGE FE - FRAME 2)
SCALE 1:50

CONDUIT LOCATION (FRAME 1)
SCALE 1:20

CONDUIT LOCATION (FRAME 1)
SCALE 1:20

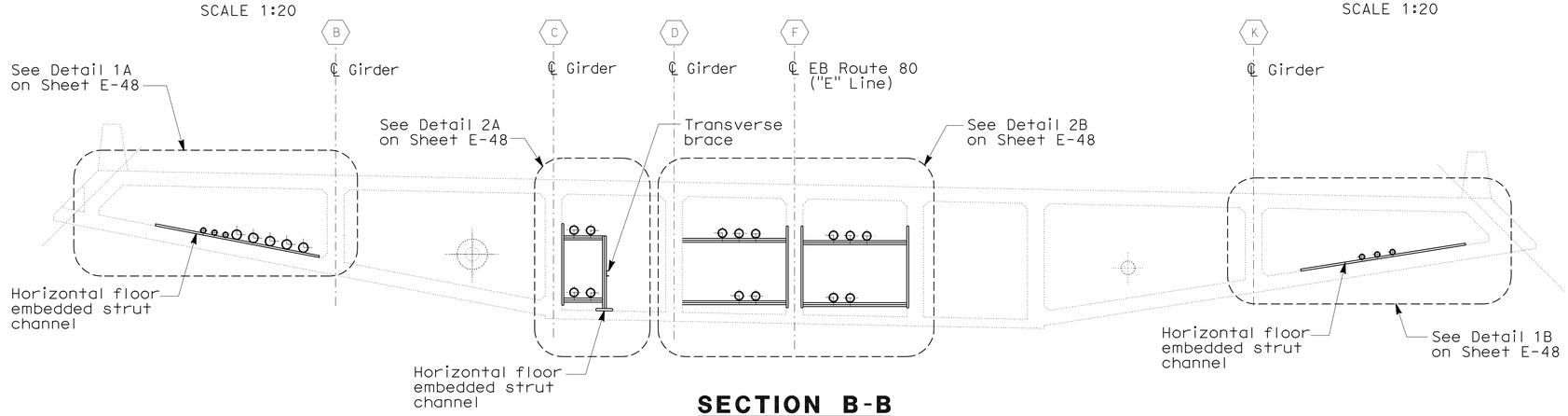

SECTION B-B
SCALE 1:50

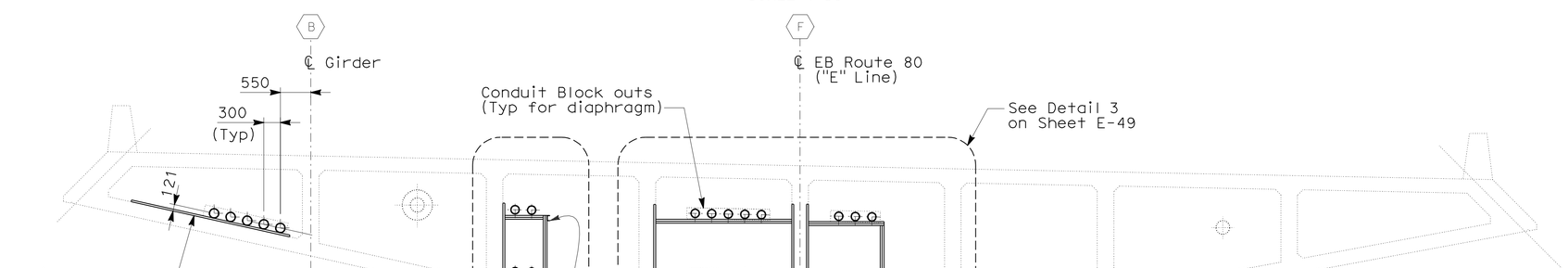

SECTION C-C
SCALE 1:50

NOTES:

1. References:
   - For conduit layout plan, see sheets E-19 and E-20.
   - For plan where Section A-A is taken, refer to sheet E-44.
   - For plan where Section B-B is taken, refer to sheet E-44.
   - For plan where Section C-C is taken, refer to sheet E-44.
   - For typical wall and horizontal floor channel insert, see Details 5 and 7 on sheet E-49.

SHEET NOTES:

(1) Conduits not shown, see E-32 for details.

(2) See sheet notes 1 and 2 on sheet E-32.

(3) The conduit locations on Frame 1 and Frame 2 on this contract shall match the conduit location on Frame 1 existing structure.

DETAILS
ROADWAY AND GIRDER LEVEL EASTBOUND (GIRDER CONDUIT SUPPORTS AND SECTIONS)
SCALE AS NOTED

E-46

THIS PLAN IS ACCURATE FOR ELECTRICAL WORK ONLY.

ALL DIMENSIONS ARE IN MILLIMETERS UNLESS OTHERWISE SHOWN

STATE OF CALIFORNIA - DEPARTMENT OF TRANSPORTATION
Caltrans

CONSULTANT FUNCTIONAL SUPERVISOR: BRADY NADELL
CALCULATED-DESIGNED BY: ELLERY LUCAS
CHECKED BY: DAVID OTO
REVISED BY / DATE REVISED

LAST REVISION 08-17-09
DATE PLOTTED => 06-OCT-2011
TIME PLOTTED => 06:49

Dist	COUNTY	ROUTE	KILOMETER POST TOTAL PROJECT	SHEET No.	TOTAL SHEETS
04	Ala	80	1.6/2.7	237	744

REGISTERED ELECTRICAL ENGINEER 05/02/11

PLANS APPROVAL DATE 10-3-11

REGISTERED PROFESSIONAL ENGINEER DAVID H. OTO No. 10699 Exp. 06/30/2013 ELECTRICAL STATE OF CALIFORNIA

THE STATE OF CALIFORNIA OR ITS OFFICERS OR AGENTS SHALL NOT BE RESPONSIBLE FOR THE ACCURACY OR COMPLETENESS OF ELECTRONIC COPIES OF THIS PLAN SHEET.

PB AMERICAS, Inc.
303 Second St., Suite 700N
San Francisco, CA 94107-1317

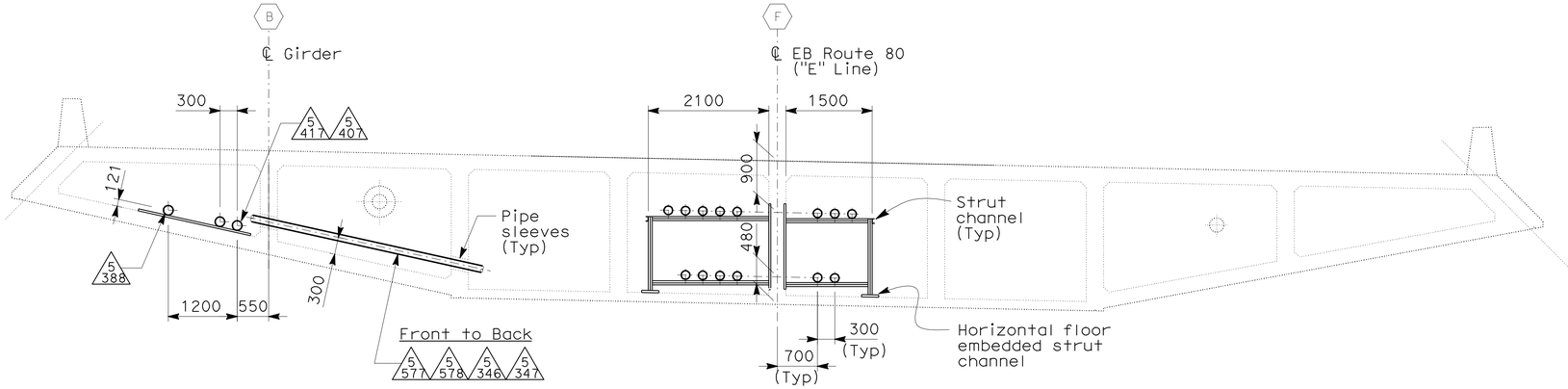

SECTION D-D

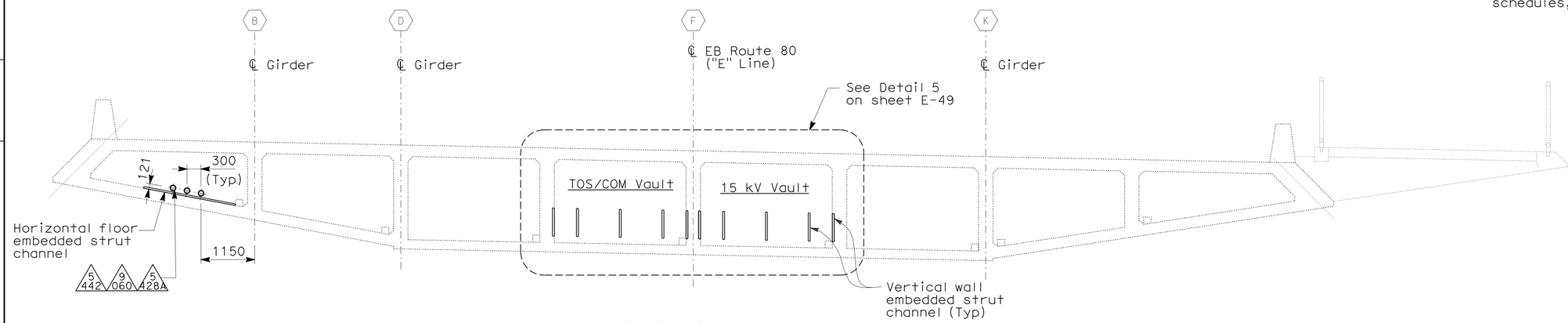

SECTION E-E

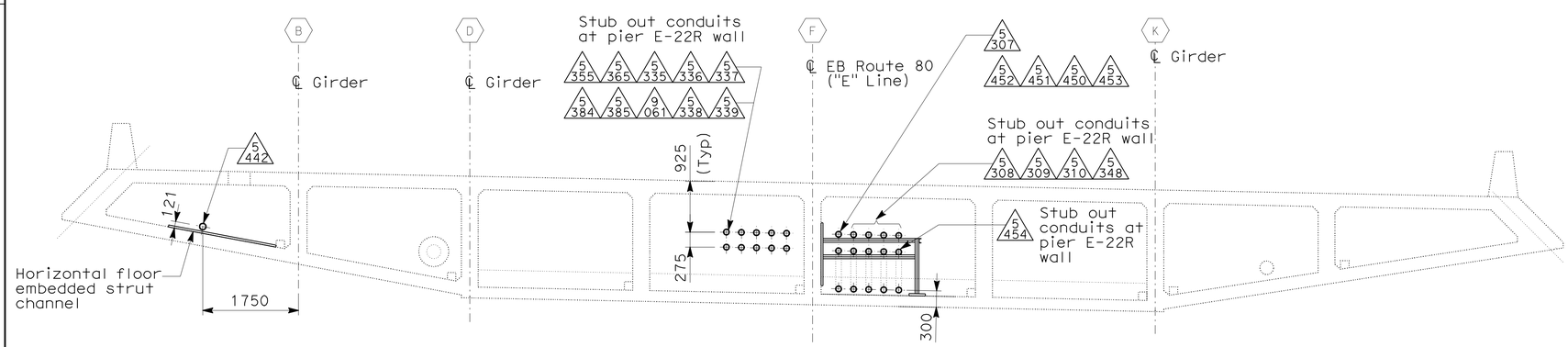

SECTION F-F

NOTES:

1. References:
   - For conduit layout plan, see sheets E-19 and E-20.
   - For plan where Section D-D is taken, refer to sheet E-44.
   - For plan where Section E-E is taken, refer to sheet E-45.
   - For typical wall and horizontal floor channel insert, see Details 5 and 7 on sheet E-49.
   - For plan where section F-F is taken, refer to sheet E-45.
   - For conduit and tray, cable and circuit schedules, see sheets starting at E-205.

DETAILS
ROADWAY AND GIRDER LEVEL EASTBOUND (GIRDER CONDUIT SUPPORTS AND SECTIONS)

SCALE 1:50

E-47

THIS PLAN IS ACCURATE FOR ELECTRICAL WORK ONLY.

ALL DIMENSIONS ARE IN MILLIMETERS UNLESS OTHERWISE SHOWN

STATE OF CALIFORNIA - DEPARTMENT OF TRANSPORTATION

Caltrans

CONSULTANT FUNCTIONAL SUPERVISOR: BRADY NADELL

CALCULATED-DESIGNED BY: ELLERY LUCAS

CHECKED BY: DAVID OTO

REVISED BY | DATE REVISED

LAST REVISION 08-17-09 | DATE PLOTTED => 06-OCT-2011 | TIME PLOTTED => 06:49

Dist	COUNTY	ROUTE	KILOMETER POST TOTAL PROJECT	SHEET No.	TOTAL SHEETS
04	Ala	80	1.6/2.7	238	744

REGISTERED ELECTRICAL ENGINEER 05/02/11

PLANS APPROVAL DATE 10-3-11

REGISTERED PROFESSIONAL ENGINEER DAVID H. OTO No. 10699 Exp. 06/30/2013 ELECTRICAL STATE OF CALIFORNIA

THE STATE OF CALIFORNIA OR ITS OFFICERS OR AGENTS SHALL NOT BE RESPONSIBLE FOR THE ACCURACY OR COMPLETENESS OF ELECTRONIC COPIES OF THIS PLAN SHEET.

PB AMERICAS, Inc.
303 Second St., Suite 700N
San Francisco, CA 94107-1317

Caltrans Metric

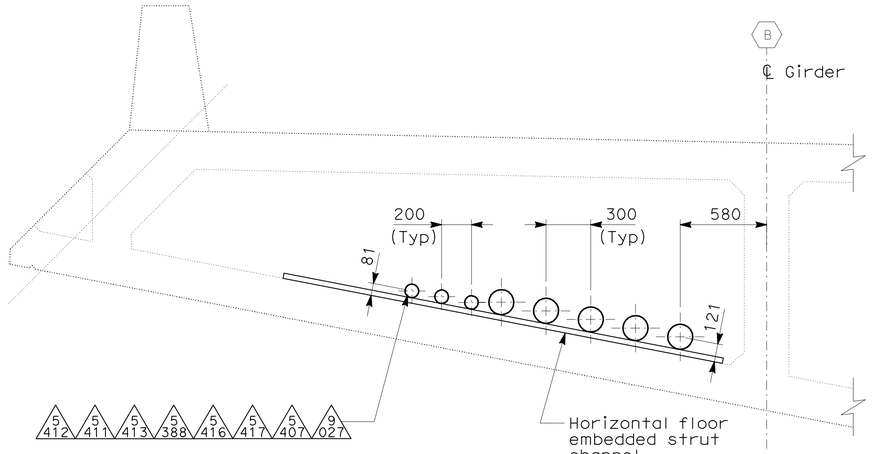

DETAIL 1A

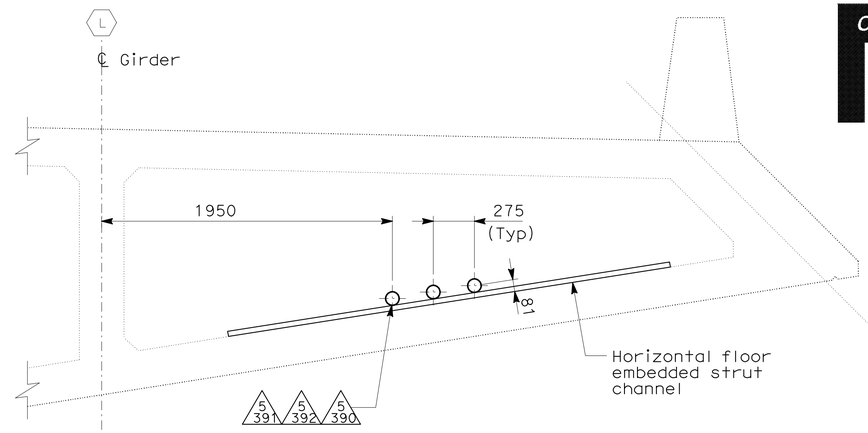

DETAIL 1B

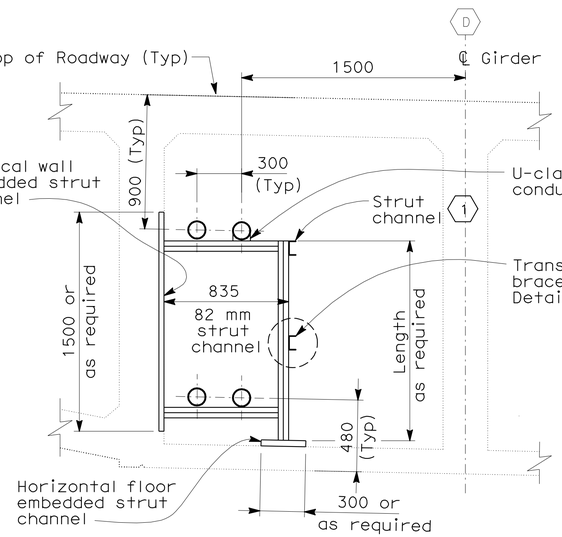

DETAIL 2A

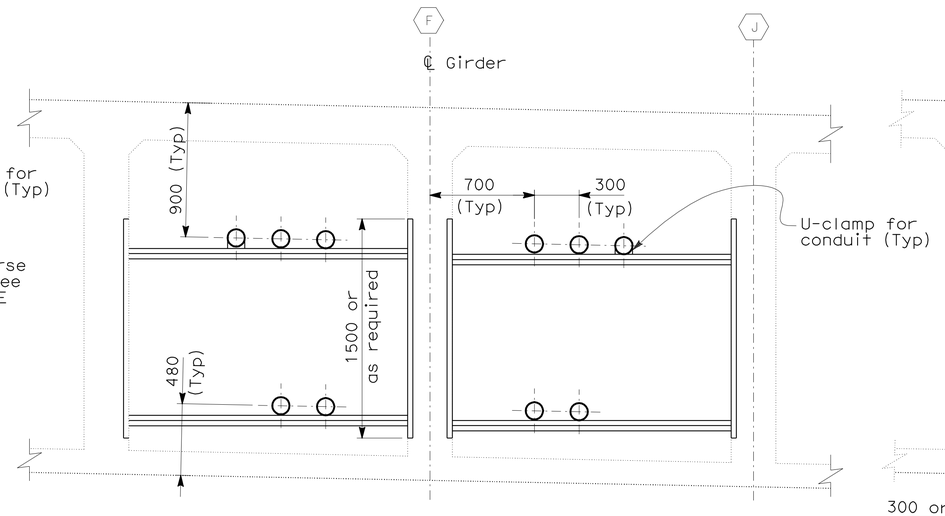

DETAIL 2B

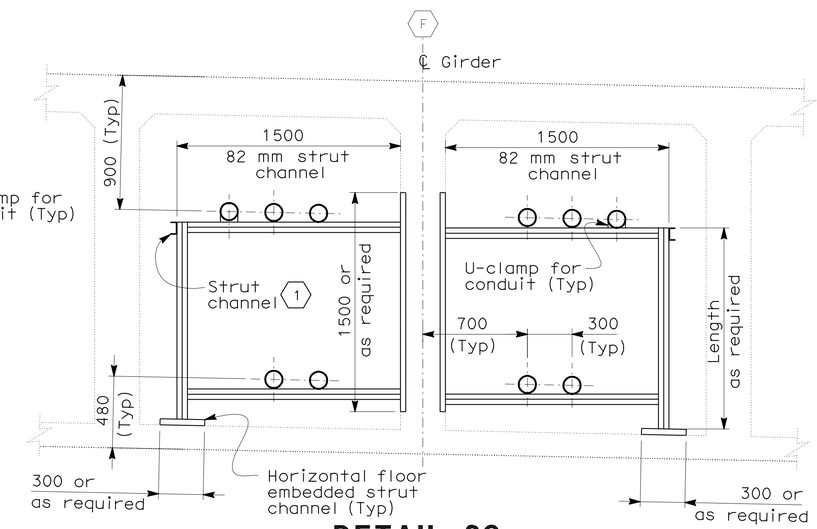

DETAIL 2C

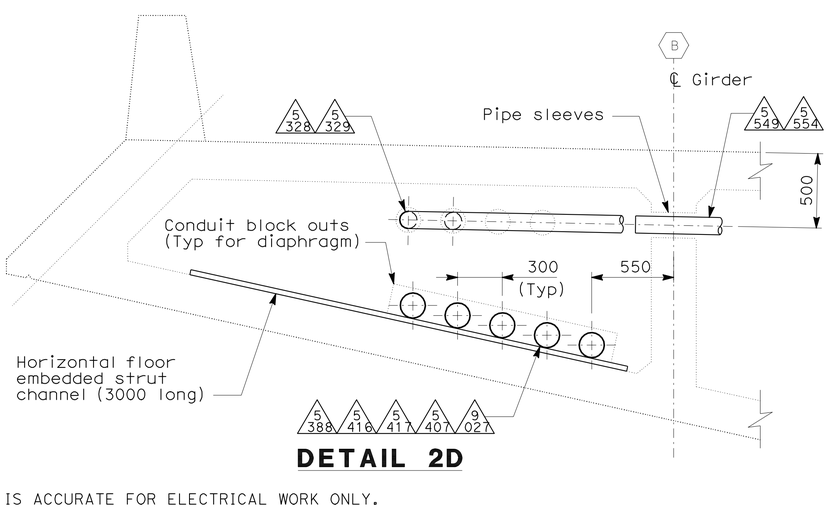

DETAIL 2D

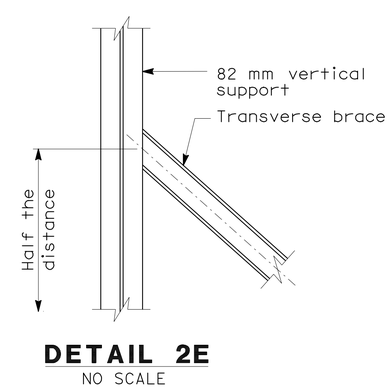

DETAIL 2E

NO SCALE

ALL DIMENSIONS ARE IN MILLIMETERS UNLESS OTHERWISE SHOWN

NOTE:

1. References:
   - For conduit layout plan, see sheet E-20.
   - For typical wall and horizontal floor channel insert, see Details 5 & 7 sheet E-49.
   - For conduit and tray, cable and circuit schedules, see sheets starting at E-205.

SHEET NOTE:

(1) For location of longitudinal channel, see sheets E-44 and E-45. For typical detail, see Detail 8 of sheet E-49.

DETAILS
ROADWAY AND GIRDER LEVEL EASTBOUND (GIRDER CONDUIT SUPPORTS AND SECTIONS)

SCALE 1:20

THIS PLAN IS ACCURATE FOR ELECTRICAL WORK ONLY.

E-48

REVISED BY	DATE REVISED

CALCULATED-DESIGNED BY: ELLERY LUCAS
CHECKED BY: DAVID OTO
CONSULTANT FUNCTIONAL SUPERVISOR: BRADY NADELL

STATE OF CALIFORNIA - DEPARTMENT OF TRANSPORTATION
Caltrans

LAST REVISION 08-17-09 | DATE PLOTTED => 06-OCT-2011 | TIME PLOTTED => 06:49

Dist	COUNTY	ROUTE	KILOMETER POST TOTAL PROJECT	SHEET No.	TOTAL SHEETS
04	Ala	80	1.6/2.7	239	744

REGISTERED ELECTRICAL ENGINEER 05/02/11

PLANS APPROVAL DATE 10-3-11

REGISTERED PROFESSIONAL ENGINEER DAVID H. OTO No. 10699 Exp. 06/30/2013 ELECTRICAL STATE OF CALIFORNIA

THE STATE OF CALIFORNIA OR ITS OFFICERS OR AGENTS SHALL NOT BE RESPONSIBLE FOR THE ACCURACY OR COMPLETENESS OF ELECTRONIC COPIES OF THIS PLAN SHEET.

PB AMERICAS, Inc.
303 Second St., Suite 700N
San Francisco, CA 94107-1317

Caltrans Metric

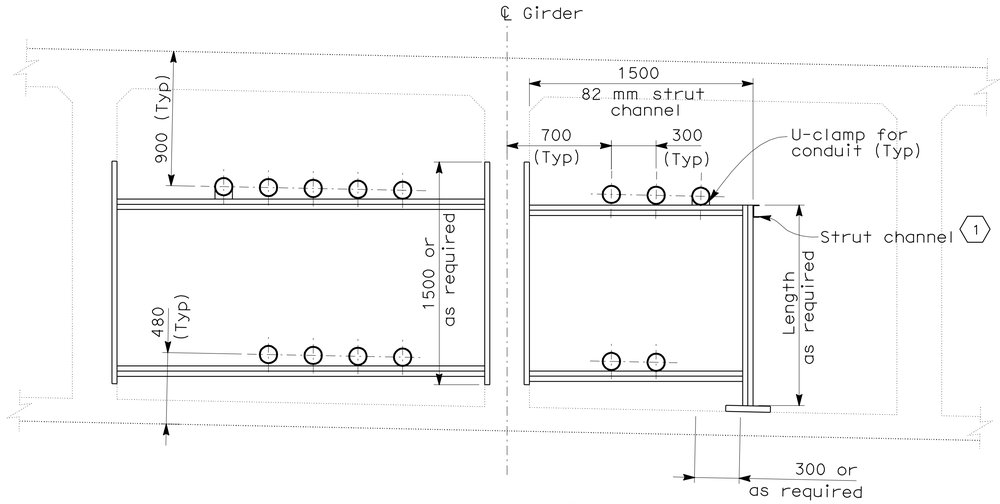

DETAIL 3
SCALE 1:20

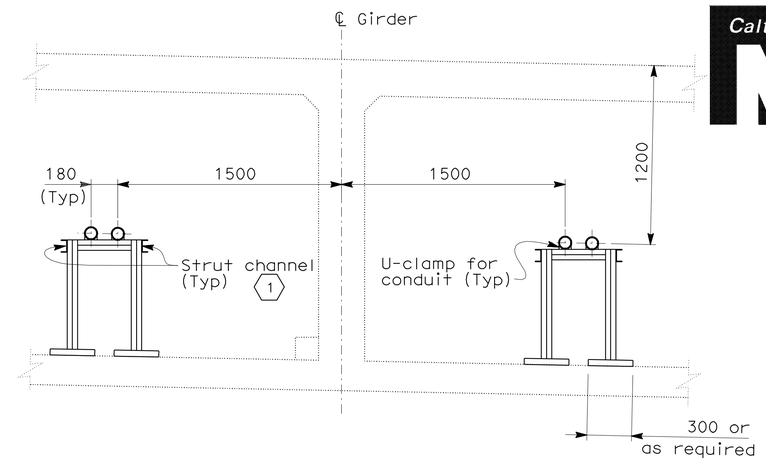

DETAIL 4
NO SCALE

SHEET NOTES:

1. For location of longitudinal channel, see sheets E-44 and E-45. For typical detail, see Detail 8 this drawing.
2. See detail 2E, sheet E-48.

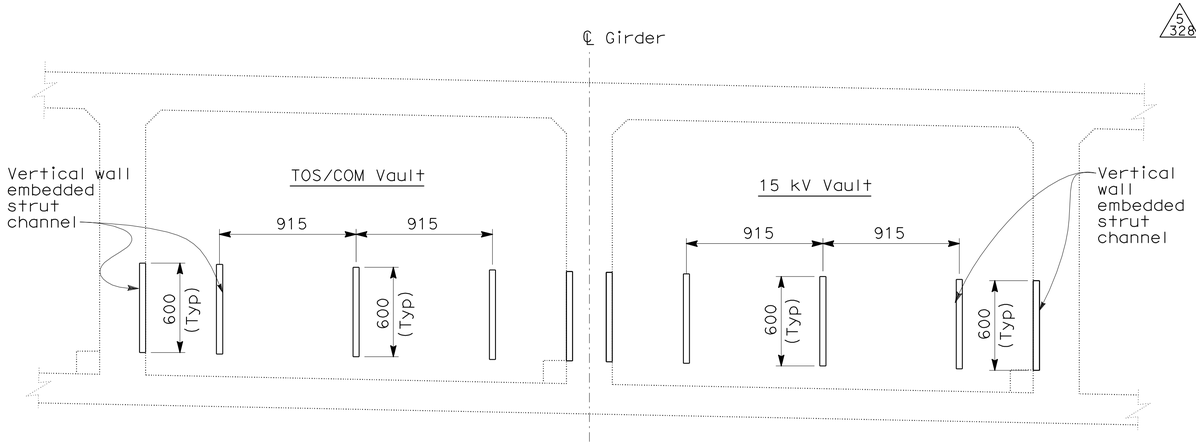

DETAIL 5
NO SCALE

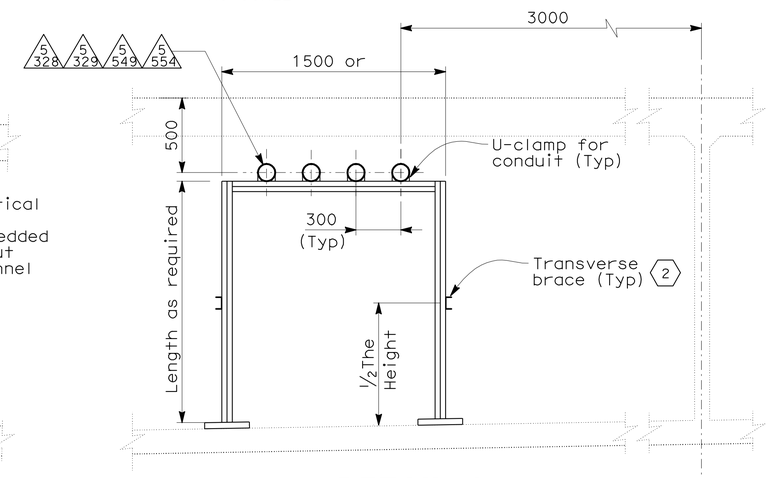

DETAIL 6
NO SCALE

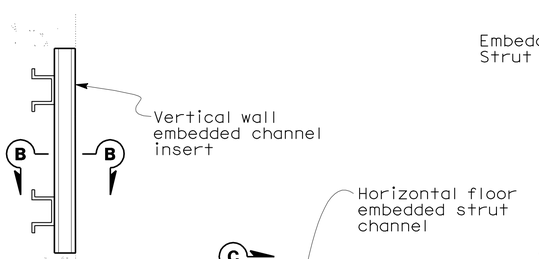

DETAIL 7
NO SCALE

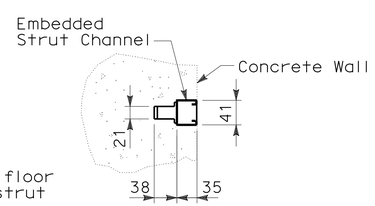

SECTION B-B

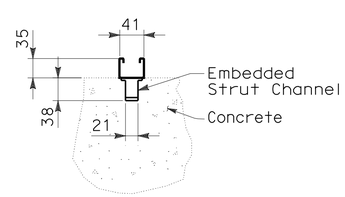

SECTION C-C

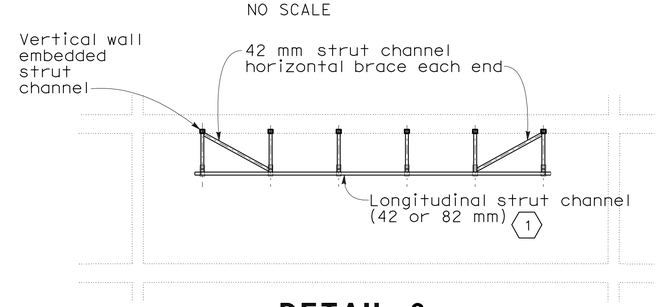

DETAIL 8
PLAN-TYPICAL
NO SCALE

DETAILS
ROADWAY AND GIRDER LEVEL EASTBOUND (TYPICAL CONDUIT INSTALLATION AND SECTIONS)
SCALE AS NOTED

E-49

THIS PLAN IS ACCURATE FOR ELECTRICAL WORK ONLY.

ALL DIMENSIONS ARE IN MILLIMETERS UNLESS OTHERWISE SHOWN

STATE OF CALIFORNIA - DEPARTMENT OF TRANSPORTATION
Caltrans

CONSULTANT FUNCTIONAL SUPERVISOR: BRADY NADELL
CALCULATED-DESIGNED BY: ELLERY LUCAS
CHECKED BY: DAVID OTO
REVISED BY / DATE REVISED

LAST REVISION 08-17-09
DATE PLOTTED => 06-OCT-2011
TIME PLOTTED => 06:49

Dist	COUNTY	ROUTE	KILOMETER POST TOTAL PROJECT	SHEET No.	TOTAL SHEETS
04	Ala	80	1.6/2.7	240	744

REGISTERED ELECTRICAL ENGINEER 05/02/11

10-3-11
PLANS APPROVAL DATE

REGISTERED PROFESSIONAL ENGINEER DAVID H. OTO No. 10699 Exp. 06/30/2013 ELECTRICAL STATE OF CALIFORNIA

THE STATE OF CALIFORNIA OR ITS OFFICERS OR AGENTS SHALL NOT BE RESPONSIBLE FOR THE ACCURACY OR COMPLETENESS OF ELECTRONIC COPIES OF THIS PLAN SHEET.

PB AMERICAS, Inc.
303 Second St., Suite 700N
San Francisco, CA 94107-1317

(E) UTILITY PANEL UP-271 Ckt #2626-2

Location: OAKLAND APPROACH SERVICE PLATFORM #22E

LOAD DESCRIPTION	LTG	REC	OTH.	CB		CB	LTG	REC	OTH.	LOAD DESCRIPTION
Spare				20/1	1 A 2	20/1			10	CB-256C
Spare				20/1	3 B 4	20/1				Spare
Recept (2) Service Platform #22E		360		20/1	5 C 6	20/1				
Spare				20/1	7 A 8	20/1				
Spare				20/1	9 B 10	30/1			2000	Controller Cabinet #TOS-22EA
Spare				20/1	11 C 12	20/1				Spare
Space					13 A 14					Space
					15 B 16					
					17 C 18					
TOTAL VA	-	360	-				-	-	2010	TOTAL VA

LOAD SUMMARY IN VA

Lighting (At 100%): 0 VA
Gen Use (1st 10 kVA at 100% Plus 50% of remainder): 2370 VA

TOTAL kVA: 2.4 kVA
TOTAL Amperes: 6.6 A at 208 V, 3 ø

BALANCE (kVA)
Phase A - 0.010
Phase B - 2.000
Phase C - 0.360

VOLTAGE: 208/120V
PHASE/WIRES: 3-phase,4-wire
BUS RATING: 100 A
MAIN: 60 AT
MOUNTING: Surface
K.A.I.C.: 10

(3)

UTILITY PANEL UP-272 (Ckt #2627-2)

Location: OAKLAND APPROACH SERVICE PLATFORM #23E

LOAD DESCRIPTION	LTG	REC	OTH.	CB		CB	LTG	REC	OTH.	LOAD DESCRIPTION
Spare				20/1	1 A 2	20/1			20	CB-257A, CB-257B
Spare				20/1	3 B 4	20/1				Spare
Recept (2) Service Platform #23E		360		20/1	5 C 6	20/1				
Spare				20/1	7 A 8	20/1				
Spare				20/1	9 B 10	30/1			2000	Controller Cabinet #TOS-23EA
Spare				20/1	11 C 12	20/1				Spare
TOTAL VA	-	360	-				-	-	2020	TOTAL VA

LOAD SUMMARY IN VA

Lighting (At 100%): 0 VA
Gen Use (1st 10 kVA at 100% Plus 50% of remainder): 2380 VA

TOTAL kVA: 2.4 kVA
TOTAL Amperes: 6.6 A at 208 V, 3 ø

BALANCE (kVA)
Phase A - 0.020
Phase B - 2.000
Phase C - 0.360

VOLTAGE: 208/120V
PHASE/WIRES: 3-phase,4-wire
BUS RATING: 100 A
MAIN: 60 AT
MOUNTING: Surface
K.A.I.C.: 10

(1)

THIS PLAN IS ACCURATE FOR ELECTRICAL WORK ONLY.

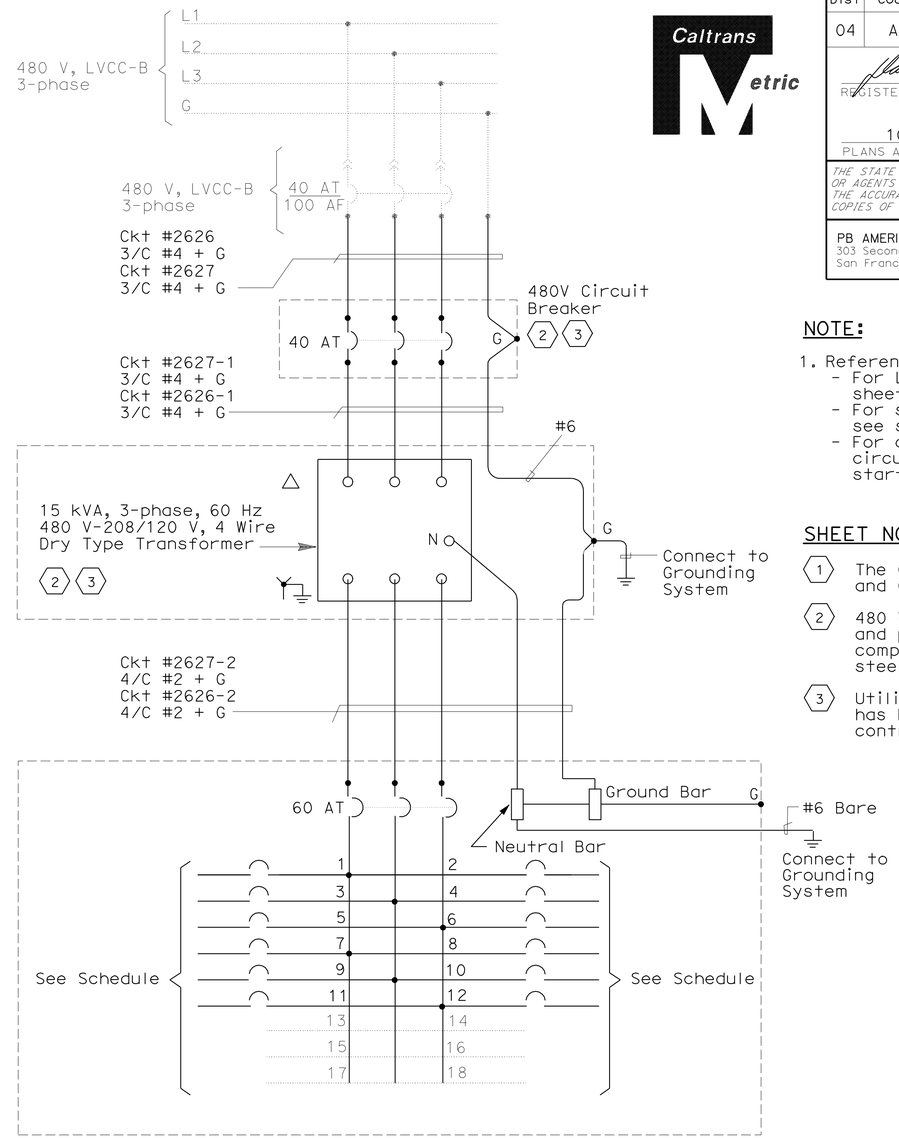

(2) (3) Utility Panel UP-271 (UP-272, 12-position)

NOTE:

1. References:
   - For LVCC-B single line diagram, see sheet E-136.
   - For service platforms 22E and 23E, see sheets E-30 and E-34.
   - For conduit and tray, cable and circuit schedules, see sheets starting at E-205.

SHEET NOTES:

(1) The Contractor shall provide Nameplates and Circuit Schedules as shown.

(2) 480 V circuit breaker, transformer, and panelboard are separate components, all NEMA 4X, stainless steel enclosures.

(3) Utility panel UP-271 and components has been provided under a previous contract.

DETAILS
ROADWAY AND GIRDER LEVEL EASTBOUND (UP-271 AND UP-272 PANEL SCHEDULES)
NO SCALE

E-50

STATE OF CALIFORNIA - DEPARTMENT OF TRANSPORTATION
Caltrans

CONSULTANT FUNCTIONAL SUPERVISOR: BRADY NADELL
CALCULATED-DESIGNED BY: JEFFRI HALIM
CHECKED BY: DAVID OTO
REVISED BY
DATE REVISED

LAST REVISION 08-17-09
DATE PLOTTED => 06-OCT-2011
TIME PLOTTED => 06:49

Dist	COUNTY	ROUTE	KILOMETER POST TOTAL PROJECT	SHEET No.	TOTAL SHEETS
04	Ala	80	1.6/2.7	241	744

REGISTERED ELECTRICAL ENGINEER 05/02/11

10-3-11
PLANS APPROVAL DATE

REGISTERED PROFESSIONAL ENGINEER DAVID H. OTO No. 10699 Exp. 06/30/2013 ELECTRICAL STATE OF CALIFORNIA

THE STATE OF CALIFORNIA OR ITS OFFICERS OR AGENTS SHALL NOT BE RESPONSIBLE FOR THE ACCURACY OR COMPLETENESS OF ELECTRONIC COPIES OF THIS PLAN SHEET.

PB AMERICAS, Inc.
303 Second St., Suite 700N
San Francisco, CA 94107-1317

(E) LIGHTING PANEL LP-281 CKT #2621-2

LOCATION: OAKLAND APPROACH SERVICE PLATFORM #22E

LOAD DESCRIPTION	LTG	CB		CB	LTG	LOAD DESCRIPTION
Bike Path Ltg (11)	583	20/1	1 A 2	20/1		Spare
Bike Path Ltg (11)	583	20/1	3 B 4	20/1		↓
Spare		20/1	5 C 6	20/1	636	Bike Path Ltg (12)
↓		20/1	7 A 8	20/1	636	Bike Path Ltg (12)
↓		20/1	9 B 10	20/1		Spare
↓		20/1	11 C 12	20/1		↓
Space			13 C 14			Space
↓			15 C 16			↓
↓			17 C 18			↓
TOTAL VA	1166				1272	TOTAL VA

LOAD SUMMARY IN VA
Lighting (AT 100%): 2438 VA

BALANCE (kVA)
Phase A - 1.219
Phase B - 0.583
Phase C - 0.636

VOLTAGE: 208/120 V
PHASE/WIRES: 3-phase,4-wire
BUS RATING: 100 A
MAIN: 60 AT
MOUNTING: SURFACE
K.A.I.C.: 10

TOTAL kVA: 2.44 kVA
TOTAL Amperes: 6.8 A at 208 V, 3 ø

(3)

LIGHTING PANEL LP-282 (Ckt #2622-2)

Location: OAKLAND APPROACH SERVICE PLATFORM #23E

LOAD DESCRIPTION	LTG	CB		CB	LTG	LOAD DESCRIPTION
Bike Path Ltg (10)	530	20/1	1 A 2	20/1		Spare
Bike Path Ltg (10)	530	20/1	3 B 4	20/1		↓
Spare		20/1	5 C 6	20/1	530	Bike Path Ltg (10)
↓		20/1	7 A 8	20/1	530	Bike Path Ltg (10)
↓		20/1	9 B 10	30/1		Spare
↓		20/1	11 C 12	20/1		↓
TOTAL VA	1060				1060	TOTAL VA

LOAD SUMMARY IN VA
Lighting (At 100%): 2120 VA

BALANCE (kVA)
Phase A - 1.060
Phase B - 0.530
Phase C - 0.530

VOLTAGE: 208/120 V
PHASE/WIRES: 3-phase,4-wire
BUS RATING: 100 A
MAIN: 60 AT
MOUNTING: SURFACE
FIBERGLASS ENCL.
K.A.I.C.: 10

TOTAL kVA: 2.1 kVA
TOTAL Amperes: 5.9 A at 208 V, 3 ø

(1)

THIS PLAN IS ACCURATE FOR ELECTRICAL WORK ONLY.

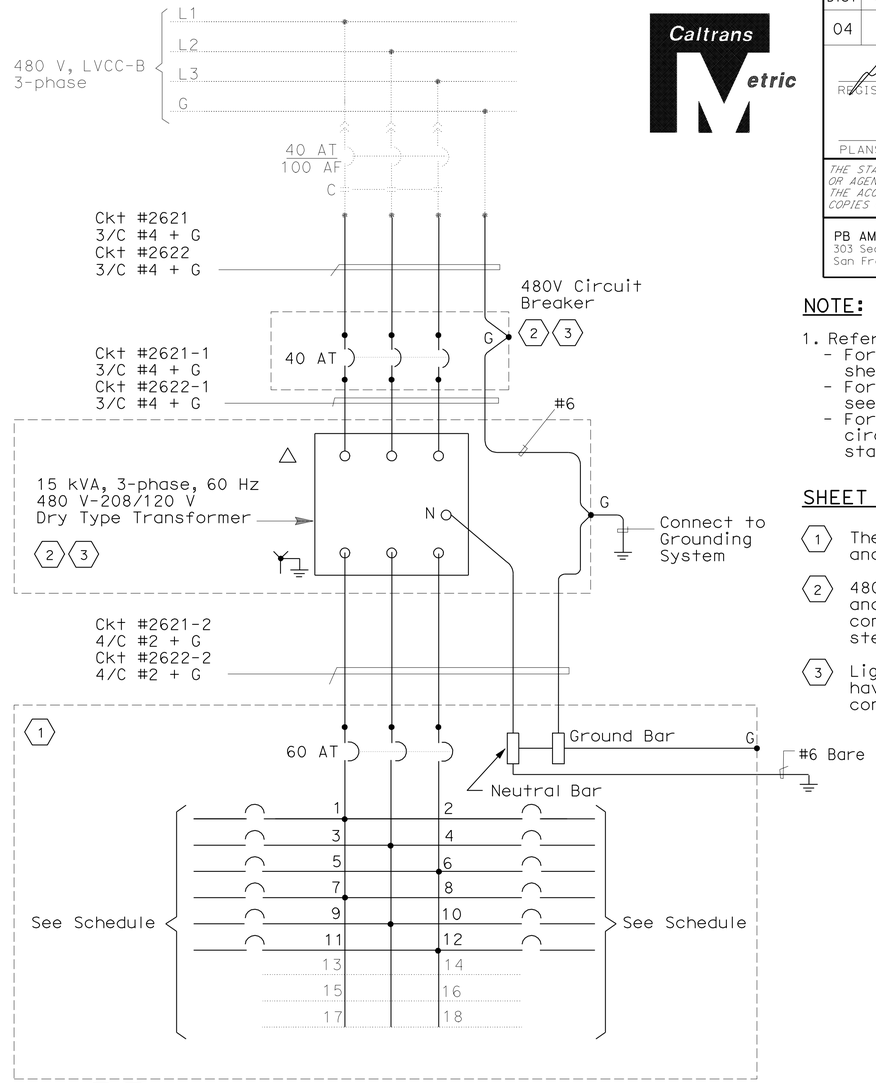

(2) (3) Lighting Panel LP-281 (LP-282, 12-position)

NOTE:

1. References:
   - For LVCC-B single line diagram, see sheet E-136.
   - For service platforms 22E and 23E, see sheets E-30 and E-34.
   - For conduit and tray, cable and circuit schedules, see sheets starting at E-205.

SHEET NOTES:

(1) The Contractor shall provide Nameplates and Circuit Schedules as shown.

(2) 480 V Circuit breaker, transformer, and panelboard are separate components, all NEMA 4X, stainless steel enclosures.

(3) Lighting panel LP-281 and components have been provided under a previous contract.

DETAILS
ROADWAY AND GIRDER LEVEL EASTBOUND (LP-281 AND LP-282 PANEL SCHEDULES)
NO SCALE

E-51

REVISED BY | DATE REVISED
JEFFRI HALIM | DAVID OTO
CALCULATED-DESIGNED BY | CHECKED BY
CONSULTANT FUNCTIONAL SUPERVISOR
BRADY NADELL
STATE OF CALIFORNIA - DEPARTMENT OF TRANSPORTATION
Caltrans

LAST REVISION 08-17-09 | DATE PLOTTED => 06-OCT-2011 | TIME PLOTTED => 06:50

Dist	COUNTY	ROUTE	KILOMETER POST TOTAL PROJECT	SHEET No.	TOTAL SHEETS
04	Ala	80	1.6/2.7	242	744

Caltrans Metric

05/02/11
REGISTERED ELECTRICAL ENGINEER

10-3-11
PLANS APPROVAL DATE

REGISTERED PROFESSIONAL ENGINEER
DAVID H. OTO
No. 10699
Exp. 06/30/2013
ELECTRICAL
STATE OF CALIFORNIA

THE STATE OF CALIFORNIA OR ITS OFFICERS OR AGENTS SHALL NOT BE RESPONSIBLE FOR THE ACCURACY OR COMPLETENESS OF ELECTRONIC COPIES OF THIS PLAN SHEET.

PB AMERICAS, Inc.
303 Second St., Suite 700N
San Francisco, CA 94107-1317

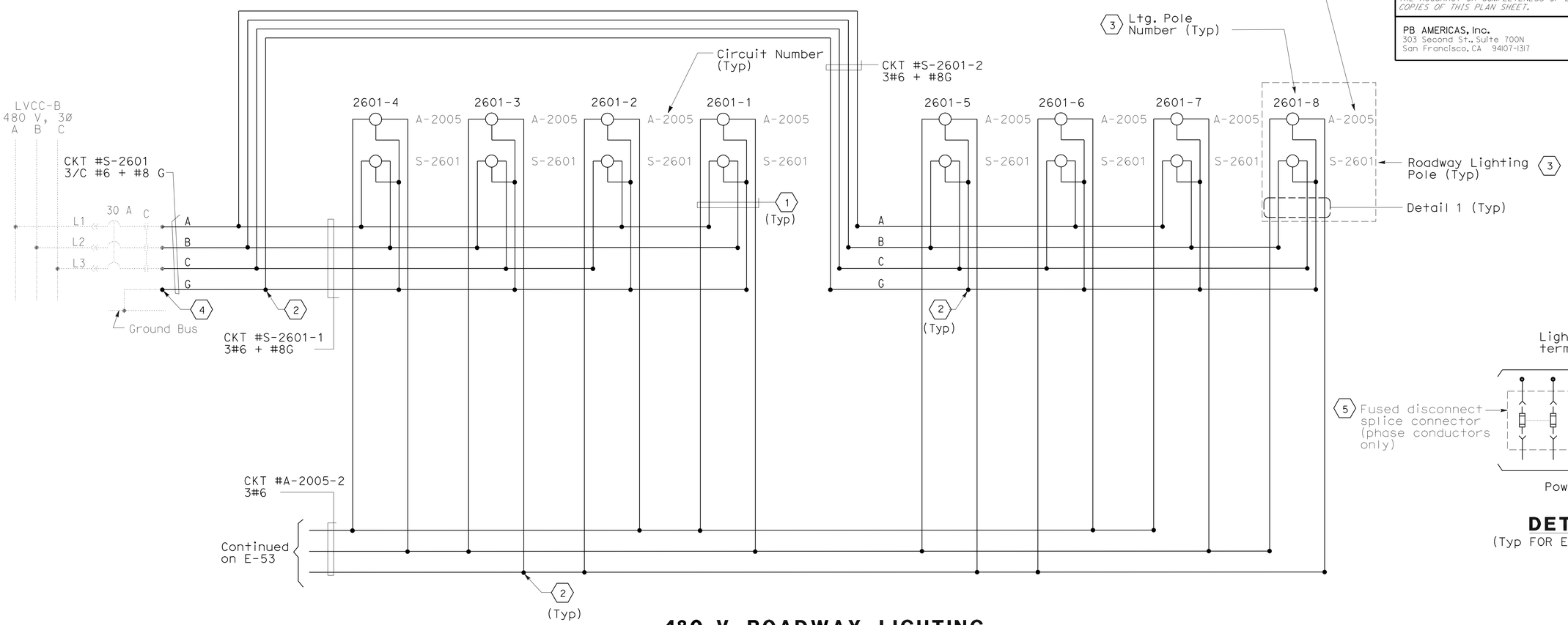

480 V ROADWAY LIGHTING

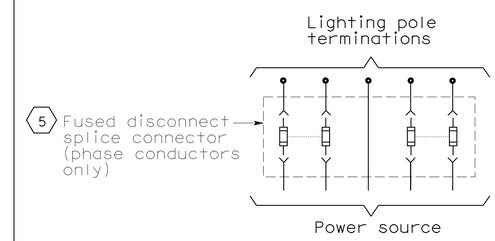

DETAIL-1
(Typ FOR EACH LTG. POLE)

NOTE:

1. References:
   - For LVCC-B single line diagram, see sheet E-136.
   - For lighting pole schedule, see sheet E-57.
   - For conduit and tray, cable and circuit schedules, see sheets starting at E-205.

SHEET NOTES:

1. 5#10 AWG single conductors, see Detail 1.
2. Loop conductors inside each PB-LTG located in barrier for splicing.
3. Roadway Lighting Pole, see sheet E-39.
4. Conductor spliced inside 600 V cell.
5. For type and size of inline fusing, see Standard Plans. Locate inside lighting pole junction box at the base of each roadway lighting pole.

THIS PLAN IS ACCURATE FOR ELECTRICAL WORK ONLY.

DETAILS
ROADWAY AND GRIDER LEVEL EASTBOUND (480 V ROADWAY LIGHTING WIRING DIAGRAM)
NO SCALE

E-52

STATE OF CALIFORNIA - DEPARTMENT OF TRANSPORTATION
Caltrans

CONSULTANT FUNCTIONAL SUPERVISOR: BRADY NADELL
CALCULATED-DESIGNED BY: JEFFRI HALIM
CHECKED BY: DAVID OTO
REVISED BY
DATE REVISED

LAST REVISION 08-17-09
DATE PLOTTED => 06-OCT-2011
TIME PLOTTED => 06:50

Dist	COUNTY	ROUTE	KILOMETER POST TOTAL PROJECT	SHEET No.	TOTAL SHEETS
04	Ala	80	1.6/2.7	243	744

Caltrans Metric

05/02/11
REGISTERED ELECTRICAL ENGINEER

10-3-11
PLANS APPROVAL DATE

REGISTERED PROFESSIONAL ENGINEER
DAVID H. OTO
No. 10699
Exp. 06/30/2013
ELECTRICAL
STATE OF CALIFORNIA

THE STATE OF CALIFORNIA OR ITS OFFICERS OR AGENTS SHALL NOT BE RESPONSIBLE FOR THE ACCURACY OR COMPLETENESS OF ELECTRONIC COPIES OF THIS PLAN SHEET.

PB AMERICAS, Inc.
303 Second St., Suite 700N
San Francisco, CA 94107-1317

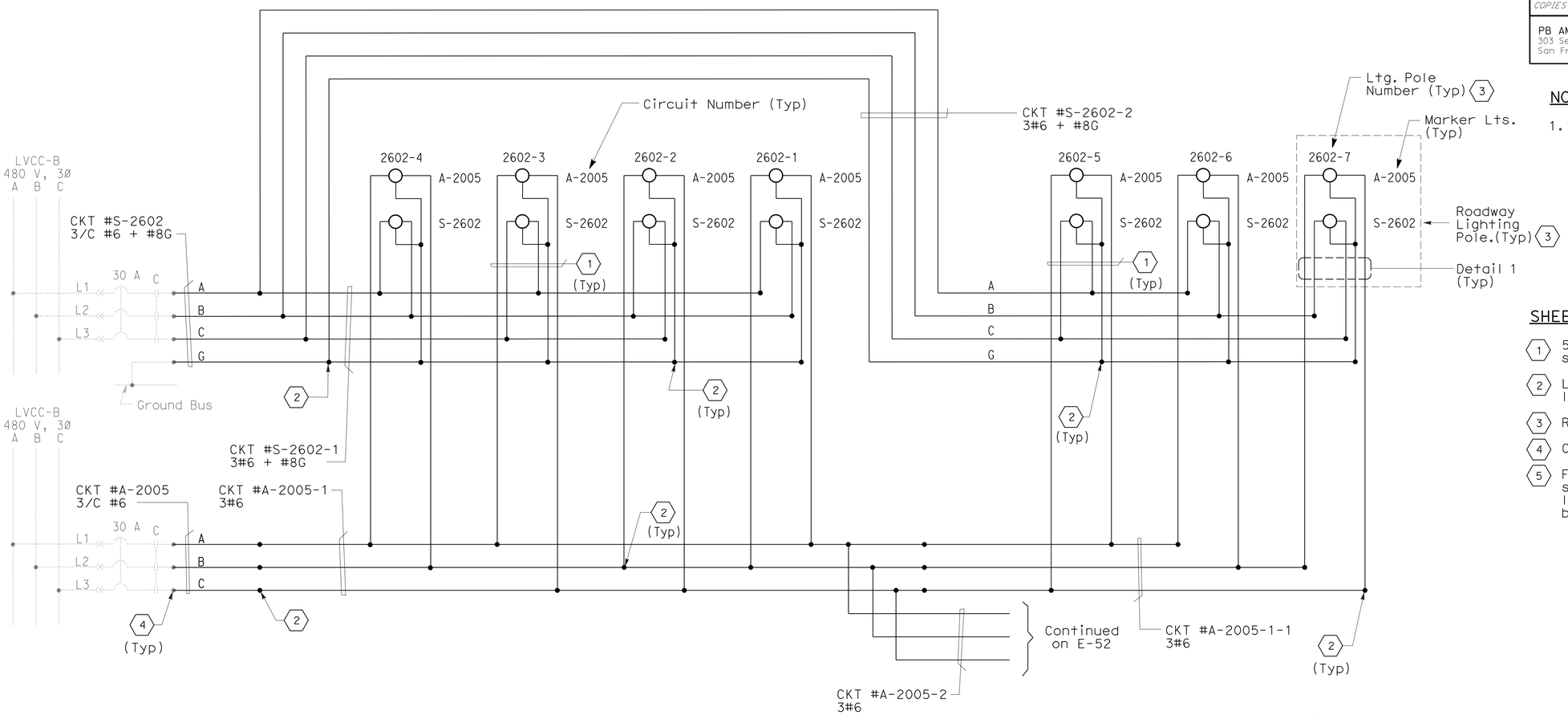

480 V ROADWAY LIGHTING

NOTE:

1. References:
   - For LVCC-B single line diagram, see sheet E-136.
   - For lighting pole schedule, see sheet E-57.
   - For conduit and tray, cable and circuit schedules, see sheets starting at E-205.

SHEET NOTES:

1. 5#10 AWG single conductors, see Detail 1.
2. Loop conductors inside PB-LTG, located in barrier for splicing.
3. Roadway Lighting Pole, see sheet E-39.
4. Conductors spliced inside 600 V cell.
5. For type and size of inline fusing, see Standard Plans. Locate inside lighting pole junction box at the base of each roadway lighting pole.

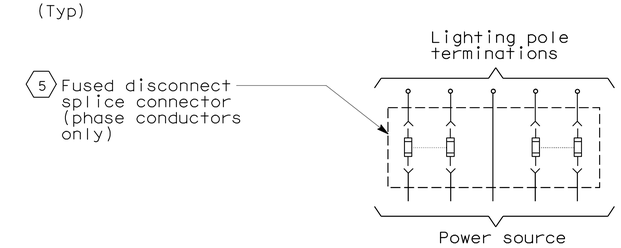

DETAIL-1

(Typ FOR EACH Ltg POLE)

DETAILS
ROADWAY AND GIRDER LEVEL EASTBOUND
(480 V ROADWAY LIGHTING WIRING DIAGRAM)

NO SCALE

THIS PLAN IS ACCURATE FOR ELECTRICAL WORK ONLY.

E-53

STATE OF CALIFORNIA - DEPARTMENT OF TRANSPORTATION
Caltrans

CONSULTANT FUNCTIONAL SUPERVISOR: BRADY NADELL
CALCULATED-DESIGNED BY: JEFFRI HALIM
CHECKED BY: DAVID OTO
REVISED BY
DATE REVISED

LAST REVISION 08-17-09
DATE PLOTTED => 06-OCT-2011
TIME PLOTTED => 06:50

Dist	COUNTY	ROUTE	KILOMETER POST TOTAL PROJECT	SHEET No.	TOTAL SHEETS
04	Ala	80	1.6/2.7	244	744

REGISTERED ELECTRICAL ENGINEER 05/02/11

PLANS APPROVAL DATE 10-3-11

REGISTERED PROFESSIONAL ENGINEER DAVID H. OTO No. 10699 Exp. 06/30/2013 ELECTRICAL STATE OF CALIFORNIA

THE STATE OF CALIFORNIA OR ITS OFFICERS OR AGENTS SHALL NOT BE RESPONSIBLE FOR THE ACCURACY OR COMPLETENESS OF ELECTRONIC COPIES OF THIS PLAN SHEET.

PB AMERICAS, Inc.
303 Second St., Suite 700N
San Francisco, CA 94107-1317

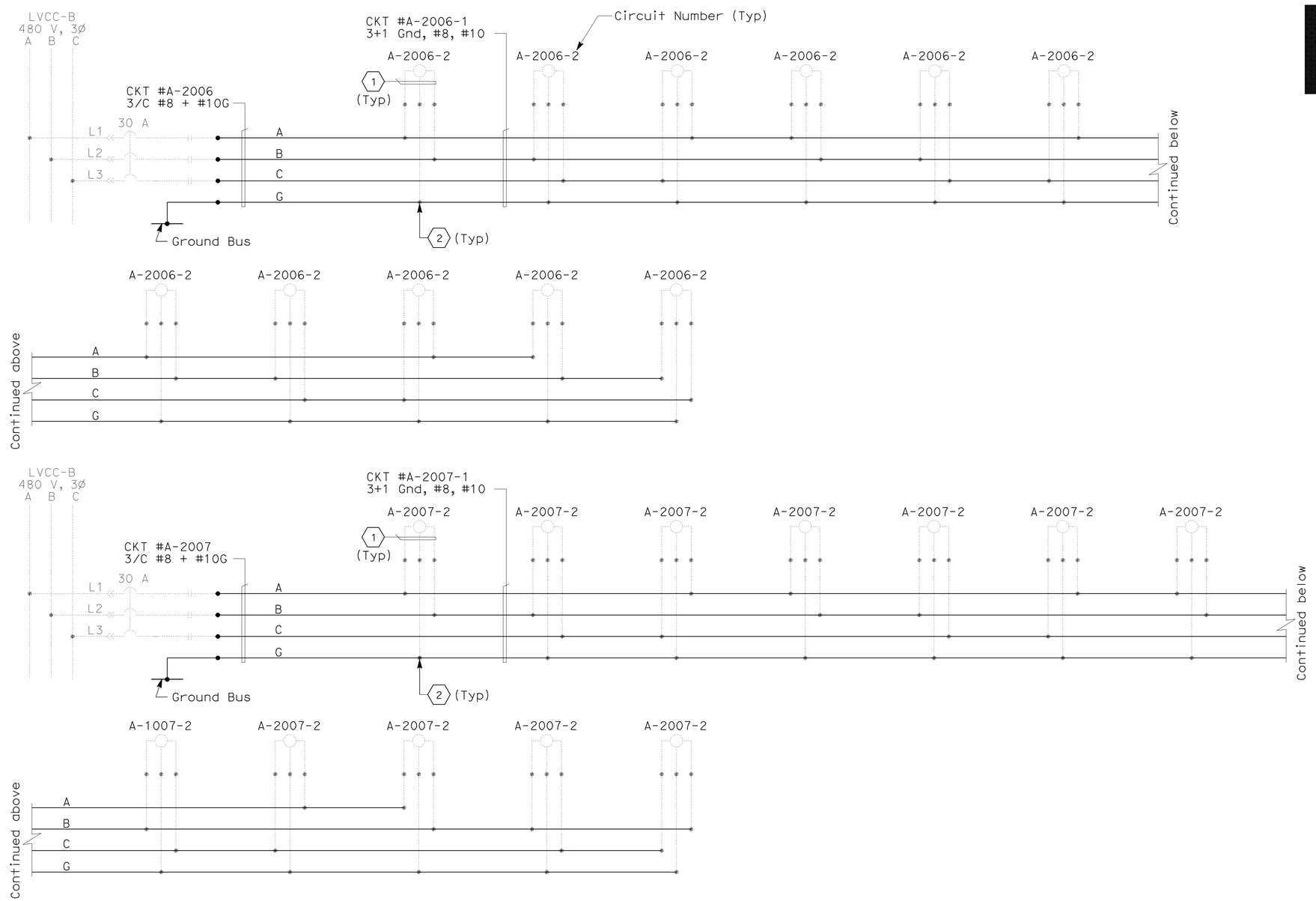

NOTE:

1. References:
   - For LVCC-B single line diagram, see sheet E-136.
   - For future light pipe plans, see sheets E-8 through E-11 and also see sheets E-62 through E-64.
   - For conduit and tray, cable and circuit schedules, see sheets starting at E-205.

SHEET NOTES:

(1) 3#10 AWG single conductors.

(2) Provide a loop conductors inside pull box PB-LTG for future connections to light pipe.

DETAILS
ROADWAY AND GIRDER LEVEL EASTBOUND (480 V LIGHT PIPE WIRING DIAGRAMS)

NO SCALE

THIS PLAN IS ACCURATE FOR ELECTRICAL WORK ONLY.

E-54

REVISED BY	DATE REVISED

CALCULATED-DESIGNED BY: JEFFRI HALIM
CHECKED BY: DAVID OTO
CONSULTANT FUNCTIONAL SUPERVISOR: BRADY NADELL

STATE OF CALIFORNIA - DEPARTMENT OF TRANSPORTATION

LAST REVISION 08-17-09 | DATE PLOTTED => 06-OCT-2011 | TIME PLOTTED => 06:50

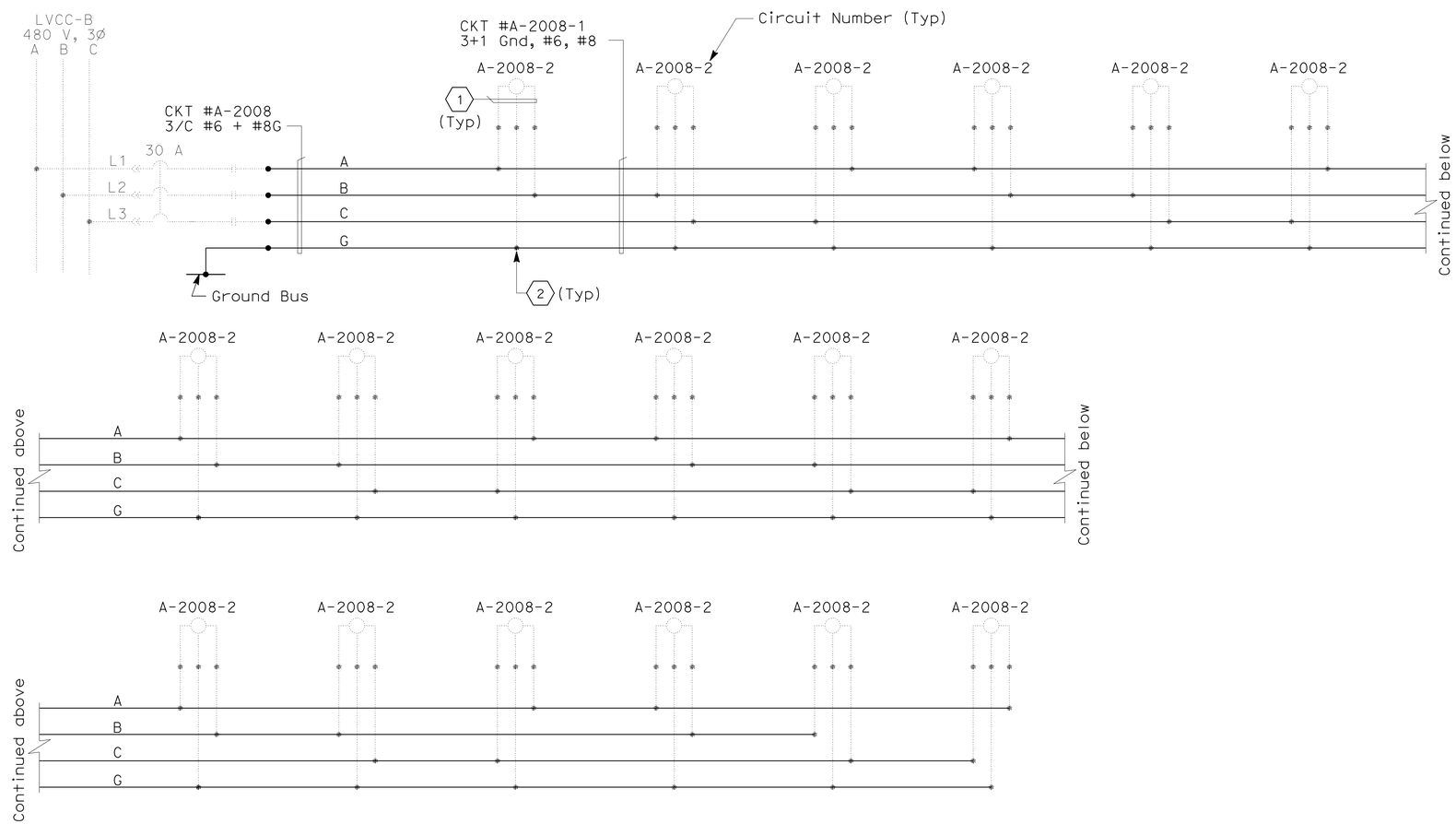

Dist	COUNTY	ROUTE	KILOMETER POST TOTAL PROJECT	SHEET No.	TOTAL SHEETS
04	Ala	80	1.6/2.7	245	744

05/02/11
REGISTERED ELECTRICAL ENGINEER

10-3-11
PLANS APPROVAL DATE

REGISTERED PROFESSIONAL ENGINEER
DAVID H. OTO
No. 10699
Exp. 06/30/2013
ELECTRICAL
STATE OF CALIFORNIA

THE STATE OF CALIFORNIA OR ITS OFFICERS OR AGENTS SHALL NOT BE RESPONSIBLE FOR THE ACCURACY OR COMPLETENESS OF ELECTRONIC COPIES OF THIS PLAN SHEET.

PB AMERICAS, Inc.
303 Second St., Suite 700N
San Francisco, CA 94107-1317

NOTE:

1. References:
   - For LVCC-B single line diagram, see sheet E-136.
   - For future light pipe plans, see sheets E-8 through E-11 and also see sheets E-62 through E-64.
   - For conduit and tray, cable and circuit schedules, see sheets starting at E-205.

SHEET NOTES:

1. 3#10 AWG single conductors.
2. Provide a loop conductors inside pull box PB-LTG for future connections to light pipe.

DETAILS
ROADWAY AND GIRDER LEVEL EASTBOUND (480 V LIGHT PIPE WIRING DIAGRAMS)
NO SCALE

THIS PLAN IS ACCURATE FOR ELECTRICAL WORK ONLY.

E-55

STATE OF CALIFORNIA - DEPARTMENT OF TRANSPORTATION
Caltrans

CONSULTANT FUNCTIONAL SUPERVISOR: BRADY NADELL
CALCULATED-DESIGNED BY: JEFFRI HALIM
CHECKED BY: DAVID OTO
REVISED BY
DATE REVISED

LAST REVISION 08-17-09
DATE PLOTTED => 06-OCT-2011
TIME PLOTTED => 06:50

Dist	COUNTY	ROUTE	KILOMETER POST TOTAL PROJECT	SHEET No.	TOTAL SHEETS
04	Ala	80	1.6/2.7	246	744

REGISTERED ELECTRICAL ENGINEER 05/02/11

10-3-11
PLANS APPROVAL DATE

REGISTERED PROFESSIONAL ENGINEER DAVID H. OTO No. 10699 Exp. 06/30/2013 ELECTRICAL STATE OF CALIFORNIA

THE STATE OF CALIFORNIA OR ITS OFFICERS OR AGENTS SHALL NOT BE RESPONSIBLE FOR THE ACCURACY OR COMPLETENESS OF ELECTRONIC COPIES OF THIS PLAN SHEET.

PB AMERICAS, Inc.
303 Second St., Suite 700N
San Francisco, CA 94107-1317

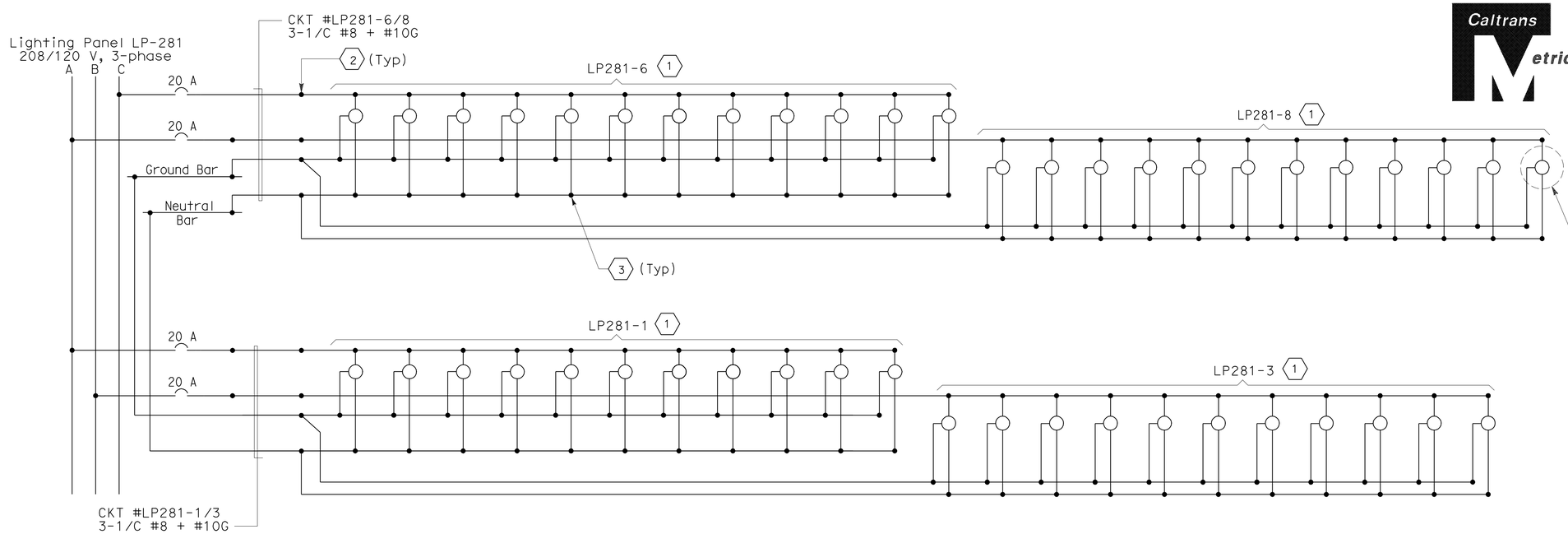

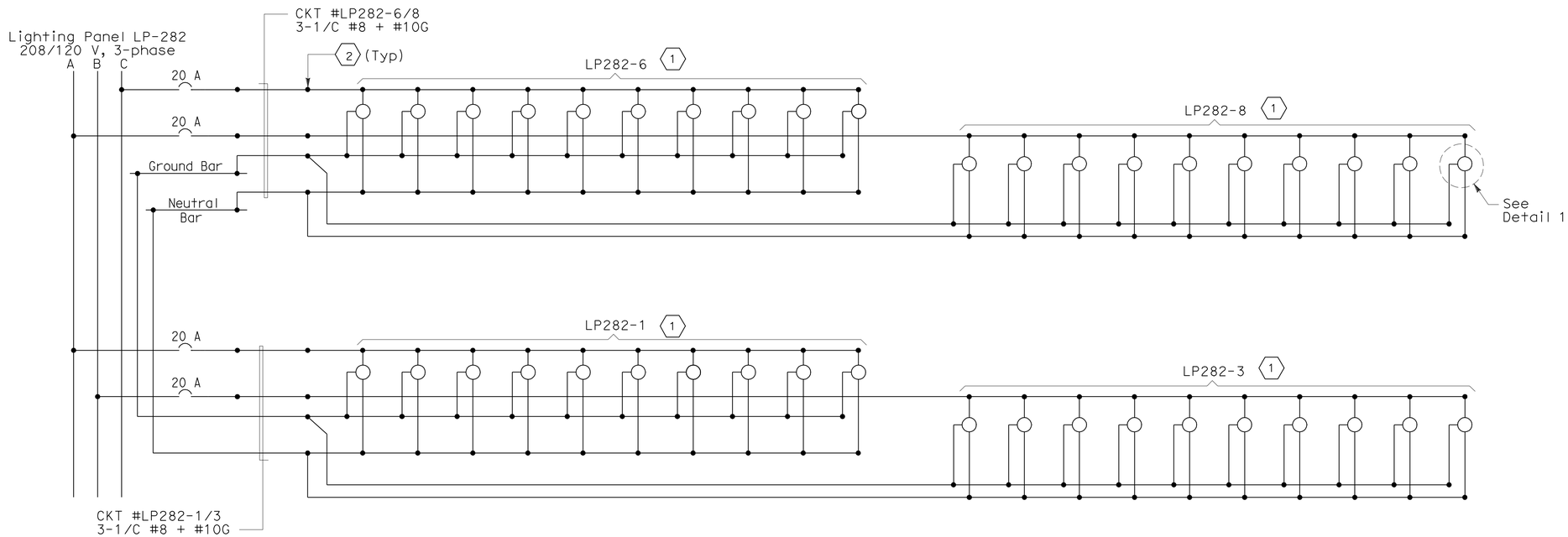

NOTE:

1. References:
   - For Bike path fixture schedule, see sheet E-57.
   - For panel schedule of lighting panels LP-281 and LP-282, see sheet E-51.
   - For conduit and tray, cable and circuit schedules, see sheets starting at E-205.

SHEET NOTES:

1. 2#12 + #12G
2. Conductors spliced inside PB-LTG located in barrier.
3. Conductors spliced inside PB-LTG located next to Bike Path.
4. Provide in-line fused disconnect, splice-connector (ungrounded line conductor only) located inside bike path lighting rail.

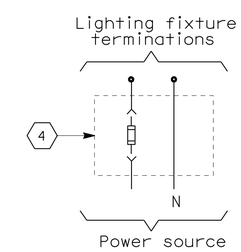

DETAIL-1
IN-LINE FUSING
(Typ for each Lighting fixture)

120 V BIKE PATH LIGHTING

DETAILS
ROADWAY AND GIRDER LEVEL EASTBOUND (120 V BIKE PATH LIGHTING WIRING DIAGRAMS)
NO SCALE

THIS PLAN IS ACCURATE FOR ELECTRICAL WORK ONLY.

STATE OF CALIFORNIA - DEPARTMENT OF TRANSPORTATION
Caltrans
CONSULTANT FUNCTIONAL SUPERVISOR BRADY NADELL
CALCULATED-DESIGNED BY JEFFRI HALIM
CHECKED BY DAVID OTO
REVISED BY
DATE REVISED

LAST REVISION 08-17-09
DATE PLOTTED => 06-OCT-2011
TIME PLOTTED => 06:50

Dist	COUNTY	ROUTE	KILOMETER POST TOTAL PROJECT	SHEET No.	TOTAL SHEETS
04	Ala	80	1.6/2.7	247	744

05/02/11
REGISTERED ELECTRICAL ENGINEER

10-3-11
PLANS APPROVAL DATE

REGISTERED PROFESSIONAL ENGINEER
DAVID H. OTO
No. 10699
Exp. 06/30/2013
ELECTRICAL
STATE OF CALIFORNIA

THE STATE OF CALIFORNIA OR ITS OFFICERS OR AGENTS SHALL NOT BE RESPONSIBLE FOR THE ACCURACY OR COMPLETENESS OF ELECTRONIC COPIES OF THIS PLAN SHEET.

PB AMERICAS, Inc.
303 Second St., Suite 700N
San Francisco, CA 94107-1317

LIGHTING POLE LOCATION EASTBOUND

Circuit Number	Pole Number	Location: Station	Location: Roadway side	
S-2601	2601-1	82+86	North	Frame 1 (1)(2)
A-2005				
S-2601	2601-2	83+10	North	
A-2005				
S-2601	2601-3	83+35	North	
A-2005				
S-2601	2601-4	83+61	North	
A-2005				
S-2601	2601-5	83+86	North	
A-2005				
S-2601	2601-6	84+08	North	
A-2005				
S-2601	2601-7	84+29	North	
A-2005				
S-2601	2601-8	84+53	North	
A-2005				
S-2602	2602-1	84+77	North	Frame 2 (1)
A-2005				
S-2602	2602-2	85+01	North	
A-2005				
S-2602	2602-3	85+25	North	
A-2005				
S-2602	2602-4	85+47	North	
A-2005				
S-2602	2602-5	85+69	North	
A-2005				
S-2602	2602-6	85+87	North	
A-2005				
S-2602	2602-7	86+09	North	
A-2005				

BIKE PATH FIXTURE SCHEDULE

Location	Light Fixture Type	Number/ Wattage	Remarks (Mounting Provisions)
Bike Path Structure	OSB-1	1-27 W	Railing mounted

NOTE:

1. References:
   - For circuit numbers, see Single Line Diagrams sheet E-136.
   - For pole numbers, see Roadway/Girder Level Plans E-8 through E-11.
   - For fixture descriptions, see Fixture Specification.
   - For 120 V bike path lighting location plan, see sheets E-8 through E-11.
   - For conduit and tray, cable and circuit schedules, see sheets starting at E-205.

SHEET NOTES:

(1) The roadway lighting poles are furnished by the State, installed by this Contractor. See sheets E-39 and E-60 for details.

(2) Lighting pole foundation location was installed in previous contract. Locations are shown for reference only.

DETAILS
ROADWAY AND GIRDER LEVEL EASTBOUND (LIGHTING POLE LOCATION AND BIKE PATH LIGHTING FIXTURE SCHEDULES)
NO SCALE

E-57

THIS PLAN IS ACCURATE FOR ELECTRICAL WORK ONLY.

ALL DIMENSIONS ARE IN METERS UNLESS OTHERWISE SHOWN

REVISED BY	DATE REVISED

CALCULATED-DESIGNED BY: JEFFRI HALIM
CHECKED BY: DAVID OTO
CONSULTANT FUNCTIONAL SUPERVISOR: BRADY NADELL

STATE OF CALIFORNIA - DEPARTMENT OF TRANSPORTATION
Caltrans

LAST REVISION 08-17-09
DATE PLOTTED => 06-OCT-2011
TIME PLOTTED => 06:51

Dist	COUNTY	ROUTE	KILOMETER POST TOTAL PROJECT	SHEET No.	TOTAL SHEETS
04	Ala	80	1.6/2.7	248	744

05/02/11
REGISTERED ELECTRICAL ENGINEER

10-3-11
PLANS APPROVAL DATE

REGISTERED PROFESSIONAL ENGINEER
DAVID H. OTO
No. 10699
Exp. 06/30/2013
ELECTRICAL
STATE OF CALIFORNIA

THE STATE OF CALIFORNIA OR ITS OFFICERS OR AGENTS SHALL NOT BE RESPONSIBLE FOR THE ACCURACY OR COMPLETENESS OF ELECTRONIC COPIES OF THIS PLAN SHEET.

PB AMERICAS, Inc.
303 Second St., Suite 700N
San Francisco, CA 94107-1317

Caltrans Metric

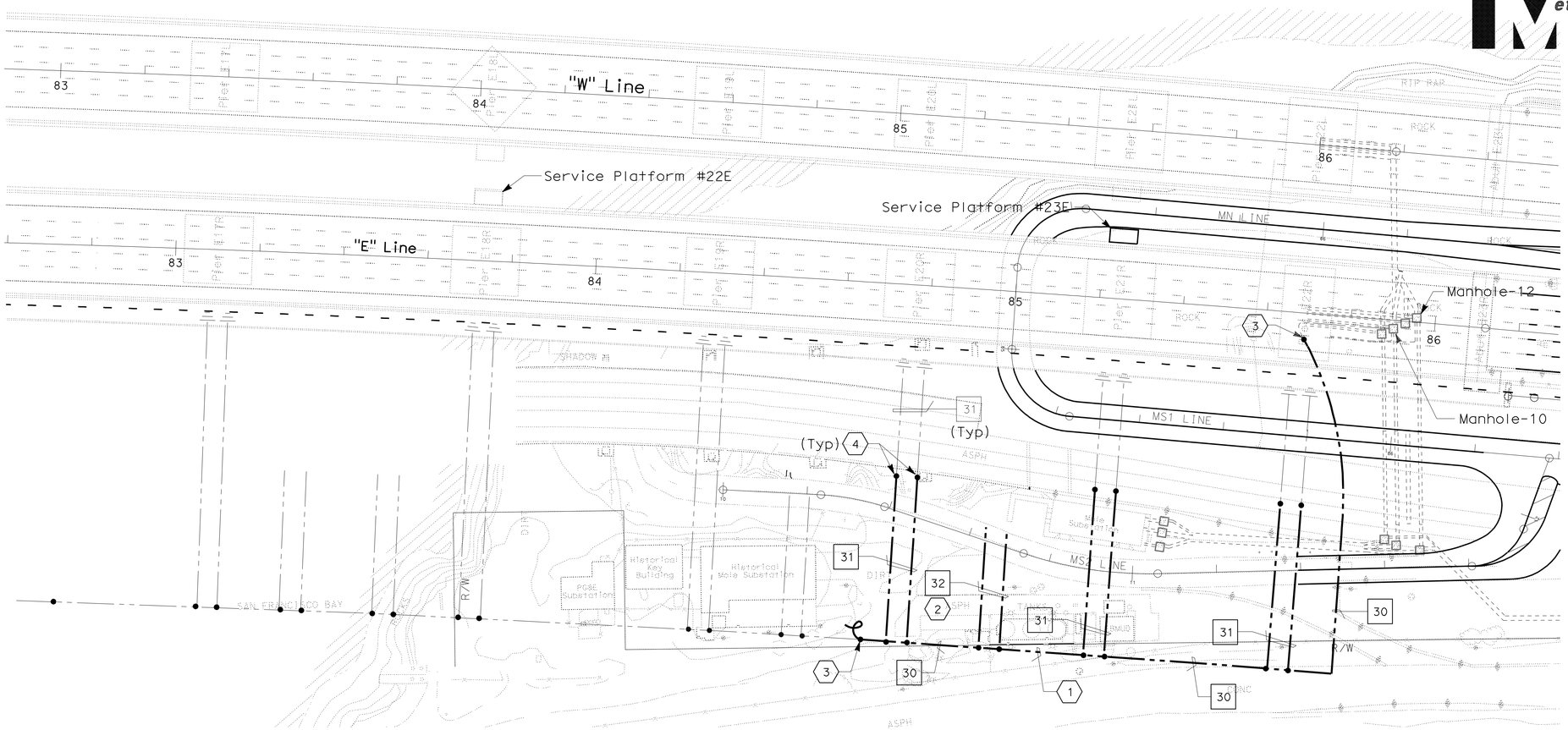

PLAN

SHEET NOTES:

1. Install one separate 500 kcmil bare copper system grounding conductor in eastbound girder, spanning the entire Oakland Structure. The system-grounding conductor shall be physically attached to the 15 kV raceway system.
2. Each vault and service platform shall be grounded with a #4/0 bare copper conductor.
3. Provide and exothermically weld the 500 kcmil system grounding conductor, at each contract split point, to the adjoining 500 kcmil system existing grounding conductor, installed under a previous contract.
4. Exothermically weld 250 kcmil bare copper ground conductors to the 250 kcmil system existing grounding conductors embedded down the pier columns.

DETAILS
ROADWAY AND GIRDER LEVEL EASTBOUND (GIRDER GROUNDING SYSTEM)
NO SCALE

E-58

THIS PLAN IS ACCURATE FOR ELECTRICAL WORK ONLY.

ALL DIMENSIONS ARE IN METERS UNLESS OTHERWISE SHOWN

STATE OF CALIFORNIA - DEPARTMENT OF TRANSPORTATION
Caltrans

CONSULTANT FUNCTIONAL SUPERVISOR: BRADY NADELL
CALCULATED-DESIGNED BY: JEFFRI HALIM
CHECKED BY: ELLERY LUCAS
REVISED BY
DATE REVISED

LAST REVISION 08-17-09
DATE PLOTTED => 06-OCT-2011
TIME PLOTTED => 06:51

Dist	COUNTY	ROUTE	KILOMETER POST TOTAL PROJECT	SHEET No.	TOTAL SHEETS
04	Ala	80	1.6/2.7	249	744

Caltrans Metric

05/02/11
REGISTERED ELECTRICAL ENGINEER

10-3-11
PLANS APPROVAL DATE

REGISTERED PROFESSIONAL ENGINEER
DAVID H. OTO
No. 10699
Exp. 06/30/2013
ELECTRICAL
STATE OF CALIFORNIA

THE STATE OF CALIFORNIA OR ITS OFFICERS OR AGENTS SHALL NOT BE RESPONSIBLE FOR THE ACCURACY OR COMPLETENESS OF ELECTRONIC COPIES OF THIS PLAN SHEET.

PB AMERICAS, Inc.
303 Second St., Suite 700N
San Francisco, CA 94107-1317

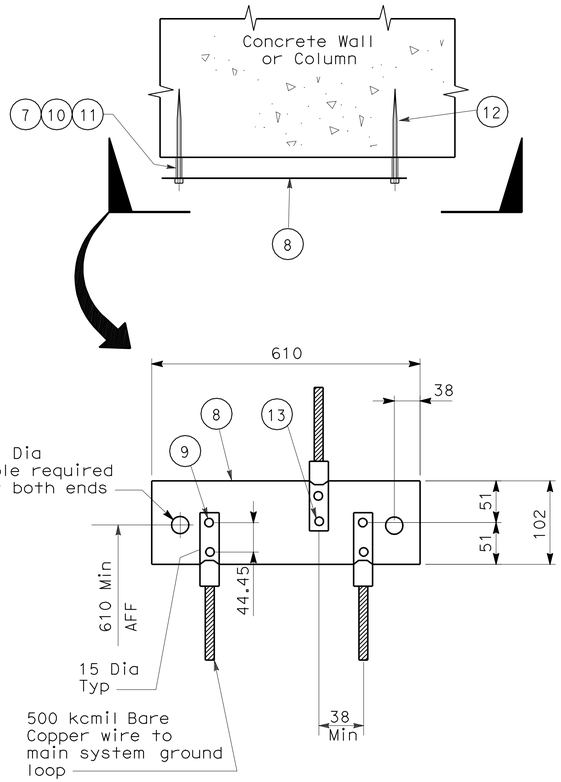

COPPER GROUND BAR DETAIL 1

NOT TO SCALE

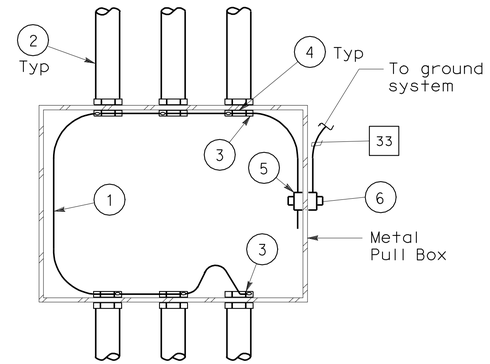

PULL BOX GROUNDING DETAIL 2

NOT TO SCALE

LIST OF MATERIALS

ITEM No.	DESCRIPTION	REMARKS
1	#6 AWG Bare Copper Wire	
2	Galvanized Rigid Steel Conduit	
3	Insulated Grounding Bushing	
4	Locknut, size as required, both sides	
5	Cable to Pull Box Ground Connector	
6	Ground Cable Connector	
7	Pipe Spacer 19 Dia x 100	
8	Copper Ground Bar, 6.350 x 102 x 610	
9	2-Hole Copper Compression Terminal Lug	
10	Insulator	
11	Insulator Mounting Base	
12	Cinch Anchor, size as required	
13	Silicon bronze bolt with nuts & lock washers	

DETAILS
ROADWAY AND GIRDER LEVEL EASTBOUND (TYPICAL GROUNDING INSTALLATION)

NO SCALE

E-59

THIS PLAN IS ACCURATE FOR ELECTRICAL WORK ONLY.

ALL DIMENSIONS ARE IN MILLIMETERS UNLESS OTHERWISE SHOWN

STATE OF CALIFORNIA - DEPARTMENT OF TRANSPORTATION
Caltrans

CONSULTANT FUNCTIONAL SUPERVISOR: BRADY NADELL
CALCULATED-DESIGNED BY: JEFFRI HALIM
CHECKED BY: DAVID OTO
REVISED BY
DATE REVISED

LAST REVISION 08-17-09
DATE PLOTTED => 06-OCT-2011
TIME PLOTTED => 06:51

Dist	COUNTY	ROUTE	KILOMETER POST TOTAL PROJECT	SHEET No.	TOTAL SHEETS
04	Ala	80	1.6/2.7	250	744

REGISTERED CIVIL ENGINEER DATE

10-3-11
PLANS APPROVAL DATE

REGISTERED PROFESSIONAL ENGINEER T.W. SPARKS No. E16039 Exp. 9-30-11 ELECTRICAL STATE OF CALIFORNIA

THE STATE OF CALIFORNIA OR ITS OFFICERS OR AGENTS SHALL NOT BE RESPONSIBLE FOR THE ACCURACY OR COMPLETENESS OF ELECTRONIC COPIES OF THIS PLAN SHEET.

T.Y. LIN / MOFFATT & NICHOL
TWO HARRISON STREET, SUITE 500
SAN FRANCISCO, CA 94105

Caltrans Metric

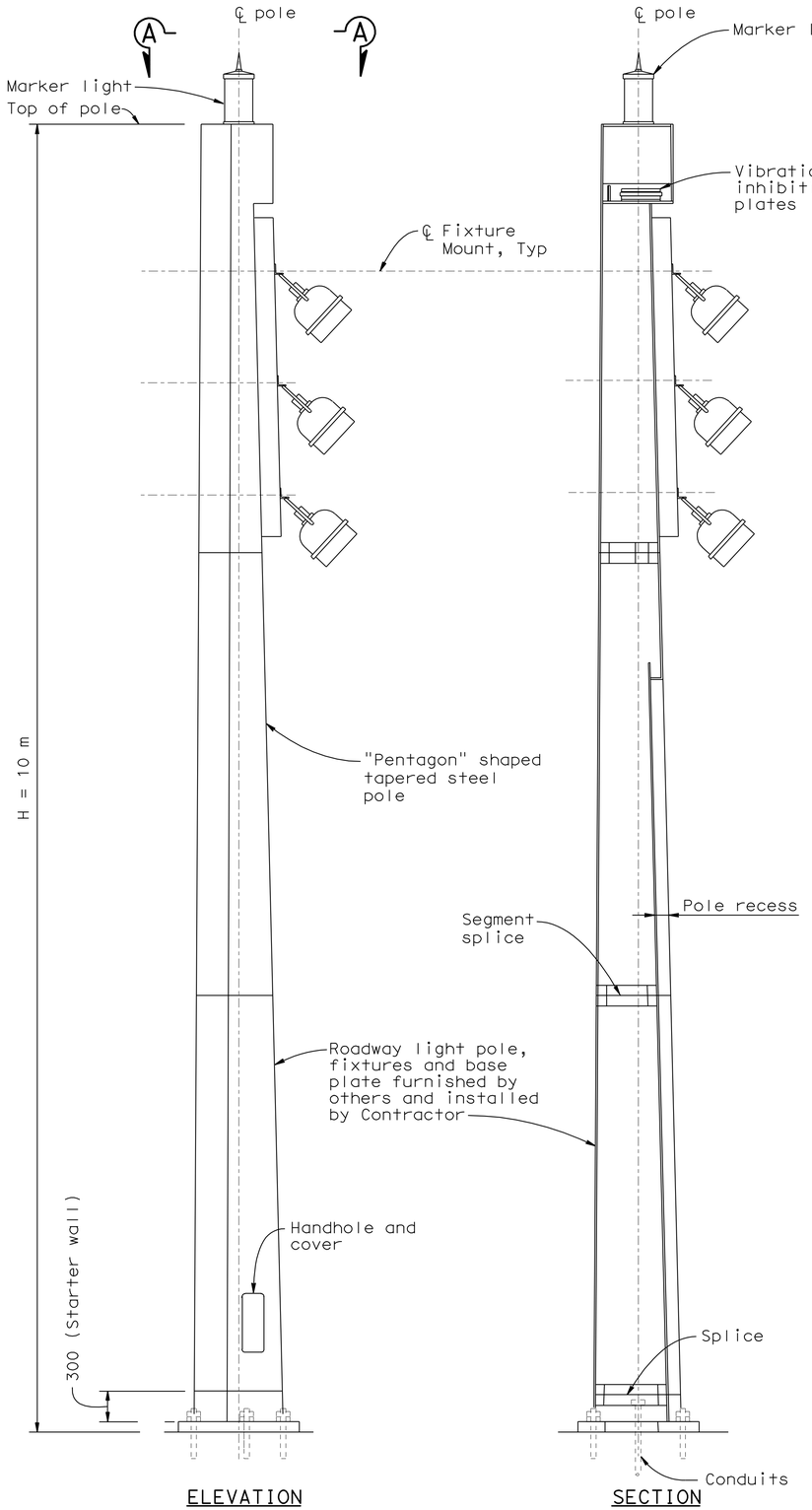

POLE DETAIL
Not to scale

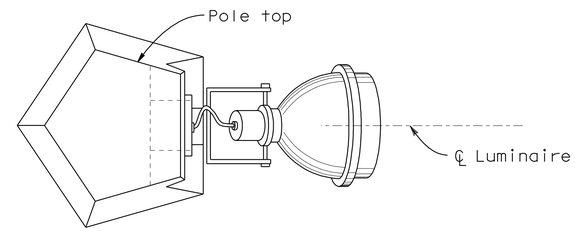

SECTION A-A
Not to scale

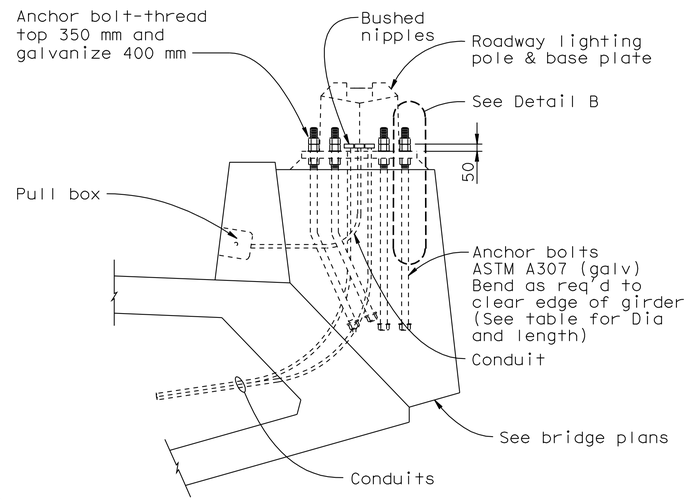

TYPICAL ANCHORAGE DETAIL
AT BRIDGE STRUCTURES
Not to scale

POLE HEIGHT "H"	ANCHORAGE		
	ANCHOR BOLT CIRCLE RADIUS= R(mm)	BASE PLATE Dia(mm) x THICKNESS (mm)	ANCHOR BOLTS NUMBER(EA) x Dia(mm) x LENGTH(mm)
10 m	275	700 x 45	5-32

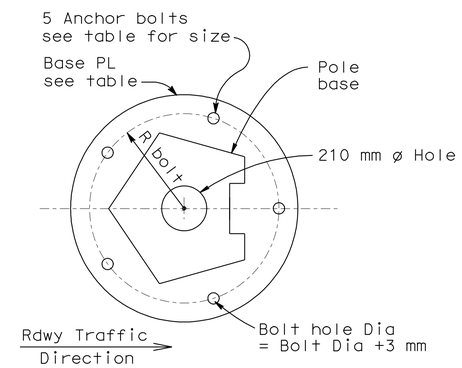

TYPICAL BASE PLATE
Not to scale

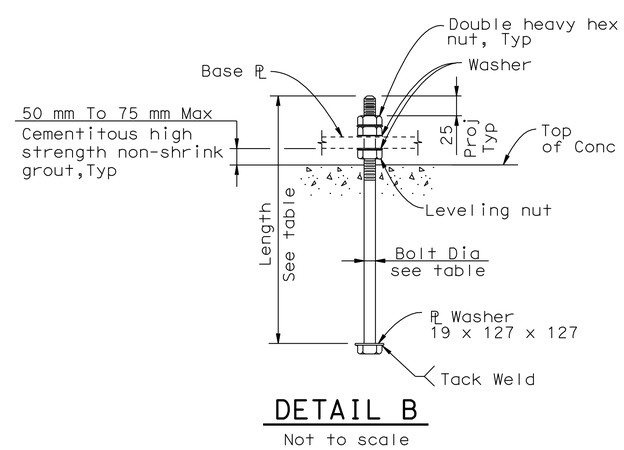

DETAIL B
Not to scale

Note:

The Contractor to furnish and install anchor bolts, leveling nuts, double heavy hex nuts and washers. Furnish and install temporary removable timber template (to match permanent baseplate) on concrete anchorage and provide temporary protection to exposed bolt threads prior to installing roadway light pole.

DETAILS
ROADWAY AND GIRDER LEVEL EASTBOUND (TYPICAL ROADWAY LIGHTING POLE AND ANCHORAGE)
NO SCALE

THIS PLAN IS ACCURATE FOR ELECTRICAL WORK ONLY.

ALL DIMENSIONS ARE IN MILLIMETERS UNLESS OTHERWISE SHOWN.

E-60

REVISED BY	DATE REVISED
JNB	3/17/11

CALCULATED-DESIGNED BY: GAM
CHECKED BY: TYL
CONSULTANT FUNCTIONAL SUPERVISOR: AL ELY

STATE OF CALIFORNIA - DEPARTMENT OF TRANSPORTATION
Caltrans

LAST REVISION
DATE PLOTTED => 06-OCT-2011
TIME PLOTTED => 08:51

Dist	COUNTY	ROUTE	KILOMETER POST TOTAL PROJECT	SHEET No.	TOTAL SHEETS
04	Ala	80	1.6/2.7	251	744

REGISTERED ELECTRICAL ENGINEER — DATE

10-3-11
PLANS APPROVAL DATE

REGISTERED PROFESSIONAL ENGINEER T. W. SPARKS No. E16039 Exp. 9-30-11 ELECTRICAL STATE OF CALIFORNIA

THE STATE OF CALIFORNIA OR ITS OFFICERS OR AGENTS SHALL NOT BE RESPONSIBLE FOR THE ACCURACY OR COMPLETENESS OF ELECTRONIC COPIES OF THIS PLAN SHEET.

T.Y. LIN / MOFFATT & NICHOL
TWO HARRISON STREET, SUITE 500
SAN FRANCISCO, CA 94105

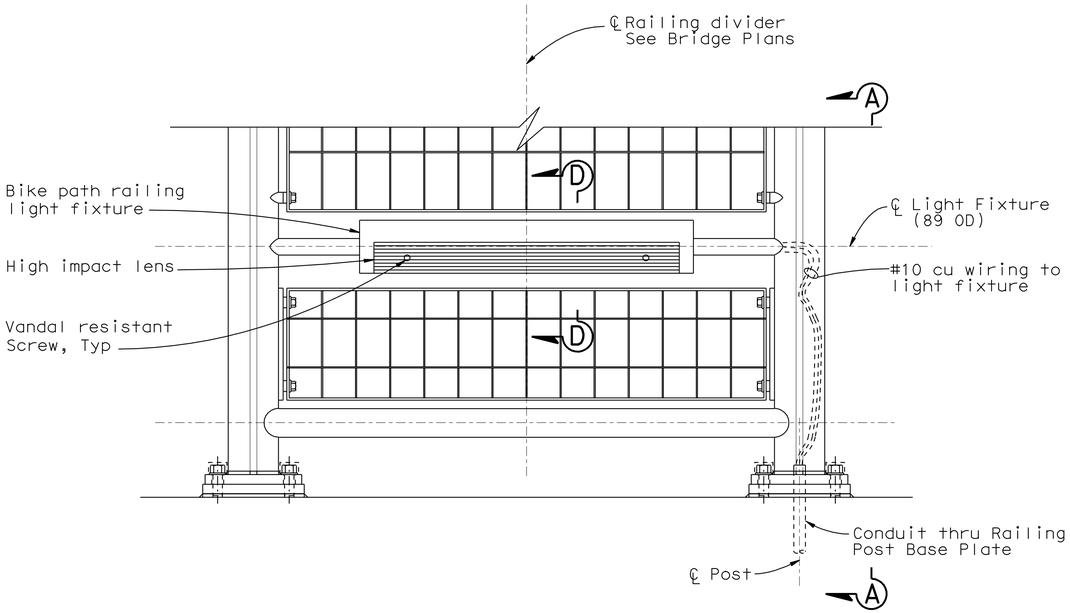

ELEVATION
1:5

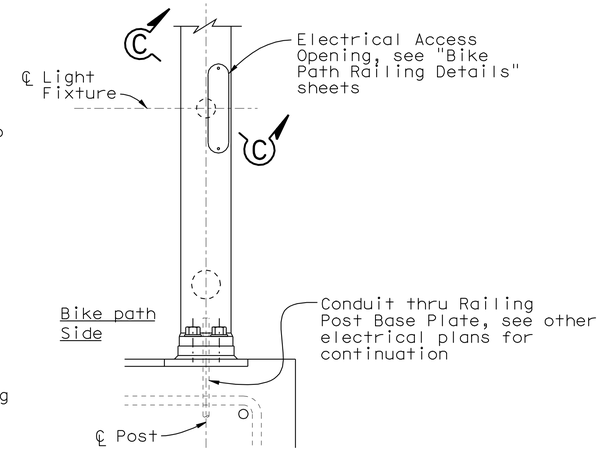

SECTION A-A
1:5

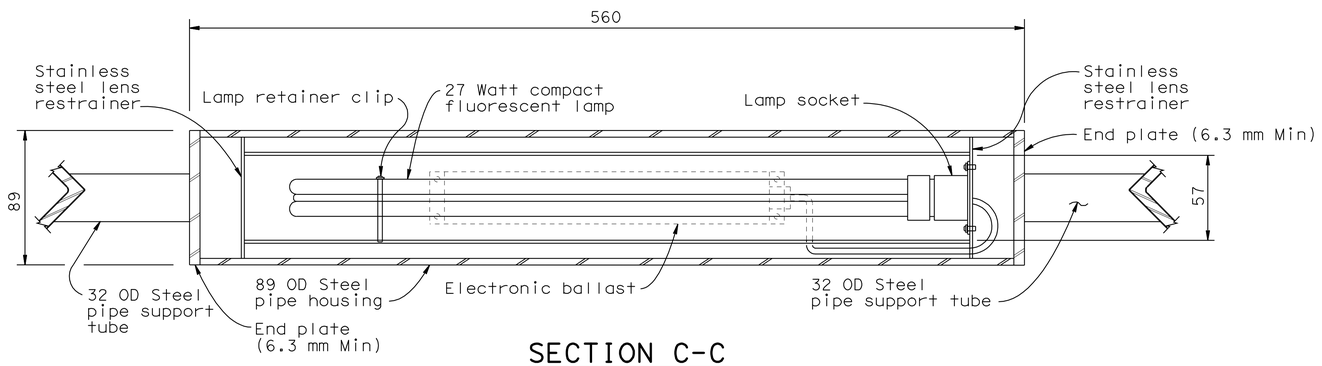

SECTION C-C
1:2

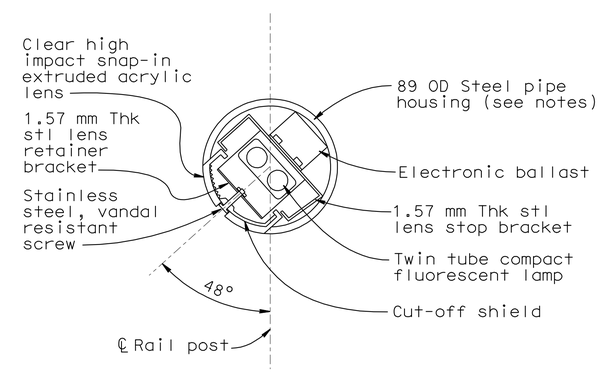

SECTION D-D
1:2

NOTES:

1. All metal (except stainless steel) parts of railing light assembly shall be coated.
2. Refer to structural plans for railing details.
3. Light fixtures shall be parallel to top of bike path.
4. Light fixture support tube shall be welded to vertical posts.
5. All exposed welds shall be ground smooth.

THIS PLAN IS ACCURATE FOR ELECTRICAL WORK ONLY.

ALL DIMENSIONS ARE IN MILLIMETERS UNLESS OTHERWISE SHOWN.

DETAILS
ROADWAY AND GIRDER LEVEL EASTBOUND (TYPICAL BIKE PATH LIGHTING INSTALLATION)

NO SCALE

E-61

REVISED BY	DATE REVISED
JNB	3/17/11
JNB	5/16/08
JNB	1/31/08

CALCULATED-DESIGNED BY: GAM
CHECKED BY: TYL
CONSULTANT FUNCTIONAL SUPERVISOR: AL ELY

STATE OF CALIFORNIA - DEPARTMENT OF TRANSPORTATION
Caltrans

LAST REVISION 05-19-08 | DATE PLOTTED => 06-OCT-2011 | TIME PLOTTED => 06:51

Dist	COUNTY	ROUTE	KILOMETER POST TOTAL PROJECT	SHEET No.	TOTAL SHEETS
04	Ala	80	1.6/2.7	252	744

REGISTERED CIVIL ENGINEER DATE

10-3-11
PLANS APPROVAL DATE

REGISTERED PROFESSIONAL ENGINEER T. W. SPARKS No. E16039 Exp. 9-30-11 ELECTRICAL STATE OF CALIFORNIA

THE STATE OF CALIFORNIA OR ITS OFFICERS OR AGENTS SHALL NOT BE RESPONSIBLE FOR THE ACCURACY OR COMPLETENESS OF ELECTRONIC COPIES OF THIS PLAN SHEET.

T.Y. LIN / MOFFATT & NICHOL
TWO HARRISON STREET, SUITE 500
SAN FRANCISCO, CA 94105

Caltrans Metric

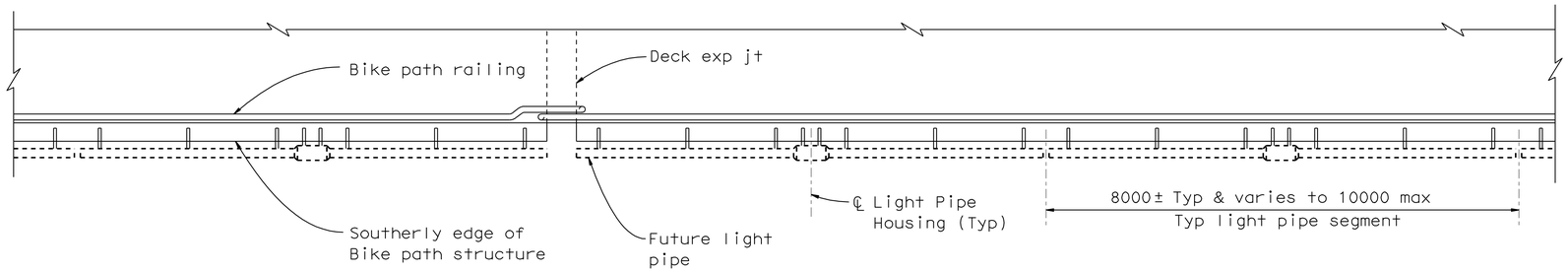

PARTIAL PLAN AT SOUTH SIDE OF STRUCTURE

1:50

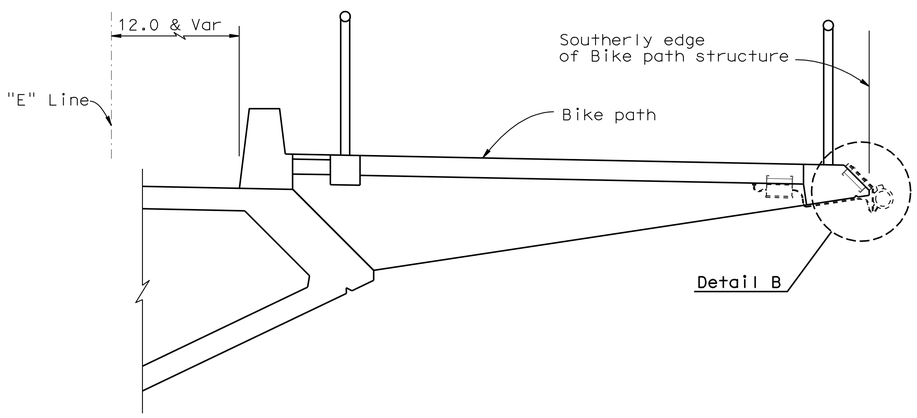

TYPICAL SECTION AT OAKLAND APPROACH STRUCTURE

1:30

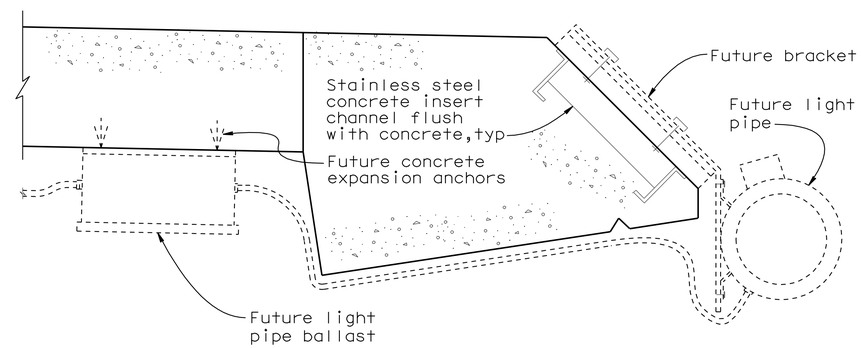

DETAIL B

No Scale

DETAILS

ROADWAY AND GIRDER LEVEL EASTBOUND (TYPICAL LIGHT PIPE INSTALLATION 1)

SCALE AS NOTED

THIS PLAN IS ACCURATE FOR ELECTRICAL WORK ONLY.

ALL DIMENSIONS ARE IN MILLIMETERS UNLESS OTHERWISE SHOWN.

E-62

REVISED BY	DATE REVISED
JNB	3/17/11
JNB	1/31/08

CALCULATED-DESIGNED BY: GAM
CHECKED BY: TYL
CONSULTANT FUNCTIONAL SUPERVISOR: AL ELY

STATE OF CALIFORNIA - DEPARTMENT OF TRANSPORTATION
Caltrans

LAST REVISION 00-00-00 | DATE PLOTTED => 06-OCT-2011 | TIME PLOTTED => 06:51

Dist	COUNTY	ROUTE	KILOMETER POST TOTAL PROJECT	SHEET No.	TOTAL SHEETS
04	Ala	80	1.6/2.7	253	744

REGISTERED CIVIL ENGINEER DATE

10-3-11
PLANS APPROVAL DATE

REGISTERED PROFESSIONAL ENGINEER T. W. SPARKS No. E16039 Exp. 9-30-11 ELECTRICAL STATE OF CALIFORNIA

THE STATE OF CALIFORNIA OR ITS OFFICERS OR AGENTS SHALL NOT BE RESPONSIBLE FOR THE ACCURACY OR COMPLETENESS OF ELECTRONIC COPIES OF THIS PLAN SHEET.

T.Y. LIN / MOFFATT & NICHOL
TWO HARRISON STREET, SUITE 500
SAN FRANCISCO, CA 94105

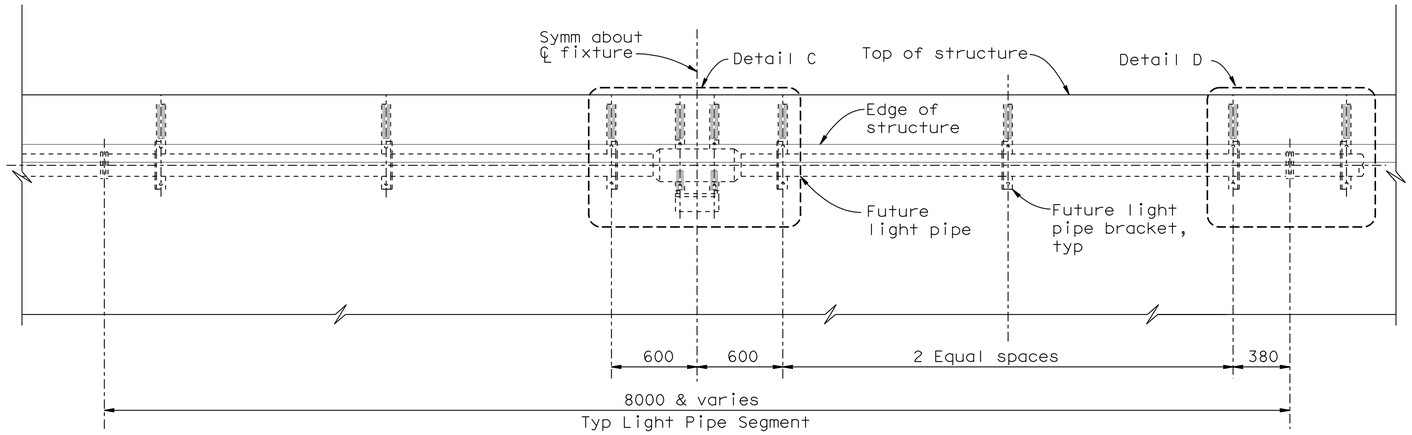

ELEVATION - TYPICAL LIGHT PIPE FIXTURE

1:20

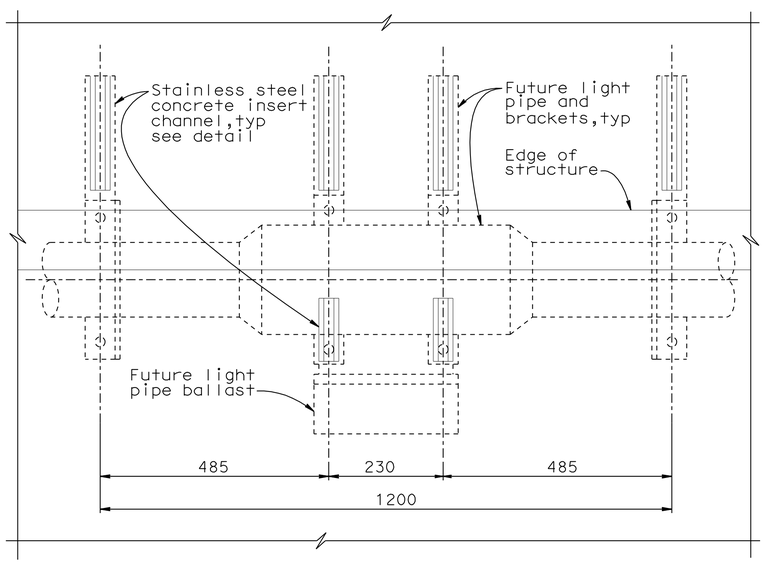

DETAIL C

No Scale

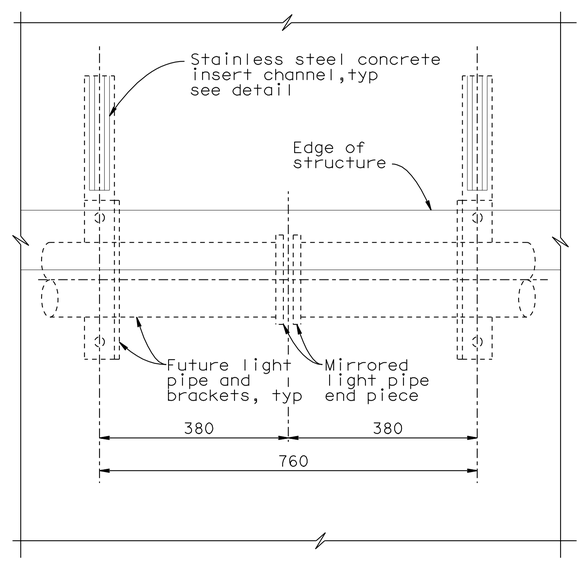

DETAIL D

No Scale

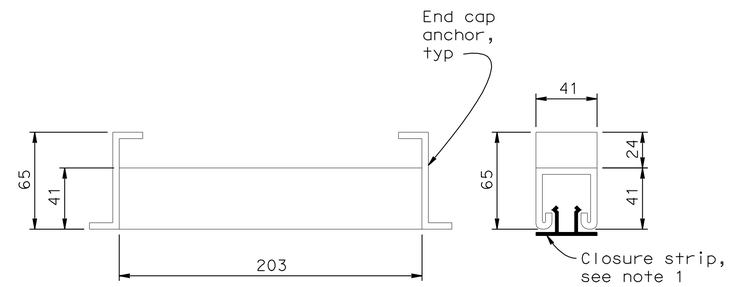

END VIEW

CONCRETE INSERT CHANNEL DETAIL

1:2

NOTE:

1. Install full length, stainless steel closure strips at all concrete insert channels to cover channels until future light pipe is installed.

DETAILS

ROADWAY AND GIRDER LEVEL EASTBOUND (TYPICAL LIGHT PIPE INSTALLATION 2)

SCALE AS NOTED

THIS PLAN IS ACCURATE FOR ELECTRICAL WORK ONLY.

ALL DIMENSIONS ARE IN MILLIMETERS UNLESS OTHERWISE SHOWN.

E-63

REVISED BY	DATE REVISED
JNB	3/17/11
JNB	1/31/08

CALCULATED-DESIGNED BY: GAM
CHECKED BY: TYL
CONSULTANT FUNCTIONAL SUPERVISOR: AL ELY

STATE OF CALIFORNIA - DEPARTMENT OF TRANSPORTATION
Caltrans

LAST REVISION 00-00-00
DATE PLOTTED => 06-OCT-2011
TIME PLOTTED => 08:52

Dist	COUNTY	ROUTE	KILOMETER POST TOTAL PROJECT	SHEET No.	TOTAL SHEETS
04	Ala	80	1.6/2.7	254	744

REGISTERED CIVIL ENGINEER DATE

10-3-11
PLANS APPROVAL DATE

REGISTERED PROFESSIONAL ENGINEER T. W. SPARKS No. E16039 Exp. 9-30-11 ELECTRICAL STATE OF CALIFORNIA

THE STATE OF CALIFORNIA OR ITS OFFICERS OR AGENTS SHALL NOT BE RESPONSIBLE FOR THE ACCURACY OR COMPLETENESS OF ELECTRONIC COPIES OF THIS PLAN SHEET.

T.Y. LIN / MOFFATT & NICHOL
TWO HARRISON STREET, SUITE 500
SAN FRANCISCO, CA 94105

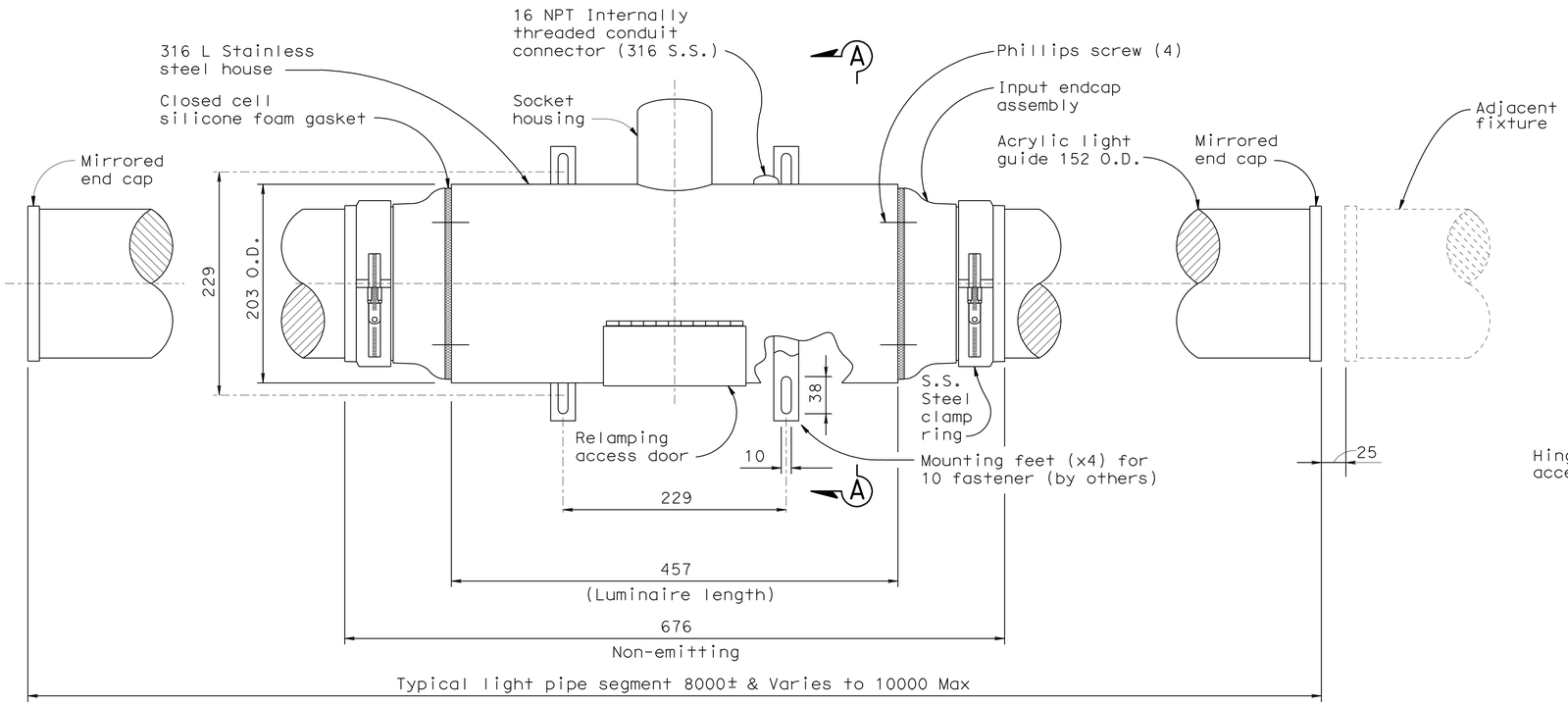

FIXTURE DETAIL

N.I.C. (Future) for reference only

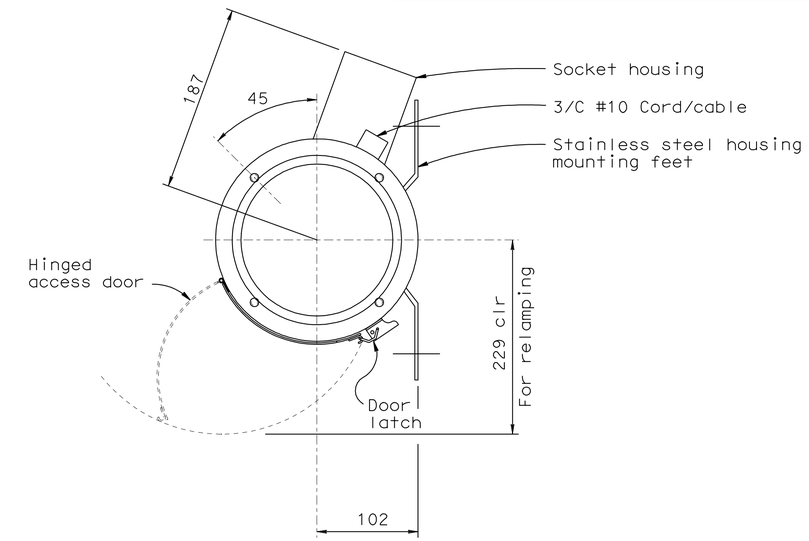

SECTION A-A

N.I.C. (Future) for reference only

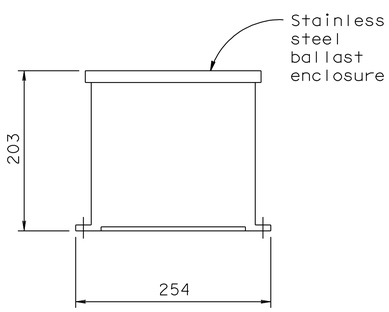

REMOTE BALLAST ELEVATION

N.I.C. (Future) for reference only

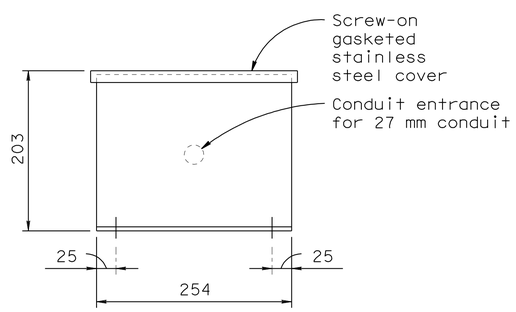

BALLAST END VIEW

N.I.C. (Future) for reference only

Notes

1. Lamp shall be ed-28 metal halide pulse start, 400 watt.
2. Socket: 5 kv rated porcelain mogul based C/W high temp. (200 °C) U.L. listed.

DETAILS

ROADWAY AND GIRDER LEVEL EASTBOUND (TYPICAL LIGHT PIPE INSTALLATION 3)

SCALE AS NOTED

THIS PLAN IS ACCURATE FOR ELECTRICAL WORK ONLY.

ALL DIMENSIONS ARE IN MILLIMETERS UNLESS OTHERWISE SHOWN.

E-64

REVISED BY	DATE REVISED
JNB	3/17/11
JNB	1/31/08

CALCULATED-DESIGNED BY: GAM
CHECKED BY: TYL
CONSULTANT FUNCTIONAL SUPERVISOR: AL ELY

STATE OF CALIFORNIA - DEPARTMENT OF TRANSPORTATION
Caltrans

LAST REVISION 00-00-00 | DATE PLOTTED => 06-OCT-2011 | TIME PLOTTED => 06:52

Dist	COUNTY	ROUTE	KILOMETER POST TOTAL PROJECT	SHEET No.	TOTAL SHEETS
04	Ala	80	1.6/2.7	255	744

REGISTERED CIVIL ENGINEER DATE

10-3-11
PLANS APPROVAL DATE

REGISTERED PROFESSIONAL ENGINEER T.W. SPARKS No. E16039 Exp. 9-30-11 ELECTRICAL STATE OF CALIFORNIA

THE STATE OF CALIFORNIA OR ITS OFFICERS OR AGENTS SHALL NOT BE RESPONSIBLE FOR THE ACCURACY OR COMPLETENESS OF ELECTRONIC COPIES OF THIS PLAN SHEET.

T.Y. LIN / MOFFATT & NICHOL
TWO HARRISON STREET, SUITE 500
SAN FRANCISCO, CA 94105

Caltrans Metric

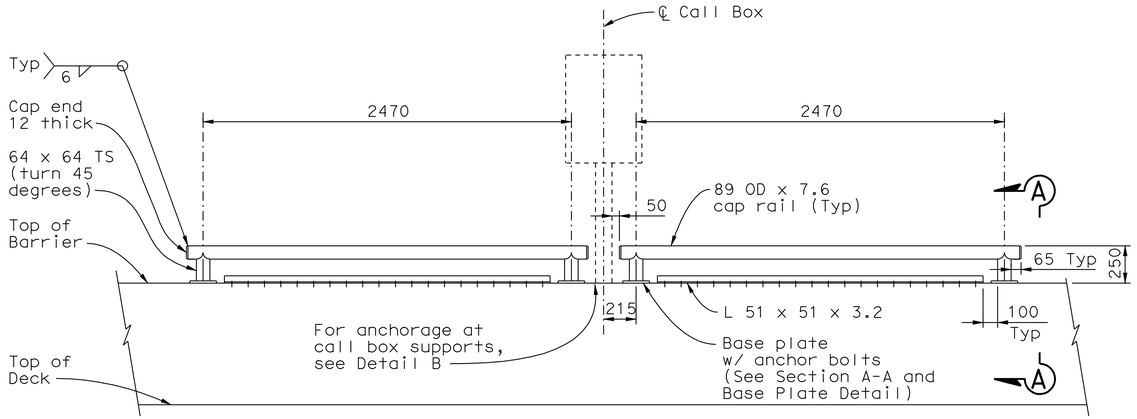

TYPICAL ELEVATION
1:20

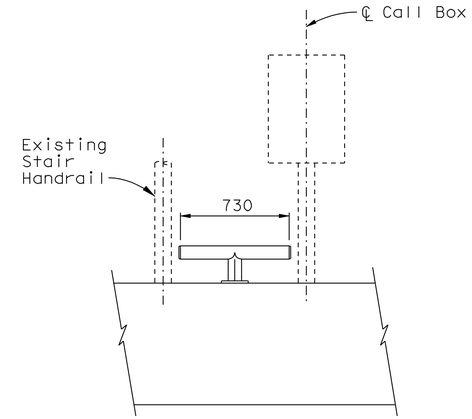

ELEVATION AT SKYWAY EB SUBSTATION STAIRS
1:20

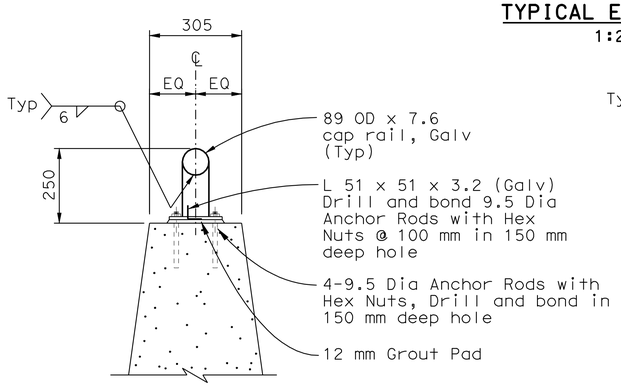

SECTION A-A
1:10

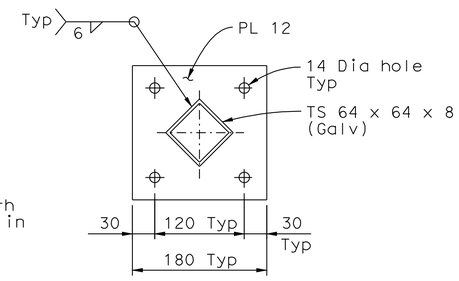

BASE PLATE DETAIL
1:4

RAILING AT CALL BOX LOCATIONS
(Required at all barrier mounted call boxes located on bridge structures, for locations see sheet E-174)

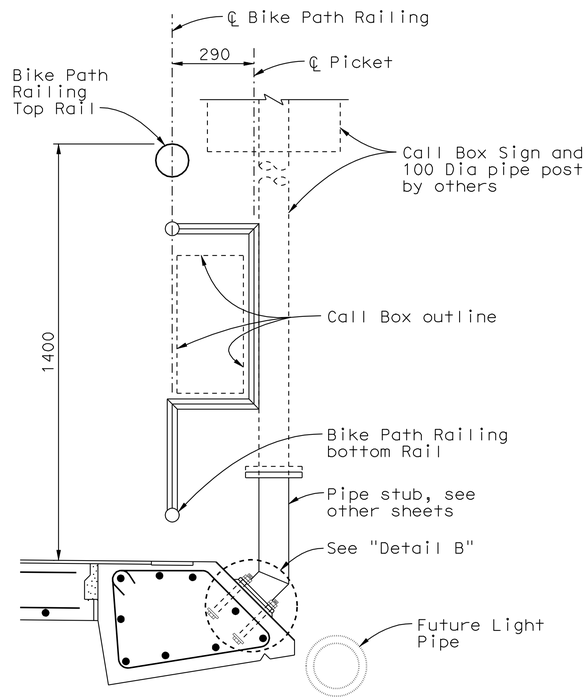

ELEVATION
1:10

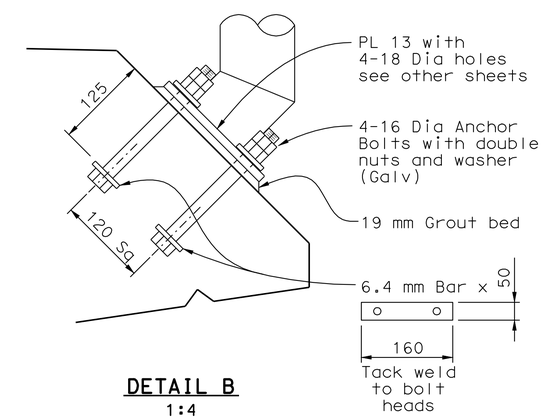

DETAIL B
1:4

CALL BOX SIGN MOUNTING AT BIKE PATH

DETAILS
ROADWAY AND GIRDER LEVEL EASTBOUND
(MISCELLANEOUS DETAILS AT CALL BOX LOCATIONS)
SCALE AS NOTED

E-65

THIS PLAN IS ACCURATE FOR ELECTRICAL WORK ONLY.

ALL DIMENSIONS ARE IN MILLIMETERS UNLESS OTHERWISE SHOWN.

REVISED BY	DATE REVISED

CALCULATED-DESIGNED BY: TYL
CHECKED BY: JNB
CONSULTANT FUNCTIONAL SUPERVISOR: AL ELY

STATE OF CALIFORNIA - DEPARTMENT OF TRANSPORTATION
Caltrans

LAST REVISION
DATE PLOTTED => 06-OCT-2011
TIME PLOTTED => 08:52

Dist	COUNTY	ROUTE	KILOMETER POST TOTAL PROJECT	SHEET No.	TOTAL SHEETS
04	Ala	80	1.6/2.7	256	744

REGISTERED ELECTRICAL ENGINEER 5/02/11

10-3-11
PLANS APPROVAL DATE

REGISTERED PROFESSIONAL ENGINEER DAVID H. OTO No. 10699 Exp. 06/30/2013 ELECTRICAL STATE OF CALIFORNIA

THE STATE OF CALIFORNIA OR ITS OFFICERS OR AGENTS SHALL NOT BE RESPONSIBLE FOR THE ACCURACY OR COMPLETENESS OF ELECTRONIC COPIES OF THIS PLAN SHEET.

PB AMERICAS, Inc.
303 Second St., Suite 700N
San Francisco, CA 94107-1317

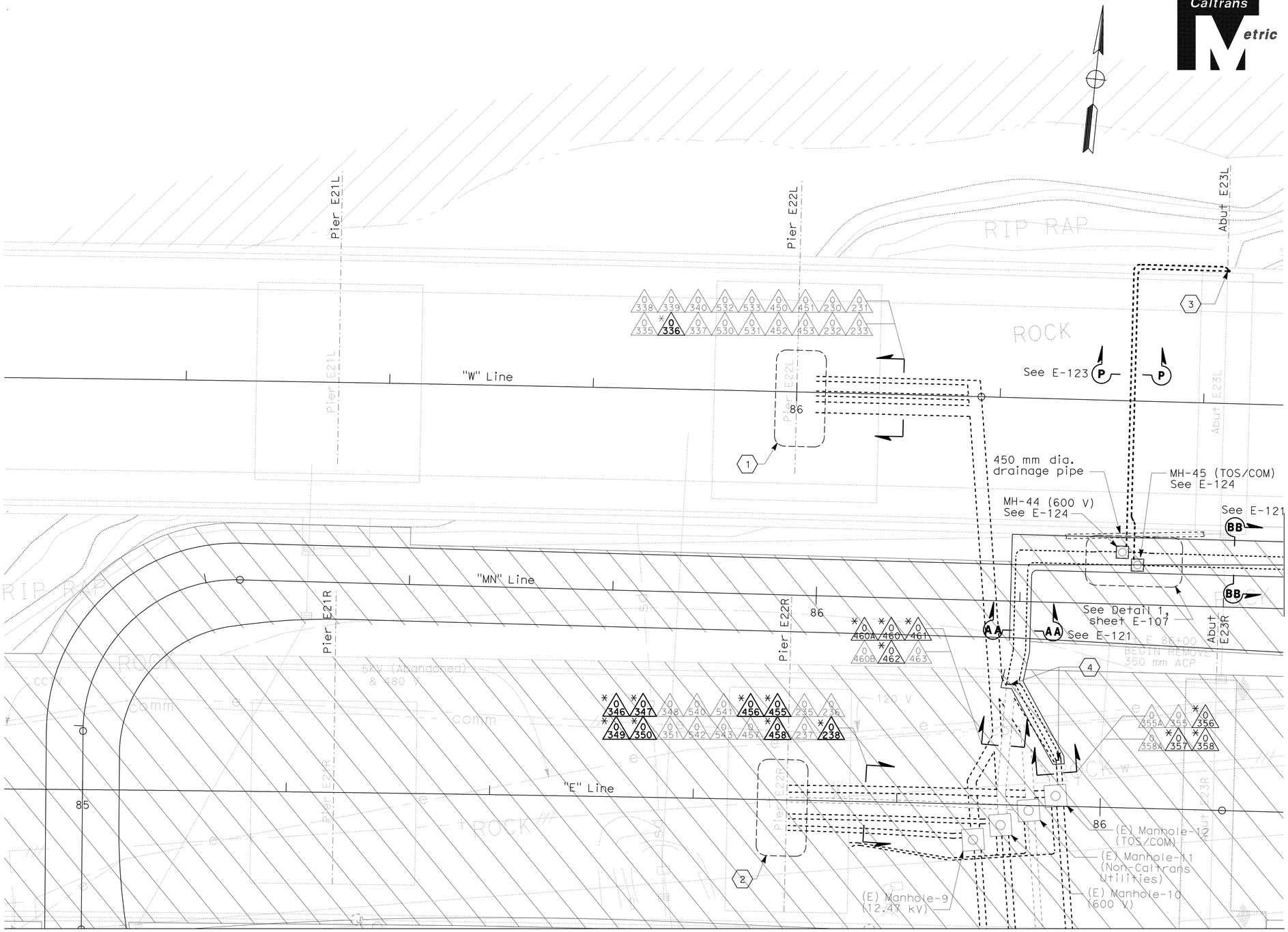

NOTES:

1. References:
   - For conduit and tray, cable and circuit schedules, see sheets starting at E-205.
   - For duct bank profiles, see utility drawings.
   - For typical duct bank sections, see sheet E-120.
   - For manhole sections, see sheets E-124 through E-129.
2. Conduits with (*) prefixes are existing. It is provided as reference for routing the cable/circuits only.
3. For electrical equipment or devices removed, see sheets E-153 through E-160.

SHEET NOTES:

1. For details of Pier 22L conduit elevations, see sheet E-24.
2. For details of Pier 22R conduit elevations, see sheet E-37.
3. Stub up 150 mm above grade and cap conduits.
4. Connect conduits to capped conduits.

LEGEND:

See Stage Construction and Traffic Handling Plan, Stage 1 for Details.

UNDERGROUND AND ROADWAY AT GRADE
(LIGHTING AND ELECTRICAL SYSTEMS)
PIER E22 AREA-UNDERGROUND CONDUIT PLAN
STAGE 1

SCALE 1:200

E-66

THIS PLAN IS ACCURATE FOR ELECTRICAL WORK ONLY.

ALL DIMENSIONS ARE IN METERS UNLESS OTHERWISE SHOWN

STATE OF CALIFORNIA - DEPARTMENT OF TRANSPORTATION
Caltrans

CONSULTANT FUNCTIONAL SUPERVISOR: BRADY NADELL
CALCULATED-DESIGNED BY: JEFFRI HALIM
CHECKED BY: ELLERY LUCAS
REVISED BY / DATE REVISED

LAST REVISION 08-05-11
DATE PLOTTED => 06-OCT-2011
TIME PLOTTED => 06:52

Dist	COUNTY	ROUTE	KILOMETER POST TOTAL PROJECT	SHEET No.	TOTAL SHEETS
04	Ala	80	1.6/2.7	257	744

REGISTERED ELECTRICAL ENGINEER 5/02/11

10-3-11
PLANS APPROVAL DATE

REGISTERED PROFESSIONAL ENGINEER DAVID H. OTO No. 10699 Exp. 06/30/2013 ELECTRICAL STATE OF CALIFORNIA

THE STATE OF CALIFORNIA OR ITS OFFICERS OR AGENTS SHALL NOT BE RESPONSIBLE FOR THE ACCURACY OR COMPLETENESS OF ELECTRONIC COPIES OF THIS PLAN SHEET.

PB AMERICAS, Inc.
303 Second St., Suite 700N
San Francisco, CA 94107-1317

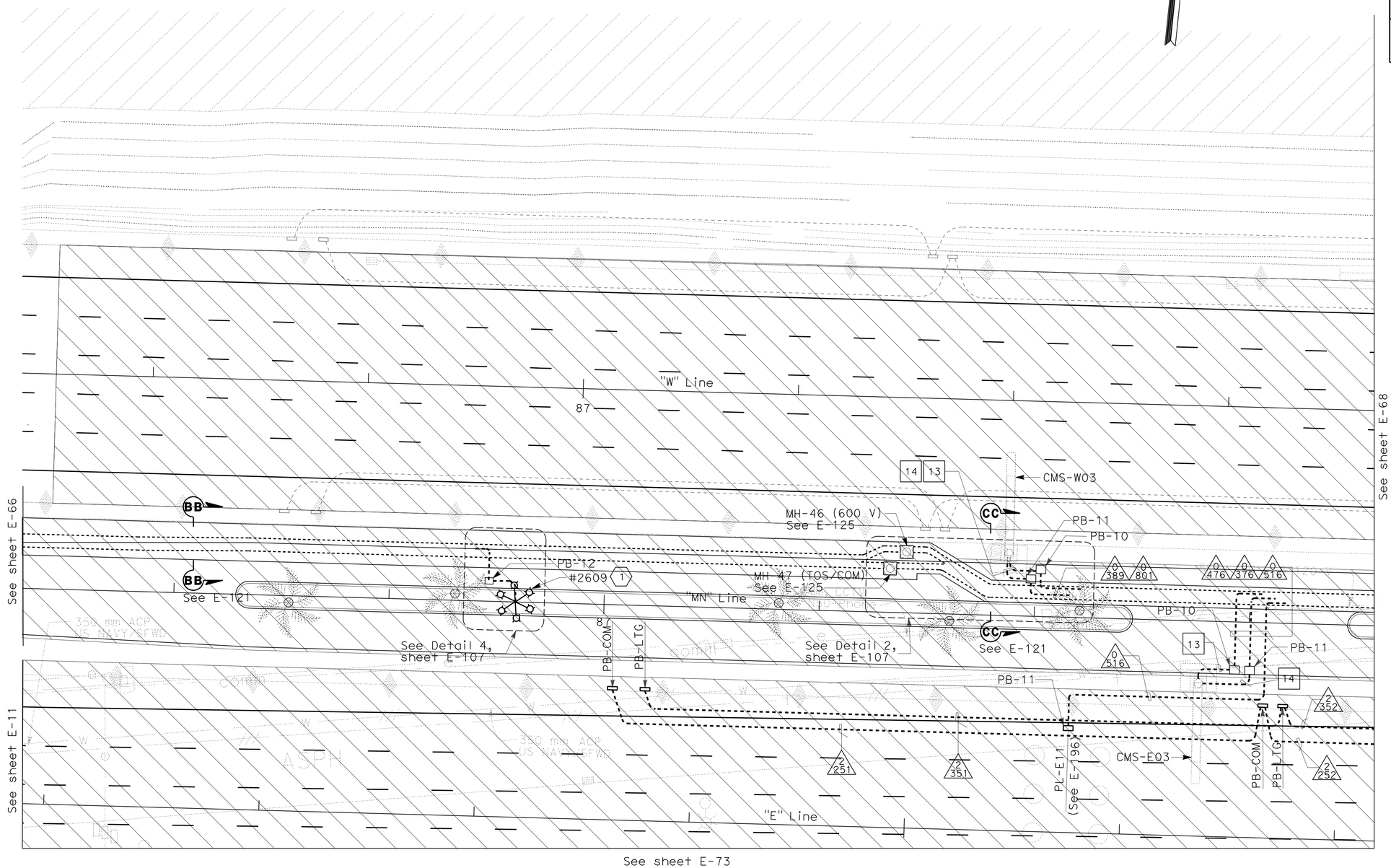

NOTES:

1. References:
   - For pull box schedule, see sheet E-130.
   - TOS equipment is shown for conduit routing only. For typical details of TOS controllers and devices, see sheets E-190 through E-197.
   - For conduit and tray, cable and circuit schedules, see sheets starting at E-205.
   - For manhole sections, see sheets E-124 through E-129.
   - For duct bank profiles, see Utility drawings.
   - For typical duct bank sections, see sheet E-120.
   - For high mast lighting wiring diagram, see sheet E-147.
2. For electrical equipment or devices removed, see sheets E-153 through E-160.

SHEET NOTE:

(1) Coordinate the work removal of the (E) High Mast lighting fixture.

LEGEND:

See Stage Construction and Traffic Handling Plan, Stage 1 for Details.

UNDERGROUND AND ROADWAY AT GRADE
(LIGHTING AND ELECTRICAL SYSTEMS)
WESTBOUND AND EASTBOUND ROADWAY
STAGE 1

SCALE 1:200

E-67

THIS PLAN IS ACCURATE FOR ELECTRICAL WORK ONLY.

ALL DIMENSIONS ARE IN METERS UNLESS OTHERWISE SHOWN

STATE OF CALIFORNIA - DEPARTMENT OF TRANSPORTATION

Caltrans

CONSULTANT FUNCTIONAL SUPERVISOR: BRADY NADELL

CALCULATED-DESIGNED BY: JEFFRI HALIM

CHECKED BY: ELLERY LUCAS

REVISED BY | DATE REVISED

LAST REVISION 08-05-11

DATE PLOTTED => 06-OCT-2011
TIME PLOTTED => 06:52

Dist	COUNTY	ROUTE	KILOMETER POST TOTAL PROJECT	SHEET No.	TOTAL SHEETS
04	Ala	80	1.6/2.7	258	744

REGISTERED ELECTRICAL ENGINEER 5/02/11

10-3-11
PLANS APPROVAL DATE

REGISTERED PROFESSIONAL ENGINEER DAVID H. OTO No. 10699 Exp. 06/30/2013 ELECTRICAL STATE OF CALIFORNIA

THE STATE OF CALIFORNIA OR ITS OFFICERS OR AGENTS SHALL NOT BE RESPONSIBLE FOR THE ACCURACY OR COMPLETENESS OF ELECTRONIC COPIES OF THIS PLAN SHEET.

PB AMERICAS, Inc.
303 Second St., Suite 700N
San Francisco, CA 94107-1317

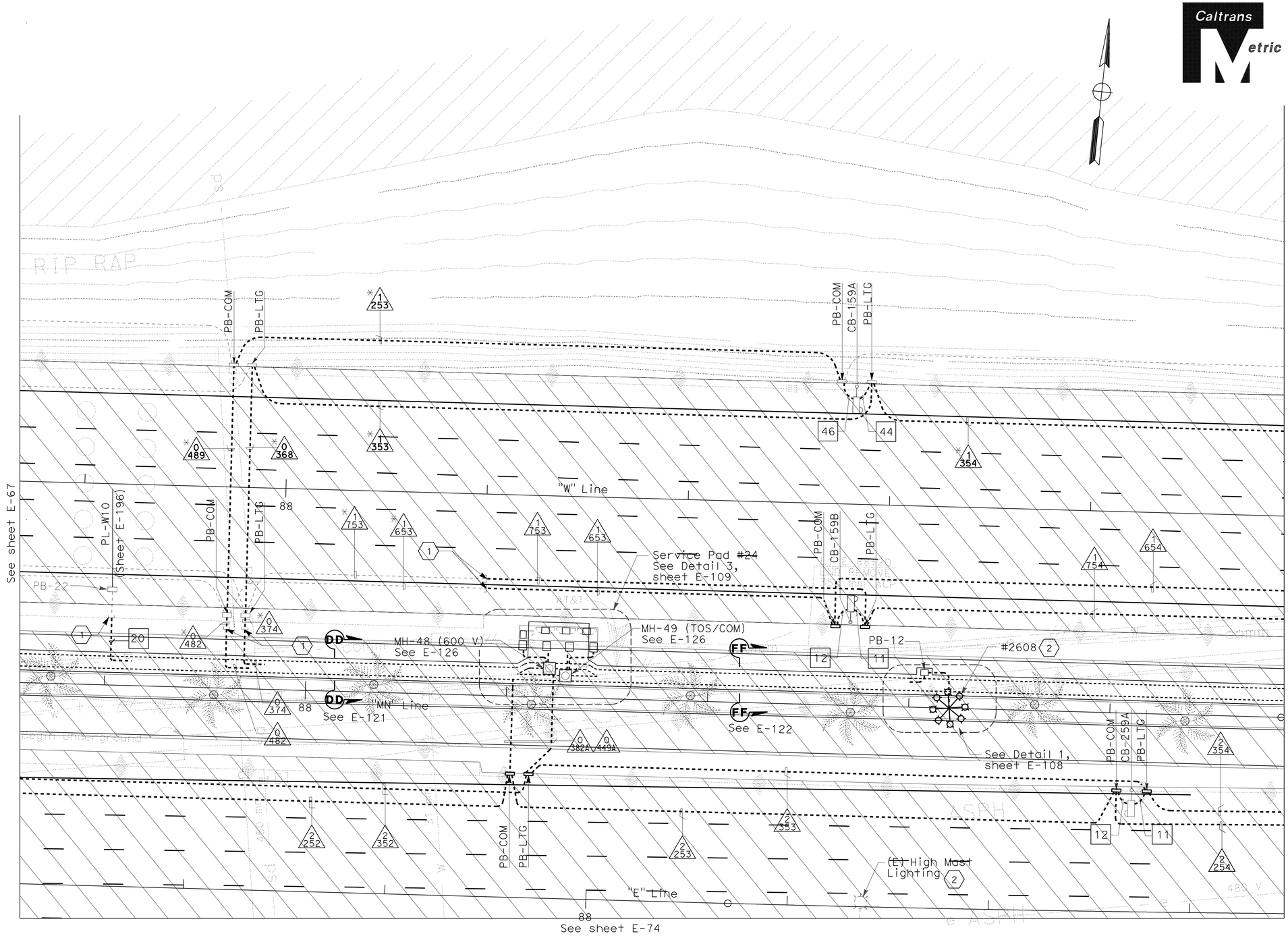

NOTES:

1. Conduits with (*) prefixed are exisiting and provided as reference for routing the cable/ circuits only.
2. References:
   - For pull box schedule, see sheet E-130.
   - TOS equipment is shown for conduit routing only. For typical details of TOS controllers and devices, see sheets E-190 through E-197.
   - For conduit and tray, cable and circuit schedules, see sheets starting at E-205.
   - For manhole sections, see sheets E-124 through E-129.
   - For duct bank profiles, see Utility drawings.
   - For typical duct bank sections, see sheet E-120.
   - For high mast lighting wiring diagram, see sheet E-147.
3. For electrical equipment or devices removed, see sheet E-153 through E-160.

SHEET NOTES:

(1) Connect conduit to capped conduit.

(2) (E) High Mast lighting to remain connected until the new High Mast lighting is installed. Coordinate the work removal of the (E) High Mast lighting fixture.

LEGEND:

See Stage Construction and Traffic Handling Plan, Stage 1 for Details.

UNDERGROUND AND ROADWAY AT GRADE
(LIGHTING AND ELECTRICAL SYSTEMS)
WESTBOUND AND EASTBOUND ROADWAY
STAGE 1

SCALE 1:200

E-68

THIS PLAN IS ACCURATE FOR ELECTRICAL WORK ONLY.

ALL DIMENSIONS ARE IN METERS UNLESS OTHERWISE SHOWN

STATE OF CALIFORNIA - DEPARTMENT OF TRANSPORTATION
Caltrans

CONSULTANT FUNCTIONAL SUPERVISOR: BRADY NADELL
CALCULATED-DESIGNED BY: JEFFRI HALIM
CHECKED BY: ELLERY LUCAS
REVISED BY / DATE REVISED

LAST REVISION 08-17-09 | DATE PLOTTED => 06-OCT-2011 | TIME PLOTTED => 06:52

Dist	COUNTY	ROUTE	KILOMETER POST TOTAL PROJECT	SHEET No.	TOTAL SHEETS
04	Ala	80	1.6/2.7	259	744

REGISTERED ELECTRICAL ENGINEER 5/02/11

10-3-11
PLANS APPROVAL DATE

REGISTERED PROFESSIONAL ENGINEER DAVID H. OTO No. 10699 Exp. 06/30/2013 ELECTRICAL STATE OF CALIFORNIA

THE STATE OF CALIFORNIA OR ITS OFFICERS OR AGENTS SHALL NOT BE RESPONSIBLE FOR THE ACCURACY OR COMPLETENESS OF ELECTRONIC COPIES OF THIS PLAN SHEET.

PB AMERICAS, Inc.
303 Second St., Suite 700N
San Francisco, CA 94107-1317

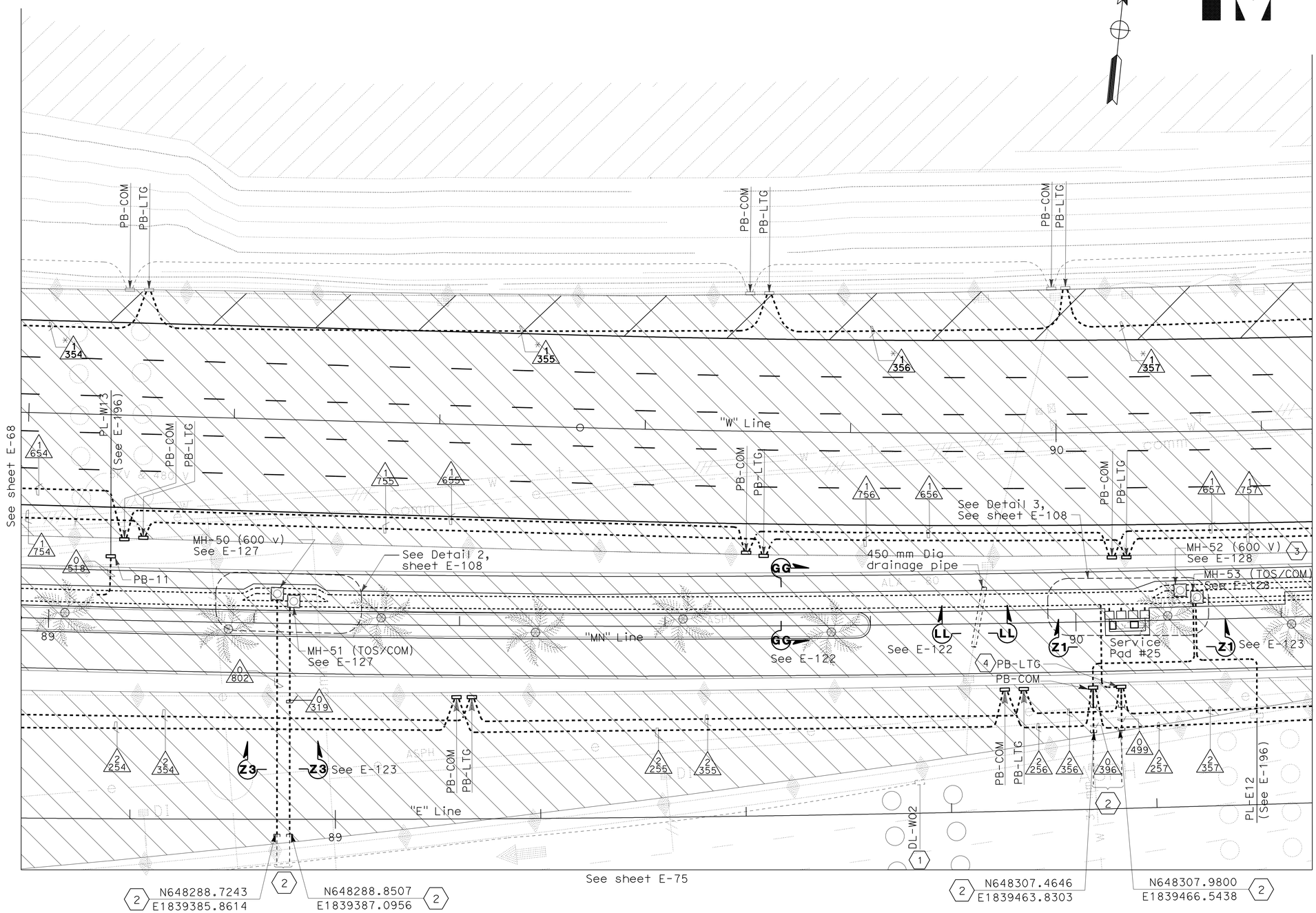

NOTES:

1. The Contractor to ensure the electrical connection of equipment, devices and the associated conduits, pull boxes identified on sheet notes 1 shall be maintained unless instructed otherwise by the Engineer.
2. Conduits with (*) prefixed are exisiting and provided as reference for routing the cable/ circuits only.
3. References:
   - For pull box schedule, see sheet E-130.
   - TOS equipment is shown for conduit routing only. For typical details of TOS controllers and devices, see sheets E-190 through E-197.
   - For conduit and tray, cable and circuit schedules, see sheets starting at E-205.
   - For manhole sections, see sheets E-124 through E-129.
   - For duct bank profiles, see Utility drawings.
   - For typical duct bank sections, see sheet E-120.
4. For electrical equipment or devices removed, see sheets E-153 through E-160.

SHEET NOTES:

(1) Existing to remain.

(2) Connect to (E) conduit, see sheet E-89.

(3) Coil 3 m length of cables (ckt. #2610, #S-2606) inside Manhole-52.

(4) Coil 1 m length of cable (ckt #UP274-4B, ckt UP274-8A) inside PB-LTG.

LEGEND:

See Stage Construction and Traffic Handling Plan, Stage 1 for Details.

UNDERGROUND AND ROADWAY AT GRADE
(LIGHTING AND ELECTRICAL SYSTEMS)
WESTBOUND AND EASTBOUND ROADWAY
STAGE 1
SCALE 1:200

E-69

THIS PLAN IS ACCURATE FOR ELECTRICAL WORK ONLY.

ALL DIMENSIONS ARE IN METERS UNLESS OTHERWISE SHOWN

STATE OF CALIFORNIA - DEPARTMENT OF TRANSPORTATION
Caltrans

CONSULTANT FUNCTIONAL SUPERVISOR: BRADY NADELL
CALCULATED-DESIGNED BY: JEFFRI HALIM
CHECKED BY: ELLERY LUCAS
REVISED BY / DATE REVISED

LAST REVISION 08-05-11
DATE PLOTTED => 06-OCT-2011
TIME PLOTTED => 06:53

Dist	COUNTY	ROUTE	KILOMETER POST TOTAL PROJECT	SHEET No.	TOTAL SHEETS
04	Ala	80	1.6/2.7	260	744

REGISTERED ELECTRICAL ENGINEER 5/02/11

10-3-11
PLANS APPROVAL DATE

REGISTERED PROFESSIONAL ENGINEER DAVID H. OTO No. 10699 Exp. 06/30/2013 ELECTRICAL STATE OF CALIFORNIA

THE STATE OF CALIFORNIA OR ITS OFFICERS OR AGENTS SHALL NOT BE RESPONSIBLE FOR THE ACCURACY OR COMPLETENESS OF ELECTRONIC COPIES OF THIS PLAN SHEET.

PB AMERICAS, Inc.
303 Second St., Suite 700N
San Francisco, CA 94107-1317

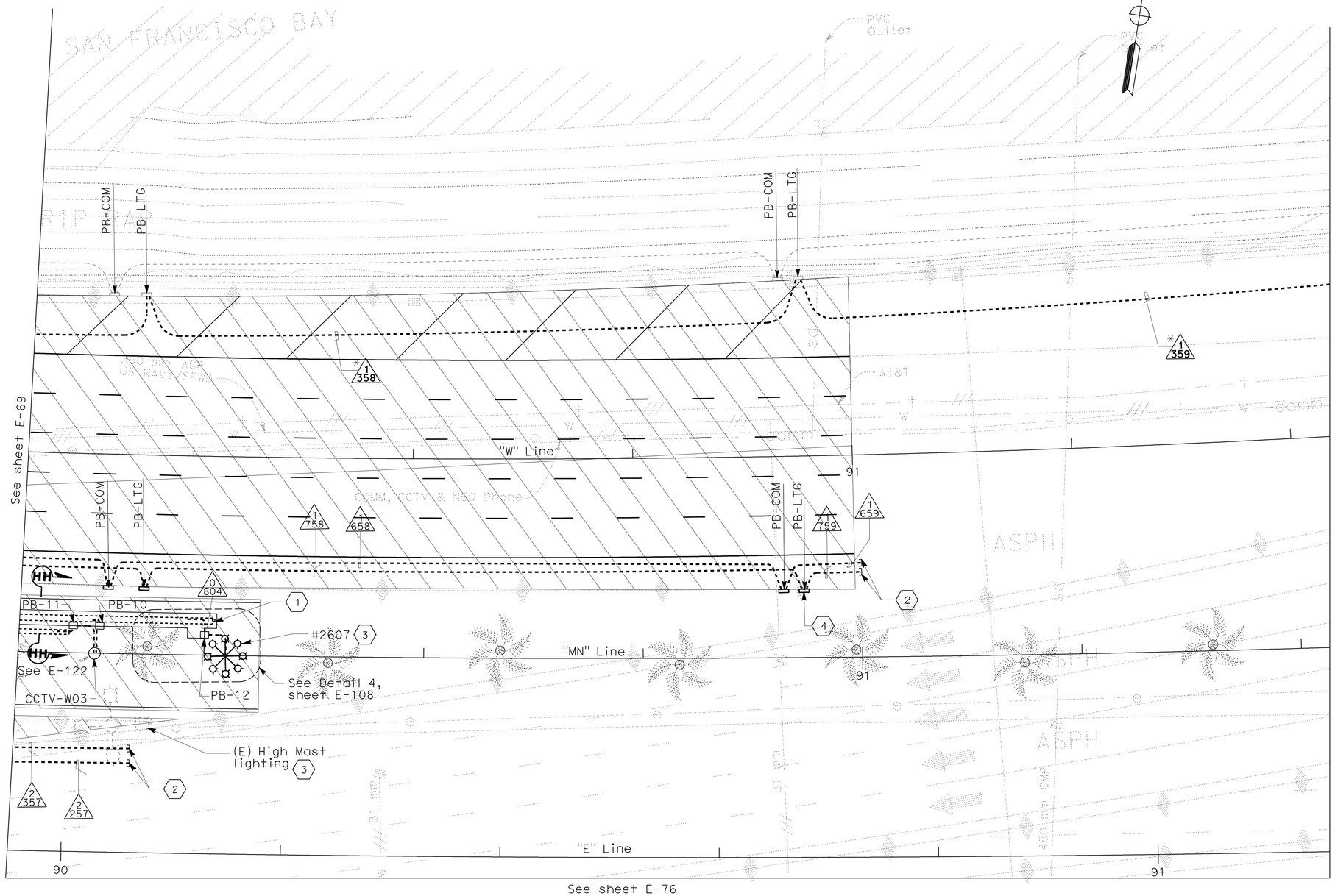

NOTES:

1. Conduits with (*) prefixed are exisiting and provided as reference for routing the cable/ circuits only.

2. References:
   - For pull box schedule, see sheet E-130.
   - TOS equipment is shown for conduit routing only. For typical details of TOS controllers and devices, see sheets E-190 through E-197.
   - For conduit and tray, cable and circuit schedules, see sheets starting at E-205.
   - For manhole sections, see sheets E-124 through E-129.
   - For duct bank profiles, see Utility drawings.
   - For typical duct bank sections, see sheet E-120.
   - For high mast lighting wiring diagram, see sheet E-147.

3. For electrical equipment or devices removed, see sheets E-153 through E-160.

SHEET NOTES:

(1) Stub out and cap conduit. The conduits shall be extended on Stage 3, see sheet E-95.

(2) Stub out and cap conduit. The conduits shall be extended on Stage 2, see sheet E-87.

(3) (E) High Mast lighting to remain connected until the new High Mast lighting is installed. Coordinate the work removal of the (E) High Mast lighting fixture.

(4) Coil 1 m length of cable (ckt. #UP173-16B) inside PB-LTG.

LEGEND:

See Stage Construction and Traffic Handling Plan, Stage 1 for Details.

UNDERGROUND AND ROADWAY AT GRADE
(LIGHTING AND ELECTRICAL SYSTEMS)
WESTBOUND AND EASTBOUND ROADWAY
STAGE 1

SCALE 1:200

E-70

THIS PLAN IS ACCURATE FOR ELECTRICAL WORK ONLY.

ALL DIMENSIONS ARE IN METERS UNLESS OTHERWISE SHOWN

STATE OF CALIFORNIA - DEPARTMENT OF TRANSPORTATION
Caltrans

CONSULTANT FUNCTIONAL SUPERVISOR: BRADY NADELL
CALCULATED-DESIGNED BY: JEFFRI HALIM
CHECKED BY: ELLERY LUCAS
REVISED BY / DATE REVISED

LAST REVISION 08-17-09 DATE PLOTTED => 06-OCT-2011 TIME PLOTTED => 06:53

Dist	COUNTY	ROUTE	KILOMETER POST TOTAL PROJECT	SHEET No.	TOTAL SHEETS
04	Ala	80	1.6/2.7	261	744

REGISTERED ELECTRICAL ENGINEER 5/02/11

10-3-11
PLANS APPROVAL DATE

REGISTERED PROFESSIONAL ENGINEER
DAVID H. OTO
No. 10699
Exp. 06/30/2013
ELECTRICAL
STATE OF CALIFORNIA

THE STATE OF CALIFORNIA OR ITS OFFICERS OR AGENTS SHALL NOT BE RESPONSIBLE FOR THE ACCURACY OR COMPLETENESS OF ELECTRONIC COPIES OF THIS PLAN SHEET.

PB AMERICAS, Inc.
303 Second St., Suite 700N
San Francisco, CA 94107-1317

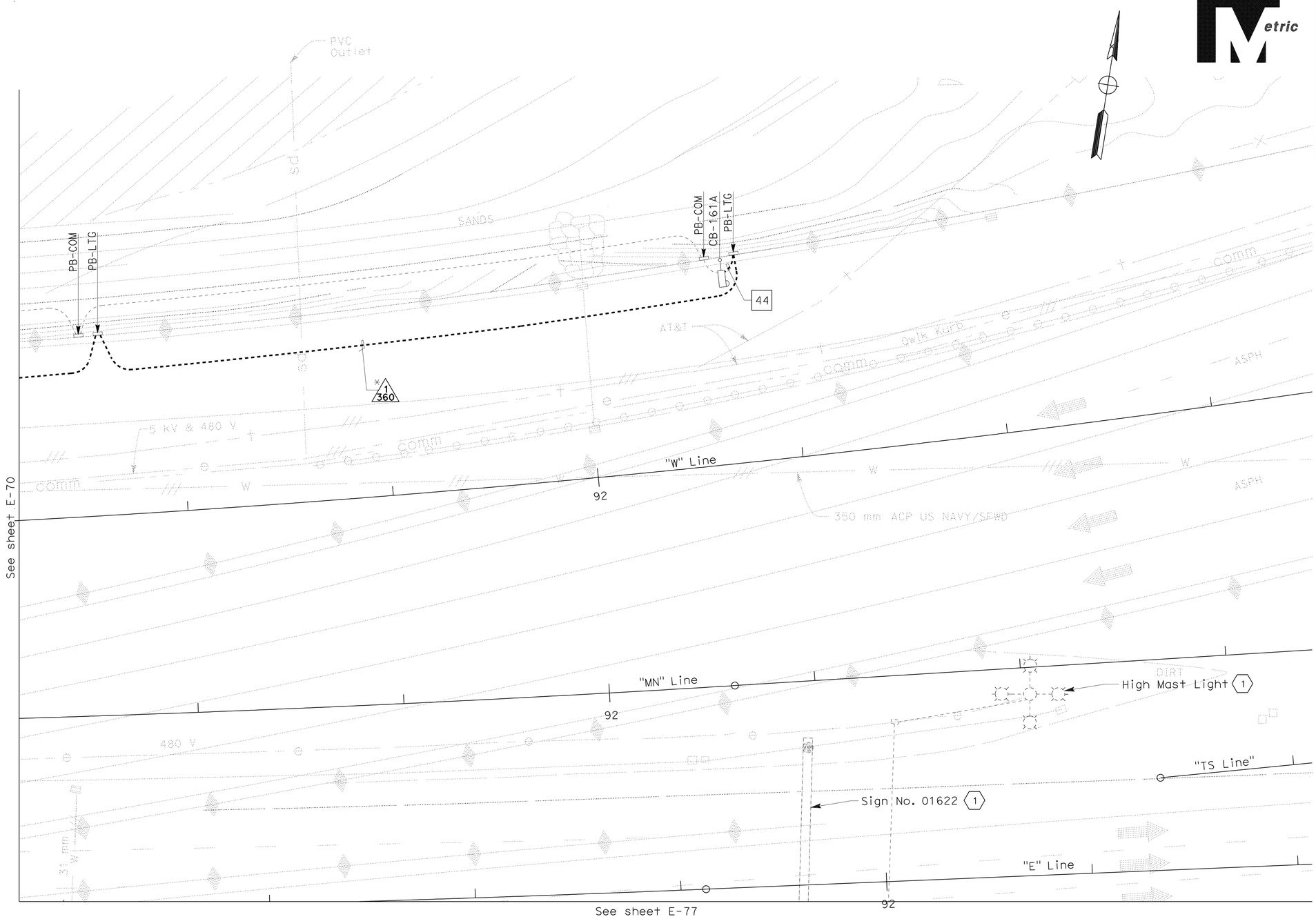

NOTES:

1. The Contractor to ensure the electrical connection of equipment, devices and the associated conduits, pull boxes identified on Sheet Note 1 shall be maintained unless instructed otherwise by the Engineer.
2. Conduits with (*) prefixed are exisiting and provided as reference for routing the cable/ circuits only.
3. References:
   - For pull box schedule, see sheet E-130.
   - TOS equipment is shown for conduit routing only. For typical details of TOS controllers and devices, see sheets E-190 through E-197.
   - For conduit and tray, cable and circuit schedules, see sheets starting at E-205.
   - For manhole sections, see sheets E-124 through E-129.
   - For duct bank profiles, see Utility drawings.
   - For typical duct bank sections, see sheet E-120.
   - For high mast lighting wiring diagram, see sheet E-147.
4. For electrical equipment or devices removed, see sheets E-153 through E-160.

SHEET NOTE:

1 Existing to remain.

UNDERGROUND AND ROADWAY AT GRADE
(LIGHTING AND ELECTRICAL SYSTEMS)
WESTBOUND AND EASTBOUND ROADWAY
STAGE 1

SCALE 1:200

E-71

THIS PLAN IS ACCURATE FOR ELECTRICAL WORK ONLY.

ALL DIMENSIONS ARE IN METERS UNLESS OTHERWISE SHOWN

STATE OF CALIFORNIA - DEPARTMENT OF TRANSPORTATION
Caltrans

CONSULTANT FUNCTIONAL SUPERVISOR: BRADY NADELL
CALCULATED-DESIGNED BY: JEFFRI HALIM
CHECKED BY: ELLERY LUCAS
REVISED BY
DATE REVISED

LAST REVISION 08-17-09
DATE PLOTTED => 06-OCT-2011
TIME PLOTTED => 06:53

Dist	COUNTY	ROUTE	KILOMETER POST TOTAL PROJECT	SHEET No.	TOTAL SHEETS
04	Ala	80	1.6/2.7	262	744

REGISTERED ELECTRICAL ENGINEER 5/02/11

10-3-11
PLANS APPROVAL DATE

REGISTERED PROFESSIONAL ENGINEER DAVID H. OTO No. 10699 Exp. 06/30/2013 ELECTRICAL STATE OF CALIFORNIA

THE STATE OF CALIFORNIA OR ITS OFFICERS OR AGENTS SHALL NOT BE RESPONSIBLE FOR THE ACCURACY OR COMPLETENESS OF ELECTRONIC COPIES OF THIS PLAN SHEET.

PB AMERICAS, Inc.
303 Second St., Suite 700N
San Francisco, CA 94107-1317

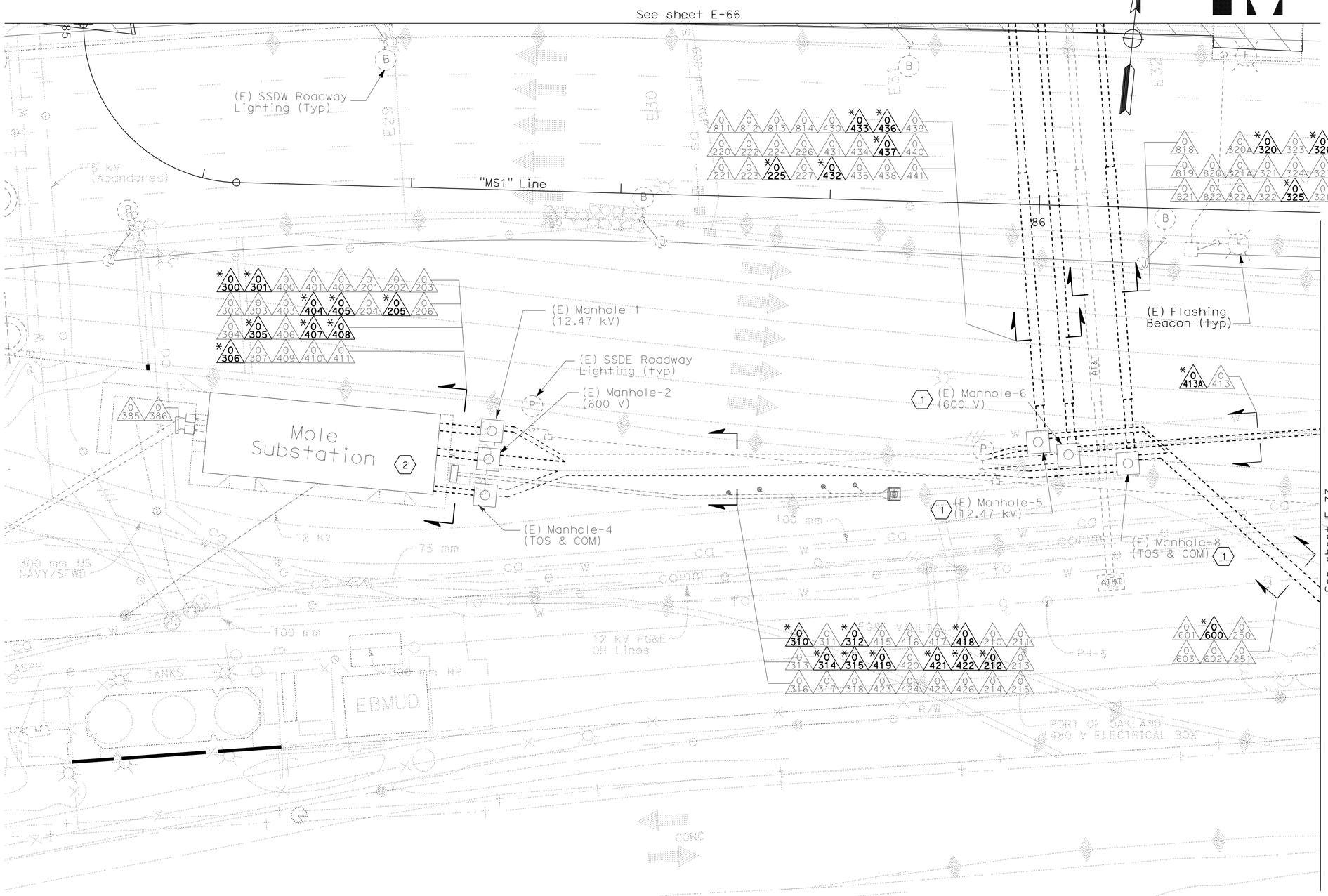

NOTES:

1. The conduit are existing. Conduits with (*) prefixed is provided as reference for routing the cable/circuits only.
2. References:
   - For conduit and tray, cable and circuit schedules, see sheets starting at E-205.
3. For electrical equipment or devices removed, see sheets E-153 through E-160.

SHEET NOTES:

(1) Manhole cover shall be lowered flushed to final grade. See Stage 4 and Electrical removal stage sheet E-155.

(2) For conduits inside Mole Substation building, see sheets E-105 and E-106.

LEGEND:

See Stage Construction and Traffic Handling Plan, Stage 1 for Details.

UNDERGROUND AND ROADWAY AT GRADE
(LIGHTING AND ELECTRICAL SYSTEMS)
MOLE SUBSTATION AREA-UNDERGROUND
STAGE 1

SCALE 1:200

E-72

THIS PLAN IS ACCURATE FOR ELECTRICAL WORK ONLY.

ALL DIMENSIONS ARE IN METERS UNLESS OTHERWISE SHOWN

STATE OF CALIFORNIA - DEPARTMENT OF TRANSPORTATION
Caltrans

CONSULTANT FUNCTIONAL SUPERVISOR: BRADY NADELL
CALCULATED-DESIGNED BY: JEFFRI HALIM
CHECKED BY: ELLERY LUCAS
REVISED BY / DATE REVISED

LAST REVISION 08-17-09 DATE PLOTTED => 06-OCT-2011 TIME PLOTTED => 06:53

Dist	COUNTY	ROUTE	KILOMETER POST TOTAL PROJECT	SHEET No.	TOTAL SHEETS
04	Ala	80	1.6/2.7	263	744

REGISTERED ELECTRICAL ENGINEER 5/02/11

10-3-11
PLANS APPROVAL DATE

REGISTERED PROFESSIONAL ENGINEER DAVID H. OTO No. 10699 Exp. 06/30/2013 ELECTRICAL STATE OF CALIFORNIA

THE STATE OF CALIFORNIA OR ITS OFFICERS OR AGENTS SHALL NOT BE RESPONSIBLE FOR THE ACCURACY OR COMPLETENESS OF ELECTRONIC COPIES OF THIS PLAN SHEET.

PB AMERICAS, Inc.
303 Second St., Suite 700N
San Francisco, CA 94107-1317

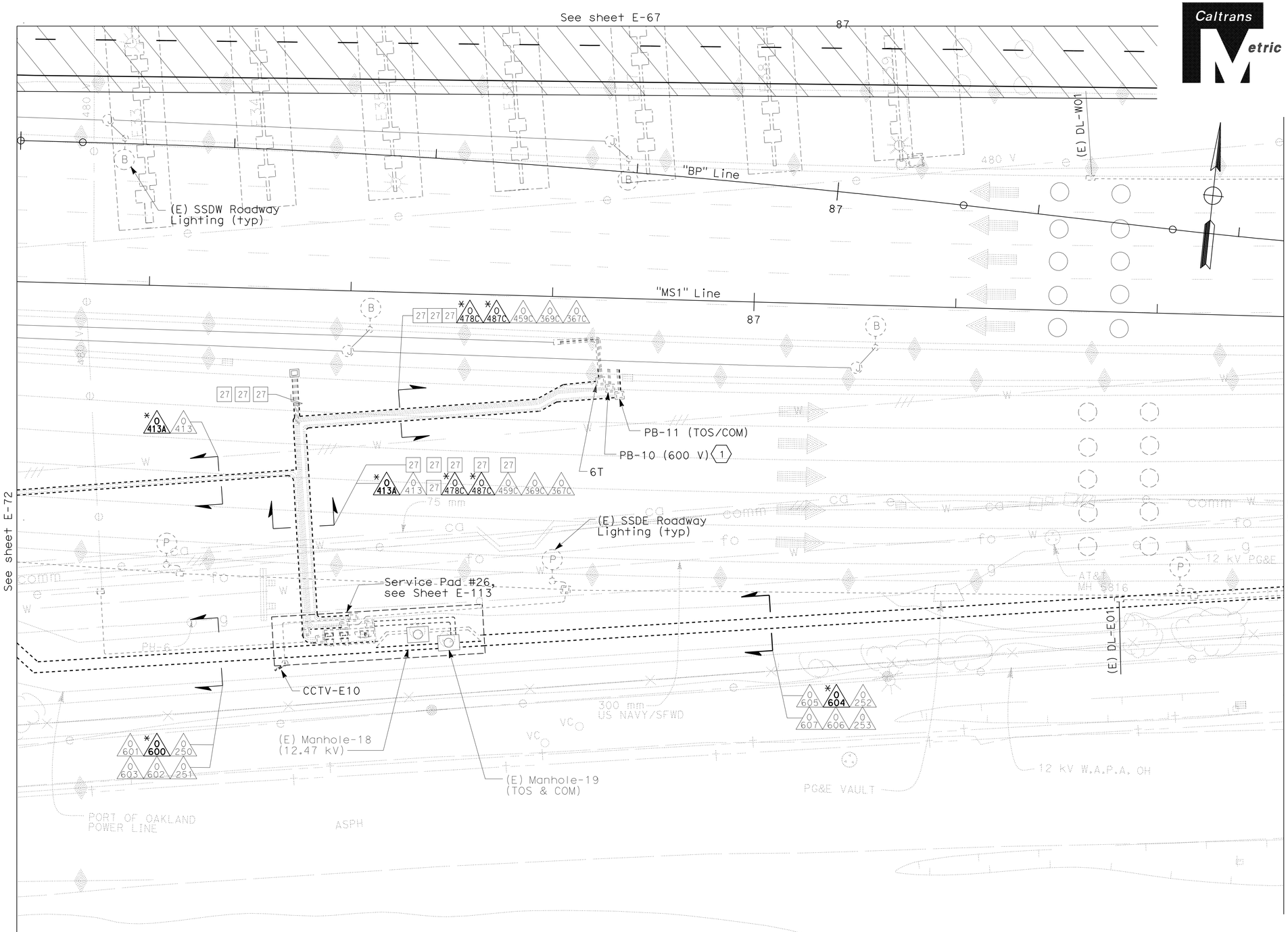

NOTES:

1. The conduit are existing. Conduits with (*) prefixed is provided as reference for routing the cable/circuits only.
2. References:
   - For conduit and tray, cable and circuit schedules, see sheets starting at E-205.
   - For pull box schedule, see sheet E-130.
3. For electrical equipment or devices removed, see sheets E-153 through E-160.

SHEET NOTE:

1. Coil 3 m length of cables (ckt # A-2009, #LP283-1/3, and #LP283-6/8) inside PB-10.

LEGEND:

See Stage Construction and Traffic Handling Plan, Stage 1 for Details.

UNDERGROUND AND ROADWAY AT GRADE
(LIGHTING AND ELECTRICAL SYSTEMS)
UNDERGROUND CONDUIT PLAN
STAGE 1

SCALE 1:200

E-73

THIS PLAN IS ACCURATE FOR ELECTRICAL WORK ONLY.

ALL DIMENSIONS ARE IN METERS UNLESS OTHERWISE SHOWN

STATE OF CALIFORNIA - DEPARTMENT OF TRANSPORTATION

CONSULTANT FUNCTIONAL SUPERVISOR: BRADY NADELL

CALCULATED-DESIGNED BY: JEFFRI HALIM

CHECKED BY: ELLERY LUCAS

REVISED BY / DATE REVISED

LAST REVISION 08-17-09 DATE PLOTTED => 06-OCT-2011 TIME PLOTTED => 06:53

Dist	COUNTY	ROUTE	KILOMETER POST TOTAL PROJECT	SHEET No.	TOTAL SHEETS
04	Ala	80	1.6/2.7	264	744

REGISTERED ELECTRICAL ENGINEER 5/02/11

10-3-11
PLANS APPROVAL DATE

REGISTERED PROFESSIONAL ENGINEER DAVID H. OTO No. 10699 Exp. 06/30/2013 ELECTRICAL STATE OF CALIFORNIA

THE STATE OF CALIFORNIA OR ITS OFFICERS OR AGENTS SHALL NOT BE RESPONSIBLE FOR THE ACCURACY OR COMPLETENESS OF ELECTRONIC COPIES OF THIS PLAN SHEET.

PB AMERICAS, Inc.
303 Second St., Suite 700N
San Francisco, CA 94107-1317

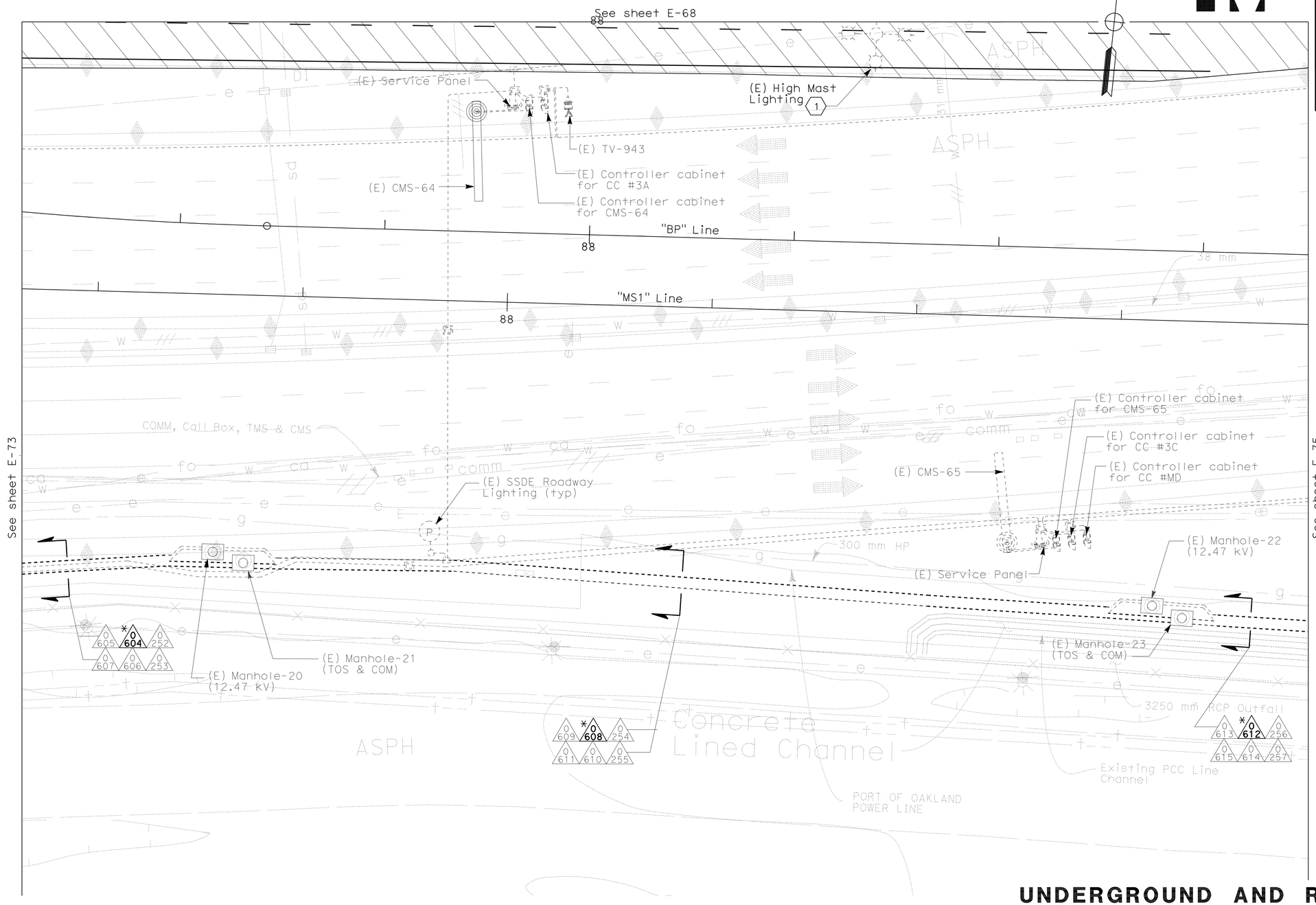

NOTES:

1. References:
   - For conduit and tray, cable and circuit schedules, see sheets starting at E-205.
2. The conduits with (*) are existing and is provided as reference for routing the cable/circuits only.
3. For electrical equipment or devices removed, see sheets E-153 through E-160.

SHEET NOTE:

(1) (E) High Mast lighting to remain connected until the new High Mast lighting is installed. See sheet E-68.

LEGEND:

See Stage Construction and Traffic Handling Plan, Stage 1 for Details.

UNDERGROUND AND ROADWAY AT GRADE
(LIGHTING AND ELECTRICAL SYSTEMS)
UNDERGROUND CONDUIT PLAN
STAGE 1

SCALE 1:200

E-74

THIS PLAN IS ACCURATE FOR ELECTRICAL WORK ONLY.

ALL DIMENSIONS ARE IN METERS UNLESS OTHERWISE SHOWN

STATE OF CALIFORNIA - DEPARTMENT OF TRANSPORTATION

Caltrans

CONSULTANT FUNCTIONAL SUPERVISOR: BRADY NADELL

CALCULATED-DESIGNED BY: JEFFRI HALIM

CHECKED BY: ELLERY LUCAS

REVISED BY / DATE REVISED

LAST REVISION 08-17-09 DATE PLOTTED => 06-OCT-2011 TIME PLOTTED => 06:54

Dist	COUNTY	ROUTE	KILOMETER POST TOTAL PROJECT	SHEET No.	TOTAL SHEETS
04	Ala	80	1.6/2.7	265	744

REGISTERED ELECTRICAL ENGINEER 5/02/11

10-3-11
PLANS APPROVAL DATE

REGISTERED PROFESSIONAL ENGINEER DAVID H. OTO No. 10699 Exp. 06/30/2013 ELECTRICAL STATE OF CALIFORNIA

THE STATE OF CALIFORNIA OR ITS OFFICERS OR AGENTS SHALL NOT BE RESPONSIBLE FOR THE ACCURACY OR COMPLETENESS OF ELECTRONIC COPIES OF THIS PLAN SHEET.

PB AMERICAS, Inc.
303 Second St., Suite 700N
San Francisco, CA 94107-1317

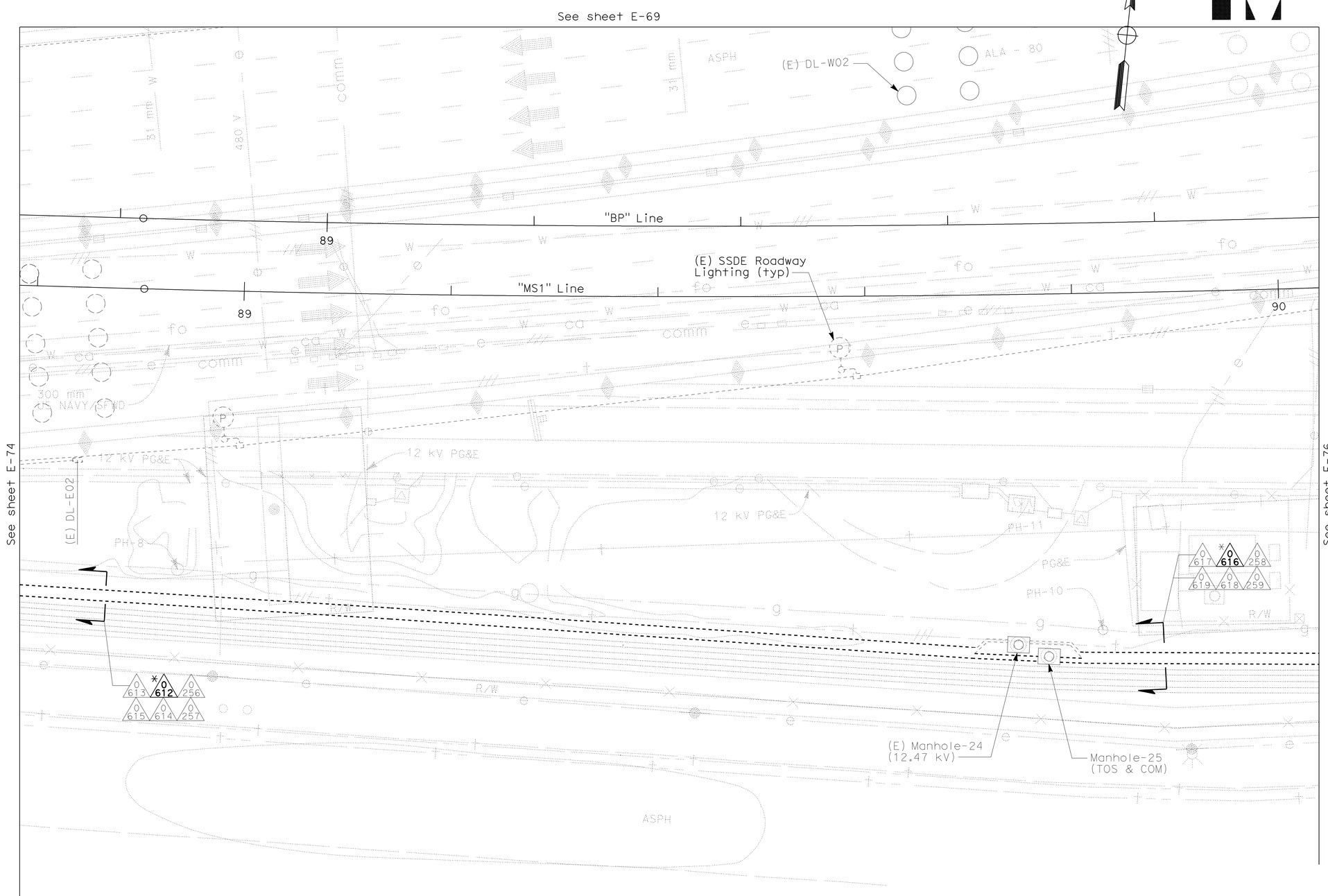

NOTES:

1. References:
   - For conduit and tray, cable and circuit schedules, see sheets starting at E-205.
2. The conduits with (*) prefixed are existing and provided as reference for routing the cable/circuits only.
3. For electrical equipment or devices removed, see sheets E-153 through E-160.

UNDERGROUND AND ROADWAY AT GRADE
(LIGHTING AND ELECTRICAL SYSTEMS)
UNDERGROUND CONDUIT PLAN
STAGE 1

SCALE 1:200

E-75

THIS PLAN IS ACCURATE FOR ELECTRICAL WORK ONLY.

ALL DIMENSIONS ARE IN METERS UNLESS OTHERWISE SHOWN

STATE OF CALIFORNIA - DEPARTMENT OF TRANSPORTATION
Caltrans

CONSULTANT FUNCTIONAL SUPERVISOR: BRADY NADELL
CALCULATED-DESIGNED BY: JEFFRI HALIM
CHECKED BY: ELLERY LUCAS
REVISED BY / DATE REVISED

LAST REVISION 08-17-09
DATE PLOTTED => 06-OCT-2011
TIME PLOTTED => 06:54

Dist	COUNTY	ROUTE	KILOMETER POST TOTAL PROJECT	SHEET No.	TOTAL SHEETS
04	Ala	80	1.6/2.7	266	744

REGISTERED ELECTRICAL ENGINEER 5/02/11

10-3-11
PLANS APPROVAL DATE

REGISTERED PROFESSIONAL ENGINEER DAVID H. OTO No. 10699 Exp. 06/30/2013 ELECTRICAL STATE OF CALIFORNIA

THE STATE OF CALIFORNIA OR ITS OFFICERS OR AGENTS SHALL NOT BE RESPONSIBLE FOR THE ACCURACY OR COMPLETENESS OF ELECTRONIC COPIES OF THIS PLAN SHEET.

PB AMERICAS, Inc.
303 Second St., Suite 700N
San Francisco, CA 94107-1317

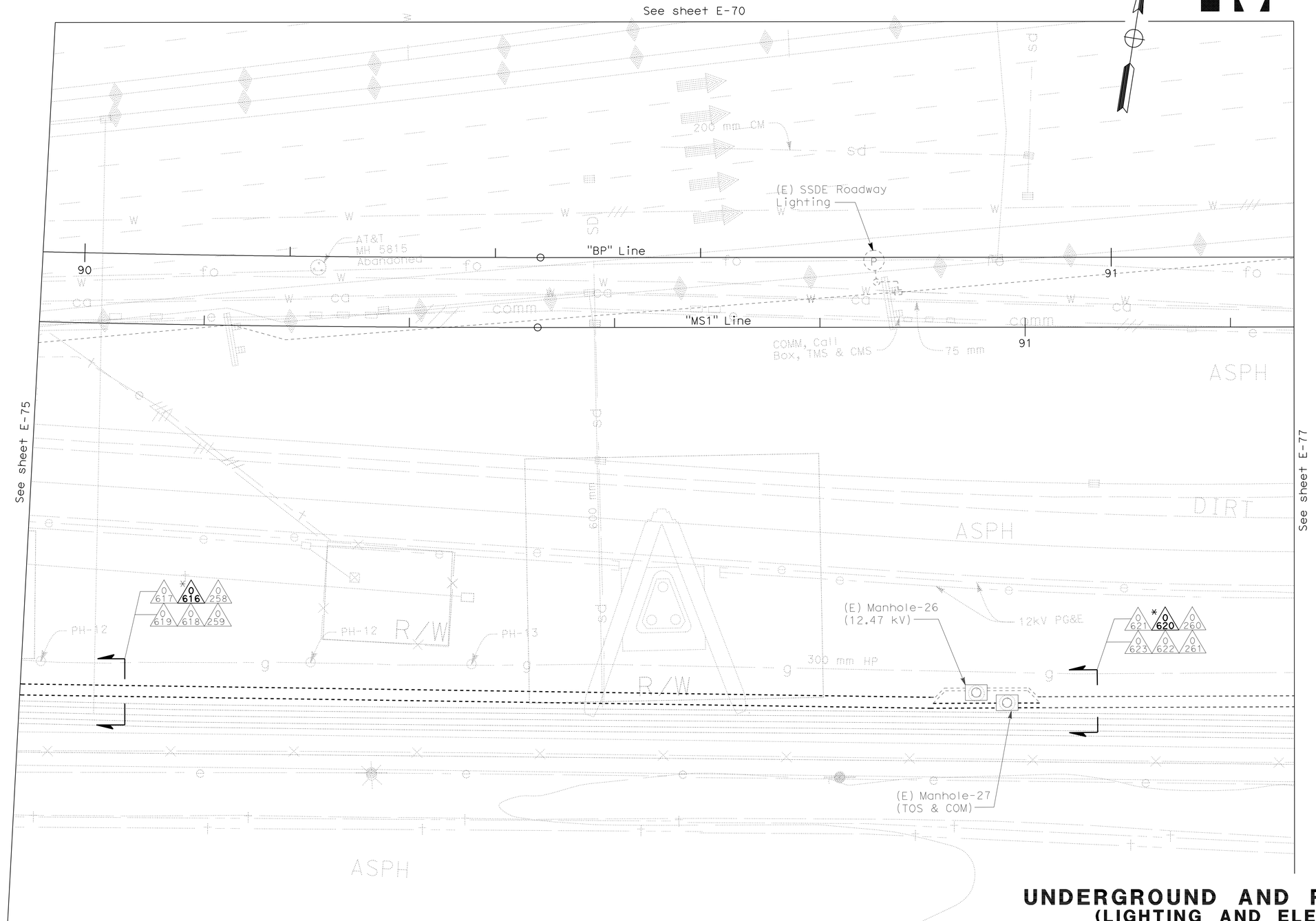

UNDERGROUND AND ROADWAY AT GRADE
(LIGHTING AND ELECTRICAL SYSTEMS)
UNDERGROUND CONDUIT PLAN
STAGE 1

SCALE 1:200

E-76

NOTES:

1. References:
   - For conduit and tray, cable and circuit schedules, see sheets starting at E-205.
2. The conduits prefixed with (*) are existing and provided as reference for routing cables/ circuits only.
3. For electrical equipment or devices removed, see sheets E-153 through E-160.

THIS PLAN IS ACCURATE FOR ELECTRICAL WORK ONLY.

ALL DIMENSIONS ARE IN METERS UNLESS OTHERWISE SHOWN

STATE OF CALIFORNIA - DEPARTMENT OF TRANSPORTATION
Caltrans

CONSULTANT FUNCTIONAL SUPERVISOR: BRADY NADELL
CALCULATED-DESIGNED BY: JEFFRI HALIM
CHECKED BY: ELLERY LUCAS
REVISED BY / DATE REVISED

LAST REVISION 08-17-09 DATE PLOTTED => 06-OCT-2011 TIME PLOTTED => 08:54

Dist	COUNTY	ROUTE	KILOMETER POST TOTAL PROJECT	SHEET No.	TOTAL SHEETS
04	Ala	80	1.6/2.7	267	744

REGISTERED ELECTRICAL ENGINEER 5/02/11

10-3-11
PLANS APPROVAL DATE

REGISTERED PROFESSIONAL ENGINEER DAVID H. OTO No. 10699 Exp. 06/30/2013 ELECTRICAL STATE OF CALIFORNIA

THE STATE OF CALIFORNIA OR ITS OFFICERS OR AGENTS SHALL NOT BE RESPONSIBLE FOR THE ACCURACY OR COMPLETENESS OF ELECTRONIC COPIES OF THIS PLAN SHEET.

PB AMERICAS, Inc.
303 Second St., Suite 700N
San Francisco, CA 94107-1317

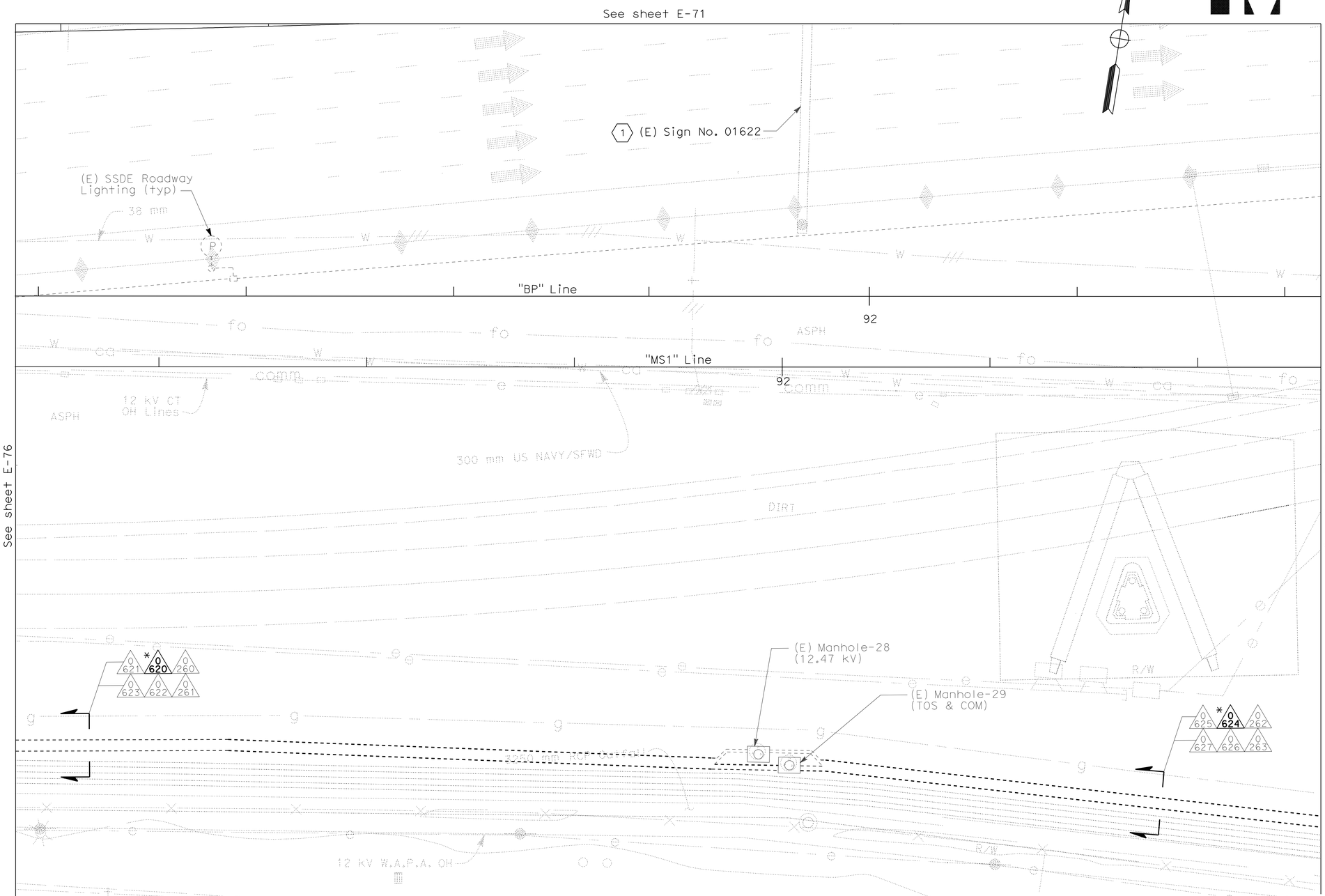

NOTES:

1. References:
   - For conduit and tray, cable and circuit schedules, see sheets starting at E-205.
2. The conduits prefixed with (*) are existing and provided as reference for routing cables/circuits only.
3. For electrical equipment or devices removed, see sheets E-153 through E-160.

SHEET NOTE:

(1) Existing power supply is from (E) High Mast lighting shown on sheet E-71.

UNDERGROUND AND ROADWAY AT GRADE
(LIGHTING AND ELECTRICAL SYSTEMS)
UNDERGROUND CONDUIT PLAN
STAGE 1

SCALE 1:200

E-77

THIS PLAN IS ACCURATE FOR ELECTRICAL WORK ONLY.

ALL DIMENSIONS ARE IN METERS UNLESS OTHERWISE SHOWN

STATE OF CALIFORNIA - DEPARTMENT OF TRANSPORTATION
Caltrans

CONSULTANT FUNCTIONAL SUPERVISOR: BRADY NADELL
CALCULATED-DESIGNED BY: JEFFRI HALIM
CHECKED BY: ELLERY LUCAS
REVISED BY / DATE REVISED

LAST REVISION 08-17-09 | DATE PLOTTED => 06-OCT-2011 | TIME PLOTTED => 06:54

Dist	COUNTY	ROUTE	KILOMETER POST TOTAL PROJECT	SHEET No.	TOTAL SHEETS
04	Ala	80	1.6/2.7	268	744

REGISTERED ELECTRICAL ENGINEER 5/02/11

10-3-11
PLANS APPROVAL DATE

REGISTERED PROFESSIONAL ENGINEER DAVID H. OTO No. 10699 Exp. 06/30/2013 ELECTRICAL STATE OF CALIFORNIA

THE STATE OF CALIFORNIA OR ITS OFFICERS OR AGENTS SHALL NOT BE RESPONSIBLE FOR THE ACCURACY OR COMPLETENESS OF ELECTRONIC COPIES OF THIS PLAN SHEET.

PB AMERICAS, Inc.
303 Second St., Suite 700N
San Francisco, CA 94107-1317

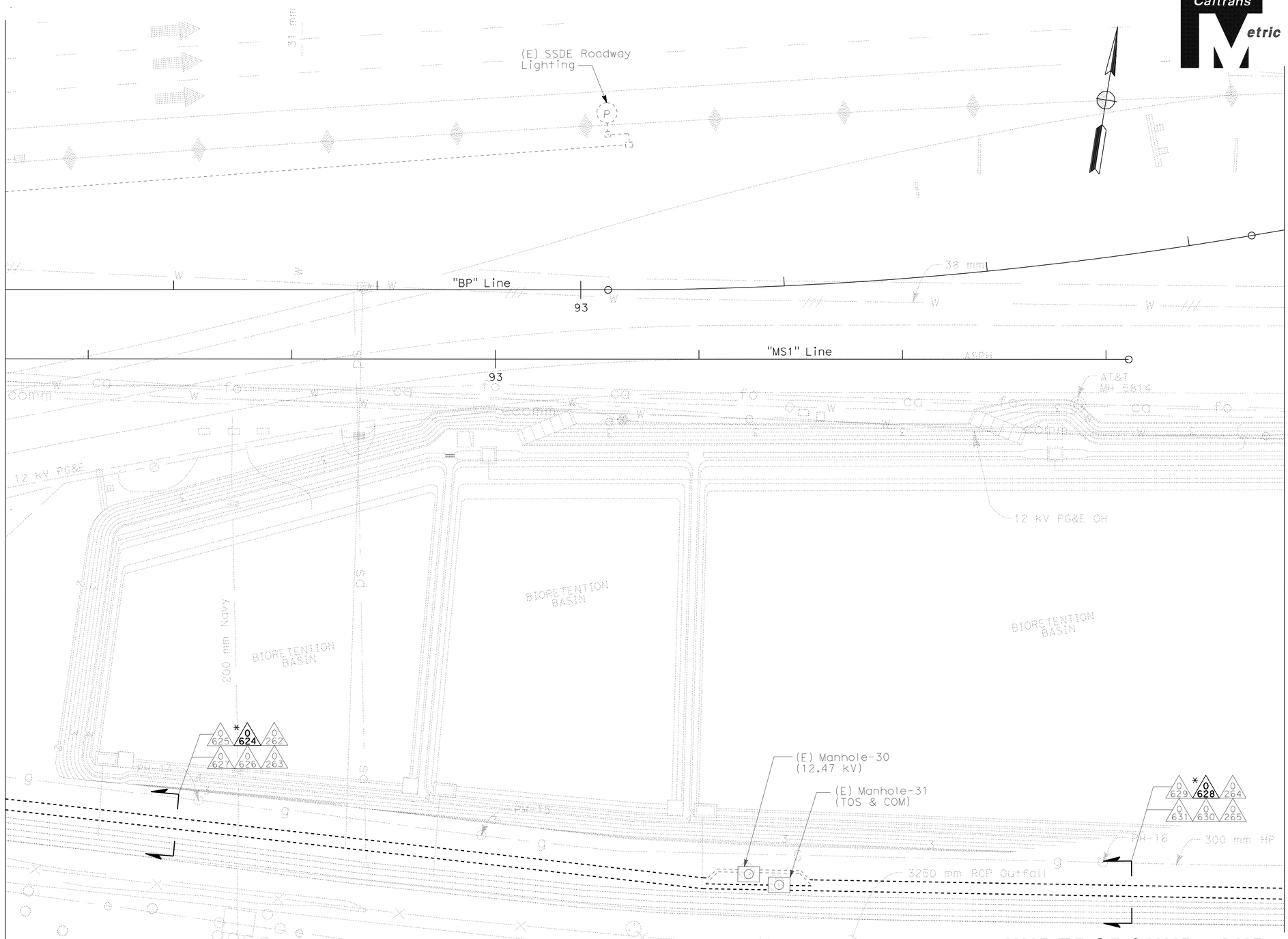

NOTES:

1. References:
   - For conduit and tray, cable and circuit schedules, see sheets starting at E-205.
2. The conduits prefixed with (*) is existing and is provided as reference for routing the cable/ circuits only.
3. For electrical equipment or devices removed, see sheets E-153 through E-160.

UNDERGROUND AND ROADWAY AT GRADE
(LIGHTING AND ELECTRICAL SYSTEMS)
UNDERGROUND CONDUIT PLAN
STAGE 1

SCALE 1:200

THIS PLAN IS ACCURATE FOR ELECTRICAL WORK ONLY.

ALL DIMENSIONS ARE IN METERS UNLESS OTHERWISE SHOWN

E-78

STATE OF CALIFORNIA - DEPARTMENT OF TRANSPORTATION	CONSULTANT FUNCTIONAL SUPERVISOR	CALCULATED-DESIGNED BY	REVISED BY
Caltrans	BRADY NADELL	CHECKED BY	DATE REVISED
	JEFFRI HALIM	ELLERY LUCAS	

LAST REVISION DATE PLOTTED => 06-OCT-2011
08-17-09 TIME PLOTTED => 06:54

Dist	COUNTY	ROUTE	KILOMETER POST TOTAL PROJECT	SHEET No.	TOTAL SHEETS
04	Ala	80	1.6/2.7	269	744

REGISTERED ELECTRICAL ENGINEER 5/02/11

10-3-11
PLANS APPROVAL DATE

REGISTERED PROFESSIONAL ENGINEER
DAVID H. OTO
No. 10699
Exp. 06/30/2013
ELECTRICAL
STATE OF CALIFORNIA

THE STATE OF CALIFORNIA OR ITS OFFICERS OR AGENTS SHALL NOT BE RESPONSIBLE FOR THE ACCURACY OR COMPLETENESS OF ELECTRONIC COPIES OF THIS PLAN SHEET.

PB AMERICAS, Inc.
303 Second St., Suite 700N
San Francisco, CA 94107-1317

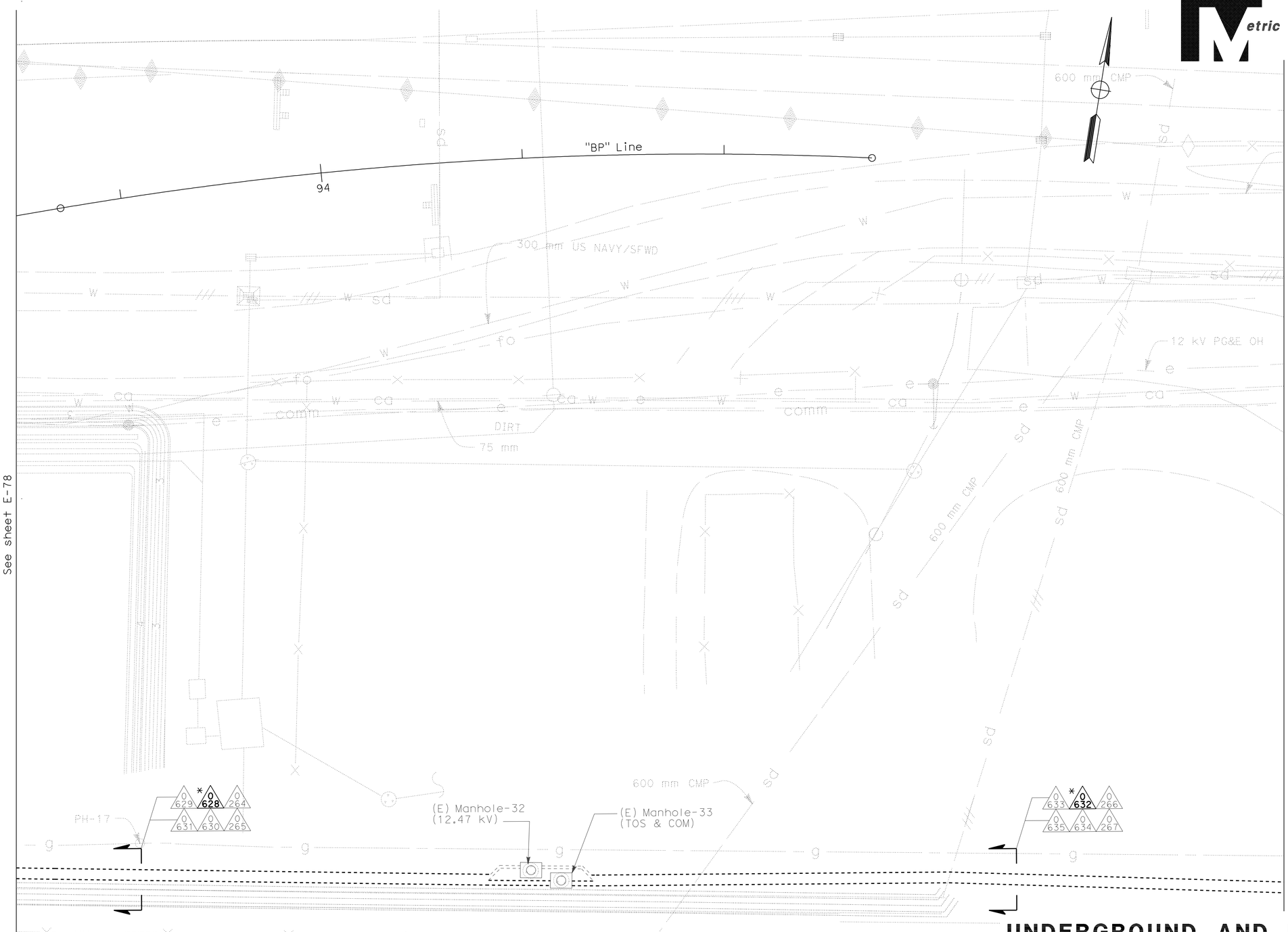

NOTES:

1. References:
   - For conduit and tray, cable and circuit schedules, see sheets starting at E-205.
2. The conduits prefixed with (*) is existing and provided as reference for routing the cable/circuits only.

UNDERGROUND AND ROADWAY AT GRADE
(LIGHTING AND ELECTRICAL SYSTEMS)
UNDERGROUND CONDUIT PLAN
STAGE 1

SCALE 1:200

E-79

THIS PLAN IS ACCURATE FOR ELECTRICAL WORK ONLY.

ALL DIMENSIONS ARE IN METERS UNLESS OTHERWISE SHOWN

STATE OF CALIFORNIA - DEPARTMENT OF TRANSPORTATION
Caltrans

CONSULTANT FUNCTIONAL SUPERVISOR: BRADY NADELL
CALCULATED-DESIGNED BY: JEFFRI HALIM
CHECKED BY: ELLERY LUCAS
REVISED BY
DATE REVISED

LAST REVISION 08-17-09
DATE PLOTTED => 06-OCT-2011
TIME PLOTTED => 06:54

Dist	COUNTY	ROUTE	KILOMETER POST TOTAL PROJECT	SHEET No.	TOTAL SHEETS
04	Ala	80	1.6/2.7	270	744

REGISTERED ELECTRICAL ENGINEER 5/02/11

10-3-11
PLANS APPROVAL DATE

REGISTERED PROFESSIONAL ENGINEER
DAVID H. OTO
No. 10699
Exp. 06/30/2013
ELECTRICAL
STATE OF CALIFORNIA

THE STATE OF CALIFORNIA OR ITS OFFICERS OR AGENTS SHALL NOT BE RESPONSIBLE FOR THE ACCURACY OR COMPLETENESS OF ELECTRONIC COPIES OF THIS PLAN SHEET.

PB AMERICAS, Inc.
303 Second St., Suite 700N
San Francisco, CA 94107-1317

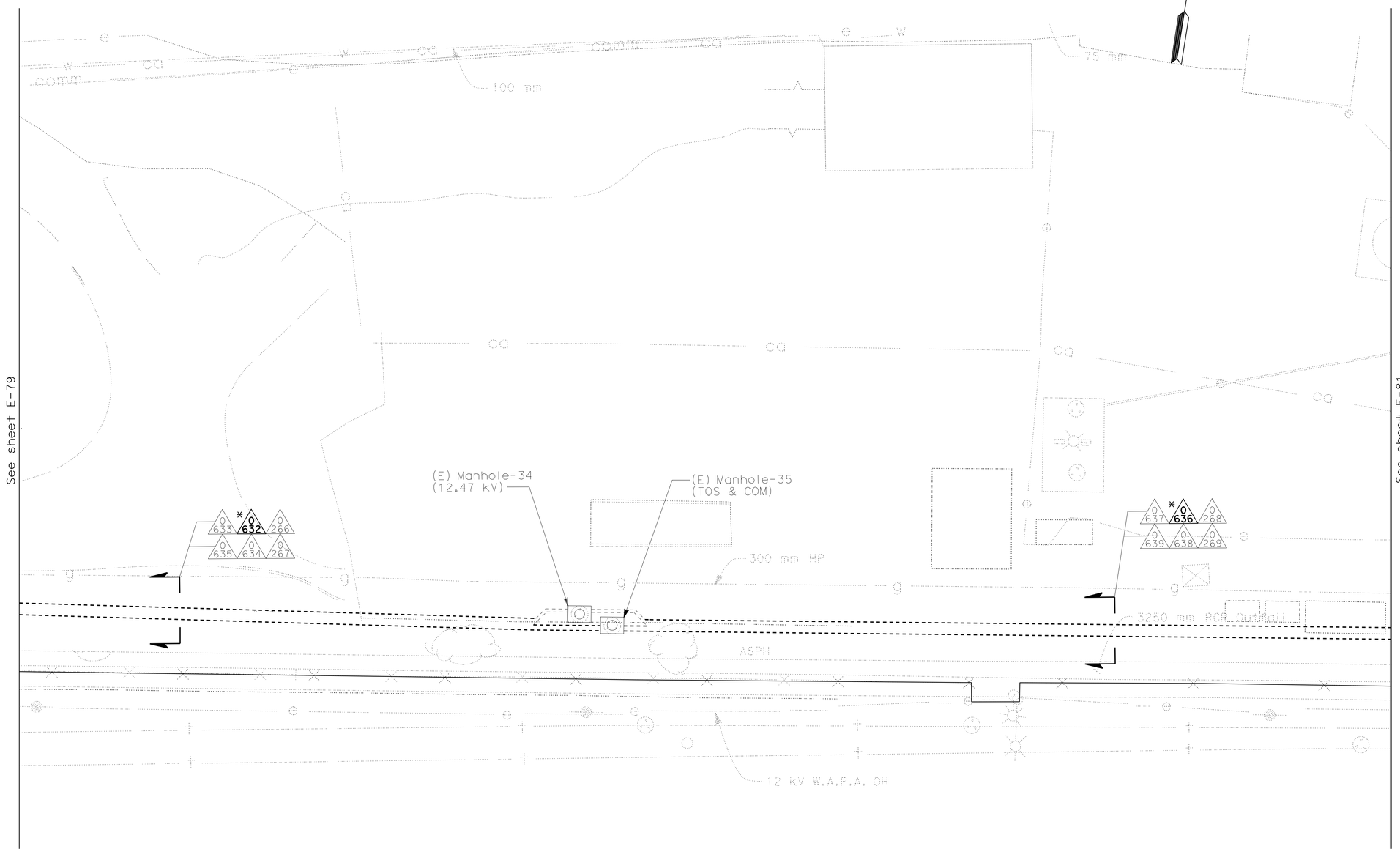

NOTES:

1. References:
   - For conduit and tray, cable and circuit schedules, see sheets starting at E-205.
2. The conduits prefixed with (*) is existing and provided as reference for routing the cable/circuits only.

UNDERGROUND AND ROADWAY AT GRADE
(LIGHTING AND ELECTRICAL SYSTEMS)
UNDERGROUND CONDUIT PLAN
STAGE 1

SCALE 1:200

E-80

THIS PLAN IS ACCURATE FOR ELECTRICAL WORK ONLY.

ALL DIMENSIONS ARE IN METERS UNLESS OTHERWISE SHOWN

REVISED BY	DATE REVISED

CALCULATED-DESIGNED BY: JEFFRI HALIM
CHECKED BY: ELLERY LUCAS
CONSULTANT FUNCTIONAL SUPERVISOR: BRADY NADELL

STATE OF CALIFORNIA - DEPARTMENT OF TRANSPORTATION
Caltrans

LAST REVISION 08-17-09
DATE PLOTTED => 06-OCT-2011
TIME PLOTTED => 06:55

Dist	COUNTY	ROUTE	KILOMETER POST TOTAL PROJECT	SHEET No.	TOTAL SHEETS
04	Ala	80	1.6/2.7	271	744

REGISTERED ELECTRICAL ENGINEER 5/02/11

10-3-11
PLANS APPROVAL DATE

REGISTERED PROFESSIONAL ENGINEER
DAVID H. OTO
No. 10699
Exp. 06/30/2013
ELECTRICAL
STATE OF CALIFORNIA

THE STATE OF CALIFORNIA OR ITS OFFICERS OR AGENTS SHALL NOT BE RESPONSIBLE FOR THE ACCURACY OR COMPLETENESS OF ELECTRONIC COPIES OF THIS PLAN SHEET.

PB AMERICAS, Inc.
303 Second St., Suite 700N
San Francisco, CA 94107-1317

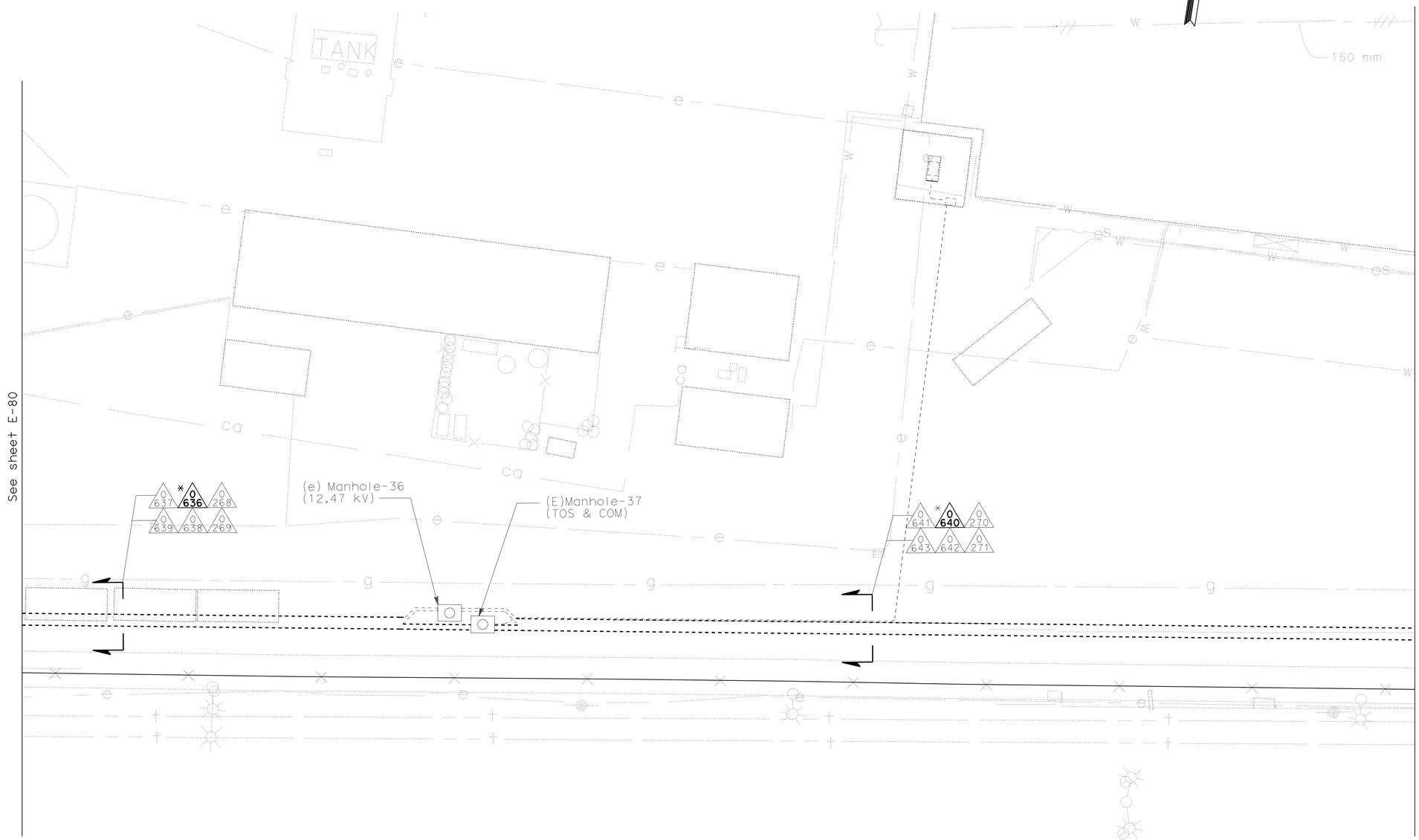

NOTES:

1. References:
   - For conduit and tray, cable and circuit schedules, see sheets starting at E-205.
2. The conduits prefixed with (*) is existing and provided as reference for routing the cable/circuits only.

UNDERGROUND AND ROADWAY AT GRADE
(LIGHTING AND ELECTRICAL SYSTEMS)
UNDERGROUND CONDUIT PLAN
STAGE 1

SCALE 1:200

E-81

THIS PLAN IS ACCURATE FOR ELECTRICAL WORK ONLY.

ALL DIMENSIONS ARE IN METERS UNLESS OTHERWISE SHOWN

REVISED BY	
DATE REVISED	
CALCULATED-DESIGNED BY	JEFFRI HALIM
CHECKED BY	ELLERY LUCAS
CONSULTANT FUNCTIONAL SUPERVISOR	BRADY NADELL

STATE OF CALIFORNIA - DEPARTMENT OF TRANSPORTATION
Caltrans

LAST REVISION 08-17-09 DATE PLOTTED => 06-OCT-2011 TIME PLOTTED => 06:55

Dist	COUNTY	ROUTE	KILOMETER POST TOTAL PROJECT	SHEET No.	TOTAL SHEETS
04	Ala	80	1.6/2.7	272	744

REGISTERED ELECTRICAL ENGINEER 5/02/11

10-3-11
PLANS APPROVAL DATE

REGISTERED PROFESSIONAL ENGINEER
DAVID H. OTO
No. 10699
Exp. 06/30/2013
ELECTRICAL
STATE OF CALIFORNIA

THE STATE OF CALIFORNIA OR ITS OFFICERS OR AGENTS SHALL NOT BE RESPONSIBLE FOR THE ACCURACY OR COMPLETENESS OF ELECTRONIC COPIES OF THIS PLAN SHEET.

PB AMERICAS, Inc.
303 Second St., Suite 700N
San Francisco, CA 94107-1317

Caltrans Metric

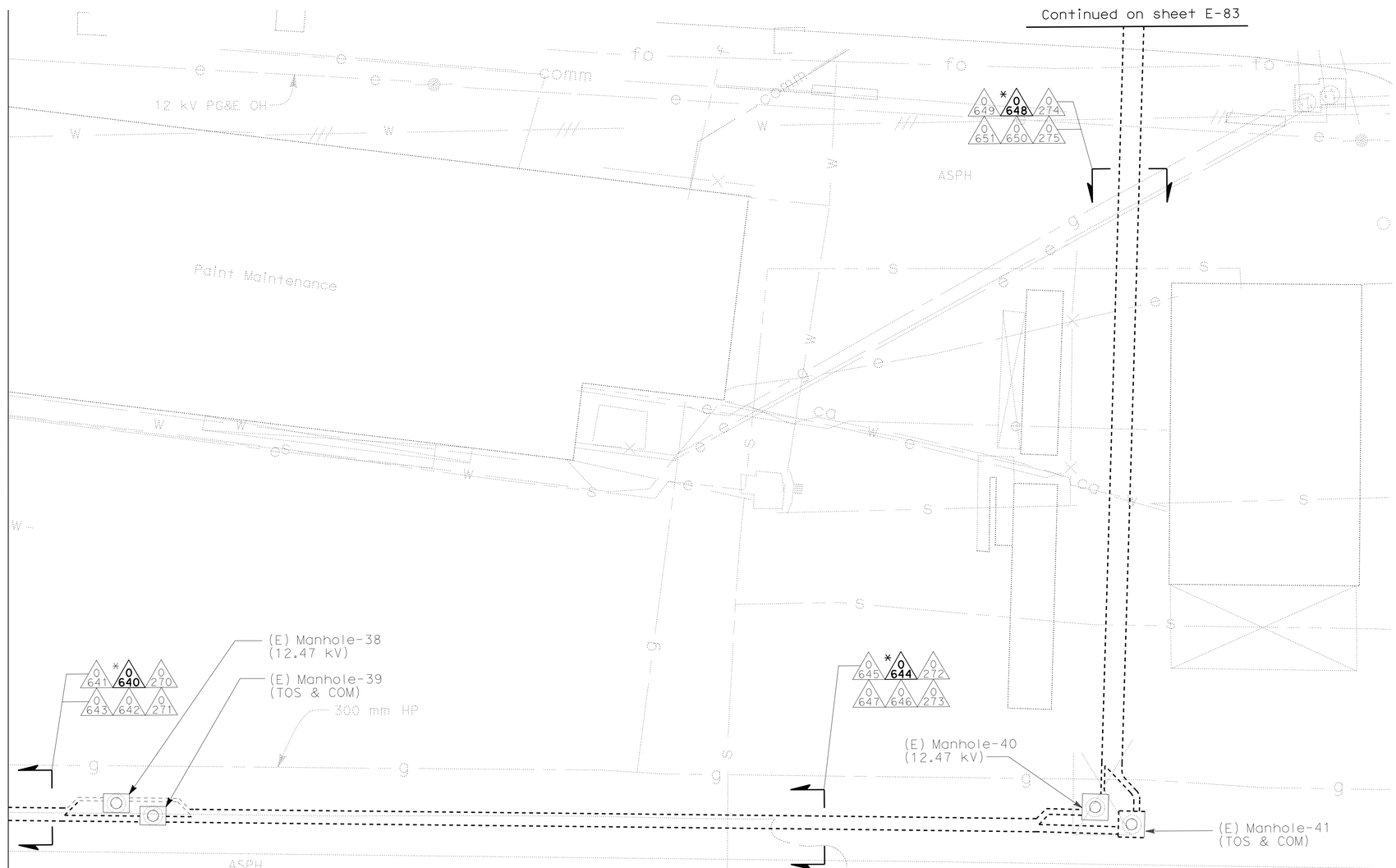

NOTES:

1. References:
   - For conduit and tray, cable and circuit schedules, see sheets starting at E-205.
2. The conduits prefixed with (*) is existing and provided as reference for routing the cable/circuits only.

UNDERGROUND AND ROADWAY AT GRADE
(LIGHTING AND ELECTRICAL SYSTEMS)
UNDERGROUND CONDUIT PLAN
STAGE 1

SCALE 1:200

E-82

THIS PLAN IS ACCURATE FOR ELECTRICAL WORK ONLY.

ALL DIMENSIONS ARE IN METERS UNLESS OTHERWISE SHOWN

REVISED BY	
DATE REVISED	
CALCULATED-DESIGNED BY	JEFFRI HALIM
CHECKED BY	ELLERY LUCAS
CONSULTANT FUNCTIONAL SUPERVISOR	BRADY NADELL

STATE OF CALIFORNIA - DEPARTMENT OF TRANSPORTATION
Caltrans

LAST REVISION 08-17-09
DATE PLOTTED => 06-OCT-2011
TIME PLOTTED => 08:55

Dist	COUNTY	ROUTE	KILOMETER POST TOTAL PROJECT	SHEET No.	TOTAL SHEETS
04	Ala	80	1.6/2.7	273	744

REGISTERED ELECTRICAL ENGINEER 5/02/11

10-3-11
PLANS APPROVAL DATE

REGISTERED PROFESSIONAL ENGINEER DAVID H. OTO No. 10699 Exp. 06/30/2013 ELECTRICAL STATE OF CALIFORNIA

THE STATE OF CALIFORNIA OR ITS OFFICERS OR AGENTS SHALL NOT BE RESPONSIBLE FOR THE ACCURACY OR COMPLETENESS OF ELECTRONIC COPIES OF THIS PLAN SHEET.

PB AMERICAS, Inc.
303 Second St., Suite 700N
San Francisco, CA 94107-1317

Caltrans Metric

NOTES:

1. (*) Conduits, manholes and ductbanks shown are existing and installed in previous contract. It is provided as reference for routing cable circuits only.

2. References:
   - For conduit and tray, cable and circuit schedules, see sheets starting at E-205.

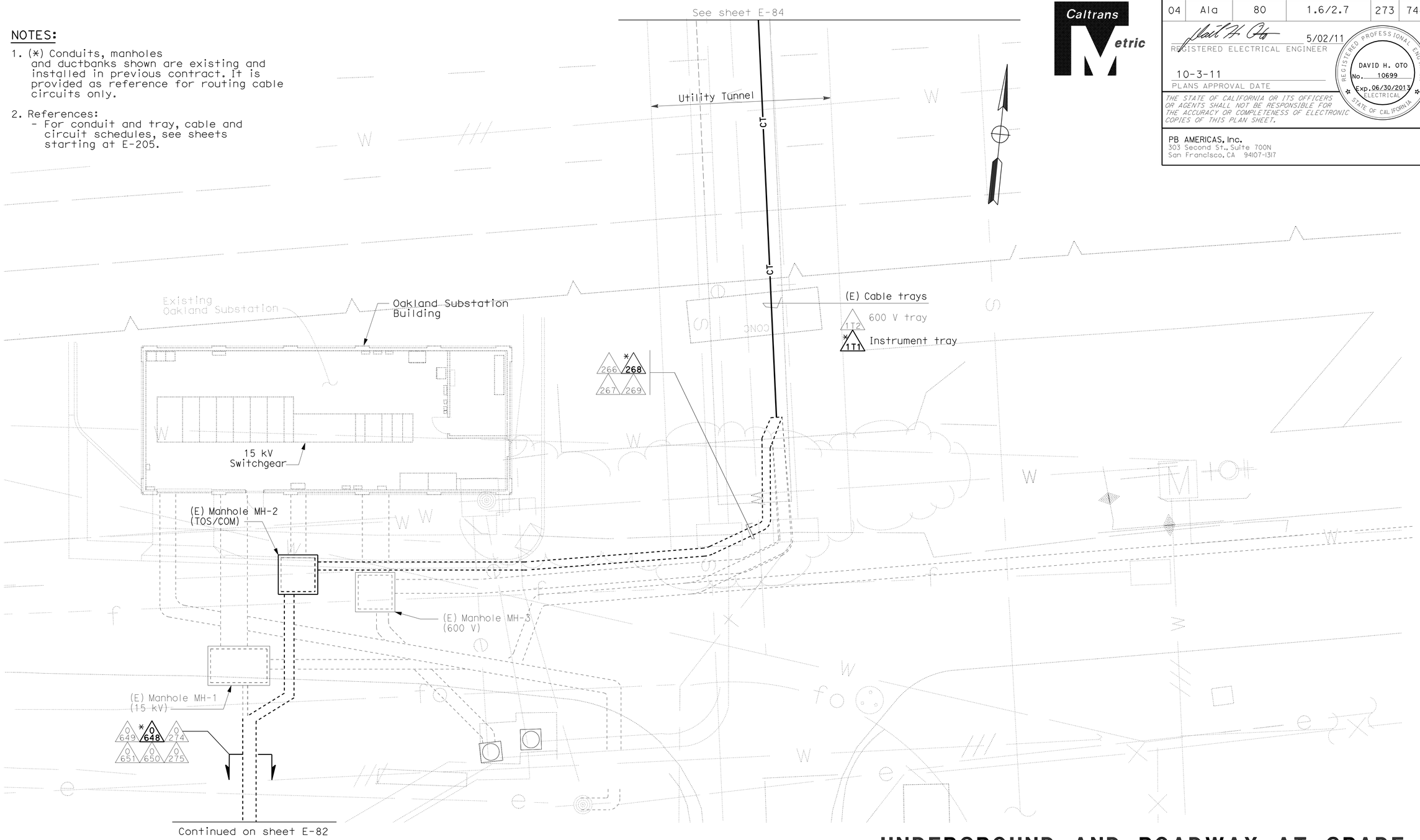

UNDERGROUND AND ROADWAY AT GRADE
(LIGHTING AND ELECTRICAL SYSTEMS)
UNDERGROUND CONDUIT PLAN - OAKLAND SUBSTATION AREA AND UTILITY TUNNEL
STAGE 1

SCALE 1:100

PLAN

THIS PLAN IS ACCURATE FOR ELECTRICAL WORK ONLY.

ALL DIMENSIONS ARE IN METERS UNLESS OTHERWISE SHOWN

E-83

STATE OF CALIFORNIA - DEPARTMENT OF TRANSPORTATION
Caltrans

CONSULTANT FUNCTIONAL SUPERVISOR: BRADY NADELL

CALCULATED-DESIGNED BY: JEFFRI HALIM

CHECKED BY: ELLERY LUCAS

REVISED BY | DATE REVISED

LAST REVISION DATE PLOTTED => 06-OCT-2011
TIME PLOTTED => 06:55
08-17-09

Dist	COUNTY	ROUTE	KILOMETER POST TOTAL PROJECT	SHEET No.	TOTAL SHEETS
04	Ala	80	1.6/2.7	274	744

REGISTERED ELECTRICAL ENGINEER 5/02/11

10-3-11
PLANS APPROVAL DATE

REGISTERED PROFESSIONAL ENGINEER
DAVID H. OTO
No. 10699
Exp. 06/30/2013
ELECTRICAL
STATE OF CALIFORNIA

THE STATE OF CALIFORNIA OR ITS OFFICERS OR AGENTS SHALL NOT BE RESPONSIBLE FOR THE ACCURACY OR COMPLETENESS OF ELECTRONIC COPIES OF THIS PLAN SHEET.

PB AMERICAS, Inc.
303 Second St., Suite 700N
San Francisco, CA 94107-1317

NOTES:

1. (*) Conduits, manholes and ductbanks shown are existing and installed in previous contract. It is provided as reference for routing cable circuits only.

2. References:
   - For conduit and tray, cable and circuit schedules, see sheets starting at E-205.

UNDERGROUND AND ROADWAY AT GRADE
(LIGHTING AND ELECTRICAL SYSTEMS)
UNDERGROUND CONDUIT PLAN - OAKLAND SUBSTATION AREA AND UTILITY TUNNEL
STAGE 1

SCALE 1:100

E-84

THIS PLAN IS ACCURATE FOR ELECTRICAL WORK ONLY.

ALL DIMENSIONS ARE IN METERS UNLESS OTHERWISE SHOWN

STATE OF CALIFORNIA - DEPARTMENT OF TRANSPORTATION
Caltrans

CONSULTANT FUNCTIONAL SUPERVISOR: BRADY NADELL
CALCULATED-DESIGNED BY: JEFFRI HALIM
CHECKED BY: ELLERY LUCAS
REVISED BY
DATE REVISED

LAST REVISION 08-17-09
DATE PLOTTED => 06-OCT-2011
TIME PLOTTED => 08:55

Dist	COUNTY	ROUTE	KILOMETER POST TOTAL PROJECT	SHEET No.	TOTAL SHEETS
04	Ala	80	1.6/2.7	275	744

REGISTERED ELECTRICAL ENGINEER 5/02/11

10-3-11
PLANS APPROVAL DATE

REGISTERED PROFESSIONAL ENGINEER
DAVID H. OTO
No. 10699
Exp. 06/30/2013
ELECTRICAL
STATE OF CALIFORNIA

THE STATE OF CALIFORNIA OR ITS OFFICERS OR AGENTS SHALL NOT BE RESPONSIBLE FOR THE ACCURACY OR COMPLETENESS OF ELECTRONIC COPIES OF THIS PLAN SHEET.

PB AMERICAS, Inc.
303 Second St., Suite 700N
San Francisco, CA 94107-1317

NOTES:

1. (*) Conduits, manholes and ductbanks shown are existing and installed in previous contract. It is provided as reference for routing cable circuits only.

2. References:
   - For conduit and tray, cable and circuit schedules, see sheets starting at E-205.

SHEET NOTE:

(1) The end connection of this Fiber Optic cable is to the new Administration building, location not shown. Prior to installing this Fiber Optic cable, the Contractor shall coordinate this work with the new Administration building. Termination to the relocated TOS cabinet shall be by this Contractor.

UNDERGROUND AND ROADWAY AT GRADE
(LIGHTING AND ELECTRICAL SYSTEMS)
CONDUIT PLAN - UTILITY TUNNEL AND ADMINISTRATION BLDG
STAGE 1

SCALE 1:100

THIS PLAN IS ACCURATE FOR ELECTRICAL WORK ONLY.

ALL DIMENSIONS ARE IN METERS UNLESS OTHERWISE SHOWN

E-85

STATE OF CALIFORNIA - DEPARTMENT OF TRANSPORTATION
Caltrans

CONSULTANT FUNCTIONAL SUPERVISOR: BRADY NADELL
CALCULATED-DESIGNED BY: JEFFRI HALIM
CHECKED BY: ELLERY LUCAS
REVISED BY
DATE REVISED

LAST REVISION DATE PLOTTED => 06-OCT-2011
TIME PLOTTED => 06:55

Dist	COUNTY	ROUTE	KILOMETER POST TOTAL PROJECT	SHEET No.	TOTAL SHEETS
04	Ala	80	1.6/2.7	276	744

REGISTERED ELECTRICAL ENGINEER 5/02/11

10-3-11
PLANS APPROVAL DATE

REGISTERED PROFESSIONAL ENGINEER DAVID H. OTO No. 10699 Exp. 06/30/2013 ELECTRICAL STATE OF CALIFORNIA

THE STATE OF CALIFORNIA OR ITS OFFICERS OR AGENTS SHALL NOT BE RESPONSIBLE FOR THE ACCURACY OR COMPLETENESS OF ELECTRONIC COPIES OF THIS PLAN SHEET.

PB AMERICAS, Inc.
303 Second St., Suite 700N
San Francisco, CA 94107-1317

Caltrans Metric

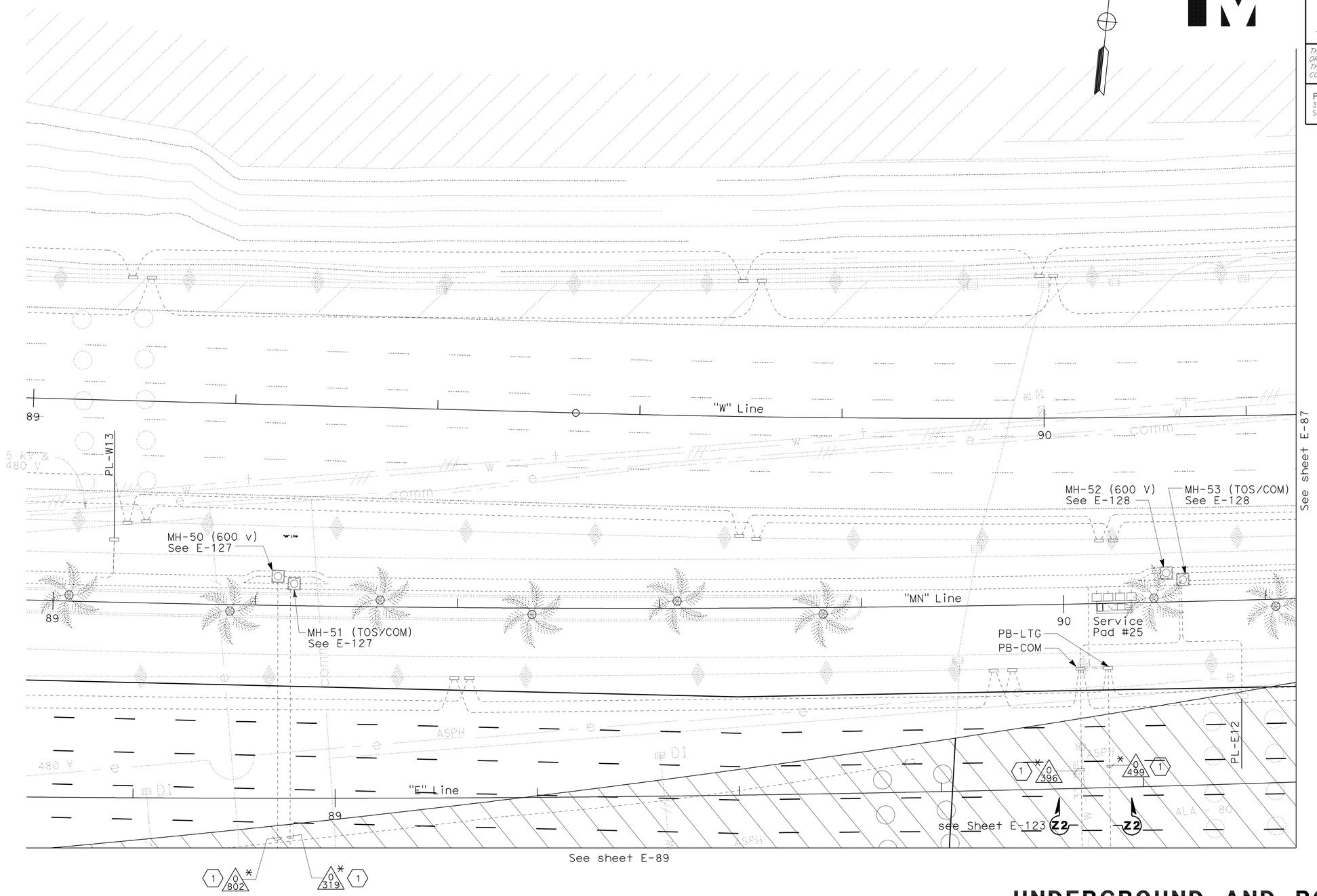

NOTES:

1. References:
   - For conduit and tray, cable and circuit schedules, see sheets starting at E-205.
2. For electrical equipment or devices removed, see sheets E-153 through E-160.

SHEET NOTE:

(1) Connect conduit to capped conduit. The capped conduits are installed in Stage 1, see sheet E-69.

LEGEND:

See Stage Construction and Traffic Handling Plan, Stage 2, for Details.

UNDERGROUND AND ROADWAY AT GRADE
(LIGHTING AND ELECTRICAL SYSTEMS)
WESTBOUND AND EASTBOUND ROADWAY
STAGE 2

SCALE 1:200

E-86

THIS PLAN IS ACCURATE FOR ELECTRICAL WORK ONLY.

ALL DIMENSIONS ARE IN METERS UNLESS OTHERWISE SHOWN

STATE OF CALIFORNIA - DEPARTMENT OF TRANSPORTATION
Caltrans

CONSULTANT FUNCTIONAL SUPERVISOR: BRADY NADELL
CALCULATED-DESIGNED BY: JEFFRI HALIM
CHECKED BY: ELLERY LUCAS
REVISED BY / DATE REVISED

LAST REVISION 08-17-09 | DATE PLOTTED => 06-OCT-2011 | TIME PLOTTED => 06:55

Dist	COUNTY	ROUTE	KILOMETER POST TOTAL PROJECT	SHEET No.	TOTAL SHEETS
04	Ala	80	1.6/2.7	277	744

REGISTERED ELECTRICAL ENGINEER 5/02/11

PLANS APPROVAL DATE 10-3-11

REGISTERED PROFESSIONAL ENGINEER DAVID H. OTO No. 10699 Exp. 06/30/2013 ELECTRICAL STATE OF CALIFORNIA

THE STATE OF CALIFORNIA OR ITS OFFICERS OR AGENTS SHALL NOT BE RESPONSIBLE FOR THE ACCURACY OR COMPLETENESS OF ELECTRONIC COPIES OF THIS PLAN SHEET.

PB AMERICAS, Inc.
303 Second St., Suite 700N
San Francisco, CA 94107-1317

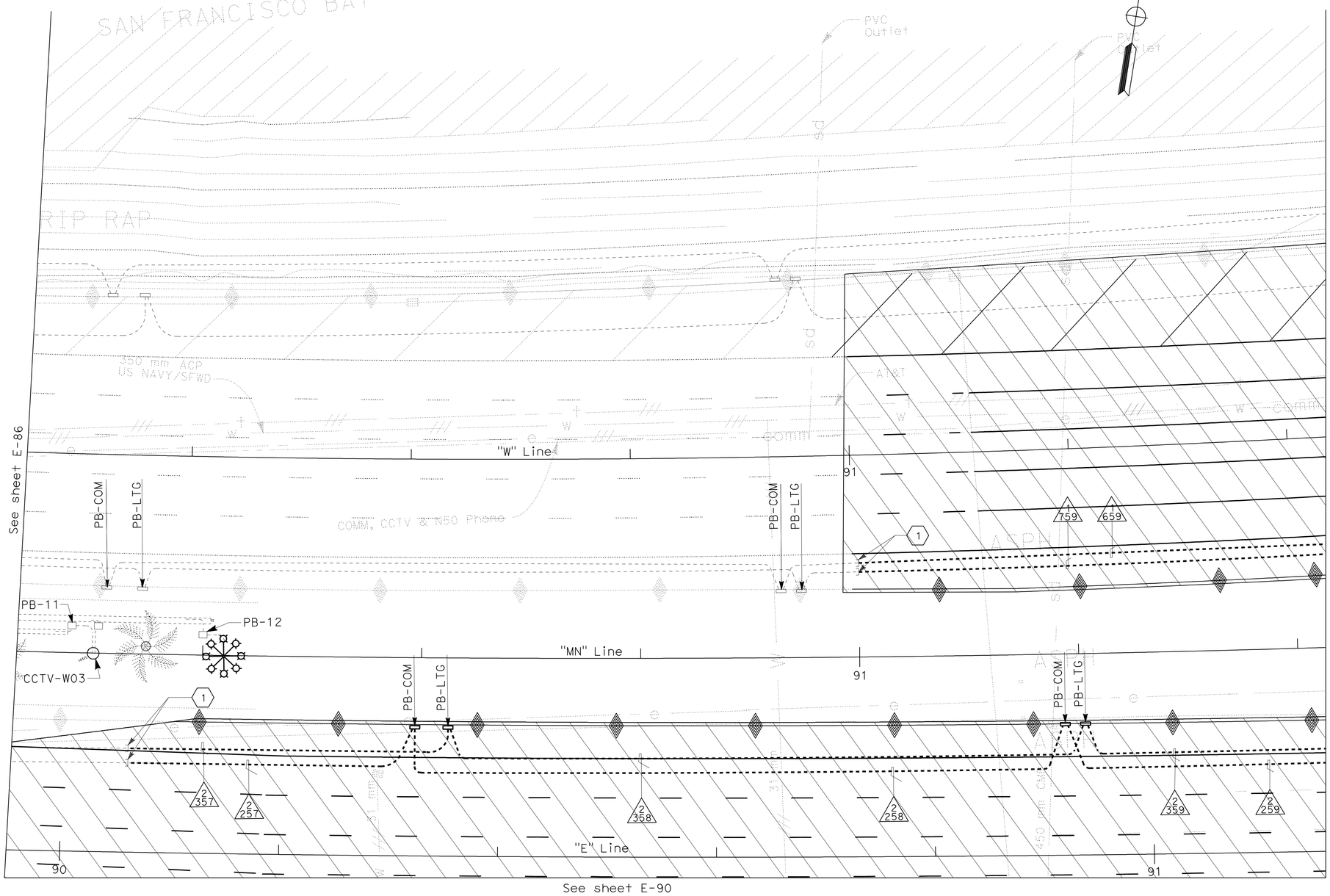

NOTES:

1. References:
   - For pull box schedule, see sheet E-130.
   - TOS equipment is shown for conduit routing only. For typical details of TOS controllers and devices, see sheets E-190 through E-197.
   - For conduit and tray, cable and circuit schedules, see sheets starting at E-205.
   - For manhole sections, see sheets E-124 through E-129.
   - For duct bank profiles, see Utility drawings.
   - For typical duct bank sections, see sheet E-120.
   - For high mast lighting wiring diagram, see sheet E-147.
2. For electrical equipment or devices removed, see sheets E-153 through E-160.

SHEET NOTE:

(1) Connect to capped conduit. The capped conduits are installed in Stage 1, see sheet E-70.

LEGEND:

Stage Construction and Traffic Handling Plan, Stage 2, for Details.

UNDERGROUND AND ROADWAY AT GRADE
(LIGHTING AND ELECTRICAL SYSTEMS)
WESTBOUND AND EASTBOUND ROADWAY
STAGE 2

SCALE 1:200

E-87

THIS PLAN IS ACCURATE FOR ELECTRICAL WORK ONLY.

ALL DIMENSIONS ARE IN METERS UNLESS OTHERWISE SHOWN

STATE OF CALIFORNIA - DEPARTMENT OF TRANSPORTATION

Caltrans

CONSULTANT FUNCTIONAL SUPERVISOR: BRADY NADELL

CALCULATED-DESIGNED BY: JEFFRI HALIM

CHECKED BY: ELLERY LUCAS

REVISED BY / DATE REVISED

LAST REVISION 08-17-09 DATE PLOTTED => 06-OCT-2011 TIME PLOTTED => 06:55

Dist	COUNTY	ROUTE	KILOMETER POST TOTAL PROJECT	SHEET No.	TOTAL SHEETS
04	Ala	80	1.6/2.7	278	744

REGISTERED ELECTRICAL ENGINEER 5/02/11

10-3-11
PLANS APPROVAL DATE

REGISTERED PROFESSIONAL ENGINEER DAVID H. OTO No. 10699 Exp. 06/30/2013 ELECTRICAL STATE OF CALIFORNIA

THE STATE OF CALIFORNIA OR ITS OFFICERS OR AGENTS SHALL NOT BE RESPONSIBLE FOR THE ACCURACY OR COMPLETENESS OF ELECTRONIC COPIES OF THIS PLAN SHEET.

PB AMERICAS, Inc.
303 Second St., Suite 700N
San Francisco, CA 94107-1317

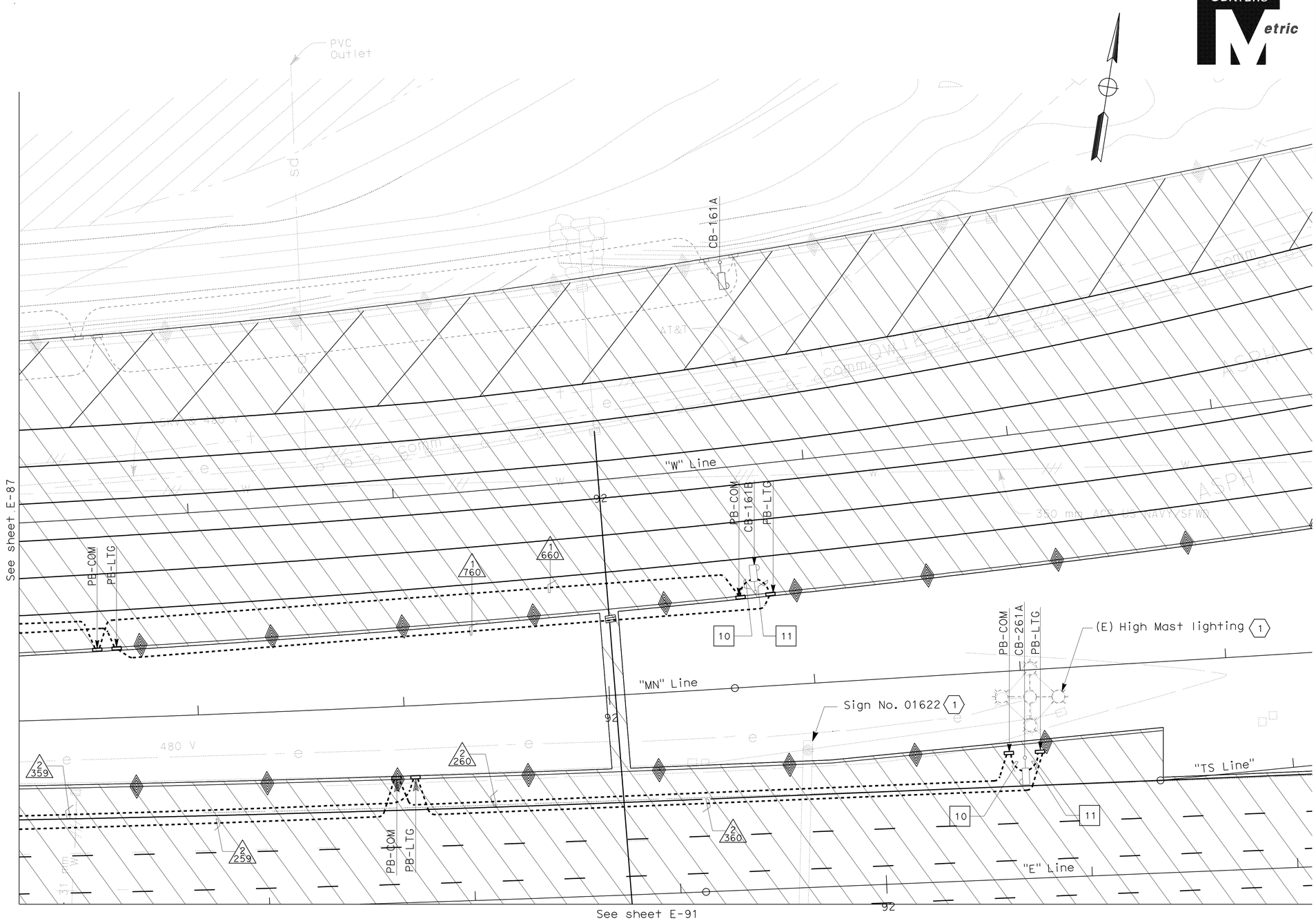

NOTES:

1. References:
   - For pull box schedule, see sheet E-130.
   - TOS equipment is shown for conduit routing only. For typical details of TOS controllers and devices, see sheets E-190 through E-197.
   - For conduit and tray, cable and circuit schedules, see sheets starting at E-205.
   - For manhole sections, see sheets E-124 through E-129.
   - For duct bank profiles, see Utility drawings.
   - For typical duct bank sections, see sheet E-120.
   - For high mast lighting wiring diagram, see sheet E-147.
2. For electrical equipment and devices removed. see sheets E-153 through E-160.

SHEET NOTE:

1. Existing to remain connected until the new High Mast lighting and the power to (E) Sign is installed.

LEGEND:

See Roadway Plans, Stage Construction and Traffic Handling Plan, Stage 2, for Details.

UNDERGROUND AND ROADWAY AT GRADE
(LIGHTING AND ELECTRICAL SYSTEMS)
WESTBOUND AND EASTBOUND ROADWAY
STAGE 2

SCALE 1:200

E-88

THIS PLAN IS ACCURATE FOR ELECTRICAL WORK ONLY.

ALL DIMENSIONS ARE IN METERS UNLESS OTHERWISE SHOWN

STATE OF CALIFORNIA - DEPARTMENT OF TRANSPORTATION
Caltrans

CONSULTANT FUNCTIONAL SUPERVISOR: BRADY NADELL
CALCULATED-DESIGNED BY: JEFFRI HALIM
CHECKED BY: ELLERY LUCAS
REVISED BY / DATE REVISED

LAST REVISION DATE PLOTTED => 06-OCT-2011
08-17-09 TIME PLOTTED => 06:55

Dist	COUNTY	ROUTE	KILOMETER POST TOTAL PROJECT	SHEET No.	TOTAL SHEETS
04	Ala	80	1.6/2.7	279	744

REGISTERED ELECTRICAL ENGINEER 5/02/11

10-3-11
PLANS APPROVAL DATE

REGISTERED PROFESSIONAL ENGINEER
DAVID H. OTO
No. 10699
Exp. 06/30/2013
ELECTRICAL
STATE OF CALIFORNIA

THE STATE OF CALIFORNIA OR ITS OFFICERS OR AGENTS SHALL NOT BE RESPONSIBLE FOR THE ACCURACY OR COMPLETENESS OF ELECTRONIC COPIES OF THIS PLAN SHEET.

PB AMERICAS, Inc.
303 Second St., Suite 700N
San Francisco, CA 94107-1317

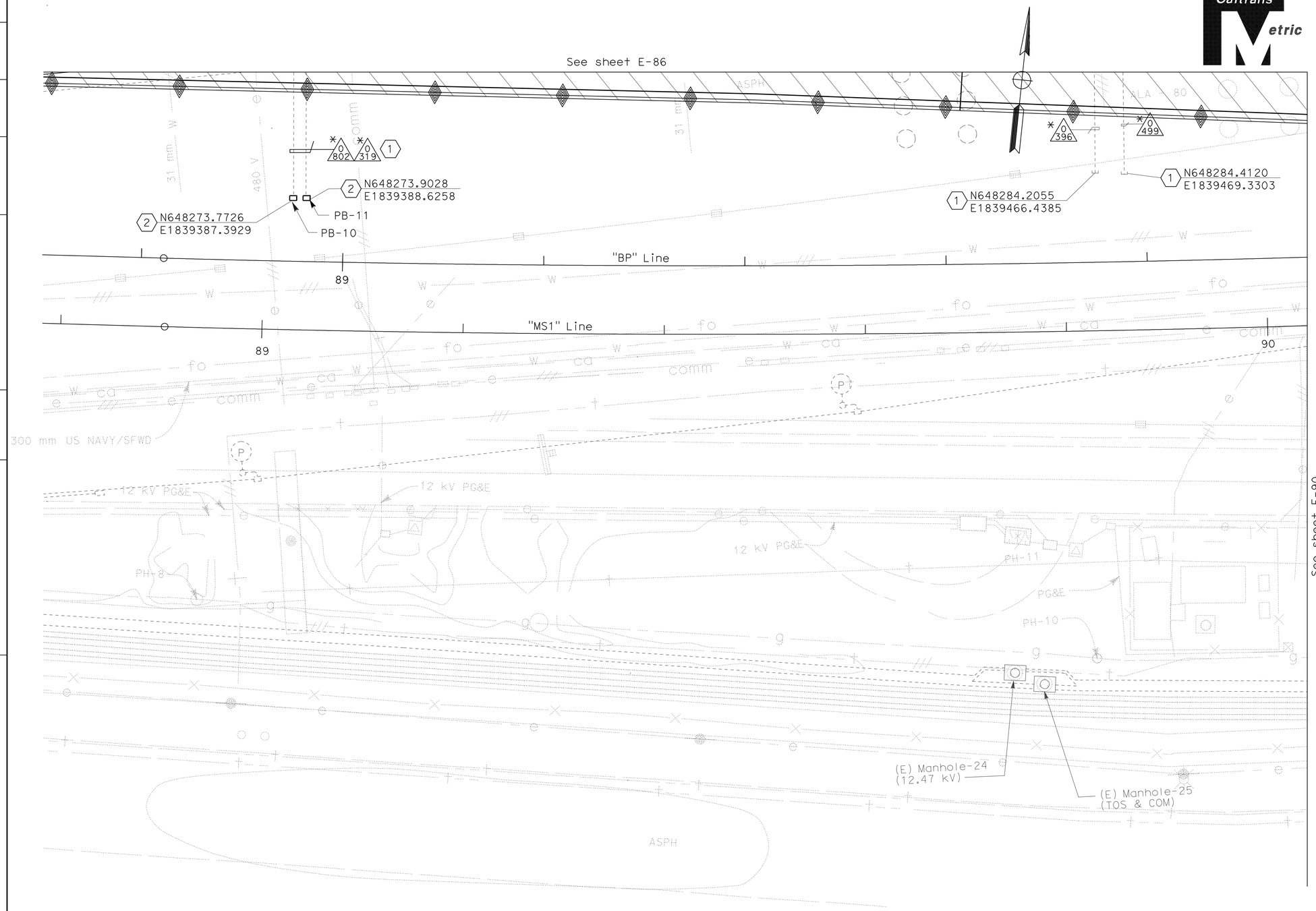

NOTE:

1. References:
   - For conduit and tray, cable and circuit schedules, see sheets starting at E-205.

SHEET NOTE:

(1) Existing conduit installed previously, see sheet E-99.

(2) Extend (E) conduits and connect to pull box.

LEGEND:

See Roadway Plans, Stage Construction and Traffic Handling Plan, Stage 2, for Details.

UNDERGROUND AND ROADWAY AT GRADE
(LIGHTING AND ELECTRICAL SYSTEMS)
EASTBOUND ROADWAY
STAGE 2

SCALE 1:200

THIS PLAN IS ACCURATE FOR ELECTRICAL WORK ONLY.

ALL DIMENSIONS ARE IN METERS UNLESS OTHERWISE SHOWN

E-89

STATE OF CALIFORNIA - DEPARTMENT OF TRANSPORTATION
Caltrans

CONSULTANT FUNCTIONAL SUPERVISOR: BRADY NADELL
CALCULATED-DESIGNED BY: JEFFRI HALIM
CHECKED BY: ELLERY LUCAS
REVISED BY / DATE REVISED

LAST REVISION 08-17-09 | DATE PLOTTED => 06-OCT-2011 | TIME PLOTTED => 08:20

Dist	COUNTY	ROUTE	KILOMETER POST TOTAL PROJECT	SHEET No.	TOTAL SHEETS
04	Ala	80	1.6/2.7	280	744

REGISTERED ELECTRICAL ENGINEER 5/02/11

10-3-11
PLANS APPROVAL DATE

REGISTERED PROFESSIONAL ENGINEER DAVID H. OTO No. 10699 Exp. 06/30/2013 ELECTRICAL STATE OF CALIFORNIA

THE STATE OF CALIFORNIA OR ITS OFFICERS OR AGENTS SHALL NOT BE RESPONSIBLE FOR THE ACCURACY OR COMPLETENESS OF ELECTRONIC COPIES OF THIS PLAN SHEET.

PB AMERICAS, Inc.
303 Second St., Suite 700N
San Francisco, CA 94107-1317

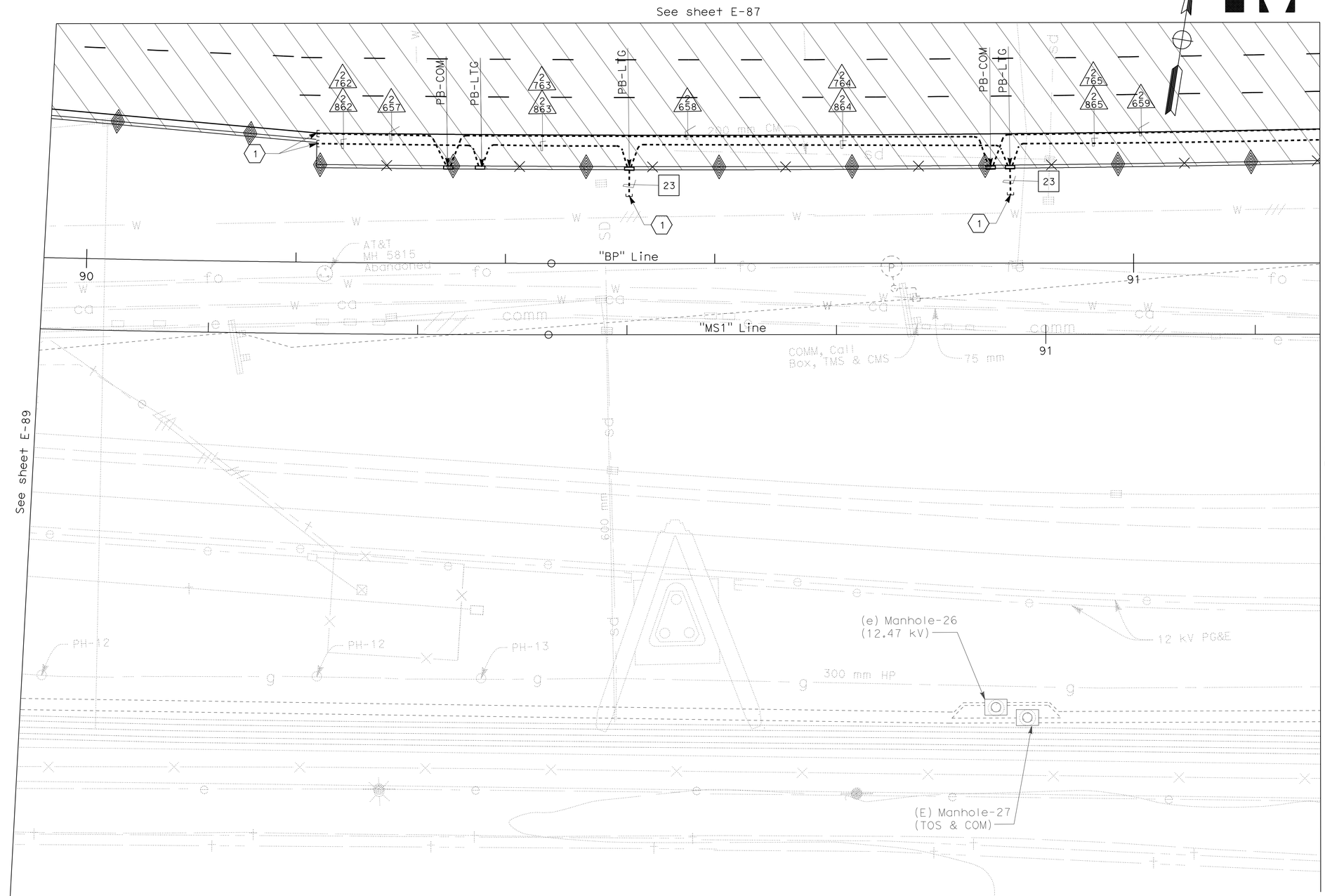

NOTE:

1. References:
   - For conduit and tray, cable and circuit schedules, see sheets starting at E-205.

SHEET NOTE:

(1) Stub out and cap conduit. The conduits shall be extended on Stage 3, see sheet E-100.

LEGEND:

See Stage Construction and Traffic Handling Plan, Stage 2, for Details.

UNDERGROUND AND ROADWAY AT GRADE
(LIGHTING AND ELECTRICAL SYSTEMS)
EASTBOUND ROADWAY
STAGE 2

SCALE 1:200

E-90

THIS PLAN IS ACCURATE FOR ELECTRICAL WORK ONLY.

ALL DIMENSIONS ARE IN METERS UNLESS OTHERWISE SHOWN

STATE OF CALIFORNIA - DEPARTMENT OF TRANSPORTATION
Caltrans

CONSULTANT FUNCTIONAL SUPERVISOR: BRADY NADELL
CALCULATED-DESIGNED BY: JEFFRI HALIM
CHECKED BY: ELLERY LUCAS
REVISED BY / DATE REVISED

LAST REVISION DATE PLOTTED => 06-OCT-2011
TIME PLOTTED => 06:56
08-17-09

Dist	COUNTY	ROUTE	KILOMETER POST TOTAL PROJECT	SHEET No.	TOTAL SHEETS
04	Ala	80	1.6/2.7	281	744

REGISTERED ELECTRICAL ENGINEER 5/02/11

10-3-11
PLANS APPROVAL DATE

REGISTERED PROFESSIONAL ENGINEER DAVID H. OTO No. 10699 Exp. 06/30/2013 ELECTRICAL STATE OF CALIFORNIA

THE STATE OF CALIFORNIA OR ITS OFFICERS OR AGENTS SHALL NOT BE RESPONSIBLE FOR THE ACCURACY OR COMPLETENESS OF ELECTRONIC COPIES OF THIS PLAN SHEET.

PB AMERICAS, Inc.
303 Second St., Suite 700N
San Francisco, CA 94107-1317

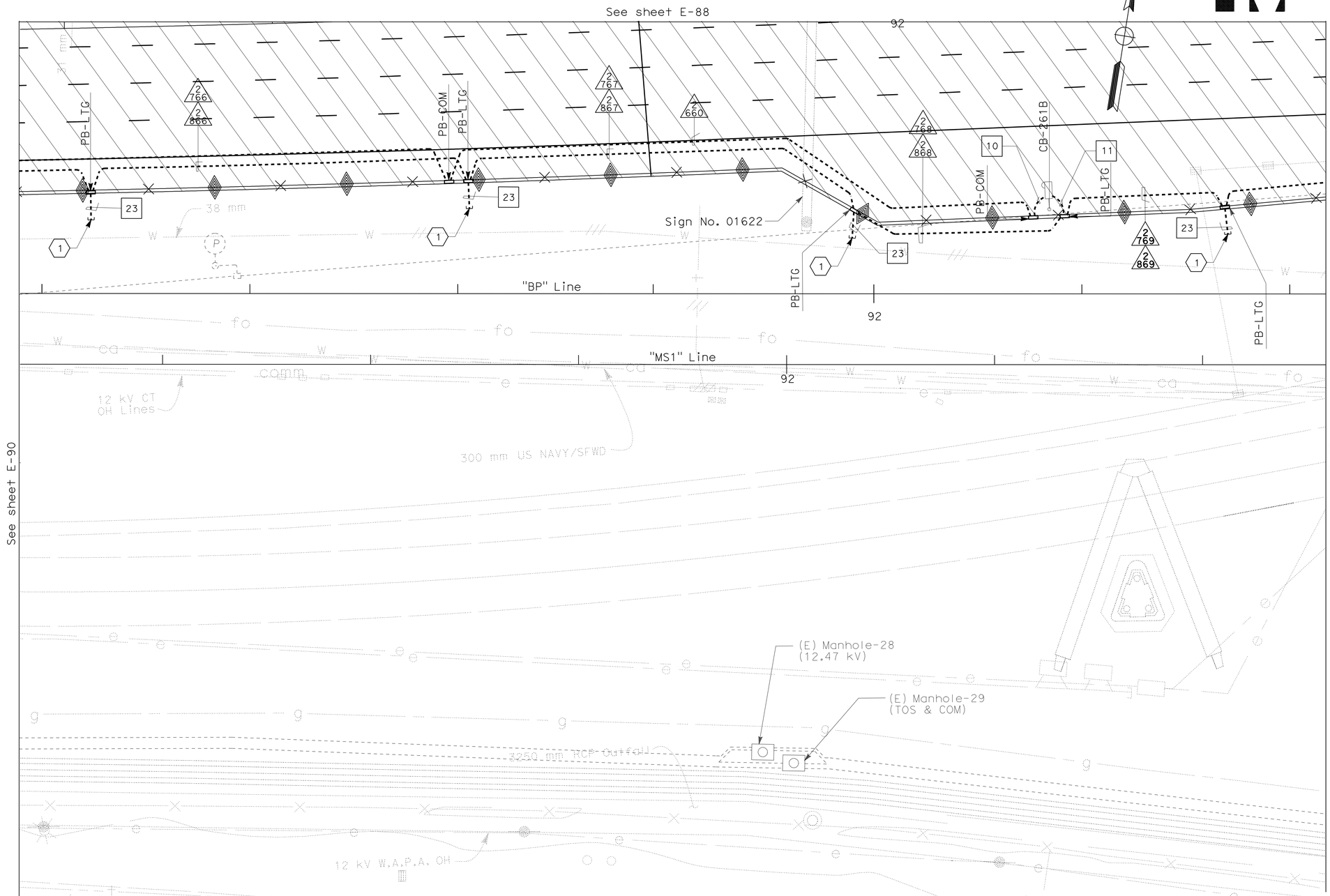

NOTE:

1. References:
   - For conduit and tray, cable and circuit schedules, see sheets starting at E-205.

SHEET NOTE:

(1) Stub out and cap conduit. The conduits shall be extended on Stage 3, see sheet E-101.

LEGEND:

See Stage Construction and Traffic Handling Plan, Stage 2, for Details.

UNDERGROUND AND ROADWAY AT GRADE
(LIGHTING AND ELECTRICAL SYSTEMS)
EASTBOUND ROADWAY
STAGE 2

SCALE 1:200

E-91

THIS PLAN IS ACCURATE FOR ELECTRICAL WORK ONLY.

ALL DIMENSIONS ARE IN METERS UNLESS OTHERWISE SHOWN

STATE OF CALIFORNIA - DEPARTMENT OF TRANSPORTATION
Caltrans

CONSULTANT FUNCTIONAL SUPERVISOR: BRADY NADELL
CALCULATED-DESIGNED BY: JEFFRI HALIM
CHECKED BY: ELLERY LUCAS
REVISED BY / DATE REVISED

LAST REVISION 08-17-09 DATE PLOTTED => 06-OCT-2011 TIME PLOTTED => 06:56

Dist	COUNTY	ROUTE	KILOMETER POST TOTAL PROJECT	SHEET No.	TOTAL SHEETS
04	Ala	80	1.6/2.7	282	744

REGISTERED ELECTRICAL ENGINEER 5/02/11

10-3-11
PLANS APPROVAL DATE

REGISTERED PROFESSIONAL ENGINEER DAVID H. OTO No. 10699 Exp. 06/30/2013 ELECTRICAL STATE OF CALIFORNIA

THE STATE OF CALIFORNIA OR ITS OFFICERS OR AGENTS SHALL NOT BE RESPONSIBLE FOR THE ACCURACY OR COMPLETENESS OF ELECTRONIC COPIES OF THIS PLAN SHEET.

PB AMERICAS, Inc.
303 Second St., Suite 700N
San Francisco, CA 94107-1317

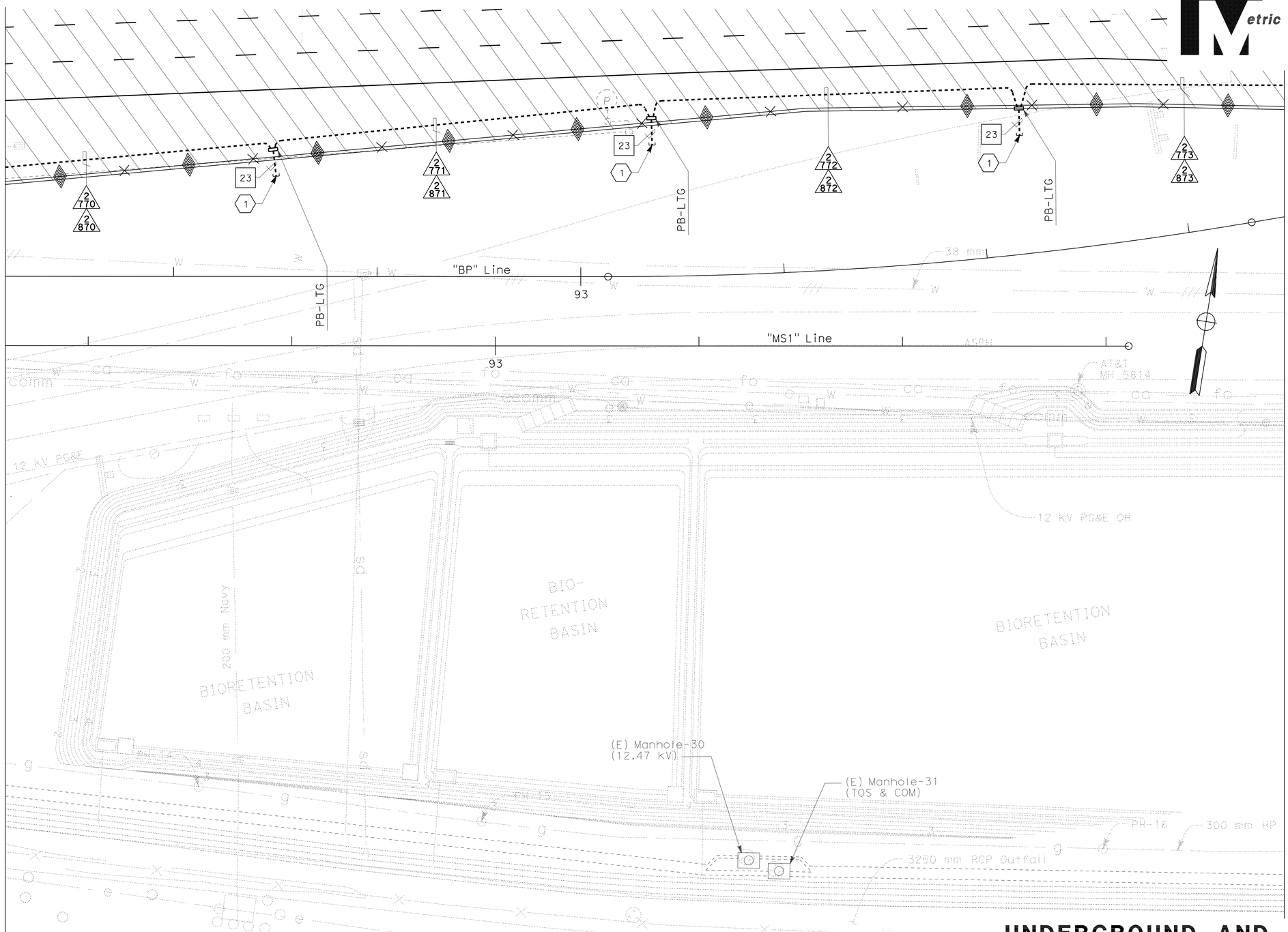

NOTE:

1. References:
   - For conduit and tray, cable and circuit schedules, see sheets starting at E-205.

SHEET NOTE:

(1) Stub out and cap conduit. The conduits shall be extended on Stage 3, see sheet E-102.

LEGEND:

See Stage Construction and Traffic Handling Plan, Stage 2, for Details.

UNDERGROUND AND ROADWAY AT GRADE
(LIGHTING AND ELECTRICAL SYSTEMS)
EASTBOUND ROADWAY
STAGE 2

SCALE 1:200

E-92

THIS PLAN IS ACCURATE FOR ELECTRICAL WORK ONLY.

ALL DIMENSIONS ARE IN METERS UNLESS OTHERWISE SHOWN

REVISED BY	DATE REVISED

JEFFRI HALIM
ELLERY LUCAS

CALCULATED-DESIGNED BY
CHECKED BY

CONSULTANT FUNCTIONAL SUPERVISOR
BRADY NADELL

STATE OF CALIFORNIA - DEPARTMENT OF TRANSPORTATION
Caltrans

LAST REVISION 08-17-09 DATE PLOTTED => 06-OCT-2011 TIME PLOTTED => 06:56

Dist	COUNTY	ROUTE	KILOMETER POST TOTAL PROJECT	SHEET No.	TOTAL SHEETS
04	Ala	80	1.6/2.7	283	744

REGISTERED ELECTRICAL ENGINEER 5/02/11

10-3-11
PLANS APPROVAL DATE

REGISTERED PROFESSIONAL ENGINEER DAVID H. OTO No. 10699 Exp. 06/30/2013 ELECTRICAL STATE OF CALIFORNIA

THE STATE OF CALIFORNIA OR ITS OFFICERS OR AGENTS SHALL NOT BE RESPONSIBLE FOR THE ACCURACY OR COMPLETENESS OF ELECTRONIC COPIES OF THIS PLAN SHEET.

PB AMERICAS, Inc.
303 Second St., Suite 700N
San Francisco, CA 94107-1317

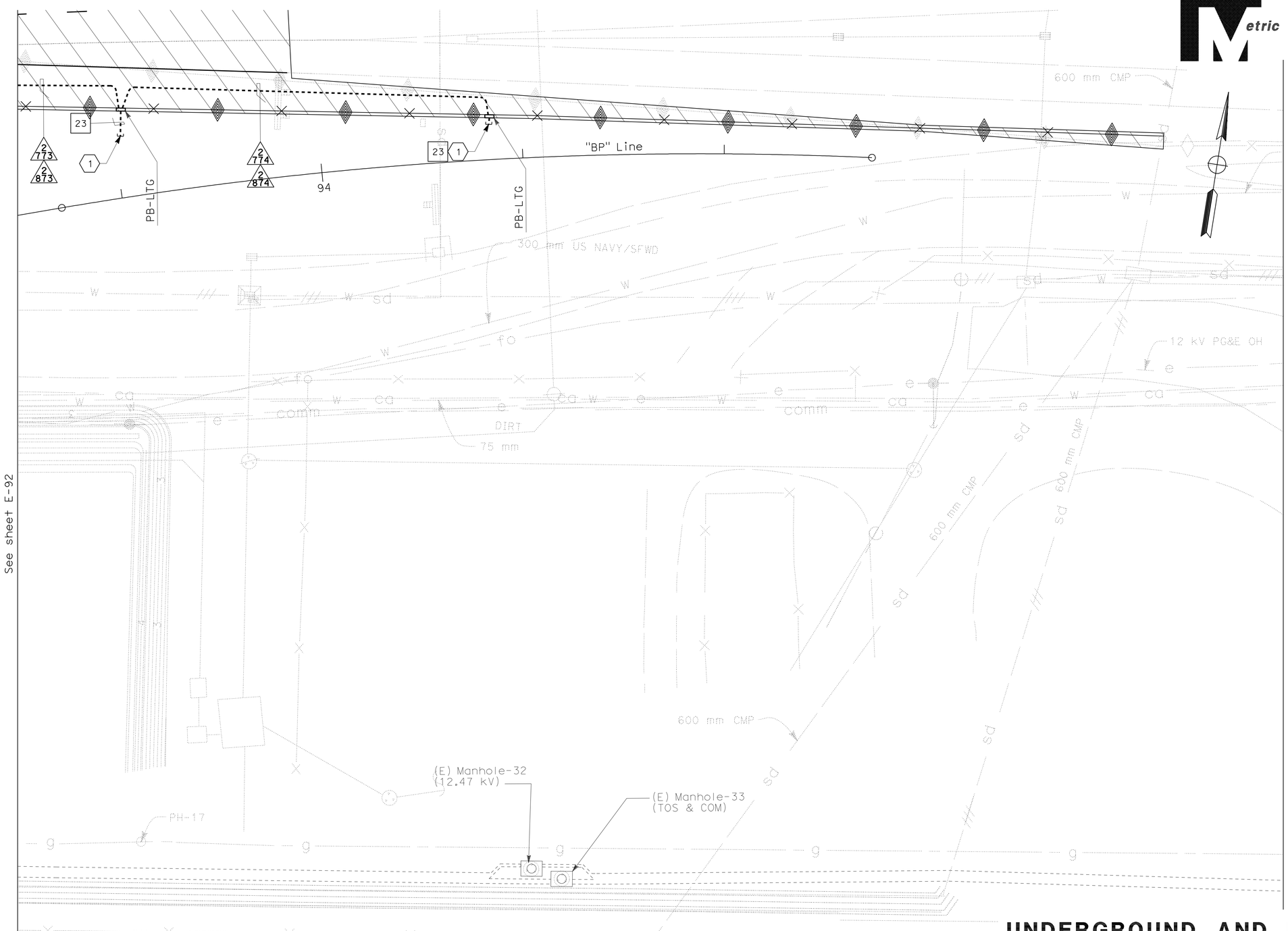

NOTE:

1. References:
   - For conduit and tray, cable and circuit schedules, see sheets starting at E-205.

SHEET NOTE:

(1) Stub out and cap conduit. The conduits shall be extended on Stage 3, see sheet E-103.

LEGEND:

See Stage Construction and Traffic Handling Plan, Stage 2, for Details.

UNDERGROUND AND ROADWAY AT GRADE
(LIGHTING AND ELECTRICAL SYSTEMS)
EASTBOUND ROADWAY
STAGE 2

SCALE 1:200

E-93

THIS PLAN IS ACCURATE FOR ELECTRICAL WORK ONLY.

ALL DIMENSIONS ARE IN METERS UNLESS OTHERWISE SHOWN

STATE OF CALIFORNIA - DEPARTMENT OF TRANSPORTATION
Caltrans

CONSULTANT FUNCTIONAL SUPERVISOR: BRADY NADELL
CALCULATED-DESIGNED BY: JEFFRI HALIM
CHECKED BY: ELLERY LUCAS
REVISED BY / DATE REVISED

LAST REVISION 08-17-09 DATE PLOTTED => 06-OCT-2011 TIME PLOTTED => 06:56

Dist	COUNTY	ROUTE	KILOMETER POST TOTAL PROJECT	SHEET No.	TOTAL SHEETS
04	Ala	80	1.6/2.7	284	744

REGISTERED ELECTRICAL ENGINEER 5/02/11

10-3-11
PLANS APPROVAL DATE

REGISTERED PROFESSIONAL ENGINEER DAVID H. OTO No. 10699 Exp. 06/30/2013 ELECTRICAL STATE OF CALIFORNIA

THE STATE OF CALIFORNIA OR ITS OFFICERS OR AGENTS SHALL NOT BE RESPONSIBLE FOR THE ACCURACY OR COMPLETENESS OF ELECTRONIC COPIES OF THIS PLAN SHEET.

PB AMERICAS, Inc.
303 Second St., Suite 700N
San Francisco, CA 94107-1317

Caltrans Metric

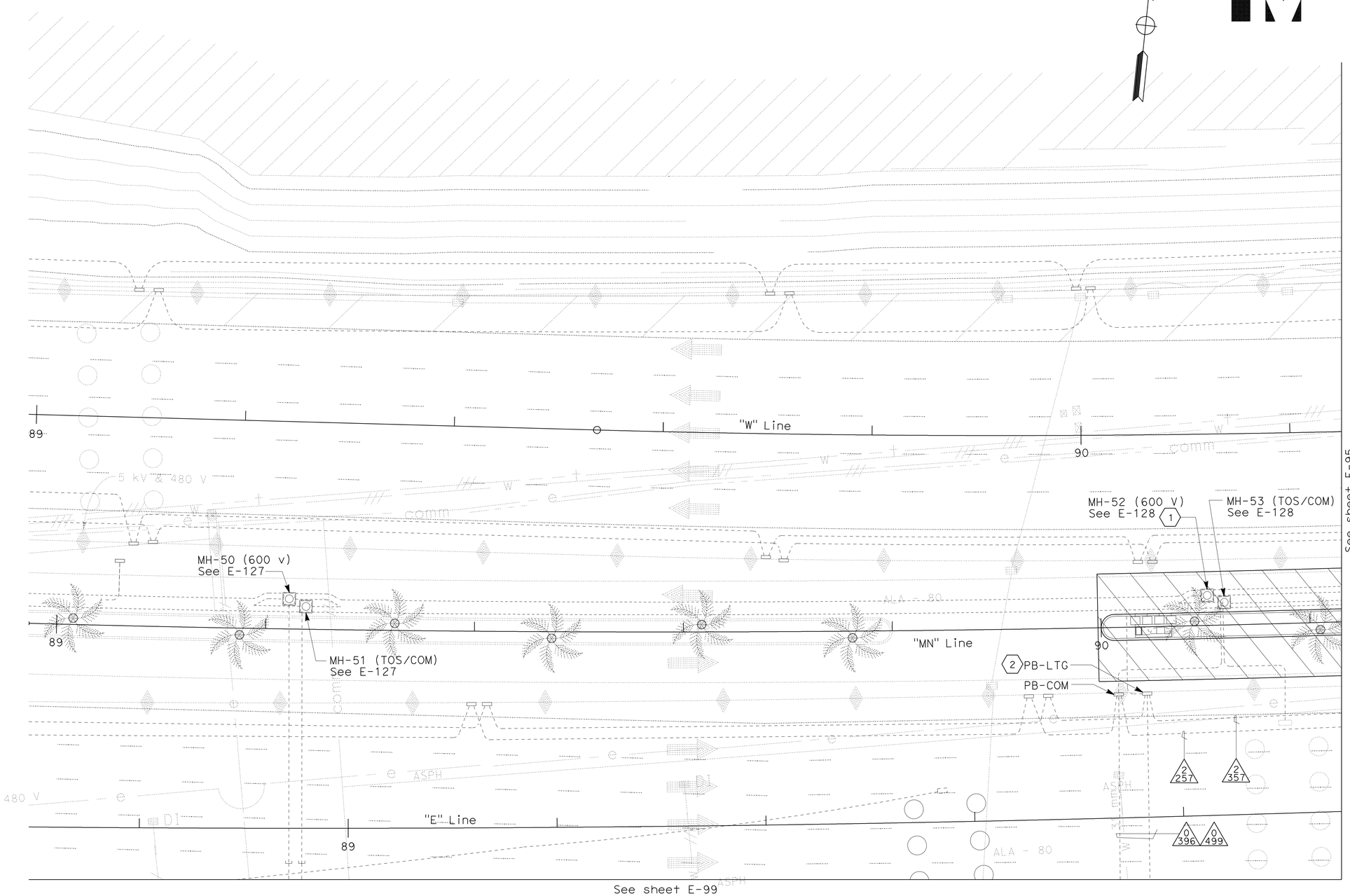

NOTES:

1. References:
   - For conduit and tray, cable and circuit schedules, see sheets starting at E-205.
2. For electrical equipment or devices removed, see Sheets E-153 through E-160.

SHEET NOTES:

(1) Extend and route previously coiled cables (ckt. #2610, and #S-2606) to its final destination.

(2) Extend and route previously coiled cables (ckt. #UP274-4B, and #UP274-8A) to its final destination.

LEGEND:

See Stage Construction and Traffic Handling Plan, Stage 3, for Details.

UNDERGROUND AND ROADWAY AT GRADE
(LIGHTING AND ELECTRICAL SYSTEMS)
WESTBOUND AND EASTBOUND ROADWAY
STAGE 3

SCALE: 1:200

E-94

THIS PLAN IS ACCURATE FOR ELECTRICAL WORK ONLY.

ALL DIMENSIONS ARE IN METERS UNLESS OTHERWISE SHOWN

STATE OF CALIFORNIA - DEPARTMENT OF TRANSPORTATION
Caltrans

CONSULTANT FUNCTIONAL SUPERVISOR: BRADY NADELL
CALCULATED-DESIGNED BY: JEFFRI HALIM
CHECKED BY: ELLERY LUCAS
REVISED BY
DATE REVISED

LAST REVISION 08-17-09
DATE PLOTTED => 06-OCT-2011
TIME PLOTTED => 06:56

Dist	COUNTY	ROUTE	KILOMETER POST TOTAL PROJECT	SHEET No.	TOTAL SHEETS
04	Ala	80	1.6/2.7	285	744

REGISTERED ELECTRICAL ENGINEER 5/02/11

10-3-11
PLANS APPROVAL DATE

REGISTERED PROFESSIONAL ENGINEER DAVID H. OTO No. 10699 Exp. 06/30/2013 ELECTRICAL STATE OF CALIFORNIA

THE STATE OF CALIFORNIA OR ITS OFFICERS OR AGENTS SHALL NOT BE RESPONSIBLE FOR THE ACCURACY OR COMPLETENESS OF ELECTRONIC COPIES OF THIS PLAN SHEET.

PB AMERICAS, Inc.
303 Second St., Suite 700N
San Francisco, CA 94107-1317

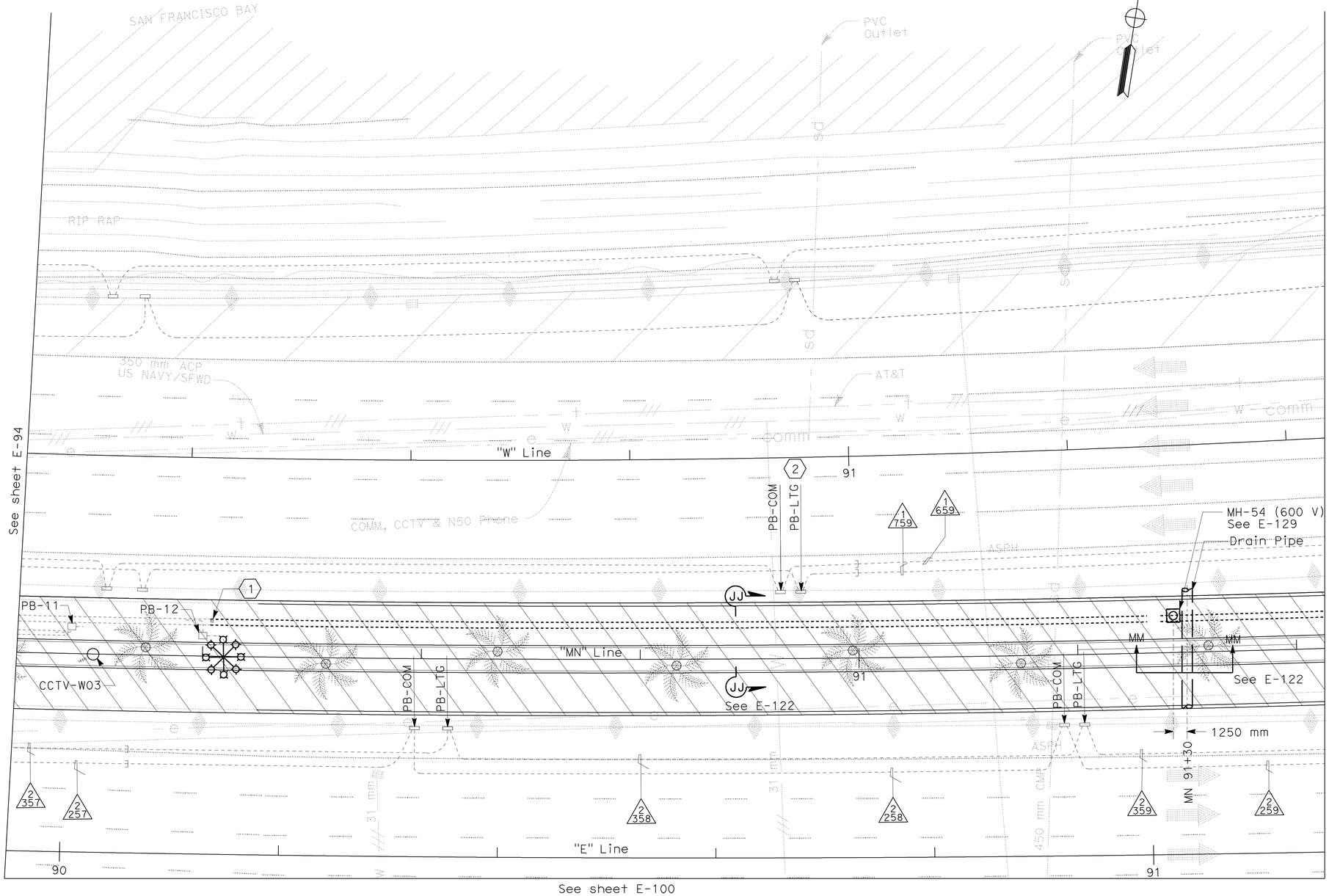

NOTES:

1. References:
   - For pull box schedule, see sheet E-130
   - TOS equipment is shown for conduit routing only. For typical details of TOS controllers and devices, see sheets E-190 through E-197. For additional details on when TOS equipment shall be installed, see Electrical Special Provisions.
   - For conduit and tray, cable and circuit schedules, see sheets starting at E-205.
   - For manhole sections, see sheets E-124 through E-129.
   - For duct bank profiles, see Utility drawings.
   - For typical duct bank sections, see sheet E-120.
   - For high mast lighting wiring diagram, see sheet E-147.
2. For electrical equipment and devices removed, see sheets E-153 through E-160.

SHEET NOTES:

(1) Connect to capped conduit. The capped conduits are installed in Stage 1, see sheet E-70.

(2) Extend and route previously coiled cables (ckt. #UP173-16B) to its final destination.

LEGEND:

See Stage Construction and Traffic Handling Plan, Stage 3, for Details.

UNDERGROUND AND ROADWAY AT GRADE
(LIGHTING AND ELECTRICAL SYSTEMS)
WESTBOUND AND EASTBOUND ROADWAY
STAGE 3

SCALE 1:200

E-95

THIS PLAN IS ACCURATE FOR ELECTRICAL WORK ONLY.

ALL DIMENSIONS ARE IN METERS UNLESS OTHERWISE SHOWN

STATE OF CALIFORNIA - DEPARTMENT OF TRANSPORTATION
Caltrans

CONSULTANT FUNCTIONAL SUPERVISOR: BRADY NADELL
CALCULATED-DESIGNED BY: JEFFRI HALIM
CHECKED BY: ELLERY LUCAS
REVISED BY
DATE REVISED

LAST REVISION 08-17-09
DATE PLOTTED => 06-OCT-2011
TIME PLOTTED => 06:56

Dist	COUNTY	ROUTE	KILOMETER POST TOTAL PROJECT	SHEET No.	TOTAL SHEETS
04	Ala	80	1.6/2.7	286	744

REGISTERED ELECTRICAL ENGINEER 5/02/11

10-3-11
PLANS APPROVAL DATE

REGISTERED PROFESSIONAL ENGINEER
DAVID H. OTO
No. 10699
Exp. 06/30/2013
ELECTRICAL
STATE OF CALIFORNIA

THE STATE OF CALIFORNIA OR ITS OFFICERS OR AGENTS SHALL NOT BE RESPONSIBLE FOR THE ACCURACY OR COMPLETENESS OF ELECTRONIC COPIES OF THIS PLAN SHEET.

PB AMERICAS, Inc.
303 Second St., Suite 700N
San Francisco, CA 94107-1317

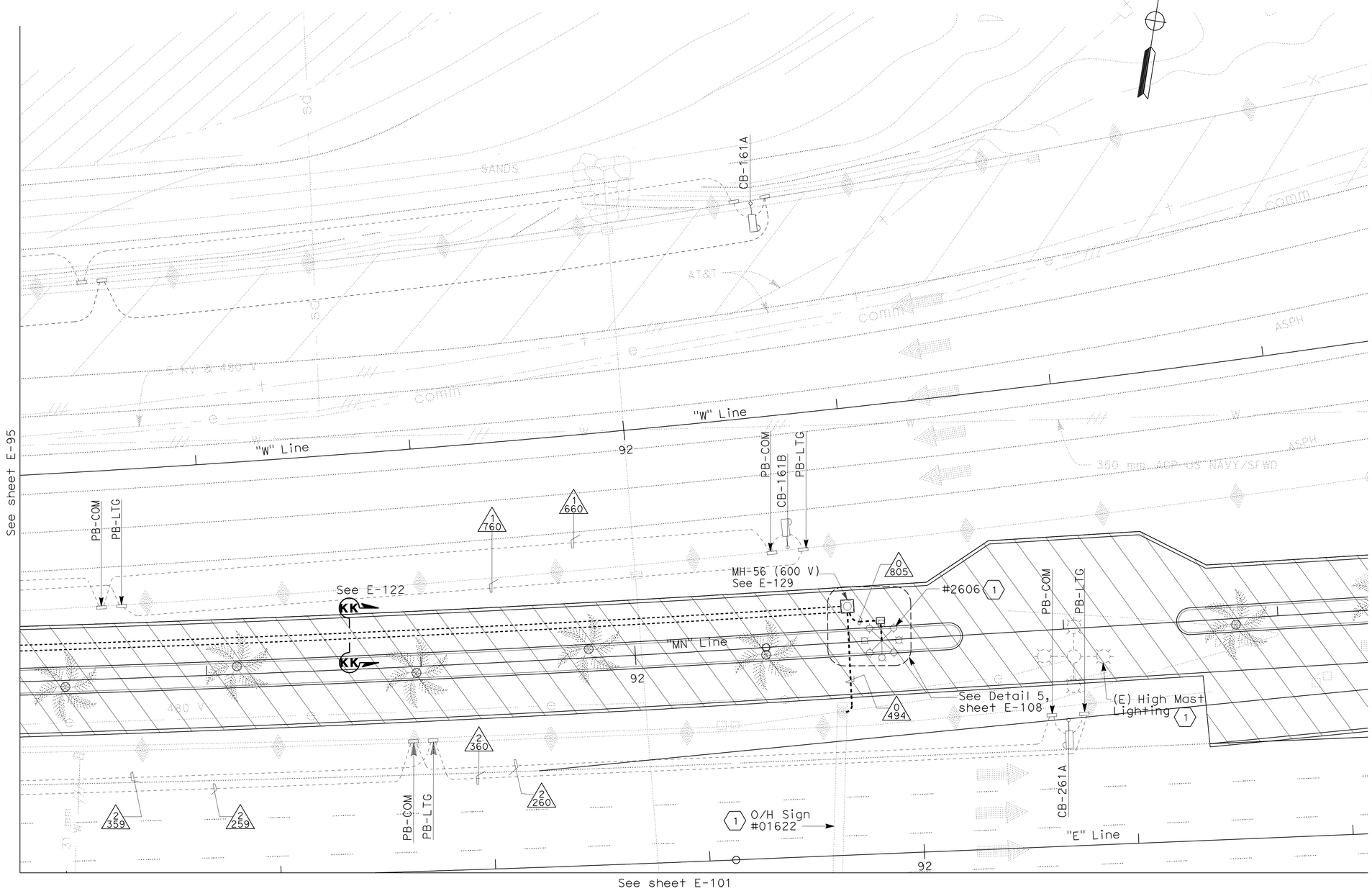

NOTE:

1. References:
   - For pull box schedule, see sheet E-130
   - TOS equipment is shown for conduit routing only. For typical details of TOS controllers and devices, see sheets E-190 through E-197. For additional details on when TOS equipment shall be installed, see Electrical Special Provisions.
   - For conduit and tray, cable and circuit schedules, see sheets starting at E-205.
   - For manhole sections, see sheets E-124 through E-129.
   - For duct bank profiles, see Utility drawings.
   - For typical duct bank sections, see sheet E-120.
   - For high mast lighting wiring diagram, see sheet E-147.

2. For electrical equipment or devices removed, see sheets E-153 through E-160.

SHEET NOTE:

1. (E) High Mast lighting to remain connected until the new High Mast lighting is installed including the Sign. Coordinate the work removal of the (E) High Mast Lighting Fixture.

LEGEND:

See Stage Construction and Traffic Handling Plan, Stage 3, for Details.

UNDERGROUND AND ROADWAY AT GRADE
(LIGHTING AND ELECTRICAL SYSTEMS)
WESTBOUND AND EASTBOUND ROADWAY
STAGE 3

SCALE 1:200

E-96

THIS PLAN IS ACCURATE FOR ELECTRICAL WORK ONLY.

ALL DIMENSIONS ARE IN METERS UNLESS OTHERWISE SHOWN

STATE OF CALIFORNIA - DEPARTMENT OF TRANSPORTATION
Caltrans

CONSULTANT FUNCTIONAL SUPERVISOR: BRADY NADELL
CALCULATED-DESIGNED BY: JEFFRI HALIM
CHECKED BY: ELLERY LUCAS
REVISED BY
DATE REVISED

LAST REVISION 08-17-09
DATE PLOTTED => 06-OCT-2011
TIME PLOTTED => 06:56

Dist	COUNTY	ROUTE	KILOMETER POST TOTAL PROJECT	SHEET No.	TOTAL SHEETS
04	Ala	80	1.6/2.7	287	744

REGISTERED ELECTRICAL ENGINEER 5/02/11

10-3-11
PLANS APPROVAL DATE

REGISTERED PROFESSIONAL ENGINEER DAVID H. OTO No. 10699 Exp. 06/30/2013 ELECTRICAL STATE OF CALIFORNIA

THE STATE OF CALIFORNIA OR ITS OFFICERS OR AGENTS SHALL NOT BE RESPONSIBLE FOR THE ACCURACY OR COMPLETENESS OF ELECTRONIC COPIES OF THIS PLAN SHEET.

PB AMERICAS, Inc.
303 Second St., Suite 700N
San Francisco, CA 94107-1317

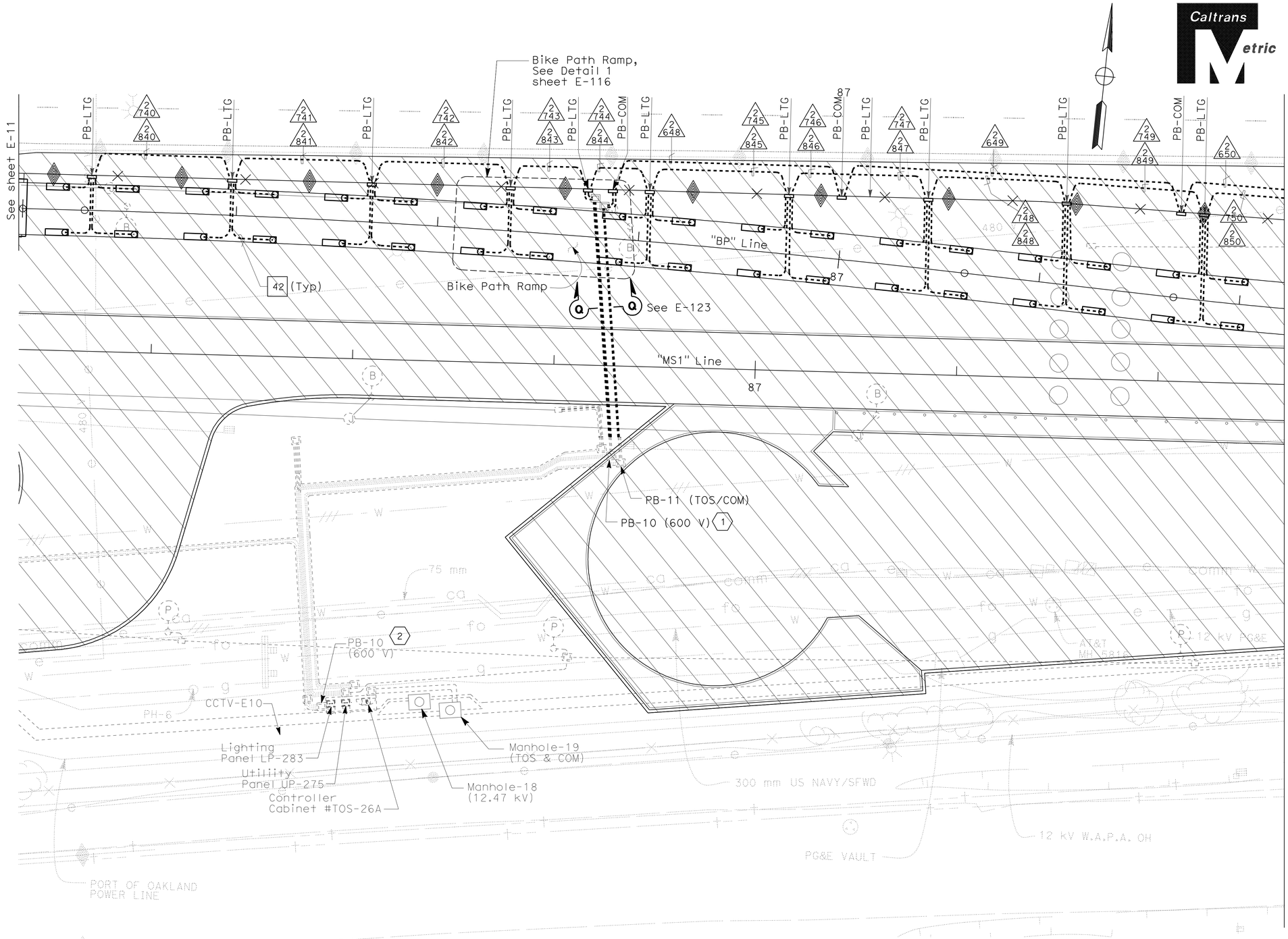

NOTE:

1. References:
   - For conduit and tray, cable and circuit schedules, see sheets starting at E-205.
   - For pull box schedule, see sheet E-130.
   - For bike path ramp wiring diagram, see sheets E-145.
2. For electrical equipment or devices removed, see sheets E-153 through E-160.

SHEET NOTE:

1. Extend and route previously coiled of cables (ckt.# A-2009, #LP283-1/3, and #LP283-6/8) to their final destination.
2. End of cable circuits #2612 and 2613. The Contractor to coil and tape ends of conductors inside pull box.

LEGEND:

See Stage Construction and Traffic Handling Plan, Stage 3, for Details.

UNDERGROUND AND ROADWAY AT GRADE
(LIGHTING AND ELECTRICAL SYSTEMS)
EASTBOUND ROADWAY
STAGE 3

SCALE: 1:200

E-97

THIS PLAN IS ACCURATE FOR ELECTRICAL WORK ONLY.

ALL DIMENSIONS ARE IN METERS UNLESS OTHERWISE SHOWN

STATE OF CALIFORNIA - DEPARTMENT OF TRANSPORTATION
Caltrans

CONSULTANT FUNCTIONAL SUPERVISOR: BRADY NADELL
CALCULATED-DESIGNED BY: JEFFRI HALIM
CHECKED BY: ELLERY LUCAS
REVISED BY / DATE REVISED

LAST REVISION 08-17-09
DATE PLOTTED => 06-OCT-2011
TIME PLOTTED => 06:56

Dist	COUNTY	ROUTE	KILOMETER POST TOTAL PROJECT	SHEET No.	TOTAL SHEETS
04	Ala	80	1.6/2.7	288	744

REGISTERED ELECTRICAL ENGINEER 5/02/11

10-3-11
PLANS APPROVAL DATE

REGISTERED PROFESSIONAL ENGINEER DAVID H. OTO No. 10699 Exp. 06/30/2013 ELECTRICAL STATE OF CALIFORNIA

THE STATE OF CALIFORNIA OR ITS OFFICERS OR AGENTS SHALL NOT BE RESPONSIBLE FOR THE ACCURACY OR COMPLETENESS OF ELECTRONIC COPIES OF THIS PLAN SHEET.

PB AMERICAS, Inc.
303 Second St., Suite 700N
San Francisco, CA 94107-1317

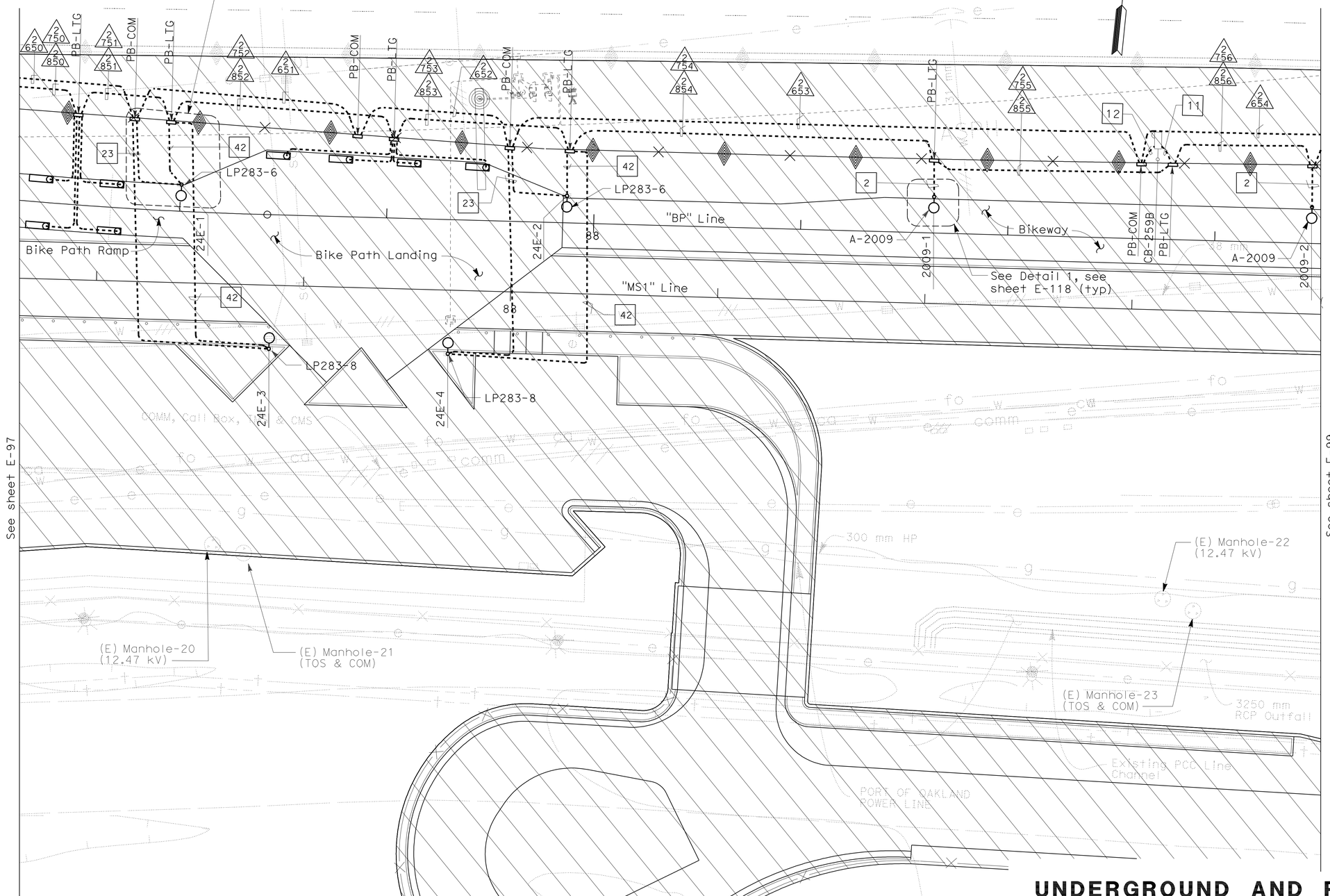

NOTES:

1. References:
   - For conduit and tray, cable and circuit schedules, see sheets starting at E-205.
   - For pull box schedule, see sheet E-130.
   - For bike path ramp wiring diagram, see sheets E-145.
   - For bikeway wiring diagram, see sheets E-146.
2. For electrical equipment and devices removed, see sheets E-153 through E-160.

LEGEND:

See Stage Construction and Traffic Handling Plan, Stage 3, for Details.

UNDERGROUND AND ROADWAY AT GRADE
(LIGHTING AND ELECTRICAL SYSTEMS)
EASTBOUND ROADWAY
STAGE 3

SCALE: 1:200

E-98

THIS PLAN IS ACCURATE FOR ELECTRICAL WORK ONLY.

ALL DIMENSIONS ARE IN METERS UNLESS OTHERWISE SHOWN

STATE OF CALIFORNIA - DEPARTMENT OF TRANSPORTATION

Caltrans

CONSULTANT FUNCTIONAL SUPERVISOR: BRADY NADELL

CALCULATED-DESIGNED BY: JEFFRI HALIM

CHECKED BY: ELLERY LUCAS

REVISED BY | DATE REVISED

LAST REVISION 08-17-09 | DATE PLOTTED => 06-OCT-2011 | TIME PLOTTED => 06:57

Dist	COUNTY	ROUTE	KILOMETER POST TOTAL PROJECT	SHEET No.	TOTAL SHEETS
04	Ala	80	1.6/2.7	289	744

REGISTERED ELECTRICAL ENGINEER 5/02/11

10-3-11
PLANS APPROVAL DATE

REGISTERED PROFESSIONAL ENGINEER DAVID H. OTO No. 10699 Exp. 06/30/2013 ELECTRICAL STATE OF CALIFORNIA

THE STATE OF CALIFORNIA OR ITS OFFICERS OR AGENTS SHALL NOT BE RESPONSIBLE FOR THE ACCURACY OR COMPLETENESS OF ELECTRONIC COPIES OF THIS PLAN SHEET.

PB AMERICAS, Inc.
303 Second St., Suite 700N
San Francisco, CA 94107-1317

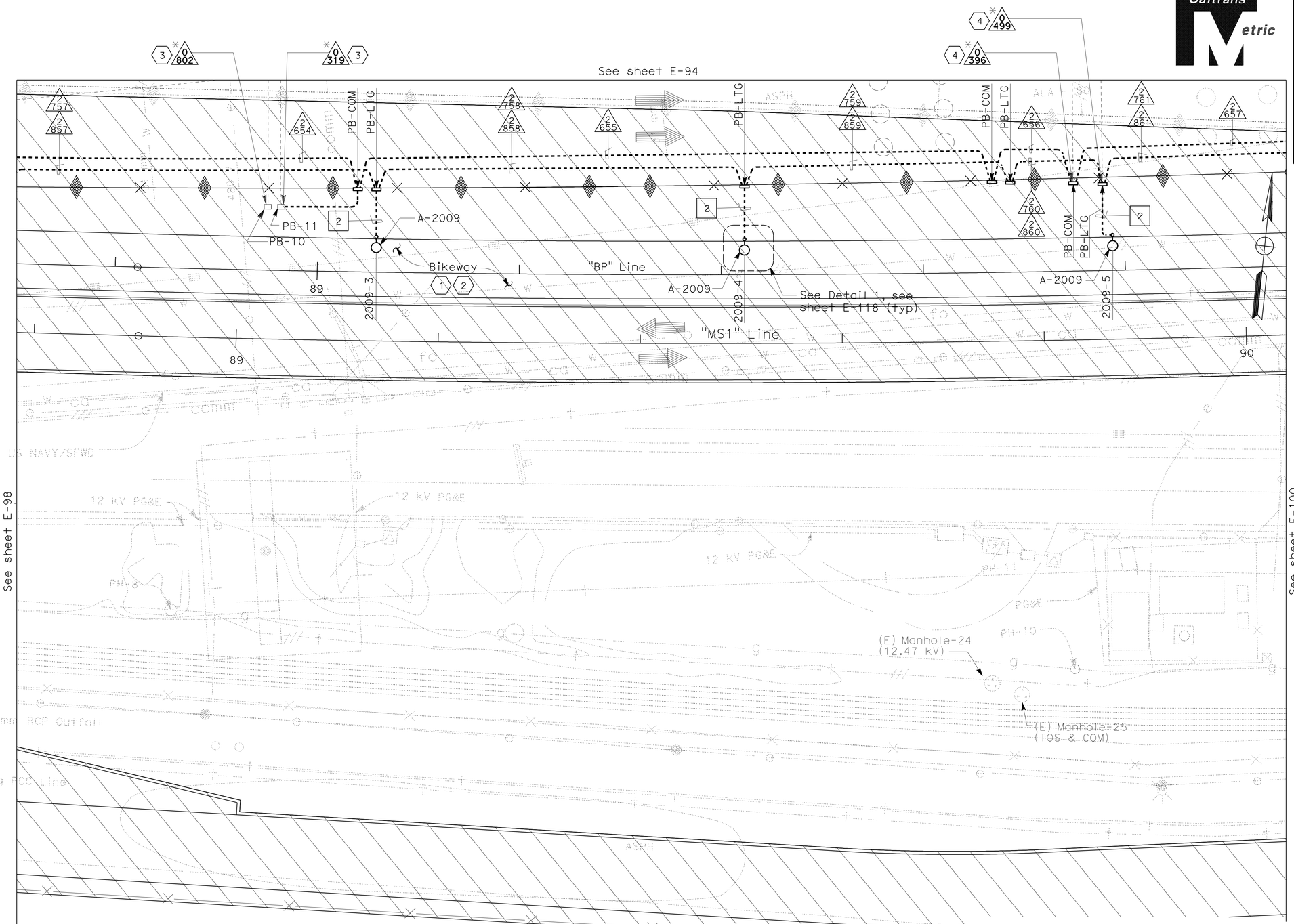

NOTES:

1. References:
   - For conduit and tray, cable and circuit schedules, see sheets starting at E-205.
   - For pull box schedule, see sheet E-130.
   - For bikeway wiring diagram, see sheet E-146.
2. For electrical equipment and devices removed, see sheets E-153 through E-160.

SHEET NOTES:

1. For Bikeway Conduit Plan, see sheet E-118.
2. For Bikeway wiring details, see sheet E-146.
3. Existing conduits previously installed.
4. Stub-Up existing conduits to PB-COM or PB-LTG.

LEGEND:

See Stage Construction and Traffic Handling Plan, Stage 3, for Details.

UNDERGROUND AND ROADWAY AT GRADE
(LIGHTING AND ELECTRICAL SYSTEMS)
EASTBOUND ROADWAY
STAGE 3

SCALE: 1:200

E-99

THIS PLAN IS ACCURATE FOR ELECTRICAL WORK ONLY.

ALL DIMENSIONS ARE IN METERS UNLESS OTHERWISE SHOWN

STATE OF CALIFORNIA - DEPARTMENT OF TRANSPORTATION
Caltrans

CONSULTANT FUNCTIONAL SUPERVISOR: BRADY NADELL
CALCULATED-DESIGNED BY: JEFFRI HALIM
CHECKED BY: ELLERY LUCAS
REVISED BY / DATE REVISED

LAST REVISION 08-17-09
DATE PLOTTED => 06-OCT-2011
TIME PLOTTED => 06:57

Dist	COUNTY	ROUTE	KILOMETER POST TOTAL PROJECT	SHEET No.	TOTAL SHEETS
04	Ala	80	1.6/2.7	290	744

REGISTERED ELECTRICAL ENGINEER 5/02/11

10-3-11
PLANS APPROVAL DATE

REGISTERED PROFESSIONAL ENGINEER DAVID H. OTO No. 10699 Exp. 06/30/2013 ELECTRICAL STATE OF CALIFORNIA

THE STATE OF CALIFORNIA OR ITS OFFICERS OR AGENTS SHALL NOT BE RESPONSIBLE FOR THE ACCURACY OR COMPLETENESS OF ELECTRONIC COPIES OF THIS PLAN SHEET.

PB AMERICAS, Inc.
303 Second St., Suite 700N
San Francisco, CA 94107-1317

Caltrans Metric

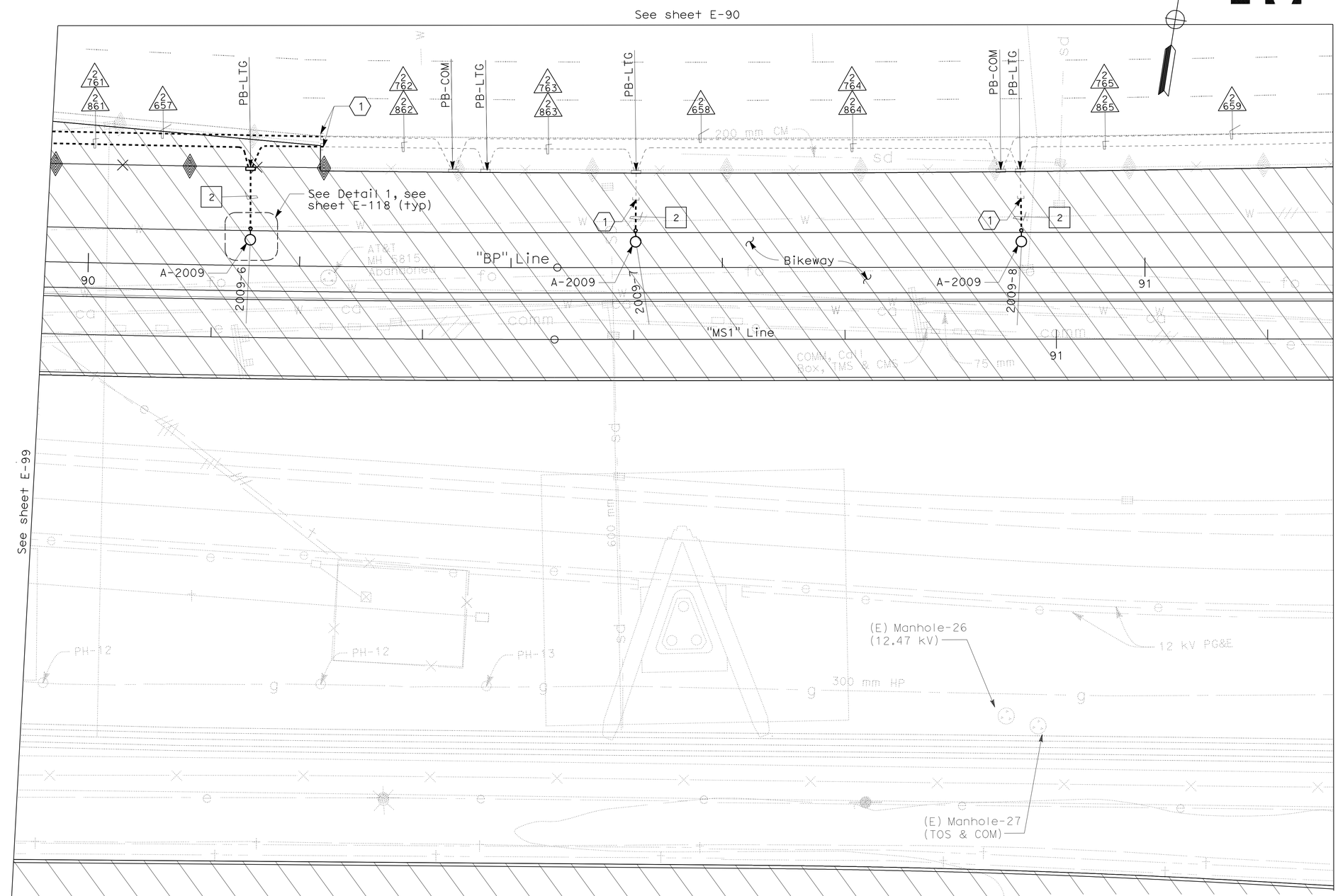

NOTES:

1. References:
   - For conduit and tray, cable and circuit schedules, see sheets starting at E-205.
   - For pull box schedule, see sheet E-130.
   - For bikeway wiring diagram, see sheet E-146.
2. For electrical equipment or devices removed. see sheets E-153 through E-160.

SHEET NOTE:

(1) Connect to capped conduit. The capped conduits are installed on Stage 2, see sheet E-90.

LEGEND:

See Stage Construction and Traffic Handling Plan, Stage 3, for Details.

UNDERGROUND AND ROADWAY AT GRADE
(LIGHTING AND ELECTRICAL SYSTEMS)
EASTBOUND ROADWAY
STAGE 3

SCALE: 1:200

E-100

THIS PLAN IS ACCURATE FOR ELECTRICAL WORK ONLY.

ALL DIMENSIONS ARE IN METERS UNLESS OTHERWISE SHOWN

STATE OF CALIFORNIA - DEPARTMENT OF TRANSPORTATION
Caltrans

CONSULTANT FUNCTIONAL SUPERVISOR: BRADY NADELL
CALCULATED-DESIGNED BY: JEFFRI HALIM
CHECKED BY: ELLERY LUCAS
REVISED BY
DATE REVISED

LAST REVISION 08-17-09
DATE PLOTTED => 06-OCT-2011
TIME PLOTTED => 06:57

Dist	COUNTY	ROUTE	KILOMETER POST TOTAL PROJECT	SHEET No.	TOTAL SHEETS
04	Ala	80	1.6/2.7	291	744

REGISTERED ELECTRICAL ENGINEER 5/02/11

10-3-11
PLANS APPROVAL DATE

REGISTERED PROFESSIONAL ENGINEER DAVID H. OTO No. 10699 Exp. 06/30/2013 ELECTRICAL STATE OF CALIFORNIA

THE STATE OF CALIFORNIA OR ITS OFFICERS OR AGENTS SHALL NOT BE RESPONSIBLE FOR THE ACCURACY OR COMPLETENESS OF ELECTRONIC COPIES OF THIS PLAN SHEET.

PB AMERICAS, Inc.
303 Second St., Suite 700N
San Francisco, CA 94107-1317

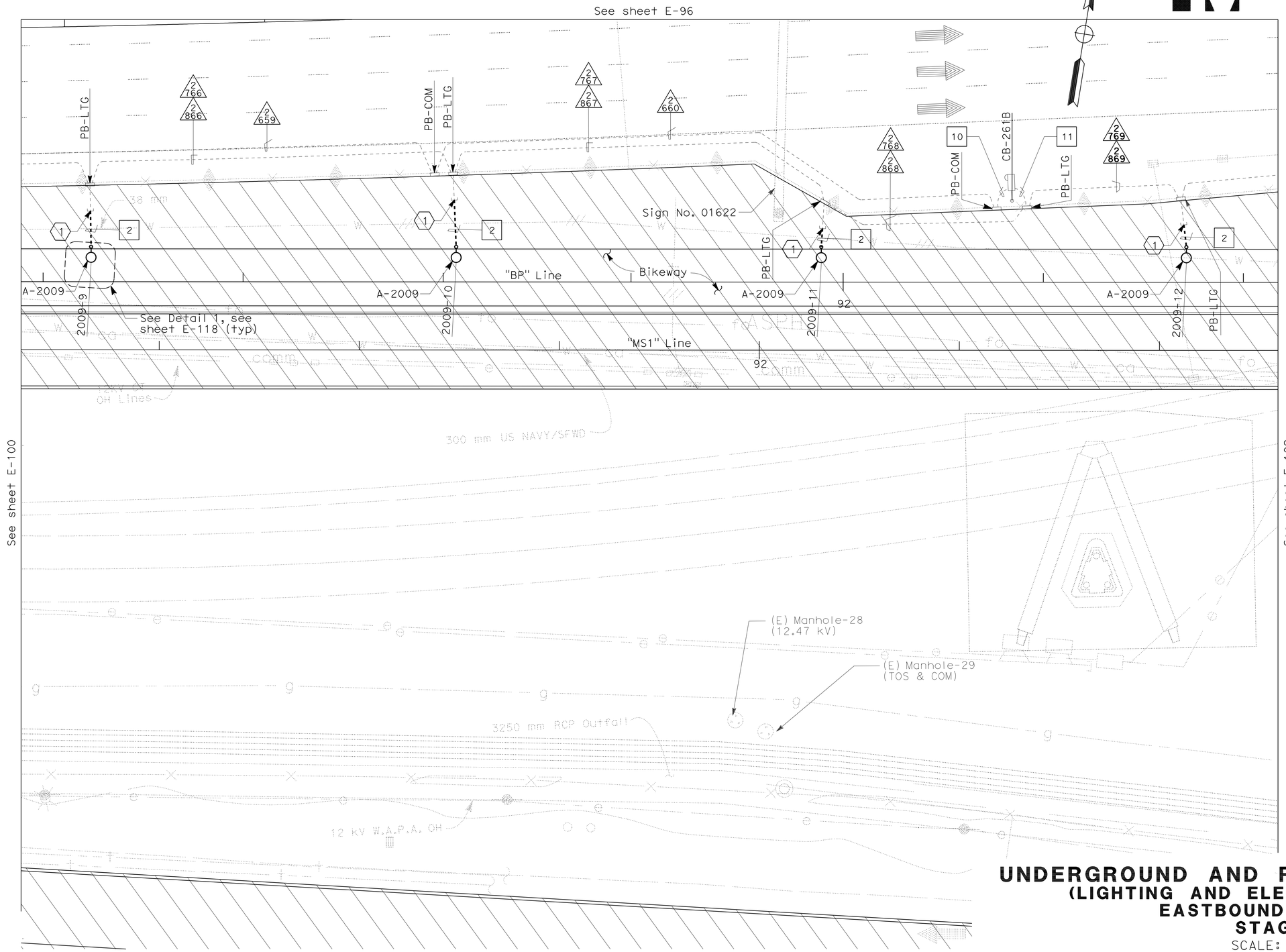

NOTES:

1. References:
   - For conduit and tray, cable and circuit schedules, see sheets starting at E-205.
   - For pull box schedule, see sheet E-130.
   - For bikeway wiring diagram, see sheet E-146.
2. For electrical equipment or devices removed, see sheets E-153 through E-160.

SHEET NOTE:

(1) Connect to capped conduit. The capped conduits are installed on Stage 2, see sheet E-91.

LEGEND:

See Stage Construction and Traffic Handling Plan, Stage 3, for Details.

UNDERGROUND AND ROADWAY AT GRADE
(LIGHTING AND ELECTRICAL SYSTEMS)
EASTBOUND ROADWAY
STAGE 3

SCALE: 1:200

E-101

THIS PLAN IS ACCURATE FOR ELECTRICAL WORK ONLY.

ALL DIMENSIONS ARE IN METERS UNLESS OTHERWISE SHOWN

STATE OF CALIFORNIA - DEPARTMENT OF TRANSPORTATION
Caltrans

CONSULTANT FUNCTIONAL SUPERVISOR: BRADY NADELL
CALCULATED-DESIGNED BY: JEFFRI HALIM
CHECKED BY: ELLERY LUCAS
REVISED BY / DATE REVISED

LAST REVISION 08-17-09 DATE PLOTTED => 06-OCT-2011 TIME PLOTTED => 06:57

Dist	COUNTY	ROUTE	KILOMETER POST TOTAL PROJECT	SHEET No.	TOTAL SHEETS
04	Ala	80	1.6/2.7	292	744

REGISTERED ELECTRICAL ENGINEER 5/02/11

10-3-11
PLANS APPROVAL DATE

REGISTERED PROFESSIONAL ENGINEER DAVID H. OTO No. 10699 Exp. 06/30/2013 ELECTRICAL STATE OF CALIFORNIA

THE STATE OF CALIFORNIA OR ITS OFFICERS OR AGENTS SHALL NOT BE RESPONSIBLE FOR THE ACCURACY OR COMPLETENESS OF ELECTRONIC COPIES OF THIS PLAN SHEET.

PB AMERICAS, Inc.
303 Second St., Suite 700N
San Francisco, CA 94107-1317

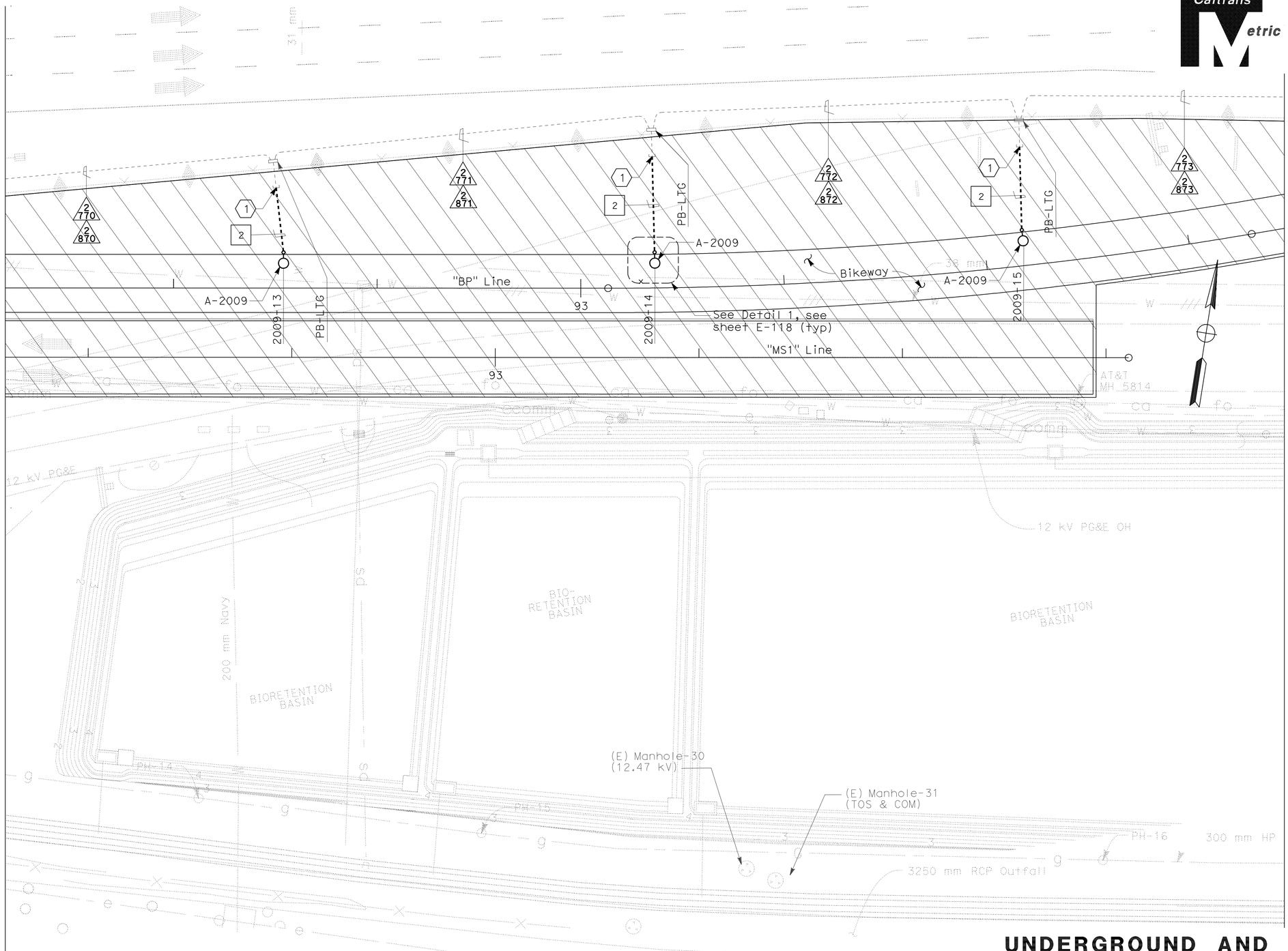

NOTES:

1. References:
   - For conduit and tray, cable and circuit schedules, see sheets starting at E-205.
   - For pull box schedule, see sheet E-130.
   - For bikeway wiring diagram, see sheet E-146.
2. For electrical equipment or devices removed, see sheets E-153 through E-160.

SHEET NOTE:

(1) Connect to capped conduit. The capped conduits are installed on Stage 2, see sheet E-92.

LEGEND:

See Stage Construction and Traffic Handling Plan, Stage 3, for Details.

UNDERGROUND AND ROADWAY AT GRADE
(LIGHTING AND ELECTRICAL SYSTEMS)
EASTBOUND ROADWAY
STAGE 3

SCALE: 1:200

E-102

THIS PLAN IS ACCURATE FOR ELECTRICAL WORK ONLY.

ALL DIMENSIONS ARE IN METERS UNLESS OTHERWISE SHOWN

STATE OF CALIFORNIA - DEPARTMENT OF TRANSPORTATION
Caltrans

CONSULTANT FUNCTIONAL SUPERVISOR: BRADY NADELL
CALCULATED-DESIGNED BY: JEFFRI HALIM
CHECKED BY: ELLERY LUCAS
REVISED BY / DATE REVISED

LAST REVISION 08-17-09 | DATE PLOTTED => 06-OCT-2011 | TIME PLOTTED => 08:57

BORDER LAST REVISED 3/1/2007 | RELATIVE BORDER SCALE IS IN MILLIMETERS 0 20 40 60 80 | DGN FILE => 40120mua102.dgn | USERNAME => s121614 | CU 04251 | EA 0120M1

Dist	COUNTY	ROUTE	KILOMETER POST TOTAL PROJECT	SHEET No.	TOTAL SHEETS
04	Ala	80	1.6/2.7	293	744

REGISTERED ELECTRICAL ENGINEER 5/02/11

10-3-11
PLANS APPROVAL DATE

REGISTERED PROFESSIONAL ENGINEER
DAVID H. OTO
No. 10699
Exp. 06/30/2013
ELECTRICAL
STATE OF CALIFORNIA

THE STATE OF CALIFORNIA OR ITS OFFICERS OR AGENTS SHALL NOT BE RESPONSIBLE FOR THE ACCURACY OR COMPLETENESS OF ELECTRONIC COPIES OF THIS PLAN SHEET.

PB AMERICAS, Inc.
303 Second St., Suite 700N
San Francisco, CA 94107-1317

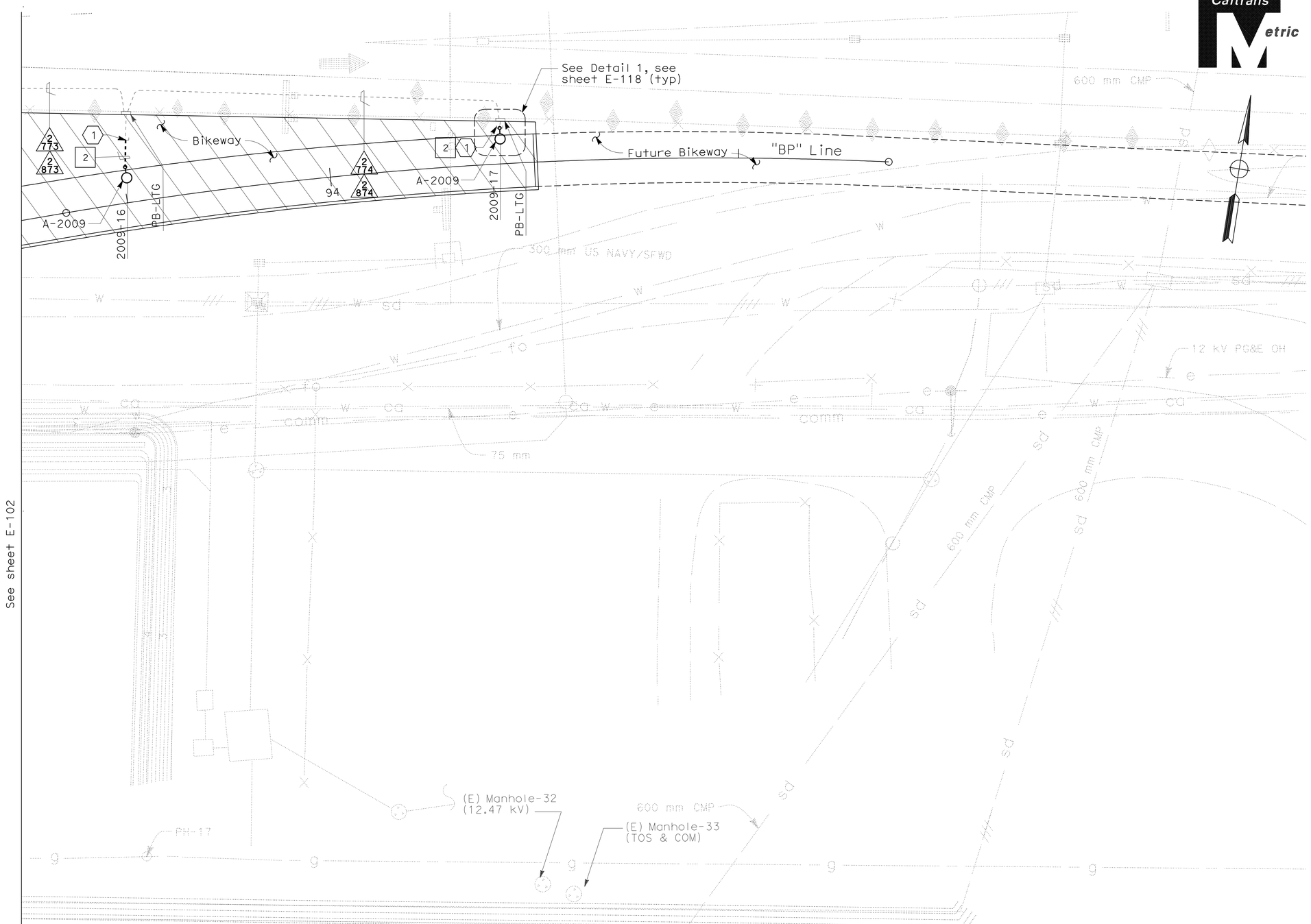

NOTES:

1. References:
   - For conduit and tray, cable and circuit schedules, see sheets starting at E-205.
   - For pull box schedule, see sheet E-130.
   - For bikeway wiring diagram, see sheet E-146.
2. For electrical equipment or devices removed, see sheets E-153 through E-160.

SHEET NOTE:

(1) Connect to capped conduit. The capped conduits are installed on Stage 2, see sheet E-93.

LEGEND:

See Stage Construction and Traffic Handling Plan, Stage 3, for Details.

UNDERGROUND AND ROADWAY AT GRADE
(LIGHTING AND ELECTRICAL SYSTEMS)
EASTBOUND ROADWAY
STAGE 3

SCALE: 1:200

E-103

THIS PLAN IS ACCURATE FOR ELECTRICAL WORK ONLY.

ALL DIMENSIONS ARE IN METERS UNLESS OTHERWISE SHOWN

STATE OF CALIFORNIA - DEPARTMENT OF TRANSPORTATION
Caltrans

CONSULTANT FUNCTIONAL SUPERVISOR: BRADY NADELL
CALCULATED-DESIGNED BY: JEFFRI HALIM
CHECKED BY: ELLERY LUCAS
REVISED BY / DATE REVISED

LAST REVISION 08-17-09 | DATE PLOTTED => 06-OCT-2011 | TIME PLOTTED => 06:57

Dist	COUNTY	ROUTE	KILOMETER POST TOTAL PROJECT	SHEET No.	TOTAL SHEETS
04	Ala	80	1.6/2.7	294	744

REGISTERED ELECTRICAL ENGINEER 5/02/11

10-3-11
PLANS APPROVAL DATE

REGISTERED PROFESSIONAL ENGINEER DAVID H. OTO No. 10699 Exp. 06/30/2013 ELECTRICAL STATE OF CALIFORNIA

THE STATE OF CALIFORNIA OR ITS OFFICERS OR AGENTS SHALL NOT BE RESPONSIBLE FOR THE ACCURACY OR COMPLETENESS OF ELECTRONIC COPIES OF THIS PLAN SHEET.

PB AMERICAS, Inc.
303 Second St., Suite 700N
San Francisco, CA 94107-1317

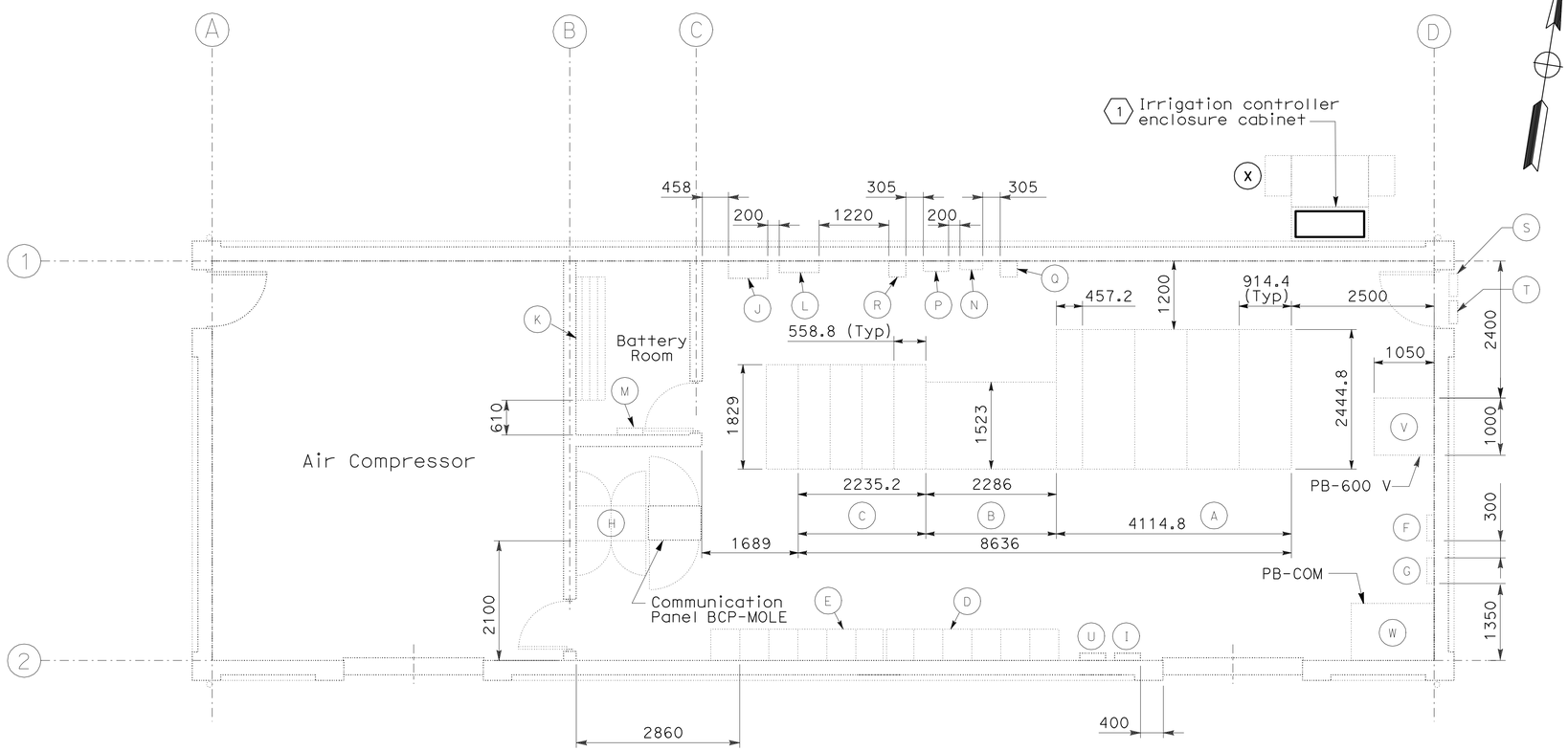

PLAN

NOTES:

1. Not in contract. All equipment inside the building is existing and installed in previous contract. It is provided as reference for identifying equipment and routing cable circuits only.

2. References:
   - For LVCC-A elevation and schedule, see sheet E-135.
   - For LVCC-B elevation and schedule, see sheet E-137.
   - For SCADA and telephone terminal box layout, see sheet E-162.
   - For COM-MOLE terminal box wiring, see sheet E-169.
   - For TEL-MOLE terminal box wiring, see sheet E-173.

SHEET NOTE:

(1) Refer to Standard Plans RSP ES-3H.

EQUIPMENT SCHEDULE

(A) 12.47 kV Metalclad Switchgear, 1200 A Bus, 500 MVA.

(B) 750 kVA Power Transformer, Dry Type, 12.47 kV - 480 V, 3-phase.

(C) 480 V Metalclad Switchgear, 1600 A Bus, 3 phase.

(D) 480 V Low Voltage Control Center (LVCC-B) 600 A Bus, 3-phase.

(E) 480 V Low Voltage Control Center (LVCC-A) 600 A Bus, 3-phase.

(F) Telephone Backboard - #TEL-MOLE.

(G) Scada Communication Terminal Box # COM-MOLE.

(H) Remote Terminal Unit RTU #16.

(I) Security Intrusion Alarm Control Panel.

(J) Battery Charger & Rectifier

(K) 125 VDC Batteries

(L) 125 VDC Panel DP-A.

(M) 125 VDC Battery Safety Switch.

(N) Lighting Panel LP-A, 208 Y/120 V, 3-phase, 4-wire.

(P) Utility Panel UP-004, 208 Y/120 V, 3-phase, 4-wire.

(Q) 30 kVA, Dry Type Transformer, 480 V - 208 Y/120 V, 3-phase, 4-wire.

(R) 30 kVA, Dry Type Transformer, 480 V - 208 Y/120 V, 3-phase, 4-wire.

(S) Photo Electric Cell PEC1 (Building Lighting).

(T) Photo Electric Cell PEC2 and PEC3 (Bridge Lighting).

(U) Fire Alarm Local Control Panel.

(V) "PB-600 V"
Size: 1000 W x 1450 D x 1000 H

(W) "PB-COMMUNICATION"
Size: 1000 W x 1450 D x 1000 H

(X) Irrigation Controller Enclosure

DETAILS
UNDERGROUND AND ROADWAY AT GRADE (MOLE SUBSTATION-EQUIPMENT ARRANGEMENT)
SCALE: 1:50

THIS PLAN IS ACCURATE FOR ELECTRICAL WORK ONLY.

ALL DIMENSIONS ARE IN MILLIMETERS UNLESS OTHERWISE SHOWN

E-104

REVISED BY	DATE REVISED

CALCULATED-DESIGNED BY: JEFFRI HALIM
CHECKED BY: ELLERY LUCAS
CONSULTANT FUNCTIONAL SUPERVISOR: BRADY NADELL

STATE OF CALIFORNIA - DEPARTMENT OF TRANSPORTATION

LAST REVISION 08-17-09 | DATE PLOTTED => 06-OCT-2011 | TIME PLOTTED => 06:57

Dist	COUNTY	ROUTE	KILOMETER POST TOTAL PROJECT	SHEET No.	TOTAL SHEETS
04	Ala	80	1.6/2.7	295	744

REGISTERED ELECTRICAL ENGINEER 5/02/11

10-3-11
PLANS APPROVAL DATE

REGISTERED PROFESSIONAL ENGINEER DAVID H. OTO No. 10699 Exp. 06/30/2013 ELECTRICAL STATE OF CALIFORNIA

THE STATE OF CALIFORNIA OR ITS OFFICERS OR AGENTS SHALL NOT BE RESPONSIBLE FOR THE ACCURACY OR COMPLETENESS OF ELECTRONIC COPIES OF THIS PLAN SHEET.

PB AMERICAS, Inc.
303 Second St., Suite 700N
San Francisco, CA 94107-1317

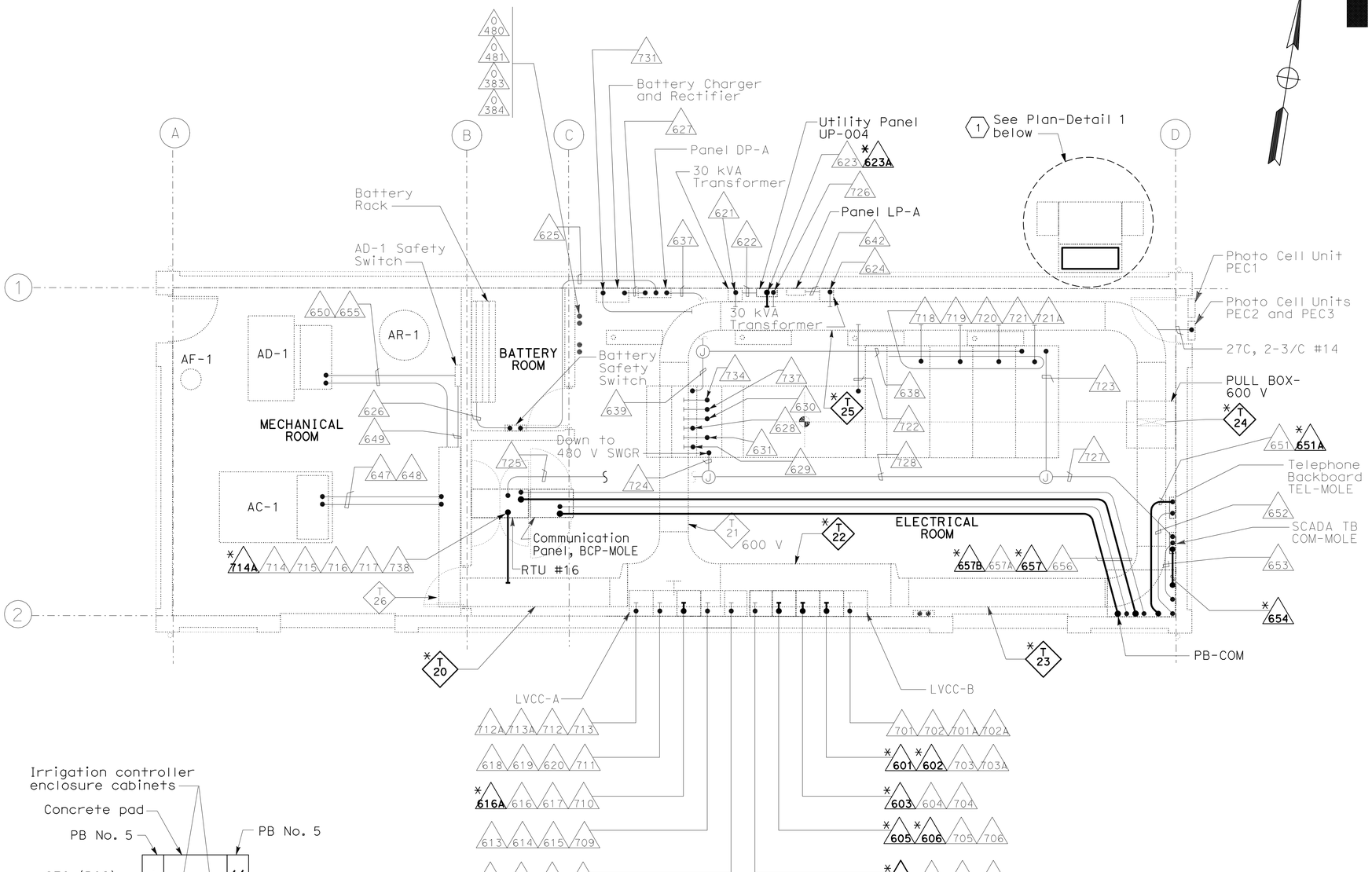

PLAN

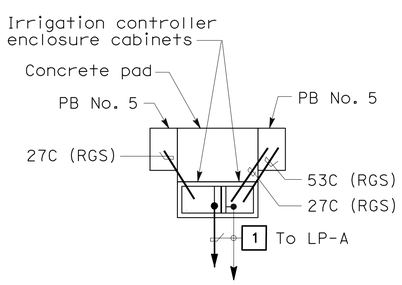

PLAN-DETAIL 1

NOTES:

1. Reference:
   - For equipment arrangement plan, see sheet E-104.
   - For conduit and tray, cable and circuit schedules, see sheets starting at E-205.
2. Not in contract. All equipment inside the building, conduits and cable trays prefixed with (*) are existing and installed in previous contract. It is provided as reference for identifying equipment and routing cable circuits only.

SHEET NOTE:

(1) Refer to Standard Plans RSP ES-3H.

DETAILS
UNDERGROUND AND ROADWAY AT GRADE (MOLE SUBSTATION-CONDUIT AND CABLE TRAY)

SCALE 1:50

THIS PLAN IS ACCURATE FOR ELECTRICAL WORK ONLY.

ALL DIMENSIONS ARE IN METERS UNLESS OTHERWISE SHOWN

E-105

STATE OF CALIFORNIA - DEPARTMENT OF TRANSPORTATION

CONSULTANT FUNCTIONAL SUPERVISOR: BRADY NADELL

CALCULATED-DESIGNED BY: JEFFRI HALIM

CHECKED BY: ELLERY LUCAS

REVISED BY / DATE REVISED

LAST REVISION 08-17-09 DATE PLOTTED => 06-OCT-2011 TIME PLOTTED => 06:57

Dist	COUNTY	ROUTE	KILOMETER POST TOTAL PROJECT	SHEET No.	TOTAL SHEETS
04	Ala	80	1.6/2.7	296	744

REGISTERED ELECTRICAL ENGINEER 5/02/11

10-3-11
PLANS APPROVAL DATE

REGISTERED PROFESSIONAL ENGINEER
DAVID H. OTO
No. 10699
Exp. 06/30/2013
ELECTRICAL
STATE OF CALIFORNIA

THE STATE OF CALIFORNIA OR ITS OFFICERS OR AGENTS SHALL NOT BE RESPONSIBLE FOR THE ACCURACY OR COMPLETENESS OF ELECTRONIC COPIES OF THIS PLAN SHEET.

PB AMERICAS, Inc.
303 Second St., Suite 700N
San Francisco, CA 94107-1317

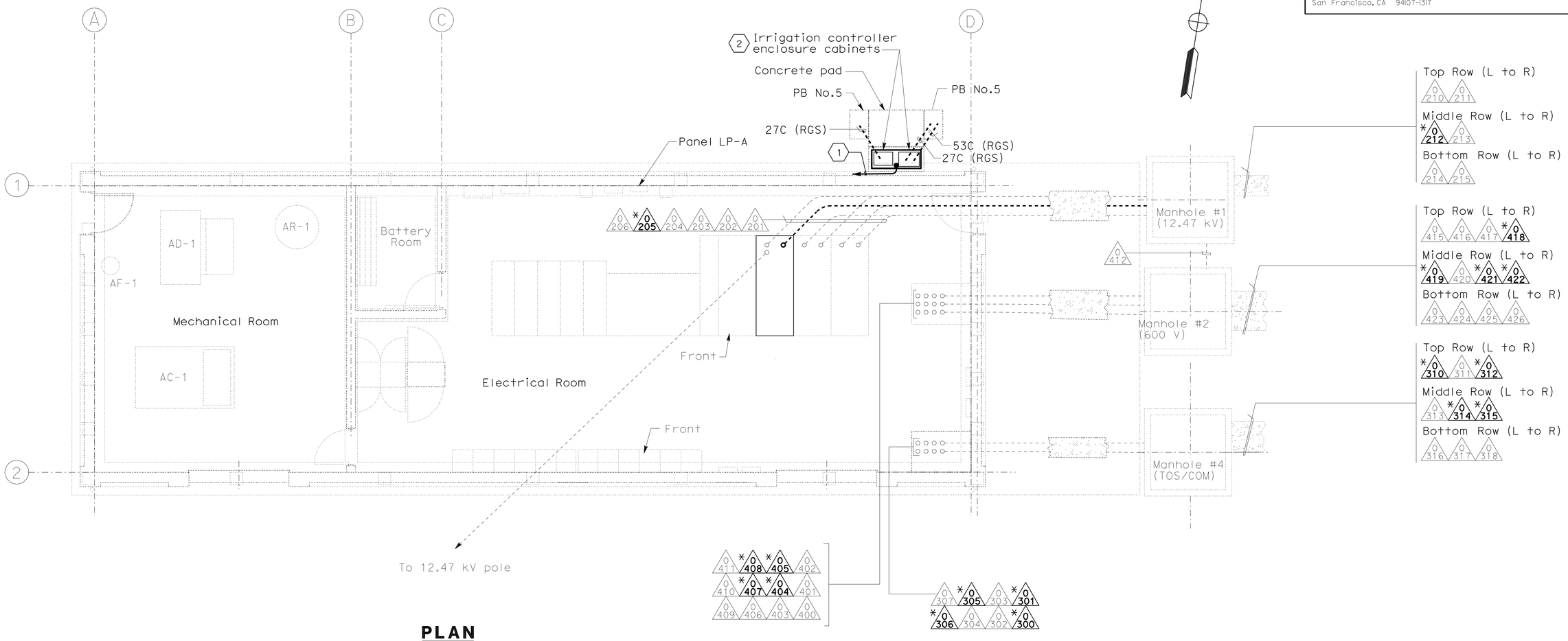

PLAN

NOTE:

1. References:
   - For conduit and tray, cable and circuit schedules, see sheets starting at E-205.

SHEET NOTES:

1. Homerun to Lighting Panel LP-A, Ckt #28 (21C, 2#12 + #12G).
2. For installation, see Standard Plans RSP ES-3H.

DETAILS
UNDERGROUND AND ROADWAY AT GRADE (MOLE SUBSTATION-UNDERGROUND CONDUITS)

SCALE 1:50

E-106

THIS PLAN IS ACCURATE FOR ELECTRICAL WORK ONLY.

ALL DIMENSIONS ARE IN METERS UNLESS OTHERWISE SHOWN

STATE OF CALIFORNIA - DEPARTMENT OF TRANSPORTATION
Caltrans

CONSULTANT FUNCTIONAL SUPERVISOR: BRADY NADELL
CALCULATED-DESIGNED BY: JEFFRI HALIM
CHECKED BY: ELLERY LUCAS
REVISED BY
DATE REVISED

LAST REVISION 08-17-09
DATE PLOTTED => 06-OCT-2011
TIME PLOTTED => 06:58

Dist	COUNTY	ROUTE	KILOMETER POST TOTAL PROJECT	SHEET No.	TOTAL SHEETS
04	Ala	80	1.6/2.7	297	744

REGISTERED ELECTRICAL ENGINEER 5/02/11

10-3-11
PLANS APPROVAL DATE

REGISTERED PROFESSIONAL ENGINEER DAVID H. OTO No. 10699 Exp. 06/30/2013 ELECTRICAL STATE OF CALIFORNIA

THE STATE OF CALIFORNIA OR ITS OFFICERS OR AGENTS SHALL NOT BE RESPONSIBLE FOR THE ACCURACY OR COMPLETENESS OF ELECTRONIC COPIES OF THIS PLAN SHEET.

PB AMERICAS, Inc.
303 Second St., Suite 700N
San Francisco, CA 94107-1317

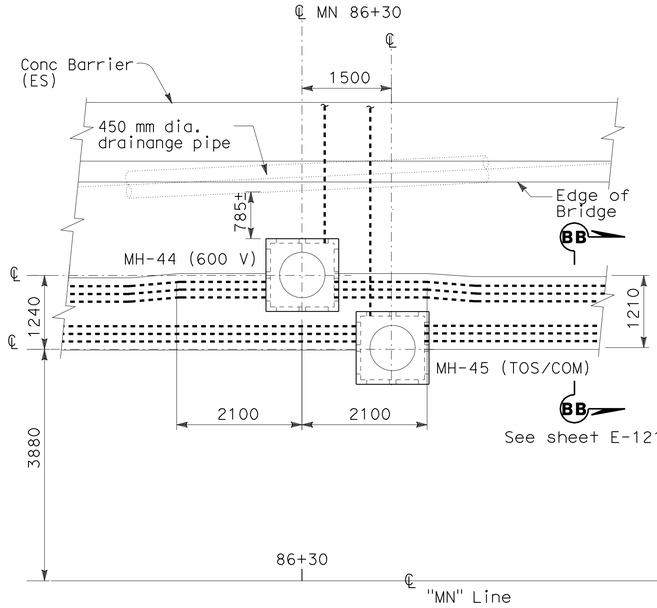

DETAIL 1
(See sheet E-66)
SCALE: 1:50

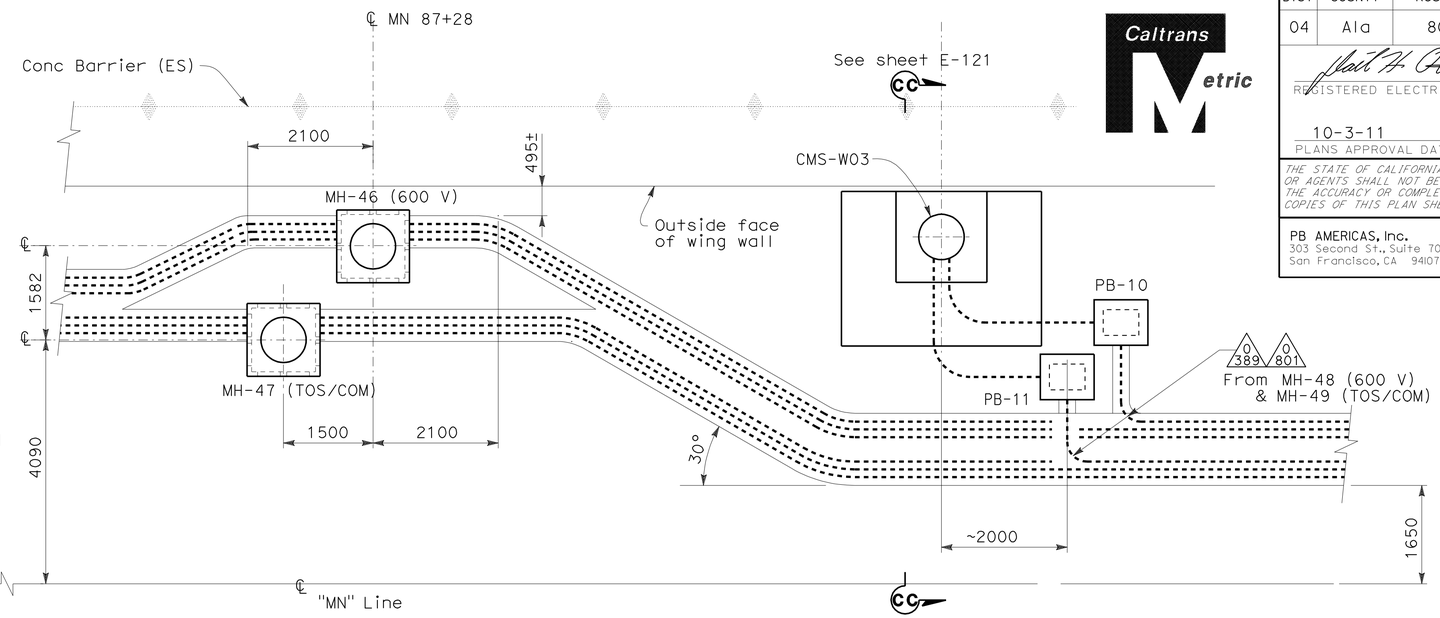

DETAIL 2
(See sheet E-67)
SCALE: 1:50

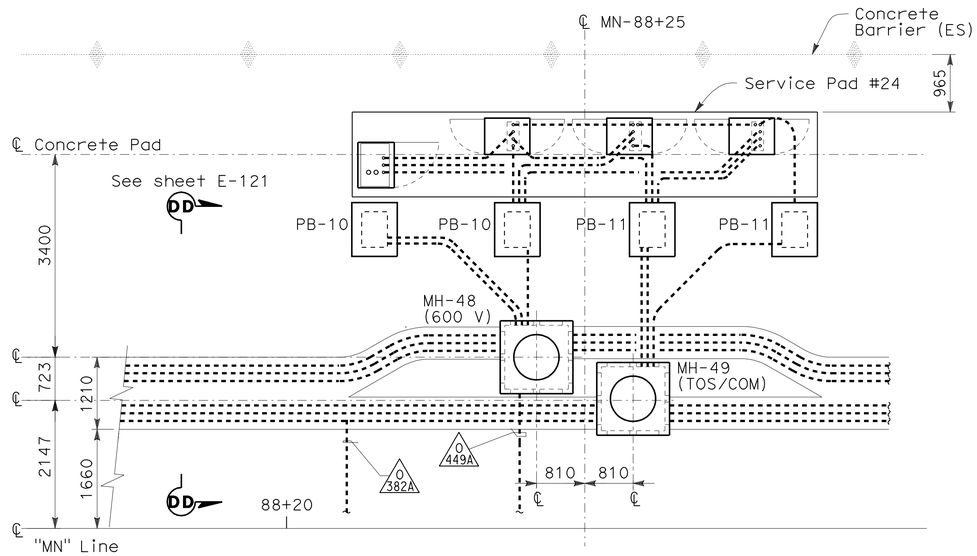

DETAIL 3
(See sheets E-67 and E-109)
SCALE: 1:50

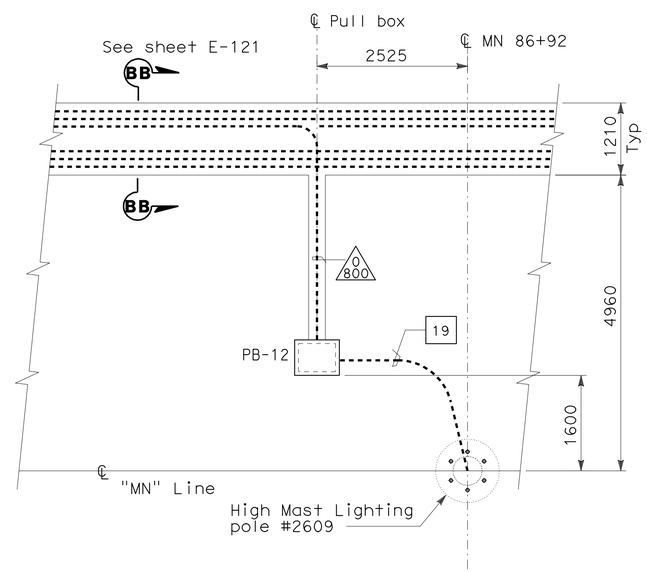

DETAIL 4
(See sheet E-67)
SCALE: 1:50

NOTES:

1. References:
   - For duct banks and pull box plans, see sheets E-66 and E-67.
   - For pull box schedule, see sheet E-130.
   - For conduit and tray, cable and circuit schedules, see sheets starting at E-205.
   - For Service Pad #24 details, see sheets E-109 and E-110.
2. Provide ground bushing on each conduit and install a bonding jumper with a #6 BCW inside manholes and pull boxes.

DETAILS
UNDERGROUND AND ROADWAY AT GRADE (MANHOLE AND DUCT BANK PLANS
SCALE AS NOTED

E-107

THIS PLAN IS ACCURATE FOR ELECTRICAL WORK ONLY.

ALL DIMENSIONS ARE IN MILLIMETERS UNLESS OTHERWISE SHOWN

REVISED BY | DATE REVISED
JEFFRI HALIM | ELLERY LUCAS
CALCULATED-DESIGNED BY | CHECKED BY
CONSULTANT FUNCTIONAL SUPERVISOR | BRADY NADELL
STATE OF CALIFORNIA - DEPARTMENT OF TRANSPORTATION
Caltrans

LAST REVISION 08-05-11 | DATE PLOTTED => 06-OCT-2011 | TIME PLOTTED => 06:58

Dist	COUNTY	ROUTE	KILOMETER POST TOTAL PROJECT	SHEET No.	TOTAL SHEETS
04	Ala	80	1.6/2.7	298	744

REGISTERED ELECTRICAL ENGINEER 5/02/11

10-3-11
PLANS APPROVAL DATE

REGISTERED PROFESSIONAL ENGINEER DAVID H. OTO No. 10699 Exp. 06/30/2013 ELECTRICAL STATE OF CALIFORNIA

THE STATE OF CALIFORNIA OR ITS OFFICERS OR AGENTS SHALL NOT BE RESPONSIBLE FOR THE ACCURACY OR COMPLETENESS OF ELECTRONIC COPIES OF THIS PLAN SHEET.

PB AMERICAS, Inc.
303 Second St., Suite 700N
San Francisco, CA 94107-1317

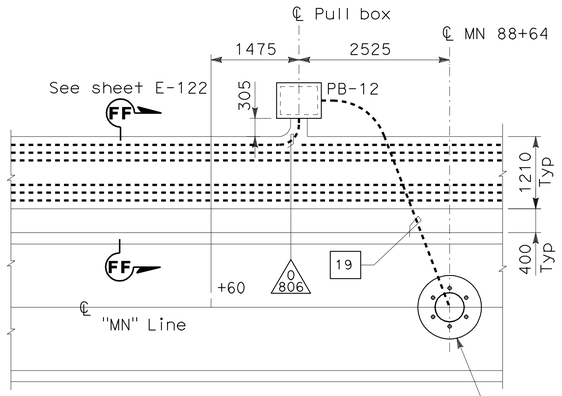

DETAIL 1
(See sheet E-68)
SCALE: 1:50

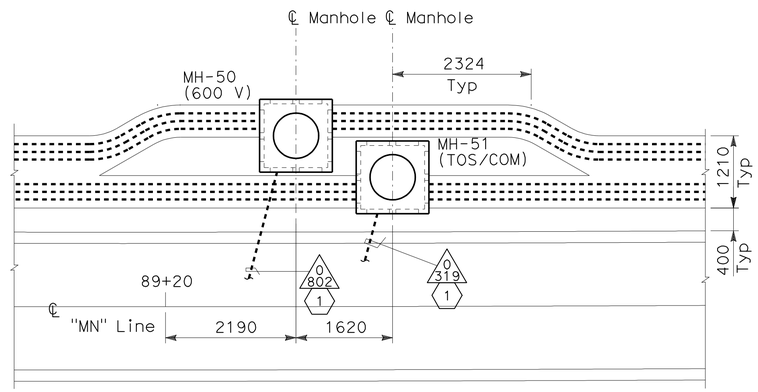

DETAIL 2
(See sheet E-68)
SCALE: 1:50

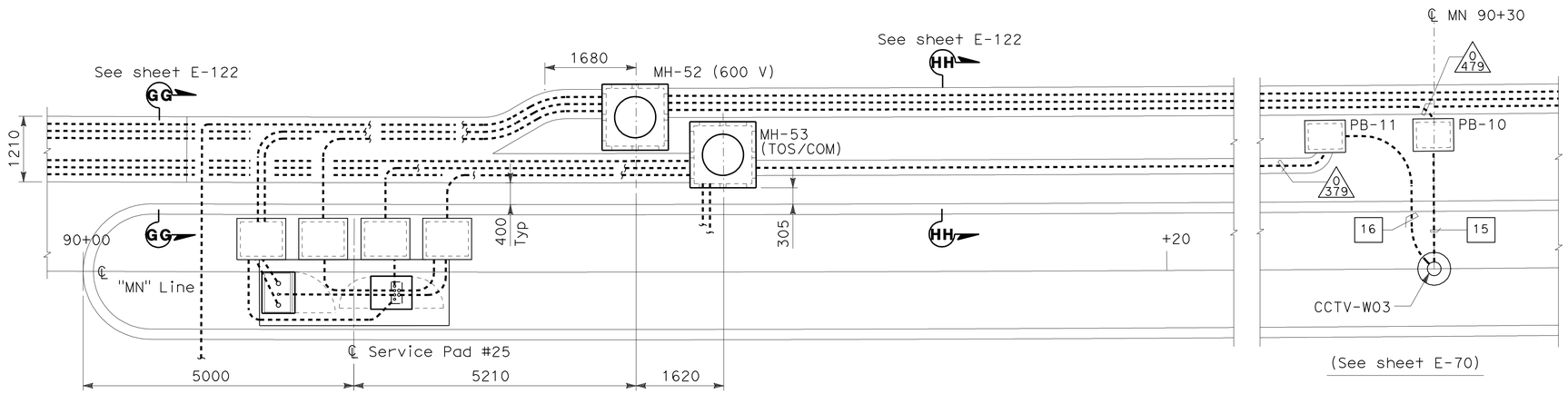

DETAIL 3
(See Sheets E-69 and E-111)
SCALE: 1:50

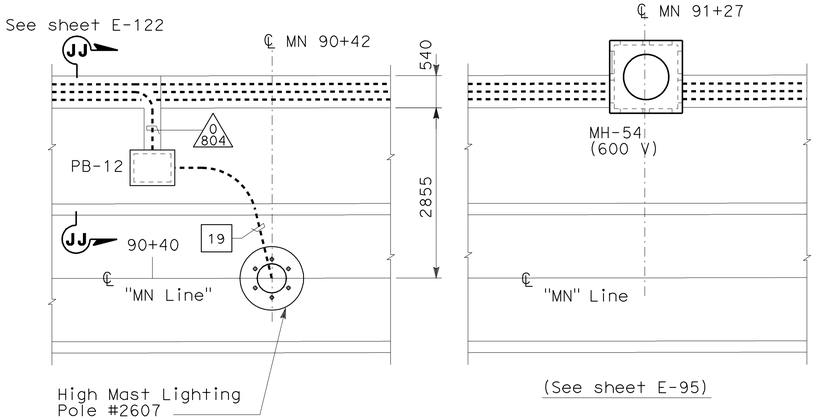

DETAIL 4
(See sheet E-70)
SCALE: 1:50

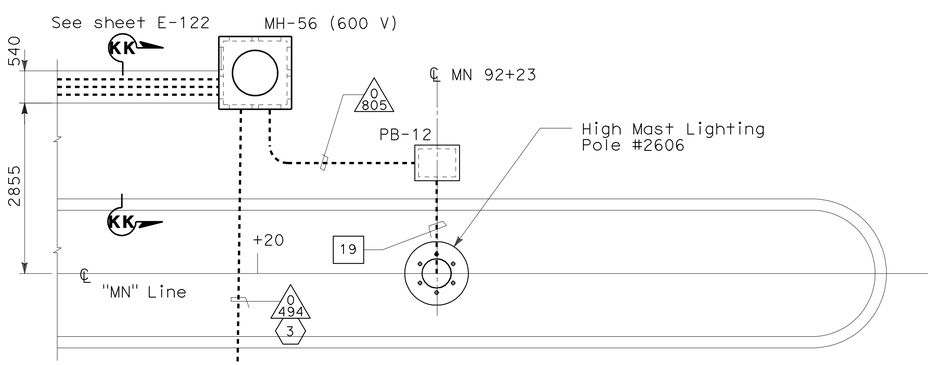

DETAIL 5
(See sheet E-108)
SCALE: 1:50

NOTES:

1. References:
   - For pull box schedule, see sheet E-130.
   - For conduit and tray, cable and circuit schedules, see sheets starting at E-205.
   - For high mast lighting wiring diagram, see sheets E-147 and E-152.
   - For high mast lighting plan, see sheets E-149 and E-150.
   - For manhole plans and sections, see sheets E-124 through E-129.
2. Provide ground bushing on each conduit and install a bonding jumper with a #6 BCW inside the manhole and pull boxes.

SHEET NOTES:

1. For continuation, see sheet E-89.
2. Conduit to PB-LTG, see sheet E-86.
3. Conduit to sign No. 01622, for continuation, see sheet E-96.

DETAILS
UNDERGROUND AND ROADWAY AT GRADE (MANHOLE AND DUCT BANK PLANS)
SCALE: 1:50

THIS PLAN IS ACCURATE FOR ELECTRICAL WORK ONLY.

ALL DIMENSIONS ARE IN MILLIMETERS UNLESS OTHERWISE SHOWN

E-108

STATE OF CALIFORNIA - DEPARTMENT OF TRANSPORTATION
Caltrans

CONSULTANT FUNCTIONAL SUPERVISOR: BRADY NADELL
CALCULATED-DESIGNED BY: JEFFRI HALIM
CHECKED BY: ELLERY LUCAS
REVISED BY / DATE REVISED

LAST REVISION 08-17-09
DATE PLOTTED => 06-OCT-2011
TIME PLOTTED => 06:58

Dist	COUNTY	ROUTE	KILOMETER POST TOTAL PROJECT	SHEET No.	TOTAL SHEETS
04	Ala	80	1.6/2.7	299	744

REGISTERED ELECTRICAL ENGINEER 5/02/11

10-3-11
PLANS APPROVAL DATE

REGISTERED PROFESSIONAL ENGINEER DAVID H. OTO No. 10699 Exp. 06/30/2013 ELECTRICAL STATE OF CALIFORNIA

THE STATE OF CALIFORNIA OR ITS OFFICERS OR AGENTS SHALL NOT BE RESPONSIBLE FOR THE ACCURACY OR COMPLETENESS OF ELECTRONIC COPIES OF THIS PLAN SHEET.

PB AMERICAS, Inc.
303 Second St., Suite 700N
San Francisco, CA 94107-1317

Caltrans Metric

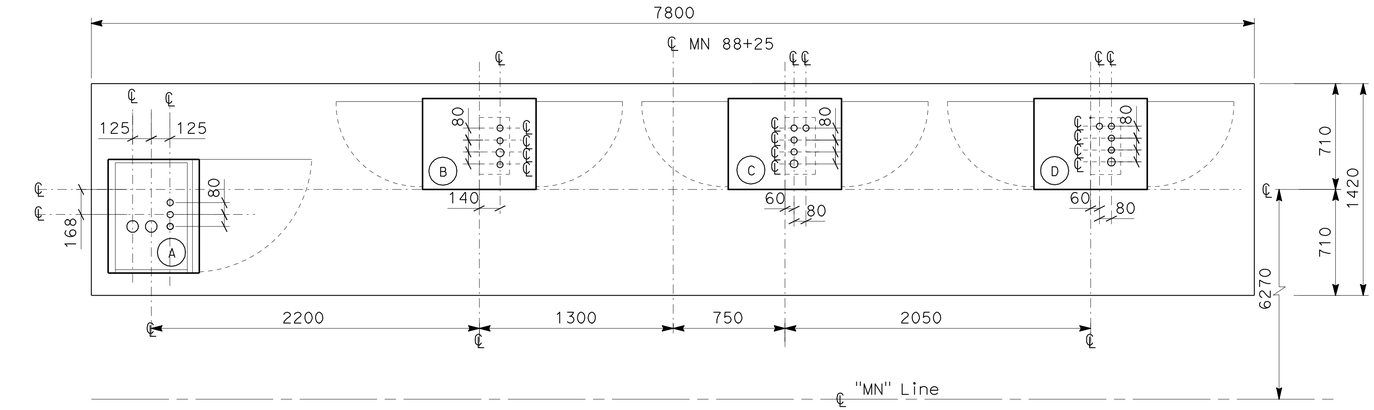

CONDUIT STUB-UP PLAN

SCALE: 1:20

EQUIPMENT SCHEDULE

A	Type III-A Service Panel Enclosure No. (UP-173) Size: 1524 H x 762 W x 610 D
B	Controller Cabinet #TOS-24A Size: 1676 H x 610 W x 762 D
C	Controller Cabinet #TOS-24B Size: 1676 H x 610 W x 762 D
D	Controller Cabinet #TOS-24C Size: 1676 H x 610 W x 762 D

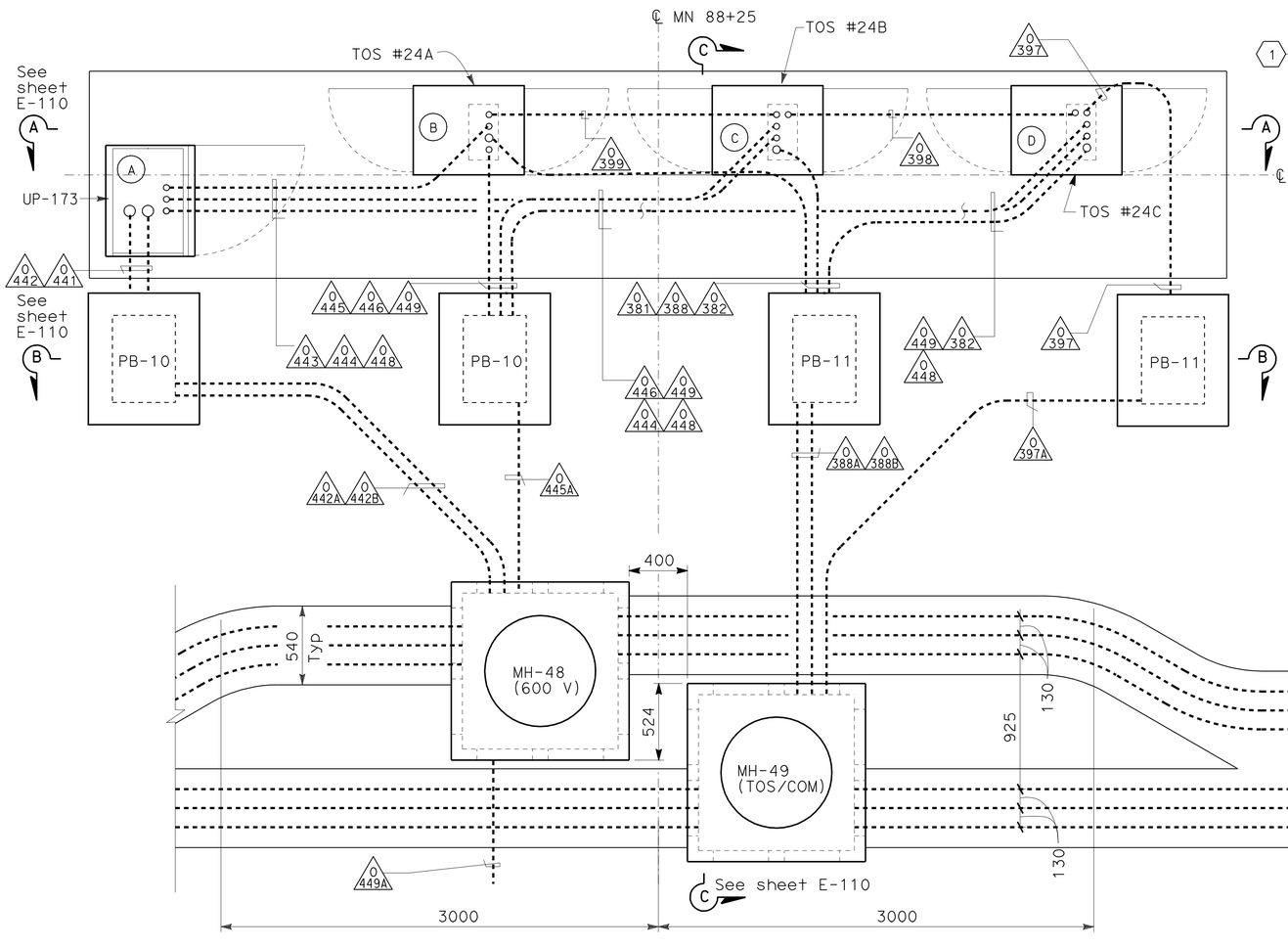

SERVICE PAD #24 DUCT BANK AND CONDUIT PLAN

(See sheet E-68)
SCALE: 1:20

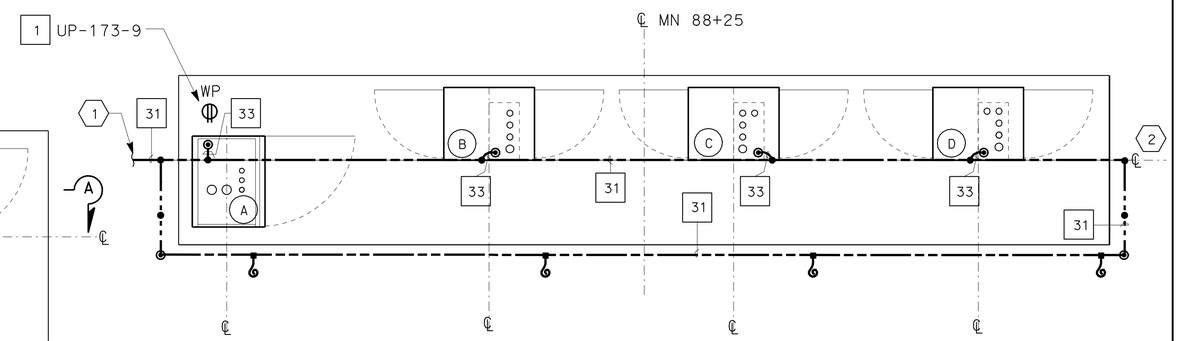

SERVICE PAD #24
EQUIPMENT ARRANGEMENT AND GROUNDING PLAN

SCALE: 1:25

NOTES:

1. References:
   - For location of Service Pad #24, see sheet E-68.
   - For UP-173 panel schedule, see sheet E-142.
   - TOS equipment is shown for routing only. For typical details of TOS controllers and devices, see sheets E-190 through E-197.
   - For typical manhole and duct bank details, see sheet E-119.
   - For pull box schedule, see sheet E-130.
   - For conduit and tray, cable and circuit schedules, see sheets starting at E-205.
2. The Contractor shall verify all stub-up locations prior to pouring concrete.
3. Provide ground bushing on each conduit and install a bonding jumper with a #6 BCW inside manholes and pull boxes.

SHEET NOTES:

(1) Connect 250 kcmil from Manhole-46. Refer to sheet E-131 for grounding system.

(2) Connect 250 kcmil towards to Manhole-56, see sheet E-131 for grounding system.

DETAILS
UNDERGROUND AND ROADWAY AT GRADE (SERVICE PAD #24 PLANS)

SCALE AS NOTED

E-109

THIS PLAN IS ACCURATE FOR ELECTRICAL WORK ONLY.

ALL DIMENSIONS ARE IN MILLIMETERS UNLESS OTHERWISE SHOWN

REVISED BY | DATE REVISED
JEFFRI HALIM | ELLERY LUCAS
CALCULATED-DESIGNED BY | CHECKED BY
CONSULTANT FUNCTIONAL SUPERVISOR: BRADY NADELL
STATE OF CALIFORNIA - DEPARTMENT OF TRANSPORTATION
Caltrans

LAST REVISION 08-17-09 | DATE PLOTTED => 06-OCT-2011 | TIME PLOTTED => 06:58

Dist	COUNTY	ROUTE	KILOMETER POST TOTAL PROJECT	SHEET No.	TOTAL SHEETS
04	Ala	80	1.6/2.7	300	744

REGISTERED ELECTRICAL ENGINEER 5/02/11

10-3-11
PLANS APPROVAL DATE

REGISTERED PROFESSIONAL ENGINEER DAVID H. OTO No. 10699 Exp. 06/30/2013 ELECTRICAL STATE OF CALIFORNIA

THE STATE OF CALIFORNIA OR ITS OFFICERS OR AGENTS SHALL NOT BE RESPONSIBLE FOR THE ACCURACY OR COMPLETENESS OF ELECTRONIC COPIES OF THIS PLAN SHEET.

PB AMERICAS, Inc.
303 Second St., Suite 700N
San Francisco, CA 94107-1317

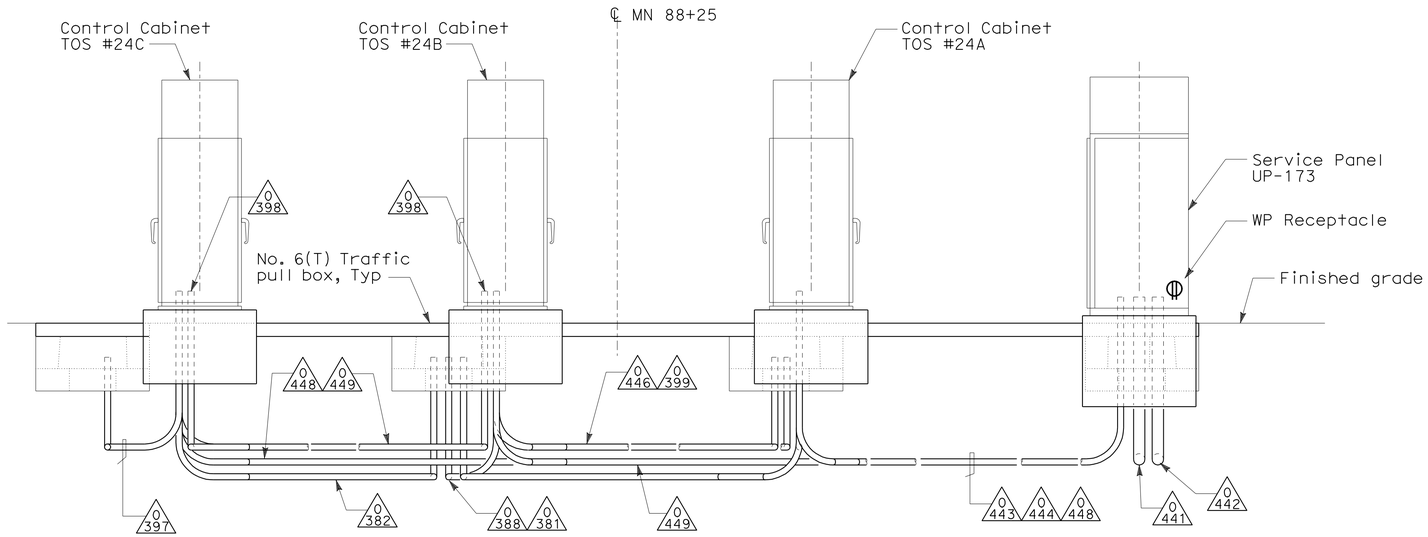

SECTION A-A
SCALE: 1:20

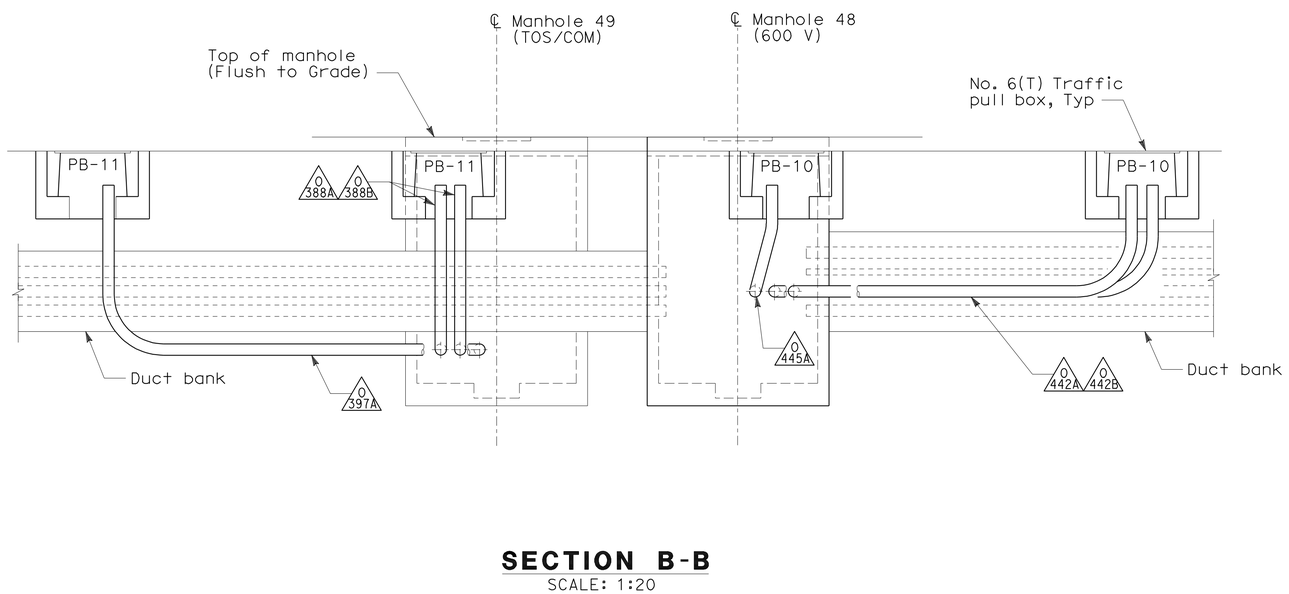

SECTION B-B
SCALE: 1:20

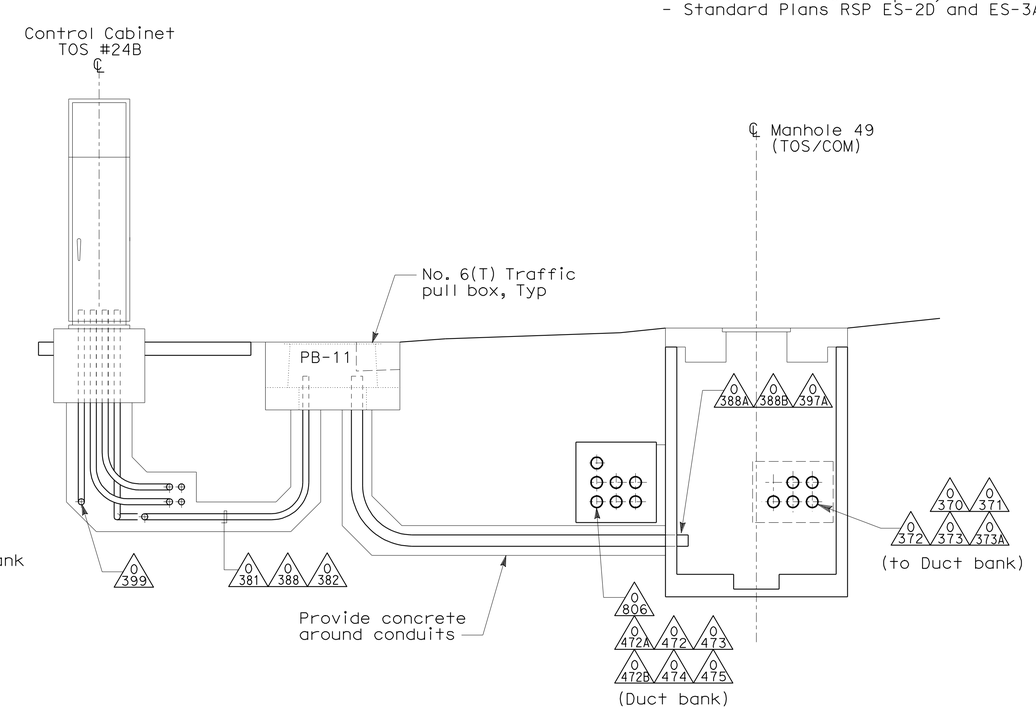

SECTION C-C
SCALE: 1:20

NOTES:

1. References:
   - For location of Service Pad #24, see sheet E-68.
   - TOS equipment is shown for routing only. For typical details of TOS controllers and devices, see sheets E-190 through E-197.
   - For typical manhole and duct bank details, see sheet E-119.
   - For pull box schedule, see sheet E-130.
   - For conduit and tray, cable and circuit schedules, see sheets starting at E-205.
   - For Service Pad #24 plan, see sheet E-109.
   - Standard Plans RSP ES-2D and ES-3A.

DETAILS
UNDERGROUND AND ROADWAY AT GRADE (SERVICE PAD #24 SECTIONS)
SCALE AS NOTED

THIS PLAN IS ACCURATE FOR ELECTRICAL WORK ONLY.

ALL DIMENSIONS ARE IN MILLIMETERS UNLESS OTHERWISE SHOWN

E-110

STATE OF CALIFORNIA - DEPARTMENT OF TRANSPORTATION
Caltrans

CONSULTANT FUNCTIONAL SUPERVISOR: BRADY NADELL
CALCULATED-DESIGNED BY: JEFFRI HALIM
CHECKED BY: ELLERY LUCAS
REVISED BY / DATE REVISED

LAST REVISION 08-17-09 DATE PLOTTED => 06-OCT-2011 TIME PLOTTED => 06:58