Dist	COUNTY	ROUTE	POST MILES TOTAL PROJECT	SHEET No.	TOTAL SHEETS
03	Col, Gle, Sut, Yub	5, 20, 45 65, 99	Var	1	25

INDEX OF PLANS

SHEET No.	DESCRIPTION
1	TITLE AND LOCATION MAP
2	CONSTRUCTION DETAILS
3-6	CONSTRUCTION AREA SIGNS
7-8	PAVEMENT DELINEATION QUANTITIES
9-13	REVISED AND NEW STANDARD PLANS
STRUCTURE PLANS	
14-25	ROUTE 20, 65, 99, 45 & 5 BRIDGES

THE STANDARD PLANS LIST APPLICABLE TO THIS CONTRACT IS INCLUDED IN THE NOTICE TO BIDDERS AND SPECIAL PROVISIONS BOOK.

STATE OF CALIFORNIA

DEPARTMENT OF TRANSPORTATION

PROJECT PLANS FOR CONSTRUCTION ON STATE HIGHWAY

IN COLUSA, GLENN, SUTTER AND YUBA COUNTIES AT VARIOUS LOCATIONS

TO BE SUPPLEMENTED BY STANDARD PLANS DATED MAY 2006

LOCATION MAP

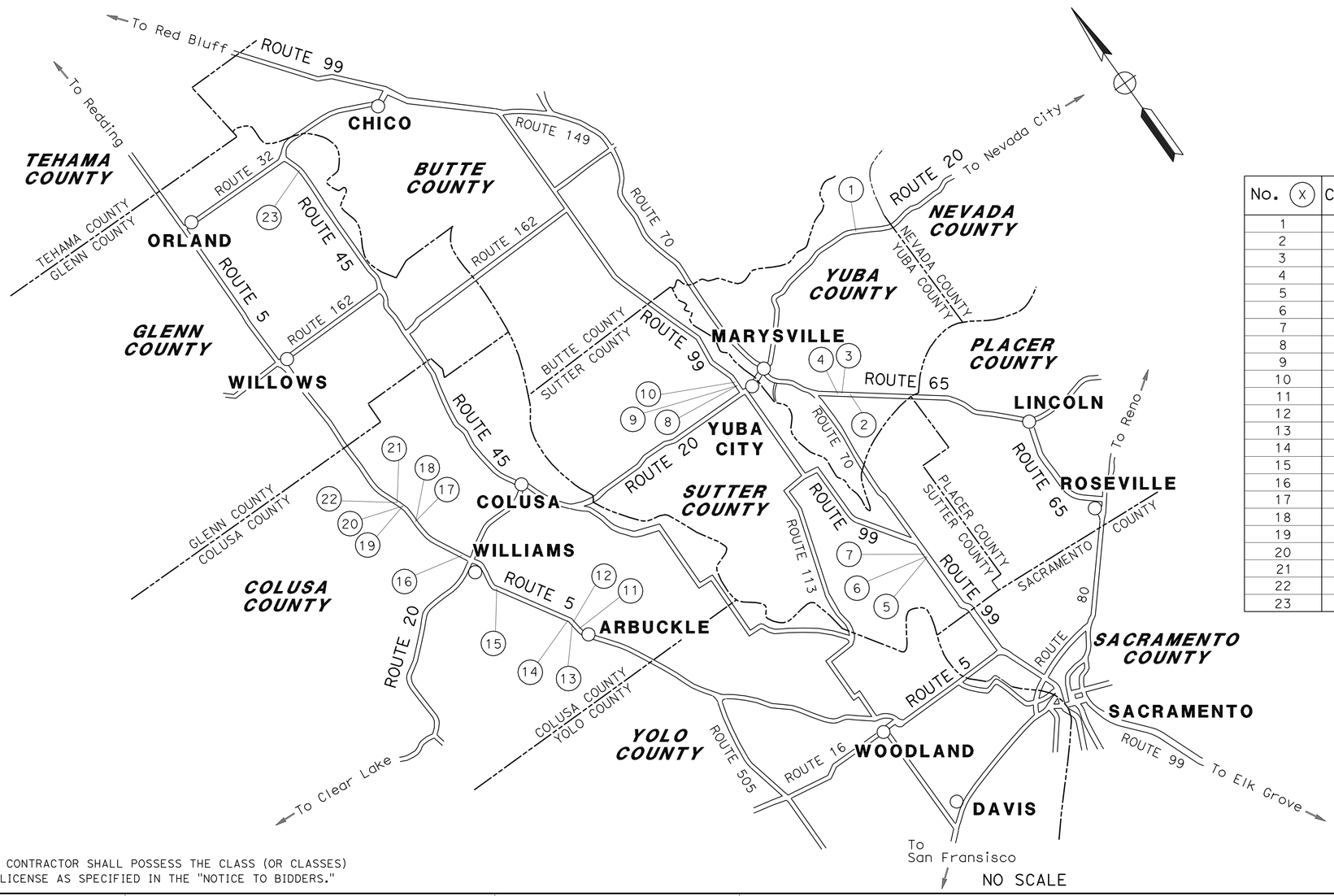

LOCATIONS OF CONSTRUCTION

No. (X)	COUNTY	ROUTE	POST MILE	BRIDGE NUMBER	STRUCTURE NAME
1	Yub	20	R17.73	16-0011	YUBA RIVER (PARKS BAR)
2	Yub	65	R6.880	16-0044	FORTY MILE ROAD OC
3	Yub	65	R7.420	16-0045R	HUTCHINSON CREEK
4	Yub	65	R7.610	16-0046L	REEDS CREEK
5	Sut	99	5.81	18-0045R	HOWSLEY ROAD UC
6	Sut	99	5.81	18-0045L	HOWSLEY ROAD UC
7	Sut	99	5.92	18-0017R	CROSS CANAL
8	Sut	99	R30.88	18-0033L	BUTTE HOUSE ROAD UC
9	Sut	99	R30.88	18-0033R	BUTTE HOUSE ROAD UC
10	Sut	99	R31.31	18-0034	QUEENS AVENUE OC
11	Col	5	7.15	15-0046	HALL STREET OC
12	Col	5	R7.700	15-0062R	NORTH ARBUCKLE UC
13	Col	5	R7.700	15-0062L	NORTH ARBUCKLE UC
14	Col	5	R7.990	15-0005L	SALT CREEK
15	Col	5	R15.91	15-0068	HUSTED ROAD OC
16	Col	5	R19.31	15-0074	FRESHWATER ROAD OC
17	Col	5	R27.74	15-0069L	STONE CORRAL CREEK
18	Col	5	R27.74	15-0069R	STONE CORRAL CREEK
19	Col	5	R29.02	15-0077L	FUNK SLOUGH OVERFLOW
20	Col	5	R29.02	15-0077R	FUNK SLOUGH OVERFLOW
21	Col	5	R29.22	15-0065L	NORTH MAXWELL OH
22	Col	5	R29.25	15-0065R	NORTH MAXWELL OH
23	Gle	45	R20.66	11-0038	STONY CREEK

PROJECT ENGINEER REGISTERED CIVIL ENGINEER — DATE 2-7-12

REGISTERED PROFESSIONAL ENGINEER — RONALD S SYKES No. C35526 Exp. 9-30-13 CIVIL — STATE OF CALIFORNIA

March 19, 2012

PLANS APPROVAL DATE

THE STATE OF CALIFORNIA OR ITS OFFICERS OR AGENTS SHALL NOT BE RESPONSIBLE FOR THE ACCURACY OR COMPLETENESS OF SCANNED COPIES OF THIS PLAN SHEET.

THE CONTRACTOR SHALL POSSESS THE CLASS (OR CLASSES) OF LICENSE AS SPECIFIED IN THE "NOTICE TO BIDDERS."

PROJECT MANAGER: RONALD SYKES

DESIGN ENGINEER: RONALD SYKES

CONTRACT No.	03-4M2104
PROJECT ID	0300020063

LAST REVISION 00-00-00 — DATE PLOTTED => 20-MAR-2012 — TIME PLOTTED => 10:27

Dist	COUNTY	ROUTE	POST MILES TOTAL PROJECT	SHEET No.	TOTAL SHEETS
03	Col, Gle, Sut, Yub	5, 20, 45, 65, 99	Var	2	25

REGISTERED CIVIL ENGINEER 2-7-12 DATE

3-19-12
PLANS APPROVAL DATE

REGISTERED PROFESSIONAL ENGINEER RONALD S. SYKES No. C35526 Exp. 9-30-11 CIVIL STATE OF CALIFORNIA

THE STATE OF CALIFORNIA OR ITS OFFICERS OR AGENTS SHALL NOT BE RESPONSIBLE FOR THE ACCURACY OR COMPLETENESS OF SCANNED COPIES OF THIS PLAN SHEET.

ROADWAY QUANTITIES

LOCATION No.	BRIDGE No.	STRUCTURE NAME	HMA (TYPE A)	COLD PLANE ASPHALT CONCRETE PAVEMENT
			TON	SQYD
12	15-0062R	NORTH ARBUCKLE UC	27	260
13	15-0062L	NORTH ARBUCKLE UC	27	260
15	15-0068	HUSTED ROAD OC	42	400
16	15-0074	FRESHWATER ROAD OC	19	178
17	15-0069L	STONE CORRAL CREEK	8	76
18	15-0069R	STONE CORRAL CREEK	8	76
19	15-0077L	FUNK SLOUGH OVERFLOW	9	83
20	15-0077R	FUNK SLOUGH OVERFLOW	9	83
23	11-0038	STONY CREEK	34	320
		TOTAL	183	1736

LEGEND

COLD PLANE AC Pvmt

DIRECTION OF TRAFFIC

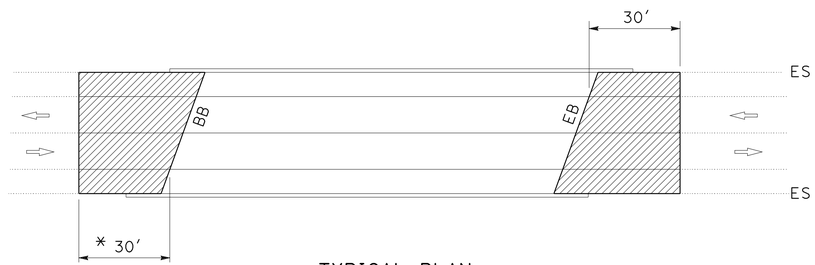

TYPICAL PLAN

* - 25' AT Loc 16, PAVE Loc 16 PARALLEL TO EDGE OF DECK AND AS DIRECTED BY THE ENGINEER.

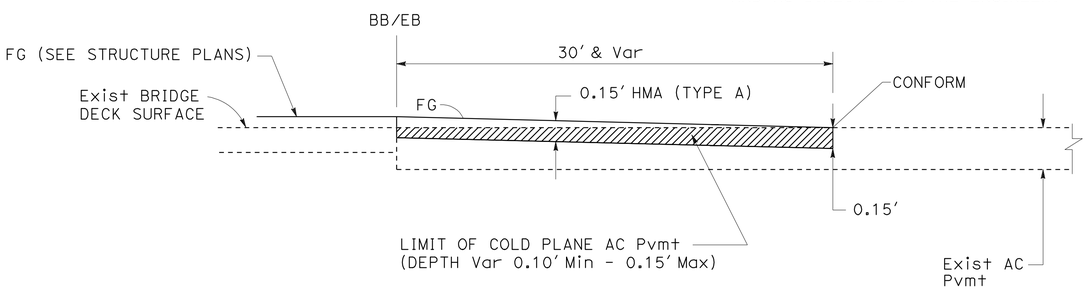

PROFILE

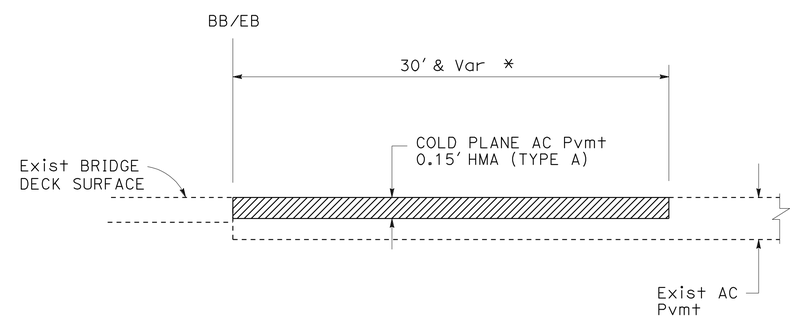

PROFILE

LOCATION 12, 13, 23

LOCATION 17, 18, 19, 20 (Shoulders only)

LOCATION 15, 16

PAVEMENT CONFORM AT BRIDGE APPROACH/DEPARTURE

NO SCALE

CONSTRUCTION DETAILS AND SUMMARY OF QUANTITIES

C-1

STATE OF CALIFORNIA - DEPARTMENT OF TRANSPORTATION
Caltrans
MAINTENANCE

FUNCTIONAL SUPERVISOR: RONALD S. SYKES

CALCULATED-DESIGNED BY: SHAHRAM RAISI
CHECKED BY

REVISED BY
DATE REVISED

LAST REVISION 00-00-00
DATE PLOTTED => 20-MAR-2012
TIME PLOTTED => 10:27

Dist	COUNTY	ROUTE	POST MILES TOTAL PROJECT	SHEET No.	TOTAL SHEETS
03	Col,Gle, Sut,Yub	5,20,45 65,99	Var	3	25

REGISTERED CIVIL ENGINEER 2-6-12 DATE

3-19-12
PLANS APPROVAL DATE

REGISTERED PROFESSIONAL ENGINEER Jeffrey S. Jewett No. 49233 Exp. 9-30-12 CIVIL STATE OF CALIFORNIA

THE STATE OF CALIFORNIA OR ITS OFFICERS OR AGENTS SHALL NOT BE RESPONSIBLE FOR THE ACCURACY OR COMPLETENESS OF SCANNED COPIES OF THIS PLAN SHEET.

STATIONARY MOUNTED CONSTRUCTION AREA SIGNS

SIGN LETTER	SIGN CODE FEDERAL	SIGN CODE CALIFORNIA	PANEL SIZE	SIGN MESSAGE	NUMBER OF POST AND SIZE	NUMBER OF SIGNS
A	W20-1	C23	48" X 48"	ROAD WORK AHEAD	1 - 6" X 6"	19
B	W20-1	C23	60" X 60"	ROAD WORK AHEAD	2 - 4" X 6"	24
C	G20-2	C14	36" X 18"	END ROAD WORK	1 - 4" X 4"	17
D	G20-2	C14	48" X 24"	END ROAD WORK	1 - 4" X 6"	12

NOTE: EXACT SIGN LOCATION TO BE DETERMINED BY THE ENGINEER.

LEGEND

(X) CONSTRUCTION AREA SIGN LETTER

SIGN - SINGLE POST

SIGN - TWO POSTS

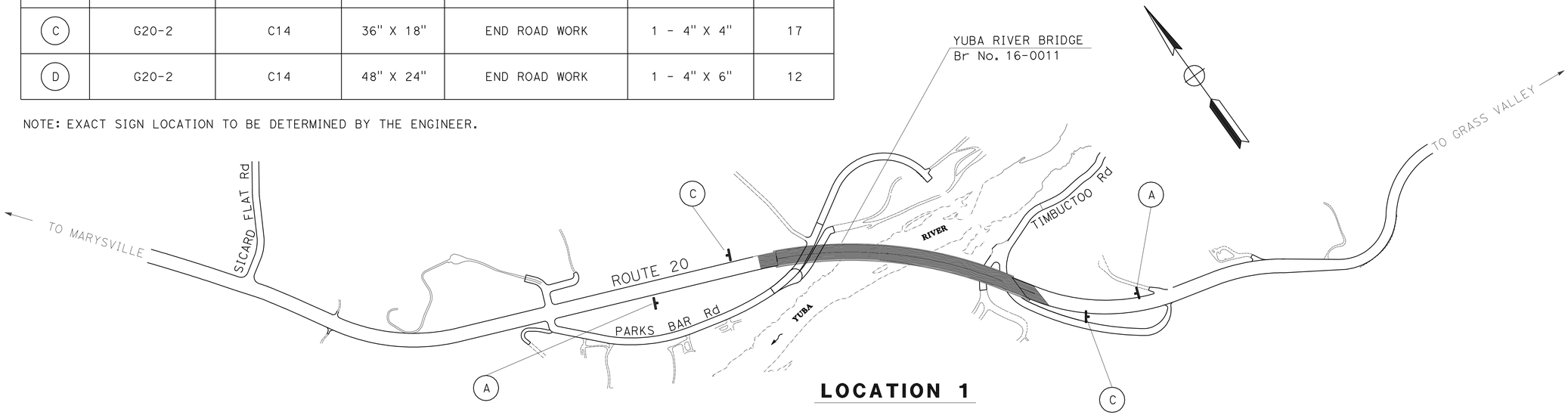

LOCATION 1

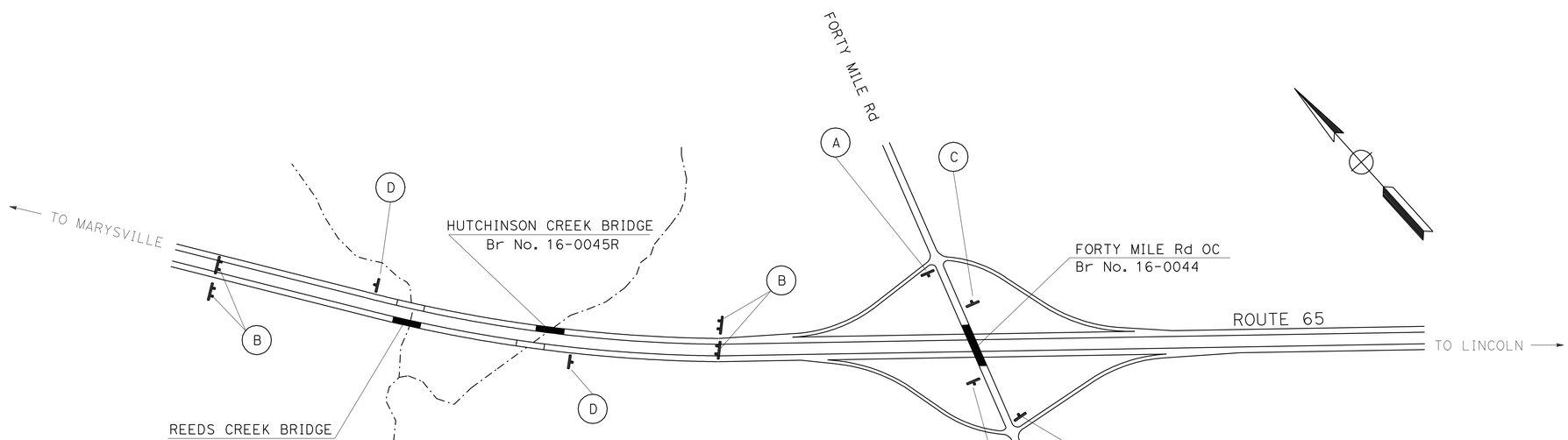

LOCATIONS 2,3, AND 4

CONSTRUCTION AREA SIGNS

NO SCALE

CS-1

STATE OF CALIFORNIA - DEPARTMENT OF TRANSPORTATION

Caltrans

TRAFFIC

FUNCTIONAL SUPERVISOR: SERGIO ACEVES

CALCULATED-DESIGNED BY | CHECKED BY | REVISED BY | DATE REVISED

LAST REVISION 02-06-12 | DATE PLOTTED => 20-MAR-2012 | TIME PLOTTED => 10:27

Dist	COUNTY	ROUTE	POST MILES TOTAL PROJECT	SHEET No.	TOTAL SHEETS
03	Col,Gle, Sut,Yub	5,20,45 65,99	Var	4	25

REGISTERED CIVIL ENGINEER 2-6-12 DATE

3-19-12
PLANS APPROVAL DATE

REGISTERED PROFESSIONAL ENGINEER Jeffrey S. Jewett No. 49233 Exp. 9-30-12 CIVIL STATE OF CALIFORNIA

THE STATE OF CALIFORNIA OR ITS OFFICERS OR AGENTS SHALL NOT BE RESPONSIBLE FOR THE ACCURACY OR COMPLETENESS OF SCANNED COPIES OF THIS PLAN SHEET.

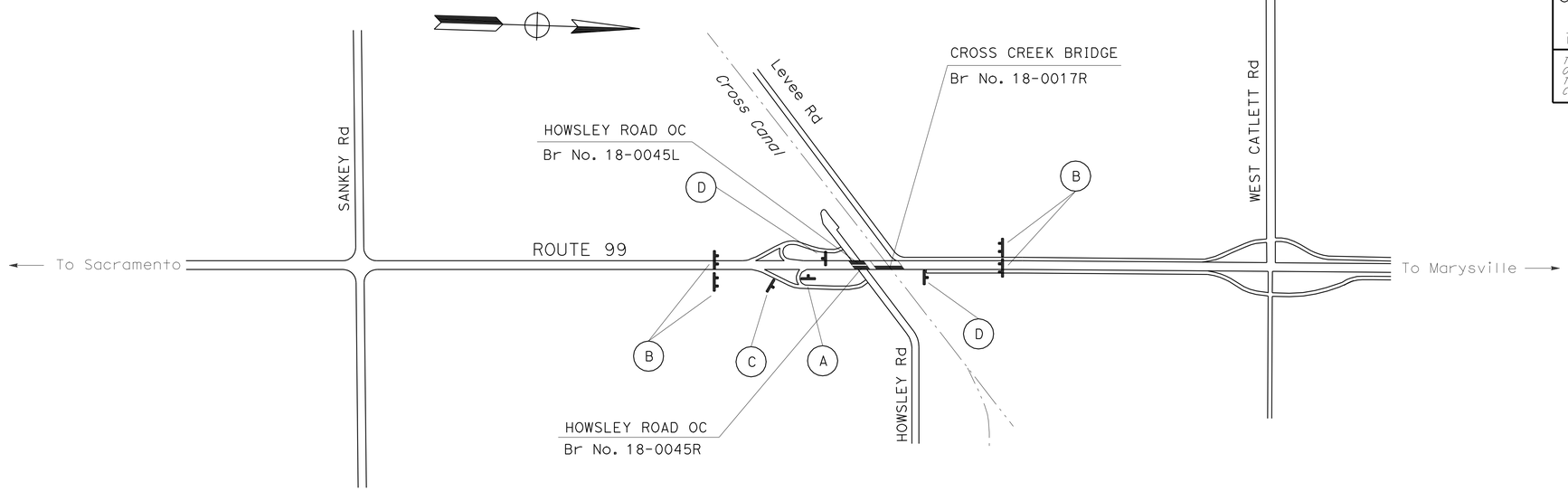

LOCATIONS 5,6, AND 7

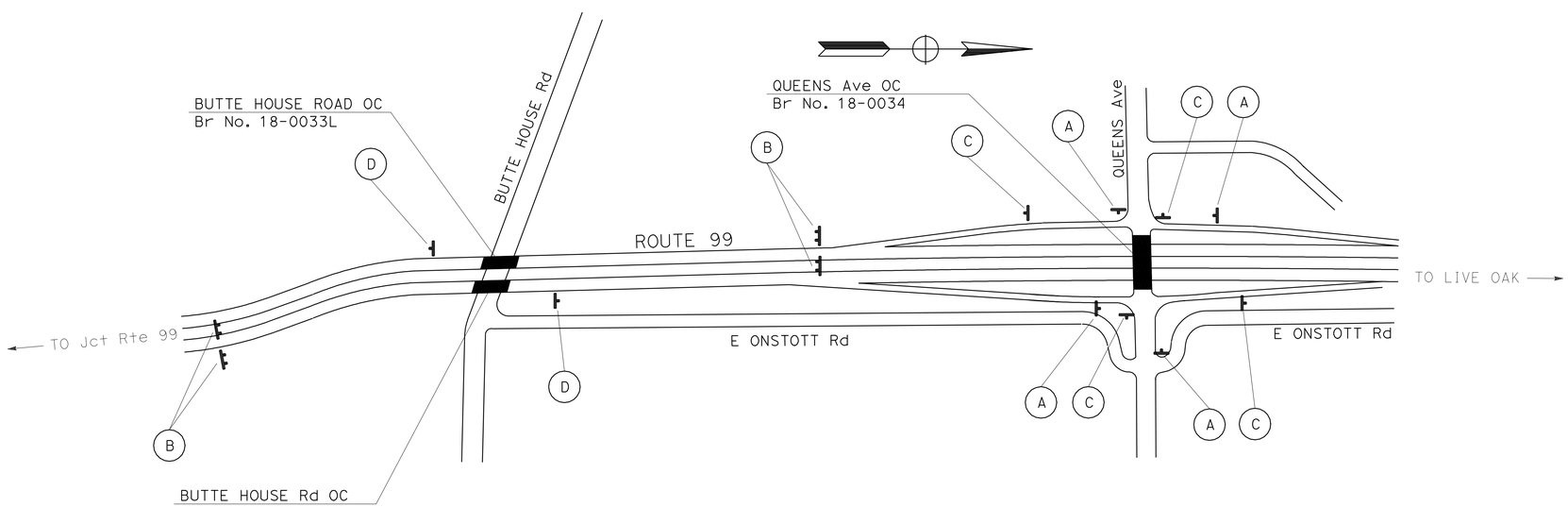

LOCATIONS 8,9, AND 10

APPROVED FOR CONSTRUCTION AREA SIGN WORK ONLY

CONSTRUCTION AREA SIGNS

NO SCALE

CS-2

STATE OF CALIFORNIA - DEPARTMENT OF TRANSPORTATION

Caltrans

TRAFFIC

FUNCTIONAL SUPERVISOR: SERGIO ACEVES

CALCULATED-DESIGNED BY | CHECKED BY

REVISED BY | DATE REVISED

LAST REVISION 02-02-12

DATE PLOTTED => 20-MAR-2012
TIME PLOTTED => 10:27

Dist	COUNTY	ROUTE	POST MILES TOTAL PROJECT	SHEET No.	TOTAL SHEETS
03	Col,Gle, Sut,Yub	5,20,45 65,99	Var	5	25

REGISTERED CIVIL ENGINEER 2-6-12 DATE

3-19-12
PLANS APPROVAL DATE

REGISTERED PROFESSIONAL ENGINEER Jeffrey S Jewett No. 49233 Exp. 9-30-12 CIVIL STATE OF CALIFORNIA

THE STATE OF CALIFORNIA OR ITS OFFICERS OR AGENTS SHALL NOT BE RESPONSIBLE FOR THE ACCURACY OR COMPLETENESS OF SCANNED COPIES OF THIS PLAN SHEET.

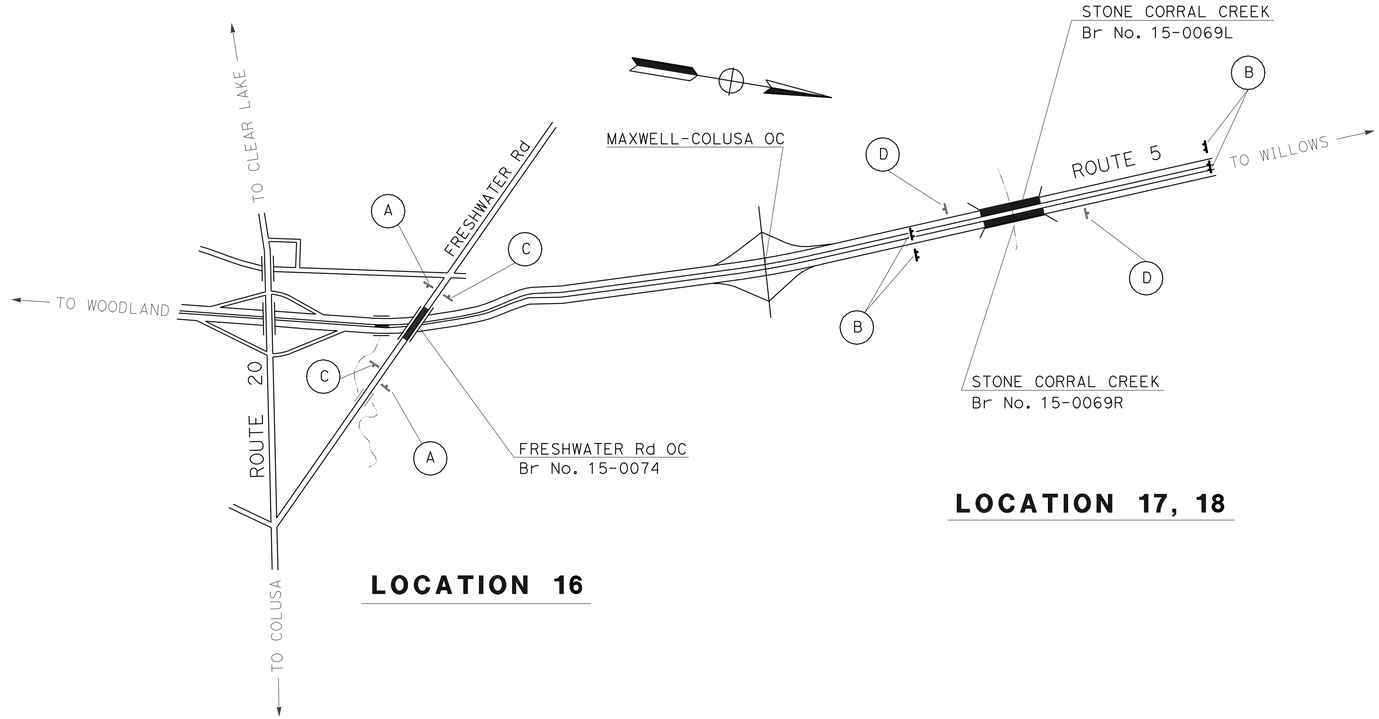

LOCATION 16

LOCATION 17, 18

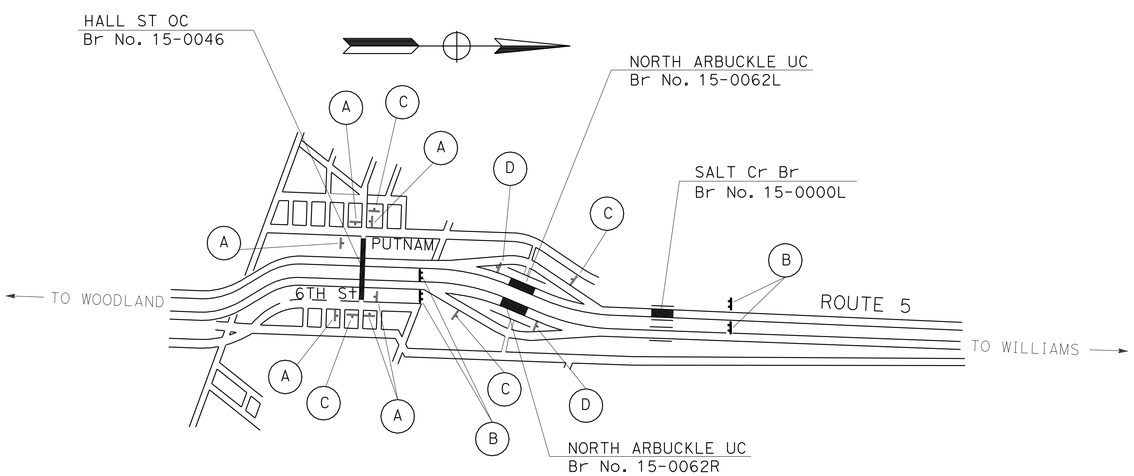

LOCATION 11, 12, 13, 14

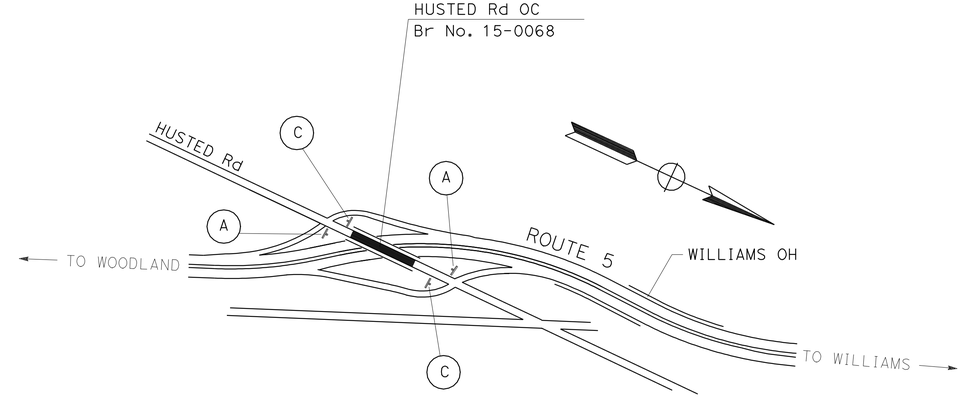

LOCATION 15

CONSTRUCTION AREA SIGNS

NO SCALE

APPROVED FOR CONSTRUCTION AREA SIGN WORK ONLY

CS-3

STATE OF CALIFORNIA - DEPARTMENT OF TRANSPORTATION
Caltrans
TRAFFIC

FUNCTIONAL SUPERVISOR: SERGIO ACEVES
CALCULATED-DESIGNED BY
CHECKED BY
REVISED BY
DATE REVISED

LAST REVISION 02-02-12
DATE PLOTTED => 20-MAR-2012
TIME PLOTTED => 10:27

Dist	COUNTY	ROUTE	POST MILES TOTAL PROJECT	SHEET No.	TOTAL SHEETS
03	Col,Gle, Sut,Yub	5,20,45 65,99	Var	6	25

REGISTERED CIVIL ENGINEER — DATE 2-6-12

3-19-12
PLANS APPROVAL DATE

REGISTERED PROFESSIONAL ENGINEER — Jeffrey S. Jewett — No. 49233 — Exp. 9-30-12 — CIVIL — STATE OF CALIFORNIA

THE STATE OF CALIFORNIA OR ITS OFFICERS OR AGENTS SHALL NOT BE RESPONSIBLE FOR THE ACCURACY OR COMPLETENESS OF SCANNED COPIES OF THIS PLAN SHEET.

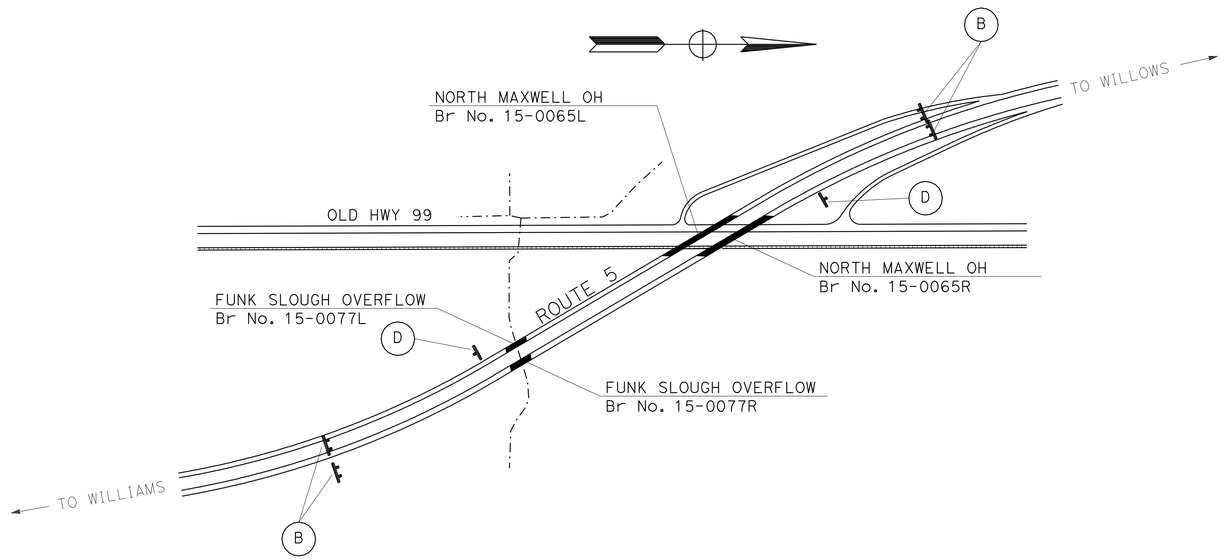

LOCATIONS 19, 20, 21, AND 22

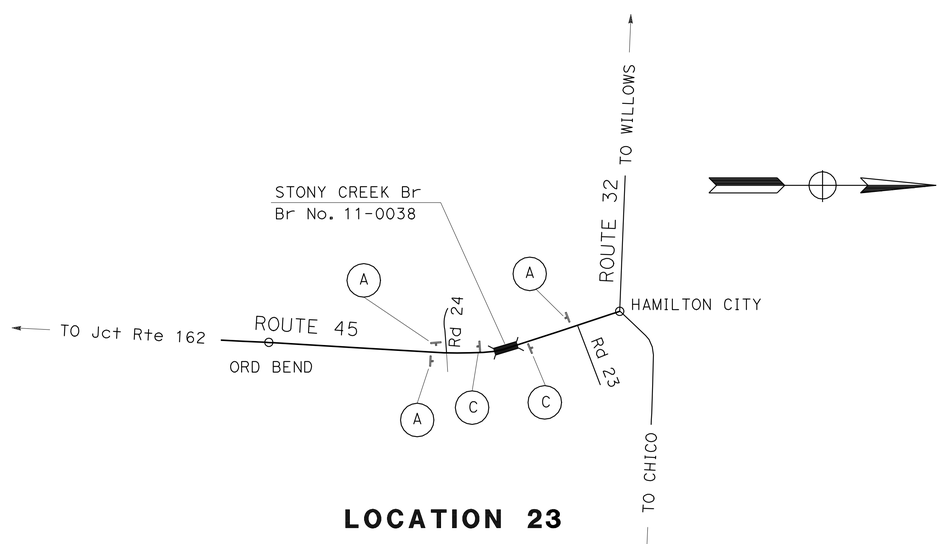

LOCATION 23

APPROVED FOR CONSTRUCTION AREA SIGN WORK ONLY

CONSTRUCTION AREA SIGNS

NO SCALE

CS-4

STATE OF CALIFORNIA - DEPARTMENT OF TRANSPORTATION
Caltrans®
TRAFFIC

FUNCTIONAL SUPERVISOR: SERGIO ACEVES

CALCULATED-DESIGNED BY: X
CHECKED BY: X
REVISED BY
DATE REVISED

LAST REVISION 02-02-12
DATE PLOTTED => 20-MAR-2012
TIME PLOTTED => 10:27

Dist	COUNTY	ROUTE	POST MILES TOTAL PROJECT	SHEET No.	TOTAL SHEETS
03	Col,Gle, Sut,Yub	5,20,45 65,99	Var	7	25

REGISTERED CIVIL ENGINEER 2-6-12 DATE

3-19-12
PLANS APPROVAL DATE

REGISTERED PROFESSIONAL ENGINEER Jeffrey S. Jewett No. 49233 Exp. 9-30-12 CIVIL STATE OF CALIFORNIA

THE STATE OF CALIFORNIA OR ITS OFFICERS OR AGENTS SHALL NOT BE RESPONSIBLE FOR THE ACCURACY OR COMPLETENESS OF SCANNED COPIES OF THIS PLAN SHEET.

4" THERMOPLASTIC TRAFFIC STRIPE

LOCATION	DETAIL NUMBER		
	22	25	27B
	LF	LF	LF
1	3,566		3,566
2	530		530
3		192	192
4		162	162
5		139	139
6		139	139
7		686	686
8		118	118
9		118	118
10	310		
11	192		
12		150	150
13		150	150
14		142	142
15	824		824
16	582		582
17		132	132
18		132	132
19		186	186
20		186	186
21		489	489
22		489	489
23	1,360		1,360
SUBTOTAL	7,364	3,610	10,472
TOTAL	21,446		

4" THERMOPLASTIC TRAFFIC STRIPE (BROKEN 36-12)

LOCATION	DETAIL NUMBER
	12
	LF
3	192
4	162
5	139
6	139
7	686
8	118
9	118
12	150
13	150
14	142
17	132
18	132
19	186
20	186
21	489
22	489
TOTAL	3610

PAVEMENT MARKER

LOCATION NUMBER	RETROREFLECTIVE		
	TYPE D (EACH)	TYPE G (EACH)	TYPE H (EACH)
1	150		
2	24		
3		4	4
4		4	4
5		4	4
6		4	4
7		16	16
8		4	4
9		4	4
10	13	6	
11	9		
12		5	5
13		5	5
14		4	4
15	36		
16	26		
17		4	4
18		4	4
19		5	5
20		5	5
21		12	12
22		12	12
23	59		
SUBTOTAL	317	102	96
TOTAL	515		

6" THERMOPLASTIC TRAFFIC STRIPE

LOCATION	DETAIL NUMBER
	39
	LF
10	366
SUBTOTAL	366

8" THERMOPLASTIC TRAFFIC STRIPE

LOCATION	DETAIL NUMBER
	38
	LF
10	123
SUBTOTAL	123

THERMOPLASTIC PAVEMENT MARKING

LOCATION NUMBER	TYPE III ARROW	BIKE LANE ARROW	BIKE LANE SYMBOL	CROSSWALK (YELLOW)	LIMIT LINE
	SQFT	SQFT	SQFT	SQFT	SQFT
10	84	14	14		24
11				100	
SUBTOTAL	84	14	14	100	24
TOTAL	236				

NOTE: THE QUANTITY FOR CROSSWALK (YELLOW) INCLUDES BOTH LINES OF CROSSWALK.

PAVEMENT DELINEATION QUANTITIES

PDQ-1

STATE OF CALIFORNIA - DEPARTMENT OF TRANSPORTATION
Caltrans
TRAFFIC

FUNCTIONAL SUPERVISOR: SERGIO ACEVES
CALCULATED-DESIGNED BY: CHUCK COOK
CHECKED BY: JEFF JEWETT
REVISED BY
DATE REVISED

LAST REVISION 02-06-12
DATE PLOTTED => 20-MAR-2012
TIME PLOTTED => 10:27

Dist	COUNTY	ROUTE	POST MILES TOTAL PROJECT	SHEET No.	TOTAL SHEETS
03	Col,Gle, Sut,Yub	5,20,45 65,99	Var	8	25

REGISTERED CIVIL ENGINEER 2-6-12 DATE

3-19-12
PLANS APPROVAL DATE

REGISTERED PROFESSIONAL ENGINEER Jeffrey S. Jewett No. 49233 Exp. 9-30-12 CIVIL STATE OF CALIFORNIA

THE STATE OF CALIFORNIA OR ITS OFFICERS OR AGENTS SHALL NOT BE RESPONSIBLE FOR THE ACCURACY OR COMPLETENESS OF SCANNED COPIES OF THIS PLAN SHEET.

REMOVE YELLOW THERMOPLASTIC PAVEMENT MARKING (HAZARDOUS WASTE)

LOCATION NUMBER	CROSSWALK
	SQFT
11	50
TOTAL	50

REMOVE THERMOPLASTIC PAVEMENT MARKING

LOCATION NUMBER	TYPE III ARROW	BIKE LANE ARROW	BIKE LANE SYMBOL	LIMIT LINE
	SQFT	SQFT	SQFT	SQFT
10	84	14	14	24
SUBTOTAL	84	14	14	24
TOTAL	136			

REMOVE YELLOW THERMOPLASTIC TRAFFIC STRIPE (HAZARDOUS WASTE)

LOCATION NUMBER	LEFT EDGELINE	CENTERLINE
	LF	LF
1		3,566
2		530
5	139	
6	139	
7	686	
8	118	
9	118	
10		292
11		192
12	90	
13	90	
14	82	
15		640
16		482
17	72	
18	72	
19	126	
20	126	
21	429	
22	429	
SUBTOTAL	2,716	5,702
TOTAL	8,418	

REMOVE TRAFFIC STRIPE

LOCATION NUMBER	LANELINE	RIGHT EDGELINE	8" CHANNELIZING LINE	6" BIKE LANE
	LF	LF	LF	LF
1		3,566		
2		530		
5	36	139		
6	36	139		
7	168	686		
8	24	118		
9	24	118		
10			246	549
12	24	90		
13	24	90		
14	82	82		
15		640		
16		482		
17	24	72		
18	24	72		
19	36	126		
20	36	126		
21	108	429		
22	108	429		
SUBTOTAL	754	7,934	246	549
TOTAL	9,483			

PAVEMENT DELINEATION QUANTITIES

PDQ-2

STATE OF CALIFORNIA - DEPARTMENT OF TRANSPORTATION
Caltrans
TRAFFIC

FUNCTIONAL SUPERVISOR
CALCULATED-DESIGNED BY
CHECKED BY
CHUCK COOK
JEFF JEWETT
REVISED BY
DATE REVISED

LAST REVISION 02-06-12
DATE PLOTTED => 20-MAR-2012
TIME PLOTTED => 10:27

DIST	COUNTY	ROUTE	POST MILES TOTAL PROJECT	SHEET NO.	TOTAL SHEETS
03	Col,Gle, Sut,Yub	5,20,45, 65,99	Var	9	25

Randell D. Hiatt
REGISTERED CIVIL ENGINEER

June 6, 2008
PLANS APPROVAL DATE

REGISTERED PROFESSIONAL ENGINEER
Randell D. Hiatt
No. C50200
Exp. 6-30-09
CIVIL
STATE OF CALIFORNIA

The State of California or its officers or agents shall not be responsible for the accuracy or completeness of electronic copies of this plan sheet.

To accompany plans dated 3-19-12

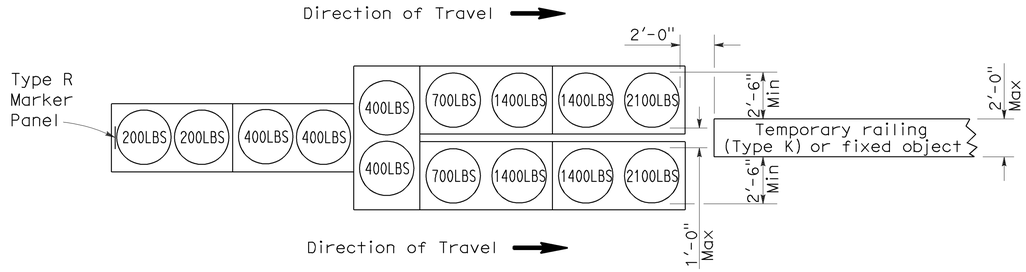

ARRAY 'TU14'

Approach speed 45 mph or more

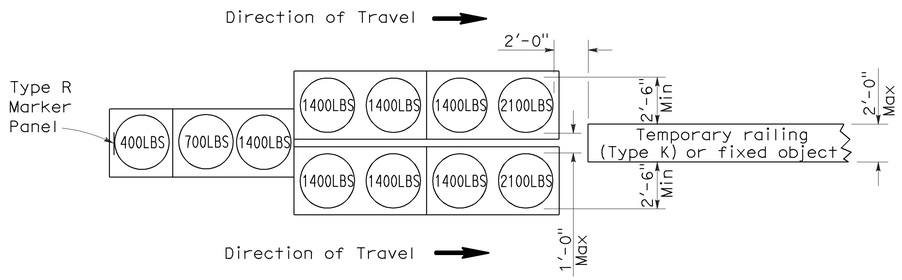

ARRAY 'TU11'

Approach speed less than 45 mph

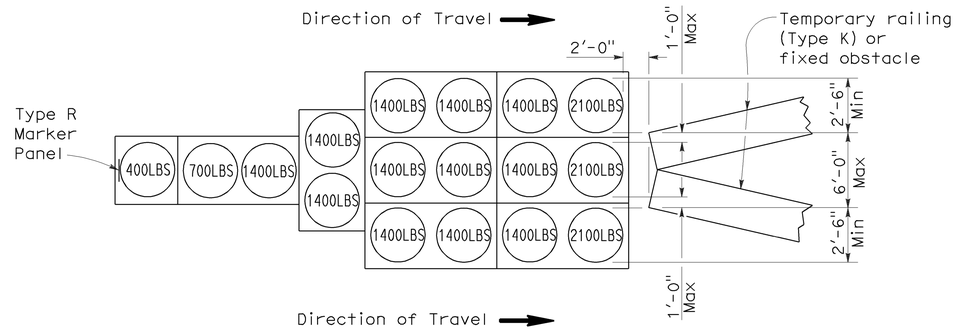

ARRAY 'TU17'

Approach speed less than 45 mph

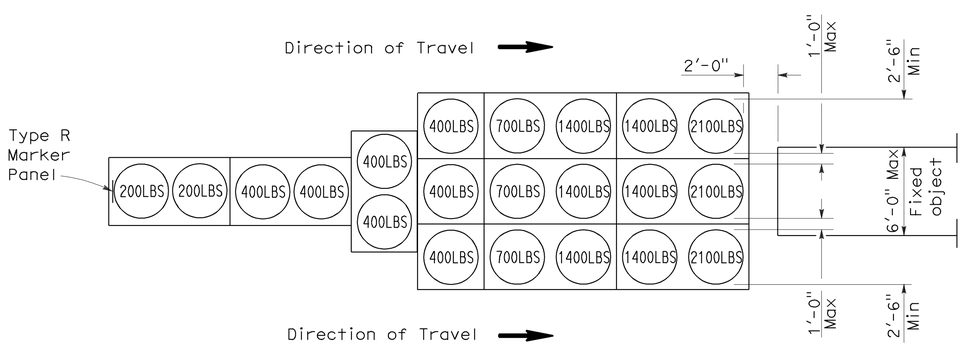

ARRAY 'TU21'

Approach speed 45 mph or more

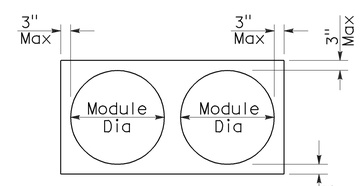

PLAN

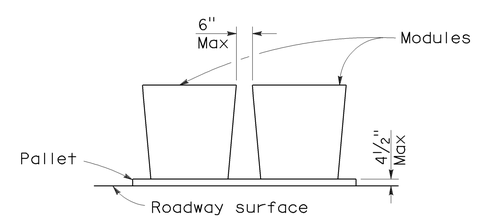

ELEVATION

CRASH CUSHION PALLET DETAIL

See Note 7

NOTES:

1. (XXX) Indicates sand filled module location and weight of sand in pounds for each module. Module spacing is based on the greater diameter of the module.
2. All sand weights are nominal.
3. Temporary crash cushion arrays shall not encroach on the traveled way.
4. Place the top of Type R marker panel 1" below the module lid.
5. Refer to Standard Plan A73B for marker details.
6. Approach speeds indicated conform to NCHRP 350 Report criteria.
7. Use of pallets is optional.

STATE OF CALIFORNIA
DEPARTMENT OF TRANSPORTATION

TEMPORARY CRASH CUSHION, SAND FILLED (UNIDIRECTIONAL)

NO SCALE

RSP T1A DATED JUNE 6, 2008 SUPERSEDES STANDARD PLAN T1A
DATED MAY 1, 2006 - PAGE 211 OF THE STANDARD PLANS BOOK DATED MAY 2006.

REVISED STANDARD PLAN RSP T1A

2006 REVISED STANDARD PLAN RSP T1A

DIST	COUNTY	ROUTE	POST MILES TOTAL PROJECT	SHEET NO.	TOTAL SHEETS
03	Col,Gle, Sut,Yub	5,20,45, 65,99	Var	10	25

Randell D. Hiatt
REGISTERED CIVIL ENGINEER

June 6, 2008
PLANS APPROVAL DATE

REGISTERED PROFESSIONAL ENGINEER
Randell D. Hiatt
No. C50200
Exp. 6-30-09
CIVIL
STATE OF CALIFORNIA

The State of California or its officers or agents shall not be responsible for the accuracy or completeness of electronic copies of this plan sheet.

To accompany plans dated 3-19-12

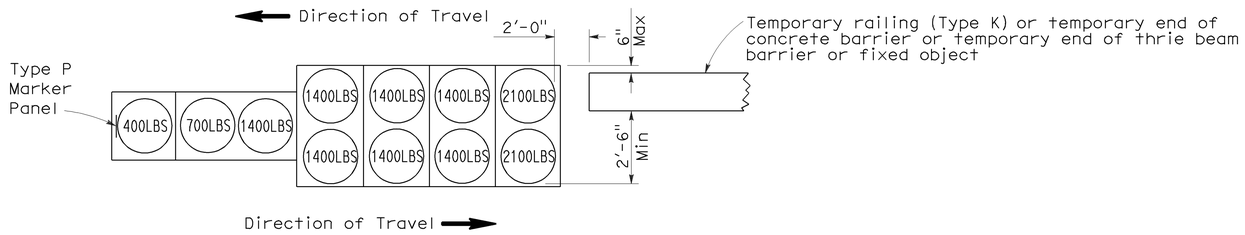

ARRAY 'TB11'

Approach speed less than 45 mph

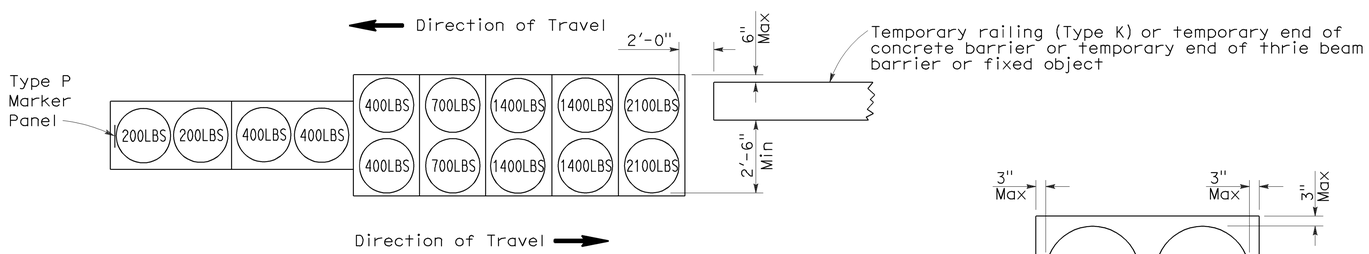

ARRAY 'TB14'

Approach speed 45 mph or more

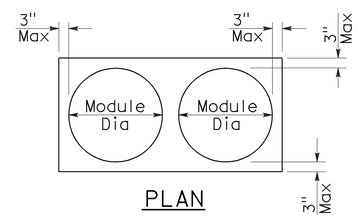

PLAN

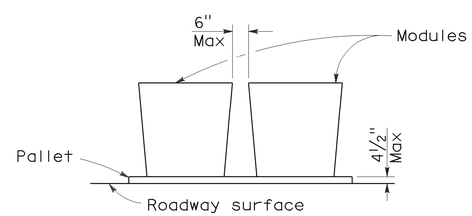

ELEVATION

CRASH CUSHION PALLET DETAIL

See Note 7

NOTES:

1. (XXX) Indicates sand filled module location and weight of sand in pounds for each module. Module spacing is based on the greater diameter of the module.
2. All sand weights are nominal.
3. Temporary crash cushion arrays shall not encroach on the traveled way.
4. Place the Type P marker panel so that the bottom of the panel rests upon the pallet.
5. Refer to Standard Plan A73B for marker details.
6. Approach speeds indicated conform to NCHRP 350 Report criteria.
7. Use of pallets is optional.

STATE OF CALIFORNIA
DEPARTMENT OF TRANSPORTATION

TEMPORARY CRASH CUSHION, SAND FILLED (BIDIRECTIONAL)

NO SCALE

RSP T1B DATED JUNE 6, 2008 SUPERSEDES STANDARD PLAN T1B
DATED MAY 1, 2006 - PAGE 212 OF THE STANDARD PLANS BOOK DATED MAY 2006.

REVISED STANDARD PLAN RSP T1B

2006 REVISED STANDARD PLAN RSP T1B

5-15-08

DIST	COUNTY	ROUTE	POST MILES TOTAL PROJECT	SHEET NO.	TOTAL SHEETS
03	Col,Gle, Sut,Yub	5,20,45, 65,99	Var	11	25

Randell D. Hiatt
REGISTERED CIVIL ENGINEER

June 6, 2008
PLANS APPROVAL DATE

REGISTERED PROFESSIONAL ENGINEER
Randell D. Hiatt
No. C50200
Exp. 6-30-09
CIVIL
STATE OF CALIFORNIA

The State of California or its officers or agents shall not be responsible for the accuracy or completeness of electronic copies of this plan sheet.

To accompany plans dated 3-19-12

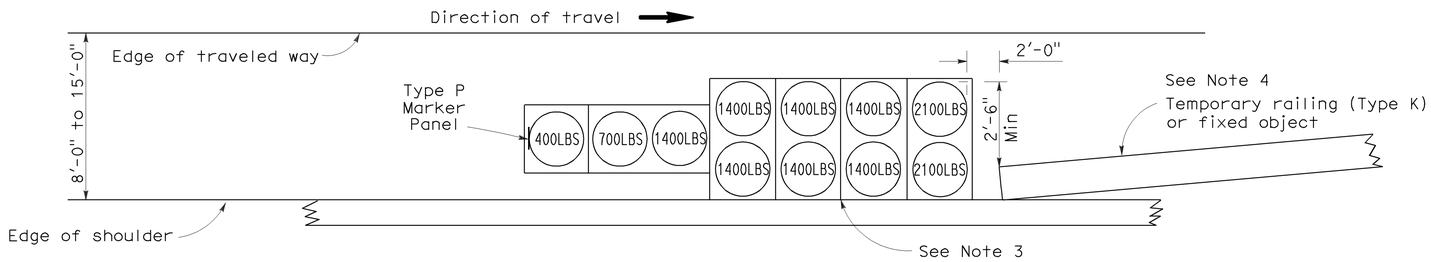

ARRAY 'TS11'

Approach speed less than 45 mph
See Note 9

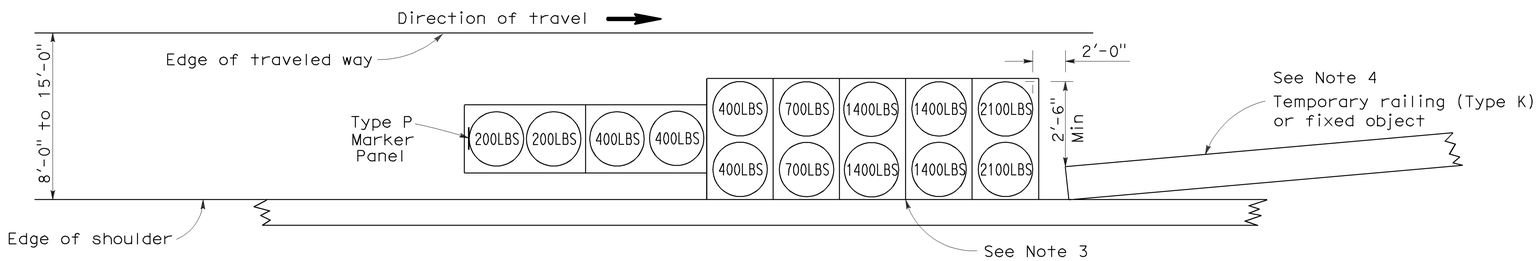

ARRAY 'TS14'

Approach speed 45 mph or more
See Note 9

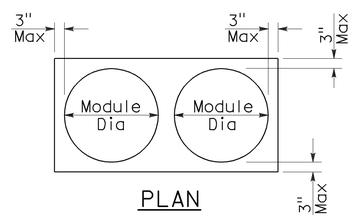

PLAN

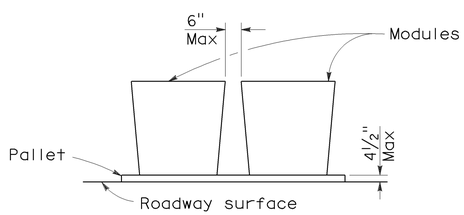

ELEVATION

CRASH CUSHION PALLET DETAIL

See Note 11

NOTES:

1. (XXX) Indicates sand filled module location and weight of sand in pounds for each module. Module spacing is based on the greater diameter of the module.
2. All sand weights are nominal.
3. The temporary crash cushion arrays shown on this plan shall be used only in locations where there will be traffic on one side of the temporary crash cushion array.
4. If the fixed object or approach end of the temporary railing is less than 15'-0" from the edge of traveled way, a temporary crash cushion is required in a construction or work zone.
5. Temporary crash cushion arrays shall not encroach on the traveled way.
6. Arrays for median shoulders shall conform to details shown on this plan for outside shoulders.
7. Place the Type P marker panel so that the bottom of the panel rests upon the pallet and faces traffic.
8. Refer to Standard Plan A73B for marker details.
9. For shoulder widths less than 8'-0", appropriate approved crash cushion protection, other than sand filled modules, shall be provided at fixed objects and at approach ends of temporary railing. The specific type of crash cushion shall be as shown on the project plans or as specified in the Special Provisions, or if not shown on the project plans or specified in the Special Provisions, shall be as approved by the Engineer.
10. Approach speeds indicated conform to NCHRP 350 Report criteria.
11. Use of pallets is optional.

STATE OF CALIFORNIA
DEPARTMENT OF TRANSPORTATION

TEMPORARY CRASH CUSHION, SAND FILLED (SHOULDER INSTALLATIONS)

NO SCALE

RSP T2 DATED JUNE 6, 2008 SUPERSEDES STANDARD PLAN T2
DATED MAY 1, 2006 - PAGE 213 OF THE STANDARD PLANS BOOK DATED MAY 2006.

REVISED STANDARD PLAN RSP T2

2006 REVISED STANDARD PLAN RSP T2

5-15-08

Dist	COUNTY	ROUTE	POST MILES TOTAL PROJECT	SHEET No.	TOTAL SHEETS
03	Col,Gle, Sut,Yub	5,20,45, 65,99	Var	12	25

Randell D. Hiatt
REGISTERED CIVIL ENGINEER

May 20, 2011
PLANS APPROVAL DATE

REGISTERED PROFESSIONAL ENGINEER
Randell D. Hiatt
No. C50200
Exp. 6-30-11
CIVIL
STATE OF CALIFORNIA

The State of California or its officers or agents shall not be responsible for the accuracy or completeness of electronic copies of this plan sheet.

To accompany plans dated 3-19-12

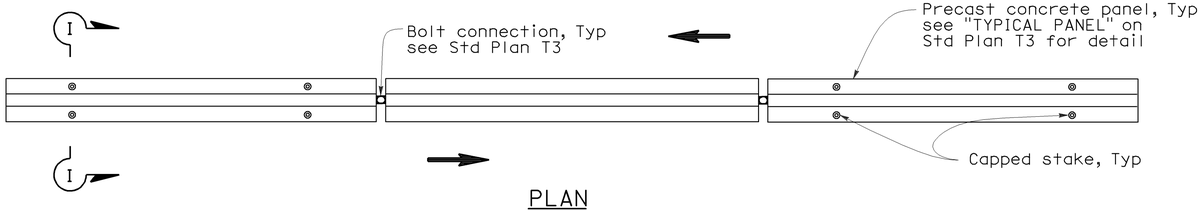

PLAN

RAILING STAKING CONFIGURATION FOR TWO-WAY TRAFFIC

See Note 1

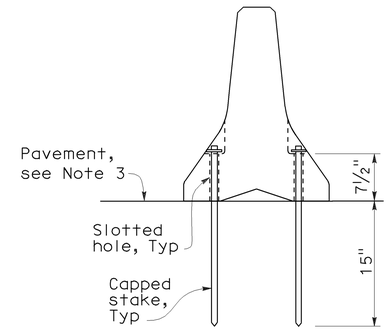

SECTION I-I

NOTES:

1. Where Type K Temporary Railing is placed as a temporary or long term barrier in two-way traffic on highways with less than 24" from the edge of traveled way, use four capped stakes per every other panel with end panels staked.
2. Where Type K Temporary Railing is placed 3" to 24" from the edge of an excavation on highways, use two capped stakes per panel along the traffic side.
3. Staked Type K Temporary Railing must be supported by at least 4" thick concrete, hot mix asphalt or existing asphalt concrete pavement.
4. The minimum yield strength for the washer must be 60,000 psi.
5. Direction of adjacent traffic indicated by ⟶.

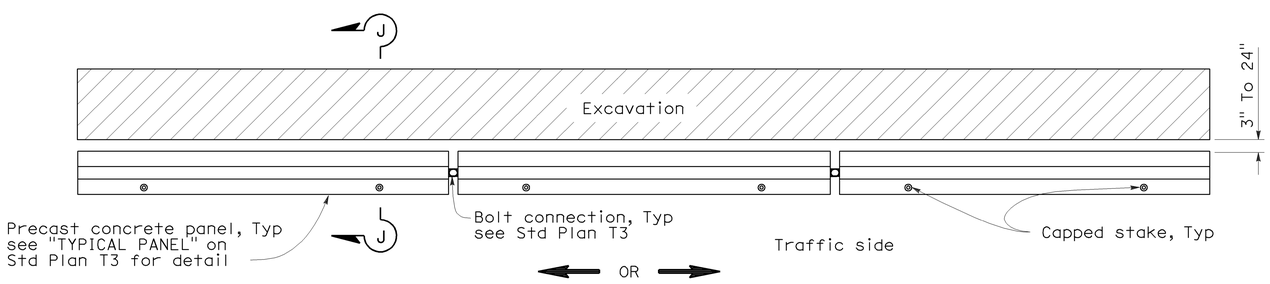

PLAN

RAILING STAKING CONFIGURATION ADJACENT TO AN EXCAVATION

See Note 2

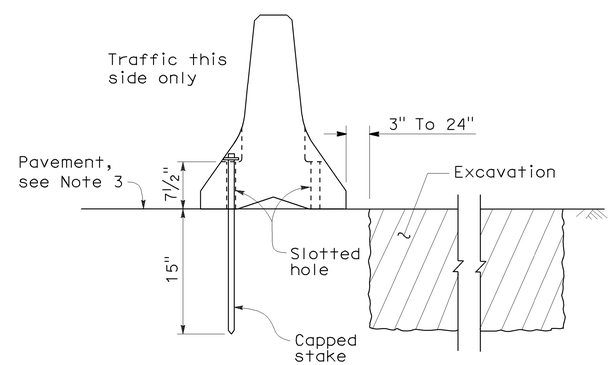

SECTION J-J

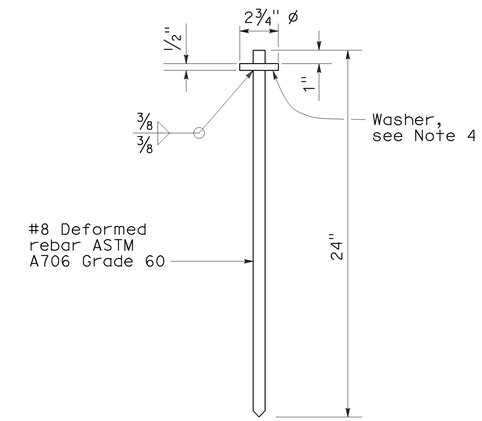

CAPPED STAKE DETAIL

STATE OF CALIFORNIA
DEPARTMENT OF TRANSPORTATION

TEMPORARY RAILING (TYPE K)

NO SCALE

NSP T3A DATED MAY 20, 2011 SUPPLEMENTS
THE STANDARD PLANS BOOK DATED MAY 2006.

NEW STANDARD PLAN NSP T3A

2006 NEW STANDARD PLAN NSP T3A

DIST	COUNTY	ROUTE	POST MILES TOTAL PROJECT	SHEET NO.	TOTAL SHEETS
03	Col,Gle, Sut,Yub	5,20,45, 65,99	Var	13	25

REGISTERED CIVIL ENGINEER

October 5, 2007
PLANS APPROVAL DATE

REGISTERED PROFESSIONAL ENGINEER Efthymios Delis No. C51434 Exp. 6-30-08 CIVIL STATE OF CALIFORNIA

The State of California or its officers or agents shall not be responsible for the accuracy or completeness of electronic copies of this plan sheet.

To accompany plans dated 3-19-12

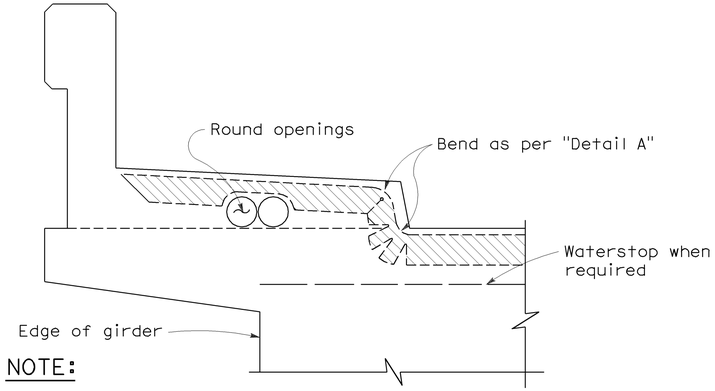

NOTE:

Type "B" seal shown. Type "A" seals to comform to the general path of seal shown, cuts for bending not required. Bend Type "A" seals 3" up into curb or barrier rail on only the low end of the seal.

CONCRETE BARRIER AND SIDEWALK

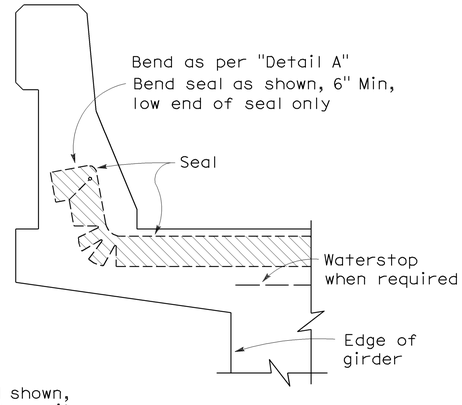

CONCRETE BARRIER

JOINT SEALS DETAILS

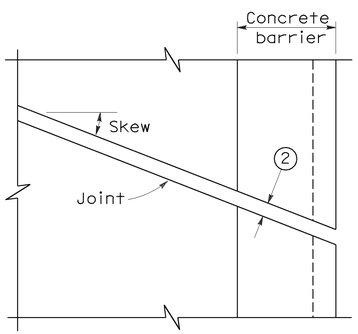

PLAN OF JOINT (SKEW ≤ 20°)

Min ℄ radius to be 4 times uncompressed width of seal or as recommended by the manufacturer, whichever is greater

In lieu of saw cutting, this area may be blocked out and reconstructed to match saw cutting on both sides.

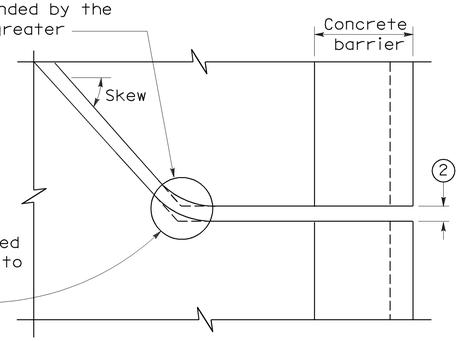

PLAN OF JOINT (SKEW > 20°)

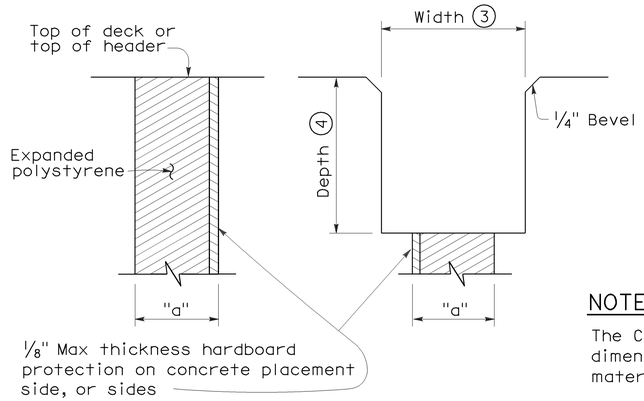

FORMING DETAIL SAWCUT DETAIL

NOTE:

The Contractor shall verify all controlling field dimensions before ordering or fabricatiing any material.

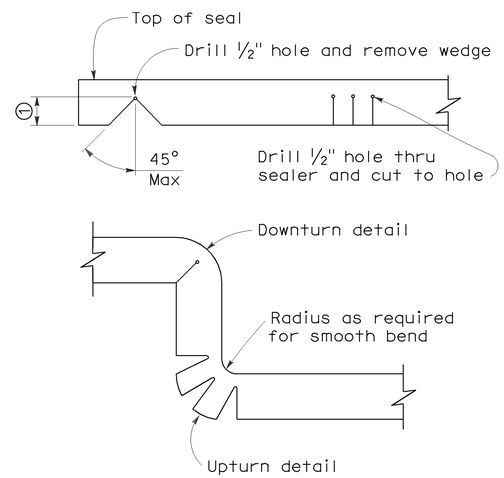

DETAIL A

NOTES:

1. Make smooth cuts from the bottom of seal to 1½" clear of top leaving at least one complete cell between the top of the cut and top of the seal. When necessary cut back of seal to clear conduit and round openings.
2. Opening in barrier to match width of sawn deck joint.
3. Sawcut groove widths shall be as ordered by the Engineer.
4. Depth of sawcut: Type A - Depth to be 2" minimum.
   Type B - Depth to be equal to or greater than the depth of seal measured along the contact surface, when compressed to minimum width position (W_2) plus dimensions shown.
5. MR (movement rating) as shown on other plan sheets.
6. Other depths must be approved by the Engineer.

DIMENSIONS "a" OF JOINT REQUIRED

Movement Rating (MR) 5	Bridge Type	"a" Dimension Deck Concrete Placed		
		Winter	Fall-Spring	Summer
2"	All except CIP/PS	1½"	1¼"	¾"
	CIP/PS	1¼"	1"	½"
1½"	All except CIP/PS	1¼"	1"	½"
	CIP/PS	1"	¾"	½"
1"	All except CIP/PS	1"	¾"	½"
	CIP/PS	¾"	½"	½"
½"	All except CIP/PS	¾"	¾"	½"
	CIP/PS	½"	½"	½"

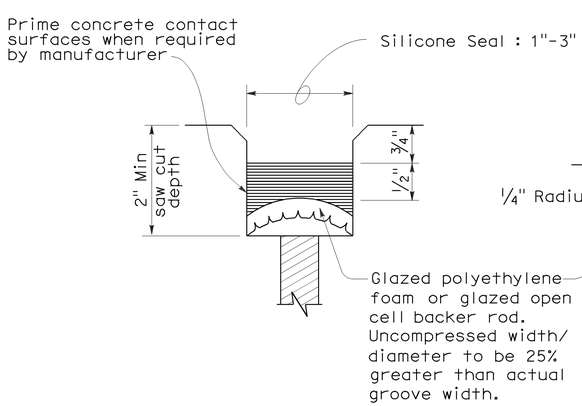

TYPE A SEAL

Movement rating : Silicone = 1" Max

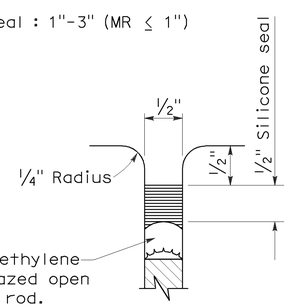

TYPE AL SEAL

Longitudinal joints only

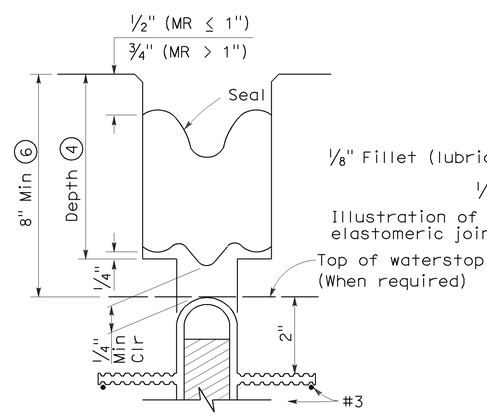

TYPE B JOINT SEAL
IN MINIMUM WIDTH POSITION (W_2)

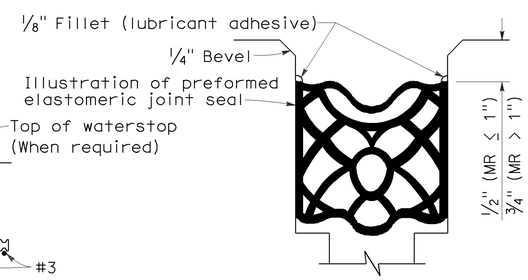

TYPE B SEAL

Movement Rating ≤ 2"

STATE OF CALIFORNIA
DEPARTMENT OF TRANSPORTATION

JOINT SEALS (MAXIMUM MOVEMENT RATING = 2")

NO SCALE

RSP B6-21 DATED OCTOBER 5, 2007 SUPERSEDES STANDARD PLAN B6-21 DATED MAY 1, 2006 - PAGE 258 OF THE STANDARD PLANS BOOK DATED MAY 2006.

REVISED STANDARD PLAN RSP B6-21

2006 REVISED STANDARD PLAN RSP B6-21

5-8-07

DIST	COUNTY	ROUTE	POST MILES TOTAL PROJECT	SHEET No.	TOTAL SHEETS
03	Yub,Sut,Gle Col	20,65,99 45,5	Var	14	25

Peter B. Kang 11-17-11
REGISTERED CIVIL ENGINEER DATE

3-19-12
PLANS APPROVAL DATE

REGISTERED PROFESSIONAL ENGINEER PETER B. KANG No. C 70336 Exp. 9-30-12 CIVIL STATE OF CALIFORNIA

The State of California or its officers or agents shall not be responsible for the accuracy or completeness of electronic copies of this plan sheet.

INDEX TO PLANS

SHEET NO.	TITLE
1	GENERAL PLAN NO. 1
2	GENERAL PLAN NO. 2
3	GENERAL PLAN NO. 3
4	GENERAL PLAN NO. 4
5	GENERAL PLAN NO. 5
6	GENERAL PLAN NO. 6
7	GENERAL PLAN NO. 7
8	GENERAL PLAN NO. 8
9	GENERAL PLAN NO. 9
10	GENERAL PLAN NO. 10
11	JOINT SEAL DETAILS NO. 1
12	JOINT SEAL DETAILS NO. 2

NOTES: (APPLY TO ALL SHEETS)

—·—·— Indicates existing.

THE CONTRACTOR SHALL VERIFY ALL CONTROLLING FIELD DIMENSIONS BEFORE ORDERING OR FABRICATING ANY MATERIAL.

STANDARD PLANS DATED MAY 2006

SHEET NO.	TITLE
A10A	ACRONYMS AND ABBREVIATIONS (SHEET 1 OF 2)
A10B	ACRONYMS AND ABBREVIATIONS (SHEET 2 OF 2)

NOTES: (APPLY TO THIS SHEET ONLY)

Indicates limits of clean and treat bridge deck with high molecular weight methacrylate as directed by the Engineer.

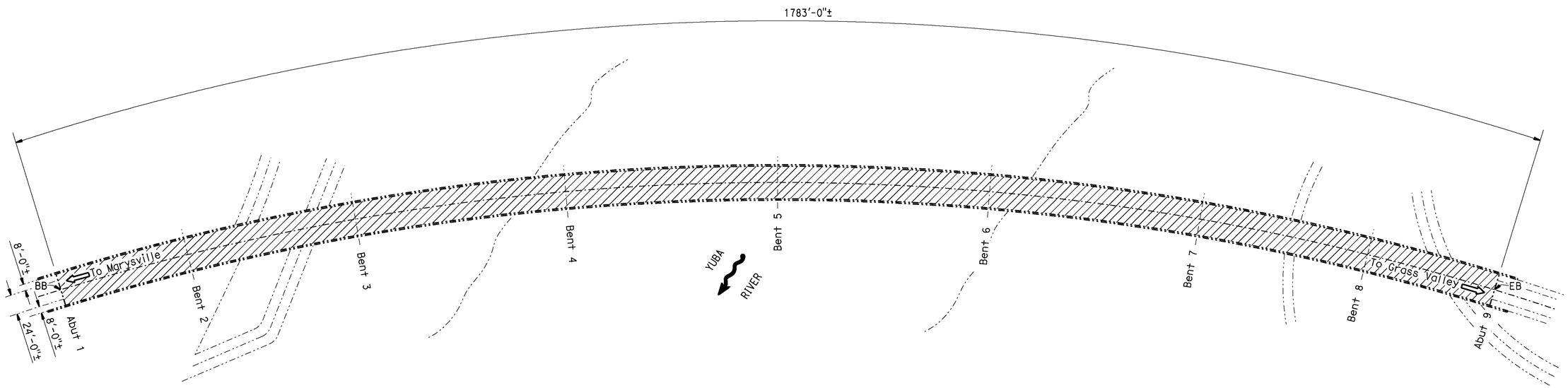

YUBA RIVER

Br No. 16-0011, ROUTE 20, Yub, PM R017.73
1" = 60'

QUANTITIES

YUBA RIVER BRIDGE #16-0011

CLEAN BRIDGE DECK	71,320	SQFT
TREAT BRIDGE DECK	71,320	SQFT
FURNISH BRIDGE DECK TREATMENT MATERIAL	790	GAL

Matthew Lee 11-17-11
DESIGN ENGINEER

	BY	CHECKED
DESIGN	Peter Kang	D. Acoda
DETAILS	David Kish	D. Acoda
QUANTITIES	Peter Kang	D. Acoda

LOAD FACTOR DESIGN — LIVE LOADING: HS20-44 AND ALTERNATIVE AND PERMIT DESIGN LOAD

	BY	CHECKED
LAYOUT	Peter Kang	D. Acoda
SPECIFICATIONS	Karla Meier	PLANS AND SPECS COMPARED Karla Meier

STATE OF CALIFORNIA
DEPARTMENT OF TRANSPORTATION

DIVISION OF MAINTENANCE
STRUCTURE MAINTENANCE DESIGN

BRIDGE NO. VARIOUS
POST MILE VARIES

ROUTE 20, 65, 99, 45 & 5 BRIDGES
GENERAL PLAN NO. 1

STRUCTURES MAINTENANCE GENERAL PLAN SHEET (ENGLISH) (REV. 09-01-10)

ORIGINAL SCALE IN INCHES FOR REDUCED PLANS 0 1 2 3

UNIT: 3488
PROJECT NUMBER & PHASE: 0300020063-1 CONTRACT NO.: 03-4M2101

DISREGARD PRINTS BEARING EARLIER REVISION DATES

REVISION DATES 6-8-11 7-11-11 8-15-11

SHEET 1 OF 12

FILE => 03-4m2101_01gp.dgn

USERNAME => s109618 DATE PLOTTED => 16-NOV-2011 TIME PLOTTED => 12:52

DIST	COUNTY	ROUTE	POST MILES TOTAL PROJECT	SHEET No.	TOTAL SHEETS
03	Yub,Sut,Gle Col	20,65,99 45,5	Var	15	25

REGISTERED CIVIL ENGINEER 11-17-11 DATE

3-19-12
PLANS APPROVAL DATE

REGISTERED PROFESSIONAL ENGINEER PETER B. KANG No. C 70336 Exp. 9-30-12 CIVIL STATE OF CALIFORNIA

The State of California or its officers or agents shall not be responsible for the accuracy or completeness of electronic copies of this plan sheet.

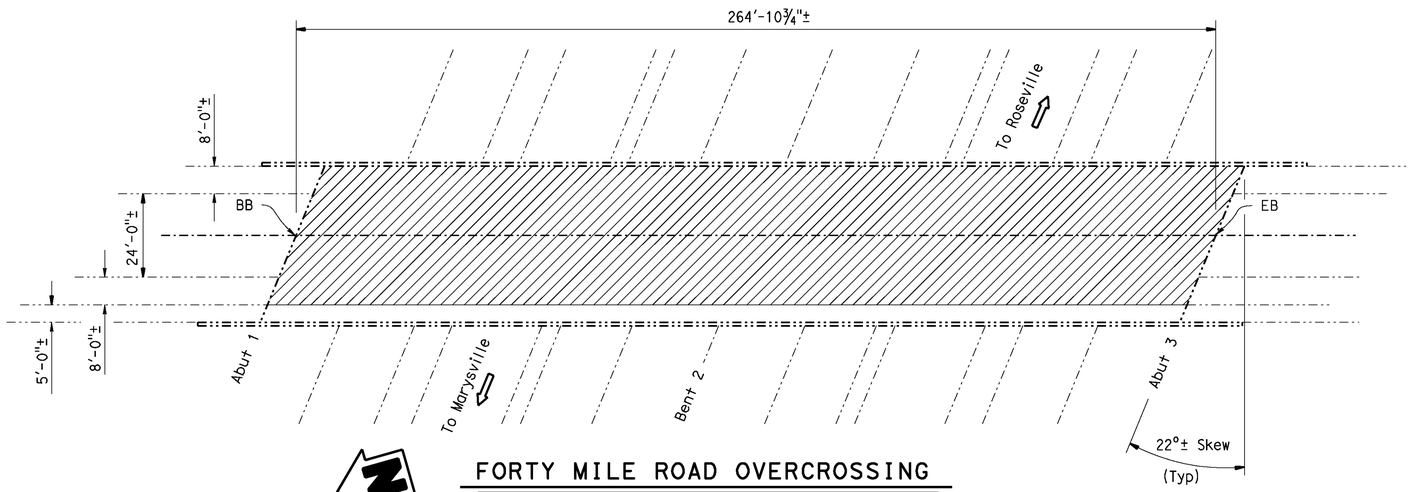

FORTY MILE ROAD OVERCROSSING

Br No. 16-0044, ROUTE 65, Yub, PM R006.88
1" = 20'

FORTY MILE RD OC #16-0044

QUANTITIES

CLEAN BRIDGE DECK	10,600	SQFT
TREAT BRIDGE DECK	10,600	SQFT
FURNISH BRIDGE DECK TREATMENT MATERIAL	120	GAL

NOTES: (APPLY TO THIS SHEET ONLY)

Indicates limits of clean and treat bridge deck with high molecular weight methacrylate as directed by the Engineer.

Indicates limits of remove existing ⅜"± chip seal overlay.

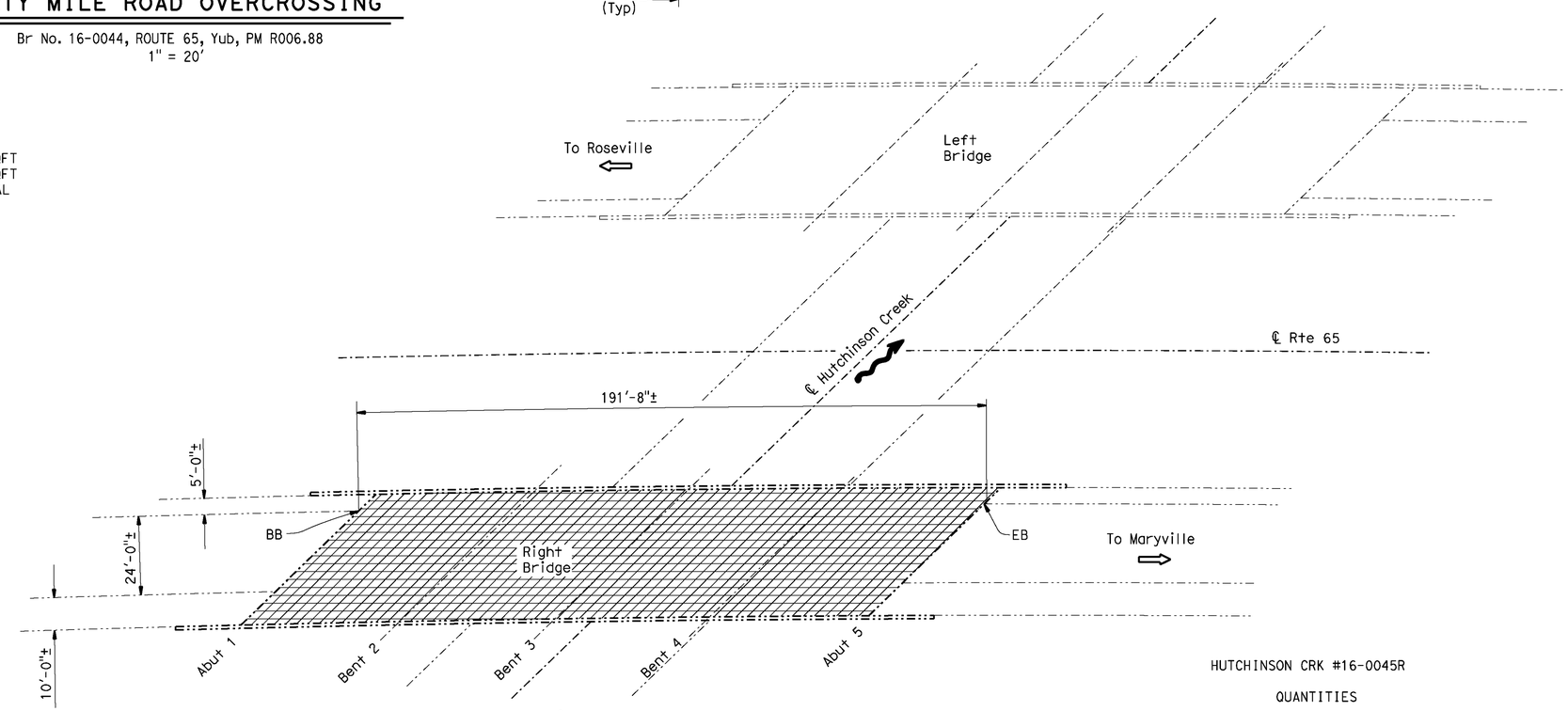

HUTCHINSON CREEK

Br No. 16-0045R, ROUTE 65, Yub, PM R007.42
1" = 20'

HUTCHINSON CRK #16-0045R

QUANTITIES

CLEAN BRIDGE DECK	7,475	SQFT
REMOVE CHIP SEAL	7,475	SQFT
TREAT BRIDGE DECK	7,475	SQFT
FURNISH BRIDGE DECK TREATMENT MATERIAL	85	GAL

DESIGN ENGINEER 11-17-11

	BY	CHECKED			
DESIGN	Peter Kang	D. Acoda	LOAD FACTOR DESIGN	LIVE LOADING: HS20-44 AND ALTERNATIVE AND PERMIT DESIGN LOAD	
DETAILS	David Kish	D. Acoda	LAYOUT	Peter Kang	D. Acoda
QUANTITIES	Peter Kang	D. Acoda	SPECIFICATIONS	Karla Meier	Karla Meier

STATE OF CALIFORNIA
DEPARTMENT OF TRANSPORTATION

DIVISION OF MAINTENANCE
STRUCTURE MAINTENANCE DESIGN

BRIDGE NO. VARIOUS
POST MILE VARIES

ROUTE 20, 65, 99, 45 & 5 BRIDGES
GENERAL PLAN NO. 2

STRUCTURES MAINTENANCE GENERAL PLAN SHEET (ENGLISH) (REV. 09-01-10)

ORIGINAL SCALE IN INCHES FOR REDUCED PLANS 0 1 2 3

UNIT: 3488
PROJECT NUMBER & PHASE: 0300020063-1 CONTRACT NO.: 03-4M2101

DISREGARD PRINTS BEARING EARLIER REVISION DATES → REVISION DATES 5-25-11 7-11-11 8-15-11

SHEET 2 OF 12

FILE => 03-4m2101_02gp.dgn

USERNAME => s109618 DATE PLOTTED => 16-NOV-2011 TIME PLOTTED => 12:52

DIST	COUNTY	ROUTE	POST MILES TOTAL PROJECT	SHEET No.	TOTAL SHEETS
03	Yub,Sut,Gle Col	20,65,99 45,5	Var	16	25

REGISTERED CIVIL ENGINEER 11-17-11 DATE

3-19-12
PLANS APPROVAL DATE

REGISTERED PROFESSIONAL ENGINEER PETER B. KANG No. C 70336 Exp. 9-30-12 CIVIL STATE OF CALIFORNIA

The State of California or its officers or agents shall not be responsible for the accuracy or completeness of electronic copies of this plan sheet.

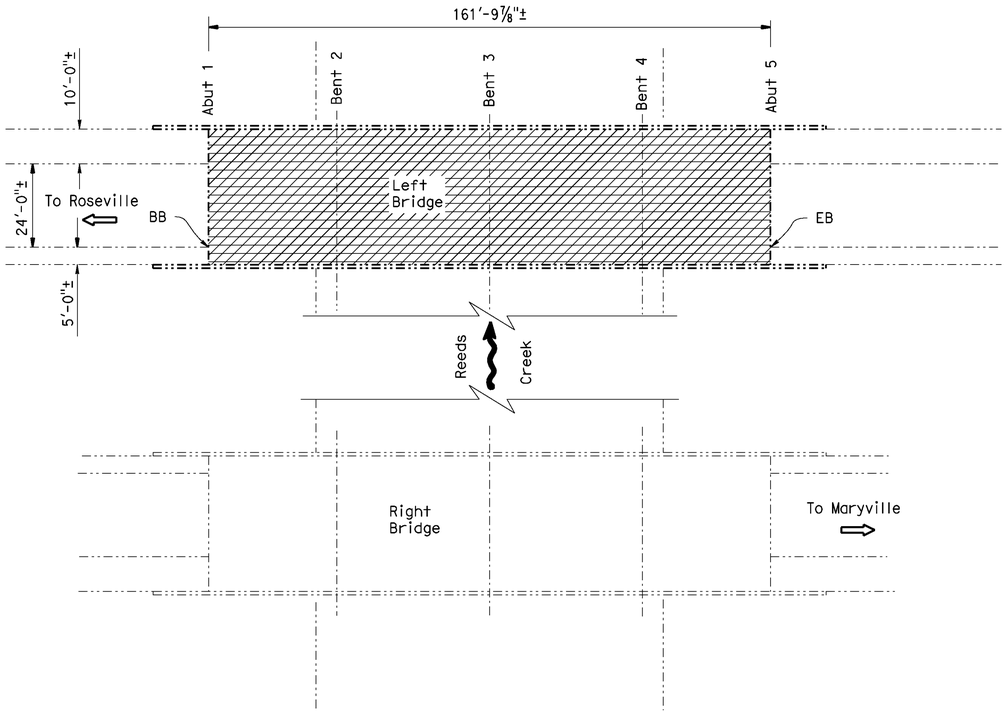

NOTES: (APPLY TO THIS SHEET ONLY)

Indicates limits of clean and treat bridge deck with high molecular weight methacrylate as directed by the Engineer.

Indicates limits of remove existing ⅜"± chip seal overlay.

Indicates limits of existing joint seal removal and placement of new joint seal. Prior to placement of new joint seal, repair joint spalls as directed by the Engineer.

REEDS CREEK

Br No. 16-0046L, ROUTE 65, Yub, PM R007.61
1" = 20'

REEDS CREEK BR #16-0046L

QUANTITIES

CLEAN BRIDGE DECK	6,310	SQFT
REMOVE CHIP SEAL	6,310	SQFT
TREAT BRIDGE DECK	6,310	SQFT
FURNISH BRIDGE DECK TREATMENT MATERIAL	70	GAL

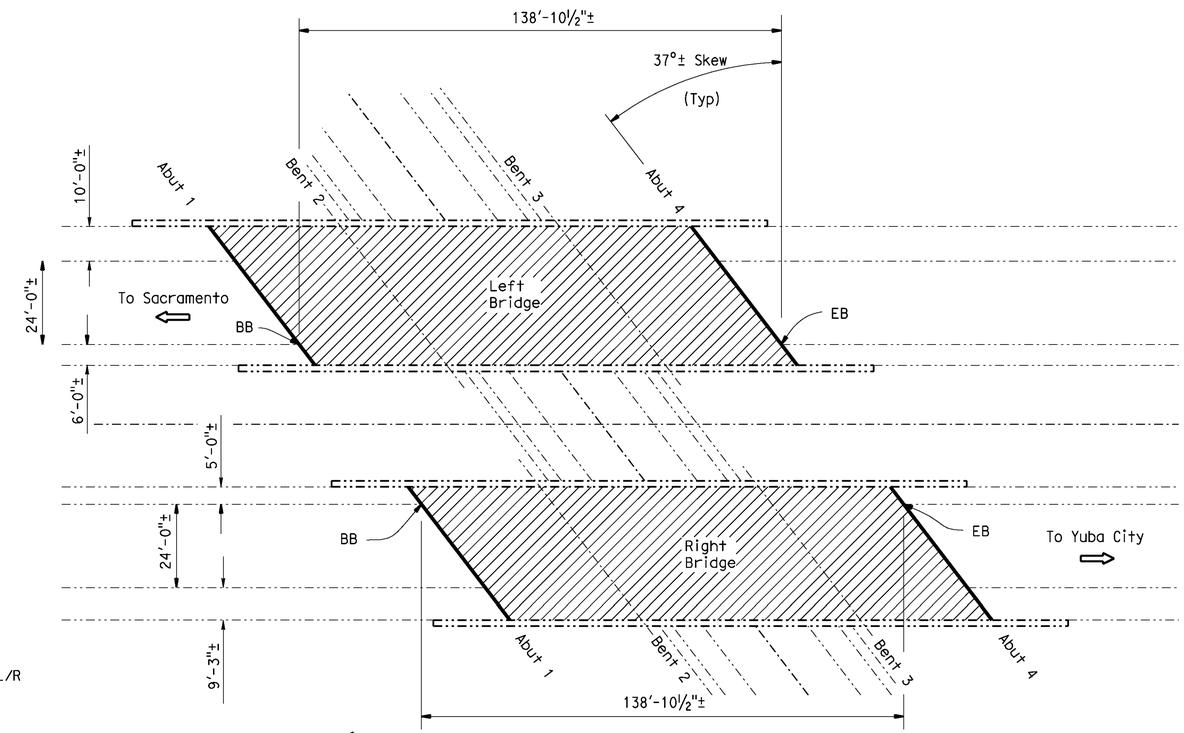

HOWSLEY RD UC #18-0045L/R

QUANTITIES

CLEAN BRIDGE DECK	10,870	SQFT
CLEAN EXPANSION JOINT	200	LF
JOINT SEAL (MR 1/2")	200	LF
TREAT BRIDGE DECK	10,870	SQFT
FURNISH BRIDGE DECK TREATMENT MATERIAL	120	GAL

HOWSLEY ROAD UNDERCROSSING

Br No. 18-0045L/R, ROUTE 99, Sut, PM 5.8
1" = 20'

DESIGN ENGINEER 11-17-11	DESIGN	BY Peter Kang	CHECKED D. Acoda	LOAD FACTOR DESIGN	LIVE LOADING: HS20-44 AND ALTERNATIVE AND PERMIT DESIGN LOAD
	DETAILS	BY David Kish	CHECKED D. Acoda	LAYOUT	BY Peter Kang / CHECKED D. Acoda
	QUANTITIES	BY Peter Kang	CHECKED D. Acoda	SPECIFICATIONS	BY Karla Meier / PLANS AND SPECS COMPARED Karla Meier

STATE OF CALIFORNIA
DEPARTMENT OF TRANSPORTATION

DIVISION OF MAINTENANCE
STRUCTURE MAINTENANCE DESIGN

BRIDGE NO. VARIOUS
POST MILE VARIES

ROUTE 20, 65, 99, 45 & 5 BRIDGES
GENERAL PLAN NO. 3

STRUCTURES MAINTENANCE GENERAL PLAN SHEET (ENGLISH) (REV. 09-01-10)

ORIGINAL SCALE IN INCHES FOR REDUCED PLANS 0 1 2 3

UNIT: 3488
PROJECT NUMBER & PHASE: 0300020063-1
CONTRACT NO.: 03-4M2101

DISREGARD PRINTS BEARING EARLIER REVISION DATES

REVISION DATES 6-29-11 7-11-11 8-15-11

SHEET 3 OF 12

FILE => 03-4m2101_03gp.dgn

USERNAME => s109618 DATE PLOTTED => 16-NOV-2011 TIME PLOTTED => 12:52

DIST	COUNTY	ROUTE	POST MILES TOTAL PROJECT	SHEET No.	TOTAL SHEETS
03	Yub,Sut,Gle Col	20,65,99 45,5	Var	17	25

REGISTERED CIVIL ENGINEER 11-17-11 DATE

3-19-12
PLANS APPROVAL DATE

REGISTERED PROFESSIONAL ENGINEER PETER B. KANG No. C 70336 Exp. 9-30-12 CIVIL STATE OF CALIFORNIA

The State of California or its officers or agents shall not be responsible for the accuracy or completeness of electronic copies of this plan sheet.

NOTES: (APPLY TO THIS SHEET ONLY)

Indicates limits of clean and treat bridge deck with high molecular weight methacrylate as directed by the Engineer.

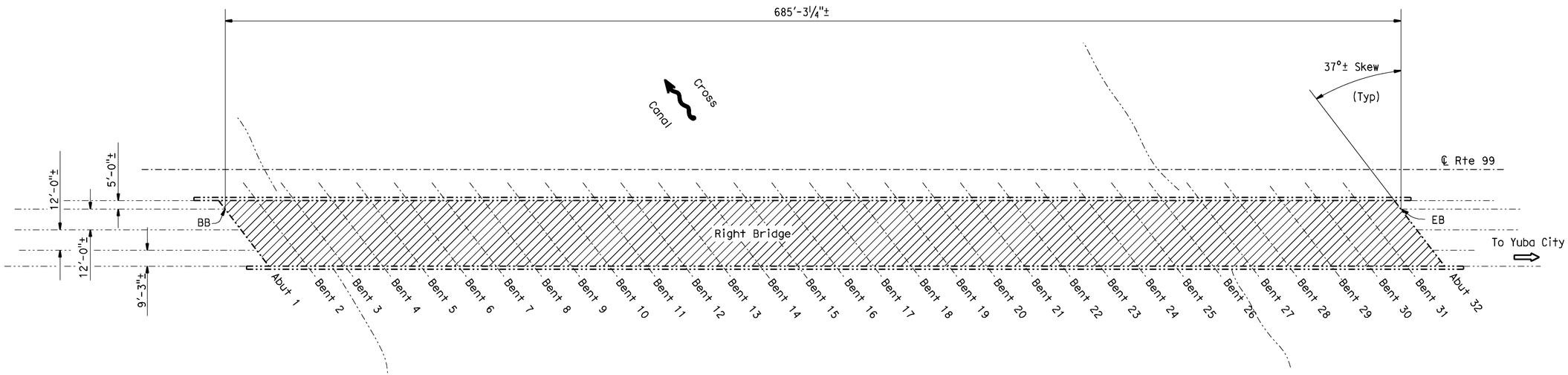

CROSS CANAL

Br No. 18-0017R, ROUTE 99, Sut, PM 5.92
1" = 30'

CROSS CANAL BRIDGE #18-0017R

QUANTITIES

CLEAN BRIDGE DECK	26,210	SQFT
TREAT BRIDGE DECK	26,210	SQFT
FURNISH BRIDGE DECK TREATMENT MATERIAL	290	GAL

11-17-11 DESIGN ENGINEER	DESIGN	BY Peter Kang	CHECKED D. Acoda	LOAD FACTOR DESIGN	LIVE LOADING: HS20-44 AND ALTERNATIVE AND PERMIT DESIGN LOAD		
	DETAILS	BY David Kish	CHECKED D. Acoda	LAYOUT	BY Peter Kang	CHECKED D. Acoda	
	QUANTITIES	BY Peter Kang	CHECKED D. Acoda	SPECIFICATIONS	BY Karla Meier	PLANS AND SPECS COMPARED Karla Meier	

STATE OF CALIFORNIA
DEPARTMENT OF TRANSPORTATION

DIVISION OF MAINTENANCE
STRUCTURE MAINTENANCE DESIGN

BRIDGE NO. VARIOUS
POST MILE VARIES

ROUTE 20, 65, 99, 45 & 5 BRIDGES
GENERAL PLAN NO. 4

STRUCTURES MAINTENANCE GENERAL PLAN SHEET (ENGLISH) (REV. 09-01-10)

ORIGINAL SCALE IN INCHES FOR REDUCED PLANS 0 1 2 3

UNIT: 3488
PROJECT NUMBER & PHASE: 0300020063-1 CONTRACT NO.: 03-4M2101

DISREGARD PRINTS BEARING EARLIER REVISION DATES

REVISION DATES 6-29-11 7-11-11 8-15-11

SHEET 4 OF 12

FILE => 03-4m2101_04gp.dgn

USERNAME => s109618 DATE PLOTTED => 16-NOV-2011 TIME PLOTTED => 12:52

DIST	COUNTY	ROUTE	POST MILES TOTAL PROJECT	SHEET No.	TOTAL SHEETS
03	Yub,Sut,Gle Col	20,65,99 45,5	Var	18	25

REGISTERED CIVIL ENGINEER — DATE 11-17-11

3-19-12
PLANS APPROVAL DATE

The State of California or its officers or agents shall not be responsible for the accuracy or completeness of electronic copies of this plan sheet.

REGISTERED PROFESSIONAL ENGINEER — PETER B. KANG — No. C 70336 — Exp. 9-30-12 — CIVIL — STATE OF CALIFORNIA

NOTES: (APPLY TO THIS SHEET ONLY)

Indicates limits of clean and treat bridge deck with high molecular weight methacrylate as directed by the Engineer.

Indicates limits of existing joint seal removal and placement of new joint seal. Prior to placement of new joint seal, repair joint spalls as directed by the Engineer.

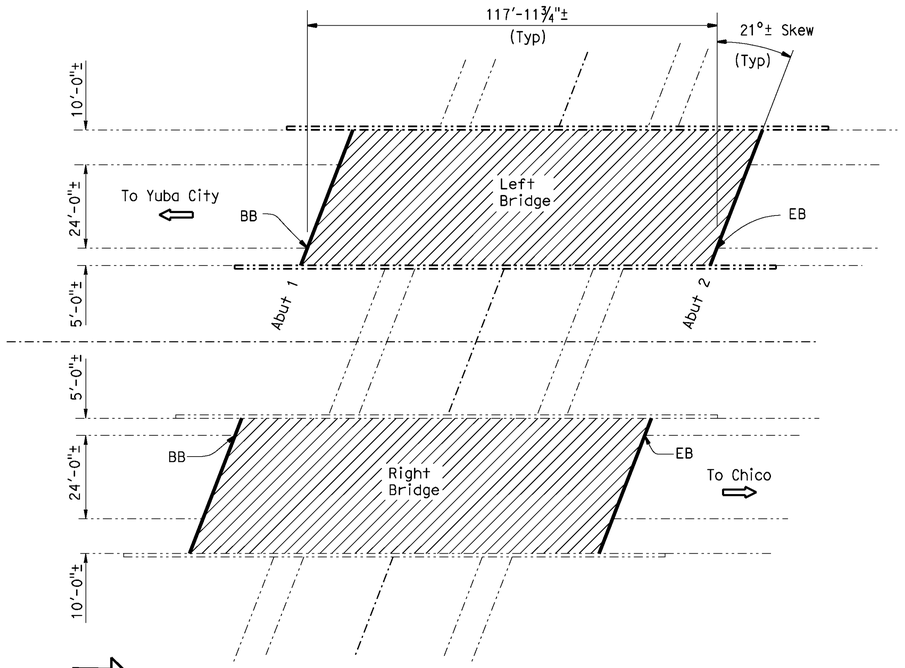

BUTTE HOUSE ROAD UNDERCROSSING

Br No. 18-0033L/R, ROUTE 99, Sut, PM R030.88
1" = 20'

BUTTE HOUSE RD UC #18-0033L/R

QUANTITIES

CLEAN BRIDGE DECK	9,200	SQFT
CLEAN EXPANSION JOINT	170	LF
JOINT SEAL (MR 1/2")	170	LF
TREAT BRIDGE DECK	9,200	SQFT
FURNISH BRIDGE DECK TREATMENT MATERIAL	100	GAL

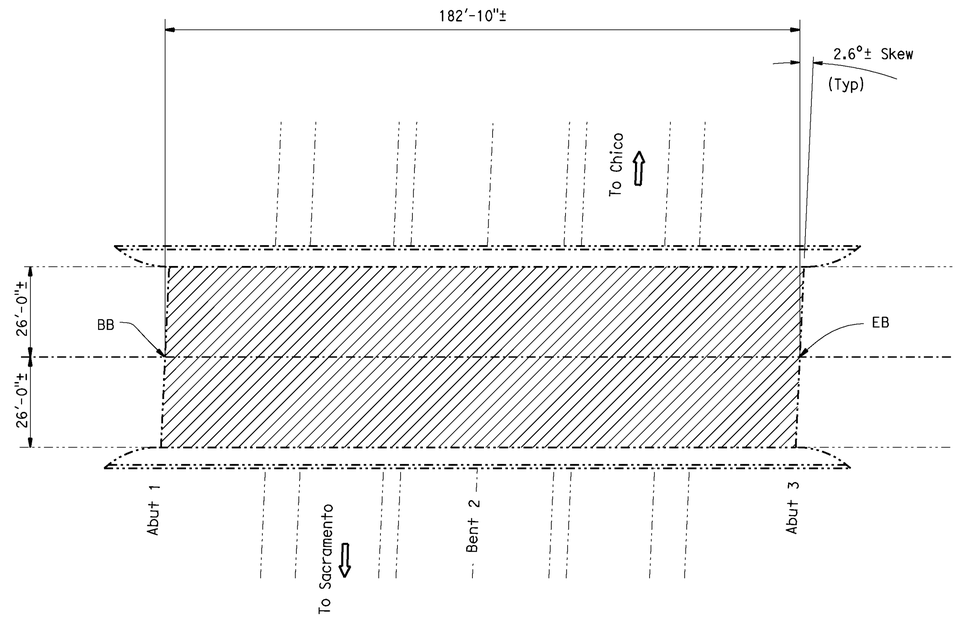

QUEENS AVENUE OVERCROSSING

Br No. 18-0034, ROUTE 99, Sut, PM R031.31
1" = 20'

QUEENS AVE OC #18-0034

QUANTITIES

CLEAN BRIDGE DECK	9,510	SQFT
TREAT BRIDGE DECK	9,510	SQFT
FURNISH BRIDGE DECK TREATMENT MATERIAL	105	GAL

DESIGN ENGINEER 11-17-11

	BY	CHECKED			
DESIGN	Peter Kang	D. Acoda	LOAD FACTOR DESIGN	LIVE LOADING: HS20-44 AND ALTERNATIVE AND PERMIT DESIGN LOAD	
DETAILS	David Kish	D. Acoda	LAYOUT	Peter Kang	D. Acoda
QUANTITIES	Peter Kang	D. Acoda	SPECIFICATIONS	Karla Meier	PLANS AND SPECS COMPARED Karla Meier

STATE OF CALIFORNIA
DEPARTMENT OF TRANSPORTATION

DIVISION OF MAINTENANCE
STRUCTURE MAINTENANCE DESIGN

BRIDGE NO. VARIOUS
POST MILE VARIES

ROUTE 20, 65, 99, 45 & 5 BRIDGES
GENERAL PLAN NO. 5

STRUCTURES MAINTENANCE GENERAL PLAN SHEET (ENGLISH) (REV. 09-01-10)

ORIGINAL SCALE IN INCHES FOR REDUCED PLANS 0 1 2 3

UNIT: 3488
PROJECT NUMBER & PHASE: 0300020063-1
CONTRACT NO.: 03-4M2101

DISREGARD PRINTS BEARING EARLIER REVISION DATES

REVISION DATES: 6-29-11 7-11-11 8-15-11

SHEET 5 OF 12

FILE => 03-4m2101_05gp.dgn

USERNAME => s109618 DATE PLOTTED => 16-NOV-2011 TIME PLOTTED => 12:52

DIST	COUNTY	ROUTE	POST MILES TOTAL PROJECT	SHEET No.	TOTAL SHEETS
03	Yub,Sut,Gle Col	20,65,99 45,5	Var	19	25

REGISTERED CIVIL ENGINEER — DATE 11-17-11

3-19-12
PLANS APPROVAL DATE

The State of California or its officers or agents shall not be responsible for the accuracy or completeness of electronic copies of this plan sheet.

REGISTERED PROFESSIONAL ENGINEER — PETER B. KANG — No. C 70336 — Exp. 9-30-12 — CIVIL — STATE OF CALIFORNIA

NOTES: (APPLY TO THIS SHEET ONLY)

Indicates limits of prepare bridge deck surface, furnish and place new 3/4" minimum depth polyester concrete overlay. Prior to placing new polyester concrete overlay remove unsound concrete and patch with rapid setting concrete as shown on the "DECK REPAIR DETAIL - OVERLAY".

Indicates limits of remove existing 3/4"± chip seal.

Indicates limits of existing joint seal removal and placement of new joint seal. Prior to placement of new joint seal, repair joint spalls as directed by the Engineer.

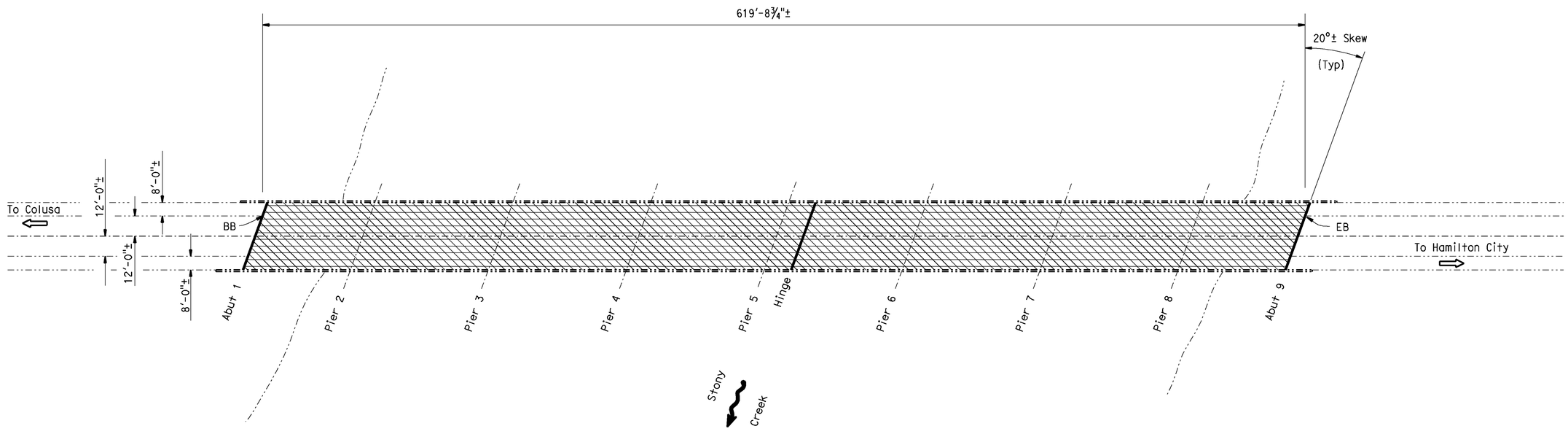

STONY CREEK

Br No. 11-0038, ROUTE 45, Gle, PM R020.66
1" = 30'

STONY CREEK BR #11-0038

QUANTITIES

REMOVE UNSOUND CONCRETE	62	CF
PREPARE CONCRETE BRIDGE DECK SURFACE	24,790	SQFT
REMOVE CHIP SEAL	24,790	SQFT
CLEAN EXPANSION JOINT	132	LF
RAPID SETTING CONCRETE (PATCH)	62	CF
FURNISH POLYESTER CONCRETE OVERLAY	1,860	CF
PLACE POLYESTER CONCRETE OVERLAY	24,790	SQFT
JOINT SEAL (MR 1 1/2")	88	LF
JOINT SEAL (MR 2")	44	LF
PUBLIC SAFETY PLAN	LUMP SUM	

DESIGN ENGINEER 11-17-11

	BY	CHECKED
DESIGN	Peter Kang	D. Acoda
DETAILS	David Kish	D. Acoda
QUANTITIES	Peter Kang	D. Acoda

LOAD FACTOR DESIGN — LIVE LOADING: HS20-44 AND ALTERNATIVE AND PERMIT DESIGN LOAD

	BY	CHECKED
LAYOUT	Peter Kang	D. Acoda
SPECIFICATIONS	Karla Meier	PLANS AND SPECS COMPARED Karla Meier

STATE OF CALIFORNIA
DEPARTMENT OF TRANSPORTATION

DIVISION OF MAINTENANCE
STRUCTURE MAINTENANCE DESIGN

BRIDGE NO. VARIOUS
POST MILE VARIES

ROUTE 20, 65, 99, 45 & 5 BRIDGES
GENERAL PLAN NO. 6

STRUCTURES MAINTENANCE GENERAL PLAN SHEET (ENGLISH) (REV. 09-01-10)

ORIGINAL SCALE IN INCHES FOR REDUCED PLANS 0 1 2 3

UNIT: 3488
PROJECT NUMBER & PHASE: 0300020063-1
CONTRACT NO.: 03-4M2101

DISREGARD PRINTS BEARING EARLIER REVISION DATES — REVISION DATES 6-28-11 7-11-11 8-15-11 8-18-11

SHEET 6 OF 12

FILE => 03-4m2101_06gp.dgn

USERNAME => s109618 DATE PLOTTED => 16-NOV-2011 TIME PLOTTED => 12:52

DIST	COUNTY	ROUTE	POST MILES TOTAL PROJECT	SHEET No.	TOTAL SHEETS
03	Yub,Sut,Gle Col	20,65,99 45,5	Var	20	25

REGISTERED CIVIL ENGINEER 11-17-11 DATE

3-19-12
PLANS APPROVAL DATE

REGISTERED PROFESSIONAL ENGINEER PETER B. KANG No. C 70336 Exp. 9-30-12 CIVIL STATE OF CALIFORNIA

The State of California or its officers or agents shall not be responsible for the accuracy or completeness of electronic copies of this plan sheet.

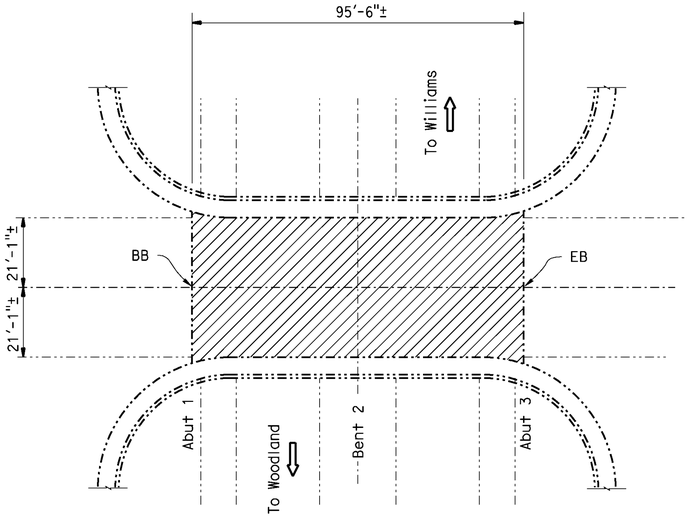

HALL STREET OVERCROSSING

Br No. 15-0046, ROUTE 5, Col, PM 7.15
1" = 20'

HALL STREET OC #15-0046

QUANTITIES

CLEAN BRIDGE DECK	4,030	SQFT
TREAT BRIDGE DECK	4,030	SQFT
FURNISH BRIDGE DECK TREATMENT MATERIAL	45	GAL
PUBLIC SAFETY PLAN	LUMP SUM	

NOTES: (APPLY TO THIS SHEET ONLY)

Indicates limits of prepare bridge deck surface, furnish and place new 3/4" minimum depth polyester concrete overlay. Prior to placing new polyester concrete overlay remove unsound concrete and patch with rapid setting concrete as shown on the "DECK REPAIR DETAIL - OVERLAY".

Indicates limits of clean and treat bridge deck with high molecular weight methacrylate as directed by the Engineer.

Indicates limits of existing joint seal removal and placement of new joint seal. Prior to placement of new joint seal, repair joint spalls as directed by the Engineer.

(1) Limits of grind existing concrete approach to conform to existing AC pavement. For details, see "Section A-A" on "JOINT SEAL DETAILS NO. 2" sheet.

NORTH ARBUCKLE UC #15-0062L/R

QUANTITIES

REMOVE UNSOUND CONCRETE	30	CF
PREPARE CONCRETE BRIDGE DECK SURFACE	11,690	SQFT
GRIND CONCRETE APPROACH SURFACE	4,680	SQFT
CLEAN EXPANSION JOINT	160	LF
RAPID SETTING CONCRETE (PATCH)	30	CF
FURNISH POLYESTER CONCRETE OVERLAY	880	CF
PLACE POLYESTER CONCRETE OVERLAY	11,690	SQFT
JOINT SEAL (MR 1/2")	160	LF

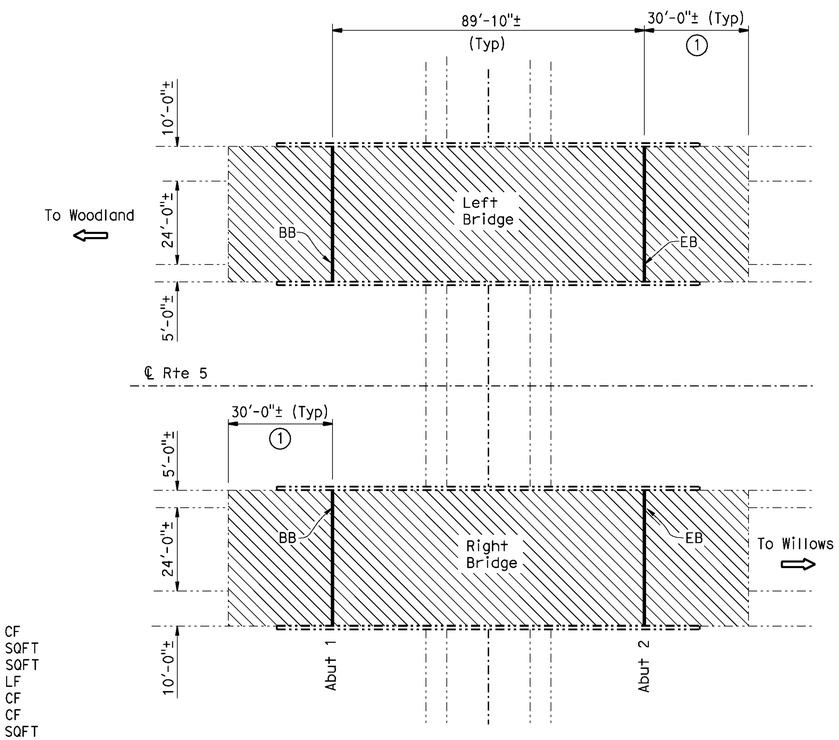

NORTH ARBUCKLE UNDERCROSSING

Br No. 15-0062L/R, ROUTE 5, Col, PM R007.70
1" = 20'

DESIGN ENGINEER 11-17-11	DESIGN	BY Peter Kang	CHECKED D. Acoda	LOAD FACTOR DESIGN	LIVE LOADING: HS20-44 AND ALTERNATIVE AND PERMIT DESIGN LOAD	
	DETAILS	BY David Kish	CHECKED D. Acoda	LAYOUT	BY Peter Kang	CHECKED D. Acoda
	QUANTITIES	BY Peter Kang	CHECKED D. Acoda	SPECIFICATIONS	BY Karla Meier	PLANS AND SPECS COMPARED Karla Meier

STATE OF CALIFORNIA DEPARTMENT OF TRANSPORTATION

DIVISION OF MAINTENANCE STRUCTURE MAINTENANCE DESIGN

BRIDGE NO. VARIOUS
POST MILE VARIES

ROUTE 20, 65, 99, 45 & 5 BRIDGES

GENERAL PLAN NO. 7

STRUCTURES MAINTENANCE GENERAL PLAN SHEET (ENGLISH) (REV. 09-01-10)

ORIGINAL SCALE IN INCHES FOR REDUCED PLANS 0 1 2 3

UNIT: 3488
PROJECT NUMBER & PHASE: 0300020063-1
CONTRACT NO.: 03-4M2101

DISREGARD PRINTS BEARING EARLIER REVISION DATES

REVISION DATES 5-24-11 7-11-11 8-15-11

SHEET 7 OF 12

FILE => 03-4m2101_07gp.dgn

USERNAME => s109618 DATE PLOTTED => 16-NOV-2011 TIME PLOTTED => 12:52

DIST	COUNTY	ROUTE	POST MILES TOTAL PROJECT	SHEET No.	TOTAL SHEETS
03	Yub,Sut,Gle Col	20,65,99 45,5	Var	21	25

REGISTERED CIVIL ENGINEER — DATE 11-17-11

3-19-12
PLANS APPROVAL DATE

REGISTERED PROFESSIONAL ENGINEER — PETER B. KANG — No. C 70336 — Exp. 9-30-12 — CIVIL — STATE OF CALIFORNIA

The State of California or its officers or agents shall not be responsible for the accuracy or completeness of electronic copies of this plan sheet.

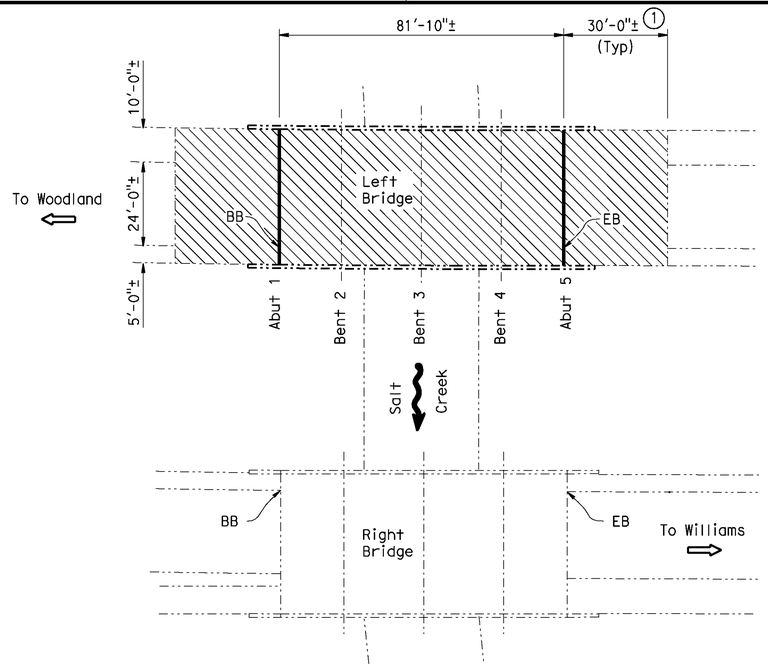

SALT CREEK

Br No. 15-0005L, ROUTE 5, Col, PM R007.99
1" = 20'

SALT CREEK BRIDGE #15-0005L

QUANTITIES

REMOVE UNSOUND CONCRETE	14	CF
PREPARE CONCRETE BRIDGE DECK SURFACE	5,530	SQFT
GRIND CONCRETE APPROACH SURFACE	2,340	SQFT
CLEAN EXPANSION JOINT	80	LF
RAPID SETTING CONCRETE (PATCH)	14	CF
FURNISH POLYESTER CONCRETE OVERLAY	415	CF
PLACE POLYESTER CONCRETE OVERLAY	5,530	SQFT
JOINT SEAL (MR 1/2")	80	LF

NOTES: (APPLY TO THIS SHEET ONLY)

Indicates limits of prepare bridge deck surface, furnish and place new 3/4" minimum depth polyester concrete overlay. Prior to placing new polyester concrete overlay remove unsound concrete and patch with rapid setting concrete as shown on the "DECK REPAIR DETAIL - OVERLAY".

Indicates limits of clean and treat bridge deck with high molecular weight methacrylate as directed by the Engineer.

Indicates limits of existing joint seal removal and placement of new joint seal. Prior to placement of new joint seal, repair joint spalls as directed by the Engineer.

(1) Limits of grind existing concrete approach to conform to existing AC pavement. For details, see "Section A-A" on "JOINT SEAL DETAILS NO. 2" sheet.

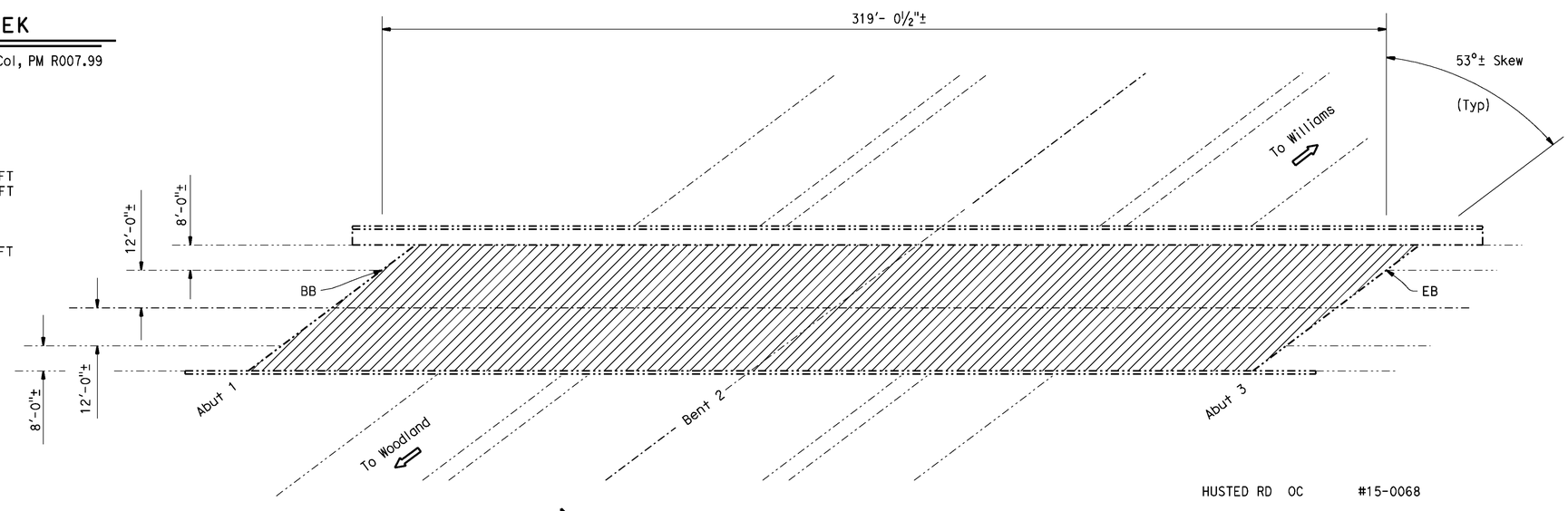

HUSTED RD OC #15-0068

QUANTITIES

CLEAN BRIDGE DECK	12,760	SQFT
TREAT BRIDGE DECK	12,760	SQFT
FURNISH BRIDGE DECK TREATMENT MATERIAL	140	GAL

HUSTED ROAD OVERCROSSING

Br No. 15-0068, ROUTE 5, Col, PM R015.91
1" = 20'

DESIGN ENGINEER 11-17-11

	BY	CHECKED
DESIGN	Peter Kang	D. Acoda
DETAILS	David Kish	D. Acoda
QUANTITIES	Peter Kang	D. Acoda

LOAD FACTOR DESIGN — LIVE LOADING: HS20-44 AND ALTERNATIVE AND PERMIT DESIGN LOAD

	BY	CHECKED
LAYOUT	Peter Kang	D. Acoda
SPECIFICATIONS	Karla Meier	PLANS AND SPECS COMPARED Karla Meier

STATE OF CALIFORNIA
DEPARTMENT OF TRANSPORTATION

DIVISION OF MAINTENANCE
STRUCTURE MAINTENANCE DESIGN

BRIDGE NO. VARIOUS
POST MILE VARIES

ROUTE 20, 65, 99, 45 & 5 BRIDGES
GENERAL PLAN NO. 8

STRUCTURES MAINTENANCE GENERAL PLAN SHEET (ENGLISH) (REV. 09-01-10)

ORIGINAL SCALE IN INCHES FOR REDUCED PLANS 0 1 2 3

UNIT: 3488
PROJECT NUMBER & PHASE: 0300020063-1
CONTRACT NO.: 03-4M2101

DISREGARD PRINTS BEARING EARLIER REVISION DATES

REVISION DATES 5-25-11 7-11-11 8-15-11

SHEET 8 OF 12

FILE => 03-4m2101_08gp.dgn

USERNAME => s109618 DATE PLOTTED => 16-NOV-2011 TIME PLOTTED => 12:52

DIST	COUNTY	ROUTE	POST MILES TOTAL PROJECT	SHEET No.	TOTAL SHEETS
03	Yub,Sut,Gle Col	20,65,99 45,5	Var	22	25

REGISTERED CIVIL ENGINEER — DATE 11-17-11

3-19-12
PLANS APPROVAL DATE

REGISTERED PROFESSIONAL ENGINEER — PETER B. KANG — No. C 70336 — Exp. 9-30-12 — CIVIL — STATE OF CALIFORNIA

The State of California or its officers or agents shall not be responsible for the accuracy or completeness of electronic copies of this plan sheet.

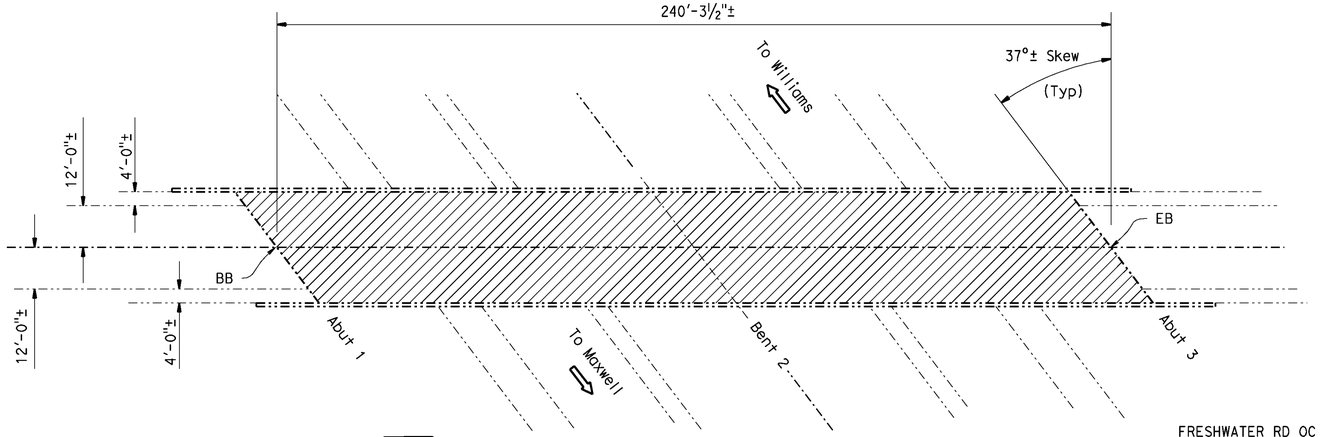

FRESHWATER ROAD OVERCROSSING

Br No. 15-0074, ROUTE 5, Col, PM R019.31
1" = 20'

FRESHWATER RD OC #15-0074

QUANTITIES

CLEAN BRIDGE DECK	7,690	SQFT
TREAT BRIDGE DECK	7,690	SQFT
FURNISH BRIDGE DECK TREATMENT MATERIAL	85	GAL

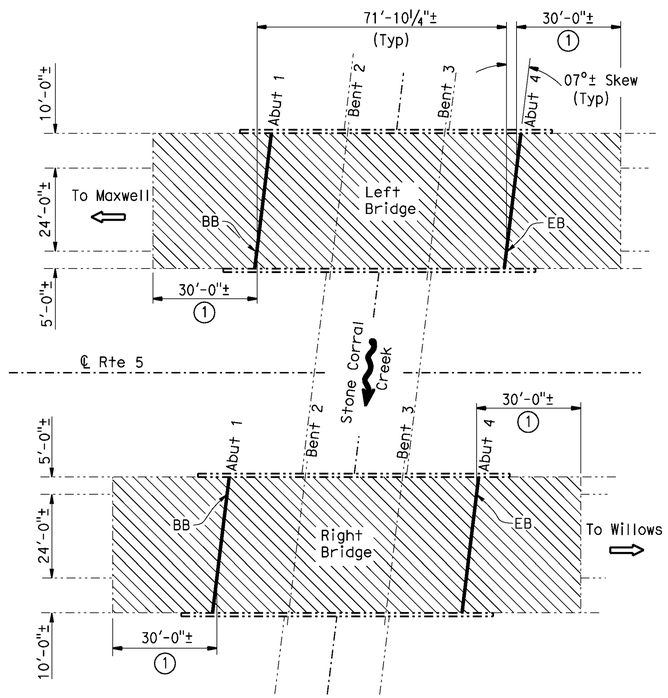

STONE CORRAL CREEK

Br No. 15-0069L/R, ROUTE 5, Col, PM R027.74
1" = 20'

STONE CORRAL CRK #15-0069L/R

QUANTITIES

REMOVE UNSOUND CONCRETE	26	CF
PREPARE CONCRETE BRIDGE DECK SURFACE	10,660	SQFT
GRIND CONCRETE APPROACH SURFACE	5,050	SQFT
CLEAN EXPANSION JOINT	160	LF
RAPID SETTING CONCRETE (PATCH)	26	CF
FURNISH POLYESTER CONCRETE OVERLAY	800	CF
PLACE POLYESTER CONCRETE OVERLAY	10,660	SQFT
JOINT SEAL (MR 1/2")	160	LF

NOTES: (APPLY TO THIS SHEET ONLY)

Indicates limits of prepare bridge deck surface, furnish and place new ¾" minimum depth polyester concrete overlay. Prior to placing new polyester concrete overlay remove unsound concrete and patch with rapid setting concrete as shown on the "DECK REPAIR DETAIL - OVERLAY".

Indicates limits of clean and treat bridge deck with high molecular weight methacrylate as directed by the Engineer.

Indicates limits of existing joint seal removal and placement of new joint seal. Prior to placement of new joint seal, repair joint spalls as directed by the Engineer.

(1) Limits of grind existing concrete approach to conform to existing AC pavement. For details, see "Section A-A" on "JOINT DETAILS NO. 2" sheet.

DESIGN ENGINEER 11-17-11	DESIGN	BY Peter Kang	CHECKED D. Acoda	LOAD FACTOR DESIGN	LIVE LOADING: HS20-44 AND ALTERNATIVE AND PERMIT DESIGN LOAD
	DETAILS	BY David Kish	CHECKED D. Acoda	LAYOUT	BY Peter Kang — CHECKED D. Acoda
	QUANTITIES	BY Peter Kang	CHECKED D. Acoda	SPECIFICATIONS	BY Karla Meier — PLANS AND SPECS COMPARED Karla Meier

STATE OF CALIFORNIA
DEPARTMENT OF TRANSPORTATION

DIVISION OF MAINTENANCE
STRUCTURE MAINTENANCE DESIGN

BRIDGE NO. VARIOUS
POST MILE VARIES

ROUTE 20, 65, 99, 45 & 5 BRIDGES
GENERAL PLAN NO. 9

STRUCTURES MAINTENANCE GENERAL PLAN SHEET (ENGLISH) (REV. 09-01-10)

ORIGINAL SCALE IN INCHES FOR REDUCED PLANS 0 1 2 3

UNIT: 3488
PROJECT NUMBER & PHASE: 0300020063-1
CONTRACT NO.: 03-4M2101

DISREGARD PRINTS BEARING EARLIER REVISION DATES — REVISION DATES 6-28-11 7-11-11 8-15-11

SHEET 9 OF 12

FILE => 03-4m2101_09gp.dgn

USERNAME => s109618 DATE PLOTTED => 16-NOV-2011 TIME PLOTTED => 12:52

DIST	COUNTY	ROUTE	POST MILES TOTAL PROJECT	SHEET No.	TOTAL SHEETS
03	Yub,Sut,Gle Col	20,65,99 45,5	Var	23	25

REGISTERED CIVIL ENGINEER 11-17-11 DATE

3-19-12
PLANS APPROVAL DATE

REGISTERED PROFESSIONAL ENGINEER PETER B. KANG No. C 70336 Exp. 9-30-12 CIVIL STATE OF CALIFORNIA

The State of California or its officers or agents shall not be responsible for the accuracy or completeness of electronic copies of this plan sheet.

NOTES: (APPLY TO THIS SHEET ONLY)

Indicates limits of prepare bridge deck surface, furnish and place new ¾" minimum depth polyester concrete overlay. Prior to placing new polyester concrete overlay remove unsound concrete and patch with rapid setting concrete as shown on the "DECK REPAIR DETAIL - OVERLAY".

Indicates limits of existing joint seal removal and placement of new joint seal. Prior to placement of new joint seal, repair joint spalls as directed by the Engineer.

(1) Limits of grind existing concrete approach to conform to existing AC pavement. For details, see "Section A-A" on "JOINT SEAL DETAILS NO. 2" sheet.

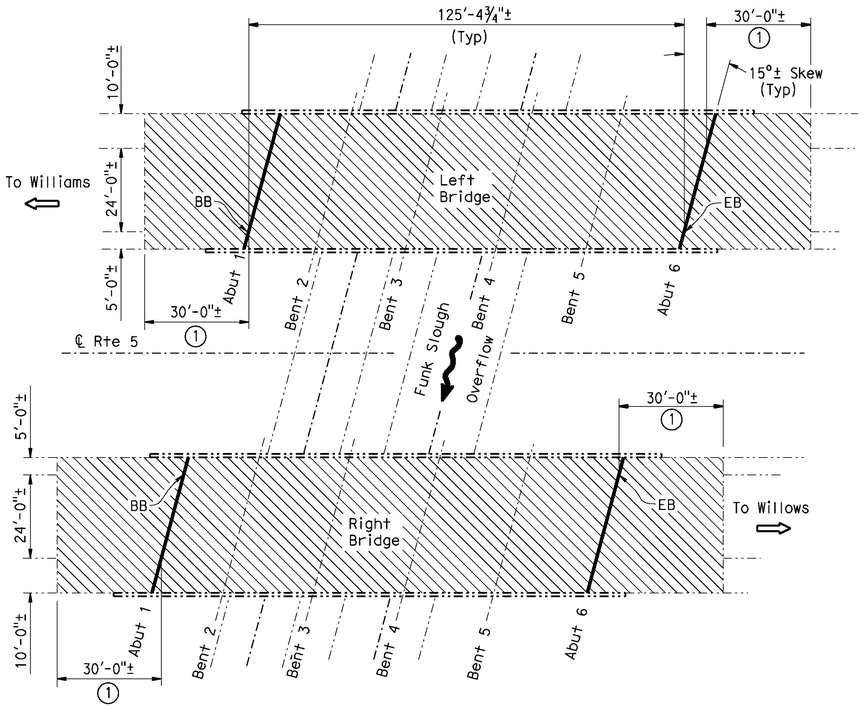

FUNK SLOUGH OVERFLOW

Br No. 15-0077L/R, ROUTE 5, Col, PM R029.02
1" = 20'

FUNK SLOUGH OVERFLOW #15-0077L/R

QUANTITIES

REMOVE UNSOUND CONCRETE	38	CF
PREPARE CONCRETE BRIDGE DECK SURFACE	15,280	SQFT
GRIND CONCRETE APPROACH SURFACE	5,500	SQFT
CLEAN EXPANSION JOINT	165	LF
RAPID SETTING CONCRETE (PATCH)	38	CF
FURNISH POLYESTER CONCRETE OVERLAY	1,150	CF
PLACE POLYESTER CONCRETE OVERLAY	15,280	SQFT
JOINT SEAL (MR 1/2")	164	LF

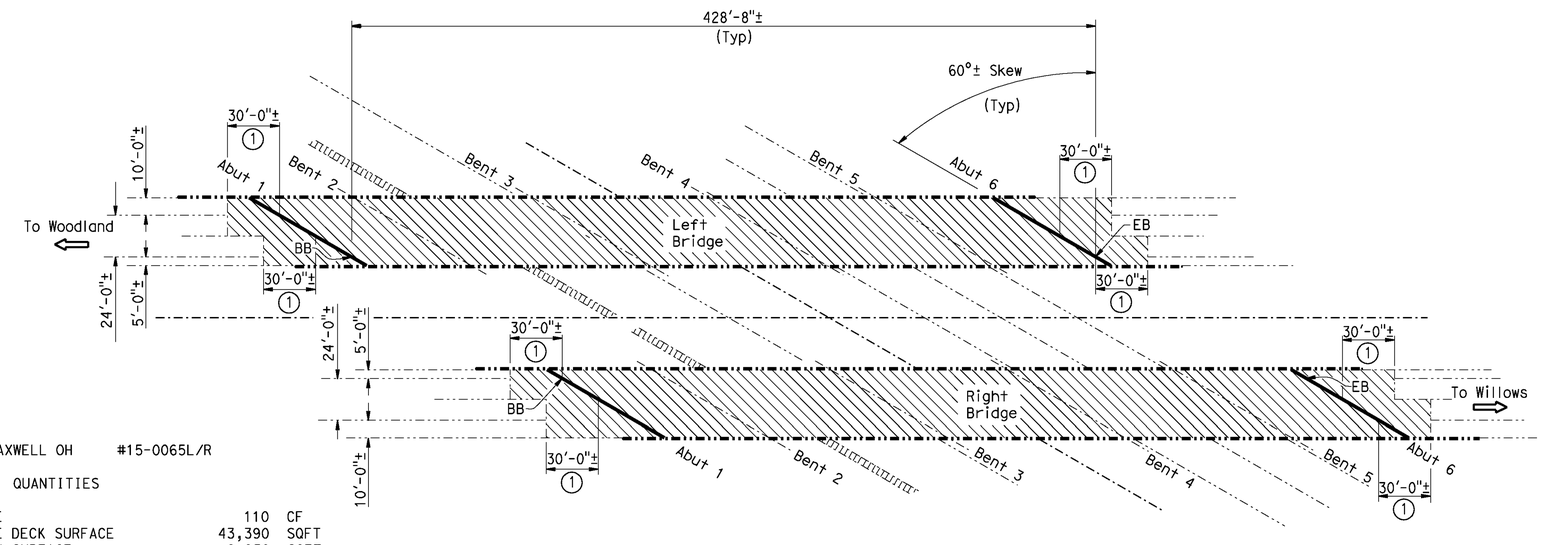

NORTH MAXWELL OH #15-0065L/R

QUANTITIES

REMOVE UNSOUND CONCRETE	110	CF
PREPARE CONCRETE BRIDGE DECK SURFACE	43,390	SQFT
GRIND CONCRETE APPROACH SURFACE	9,950	SQFT
CLEAN EXPANSION JOINT	320	LF
RAPID SETTING CONCRETE (PATCH)	110	CF
FURNISH POLYESTER CONCRETE OVERLAY	3,250	CF
PLACE POLYESTER CONCRETE OVERLAY	43,390	SQFT
JOINT SEAL (MR 2")	320	LF

NORTH MAXWELL OVERHEAD

Br No. 15-0065L/R, ROUTE 5, Col, PM R029.22
1" = 40'

X DESIGN ENGINEER	DESIGN	BY Peter Kang	CHECKED D. Acoda	LOAD FACTOR DESIGN	LIVE LOADING: HS20-44 AND ALTERNATIVE AND PERMIT DESIGN LOAD	
	DETAILS	BY David Kish	CHECKED D. Acoda	LAYOUT	BY Peter Kang	CHECKED D. Acoda
	QUANTITIES	BY Peter Kang	CHECKED D. Acoda	SPECIFICATIONS	BY X	PLANS AND SPECS COMPARED X

STATE OF CALIFORNIA
DEPARTMENT OF TRANSPORTATION

DIVISION OF MAINTENANCE
STRUCTURE MAINTENANCE DESIGN

BRIDGE NO. VARIOUS
POST MILE VARIES

ROUTE 20, 65, 99, 45 & 5 BRIDGES
GENERAL PLAN NO. 10

STRUCTURES MAINTENANCE GENERAL PLAN SHEET (ENGLISH) (REV. 09-01-10)

ORIGINAL SCALE IN INCHES FOR REDUCED PLANS 0 1 2 3

UNIT: 3488
PROJECT NUMBER & PHASE: 0300020063-1 CONTRACT NO.: 03-4M2101

DISREGARD PRINTS BEARING EARLIER REVISION DATES

REVISION DATES 6-30-11 7-11-11 8-15-11 8-18-11

SHEET 10 OF 12

FILE => 03-4m2101_10gp.dgn

USERNAME => s109618 DATE PLOTTED => 16-NOV-2011 TIME PLOTTED => 12:52

DIST	COUNTY	ROUTE	POST MILES TOTAL PROJECT	SHEET No.	TOTAL SHEETS
03	Yub,Sut,Gle Col	20,65,99 45,5	Var	24	25

REGISTERED CIVIL ENGINEER — DATE 11-17-11

PLANS APPROVAL DATE 3-19-12

REGISTERED PROFESSIONAL ENGINEER — PETER B. KANG — No. C 70336 — Exp. 9-30-12 — CIVIL — STATE OF CALIFORNIA

The State of California or its officers or agents shall not be responsible for the accuracy or completeness of electronic copies of this plan sheet.

JOINT SEAL TABLE

BRIDGE NAME	BRIDGE NUMBER	LOCATION		MINIMUM "MR" (INCHES)	APPROXIMATE LENGTH (FEET)	EXISTING WATERSTOP	APPROX DEPTH TO CLEAN EXP JOINT (INCHES)
HOWSLEY ROAD UNDERCROSSING	18-0045L	Abut 1	BB	½"	51.0	NO	12
		Abut 4	EB	½"	51.0	NO	12
	18-0045R	Abut 1	BB	½"	49.0	NO	12
		Abut 4	EB	½"	49.0	NO	12
BUTTE HOUSE ROAD UNDERCROSSING	18-0033L	Abut 1	BB	½"	42.5	NO	12
		Abut 2	EB	½"	42.5	NO	12
	18-0033R	Abut 1	BB	½"	42.5	NO	12
		Abut 2	EB	½"	42.5	NO	12
STONY CREEK	11-0038	Abut 1	BW	1½"	44.0	NO	12
		Pier 5	H	2"	44.0	NO	12
		Abut 9	BW	1½"	44.0	NO	12
NORTH ARBUCKLE UNDERCROSSING	15-0062L	Abut 1	BB	½"	40.0	NO	12
		Abut 2	EB	½"	40.0	NO	12
	15-0062R	Abut 1	BB	½"	40.0	NO	12
		Abut 2	EB	½"	40.0	NO	12
SALT CREEK	15-0005L	Abut 1	BB	½"	40.0	NO	12
		Abut 5	EB	½"	40.0	NO	12
STONE CORRAL CREEK	15-0069L	Abut 1	BB	½"	40.0	NO	12
		Abut 4	EB	½"	40.0	NO	12
	15-0069R	Abut 1	BB	½"	40.0	NO	12
		Abut 4	EB	½"	40.0	NO	12
FUNK SLOUGH OVERFLOW	15-0077L	Abut 1	BB	½"	41.0	NO	12
		Abut 6	EB	½"	41.0	NO	12
	15-0077R	Abut 1	BB	½"	41.0	NO	12
		Abut 6	EB	½"	41.0	NO	12
NORTH MAXWELL OVERHEAD	15-0065L	Abut 1	BB	2"	80.0	NO	12
		Abut 6	EB	2"	80.0	NO	12
	15-0065R	Abut 1	BB	2"	80.0	NO	12
		Abut 6	EB	2"	80.0	NO	12

LEGEND:
BW - Abutment backwall joint
BB - Paving notch at beginning of bridge
EB - Paving notch at end of bridge
H - Hinge joint

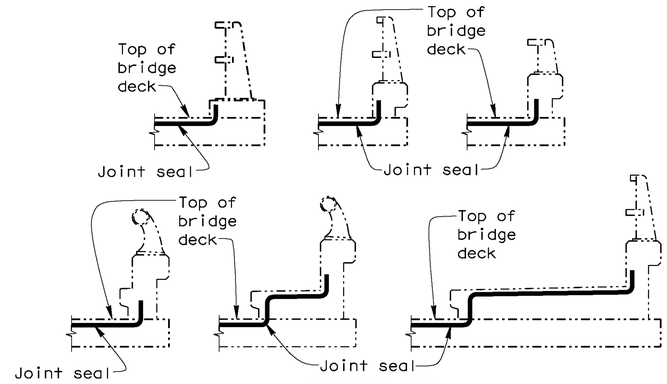

BARRIER RAIL

JOINT SEAL AT LOW SIDE OF DECK

Notes: Details shown for illustration purposes only.

For use only where deck joint matches the sidewalk, curb or barrier rail joint.

The following notes apply to JOINT SEAL TYPE B:

1) Seal must satisfy both minimum Movement Rating (MR) and minimum W1 requirements.
2) Minimum W1 is the calculated maximum width of the joint based on field measurements. After the joints have been cleaned, minimum W1 is to be calculated by the Engineer.
3) W1 shall be the smaller of the values determined as follows:
   A) 0.85 times the manufacturer's designed minimum uncompressed width of the seal.
   B) The width of the seal on the third successive test cycle of the pressure deflection test; when compressed to an average pressure of 3 psi.
4) Bend Type B joint seal 6" up into curb or rail on the low side of the deck where deck joint matches curb or rail joint.
5) For details not shown, see RSP B6-21

The following notes apply to JOINT SEAL TYPE A:

1) Install Type A joint seal 3" up into rail on the low side of deck where joint matches curb or rail joint.
2) For details not shown, see RSP B6-21

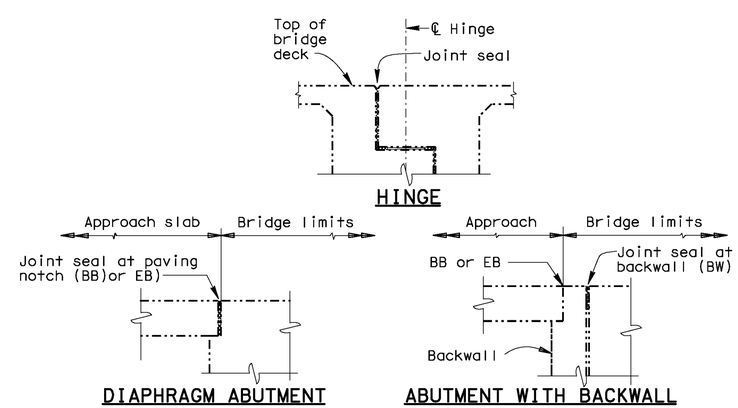

HINGE

DIAPHRAGM ABUTMENT

ABUTMENT WITH BACKWALL

JOINT SEAL LOCATION

	BY	CHECKED
DESIGN	P. Kang	D. Acoba
DETAILS	Dale Kubochi	D. Acoba
QUANTITIES	P. Kang	D. Acoba

STATE OF CALIFORNIA
DEPARTMENT OF TRANSPORTATION

DIVISION OF MAINTENANCE
STRUCTURE MAINTENANCE DESIGN

BRIDGE NO. VARIOUS
POST MILE VARIES

ROUTE 20, 65, 99, 45 & 5 BRIDGES
JOINT SEAL DETAILS NO. 1

STRUCTURES MAINTENANCE DETAIL SHEET (ENGLISH) (REV. 09-01-10)

ORIGINAL SCALE IN INCHES FOR REDUCED PLANS 0 1 2 3

UNIT: 3488
PROJECT NUMBER & PHASE: 0300020063-1
CONTRACT NO.: 03-4M2101

DISREGARD PRINTS BEARING EARLIER REVISION DATES — REVISION DATES 7-8-11 7-11-11 8-15-11

SHEET 11 OF 12

FILE => 03-4m2101-s-jt-seal-det01.dgn

USERNAME => s109618 DATE PLOTTED => 16-NOV-2011 TIME PLOTTED => 12:52

DIST	COUNTY	ROUTE	POST MILES TOTAL PROJECT	SHEET No.	TOTAL SHEETS
03	Yub,Sut,Gle Col	20,65,99 45,5	Var	25	25

Peter B. Kang 11-17-11
REGISTERED CIVIL ENGINEER DATE

3-19-12
PLANS APPROVAL DATE

REGISTERED PROFESSIONAL ENGINEER PETER B. KANG No. C 70336 Exp. 9-30-12 CIVIL STATE OF CALIFORNIA

The State of California or its officers or agents shall not be responsible for the accuracy or completeness of electronic copies of this plan sheet.

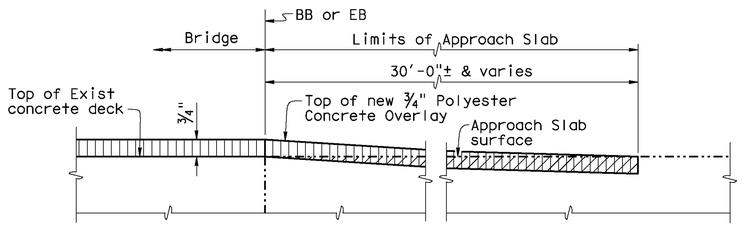

SECTION A-A

No Scale

NOTES:

Indicates limits of grind concrete surfacing.

Indicates limits of prepare concrete bridge deck surface, furnish and place new 3/4" minimum depth polyester concrete overlay.

DECK REPAIR TABLE
REMOVE UNSOUND CONCRETE AND RAPID SETTING CONCRETE (PATCH)

BRIDGE NAME	BRIDGE NUMBER	APPROXIMATE AREA DAMAGED (PERCENT)	APPROXIMATE DEPTH (INCHES)
STONY CREEK	11-0038	1	3
NORTH ARBUCKLE UNDERCROSSING	15-0062L	1	3
	15-0062R	1	3
SALT CREEK	15-0005L	1	3
STONE CORRAL CREEK	15-0069L	1	3
	15-0069R	1	3
FUNK SLOUGH OVERFLOW	15-0077L	1	3
	15-0077R	1	3
NORTH MAXWELL OVERHEAD	15-0065L	1	3
	15-0065R	1	3

Locations to be determined by the Engineer. For details see "DECK REPAIR DETAIL - OVERLAY".

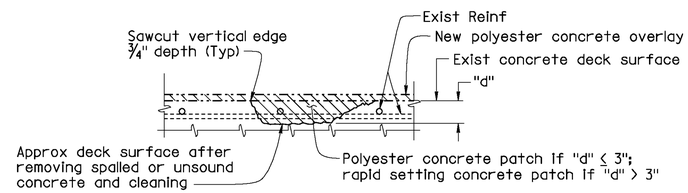

DECK REPAIR DETAIL - OVERLAY

Note: Locations to be determined by the Engineer. Reinforcement may be encountered during deck concrete removal.

NO SCALE

NOTES:

Indicates limits of new polyester concrete.

DESIGN	BY P. Kang	CHECKED D. Acoba	
DETAILS	BY Dale Kubochi	CHECKED D. Acoba	
QUANTITIES	BY P. Kang	CHECKED D. Acoba	

STATE OF CALIFORNIA
DEPARTMENT OF TRANSPORTATION

DIVISION OF MAINTENANCE
STRUCTURE MAINTENANCE DESIGN

BRIDGE NO. VARIOUS
POST MILE VARIES

ROUTE 20, 65, 99, 45 & 5 BRIDGES
JOINT SEAL DETAILS NO. 2

STRUCTURES MAINTENANCE DETAIL SHEET (ENGLISH) (REV. 09-01-10)

ORIGINAL SCALE IN INCHES FOR REDUCED PLANS 0 1 2 3

UNIT: 3488
PROJECT NUMBER & PHASE: 0300020063-1 CONTRACT NO.: 03-4M2101

DISREGARD PRINTS BEARING EARLIER REVISION DATES

REVISION DATES 7-5-11 7-11-11 8-15-11

SHEET 12 OF 12

FILE => 03-4m2101-s-jt-seal-det02.dgn

USERNAME => s109618 DATE PLOTTED => 16-NOV-2011 TIME PLOTTED => 12:52