Dist	COUNTY	ROUTE	POST MILES TOTAL PROJECT	SHEET No.	TOTAL SHEETS
01	Hum	169	18.1,19.5	1	39

ER-43J9(004)

STATE OF CALIFORNIA
DEPARTMENT OF TRANSPORTATION

PROJECT PLANS FOR CONSTRUCTION ON
STATE HIGHWAY

IN HUMBOLDT COUNTY
NEAR WEITCHPEC
AT 2.9 MILES AND 4.3 MILES WEST
OF CAPPELL CREEK BRIDGE

TO BE SUPPLEMENTED BY STANDARD PLANS DATED MAY 2006

INDEX OF PLANS

SHEET No.	DESCRIPTION
1	TITLE AND LOCATION MAP
2	TYPICAL CROSS SECTIONS
3	LAYOUT
4-7	CONSTRUCTION DETAILS
8	CONSTRUCTION AREA SIGNS
9	TRAFFIC HANDLING PLAN AND DETAILS
10	SUMMARY OF QUANTITIES
11	ELECTRICAL PLAN
12-23	REVISED AND NEW STANDARD PLANS

STRUCTURE PLANS

24-39	NOTCHKO RETAINING WALL

THE STANDARD PLANS LIST APPLICABLE TO THIS CONTRACT IS INCLUDED IN THE NOTICE TO BIDDERS AND SPECIAL PROVISIONS BOOK.

LOCATION MAP

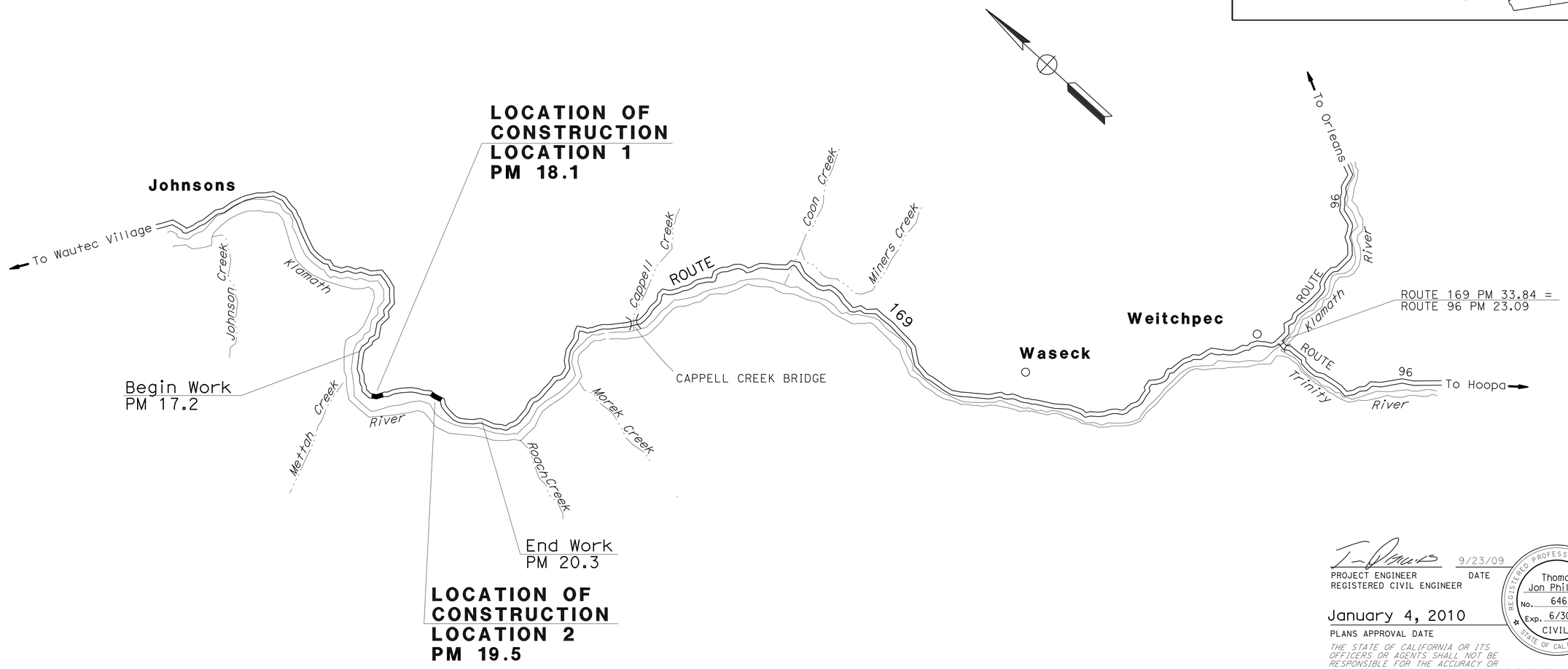

PROJECT MANAGER: Kevin Church

DESIGN ENGINEER: Tom Phillips

PROJECT ENGINEER REGISTERED CIVIL ENGINEER — DATE 9/23/09

REGISTERED PROFESSIONAL ENGINEER — Thomas Jon Phillips — No. 64633 — Exp. 6/30/11 — CIVIL — STATE OF CALIFORNIA

January 4, 2010
PLANS APPROVAL DATE

THE STATE OF CALIFORNIA OR ITS OFFICERS OR AGENTS SHALL NOT BE RESPONSIBLE FOR THE ACCURACY OR COMPLETENESS OF SCANNED COPIES OF THIS PLAN SHEET.

THE CONTRACTOR SHALL POSSESS THE CLASS (OR CLASSES) OF LICENSE AS SPECIFIED IN THE "NOTICE TO BIDDERS."

NO SCALE

CONTRACT No. 01-478304

LAST REVISION 00-00-00 — DATE PLOTTED => 11-MAR-2010 — TIME PLOTTED => 14:44

Dist	COUNTY	ROUTE	POST MILES TOTAL PROJECT	SHEET No.	TOTAL SHEETS
01	Hum	169	18.1,19.5	2	39

REGISTERED CIVIL ENGINEER 9/23/09 DATE

1-4-10
PLANS APPROVAL DATE

REGISTERED PROFESSIONAL ENGINEER
Thomas Jon Phillips
No. 64633
Exp. 6/30/11
CIVIL
STATE OF CALIFORNIA

THE STATE OF CALIFORNIA OR ITS OFFICERS OR AGENTS SHALL NOT BE RESPONSIBLE FOR THE ACCURACY OR COMPLETENESS OF SCANNED COPIES OF THIS PLAN SHEET.

LEGEND

SR = SUPERELEVATION RATE
GPI = GEOSYNTHETIC PAVEMENT INTERLAYER

DESIGN DESIGNATION (ROUTE 169)

(2008)	AADT=320	D= 60%
(2011)	AADT=320	T= 5%
	DHV=80	V= 20 MPH

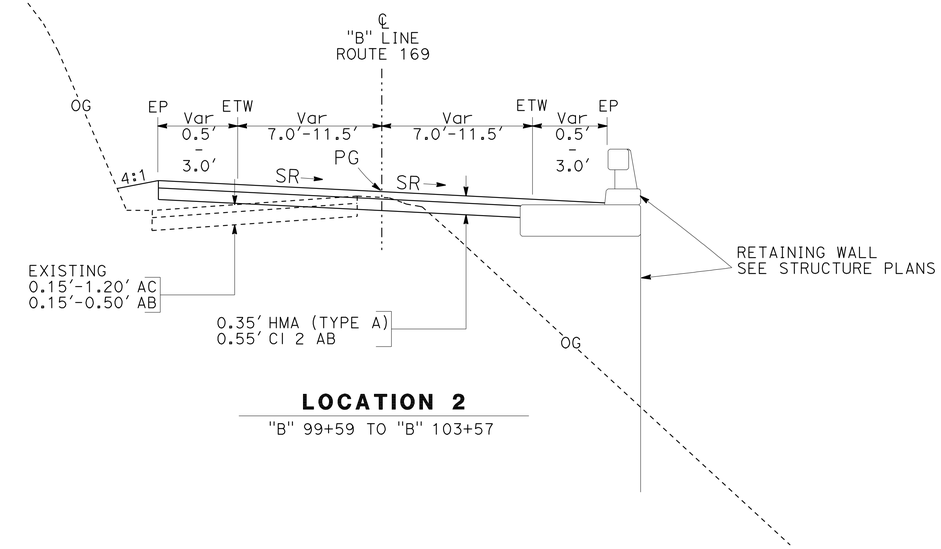

LOCATION 2

"B" 99+59 TO "B" 103+57

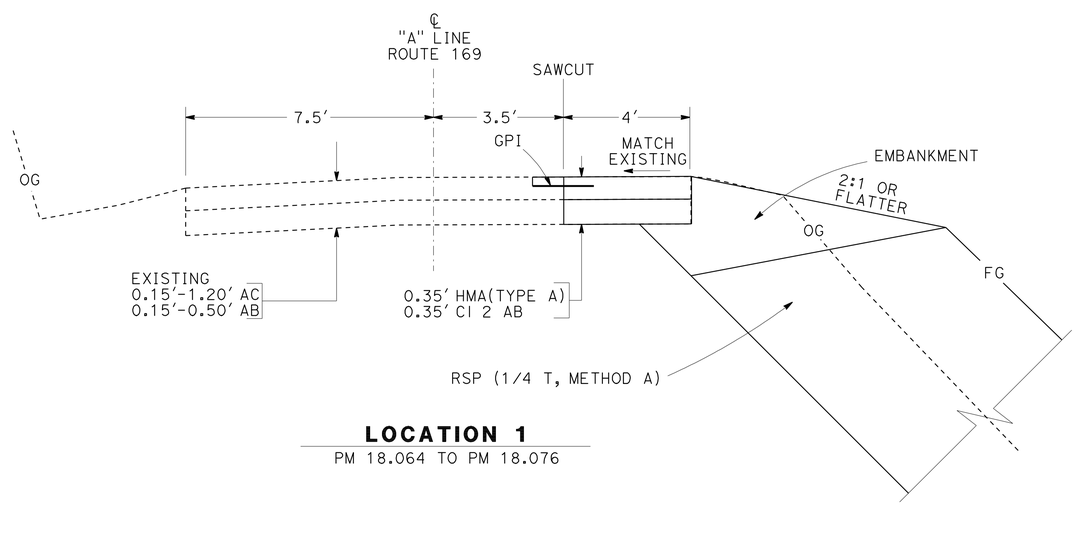

LOCATION 1

PM 18.064 TO PM 18.076

TYPICAL CROSS SECTIONS

NO SCALE

X-1

STATE OF CALIFORNIA - DEPARTMENT OF TRANSPORTATION
Caltrans
DESIGN

FUNCTIONAL SUPERVISOR: Lucy Kostrzewa
CALCULATED-DESIGNED BY: Jeff Zimmerer
CHECKED BY: Juan Salas
REVISED BY
DATE REVISED

LAST REVISION 00-00-00
DATE PLOTTED => 06-JAN-2010
TIME PLOTTED => 07:22

No	LINE	STATION		CURVE OR TANGENT DATA	COORDINATES NORTH	COORDINATES EAST
1	B	99+11.00	BEGIN	R=110.0′ Δ=25°16′24.5″ T=24.662′ L=48.522′	2359942.3133	6050670.4926
	B	99+52.52	EC	S 27°37′58.9″ E 3.753′	2359905.5903	6050701.6027
2	B	99+63.06	BC	R=115.0′ 38°12′23.3″ T=39.830′ L=76.685′	2359902.2654	6050703.3434
	B	100+39.72	EC	S 10°34′24.2″ W 31.068′	2359827.8256	6050714.5080
3	B	100+70.79	BC	R=863.0′ Δ=5°25′39.9″ T=40.908′ L=81.754′	2359797.2854	6050708.8072
	B	101+52.54	EC	S 16°00′05.0″ W 153.691′	2359717.7497	6050690.0242
4	B	103+06.23	BC	R=261.5′ Δ=9°03′48.6″ T=20.730′ L=41.374′	2359570.0135	6050647.6576
	B	103+47.61	EC	S 6°56′15.9″ W 24.657′	2359529.5079	6050639.4390
5	B	103+72.50	BC	R=180.0′ Δ=15°51′08.1″ T=25.061′ L=49.801′	2359505.0318	6050636.4607
	B	104+22.30	EC	S 8°54′52.3″ E 8.189′	2359456.5.3966	6050637.3171
6	B	104+30.49	BC	R=100.0′ Δ=14°57′37.6″ T=13.130′ L=26.111′	2359447.3062	6050638.5861
	B	104+56.60	EC	S 23.52′29.4″ E 10.000′	2359422.3280	6050645.9351
	B	106+66.60	END		2359413.1841	6050649.9823

FOR COMPLETE RIGHT OF WAY DATA, SEE RIGHT OF WAY RECORD MAPS AT DISTRICT OFFICE.

LEGEND

TW = TRAVELED WAY
TSF = TEMPORARY REINFORCED SILT FENCE
TFESA = TEMPORARY FENCE ENVIROMENTALY SENSITIVE AREA

Dist	COUNTY	ROUTE	POST MILES TOTAL PROJECT	SHEET No.	TOTAL SHEETS
01	Hum	169	18.1,19.5	3	39

REGISTERED CIVIL ENGINEER 9/23/09 DATE

1-4-10
PLANS APPROVAL DATE

REGISTERED PROFESSIONAL ENGINEER Thomas Jon Phillips No. 64633 Exp. 6/30/11 CIVIL STATE OF CALIFORNIA

THE STATE OF CALIFORNIA OR ITS OFFICERS OR AGENTS SHALL NOT BE RESPONSIBLE FOR THE ACCURACY OR COMPLETENESS OF SCANNED COPIES OF THIS PLAN SHEET.

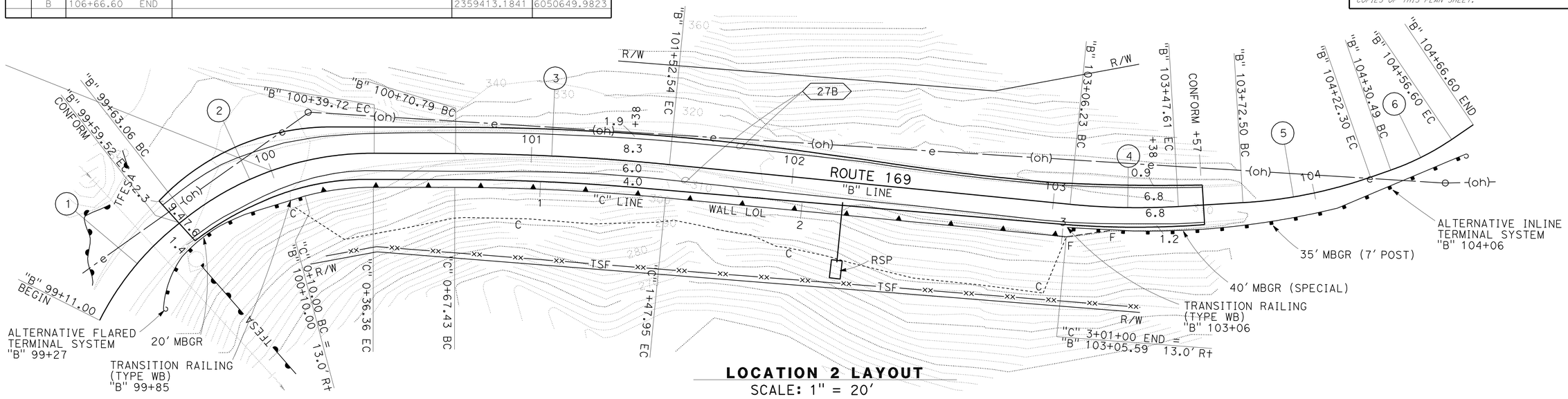

LOCATION 2 LAYOUT
SCALE: 1" = 20′

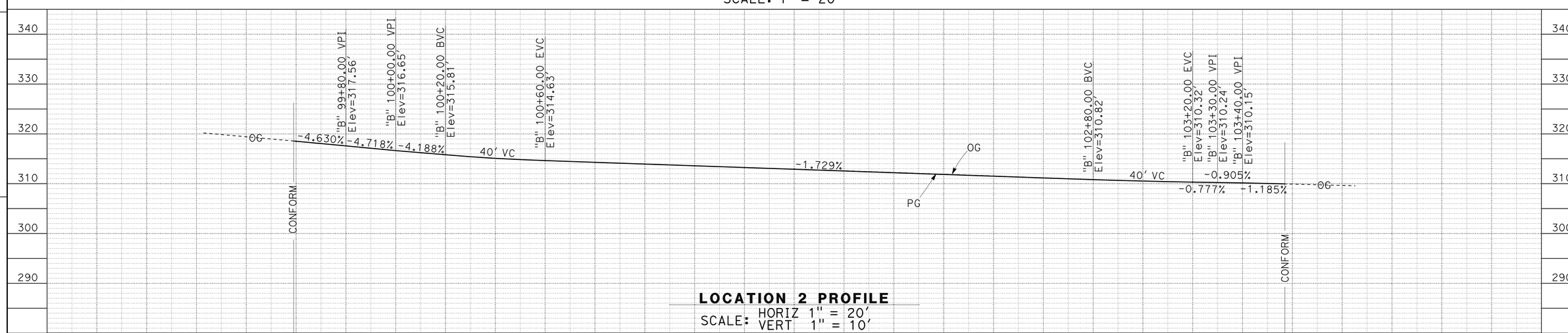

LOCATION 2 PROFILE
SCALE: HORIZ 1" = 20′
VERT 1" = 10′

LOCATION 2 SUPERELEVATION
SCALE: 1" = 20′

SCALE AS SHOWN

LAYOUT L-1

STATE OF CALIFORNIA - DEPARTMENT OF TRANSPORTATION
Caltrans
DESIGN

FUNCTIONAL SUPERVISOR: Lucy Kostrzewa
CALCULATED-DESIGNED BY: Juan Salas
CHECKED BY: Jeff Zimmerer
REVISED BY
DATE REVISED

LAST REVISION 00-00-00
DATE PLOTTED => 06-JAN-2010
TIME PLOTTED => 07:23

Dist	COUNTY	ROUTE	POST MILES TOTAL PROJECT	SHEET No.	TOTAL SHEETS
01	Hum	169	18.1,19.5	4	39

REGISTERED CIVIL ENGINEER 9/23/09 DATE

1-4-10
PLANS APPROVAL DATE

REGISTERED PROFESSIONAL ENGINEER Thomas Jon Phillips No. 64633 Exp. 6/30/11 CIVIL STATE OF CALIFORNIA

THE STATE OF CALIFORNIA OR ITS OFFICERS OR AGENTS SHALL NOT BE RESPONSIBLE FOR THE ACCURACY OR COMPLETENESS OF SCANNED COPIES OF THIS PLAN SHEET.

NOTE:

FOR COMPLETE RIGHT OF WAY DATA, SEE RIGHT OF WAY RECORD MAPS AT DISTRICT OFFICE.

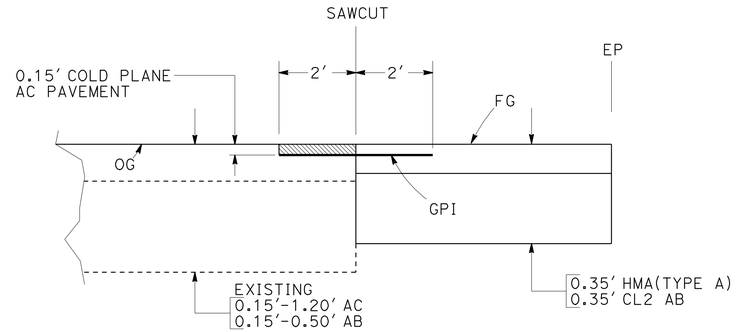

GEOSYNTHETIC PAVEMENT LAYER (GPI)

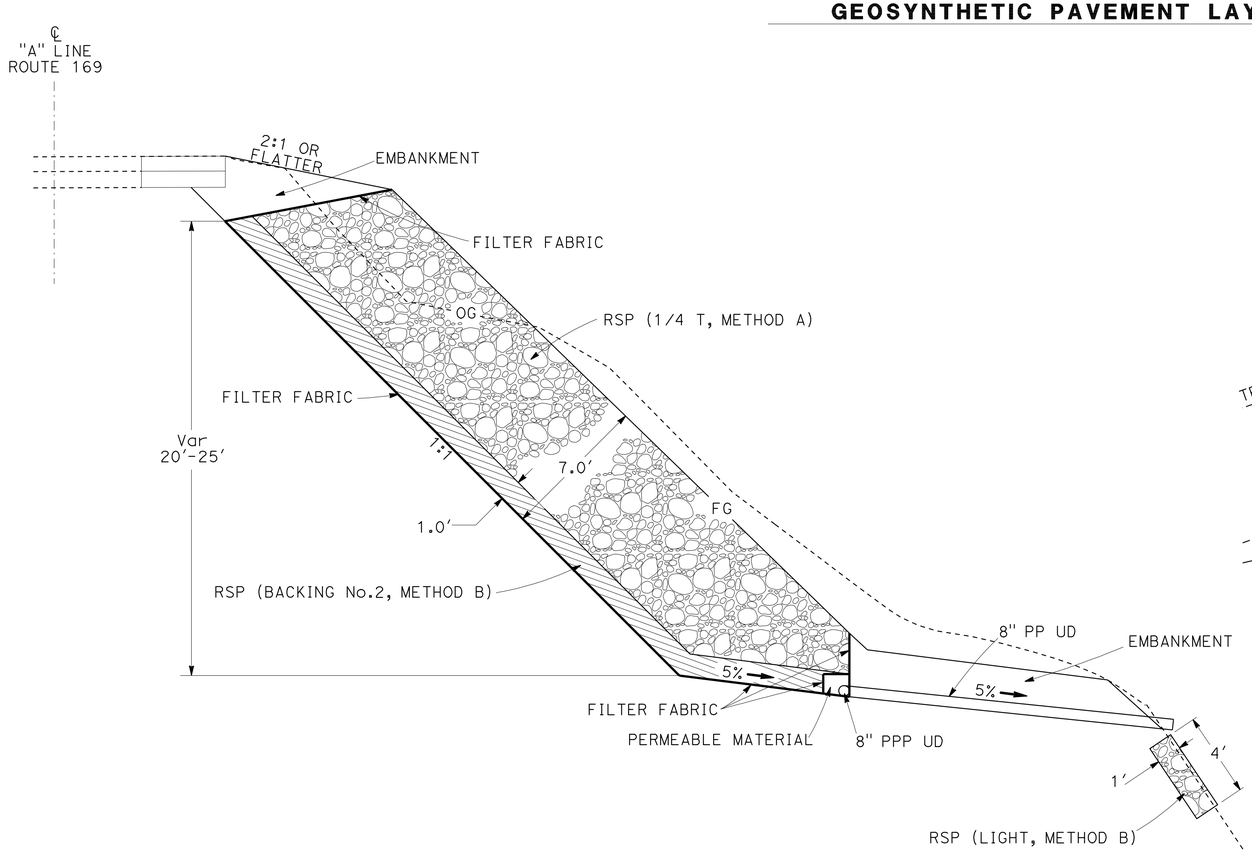

SECTION A-A

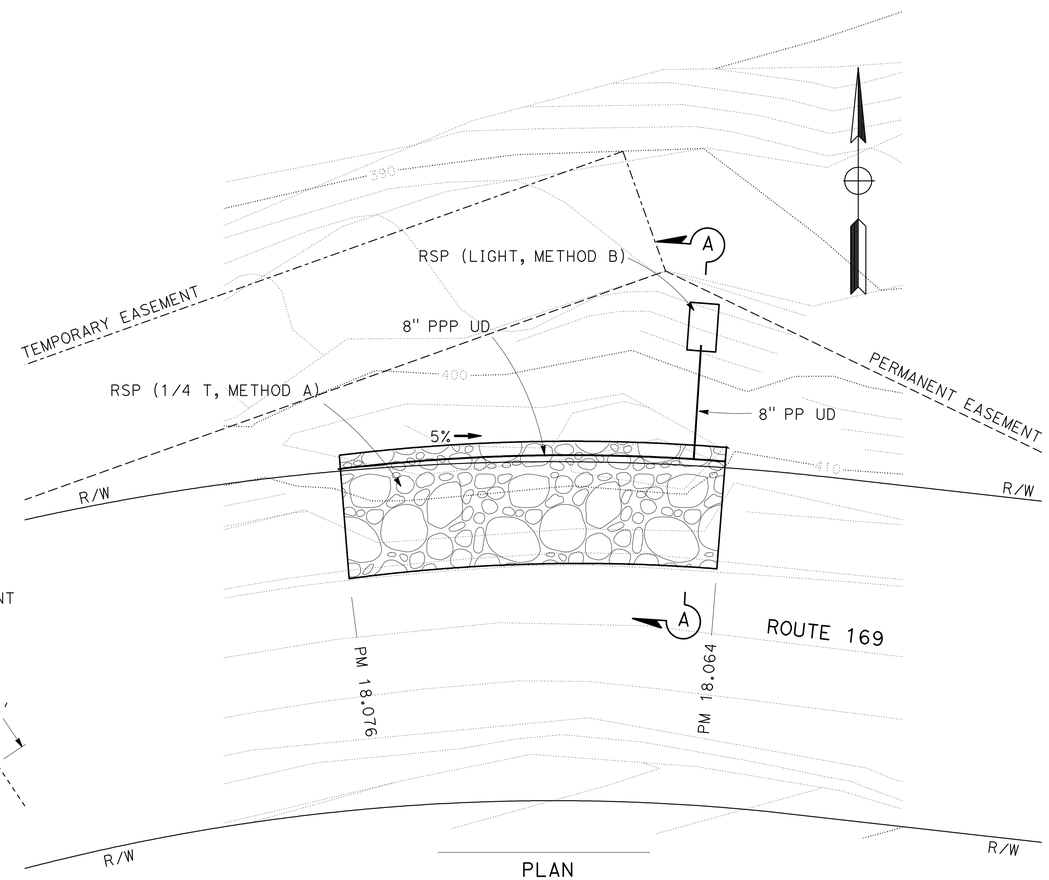

PLAN

ROCK SLOPE PROTECTION

PM 18.064 TO PM 18.076

CONSTRUCTION DETAILS
(LOCATION 1)

NO SCALE

C-1

STATE OF CALIFORNIA - DEPARTMENT OF TRANSPORTATION
Caltrans®
DESIGN

FUNCTIONAL SUPERVISOR: Lucy Kostrzewa
CALCULATED-DESIGNED BY: Jeff Zimmerer
CHECKED BY: Juan Salas
REVISED BY
DATE REVISED

LAST REVISION 00-00-00
DATE PLOTTED => 06-JAN-2010
TIME PLOTTED => 07:23

Dist	COUNTY	ROUTE	POST MILES TOTAL PROJECT	SHEET No.	TOTAL SHEETS
01	Hum	169	18.1,19.5	5	39

REGISTERED CIVIL ENGINEER 9/23/09 DATE

1-4-10
PLANS APPROVAL DATE

REGISTERED PROFESSIONAL ENGINEER
Thomas Jon Phillips
No. 64633
Exp. 6/30/11
CIVIL
STATE OF CALIFORNIA

THE STATE OF CALIFORNIA OR ITS OFFICERS OR AGENTS SHALL NOT BE RESPONSIBLE FOR THE ACCURACY OR COMPLETENESS OF SCANNED COPIES OF THIS PLAN SHEET.

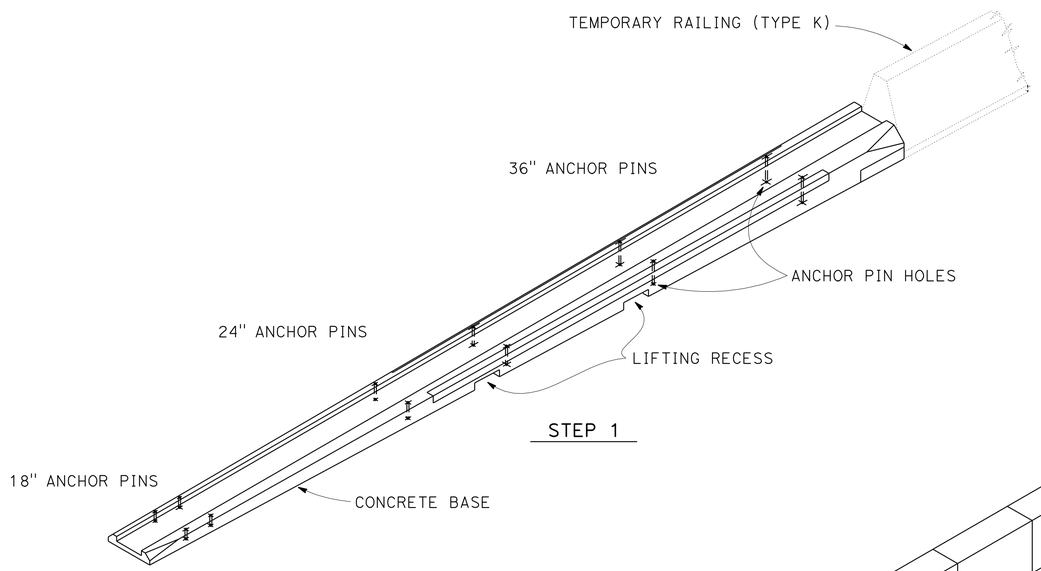

STEP 1

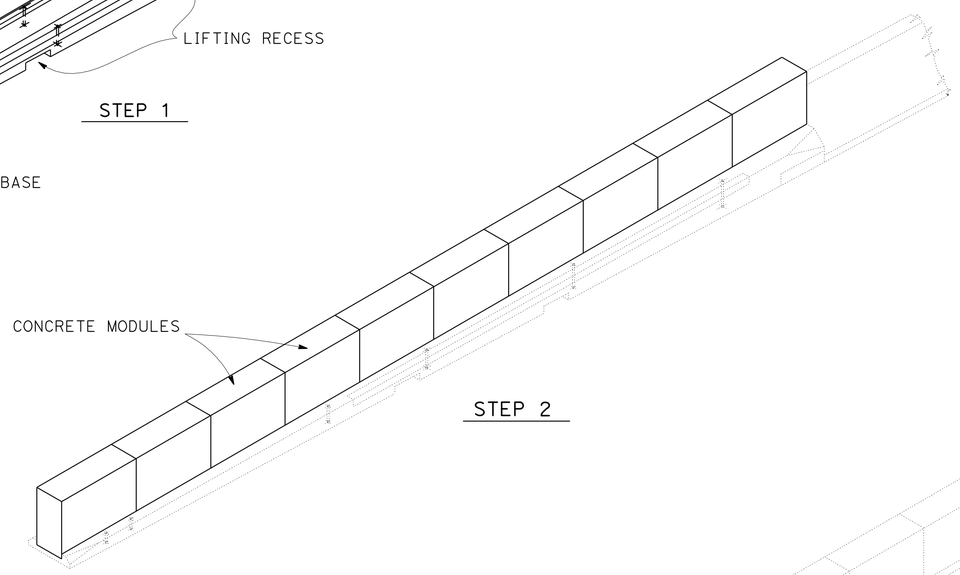

STEP 2

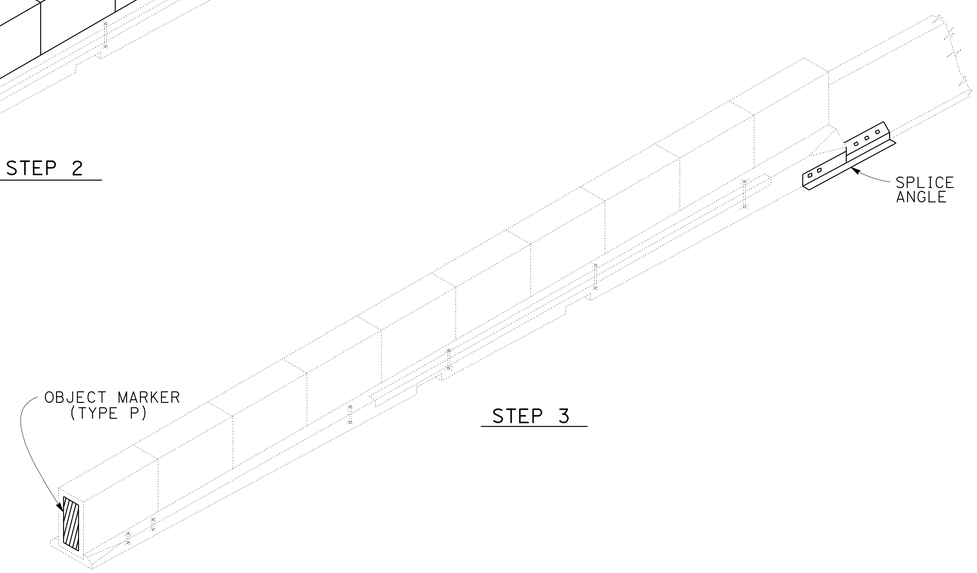

STEP 3

TEMPORARY CRASH CUSHION (TYPE ADIEM)

SEE STD PLAN A82B1 FOR DETAILS NOT SHOWN

CONSTRUCTION DETAILS (LOCATION 2)

NO SCALE

C-2

STATE OF CALIFORNIA - DEPARTMENT OF TRANSPORTATION
Caltrans
DESIGN

FUNCTIONAL SUPERVISOR: Lucy Kostrzewa
CALCULATED-DESIGNED BY: Juan Salas
CHECKED BY: Jeff Zimmerer
REVISED BY
DATE REVISED

LAST REVISION 00-00-00
DATE PLOTTED => 06-JAN-2010
TIME PLOTTED => 08:53

Dist	COUNTY	ROUTE	POST MILES TOTAL PROJECT	SHEET No.	TOTAL SHEETS
01	Hum	169	18.1,19.5	6	39

REGISTERED CIVIL ENGINEER 9/23/09 DATE

1-4-10
PLANS APPROVAL DATE

REGISTERED PROFESSIONAL ENGINEER
Thomas Jon Phillips
No. 64633
Exp. 6/30/11
CIVIL
STATE OF CALIFORNIA

THE STATE OF CALIFORNIA OR ITS OFFICERS OR AGENTS SHALL NOT BE RESPONSIBLE FOR THE ACCURACY OR COMPLETENESS OF SCANNED COPIES OF THIS PLAN SHEET.

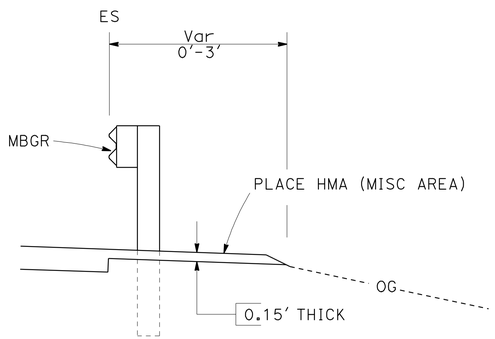

PLACE HMA (Misc AREA)

"B" 99+27 TO "B" 104+56

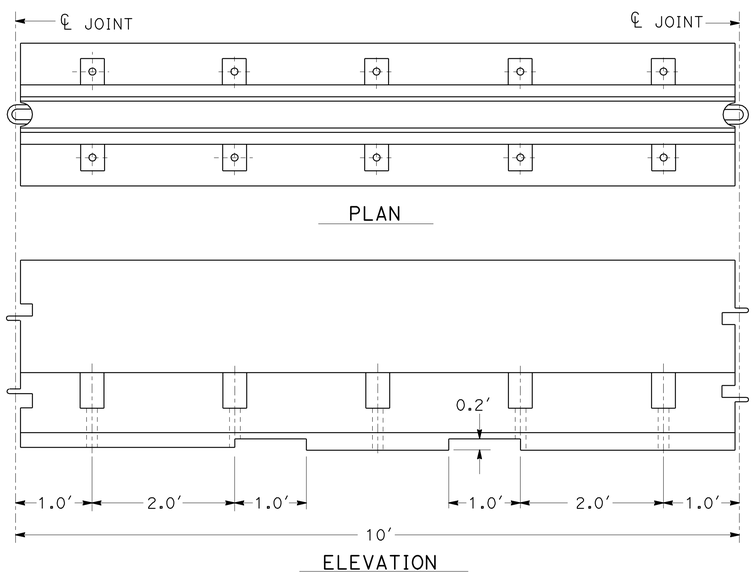

TEMPORARY RAILING (TYPE K) (MODIFIED)

SEE STANDARD PLAN T3 FOR DETAILS NOT SHOWN

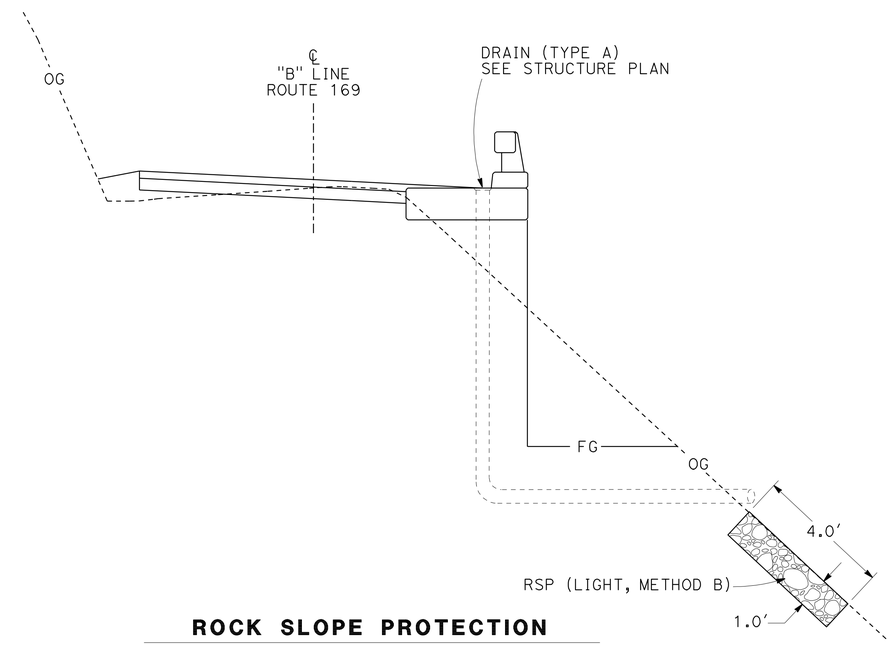

ROCK SLOPE PROTECTION

"B" 102+20.0

CONSTRUCTION DETAILS
(LOCATION 2)

NO SCALE

C-3

STATE OF CALIFORNIA - DEPARTMENT OF TRANSPORTATION
Caltrans®
DESIGN

FUNCTIONAL SUPERVISOR: Lucy Kostrzewa
CALCULATED-DESIGNED BY: Jeff Zimmerer
CHECKED BY: Juan Salas
REVISED BY
DATE REVISED

LAST REVISION 00-00-00
DATE PLOTTED => 06-JAN-2010
TIME PLOTTED => 07:23

Dist	COUNTY	ROUTE	POST MILES TOTAL PROJECT	SHEET No.	TOTAL SHEETS
01	Hum	169	18.1,19.5	7	39

REGISTERED CIVIL ENGINEER 9/23/09 DATE

1-4-10
PLANS APPROVAL DATE

REGISTERED PROFESSIONAL ENGINEER Thomas Jon Phillips No. 64633 Exp. 6/30/11 CIVIL STATE OF CALIFORNIA

THE STATE OF CALIFORNIA OR ITS OFFICERS OR AGENTS SHALL NOT BE RESPONSIBLE FOR THE ACCURACY OR COMPLETENESS OF SCANNED COPIES OF THIS PLAN SHEET.

NOTES:

1. APPROXIMATE EXCAVATION PER PRECAST CONCRETE BEAM IS 1 CY.
2. SEE HARDWARE CHART FOR DIMENSIONS.
3. NEST ELEMENTS TO THE SECOND CONVENTIONAL POST.
4. MINIMUM 12" BELOW FINISH GRADE TO TOP OF CONCRETE BEAMS.

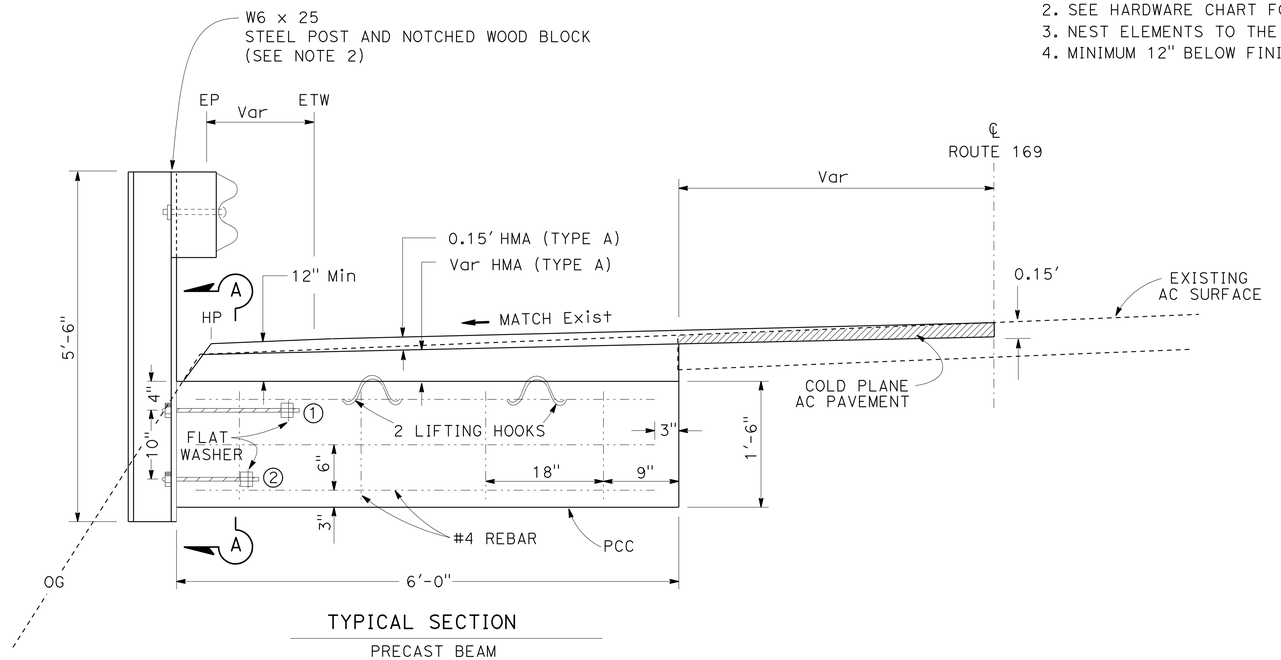

TYPICAL SECTION

PRECAST BEAM

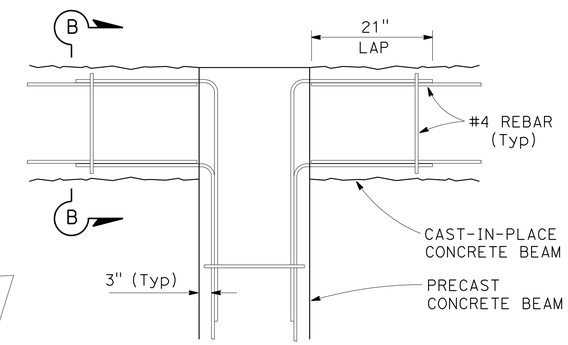

CONCRETE BEAM DETAIL

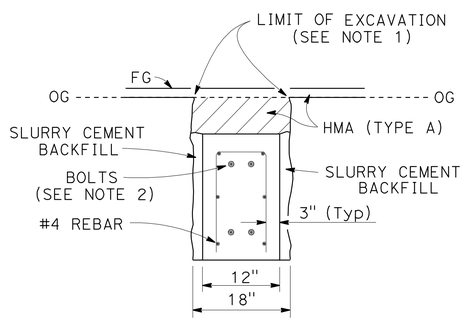

SECTION A-A

PRECAST

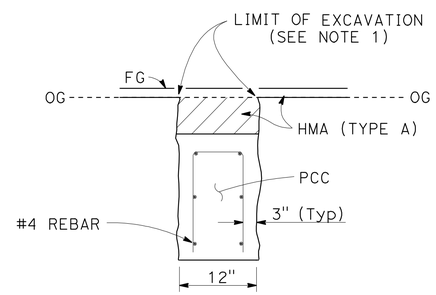

SECTION B-B

CAST-IN-PLACE

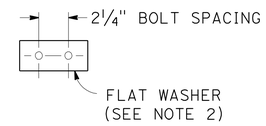

FLAT WASHER

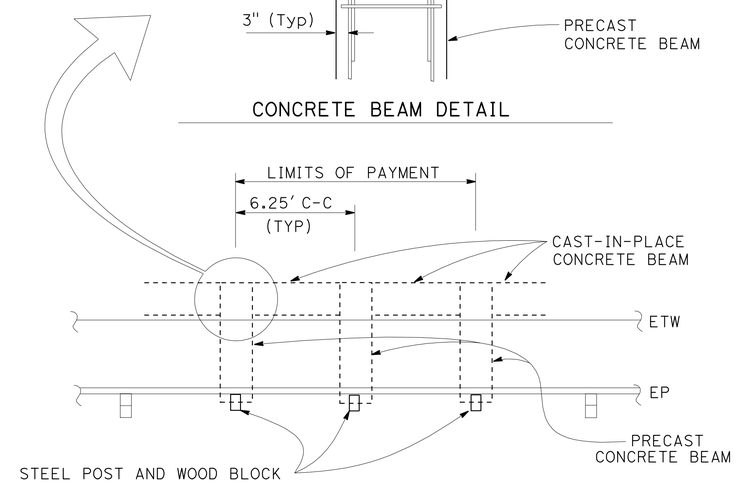

PLAN VIEW

HARDWARE CHART FOR PRECAST CONCRETE BEAM

CASE	STEEL POST	WOOD BLOCK	①	②	BOLT SPACING
PRECAST BEAM	W6 x 25	6" x 8" x 1'-2"	2 EA ¾" Dia x 1'-6" HS BOLTS (THREADED BOTH ENDS) WITH 3 EA Hex NUTS AND 3" x 7" x ¼" FLAT WASHER	2 EA ⅝" Dia x 1' HS BOLTS (THREADED BOTH ENDS) WITH 3 EA Hex NUTS AND 2" X 7" X ¼" FLAT WASHER	2¼"

MBGR (SPECIAL)

CONSTRUCTION DETAILS
(LOCATION 2)

NO SCALE

C-4

STATE OF CALIFORNIA - DEPARTMENT OF TRANSPORTATION
DESIGN
Caltrans

FUNCTIONAL SUPERVISOR: Lucy Kostrzewa
CALCULATED-DESIGNED BY: Juan Salas
CHECKED BY
REVISED BY
DATE REVISED: Jeff Zimmerer

LAST REVISION 00-00-00
DATE PLOTTED => 06-JAN-2010
TIME PLOTTED => 07:23

Dist	COUNTY	ROUTE	POST MILES TOTAL PROJECT	SHEET No.	TOTAL SHEETS
01	Hum	169	18.1,19.5	8	39

REGISTERED CIVIL ENGINEER 9/23/09 DATE

1-4-10
PLANS APPROVAL DATE

REGISTERED PROFESSIONAL ENGINEER Thomas Jon Phillips No. 64633 Exp. 6/30/11 CIVIL STATE OF CALIFORNIA

THE STATE OF CALIFORNIA OR ITS OFFICERS OR AGENTS SHALL NOT BE RESPONSIBLE FOR THE ACCURACY OR COMPLETENESS OF SCANNED COPIES OF THIS PLAN SHEET.

STATIONARY MOUNTED CONSTRUCTION AREA SIGNS

◯	SIGN CODE MUTCD	SIGN MESSAGE	PANEL SIZE	No. OF POSTS AND SIZE	No. OF SIGNS
A	W20-1	ROAD WORK AHEAD	36"x36"	1-6"x6"	2
	SP1(CA)	STORM REPAIR	36"x24"		
B	G20-2	END ROAD WORK	36"x18"	1-4"x4"	2
C	W11-1(CA)	BICYCLE (SYMBOL)	30"x30"	1-4"x6"	2
	W16-1(CA)	SHARE THE ROAD	36"x24"		
D	W3-1	STOP AHEAD (SYMBOL)	36"x36"	CLASS 5 POLE	2
E	R1	STOP	30"x30"	1-4"x6"	2
	SP2(CA)	PROCEED WHEN CLEAR	18"x30"		
ROAD CLOSURE SIGNS					
F	SP3	ROAD CLOSED 14 MILES AHEAD	48"x60"	2-4"x6"	1
G	SP4	ROAD CLOSED 1 MILE AHEAD	48"x60"	2-4"x6"	2
H	W20-3	ROAD CLOSED 500 FT	36"x36"	CLASS 5 POLE	2
I	R11-2	ROAD CLOSED (BARRIER MOUNTED)	48"x30"		2
J	W20-3	ROAD CLOSED 1000 FT	36"x36"	CLASS 5 POLE	2
K	W1-4	CURVE (SYMBOL)	36"x36"	1-4"x4"	1

NOTES:
1. EXACT SIGN LOCATION TO BE DETERMINED BY THE ENGINEER.
2. SIGNS "F" & "G" TO BE IN PLACE 30 DAYS MINIMUM PRIOR TO AND DURING EFFECTIVE DATES.
3. SIGNS "H" & "J" TO BE COVERED WITH FLASHING BEACON OFF WHEN ROAD IS NOT CLOSED.
4. SIGNS "D" & "E" TO BE COVERED WITH FLASHING BEACON OFF WHEN ROAD IS CLOSED.
5. SIGN "I" WITH BARRIERS TO BE REMOVED WHEN ROAD IS NOT CLOSED.

SP1
36" x 24"
4" CAPS
BLACK/ORANGE

STORM REPAIR

SP2
18" x 30"
4" CAPS
BLACK/ORANGE

PROCEED WHEN CLEAR

LEGEND

TEMPORARY FLASHING BEACON (YELLOW)

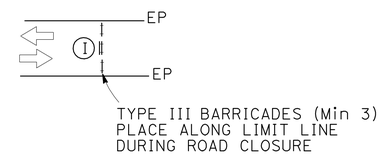

ROAD CLOSED

SP3
48" x 60"
6" CAPS (TITLE)
4" CAPS (INFO)
BLACK/ORANGE

ROAD CLOSED
14 MILES AHEAD
DATE TO DATE
10:00 PM TO 5:00 AM

SP4
48" x 60"
6" CAPS (TITLE)
4" CAPS (INFO)
BLACK/ORANGE

ROAD CLOSED
1 MILE AHEAD
DATE TO DATE
10:00 PM TO 5:00 AM

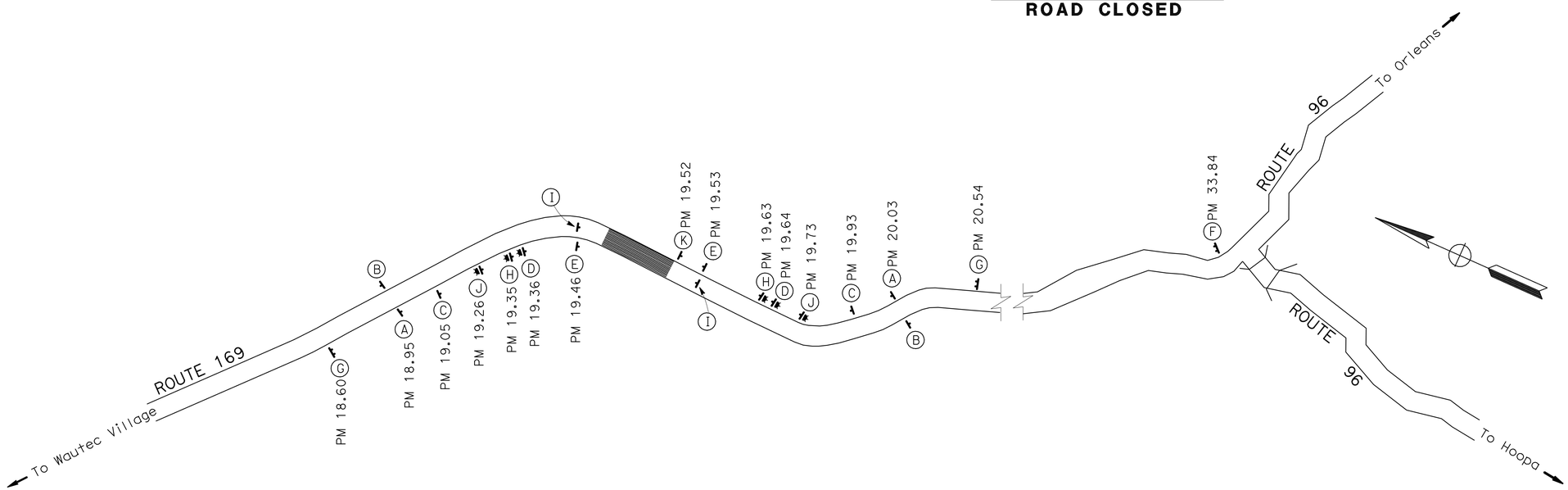

CONSTRUCTION AREA SIGNS
(LOCATION 2)
NO SCALE

CS-1

STATE OF CALIFORNIA - DEPARTMENT OF TRANSPORTATION
Caltrans®
DESIGN

FUNCTIONAL SUPERVISOR: Lucy Kostrzewa
CALCULATED-DESIGNED BY: Jeff Zimmerer
CHECKED BY: Juan Salas
REVISED BY
DATE REVISED

LAST REVISION 00-00-00
DATE PLOTTED => 06-JAN-2010
TIME PLOTTED => 07:23

Dist	COUNTY	ROUTE	POST MILES TOTAL PROJECT	SHEET No.	TOTAL SHEETS
01	Hum	169	18.1,19.5	9	39

REGISTERED CIVIL ENGINEER 9/23/09 DATE

1-4-10
PLANS APPROVAL DATE

REGISTERED PROFESSIONAL ENGINEER
Thomas Jon Phillips
No. 64633
Exp. 6/30/11
CIVIL
STATE OF CALIFORNIA

THE STATE OF CALIFORNIA OR ITS OFFICERS OR AGENTS SHALL NOT BE RESPONSIBLE FOR THE ACCURACY OR COMPLETENESS OF SCANNED COPIES OF THIS PLAN SHEET.

NOTE:

TRAFFIC MUST BE CONTROLLED WITH FLAGGERS WHENEVER CONSTRUCTION ACTIVITIES BLOCK THE LINE OF SIGHT BETWEEN THE LIMIT LINES

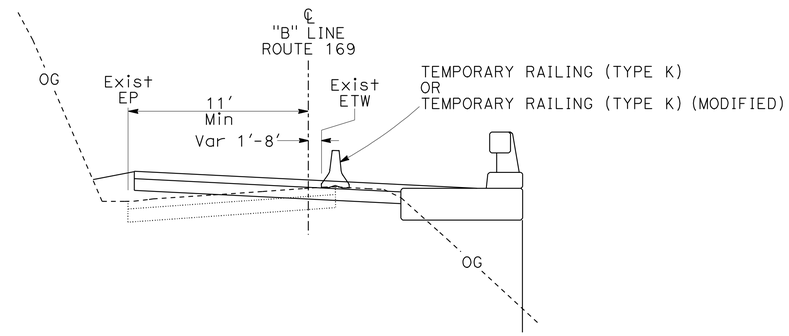

TYPICAL SECTION

"B" 99+73 TO "B" 103+13

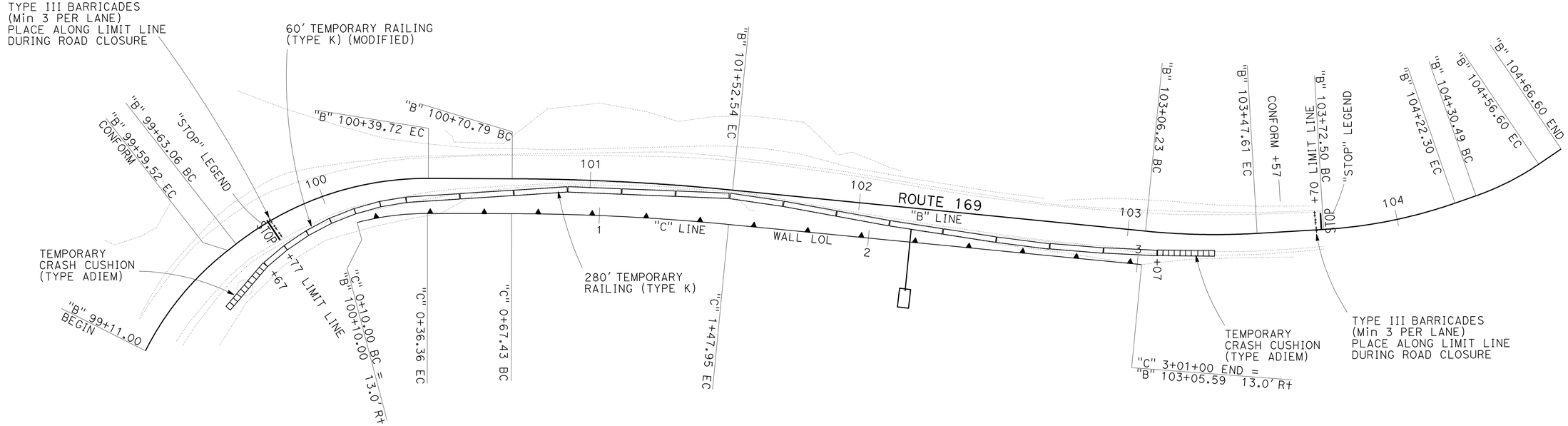

TRAFFIC HANDLING PLAN AND DETAILS

(LOCATION 2)

NO SCALE

TH-1

STATE OF CALIFORNIA - DEPARTMENT OF TRANSPORTATION
Caltrans®
DESIGN

FUNCTIONAL SUPERVISOR: Lucy Kostrzewa
CALCULATED-DESIGNED BY: Jeff Zimmerer
CHECKED BY: Juan Salas
REVISED BY
DATE REVISED

LAST REVISION 00-00-00
DATE PLOTTED => 06-JAN-2010
TIME PLOTTED => 07:24

Dist	COUNTY	ROUTE	POST MILES TOTAL PROJECT	SHEET No.	TOTAL SHEETS
01	Hum	169	18.1,19.5	10	39

REGISTERED CIVIL ENGINEER 9/23/09 DATE

1-4-10
PLANS APPROVAL DATE

REGISTERED PROFESSIONAL ENGINEER
Thomas Jon Phillips
No. 64633
Exp. 6/30/11
CIVIL
STATE OF CALIFORNIA

THE STATE OF CALIFORNIA OR ITS OFFICERS OR AGENTS SHALL NOT BE RESPONSIBLE FOR THE ACCURACY OR COMPLETENESS OF SCANNED COPIES OF THIS PLAN SHEET.

ROCK SLOPE PROTECTION

LOCATION		ROCK SLOPE PROTECTION				UNDERDRAIN	
		BACKING (No. 2, METHOD B)	(LIGHT, METHOD B)	(1/4 TON, METHOD A)	FABRIC	8" PP	8" PPP
FROM	TO	CY			SQYD	LF	
LOCATION 1							
PM 18.064	PM 18.076	13	2	600	120	40	70
LOCATION 2							
"B" 99+37	"B" 103+41		2		2		
TOTAL		13	4	600	122	40	70

EROSION CONTROL

LOCATION 2		COMPOST BLANKET	HYDROSEED	(N)		
				FIBER	TACKIFIER	PURE LIVE SEED
FROM	TO	CY	SQFT	POUNDS PER ACRE		
"B" 99+59	"B" 103+57	14.5	6300	173.6	20.2	21.7
TOTAL		14.5	6300	173.6	20.2	21.7

TRAFFIC HANDLING

LOCATION		TEMPORARY				TYPE III BARRICADE
		PAVEMENT MARKING (PAINT)	RAILING TYPE K	RAILING TYPE K (MODIFIED)	CRASH CUSHION (TYPE ADIEM)	
FROM	TO	SQFT	LF		EA	
LOCATION 2						
"B" 99+37	"B" 99+67				1	
"B" 99+67	"B" 100+36			60		
"B" 99+77		34				3
"B" 100+36	"B" 103+11		280			
"B" 103+11	"B" 103+41				1	
"B" 103+70		34				3
TOTAL		68	280	60	2	6

PAVEMENT DELINEATION

LOCATION		DETAIL No.	DETAIL LENGTH	4" THERMOPLASTIC STRIPE
FROM	TO		LF	
LOCATION 1		27B	70	70
PM 18.064	PM 18.076			
LOCATION 2				
"B" 99+37	"B" 103+41	27B	400	800
TOTAL				870

TEMPORARY FENCE

LOCATION		REINFORCED SILT FENCE	FENCE (TYPE ESA)
FROM	TO	LF	
LOCATION 2			
"B" 99+59	"B" 103+57	350	200
TOTAL		350	200

METAL BEAM GUARD RAIL

LOCATION (RIGHT)		METAL BEAM GUARD RAILING			ALTERNATIVE FLARED TERMINAL SYSTEM	ALTERNATIVE INLINE TERMINAL SYSTEM	TRANSITION RAILING (WB)	PLACE HMA (Misc AREA)
		(WOOD POST)	(7' WOOD POST)	(SPECIAL)				
FROM	TO	LF			EA			SQYD
LOCATION 2								
"B" 99+27	"B" 99+65				1			20
"B" 99+65	"B" 99+85	20						7
"B" 99+85	"B" 100+10						1	8
"B" 103+06	"B" 103+31						1	8
"B" 103+31	"B" 103+71			40				13
"B" 103+71	"B" 104+06		35					12
"B" 104+06	"B" 104+56					1		20
TOTAL		20	35	40	1	1	2	88

ROADWAY

LOCATION (RIGHT)		COLD PLANE AC PAVEMENT	ROADWAY EXCAVATION	CLASS 2 AGGREGATE BASE	HMA (TYPE A)	GEOSYNTHETIC PAVEMENT LAYER	(N) EMBANKMENT
FROM	TO	SQYD	CY		TON	SQYD	CY
LOCATION 1							
PM 18.064	PM 18.076	40		5	8	30	
LOCATION 2							
"B" 103+06	"B" 103+71	750	1860	163	202		600
MBGR					9		
TOTAL		790	1860	168	219	30	600

(N) - NOT A SEPARATE PAY ITEM, FOR INFORMATION ONLY.

SUMMARY OF QUANTITIES
Q-1

REVISED BY | DATE REVISED
Jeff Zimmerer | Juan Salas
CALCULATED-DESIGNED BY | CHECKED BY
FUNCTIONAL SUPERVISOR
Lucy Kostrzewa
STATE OF CALIFORNIA - DEPARTMENT OF TRANSPORTATION
Caltrans
DESIGN

LAST REVISION 00-00-00 | DATE PLOTTED => 07-JAN-2010 | TIME PLOTTED => 08:02

Dist	COUNTY	ROUTE	POST MILES TOTAL PROJECT	SHEET No.	TOTAL SHEETS
01	Hum	169	18.1,19.5	11	39

Brian T. Finck 9/23/09
REGISTERED ELECTRICAL ENGINEER DATE

1-4-10
PLANS APPROVAL DATE

REGISTERED PROFESSIONAL ENGINEER BRIAN T. FINCK No. 17756 Exp 6-30-10 ELECTRICAL STATE OF CALIFORNIA

THE STATE OF CALIFORNIA OR ITS OFFICERS OR AGENTS SHALL NOT BE RESPONSIBLE FOR THE ACCURACY OR COMPLETENESS OF SCANNED COPIES OF THIS PLAN SHEET.

LEGEND:

A.h = AMPERE HOUR

NOTES: (THIS SHEET ONLY)

1. A VISOR SHALL BE INSTALLED ON EACH FLASHER HEAD TO SHIELD THE LENS FROM DIRECT EXPOSURE OF THE SOLAR RADIATION.
2. THIS UNIT SHALL BE LOCATED IN AN UNSHADED AREA.
3. SEE SHEETS CS-1 AND TH-1 FOR SIGNS D, H, AND J.
4. WOOD POLE SHALL BE LOCATED OUTSIDE THE CLEAR RECOVERY ZONE OR PROTECTED IN PLACE.

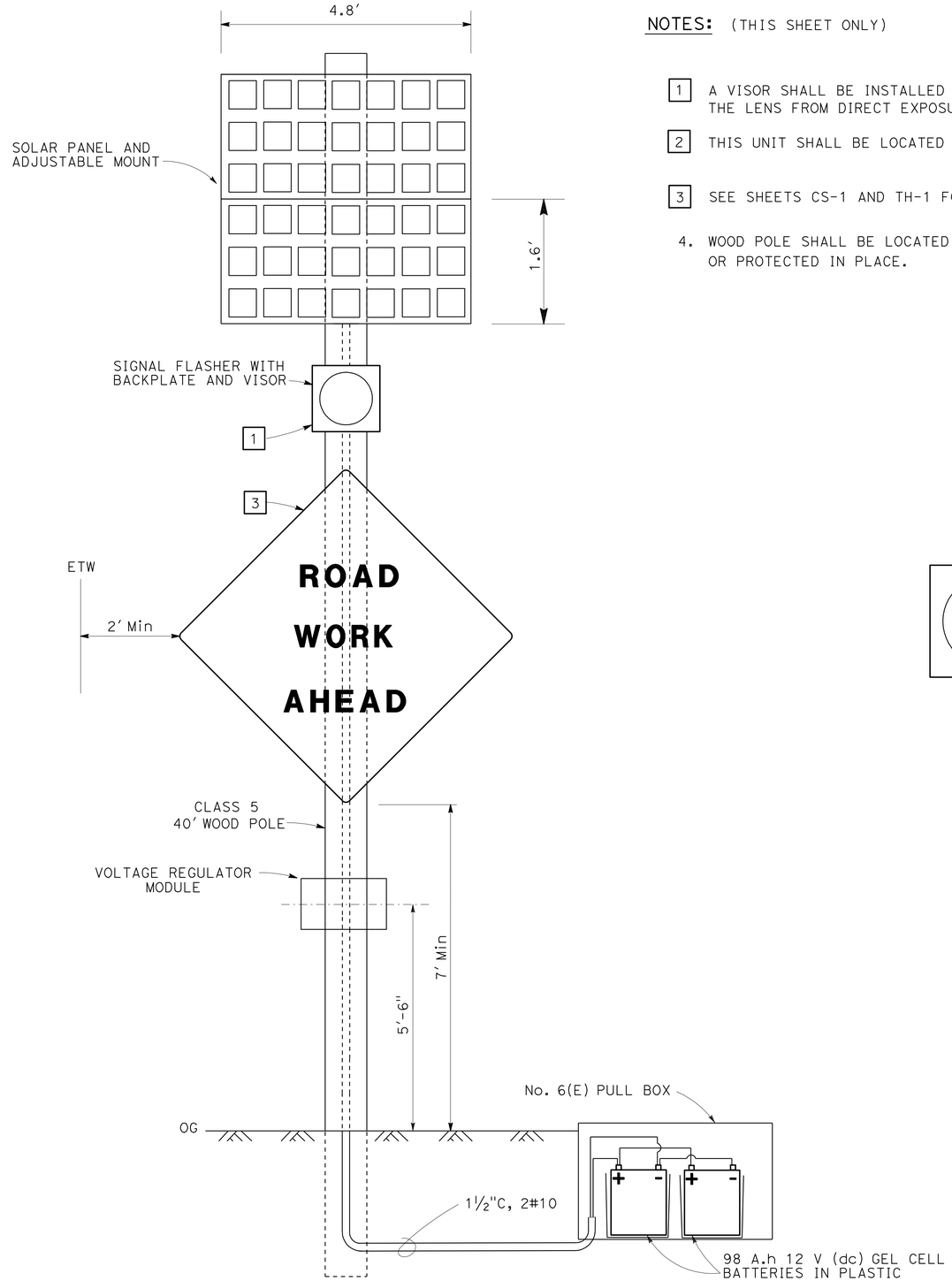

TEMPORARY FLASHING BEACON SYSTEM (SOLAR POWERED)

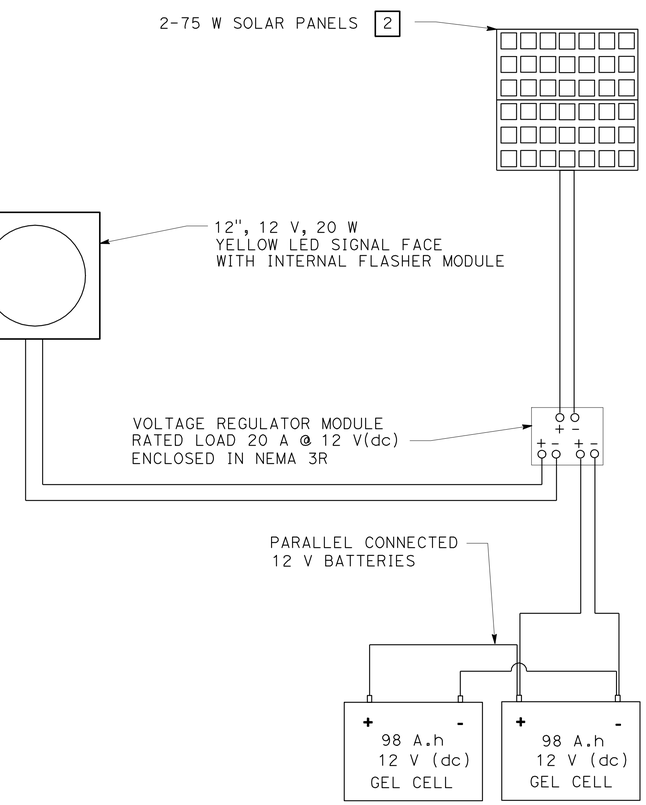

CONNECTION DIAGRAM

NOTE: THIS SHEET ACCURATE FOR ELECTRICAL WORK ONLY

ELECTRICAL
NO SCALE **E-1**

STATE OF CALIFORNIA - DEPARTMENT OF TRANSPORTATION
Caltrans® **TRAFFIC ELECTRICAL**

FUNCTIONAL SUPERVISOR: Troy A. Arseneau
CALCULATED-DESIGNED BY: Brian Finck
CHECKED BY: Scott Shipman
REVISED BY
DATE REVISED

LAST REVISION 00-00-00 | DATE PLOTTED => 06-JAN-2010 | TIME PLOTTED => 07:24

DIST	COUNTY	ROUTE	POST MILES TOTAL PROJECT	SHEET NO.	TOTAL SHEETS
01	Hum	169	18.1,19.5	12	39

Randell D. Hiatt
REGISTERED CIVIL ENGINEER

June 6, 2008
PLANS APPROVAL DATE

REGISTERED PROFESSIONAL ENGINEER
Randell D. Hiatt
No. C50200
Exp. 6-30-09
CIVIL
STATE OF CALIFORNIA

The State of California or its officers or agents shall not be responsible for the accuracy or completeness of electronic copies of this plan sheet.

To accompany plans dated 1-4-10

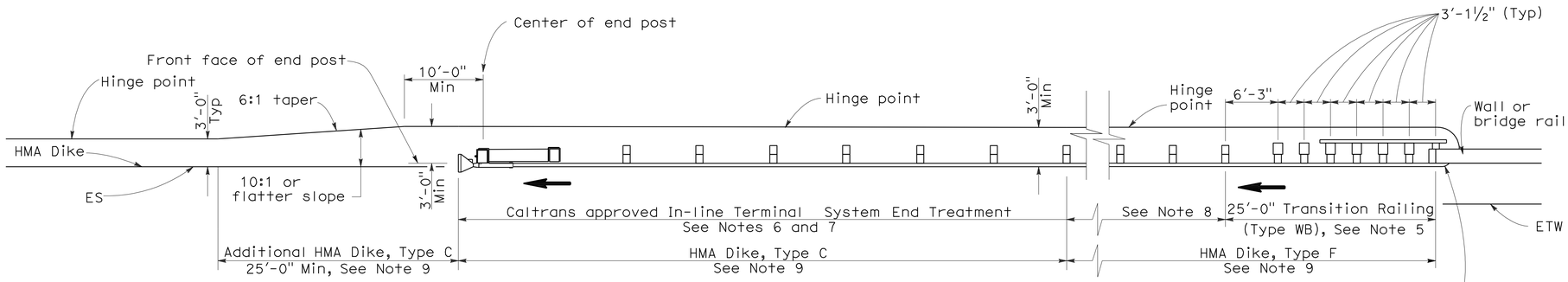

TYPE 12AA LAYOUT

(GUARD RAILING INSTALLATION AT STRUCTURE DEPARTURE WITH AN IN-LINE END TREATMENT AT TRAILING END OF RAILING)
See Notes 9 and 10

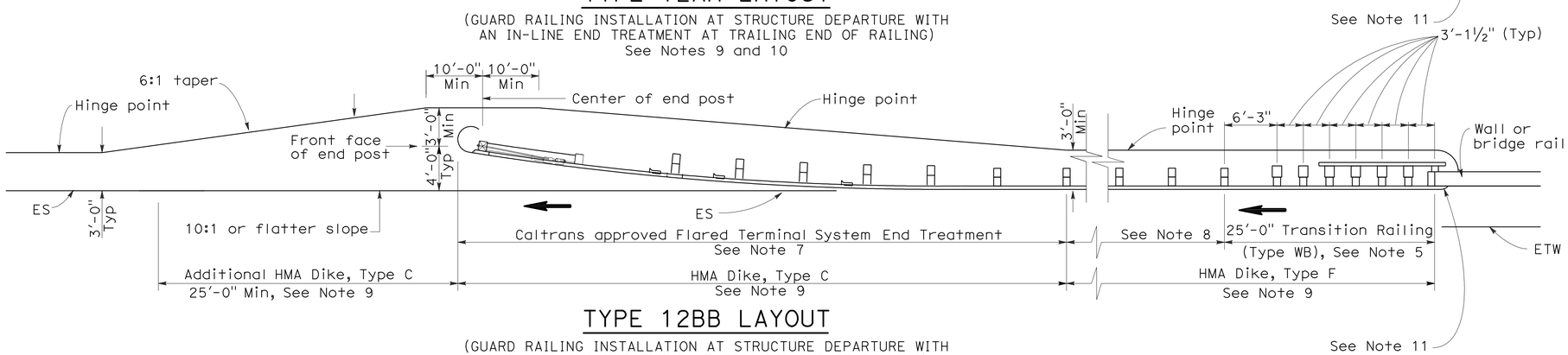

TYPE 12BB LAYOUT

(GUARD RAILING INSTALLATION AT STRUCTURE DEPARTURE WITH A FLARED END TREATMENT AT TRAILING END OF RAILING)
See Notes 9 and 10

NOTES:

1. Line post, blocks and hardware to be used are shown on Standard Plans A77A1, A77A2, A77B1, A77C1 and A77C2.
2. Guard rail post spacing to be 6'-3" center to center, except as otherwise noted.
3. Except as noted, line posts are 6" x 8" x 6'-0" wood with 6" x 8" x 1'-2" wood blocks. W6 x 9 steel posts, 6'-0" in length, with 6" x 8" x 1-2" notched wood blocks or notched recycled plastic blocks may be used for 6" x 8" x 6'-0" wood posts with 6" x 8" x 1'-2" wood blocks where applicable and when specified.
4. Direction of adjacent traffic indicated by ➡.
5. For Transition Railing (Type WB) details for Types 12AA and 12BB Layouts, see Standard Plan A77J4.
6. In-line Terminal System Treatments are used where site conditions will not accommodate a flared end treatment.
7. The type of terminal system to be used will be shown on the Project Plans.
8. Dependent on site conditions (embankment height, side slopes, other fixed objects), it may be advisable to construct additional guard railing (a length equal to multiples of 12'-6" with 6'-3" post spacing) between the transition railing and end treatments.
9. Where placement of dike is required with guard railing installations, see Revised Standard Plan RSP A77C4 for dike positioning details.
10. Type 12AA or Type 12BB Layouts are typically used to the right of traffic departing a structure on two-way conventional highways where the roadbed width across the structure is less than 40 feet.
11. For additional details of typical connections to bridge rail, see Connection Detail CC on Revised Standard Plan RSP A77J2 and Connection Detail HH on Standard Plans A77k2.

STATE OF CALIFORNIA
DEPARTMENT OF TRANSPORTATION

METAL BEAM GUARD RAILING TYPICAL LAYOUTS FOR STRUCTURE DEPARTURE

NO SCALE

RSP A77F4 DATED JUNE 6, 2008 SUPERSEDES STANDARD PLAN A77F4
DATED MAY 1, 2006 - PAGE 57 OF THE STANDARD PLANS BOOK DATED MAY 2006.

REVISED STANDARD PLAN RSP A77F4

2006 REVISED STANDARD PLAN RSP A77F4

12-10-07

DIST	COUNTY	ROUTE	POST MILES TOTAL PROJECT	SHEET NO.	TOTAL SHEETS
01	Hum	169	18.1,19.5	13	39

Randell D. Hiatt
REGISTERED CIVIL ENGINEER

June 5, 2009
PLANS APPROVAL DATE

REGISTERED PROFESSIONAL ENGINEER Randell D. Hiatt No. C50200 Exp. 6-30-09 CIVIL STATE OF CALIFORNIA

The State of California or its officers or agents shall not be responsible for the accuracy or completeness of electronic copies of this plan sheet.

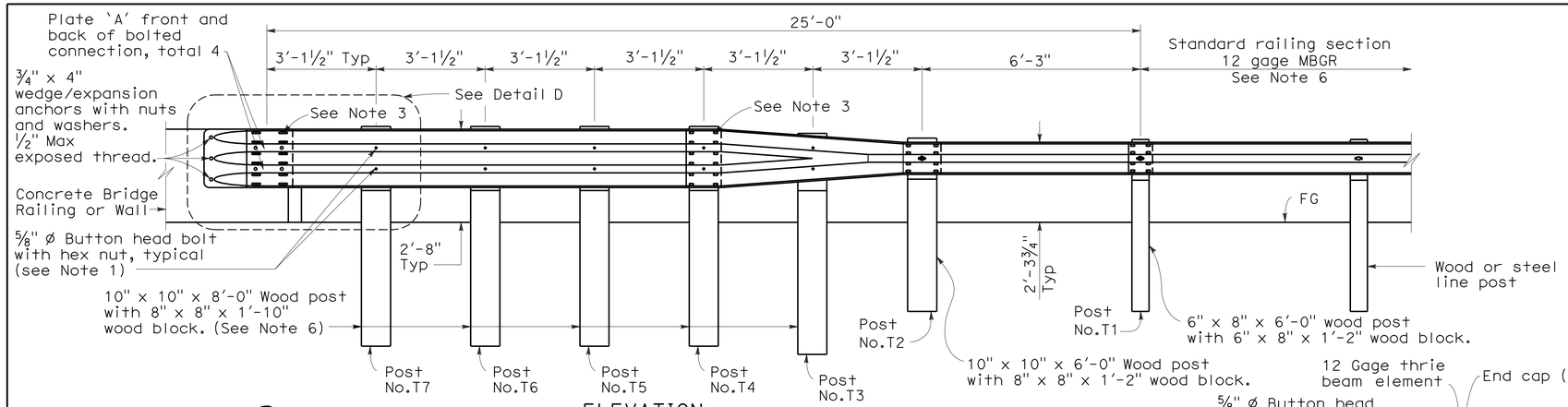

ELEVATION

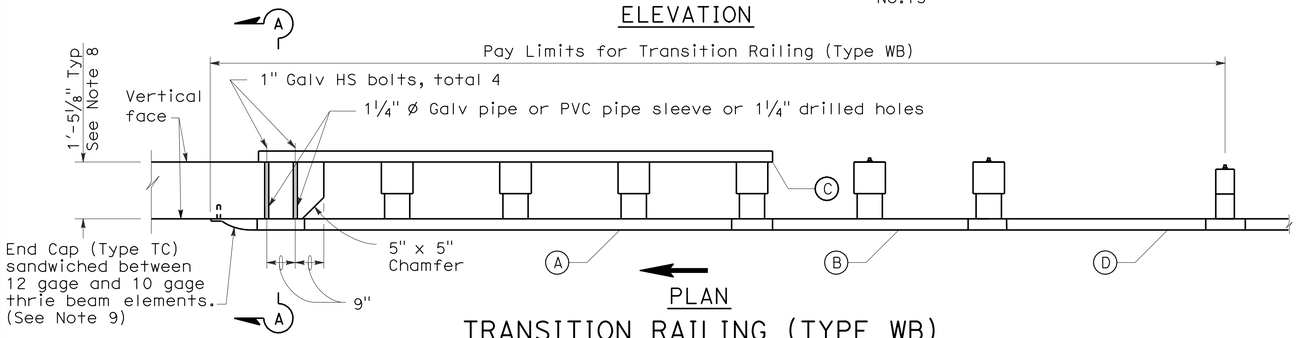

PLAN

TRANSITION RAILING (TYPE WB)

(No Blockout Attachment)

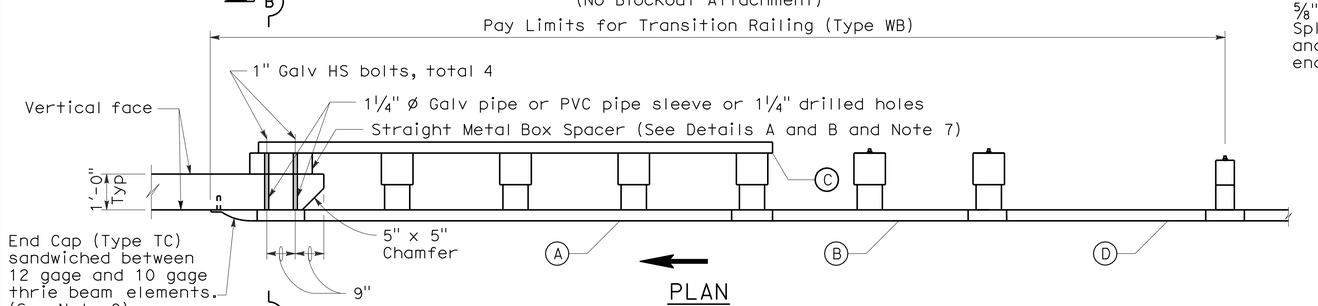

PLAN

TRANSITION RAILING (TYPE WB)

(Blockout Attachment)

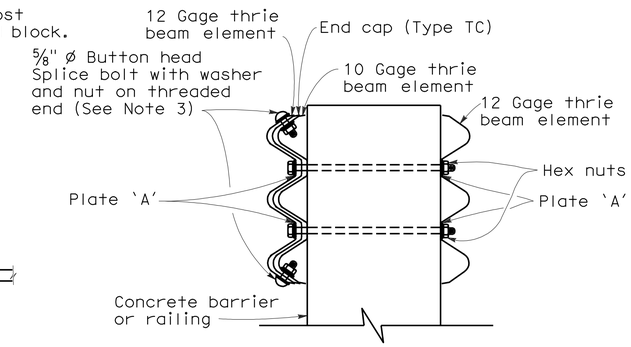

SECTION A-A

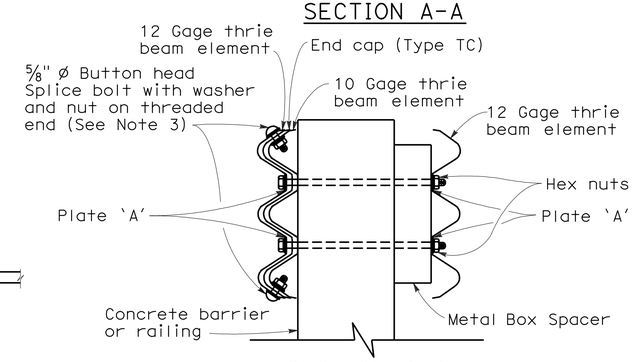

SECTION B-B

LEGEND

(A) Nested thrie beam elements (one 12 gage element nested over one 10 gage element).

(B) One 10 gage "W" beam to thrie beam element.

(C) One 12 gage thrie beam element.

(D) One 10 gage "W" beam rail element (7'-3½" length)

10 gage = 0.135" thick

12 gage = 0.108" thick

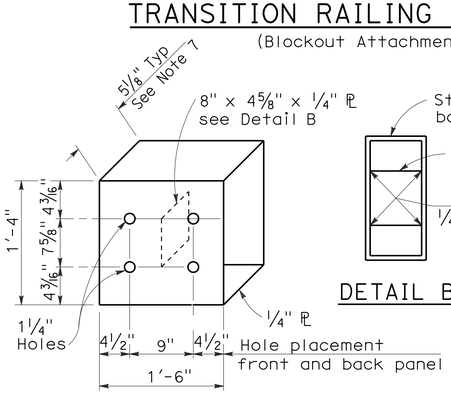

DETAIL A

STRAIGHT METAL BOX SPACER

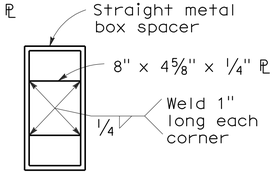

DETAIL B

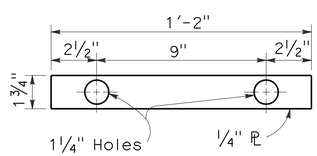

DETAIL C

PLATE 'A'

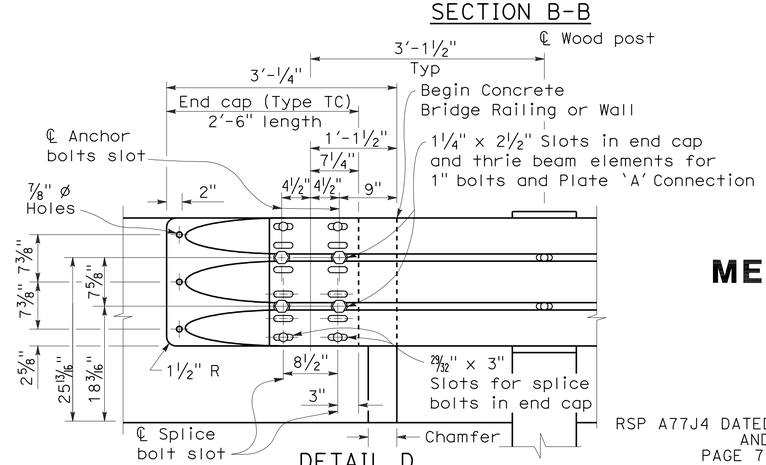

DETAIL D

NOTES:

To accompany plans dated 1-4-10

1. Use 5/8 " Ø Button head bolts and hex nuts for connections to posts. No washer on rail face for bolted connections to post.
2. The nested rail elements, end cap, and 'W' beam to thrie beam element may be spliced together prior to bolting the elements to the wood post and concrete barrier or railing.
3. Exterior splice bolt holes for rail element splices at Post No.T4 and the connection to the concrete barrier or railing shall be the standard 29/32 " x 1 1/8 " slot size. Interior splice bolt holes at these locations may be increased up to 1 1/4 " Ø. Only the top 2 and the bottom 2 splice bolts with washers and nuts are required for rail splices at Post No.T4 and the connection to the concrete barrier or railing.
4. Direction of adjacent traffic indicated by ⟶.
5. The top elevation of Post Nos.T2 through T7 shall not project more than 1" above the top elevation of the rail element.
6. Typically, the railing connected to Transition Railing (Type WB) will be either standard railing section of metal beam guard railing or an approved Caltrans end treatment attached to Post No.T1.
7. The depth of the metal box spacer varies from the 5 1/8 " to 1 1/2 " and is dependent on the width of the concrete railing or wall. The combined dimension for the depth of the metal box spacer plus the width of railing or wall is typically 17 1/8 ". Where the space between the backside of the concrete railing or wall and the rear thrie beam element is less than 1 1/2 ", metal plates similar to Plate 'A' are to be used as spacers.
8. Where the width of the concrete railing or wall is greater than 17 1/8 ", wood blocks are to be used to fill the space created between the backside of Posts No.4 through No.7 and the rear thrie beam element. These wood blocks shall be 8" in width and 1'-2" in length. The dimension between the front thrie beam element and the rear thrie beam element is to match the width of the concrete railing or wall.
9. End cap may be installed over 12 gage and 10 gage thrie beam elements where transition railing is installed on the departure end of bridge railing.

STATE OF CALIFORNIA
DEPARTMENT OF TRANSPORTATION

METAL BEAM GUARD RAILING TRANSITION RAILING (TYPE WB)

NO SCALE

RSP A77J4 DATED JUNE 5, 2009 SUPERSEDES RSP A77J4 DATED JUNE 6, 2008 AND STANDARD PLAN A77J4 DATED MAY 1, 2006 - PAGE 75 OF THE STANDARD PLANS BOOK DATED MAY 2006.

REVISED STANDARD PLAN RSP A77J4

2006 REVISED STANDARD PLAN RSP A77J4

5-14-09

DIST	COUNTY	ROUTE	POST MILES TOTAL PROJECT	SHEET NO.	TOTAL SHEETS
01	Hum	169	18.1,19.5	14	39

Randell D. Hiatt
REGISTERED CIVIL ENGINEER

June 6, 2008
PLANS APPROVAL DATE

REGISTERED PROFESSIONAL ENGINEER
Randell D. Hiatt
No. C50200
Exp. 6-30-09
CIVIL
STATE OF CALIFORNIA

The State of California or its officers or agents shall not be responsible for the accuracy or completeness of electronic copies of this plan sheet.

To accompany plans dated 1-4-10

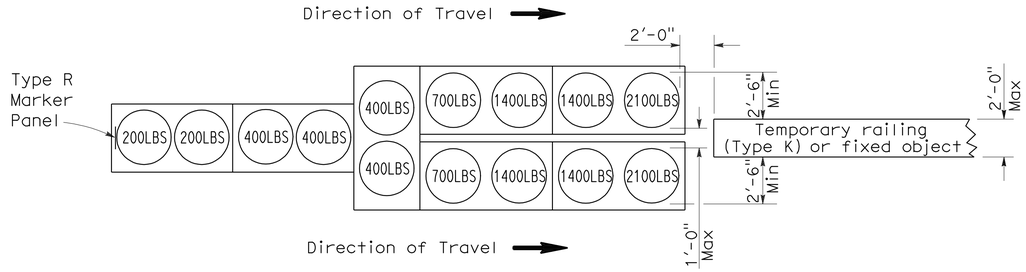

ARRAY 'TU14'

Approach speed 45 mph or more

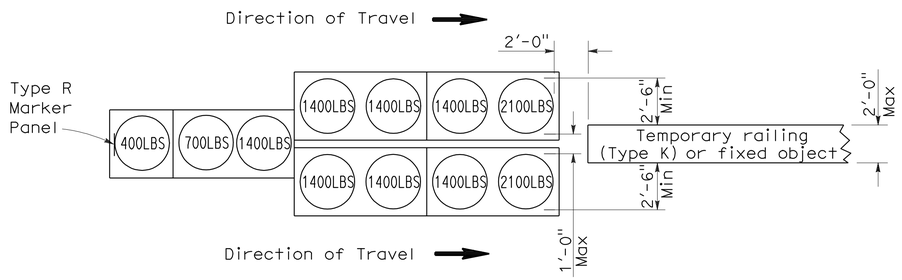

ARRAY 'TU11'

Approach speed less than 45 mph

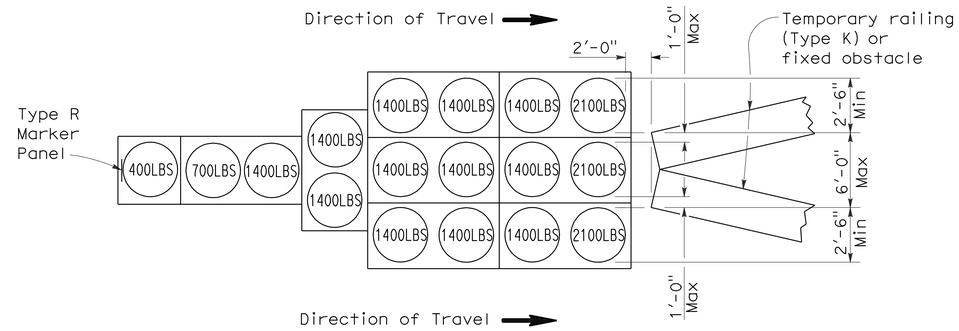

ARRAY 'TU17'

Approach speed less than 45 mph

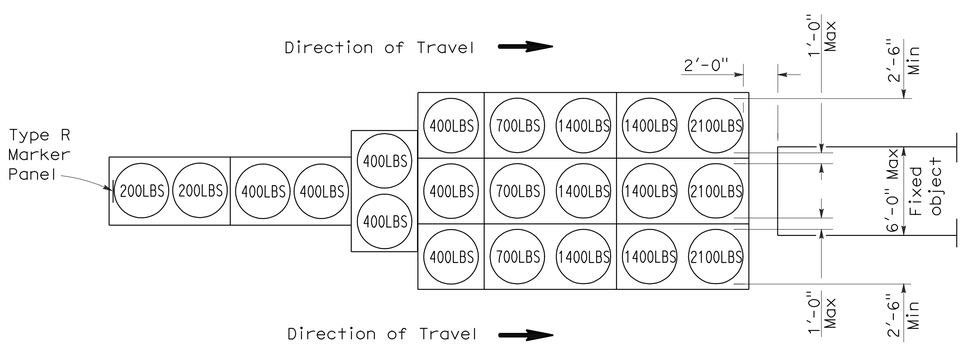

ARRAY 'TU21'

Approach speed 45 mph or more

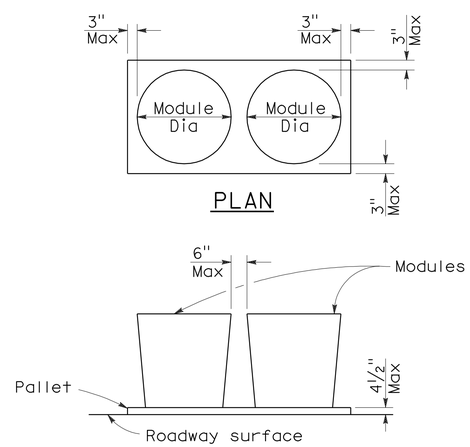

CRASH CUSHION PALLET DETAIL

See Note 7

NOTES:

1. (XXX) Indicates sand filled module location and weight of sand in pounds for each module. Module spacing is based on the greater diameter of the module.
2. All sand weights are nominal.
3. Temporary crash cushion arrays shall not encroach on the traveled way.
4. Place the top of Type R marker panel 1" below the module lid.
5. Refer to Standard Plan A73B for marker details.
6. Approach speeds indicated conform to NCHRP 350 Report criteria.
7. Use of pallets is optional.

STATE OF CALIFORNIA
DEPARTMENT OF TRANSPORTATION

TEMPORARY CRASH CUSHION, SAND FILLED (UNIDIRECTIONAL)

NO SCALE

RSP T1A DATED JUNE 6, 2008 SUPERSEDES STANDARD PLAN T1A
DATED MAY 1, 2006 - PAGE 211 OF THE STANDARD PLANS BOOK DATED MAY 2006.

REVISED STANDARD PLAN RSP T1A

2006 REVISED STANDARD PLAN RSP T1A

5-15-08

DIST	COUNTY	ROUTE	POST MILES TOTAL PROJECT	SHEET NO.	TOTAL SHEETS
01	Hum	169	18.1,19.5	15	39

Randell D. Hiatt
REGISTERED CIVIL ENGINEER

June 6, 2008
PLANS APPROVAL DATE

REGISTERED PROFESSIONAL ENGINEER
Randell D. Hiatt
No. C50200
Exp. 6-30-09
CIVIL
STATE OF CALIFORNIA

The State of California or its officers or agents shall not be responsible for the accuracy or completeness of electronic copies of this plan sheet.

To accompany plans dated 1-4-10

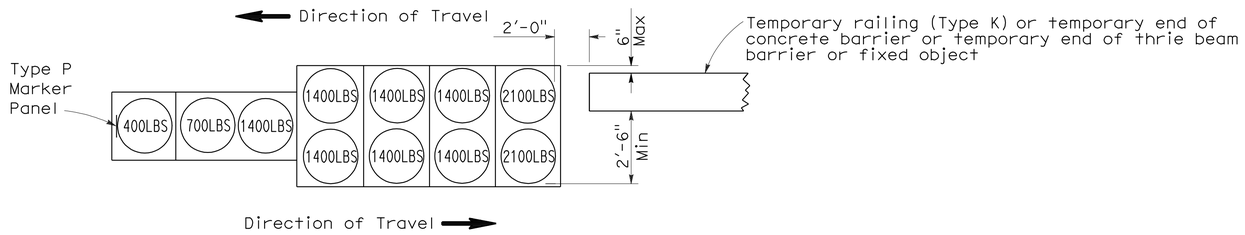

ARRAY 'TB11'

Approach speed less than 45 mph

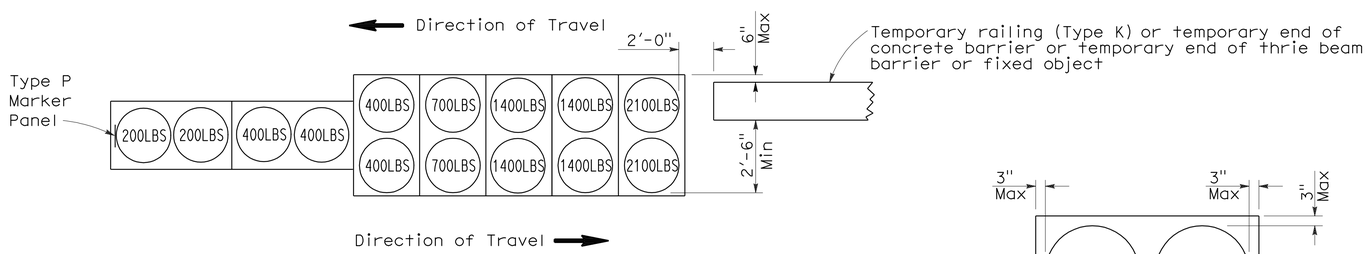

ARRAY 'TB14'

Approach speed 45 mph or more

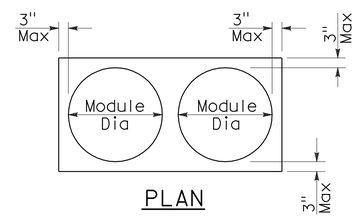

PLAN

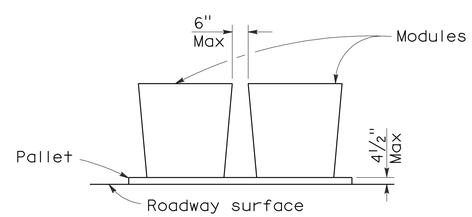

ELEVATION

CRASH CUSHION PALLET DETAIL

See Note 7

NOTES:

1. (XXX) Indicates sand filled module location and weight of sand in pounds for each module. Module spacing is based on the greater diameter of the module.
2. All sand weights are nominal.
3. Temporary crash cushion arrays shall not encroach on the traveled way.
4. Place the Type P marker panel so that the bottom of the panel rests upon the pallet.
5. Refer to Standard Plan A73B for marker details.
6. Approach speeds indicated conform to NCHRP 350 Report criteria.
7. Use of pallets is optional.

STATE OF CALIFORNIA
DEPARTMENT OF TRANSPORTATION

TEMPORARY CRASH CUSHION, SAND FILLED (BIDIRECTIONAL)

NO SCALE

RSP T1B DATED JUNE 6, 2008 SUPERSEDES STANDARD PLAN T1B
DATED MAY 1, 2006 - PAGE 212 OF THE STANDARD PLANS BOOK DATED MAY 2006.

REVISED STANDARD PLAN RSP T1B

2006 REVISED STANDARD PLAN RSP T1B

5-15-08

DIST	COUNTY	ROUTE	POST MILES TOTAL PROJECT	SHEET NO.	TOTAL SHEETS
01	Hum	169	18.1,19.5	16	39

Randell D. Hiatt
REGISTERED CIVIL ENGINEER

June 6, 2008
PLANS APPROVAL DATE

REGISTERED PROFESSIONAL ENGINEER
Randell D. Hiatt
No. C50200
Exp. 6-30-09
CIVIL
STATE OF CALIFORNIA

The State of California or its officers or agents shall not be responsible for the accuracy or completeness of electronic copies of this plan sheet.

To accompany plans dated 1-4-10

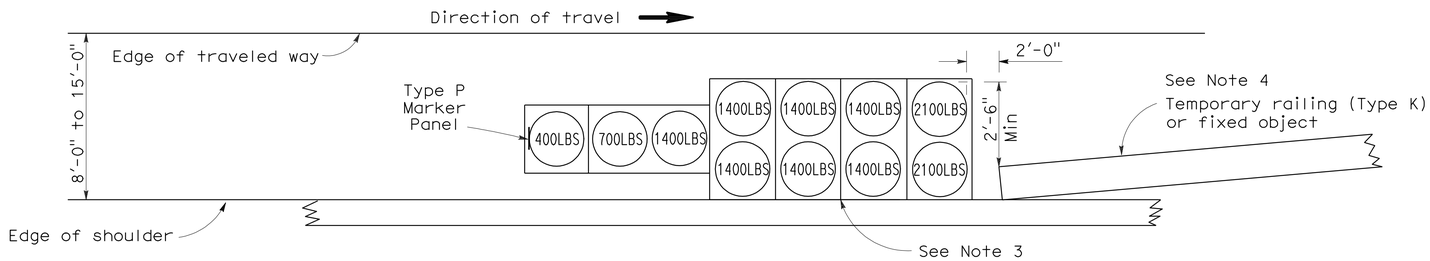

ARRAY 'TS11'

Approach speed less than 45 mph
See Note 9

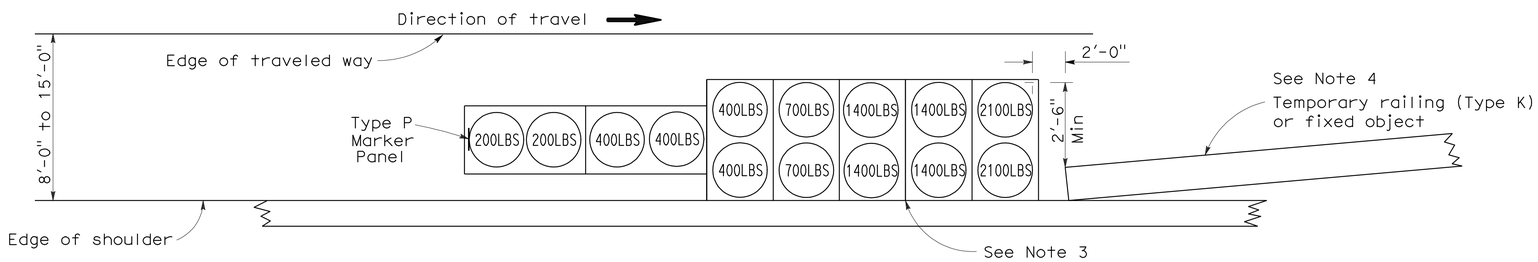

ARRAY 'TS14'

Approach speed 45 mph or more
See Note 9

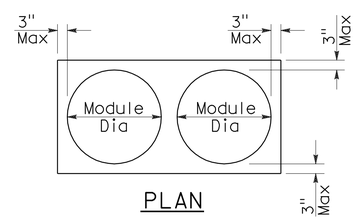

PLAN

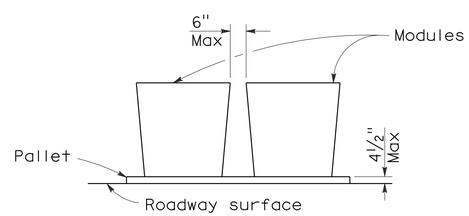

ELEVATION

CRASH CUSHION PALLET DETAIL

See Note 11

NOTES:

1. (XXX) Indicates sand filled module location and weight of sand in pounds for each module. Module spacing is based on the greater diameter of the module.
2. All sand weights are nominal.
3. The temporary crash cushion arrays shown on this plan shall be used only in locations where there will be traffic on one side of the temporary crash cushion array.
4. If the fixed object or approach end of the temporary railing is less than 15'-0" from the edge of traveled way, a temporary crash cushion is required in a construction or work zone.
5. Temporary crash cushion arrays shall not encroach on the traveled way.
6. Arrays for median shoulders shall conform to details shown on this plan for outside shoulders.
7. Place the Type P marker panel so that the bottom of the panel rests upon the pallet and faces traffic.
8. Refer to Standard Plan A73B for marker details.
9. For shoulder widths less than 8'-0", appropriate approved crash cushion protection, other than sand filled modules, shall be provided at fixed objects and at approach ends of temporary railing. The specific type of crash cushion shall be as shown on the project plans or as specified in the Special Provisions, or if not shown on the project plans or specified in the Special Provisions, shall be as approved by the Engineer.
10. Approach speeds indicated conform to NCHRP 350 Report criteria.
11. Use of pallets is optional.

STATE OF CALIFORNIA
DEPARTMENT OF TRANSPORTATION

TEMPORARY CRASH CUSHION, SAND FILLED (SHOULDER INSTALLATIONS)

NO SCALE

RSP T2 DATED JUNE 6, 2008 SUPERSEDES STANDARD PLAN T2
DATED MAY 1, 2006 - PAGE 213 OF THE STANDARD PLANS BOOK DATED MAY 2006.

REVISED STANDARD PLAN RSP T2

2006 REVISED STANDARD PLAN RSP T2

5-15-08

DIST	COUNTY	ROUTE	POST MILES TOTAL PROJECT	SHEET NO.	TOTAL SHEETS
01	Hum	169	18.1,19.5	17	39

Greg W. Edwards
REGISTERED CIVIL ENGINEER

November 17, 2006
PLANS APPROVAL DATE

REGISTERED PROFESSIONAL ENGINEER
Greg W. Edwards
No. C36386
Exp. 6-30-08
CIVIL
STATE OF CALIFORNIA

The State of California or its officers or agents shall not be responsible for the accuracy or completeness of electronic copies of this plan sheet.

To accompany plans dated 1-4-10

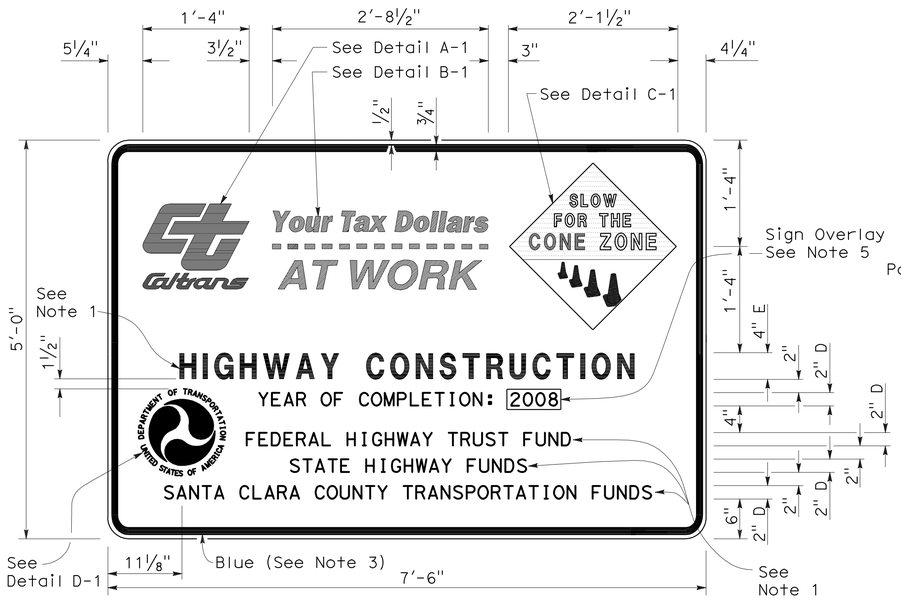

TYPE 1

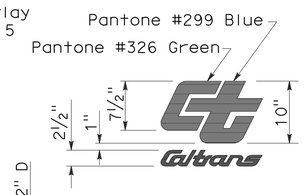

DETAIL A-1

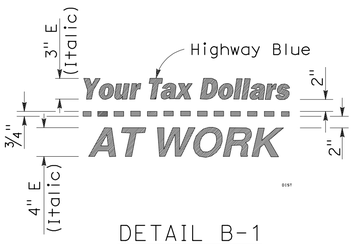

DETAIL B-1
(See Note 3)

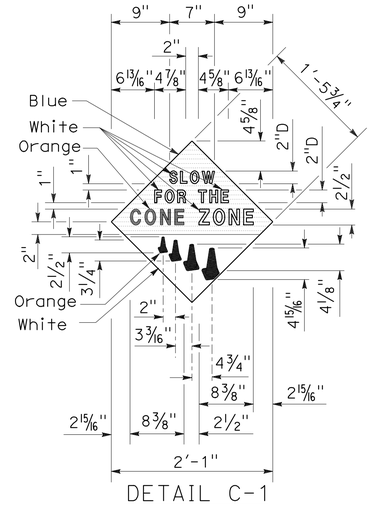

DETAIL C-1
(See Note 4)

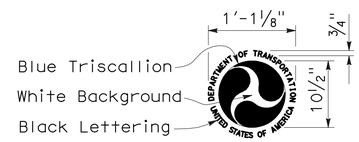

DETAIL D-1
(See Note 6)

NOTES:

1. The sign messages shown for type of project and fund types are examples only. See the Special Provisions for the applicable type of project and fund type messages to be used.
2. Except as otherwise shown, the legend of sign shall be black on a white background (non-reflective).
3. The border of the signs and details "B-1" and "B-2" shall be blue (non-reflective).
4. The diamond in details "C-1" and "C-2" shall be blue for the background of message, " SLOW FOR THE CONE ZONE", and white background for the orange cones. The color and type of font for the "SLOW FOR THE CONE ZONE" message shall be: "SLOW" white D; "FOR THE" white D; "CONE" orange Arial font; "ZONE" white Arial font.
5. Year of completion of project construction shown on the overlay is an example only. See the Special Provisions.
6. Use when the Project involves Federal Highway Trust Fund.

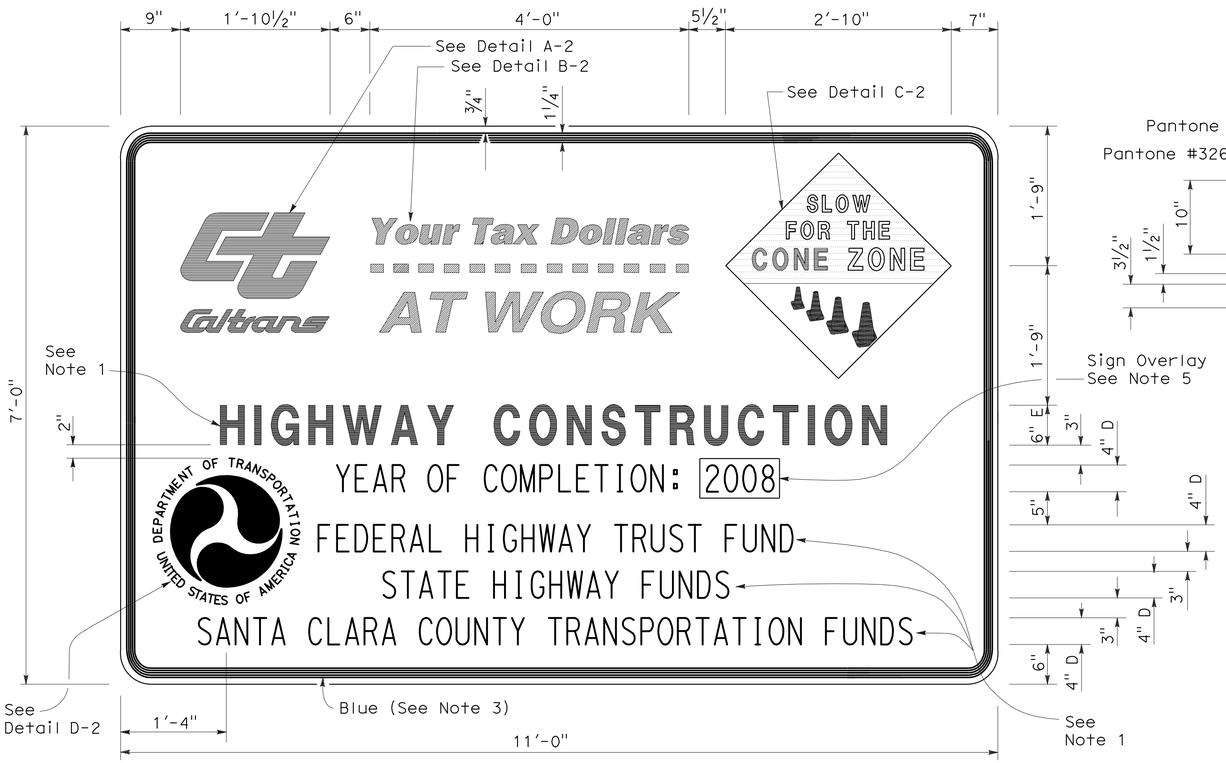

TYPE 2

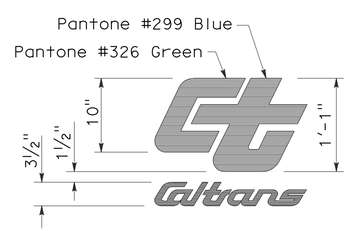

DETAIL A-2

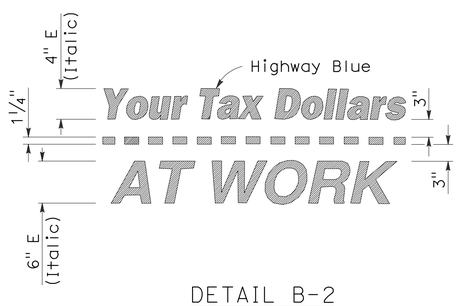

DETAIL B-2
(See Note 3)

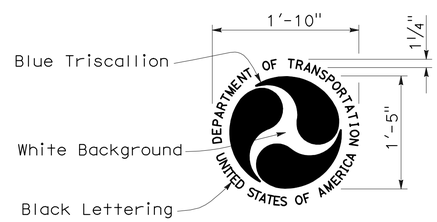

DETAIL D-2
(See Note 6)

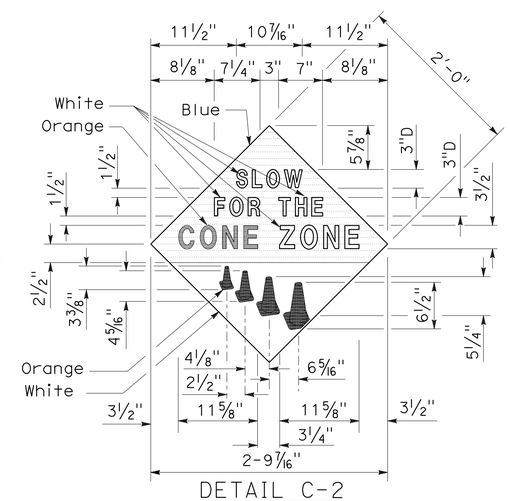

DETAIL C-2
(See Note 4)

STATE OF CALIFORNIA
DEPARTMENT OF TRANSPORTATION

CONSTRUCTION PROJECT FUNDING IDENTIFICATION SIGNS

NO SCALE

RSP T7 DATED NOVEMBER 17, 2006 SUPERSEDES STANDARD PLAN T7
DATED MAY 1, 2006 - PAGE 217 OF THE STANDARD PLANS BOOK DATED MAY 2006.

REVISED STANDARD PLAN RSP T7

2006 REVISED STANDARD PLAN RSP T7

9-7-06

DIST	COUNTY	ROUTE	POST MILES TOTAL PROJECT	SHEET NO.	TOTAL SHEETS
01	Hum	169	18.1,19.5	18	39

LICENSED LANDSCAPE ARCHITECT

April 3, 2009
PLANS APPROVAL DATE

The State of California or its officers or agents shall not be responsible for the accuracy or completeness of electronic copies of this plan sheet.

LICENSED LANDSCAPE ARCHITECT — Robert B. Schott 3025 — Signature — 11-30-10 Renewal Date — 2-25-09 Date — STATE OF CALIFORNIA

To accompany plans dated 1-4-10

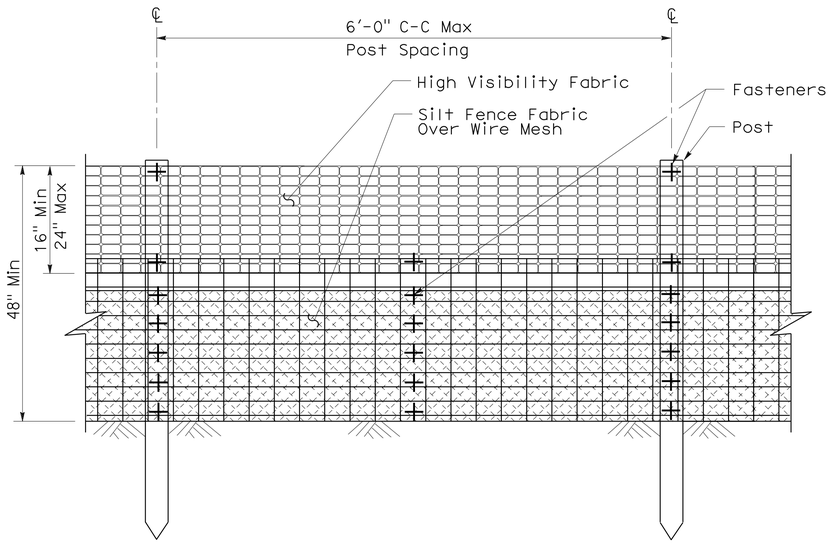

ELEVATION

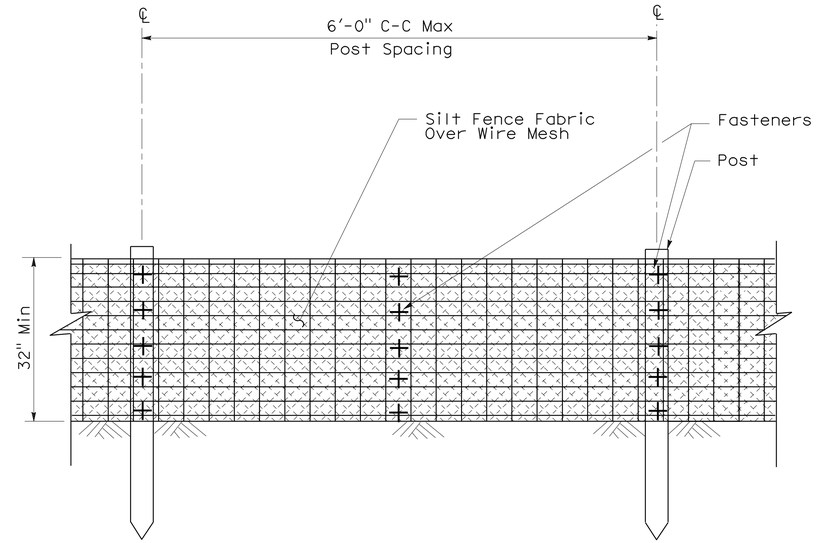

ELEVATION

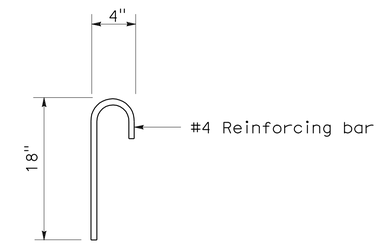

ANCHOR

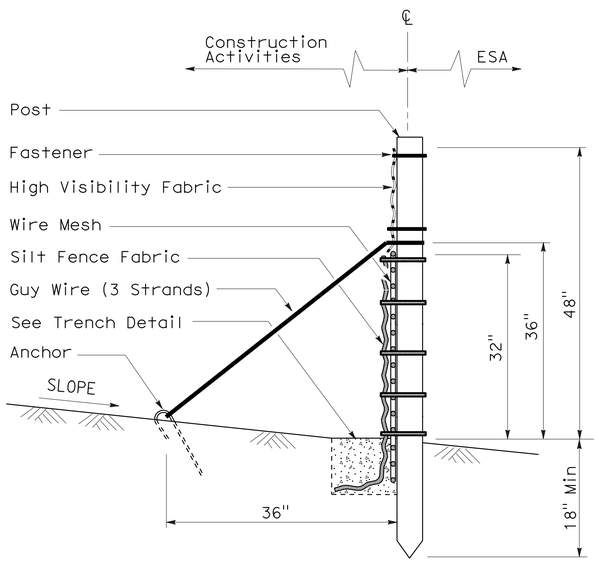

SECTION

TEMPORARY REINFORCED SILT FENCE (TYPE 1)

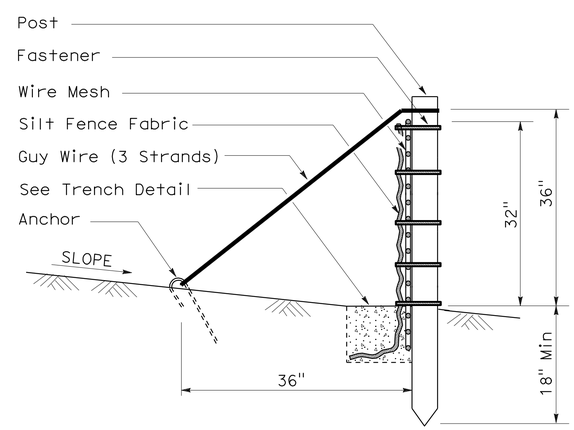

SECTION

TEMPORARY REINFORCED SILT FENCE (TYPE 2)

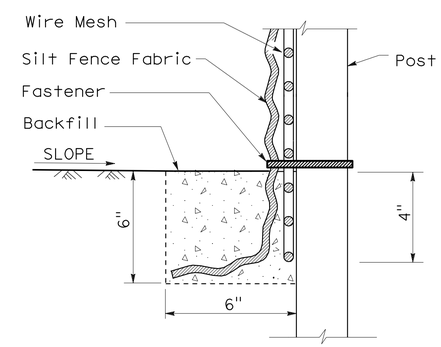

SECTION

TRENCH DETAIL

STATE OF CALIFORNIA
DEPARTMENT OF TRANSPORTATION

TEMPORARY WATER POLLUTION CONTROL DETAILS (TEMPORARY REINFORCED SILT FENCE)

NO SCALE

NSP T60 DATED APRIL 3, 2009 SUPPLEMENTS
THE STANDARD PLANS BOOK DATED MAY 2006.

NEW STANDARD PLAN NSP T60

2006 NEW STANDARD PLAN NSP T60

1-7-09

DIST	COUNTY	ROUTE	POST MILES TOTAL PROJECT	SHEET NO.	TOTAL SHEETS
01	Hum	169	18.1,19.5	19	39

LICENSED LANDSCAPE ARCHITECT

April 3, 2009
PLANS APPROVAL DATE

The State of California or its officers or agents shall not be responsible for the accuracy or completeness of electronic copies of this plan sheet.

LICENSED LANDSCAPE ARCHITECT — Robert B. Schott — 3625 — Signature — 11-30-10 Renewal Date — 2-25-09 Date — STATE OF CALIFORNIA

To accompany plans dated 1-4-10

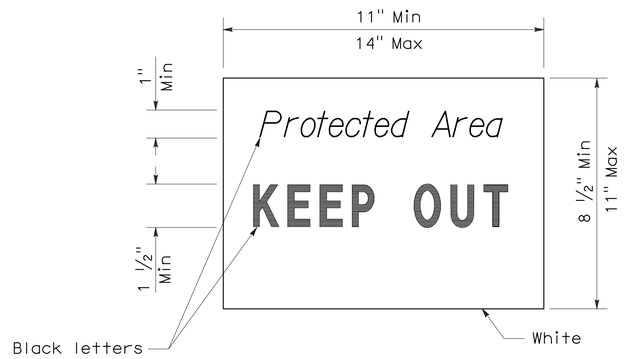

SIGN DETAIL

NOTE:

1. Temporary silt fence and temporary straw bale barrier shown for reference purposes only.

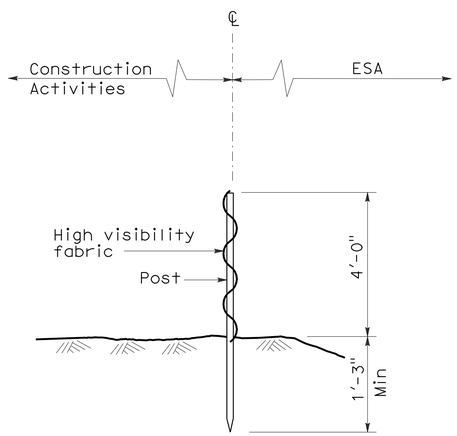

SECTION
TEMPORARY FENCE (TYPE ESA)

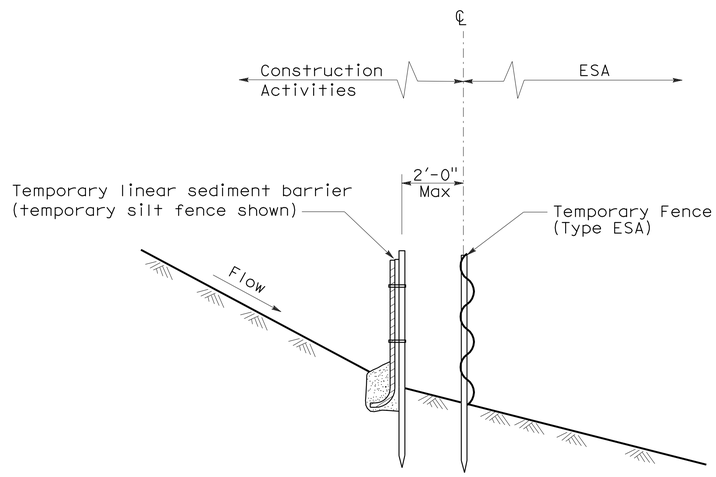

SECTION
PLACEMENT DETAIL
FOR TEMPORARY LINEAR SEDIMENT BARRIER
USED WITH TEMPORARY
FENCE (TYPE ESA)
(See Note 1)

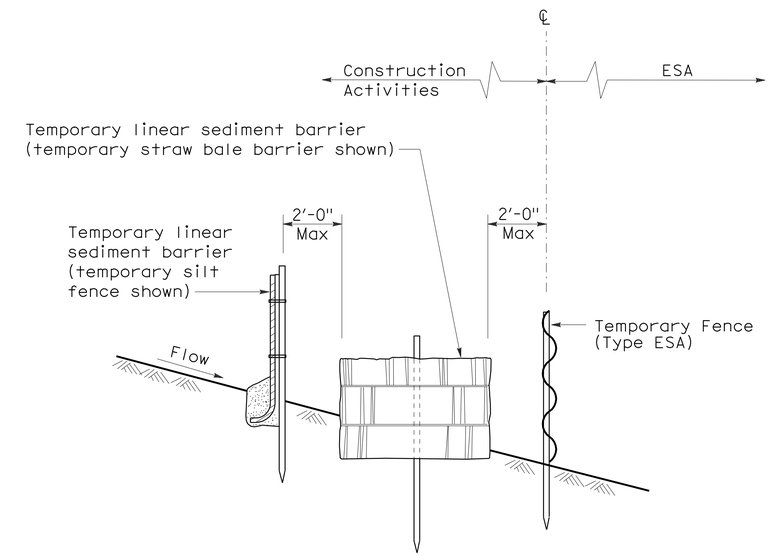

SECTION
PLACEMENT DETAIL
FOR TEMPORARY SILT FENCE
AND TEMPORARY STRAW BALE BARRIER
USED WITH TEMPORARY FENCE (TYPE ESA)
(See Note 1)

STATE OF CALIFORNIA
DEPARTMENT OF TRANSPORTATION

TEMPORARY WATER POLLUTION CONTROL DETAILS [TEMPORARY FENCE (TYPE ESA)]

NO SCALE

NSP T65 DATED APRIL 3, 2009 SUPPLEMENTS
THE STANDARD PLANS BOOK DATED MAY 2006.

NEW STANDARD PLAN NSP T65

2006 NEW STANDARD PLAN NSP T65

DIST	COUNTY	ROUTE	POST MILES TOTAL PROJECT	SHEET NO.	TOTAL SHEETS
01	Hum	169	18.1,19.5	20	39

REGISTERED CIVIL ENGINEER

January 18, 2008
PLANS APPROVAL DATE

REGISTERED PROFESSIONAL ENGINEER
Tillat Satter
No. C42892
Exp. 03-31-08
CIVIL
STATE OF CALIFORNIA

The State of California or its officers or agents shall not be responsible for the accuracy or completeness of electronic copies of this plan sheet.

To accompany plans dated 1-4-10

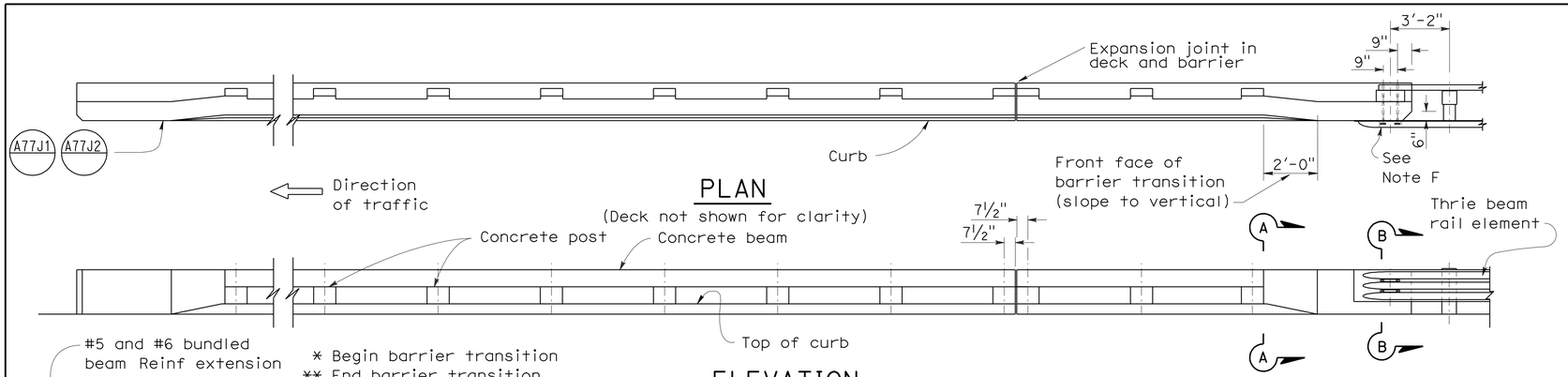

PLAN

(Deck not shown for clarity)

ELEVATION

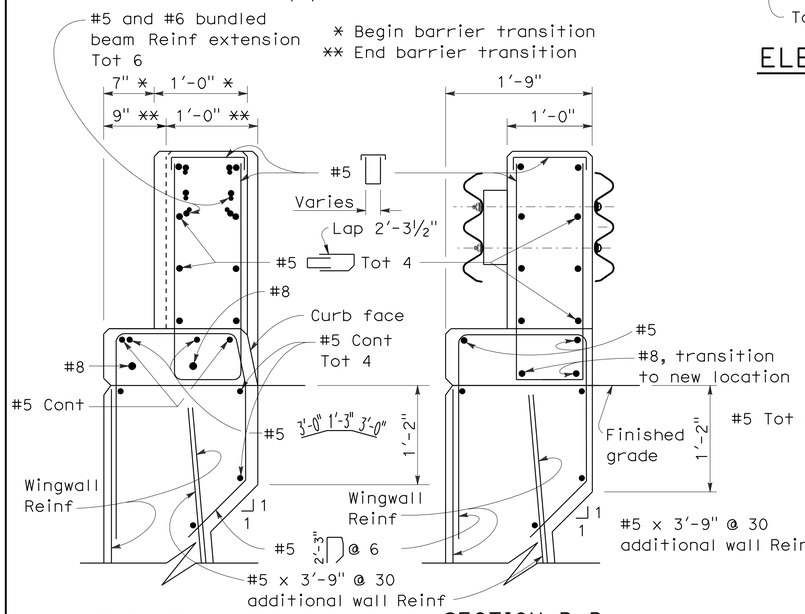

SECTION A-A

SECTION B-B

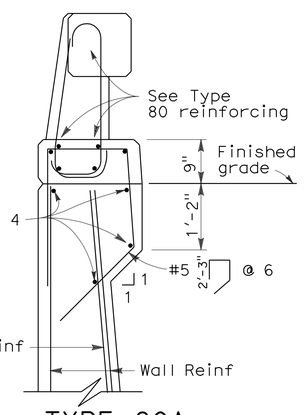

TYPE 80A

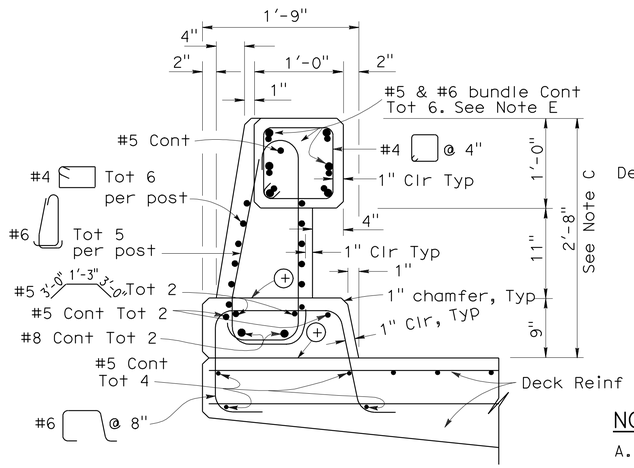

TYPE 80

⊕ Construction joint

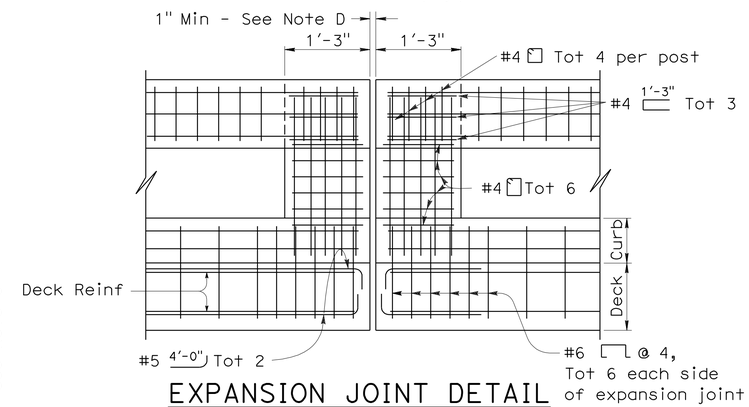

EXPANSION JOINT DETAIL

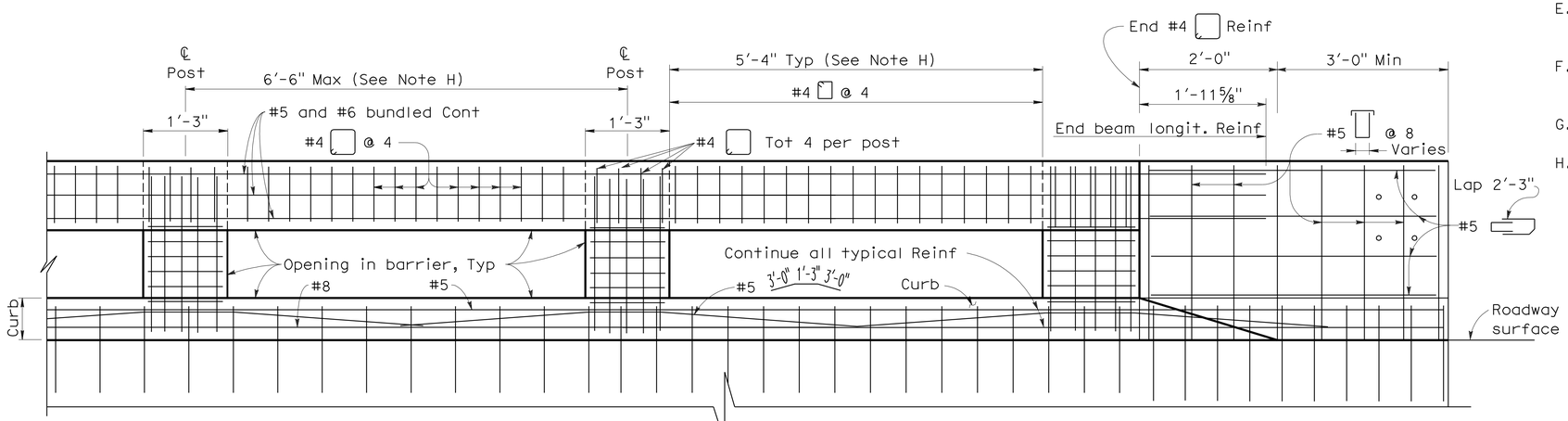

LONGITUDINAL SECTION

(Deck or wingwall reinforcing not shown)

NOTES:

A. Walls are to be backfilled before the barrier is placed.

B. Longitudinal reinforcing steel to stop at all expansion joints.

C. The front face dimensions are to be constant above the finish roadway profile, but the overall height will vary with certain thicknesses of surfacing and roadway slopes.

D. Expansion joint to match deck joint.

E. No lap splicing allowed on the longitudinal rail reinforcing. Splicing shall be staggered.

F. For typical metal railing connection details not shown, see Standard Plans A77J1 and A77J2.

G. Chain link railing is not allowed on Type 80 Barriers.

H. Post to be spaced equally, typically 6'-6" spacing. Post spacing may be reduced where location of hinges or expansion joints or the length of wingwalls will not accommodate the 6'-6" spacing. Maximum see-through availability is to be strived for, where 6'-6" post spacing can not be achieved.

STATE OF CALIFORNIA
DEPARTMENT OF TRANSPORTATION

CONCRETE BARRIER TYPE 80 (SHEET 1 OF 2)

NO SCALE

RSP B11-60 DATED JANUARY 18, 2008 SUPERSEDES STANDARD PLAN B11-60 DATED MAY 1, 2006 - PAGE 276 OF THE STANDARD PLANS BOOK DATED MAY 2006.

REVISED STANDARD PLAN RSP B11-60

2006 REVISED STANDARD PLAN RSP B11-60

10-22-07

DIST	COUNTY	ROUTE	POST MILES TOTAL PROJECT	SHEET NO.	TOTAL SHEETS
01	Hum	169	18.1,19.5	21	39

REGISTERED ELECTRICAL ENGINEER

October 5, 2007
PLANS APPROVAL DATE

REGISTERED PROFESSIONAL ENGINEER Jeffery G. McRae No. E14512 Exp. 6-30-08 ELECTRICAL STATE OF CALIFORNIA

The State of California or its officers or agents shall not be responsible for the accuracy or completeness of electronic copies of this plan sheet.

To accompany plans dated 1-4-10

2006 REVISED STANDARD PLAN RSP ES-1A

ELECTROLIERS

STANDARD TYPES
15, 15D
15 STRUCTURE
21, 21D STRUCTURE
30
31
32
35
36-20A

High mast light pole

Double Arm lighting standard

Existing electrolier

Electrolier foundation (Future installation)

NOTES:

1. Luminaires shall be 310 W HPS when installed on Type 21, 21D, 30, 31, 32, 35 and 36-20A Standards, unless otherwise specified. Luminaires shall be 200 W HPS when installed on other type standards or poles, unless otherwise specified.
2. Luminaires shall be the cutoff type, ANSI Type Ⅲ medium cutoff lighting distribution, unless otherwise specified.
3. Variations noted adjacent to symbol on project plans.

Electrolier (see project notes or project plans)

Luminaire on wood pole

STANDARD NOTES:

- AB — Abandon. If applied to conduit, remove conductors.
- BC — Install pull box in existing conduit run.
- BP — Pedestrian barricade, type as indicated on plan.
- CB — Install conduit into existing pull box.
- CC — Connect new and existing conduit. Remove existing conductors and install conductors as indicated.
- CF — Conduit to remain for future use. Remove conductors. Install pull wire or rope.
- DH — Detector handhole.
- FA — Foundation to be abandoned.
- IS — Install sign on signal mast arm.
- NS — No slip base on standard.
- PEC — Photoelectric control.
- PEU — Photoelectric unit.
- RC — Equipment or material to be removed and become the property of the Contractor.
- RE — Remove electrolier, fuses and ballast. Tape ends of conductors.
- RL — Relocate equipment.
- RR — Remove and reuse equipment.
- RS — Remove and salvage equipment.
- SC — Splice new to existing conductors.
- SD — Service disconnect.
- SF — Standard to remain for future use. Remove luminaire, pole conductors, fuses and ballast.
- TSP — Telephone service point.

ABBREVIATIONS AND EQUIPMENT DESIGNATIONS

PROPOSED	EXISTING	
BBS	bbs	Battery backup system
BC	bc	Bolt circle
C	C	Conduit
CCTV	cctv	Closed circuit television
CKT	ckt	Circuit
CMS	cms	Changeable message sign
DLC	dlc	Loop detector lead-in cable
EMS	ems	Extinguishable message sign
EVC	evc	Emergency vehicle cable
EVD	evd	Emergency vehicle detector
FB	fb	Flashing beacon
FBCA	fbca	Flashing beacon control assembly
FBS	fbs	Flashing beacon with slip base
FO	fo	Fiber optic
G	G	Ground (Equipment Grounding Conductor)
GFCI	GFCI	Ground fault circuit interrupt
HAR	har	Highway advisory radio
HEX	hex	Hexagonal
HPS	hps	High pressure sodium
IISNS	iisns	Internally illuminated street name sign
ISL	isl	Induction sign lighting
LED	led	Light emitting diode
LMA	lma	Luminaire mast arm
LPS	lps	Low pressure sodium
LTG	ltg	Lighting
LUM	lum	Luminaire
MAT	mat	Mast arm mounting vehicle signal faces, top attachment
MAS	mas	Mast arm mounting vehicle signal faces, side attachment
MAS-4A	mas-4A	Mast arm mounting vehicle signal faces, side attachment - 4 signal section
MAS-4B	mas-4B	
MAS-4C	mas-4C	
MAS-5A	mas-5A	Mast arm mounting vehicle signal faces, side attachment - 5 signal section
MAS-5B	mas-5B	
MC	mc	Mercury contactor
M/M	m/m	Multiple to multiple transformer
MT	mt	Conduit with pull wire or rope only
MTG	mtg	Mounting
	mv	Mercury vapor lighting fixture
N	N	Neutral (Grounded Conductor)
NC	NC	Normally closed
NO	NO	Normally open
PB	pb	Pull box
PEC	pec	Photoelectric control (Type Ⅰ, Ⅱ, Ⅲ, Ⅳ or Ⅴ as shown)
PED	ped	Pedestrian
PEU	peu	Photoelectric unit
PPB	ppb	Pedestrian push button
RL		Relocated equipment
RM	rm	Ramp metering
SB	sb	Slip base
SIC	sic	Signal interconnect cable
SIG	sig	Signal
SMA	sma	Signal mast arm
SNS	sns	Street name sign
SP	sp	Service point
TDC	tdc	Telephone demarcation cabinet
TMS	tms	Traffic monitoring station
TOS	tos	Traffic Operations System
VEH	veh	Vehicle
XFMR	xfmr	Transformer
COMM	comm	Communication
RWIS	rwis	Roadway weather information system

SOFFIT AND WALL MOUNTED LUMINAIRES

Pendant, 70 W HPS unless otherwise specified.

Flush, 70 W HPS unless otherwise specified.

Wall surface, 70 W HPS unless otherwise specified.

Existing soffit or wall luminaire to remain unmodified.

Existing soffit or wall luminaire to be modified as specified.

NOTE:

Arrow indicates "street side" of luminaire.

STATE OF CALIFORNIA
DEPARTMENT OF TRANSPORTATION

ELECTRICAL SYSTEMS (SYMBOLS AND ABBREVIATIONS)

NO SCALE

RSP ES-1A DATED OCTOBER 5, 2007 SUPERSEDES STANDARD PLAN ES-1A DATED MAY 1, 2006 - PAGE 400 OF THE STANDARD PLANS BOOK DATED MAY 2006.

REVISED STANDARD PLAN RSP ES-1A

DIST	COUNTY	ROUTE	POST MILES TOTAL PROJECT	SHEET NO.	TOTAL SHEETS
01	Hum	169	18.1,19.5	22	39

REGISTERED ELECTRICAL ENGINEER

October 5, 2007
PLANS APPROVAL DATE

REGISTERED PROFESSIONAL ENGINEER Jeffery G. McRae No. E14512 Exp. 6-30-08 ELECTRICAL STATE OF CALIFORNIA

The State of California or its officers or agents shall not be responsible for the accuracy or completeness of electronic copies of this plan sheet.

To accompany plans dated 1-4-10

CONDUIT

PROPOSED	EXISTING	
		Lighting Conduit, unless otherwise indicated or noted
		Traffic signal conduit
C	c	Communication conduit
T	t	Telephone conduit
F	f	Fire alarm conduit
FO	fo	Fiber optic conduit
		Conduit termination (RSP ES-9A C)
R	r	Conduit riser in/on structure or service pole

SERVICE EQUIPMENT

PROPOSED	EXISTING	
OH	oh	Overhead lines
U	U	Wood pole "U" indicates utility owned
		Pole guy with anchor
		Utility transformer - ground mounted
III		Service equipment enclosure type
		Service equipment enclosure door indicates front of enclosure
T	t	Telephone demarcation cabinet

POLE-MOUNTED SERVICE DESIGNATION

Type of installation

TYPE H SERVICE - 28'-10" ← Pole height above grade

ILLUMINATED OVERHEAD SIGN

PROPOSED	EXISTING	
		Overhead sign - Single post
		Overhead sign - Two post
		Overhead sign - Mounted on structure
		Overhead sign with electrolier

SIGNAL EQUIPMENT

PROPOSED	EXISTING	
		Pedestrian signal face
		Pedestrian push button post
		Pedestrian barricade
		Vehicle signal face (with backplate, 3-Section: red, yellow and green)
		Vehicle signal face with angle visors
PV	PV	Modifications of basic symbols: "L" indicates all non-arrow sections louvered "LG" indicates louvered green section only "PV" indicates 12" programmed visibility sections "8" indicates all 8" sections (only when specified)
		Type 15TS and Vehicle signal face
		Vehicle signal face with red, yellow and green left arrow sections
		Vehicle signal face with red and yellow sections and up green arrow
		Vehicle signal face (5 Section) with red, yellow and green sections and yellow and green right arrows
		Type 1 Standard and attached vehicle signal faces
		Standard with signal mast arm only and attached vehicle signal faces and internally illuminated street name sign
		Type 33 Standard, Left-turn vehicle signal face and sign
		Standard with luminaire and signal mast arms and attached vehicle signal faces
		Cantilever flashing beacon Type 9 Frame, with a sign unless otherwise specified or indicated
		Type 15-FBS Standard with two vehicle signal face sections with lens, backplate and visor with a sign
R	Y	Flashing beacon. One vehicle signal face section with lens, backplate and visor. "R" indicates red indication, "Y" indicates yellow indication
		Controller assembly. Door indicates front of cabinet

SIGNAL EQUIPMENT Cont

PROPOSED	EXISTING	
		Guard post
		Type 1 Standard with "Meter On" sign
		Emergency Vehicle detector

NOTES:

1. All signal sections shall be 12" unless shown otherwise.
2. Signal heads shall be provided with backplates unless shown otherwise.
3. Signal indication shall be LED.

STATE OF CALIFORNIA
DEPARTMENT OF TRANSPORTATION

ELECTRICAL SYSTEMS (SYMBOLS AND ABBREVIATIONS)

NO SCALE

RSP ES-1B DATED OCTOBER 5, 2007 SUPERCEDES STANDARD PLAN ES-1B DATED MAY 1, 2006 - PAGE 401 OF THE STANDARD PLANS BOOK DATED MAY 2006.

REVISED STANDARD PLAN RSP ES-1B

2006 REVISED STANDARD PLAN RSP ES-1B

7-10-07

DIST	COUNTY	ROUTE	POST MILES TOTAL PROJECT	SHEET NO.	TOTAL SHEETS
01	Hum	169	18.1,19.5	23	39

REGISTERED ELECTRICAL ENGINEER

October 5, 2007
PLANS APPROVAL DATE

REGISTERED PROFESSIONAL ENGINEER Jeffery G. McRae No. E14512 Exp. 6-30-08 ELECTRICAL STATE OF CALIFORNIA

The State of California or its officers or agents shall not be responsible for the accuracy or completeness of electronic copies of this plan sheet.

To accompany plans dated 1-4-10

EQUIPMENT IDENTIFICATION

ILLUMINATED SIGN IDENTIFICATION NUMBER:

Sign No. 12345
10 ISL SCI 1.0

- Sign number - Place on post or structure
- Transformer rating (kVA)
- Lighting control type
- Number and type of fixtures

Do NOT place on standard or structure

ELECTROLIER OR EQUIPMENT IDENTIFICATION NUMBER:

12345 - 15'-0"

- Mast arm length, if shown. Do not place on standard or structure.
- Equipment number - Place on standard or structure. Existing equipment numbers are shown in parenthesis

CONDUIT AND CONDUCTOR IDENTIFICATION:

1½"C, 2#10, 15#14, 2 DLC

- Number and size of conductors and cables
- Size of conduit in inches

Ø1, Ø2, Ø2P, etc.	Traffic phase identification for signal faces, detectors and phase diagrams
1 2 3	Project note numbers
A B C	Equipment description, installation or item numbers
1 2 3	Conduit run numbers

SIGNAL AND LIGHTING STANDARD (TYPICAL DESIGNATION):

19A - 3 - 100

- Wind velocity = 100 mph
- Case 3 arm loading
- Standard type
- Standard Plan sheet number
- Detail number or letter

MISCELLANEOUS EQUIPMENT

PROPOSED	EXISTING	
CMS	cms	Changeable message sign
		Closed circuit television camera
		Highway advisory radio pole and antenna
EMS	ems	Extinguishable message sign
M V	m v	Detection device M = Microwave sensor V = Video image sensor

WIRING DIAGRAM LEGEND

P	Pole
CB	Circuit breaker
A	Ampere
V	Volt
M	Metered
UM	Unmetered
NB	Neutral bus
GB	Ground bus
G	Equipment grounding conductor
N	Grounded conductor (Neutral)

- External conductor
- Conductor or bus
- Tie point
- Contactor coil
- Contactor, Contact NO
- Terminal blocks
- Contactor, Contact NC
- Enclosure bond
- Grounding electrode
- Circuit breaker
- Receptacle

PULL BOXES

PROPOSED	EXISTING	
		Pull box-No. 5 unless otherwise indicated or noted.
3	9A(21)	Pull box-Additional designations or descriptions

3 = No. 3½ pull box
5 = No. 5 pull box
6 = No. 6 pull box
7 = No. 7 (Ceiling pull box)
8 = No. 8 (Pendant soffit pull box)
9 = No. 9 pull box
9A = No. 9A pull box

(C) = Communications pull box
(E) = Pull box with extension
(S) = Sprinkler control pull box
(21) = Anchor bolts and conduit for future installation of Type 21 Standard
(T) = Traffic pull box

VEHICLE DETECTORS

5 J 9 U

- Vehicle detector designation
- U = Upper
  L = Lower
- Slot number in input file
- Input file (I or J)
- Phase

PROPOSED	EXISTING	
		Type A detector loop. Outline of sawcut shown.
		Type B detector loop. Outline of sawcut shown.
		Type C detector loop. Outline of sawcut shown.
		Type D detector loop. Outline of sawcut shown.
		Type E detector loop. Outline of sawcut shown.
		Type Q detector loop. Outline of sawcut shown.
		Magnetic detector
DH	dh	Detector handhole
		Microwave or video detection zone

STATE OF CALIFORNIA
DEPARTMENT OF TRANSPORTATION

ELECTRICAL SYSTEMS (SYMBOLS AND ABBREVIATIONS)

NO SCALE

RSP ES-1C DATED OCTOBER 5, 2007 SUPERCEDES STANDARD PLAN ES-1C DATED MAY 1, 2006 - PAGE 402 OF THE STANDARD PLANS BOOK DATED MAY 2006.

REVISED STANDARD PLAN RSP ES-1C

2006 REVISED STANDARD PLAN RSP ES-1C

DIST	COUNTY	ROUTE	POST MILES TOTAL PROJECT	SHEET No	TOTAL SHEETS
01	Hum	169	18.1,19.5	24	39

REGISTERED CIVIL ENGINEER — DATE 4-01-09

1-4-10
PLANS APPROVAL DATE

REGISTERED PROFESSIONAL ENGINEER — Erika Lynn Ward — No. C66140 — Exp. 6-30-10 — CIVIL — STATE OF CALIFORNIA

The State of California or its officers or agents shall not be responsible for the accuracy or completeness of electronic copies of this plan sheet.

Notes:

1. OG elevations are approximate.
2. FG shall be subject to approval by the Engineer.
3. For "General Notes", see "Foundation Plan" sheet.
4. For "Detail A", see "Details No. 1" sheet.
5. For Steel Soldier Pile No. 1 to No. 17 and Pile No. 22 to No. 39 use section W14 x 120. For Steel Soldier Pile No. 18 to No. 21 use section W14 x 159.

✳ See "Road Plans"

✳✳ See "Architectural Treatment" sheet

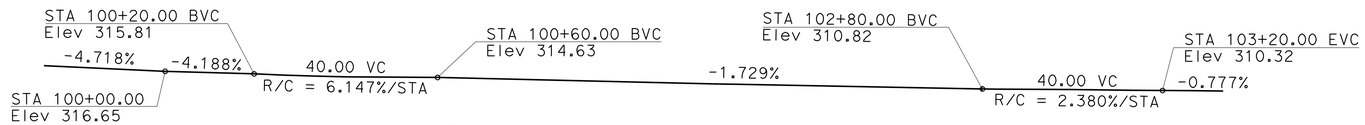

℄ ROUTE 169 = "B" LINE
PROFILE GRADE
No Scale

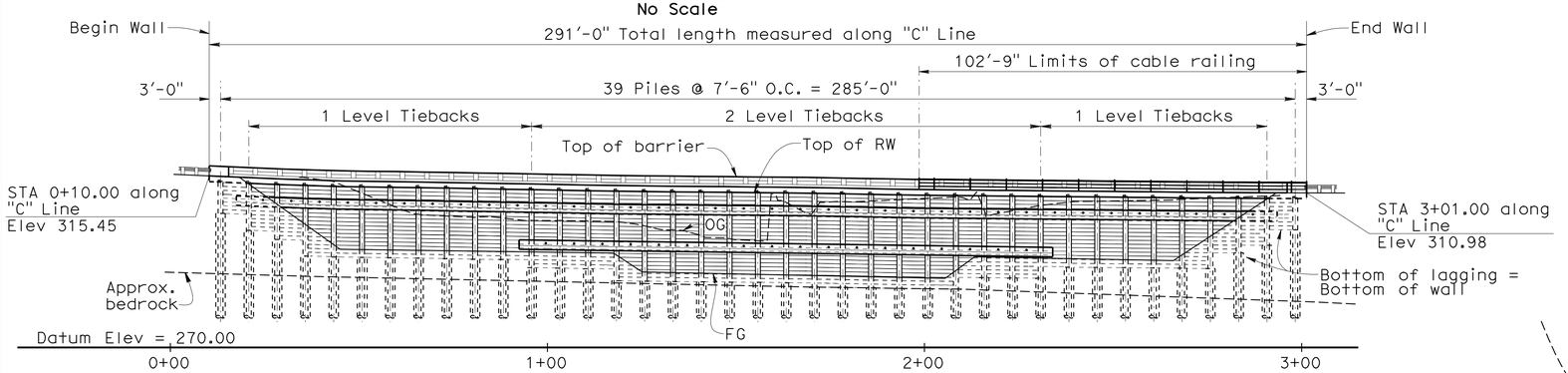

DEVELOPED ELEVATION
1" = 20'

QUANTITIES

REMOVE RETAINING WALL	LUMP	SUM
STRUCTURE EXCAVATION (SOLDIER PILE WALL)	615	CY
STRUCTURE BACKFILL (SOLDIER PILE WALL)	125	CY
LEAN CONCRETE BACKFILL	105	CY
30" DRILLED HOLE	1,295	LF
STEEL SOLDIER PILE (W14X120)	1,295	LF
STEEL SOLDIER PILE (W14X159)	148	LF
TIEBACK ANCHOR	54	EA
STRUCTURAL CONCRETE, RETAINING WALL	73	CY
STRUCTURAL CONCRETE, BARRIER SLAB	108	CY
CLASS 3 CONCRETE (BACKFILL)	125	CY
BAR REINFORCING STEEL (RETAINING WALL)	50,600	LB
TIMBER LAGGING	30	MFBM
CLEAN AND PAINT STEEL SOLDIER PILE	LUMP	SUM
CABLE RAILING	103	LF
CONCRETE BARRIER (TYPE 80 MODIFIED)	300	LF

INDEX TO PLANS

Sheet No.	Name
1	GENERAL PLAN
2	STRUCTURE PLAN NO. 1
3	STRUCTURE PLAN NO. 2
4	FOUNDATION PLAN
5	DETAILS NO. 1
6	DETAILS NO. 2
7	DETAILS NO. 3
8	TIEBACK DETAILS
9	ARCHITECTURAL TREATMENT DETAILS
10	LOG OF TEST BORINGS 1 OF 7
11	LOG OF TEST BORINGS 2 OF 7
12	LOG OF TEST BORINGS 3 OF 7
13	LOG OF TEST BORINGS 4 OF 7
14	LOG OF TEST BORINGS 5 OF 7
15	LOG OF TEST BORINGS 6 OF 7
16	LOG OF TEST BORINGS 7 OF 7

STANDARD PLANS DATED MAY 2006

A10A	ACRONYMS AND ABBREVIATIONS (A-L)
A10B	ACRONYMS AND ABBREVIATIONS (M-Z)
A10C	SYMBOLS
A10D	SYMBOLS
RSP B11-60	CONCRETE BARRIER TYPE 80
B11-47	CABLE RAILING
B7-5	DECK DRAINS

STANDARD PLAN SHEET NO.

DETAIL NO.

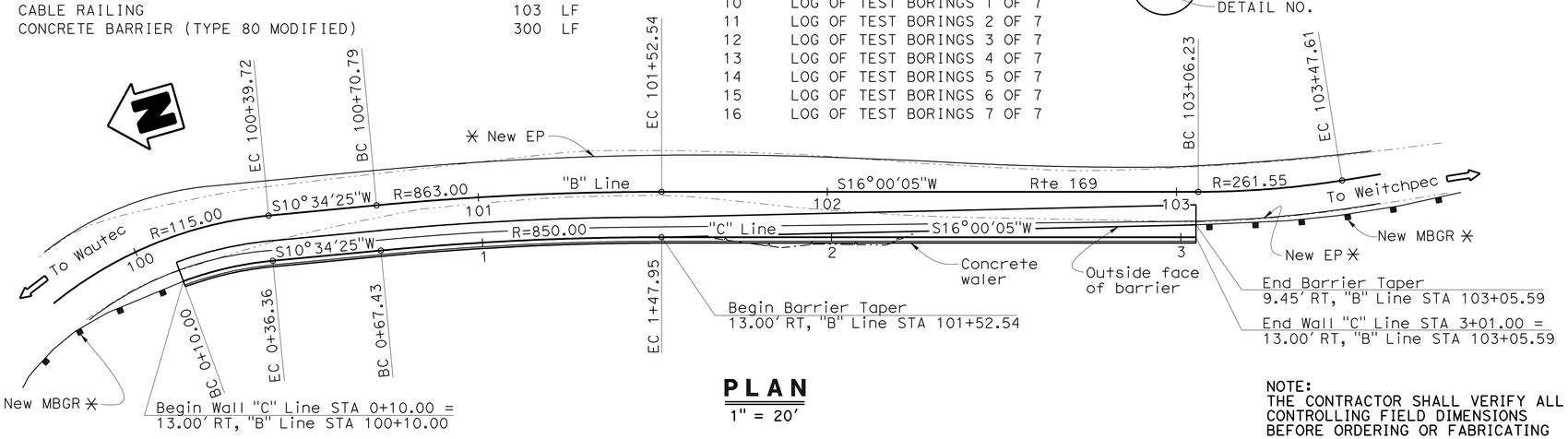

PLAN
1" = 20'

NOTE:
THE CONTRACTOR SHALL VERIFY ALL CONTROLLING FIELD DIMENSIONS BEFORE ORDERING OR FABRICATING ANY MATERIAL.

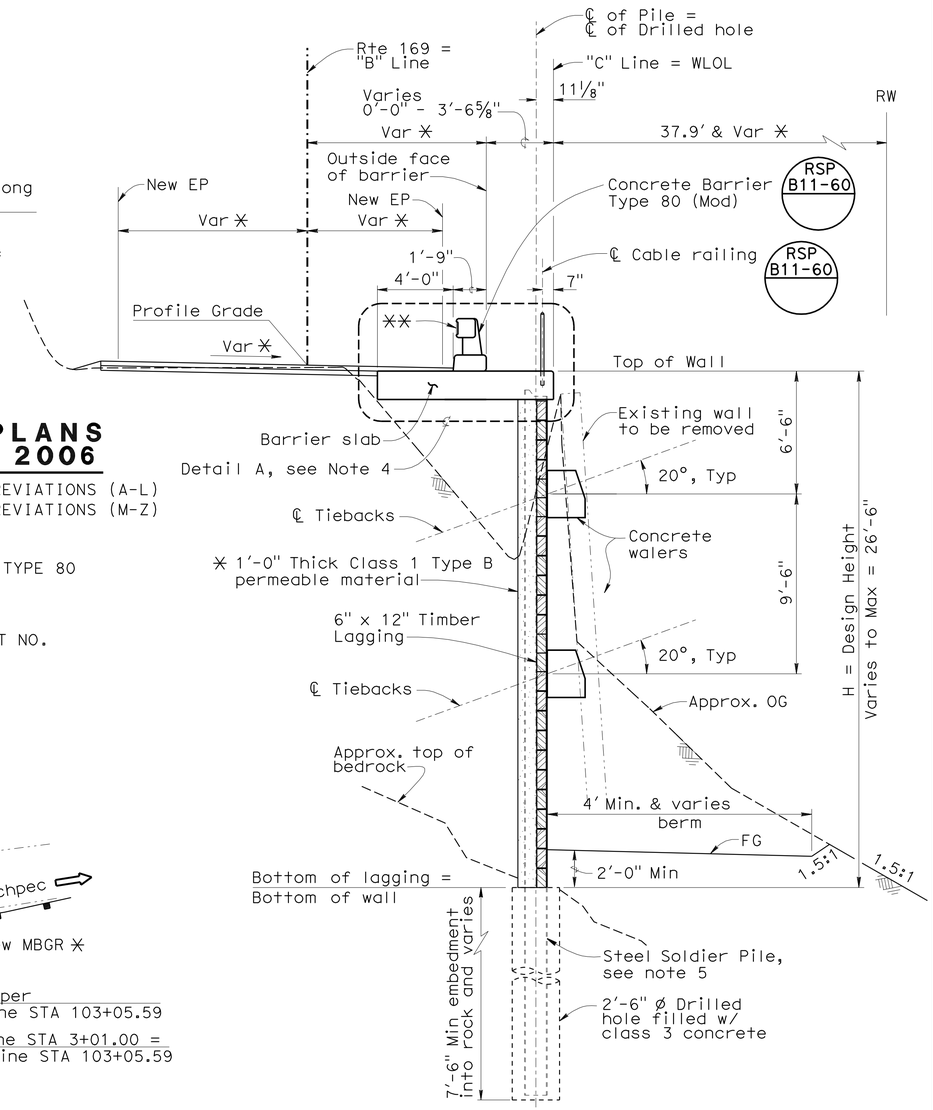

TYPICAL SECTION
¼" = 1'-0"

Gudmund Setberg DESIGN ENGINEER	DESIGN	BY E. Ward	CHECKED N. Nguyen	LOAD & RESISTANCE FACTOR DESIGN	LIVE LOADING: 2 FEET SURCHARGE
	DETAILS	BY C. Figuerres	CHECKED N. Nguyen	LAYOUT BY E. Ward	CHECKED N. Nguyen
	QUANTITIES	BY E. Ward	CHECKED G. Setberg	SPECIFICATIONS BY J. Corrado	PLANS AND SPECS COMPARED

ORIGINAL SCALE IN INCHES FOR REDUCED PLANS 0 1 2 3

STATE OF CALIFORNIA
DEPARTMENT OF TRANSPORTATION

DIVISION OF ENGINEERING SERVICES
STRUCTURE DESIGN
DESIGN BRANCH 2

CU 01
EA 478301

BRIDGE NO. 04E0023
POST MILE 19.47

NOTCHKO RETAINING WALL
GENERAL PLAN

DISREGARD PRINTS BEARING EARLIER REVISION DATES → 9-09-09 12-16-09 1-08-09 1-16-09 1-20-09 2-09-09 2-11-09 3-19-09 1-23-09

SHEET 1 OF 16

STRUCTURES DESIGN GENERAL PLAN SHEET (ENGLISH) (REV.07-24-06)

FILE => agp.dgn

USERNAME => trmikesi DATE PLOTTED => 06-JAN-2010 TIME PLOTTED => 07:27

DIST	COUNTY	ROUTE	POST MILES TOTAL PROJECT	SHEET No	TOTAL SHEETS
01	Hum	169	18.1,19.5	25	39

REGISTERED CIVIL ENGINEER 4-01-09 DATE

1-4-10
PLANS APPROVAL DATE

REGISTERED PROFESSIONAL ENGINEER Erika Lynn Ward No. C66140 Exp. 6-30-10 CIVIL STATE OF CALIFORNIA

The State of California or its officers or agents shall not be responsible for the accuracy or completeness of electronic copies of this plan sheet.

GENERAL NOTES

DESIGN:

AASHTO LRFD Bridge Design Specifications dated 2004 with Caltrans Interim Revisions 2006

SOIL PARAMETERS:

(For determination of design lateral earth pressures)

ϕ_{Ave} = 37°, $\gamma_{soil\ Ave}$ = 146 pcf (Above Bedrock)

ϕ_{Ave} = 48°, $\gamma_{soil\ Ave}$ = 150 pcf (Bedrock)

Ground water elevation is approximately top of bedrock

Traffic surcharge load = 240 psf (or 2 ft surcharge)

REINFORCED CONCRETE:

f'c = 4,000 psi (Concrete compressive strength at 28 days)

fy = 60,000 psi

STRUCTURAL STEEL:

Steel Piles: Grade 50

STRUCTURAL TIMBER:

Preservative Pressure Treated Douglas Fir. Grade No. 1 or better Timber to be full sawn.

Note:

OG elevations are approximate. FG shall be subject to approval by the Engineer.

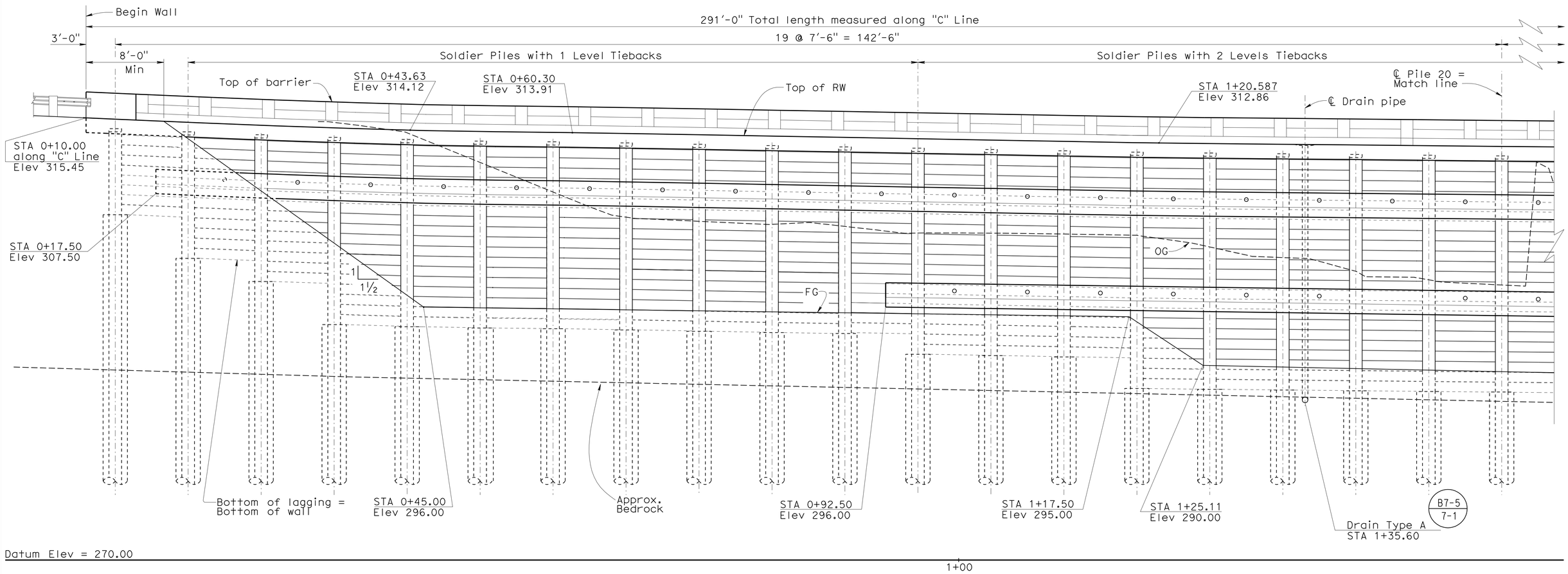

Number of 6 x 12 Timber lagging members between piles		8	12	14	18	18	18	18	18	18	18	18	20	20	20	23	23	23	23	23	
Pile No.	1	2	3	4	5	6	7	8	9	10	11	12	13	14	15	16	17	18	19	20	
Pile length	37	37	37	37	37	37	37	37	37	37	37	37	37	37	37	37	37	37	37	37	

NOTE:
THE CONTRACTOR SHALL VERIFY ALL CONTROLLING FIELD DIMENSIONS BEFORE ORDERING OR FABRICATING ANY MATERIAL.

DEVELOPED ELEVATION

1" = 5'

	BY	CHECKED
DESIGN	E. Ward	N. Nguyen
DETAILS	C. Figuerres	N. Nguyen
QUANTITIES	E. Ward	G. Setberg

STATE OF CALIFORNIA
DEPARTMENT OF TRANSPORTATION

DIVISION OF ENGINEERING SERVICES
STRUCTURE DESIGN
DESIGN BRANCH 2

BRIDGE NO. 04E0023
POST MILE 19.47

NOTCHKO RETAINING WALL
STRUCTURE PLAN NO. 1

STRUCTURES DESIGN DETAIL SHEET (ENGLISH) (REV. 10/25/05)

ORIGINAL SCALE IN INCHES FOR REDUCED PLANS 0 1 2 3

CU 01
EA 478301

DISREGARD PRINTS BEARING EARLIER REVISION DATES

REVISION DATES: 11-14-08 12-01-08 12-16-08 1-09-09 1-16-09 1-26-09 2-16-09 2-11-09 3-19-09 9-09-09

SHEET 2 OF 16

FILE => bsp01.dgn

USERNAME => trmikest DATE PLOTTED => 06-JAN-2010 TIME PLOTTED => 07:27

DIST	COUNTY	ROUTE	POST MILES TOTAL PROJECT	SHEET No	TOTAL SHEETS
01	Hum	169	18.1,19.5	26	39

REGISTERED CIVIL ENGINEER 4-01-09 DATE

1-4-10
PLANS APPROVAL DATE

REGISTERED PROFESSIONAL ENGINEER Erika Lynn Ward No. C66140 Exp. 6-30-10 CIVIL STATE OF CALIFORNIA

The State of California or its officers or agents shall not be responsible for the accuracy or completeness of electronic copies of this plan sheet.

GENERAL NOTES (CONT.)

PRESTRESSING STEEL:

Strands - ASTM designation A416
T = Design Force per Tieback, see Table of Tieback Forces
f_{pu} = Specified tensile strength of prestressing steel (Ksi)
A_s (Min) = Minimum cross sectional area of prestressing steel in Tieback tendon. (in^2)

$$A_s \text{ (Min)} = \frac{1.5\ T}{0.75\ f}$$

TABLE OF TIEBACK FORCES

Location	T, kips
1 Level Tieback	77
2 Level Tiebacks Upper	64
2 Level Tiebacks Lower	68

Note:
OG elevations are approximate. FG shall be subject to approval by the Engineer.

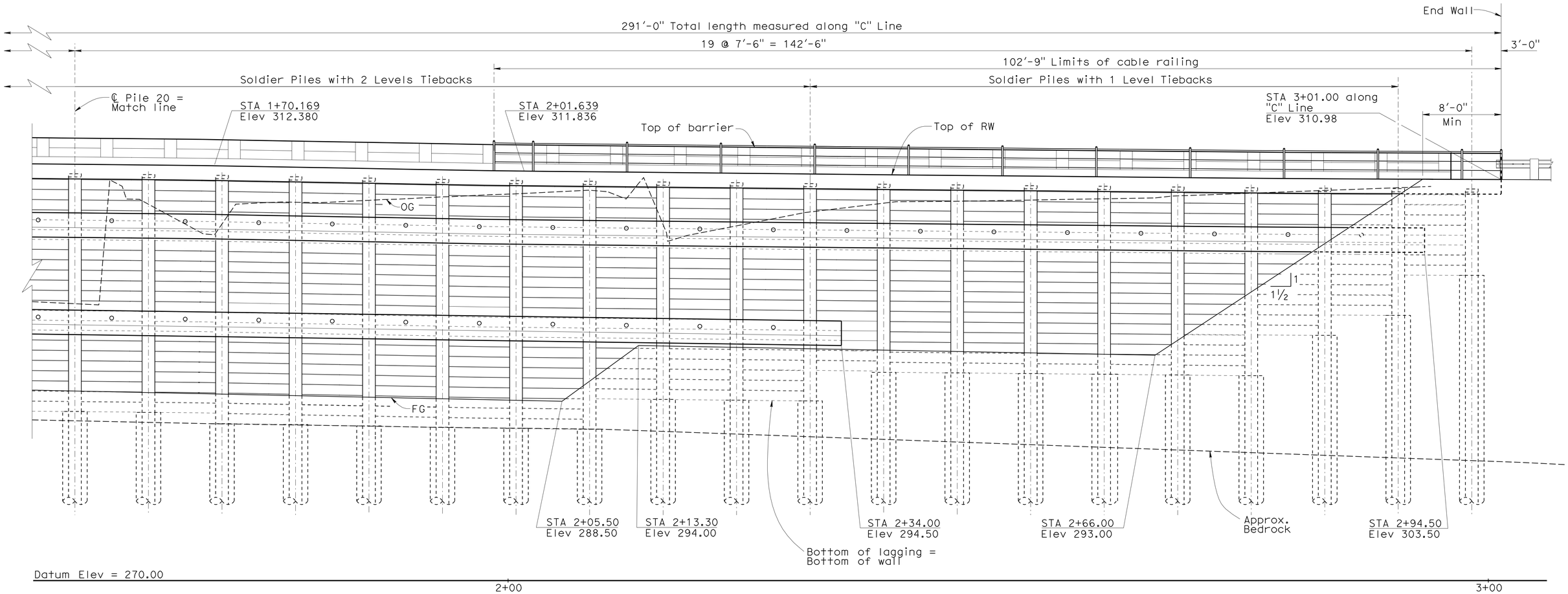

Number of 6 x 12 Timber lagging members between piles		23		23		24		24		24		24		24		21		21		21		18	
		18		18		18		18		18		14		12		8							
Pile No.	20		21		22		23		24		25		26		27		28		29		30		31
		32		33		34		35		36		37		38		39							
Pile length	37		37		37		37		37		37		37		37		37		37		37		37
		37		37		37		37		37		37		37		37							

NOTE:
THE CONTRACTOR SHALL VERIFY ALL CONTROLLING FIELD DIMENSIONS BEFORE ORDERING OR FABRICATING ANY MATERIAL.

DEVELOPED ELEVATION

1" = 5'

	BY	CHECKED
DESIGN	E. Ward	N. Nguyen
DETAILS	C. Figuerres	N. Nguyen
QUANTITIES	E. Ward	G. Setberg

STATE OF CALIFORNIA
DEPARTMENT OF TRANSPORTATION

DIVISION OF ENGINEERING SERVICES
STRUCTURE DESIGN
DESIGN BRANCH 2

BRIDGE NO. 04E0023
POST MILE 19.47

NOTCHKO RETAINING WALL
STRUCTURE PLAN NO. 2

STRUCTURES DESIGN DETAIL SHEET (ENGLISH) (REV. 10/25/05)

ORIGINAL SCALE IN INCHES FOR REDUCED PLANS 0 1 2 3

CU 01
EA 478301

DISREGARD PRINTS BEARING EARLIER REVISION DATES

REVISION DATES: 11-14-08 12-04-08 12-16-08 1-09-09 1-16-09 1-26-09 2-16-09 2-18-09 3-19-09 7-27-09

SHEET 3 OF 16

FILE => bsp02.dgn

USERNAME => trmikesl DATE PLOTTED => 06-JAN-2010 TIME PLOTTED => 07:28

DIST	COUNTY	ROUTE	POST MILES TOTAL PROJECT	SHEET No	TOTAL SHEETS
01	Hum	169	18.1,19.5	27	39

REGISTERED CIVIL ENGINEER 4-01-09 DATE

1-4-10
PLANS APPROVAL DATE

The State of California or its officers or agents shall not be responsible for the accuracy or completeness of electronic copies of this plan sheet.

REGISTERED PROFESSIONAL ENGINEER
Erika Lynn Ward
No. C66140
Exp. 6-30-10
CIVIL
STATE OF CALIFORNIA

CURVE DATA

No.	R	Δ	T	L
Ⓐ	115.00	38°12'24"	39.83	76.69
Ⓑ	863.00	5°25'40"	40.91	81.75
Ⓒ	261.55	-9°03'49"	20.73	41.37
Ⓓ	102.00	14°48'23"	13.25	26.36
Ⓔ	850.00	5°25'40"	40.29	80.52

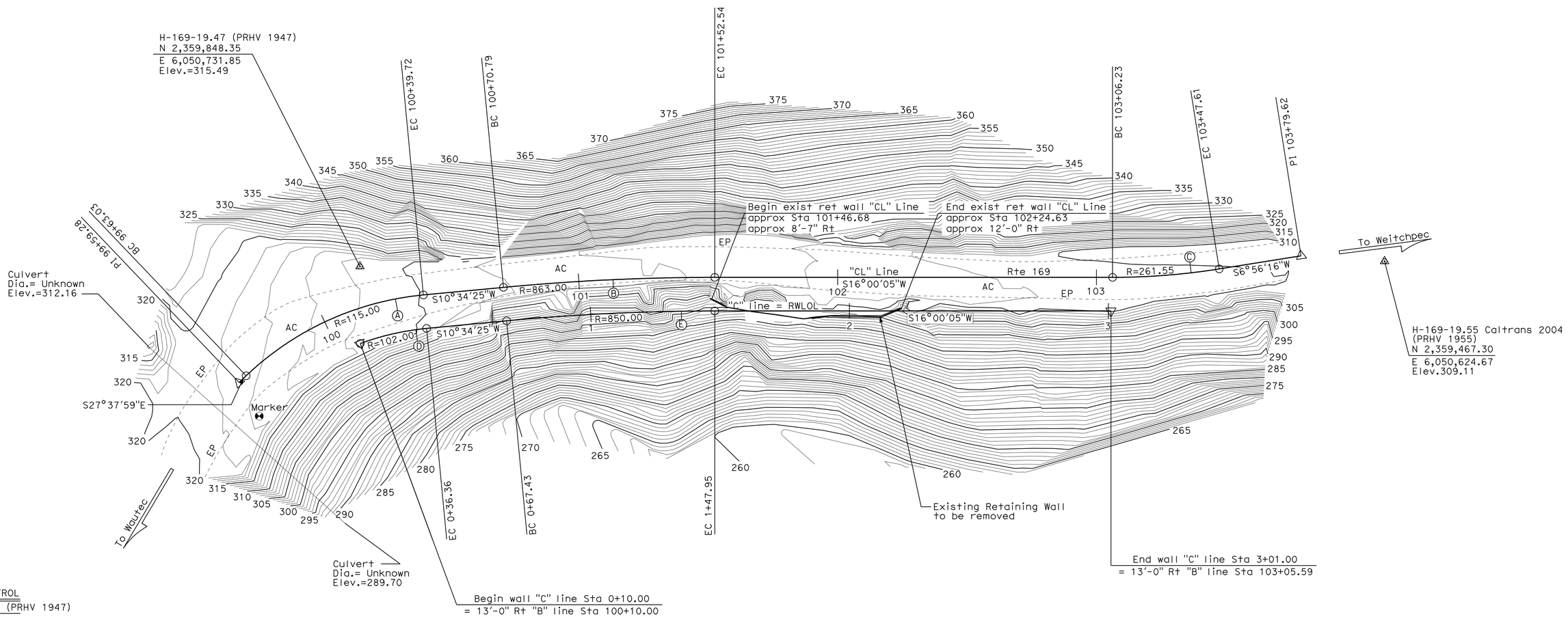

SURVEY CONTROL

H-169-19.47 (PRHV 1947)
Fnd Alcar
15.24 FT Lt. ℄ Rte 169
Sta. 00+19.64
N 2,359,848.35
E 6,050,731.85
Elev. = 315.49

H-169-19.55 Caltrans 2004 (PRHV 1955)
Fnd Alcar
78.57 FT S12°41'19"W From
Sta. 03+33.33 Rte 169
N 2,359,467.30
E 6,050,624.67
Elev. = 309.11

PRELIMINARY INVESTIGATION SECTION

SCALE 1"=20'	VERT.DATUM NAVD88	PHOTOGRAMMETRY AS OF: X			
	HORZ.DATUM NAD83 (1991.35)	SURVEYED	BY District	CHECKED	BY T.Mason 08/2008
ALIGNMENT TIES Dist.Traverse Sheet		DRAFTED	BY T.Zolnikova 08/2008	CHECKED	BY L.Lew 08/2008

DESIGN	BY E. Emerick	CHECKED N. Nguyen
DETAILS	BY C. Figuerres	CHECKED N. Nguyen
QUANTITIES	BY E. Ward	CHECKED G. Setberg

STATE OF CALIFORNIA
DEPARTMENT OF TRANSPORTATION

DIVISION OF ENGINEERING SERVICES
STRUCTURE DESIGN
DESIGN BRANCH 02

BRIDGE NO. 0E0023
POST MILE 19.47

NOTCHKO RETAINING WALL FOUNDATION PLAN

STRUCTURES FOUNDATION PLAN SHEET (ENGLISH) (REV. 10/25/05)

ORIGINAL SCALE IN INCHES FOR REDUCED PLANS 0 1 2 3

CU 01
EA 478301

DISREGARD PRINTS BEARING EARLIER REVISION DATES

REVISION DATES 08/22/08 10/22/08 01/05/09 02-10-09 03-19-09

SHEET 4 OF 16

FILE => cfp01.dgn

USERNAME => trmikesl DATE PLOTTED => 06-JAN-2010 TIME PLOTTED => 07:28

DIST	COUNTY	ROUTE	POST MILES TOTAL PROJECT	SHEET No	TOTAL SHEETS
01	Hum	169	18.1,19.5	28	39

REGISTERED CIVIL ENGINEER 4-01-09 DATE

1-4-10
PLANS APPROVAL DATE

REGISTERED PROFESSIONAL ENGINEER Erika Lynn Ward No. C66140 Exp. 6-30-10 CIVIL STATE OF CALIFORNIA

The State of California or its officers or agents shall not be responsible for the accuracy or completeness of electronic copies of this plan sheet.

Notes:

1. Embed reinforcement 18" into outside face of barrier.
2. For limits of cable railing, see "Structure Plan No. 2" sheet.
3. Reinforcement is parallel to outside face of barrier.
4. Reinforcement is parallel to WLOL.

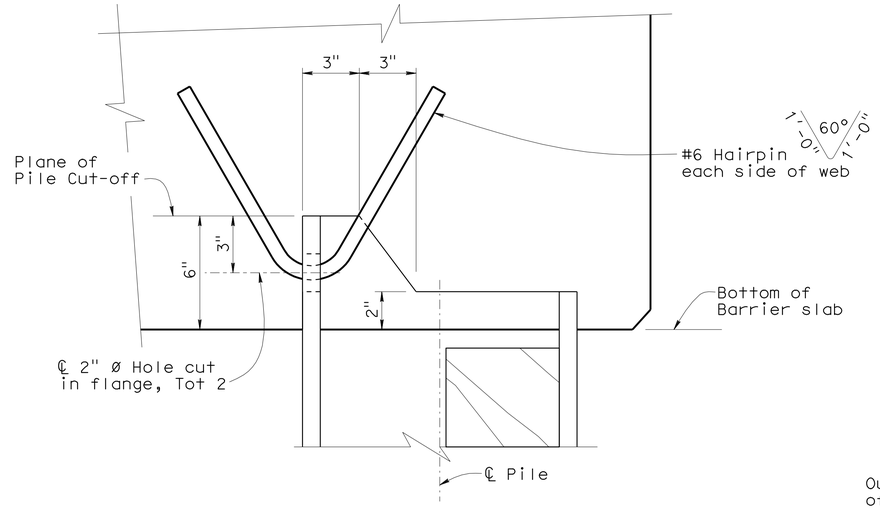

STEEL PILE ANCHOR

DETAIL B

3"=1'-0"

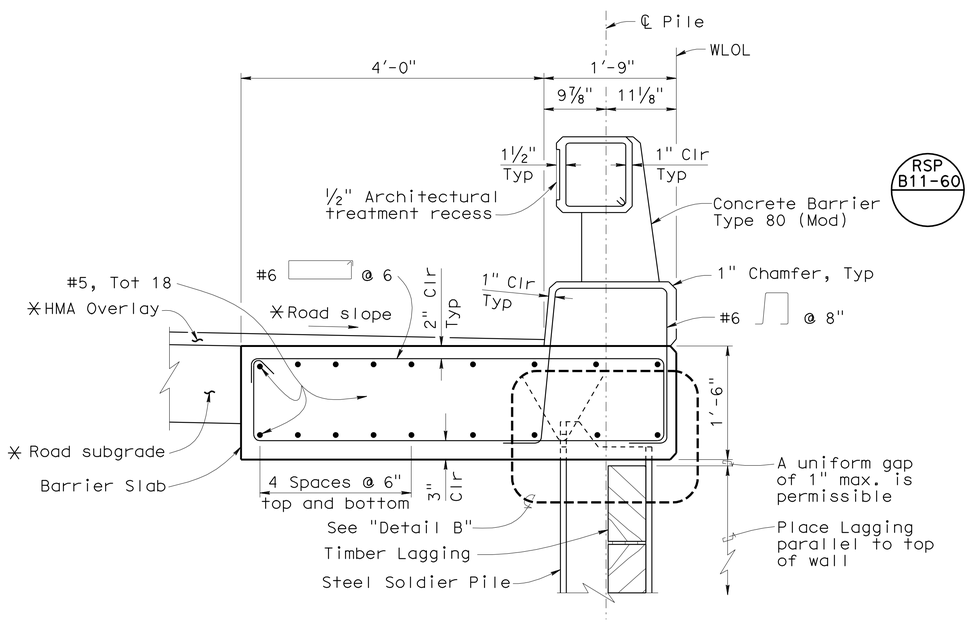

"C" Line STA 0+10.00 to STA 1+47.95

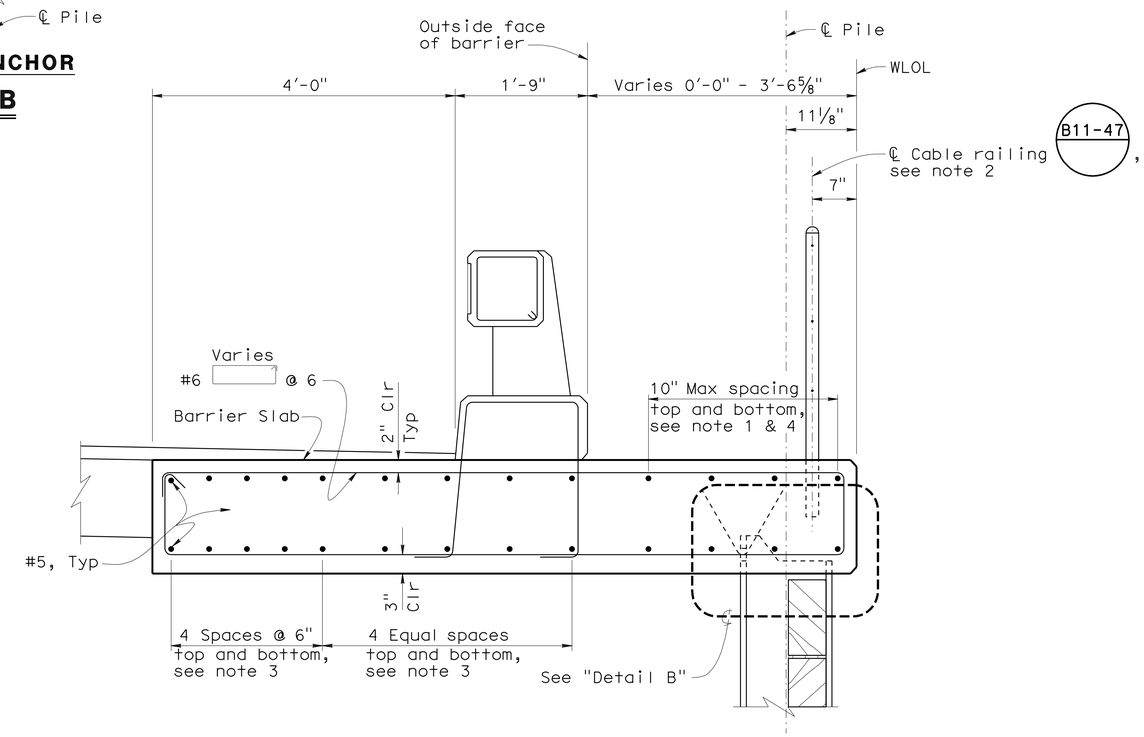

"C" Line STA 1+47.95 to STA 3+01.00

Note: For additonal information, see detail on left.

DETAIL A

1"=1'-0"

✳ See "Road Plans"

NOTE:
THE CONTRACTOR SHALL VERIFY ALL CONTROLLING FIELD DIMENSIONS BEFORE ORDERING OR FABRICATING ANY MATERIAL.

	BY	CHECKED
DESIGN	E. Ward	N. Nguyen
DETAILS	C. Figuerres	N. Nguyen
QUANTITIES	E. Ward	G. Setberg

STATE OF CALIFORNIA DEPARTMENT OF TRANSPORTATION

DIVISION OF ENGINEERING SERVICES STRUCTURE DESIGN DESIGN BRANCH 2

BRIDGE NO. 04E0023
POST MILE 19.47

NOTCHKO RETAINING WALL
DETAILS NO. 1

STRUCTURES DESIGN DETAIL SHEET (ENGLISH) (REV. 10/25/05)

ORIGINAL SCALE IN INCHES FOR REDUCED PLANS 0 1 2 3

CU 01
EA 478301

DISREGARD PRINTS BEARING EARLIER REVISION DATES

REVISION DATES: 11-17-08 12-04-08 12-12-08 1-16-09 2-18-09 2-26-09 7-27-09

SHEET 5 OF 16

FILE => ddet01.dgn

USERNAME => trmikesl DATE PLOTTED => 06-JAN-2010 TIME PLOTTED => 07:28

DIST	COUNTY	ROUTE	POST MILES TOTAL PROJECT	SHEET No	TOTAL SHEETS
01	Hum	169	18.1,19.5	29	39

REGISTERED CIVIL ENGINEER 4-01-09 DATE

1-4-10
PLANS APPROVAL DATE

REGISTERED PROFESSIONAL ENGINEER Erika Lynn Ward No. C66140 Exp. 6-30-10 CIVIL STATE OF CALIFORNIA

The State of California or its officers or agents shall not be responsible for the accuracy or completeness of electronic copies of this plan sheet.

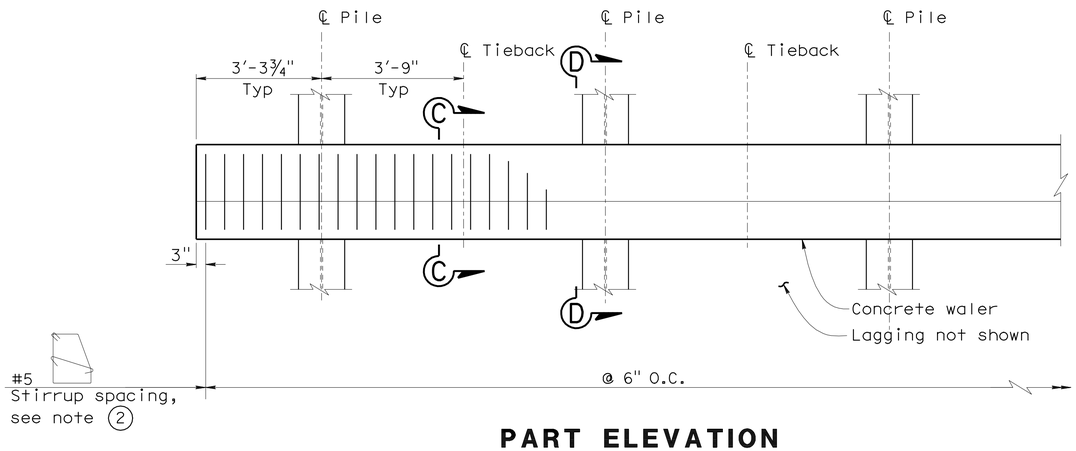

PART ELEVATION

½"=1'-0"

Notes:

1. Omit gap between laggings members at joints behind concrete waler.
2. To avoid conflict with tiebacks, the stirrup can be moved and bundled with adjacent stirrup.
3. For details and dimension not shown, see "SECTION C-C".

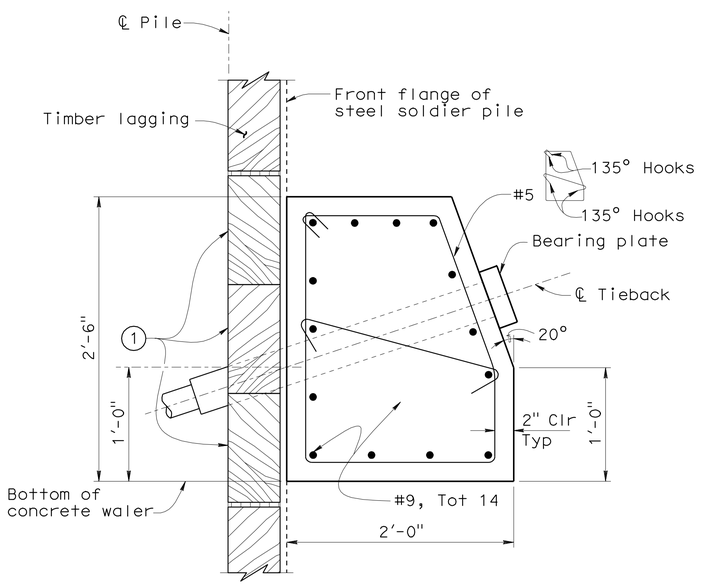

SECTION C-C

1½"=1'-0"

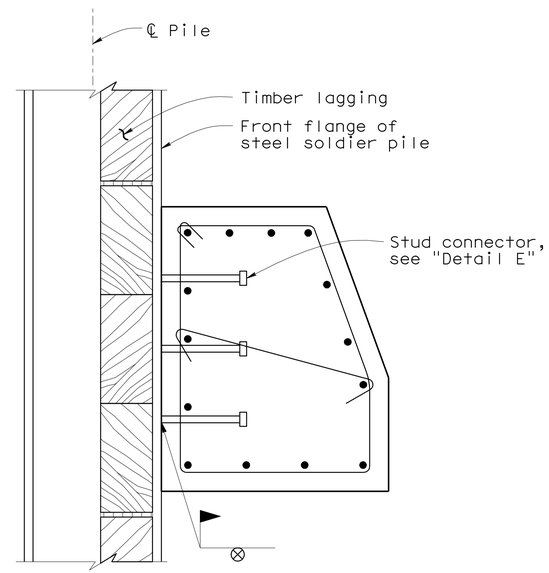

SECTION D-D

1½"=1'-0"

see note 3

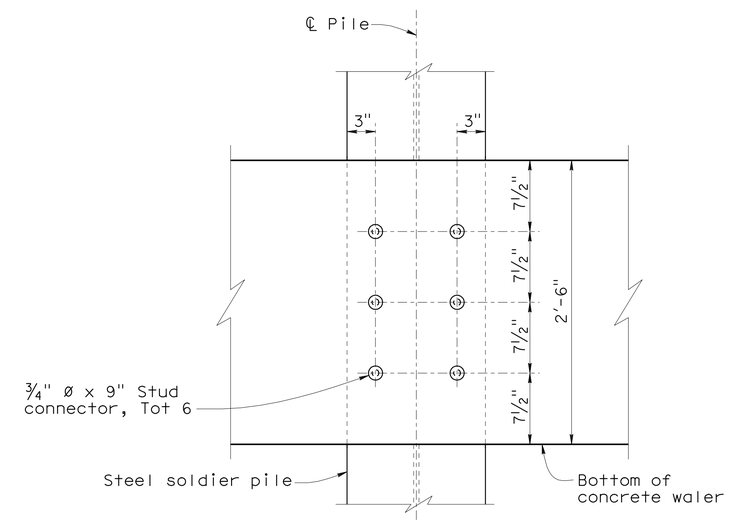

CONCRETE ANCHOR PLACEMENT

DETAIL E

1½"=1'-0"

NOTE:
THE CONTRACTOR SHALL VERIFY ALL CONTROLLING FIELD DIMENSIONS BEFORE ORDERING OR FABRICATING ANY MATERIAL.

	BY	CHECKED
DESIGN	E. Ward	N. Nguyen
DETAILS	C. Figuerres	N. Nguyen
QUANTITIES	E. Ward	G. Setberg

STATE OF CALIFORNIA
DEPARTMENT OF TRANSPORTATION

DIVISION OF ENGINEERING SERVICES
STRUCTURE DESIGN
DESIGN BRANCH 2

BRIDGE NO. 04E0023
POST MILE 19.47

NOTCHKO RETAINING WALL
DETAILS NO. 2

STRUCTURES DESIGN DETAIL SHEET (ENGLISH) (REV. 10/25/05)

ORIGINAL SCALE IN INCHES FOR REDUCED PLANS 0 1 2 3

CU 01
EA 478301

DISREGARD PRINTS BEARING EARLIER REVISION DATES

REVISION DATES: 11-17-08, 12-04-08, 12-16-08, 1-16-09, 1-26-09, 2-09-09

SHEET 6 OF 16

FILE => ddet02.dgn

USERNAME => trmikes1 DATE PLOTTED => 06-JAN-2010 TIME PLOTTED => 07:28

DIST	COUNTY	ROUTE	POST MILES TOTAL PROJECT	SHEET No	TOTAL SHEETS
01	Hum	169	18.1,19.5	30	39

REGISTERED CIVIL ENGINEER — DATE 4-01-09

1-4-10
PLANS APPROVAL DATE

REGISTERED PROFESSIONAL ENGINEER — Erika Lynn Ward — No. C66140 — Exp. 6-30-10 — CIVIL — STATE OF CALIFORNIA

The State of California or its officers or agents shall not be responsible for the accuracy or completeness of electronic copies of this plan sheet.

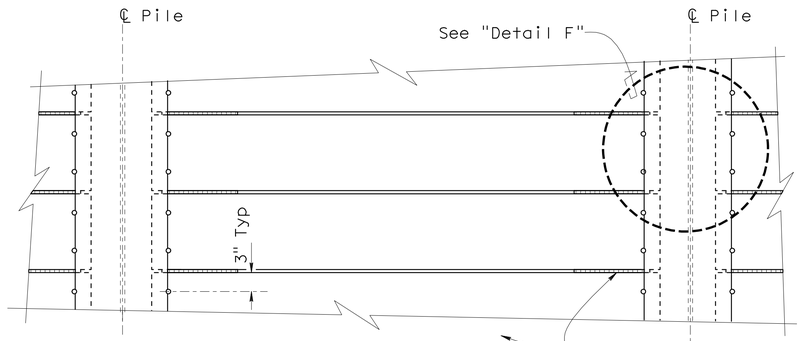

PART ELEVATION

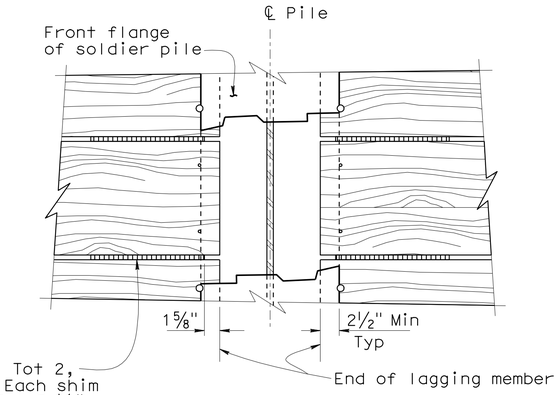

DETAIL F

1½"=1'-0"

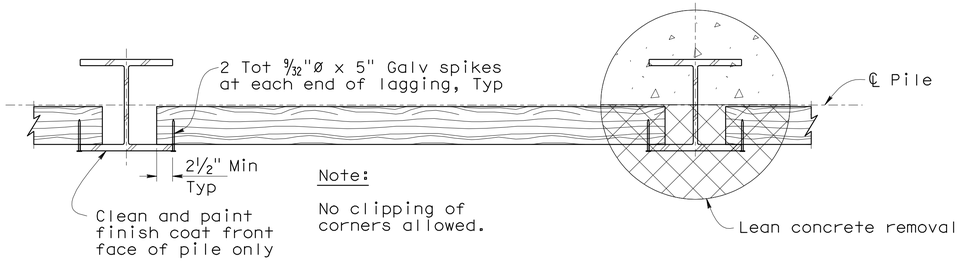

Note:

No clipping of corners allowed.

PART PLAN OF LAGGING MEMBER

LAGGING DETAILS

1"=1'-0"

Notes:

1. Upper tiebacks shall be constructed first lift.
2. The excavation at front of wall for first lift shall not extend more than 2'-0" below the bottom of upper waler.
3. For upper tiebacks, roadway backfill shall be placed and compacted to 3'-6" above upper tieback level prior to installation and stressing the tieback anchors.
4. Lower tiebacks shall be constructed second lift. Excavation for second lift shall not extend more than 2'-0" below the bottom of lower waler until lower tiebacks are completely grouted.
5. For drain location, see "Structure Plan No. 1" sheet.

✳ See "Road Plans"

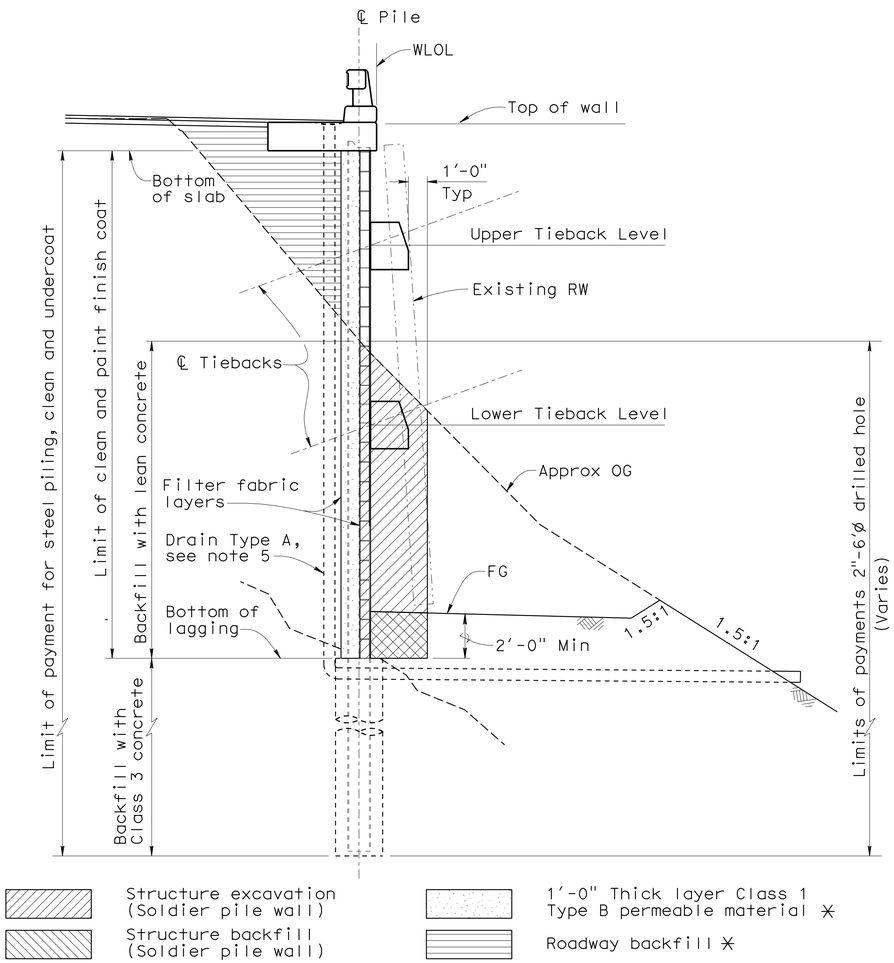

TYPICAL WALL SECTION WITH EARTHWORK

LIMITS OF PAYMENT FOR EXCAVATION, BACKFILL AND SOLDIER PILE DRILLED HOLE

¼" = 1'-0"

NOTE:
THE CONTRACTOR SHALL VERIFY ALL CONTROLLING FIELD DIMENSIONS BEFORE ORDERING OR FABRICATING ANY MATERIAL.

	BY	CHECKED
DESIGN	E. Ward	N. Nguyen
DETAILS	C. Figuerres	N. Nguyen
QUANTITIES	E. Ward	G. Setberg

STATE OF CALIFORNIA
DEPARTMENT OF TRANSPORTATION

DIVISION OF ENGINEERING SERVICES
STRUCTURE DESIGN
DESIGN BRANCH 2

BRIDGE NO. 04E0023
POST MILE 19.47

NOTCHKO RETAINING WALL
DETAILS NO. 3

STRUCTURES DESIGN DETAIL SHEET (ENGLISH) (REV. 10/25/05)

ORIGINAL SCALE IN INCHES FOR REDUCED PLANS 0 1 2 3

CU 01
EA 478301

DISREGARD PRINTS BEARING EARLIER REVISION DATES

REVISION DATES: 11-12-08 12-12-08 1-16-09 1-26-09 2-09-09 2-11-09 3-19-09 4-30-09 9-09-09

SHEET 7 OF 16

FILE => ddet03.dgn

USERNAME => trmikest DATE PLOTTED => 06-JAN-2010 TIME PLOTTED => 07:29

DIST	COUNTY	ROUTE	POST MILES TOTAL PROJECT	SHEET No	TOTAL SHEETS
01	Hum	169	18.1,19.5	31	39

REGISTERED CIVIL ENGINEER 4-01-09 DATE

1-4-10
PLANS APPROVAL DATE

REGISTERED PROFESSIONAL ENGINEER Erika Lynn Ward No. C66140 Exp. 6-30-10 CIVIL STATE OF CALIFORNIA

The State of California or its officers or agents shall not be responsible for the accuracy or completeness of electronic copies of this plan sheet.

Notes:

1. Anchorage enclosure shall have provisions to allow injecting grout at low end and venting at high end. Galvanize after fabrication.
2. Silicone Sealant to cover full width of flange.
3. The PVC or steel tube shall be used as a casing to establish a stable hole of adequate dimension and to prevent the cement grout intruding into embankment material.
4. The length of PVC or steel tube shall be determined by the Contractor, the maximum length of the tube is not longer than the unbonded length. See note 6
5. Steel tube welded to bearing plate (Min length = 4'-0", min thickness = 1/4") Galvanize assembly after fabrication.
6. The unbonded length = 35 ft for upper tieback anchors and = 25 ft for lower tieback anchors.

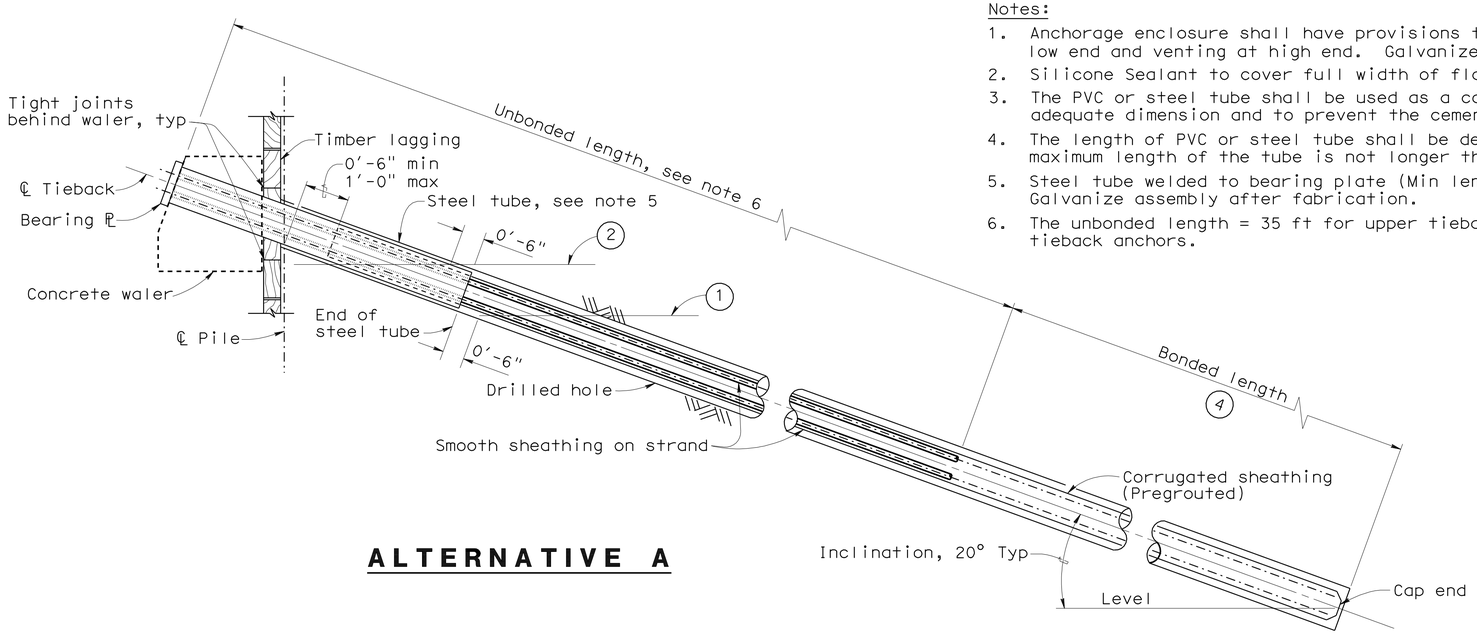

ALTERNATIVE A

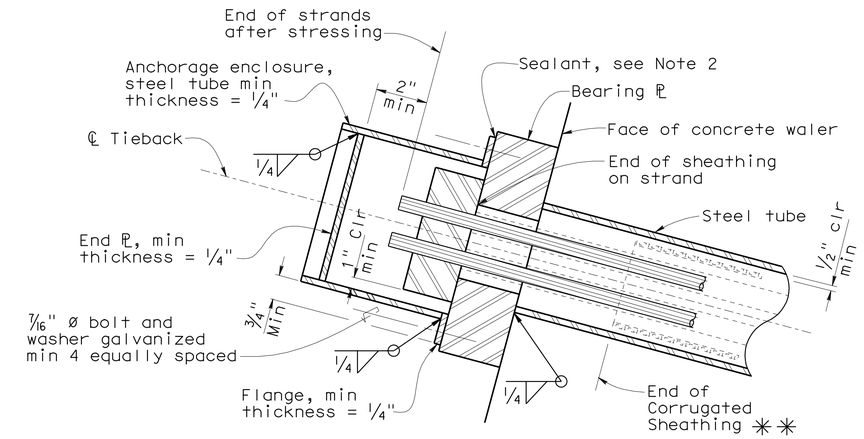

ALTERNATIVE 1

Notes:

1. Level of initial grouting
2. Level of secondary grouting
3. Length of initial grouting inside corrugated sheathing
4. Bonded length shall be determined by the Contractor

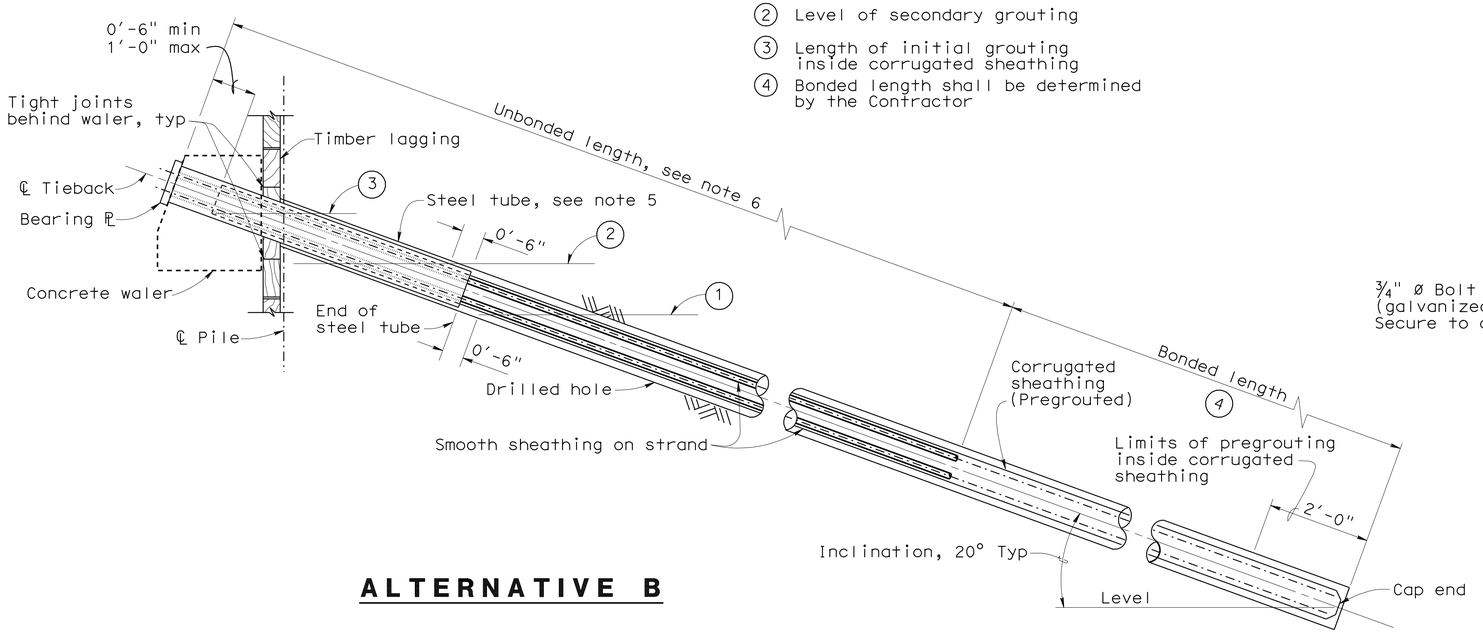

ALTERNATIVE B

TIEBACK TENDON DETAIL (STRAND)

No Scale

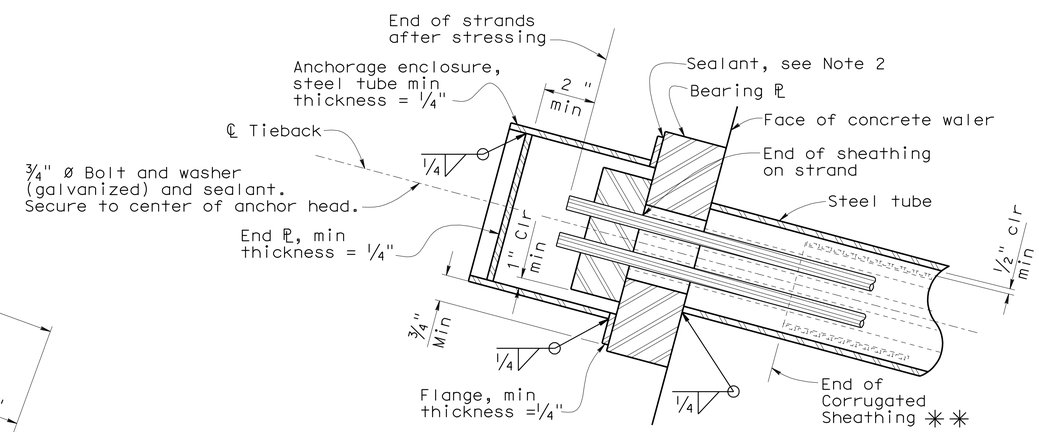

ALTERNATIVE 2

ANCHORAGE ENCLOSURE DETAILS

No Scale

✳✳ Alternative B Tendon only

DESIGN	BY E. Ward	CHECKED N. Nguyen	
DETAILS	BY C. Figuerres	CHECKED N. Nguyen	
QUANTITIES	BY E. Ward	CHECKED G. Setberg	

STATE OF CALIFORNIA
DEPARTMENT OF TRANSPORTATION

DIVISION OF ENGINEERING SERVICES
STRUCTURE DESIGN
DESIGN BRANCH 2

BRIDGE NO. 04E0023
POST MILE 19.47

NOTCHKO RETAINING WALL
TIEBACK DETAIL

STRUCTURES DESIGN DETAIL SHEET (ENGLISH) (REV. 10/25/05)

ORIGINAL SCALE IN INCHES FOR REDUCED PLANS 0 1 2 3

CU 01
EA 478301

DISREGARD PRINTS BEARING EARLIER REVISION DATES

REVISION DATES: 11-19-08 2-10-09

SHEET 8 OF 16

FILE => etiebackdet.dgn

USERNAME => trmikest DATE PLOTTED => 06-JAN-2010 TIME PLOTTED => 07:29

DIST	COUNTY	ROUTE	POST MILES TOTAL PROJECT	SHEET No	TOTAL SHEETS
01	Hum	169	18.1,19.5	32	39

REGISTERED CIVIL ENGINEER 4-01-09 DATE

1-4-10
PLANS APPROVAL DATE

REGISTERED PROFESSIONAL ENGINEER Erika Lynn Ward No. C66140 Exp. 6-30-10 CIVIL STATE OF CALIFORNIA

The State of California or its officers or agents shall not be responsible for the accuracy or completeness of electronic copies of this plan sheet.

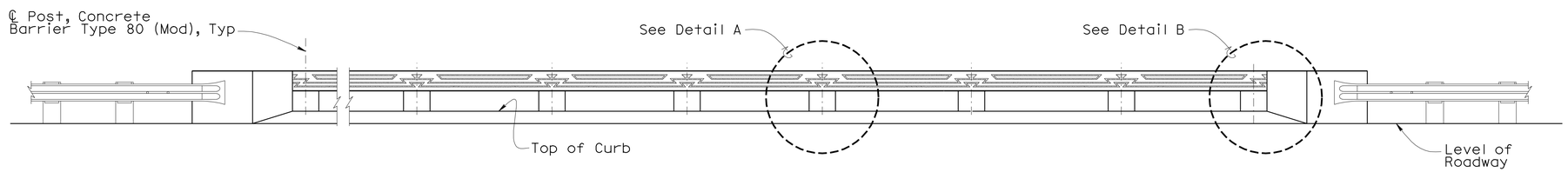

ELEVATION
No Scale

Notes:

1. The motif shall be placed on inside face of concrete barrier by using ellastomeric form liner.
2. A test panel shall be approved by the engineer in advance for architectural texture on barrier concrete surface.

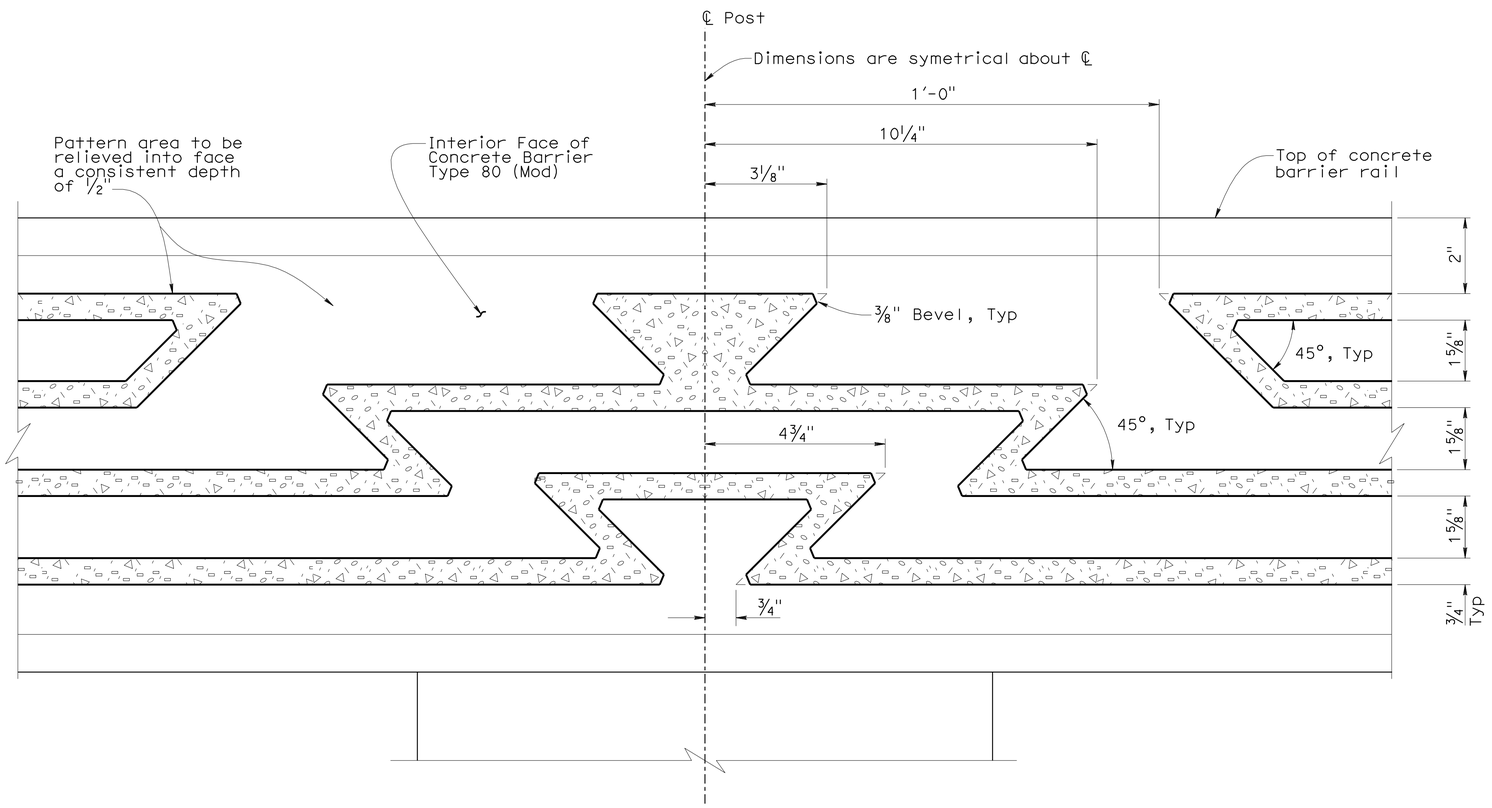

DETAIL A
6" = 1'-0"

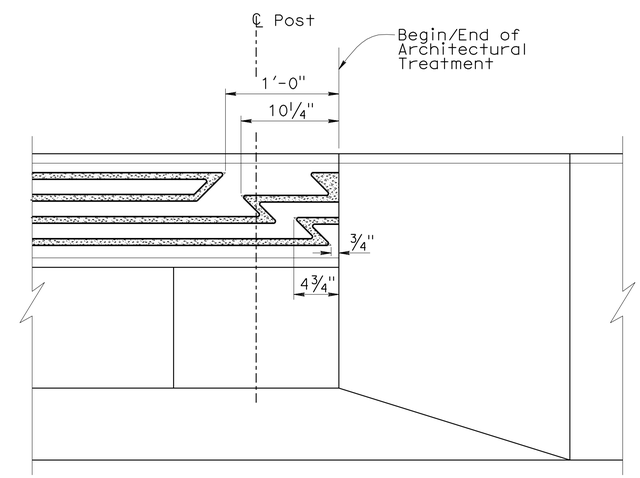

DETAIL B
1½" = 1'-0"

For dimensions not shown, see "Detail A".

DESIGN	BY E. Ward	CHECKED N. Nguyen	
DETAILS	BY C. Figuerres	CHECKED N. Nguyen	
QUANTITIES	BY E. Ward	CHECKED G. Setberg	

STATE OF CALIFORNIA
DEPARTMENT OF TRANSPORTATION

DIVISION OF ENGINEERING SERVICES
STRUCTURE DESIGN
DESIGN BRANCH 2

BRIDGE NO. 04E0023
POST MILE 19.47

NOTCHKO RETAINING WALL ARCHITECTURAL TREATMENT

STRUCTURES DESIGN DETAIL SHEET (ENGLISH) (REV. 10/25/05)

ORIGINAL SCALE IN INCHES FOR REDUCED PLANS 0 1 2 3

CU 01
EA 478301

DISREGARD PRINTS BEARING EARLIER REVISION DATES

REVISION DATES: ~~11-19-08~~ 2-10-09

SHEET 9 OF 16

FILE => farchtreat.dgn

USERNAME => trmikest DATE PLOTTED => 06-JAN-2010 TIME PLOTTED => 07:29

DIST	COUNTY	ROUTE	POST MILES TOTAL PROJECT	SHEET No	TOTAL SHEETS
01	Hum	169	18.1,19.5	33	39

REGISTERED GEOLOGIST — DATE 8-25-08

1-4-10
PLANS APPROVAL DATE

REGISTERED GEOLOGIST WILLIAM V. McCORMICK III No. 1673 Exp. 11-30-08 CERTIFIED ENGINEERING GEOLOGIST STATE OF CALIFORNIA

The State of California or its officers or agents shall not be responsible for the accuracy or completeness of electronic copies of this plan sheet.

KLEINFELDER
2240 NORTHPOINT PKWY.
SANTA ROSA, CA 95407

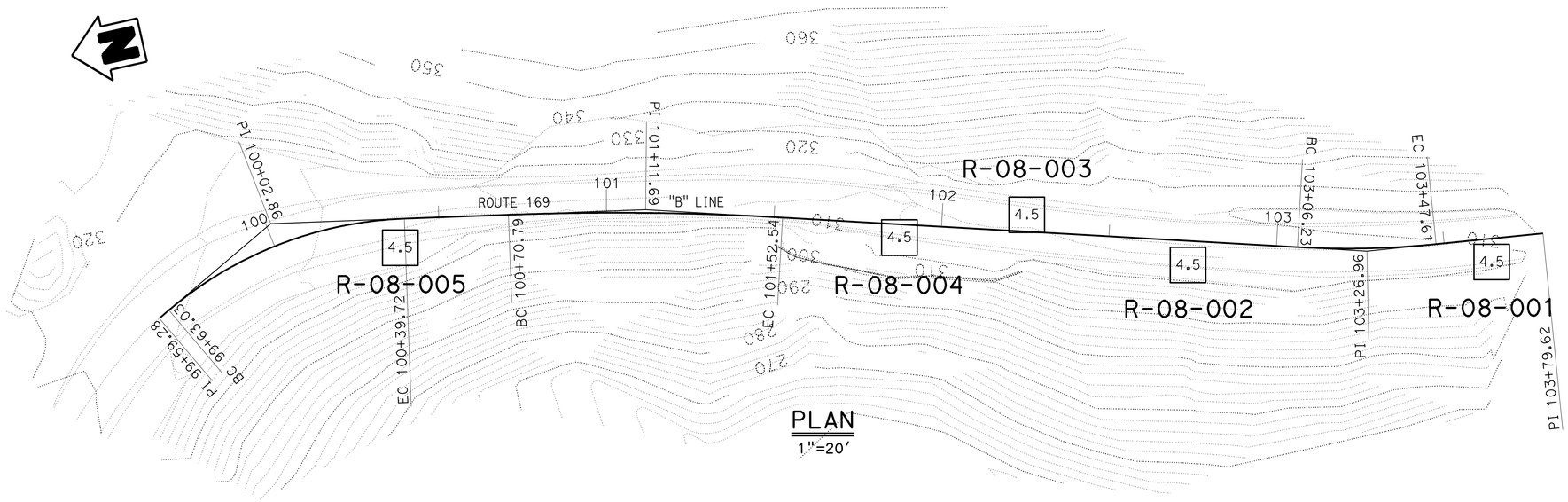

PLAN
1"=20'

Notes:

1. 2" samples were taken using a modified California split-barrel sampler with an inside diameter (I.D.) of 2" and an outside diameter (O.D.) of 2½".
2. 1.4" samples were taken using a SPT split-barrel sampler with an inside diameter (I.D.) of 1.4" and an outside diameter (O.D.) of 2".
3. An automatic hammer (140 lb) with a 30" drop was used to advance the sampler.
4. Blowcounts noted for boring are field blowcounts and have not been corrected.
5. Blowcounts 50/5 means 50 blows per 5" penetration.
6. This LOTB sheet was prepared in accordance with the Caltrans Soil & Rock Logging, Classification, and Presentation Manual (June 2007)

BENCHMARKS

STATION	N	E	ELEV (FT)	DESCRIPTION
100+19.01	2359848.3480	6050731.8490	315.491	"PRVH1947" ALCAR is 15.39 Left at "B" Line Station 100+19.01

SURVEY CONTROL

1. Coordinates bearing and distances are based on the California State Plane Coordinate system of NAD 83 (1986). Elevations are based on NAVD88.

DESIGN OVERSIGHT ENGINEER: SIGN OFF DATE:
FUNCTIONAL SUPERVISOR
NAME:
DRAWN BY: A. Sanchez
CHECKED BY: E. Johnson
FIELD INVESTIGATION BY:
KLEINFELDER, April 2008

PREPARED FOR THE STATE OF CALIFORNIA DEPARTMENT OF TRANSPORTATION

PROJECT ENGINEER

BRIDGE NO.
POST MILES 19.47

NOTCHKO RETAINING WALL
LOG OF TEST BORINGS 1 of 7

OGS CIVIL LOG OF TEST BORINGS SHEET

ORIGINAL SCALE IN INCHES FOR REDUCED PLANS 0 1 2 3

CU
EA 478301

DISREGARD PRINTS BEARING EARLIER REVISION DATES → 5-26-08 8-25-08 4-14-09

REVISION DATES

SHEET 10 OF 16

FILE => glrtb01.dgn

USERNAME => trmikesl DATE PLOTTED => 06-JAN-2010 TIME PLOTTED => 07:30

DIST	COUNTY	ROUTE	POST MILES TOTAL PROJECT	SHEET No	TOTAL SHEETS
01	Hum	169	18.1,19.5	34	39

REGISTERED GEOLOGIST — DATE 8-25-08

1-4-10
PLANS APPROVAL DATE

REGISTERED GEOLOGIST WILLIAM V. McCORMICK III No. 1673 Exp. 11-30-08 CERTIFIED ENGINEERING GEOLOGIST STATE OF CALIFORNIA

The State of California or its officers or agents shall not be responsible for the accuracy or completeness of electronic copies of this plan sheet.

KLEINFELDER
2240 NORTHPOINT PKWY.
SANTA ROSA, CA 95407

NOTE: This LOTB sheet was prepared in accordance with the Caltrans Soil & Rock Logging, Classification, and Presentation Manual (June 2007)

FOR PLAN VIEW AND ADDITIONAL NOTES, SEE "LOG OF TEST BORINGS" SHEET 1 OF 7

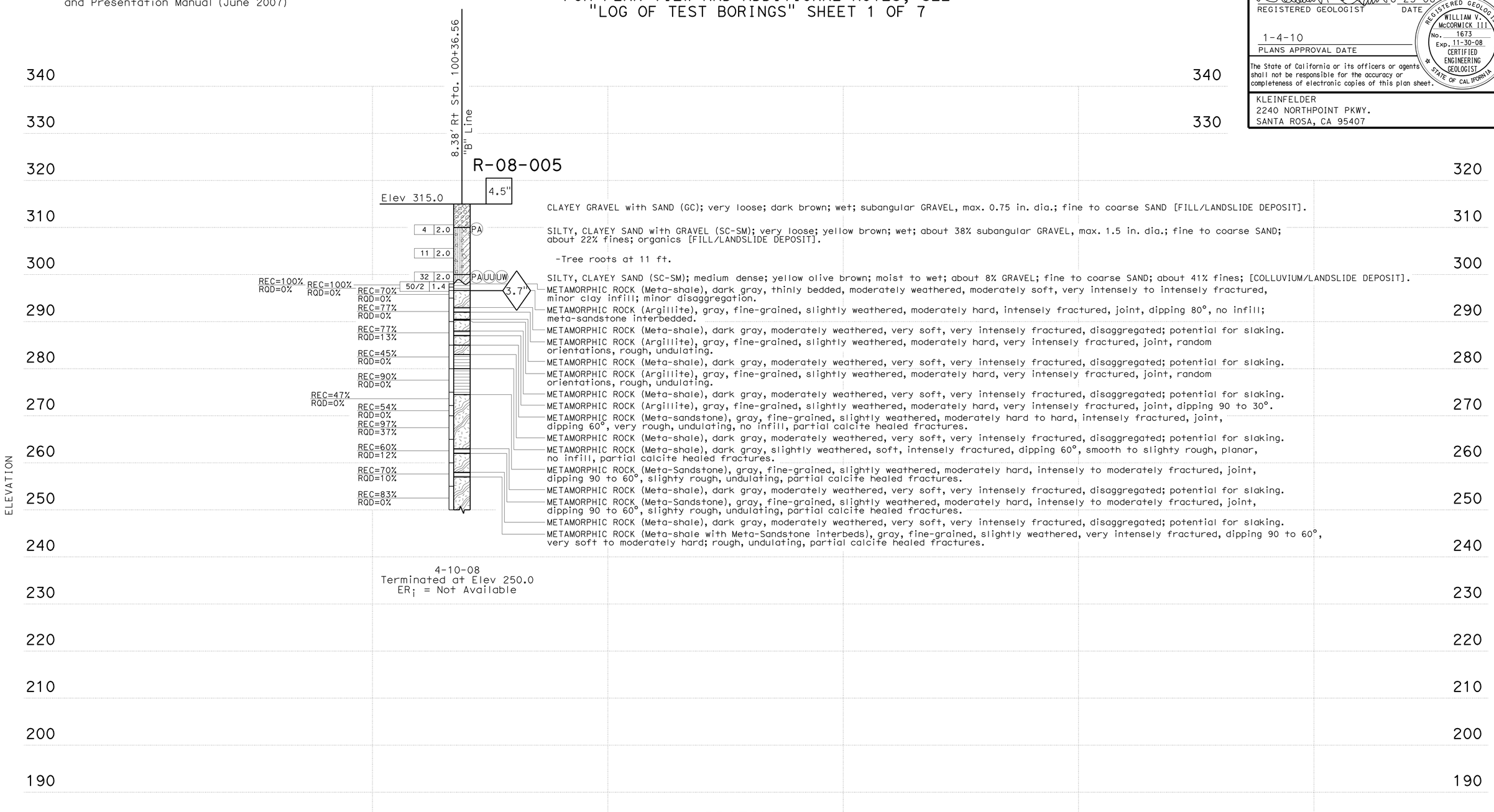

PROFILE
HOR. 1"=20'
VER. 1"=10'

DESIGN OVERSIGHT ENGINEER:	SIGN OFF DATE:		PREPARED FOR THE STATE OF CALIFORNIA DEPARTMENT OF TRANSPORTATION	BRIDGE NO.	NOTCHKO RETAINING WALL
FUNCTIONAL SUPERVISOR	DRAWN BY: A. Sanchez	FIELD INVESTIGATION BY:		PROJECT ENGINEER	POST MILES 19.47	LOG OF TEST BORINGS 2 of 7
NAME:	CHECKED BY: E. Johnson	E. Johnson, April 2008				

OGS CIVIL LOG OF TEST BORINGS SHEET

ORIGINAL SCALE IN INCHES FOR REDUCED PLANS 0 1 2 3

CU
EA 478301

DISREGARD PRINTS BEARING EARLIER REVISION DATES → 5-26-08 8-25-08 4-14-09

REVISION DATES

SHEET 11 OF 16

FILE => glrtb02.dgn

USERNAME => trmikesl DATE PLOTTED => 06-JAN-2010 TIME PLOTTED => 07:30

DIST	COUNTY	ROUTE	POST MILES TOTAL PROJECT	SHEET No	TOTAL SHEETS
01	Hum	169	18.1,19.5	35	39

REGISTERED GEOLOGIST 8-25-08 DATE

1-4-10
PLANS APPROVAL DATE

REGISTERED GEOLOGIST WILLIAM V. McCORMICK III No. 1673 Exp. 11-30-08 CERTIFIED ENGINEERING GEOLOGIST STATE OF CALIFORNIA

The State of California or its officers or agents shall not be responsible for the accuracy or completeness of electronic copies of this plan sheet.

KLEINFELDER
2240 NORTHPOINT PKWY.
SANTA ROSA, CA 95407

NOTE: This LOTB sheet was prepared in accordance with the Caltrans Soil & Rock Logging, Classification, and Presentation Manual (June 2007)

FOR PLAN VIEW AND ADDITIONAL NOTES, SEE "LOG OF TEST BORINGS" SHEET 1 OF 7

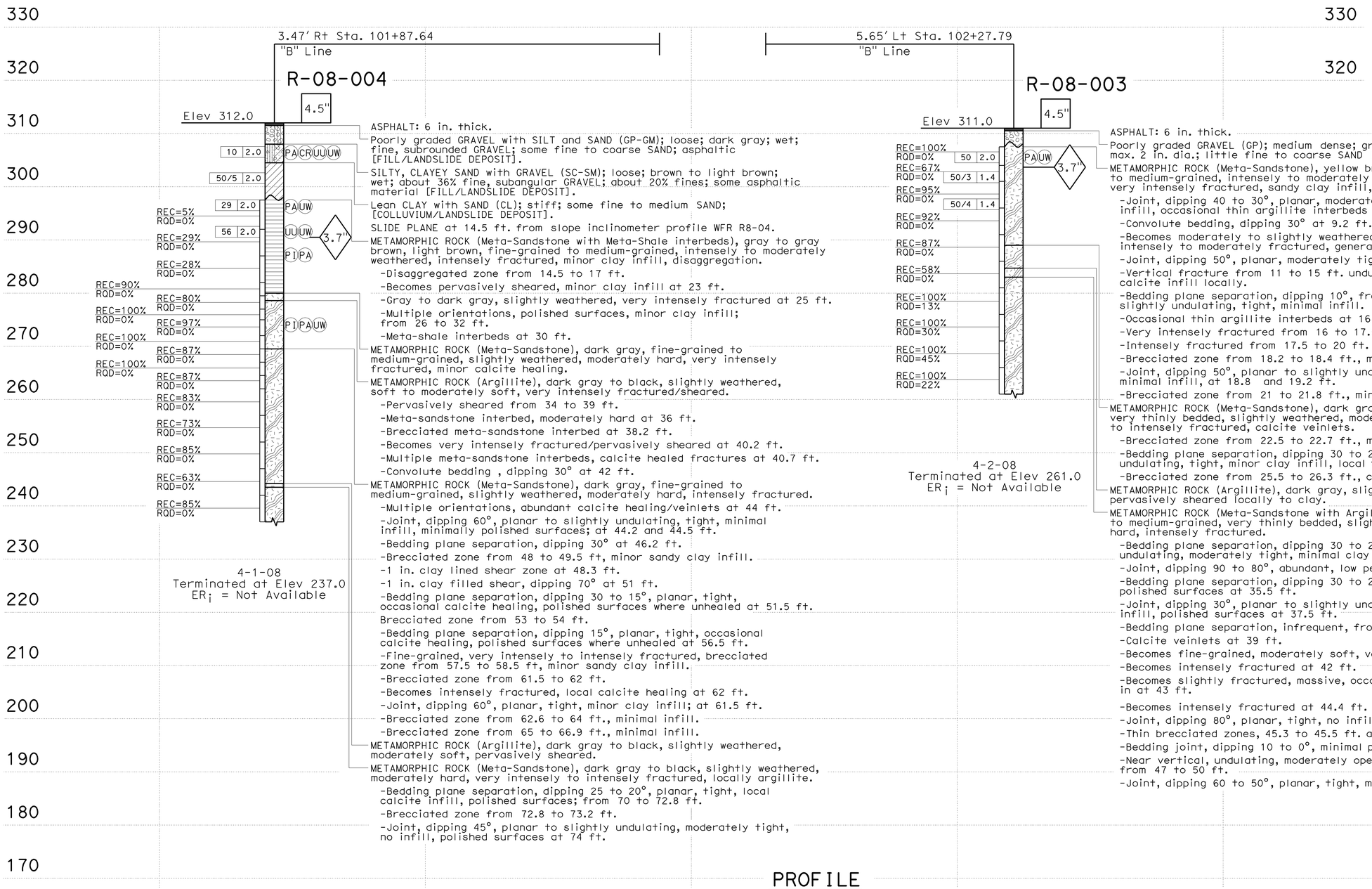

ASPHALT: 6 in. thick.
Poorly graded GRAVEL with SILT and SAND (GP-GM); loose; dark gray; wet; fine, subrounded GRAVEL; some fine to coarse SAND; asphaltic [FILL/LANDSLIDE DEPOSIT].
SILTY, CLAYEY SAND with GRAVEL (SC-SM); loose; brown to light brown; wet; about 36% fine, subangular GRAVEL; about 20% fines; some asphaltic material [FILL/LANDSLIDE DEPOSIT].
Lean CLAY with SAND (CL); stiff; some fine to medium SAND; [COLLUVIUM/LANDSLIDE DEPOSIT].
SLIDE PLANE at 14.5 ft. from slope inclinometer profile WFR R8-04.
METAMORPHIC ROCK (Meta-Sandstone with Meta-Shale interbeds), gray to gray brown, light brown, fine-grained to medium-grained, intensely to moderately weathered, intensely fractured, minor clay infill, disaggregation.
-Disaggregated zone from 14.5 to 17 ft.
-Becomes pervasively sheared, minor clay infill at 23 ft.
-Gray to dark gray, slightly weathered, very intensely fractured at 25 ft.
-Multiple orientations, polished surfaces, minor clay infill; from 26 to 32 ft.
-Meta-shale interbeds at 30 ft.
METAMORPHIC ROCK (Meta-Sandstone), dark gray, fine-grained to medium-grained, slightly weathered, moderately hard, very intensely fractured, minor calcite healing.
METAMORPHIC ROCK (Argillite), dark gray to black, slightly weathered, soft to moderately soft, very intensely fractured/sheared.
-Pervasively sheared from 34 to 39 ft.
-Meta-sandstone interbed, moderately hard at 36 ft.
-Brecciated meta-sandstone interbed at 38.2 ft.
-Becomes very intensely fractured/pervasively sheared at 40.2 ft.
-Multiple meta-sandstone interbeds, calcite healed fractures at 40.7 ft.
-Convolute bedding , dipping 30° at 42 ft.
METAMORPHIC ROCK (Meta-Sandstone), dark gray, fine-grained to medium-grained, slightly weathered, moderately hard, intensely fractured.
-Multiple orientations, abundant calcite healing/veinlets at 44 ft.
-Joint, dipping 60°, planar to slightly undulating, tight, minimal infill, minimally polished surfaces; at 44.2 and 44.5 ft.
-Bedding plane separation, dipping 30° at 46.2 ft.
-Brecciated zone from 48 to 49.5 ft, minor sandy clay infill.
-1 in. clay lined shear zone at 48.3 ft.
-1 in. clay filled shear, dipping 70° at 51 ft.
-Bedding plane separation, dipping 30 to 15°, planar, tight, occasional calcite healing, polished surfaces where unhealed at 51.5 ft.
Brecciated zone from 53 to 54 ft.
-Bedding plane separation, dipping 15°, planar, tight, occasional calcite healing, polished surfaces where unhealed at 56.5 ft.
-Fine-grained, very intensely to intensely fractured, brecciated zone from 57.5 to 58.5 ft, minor sandy clay infill.
-Brecciated zone from 61.5 to 62 ft.
-Becomes intensely fractured, local calcite healing at 62 ft.
-Joint, dipping 60°, planar, tight, minor clay infill; at 61.5 ft.
-Brecciated zone from 62.6 to 64 ft., minimal infill.
-Brecciated zone from 65 to 66.9 ft., minimal infill.
METAMORPHIC ROCK (Argillite), dark gray to black, slightly weathered, moderately soft, pervasively sheared.
METAMORPHIC ROCK (Meta-Sandstone), dark gray to black, slightly weathered, moderately hard, very intensely to intensely fractured, locally argillite.
-Bedding plane separation, dipping 25 to 20°, planar, tight, local calcite infill, polished surfaces; from 70 to 72.8 ft.
-Brecciated zone from 72.8 to 73.2 ft.
-Joint, dipping 45°, planar to slightly undulating, moderately tight, no infill, polished surfaces at 74 ft.

ASPHALT: 6 in. thick.
Poorly graded GRAVEL (GP); medium dense; gray; moist; subrounded GRAVEL, max. 2 in. dia.; little fine to coarse SAND [FILL].
METAMORPHIC ROCK (Meta-Sandstone), yellow brown to brown, fine-grained to medium-grained, intensely to moderately weathered, moderately hard, very intensely fractured, sandy clay infill, slight disaggregation.
-Joint, dipping 40 to 30°, planar, moderately tight, minor clay infill, occasional thin argillite interbeds at 8.5 ft.
-Convolute bedding, dipping 30° at 9.2 ft.
-Becomes moderately to slightly weathered, moderately hard to hard, intensely to moderately fractured, generally massive at 10 ft.
-Joint, dipping 50°, planar, moderately tight, clay infill; at 11 and 12 ft.
-Vertical fracture from 11 to 15 ft. undulating, moderately open, calcite infill locally.
-Bedding plane separation, dipping 10°, from 11 to 15 ft., planar, slightly undulating, tight, minimal infill.
-Occasional thin argillite interbeds at 16 ft.
-Very intensely fractured from 16 to 17.5 ft.
-Intensely fractured from 17.5 to 20 ft.
-Brecciated zone from 18.2 to 18.4 ft., minimal infill.
-Joint, dipping 50°, planar to slightly undulating, moderately open, minimal infill, at 18.8 and 19.2 ft.
-Brecciated zone from 21 to 21.8 ft., minimal infill.
METAMORPHIC ROCK (Meta-Sandstone), dark gray to black, fine-grained, very thinly bedded, slightly weathered, moderately hard, very intensely to intensely fractured, calcite veinlets.
-Brecciated zone from 22.5 to 22.7 ft., minimal infill.
-Bedding plane separation, dipping 30 to 25°, planar to slightly undulating, tight, minor clay infill, local vertical fractures at 24.5 ft
-Brecciated zone from 25.5 to 26.3 ft., clay infill.
METAMORPHIC ROCK (Argillite), dark gray, slightly weathered, very soft, pervasively sheared locally to clay.
METAMORPHIC ROCK (Meta-Sandstone with Argillite interbeds), fine-grained to medium-grained, very thinly bedded, slightly weathered, moderately hard, intensely fractured.
-Bedding plane separation, dipping 30 to 25°, planar to slightly undulating, moderately tight, minimal clay infill, polished surfaces at 32 ft.
-Joint, dipping 90 to 80°, abundant, low persistence, calcite healed at 33.5 ft.
-Bedding plane separation, dipping 30 to 25°, planar, tight, polished surfaces at 35.5 ft.
-Joint, dipping 30°, planar to slightly undulating, tight, minimal infill, polished surfaces at 37.5 ft.
-Bedding plane separation, infrequent, from 37 to 38.8 ft.
-Calcite veinlets at 39 ft.
-Becomes fine-grained, moderately soft, very intensely fractured at 40 ft.
-Becomes intensely fractured at 42 ft.
-Becomes slightly fractured, massive, occasional argillite interbeds to 0.5 in at 43 ft.
-Becomes intensely fractured at 44.4 ft.
-Joint, dipping 80°, planar, tight, no infill at 44.6 ft.
-Thin brecciated zones, 45.3 to 45.5 ft. and 46.1 to 46.5 ft.
-Bedding joint, dipping 10 to 0°, minimal parting at 48 ft.
-Near vertical, undulating, moderately open, partial calcite healing; from 47 to 50 ft.
-Joint, dipping 60 to 50°, planar, tight, minor calcite infill at 49.8 ft.

DESIGN OVERSIGHT ENGINEER:	SIGN OFF DATE:		
FUNCTIONAL SUPERVISOR	DRAWN BY: A. Sanchez	FIELD INVESTIGATION BY:	
NAME:	CHECKED BY: E. Johnson	J. Richmond, April 2008	

PREPARED FOR THE STATE OF CALIFORNIA DEPARTMENT OF TRANSPORTATION

PROJECT ENGINEER

BRIDGE NO.
POST MILES 19.47

NOTCHKO RETAINING WALL
LOG OF TEST BORINGS 3 of 7

OGS CIVIL LOG OF TEST BORINGS SHEET

ORIGINAL SCALE IN INCHES FOR REDUCED PLANS 0 1 2 3

CU
EA 478301

DISREGARD PRINTS BEARING EARLIER REVISION DATES

REVISION DATES: 5-26-08 8-25-08 4-14-09

SHEET 12 OF 16

FILE => glltb03.dgn

USERNAME => trmikes1 DATE PLOTTED => 06-JAN-2010 TIME PLOTTED => 07:30

DIST	COUNTY	ROUTE	POST MILES TOTAL PROJECT	SHEET No	TOTAL SHEETS
01	Hum	169	18.1,19.5	36	39

REGISTERED GEOLOGIST — DATE 8-25-08

1-4-10
PLANS APPROVAL DATE

REGISTERED GEOLOGIST WILLIAM V. McCORMICK III No. 1673 Exp. 11-30-08 CERTIFIED ENGINEERING GEOLOGIST STATE OF CALIFORNIA

The State of California or its officers or agents shall not be responsible for the accuracy or completeness of electronic copies of this plan sheet.

KLEINFELDER
2240 NORTHPOINT PKWY.
SANTA ROSA, CA 95407

NOTE: This LOTB sheet was prepared in accordance with the Caltrans Soil & Rock Logging, Classification, and Presentation Manual (Jume 2007)

FOR PLAN VIEW AND ADDITIONAL NOTES, SEE "LOG OF TEST BORINGS" SHEET 1 OF 7

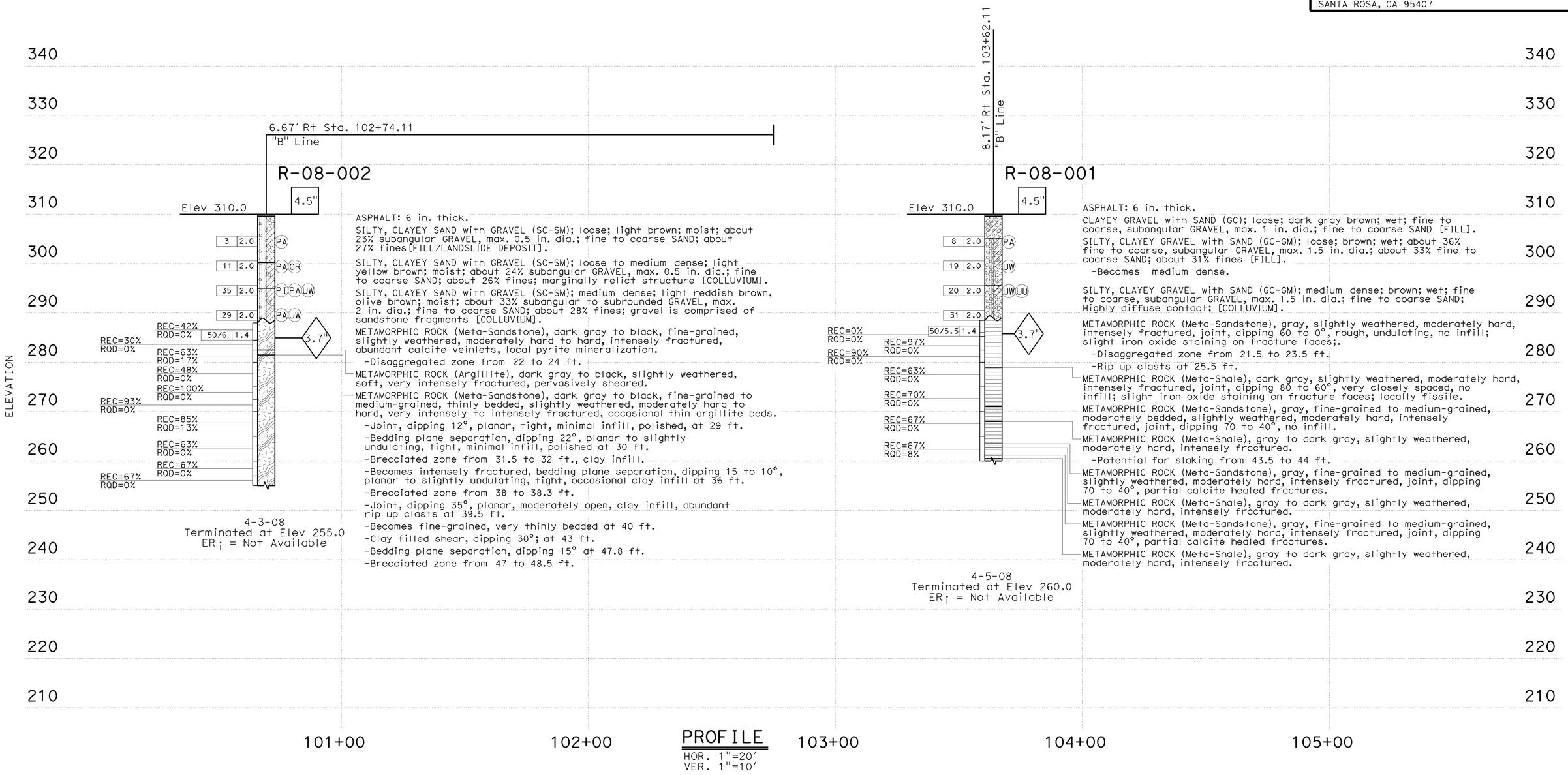

ASPHALT: 6 in. thick.

SILTY, CLAYEY SAND with GRAVEL (SC-SM); loose; light brown; moist; about 23% subangular GRAVEL, max. 0.5 in. dia.; fine to coarse SAND; about 27% fines[FILL/LANDSLIDE DEPOSIT].

SILTY, CLAYEY SAND with GRAVEL (SC-SM); loose to medium dense; light yellow brown; moist; about 24% subangular GRAVEL, max. 0.5 in. dia.; fine to coarse SAND; about 26% fines; marginally relict structure [COLLUVIUM].

SILTY, CLAYEY SAND with GRAVEL (SC-SM); medium dense; light reddish brown, olive brown; moist; about 33% subangular to subrounded GRAVEL, max. 2 in. dia.; fine to coarse SAND; about 28% fines; gravel is comprised of sandstone fragments [COLLUVIUM].

METAMORPHIC ROCK (Meta-Sandstone), dark gray to black, fine-grained, slightly weathered, moderately hard to hard, intensely fractured, abundant calcite veinlets, local pyrite mineralization.

-Disaggregated zone from 22 to 24 ft.

METAMORPHIC ROCK (Argillite), dark gray to black, slightly weathered, soft, very intensely fractured, pervasively sheared.

METAMORPHIC ROCK (Meta-Sandstone), dark gray to black, fine-grained to medium-grained, thinly bedded, slightly weathered, moderately hard to hard, very intensely to intensely fractured, occasional thin argillite beds.

-Joint, dipping 12°, planar, tight, minimal infill, polished, at 29 ft.

-Bedding plane separation, dipping 22°, planar to slightly undulating, tight, minimal infill, polished at 30 ft.

-Brecciated zone from 31.5 to 32 ft., clay infill.

-Becomes intensely fractured, bedding plane separation, dipping 15 to 10°, planar to slightly undulating, tight, occasional clay infill at 36 ft.

-Brecciated zone from 38 to 38.3 ft.

-Joint, dipping 35°, planar, moderately open, clay infill, abundant rip up clasts at 39.5 ft.

-Becomes fine-grained, very thinly bedded at 40 ft.

-Clay filled shear, dipping 30°; at 43 ft.

-Bedding plane separation, dipping 15° at 47.8 ft.

-Brecciated zone from 47 to 48.5 ft.

ASPHALT: 6 in. thick.

CLAYEY GRAVEL with SAND (GC); loose; dark gray brown; wet; fine to coarse, subangular GRAVEL, max. 1 in. dia.; fine to coarse SAND [FILL].

SILTY, CLAYEY GRAVEL with SAND (GC-GM); loose; brown; wet; about 36% fine to coarse, subangular GRAVEL, max. 1.5 in. dia.; about 33% fine to coarse SAND; about 31% fines [FILL].

-Becomes medium dense.

SILTY, CLAYEY GRAVEL with SAND (GC-GM); medium dense; brown; wet; fine to coarse, subangular GRAVEL, max. 1.5 in. dia.; fine to coarse SAND; Highly diffuse contact; [COLLUVIUM].

METAMORPHIC ROCK (Meta-Sandstone), gray, slightly weathered, moderately hard, intensely fractured, joint, dipping 60 to 0°, rough, undulating, no infill; slight iron oxide staining on fracture faces;.

-Disaggregated zone from 21.5 to 23.5 ft.

-Rip up clasts at 25.5 ft.

METAMORPHIC ROCK (Meta-Shale), dark gray, slightly weathered, moderately hard, intensely fractured, joint, dipping 80 to 60°, very closely spaced, no infill; slight iron oxide staining on fracture faces; locally fissile.

METAMORPHIC ROCK (Meta-Sandstone), gray, fine-grained to medium-grained, moderately bedded, slightly weathered, moderately hard, intensely fractured, joint, dipping 70 to 40°, no infill.

METAMORPHIC ROCK (Meta-Shale), gray to dark gray, slightly weathered, moderately hard, intensely fractured.

-Potential for slaking from 43.5 to 44 ft.

METAMORPHIC ROCK (Meta-Sandstone), gray, fine-grained to medium-grained, slightly weathered, moderately hard, intensely fractured, joint, dipping 70 to 40°, partial calcite healed fractures.

METAMORPHIC ROCK (Meta-Shale), gray to dark gray, slightly weathered, moderately hard, intensely fractured.

METAMORPHIC ROCK (Meta-Sandstone), gray, fine-grained to medium-grained, slightly weathered, moderately hard, intensely fractured, joint, dipping 70 to 40°, partial calcite healed fractures.

METAMORPHIC ROCK (Meta-Shale), gray to dark gray, slightly weathered, moderately hard, intensely fractured.

PROFILE
HOR. 1"=20'
VER. 1"=10'

DESIGN OVERSIGHT ENGINEER:	SIGN OFF DATE:	PREPARED FOR THE STATE OF CALIFORNIA DEPARTMENT OF TRANSPORTATION	PROJECT ENGINEER	BRIDGE NO.	NOTCHKO RETAINING WALL
FUNCTIONAL SUPERVISOR	DRAWN BY: A. Sanchez	FIELD INVESTIGATION BY:		POST MILES 19.47	LOG OF TEST BORINGS 4 of 7
NAME:	CHECKED BY: E. Johnson	J. Richmond, E. Johnson, April 2008			
OGS CIVIL LOG OF TEST BORINGS SHEET	ORIGINAL SCALE IN INCHES FOR REDUCED PLANS 0 1 2 3	CU EA 478301	DISREGARD PRINTS BEARING EARLIER REVISION DATES	REVISION DATES 5-28-08 8-25-08 4-14-09	SHEET 13 OF 16

FILE => glrtb04.dgn

USERNAME => trmikest DATE PLOTTED => 06-JAN-2010 TIME PLOTTED => 07:30

REFERENCE: CALTRANS SOIL & ROCK LOGGING, CLASSIFICATION, AND PRESENTATION MANUAL (JUNE 2007)

DIST	COUNTY	ROUTE	POST MILES TOTAL PROJECT	SHEET No	TOTAL SHEETS
01	Hum	169	18.1,19.5	37	39

REGISTERED GEOLOGIST 8-25-08 DATE

REGISTERED GEOLOGIST WILLIAM V. McCORMICK III No. 1673 Exp. 11-30-08 CERTIFIED ENGINEERING GEOLOGIST STATE OF CALIFORNIA

1-4-10
PLANS APPROVAL DATE

The State of California or its officers or agents shall not be responsible for the accuracy or completeness of electronic copies of this plan sheet.

KLEINFELDER
2240 NORTHPOINT PKWY.
SANTA ROSA, CA 95407

PERCENT CORE RECOVERY (REC) & ROCK QUALITY DESIGNATION (RQD)

$$REC = \frac{\sum \text{Length of the recovered core pieces (inches)}}{\text{Total length of core run (inches)}} \times 100\%$$

$$RQD = \frac{\sum \text{Length of intact core pieces} \geq 4''}{\text{Total length of core run (inches)}} \times 100\%$$

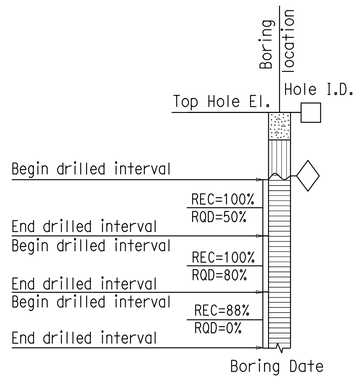

RELATIVE STRENGTH OF INTACT ROCK

Term	Uniaxial Compressive Strength (PSI)
Extremely Strong	> 30,000
Very Strong	14,500 - 30,000
Strong	7,000 - 14,500
Medium Strong	3,500 - 7,000
Weak	700 - 3,500
Very Weak	150 - 700
Extremely Weak	< 150

BEDDING SPACING

Description	Thickness / Spacing
Massive	Greater than 10 ft
Very thickly bedded	3 to 10 ft
Thickly bedded	1 to 3 ft
Moderately bedded	3-5/8" to 1 ft
Thinly bedded	1-1/4" to 3-5/8"
Very thinly bedded	3/8" to 1-1/4"
Laminated	Less than 3/8"

LEGEND OF ROCK MATERIALS

- IGNEOUS ROCK
- SEDIMENTARY ROCK
- METAMORPHIC ROCK

ROCK HARDNESS

Description	Criteria
Extremely Hard	Specimen cannot be scratched with a pocket knife or sharp pick; can only be chipped with repeated heavy hammer blows.
Very Hard	Specimen cannot be scratched with a pocket knife or sharp pick. Breaks with repeated heavy hammer blows.
Hard	Specimen can be scratched with a pocket knife or sharp pick with difficulty (heavy pressure). Heavy hammer blows required to break specimen.
Moderately Hard	Specimen can be scratched with pocket knife or sharp pick with light or moderate pressure. Core breaks with moderate hammer pressure.
Moderately Soft	Specimen can be grooved 1/6" deep with a pocket knife or sharp pick with moderate or heavy pressure. Breaks with light hammer blow or heavy manual pressure.
Soft	Specimen can be grooved or gouged easily by a pocket knife or sharp pick with light pressure, can be scratched with fingernail. Breaks with light to moderate manual pressure.
Very Soft	Specimen can be readily indented, grooved or gouged with fingernail, or carved with a pocket knife. Breaks with light manual pressure.

FRACTURE DENSITY

Description	Observed Fracture Density
Unfractured	No fractures.
Very slightly fractured	Lengths greater than 3 feet.
Slightly fractured	Lengths from 1 to 3 feet with few lengths less than 1 foot or greater than 3 feet.
Moderately fractured	Lengths mostly in 4" to 1 foot range with most lengths about 8"
Intensely fractured	Lengths average from 1 to 4" with scattered fragmented intervals with lengths less than 4"
Very intensely fractured	Mostly chips and fragments with a few scattered short core lengths.

Combination descriptors (such as "Very intensely to intensely fractured") are used where equal distribution of both fracture density characteristics is present over a significant interval or exposure, or where characteristics are "in between" the descriptor definitions. Only two adjacent descriptors may be combined.

WEATHERING DESCRIPTORS FOR INTACT ROCK

Description	Diagnostic features					General Characteristics
	Chemical Weathering-Discoloration and/or oxidation		Mechanical Weathering-Grain boundary conditions (disaggregation) primarily for granitics and some coarse-grained sediments	Texture and Solutioning		
	Body of Rock	Fracture Surfaces		Texture	Solutioning	
Fresh	No discoloration, not oxidized.	No discoloration or oxidation.	No separation, intact (tight).	No change.	No solutioning.	Hammer rings when crystalline rocks are struck.
Slightly Weathered	Discoloration or oxidation is limited to surface of, or short distance from, fractures; some feldspar crystals are dull.	Minor to complete discoloration or oxidation of most surfaces.	No visible separation, intact (tight).	Preserved.	Minor leaching of some soluble minerals may be noted.	Hammer rings when crystalline rocks are struck. Body of rock not weakened.
Moderately Weathered	Discoloration or oxidation extends from fractures usually throughout; Fe-Mg minerals are "rusty," feldspar crystals are "cloudy."	All fracture surfaces are discolored or oxidized.	Partial separation of boundaries visible.	Generally preserved.	Soluble minerals may be mostly leached.	Hammer does not ring when rock is struck. Body of rock is slightly weakened.
Intensely Weathered	Discoloration or oxidation throughout; all feldspars and Fe-Mg minerals are altered to clay to some extent; or chemical alteration produces in-situ disaggregation, see grain boundary conditions.	All fracture surfaces are discolored or oxidized, surfaces friable.	Partial separation, rock is friable; in semiarid conditions granitics are disaggregated.	Texture altered by chemical disintegration (hydration, argillation).	Leaching of soluble minerals may be complete.	Dull sound when struck with hammer, usually can be broken with moderate to heavy manual pressure or by light hammer blow without reference to planes of weakness such as incipient or hairline fractures, or veinlets. Rock is significantly weakened.
Decomposed	Discolored or oxidized throughout, but resistant minerals such as quartz may be unaltered; all feldspars and Fe-Mg minerals are completely altered to clay.		Complete separation of grain boundaries (disaggregated).	Resembles a soil, partial or complete remnant rock structure may be preserved; leaching of soluble minerals usually complete.		Can be granulated by hand. Resistant minerals such as quartz may be present as "stringers" or "dikes."

Combination descriptors (such as "slightly weathered to fresh") are permissible where equal distribution of both weathering characteristics is present over significant intervals or where characteristics present are "in between" the diagnostic feature. However, combination descriptors should not be used where significant, identifiable zones can be delineated. Only two adjacent descriptors may be combined. "Very intensely weathered" is the combination descriptor for "intensely weathered to decomposed."

DESIGN OVERSIGHT ENGINEER: SIGN OFF DATE:

PREPARED BY A. Sanchez

CHECKED BY E. Johnson

PREPARED FOR THE STATE OF CALIFORNIA DEPARTMENT OF TRANSPORTATION

PROJECT ENGINEER

BRIDGE NO.

POST MILE 19.47

ROCK LEGEND

LOG OF TEST BORINGS 5 of 7

GS LOTB ROCK LEGEND

ORIGINAL SCALE IN INCHES FOR REDUCED PLANS 0 1 2 3

CU
EA 478301

DISREGARD PRINTS BEARING EARLIER REVISION DATES 5-26-08 8-25-08

REVISION DATES

SHEET 14 OF 16

FILE => glrb05.dgn

USERNAME => trmikes1 DATE PLOTTED => 06-JAN-2010 TIME PLOTTED => 07:31

REFERENCE: CALTRANS SOIL & ROCK LOGGING, CLASSIFICATION, AND PRESENTATION MANUAL (JUNE 2007)

DIST	COUNTY	ROUTE	POST MILES TOTAL PROJECT	SHEET No	TOTAL SHEETS
01	Hum	169	18.1,19.5	38	39

REGISTERED GEOLOGIST 8-25-08 DATE

REGISTERED GEOLOGIST WILLIAM V. McCORMICK III No. 1673 Exp. 11-30-08 CERTIFIED ENGINEERING GEOLOGIST STATE OF CALIFORNIA

1-4-10
PLANS APPROVAL DATE

The State of California or its officers or agents shall not be responsible for the accuracy or completeness of electronic copies of this plan sheet.

KLEINFELDER
2240 NORTHPOINT PKWY.
SANTA ROSA, CA 95407

CEMENTATION

Description	Criteria
Weak	Crumbles or breaks with handling or little finger pressure.
Moderate	Crumbles or breaks with considerable finger pressure.
Strong	Will not crumble or break with finger pressure.

CONSISTENCY OF COHESIVE SOILS

Description	Unconfined Compressive Strength (tsf)	Pocket Penetrometer Measurement (tsf)	Torvane Measurement (tsf)	Field Approximation
Very Soft	< 0.25	< 0.25	< 0.12	Easily penetrated several inches by fist
Soft	0.25 to 0.50	0.25 to 0.50	0.12 to 0.25	Easily penetrated several inches by thumb
Medium Stiff	0.50 to 1.0	0.50 to 1.0	0.25 to 0.50	Penetrated several inches by thumb with moderate effort
Stiff	1 to 2	1 to 2	0.50 to 1.0	Readily indented by thumb but penetrated only with great effort
Very Stiff	2 to 4	2 to 4	1.0 to 2.0	Readily indented by thumbnail
Hard	> 4.0	> 4.0	> 2.0	Indented by thumbnail with difficulty

BOREHOLE IDENTIFICATION

Symbol	Hole Type	Description
Size	A	Auger Boring
Size	R P	Rotary drilled boring Rotary percussion boring (air)
Size	R	Rotary drilled diamond core
Size	HD HA	Hand driven (1-inch soil tube) Hand Auger
●	D	Dynamic Cone Penetration Boring
▲	CPT	Cone Penetration Test (ASTM D 5778-95)
⬚	O	Other

Note: Size in inches.

PLASTICITY OF FINE-GRAINED SOILS

Description	Criteria
Nonplastic	A 1/8-inch thread cannot be rolled at any water content.
Low	The thread can barely be rolled and the lump cannot be formed when drier than the plastic limit.
Medium	The thread is easy to roll and not much time is required to reach the plastic limit. The thread cannot be rerolled after reaching the plastic limit. The lump crumbles when drier than the plastic limit.
High	It takes considerable time rolling and kneading to reach the plastic limit. The thread can be rerolled several times after reaching the plastic limit. The lump can be formed without crumbling when drier than the plastic limit.

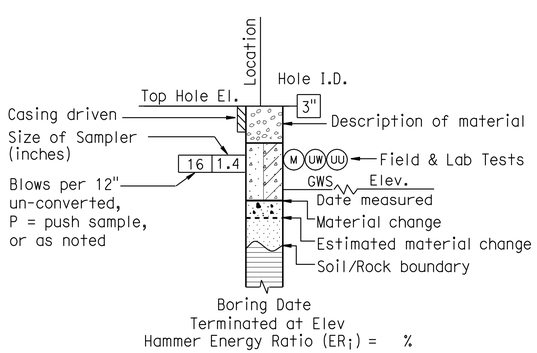

ROTARY BORING

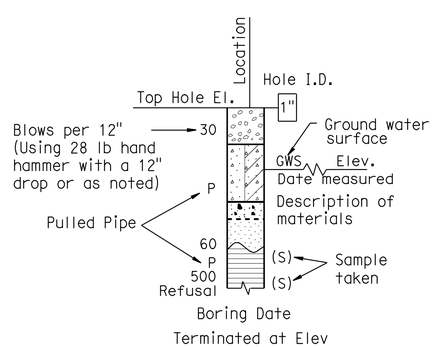

HAND BORING

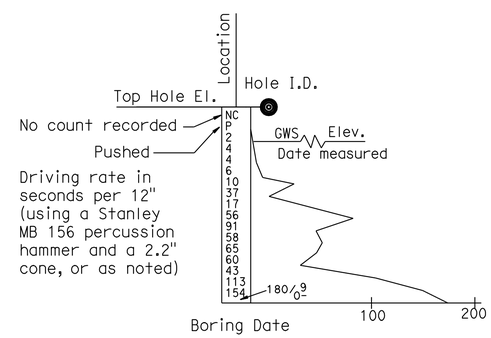

DYNAMIC CONE PENETRATION BORING

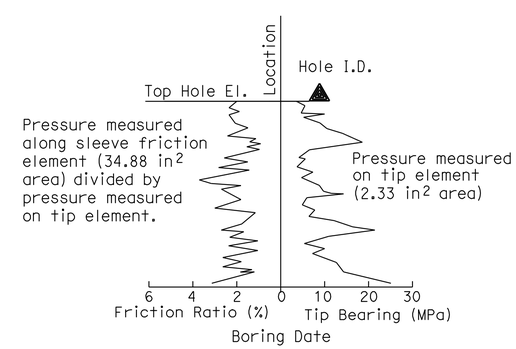

CONE PENETRATION TEST (CPT) SOUNDING

DESIGN OVERSIGHT ENGINEER:	SIGN OFF DATE:	PREPARED FOR THE STATE OF CALIFORNIA DEPARTMENT OF TRANSPORTATION	PROJECT ENGINEER
PREPARED BY	A. Sanchez		
CHECKED BY	E. Johnson		

BRIDGE NO.

POST MILE 19.47

SOIL LEGEND

LOG OF TEST BORINGS 6 OF 7

GS LOTB SOIL LEGEND

ORIGINAL SCALE IN INCHES FOR REDUCED PLANS 0 1 2 3

CU
EA 478301

DISREGARD PRINTS BEARING EARLIER REVISION DATES

REVISION DATES: ~~5-26-08~~ 8-25-08

SHEET 15 OF 16

FILE => glltb06.dgn

USERNAME => trmikes1 DATE PLOTTED => 06-JAN-2010 TIME PLOTTED => 07:31

REFERENCE: CALTRANS SOIL & ROCK LOGGING, CLASSIFICATION, AND PRESENTATION MANUAL (JUNE 2007)

DIST	COUNTY	ROUTE	POST MILES TOTAL PROJECT	SHEET No	TOTAL SHEETS
01	Hum	169	18.1,19.5	39	39

REGISTERED GEOLOGIST 8-25-08 DATE

1-4-10
PLANS APPROVAL DATE

REGISTERED GEOLOGIST WILLIAM V. McCORMICK III No. 1673 Exp. 11-30-08 CERTIFIED ENGINEERING GEOLOGIST STATE OF CALIFORNIA

The State of California or its officers or agents shall not be responsible for the accuracy or completeness of electronic copies of this plan sheet.

KLEINFELDER
2240 NORTHPOINT PKWY.
SANTA ROSA, CA 95407

GROUP SYMBOLS AND NAMES

Graphic/Symbol	Group Names
GW	Well-graded GRAVEL Well-graded GRAVEL with SAND
GP	Poorly graded GRAVEL Poorly graded GRAVEL with SAND
GW-GM	Well-graded GRAVEL with SILT Well-graded GRAVEL with SILT and SAND
GW-GC	Well-graded GRAVEL with CLAY (or SILTY CLAY) Well-graded GRAVEL with CLAY and SAND (or SILTY CLAY and SAND)
GP-GM	Poorly graded GRAVEL with SILT Poorly graded GRAVEL with SILT and SAND
GP-GC	Poorly graded GRAVEL with CLAY (or SILTY CLAY) Poorly graded GRAVEL with CLAY and SAND (or SILTY CLAY and SAND)
GM	SILTY GRAVEL SILTY GRAVEL with SAND
GC	CLAYEY GRAVEL CLAYEY GRAVEL with SAND
GC-GM	SILTY, CLAYEY GRAVEL SILTY, CLAYEY GRAVEL with SAND
SW	Well-graded SAND Well-graded SAND with GRAVEL
SP	Poorly graded SAND Poorly graded SAND with GRAVEL
SW-SM	Well-graded SAND with SILT Well-graded SAND with SILT and GRAVEL
SW-SC	Well-graded SAND with CLAY (or SILTY CLAY) Well-graded SAND with CLAY and GRAVEL (or SILTY CLAY and GRAVEL)
SP-SM	Poorly graded SAND with SILT Poorly graded SAND with SILT and GRAVEL
SP-SC	Poorly graded SAND with CLAY (or SILTY CLAY) Poorly graded SAND with CLAY and GRAVEL (or SILTY CLAY and GRAVEL)
SM	SILTY SAND SILTY SAND with GRAVEL
SC	CLAYEY SAND CLAYEY SAND with GRAVEL
SC-SM	SILTY, CLAYEY SAND SILTY, CLAYEY SAND with GRAVEL
PT	PEAT
	COBBLES COBBLES and BOULDERS BOULDERS

Graphic/Symbol	Group Names
CL	Lean CLAY Lean CLAY with SAND Lean CLAY with GRAVEL SANDY lean CLAY SANDY lean CLAY with GRAVEL GRAVELLY lean CLAY GRAVELLY lean CLAY with SAND
CL-ML	SILTY CLAY SILTY CLAY with SAND SILTY CLAY with GRAVEL SANDY SILTY CLAY SANDY SILTY CLAY with GRAVEL GRAVELLY SILTY CLAY GRAVELLY SILTY CLAY with SAND
ML	SILT SILT with SAND SILT with GRAVEL SANDY SILT SANDY SILT with GRAVEL GRAVELLY SILT GRAVELLY SILT with SAND
OL	ORGANIC lean CLAY ORGANIC lean CLAY with SAND ORGANIC lean CLAY with GRAVEL SANDY ORGANIC lean CLAY SANDY ORGANIC lean CLAY with GRAVEL GRAVELLY ORGANIC lean CLAY GRAVELLY ORGANIC lean CLAY with SAND
OL	ORGANIC SILT ORGANIC SILT with SAND ORGANIC SILT with GRAVEL SANDY ORGANIC SILT SANDY ORGANIC SILT with GRAVEL GRAVELLY ORGANIC SILT GRAVELLY ORGANIC SILT with SAND
CH	Fat CLAY Fat CLAY with SAND Fat CLAY with GRAVEL SANDY fat CLAY SANDY fat CLAY with GRAVEL GRAVELLY fat CLAY GRAVELLY fat CLAY with SAND
MH	Elastic SILT Elastic SILT with SAND Elastic SILT with GRAVEL SANDY elastic SILT SANDY elastic SILT with GRAVEL GRAVELLY elastic SILT GRAVELLY elastic SILT with SAND
OH	ORGANIC fat CLAY ORGANIC fat CLAY with SAND ORGANIC fat CLAY with GRAVEL SANDY ORGANIC fat CLAY SANDY ORGANIC fat CLAY with GRAVEL GRAVELLY ORGANIC fat CLAY GRAVELLY ORGANIC fat CLAY with SAND
OH	ORGANIC elastic SILT ORGANIC elastic SILT with SAND ORGANIC elastic SILT with GRAVEL SANDY ORGANIC elastic SILT SANDY ORGANIC elastic SILT with GRAVEL GRAVELLY ORGANIC elastic SILT GRAVELLY ORGANIC elastic SILT with SAND
OL/OH	ORGANIC SOIL ORGANIC SOIL with SAND ORGANIC SOIL with GRAVEL SANDY ORGANIC SOIL SANDY ORGANIC SOIL with GRAVEL GRAVELLY ORGANIC SOIL GRAVELLY ORGANIC SOIL with SAND

FIELD AND LABORATORY TESTING

- (C) Consolidation (ASTM D 2435)
- (CL) Collapse Potential (ASTM D 5333)
- (CP) Compaction Curve (CTM 216)
- (CR) Corrosivity Testing (CTM 643, CTM 422, CTM 417)
- (CU) Consolidated Undrained Triaxial (ASTM D 4767)
- (DS) Direct Shear (ASTM D 3080)
- (EI) Expansion Index (ASTM D 4829)
- (M) Moisture Content (ASTM D 2216)
- (OC) Organic Content-% (ASTM D 2974)
- (P) Permeability (CTM 220)
- (PA) Particle Size Analysis (ASTM D 422)
- (PI) Plasticity Index (AASHTO T 90) Liquid Limit (AASHTO T 89)
- (PL) Point Load Index (ASTM D 5731)
- (PM) Pressure Meter
- (PP) Pocket Penetrometer
- (R) R-Value (CTM 301)
- (SE) Sand Equivalent (CTM 217)
- (SG) Specific Gravity (AASHTO T 100)
- (SL) Shrinkage Limit (ASTM D 427)
- (SW) Swell Potential (ASTM D 4546)
- (TV) Pocket Torvane
- (UC) Unconfined Compression-Soil (ASTM D 2166) Unconfined Compression-Rock (ASTM D 2938)
- (UU) Unconsolidated Undrained Triaxial (ASTM D 2850)
- (UW) Unit Weight (ASTM D 4767)
- (VS) Vane Shear (AASHTO T 223)

APPARENT DENSITY OF COHESIONLESS SOILS

Description	SPT N_{60} (Blows / 12 inches)
Very loose	0 - 4
Loose	5 - 10
Medium Dense	11 - 30
Dense	31 - 50
Very Dense	> 50

MOISTURE

Description	Criteria
Dry	Absence of moisture, dusty, dry to the touch
Moist	Damp but no visible water
Wet	Visible free water, usually soil is below water table

PERCENT OR PROPORTION OF SOILS

Description	Criteria
Trace	Particles are present but estimated to be less than 5%
Few	5 to 10%
Little	15 to 25%
Some	30 to 45%
Mostly	50 to 100%

PARTICLE SIZE

Description		Size
Boulder		> 12"
Cobble		3" to 12"
Gravel	Coarse	3/4" to 3"
	Fine	No. 4 to 3/4"
Sand	Coarse	No. 10 to No. 4
	Medium	No. 40 to No. 10
	Fine	No. 200 to No. 40

DESIGN OVERSIGHT ENGINEER: SIGN OFF DATE:
PREPARED BY A. Sanchez
CHECKED BY E. Johnson

PREPARED FOR THE STATE OF CALIFORNIA DEPARTMENT OF TRANSPORTATION

PROJECT ENGINEER

BRIDGE NO.
POST MILE 19.47

SOIL LEGEND
LOG OF TEST BORINGS 7 of 7

GS LOTB SOIL LEGEND

ORIGINAL SCALE IN INCHES FOR REDUCED PLANS 0 1 2 3

CU
EA 478301

DISREGARD PRINTS BEARING EARLIER REVISION DATES 5-26-08 8-25-08

REVISION DATES

SHEET 16 OF 16

FILE => glltb07.dgn

USERNAME => trmikest DATE PLOTTED => 06-JAN-2010 TIME PLOTTED => 07:32