Dist	COUNTY	ROUTE	POST MILES TOTAL PROJECT	SHEET No.	TOTAL SHEETS
01	Men	1	92.8	20	96

Kemset Moore 11-4-11
REGISTERED CIVIL ENGINEER DATE

6-11-12
PLANS APPROVAL DATE

REGISTERED PROFESSIONAL ENGINEER KEMSET MOORE No. 64494 Exp. 6-30-13 CIVIL STATE OF CALIFORNIA

THE STATE OF CALIFORNIA OR ITS OFFICERS OR AGENTS SHALL NOT BE RESPONSIBLE FOR THE ACCURACY OR COMPLETENESS OF SCANNED COPIES OF THIS PLAN SHEET.

NOTES:

1. FOR G1 DRAINAGE INLET DETAILS NOT SHOWN, SEE Std PLAN D73.
2. FOR FRAME DETAILS, SEE Std PLAN D77-A.

DRAINAGE SYSTEM NUMBER	POINT No./ LOCATION	STATION	OFFSET	ELEVATION
1	1	401+81.25	16.14 Lt	338.04
	GRATE	401+87.50	17.31 Lt	339.06
	2	401+93.75	16.14 Lt	338.06
5	1	408+15.63	16.32 Lt	334.11
	GRATE	408+21.88	17.49 Lt	334.10
	2	408+27.13	16.32 Lt	334.05

RSP CLASS	T (FEET)
LIGHT	1.5
1/4TON	3.0
1/2TON	4.0
1 TON	5.0

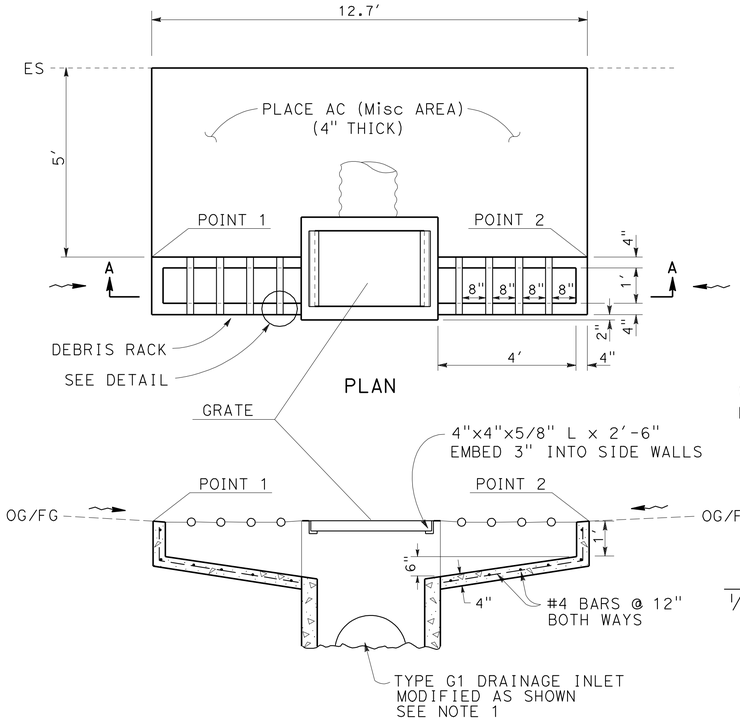

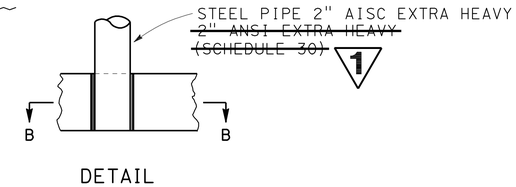

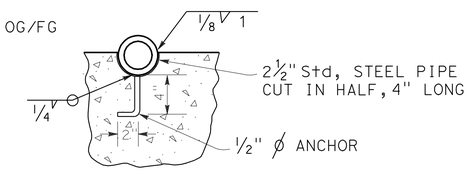

MODIFIED G1 DRAINAGE INLET

DRAINAGE SYSTEM No. 1 5

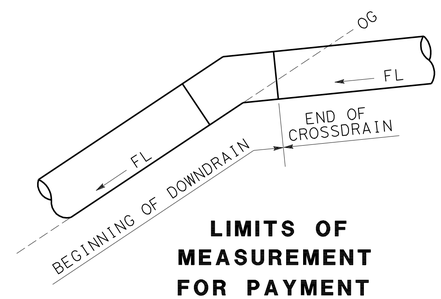

LIMITS OF MEASUREMENT FOR PAYMENT

FOR DIMENSIONS L & W
SEE DRAINAGE PROFILES

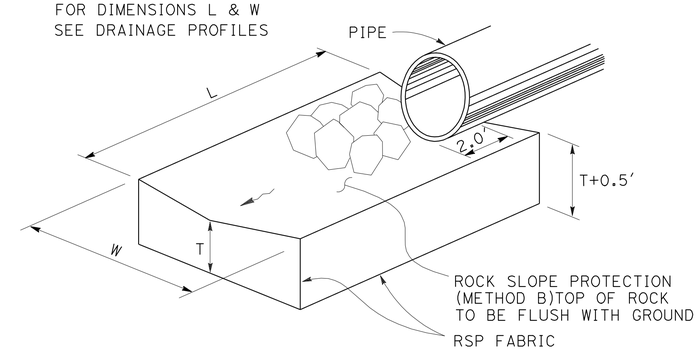

ROCK ENERGY DISSIPATOR AT DRAINAGE OUTLET

ALIGNMENT "A"

DRAINAGE SYSTEM No. 1 2 4 5

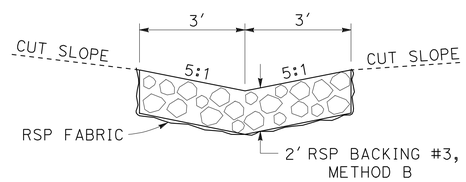

ROCK LINED DITCH

"F" 300+89, 10.0' Lt TO 36.0' Lt
"L" 101+13, 51.6' Rt TO 86.4' Rt

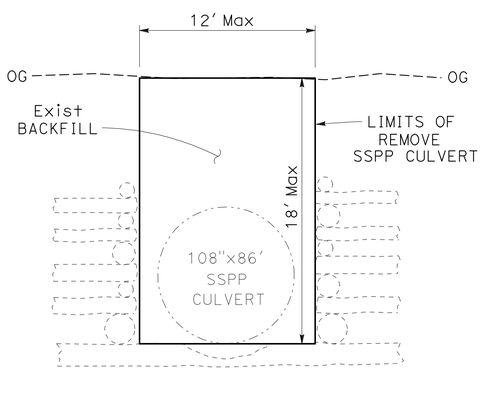

LIMITS OF REMOVE SSPP CULVERT

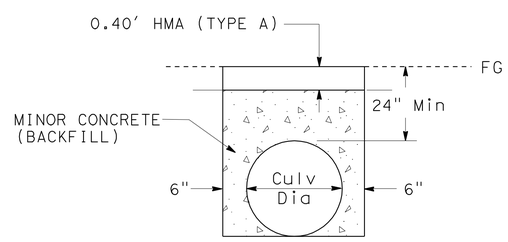

MINOR CONCRETE (BACKFILL)

SEE Std PLAN A62D, A62DA & A62F FOR EXCAVATION AND BACKFILL DETAILS

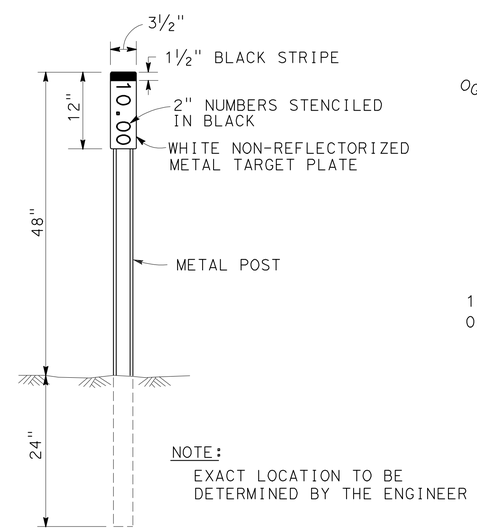

NOTE:
EXACT LOCATION TO BE DETERMINED BY THE ENGINEER

MARKER (CULVERT)

DRAINAGE SYSTEM No. 1 4 5

NOTE: RSP TO EXTEND BENEATH BRIDGE DECK DRAINS

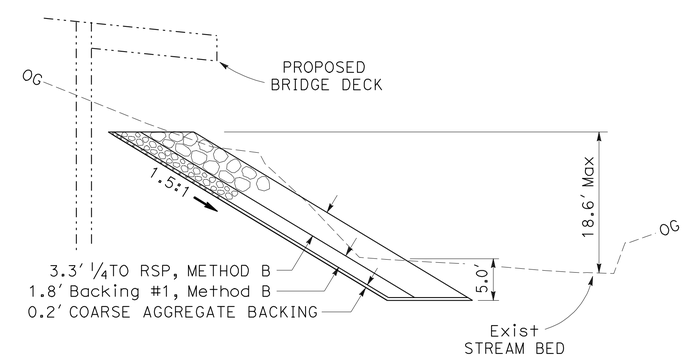

ROCK SLOPE PROTECTION

(AT ABUTMENT 4)

"A" 405+75.00, 41.8' TO 47.9' Rt
"A" 405+15.00, 23.8' TO 28.0' Rt

1 REVISED PER ADDENDUM No. 1 DATED OCTOBER 11, 2012

DRAINAGE DETAILS

NO SCALE **DD-1**

REVISED BY | DATE REVISED
KEMSET MOORE
CALCULATED-DESIGNED BY | CHECKED BY
FUNCTIONAL SUPERVISOR
TIMOTHY L. BOESE

STATE OF CALIFORNIA - DEPARTMENT OF TRANSPORTATION
Caltrans
HYDRAULICS

LAST REVISION 00-00-00 | DATE PLOTTED => 10-OCT-2012 | TIME PLOTTED => 11:37

Dist	COUNTY	ROUTE	POST MILES TOTAL PROJECT	SHEET No.	TOTAL SHEETS
01	Men	1	92.8	21	96

Kemset Moore 11-4-11
REGISTERED CIVIL ENGINEER DATE

6-11-12
PLANS APPROVAL DATE

REGISTERED PROFESSIONAL ENGINEER KEMSET MOORE No. 64494 Exp. 6-30-13 CIVIL STATE OF CALIFORNIA

THE STATE OF CALIFORNIA OR ITS OFFICERS OR AGENTS SHALL NOT BE RESPONSIBLE FOR THE ACCURACY OR COMPLETENESS OF SCANNED COPIES OF THIS PLAN SHEET.

1

NOTES:

1. (N) NOT A SEPARATE PAY ITEM FOR INFORMATION ONLY.
2. ALL CULVERT JOINTS SHALL BE POSITIVE.
3. THE JOINT CLASSIFICATION SHALL BE DOWNDDRAIN.
4. LENGTHS OF PIPES AND ANGLE OF ELBOWS SHALL BE VERIFIED IN THE FIELD BY THE CONTRACTOR.
5. FOR RCP, TYPE II MODIFED OR TYPE IP, CEMENT SHALL BE USED WITH A MAXIMUM WATER TO CEMENT RATIO OF 0.40.
6. ALL PLASTIC PIPE SHALL BE SMOOTH INTERIOR.

APC ALLOWABLE ALTERNATIVES

DRAINAGE SYSTEM No.	RCP	GALVANIZED CSP	POLYMERIC SHEET COATED	HDPE
		0.138"	0.079"	
1	X	X	X	X
2	X	X	X	X
4	X	X	X	X
5	X	X	X	X

DRAINAGE QUANTITIES

DRAINAGE SHEET No.	DRAINAGE SYSTEM No.	DRAINAGE UNIT	REMOVE SSPP CULVERT	REMOVE CULVERT	REMOVE OVERSIDE DRAIN	REMOVE DOWNDRAIN	REMOVE GABIONS	REMOVE INLET	24" AP CULVERT	24" CSP DOWNDRAIN	ANCHOR ASSEMBLY (N)	PLACE HMA (Misc AREA)	HMA (TYPE A)	PIPE ELBOW (N)	36" AP INLET	Misc. IRON AND STEEL	MINOR CONCRETE (MINOR STRUCTURE)	MINOR CONCRETE (BACKFILL)	ROCK SLOPE PROTECTION (LIGHT METHOD B)	ROCK SLOPE PROTECTION (BACKING No.1 (METHOD B)	ROCK SLOPE PROTECTION (BACKING No.3 (METHOD B)	ROCK SLOPE PROTECTON (1/4TON METHOD B)	ROCK FISH WEIR	ROCK SLOPE PROTECTION FABRIC	COARSE AGGREGATE BACKING	MARKER (CULVERT)	HEIGHT OF INLET (N)	REMARKS	STATION	DRAINAGE SHEET No.	DRAINAGE SYSTEM No.	DRAINAGE UNIT
			EA					LS	EA	LF		EA	SQYD	TON	EA	LF	LB	CY						SQYD	CY	EA	LF						
DP-1	1	a															337	1.53									3.0	MODIFIED TYPE GI DI, GRATE TYPE 24-12X	"A" 401+87.50	DP-1	1	a
		b								40.0																							b
		c																		6.2				18.2				ROCK ENERGY DISSIPATOR					c
		d																								2		STENCIL "PM 92.75"					d
		e											8.9	1.5														HMA PAID IN ROADWAY QUANTITY					e
		f																	9.5														f
DP-1	2	a														3.6	236										3.1	AP INLET TYPE 36R GRATE WITH CHAIN	"L" 100+61.37	DP-1	2	a
		b								89.5																							b
		c																		6.2				18.2				ROCK ENERGY DISSIPATOR					c
		d																				15.8		39.2				ROCK LINED DITCH	"L" 101+13, R†				d
DP-1	3	a	1																									9'x87' SSP CULVERT	"A" 404+78.00, 52.4' R† TO 139.2' R†	DP-1	3	a
		b			1																							18"x22' CSP OD					b
		c					1																					FOR ADDITIONAL DETAILS SEE INFORMATIONAL HANDOUT					c
DP-2	4	a															239	1.60									4.5	TYPE GO DI GRATE TYPE 24-12X	"A" 406+19.00	DP-2	4	a
		b								48.4																		CSP ELBOW = 30°					b
		c									22.8	1			1																		c
		d																		8.0				22.7				ROCK ENERGY DISSIPATOR					d
		e																															e
DP-2	5	a						1																					"A" 408+21.88	DP-2	5	a
		b															337	1.69									4.2	MODIFIED TYPE GI DI, GRATE TYPE 24-12X				b
		c											8.9	1.5														HMA PAID IN ROADWAY QUANTITY					c
		d		1																								24"x42' CSP CULVERT					d
		e								43.8																							e
		f				1																						24"x26' CSP DD					f
		g									12.8	1			1													CSP ELBOW = 35°					g
		h																		6.2				18.2				ROCK ENERGY DISSIPATOR					h
		i																								2		STENCIL "PM 92.90"					i
C-2																							456.6					ROCK FISH WEIRS	"F" 300+42.20 TO 301+32.10	C-2		
DD-1																					110		272		14.0			Br. No. 10-0304 DUNN CREEK	"A" 405+15.00 TO 405+75.00 R†	DD-1		
DD-1																						12.3		35.1				ROCK LINED DITCH	"F" 300+89, L†	DD-1		
TOTAL			1	1	1	1	1	1		221.7	35.6	2	17.8	3.0	2	3.6	1149	4.82	9.5	26.6	110	28.1	272	456.6	151.6	14.0	4					

1 REVISED PER ADDENDUM No. 1 DATED OCTOBER 11, 2012

DRAINAGE QUANTITIES
DQ-1

STATE OF CALIFORNIA - DEPARTMENT OF TRANSPORTATION
Caltrans
HYDRAULICS

FUNCTIONAL SUPERVISOR: TIMOTHY L. BOESE
CALCULATED-DESIGNED BY: KEMSET MOORE
CHECKED BY
REVISED BY
DATE REVISED

LAST REVISION 00-00-00
DATE PLOTTED => 10-OCT-2012
TIME PLOTTED => 11:37