Dist	COUNTY	ROUTE	POST MILES TOTAL PROJECT	SHEET No.	TOTAL SHEETS
01	Hum	36	5.9/7.6	1	26

INDEX OF PLANS

SHEET No.	DESCRIPTION
1	TITLE AND LOCATION MAP
2-3	TYPICAL CROSS SECTIONS
4-5	LAYOUTS
6	PROFILES
7	SUPERELEVATION DIAGRAM
8-13	CONSTRUCTION DETAILS
14	UTILITY PLAN
15	CONSTRUCTION AREA SIGNS
16-17	PAVEMENT DELINEATION PLAN, DETAILS AND QUANTITIES
18	SUMMARY OF QUANTITIES
19-26	REVISED AND NEW STANDARD PLANS

THE STANDARD PLANS LIST APPLICABLE TO THIS CONTRACT IS INCLUDED IN THE NOTICE TO BIDDERS AND SPECIAL PROVISIONS BOOK.

STATE OF CALIFORNIA

DEPARTMENT OF TRANSPORTATION

PROJECT PLANS FOR CONSTRUCTION ON

STATE HIGHWAY

IN HUMBOLDT COUNTY AT CARLOTTA FROM WILSON LANE TO 0.5 MILE WEST OF CUMMINGS CREEK ROAD

TO BE SUPPLEMENTED BY STANDARD PLANS DATED MAY 2006

LOCATION MAP

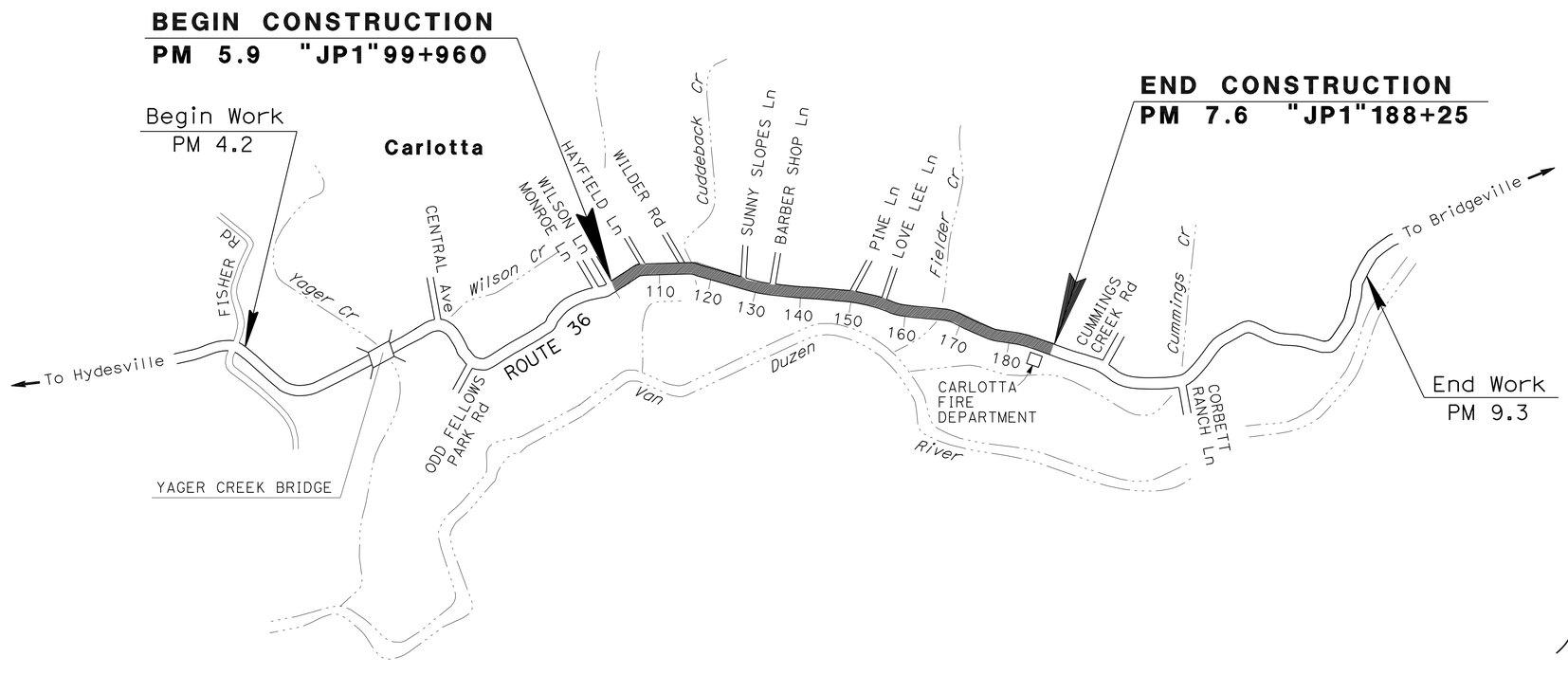

NO SCALE

André V. H. Guimarães 4-17-12
PROJECT ENGINEER DATE
REGISTERED CIVIL ENGINEER

June 11, 2012
PLANS APPROVAL DATE

REGISTERED PROFESSIONAL ENGINEER
ANDRE GUIMARAES
No. 78117
Exp. 9-30-13
CIVIL
STATE OF CALIFORNIA

THE STATE OF CALIFORNIA OR ITS OFFICERS OR AGENTS SHALL NOT BE RESPONSIBLE FOR THE ACCURACY OR COMPLETENESS OF SCANNED COPIES OF THIS PLAN SHEET.

THE CONTRACTOR SHALL POSSESS THE CLASS (OR CLASSES) OF LICENSE AS SPECIFIED IN THE "NOTICE TO BIDDERS."

CONTRACT No.	01-323304
PROJECT ID	0100000101

P:\PROJ\01\32330\drafting\Resubmit Set\0100000101ab001.dgn

DESIGN ENGINEER	PROJECT MANAGER
S.R.HUGHES	R.D.MULLEN

LAST REVISION 00-00-00 DATE PLOTTED => 14-JUN-2012 TIME PLOTTED => 1005

Dist	COUNTY	ROUTE	POST MILES TOTAL PROJECT	SHEET No.	TOTAL SHEETS
01	Hum	36	5.9/7.6	2	26

REGISTERED CIVIL ENGINEER 4-17-12 DATE

6-11-12
PLANS APPROVAL DATE

REGISTERED PROFESSIONAL ENGINEER ANDRE GUIMARAES No. 78117 Exp. 9-30-13 CIVIL STATE OF CALIFORNIA

THE STATE OF CALIFORNIA OR ITS OFFICERS OR AGENTS SHALL NOT BE RESPONSIBLE FOR THE ACCURACY OR COMPLETENESS OF SCANNED COPIES OF THIS PLAN SHEET.

NOTES:

1. DIMENSIONS OF THE PAVEMENT STRUCTURES (STRUCTURAL SECTIONS) ARE SUBJECT TO TOLERANCES SPECIFIED IN THE STANDARD SPECIFICATIONS.
2. SUPERELEVATION AS SHOWN OR AS DIRECTED BY THE ENGINEER.

LEGEND

GPI GEOSYNTHETIC PAVEMENT INTERLAYER
SR SUPERELEVATION RATE
TCE TEMPORARY CONSTRUCTION EASEMENT

DESIGN DESIGNATION (ROUTE 36)

2013 ADT = 2,180 D = 60%
2033 ADT = 2,580 T = 6%
DHV (2013) = 280 V = 55 MPH
$ESAL_{20}$ = 999,999 TI_{20} = 9.0

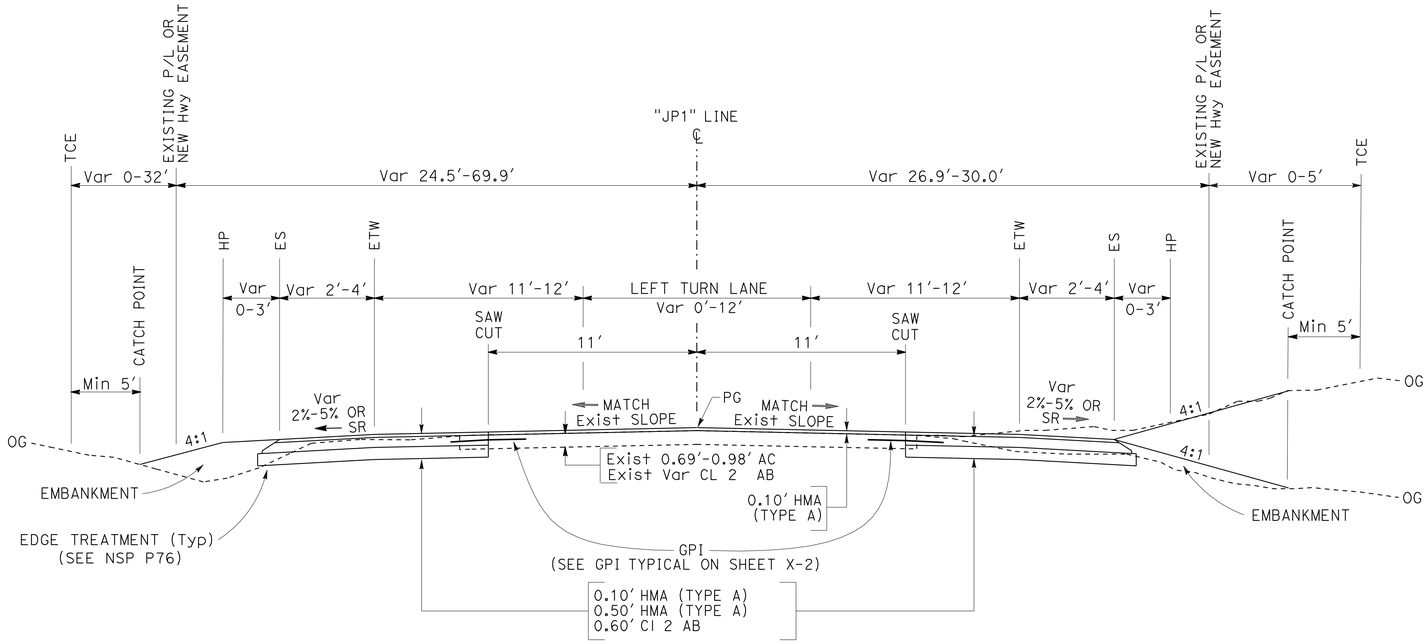

"JP1" 110+10.00 TO "JP1" 117+54.20

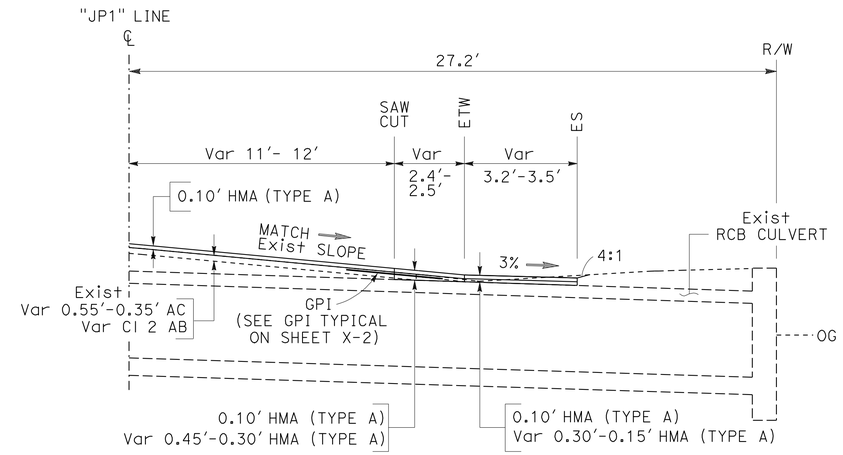

"JP1" 117+13.40 R+ TO "JP1" 117+23.01 R+

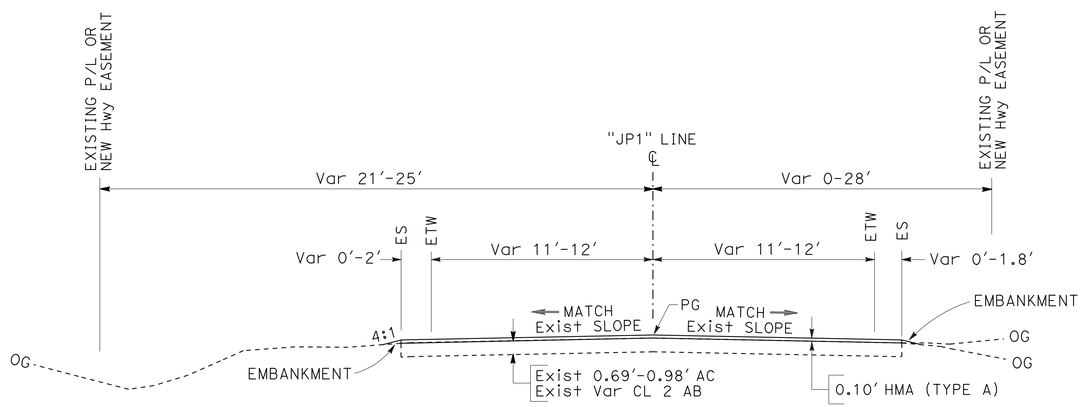

"JP1" 109+60.27 TO "JP1" 110+10.00
"JP1" 117+54.20 TO "JP1" 118+30.00

TYPICAL CROSS SECTIONS X-1

NO SCALE

REVISED BY | DATE REVISED
ANDRE GUIMARAES | TREVOR GOFF
CALCULATED-DESIGNED BY | CHECKED BY
FUNCTIONAL SUPERVISOR: STEVEN R. HUGHES

STATE OF CALIFORNIA - DEPARTMENT OF TRANSPORTATION
Caltrans DESIGN

P:\PROJ\01\32330\drafting\Resubmit1Set\01000001011ca001.dgn

LAST REVISION 00-00-00 | DATE PLOTTED => 14-JUN-2012 | TIME PLOTTED => 09:04

Dist	COUNTY	ROUTE	POST MILES TOTAL PROJECT	SHEET No.	TOTAL SHEETS
01	Hum	36	5.9/7.6	3	26

REGISTERED CIVIL ENGINEER 4-17-12 DATE

6-11-12
PLANS APPROVAL DATE

REGISTERED PROFESSIONAL ENGINEER ANDRE GUIMARAES No. 78117 Exp. 9-30-13 CIVIL STATE OF CALIFORNIA

THE STATE OF CALIFORNIA OR ITS OFFICERS OR AGENTS SHALL NOT BE RESPONSIBLE FOR THE ACCURACY OR COMPLETENESS OF SCANNED COPIES OF THIS PLAN SHEET.

NOTES:

1. DIMENSIONS OF THE PAVEMENT STRUCTURES (STRUCTURAL SECTIONS) ARE SUBJECT TO TOLERANCES SPECIFIED IN THE STANDARD SPECIFICATIONS.
2. SUPERELEVATION AS SHOWN OR AS DIRECTED BY THE ENGINEER.

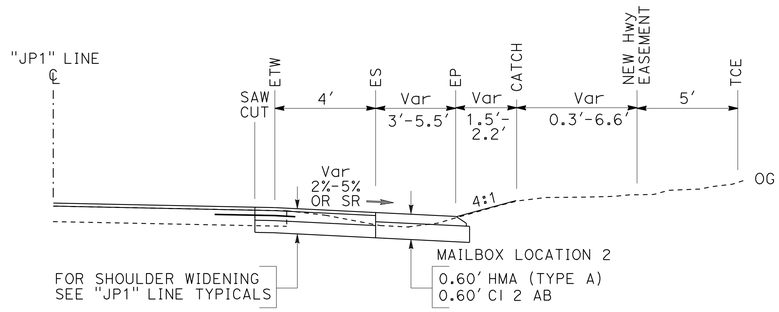

MAILBOX PULLOUT TYPICAL

MAILBOX LOCATION 2
"JP1" 112+70.3 TO "JP1" 113+66.0, Rt

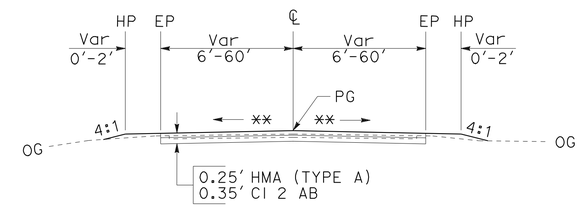

PRIVATE DRIVEWAYS

"PA218","PA2191","PA2192","PA220","PA222"

** SUPERELEVATION SHALL BE -2% OR AS DIRECTED BY THE ENGINEER.

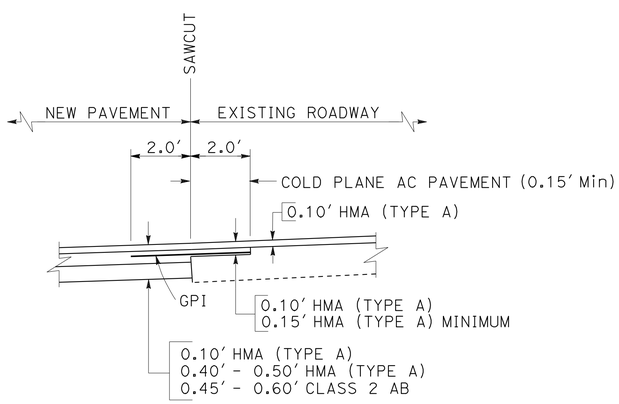

GEOSYNTHETIC PAVEMENT INTERLAYER (GPI)

"JP1" 110+24.19 TO "JP1" 117+54.20
"W1" 10+28.75 TO "W1" 10+80.00

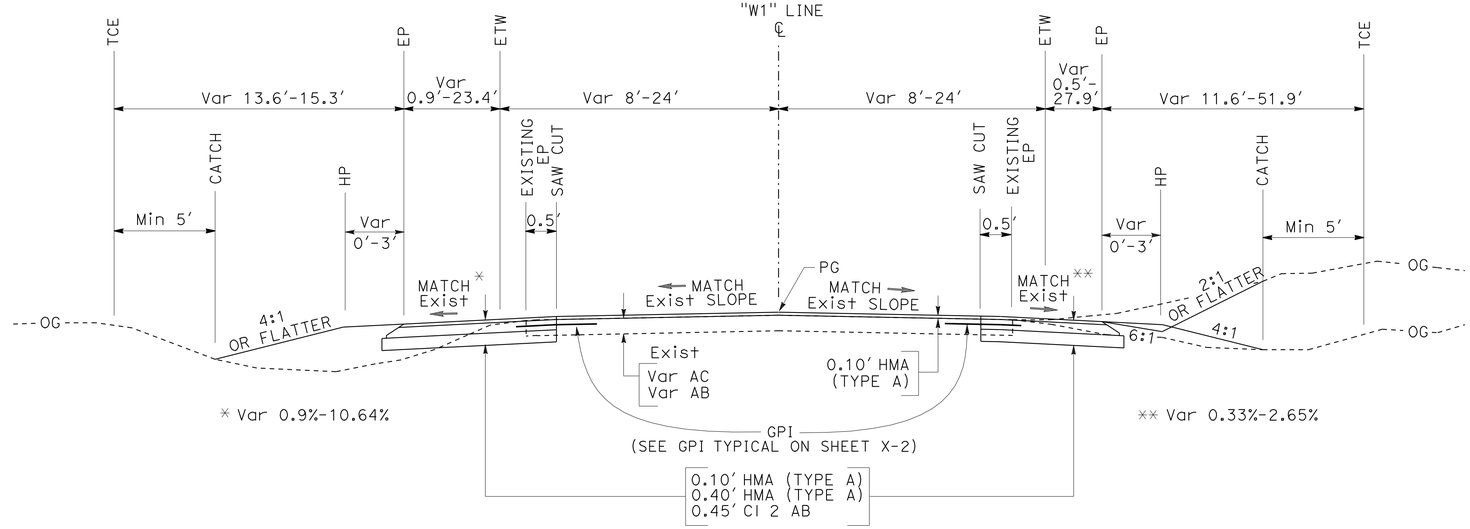

WILDER ROAD

"W1" 10+28.66 TO "W1" 11+00.00

TYPICAL CROSS SECTIONS X-2

NO SCALE

REVISED BY | DATE REVISED
ANDRE GUIMARAES | TREVOR GOFF
CALCULATED-DESIGNED BY | CHECKED BY
FUNCTIONAL SUPERVISOR: STEVEN R. HUGHES

STATE OF CALIFORNIA - DEPARTMENT OF TRANSPORTATION
Caltrans® DESIGN

P:\PROJ\01\32330\drafting\sheets\0100000101ca002.dgn

LAST REVISION 00-00-00 | DATE PLOTTED => 14-JUN-2012 | TIME PLOTTED => 09:04

NOTES:

1. FOR ACCURATE RIGHT OF WAY DATA, CONTACT RIGHT OF WAY ENGINEERING AT THE DISTRICT OFFICE.
2. FOR PAVEMENT DELINEATION SEE SHEETS PD-1 & PDQ-1.
3. COORDINATE VALUES SHOWN ARE CCS83, ZONE 1.
4. ELEVATION IS BASED ON NAVD88 DATUM.

LEGEND

= TRANSVERSE JOINT HMA (SEE SHEET C-4)

= MAIL BOX LOCATION NUMBER - SEE SUMMARY OF QUANTITIES

TFESA = TEMPORARY FENCE (TYPE ESA)

TCE = TEMPORARY CONSTRUCTION EASEMENT

= SAWCUT LINE

No.	LINE	STATION	CURVE OR TANGENT DATA		COORDINATES NORTH	COORDINATES EAST
	PA218	218+00.00 Begin	N 30°24'14.1" E	47.763	2084191.7048	5993877.0860
	PA218	218+47.76 End			2084232.8997	5993901.2587
	PA2191	2191+00.00 Begin	S 31°21'29.1" W	49.686	2084093.7448	5994037.8345
	PA2191	2191+49.69 End			2084051.3161	5994011.9785
	PA2192	2192+00.00 Begin	S 31°21'29.1" W	49.686	2084079.8861	5994060.5761
	PA2192	2192+49.69 End			2084037.4573	5994034.7201
	JP1	109+95.39 Begin	S 58°38'30.8" W	600.137	2084209.9480	5993847.1500

Dist	COUNTY	ROUTE	POST MILES TOTAL PROJECT	SHEET No.	TOTAL SHEETS
01	Hum	36	5.9/7.6	4	26

REGISTERED CIVIL ENGINEER 4-17-12 DATE

6-11-12
PLANS APPROVAL DATE

REGISTERED PROFESSIONAL ENGINEER ANDRE GUIMARAES No. 78117 Exp. 9-30-13 CIVIL STATE OF CALIFORNIA

THE STATE OF CALIFORNIA OR ITS OFFICERS OR AGENTS SHALL NOT BE RESPONSIBLE FOR THE ACCURACY OR COMPLETENESS OF SCANNED COPIES OF THIS PLAN SHEET.

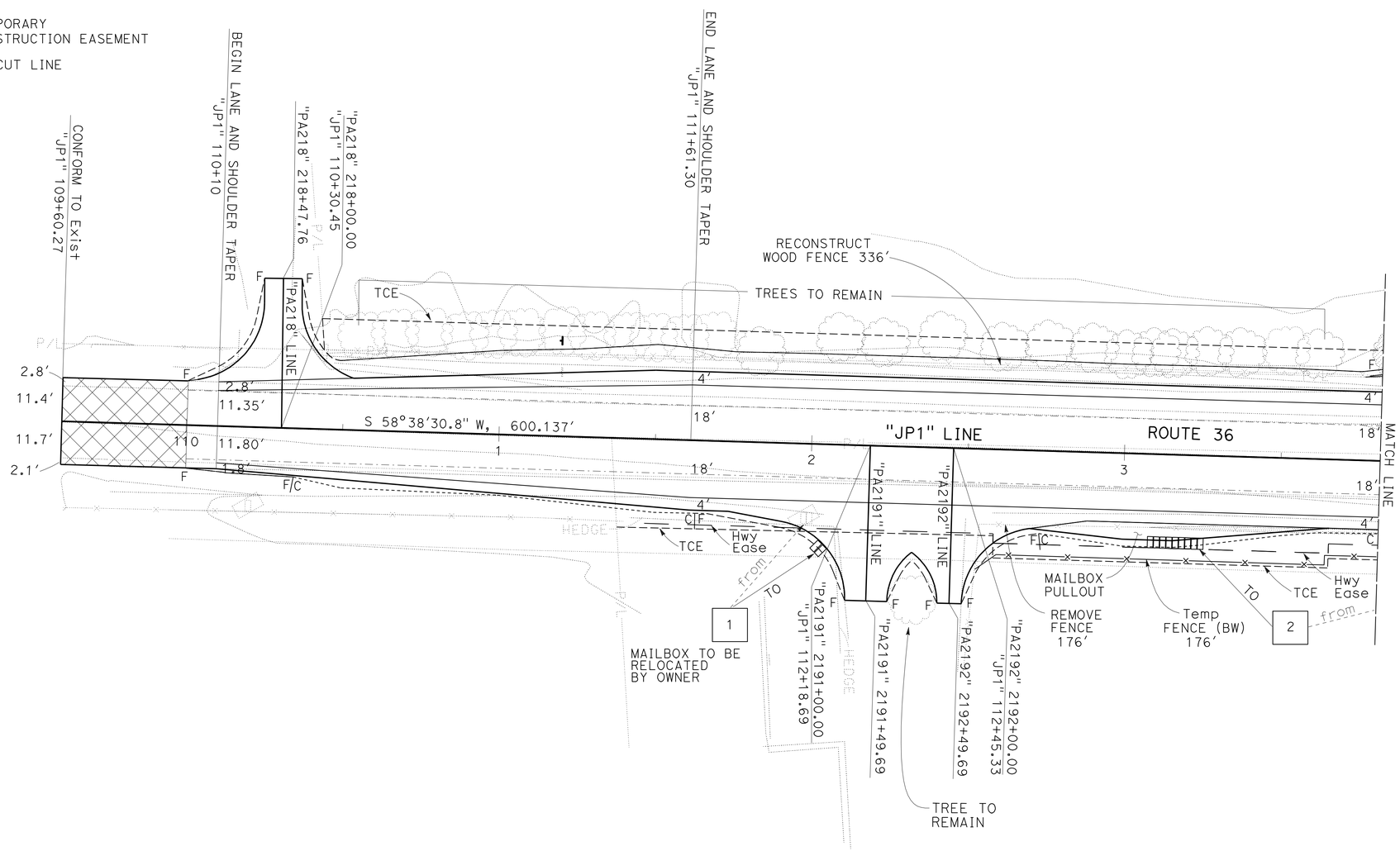

SCALE: 1"=20'

LAYOUT L-1

STATE OF CALIFORNIA - DEPARTMENT OF TRANSPORTATION
Caltrans
DESIGN

FUNCTIONAL SUPERVISOR: STEVEN R. HUGHES
CALCULATED-DESIGNED BY: ANDRE GUIMARAES
CHECKED BY: TREVOR GOFF
REVISED BY
DATE REVISED

P:\PROJ\01\32330\drafting\Resubmit+Set\0100000101ea001.dgn

LAST REVISION 00-00-00
DATE PLOTTED => 14-JUN-2012
TIME PLOTTED => 09:04

NOTE: FOR ACCURATE RIGHT OF WAY DATA, CONTACT RIGHT OF WAY ENGINEERING AT THE DISTRICT OFFICE.

Dist	COUNTY	ROUTE	POST MILES TOTAL PROJECT	SHEET No.	TOTAL SHEETS
01	Hum	36	5.9/7.6	5	26

REGISTERED CIVIL ENGINEER 4-17-12 DATE

6-11-12
PLANS APPROVAL DATE

REGISTERED PROFESSIONAL ENGINEER ANDRE GUIMARAES No. 78117 Exp. 9-30-13 CIVIL STATE OF CALIFORNIA

THE STATE OF CALIFORNIA OR ITS OFFICERS OR AGENTS SHALL NOT BE RESPONSIBLE FOR THE ACCURACY OR COMPLETENESS OF SCANNED COPIES OF THIS PLAN SHEET.

LEGEND

TREE TO BE REMOVED

No.	LINE	STATION		CURVE OR TANGENT DATA	COORDINATES NORTH	COORDINATES EAST
	W1	10+00.00	Begin	N 31°15'52.7" E 32.266	2083965.1650	5994248.8287
2	W1	10+32.27	BC	R=40 Δ= -27°04'00.0" Tan= 9.628 L=18.896	2083992.7455	5994265.5746
	W1	10+51.16	EC	N 4°11'52.2" E 8.326	2084010.5771	5994271.2762
	W1	10+59.49	POT	N 4°11'53.0" E 19.693	2084018.8804	5994271.8856
	W1	10+79.18	POT	N 2°40'54.7" E 20.985	2084038.5204	5994273.3272
	W1	11+00.00	POT	N 0°49'09.9" E 20.271	2084059.4825	5994274.3091
1	JP1	115+95.53	BC	R=807 Δ= 19°36'16.4" Tan= 139.426 L=276.126	2083897.6451	5994359.6261
	JP1	118+71.66	EC	S 39°02'14.4" E 408.975	2083716.7926	5994566.5007
	PA220	220+00.00	Begin	N 37°21'04.2" E 46.880	2083857.5331	5994419.2938
	PA220	220+46.88	End		2083894.7992	5994447.7356
	PA222	222+00.00	Begin	S 29°19'02.8" W 43.993	2083801.8601	5994486.6663
	PA222	222+43.99	End		2083763.5015	5994465.1251

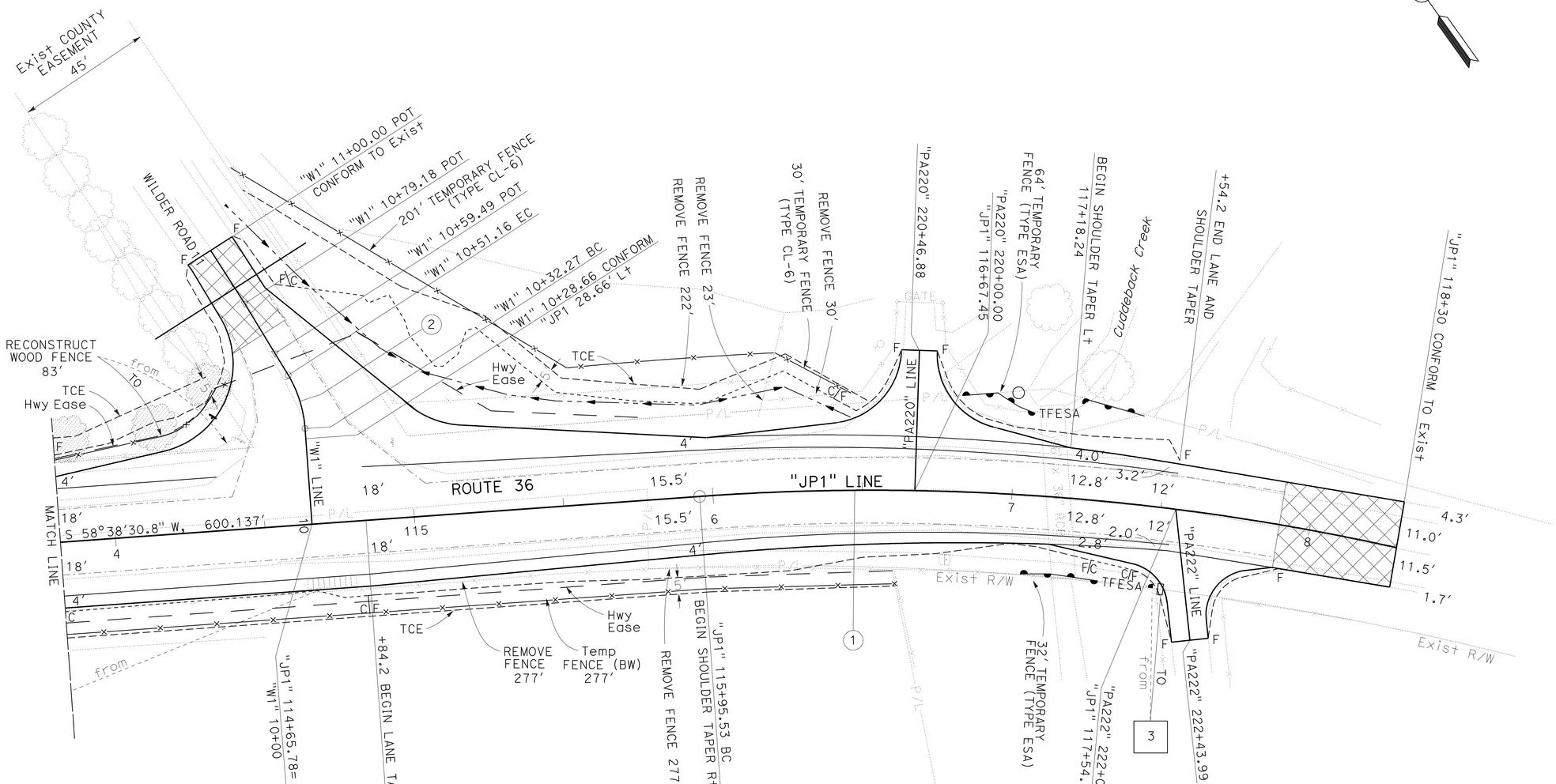

SCALE: 1"=20'

LAYOUT L-2

STATE OF CALIFORNIA - DEPARTMENT OF TRANSPORTATION
Caltrans
DESIGN

ANDRE GUIMARAES — TREVOR GOFF — STEVEN R. HUGHES — REVISED BY — DATE REVISED — CALCULATED-DESIGNED BY — CHECKED BY — FUNCTIONAL SUPERVISOR

P:\PROJ\01\32330\drafting\Resubmitset\0100000101ea002.dgn

LAST REVISION 00-00-00 | DATE PLOTTED => 14-JUN-2012 | TIME PLOTTED => 09:04

Dist	COUNTY	ROUTE	POST MILES TOTAL PROJECT	SHEET No.	TOTAL SHEETS
01	Hum	36	5.9/7.6	6	26

REGISTERED CIVIL ENGINEER 4-17-12 DATE

6-11-12
PLANS APPROVAL DATE

REGISTERED PROFESSIONAL ENGINEER ANDRE GUIMARAES No. 78117 Exp. 9-30-13 CIVIL STATE OF CALIFORNIA

THE STATE OF CALIFORNIA OR ITS OFFICERS OR AGENTS SHALL NOT BE RESPONSIBLE FOR THE ACCURACY OR COMPLETENESS OF SCANNED COPIES OF THIS PLAN SHEET.

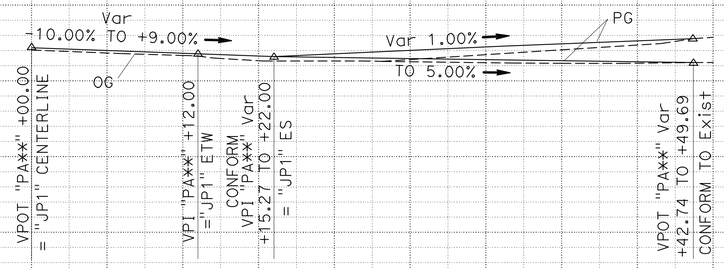

TYPICAL DRIVEWAY PROFILE

** DRIVEWAY #'s

(SEE DRIVEWAY TABLE SHEET C-7)

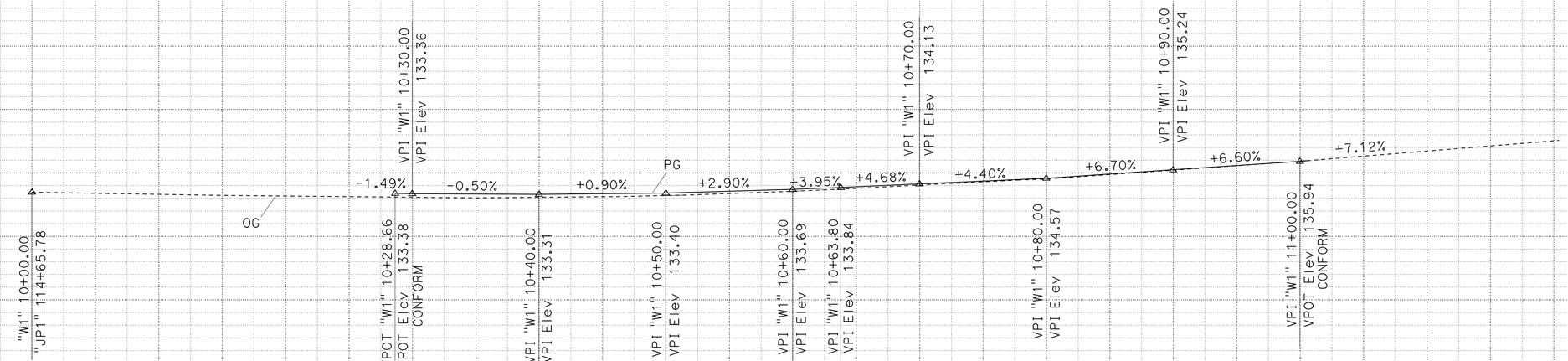

"W1" LINE PROFILE

PROFILE

SCALE: Horiz 1" = 5'
Vert 1" = 5'

P-1

STATION	"W1" 10+00	"W1" 10+50	"W1" 11+00	TOTAL
CY Exc		196		
CY Emb		2		

REVISED BY | DATE REVISED

ANDRE GUIMARAES | TREVOR GOFF

CALCULATED-DESIGNED BY | CHECKED BY

FUNCTIONAL SUPERVISOR: STEVEN R. HUGHES

STATE OF CALIFORNIA - DEPARTMENT OF TRANSPORTATION

Caltrans DESIGN

P:\PROJ\01\32330\drafting\sheets\0100000101fa001.dgn

LAST REVISION 00-00-00 | DATE PLOTTED => 14-JUN-2012 | TIME PLOTTED => 09:05

BORDER LAST REVISED 7/2/2010 | USERNAME => s128843 | DGN FILE => 0100000101fa001.dgn | RELATIVE BORDER SCALE IS IN INCHES 0 1 2 3 | UNIT 0311 | PROJECT NUMBER & PHASE 01000001011

Dist	COUNTY	ROUTE	POST MILES TOTAL PROJECT	SHEET No.	TOTAL SHEETS
01	Hum	36	5.9/7.6	7	26

REGISTERED CIVIL ENGINEER 4-17-12 DATE

6-11-12
PLANS APPROVAL DATE

REGISTERED PROFESSIONAL ENGINEER ANDRE GUIMARAES No. 78117 Exp. 9-30-13 CIVIL STATE OF CALIFORNIA

THE STATE OF CALIFORNIA OR ITS OFFICERS OR AGENTS SHALL NOT BE RESPONSIBLE FOR THE ACCURACY OR COMPLETENESS OF SCANNED COPIES OF THIS PLAN SHEET.

LEGEND

TW = TRAVELED WAY

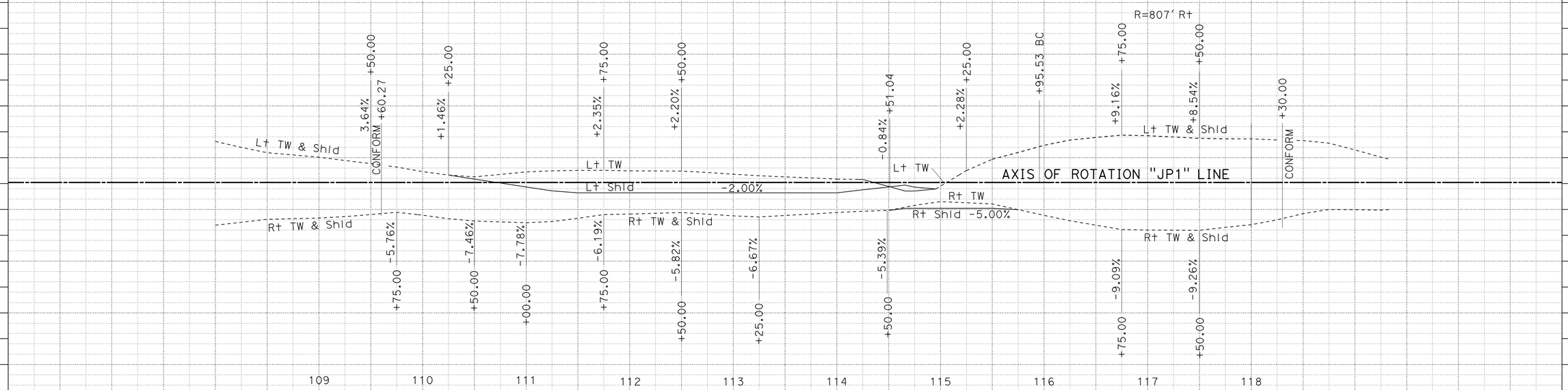

SUPERELEVATION DIAGRAM

SCALE: Horiz 1" = 50'

SE-1

STATION		"JP1" 109+60.27	"JP1" 114+65.78	"JP1" 118+30.00	TOTAL
CY	Exc	501	303		
	Emb	95	91		

ANDRE GUIMARAES — CALCULATED-DESIGNED BY
TREVOR GOFF — CHECKED BY
STEVEN R. HUGHES — FUNCTIONAL SUPERVISOR
REVISED BY — DATE REVISED

STATE OF CALIFORNIA - DEPARTMENT OF TRANSPORTATION
Caltrans®
DESIGN

P:\PROJ\01\32330\drafting\sheets\0100000101fc001.dgn

LAST REVISION 00-00-00
DATE PLOTTED => 14-JUN-2012
TIME PLOTTED => 09:05

Dist	COUNTY	ROUTE	POST MILES TOTAL PROJECT	SHEET No.	TOTAL SHEETS
01	Hum	36	5.9/7.6	8	26

REGISTERED CIVIL ENGINEER 4-17-12 DATE

6-11-12
PLANS APPROVAL DATE

REGISTERED PROFESSIONAL ENGINEER ANDRE GUIMARAES No. 78117 Exp. 9-30-13 CIVIL STATE OF CALIFORNIA

THE STATE OF CALIFORNIA OR ITS OFFICERS OR AGENTS SHALL NOT BE RESPONSIBLE FOR THE ACCURACY OR COMPLETENESS OF SCANNED COPIES OF THIS PLAN SHEET.

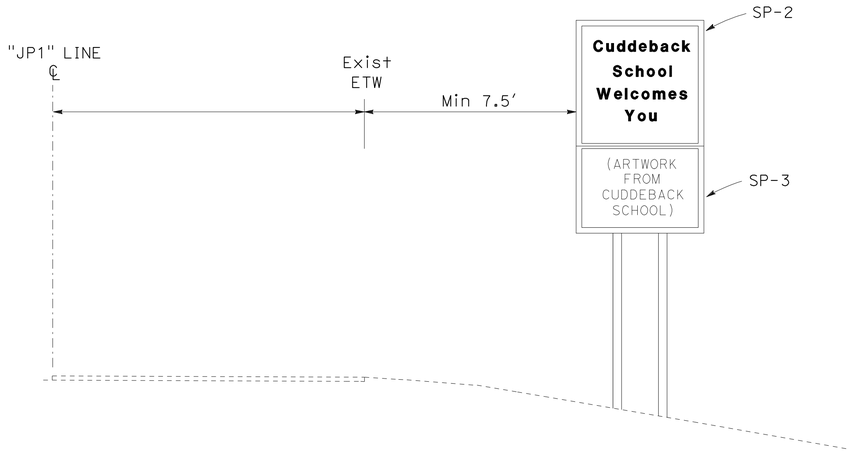

SPECIAL SIGN 2 AND 3

"JP1" 100+60 (R+)

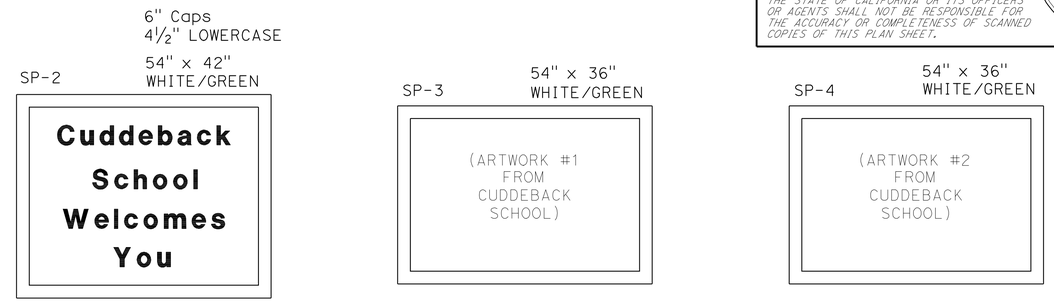

SPECIAL ROADSIDE SIGN DETAILS

"JP1" 100+60 (R+)
"JP1" 188+00 (L+)

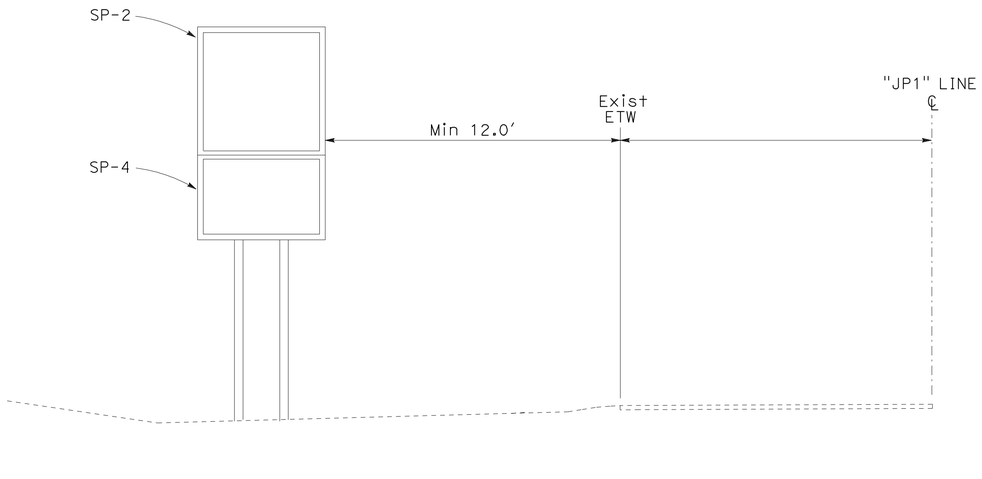

SPECIAL SIGN 2 AND 4

"JP1" 188+00 (L+)

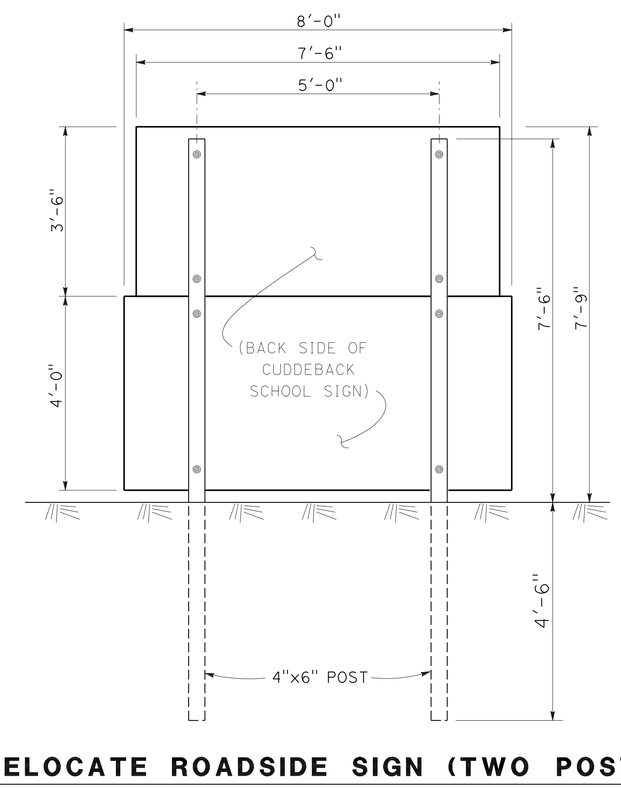

RELOCATE ROADSIDE SIGN (TWO POST) SP-5

NOTE: MATCH EXISTING BOLT PLACEMENT
"JP1" 114+90 (L+)

CONSTRUCTION DETAILS

NO SCALE

C-1

REVISED BY	DATE REVISED
ANDRE GUIMARAES	
TREVOR GOFF	

CALCULATED-DESIGNED BY
CHECKED BY

FUNCTIONAL SUPERVISOR
STEVEN R. HUGHES

STATE OF CALIFORNIA - DEPARTMENT OF TRANSPORTATION
Caltrans
DESIGN

P:\PROJ\01\32330\drafting\Resubmit5e+\0100000101ga001.dgn

LAST REVISION 00-00-00
DATE PLOTTED => 14-JUN-2012
TIME PLOTTED => 09:06

Dist	COUNTY	ROUTE	POST MILES TOTAL PROJECT	SHEET No.	TOTAL SHEETS
01	Hum	36	5.9/7.6	9	26

REGISTERED CIVIL ENGINEER 4-17-12 DATE

6-11-12
PLANS APPROVAL DATE

REGISTERED PROFESSIONAL ENGINEER
ANDRE GUIMARAES
No. 78117
Exp. 9-30-13
CIVIL
STATE OF CALIFORNIA

THE STATE OF CALIFORNIA OR ITS OFFICERS OR AGENTS SHALL NOT BE RESPONSIBLE FOR THE ACCURACY OR COMPLETENESS OF SCANNED COPIES OF THIS PLAN SHEET.

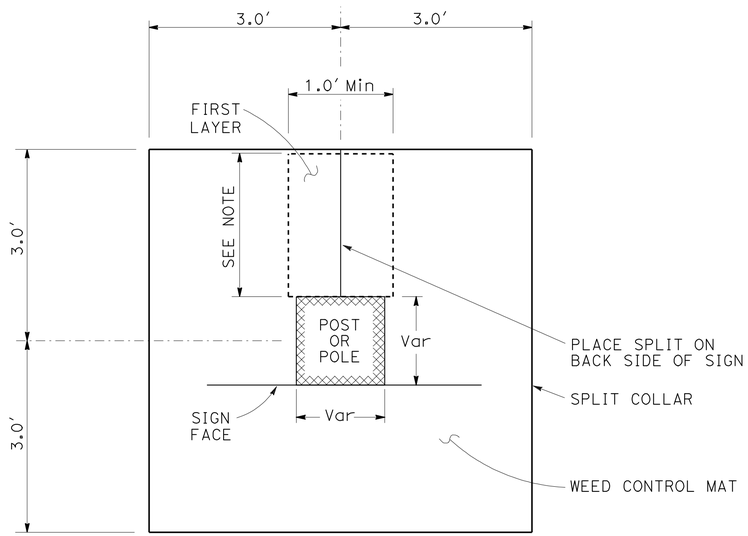

PLAN

WEED CONTROL MAT PLACEMENT ROADSIDE SIGN POSTS AND POLES

NOTE: FIRST LAYER SHALL EXTEND FROM EXISTING POST OR POLE TO EDGE OF TOP LAYER.

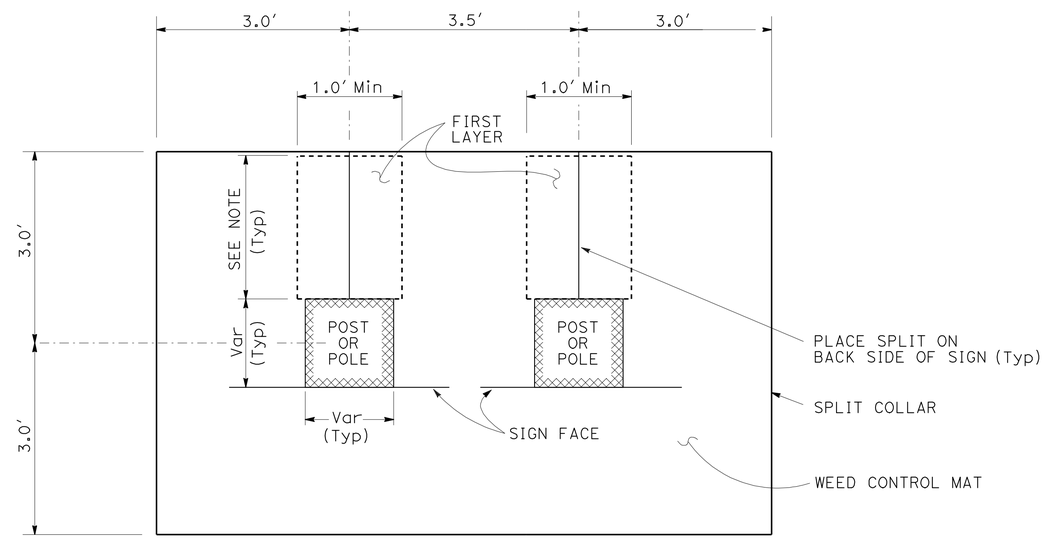

PLAN

WEED CONTROL MAT PLACEMENT ROADSIDE SIGN POSTS AND POLES

NOTE: FIRST LAYER SHALL EXTEND FROM EXISTING POST OR POLE TO EDGE OF TOP LAYER.

CONSTRUCTION DETAILS

NO SCALE

C-2

REVISED BY	ANDRE GUIMARAES
DATE REVISED	TREVOR GOFF
CALCULATED-DESIGNED BY	
CHECKED BY	
FUNCTIONAL SUPERVISOR	STEVEN R. HUGHES

STATE OF CALIFORNIA - DEPARTMENT OF TRANSPORTATION
Caltrans
DESIGN

P:\PROJ\01\32330\drafting\Resubmitset\0100000101ga002.dgn

LAST REVISION 00-00-00 | DATE PLOTTED => 14-JUN-2012 | TIME PLOTTED => 09:05

Dist	COUNTY	ROUTE	POST MILES TOTAL PROJECT	SHEET No.	TOTAL SHEETS
01	Hum	36	5.9/7.6	10	26

REGISTERED CIVIL ENGINEER 4-17-12 DATE

6-11-12
PLANS APPROVAL DATE

REGISTERED PROFESSIONAL ENGINEER ANDRE GUIMARAES No. 78117 Exp. 9-30-13 CIVIL STATE OF CALIFORNIA

THE STATE OF CALIFORNIA OR ITS OFFICERS OR AGENTS SHALL NOT BE RESPONSIBLE FOR THE ACCURACY OR COMPLETENESS OF SCANNED COPIES OF THIS PLAN SHEET.

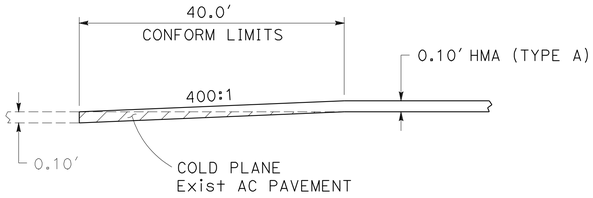

TRANSVERSE JOINT HMA (TYPE A)

"JP1" 109+60.27 TO "JP1" 110+00.27
"JP1" 117+90.00 TO "JP1" 118+30.00

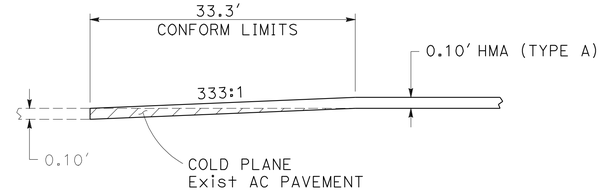

TRANSVERSE JOINT HMA (TYPE A)

"W1" 10+66.7 TO "W1" 11+00

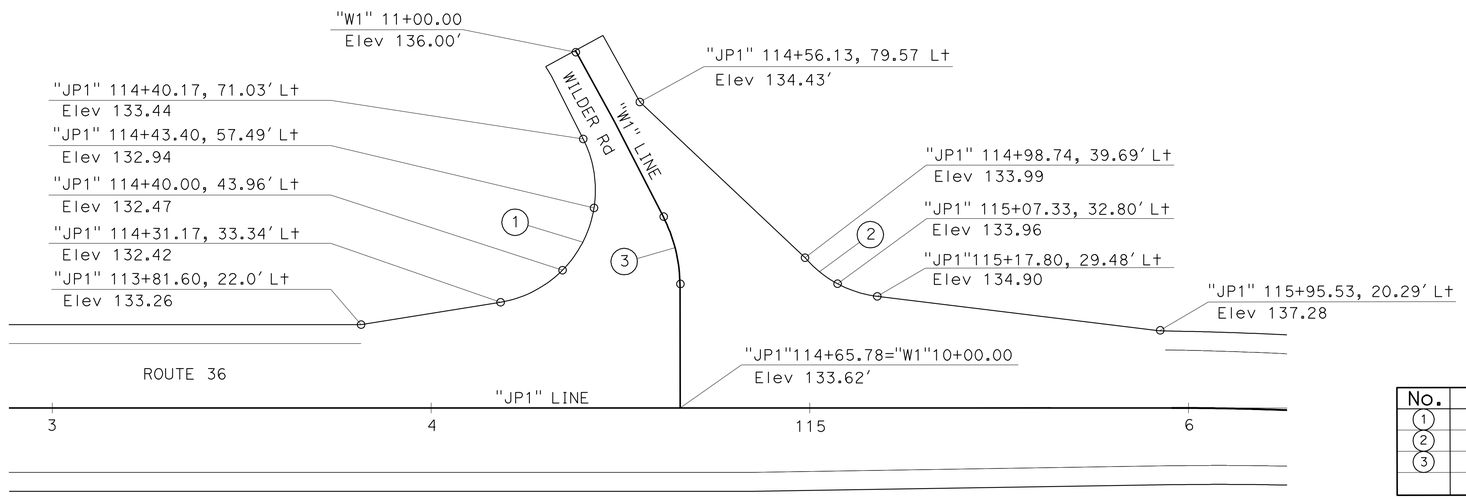

WILDER ROAD

CURVE DATA

No.	R	Δ	T	L	N	E
1	30.00′	107°17′13"	40.76′	56.18′	2084041.53	5994234.02
2	30.00′	42°17′29"	11.60′	22.14′	2083986.78	5994327.23
3	40.00′	27°04′00.0"	9.628′	18.896′	2083992.75	5994265.57

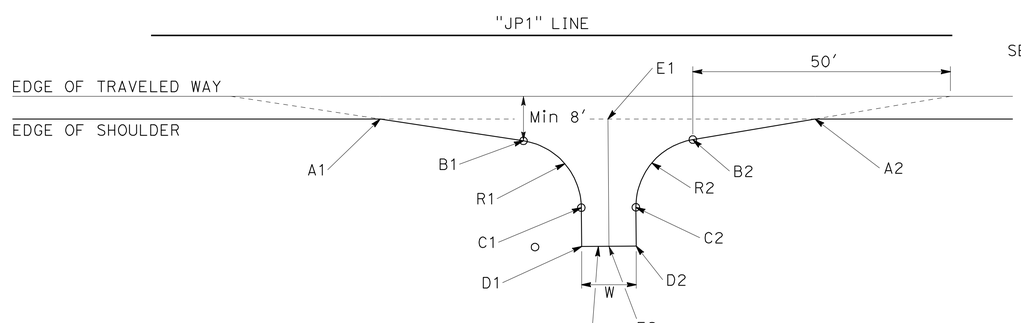

SEE CONSTRUCTION DETAIL SHEETS FOR DRIVEWAY POINT TABLES

TYPICAL LAYOUT FOR DRIVEWAYS (Rt)

PA 219-1, PA 219-2

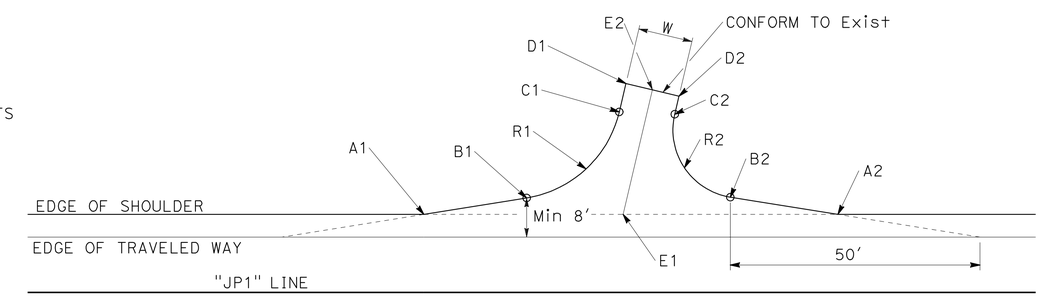

TYPICAL LAYOUT FOR DRIVEWAYS (Lt*)

PA 218, PA 220, PA 222,

* DRIVEWAYS ON Rt ARE MIRROR IMAGE OF Lt ABOUT THE "JP1" LINE

CONSTRUCTION DETAILS

NO SCALE

C-3

REVISED BY | DATE REVISED
ANDRE GUIMARAES | TREVOR GOFF
CALCULATED-DESIGNED BY | CHECKED BY
FUNCTIONAL SUPERVISOR | STEVEN R. HUGHES

STATE OF CALIFORNIA - DEPARTMENT OF TRANSPORTATION
Caltrans
DESIGN

P:\PROJ\01\32330\drafting\ResubmitSet\0100000101ga003.dgn

LAST REVISION 00-00-00 | DATE PLOTTED => 14-JUN-2012 | TIME PLOTTED => 09:05

Dist	COUNTY	ROUTE	POST MILES TOTAL PROJECT	SHEET No.	TOTAL SHEETS
01	Hum	36	5.9/7.6	11	26

REGISTERED CIVIL ENGINEER 4-17-12 DATE

6-11-12
PLANS APPROVAL DATE

REGISTERED PROFESSIONAL ENGINEER ANDRE GUIMARAES No. 78117 Exp. 9-30-13 CIVIL STATE OF CALIFORNIA

THE STATE OF CALIFORNIA OR ITS OFFICERS OR AGENTS SHALL NOT BE RESPONSIBLE FOR THE ACCURACY OR COMPLETENESS OF SCANNED COPIES OF THIS PLAN SHEET.

20-S
SINGLE MAILBOX KIT

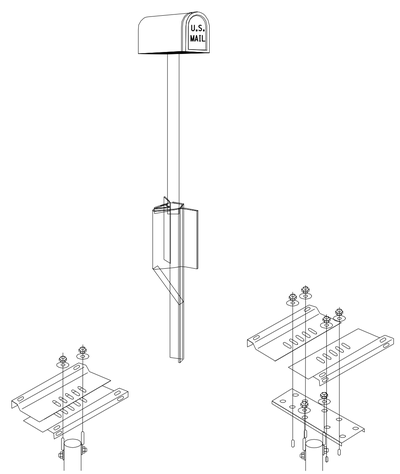

MBB-S
No.1 OR No. 1A MAILBOX BRACKET FOR SINGLE POST INSTALLATION

MBB-4
No.2 MAILBOX BRACKET FOR SINGLE POST INSTALLATION

TAPCO PART No.	DESCRIPTION
20-S	SINGLE MAILBOX SUPPORT KIT (No.1 OR 1A)
20-S2	SINGLE LARGE MAILBOX SUPPORT KIT (No. 2)

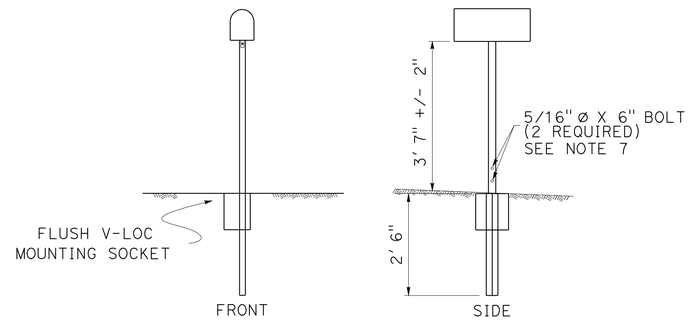

SINGLE MAILBOX INSTALLATION

GENERAL NOTES FOR ALL DETAILS:

1. VERTICAL DISTANCE FROM BOTTOM OF MAILBOX DOOR(S) TO GROUND SHALL BE 3' 5" TO 3' 9".
2. HEIGHT ALIGNMENT BETWEEN ADJACENT POSTS AT ANY LOCATION AS DIRECTED BY ENGINEER.
3. BOTTOM EDGES OF MAILBOXES TO BE AT UNIFORM HEIGHT +/-½" ON MULTIPLE INSTALLATION.
4. ALL MAILBOXES TO FACE SR36 UNLESS OTHERWISE ORIENTATED ON LAYOUT SHEETS.
5. MAILBOXES TO BE GALVANIZED AND BLACK IN COLOR WITH GOLD NUMBERS FOR STREET ADDRESS. NUMBERS TO TO BE LOCATED ON FRONT OF MAILBOX DOOR.
6. NO HOLES ARE TO BE DRILLED IN THE TUBE SUPPORT FRAME UNLESS CALLED FOR IN MANUFACTURE'S INSTALLATION INSTRUCTIONS.
7. FASTENERS PROVIDED IN TAPCO POST KITS.
8. EXACT MAILBOX LOCATION TO BE PER QUANTITY SHEET OR AS DETERMINED BY THE ENGINEER.

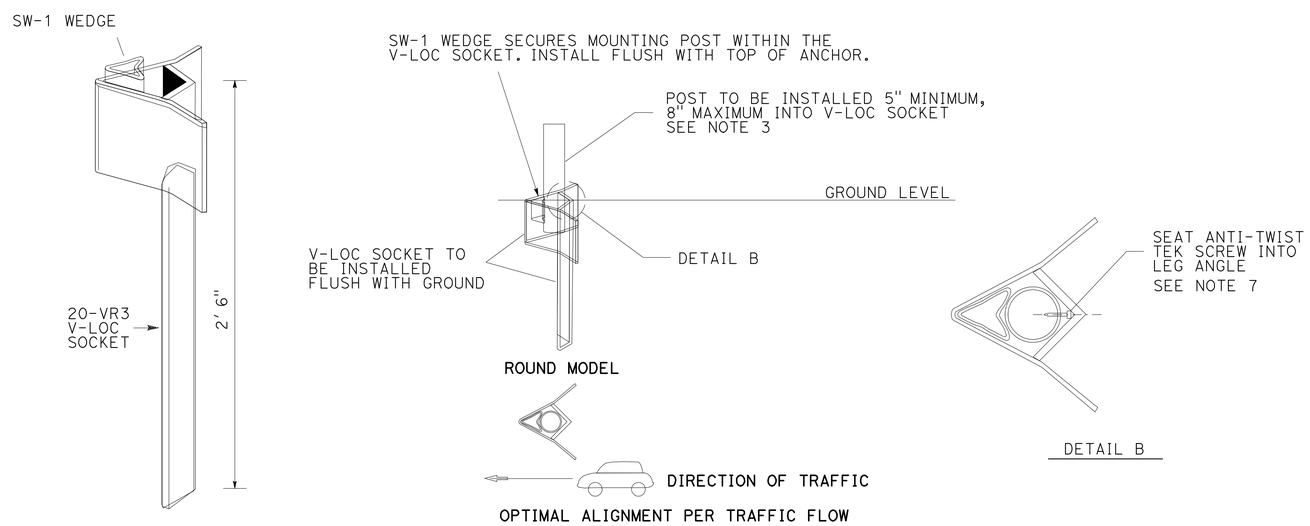

POST LOCATIONS TO BE AS SHOWN ON MAILBOX QUANTITY SHEETS

V-LOC MAILBOX SYSTEM

CONSTRUCTION DETAILS
NO SCALE
C-4

STATE OF CALIFORNIA - DEPARTMENT OF TRANSPORTATION
Caltrans DESIGN
FUNCTIONAL SUPERVISOR: STEVEN R. HUGHES
CALCULATED-DESIGNED BY: ANDRE GUIMARAES
CHECKED BY: TREVOR GOFF
REVISED BY
DATE REVISED
P:\PROJ\01\32330\drafting\Resubmitset\01000001011ga004.dgn

LAST REVISION 00-00-00
DATE PLOTTED => 14-JUN-2012
TIME PLOTTED => 09:05

Dist	COUNTY	ROUTE	POST MILES TOTAL PROJECT	SHEET No.	TOTAL SHEETS
01	Hum	36	5.9/7.6	12	26

REGISTERED CIVIL ENGINEER 4-17-12 DATE

6-11-12
PLANS APPROVAL DATE

REGISTERED PROFESSIONAL ENGINEER
ANDRE GUIMARAES
No. 78117
Exp. 9-30-13
CIVIL
STATE OF CALIFORNIA

THE STATE OF CALIFORNIA OR ITS OFFICERS OR AGENTS SHALL NOT BE RESPONSIBLE FOR THE ACCURACY OR COMPLETENESS OF SCANNED COPIES OF THIS PLAN SHEET.

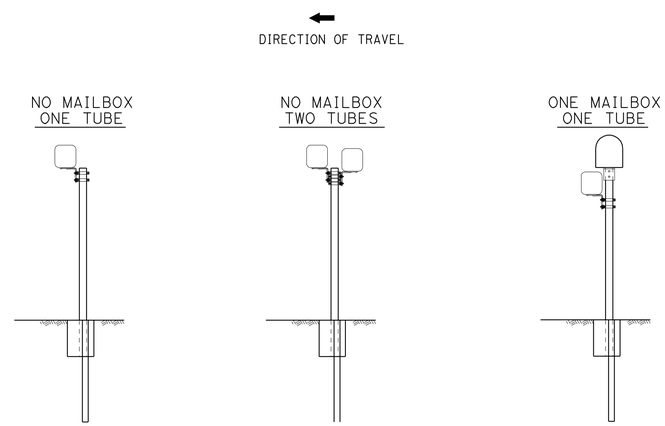

NEWSPAPER TUBE CONFIGURATIONS - SINGLE POST INSTALLATIONS

NOTE: NEWSPAPER TUBE ONLY POSTS USE THE FOLLOWING TAPCO PART NUMBERS.

TAPCO PART No.	DESCRIPTION
20-VR3	V-LOC SOCKET WITH WEDGE
20-ST	MAILBOX SUPPORT TUBE

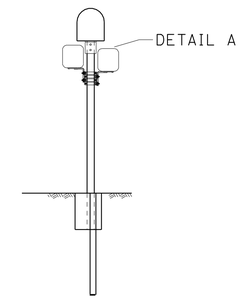

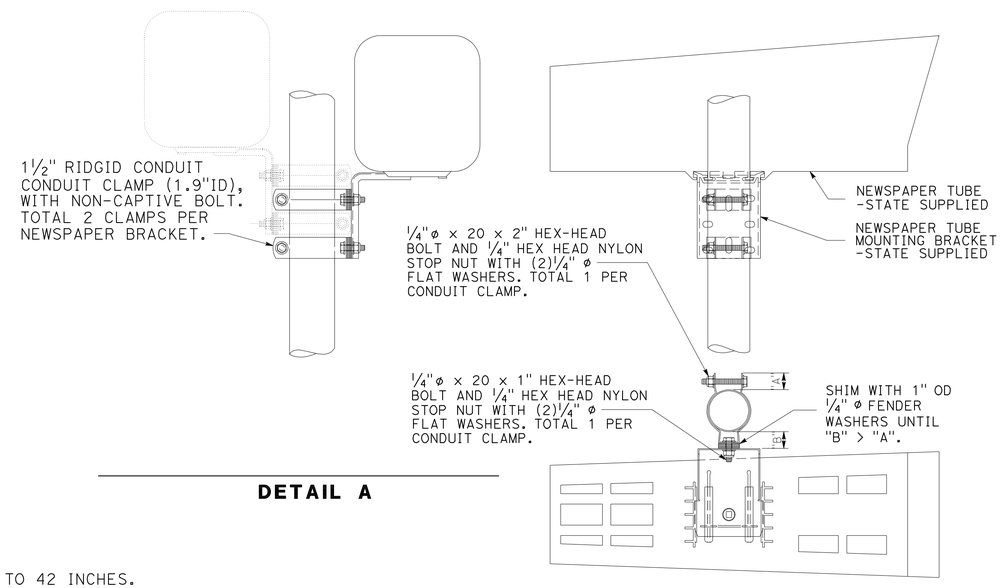

DETAIL A

GENERAL NOTES FOR ALL DETAILS:

1. POLES WITH NEWSPAPER TUBE(S) ONLY INSTALLED SHALL USE V-LOC BREAK AWAY POST SYSTEM.
2. NEWSPAPER TUBE(S) ONLY POST LOCATIONS TO BE AS SHOWN ON MAILBOX QUANTITY SHEETS.
3. NEWSPAPER ONLY POSTS SHALL BE INSTALLED THE SAME AS THE V_LOC MAILBOX POST. SEE V-LOC MAILBOX INSTALLATION CONSTRUCTION DETAIL SHEET C-3 FOR INSTALLATION REQUIREMENTS.
4. INSTALL ONE NEWSPAPER TUBE PER EACH MAILBOX.
5. ON NEWSPAPER ONLY POSTS THE VERTICAL DISTANCE FROM THE BOTTOM OF THE NEWSPAPER TUBE TO THE GROUND SHALL BE 39 TO 42 INCHES.
6. HEIGHT ALIGNMENT BETWEEN ADJACENT POSTS AT ANY LOCATION TO BE AS DIRECTED BY ENGINEER.
7. NEWSPAPER TUBE CENTERLINE TO BE PARALLEL WITH MAILBOX CENTERLINE IF BOTH UNITS INSTALLED ON SAME POST.
8. ALL NEWSPAPER TUBES TO FACE SR36 UNLESS OTHERWISE ORIENTATED ON LAYOUT SHEETS.
9. ALL NUTS/WASHERS (ALL TYPES USED), MUFFLER CLAMPS, AND CONDUIT CLAMPS TO BE STAINLESS STEEL.
10. NO HOLES ARE TO BE DRILLED IN THE V-LOC POST TUBE SUPPORT FRAME UNLESS CALLED FOR IN MANUFACTURE'S INSTALLATION INSTRUCTIONS.
11. NEWSPAPER TUBES WILL BE STATE SUPPLIED. SINGLE POST ANGLE MOUNTING BRACKETS WILL BE STATE SUPPLIED. NO OTHER MOUNTING HARDWARE WILL BE STATE SUPPLIED.
12. NEWSPAPER TUBES TO REMAIN ATTACHED TO POST WHEN POST IS HIT.

NEWSPAPER TUBE INSTALLATION FOR V-LOC MAILBOX SYSTEM

CONSTRUCTION DETAILS

NO SCALE

C-5

REVISED BY | DATE REVISED
ANDRE GUIMARAES | TREVOR GOFF
CALCULATED-DESIGNED BY | CHECKED BY
FUNCTIONAL SUPERVISOR
STEVEN R. HUGHES

STATE OF CALIFORNIA - DEPARTMENT OF TRANSPORTATION
Caltrans
DESIGN

P:\PROJ\01\32330\drafting\Resubmit+Set\01000001011ga005.dgn

LAST REVISION 00-00-00 | DATE PLOTTED => 14-JUN-2012 | TIME PLOTTED => 09:05

Dist	COUNTY	ROUTE	POST MILES TOTAL PROJECT	SHEET No.	TOTAL SHEETS
01	Hum	36	5.9/7.6	13	26

REGISTERED CIVIL ENGINEER 4-17-12 DATE

6-11-12
PLANS APPROVAL DATE

REGISTERED PROFESSIONAL ENGINEER ANDRE GUIMARAES No. 78117 Exp. 9-30-13 CIVIL STATE OF CALIFORNIA

THE STATE OF CALIFORNIA OR ITS OFFICERS OR AGENTS SHALL NOT BE RESPONSIBLE FOR THE ACCURACY OR COMPLETENESS OF SCANNED COPIES OF THIS PLAN SHEET.

DRIVEWAY TABLE

	A1	B1	C1	D1	E1	E2	D2	C2	B2	A2	W	R1	R2
DRIVEWAY # PA218											12.00	25.00	25.00
STATION	"JP1"110+00.00	"JP1" 110+03.21	"JP1"110+23.66	SEE C1	"JP1"110+30.12	"JP1" 110+29.66	SEE C2	"JP1"110+35.66	"JP1" 110+3.00	-			
OFFSET (FT)	14.1 L†	14.47 L†	47.66 L†		15.27 L†	47.76 L†		47.86 L†	16.55 L†	-			
ELEVATION (FT)	132.57	132.30	131.86		132.74	131.86		131.86	132.76	-			
DRIVEWAY # PA2191											13.53	25.00	20.00
STATION	"JP1"111+73.84	"JP1" 111+90.84	"JP1"112+11.93	SEE C1	"JP1"112+18.69	"JP1" 112+18.69	SEE C2	"JP1"112+25.46	"JP1"112+32.85	-			
OFFSET (FT)	22.34 R†	25.04 R†	49.69 R†		22.00 R†	49.69 R†		49.69 R†	33.70 R†	-			
ELEVATION (FT)	131.45	131.07	131.88		131.58	131.88		131.88	131.47	-			
DRIVEWAY # PA2192											7.79	20.00	25.00
STATION	-	"JP1" 112+32.85	"JP1"112+41.43	SEE C1	"JP1"112+45.32	"JP1" 112+45.32	SEE C2	"JP1"112+49.22	"JP1"112+70.23	"JP1"112+88.56			
OFFSET (FT)	-	33.70 R†	49.69 R†		22.00 R†	49.69 R†		49.69 R†	24.97 R†	22.00 R†			
ELEVATION (FT)	-	131.40	131.78		131.65	131.78		131.78	131.18	131.58			
DRIVEWAY # PA220											12.00	25.00	25.00
STATION	"JP1"116+00.00	"JP1" 116+42.98	"JP1"116+62.46	"JP1"116+62.47	"JP1"116+67.74	"JP1" 116+68.13	"JP1"116+73.80	"JP1"116+73.80	"JP1"116+92.60	"JP1"117+18.32			
OFFSET (FT)	19.84 L†	22.87 L†	46.59 L†	46.98 L†	19.19 L†	46.87 L†	46.81 L†	45.79 L†	22.01 L†	17.41 L†			
ELEVATION (FT)	137.41	138.29	138.79	138.90	138.76	138.90	138.90	138.79	138.29	138.94			
DRIVEWAY # PA222											12.32	15.00	15.00
STATION	"JP1"117+13.47	"JP1" 117+42.59	"JP1"117+55.95	"JP1"117+59.30	"JP1"117+59.20	"JP1" 117+65.62	"JP1"117+71.92	"JP1" 117+71.21	"JP1"117+81.00				
OFFSET (FT)	15.84 R†	19.77 R†	31.25 R†	17.75 R†	17.84 R†	42.74 R†	41.21 R†	38.63 R†	16.9 R†	16.4 R†			
ELEVATION (FT)	135.83	135.69	135.13	134.65	135.92	134.65	134.65	134.65	135.02	136.35			

CONSTRUCTION DETAILS
C-6

REVISED BY | DATE REVISED
ANDRE GUIMARAES | TREVOR GOFF
CALCULATED-DESIGNED BY | CHECKED BY
FUNCTIONAL SUPERVISOR
STEVEN R. HUGHES

STATE OF CALIFORNIA - DEPARTMENT OF TRANSPORTATION
Caltrans
DESIGN

P:\PROJ\01\32330\drafting\Resubmit+Set\0100000101ga006.dgn

LAST REVISION 00-00-00 | DATE PLOTTED => 14-JUN-2012 | TIME PLOTTED => 09:06

Dist	COUNTY	ROUTE	POST MILES TOTAL PROJECT	SHEET No.	TOTAL SHEETS
01	Hum	36	5.9/7.6	14	26

REGISTERED CIVIL ENGINEER — DATE 4-17-12

6-11-12
PLANS APPROVAL DATE

REGISTERED PROFESSIONAL ENGINEER — ANDRE GUIMARAES — No. 78117 — Exp. 9-30-13 — CIVIL — STATE OF CALIFORNIA

THE STATE OF CALIFORNIA OR ITS OFFICERS OR AGENTS SHALL NOT BE RESPONSIBLE FOR THE ACCURACY OR COMPLETENESS OF SCANNED COPIES OF THIS PLAN SHEET.

NOTES:

1. FOR ACCURATE RIGHT OF WAY DATA, CONTACT RIGHT OF WAY ENGINEERING AT THE DISTRICT OFFICE.
2. EXISTING UTILITY FACILITIES HAVE NOT BEEN PLOTTED ON THESE SHEETS.

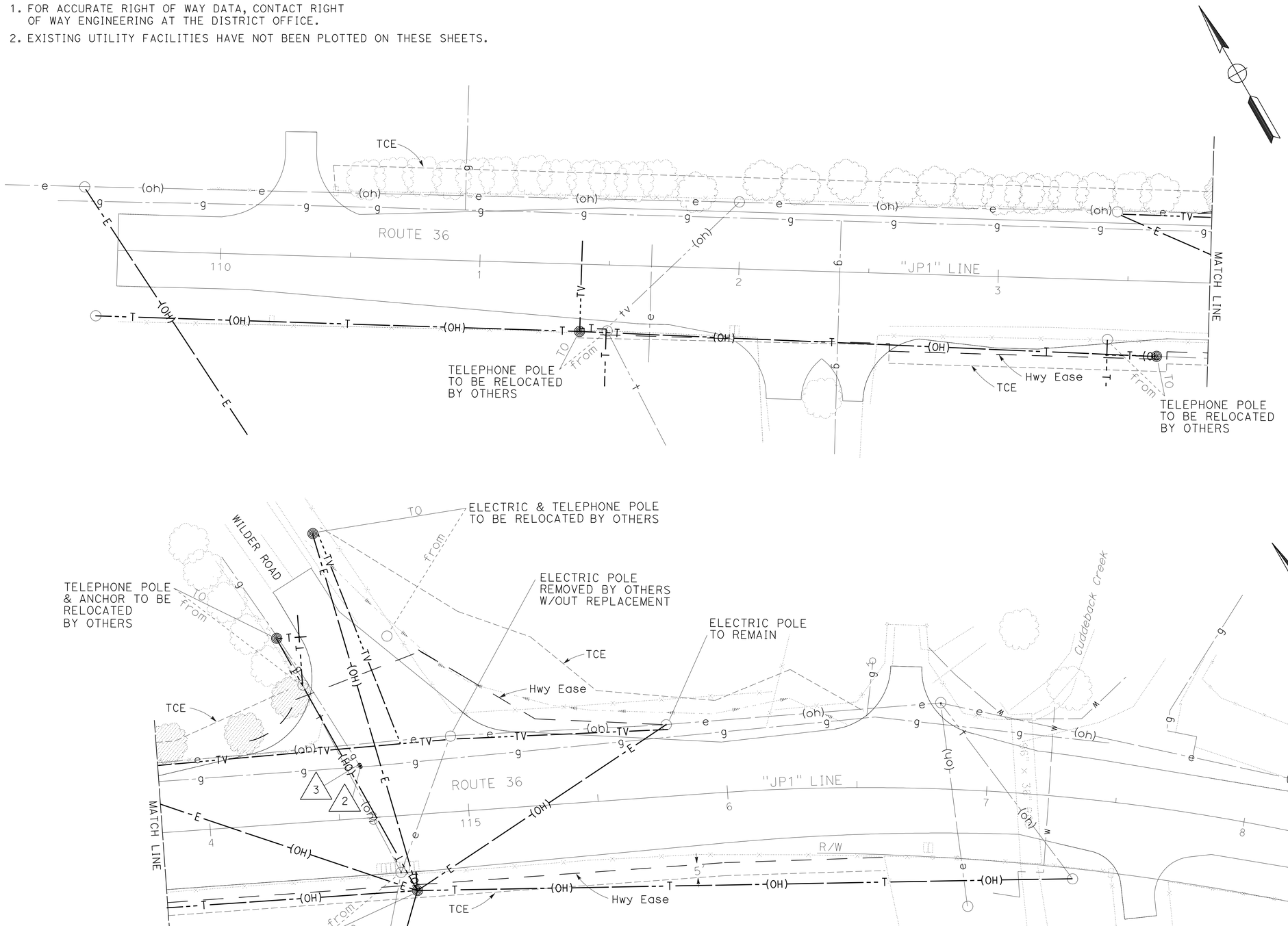

UTILITY PLAN

SCALE: 1" = 20'

U-1

THIS PLAN ACCURATE FOR UTILITY WORK ONLY

STATE OF CALIFORNIA - DEPARTMENT OF TRANSPORTATION
Caltrans
DESIGN

FUNCTIONAL SUPERVISOR: STEVEN R. HUGHES
CALCULATED-DESIGNED BY: ANDRE GUIMARAES
CHECKED BY: TREVOR GOFF
REVISED BY
DATE REVISED

P:\PROJ\01\32330\drafting\sheets\0100000101ka001.dgn

LAST REVISION 00-00-00
DATE PLOTTED => 14-JUN-2012
TIME PLOTTED => 09:32

BORDER LAST REVISED 7/2/2010
USERNAME => s114926
DGN FILE => 0100000101ka001.dgn
RELATIVE BORDER SCALE IS IN INCHES 0 1 2 3
UNIT 0311
PROJECT NUMBER & PHASE 01000001011

Dist	COUNTY	ROUTE	POST MILES TOTAL PROJECT	SHEET No.	TOTAL SHEETS
01	Hum	36	5.9/7.6	15	26

REGISTERED CIVIL ENGINEER 4-17-12 DATE

6-11-12
PLANS APPROVAL DATE

REGISTERED PROFESSIONAL ENGINEER ANDRE GUIMARAES No. 78117 Exp. 9-30-13 CIVIL STATE OF CALIFORNIA

THE STATE OF CALIFORNIA OR ITS OFFICERS OR AGENTS SHALL NOT BE RESPONSIBLE FOR THE ACCURACY OR COMPLETENESS OF SCANNED COPIES OF THIS PLAN SHEET.

STATIONARY MOUNTED CONSTRUCTION AREA SIGNS

◯	TYPE	SIGN MESSAGE	PANEL SIZE	No. OF POSTS AND SIZE	EACH
A	C40 (CA)	TRAFFIC FINES DOUBLED IN CONSTRUCTION ZONES	108" x 42"	2 - (6" x 6")	2
B	W20-1 C23B (CA)	ROAD WORK AHEAD HIGHWAY WIDENING	48" x 48" 30" x 18"	1 - (6" x 6")	2
C	W11-1	BICYCLE (SYMBOL)	36" x 36"	1 - (4" x 6")	2
	W16-1	SHARE THE ROAD	24" x 30"		
D	G20-2	END ROAD WORK	36" x 18"	1 - (4" x 4")	2
E	W20-1	ROAD WORK AHEAD	36" x 36"	1 - (4" x 6")	4

NOTE: EXACT LOCATIONS OF CONSTRUCTION AREA SIGNS TO BE DETERMINED IN THE FIELD BY THE ENGINEER.

C23B (CA)

HIGHWAY WIDENING

BLACK / ORANGE
6" Caps
30" x 18"

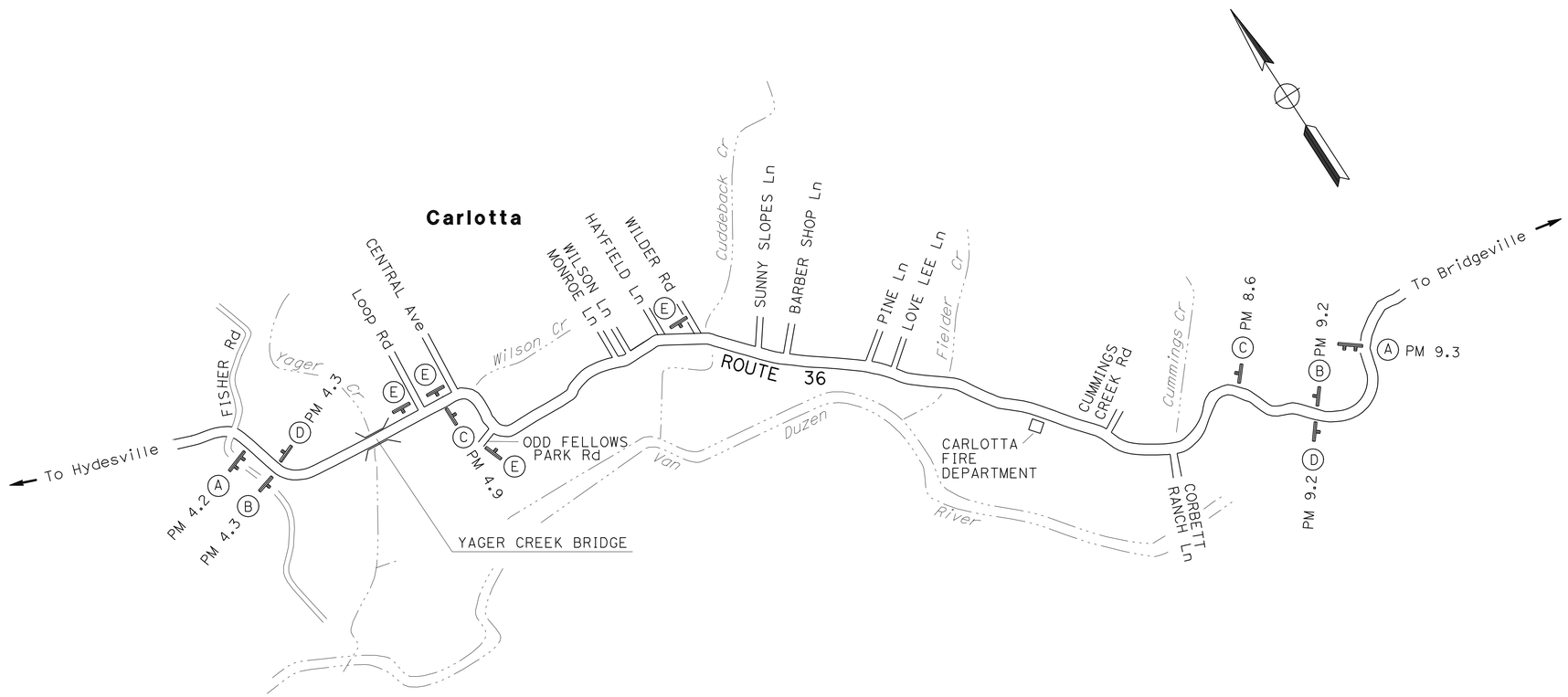

CONSTRUCTION AREA SIGNS

NO SCALE

CS-1

THIS PLAN ACCURATE FOR CONSTRUCTION AREA SIGN WORK ONLY.

REVISED BY | DATE REVISED

ANDRE GUIMARAES | TREVOR GOFF

CALCULATED-DESIGNED BY | CHECKED BY

FUNCTIONAL SUPERVISOR: STEVEN R. HUGHES

STATE OF CALIFORNIA - DEPARTMENT OF TRANSPORTATION

Caltrans

DESIGN

P:\PROJ\01\32330\drafting\Resubmit+Set\01000001011a001.dgn

LAST REVISION | DATE PLOTTED => 14-JUN-2012 | TIME PLOTTED => 09:32

00-00-00

Dist	COUNTY	ROUTE	POST MILES TOTAL PROJECT	SHEET No.	TOTAL SHEETS
01	Hum	36	5.9/7.6	16	26

REGISTERED CIVIL ENGINEER — DATE 4-17-12

6-11-12
PLANS APPROVAL DATE

REGISTERED PROFESSIONAL ENGINEER — ANDRE GUIMARAES — No. 78117 — Exp. 9-30-13 — CIVIL — STATE OF CALIFORNIA

THE STATE OF CALIFORNIA OR ITS OFFICERS OR AGENTS SHALL NOT BE RESPONSIBLE FOR THE ACCURACY OR COMPLETENESS OF SCANNED COPIES OF THIS PLAN SHEET.

LEGEND:

- ROADSIDE SIGN NUMBER
- NEW ROADSIDE SIGN
- RELOCATE ROADSIDE SIGN
- RESET ROADSIDE SIGN
- ROADSIDE SIGN TO REMAIN
- MILEPOST MARKER
- No. TRAFFIC STRIPE DETAIL
- CHANGE IN STRIPING PATTERN
- DELINEATOR
- REMOVE DELINEATOR

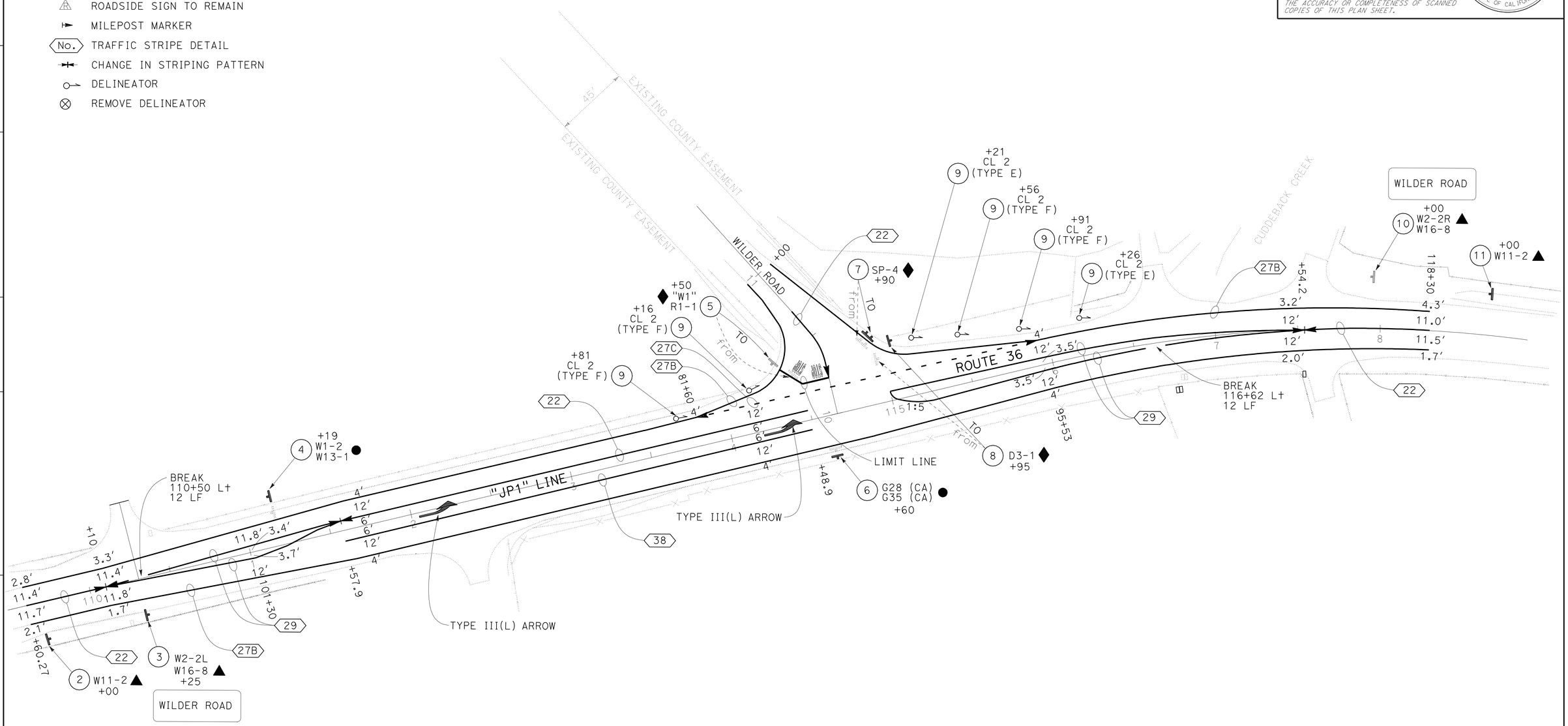

PAVEMENT DELINEATION AND SIGN PLAN

SCALE 1" = 30'

PD-1

THIS PLAN ACCURATE FOR PAVEMENT DELINEATION AND SIGN WORK ONLY.

STATE OF CALIFORNIA - DEPARTMENT OF TRANSPORTATION — DESIGN

FUNCTIONAL SUPERVISOR: STEVEN R. HUGHES

CALCULATED-DESIGNED BY: ANDRE GUIMARAES — CHECKED BY: TREVOR GOFF

REVISED BY — DATE REVISED

P:\PROJ\01\32330\drafting\sheets\0100000101na001.dgn

LAST REVISION 00-00-00 — DATE PLOTTED => 14-JUN-2012 — TIME PLOTTED => 09:32

BORDER LAST REVISED 7/2/2010 — USERNAME => s114926 — DGN FILE => 0100000101na001.dgn — RELATIVE BORDER SCALE IS IN INCHES 0 1 2 3 — UNIT 0311 — PROJECT NUMBER & PHASE 01000001011

Dist	COUNTY	ROUTE	POST MILES TOTAL PROJECT	SHEET No.	TOTAL SHEETS
01	Hum	36	5.9/7.6	17	26

REGISTERED CIVIL ENGINEER 4-17-12 DATE

6-11-12
PLANS APPROVAL DATE

REGISTERED PROFESSIONAL ENGINEER ANDRE GUIMARAES No. 78117 Exp. 9-30-13 CIVIL STATE OF CALIFORNIA

THE STATE OF CALIFORNIA OR ITS OFFICERS OR AGENTS SHALL NOT BE RESPONSIBLE FOR THE ACCURACY OR COMPLETENESS OF SCANNED COPIES OF THIS PLAN SHEET.

TRAFFIC STRIPE AND PAVEMENT MARKER QUANTITIES

LOCATION (STATION)		THERMOPLASTIC TRAFFIC STRIPE						PAVEMENT MARKER (RETROREFLECTIVE)	
		DETAIL No.	DETAIL LENGTH	4" WHITE (SOLID)	4" YELLOW (SOLID)	4" WHITE (BROKEN 12-3)	8" WHITE (SOLID)	TYPE D YELLOW (TWO-WAY)	TYPE G CLEAR (ONE-WAY)
FROM	TO		LF					EA	
"JP1" 109+60 R†	"JP1" 118+30 R†	27B	870	870					
"JP1" 109+60 L†	"JP1" 114+49 L†	27B	489	489					
"JP1" 109+60	"JP1" 110+10	22	50		100			6	
"JP1" 110+10	"JP1" 111+61	29	151		604			16	
"JP1" 111+61	"JP1" 114+49	22	288		576			26	
"JP1" 111+61	"JP1" 114+49	38	288				288		13
"JP1" 113+81.61	"JP1" 115+94.41	27C	213			213			
"JP1" 115+00	"JP1" 117+54	29	254		1016			24	
"JP1" 114+95 L†	"JP1" 118+30 L†	27B	335	335					
"JP1" 117+54	"JP1" 118+30	22	76		152			10	
"W1" 10+22	"W1" 10+59	22	37		74			6	
		SUBTOTAL		1694	2522	213		88	13
		TOTAL		4216		213	288	101	

REMOVE THERMOPLASTIC PAVEMENT MARKING

LOCATION (STATION)	ORIENTATION	TYPE	AREA
			SQFT
"W1" 10+27 L†	FSBT	LIMIT LINE	26
"W1" 10+34 L†	FSBT	"STOP"	22
		TOTAL	48

THERMOPLASTIC PAVEMENT MARKING

LOCATION (STATION)	ORIENTATION	TYPE	AREA
			SQFT
"JP1" 112+25	FEBT	TYPE III ARROW (L)	42
"JP1" 114+24	FEBT	TYPE III ARROW (L)	42
"W1" 10+22 L†	FSBT	LIMIT LINE	34
"W1" 10+31 L†	FSBT	"STOP"	22
"W1" 10+34 L†	FSBT	"STOP"	22
		TOTAL	162

SIGN QUANTITIES

SIGN No.	LOCATION STATION	R†/L†	ORIENTATION	SIGN CODE * = CA	PANEL SIZE	RESET ROADSIDE SIGN (ONE POST)	RELOCATE ROADSIDE SIGN- ONE POST	RELOCATE ROADSIDE SIGN- TWO POST	ROADSIDE SIGN- ONE POST	ROADSIDE SIGN- TWO POST	(N) ROADSIDE SIGN POST (POST SIZE)	WEED CONTROL MAT (FIBER)	DELINEATOR (CLASS 2) (TYPE E)	DELINEATOR (CLASS 2) (TYPE F)	REMARKS
					INCHES	EA						SQYD	EA		
1	"JP1" 100+15	R†	FEBT	SP-2 *	54x42					1	4" x 6"	6.8			CUDDEBACK SCHOOL WELCOMES YOU ARTWORK #1 FROM STUDENTS @ CUDDEBACK SCHOOL
	"JP1" 100+15	R†	FEBT	SP-3 *	54x36										
2	"JP1" 110+00	R†	FEBT	W11-2	36x36				1		4" x 4"	4.2			
3	"JP1" 110+25	R†	FEBT	W2-2L	36x36				1		6" x 6"	4.2			WILDER ROAD
	"JP1" 110+25	R†	FEBT	W16-8	42x8										
4	"JP1" 111+19	L†	FWBT	W1-2	48x48	1						4.2			
	"JP1" 111+19	L†	FWBT	W13-1	36x36										
5	"W1" 10+50	L†	FSBT	R1-1	30x30		1					4.2			
6	"JP1" 114+60	R†	FSBT	G28 *	24x25	1						4.2			
	"JP1" 114+60	R†	FSBT	G35 *	21x15										
7	"JP1" 114+90	L†	FEBT	SP-5	90x42			1				—			
			FEBT		96x48										
8	"JP1" 114+95	L†	FWBT	D3-1			1					4.2			COUNTY SIGN
9	"JP1" 115+21	L†	FWBT									4.2	3	3	MULTIPLE LOCATIONS, SEE PD-1
10	"JP1" 118+00	L†	FWBT	W2-2R	36x36				1		6" x 6"	4.2			WILDER ROAD
	"JP1" 118+00	L†	FWBT	W16-8	42x8										
11	"JP1" 118+69	L†	FWBT	W11-2	36x36				1			4.2			
12	"JP1" 188+00	L†	FWBT	SP-2 *	54x42					1	4" x 6"	6.8			CUDDEBACK SCHOOL WELCOMES YOU ARTWORK #2 FROM STUDENTS @ CUDDEBACK SCHOOL
	"JP1" 188+00	L†	FWBT	SP-4 *	54x36										
					SUBTOTAL	2	2	1	4	2		51.4	3	3	
					TOTAL	2	2	1	4	2		51.4	6		

(N) = NOT A SEPARATE PAY ITEM, FOR INFORMATION ONLY

PAVEMENT DELINEATION AND SIGN QUANTITIES

PDQ-1

REVISED BY | DATE REVISED

ANDRE GUIMARAES | TREVOR GOFF

CALCULATED-DESIGNED BY | CHECKED BY

FUNCTIONAL SUPERVISOR: STEVEN R. HUGHES

STATE OF CALIFORNIA - DEPARTMENT OF TRANSPORTATION

Caltrans® DESIGN

P:\PROJ\01\32330\drafting\Resubmit\Set\0100000101nc001.dgn

LAST REVISION 00-00-00 | DATE PLOTTED => 14-JUN-2012 | TIME PLOTTED => 09:38

NOTE: (N) NOT A SEPARATE PAY ITEM. FOR INFORMATION ONLY.

Dist	COUNTY	ROUTE	POST MILES TOTAL PROJECT	SHEET No.	TOTAL SHEETS
01	Hum	36	5.9/7.6	18	26

REGISTERED CIVIL ENGINEER 4-17-12 DATE

6-11-12
PLANS APPROVAL DATE

REGISTERED PROFESSIONAL ENGINEER ANDRE GUIMARAES No. 78117 Exp. 9-30-13 CIVIL STATE OF CALIFORNIA

THE STATE OF CALIFORNIA OR ITS OFFICERS OR AGENTS SHALL NOT BE RESPONSIBLE FOR THE ACCURACY OR COMPLETENESS OF SCANNED COPIES OF THIS PLAN SHEET.

FENCE SUMMARY TABLE

LOCATION FROM	LOCATION TO	TEMPORARY FENCE (TYPE BW)	TEMPORARY FENCE (TYPE ESA)	TEMPORARY FENCE (TYPE CL-6)	RECONSTRUCT WOOD FENCE	REMOVE FENCE	REMARKS
		LF					
"JP1" 110+43.7 L+	"JP1" 113+79.84 L+				336		3' RAIL FENCE (WOOD)
"JP1" 112+50.4 R+	"JP1" 113+81.5 R+	176				176	TYPE BW
"JP1" 113+79.8 L+	"JP1" 114+46.3 L+				83		3' RAIL FENCE (WOOD)
"JP1" 113+81.5 R+	"JP1" 116+59.5 R+	277				277	
"JP1" 116+22.0 L+	"JP1" 116+26.3 L+					23	TYPE BW & WM WITH PIPE
"JP1" 116+22.0 L+	"JP1" 116+47.4 L+			30		30	5' RAIL FENCE (WOOD) & WM
"JP1" 116+94.0 L+	"JP1" 117+37.0 L+		64				
"JP1" 117+07.5 R+	"JP1" 117+29.0 R+		32				
"W1" 10+35.0 R+	"W1" 11+20.0 R+			201		222	TYPE BW & WM WITH PIPE
	TOTAL	453	96	231	419	728	

EROSION CONTROL

LOCATION FROM	LOCATION TO	EROSION CONTROL (COMPOST BLANKET)
		CY
"JP1" 210+00 L+	"JP1" 217+83 L+	46
"JP1" 210+00 R+	"JP1" 217+83 R+	16
	TOTAL	62

CONSTRUCTION SITE BMP'S

LOCATION FROM	LOCATION TO	L+/R+	TEMPORARY FIBER ROLL
			LF
"JP1" 109+95.39	"JP1" 117+83.00	L+	320
"W1" 10+35.40	"W1" 11+20.00	L+/R+	225
		TOTAL	545

SUMMARY OF ROADWAY QUANTITIES

LOCATION FROM	LOCATION TO	L+/R+	ROADWAY EXCAVATION	EMBANKMENT (N)	CLASS 2 AB	HMA (TYPE A)	SAFETY EDGE (N)	TACK COAT	COLD PLANE AC PAVEMENT	GEOSYNTHETIC PAVEMENT INTERLAYER	PAVING ASPHALT (BINDER, GPI)
			CY			TON			SQYD		TON
"JP1"109+60.27	"JP1"118+30.00	L+	292	160	165.5	407.1	16.42	0.76	268.9	325.0	0.39
"JP1"109+60.27	"JP1"118+30.00	R+	470	26	199.5	455.1	16.42	0.91	268.9	325.0	0.39
"PA218"218+20.08	"PA218"218+47.76	L+/R+	17		10.0	15.0					
"PA220"220+19.19	"PA220"220+46.88	L+/R+	17		10.0	15.0					
"PA222"222+18.26	"PA222"222+43.99	L+/R+	12		7.0	11.0					
"PA2191"2191+22.00	"PA2191"2191+49.69	L+/R+	16		9.0	14.0					
"PA2192"2192+22.00	"PA2192"2192+49.69	L+/R+	13		7.0	12.0					
"W1"10+28.66	"W1"11+00.00	L+/R+	196	2	19.4	51.7	2.28	0.13	97.7	63.4	0.04
		TOTAL	1033	188	427.4	980.9	35.12	1.80	635.5	713.4	0.82

SUMMARY OF MAILBOX QUANTITIES

LOCATION No.	EXISTING MAILBOX LOCATION SINGLE/MULTIPLE	STATION	OFFSET	LEFT/RIGHT	(N) No. 2 MAILBOX *	(N) No. 1A MAILBOX *	(N) No. 1 MAILBOX *	TOTAL	V-LOC POST (N) SINGLE	NEW MAILBOX LOCATION STATION	OFFSET	LEFT/RIGHT	(N) No. 2 MAILBOX *	(N) No. 1A MAILBOX *	(N) No. 1 MAILBOX *	REPLACE MAILBOX	REMARKS
					EA	EA	EA	EA	EA				EA	EA	EA	EA	
1	SINGLE	"JP1" 111+98.05	23.60	R+	1			1		"JP1" 112+03.00	32.00	R+					TO BE RELOCATED BY OWNER OUTSIDE STATE R/W
	SINGLE	"JP1" 111+99.80	23.16	R+			1**	1	1	"JP1" 112+04.50	33.50	R+			1**	1	
2	SINGLE	"JP1" 114+63.89	19.61	R+		1		1	1	"JP1" 113+08.00	28.50	R+		1		1	
	MULTIPLE	"JP1" 114+65.36	19.61	R+			2**	2	1	"JP1" 113+10.00	28.50	R+			2**	2	
	SINGLE	"JP1" 114+66.83	19.61	R+	1			1	1	"JP1" 113+12.00	28.50	R+	1			1	
	SINGLE	"JP1" 114+68.30	19.61	R+			1	1	1	"JP1" 113+14.00	28.50	R+			1	1	
	SINGLE	"JP1" 114+69.77	19.61	R+		1		1	1	"JP1" 113+16.00	28.50	R+		1		1	
	SINGLE	"JP1" 114+71.24	19.61	R+		1		1	1	"JP1" 113+18.00	28.50	R+		1		1	
	SINGLE	"JP1" 114+73.00	19.61	R+		1		1	1	"JP1" 113+20.00	28.50	R+		1		1	
	SINGLE	"JP1" 114+74.50	19.61	R+			1**	1	1	"JP1" 113+22.00	28.50	R+			1**	1	
	SINGLE	"JP1" 114+77.09	19.71	R+	1			1	1	"JP1" 113+24.00	28.50	R+	1			1	
3	SINGLE	"JP1" 117+50.37	27.15	R+			1	1	1	"JP1" 117+53.00	27.20	R+			1	1	
				TOTAL	3	4	6	13	11			TOTAL	2	4	6	12	

* SEE SPECIAL PROVISIONS FOR MAILBOX EQUIVALENT SIZE DESIGNATIONS
** INSTALL NEWSPAPER BOX(S) IN LIEU OF MAILBOX(S)

SUMMARY OF QUANTITIES
Q-1

REVISED BY	DATE REVISED

ANDRE GUIMARAES — TREVOR GOFF
CALCULATED-DESIGNED BY — CHECKED BY
FUNCTIONAL SUPERVISOR: STEVEN R. HUGHES

STATE OF CALIFORNIA - DEPARTMENT OF TRANSPORTATION
Caltrans® DESIGN

P:\PROJ\01\32330\drafting\ResubmitSet\0100000101pa001.dgn

LAST REVISION 00-00-00 | DATE PLOTTED => 14-JUN-2012 | TIME PLOTTED => 09:38

DIST	COUNTY	ROUTE	POST MILES TOTAL PROJECT	SHEET No.	TOTAL SHEETS
01	Hum	36	5.9/7.6	19	26

REGISTERED CIVIL ENGINEER

January 20, 2012
PLANS APPROVAL DATE

REGISTERED PROFESSIONAL ENGINEER
Cornelis M. Hakim
No. C55610
Exp. 12-31-12
CIVIL
STATE OF CALIFORNIA

The State of California or its officers or agents shall not be responsible for the accuracy or completeness of electronic copies of this plan sheet.

To accompany plans dated 6-11-12

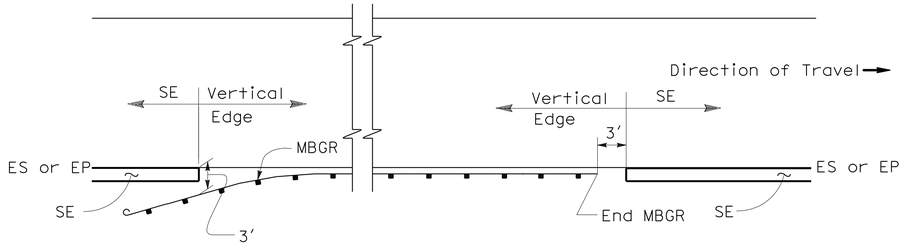

MBGR

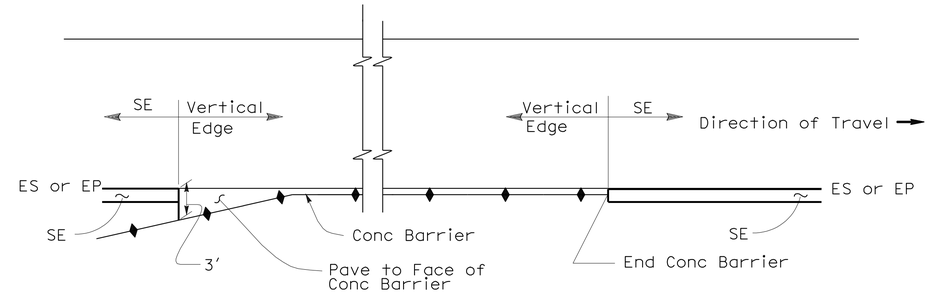

CONCRETE BARRIER

ABBREVIATIONS:

SE Safety Edge

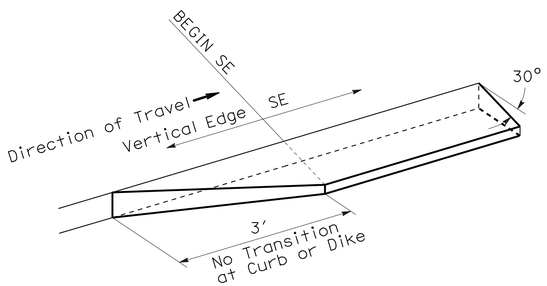

TRANSITION DETAIL FOR CONCRETE ONLY

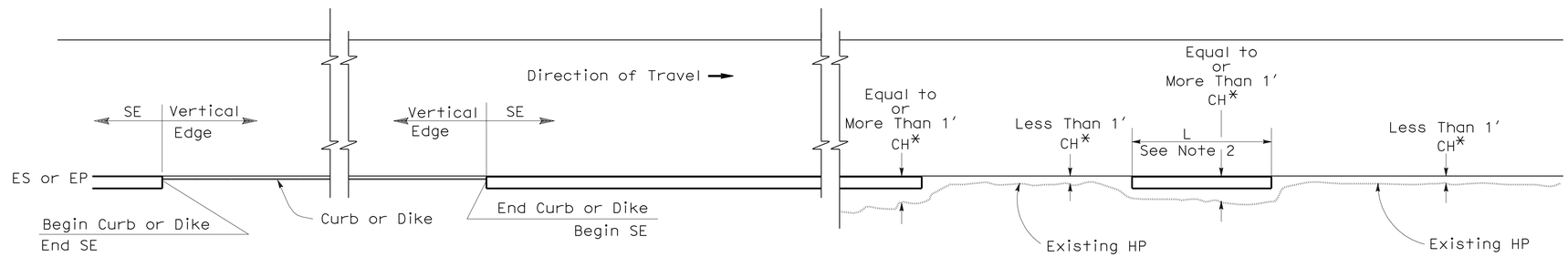

CURB OR DIKE

NARROW SIDE SLOPE

* CH = Distance from ES or EP to existing HP.

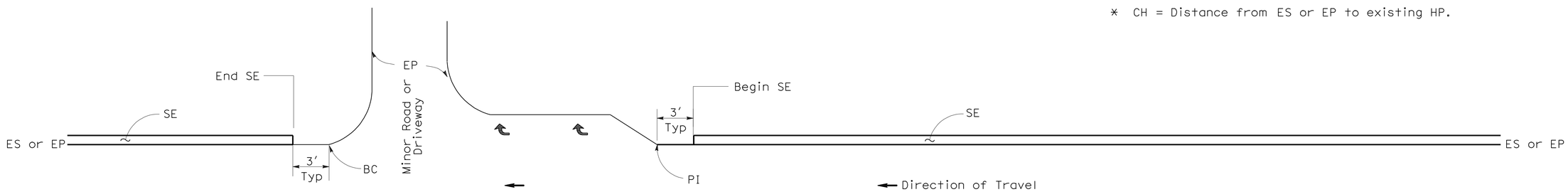

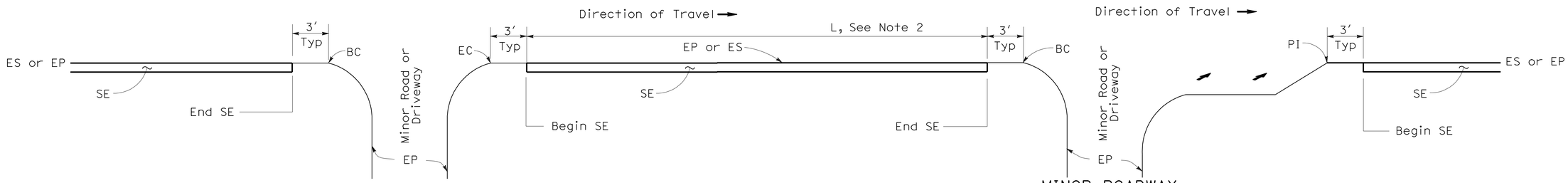

INTERSECTION

MINOR ROADWAY OR DRIVEWAY

DRIVEWAY AND INTERSECTION

NOTES:

1. For details not shown, see New Standard Plans NSP P75 and NSP P76.
2. Safety edge is optional when L is less than 30′.

STATE OF CALIFORNIA
DEPARTMENT OF TRANSPORTATION

PAVEMENT EDGE TREATMENTS

NO SCALE

NSP P74 DATED JANUARY 20, 2012 SUPPLEMENTS THE STANDARD PLANS BOOK DATED MAY 2006.

NEW STANDARD PLAN NSP P74

2006 NEW STANDARD PLAN NSP P74

01-05-12

DIST	COUNTY	ROUTE	POST MILES TOTAL PROJECT	SHEET No.	TOTAL SHEETS
01	Hum	36	5.9/7.6	20	26

REGISTERED CIVIL ENGINEER

January 20, 2012
PLANS APPROVAL DATE

REGISTERED PROFESSIONAL ENGINEER Cornelis M. Hakim No. C55610 Exp. 12-31-12 CIVIL STATE OF CALIFORNIA

The State of California or its officers or agents shall not be responsible for the accuracy or completeness of electronic copies of this plan sheet.

To accompany plans dated 6-11-12

LEGEND:

- HMA Pavement
- HMA or Concrete Pavement
- Concrete Pavement

ABBREVIATIONS:

SE	Safety Edge
TT	Total Thickness of SE
HW	Hinge Width, distance from ES or EP to HP

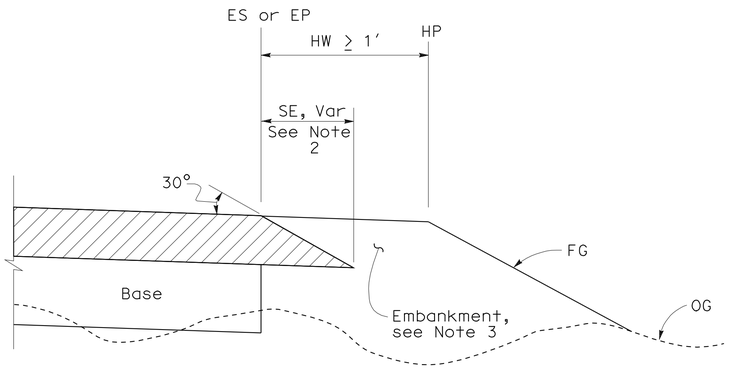

CASE K
Safety Edge - Fill Section, HW ≥ 1′

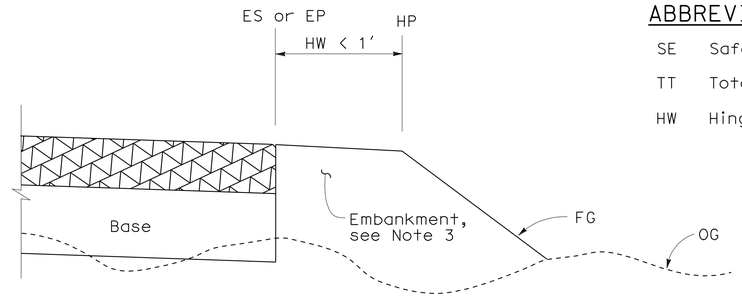

CASE L
Vertical Edge - Fill Section, HW < 1′

FILL SECTION

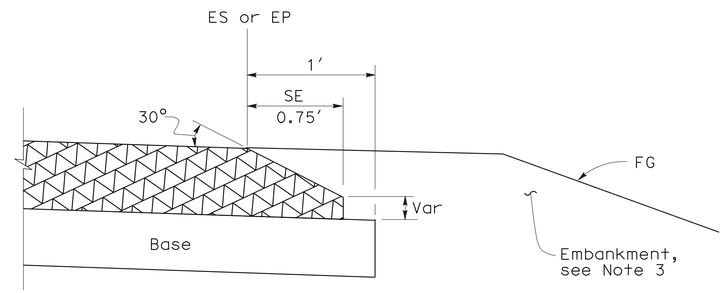

DETAIL "B"
For HMA pavement thickness more than 0.43′ or concrete pavement

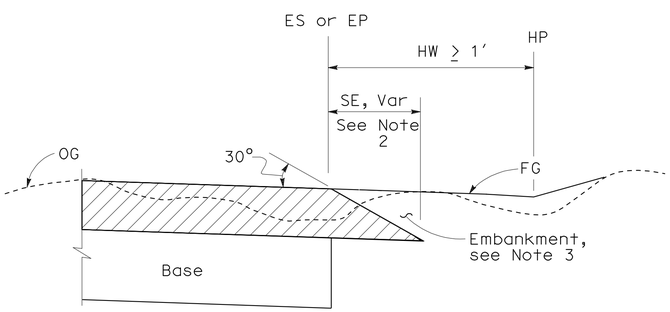

CASE M
Safety Edge - Cut Section, HW ≥ 1′

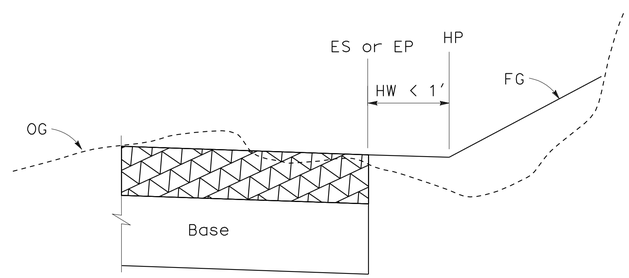

CASE N
Vertical Edge - Cut Section, HW < 1′

CUT SECTION

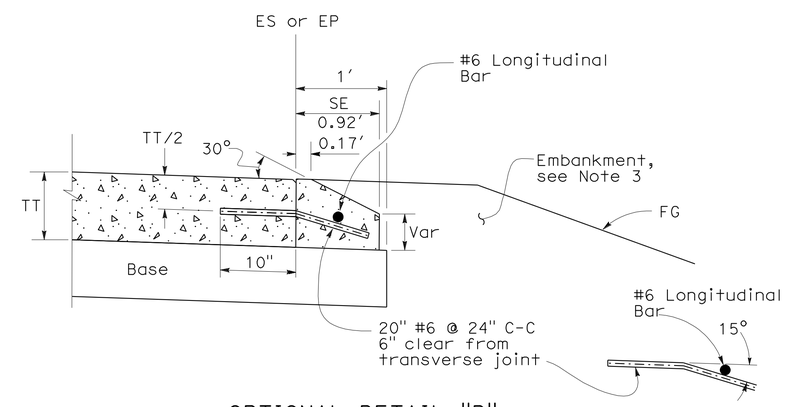

OPTIONAL DETAIL "B"
For concrete pavement
See Note 4

NOTES:

1. For limits of safety edge and vertical edge treatments, see New Standard Plan NSP P74
2. Details shown for HMA pavement thickness less than 0.43′. See Detail "B" for HMA pavement thickness more than 0.43′ or concrete pavement.
3. For locations and limits of embankment see project plans.
4. Safety edge transverse joint must match pavement transverse joint. End of #6 longitudinal bar must be 2" ±½" clear from transverse joint.
5. Safety edge is not needed in the area of MBGR, barrier, right turn lane and acceleration lane. See New Standard Plan NSP P74.

STATE OF CALIFORNIA
DEPARTMENT OF TRANSPORTATION

PAVEMENT EDGE TREATMENTS-NEW CONSTRUCTION

NO SCALE

NSP P76 DATED JANUARY 20, 2012 SUPPLEMENTS THE STANDARD PLANS BOOK DATED MAY 2006.

NEW STANDARD PLAN NSP P76

2006 NEW STANDARD PLAN NSP P76

DIST	COUNTY	ROUTE	POST MILES TOTAL PROJECT	SHEET NO.	TOTAL SHEETS
01	Hum	36	5.9/7.6	21	26

Randell D. Hiatt
REGISTERED CIVIL ENGINEER

June 6, 2008
PLANS APPROVAL DATE

REGISTERED PROFESSIONAL ENGINEER
Randell D. Hiatt
No. C50200
Exp. 6-30-09
CIVIL
STATE OF CALIFORNIA

The State of California or its officers or agents shall not be responsible for the accuracy or completeness of electronic copies of this plan sheet.

To accompany plans dated 6-11-12

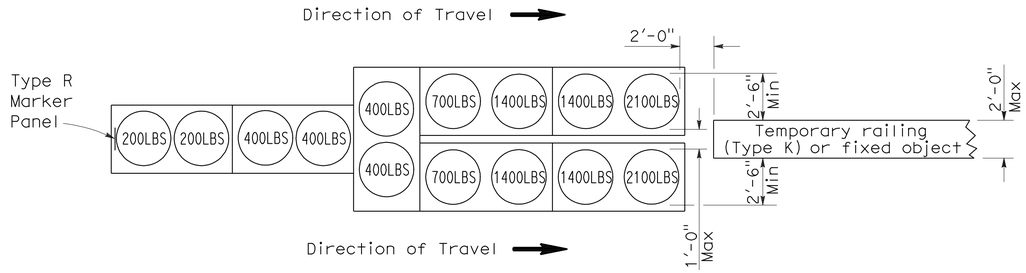

ARRAY 'TU14'

Approach speed 45 mph or more

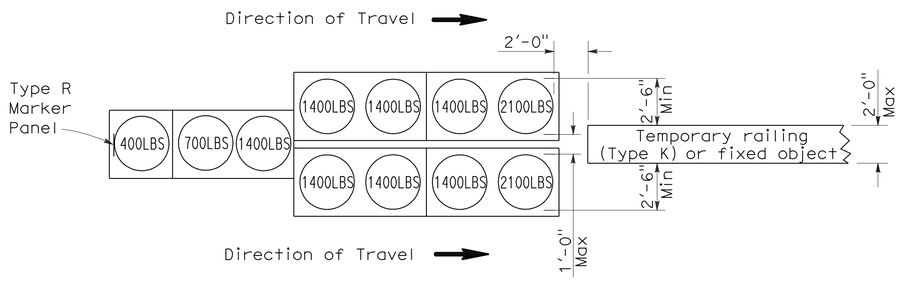

ARRAY 'TU11'

Approach speed less than 45 mph

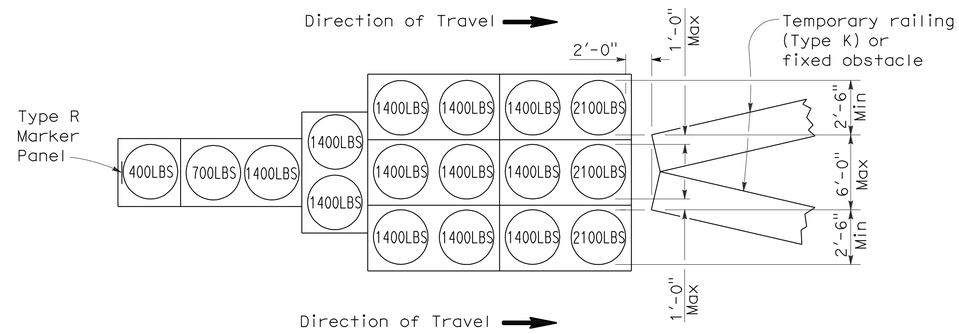

ARRAY 'TU17'

Approach speed less than 45 mph

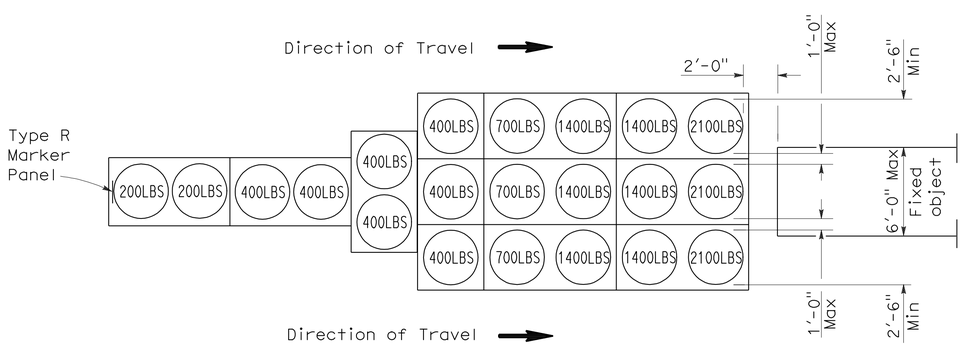

ARRAY 'TU21'

Approach speed 45 mph or more

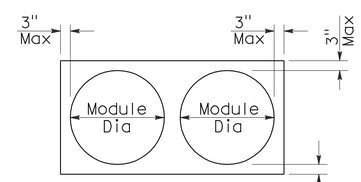

PLAN

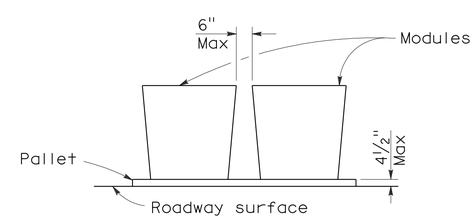

ELEVATION

CRASH CUSHION PALLET DETAIL

See Note 7

NOTES:

1. (XXX) Indicates sand filled module location and weight of sand in pounds for each module. Module spacing is based on the greater diameter of the module.
2. All sand weights are nominal.
3. Temporary crash cushion arrays shall not encroach on the traveled way.
4. Place the top of Type R marker panel 1" below the module lid.
5. Refer to Standard Plan A73B for marker details.
6. Approach speeds indicated conform to NCHRP 350 Report criteria.
7. Use of pallets is optional.

STATE OF CALIFORNIA
DEPARTMENT OF TRANSPORTATION

TEMPORARY CRASH CUSHION, SAND FILLED (UNIDIRECTIONAL)

NO SCALE

RSP T1A DATED JUNE 6, 2008 SUPERSEDES STANDARD PLAN T1A
DATED MAY 1, 2006 - PAGE 211 OF THE STANDARD PLANS BOOK DATED MAY 2006.

REVISED STANDARD PLAN RSP T1A

2006 REVISED STANDARD PLAN RSP T1A

5-15-08

DIST	COUNTY	ROUTE	POST MILES TOTAL PROJECT	SHEET NO.	TOTAL SHEETS
01	Hum	36	5.9/7.6	22	26

Randell D. Hiatt
REGISTERED CIVIL ENGINEER

June 6, 2008
PLANS APPROVAL DATE

REGISTERED PROFESSIONAL ENGINEER
Randell D. Hiatt
No. C50200
Exp. 6-30-09
CIVIL
STATE OF CALIFORNIA

The State of California or its officers or agents shall not be responsible for the accuracy or completeness of electronic copies of this plan sheet.

To accompany plans dated 6-11-12

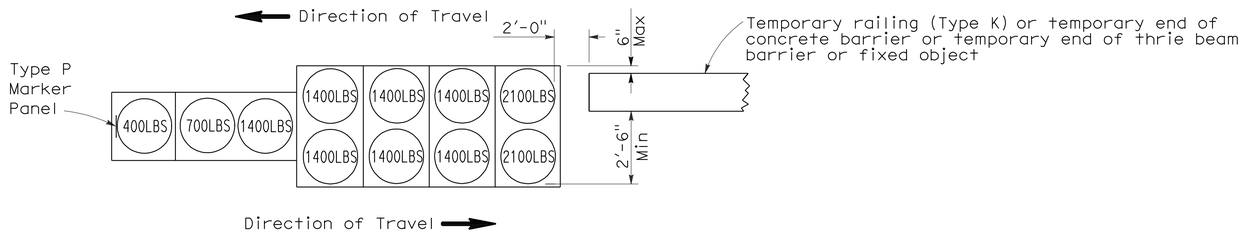

ARRAY 'TB11'

Approach speed less than 45 mph

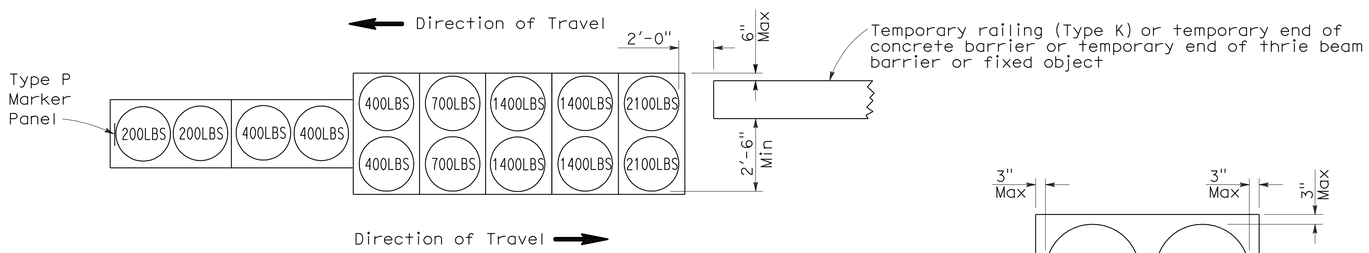

ARRAY 'TB14'

Approach speed 45 mph or more

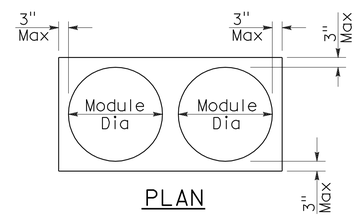

PLAN

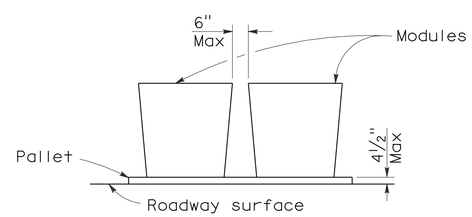

ELEVATION

CRASH CUSHION PALLET DETAIL

See Note 7

NOTES:

1. (XXX) Indicates sand filled module location and weight of sand in pounds for each module. Module spacing is based on the greater diameter of the module.
2. All sand weights are nominal.
3. Temporary crash cushion arrays shall not encroach on the traveled way.
4. Place the Type P marker panel so that the bottom of the panel rests upon the pallet.
5. Refer to Standard Plan A73B for marker details.
6. Approach speeds indicated conform to NCHRP 350 Report criteria.
7. Use of pallets is optional.

STATE OF CALIFORNIA
DEPARTMENT OF TRANSPORTATION

TEMPORARY CRASH CUSHION, SAND FILLED (BIDIRECTIONAL)

NO SCALE

RSP T1B DATED JUNE 6, 2008 SUPERSEDES STANDARD PLAN T1B
DATED MAY 1, 2006 - PAGE 212 OF THE STANDARD PLANS BOOK DATED MAY 2006.

REVISED STANDARD PLAN RSP T1B

2006 REVISED STANDARD PLAN RSP T1B

DIST	COUNTY	ROUTE	POST MILES TOTAL PROJECT	SHEET NO.	TOTAL SHEETS
01	Hum	36	5.9/7.6	23	26

Randell D. Hiatt
REGISTERED CIVIL ENGINEER

June 6, 2008
PLANS APPROVAL DATE

REGISTERED PROFESSIONAL ENGINEER
Randell D. Hiatt
No. C50200
Exp. 6-30-09
CIVIL
STATE OF CALIFORNIA

The State of California or its officers or agents shall not be responsible for the accuracy or completeness of electronic copies of this plan sheet.

To accompany plans dated 6-11-12

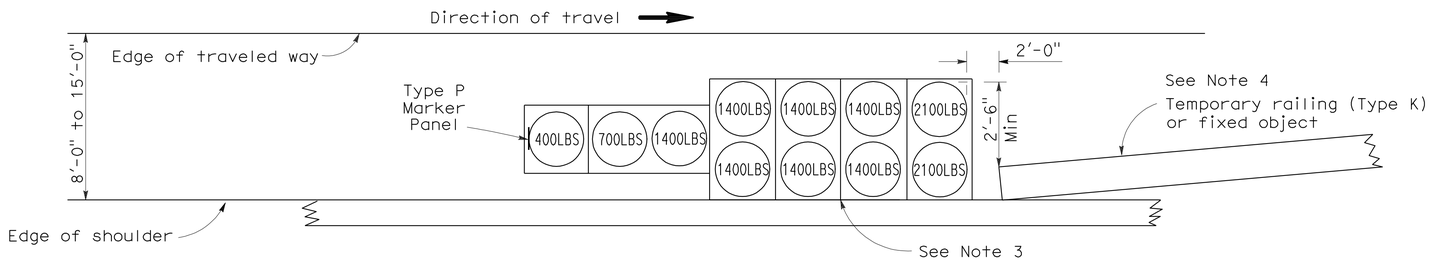

ARRAY 'TS11'

Approach speed less than 45 mph
See Note 9

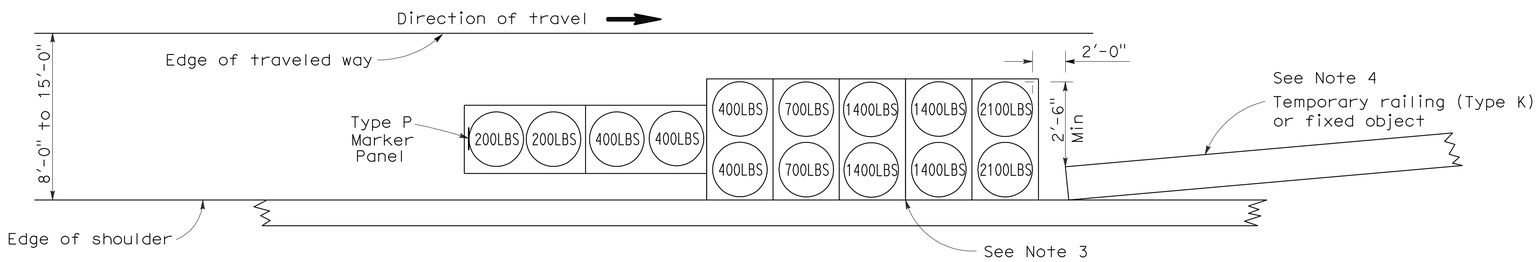

ARRAY 'TS14'

Approach speed 45 mph or more
See Note 9

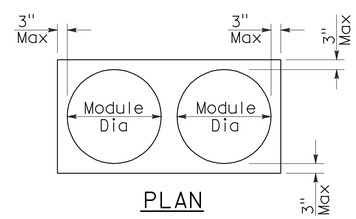

PLAN

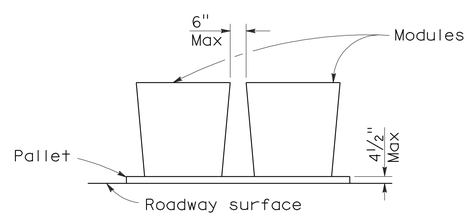

ELEVATION

CRASH CUSHION PALLET DETAIL

See Note 11

NOTES:

1. (XXX) Indicates sand filled module location and weight of sand in pounds for each module. Module spacing is based on the greater diameter of the module.
2. All sand weights are nominal.
3. The temporary crash cushion arrays shown on this plan shall be used only in locations where there will be traffic on one side of the temporary crash cushion array.
4. If the fixed object or approach end of the temporary railing is less than 15'-0" from the edge of traveled way, a temporary crash cushion is required in a construction or work zone.
5. Temporary crash cushion arrays shall not encroach on the traveled way.
6. Arrays for median shoulders shall conform to details shown on this plan for outside shoulders.
7. Place the Type P marker panel so that the bottom of the panel rests upon the pallet and faces traffic.
8. Refer to Standard Plan A73B for marker details.
9. For shoulder widths less than 8'-0", appropriate approved crash cushion protection, other than sand filled modules, shall be provided at fixed objects and at approach ends of temporary railing. The specific type of crash cushion shall be as shown on the project plans or as specified in the Special Provisions, or if not shown on the project plans or specified in the Special Provisions, shall be as approved by the Engineer.
10. Approach speeds indicated conform to NCHRP 350 Report criteria.
11. Use of pallets is optional.

STATE OF CALIFORNIA
DEPARTMENT OF TRANSPORTATION

TEMPORARY CRASH CUSHION, SAND FILLED (SHOULDER INSTALLATIONS)

NO SCALE

RSP T2 DATED JUNE 6, 2008 SUPERSEDES STANDARD PLAN T2
DATED MAY 1, 2006 - PAGE 213 OF THE STANDARD PLANS BOOK DATED MAY 2006.

REVISED STANDARD PLAN RSP T2

2006 REVISED STANDARD PLAN RSP T2

5-15-08

Dist	COUNTY	ROUTE	POST MILES TOTAL PROJECT	SHEET No.	TOTAL SHEETS
01	Hum	36	5.9/7.6	24	26

Randell D. Hiatt
REGISTERED CIVIL ENGINEER

May 20, 2011
PLANS APPROVAL DATE

REGISTERED PROFESSIONAL ENGINEER
Randell D. Hiatt
No. C50200
Exp. 6-30-11
CIVIL
STATE OF CALIFORNIA

The State of California or its officers or agents shall not be responsible for the accuracy or completeness of electronic copies of this plan sheet.

To accompany plans dated 6-11-12

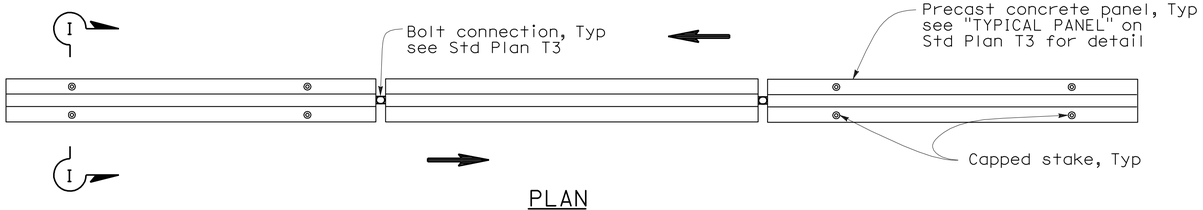

PLAN

RAILING STAKING CONFIGURATION FOR TWO-WAY TRAFFIC

See Note 1

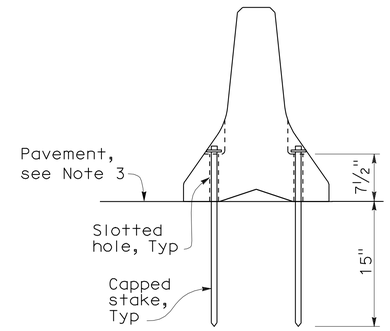

SECTION I-I

NOTES:

1. Where Type K Temporary Railing is placed as a temporary or long term barrier in two-way traffic on highways with less than 24" from the edge of traveled way, use four capped stakes per every other panel with end panels staked.
2. Where Type K Temporary Railing is placed 3" to 24" from the edge of an excavation on highways, use two capped stakes per panel along the traffic side.
3. Staked Type K Temporary Railing must be supported by at least 4" thick concrete, hot mix asphalt or existing asphalt concrete pavement.
4. The minimum yield strength for the washer must be 60,000 psi.
5. Direction of adjacent traffic indicated by ⟹.

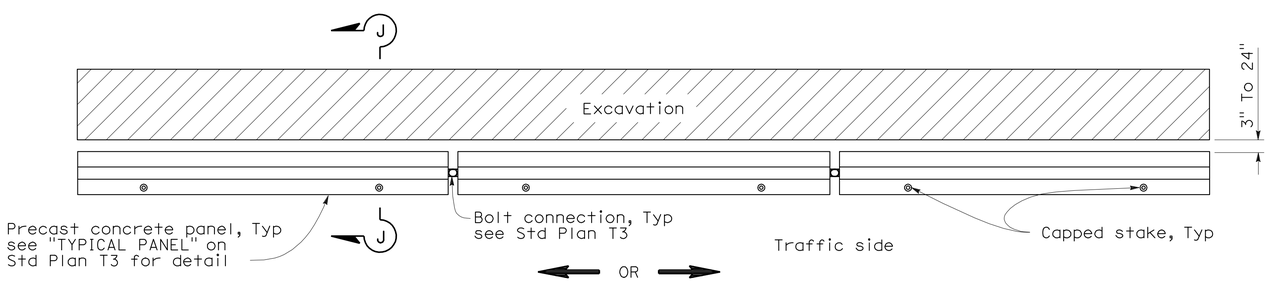

PLAN

RAILING STAKING CONFIGURATION ADJACENT TO AN EXCAVATION

See Note 2

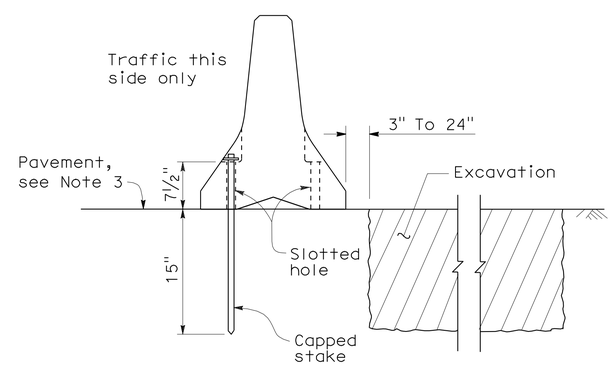

SECTION J-J

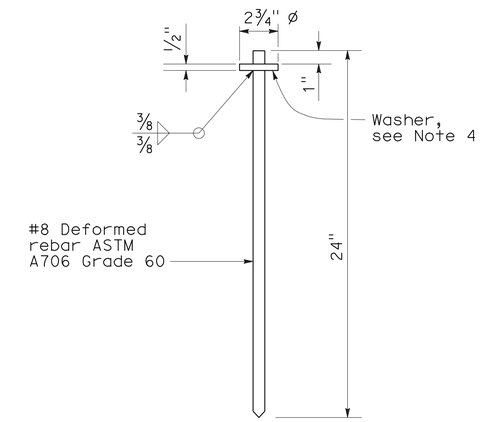

CAPPED STAKE DETAIL

STATE OF CALIFORNIA
DEPARTMENT OF TRANSPORTATION

TEMPORARY RAILING (TYPE K)

NO SCALE

NSP T3A DATED MAY 20, 2011 SUPPLEMENTS THE STANDARD PLANS BOOK DATED MAY 2006.

NEW STANDARD PLAN NSP T3A

2006 NEW STANDARD PLAN NSP T3A

DIST	COUNTY	ROUTE	POST MILES TOTAL PROJECT	SHEET NO.	TOTAL SHEETS
01	Hum	36	5.9/7.6	25	26

Robert B. Schott
LICENSED LANDSCAPE ARCHITECT

April 3, 2009
PLANS APPROVAL DATE

LICENSED LANDSCAPE ARCHITECT
Robert B. Schott 3035
Signature
11-30-10
Renewal Date
2-25-09
Date
STATE OF CALIFORNIA

The State of California or its officers or agents shall not be responsible for the accuracy or completeness of electronic copies of this plan sheet.

To accompany plans dated 6-11-12

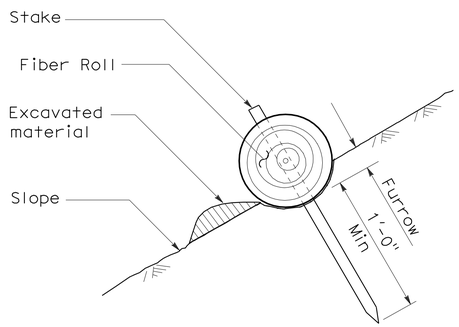

SECTION

TEMPORARY FIBER ROLL (TYPE 1)

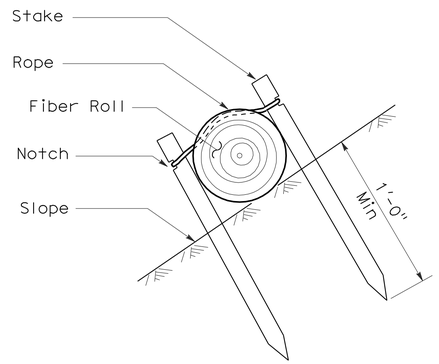

SECTION

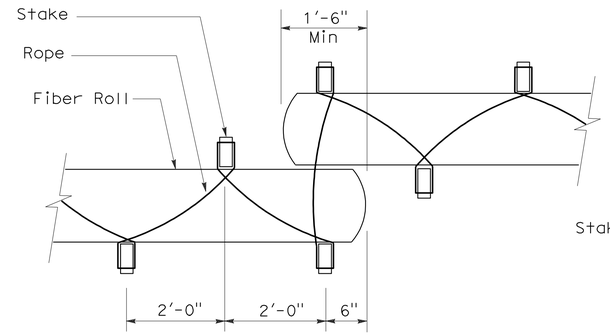

PLAN

TEMPORARY FIBER ROLL (TYPE 2)

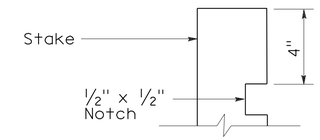

ELEVATION

STAKE NOTCH DETAIL

NOTES:

1. Temporary fiber roll spacing varies depending upon slope inclination.
2. Installations shown in the perspectives are for slope inclination of 10:1 and steeper.

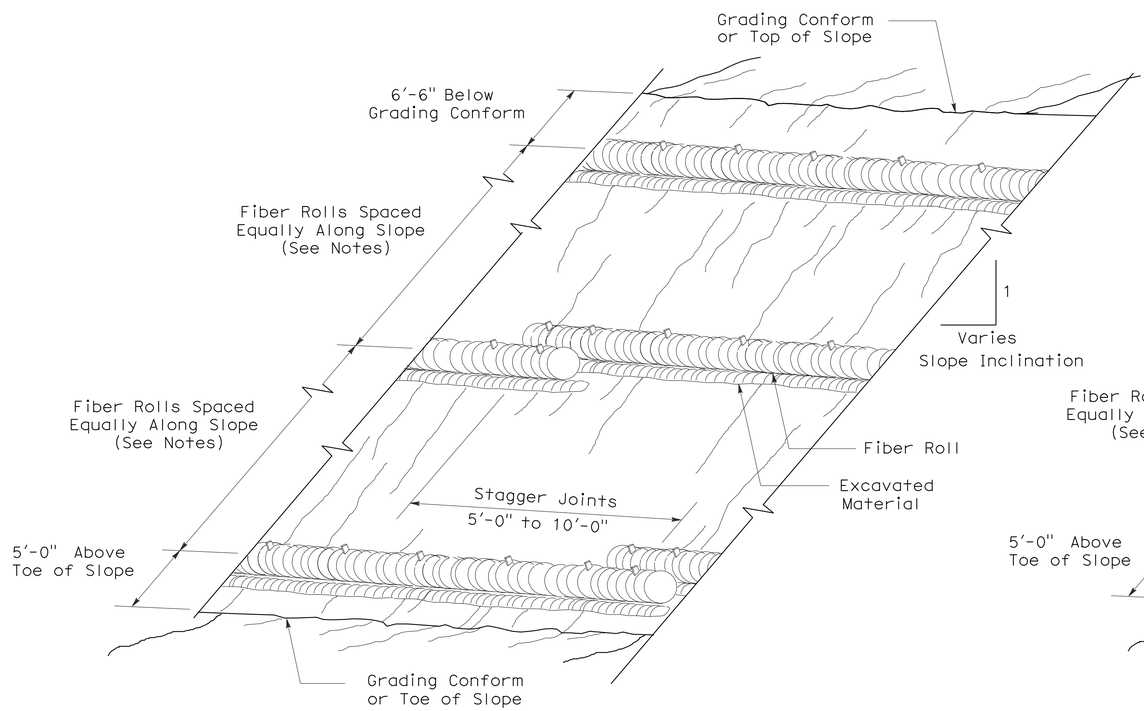

PERSPECTIVE

TEMPORARY FIBER ROLL (TYPE 1)

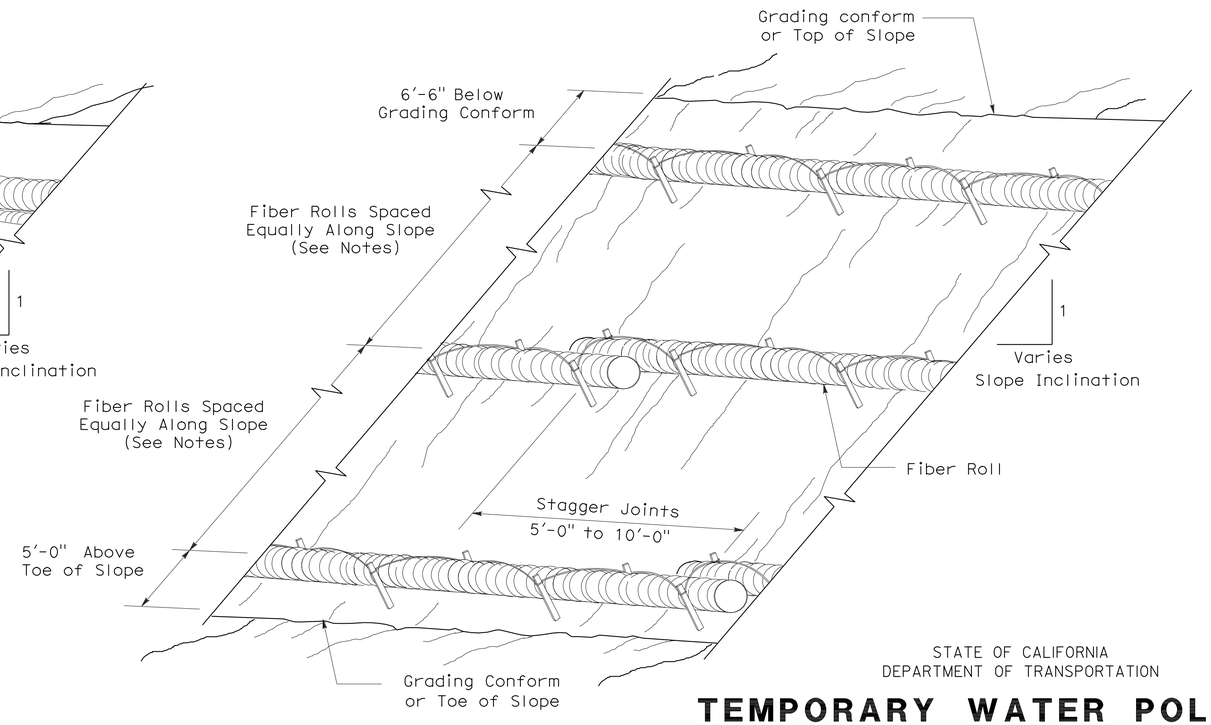

PERSPECTIVE

TEMPORARY FIBER ROLL (TYPE 2)

STATE OF CALIFORNIA
DEPARTMENT OF TRANSPORTATION

TEMPORARY WATER POLLUTION CONTROL DETAILS (TEMPORARY FIBER ROLL)

NO SCALE

RSP T56 DATED APRIL 3, 2009 SUPERSEDES STANDARD PLAN T56
DATED MAY 1, 2006 - PAGE 232 OF THE STANDARD PLANS BOOK DATED MAY 2006.

REVISED STANDARD PLAN RSP T56

2006 REVISED STANDARD PLAN RSP T56

2-23-09

DIST	COUNTY	ROUTE	POST MILES TOTAL PROJECT	SHEET NO.	TOTAL SHEETS
01	Hum	36	5.9/7.6	26	26

LICENSED LANDSCAPE ARCHITECT

April 3, 2009
PLANS APPROVAL DATE

LICENSED LANDSCAPE ARCHITECT
Robert B. Schott 3025
Signature
11-30-10
Renewal Date
2-25-09
Date
STATE OF CALIFORNIA

The State of California or its officers or agents shall not be responsible for the accuracy or completeness of electronic copies of this plan sheet.

To accompany plans dated 6-11-12

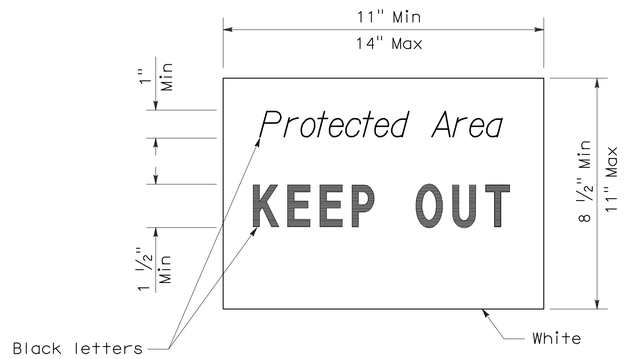

SIGN DETAIL

NOTE:

1. Temporary silt fence and temporary straw bale barrier shown for reference purposes only.

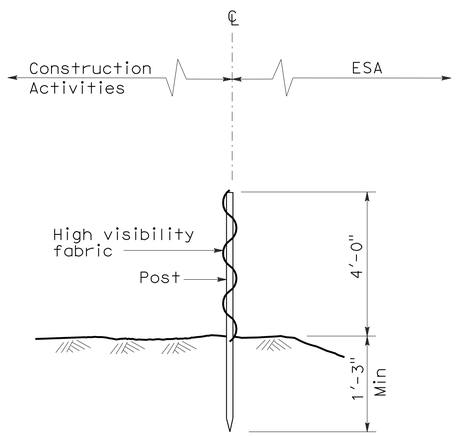

SECTION
TEMPORARY FENCE (TYPE ESA)

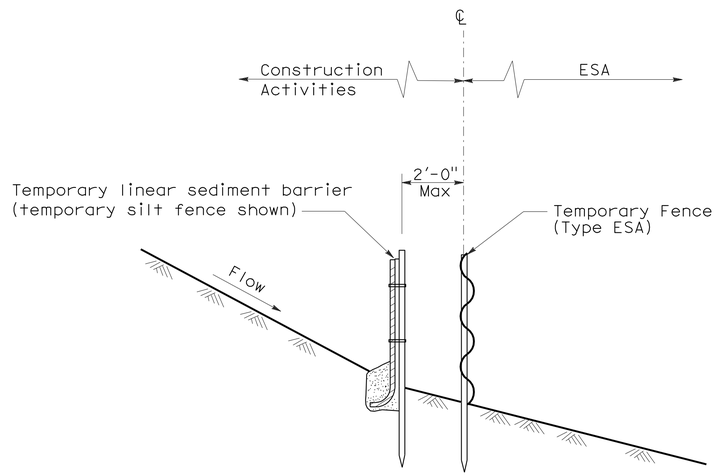

SECTION
PLACEMENT DETAIL
FOR TEMPORARY LINEAR SEDIMENT BARRIER
USED WITH TEMPORARY
FENCE (TYPE ESA)
(See Note 1)

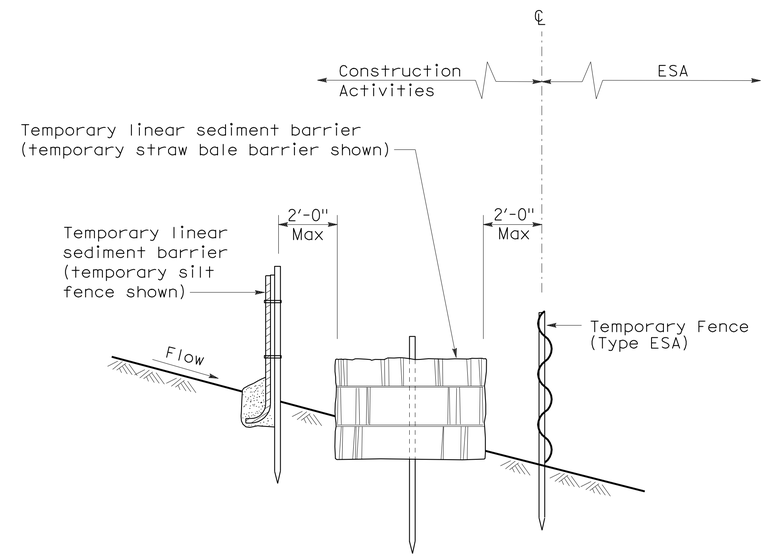

SECTION
PLACEMENT DETAIL
FOR TEMPORARY SILT FENCE
AND TEMPORARY STRAW BALE BARRIER
USED WITH TEMPORARY FENCE (TYPE ESA)
(See Note 1)

STATE OF CALIFORNIA
DEPARTMENT OF TRANSPORTATION

TEMPORARY WATER POLLUTION CONTROL DETAILS [TEMPORARY FENCE (TYPE ESA)]

NO SCALE

NSP T65 DATED APRIL 3, 2009 SUPPLEMENTS
THE STANDARD PLANS BOOK DATED MAY 2006.

NEW STANDARD PLAN NSP T65

2006 NEW STANDARD PLAN NSP T65