DIST	COUNTY	ROUTE	KILOMETER POST TOTAL PROJECT	SHEET No	TOTAL SHEETS
01	Men	101	R69.4/R78.9	801	939

REGISTERED CIVIL ENGINEER 9-15-11 DATE

1-23-12
PLANS APPROVAL DATE

REGISTERED PROFESSIONAL ENGINEER M. Friedheim No. 57968 Exp. 6-30-12 CIVIL STATE OF CALIFORNIA

The State of California or its officers or agents shall not be responsible for the accuracy or completeness of electronic copies of this plan sheet.

NOTES:

1. All hardware and pipes to be galvanized.
2. For "a" dimension see "Joint Seal Assembly (Maximum Movement Rating = 100 mm)" sheet
3. For Section F-F see "Drainage Details No.2" sheet.

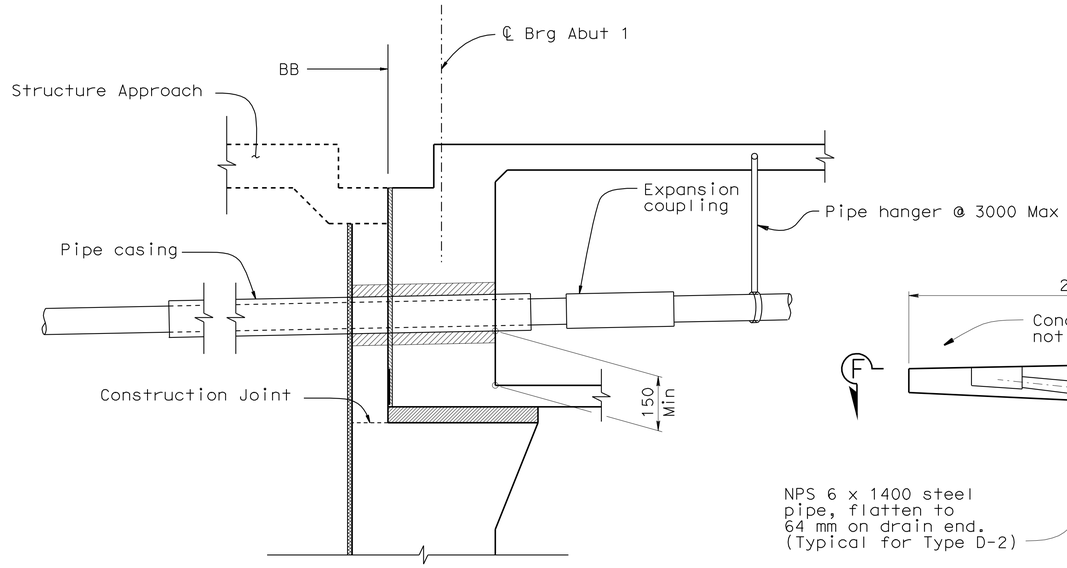

ABUTMENT 1
DECK DRAIN PIPE DETAIL B7-8
1:25

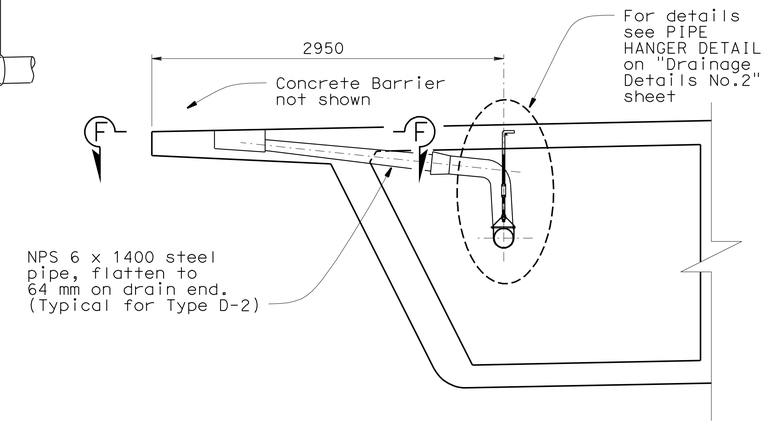

DECK DRAIN TYPE D-2 B7-6
1:25

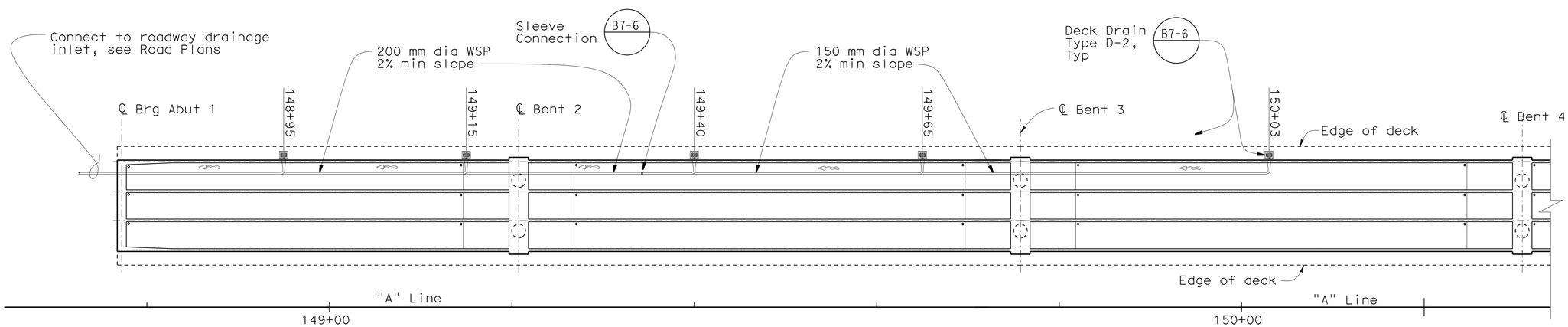

ABUTMENT 1
DRAINAGE LAYOUT B7-6
1:250

DESIGN	BY M. Moore	CHECKED R. Le	
DETAILS	BY S. Ng	CHECKED R. Le	
QUANTITIES	BY G. Zuniga/G. Slocum	CHECKED R. Odell/C. Udarbe	

STATE OF CALIFORNIA
DEPARTMENT OF TRANSPORTATION

DIVISION OF ENGINEERING SERVICES
STRUCTURE DESIGN
DESIGN BRANCH 2

BRIDGE NO. 10-0165
KILOMETER POST R74.945

WILLITS BYPASS
FLOODWAY VIADUCT
DRAINAGE DETAILS NO. 1

ALL DIMENSIONS ARE IN MILLIMETERS UNLESS OTHERWISE SHOWN

ORIGINAL SCALE IN MILLIMETERS FOR REDUCED PLANS 0 10 20 30 40 50 60 70 80 90 100

CU 01
EA 262001

DISREGARD PRINTS BEARING EARLIER REVISION DATES

REVISION DATES: 8-01-08 9-26-08 10-14-08 3-23-09 4-04-11

SHEET 62 OF 88

FILE => 10-0165_godd01.dgn

STRUCTURES DESIGN DETAIL SHEET (METRIC) (REV.03-17-04)

USERNAME => s126614 DATE PLOTTED => 28-JAN-2012 TIME PLOTTED => 07:45

DIST	COUNTY	ROUTE	KILOMETER POST TOTAL PROJECT	SHEET No	TOTAL SHEETS
01	Men	101	R69.4/R78.9	802	939

REGISTERED CIVIL ENGINEER 9-15-11 DATE

1-23-12
PLANS APPROVAL DATE

REGISTERED PROFESSIONAL ENGINEER M. Friedheim No. 57968 Exp. 6-30-12 CIVIL STATE OF CALIFORNIA

The State of California or its officers or agents shall not be responsible for the accuracy or completeness of electronic copies of this plan sheet.

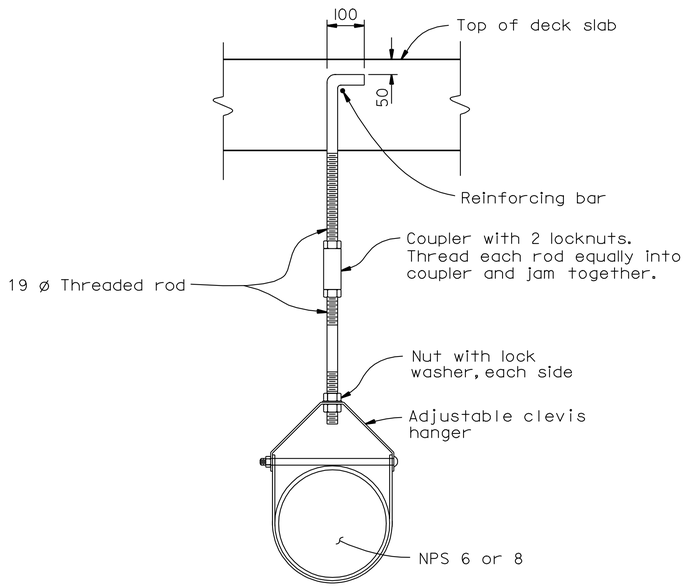

PIPE HANGER DETAIL (B7-8)

NO SCALE

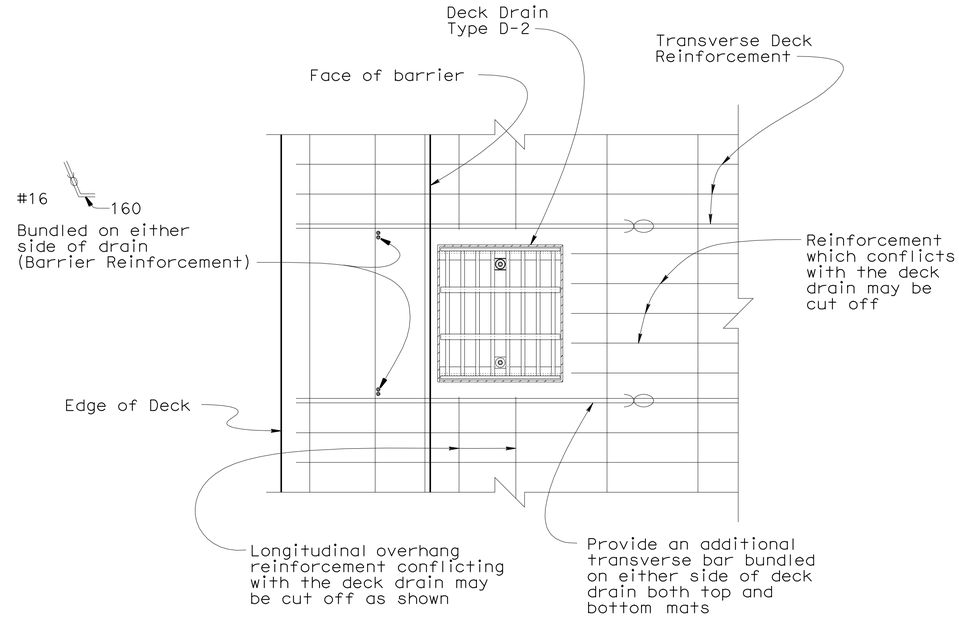

SECTION F-F

Note: Not all reinforcement shown

1:10

Caltrans Metric

	BY	CHECKED
DESIGN	M. Moore	M. Friedheim
DETAILS	S. Ng	M. Friedheim
QUANTITIES	G. Zuniga/G. Slocum	R. Odell/C. Udarbe

STATE OF CALIFORNIA
DEPARTMENT OF TRANSPORTATION

DIVISION OF ENGINEERING SERVICES
STRUCTURE DESIGN
DESIGN BRANCH 2

BRIDGE NO. 10-0165
KILOMETER POST R74.945

WILLITS BYPASS
FLOODWAY VIADUCT
DRAINAGE DETAILS NO. 2

ALL DIMENSIONS ARE IN MILLIMETERS UNLESS OTHERWISE SHOWN

ORIGINAL SCALE IN MILLIMETERS FOR REDUCED PLANS 0 10 20 30 40 50 60 70 80 90 100

CU 01
EA 262001

DISREGARD PRINTS BEARING EARLIER REVISION DATES

REVISION DATES: 7-31-08 10-8-08 10-16-08

SHEET 63 OF 88

FILE => 10-0165_godd02.dgn

STRUCTURES DESIGN DETAIL SHEET (METRIC) (REV.03-17-04)

USERNAME => s126614 DATE PLOTTED => 28-JAN-2012 TIME PLOTTED => 07:45

DIST	COUNTY	ROUTE	KILOMETER POST TOTAL PROJECT	SHEET No	TOTAL SHEETS
01	Men	101	R69.4/R78.9	803	939

REGISTERED CIVIL ENGINEER 9-15-11 DATE

1-23-12
PLANS APPROVAL DATE

REGISTERED PROFESSIONAL ENGINEER M. Friedheim No. 57968 Exp. 6-30-12 CIVIL STATE OF CALIFORNIA

The State of California or its officers or agents shall not be responsible for the accuracy or completeness of electronic copies of this plan sheet.

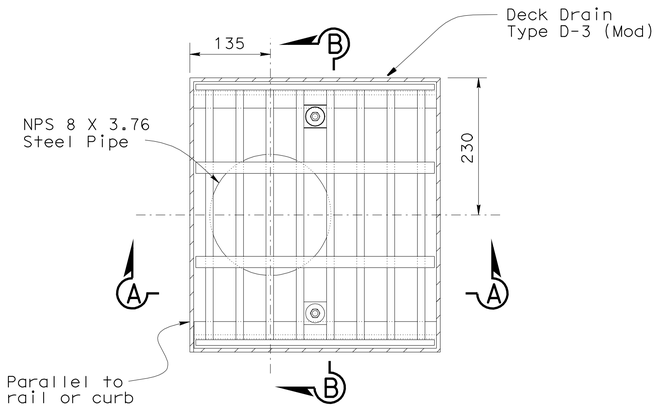

PLAN
1:5

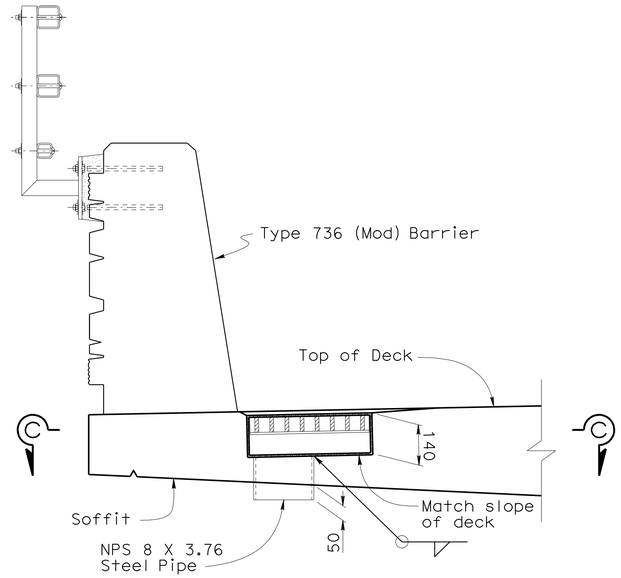

SECTION A-A
1:10

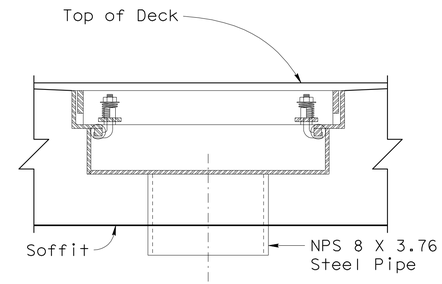

SECTION B-B
1:5

Notes:

1. For dimensions not shown, grate and frame details see Standard Plan B7-7.
2. Galvanize deck drain assembly after fabrication.
3. For location of deck drains and scuppers see "Structure Plan" sheets.

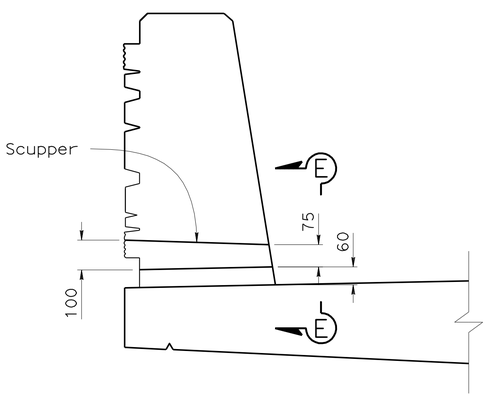

DETAIL D
1:10

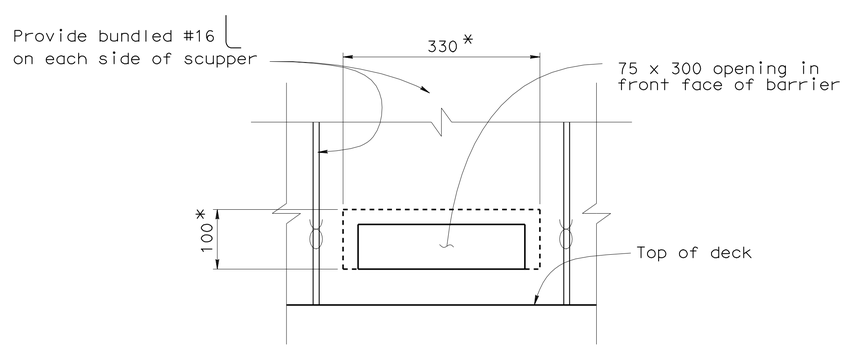

ELEVATION E-E
1:5

* At exterior face of barrier

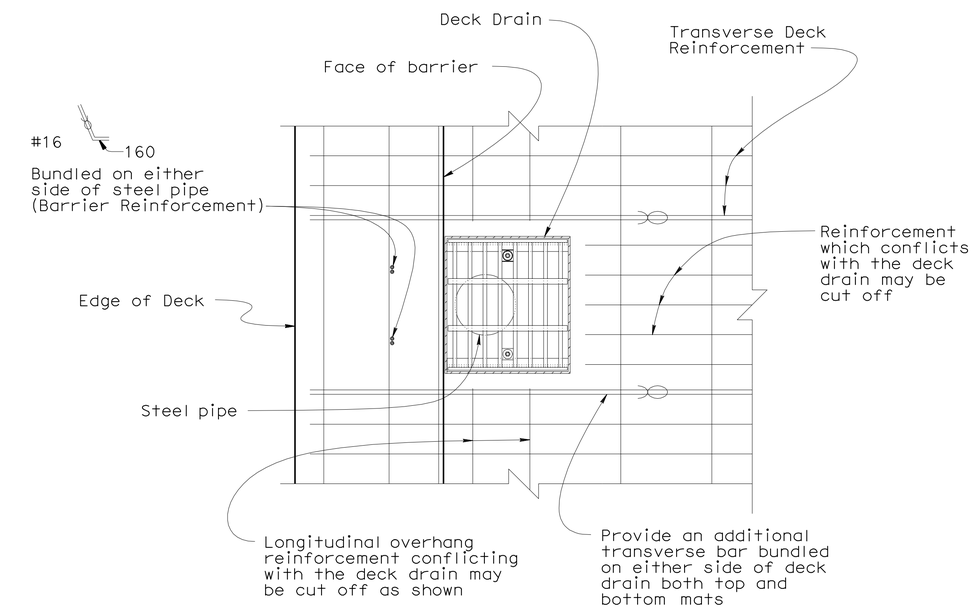

SECTION C-C

Note: not all reinforcement shown
1:10

Caltrans Metric

	BY	CHECKED
DESIGN	M. Friedheim	R. Le
DETAILS	S. Evans	R. Le
QUANTITIES	G. Zuniga/G. Slocum	R. Odell/C. Udarbe

STATE OF CALIFORNIA
DEPARTMENT OF TRANSPORTATION

DIVISION OF ENGINEERING SERVICES
STRUCTURE DESIGN
DESIGN BRANCH 2

BRIDGE NO. 10-0165
KILOMETER POST R74.945

WILLITS BYPASS
FLOODWAY VIADUCT
DRAINAGE DETAILS NO. 3

ALL DIMENSIONS ARE IN MILLIMETERS UNLESS OTHERWISE SHOWN

ORIGINAL SCALE IN MILLIMETERS FOR REDUCED PLANS 0 10 20 30 40 50 60 70 80 90 100

CU 01
EA 262001

DISREGARD PRINTS BEARING EARLIER REVISION DATES

REVISION DATES: 2-06-07 10-2-08 10-16-08 02-20-09

SHEET 64 OF 88

FILE => 10-0165_godd03.dgn

STRUCTURES DESIGN DETAIL SHEET (METRIC) (REV.03-17-04)

USERNAME => s12614 DATE PLOTTED => 28-JAN-2012 TIME PLOTTED => 07:45

DIST	COUNTY	ROUTE	KILOMETER POST TOTAL PROJECT	SHEET No	TOTAL SHEETS
01	Men	101	R69.4/R78.9	804	939

REGISTERED CIVIL ENGINEER 9-15-11 DATE

1-23-12
PLANS APPROVAL DATE

REGISTERED PROFESSIONAL ENGINEER M. Friedheim No. 57968 Exp. 6-30-12 CIVIL STATE OF CALIFORNIA

The State of California or its officers or agents shall not be responsible for the accuracy or completeness of electronic copies of this plan sheet.

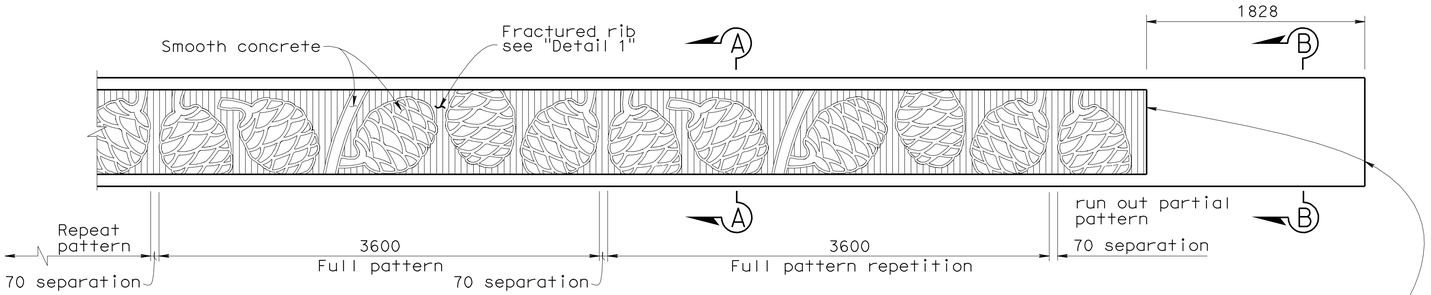

TYPE 736 BARRIER PARTIAL ELEVATION

1:25

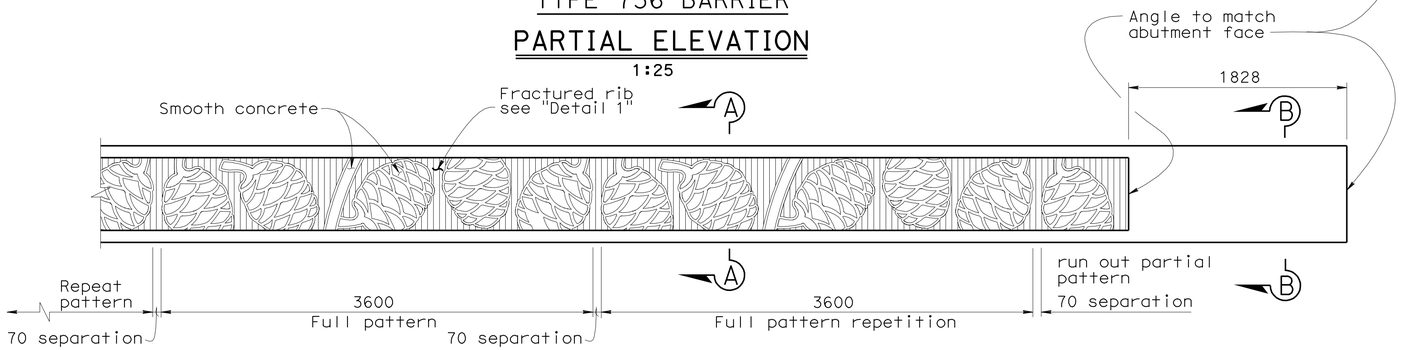

TYPE 732 BARRIER PARTIAL ELEVATION

1:25

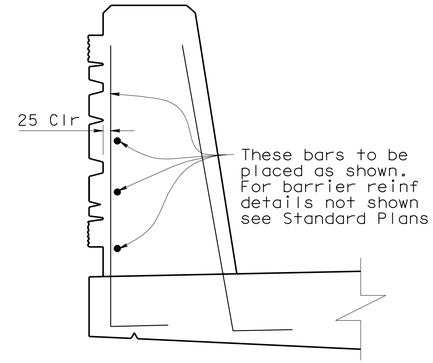

BARRIER REINFORCEMENT MODIFICATION

1:10

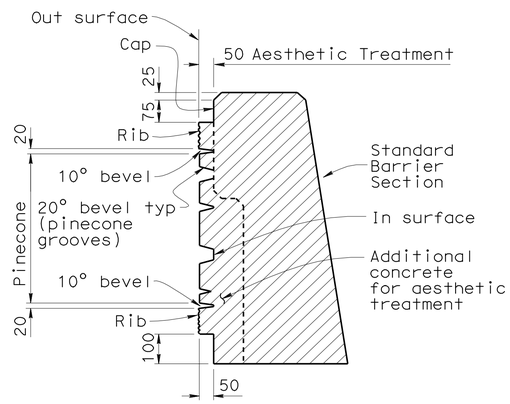

SECTION A-A

1:10

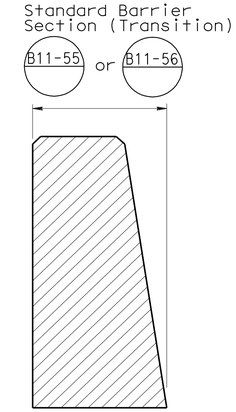

SECTION B-B

1:10

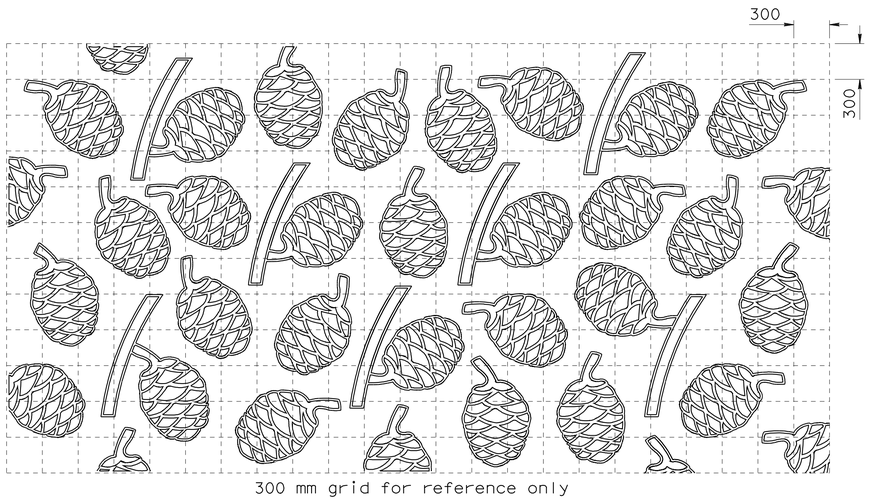

RANDOM PINECONE PATTERN FOR WING WALLS

1:25

NOTE: Place random pinecone pattern on Fractured Rib Background
Fractured rib to be at same angle/alignment as abutment wall.
Relief similar to Barrier Section A-A

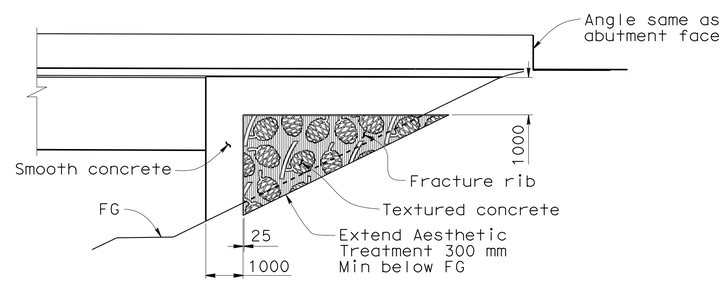

TYPICAL WINGWALL AESTHETIC TREATMENT ABUT 34

1:80

NOTE: For aestetic details at Abut 1, see "Abutment Details No. 1" sheet.

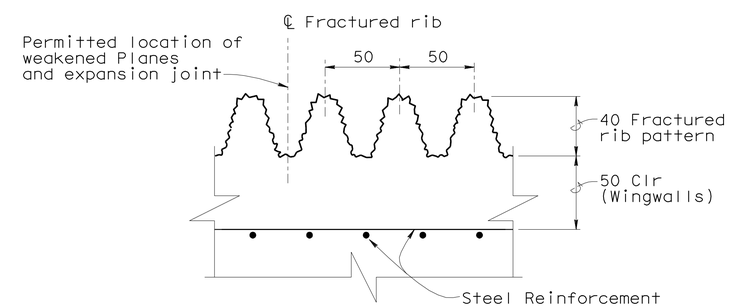

TYPICAL FRACTURED RIB TEXTURE DETAIL 1

1:2

Caltrans Metric

DESIGN	BY M. Friedheim	CHECKED R. Odell	
DETAILS	BY J. Yang	CHECKED R. Odell	
QUANTITIES	BY G. Zuniga/G. Slocum	CHECKED R. Odell/C. Udarbe	

STATE OF CALIFORNIA DEPARTMENT OF TRANSPORTATION

DIVISION OF ENGINEERING SERVICES STRUCTURE DESIGN DESIGN BRANCH 2

BRIDGE NO. 10-0165
KILOMETER POST R74.945

WILLITS BYPASS
FLOODWAY VIADUCT
AESTHETIC DETAILS NO. 1

ALL DIMENSIONS ARE IN MILLIMETERS UNLESS OTHERWISE SHOWN

ORIGINAL SCALE IN MILLIMETERS FOR REDUCED PLANS 0 10 20 30 40 50 60 70 80 90 100

CU 01
EA 262001

DISREGARD PRINTS BEARING EARLIER REVISION DATES

REVISION DATES: 1-5-07 9-25-08 1-28-09 02-20-09 03-03-09

SHEET 65 OF 88

FILE => 10-0165_gpadet1.dgn

STRUCTURES DESIGN DETAIL SHEET (METRIC) (REV.03-17-04)

USERNAME => s121614 DATE PLOTTED => 28-JAN-2012 TIME PLOTTED => 07:46

DIST	COUNTY	ROUTE	KILOMETER POST TOTAL PROJECT	SHEET No	TOTAL SHEETS
01	Men	101	R69.4/R78.9	805	939

REGISTERED CIVIL ENGINEER 9-15-11 DATE

1-23-12
PLANS APPROVAL DATE

REGISTERED PROFESSIONAL ENGINEER M. Friedheim No. 57968 Exp. 6-30-12 CIVIL STATE OF CALIFORNIA

The State of California or its officers or agents shall not be responsible for the accuracy or completeness of electronic copies of this plan sheet.

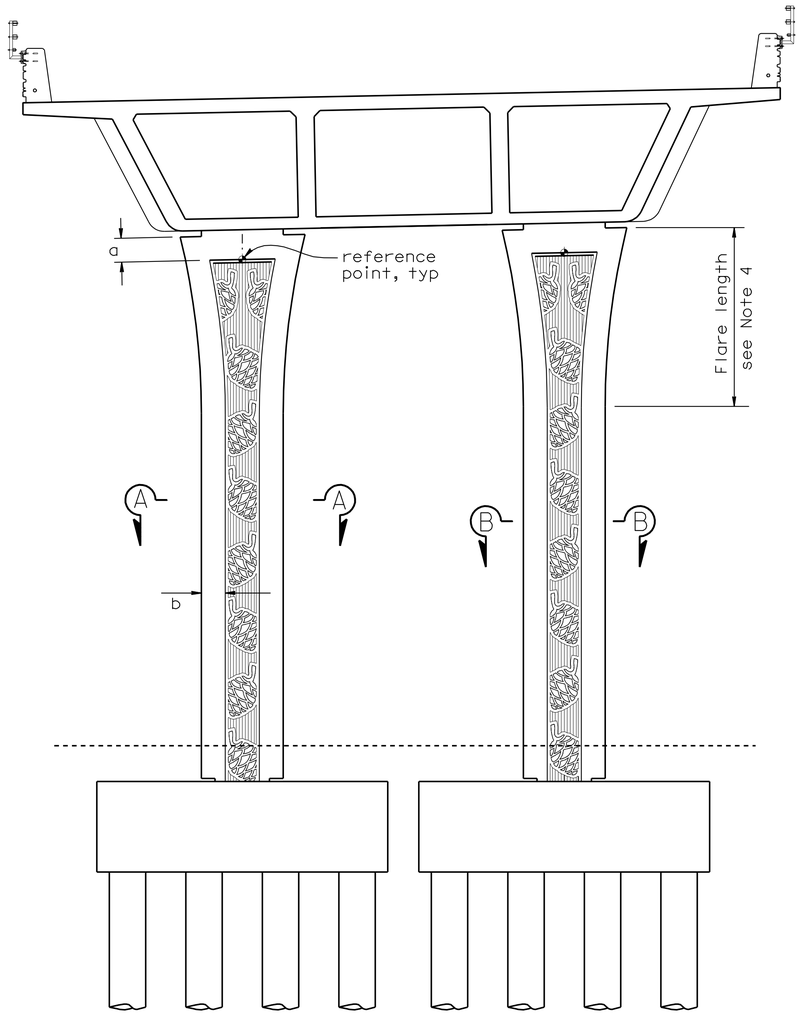

TYPICAL BENT ELEVATION
1:50

Column Diameter	a	b
1372	400	400
1524	450	450
1676	500	500
1829	550	550
2134	650	650

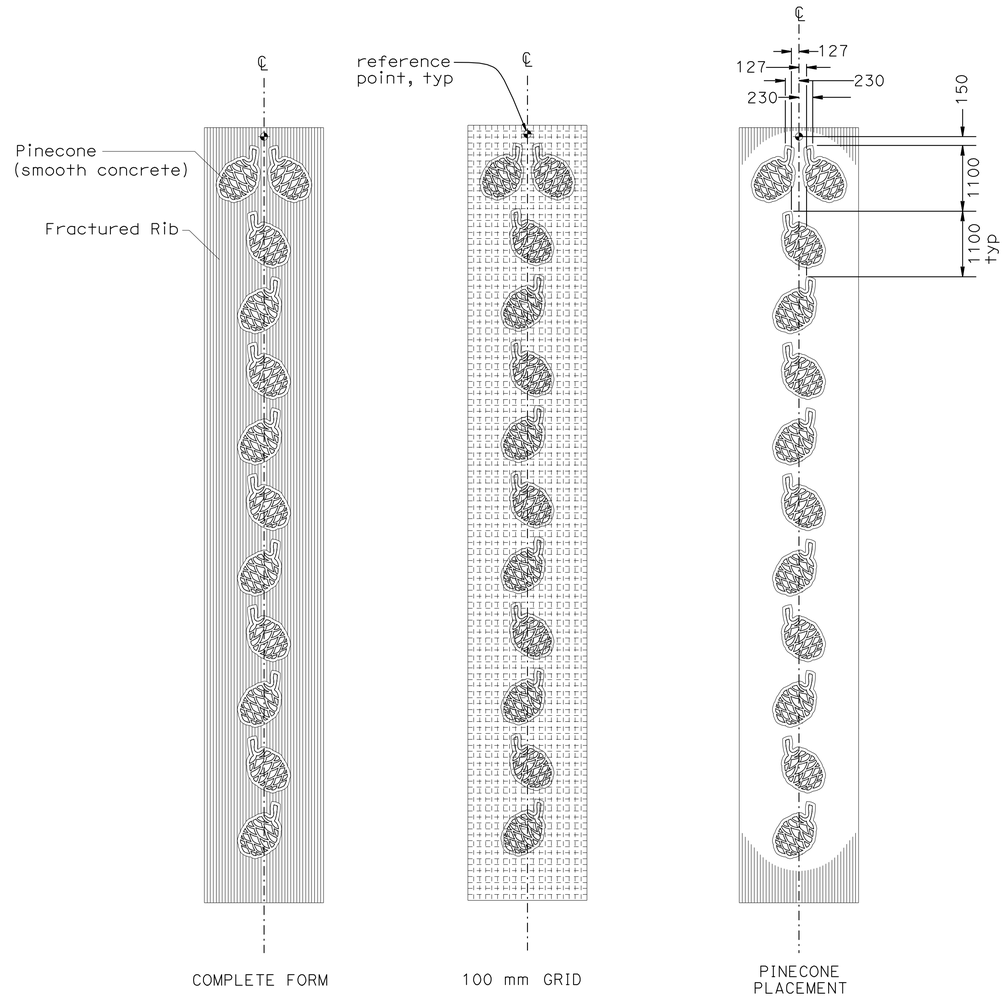

PATTERN DETAILS
1:50

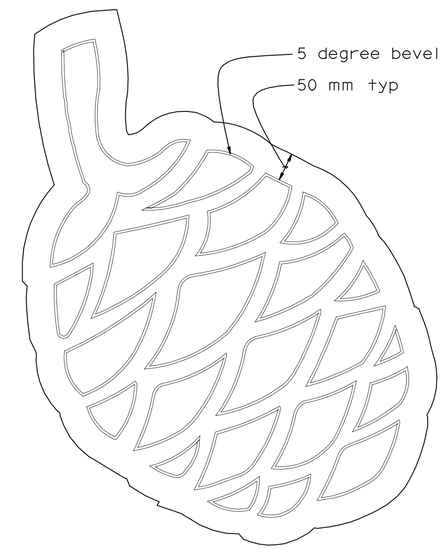

PINECONE
No scale

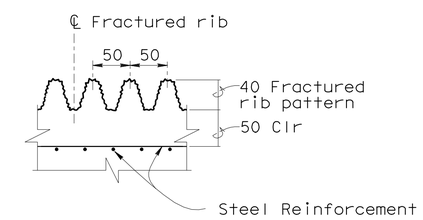

FRACTURED RIB TEXTURE
No scale

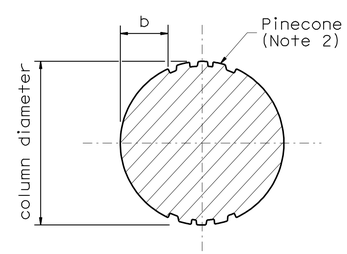

SECTION A-A
1:25

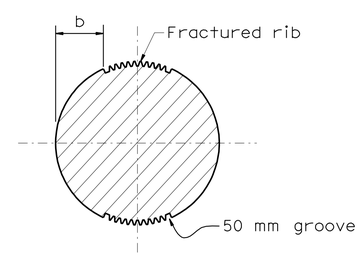

SECTION B-B
1:25

NOTES:

1. For additional column flare details, see "Bent Details No. 4" sheet.
2. Depth of pinecone relief shall be 40 mm.
3. For Bent 24 column aesthetic details, see "Aesthetic Details No. 3" sheet.
4. For flare length see "Bent Details No. 4" sheet

Caltrans Metric

	BY	CHECKED
DESIGN	M. Friedheim	M. Akkari/C. Udarbe
DETAILS	E. Montevirgen	M. Akkari/C. Udarbe
QUANTITIES	G. Zuniga/G. Slocum	R. Odell/C. Udarbe

STATE OF CALIFORNIA DEPARTMENT OF TRANSPORTATION

DIVISION OF ENGINEERING SERVICES STRUCTURE DESIGN
DESIGN BRANCH 2

BRIDGE NO. 10-0165
KILOMETER POST R74.945

WILLITS BYPASS
FLOODWAY VIADUCT
AESTHETIC DETAILS NO. 2

ALL DIMENSIONS ARE IN MILLIMETERS UNLESS OTHERWISE SHOWN

ORIGINAL SCALE IN MILLIMETERS FOR REDUCED PLANS 0 10 20 30 40 50 60 70 80 90 100

CU 01
EA 262001

DISREGARD PRINTS BEARING EARLIER REVISION DATES

REVISION DATES: 8-12-08 1-29-09 2-26-09 3-11-09 4-04-11

SHEET 66 OF 88

FILE => 10-0165_gpclmnaesth2.dgn

STRUCTURES DESIGN DETAIL SHEET (METRIC) (REV.03-17-04)

USERNAME => s121614 DATE PLOTTED => 28-JAN-2012 TIME PLOTTED => 07:46

DIST	COUNTY	ROUTE	KILOMETER POST TOTAL PROJECT	SHEET No	TOTAL SHEETS
01	Men	101	R69.4/R78.9	806	939

REGISTERED CIVIL ENGINEER 9-15-11 DATE

1-23-12
PLANS APPROVAL DATE

REGISTERED PROFESSIONAL ENGINEER M. Friedheim No. 57968 Exp. 6-30-12 CIVIL STATE OF CALIFORNIA

The State of California or its officers or agents shall not be responsible for the accuracy or completeness of electronic copies of this plan sheet.

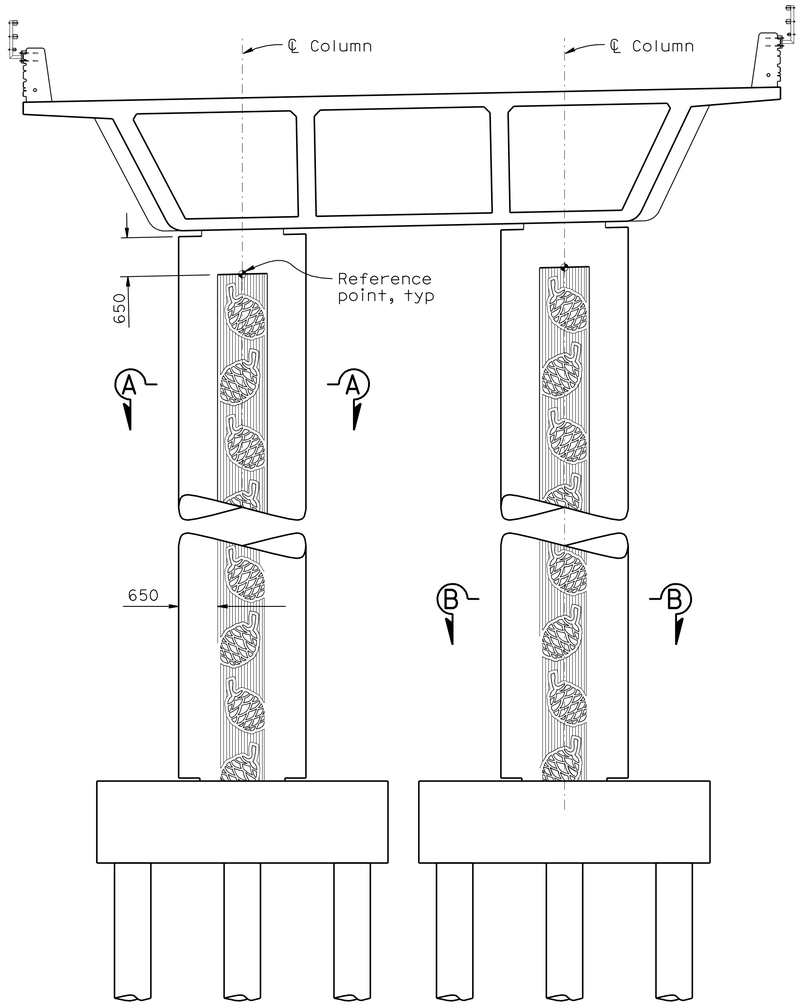

BENT 24 ELEVATION
1:50

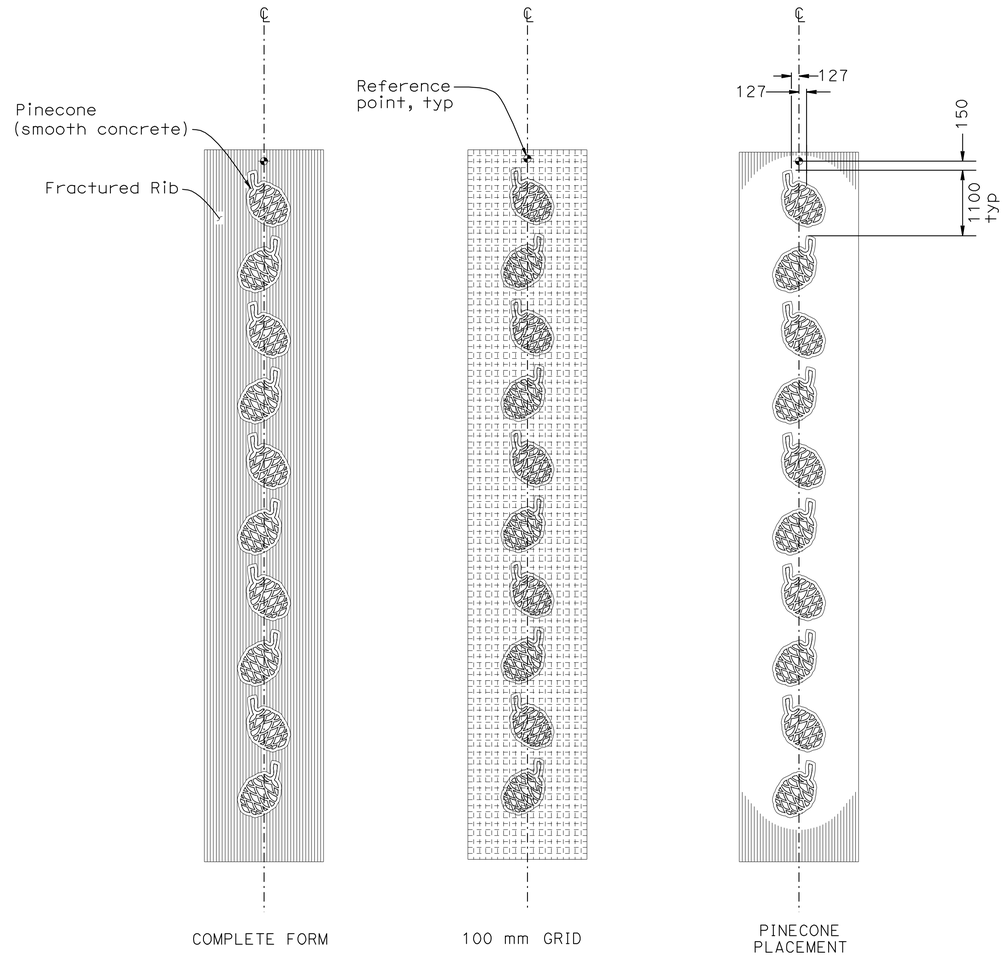

PATTERN DETAILS
1:50

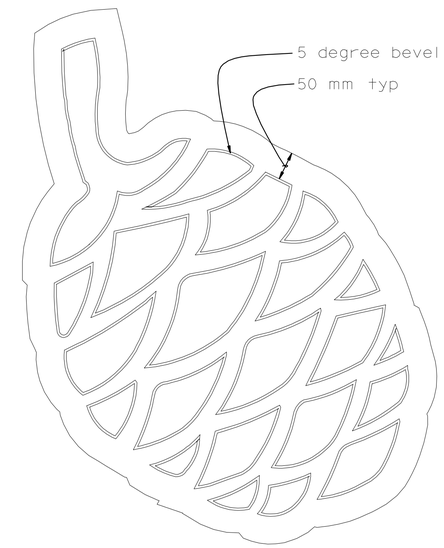

PINECONE
No scale

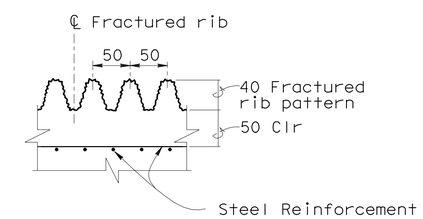

FRACTURED RIB TEXTURE
No scale

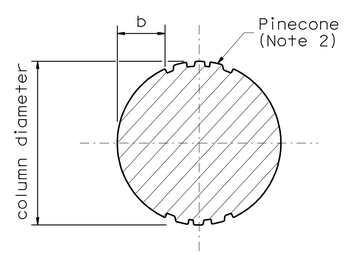

SECTION A-A
1:25

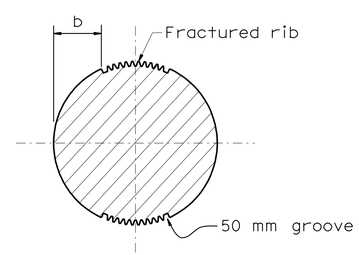

SECTION B-B
1:25

Notes:

1. For additional column details, see "Bent Details No. 3" sheet.
2. Depth of pinecone relief shall be 40 mm.

Caltrans Metric

	BY	CHECKED
DESIGN	C. Udarbe	E. Ward
DETAILS	J. Yang	E. Ward
QUANTITIES	G. Zuniga/G. Slocum	R. Odell/C. Udarbe

STATE OF CALIFORNIA
DEPARTMENT OF TRANSPORTATION

DIVISION OF ENGINEERING SERVICES
STRUCTURE DESIGN
DESIGN BRANCH 2

BRIDGE NO. 10-0165
KILOMETER POST R74.945

WILLITS BYPASS
FLOODWAY VIADUCT
AESTHETIC DETAILS NO. 3

ALL DIMENSIONS ARE IN MILLIMETERS UNLESS OTHERWISE SHOWN

ORIGINAL SCALE IN MILLIMETERS FOR REDUCED PLANS 0 10 20 30 40 50 60 70 80 90 100

CU 01
EA 262001

DISREGARD PRINTS BEARING EARLIER REVISION DATES

REVISION DATES: 2-23-09 4-04-11

SHEET 67 OF 88

FILE => 10-0165_gpclmnaesth3.dgn

STRUCTURES DESIGN DETAIL SHEET (METRIC) (REV.03-17-04)

USERNAME => s121614 DATE PLOTTED => 28-JAN-2012 TIME PLOTTED => 07:46

DIST.	COUNTY	ROUTE	KILOMETER POST TOTAL PROJECT	SHEET NO.	TOTAL SHEETS
01	Men	101	R69.4/R78.9	807	939

Caltrans Metric

Marc Friedheim 9-15-11
REGISTERED ENGINEER - CIVIL

1-23-12
PLANS APPROVAL DATE

REGISTERED PROFESSIONAL ENGINEER Marc Friedheim No. 57968 Exp. 6-30-12 CIVIL STATE OF CALIFORNIA

The State of California or its officers or agents shall not be responsible for the accuracy or completeness of electronic copies of this plan sheet.

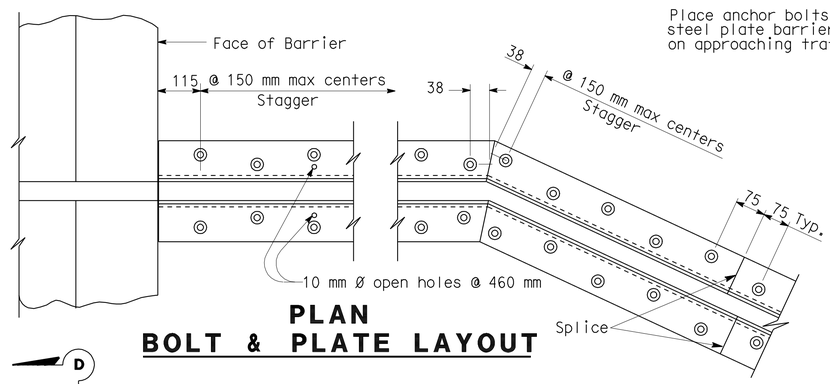

PLAN
BOLT & PLATE LAYOUT

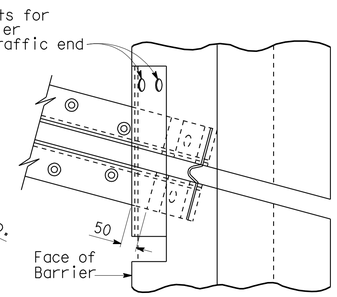

SKEW ≤ 20°

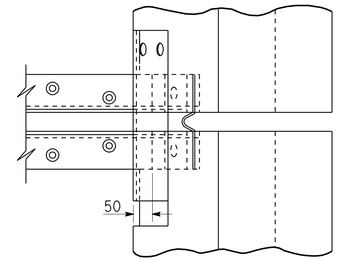

SKEW > 20°

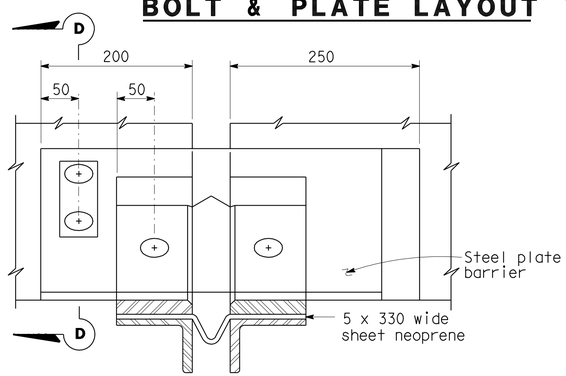

VIEW B-B

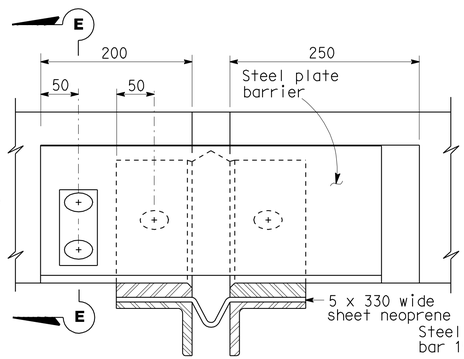

VIEW C-C

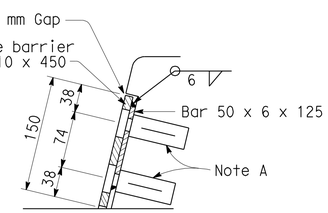

SECTION E-E

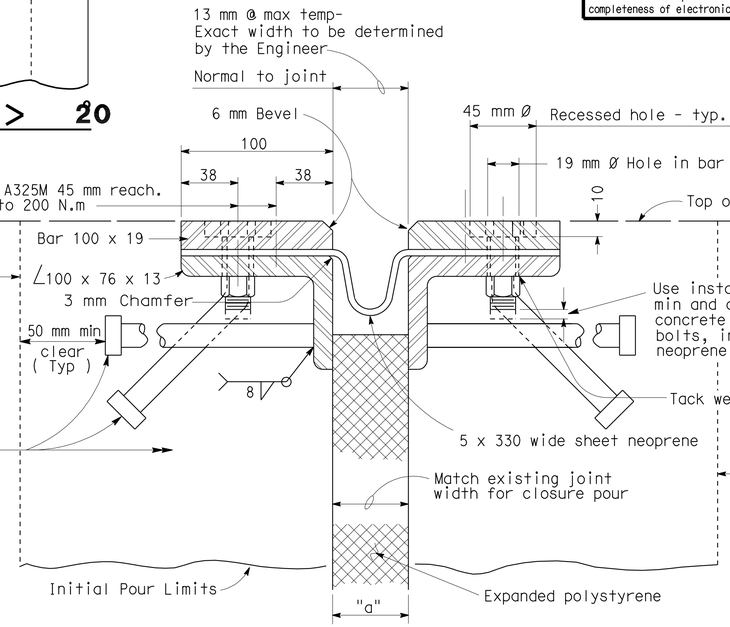

SECTION A-A

Note :
Stagger anchor studs @ 115 mm± on centers thus :

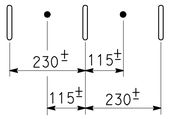

Joint Information			"a" Dimensions		
Location	Movement Rating (MR)	Skew	Winter	Spring & Fall	Summer
Abut 1	100	0°	45	35	25
Abut 34	100	0°	45	35	25

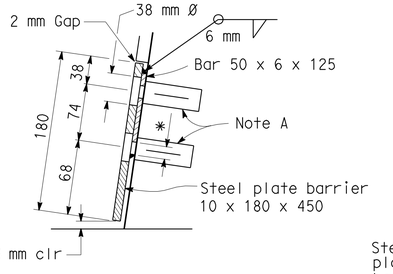

SECTION D-D ◇1

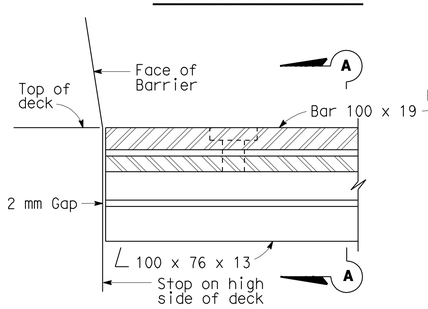

HIGH SIDE BARRIER DETAIL ◇1

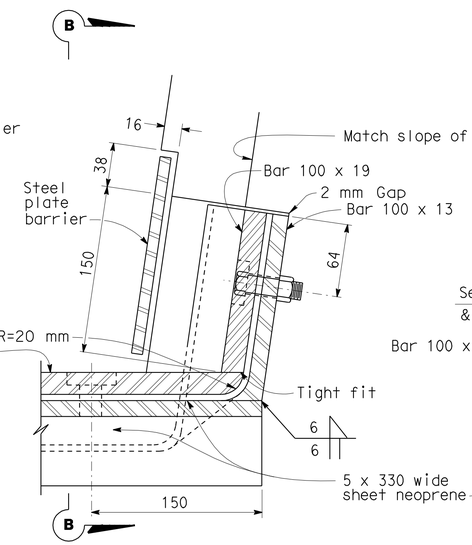

LOW SIDE BARRIER DETAIL ◇1

(See Note B)

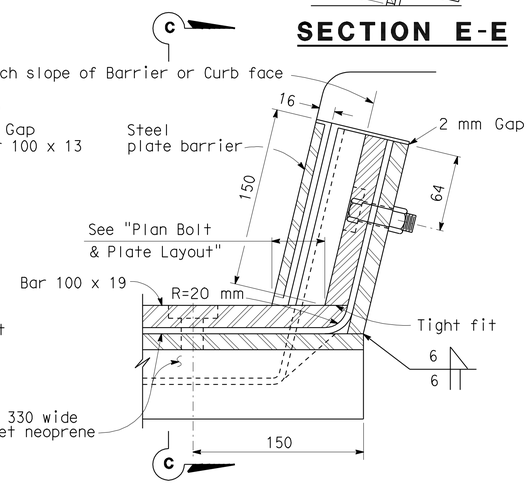

SIDEWALK DETAIL

(See Note B)

NOTES:

Full penetration butt welds may be substituted for fillet welds on all anchor studs.

Alternate types of anchor studs may be permitted subject to the approval by the Engineer.

Joint seal assembly to be used in conjunction with closure pour. (See other sheets for limits). Closure pour shall not be placed until final deck surface is within the tolerance specified.

Use joint at crown of roadway, at any change in transverse slope in deck and at changes in horizontal direction. Place other joints at or near lanes. All metal parts to be painted or galvanized after fabrication.

Sheet neoprene shall be fabricated in one continuous piece or joints shall be vulcanized. Neoprene shall be fabricated to bend around corners. 25 mm holes in neoprene sheets shall be drilled or punched so that the neoprene is not distorted at the time of installation.

NOTE A

Insert assembly or expansion anchorage for 16 x 45 A325M bolt.

NOTE B

Use the Sidewalk Detail at all sidewalk joints. Use the Barrier Detail at both sides if the roadway is crowned or if the difference in elevation between the ends of the seal is 150 mm or less.

NO SCALE

ALL DIMENSIONS ARE IN MILLIMETERS UNLESS OTHERWISE SHOWN

SPECIAL DETAILS

WILLITS BYPASS
FLOODWAY VIADUCT
JOINT SEAL ASSEMBLY (MAXIMUM MOVEMENT RATING = 100 mm)

STANDARD DRAWING

RELEASE DATE	Revised	DESIGN	BY H. HERR	CHECKED R. LACALLE	RELEASED BY
FILE NO.	xs8-010	DETAILS	BY R. YEE	CHECKED R. LACALLE	
		SUBMITTED	BY C.W. PURKISS	DRAWING DATE 9/93	OFFICE CHIEF

◇1 Modified for barrier shape

STATE OF CALIFORNIA
DEPARTMENT OF TRANSPORTATION

DIVISION OF ENGINEERING SERVICES

BRIDGE NO. 10-0165
KILOMETER POST R74.945

CU 01
EA 262001

DISREGARD PRINTS BEARING EARLIER REVISION DATES 9-25-08

REVISION DATES (PRELIMINARY STAGE ONLY)

SHEET 68 OF 88

DS OSD 2147A (METRIC) (REV. 2/25/97)

ORIGINAL SCALE IN MILLIMETERS FOR REDUCED PLANS 0 10 20 30 40 50 60 70 80 90 100

USERNAME => s121614

10-0165_gqjsad.dgn

DATE PLOTTED => 28-JAN-2012 TIME PLOTTED => 07:46

DIST	COUNTY	ROUTE	KILOMETER POST TOTAL PROJECT	SHEET No	TOTAL SHEETS
01	Men	101	R69.4/R78.9	808	939

REGISTERED CIVIL ENGINEER 9-15-11 DATE

1-23-12
PLANS APPROVAL DATE

REGISTERED PROFESSIONAL ENGINEER M. Friedheim No. 57968 Exp. 6-30-12 CIVIL STATE OF CALIFORNIA

The State of California or its officers or agents shall not be responsible for the accuracy or completeness of electronic copies of this plan sheet.

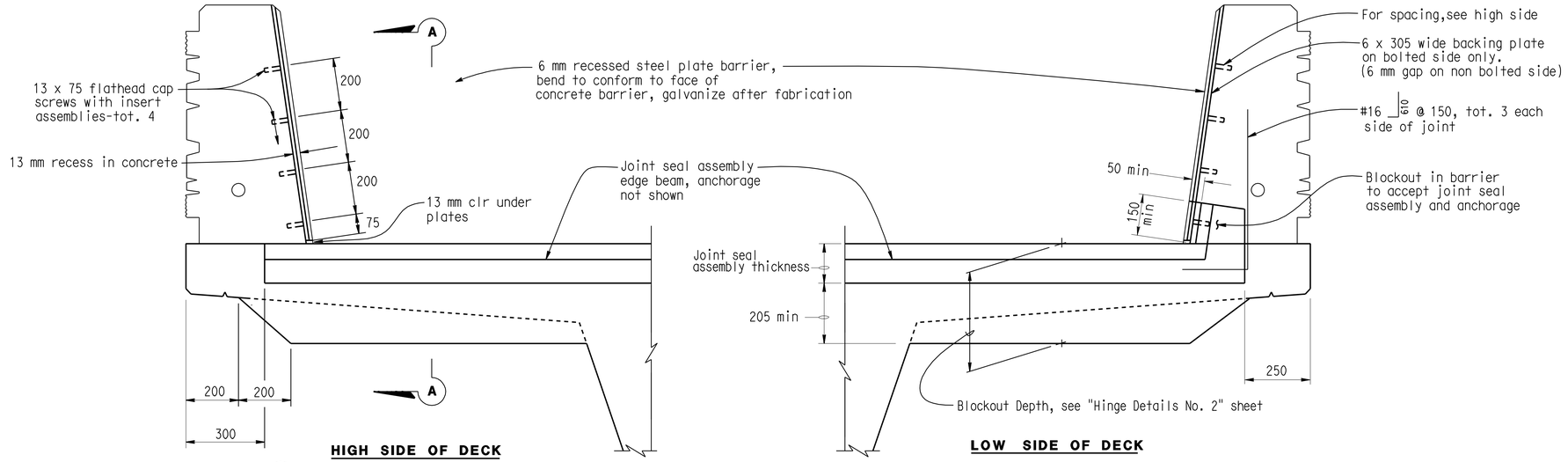

SEAL INSTALLATION

1:10

JOINT INFORMATION		"a" DIMENSIONS			
LOCATION	MOVEMENT RATING (M.R.)	SKEW	WINTER	SPRING & FALL	SUMMER
Hinge 4	200	0	85	65	45
Hinge 8	300	0	130	95	65
Hinge 13	290	0	125	95	65
Hinge 17	290	0	125	95	65
Hinge 22	310	0	130	100	65
Hinge 26	290	0	125	95	65
Hinge 30	190	0	80	60	40

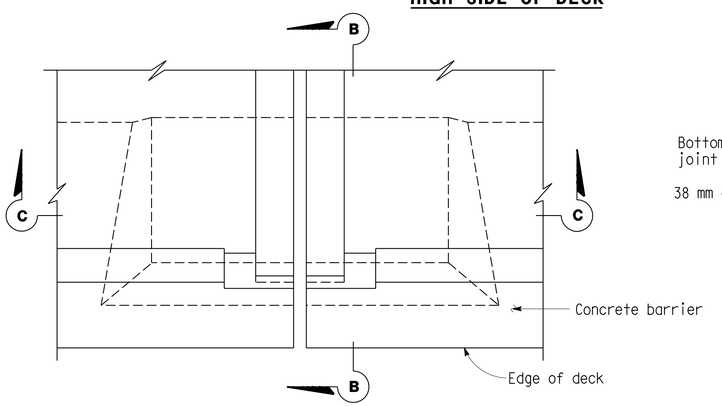

PLAN - DECK JOINT

No Scale

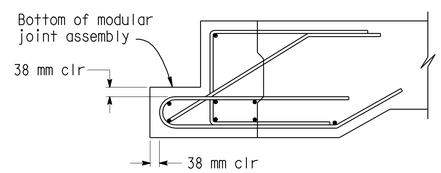

DETAIL D

No Scale

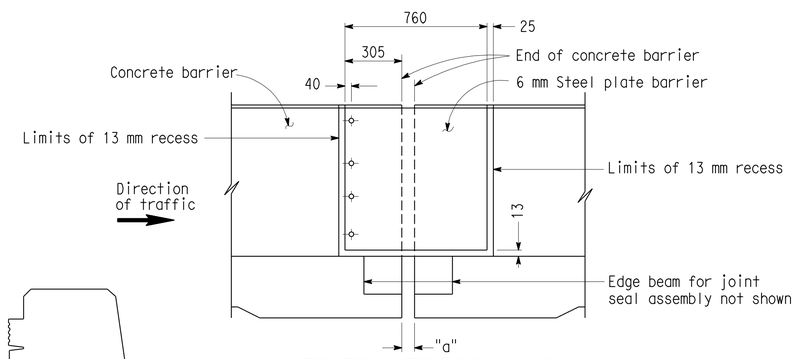

ELEVATION A-A

No Scale

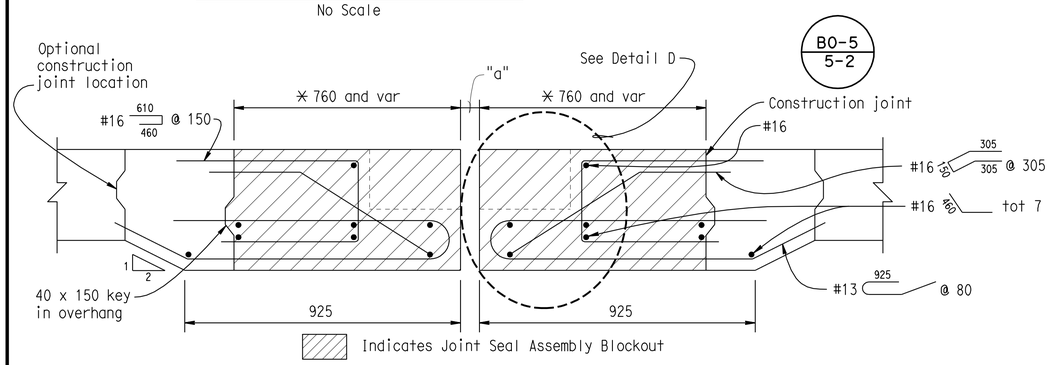

SECTION C-C

1:10

Note: Bar reinforcing shown in Section C-C applies to entire joint length except as noted.

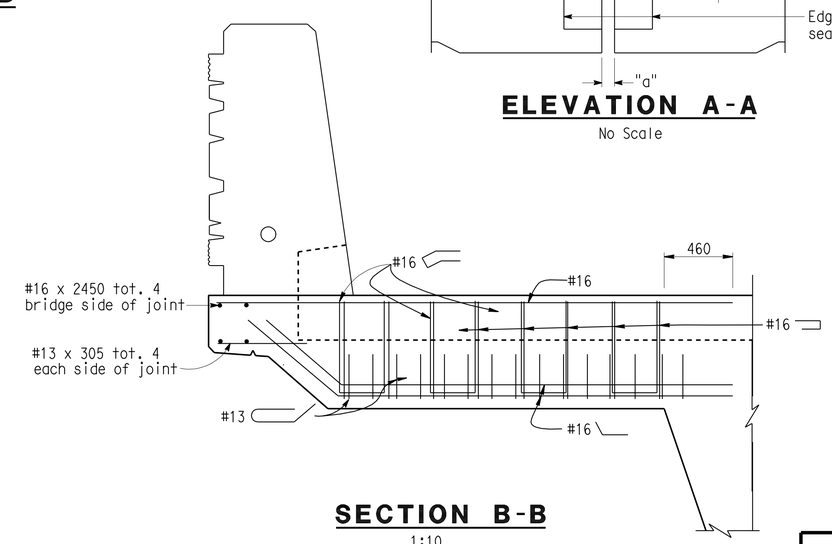

SECTION B-B

1:10

Reinf. shown is in addition to slab reinf.

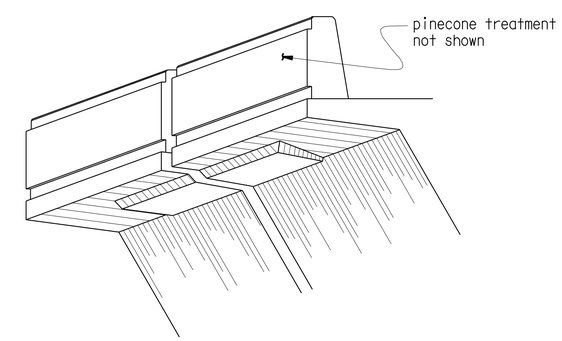

DECK OVERHANG AT HINGE

No Scale

WILLITS BYPASS

FLOODWAY VIADUCT

JOINT SEAL - HINGE DETAILS

MOVEMENT RATING GREATER THAN 100 mm

Caltrans Metric

	BY	CHECKED
DESIGN	M. Friedheim	G. Slocum
DETAILS	S. Evans/S. Ng	G. Slocum
QUANTITIES	G. Zungia/G. Slocum	R. Odell/C. Udarbe

STATE OF CALIFORNIA DEPARTMENT OF TRANSPORTATION

DIVISION OF ENGINEERING SERVICES STRUCTURE DESIGN DESIGN BRANCH 2

BRIDGE NO. 10-0165

KILOMETER POST R74.945

ALL DIMENSIONS ARE IN MILLIMETERS UNLESS OTHERWISE SHOWN

ORIGINAL SCALE IN MILLIMETERS FOR REDUCED PLANS 0 10 20 30 40 50 60 70 80 90 100

CU 01
EA 262001

DISREGARD PRINTS BEARING EARLIER REVISION DATES

REVISION DATES: 2-08-07 8-18-08 9-25-08 1-29-09 2-24-09 02-24-09 5-07-09

SHEET 69 OF 88

FILE => 10-0165_grhdjs.dgn

STRUCTURES DESIGN DETAIL SHEET (METRIC) (REV.03-17-04)

USERNAME => s126614 DATE PLOTTED => 28-JAN-2012 TIME PLOTTED => 07:47

DIST.	COUNTY	ROUTE	KILOMETER POST TOTAL PROJECT	SHEET NO.	TOTAL SHEETS
01	Men	101	R69.4/R78.9	809	939

Caltrans Metric

Marc Friedheim 9-15-11
REGISTERED ENGINEER - CIVIL

1-23-12
PLANS APPROVAL DATE

REGISTERED PROFESSIONAL ENGINEER Marc Friedheim No. 57968 Exp. 6-30-12 CIVIL STATE OF CALIFORNIA

The State of California or its officers or agents shall not be responsible for the accuracy or completeness of electronic copies of this plan sheet.

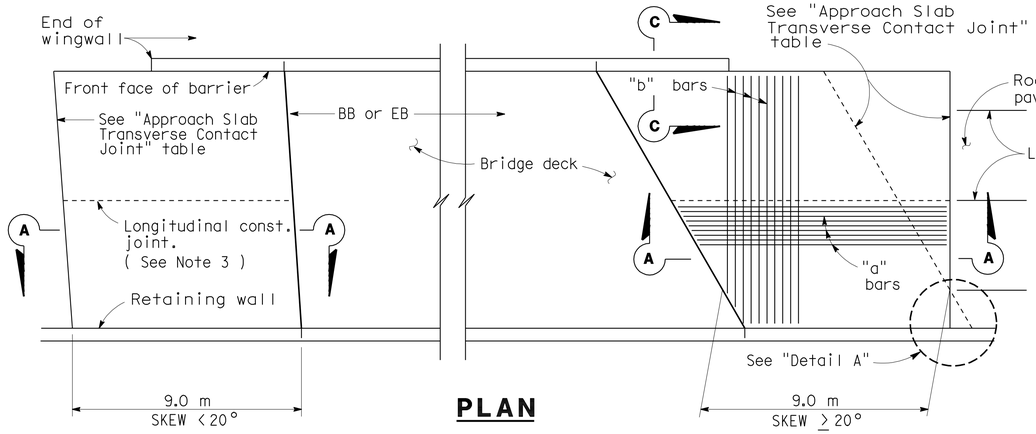

PLAN

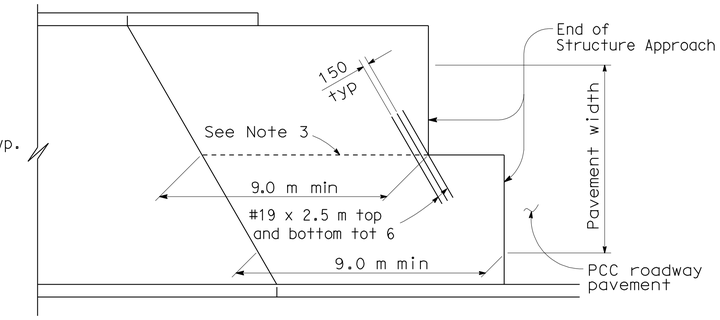

STRUCTURE APPROACH - END STAGGER DETAIL

APPROACH SLAB TRANSVERSE CONTACT JOINT		
APPROACH SKEW	WITH AC ROADWAY PAVEMENT	WITH PCC ROADWAY PAVEMENT
< 20°	Parallel to face of paving notch	Parallel to face of paving notch
20°- 45°	Parallel to face of P N use (Detail A)	Stagger lines 7.2 m to 10.8 m apart.
> 45°	Parallel to face of P N use (Detail A)	Stagger at each lane line.

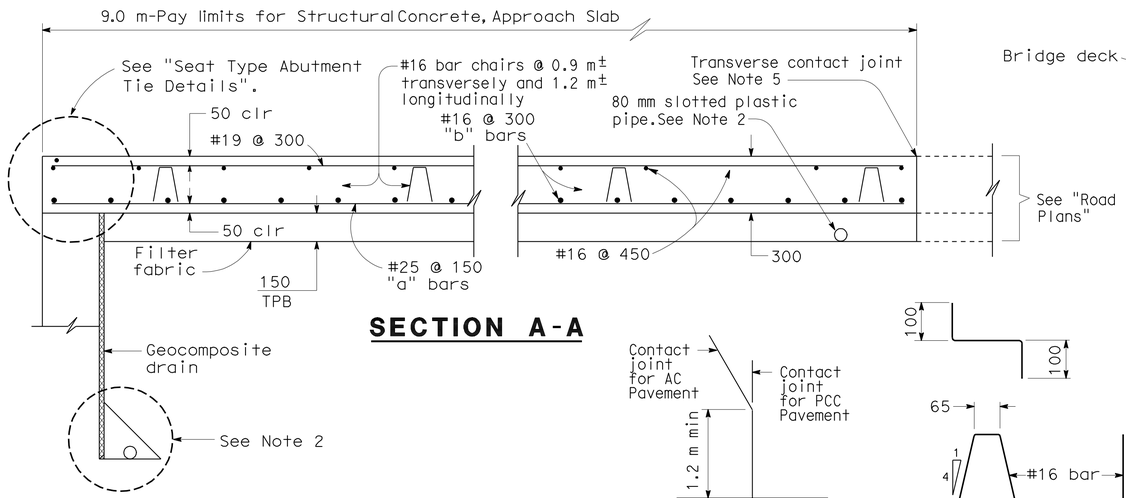

SECTION A-A

DETAIL A

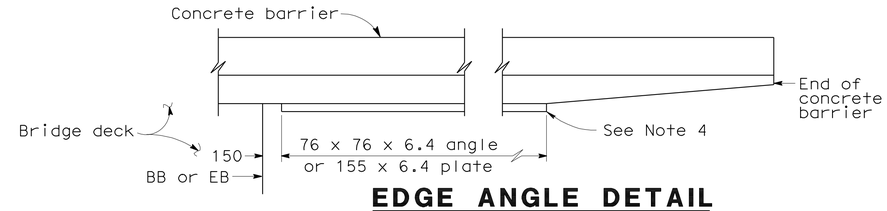

EDGE ANGLE DETAIL

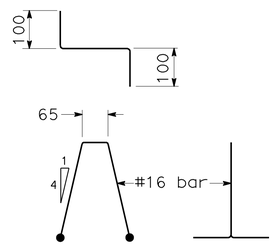

BAR CHAIR DETAIL

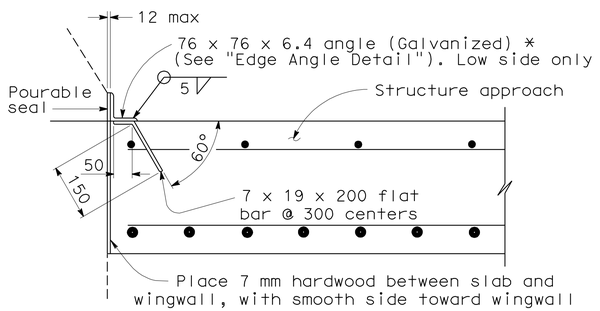

*(TO BE USED WITH TYPE 25 OR TYPE 27 CONCRETE BARRIER)

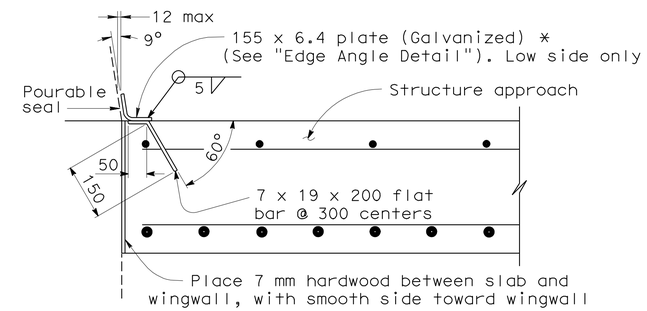

*(TO BE USED WITH TYPE 732 OR TYPE 736 CONCRETE BARRIER)

DETAIL B

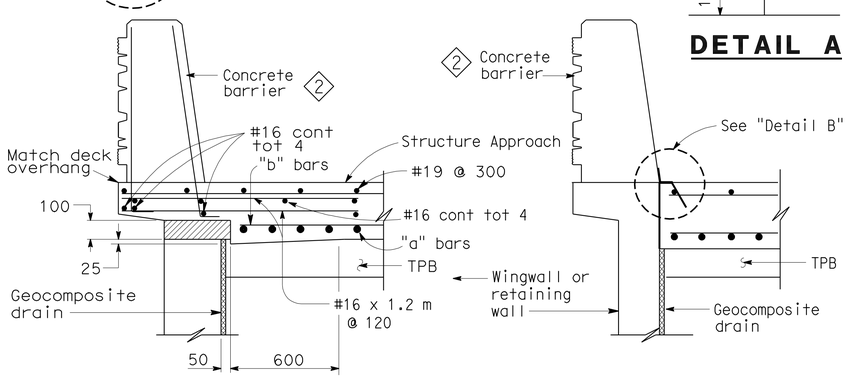

TYPE E-1 TYPE E-2

SECTION C-C

(Type E-1 to be used,unless otherwise shown on plans)

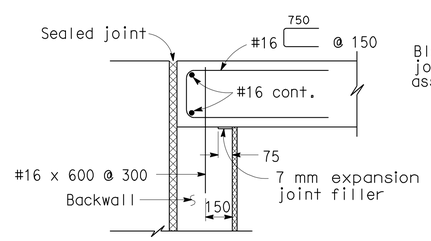

MR ≤ 50 mm

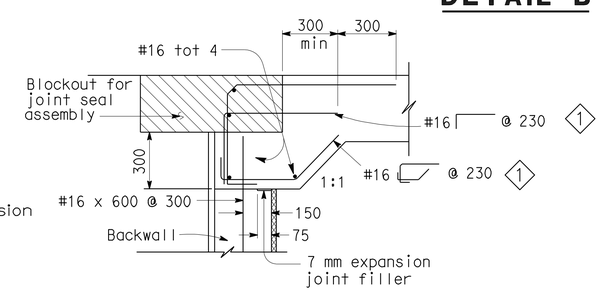

MR > 50 mm

SEAT TYPE ABUTMENT TIE DETAILS (SEE NOTE 1)

NOTES:

1. For details not shown,see Structure Plans. For MR ≤ 50 mm,adjust bar reinforcement to clear a sawcut for sealed joint,when required.
2. For drainage details,see "Structure Approach Drainage Details" sheet.
3. Longitudinal construction joints,when permitted by the Engineer, shall be located on lane lines.
4. End angle or plate at beginning of barrier transition, end of wingwall or end of structure approach as applicable.
5. For transverse contact joint with new PCC paving, refer to Standard Plan P30
6. At the contractor's option, approach slab transverse reinforcement may be placed parallel to paving notch. Spacing of transverse reinforcement is measured along ℄ roadway.

Remove all polystyrene.

SPECIAL DETAILS

NO SCALE

ALL DIMENSIONS ARE IN MILLIMETERS UNLESS OTHERWISE SHOWN

STANDARD DRAWING

RELEASE DATE	REVISED	DESIGN	BY M. TRAFFALIS	CHECKED E. THORKILDSEN	RELEASED BY
FILE NO.	xs3-120	DETAILS	BY R. YEE	CHECKED E. THORKILDSEN	OFFICE CHIEF
		SUBMITTED	BY M. HA	DRAWING DATE 4/98	

1 Bar spacing changed
2 Modified barrier

STATE OF CALIFORNIA DEPARTMENT OF TRANSPORTATION

DIVISION OF ENGINEERING SERVICES

BRIDGE NO. 10-0165
KILOMETER POST R74.945

WILLITS BYPASS
FLOODWAY VIADUCT
STRUCTURE APPROACH TYPE N(9S)

DS OSD 2147A (METRIC) (REV. 2/25/97)

ORIGINAL SCALE IN MILLIMETERS FOR REDUCED PLANS 0 10 20 30 40 50 60 70 80 90 100

CU 01
EA 262001

DISREGARD PRINTS BEARING EARLIER REVISION DATES

REVISION DATES (PRELIMINARY STAGE ONLY) 10-16-08 1-28-09

SHEET 70 OF 88

USERNAME => s121614

10-0165_gssadt1.dgn

DATE PLOTTED => 28-JAN-2012 TIME PLOTTED => 07:47

DIST.	COUNTY	ROUTE	KILOMETER POST TOTAL PROJECT	SHEET NO.	TOTAL SHEETS
01	Men	101	R69.4/R78.9	810	939

Caltrans Metric

Marc Friedheim 9-15-11
REGISTERED ENGINEER - CIVIL

1-23-12
PLANS APPROVAL DATE

REGISTERED PROFESSIONAL ENGINEER Marc Friedheim No. 57968 Exp. 6-30-12 CIVIL STATE OF CALIFORNIA

The State of California or its officers or agents shall not be responsible for the accuracy or completeness of electronic copies of this plan sheet.

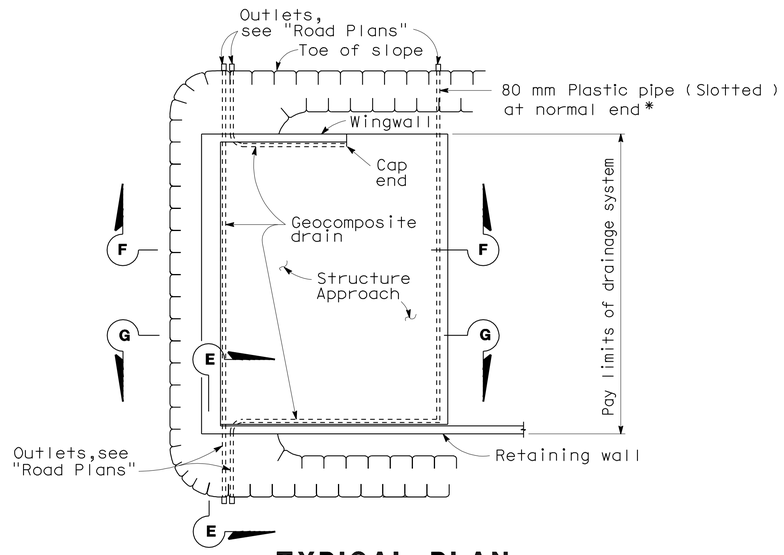

TYPICAL PLAN

*For pipe layout at staggered end,see "Detail B".

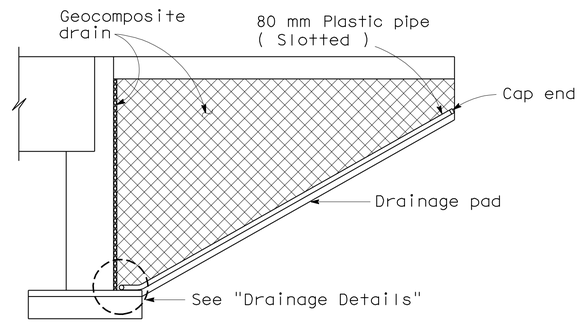

CANTILEVER WINGWALL SECTION F-F

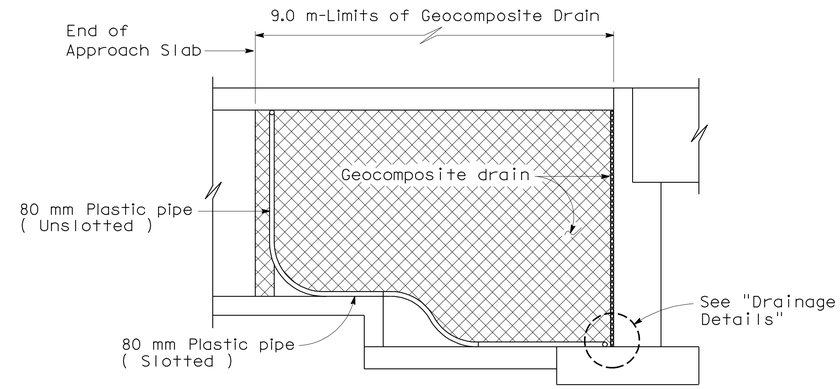

RETAINING WALL WINGWALL SECTION G-G

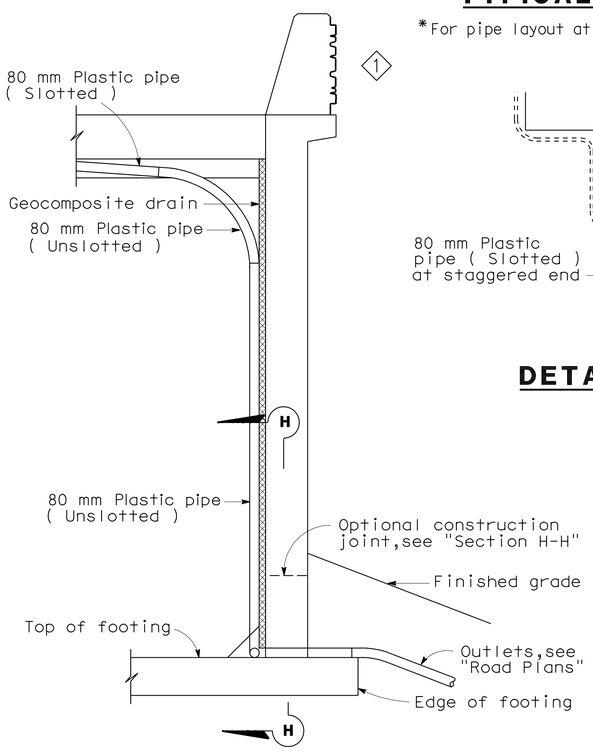

SECTION E-E

NOTE: Bends and junctions in 80 mm plastic pipe are 750 mm radius min.

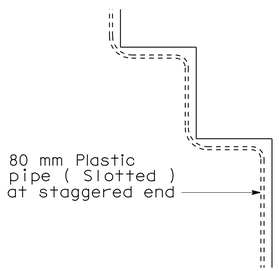

DETAIL B

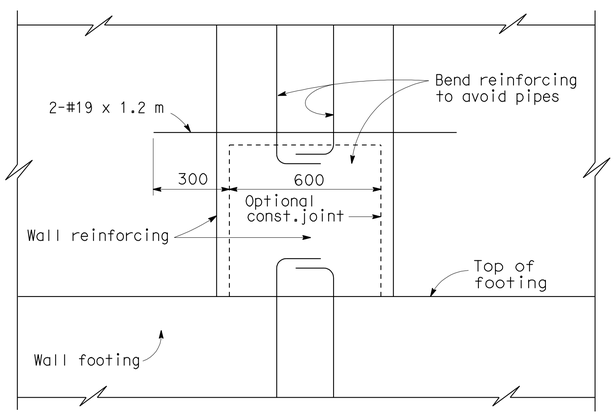

SECTION H-H

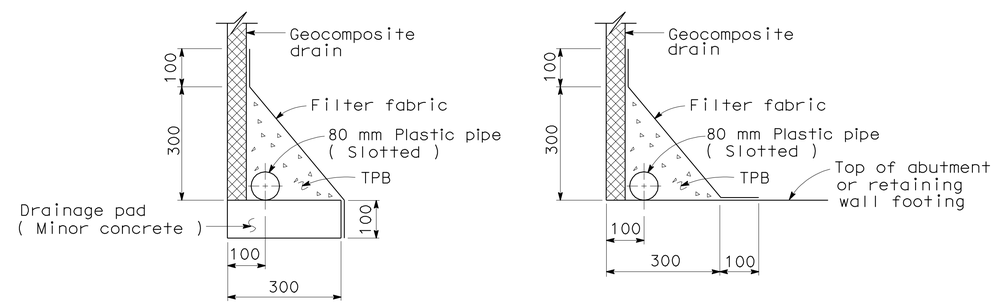

WITHOUT FOOTING WITH FOOTING

DRAINAGE DETAILS

SPECIAL DETAILS
NO SCALE
ALL DIMENSIONS ARE IN MILLIMETERS UNLESS OTHERWISE SHOWN

1 Modified barrier

STANDARD DRAWING				
RELEASE DATE REVISED	DESIGN	BY M. TRAFFALIS	CHECKED E. THORKILDSEN	RELEASED BY
FILE NO. xs3-110	DETAILS	BY R. YEE	CHECKED E. THORKILDSEN	OFFICE CHIEF
	SUBMITTED	BY M. HA	DRAWING DATE 4/98	

STATE OF CALIFORNIA DEPARTMENT OF TRANSPORTATION

DIVISION OF ENGINEERING SERVICES

BRIDGE NO. 10-0165
KILOMETER POST R74.945

WILLITS BYPASS
FLOODWAY VIADUCT
STRUCTURE APPROACH DRAINAGE DETAILS

DS OSD 2147A (METRIC) (REV. 2/25/97)

ORIGINAL SCALE IN MILLIMETERS FOR REDUCED PLANS 0 10 20 30 40 50 60 70 80 90 100

CU 01
EA 262001

DISREGARD PRINTS BEARING EARLIER REVISION DATES

REVISION DATES (PRELIMINARY STAGE ONLY) 10-16-08 1-28-09

SHEET 71 OF 88

USERNAME => s121614

10-0165_gssadt2.dgn

DATE PLOTTED => 28-JAN-2012 TIME PLOTTED => 07:47

DIST.	COUNTY	ROUTE	KILOMETER POST TOTAL PROJECT	SHEET NO.	TOTAL SHEETS
01	Men	101	R69.4/R78.9	811	939

Caltrans Metric

REGISTERED ENGINEER - CIVIL 9-15-11

PLANS APPROVAL DATE 1-23-12

REGISTERED PROFESSIONAL ENGINEER M. Friedheim No. 57968 Exp. 6-30-12 CIVIL STATE OF CALIFORNIA

The State of California or its officers or agents shall not be responsible for the accuracy or completeness of electronic copies of this plan sheet.

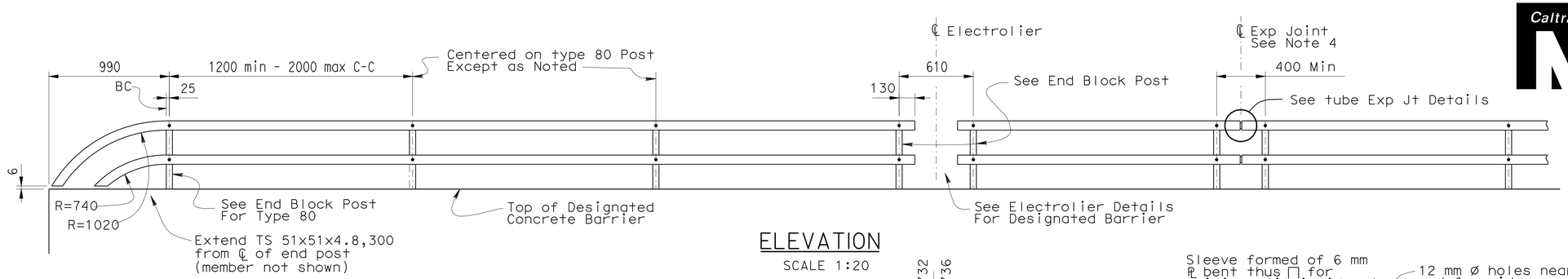

ELEVATION
SCALE 1:20

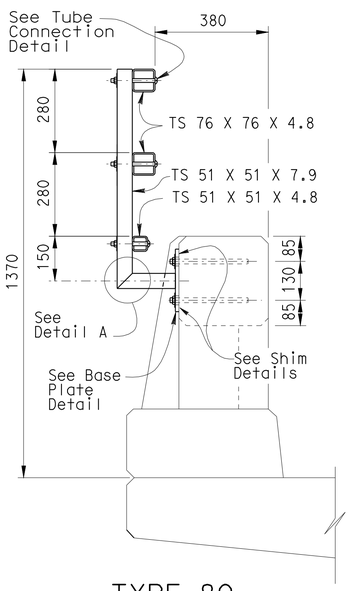

TYPE 80
END BLOCK POST
SCALE 1:10

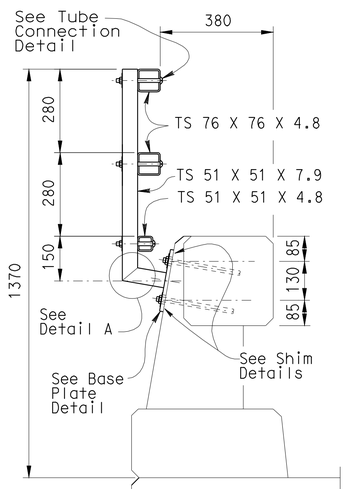

TYPE 80
SCALE 1:10

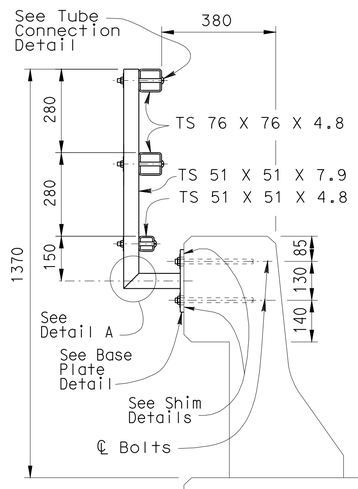

TYPE 25
SCALE 1:10

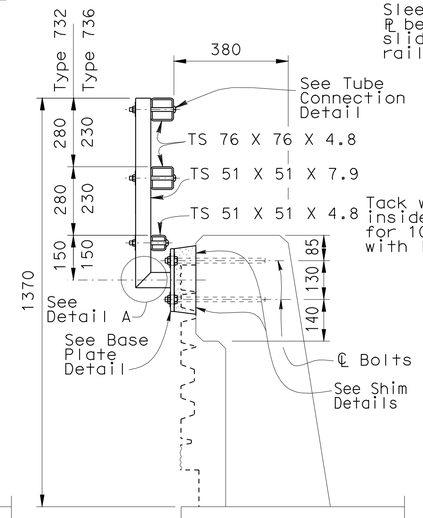

TYPE 732 OR 736 ◇1
NO SCALE

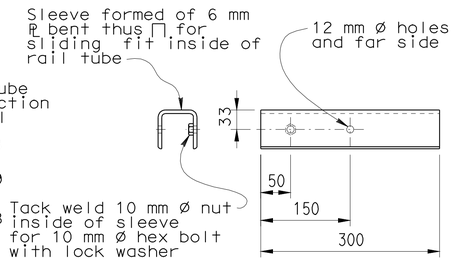

SLEEVE DETAIL
SCALE 1:5

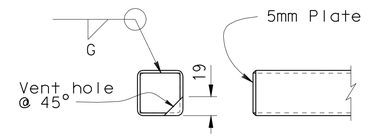

RAIL CAP DETAIL
SCALE 1:5

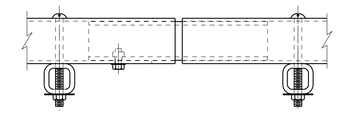

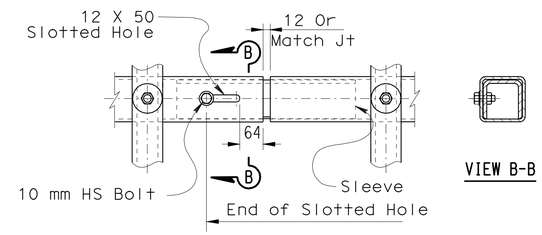

TUBE EXPANSION JOINT DETAILS
SCALE 1:5

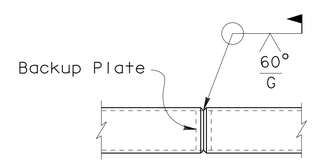

WELDED SPLICE DETAIL
SCALE 1:5

NOTES:

1. Galvanize rail assembly after fabrication.
2. Post shall be normal to railing.
3. Rail tubes shall be shop bent or fabricated to fit horizontal curve when radius is less than 300 m.
4. Tube splices shall be located in the tubes spanning deck or wall joints. Increase joint width in tubes to match expansion joint width and increase sleeve length correspondingly.
5. Top rail tube shall be continuous over not less than two posts except a short post spacing is permitted near deck or wall joints, electroliers, or other rail discontinuities as noted.
6. For details and reinforcement not shown see Standard Plans.
7. See project plans for limits of tubular bicycle railing.
8. CIP threaded rods may alternatively be installed using a drill and bond method with epoxy cartridges after forming and pouring barrier concrete. Plates to be placed against level surface.

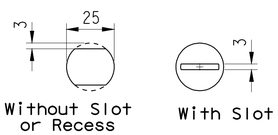

VIEW C-C
SCALE 1:1

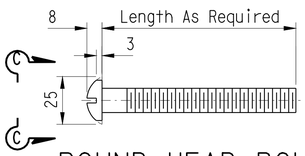

ROUND HEAD BOLT DETAIL
SCALE 1:1

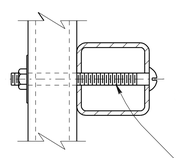

TUBE CONNECTION DETAIL
SCALE 1:2.5

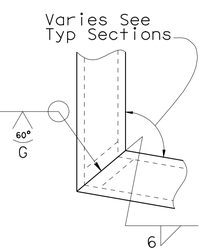

DETAIL A
SCALE 1:2.5

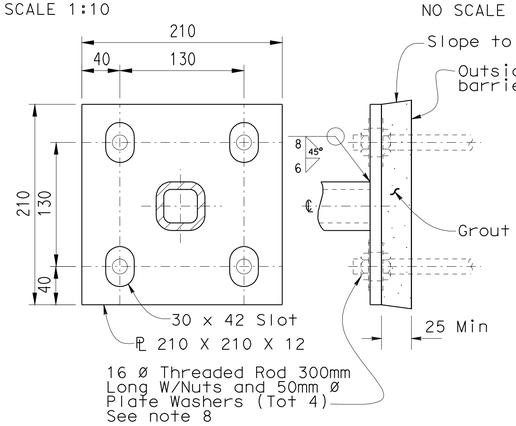

BASE PLATE DETAIL ◇2
SCALE 1:2.5

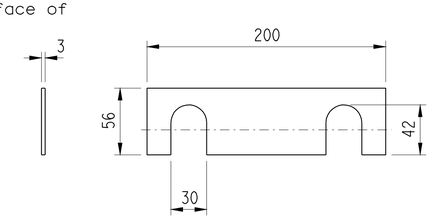

SHIM DETAILS
NO SCALE

SPECIAL DETAILS

RELEASE DATE	REVISED	DESIGN	BY TILLAT SATTER	CHECKED NEELIMA PATIL	RELEASED BY
FILE NO.	XS16-500	DETAILS	BY H.NGUYEN	CHECKED TILLAT SATTER	OFFICE CHIEF
		SUBMITTED	BY	DRAWING DATE 08/06	

◇1 Barrier modified
◇2 Plate details modified

STATE OF CALIFORNIA
DEPARTMENT OF TRANSPORTATION

DIVISION OF ENGINEERING SERVICES

BRIDGE NO. 10-0165
KILOMETER POST R74.945

WILLITS BYPASS
FLOODWAY VIADUCT
TUBULAR BICYCLE RAILING

DS OSD 2139M (METRIC) (REV. 3/5/97)

ORIGINAL SCALE IN MILLIMETERS FOR REDUCED PLANS 0 10 20 30 40 50 60 70 80 90 100

CU 01
EA 262001

DISREGARD PRINTS BEARING EARLIER REVISION DATES

REVISION DATES (PRELIMINARY STAGE ONLY) 10-16-08 1-28-09 01-30-09

SHEET 72 OF 88

USERNAME => s121614 FILE => 10-0165_gttbrdt.dgn

USERNAME => s121614 DATE PLOTTED => 28-JAN-2012 TIME PLOTTED => 07:47

VI=I

DIST	COUNTY	ROUTE	KILOMETER POST TOTAL PROJECT	SHEET No	TOTAL SHEETS
01	Men	101	R69.4/R78.9	812	939

CERTIFIED ENGINEERING GEOLOGIST 5-21-09 DATE

1-23-12
PLANS APPROVAL DATE

REGISTERED GEOLOGIST — Reid Buell No. 1481 Exp. 4-30-11 — CERTIFIED ENGINEERING GEOLOGIST — STATE OF CALIFORNIA

The State of California or its officers or agents shall not be responsible for the accuracy or completeness of electronic copies of this plan sheet.

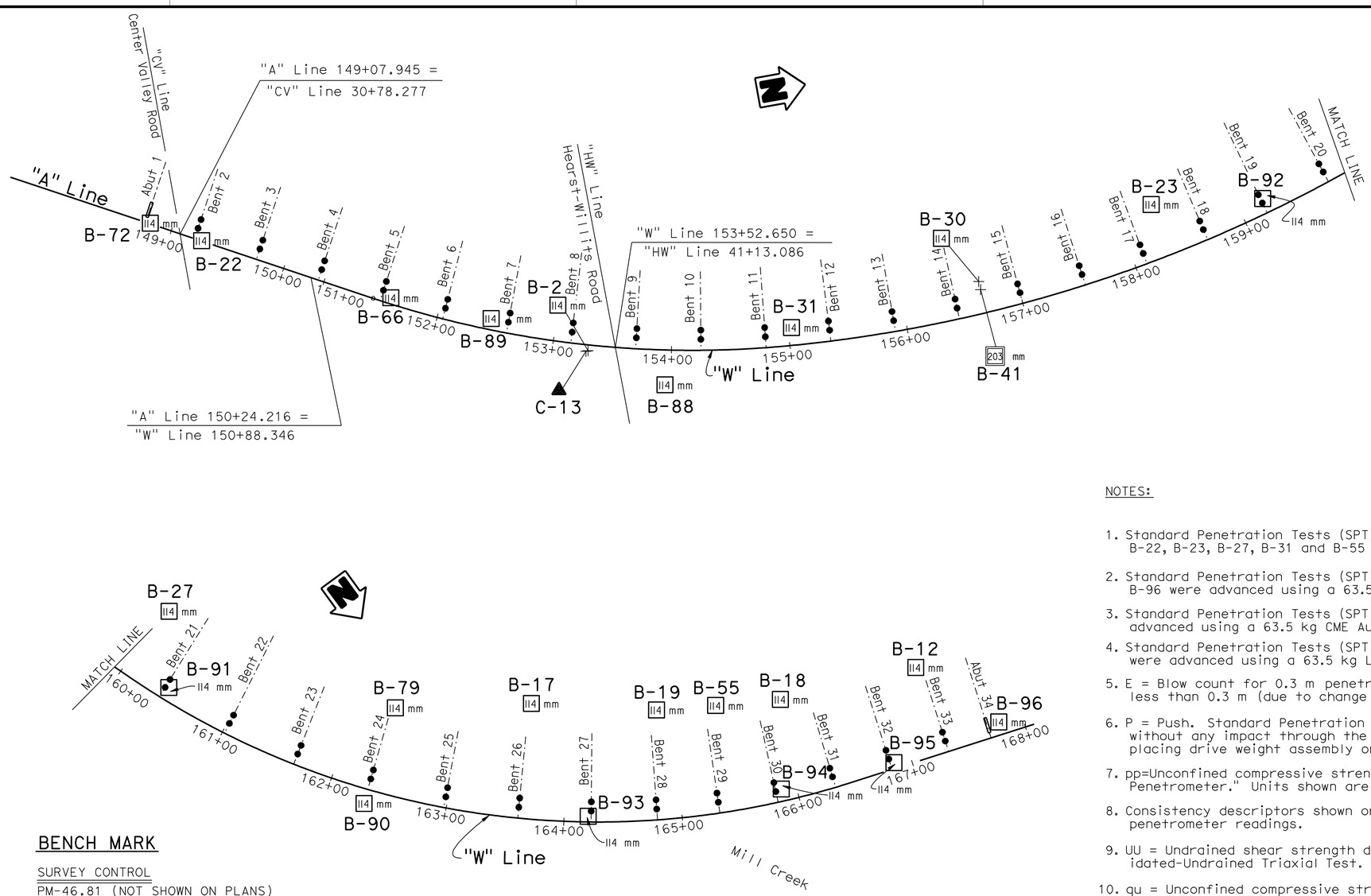

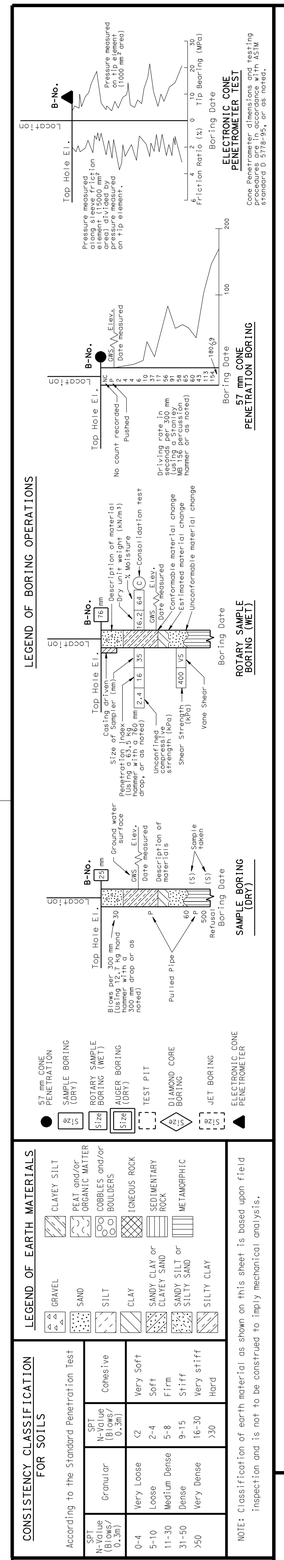

NOTES:

1. Standard Penetration Tests (SPT) performed in Borings B-2, B-12, B-18, B-19, B-22, B-23, B-27, B-31 and B-55 were advanced using a 63.5 kg Safety Hammer.
2. Standard Penetration Tests (SPT) performed in Borings B-17, B-66, B-72 and B-96 were advanced using a 63.5 kg Diedrich Automatic Hammer.
3. Standard Penetration Tests (SPT) performed in Borings B-30 and B-79 were advanced using a 63.5 kg CME Automatic Hammer.
4. Standard Penetration Tests (SPT) performed in Borings B-88 thru B-95 were advanced using a 63.5 kg Longyear Automatic Hammer.
5. E = Blow count for 0.3 m penetration extrapolated from blow count for less than 0.3 m (due to change in material or hard driving).
6. P = Push. Standard Penetration Test (SPT) split barrel sampler penetrated without any impact through the sample interval of 457 mm (18 inches) when placing drive weight assembly on sample rods.
7. pp=Unconfined compressive strength determined in the field by "Pocket Penetrometer." Units shown are kilopascals (kPa).
8. Consistency descriptors shown on the LOTB sheets are based on the pocket penetrometer readings.
9. UU = Undrained shear strength determined in the laboratory by Unconsolidated-Undrained Triaxial Test. Units shown are kilopascals (kPa).
10. qu = Unconfined compressive strength determined in the laboratory. Units shown are kilopascals (kPa).
11. Penetration index value designated as "REF" means sampler refusal.
12. Ground water surface elevations are subject to seasonal fluctuations and may occur at higher or lower elevations depending on conditions at any particular time.

BENCH MARK

SURVEY CONTROL

PM-46.81 (NOT SHOWN ON PLANS)
Fnd PK & ALUM WASHER
340.559 m Rt ℄ Rte 101
Sta 151+56.708
N 694334.333
E 1884940.412
Elev = 412.093 m

SEWER (NOT SHOWN ON PLANS)
Fnd 2 1/4" BRASS DISK
159.985 m Lt ℄ Rte 101
Sta 163+10.608
N 695463.301
E 1884392.708
Elev = 411.192 m

PLAN
1:2000

OGS CIVIL LOG OF TEST BORINGS SHEET (METRIC) (REV. 4/04)

Caltrans Metric

ENGINEERING SERVICES	GEOTECHNICAL SERVICES
DRAWN BY	I.G-Remmen 4/09
CHECKED BY	T. Alderman

ALL DIMENSIONS ARE IN METERS UNLESS OTHERWISE SHOWN

FIELD INVESTIGATION BY: T. Alderman

ORIGINAL SCALE IN MILLIMETERS FOR REDUCED PLANS 0 10 20 30 40 50 60 70 80 90 100

STATE OF CALIFORNIA DEPARTMENT OF TRANSPORTATION

DIVISION OF ENGINEERING SERVICES STRUCTURE DESIGN
DESIGN BRANCH 2

CU 01
EA 262001

BRIDGE NO. 10-0165
KILOMETER POST R74.945

DISREGARD PRINTS BEARING EARLIER REVISION DATES

REVISION DATES (PRELIMINARY STAGE ONLY) 05-12-09 05-19-09

WILLITS BYPASS
FLOODWAY VIADUCT
LOG OF TEST BORINGS 1 OF 16

SHEET 73 OF 88

FILE => 10-0165_gulotb01.dgn

USERNAME => s126614 DATE PLOTTED => 28-JAN-2012 TIME PLOTTED => 07:48

DIST	COUNTY	ROUTE	KILOMETER POST TOTAL PROJECT	SHEET No	TOTAL SHEETS
01	Men	101	R69.4/R78.9	813	939

CERTIFIED ENGINEERING GEOLOGIST 5-21-09 DATE

REGISTERED GEOLOGIST Reid Buell No. 1481 Exp. 4-30-11 CERTIFIED ENGINEERING GEOLOGIST STATE OF CALIFORNIA

1-23-12
PLANS APPROVAL DATE

The State of California or its officers or agents shall not be responsible for the accuracy or completeness of electronic copies of this plan sheet.

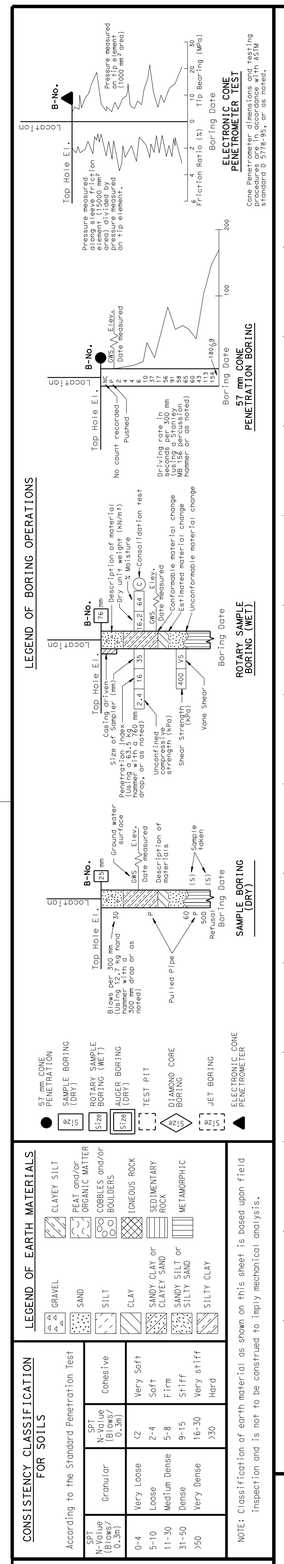

OGS CIVIL LOG OF TEST BORINGS SHEET (METRIC) (REV. 4/04)

On Sta 148+81
"A" Line

B-72

114 mm

412.81

412 m

5 35 Fine SANDY CLAY (CL), very soft to hard, mottled gray and reddish brown, moist, from Elev 412.81 to 411.28, pp=144 to 430 kPa.

7 35 -from Elev 411.28 to 410.37, pp=144 to 239 kPa

409 m

5 35 -from Elev 410.37 to 407.93, pp=5 to 96 kPa

GWS Elev 409.30
8-30-06

8 35 CLAY (CL), stiff to hard, mottled gray and reddish brown, wet, from Elev 407.93 to 407.32, pp=144 to 239 kPa.

406 m

3 35 Fine SANDY CLAY (CL), soft to firm, dark bluish gray with reddish brown mottling, wet.

-from Elev 407.32 to 404.50, pp=24 to 96 kPa

6 35 CLAYEY SAND (SC), loose, dark bluish gray, wet, fine to coarse sand.

403 m

4 35 Fine SANDY CLAY (CL), stiff to very stiff, dark bluish gray, moist.

CLAYEY fine SAND (SC), very loose, dark bluish gray, wet.

7 35 Interbedded CLAY (CL) and SANDY CLAY (CL), very soft to stiff, bluish gray, moist, fine sand

400 m

7 35 -from Elev 403.05 to 399.09, pp=48 to 96 kPa
-from Elev 399.09 to 398.18, pp=48 to 144 kPa
-from Elev 398.18 to 396.35, pp=5 to 24 kPa

8 35

397 m

5 35 SILTY fine SAND (SM), loose, dark bluish gray, wet.

-at Elev 396.35, wood fragment.

8 35 Interbedded CLAY (CL) and CLAY with fine SAND (CL), soft to stiff, dark bluish gray, moist, from Elev 396.35 to 395.43, pp=108 kPa, from Elev 395.43 to 394.52, pp=24 to 72 kPa.

394 m

7 35 CLAY (CL), firm to stiff, dark bluish gray, moist.
-from Elev 394.52 to 391.09, pp=72 to 144 kPa
-at Elev 393.91, UU=35 kPa

10 35

391 m

12 35 CLAYEY SAND with GRAVEL (SC), medium dense, dark bluish gray, wet, fine to coarse sand, fine gravel.

22 35 Well-graded GRAVEL with CLAY and SAND (GW-GC), medium dense, dark bluish gray, wet, fine to coarse subrounded to rounded gravel.

388 m

42 35 Well-graded GRAVEL with CLAY and SAND (GW-GC), dense, brown, wet, fine to coarse subrounded to rounded gravel.

385 m

31 35 Poorly-graded GRAVEL with SILT and SAND (GP-GM), dense, brown, wet, fine subrounded to rounded gravel.

382 m

72 35 Well-graded GRAVEL with CLAY and SAND (GW-GC), dense to very dense, brown, wet, fine to coarse rounded gravel.

379 m

36 35 Well-graded GRAVEL with SILT and SAND (GW-GM), dense, brown, wet, fine to coarse subrounded to rounded gravel.

376 m

38 35 CLAYEY SAND with GRAVEL (SC), dense, brown, wet, fine to coarse sand, fine to medium subrounded to rounded gravel.
-from Elev 377.14 to 376.08, pp=48 to 383 kPa

8-29-06 Well-graded GRAVEL with CLAY and SAND (GW-GC), dense, brown, wet, fine to coarse subrounded to rounded gravel.

148+80

On Sta 149+27
"A" Line

B-22

114 mm

413.34

Asphalt concrete (parking lot), 180 mm thick.

CLAY with SAND (CL), soft to stiff, dark gray, moist.

4 35 -at Elev 412.12, pp=120 kPa
-from Elev 411.82 to 410.83, pp=24 to 72 kPa
-at Elev 411.21, UU=31 kPa

GWS Elev 411.36
1-6-05

23 35 CLAY (CL), stiff to hard, dark yellowish brown with gray mottling, moist.
-from Elev 410.83 to 408.47, pp=96 to 287 kPa

12 35 CLAY (CL), firm to very stiff, dark gray with yellowish brown mottling, moist.

15 35 -at Elev 408.47 and 407.25, black wood fragments.
-from Elev 408.47 to 405.72, pp=72 to 192 kPa
-at Elev 408.16, UU=64 kPa

8 35 CLAY (CL), firm, dark gray, moist.
-at Elev 405.42, pp=48 to 72 kPa
-at Elev 405.27, qu=48 kPa
-at Elev 405.11, UU=48 kPa

22 35 CLAYEY SAND with GRAVEL (SC), medium dense, dark gray, moist to wet, fine to coarse subangular to subrounded gravel.

13 35 CLAY (CL), stiff, dark bluish gray, moist, pp=96 to 144 kPa.

14 35 Well-graded GRAVEL (GW), medium dense, dark gray, wet.

16 35 CLAY (CL), stiff, dark bluish gray, moist.
-from Elev 401.46 to 396.43, pp=96 to 144 kPa

17 35

12 35 CLAY with fine SAND (CL), very soft to stiff, dark bluish gray, moist to wet.
-from Elev 396.43 to 394.14, pp=5 to 120 kPa

16 35 CLAY (CL), firm to stiff, dark bluish gray, moist.
-from Elev 394.14 to 390.94, pp=48 to 120 kPa

22 35

31 35 CLAYEY SAND with GRAVEL (SC), dense, dark bluish gray and brown, wet, fine to coarse angular to subrounded gravel.

50 35 -from Elev 390.94 to 388.96, pp=144 to 287 kPa

50 35 SILTY SAND with GRAVEL (SM), medium dense to dense, grayish brown, wet, fine to coarse sub-angular to subrounded gravel.

50 35

34 35 Well-graded SAND with SILT, CLAY and GRAVEL (SW-SM/SW-SC), very dense, brown, wet, fine to coarse subangular to subrounded gravel.

84 35

54 35

50 35

51 35

149+20

FOR PLAN VIEW, SEE
"LOG OF TEST BORINGS" 1 OF 16

53 35 373 m

Well-graded SAND with SILT, CLAY and GRAVEL (SW-SM/SW-SC), very dense, brown, wet, fine to coarse subangular to subrounded gravel.

74 35 370 m

367 m

93 35 364 m

361 m

60 35 358 m

355 m

78 35

E285 35 352 m

Gravelly CLAY (CL), hard, greenish gray and brown, moist.

1-5-05

PROFILE

HOR. 1:100
VER. 1:100

Caltrans Metric

ENGINEERING SERVICES	GEOTECHNICAL SERVICES
DRAWN BY	I.G-Remmen 4/09
CHECKED BY	T. Alderman

FIELD INVESTIGATION BY: T. Alderman

STATE OF CALIFORNIA DEPARTMENT OF TRANSPORTATION

DIVISION OF ENGINEERING SERVICES STRUCTURE DESIGN
DESIGN BRANCH 2

BRIDGE NO. 10-0165
KILOMETER POST R74.945

WILLITS BYPASS
FLOODWAY VIADUCT
LOG OF TEST BORINGS 2 OF 16

ALL DIMENSIONS ARE IN METERS UNLESS OTHERWISE SHOWN

ORIGINAL SCALE IN MILLIMETERS FOR REDUCED PLANS 0 10 20 30 40 50 60 70 80 90 100

CU 01
EA 262001

DISREGARD PRINTS BEARING EARLIER REVISION DATES

REVISION DATES (PRELIMINARY STAGE ONLY) 05-12-09 05-19-09

SHEET 74 OF 88

FILE => 10-0165_gulotb02.dgn

USERNAME => s12614 DATE PLOTTED => 28-JAN-2012 TIME PLOTTED => 07:48

DIST	COUNTY	ROUTE	KILOMETER POST TOTAL PROJECT	SHEET No	TOTAL SHEETS
01	Men	101	R69.4/R78.9	814	939

CERTIFIED ENGINEERING GEOLOGIST 5-21-09 DATE

REGISTERED GEOLOGIST Reid Buell No. 1481 Exp. 4-30-11 CERTIFIED ENGINEERING GEOLOGIST STATE OF CALIFORNIA

1-23-12
PLANS APPROVAL DATE

The State of California or its officers or agents shall not be responsible for the accuracy or completeness of electronic copies of this plan sheet.

FOR PLAN VIEW, SEE
"LOG OF TEST BORINGS" 1 OF 16

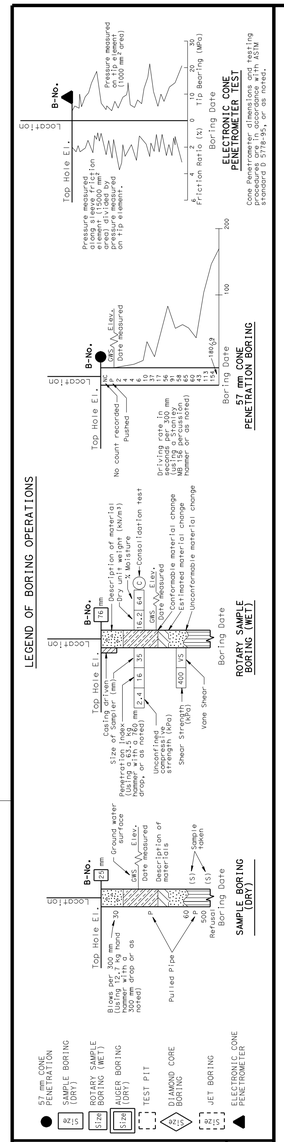

OGS CIVIL LOG OF TEST BORINGS SHEET (METRIC) (REV. 4/04)

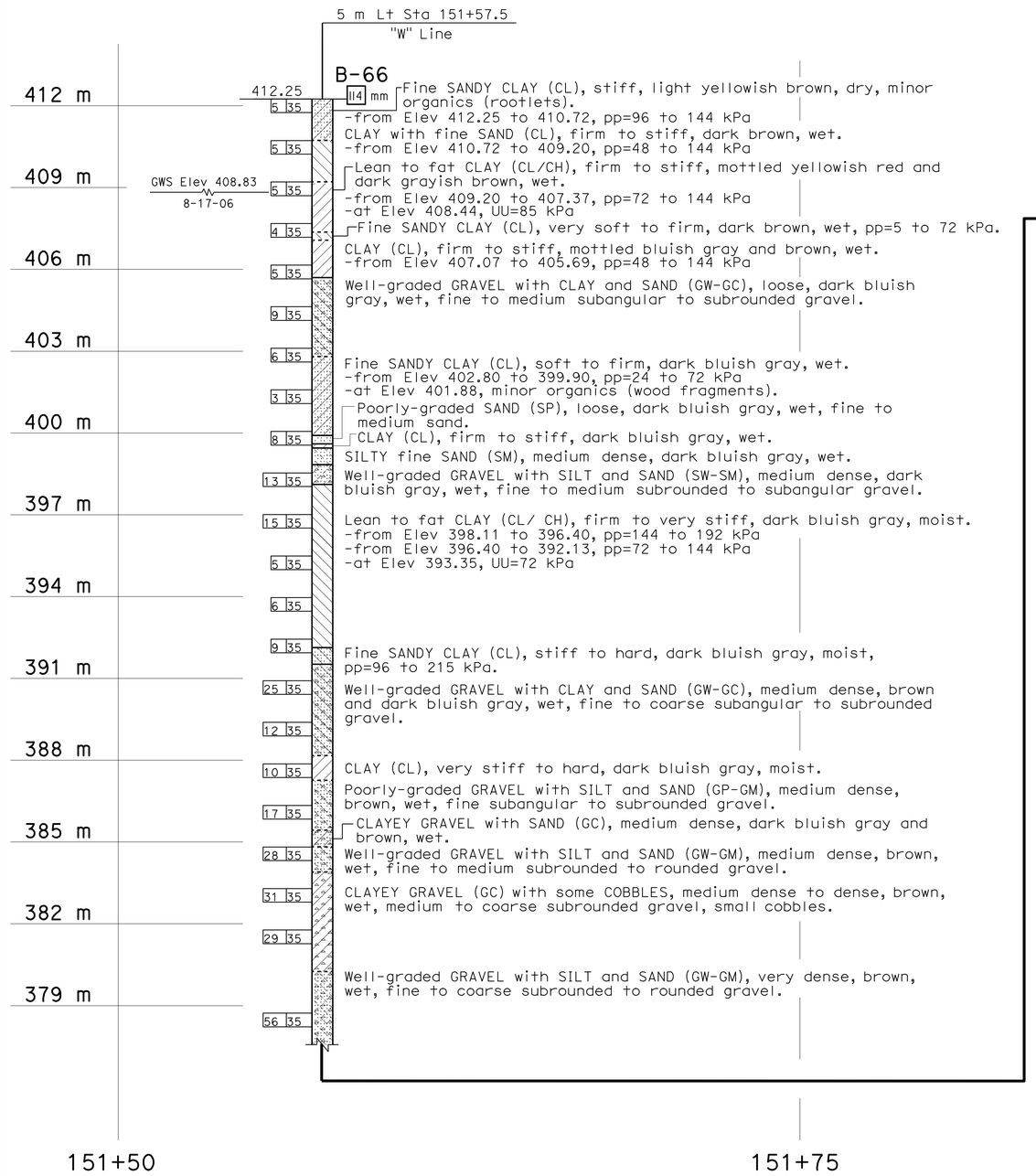

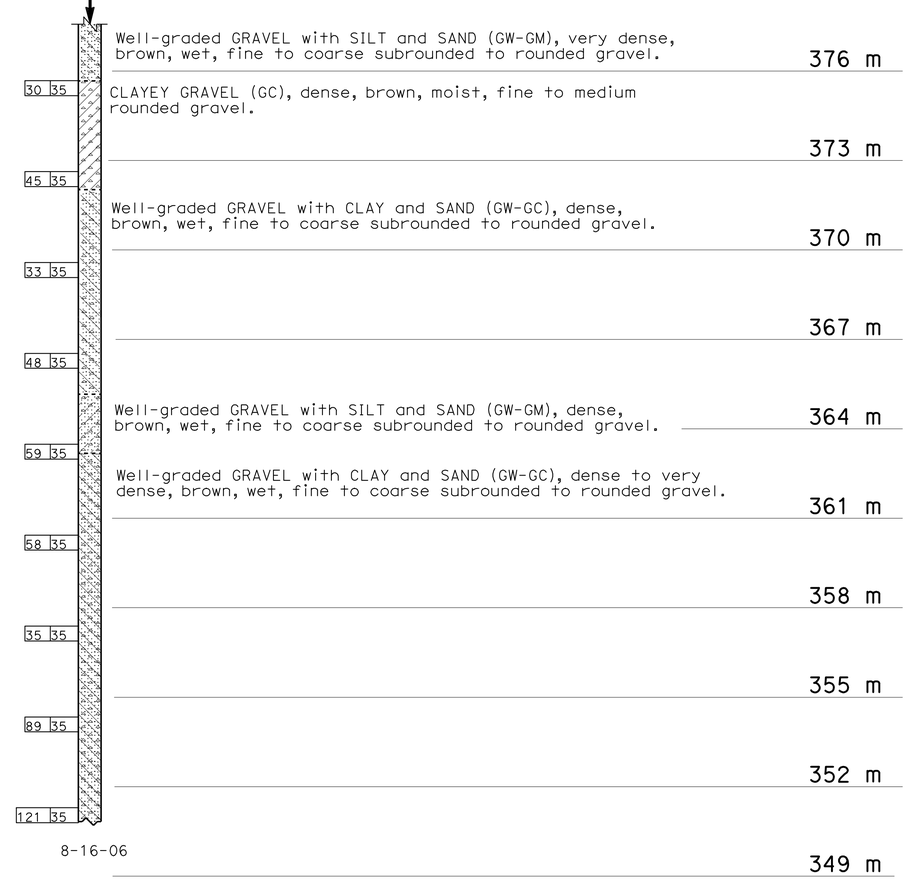

PROFILE

HOR. 1:100
VER. 1:100

ENGINEERING SERVICES	GEOTECHNICAL SERVICES
DRAWN BY	I.G-Remmen 4/09
CHECKED BY	T. Alderman

FIELD INVESTIGATION BY: T. Alderman

STATE OF CALIFORNIA DEPARTMENT OF TRANSPORTATION

DIVISION OF ENGINEERING SERVICES STRUCTURE DESIGN DESIGN BRANCH 2

BRIDGE NO. 10-0165
KILOMETER POST R74.945

WILLITS BYPASS
FLOODWAY VIADUCT
LOG OF TEST BORINGS 3 OF 16

ALL DIMENSIONS ARE IN METERS UNLESS OTHERWISE SHOWN

ORIGINAL SCALE IN MILLIMETERS FOR REDUCED PLANS 0 10 20 30 40 50 60 70 80 90 100

CU 01
EA 262001

DISREGARD PRINTS BEARING EARLIER REVISION DATES 05-13-09

REVISION DATES (PRELIMINARY STAGE ONLY)

SHEET 75 OF 88

FILE => 10-0165_gulotb03.dgn

USERNAME => s121614 DATE PLOTTED => 28-JAN-2012 TIME PLOTTED => 07:48

DIST	COUNTY	ROUTE	KILOMETER POST TOTAL PROJECT	SHEET No	TOTAL SHEETS
01	Men	101	R69.4/R78.9	815	939

CERTIFIED ENGINEERING GEOLOGIST — DATE 5-21-09

REGISTERED GEOLOGIST — Reid Buell — No. 1481 — Exp. 4-30-11 — CERTIFIED ENGINEERING GEOLOGIST — STATE OF CALIFORNIA

1-23-12
PLANS APPROVAL DATE

The State of California or its officers or agents shall not be responsible for the accuracy or completeness of electronic copies of this plan sheet.

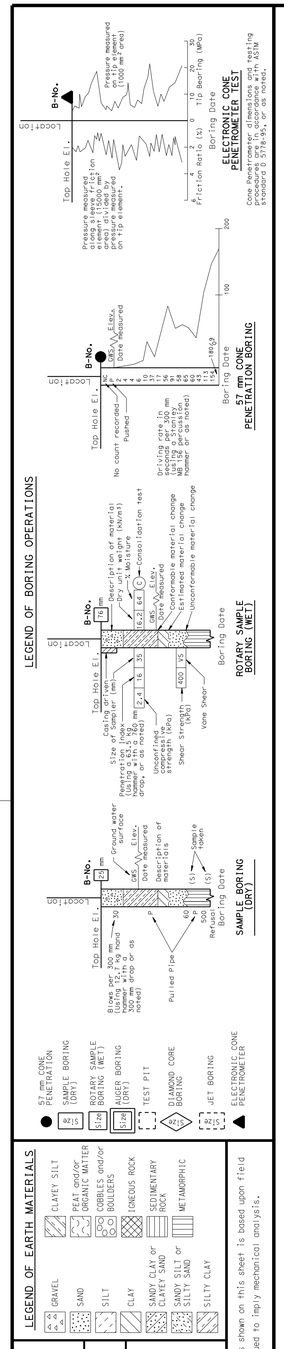

OGS CIVIL LOG OF TEST BORINGS SHEET (METRIC) (REV. 4/04)

FOR PLAN VIEW, SEE
"LOG OF TEST BORINGS" 1 OF 16

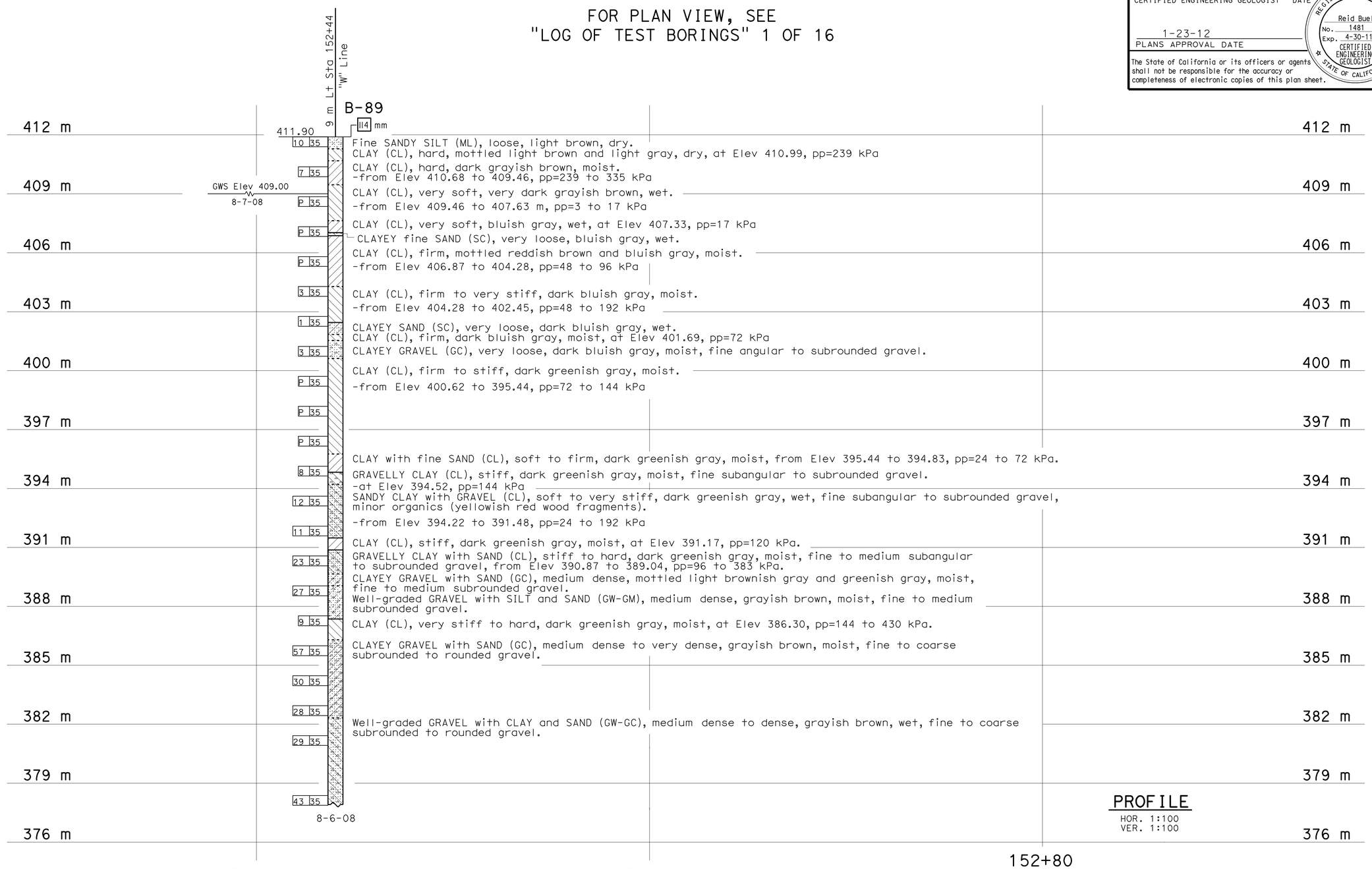

PROFILE
HOR. 1:100
VER. 1:100

Caltrans Metric

ENGINEERING SERVICES	GEOTECHNICAL SERVICES
DRAWN BY	I.G-Remmen 4/09
CHECKED BY	T. Alderman

FIELD INVESTIGATION BY: T. Alderman

STATE OF CALIFORNIA
DEPARTMENT OF TRANSPORTATION

DIVISION OF ENGINEERING SERVICES
STRUCTURE DESIGN
DESIGN BRANCH 2

BRIDGE NO. 10-0165
KILOMETER POST R74.945

WILLITS BYPASS
FLOODWAY VIADUCT
LOG OF TEST BORINGS 4 OF 16

ALL DIMENSIONS ARE IN METERS UNLESS OTHERWISE SHOWN

ORIGINAL SCALE IN MILLIMETERS FOR REDUCED PLANS 0 10 20 30 40 50 60 70 80 90 100

CU 01
EA 262001

DISREGARD PRINTS BEARING EARLIER REVISION DATES

REVISION DATES (PRELIMINARY STAGE ONLY) 05-13-09 05-19-09

SHEET 76 OF 88

FILE => 10-0165_gu1otb04.dgn

USERNAME => s121614 DATE PLOTTED => 28-JAN-2012 TIME PLOTTED => 07:49

DIST	COUNTY	ROUTE	KILOMETER POST TOTAL PROJECT	SHEET No	TOTAL SHEETS
01	Men	101	R69.4/R78.9	816	939

CERTIFIED ENGINEERING GEOLOGIST 5-21-09 DATE

REGISTERED GEOLOGIST Reid Buell No. 1481 Exp. 4-30-11 CERTIFIED ENGINEERING GEOLOGIST STATE OF CALIFORNIA

1-23-12
PLANS APPROVAL DATE

The State of California or its officers or agents shall not be responsible for the accuracy or completeness of electronic copies of this plan sheet.

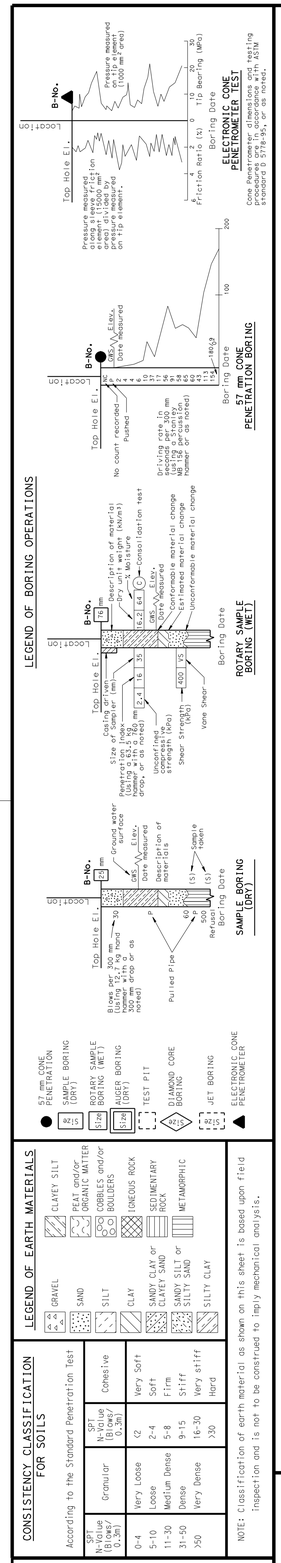

OGS CIVIL LOG OF TEST BORINGS SHEET (METRIC) (REV. 4/04)

FOR PLAN VIEW, SEE "LOG OF TEST BORINGS" 1 OF 16

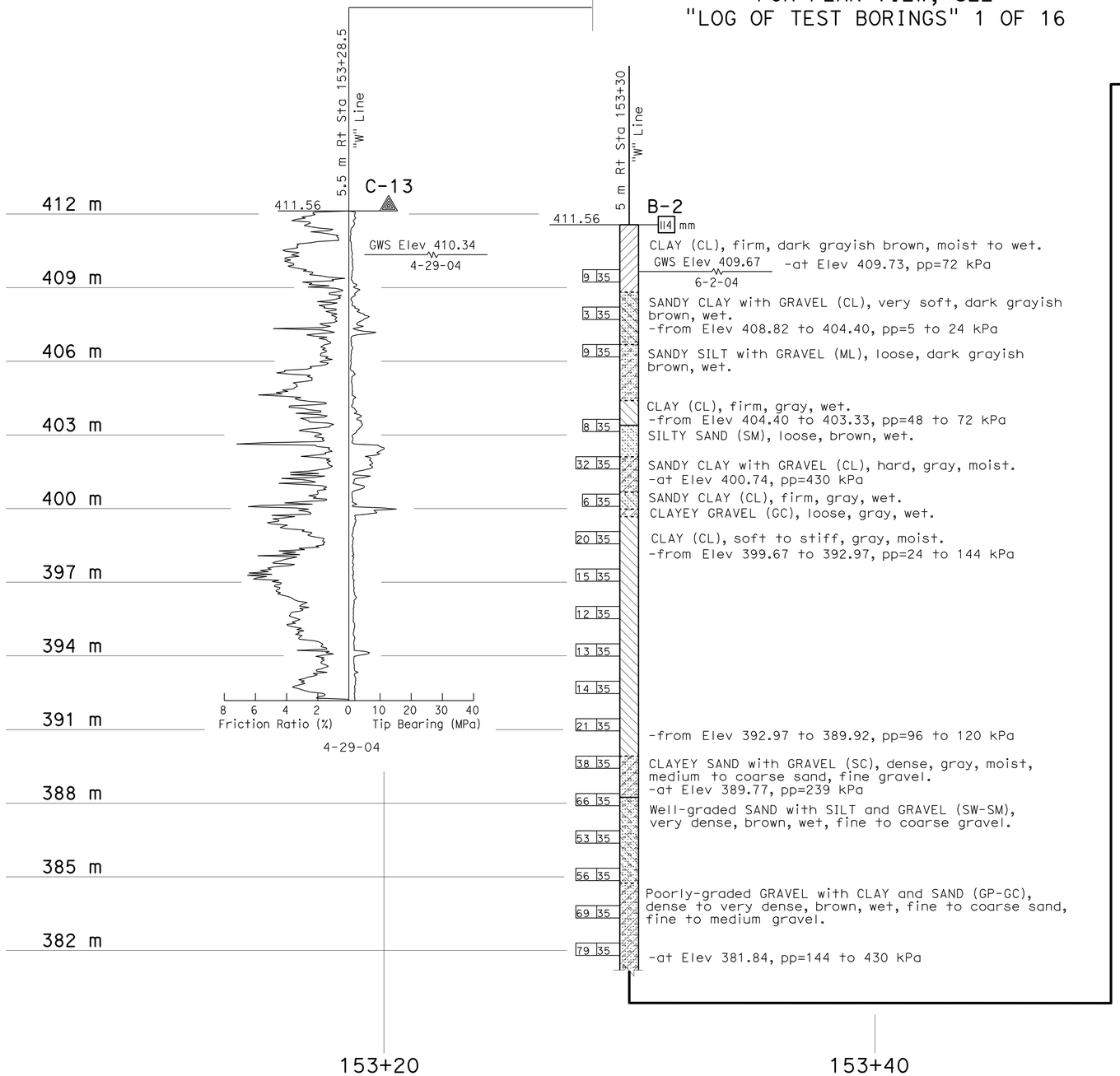

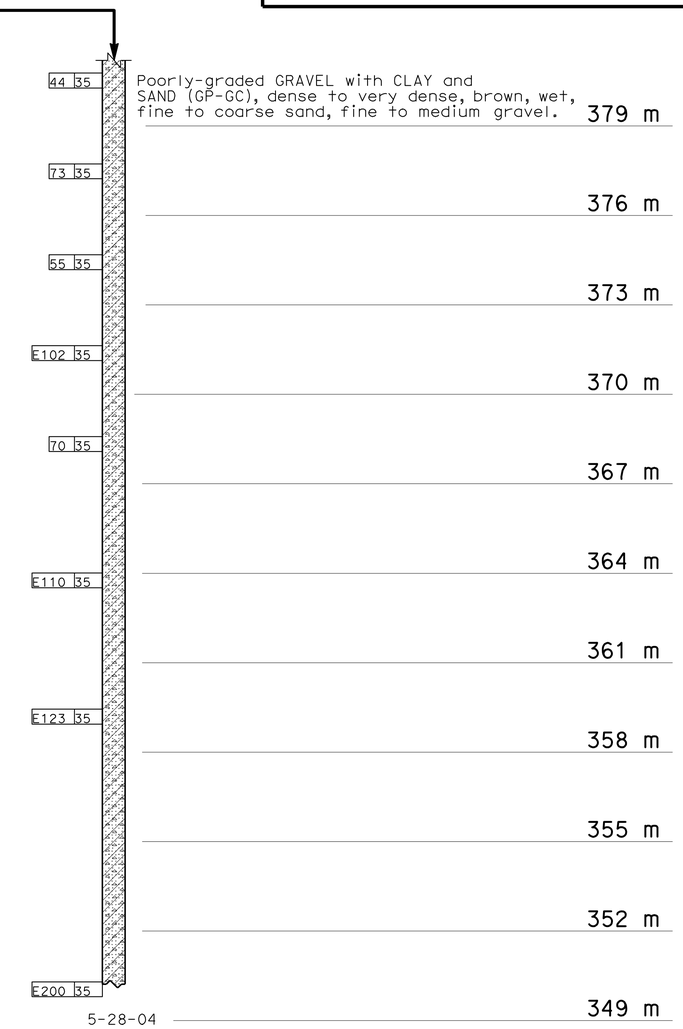

PROFILE
HOR. 1:100
VER. 1:100

Caltrans Metric

ENGINEERING SERVICES	GEOTECHNICAL SERVICES
DRAWN BY	I.G-Remmen 4/09
CHECKED BY	T. Alderman

FIELD INVESTIGATION BY: T. Alderman

STATE OF CALIFORNIA DEPARTMENT OF TRANSPORTATION

DIVISION OF ENGINEERING SERVICES STRUCTURE DESIGN DESIGN BRANCH 2

BRIDGE NO. 10-0165
KILOMETER POST R74.945

WILLITS BYPASS
FLOODWAY VIADUCT
LOG OF TEST BORINGS 5 OF 16

ALL DIMENSIONS ARE IN METERS UNLESS OTHERWISE SHOWN

ORIGINAL SCALE IN MILLIMETERS FOR REDUCED PLANS 0 10 20 30 40 50 60 70 80 90 100

CU 01
EA 262001

DISREGARD PRINTS BEARING EARLIER REVISION DATES

REVISION DATES (PRELIMINARY STAGE ONLY) 05-14-09 05-19-09

SHEET 77 OF 88

FILE => 10-0165_gulotb05.dgn

USERNAME => s12161d DATE PLOTTED => 28-JAN-2012 TIME PLOTTED => 07:49

DIST	COUNTY	ROUTE	KILOMETER POST TOTAL PROJECT	SHEET No	TOTAL SHEETS
01	Men	101	R69.4/R78.9	817	939

CERTIFIED ENGINEERING GEOLOGIST 5-21-09 DATE

1-23-12
PLANS APPROVAL DATE

REGISTERED GEOLOGIST — Reid Buell No. 1481 Exp. 4-30-11 — CERTIFIED ENGINEERING GEOLOGIST — STATE OF CALIFORNIA

The State of California or its officers or agents shall not be responsible for the accuracy or completeness of electronic copies of this plan sheet.

FOR PLAN VIEW, SEE "LOG OF TEST BORINGS" 1 OF 16

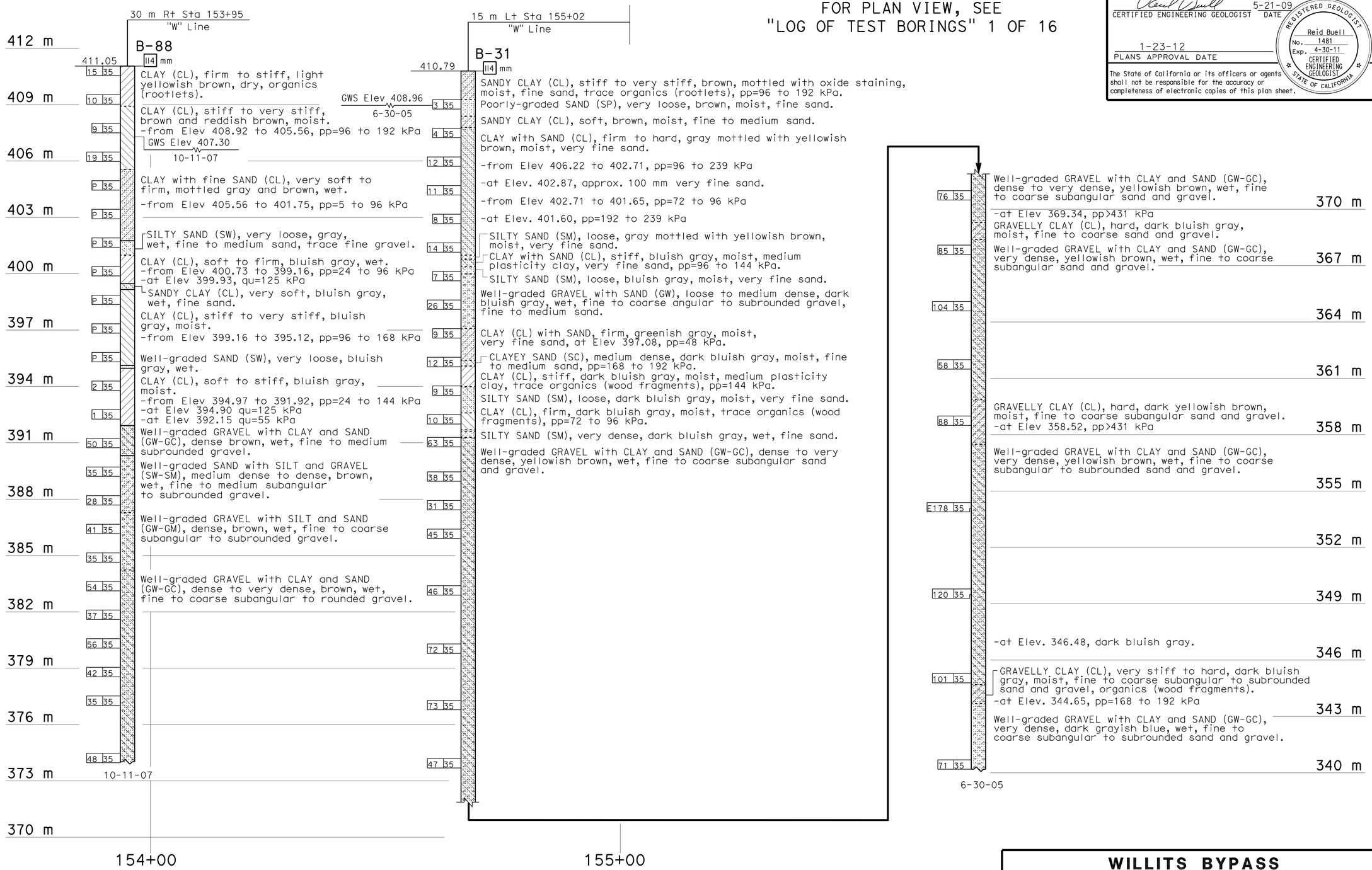

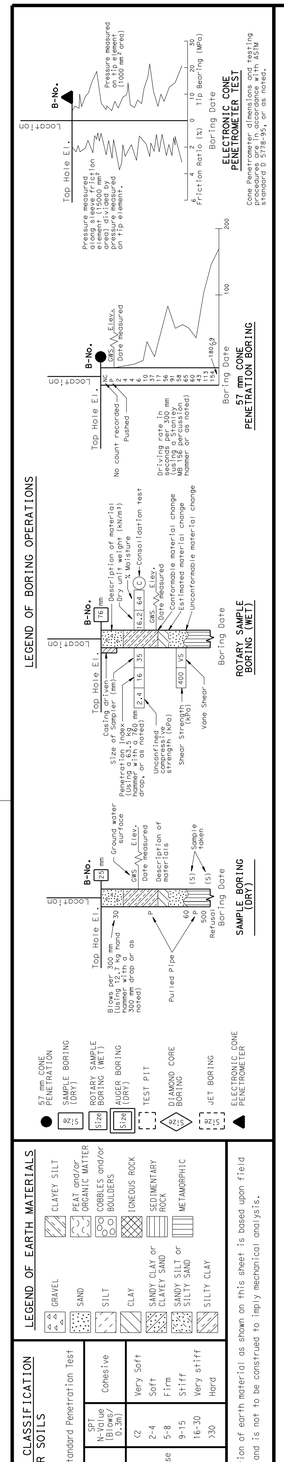

OGS CIVIL LOG OF TEST BORINGS SHEET (METRIC) (REV. 4/04)

Caltrans Metric

ENGINEERING SERVICES	GEOTECHNICAL SERVICES
DRAWN BY	I.G-Remmen 4/09
CHECKED BY	T. Alderman

FIELD INVESTIGATION BY: T. Alderman

STATE OF CALIFORNIA DEPARTMENT OF TRANSPORTATION

DIVISION OF ENGINEERING SERVICES STRUCTURE DESIGN
DESIGN BRANCH 2

BRIDGE NO. 10-0165
KILOMETER POST R74.945

WILLITS BYPASS
FLOODWAY VIADUCT
LOG OF TEST BORINGS 6 OF 16

ALL DIMENSIONS ARE IN METERS UNLESS OTHERWISE SHOWN

ORIGINAL SCALE IN MILLIMETERS FOR REDUCED PLANS 0 10 20 30 40 50 60 70 80 90 100

CU 01
EA 262001

DISREGARD PRINTS BEARING EARLIER REVISION DATES 05-14-09 05-19-09

REVISION DATES (PRELIMINARY STAGE ONLY)

SHEET 78 OF 88

FILE => 10-0165_gulotb06.dgn

USERNAME => s12614 DATE PLOTTED => 28-JAN-2012 TIME PLOTTED => 07:49

DIST	COUNTY	ROUTE	KILOMETER POST TOTAL PROJECT	SHEET No	TOTAL SHEETS
01	Men	101	R69.4/R78.9	818	939

CERTIFIED ENGINEERING GEOLOGIST — DATE 5-21-09

REGISTERED GEOLOGIST — Reid Buell No. 1481 Exp. 4-30-11 — CERTIFIED ENGINEERING GEOLOGIST — STATE OF CALIFORNIA

1-23-12
PLANS APPROVAL DATE

The State of California or its officers or agents shall not be responsible for the accuracy or completeness of electronic copies of this plan sheet.

FOR PLAN VIEW, SEE
"LOG OF TEST BORINGS" 1 OF 16

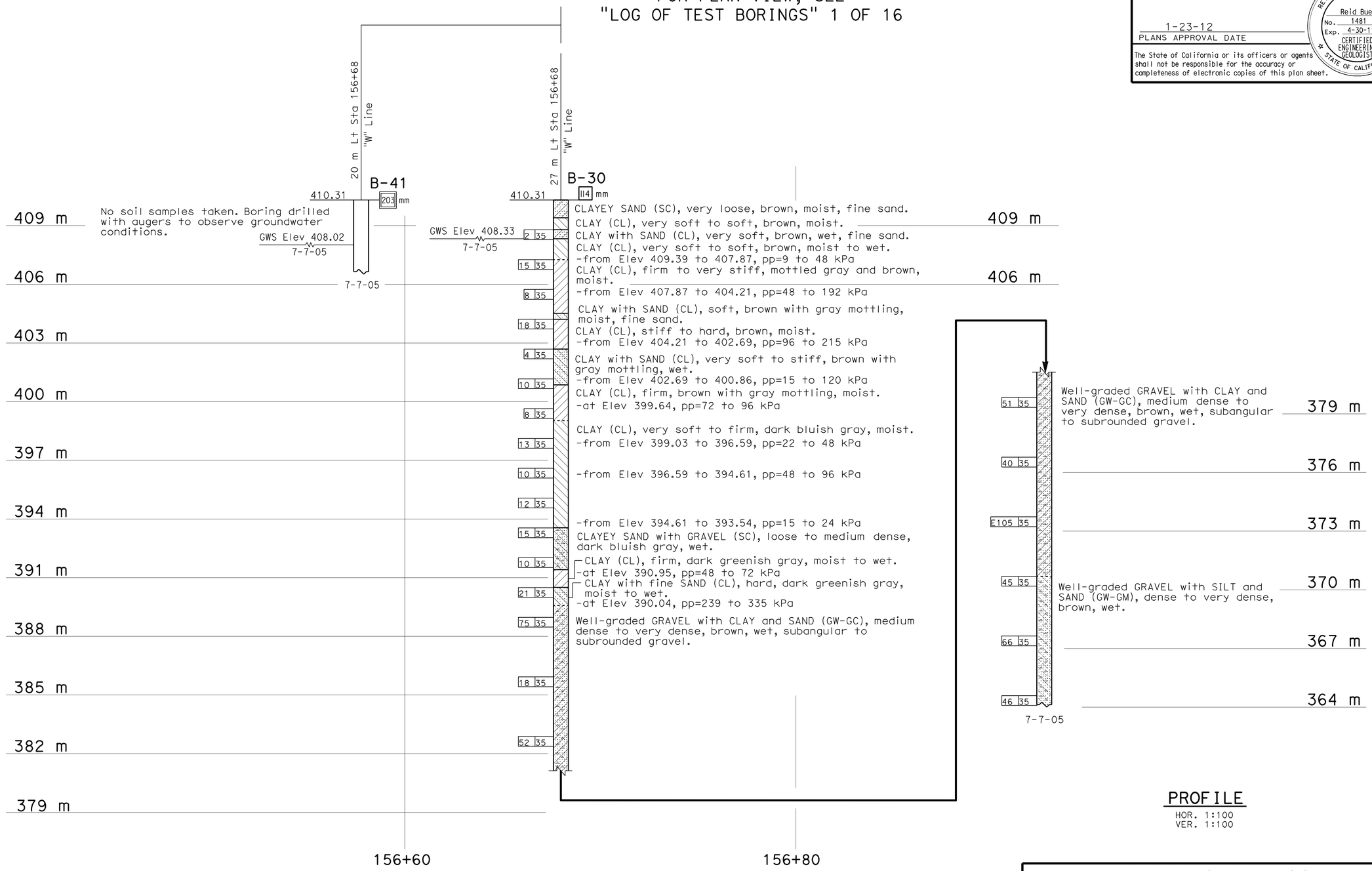

PROFILE
HOR. 1:100
VER. 1:100

LEGEND OF BORING OPERATIONS

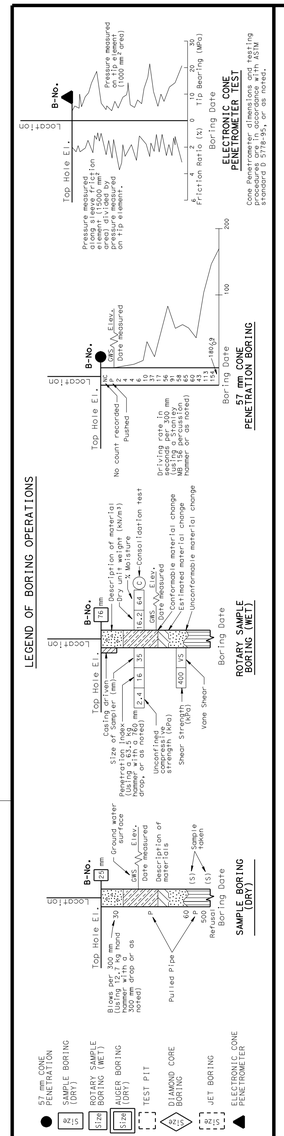

LEGEND OF EARTH MATERIALS

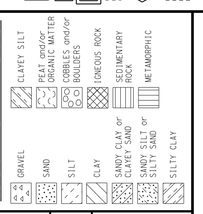

CONSISTENCY CLASSIFICATION FOR SOILS
According to the Standard Penetration Test

SPT N-Value (Blows/0.3m)	Granular	SPT N-Value (Blows/0.3m)	Cohesive
0-4	Very Loose	<2	Very Soft
5-10	Loose	2-4	Soft
11-30	Medium Dense	5-8	Firm
31-50	Dense	9-15	Stiff
>50	Very Dense	16-30	Very stiff
		>30	Hard

NOTE: Classification of earth material as shown on this sheet is based upon field inspection and is not to be construed to imply mechanical analysis.

OGS CIVIL LOG OF TEST BORINGS SHEET (METRIC) (REV. 4/04)

Caltrans Metric

ENGINEERING SERVICES	GEOTECHNICAL SERVICES
DRAWN BY	I.G-Remmen 4/09
CHECKED BY	T. Alderman

FIELD INVESTIGATION BY: T. Alderman

STATE OF CALIFORNIA
DEPARTMENT OF TRANSPORTATION

DIVISION OF ENGINEERING SERVICES
STRUCTURE DESIGN
DESIGN BRANCH 2

BRIDGE NO. 10-0165
KILOMETER POST R74.945

CU 01
EA 262001

ALL DIMENSIONS ARE IN METERS UNLESS OTHERWISE SHOWN

ORIGINAL SCALE IN MILLIMETERS FOR REDUCED PLANS 0 10 20 30 40 50 60 70 80 90 100

DISREGARD PRINTS BEARING EARLIER REVISION DATES

REVISION DATES (PRELIMINARY STAGE ONLY) 05-14-09 05-19-09

SHEET 79 OF 88

WILLITS BYPASS
FLOODWAY VIADUCT
LOG OF TEST BORINGS 7 OF 16

FILE => 10-0165_gulotb07.dgn

USERNAME => s121614 DATE PLOTTED => 28-JAN-2012 TIME PLOTTED => 07:50

DIST	COUNTY	ROUTE	KILOMETER POST TOTAL PROJECT	SHEET No	TOTAL SHEETS
01	Men	101	R69.4/R78.9	819	939

CERTIFIED ENGINEERING GEOLOGIST 5-21-09 DATE

REGISTERED GEOLOGIST Reid Buell No. 1481 Exp. 4-30-11 CERTIFIED ENGINEERING GEOLOGIST STATE OF CALIFORNIA

1-23-12
PLANS APPROVAL DATE

The State of California or its officers or agents shall not be responsible for the accuracy or completeness of electronic copies of this plan sheet.

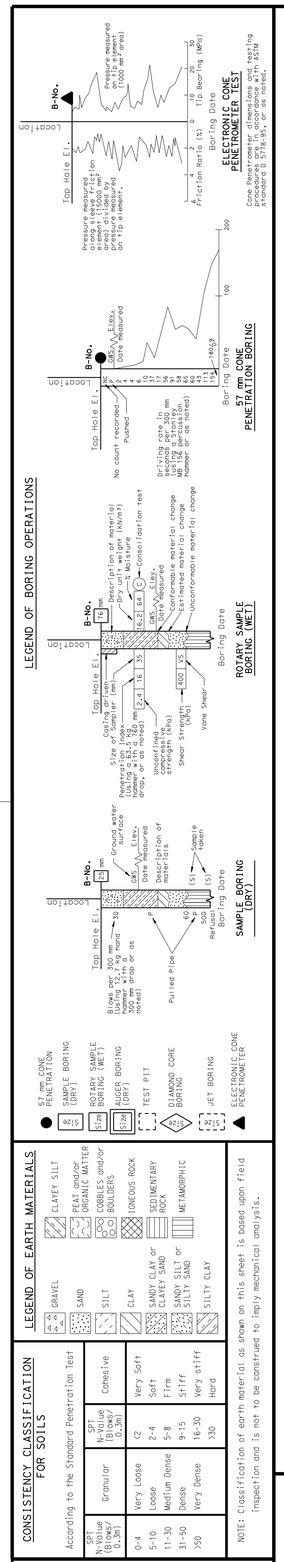

OGS CIVIL LOG OF TEST BORINGS SHEET (METRIC) (REV. 4/04)

FOR PLAN VIEW, SEE
"LOG OF TEST BORINGS" 1 OF 16

45 m Lt Sta 158+30 "W" Line

B-23

410.05 | 114 mm

GWS Elev 408.31
6-16-05

409 m
406 m
403 m
400 m
397 m
394 m
391 m
388 m
385 m
382 m
379 m
376 m

CLAY (CL), soft to firm, brown with gray mottling, moist.
-from Elev 410.05 to 407.61, pp = 24 to 96 kPa
-at Elev 408.06, UU = 16 kPa
CLAY with GRAVEL (CL), firm to very stiff, brown with gray mottling, wet.
-from Elev 407.61 to 405.48, pp = 48 to 192 kPa
CLAY with trace fine SAND (CL), firm, brown with gray mottling, wet.
-at Elev 405.17, pp = 48 kPa
SANDY CLAY with GRAVEL (CL), firm to stiff, brown, wet, fine sand, subangular to subrounded gravel.
-from Elev 404.81 to 403.04, pp = 72 to 144 kPa
Fine SANDY SILT (ML), loose, bluish gray, wet.
-at Elev 402.43, pp = 48 kPa
SANDY CLAY with GRAVEL (CL), firm, gray with yellowish brown mottling, wet, fine gravel.
-from Elev 401.82 to 399.69, pp = 48 to 96 kPa

CLAY (CL), firm, gray with yellowish brown mottling, wet.
-from Elev 399.69 to 396.64, pp = 48 to 96 kPa
-at Elev 398.93, UU = 28 kPa
CLAY (CL), firm, dark bluish gray, moist.

CLAYEY GRAVEL with SAND (GC), medium dense, dark bluish gray, wet, subrounded gravel
CLAY (CL), stiff to very stiff, dark bluish gray, moist.
-from Elev 396.33 to 392.66, pp = 96 to 192 kPa
-at Elev 395.88, UU = 56 kPa
-at Elev 395.72, organics (black wood fragments).

SILTY SAND (SM), medium dense, dark bluish gray, wet, fine sand.

Well-graded SAND with SILT and GRAVEL (SW-SM), dense to very dense, grayish brown with yellowish brown mottling, wet, subangular to subrounded fine to coarse gravel.

CLAY with SAND (CL), stiff, dark bluish gray with minor yellowish brown mottling, moist.
-at Elev 383.53, pp = 96 to 144 kPa
Well-graded SAND with SILT and GRAVEL (SW-SM), very dense, bluish gray, moist.
Well-graded GRAVEL with CLAY and SAND (GW-GC), very dense, grayish brown, moist, fine to medium subangular to subrounded gravel.
Well-graded SAND with CLAY and GRAVEL (SW-SC), very dense, brown with minor gray mottling, moist.

4 35 | 11 35 | 5 35 | 8 35 | 9 35 | 8 35 | 6 35 | 10 35 | 14 35 | 16 35 | 17 35 | 23 35 | 26 35 | 44 35 | 50 35 | 59 35 | 51 35 | 65 35 | 65 35

158+25 158+50

78 35 | 50 35 | 82 35 | 123 35 | 50 35 | 60 35 | 84 35 | E123 35 | E196 35 | 78 35 | 101 35

6-16-05

Well-graded SAND with CLAY and GRAVEL (SW-SC), very dense, brown with minor gray mottling, moist. — 373 m

Well-graded SAND with CLAY and GRAVEL (SW-SC), dense to very dense, brown with minor gray mottling, moist, subangular to subrounded gravel. — 370 m

367 m

364 m

Well-graded SAND with SILT and GRAVEL (SW-SM), dense to very dense, brown, wet, subrounded gravel. — 361 m

Well-graded SAND with CLAY and GRAVEL (SW-SC), very dense, mottled brown, yellowish brown, and gray, moist to wet, fine to coarse subangular to subrounded gravel. — 358 m

355 m

352 m

349 m

346 m

343 m

340 m

PROFILE
HOR. 1:100
VER. 1:100

Caltrans Metric

ENGINEERING SERVICES	GEOTECHNICAL SERVICES
DRAWN BY	I.G-Remmen 4/09
CHECKED BY	T. Alderman

FIELD INVESTIGATION BY: T. Alderman

STATE OF CALIFORNIA DEPARTMENT OF TRANSPORTATION

DIVISION OF ENGINEERING SERVICES STRUCTURE DESIGN
DESIGN BRANCH 2

BRIDGE NO. 10-0165
KILOMETER POST R74.945

WILLITS BYPASS
FLOODWAY VIADUCT
LOG OF TEST BORINGS 8 OF 16

ALL DIMENSIONS ARE IN METERS UNLESS OTHERWISE SHOWN

ORIGINAL SCALE IN MILLIMETERS FOR REDUCED PLANS 0 10 20 30 40 50 60 70 80 90 100

CU 01
EA 262001

DISREGARD PRINTS BEARING EARLIER REVISION DATES

REVISION DATES (PRELIMINARY STAGE ONLY) 05-15-09 05-19-09

SHEET 80 OF 88

FILE => 10-0165_gulotb08.dgn

USERNAME => s121614 DATE PLOTTED => 28-JAN-2012 TIME PLOTTED => 07:50

DIST	COUNTY	ROUTE	KILOMETER POST TOTAL PROJECT	SHEET No	TOTAL SHEETS
01	Men	101	R69.4/R78.9	820	939

CERTIFIED ENGINEERING GEOLOGIST 5-21-09 DATE

REGISTERED GEOLOGIST Reid Buell No. 1481 Exp. 4-30-11 CERTIFIED ENGINEERING GEOLOGIST STATE OF CALIFORNIA

1-23-12
PLANS APPROVAL DATE

The State of California or its officers or agents shall not be responsible for the accuracy or completeness of electronic copies of this plan sheet.

FOR PLAN VIEW, SEE "LOG OF TEST BORINGS" 1 OF 16

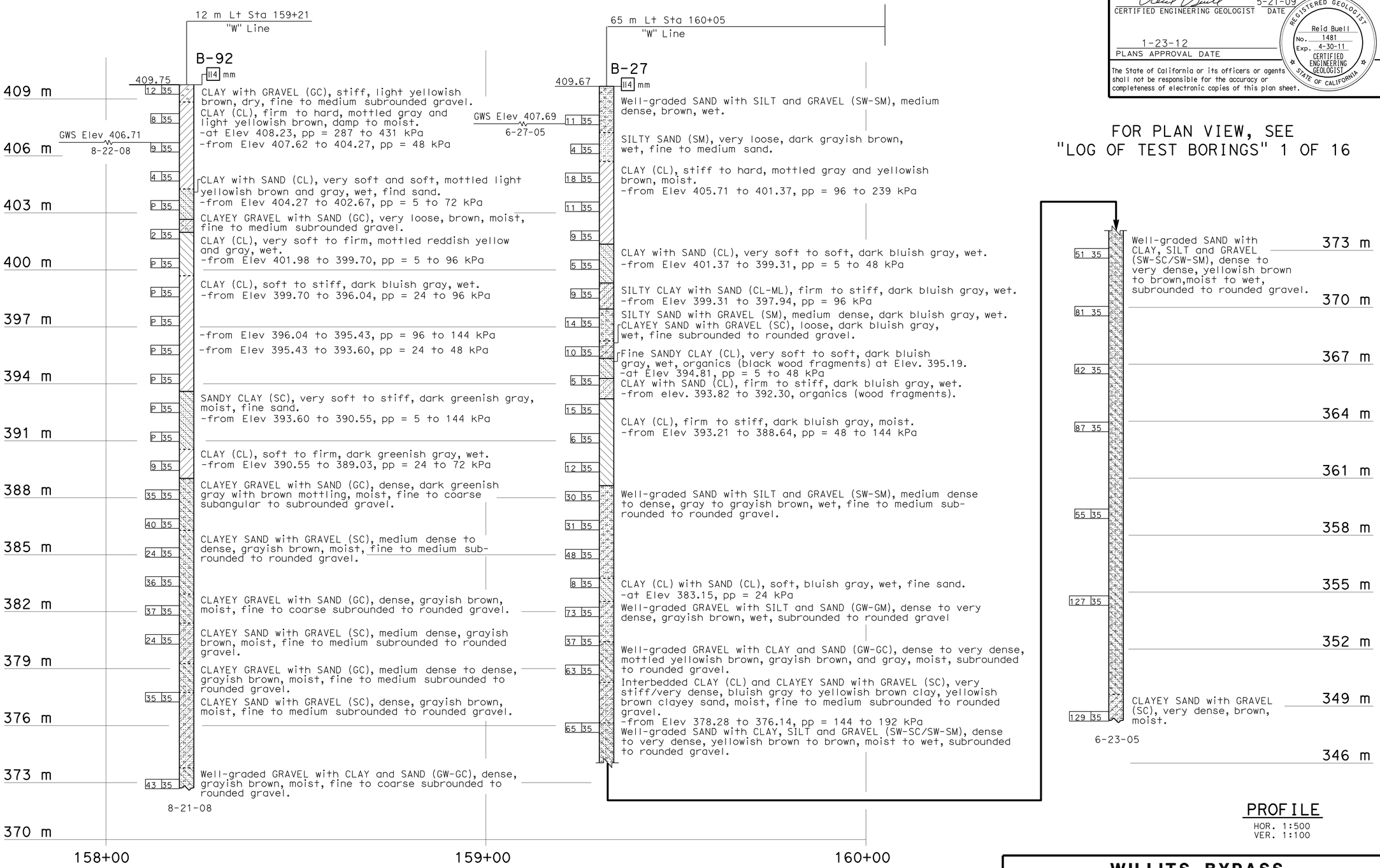

PROFILE
HOR. 1:500
VER. 1:100

OGS CIVIL LOG OF TEST BORINGS SHEET (METRIC) (REV. 4/04)

Caltrans Metric

ENGINEERING SERVICES	GEOTECHNICAL SERVICES
DRAWN BY	I.G-Remmen 4/09
CHECKED BY	T. Alderman

FIELD INVESTIGATION BY: T. Alderman

STATE OF CALIFORNIA DEPARTMENT OF TRANSPORTATION

DIVISION OF ENGINEERING SERVICES STRUCTURE DESIGN DESIGN BRANCH 2

BRIDGE NO. 10-0165
KILOMETER POST R74.945

WILLITS BYPASS
FLOODWAY VIADUCT
LOG OF TEST BORINGS 9 OF 16

ALL DIMENSIONS ARE IN METERS UNLESS OTHERWISE SHOWN

ORIGINAL SCALE IN MILLIMETERS FOR REDUCED PLANS 0 10 20 30 40 50 60 70 80 90 100

CU 01
EA 262001

DISREGARD PRINTS BEARING EARLIER REVISION DATES

REVISION DATES (PRELIMINARY STAGE ONLY) 05-13-09 05-19-09

SHEET 81 OF 88

FILE => 10-0165_gulotb09.dgn

USERNAME => s12614 DATE PLOTTED => 28-JAN-2012 TIME PLOTTED => 07:50

DIST	COUNTY	ROUTE	KILOMETER POST TOTAL PROJECT	SHEET No	TOTAL SHEETS
01	Men	101	R69.4/R78.9	821	939

CERTIFIED ENGINEERING GEOLOGIST 5-21-09 DATE

REGISTERED GEOLOGIST Reid Buell No. 1481 Exp. 4-30-11 CERTIFIED ENGINEERING GEOLOGIST STATE OF CALIFORNIA

1-23-12
PLANS APPROVAL DATE

The State of California or its officers or agents shall not be responsible for the accuracy or completeness of electronic copies of this plan sheet.

FOR PLAN VIEW, SEE
"LOG OF TEST BORINGS" 1 OF 16

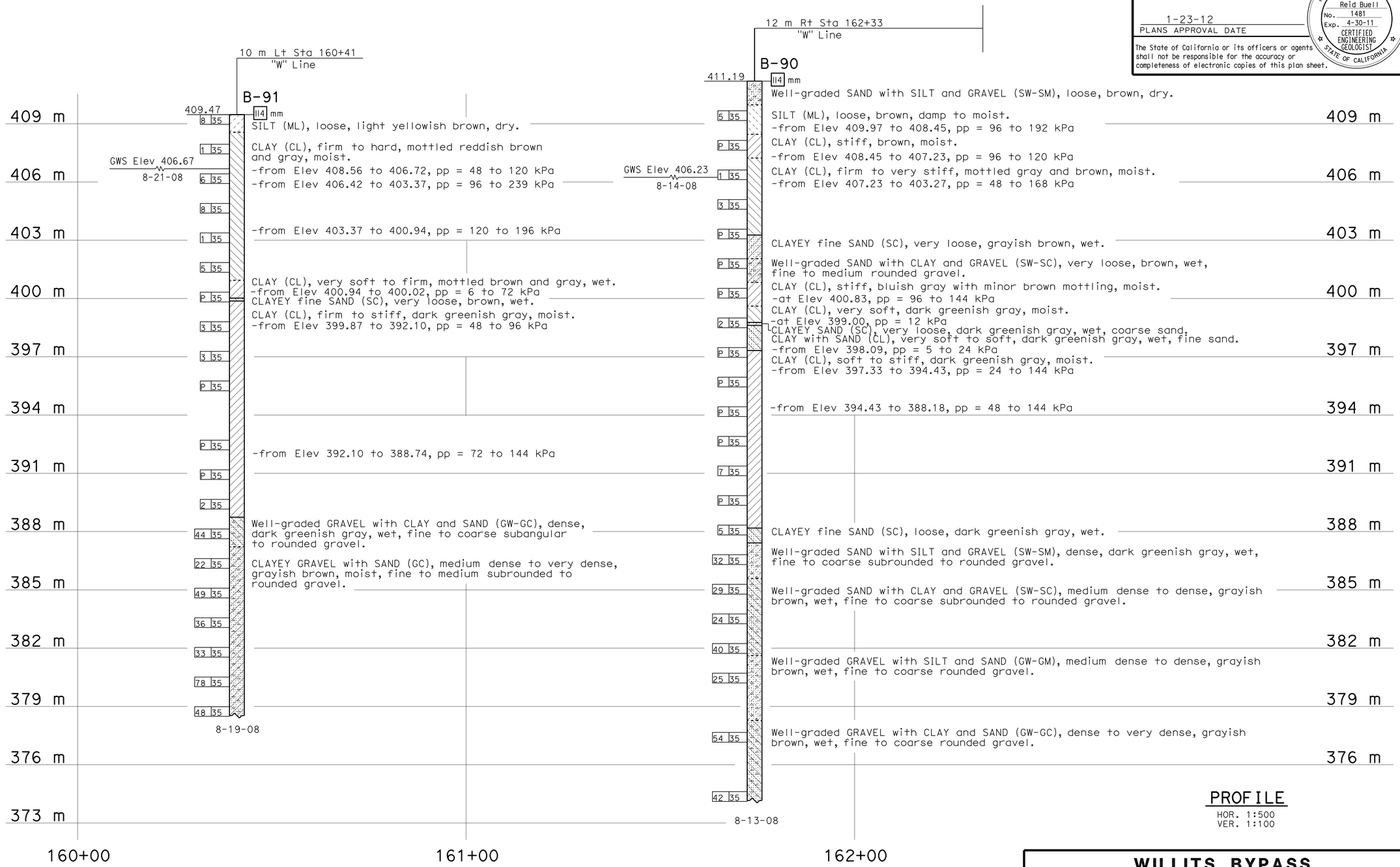

PROFILE
HOR. 1:500
VER. 1:100

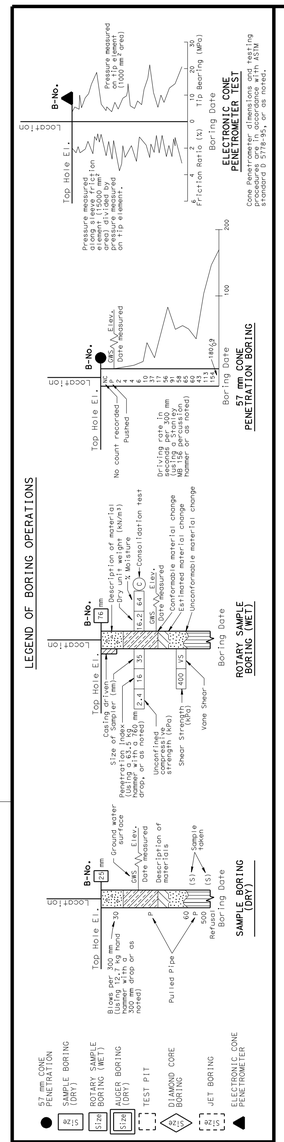

LEGEND OF EARTH MATERIALS

GRAVEL · SAND · SILT · CLAY · SANDY CLAY or CLAYEY SAND · SANDY SILT or SILTY SAND · SILTY CLAY · CLAYEY SILT · PEAT and/or ORGANIC MATTER · COBBLES and/or BOULDERS · CONEDUS ROCK · SEDIMENTARY ROCK · METAMORPHIC

CONSISTENCY CLASSIFICATION FOR SOILS

According to the Standard Penetration Test

SPT N-Value (Blows/0.3m)	Granular	SPT N-Value (Blows/0.3m)	Cohesive
0-4	Very Loose	<2	Very Soft
5-10	Loose	2-4	Soft
11-30	Medium Dense	5-8	Firm
31-50	Dense	9-15	Stiff
>50	Very Dense	16-30	Very stiff
		>30	Hard

NOTE: Classification of earth material as shown on this sheet is based upon field inspection and is not to be construed to imply mechanical analysis.

OGS CIVIL LOG OF TEST BORINGS SHEET (METRIC) (REV. 4/04)

Caltrans Metric

ENGINEERING SERVICES | GEOTECHNICAL SERVICES

DRAWN BY I.G-Remmen 4/09
CHECKED BY T. Alderman

FIELD INVESTIGATION BY: T. Alderman

STATE OF CALIFORNIA DEPARTMENT OF TRANSPORTATION

DIVISION OF ENGINEERING SERVICES STRUCTURE DESIGN
DESIGN BRANCH 2

BRIDGE NO. 10-0165
KILOMETER POST R74.945

WILLITS BYPASS
FLOODWAY VIADUCT
LOG OF TEST BORINGS 10 OF 16

ALL DIMENSIONS ARE IN METERS UNLESS OTHERWISE SHOWN

ORIGINAL SCALE IN MILLIMETERS FOR REDUCED PLANS 0 10 20 30 40 50 60 70 80 90 100

CU 01
EA 262001

DISREGARD PRINTS BEARING EARLIER REVISION DATES

REVISION DATES (PRELIMINARY STAGE ONLY) 05-14-09 05-19-09

SHEET 82 OF 88

FILE => 10-0165_gulotb10.dgn

USERNAME => s12614 DATE PLOTTED => 28-JAN-2012 TIME PLOTTED => 07:51

DIST	COUNTY	ROUTE	KILOMETER POST TOTAL PROJECT	SHEET No	TOTAL SHEETS
01	Men	101	R69.4/R78.9	822	939

CERTIFIED ENGINEERING GEOLOGIST 5-21-09 DATE

1-23-12
PLANS APPROVAL DATE

REGISTERED GEOLOGIST — Reid Buell No. 1481 Exp. 4-30-11 — CERTIFIED ENGINEERING GEOLOGIST — STATE OF CALIFORNIA

The State of California or its officers or agents shall not be responsible for the accuracy or completeness of electronic copies of this plan sheet.

B-79

72 m Lt Sta 162+34
"W" Line
411.44

114 mm Asphalt concrete, 215 mm thick.

410 m — CLAYEY GRAVEL (GC), loose, dark gray, wet.
SANDY CLAY with GRAVEL (CL), very soft to firm, grayish brown, wet, fine sand and gravel.

Fine SANDY CLAY (CL), very soft to firm, grayish brown, wet.
-from Elev 409.91 to 407.47, pp = 7 to 72 kPa

407 m — CLAY (CL), very soft to very stiff, mottled gray and brown, moist to wet.
-from Elev 407.47 to 404.43, pp = 48 to 192 kPa
-from Elev 404.43 to 402.90, pp = 15 to 96 kPa

GWS Elev 406.56
10-19-06

404 m

CLAY with trace fine SAND and GRAVEL (CL), firm to very stiff, mottled gray and brown, moist to wet.
-from Elev 402.90 to 400.77, pp = 48 to 192 kPa

401 m — Well-graded GRAVEL with CLAY and SAND (GW-GC), medium dense, brown, wet, fine to coarse subrounded gravel

CLAY (CL), very soft to firm, mottled gray and brown, moist.
-from Elev 400.77 to 398.03, pp = 15 to 72 kPa

398 m — CLAY (CL), soft to stiff, dark greenish gray, moist.
-from Elev 398.03 to 392.54, pp = 24 to 120 kPa

395 m

392 m — CLAY (CL), stiff to hard, dark greenish gray, moist.
-from Elev 392.54 to 390.41, pp = 96 to 239 kPa

Fine SANDY CLAY (CL), soft to stiff, dark greenish gray, moist.
-at Elev 389.64, pp = 24 to 96 kPa

389 m — CLAY (CL), very stiff, dark greenish gray, moist.
-at Elev 389.03, pp = 144 to 192 kPa
CLAYEY SAND with fine GRAVEL (SC), medium dense, dark greenish gray, moist.
-at Elev 388.12, pp = 5 to 96 kPa
Well-graded GRAVEL with CLAY and SAND (GW-GC), dense, dark greenish gray, moist, fine to coarse subrounded gravel.

386 m — Well-graded GRAVEL with CLAY and SAND (GW-GC), dense to very dense, brown, moist, fine to coarse subrounded gravel.

Well-graded GRAVEL with SILT and SAND (GW-GM), medium dense, brown, moist, fine to coarse subrounded gravel.

383 m — CLAY (CL), stiff, dark greenish gray, moist.
-from Elev 382.79 to 381.57, pp = 144 kPa

380 m — Well-graded GRAVEL with SAND (GW), dense to very dense, brown, moist, fine to coarse subrounded to rounded gravel.

377 m — CLAY (CL), very stiff to hard, brown, dark greenish gray, moist.
-at Elev 376.08, pp = 144 to 239 kPa

374 m — Well-graded GRAVEL with SILT and SAND (GW-GM), dense, brown, moist, fine to coarse subrounded to rounded gravel.

371 m

368 m — SILTY SAND with GRAVEL (SM), medium dense, brown, moist, fine gravel.
Well-graded GRAVEL with SILT and SAND (GW-GM), dense, brown, moist, fine to coarse subangular to rounded gravel.

365 m — Well-graded GRAVEL with CLAY and SAND (GW-GC), dense, brown, moist, fine to coarse subrounded to rounded gravel.

10-19-06

Depth	Blows	Sample
4	35	
3	35	
P	35	
8	35	
P	35	
6	35	
19	35	
P	35	
5	35	
8	35	
5	35	
3	35	
11	35	
10	35	
19	35	
46	35	
71	35	
30	35	
15	35	
31	35	
53	35	
43	35	
46	35	
28	35	
43	35	

B-17

97 m Lt Sta 163+62.5
"W" Line
409.84

114 mm

410 m — CLAY with fine SAND(CL), very soft to hard, brown, dry to moist.
-from Elev 408.31 to 407.40, pp = 5 to 48 kPa
-from Elev 407.40 to 406.79, pp = 168 to 239 kPa
-at Elev 407.40, UU = 60 kPa

407 m — CLAY with fine SAND (CL), firm to stiff, brown with yellowish brown mottling, wet.
-from Elev 406.79 to 405.87, pp = 72 to 144 kPa
-at Elev 406.02, UU = 44 kPa

GWS Elev 407.94
9-16-04

404 m — CLAY (CL), firm to stiff, brown with gray mottling, moist.
-from Elev 405.87 to 401.30, pp = 48 to 144 kPa
-at Elev 403.13, UU = 60 kPa
-at Elev 401.45, UU = 82 kPa

401 m — SILTY SAND (SM), loose, brown, wet.
SANDY CLAY (CL), soft to firm, brown with gray mottling, wet.
-at Elev 400.69, pp = 24 to 96 kPa
-at Elev 400.08, UU = 15 kPa

CLAY (CL), firm, dark gray, moist.
-at Elev 397.64, pp = 48 to 72 kPa
-at Elev 397.03, UU = 32 kPa
SILTY SAND with GRAVEL (SM), medium dense, dark gray, wet.

CLAY (CL), stiff to hard, dark gray, moist.
-from Elev 394.90 to 388.80, pp = 96 to 239 kPa
-at Elev 390.44 to 388.80, UU = 62 kPa

-at Elev 389.26, qu = 132 kPa

SANDY CLAY (CL), firm, dark gray, moist.
-at Elev 388.50, pp = 72 kPa
Well-graded GRAVEL with SAND (GW), dense, dark gray, wet, subrounded gravel.

CLAY (CL), stiff, dark gray, moist.
-at Elev 385.45, pp = 96 to 144 kPa

CLAYEY SAND with GRAVEL (SC), dense, dark gray, wet, fine to coarse subrounded to rounded gravel.

Well-graded GRAVEL with CLAY and SAND (GW-GC), very dense, yellowish brown, wet, angular to rounded gravel.

CLAY (CL), very stiff, dark gray, moist.
-at Elev 377.22, pp = 144 to 192 kPa
CLAYEY SAND with GRAVEL (SC), dense, brown, wet.
-at Elev 376.31, pp = 239 to 431 kPa

Well-graded GRAVEL with CLAY and SAND (GW-GC), very dense, brown, wet, fine to coarse subangular to subrounded gravel.

Depth	Blows	Sample
5	35	
3	35	
8	35	
6	35	
6	35	
9	35	
6	35	
12	35	
16	35	
17	35	
17	35	
14	35	
27	35	
41	35	
15	35	
39	35	
E102	35	
42	35	
94	35	

FOR PLAN VIEW, SEE
"LOG OF TEST BORINGS" 1 OF 16

Well-graded GRAVEL with CLAY and SAND (GW-GC), very dense, brown, wet, fine to coarse subangular to subrounded gravel. — 371 m

Well-graded SAND with SILT and GRAVEL (SW-SM), very dense, mottled brownish yellow and gray, wet, fine to coarse gravel. — 368 m

365 m

Well-graded SAND with SILT (SW-SM), very dense, grayish brown, wet.

Well-graded GRAVEL with SILT and SAND (GW-GM), very dense, light yellowish brown, wet, subangular to subrounded gravel. — 362 m

359 m

356 m

353 m

Depth	Blows	Sample
E109	35	
54	35	
87	35	

9-14-04

PROFILE

HOR. 1:500
VER. 1:100

162+20 163+00 164+00

LEGEND OF BORING OPERATIONS

ELECTRONIC CONE PENETROMETER TEST — Cone Penetrometer dimensions and testing procedures shall conform with ASTM standard D 5778-95, or as noted.

57 mm CONE PENETRATION BORING

ROTARY SAMPLE BORING (WET)

SAMPLE BORING (DRY)

LEGEND OF EARTH MATERIALS: GRAVEL, SAND, SILT, CLAY, SANDY CLAY or CLAYEY SAND, SANDY SILT or SILTY SAND, SILTY CLAY, CLAYEY SILT, PEAT and/or ORGANIC MATTER, COBBLES and/or BOULDERS, IGNEOUS ROCK, SEDIMENTARY ROCK, METAMORPHIC

CONSISTENCY CLASSIFICATION FOR SOILS — According to the Standard Penetration Test

SPT N-Value (Blows/0.3m)	Granular	SPT N-Value (Blows/0.3m)	Cohesive
0-4	Very Loose	<2	Very Soft
5-10	Loose	2-4	Soft
11-30	Medium Dense	5-8	Firm
31-50	Dense	9-15	Stiff
>50	Very Dense	16-30	Very stiff
		>30	Hard

NOTE: Classification of earth material as shown on this sheet is based upon field inspection and is not to be construed to imply mechanical analysis.

OGS CIVIL LOG OF TEST BORINGS SHEET (METRIC) (REV. 4/04)

Caltrans Metric

ENGINEERING SERVICES	GEOTECHNICAL SERVICES
DRAWN BY	I.G-Remmen 4/09
CHECKED BY	T. Alderman

FIELD INVESTIGATION BY: T. Alderman

STATE OF CALIFORNIA DEPARTMENT OF TRANSPORTATION

DIVISION OF ENGINEERING SERVICES STRUCTURE DESIGN — DESIGN BRANCH 2

BRIDGE NO. 10-0165
KILOMETER POST R74.945

WILLITS BYPASS
FLOODWAY VIADUCT
LOG OF TEST BORINGS 11 OF 16

ALL DIMENSIONS ARE IN METERS UNLESS OTHERWISE SHOWN

ORIGINAL SCALE IN MILLIMETERS FOR REDUCED PLANS 0 10 20 30 40 50 60 70 80 90 100

CU 01
EA 262001

DISREGARD PRINTS BEARING EARLIER REVISION DATES — REVISION DATES (PRELIMINARY STAGE ONLY) 05-17-09 05-19-09

SHEET 83 OF 88

FILE => 10-0165_gulotb11.dgn

USERNAME => s121614 DATE PLOTTED => 28-JAN-2012 TIME PLOTTED => 07:51

DIST	COUNTY	ROUTE	KILOMETER POST TOTAL PROJECT	SHEET No	TOTAL SHEETS
01	Men	101	R69.4/R78.9	823	939

CERTIFIED ENGINEERING GEOLOGIST — 5-21-09 DATE

1-23-12
PLANS APPROVAL DATE

REGISTERED GEOLOGIST — Reid Buell — No. 1481 — Exp. 4-30-11 — CERTIFIED ENGINEERING GEOLOGIST — STATE OF CALIFORNIA

The State of California or its officers or agents shall not be responsible for the accuracy or completeness of electronic copies of this plan sheet.

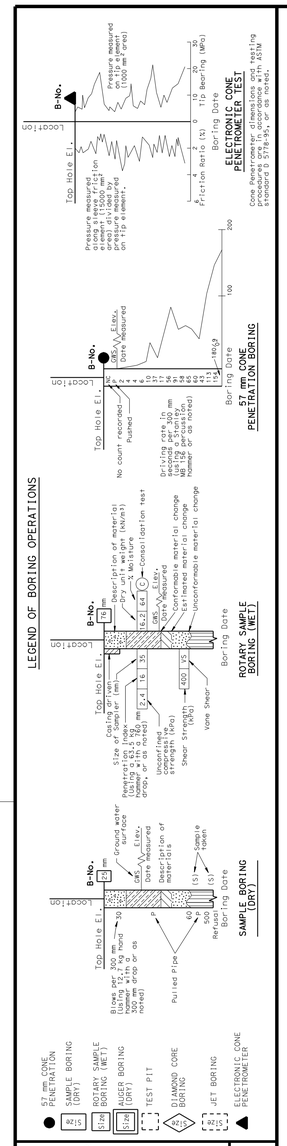

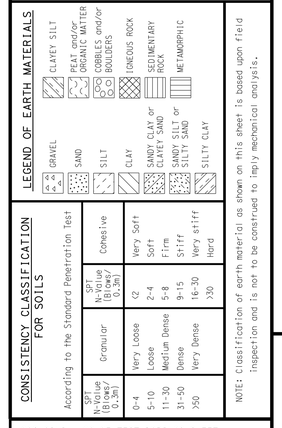

CONSISTENCY CLASSIFICATION FOR SOILS

According to the Standard Penetration Test

SPT N-Value (Blows/ 0.3m)	Granular	SPT N-Value (Blows/ 0.3m)	Cohesive
0-4	Very Loose	<2	Very Soft
5-10	Loose	2-4	Soft
11-30	Medium Dense	5-8	Firm
31-50	Dense	9-15	Stiff
>50	Very Dense	16-30	Very stiff
		>30	Hard

NOTE: Classification of earth material as shown on this sheet is based upon field inspection and is not to be construed to imply mechanical analysis.

OGS CIVIL LOG OF TEST BORINGS SHEET (METRIC) (REV. 4/04)

B-93

5 m Lt Sta 164+20 "W" Line — 409.39

GWS Elev 407.20 — 8-28-08

8-27-08

CLAY (CL), very stiff to hard, light yellowish brown, damp.
-from Elev 409.39 to 407.87, pp = 144 to 431 kPa
CLAYEY SAND with GRAVEL (SC), loose, brown, wet, fine sand, fine rounded gravel.
CLAY (CL), soft to stiff, brown, wet.
-from Elev 406.95 to 405.43, pp = 24 to 144 kPa
CLAY (CL), soft to stiff, mottled gray and yellowish brown, moist.
-from Elev 405.43 to 400.86, pp = 24 to 120 kPa
CLAY with SAND (CL), firm, gray with brown mottling, moist, coarse sand.
-from Elev 400.86 to 399.33, pp = 48 to 96 kPa
CLAY (CL), soft to firm, bluish gray, moist.
-from Elev 399.33 to 396.29, pp = 24 to 96 kPa
CLAYEY SAND with GRAVEL (SC), very loose, bluish gray, moist, coarse sand, fine gravel.
CLAY with fine SAND (CL), very soft to firm, bluish gray, moist.
-at Elev 395.37, pp = 5 to 96 kPa
CLAY (CL), soft to stiff, bluish gray, moist.
-from Elev 395.07 to 390.49, pp = 24 to 120 kPa
CLAYEY SAND with GRAVEL (SC), very loose, bluish gray, moist, fine to medium subrounded to rounded gravel.
CLAY (CL), firm to stiff, bluish gray, moist.
-from Elev 390.19 to 386.84, pp = 48 to 144 kPa
CLAYEY GRAVEL with SAND (GC), dense, bluish gray, moist, fine to medium subrounded to rounded gravel.
CLAYEY SAND with GRAVEL (SC), medium dense, bluish gray, moist, fine to medium rounded gravel.
-from Elev 385.62 to 383.79, pp = 5 to 287 kPa
CLAY (CL), firm, moist, greenish gray.
-from Elev 383.79 to 381.81, pp = 72 to 96 kPa
CLAYEY SAND with GRAVEL (SC), medium dense to dense, brown, moist, fine to medium subrounded to rounded gravel.
-from Elev 381.81 to 379.83, pp = 24 to 431 kPa
CLAYEY GRAVEL with SAND (GC), very dense, grayish brown, moist, fine to coarse subrounded to rounded gravel.
CLAY (CL), stiff, bluish gray, moist.
-from Elev 378.00 to 376.17, pp = 96 to 144 kPa
Well-graded GRAVEL with CLAY and SAND (GW-GC), dense, brown, moist, fine to coarse rounded gravel.
CLAYEY GRAVEL with SAND (GC), medium dense to dense, brown, moist, fine to medium rounded gravel.

B-19

92 m Lt Sta 164+86 "W" Line — 410.00

GWS Elev 407.87 — 8-28-08

10-14-04

SILT (ML), very loose, brown with gray mottling, moist.
-at Elev 408.47, pp = 48 to 72 kPa
CLAY with GRAVEL (CL), firm to very stiff, brown with gray mottling, moist to wet.
-at Elev 406.95, pp = 72 to 192 kPa
CLAY (CL), stiff to very stiff, dark greenish gray, moist to wet.
-at Elev 405.43, pp = 96 to 120 kPa
-at Elev 403.90, pp = 96 to 168 kPa
-at Elev 402.35, pp = 48 to 96 kPa
CLAY (CL), firm, olive brown with gray mottling, moist to wet.
-at Elev 400.85, pp = 48 to 96 kPa
CLAY (CL), firm to stiff, dark greenish gray, moist to wet.
-at Elev 399.33, pp = 48 to 120 kPa
-at Elev 397.81, pp = 72 to 96 kPa
Well-graded SAND with SILT and GRAVEL (SW-SM), medium dense, greenish black, moist.
CLAY (CL), firm to stiff, greenish black, moist.
-at Elev 394.76, pp = 96 kPa
-from elev. 393.69 to 386.53, pp = 96 to 144 kPa
-from Elev 386.53 to 385.61, pp = 48 to 72 kPa
-from Elev 385.61 to 383.33, pp = 96 to 120 kPa
Well-graded GRAVEL with SILT and SAND (GW-GM), dense, dark greenish gray, moist, subangular to subrounded gravel.
SILTY SAND (SM), medium dense, dark greenish gray with rust brown staining, wet, very fine to fine sand.
Well-graded GRAVEL with SILT and SAND (GW-GM), dense, dark brown to dark yellowish brown, wet, subangular to subrounded gravel.
CLAY (CL), very stiff, dark greenish gray, moist.
-at Elev 377.84, pp = 144 to 168 kPa
Well-graded GRAVEL with SILT and SAND (GW-GM), dense to very dense, dark brown to dark yellowish brown, wet, subangular to subrounded gravel.

FOR PLAN VIEW, SEE "LOG OF TEST BORINGS" 1 OF 16

Well-graded SAND with SILT (SW-SM), very dense, dark brown to reddish brown, wet, very fine to medium sand.

410 m, 407 m, 404 m, 401 m, 398 m, 395 m, 392 m, 389 m, 386 m, 383 m, 380 m, 377 m, 374 m, 371 m, 368 m, 365 m

164+20, 164+50, 165+00

PROFILE
HOR. 1:200
VER. 1:100

Caltrans Metric

ENGINEERING SERVICES	GEOTECHNICAL SERVICES
DRAWN BY	I.G-Remmen 4/09
CHECKED BY	T. Alderman

FIELD INVESTIGATION BY: T. Alderman

STATE OF CALIFORNIA DEPARTMENT OF TRANSPORTATION

DIVISION OF ENGINEERING SERVICES STRUCTURE DESIGN — DESIGN BRANCH 2

BRIDGE NO. 10-0165
KILOMETER POST R74.945

WILLITS BYPASS
FLOODWAY VIADUCT
LOG OF TEST BORINGS 12 OF 16

ALL DIMENSIONS ARE IN METERS UNLESS OTHERWISE SHOWN

ORIGINAL SCALE IN MILLIMETERS FOR REDUCED PLANS 0 10 20 30 40 50 60 70 80 90 100

CU 01
EA 262001

DISREGARD PRINTS BEARING EARLIER REVISION DATES — REVISION DATES (PRELIMINARY STAGE ONLY) 05-14-09 05-19-09

SHEET 84 OF 88

FILE => 10-0165_gulotb12.dgn

USERNAME => s121614 DATE PLOTTED => 28-JAN-2012 TIME PLOTTED => 07:51

DIST	COUNTY	ROUTE	KILOMETER POST TOTAL PROJECT	SHEET No	TOTAL SHEETS
01	Men	101	R69.4/R78.9	824	939

CERTIFIED ENGINEERING GEOLOGIST — 5-21-09 DATE

REGISTERED GEOLOGIST — Reid Buell No. 1481 Exp. 4-30-11 CERTIFIED ENGINEERING GEOLOGIST — STATE OF CALIFORNIA

1-23-12
PLANS APPROVAL DATE

The State of California or its officers or agents shall not be responsible for the accuracy or completeness of electronic copies of this plan sheet.

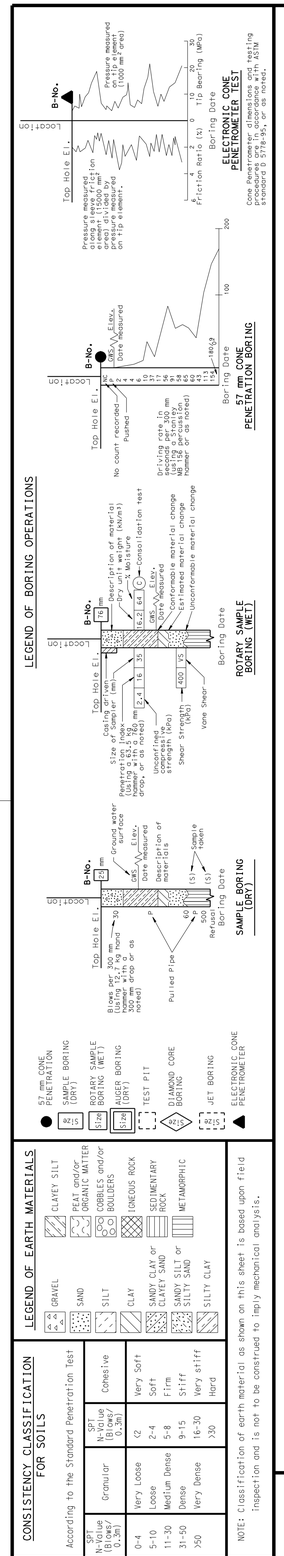

OGS CIVIL LOG OF TEST BORINGS SHEET (METRIC) (REV. 4/04)

FOR PLAN VIEW, SEE "LOG OF TEST BORINGS" 1 OF 16

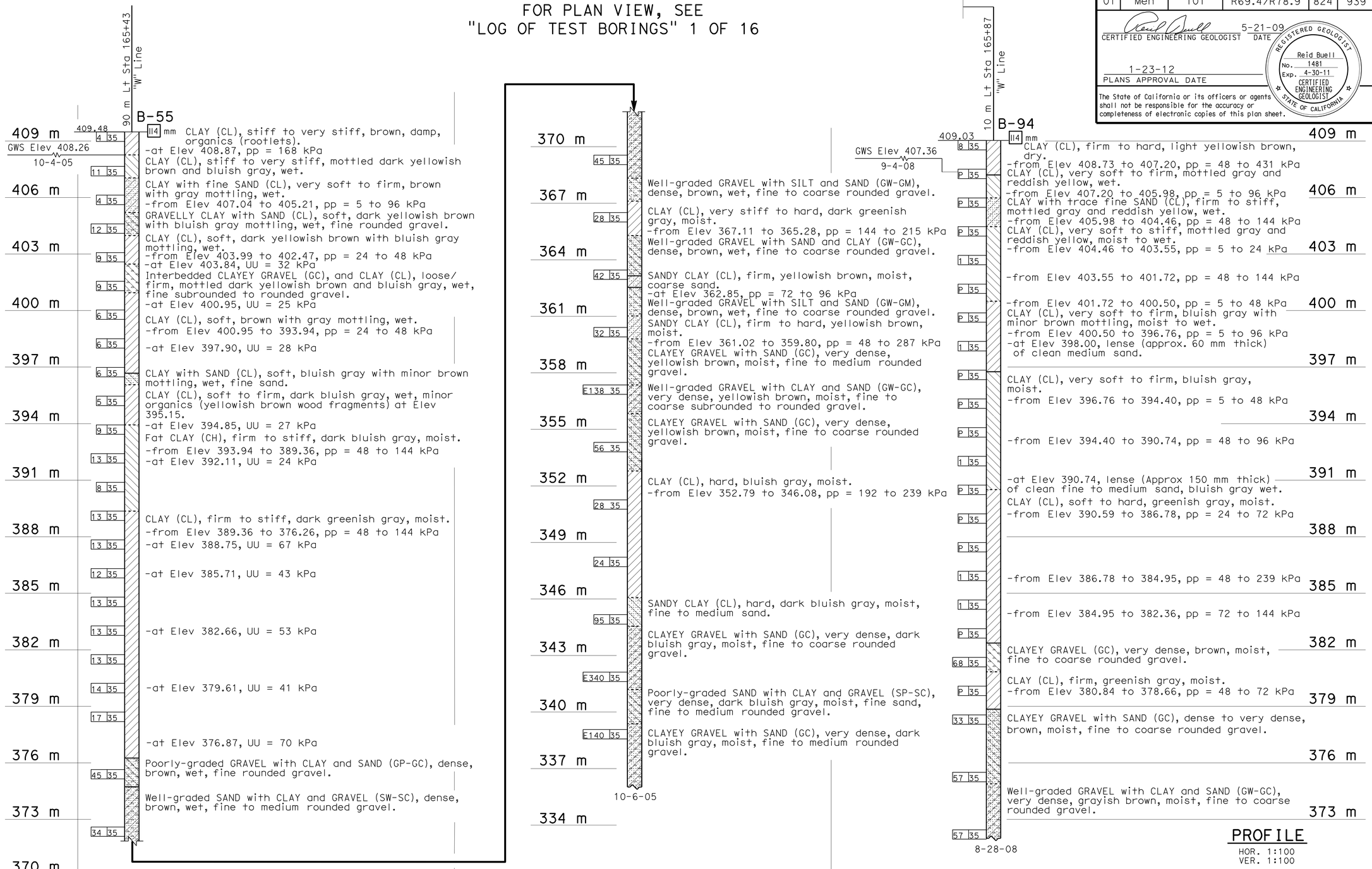

PROFILE
HOR. 1:100
VER. 1:100

Caltrans Metric

ENGINEERING SERVICES	GEOTECHNICAL SERVICES
DRAWN BY	I.G-Remmen 4/09
CHECKED BY	T. Alderman

FIELD INVESTIGATION BY: T. Alderman

STATE OF CALIFORNIA DEPARTMENT OF TRANSPORTATION

DIVISION OF ENGINEERING SERVICES STRUCTURE DESIGN DESIGN BRANCH 2

BRIDGE NO. 10-0165
KILOMETER POST R74.945

WILLITS BYPASS
FLOODWAY VIADUCT
LOG OF TEST BORINGS 13 OF 16

ALL DIMENSIONS ARE IN METERS UNLESS OTHERWISE SHOWN

ORIGINAL SCALE IN MILLIMETERS FOR REDUCED PLANS 0 10 20 30 40 50 60 70 80 90 100

CU 01
EA 262001

DISREGARD PRINTS BEARING EARLIER REVISION DATES — REVISION DATES (PRELIMINARY STAGE ONLY) 05-13-09 05-19-09

SHEET 85 OF 88

FILE => 10-0165_gulotb13.dgn

USERNAME => s12614 DATE PLOTTED => 28-JAN-2012 TIME PLOTTED => 07:52

DIST	COUNTY	ROUTE	KILOMETER POST TOTAL PROJECT	SHEET No	TOTAL SHEETS
01	Men	101	R69.4/R78.9	825	939

CERTIFIED ENGINEERING GEOLOGIST — DATE 5-21-09

REGISTERED GEOLOGIST — Reid Buell No. 1481 Exp. 4-30-11 — CERTIFIED ENGINEERING GEOLOGIST — STATE OF CALIFORNIA

1-23-12
PLANS APPROVAL DATE

The State of California or its officers or agents shall not be responsible for the accuracy or completeness of electronic copies of this plan sheet.

FOR PLAN VIEW, SEE
"LOG OF TEST BORINGS" 1 OF 16

B-18

83 m Lt Sta 166+05
"W" Line

114 mm — 409.35

GWS Elev 407.52
10-14-04

CLAY with SAND (CL), stiff, mottled gray and brown, moist, fine sand.
-from Elev 407.52 to 404.78, pp = 96 to 144 kPa

-from Elev 404.78 to 401.27, pp = 24 to 72 kPa

-at Elev 402.34, UU = 30 kPa
-at Elev 402.19, qu = 67 kPa

CLAY with SAND (CL), very soft to firm, reddish brown with gray mottling, wet.
-at Elev 399.44, qu = 38 kPa

GRAVELLY CLAY with SAND (CL), very soft to firm, reddish brown with gray mottling, wet, subrounded gravel.
-from Elev 401.27 to 398.07, pp = 5 to 96 kPa

CLAY (CL), soft to very stiff, dark gray, moist.
-at Elev 397.77, pp = 48 kPa

-from Elev 397.16 to 393.19 pp = 24 to 50 kPa
-at Elev 396.09, qu = 67 kPa
-at Elev 395.94, UU = 35 kPa

-at Elev 393.35, UU = 50 kPa
-at Elev 393.20, qu = 96 kPa
-from Elev 393.19 to 392.28, pp = 72 to 96 kPa

-from Elev 392.28 to 388.62, pp = 96 to 144 kPa

-at Elev 390.30, UU = 63 kPa
-at Elev 390.15, qu = 96 kPa

-from Elev 388.62 to 387.10, pp = 48 to 144 kPa

-at Elev 387.10, UU = 67 kPa
-at Elev 386.95, qu = 124 kPa
-from Elev 387.10 to 382.53, pp = 96 to 215 kPa

-at Elev 384.05, UU = 59 kPa
-at Elev 383.90, qu = 124 kPa

CLAYEY SAND with GRAVEL (SC), very dense, grayish brown, wet, fine to coarse subrounded gravel.
-from Elev 382.53 to 381.00, pp=96 kPa
-from Elev 381.00 to 376.13, pp=333 to >431 kPa

Well-graded GRAVEL with CLAY and SAND (GW-GC), very dense, reddish brown, moist to wet, sub-angular to rounded fine to coarse gravel.

Well-graded GRAVEL with CLAY and SAND (GW-GC), very dense, reddish brown, moist to wet, subangular to rounded fine to coarse gravel.

GRAVELLY CLAY with SAND (CL), hard, reddish brown, moist, wet.
-from Elev 370.03 to 368.51, pp > 431 kPa

CLAY (CL), very stiff to hard, dark gray, moist.
-from Elev 368.51 to 365.15, pp = 144 to 239 kPa

Well-graded GRAVEL with CLAY and SAND (GW-GC), very dense, brown, wet, subrounded to fine to coarse gravel.

Well-graded SAND with CLAY and GRAVEL (SW-SC), very dense, reddish brown, wet, subangular to subrounded gravel.

10-14-04

B-95

5 m Lt Sta 166+85
"W" Line

114 mm — 408.53

GWS Elev 407.10
9-5-08

CLAY (CL), soft to very stiff, mottled brown and gray, damp to moist.

-from Elev 407.62 to 403.96, pp = 48 to 192 kPa

CLAYEY SAND with GRAVEL (SC), very loose, mottled brown and gray, wet, fine to coarse sand, fine rounded gravel.

CLAY (CL), very soft to soft, mottled gray and brown, wet.
-from Elev 403.96 to 401.52, pp = 3 to 48 kPa

Well-graded SAND with CLAY and GRAVEL (SW-SC), very loose, grayish brown, wet, fine rounded gravel.

CLAY (CL), soft to hard, bluish gray, moist.
-from Elev 400.00 to 398.32, pp = 9 to 24 kPa

-from Elev 398.32 to 392.07, pp = 24 to 72 kPa

-from Elev 392.07 to 387.19, pp = 72 to 120 kPa

-from Elev 387.19 to 384.30, pp = 9 to 240 kPa

CLAYEY GRAVEL with SAND (GC), dense, brown, wet, fine to medium sand, fine to medium round gravel.

Fine SANDY CLAY (CL), stiff to hard, brown, wet.

CLAY (CL), firm to hard, greenish gray, moist.
-from Elev 383.38 to 380.79, pp = 48 to 431 kPa

CLAYEY GRAVEL with SAND (GC), medium dense, yellowish brown, moist, fine to medium sand, fine to medium rounded gravel.

CLAY (CL), stiff to hard, greenish gray, moist.
-from Elev 379.88 to 378.35, pp = 96 to 431 kPa

CLAYEY GRAVEL with SAND (GC), dense, yellowish brown, moist, fine sand, fine to coarse, rounded gravel.

Well-graded GRAVEL with CLAY and SAND (GW-GC), dense, grayish brown, moist, fine to coarse sand, fine to coarse rounded gravel.

CLAYEY GRAVEL with SAND (GC), dense, yellowish brown, moist, fine to coarse sand, fine to coarse rounded gravel.

CLAY (CL), stiff to very stiff, greenish gray, moist.
-from Elev 370.12 to 368.45, pp = 96 to 192 kPa

9-4-08

PROFILE
HOR. 1:200
VER. 1:100

409 m, 406 m, 403 m, 400 m, 397 m, 394 m, 391 m, 388 m, 385 m, 382 m, 379 m, 376 m, 373 m, 370 m, 367 m

166+00 166+50 167+00

LEGEND OF BORING OPERATIONS

ELECTRONIC CONE PENETROMETER TEST — Cone Penetrometer dimensions and testing procedures shall conform to ASTM standard D 5778-95, or as noted.

57 mm CONE PENETRATION BORING

ROTARY SAMPLE BORING (WET)

SAMPLE BORING (DRY)

57 mm CONE PENETRATION | SAMPLE BORING (DRY) | ROTARY SAMPLE BORING (WET) | AUGER BORING (DRY) | TEST PIT | DIAMOND CORE BORING | JET BORING | ELECTRONIC CONE PENETROMETER

LEGEND OF EARTH MATERIALS

GRAVEL | SAND | SILT | CLAY | SANDY CLAY or CLAYEY SAND | SANDY SILT or SILTY SAND | SILTY CLAY | CLAYEY SILT | PEAT and/or ORGANIC MATTER | COBBLES and/or BOULDERS | IGNEOUS ROCK | SEDIMENTARY ROCK | METAMORPHIC

CONSISTENCY CLASSIFICATION FOR SOILS

According to the Standard Penetration Test

SPT N-Value (Blows/0.3m)	Granular	SPT N-Value (Blows/0.3m)	Cohesive
0-4	Very Loose	<2	Very Soft
5-10	Loose	2-4	Soft
11-30	Medium Dense	5-8	Firm
31-50	Dense	9-15	Stiff
>50	Very Dense	16-30	Very stiff
		>30	Hard

NOTE: Classification of earth material as shown on this sheet is based upon field inspection and is not to be construed to imply mechanical analysis.

OGS CIVIL LOG OF TEST BORINGS SHEET (METRIC) (REV. 4/04)

Caltrans Metric

ENGINEERING SERVICES	GEOTECHNICAL SERVICES
DRAWN BY	I.G-Remmen 4/09
CHECKED BY	T. Alderman

FIELD INVESTIGATION BY: T. Alderman

STATE OF CALIFORNIA
DEPARTMENT OF TRANSPORTATION

DIVISION OF ENGINEERING SERVICES
STRUCTURE DESIGN
DESIGN BRANCH 2

BRIDGE NO. 10-0165
KILOMETER POST R74.945

CU 01
EA 262001

ALL DIMENSIONS ARE IN METERS UNLESS OTHERWISE SHOWN

ORIGINAL SCALE IN MILLIMETERS FOR REDUCED PLANS 0 10 20 30 40 50 60 70 80 90 100

DISREGARD PRINTS BEARING EARLIER REVISION DATES — REVISION DATES (PRELIMINARY STAGE ONLY) 05-13-09 05-19-09

WILLITS BYPASS
FLOODWAY VIADUCT
LOG OF TEST BORINGS 14 OF 16

SHEET 86 OF 88

FILE => 10-0165_gulotb14.dgn

USERNAME => s12164 DATE PLOTTED => 28-JAN-2012 TIME PLOTTED => 07:52

DIST	COUNTY	ROUTE	KILOMETER POST TOTAL PROJECT	SHEET No	TOTAL SHEETS
01	Men	101	R69.4/R78.9	826	939

CERTIFIED ENGINEERING GEOLOGIST — 5-21-09 DATE

REGISTERED GEOLOGIST — Reid Buell — No. 1481 — Exp. 4-30-11 — CERTIFIED ENGINEERING GEOLOGIST — STATE OF CALIFORNIA

1-23-12
PLANS APPROVAL DATE

The State of California or its officers or agents shall not be responsible for the accuracy or completeness of electronic copies of this plan sheet.

FOR PLAN VIEW, SEE
"LOG OF TEST BORINGS" 1 OF 16

75 m Lt Sta 167+27 "W" Line

B-12

114 mm

409 m — 408.88

GWS Elev 407.47
7-15-04

CLAY with SAND (CL), firm to very stiff, dark brown with gray mottling, moist to wet.

406 m

-from Elev 407.35 to 404.99, pp = 48 to 192 kPa
-at Elev 406.74, UU = 43 kPa
Well-graded GRAVEL with SAND (GW), loose, dark brown, wet.

403 m

CLAY (CL), firm, dark greenish gray with yellowish brown mottling, wet.
-from Elev 403.69 to 402.17, pp = 5 to 96 kPa

CLAYEY GRAVEL (GC), very loose to loose, dark brown, wet.
CLAY with SAND (CL), very soft to hard, dark brown, wet.
-from Elev 401.86 to 400.34, pp = 5 to 239 kPa

400 m

Interbedded SANDY CLAY (CL) and GRAVEL (GW), loose, dark gray, wet.
SANDY CLAY (CL), very soft to firm, dark gray, wet.
CLAY with GRAVEL (CL), firm, dark gray, wet.
-from Elev 399.88 to 398.82, pp = 5 to 96 kPa
-at Elev 398.97, UU = 37 kPa
CLAY (CL), very soft to stiff, dark bluish gray, moist.

397 m

-from Elev 397.60 to 395.16, pp = 5 to 48 kPa
-at Elev 397.44, UU = 36 kPa
-from Elev 395.16 to 393.02, pp = 96 kPa
-at Elev 394.55, UU = 36 kPa

394 m

-from Elev 393.02 to 389.98, pp = 48 to 144 kPa

391 m

SANDY CLAY (CL), firm to very stiff, dark bluish gray, moist.
-at Elev 389.21, organics (wood fragments).

388 m

-from Elev 389.98 to 386.62, pp = 72 to 192 kPa
-at Elev 388.30, UU = 182 kPa
CLAY (CL), firm to hard, dark bluish gray, moist.
-from Elev 386.62 to 386.01, pp = 192 to 263 kPa

385 m

SANDY CLAY (CL), firm, dark bluish gray, wet.
-from Elev 386.01 to 384.79, pp = 48 to 96 kPa
Well-graded GRAVEL with CLAY and SAND (GW-GC), medium dense, dark yellowish brown, wet.
CLAY (CL), stiff, dark bluish gray, moist.

382 m

-from Elev 383.58 to 381.75, pp = 120 kPa
-at Elev 382.05, qu = 105 kPa
Well-graded GRAVEL with CLAY and SAND (GW-GC), very dense, dark yellowish brown, moist.

379 m

CLAY (CL), firm to stiff, dark bluish gray, moist.
-from Elev 379.61 to 378.70, pp = 48 to 144 kPa
Well-graded GRAVEL with CLAY and SAND (GW-GC), dense, dark yellowish brown, moist.

376 m

CLAY with SAND (CL), firm, dark bluish gray, moist.

374 m

-from Elev 376.26 to 374.43, pp = 48 to 72 kPa
Poorly-graded SAND (SP) interbedded with Well-graded GRAVEL with CLAY and SAND (GW-GC), dense, dark bluish gray, moist.

373 m

CLAY (CL), stiff to very stiff, dark bluish gray, moist.
-from Elev 373.52 to 371.38, pp = 120 to 192 kPa
-at Elev 372.60, qu = 182 kPa
SILTY SAND with GRAVEL (SM), dense, dark bluish gray, moist.

370 m

CLAY (CL), stiff to very stiff, dark bluish gray, moist.
-from Elev 370.16 to 366.81, pp = 144 kPa
-at Elev 368.64, qu = 172 kPa

367 m

SILTY SAND with GRAVEL (SM), very dense, dark bluish gray, wet.

364 m

CLAY (CL), stiff to hard, dark bluish gray, moist.
-from Elev 364.68 to 363.15, pp = 96 to 144 kPa
-from Elev 363.15 to 360.41, pp = 192 to 287 kPa
-at Elev 361.63, qu = 211 kPa

361 m

CLAYEY SAND with GRAVEL (SC), dense, dark yellowish brown, wet.
SILTY SAND with GRAVEL (SM), dense, dark yellowish brown, wet.

358 m

CLAY (CL), hard, greenish gray, moist.
-from Elev 357.67 to 356.14, pp = 192 to 287 kPa
-at Elev 357.36, qu = 297 kPa
CLAYEY SAND with GRAVEL (SC), medium dense to dense, dark bluish gray, wet.

355 m

CLAY (CL), very stiff to hard, dark bluish gray, moist.
-from Elev 354.31 to 351.88, pp = 144 to 215 kPa
Poorly-graded SAND (SP) interbedded with Well-graded SAND with SILT and GRAVEL (SW-SM), very dense, dark bluish gray, wet.

352 m

349 m

346 m

6 35 | 8 35 | 4 35 | 6 35 | 3 35 | 7 35 | 6 35 | 4 35 | 10 35 | 9 35 | 11 35 | 13 35 | 10 35 | 22 35 | 13 35 | 13 35 | 19 35 | 85 35 | 44 35 | 35 35 | 43 35 | 19 35 | 72 35 | 31 35 | 40 35 | 24 35 | REF 35

7-15-04

167+20 — 167+50

PROFILE
HOR. 1:200
VER. 1:100

LEGEND OF BORING OPERATIONS

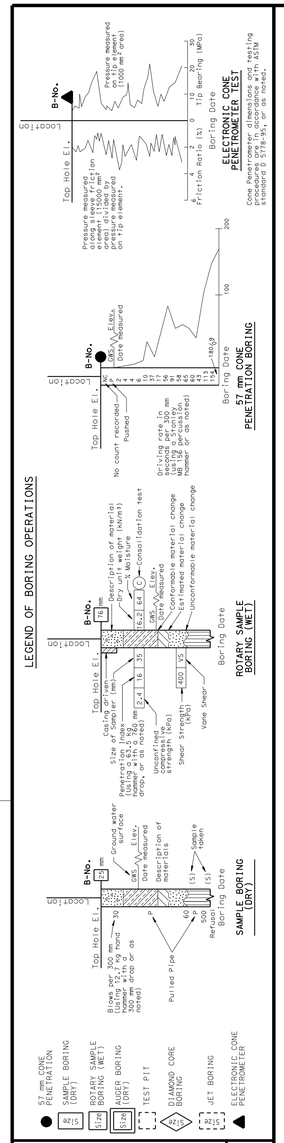

LEGEND OF EARTH MATERIALS

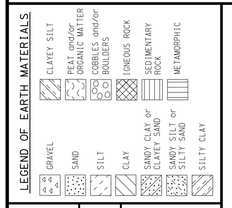

CONSISTENCY CLASSIFICATION FOR SOILS
According to the Standard Penetration Test

SPT N-Value (Blows/0.3m)	Granular	SPT N-Value (Blows/0.3m)	Cohesive
0-4	Very Loose	<2	Very Soft
5-10	Loose	2-4	Soft
11-30	Medium Dense	5-8	Firm
31-50	Dense	9-15	Stiff
>50	Very Dense	16-30	Very stiff
		>30	Hard

NOTE: Classification of earth material as shown on this sheet is based upon field inspection and is not to be construed to imply mechanical analysis.

OGS CIVIL LOG OF TEST BORINGS SHEET (METRIC) (REV. 4/04)

Caltrans Metric

ENGINEERING SERVICES	GEOTECHNICAL SERVICES
DRAWN BY	I.G-Remmen 4/09
CHECKED BY	T. Alderman

FIELD INVESTIGATION BY: T. Alderman

STATE OF CALIFORNIA DEPARTMENT OF TRANSPORTATION

DIVISION OF ENGINEERING SERVICES STRUCTURE DESIGN — DESIGN BRANCH 2

BRIDGE NO. 10-0165
KILOMETER POST R74.945

WILLITS BYPASS
FLOODWAY VIADUCT
LOG OF TEST BORINGS 15 OF 16

ALL DIMENSIONS ARE IN METERS UNLESS OTHERWISE SHOWN

ORIGINAL SCALE IN MILLIMETERS FOR REDUCED PLANS 0 10 20 30 40 50 60 70 80 90 100

CU 01
EA 262001

DISREGARD PRINTS BEARING EARLIER REVISION DATES — REVISION DATES (PRELIMINARY STAGE ONLY) 05-14-09 05-19-09

SHEET 87 OF 88

FILE => 10-0165_gulotb15.dgn

USERNAME => s12614 DATE PLOTTED => 28-JAN-2012 TIME PLOTTED => 07:52

DIST	COUNTY	ROUTE	KILOMETER POST TOTAL PROJECT	SHEET No	TOTAL SHEETS
01	Men	101	R69.4/R78.9	827	939

CERTIFIED ENGINEERING GEOLOGIST 5-21-09 DATE

REGISTERED GEOLOGIST Reid Buell No. 1481 Exp. 4-30-11 CERTIFIED ENGINEERING GEOLOGIST STATE OF CALIFORNIA

1-23-12
PLANS APPROVAL DATE

The State of California or its officers or agents shall not be responsible for the accuracy or completeness of electronic copies of this plan sheet.

FOR PLAN VIEW, SEE
"LOG OF TEST BORINGS" 1 OF 16

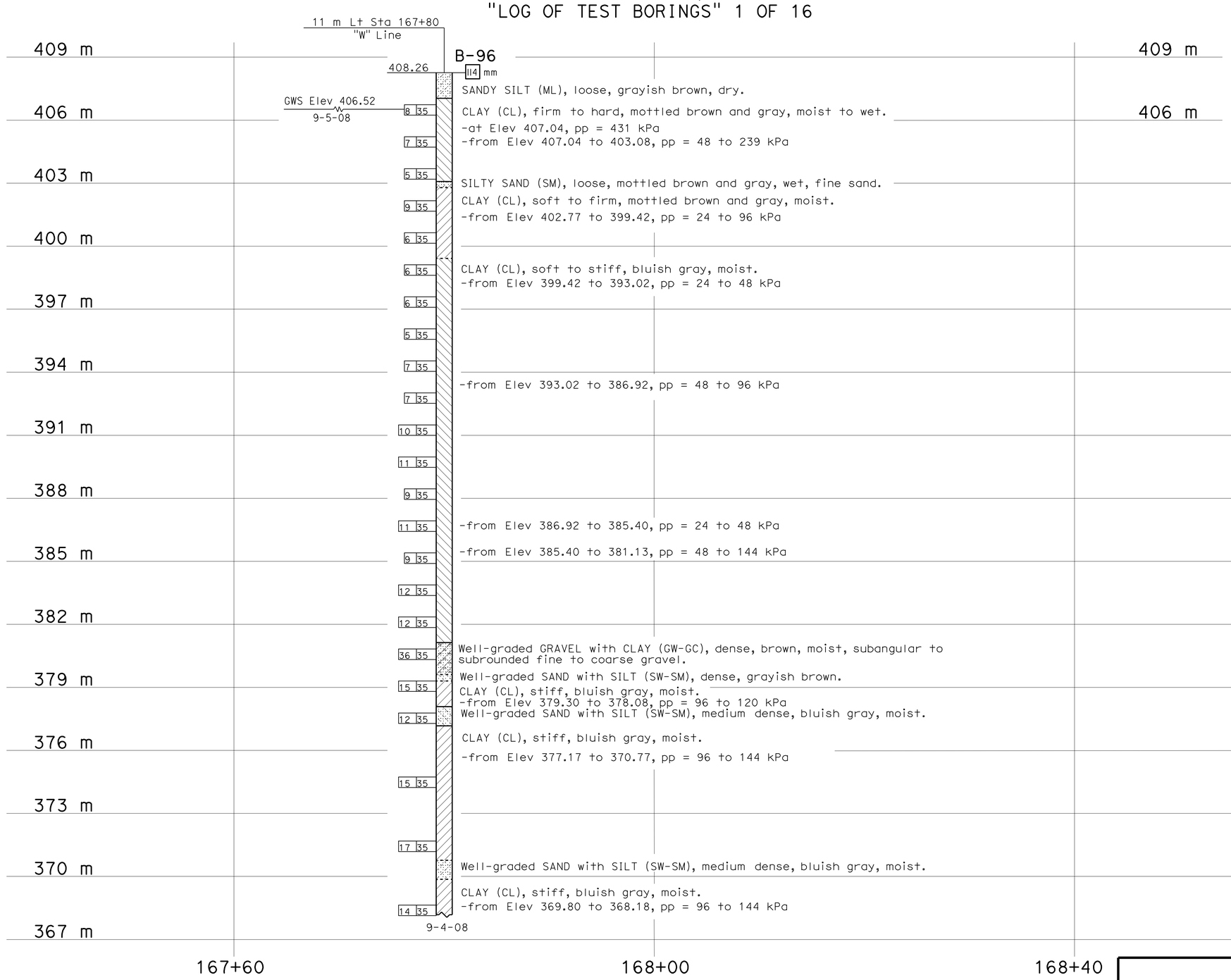

PROFILE
HOR. 1:200
VER. 1:100

LEGEND OF BORING OPERATIONS

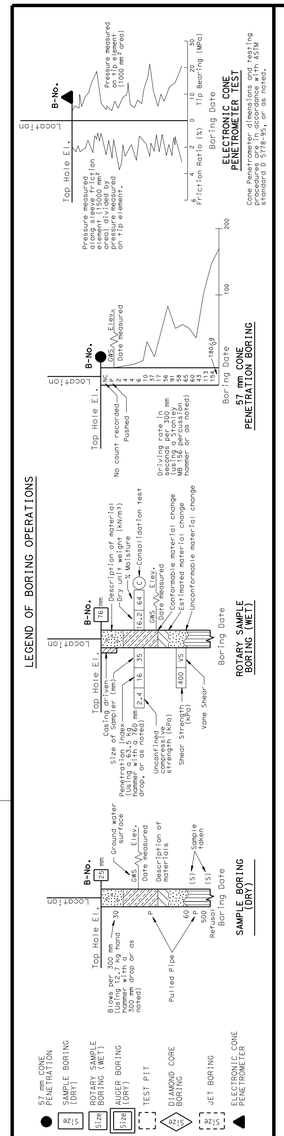

LEGEND OF EARTH MATERIALS

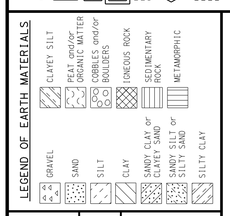

CONSISTENCY CLASSIFICATION FOR SOILS

According to the Standard Penetration Test

SPT N-Value (Blows/0.3m)	Granular	SPT N-Value (Blows/0.3m)	Cohesive
0-4	Very Loose	<2	Very Soft
5-10	Loose	2-4	Soft
11-30	Medium Dense	5-8	Firm
31-50	Dense	9-15	Stiff
>50	Very Dense	16-30	Very stiff
		>30	Hard

NOTE: Classification of earth material as shown on this sheet is based upon field inspection and is not to be construed to imply mechanical analysis.

OGS CIVIL LOG OF TEST BORINGS SHEET (METRIC) (REV. 4/04)

Caltrans Metric

ENGINEERING SERVICES | GEOTECHNICAL SERVICES

DRAWN BY I.G-Remmen 4/09
CHECKED BY T. Alderman

FIELD INVESTIGATION BY: T. Alderman

STATE OF CALIFORNIA DEPARTMENT OF TRANSPORTATION

DIVISION OF ENGINEERING SERVICES STRUCTURE DESIGN
DESIGN BRANCH 2

BRIDGE NO. 10-0165
KILOMETER POST R74.945

WILLITS BYPASS
FLOODWAY VIADUCT
LOG OF TEST BORINGS 16 OF 16

ALL DIMENSIONS ARE IN METERS UNLESS OTHERWISE SHOWN

ORIGINAL SCALE IN MILLIMETERS FOR REDUCED PLANS 0 10 20 30 40 50 60 70 80 90 100

CU 01
EA 262001

DISREGARD PRINTS BEARING EARLIER REVISION DATES

REVISION DATES (PRELIMINARY STAGE ONLY) 05-12-09 05-19-09

SHEET 88 OF 88

FILE => 10-0165_gulotb16.dgn

USERNAME => s12614 DATE PLOTTED => 28-JAN-2012 TIME PLOTTED => 07:52

DIST	COUNTY	ROUTE	KILOMETER POST TOTAL PROJECT	SHEET No	TOTAL SHEETS
01	Men	101	R69.4/R78.9	828	939

REGISTERED CIVIL ENGINEER 9-15-11 DATE

1-23-12
PLANS APPROVAL DATE

REGISTERED PROFESSIONAL ENGINEER M. Friedheim No. 57968 Exp. 06-30-12 CIVIL STATE OF CALIFORNIA

The State of California or its officers or agents shall not be responsible for the accuracy or completeness of electronic copies of this plan sheet.

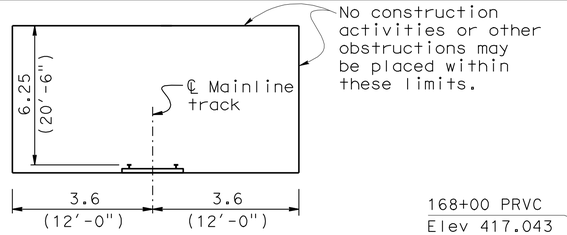

MINIMUM TEMPORARY CONSTRUCTION CLEARANCE

(Measured normal to railroad)
(All railroad tracks not shown)
NO SCALE

RAILROAD NOTES:

1. Drainage from the overhead shall be diverted away from NWPRR tracks and shall not be discharged onto the tracks.
2. All temporary shoring shall be designed to meet NWPRR requirements.
3. Temporary shoring must be designed according to the requirement identified in the BNSF/UPRR guidelines for temporary shoring published October 25, 2004.
4. Contractor shall verify existing top of rail elevations prior to beginning of construction.

NOTES:

1. Structure Approach Slab, Type N(9S)
2. Metal Beam Guardrail, see Road Plans
3. Concrete Barrier Type 736 mod with architectural treatment and Chain Link Railing Type 7 mod
4. Minimum vertical clearance: 7.1 m (23'-4")
5. Paint "Quail Meadows OH"
6. Paint Bridge Number and Year Constructed
7. For Treatment on Walls, see "Aesthetic Details" sheet
8. Scupper drain, see "Typical Section" for details
9. See Road Plans for wick drain design at abutment

Indicates point of minimum vertical clearance
Indicates direction of flow in drainage ditch

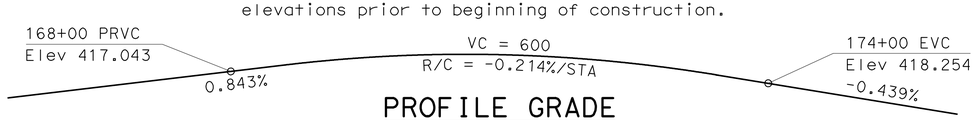

PROFILE GRADE

NO SCALE

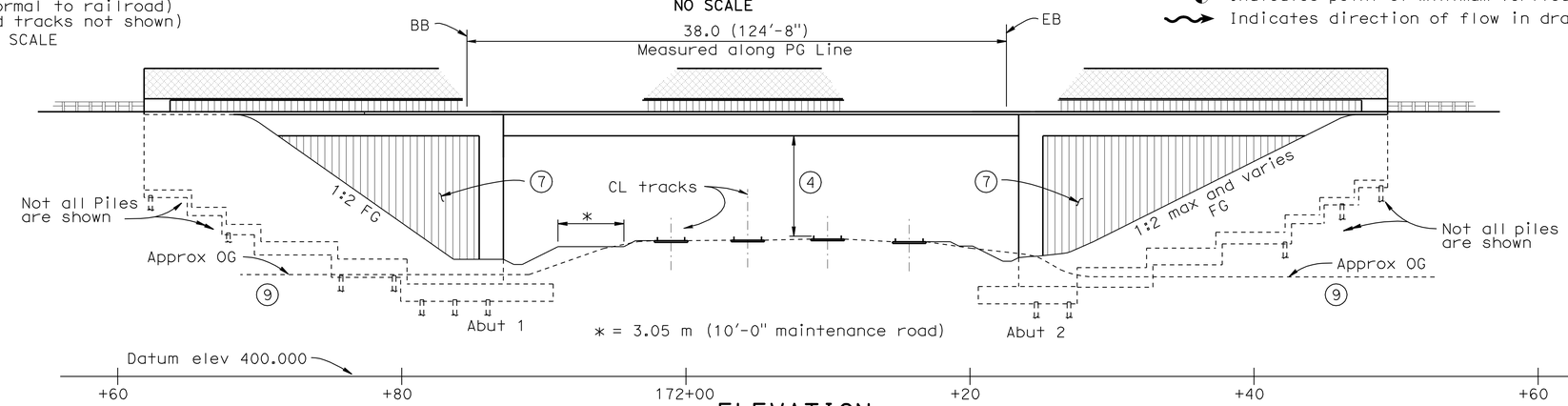

ELEVATION

1:200

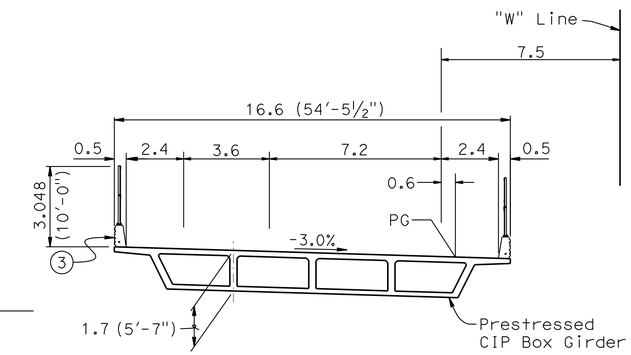

TYPICAL SECTION

1:125

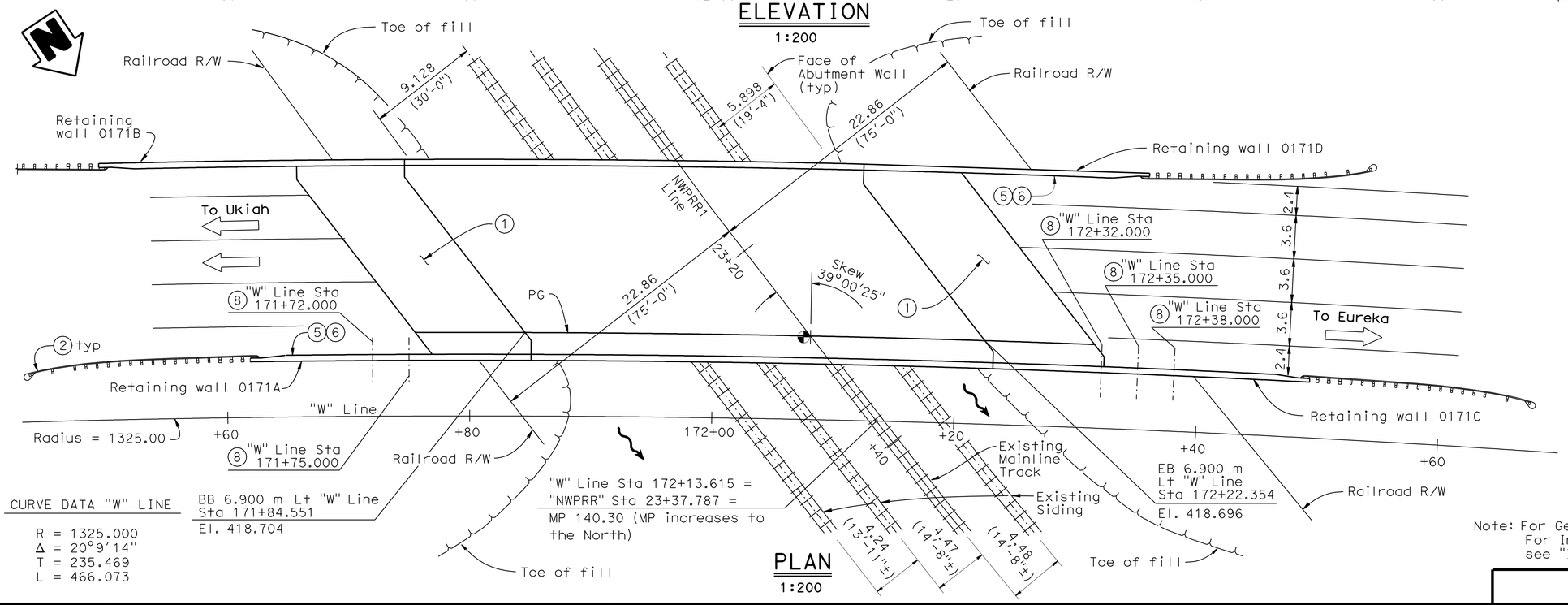

PLAN

1:200

CURVE DATA "W" LINE

R = 1325.000
Δ = 20°9'14"
T = 235.469
L = 466.073

BB 6.900 m Lt "W" Line Sta 171+84.551
El. 418.704

QUAIL MEADOWS OH 10-0171
QUANTITIES

STRUCTURE EXCAVATION (BRIDGE)	776	m^3
STRUCTURE EXCAVATION (RETAINING WALL)	2 500	m^3
STRUCTURE BACKFILL (BRIDGE)	1 560	m^3
STRUCTURE BACKFILL (RETAINING WALL)	2 750	m^3
PERVIOUS BACKFILL MATERIAL (RETAINING WALL)	74	m^3
FURNISH STEEL PILING (HP 250 X 62)	6 534	m
DRIVE STEEL PILE (HP 250 X 62)	216	EA
FURNISH STEEL PILING (HP 360 X 132)	3 252	m
DRIVE STEEL PILE (HP 360 X 132)	118	EA
PRESTRESSING CAST-IN-PLACE CONCRETE	LUMP	SUM
STRUCTURAL CONCRETE, BRIDGE FOOTING	329	m^3
STRUCTURAL CONCRETE, BRIDGE	803	m^3
STRUCTURAL CONCRETE, RETAINING WALL	816	m^3
STRUCTURAL CONCRETE, APPROACH SLAB (TYPE N)	90	m^3
ARCHITECTURAL TEXTURE	288	m^2
JOINT SEAL (MR 40 MM)	42	m
BAR REINFORCING STEEL (BRIDGE)	120 500	kg
BAR REINFORCING STEEL (RETAINING WALL)	80 200	kg
CHAIN LINK RAILING (TYPE 7)	176	m
CONCRETE BARRIER (TYPE 736 MODIFIED)	176	m

Note: For General Notes, see "Deck Contours" sheet.
For Index to Plans, Standard Plans and Pile Data Table, see "Index to Plans" sheet.

Caltrans Metric

DESIGN ENGINEER

	BY	CHECKED				
DESIGN	T. Bui	I. Chernioglo	LOAD FACTOR DESIGN	LIVE LOADING: HS20-44 AND ALTERNATIVE AND PERMIT DESIGN LOAD		
DETAILS	J. Yang/E. Montevirgen/GS	I. Chernioglo	LAYOUT	M. Friedheim	T. Bui	
QUANTITIES	I. Chernioglo	T. Bui	SPECIFICATIONS	I. Huang	PLANS AND SPECS COMPARED I. Huang	

ALL DIMENSIONS ARE IN METERS UNLESS OTHERWISE SHOWN

ORIGINAL SCALE IN MILLIMETERS FOR REDUCED PLANS 0 10 20 30 40 50 60 70 80 90 100

STATE OF CALIFORNIA
DEPARTMENT OF TRANSPORTATION

DIVISION OF ENGINEERING SERVICES
STRUCTURE DESIGN
DESIGN BRANCH 2

CU 01
EA 262001

BRIDGE NO. 10-0171
KILOMETER POST R76.807

DISREGARD PRINTS BEARING EARLIER REVISION DATES

REVISION DATES: 5-14-07 4-06-09 5-23-07 4-7-08 2-19-08 1-02-09 2-03-09 2-13-09 2-28-09

SHEET 1 OF 25

WILLITS BYPASS
QUAIL MEADOWS OH
GENERAL PLAN

FILE => 10-0171_hagp.dgn

STRUCTURES DESIGN GENERAL PLAN SHEET (METRIC) (REV.03-17-04)

USERNAME => s612614 DATE PLOTTED => 28-JAN-2012 TIME PLOTTED => 07:53

DIST	COUNTY	ROUTE	KILOMETER POST TOTAL PROJECT	SHEET No	TOTAL SHEETS
01	Men	101	R69.4/R78.9	829	939

REGISTERED CIVIL ENGINEER 9-15-11 DATE

1-23-12
PLANS APPROVAL DATE

REGISTERED PROFESSIONAL ENGINEER M. Friedheim No. 57968 Exp. 06-30-12 CIVIL STATE OF CALIFORNIA

The State of California or its officers or agents shall not be responsible for the accuracy or completeness of electronic copies of this plan sheet.

INDEX TO PLANS

1. GENERAL PLAN
2. INDEX TO PLANS
3. DECK CONTOURS
4. FOUNDATION PLAN
5. ABUTMENT 1 LAYOUT
6. ABUTMENT 2 LAYOUT
7. ABUTMENT DETAILS NO. 1
8. ABUTMENT DETAILS NO. 2
9. ABUTMENT DETAILS NO. 3
10. RETAINING WALL 0171A LAYOUT
11. RETAINING WALL 0171B LAYOUT
12. TYPICAL SECTION
13. GIRDER LAYOUT
14. BOTTOM GIRDER REINFORCEMENT
15. ASTHETIC DETAILS
16. STRUCTURE APPROACH TYPE N (9S)
17. STRUCTURE APPROACH DRAINAGE DETAILS
18. CHAIN LINK RAILING TYPE 7 MODIFIED
19. LOG OF TEST BORINGS 1 OF 7
20. LOG OF TEST BORINGS 2 OF 7
21. LOG OF TEST BORINGS 3 OF 7
22. LOG OF TEST BORINGS 4 OF 7
23. LOG OF TEST BORINGS 5 OF 7
24. LOG OF TEST BORINGS 6 OF 7
25. LOG OF TEST BORINGS 7 OF 7

PILE DATA

Location	Pile Type	Nominal Resistance		Design tip Elevations (m)	Specified Tip Elevations (m)
		Compression	Tension		
Abut 1	HP 360 x 132	1250 KN	0 KN	380.00 (1)	380.00
Abut 2	HP 360 x 132	1250 KN	0 KN	379.25 (1)	379.25
Ret Wall 0171A	HP 250 x 62	800 KN	0 KN	380.50 (1)	380.50
Ret Wall 0171B	HP 250 x 62	800 KN	0 KN	380.50 (1)	380.50
Ret Wall 0171C	HP 250 x 62	800 KN	0 KN	379.25 (1)	379.25
Ret Wall 0171D	HP 250 x 62	800 KN	0 KN	379.25 (1)	379.25

Tip elevation controlled by the following demands:
(1) Compression

STANDARD PLANS DATED JULY 2004

A10A	ACRONYMS AND ABBREVIATIONS (A-L)
A10B	ACRONYMS AND ABBREVIATIONS (M-Z)
A10C	SYMBOLS (SHEET 1 OF 2)
A10D	SYMBOLS (SHEET 2 OF 2)
A62C	LIMITS OF PAYMENT FOR EXCAVATION AND BACKFILL-BRIDGE
B0-1	BRIDGE DETAILS
B0-3	BRIDGE DETAILS
B0-5	BRIDGE DETAILS
B0-13	BRIDGE DETAILS
B3-1	RETAINING WALL TYPE 1 - H=1200 THROUGH 9100 mm
B3-2	RETAINING WALL TYPE 1 - H=9700 THROUGH 10900 mm
B3-8	RETAINING WALL DETAIL No. 1
RSP B6-21	JOINT SEALS (MAXIMUM MOVEMENT RATING = 50 mm)
B7-1	BOX GIRDER DETAILS
B7-8	DECK DRAINAGE DETAILS
RSP B8-5	CAST-IN-PLACE PRESTRESSED GIRDER DETAILS
B11-56	CONCRETE BARRIER TYPE 736
RSP ES-9B	ELECTRICAL SYSTEMS (ELECTRICAL DETAILS, STRUCTURE INSTALLATIONS)
RSP ES-9C	ELECTRICAL SYSTEMS (ELECTRICAL DETAILS, STRUCTURE INSTALLATIONS)

Standard Plan sheet number

Detail number

Caltrans Metric

	BY	CHECKED
DESIGN	T. Bui	I. Chernioglo
DETAILS	L. Wang/G. Souza	I. Chernioglo
QUANTITIES	I. Chernioglo	T. Bui

STATE OF CALIFORNIA
DEPARTMENT OF TRANSPORTATION

DIVISION OF ENGINEERING SERVICES
STRUCTURE DESIGN
DESIGN BRANCH 2

BRIDGE NO. 10-0171
KILOMETER POST R76.807

WILLITS BYPASS
QUAIL MEADOWS OH
INDEX TO PLANS

ALL DIMENSIONS ARE IN MILLIMETERS UNLESS OTHERWISE SHOWN

ORIGINAL SCALE IN MILLIMETERS FOR REDUCED PLANS 0 10 20 30 40 50 60 70 80 90 100

CU 01
EA 262001

DISREGARD PRINTS BEARING EARLIER REVISION DATES

REVISION DATES: 4-06-09 4-24-09 7-14-09

SHEET 2 OF 25

FILE => 10-0171_haitp.dgn

STRUCTURES DESIGN DETAIL SHEET (METRIC) (REV.03-17-04)

USERNAME => s126614 DATE PLOTTED => 28-JAN-2012 TIME PLOTTED => 07:53

DIST	COUNTY	ROUTE	KILOMETER POST TOTAL PROJECT	SHEET No	TOTAL SHEETS
01	Men	101	R69.4/R78.9	830	939

REGISTERED CIVIL ENGINEER 9-15-11 DATE

1-23-12
PLANS APPROVAL DATE

REGISTERED PROFESSIONAL ENGINEER M. Friedheim No. 57968 Exp. 06-30-12 CIVIL STATE OF CALIFORNIA

The State of California or its officers or agents shall not be responsible for the accuracy or completeness of electronic copies of this plan sheet.

NOTES:

1. x = 2.5 m interval measured along station line
2. Contours do not include camber
3. Contour interval = 0.05 m

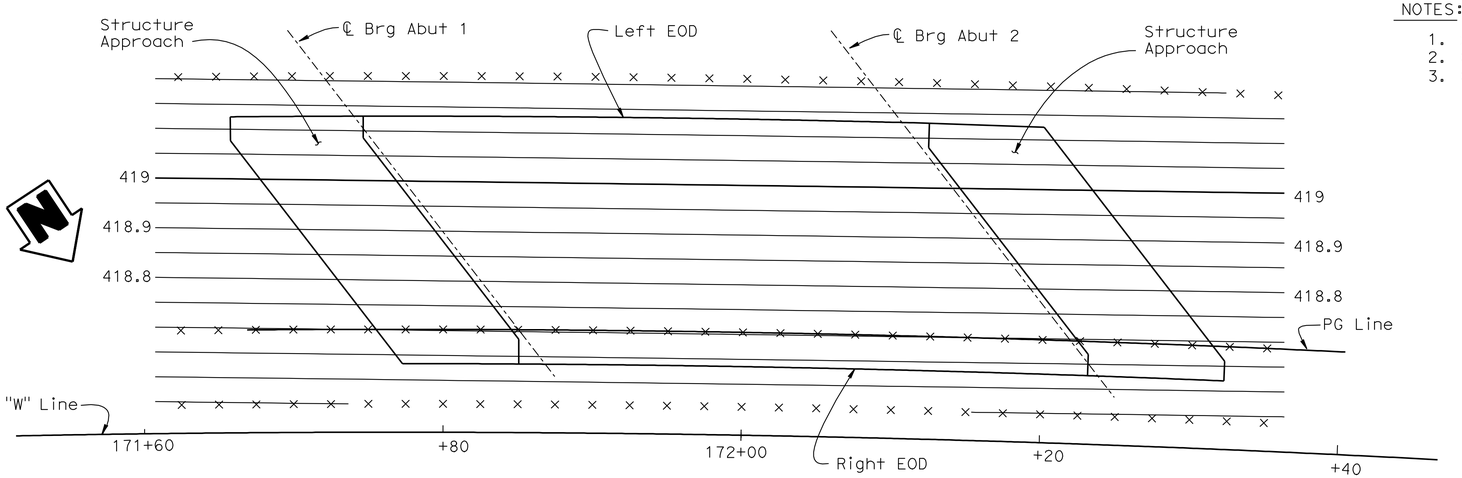

DECK CONTOURS

1:200

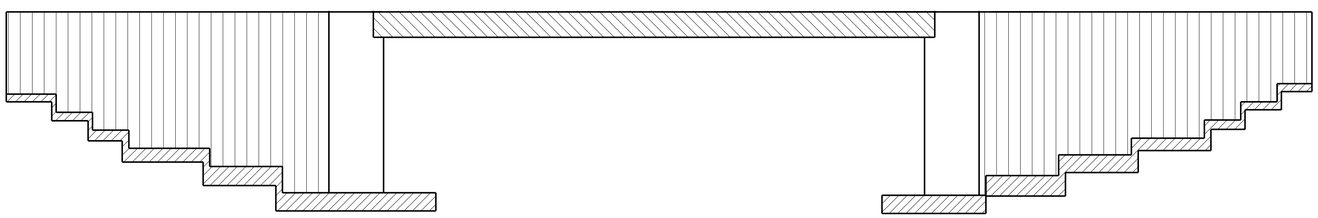

Structural Concrete, Bridge
Structural Concrete, Retaining Wall
Structural Concrete, Bridge (28 Mpa @ 28 days)
Structural Concrete, Bridge Footing

CONCRETE STRENGTH AND TYPE LIMITS

1:200

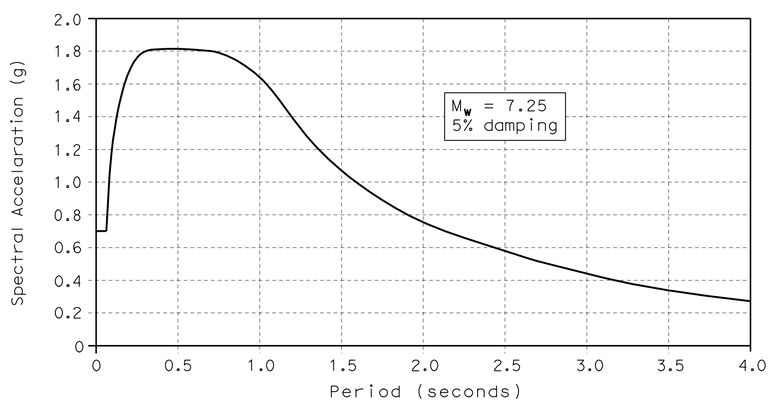

GENERAL NOTES (LOAD FACTOR DESIGN)

DESIGN: Bridge Design Specifications - April 2000 (LFD) (1996 AASHTO with interims and revisions by Caltrans).

Project Specific Design Criteria - March 2009.

SEISMIC DESIGN: Caltrans SDC Version 1.4 - June 2006

DEAD LOAD: Includes 1675 Pa for future wearing surface. Includes 1460 N/m for future utilities.

LIVE LOAD: HS20-44 and alternative and permit design load.

SEISMIC LOADING: Modified Caltrans Seismic Design Criteria for Soil Profile Type D, PBA = 0.7 g. See Response Spectrum below.

REINFORCED CONCRETE:

fy = 420 MPa
f'c = 25 MPa (See concrete strength and type limits for exceptions)

Transverse Deck Slab (working stress design)
fs = 140 MPa
f'c = 8 MPa
n = 10

PRESTRESSED CONCRETE: See "Prestressing Notes" on Girder Layout sheet

Caltrans Metric

	BY	CHECKED
DESIGN	T. Bui	I. Chernioglo
DETAILS	L. Wang/G. Souza	I. Chernioglo
QUANTITIES	I. Chernioglo	T. Bui

STATE OF CALIFORNIA
DEPARTMENT OF TRANSPORTATION

DIVISION OF ENGINEERING SERVICES
STRUCTURE DESIGN
DESIGN BRANCH 2

BRIDGE NO. 10-0171
KILOMETER POST R76.807

WILLITS BYPASS
QUAIL MEADOWS OH
DECK CONTOURS

ALL DIMENSIONS ARE IN METERS UNLESS OTHERWISE SHOWN

ORIGINAL SCALE IN MILLIMETERS FOR REDUCED PLANS 0 10 20 30 40 50 60 70 80 90 100

CU 01
EA 262001

DISREGARD PRINTS BEARING EARLIER REVISION DATES

REVISION DATES: 11-24-08 12-15-08 01-07-09 02-14-09 02-18-09 04-24-09

SHEET 3 OF 25

FILE => 10-0171_hbdc.dgn

STRUCTURES DESIGN DETAIL SHEET (METRIC) (REV.03-17-04)

USERNAME => s121614 DATE PLOTTED => 28-JAN-2012 TIME PLOTTED => 07:53

DIST	COUNTY	ROUTE	KILOMETER POST TOTAL PROJECT	SHEET No	TOTAL SHEETS
01	Men	101	R69.4/R78.9	831	939

Caltrans Metric

REGISTERED CIVIL ENGINEER 9-15-11 DATE

1-23-12
PLANS APPROVAL DATE

REGISTERED PROFESSIONAL ENGINEER M. Friedheim No. 57968 Exp. 6-30-12 CIVIL STATE OF CALIFORNIA

The State of California or its officers or agents shall not be responsible for the accuracy or completeness of electronic copies of this plan sheet.

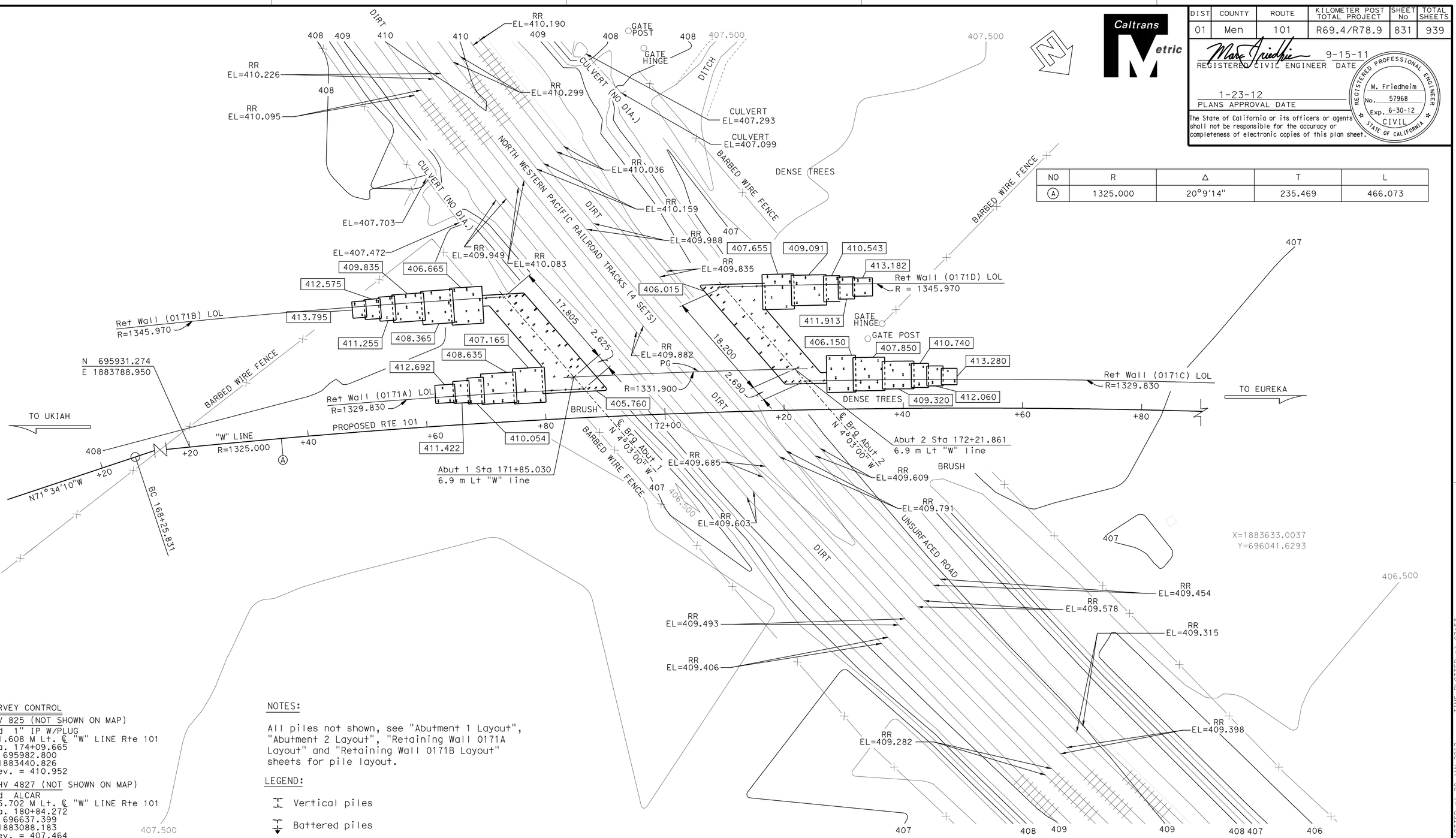

NO	R	Δ	T	L
A	1325.000	20°9'14"	235.469	466.073

ALL DIMENSIONS ARE IN METERS UNLESS OTHERWISE SHOWN

SURVEY CONTROL

PMV 825 (NOT SHOWN ON MAP)
Fnd 1" IP W/PLUG
171.608 M Lt. ℄ "W" LINE Rte 101
Sta. 174+09.665
N 695982.800
E 1883440.826
Elev. = 410.952

PRHV 4827 (NOT SHOWN ON MAP)
Fnd ALCAR
125.702 M Lt. ℄ "W" LINE Rte 101
Sta. 180+84.272
N 696637.399
E 1883088.183
Elev. = 407.464

NOTES:

All piles not shown, see "Abutment 1 Layout", "Abutment 2 Layout", "Retaining Wall 0171A Layout" and "Retaining Wall 0171B Layout" sheets for pile layout.

LEGEND:

Vertical piles

Battered piles

Indicates bottom of footing elevation

WILLITS BYPASS
QUAIL MEADOWS OH
FOUNDATION PLAN

PRELIMINARY INVESTIGATION SECTION

SCALE	VERT. DATUM NGVD 29	PHOTOGRAMMETRY AS OF:		
1:300	HORZ. DATUM NAD 83 (1991.35)	SURVEYED	BY K. ELLINGSON 5/05	DRAFTED BY F. BANDA 8/05
ALIGNMENT TIES DIST TRAVERSE SHEET		FIELD CHECKED BY		CHECKED BY T. ZOLNIKOVA 8/05

	BY	CHECKED
DESIGN	T. Bui	I. Chernioglo
DETAILS	E. Montevirgen/J. Yang/GS	I. Chernioglo
QUANTITIES	I. Chernioglo	T. Bui

STATE OF CALIFORNIA DEPARTMENT OF TRANSPORTATION

DIVISION OF ENGINEERING SERVICES STRUCTURES DESIGN DESIGN BRANCH

BRIDGE NO. 10-0171
KILOMETER POST R76.807

CU 01
EA 262001

STRUCTURES FOUNDATION PLAN SHEET (METRIC) (REV.12-1-01)

ORIGINAL SCALE IN MILLIMETERS FOR REDUCED PLANS 0 10 20 30 40 50 60 70 80 90 100

DISREGARD PRINTS BEARING EARLIER REVISION DATES

REVISION DATES (PRELIMINARY STAGE ONLY): 8/23/05 12/28/08 2/02/09 2/04/09 2/18/09 4/24/09 12-09-09

SHEET 4 OF 25

FILE => 10-0171_hbfp.dgn

USERNAME => s12614 DATE PLOTTED => 28-JAN-2012 TIME PLOTTED => 07:53

DIST	COUNTY	ROUTE	KILOMETER POST TOTAL PROJECT	SHEET No	TOTAL SHEETS
01	Men	101	R69.4/R78.9	832	939

REGISTERED CIVIL ENGINEER 9-15-11 DATE

1-23-12
PLANS APPROVAL DATE

REGISTERED PROFESSIONAL ENGINEER M. Friedheim No. 57968 Exp. 6-30-12 CIVIL STATE OF CALIFORNIA

The State of California or its officers or agents shall not be responsible for the accuracy or completeness of electronic copies of this plan sheet.

NOTES:

1. For Section A-A, see "Abutment Details No. 1" sheet
2. For External Shear Key Reinforcement, see "Abutment Details No. 2" sheet
3. For Sections B-B and C-C see "Abutment Details No.2" sheet.

LEGEND:

Indicates vertical piles.

Indicates battered piles.

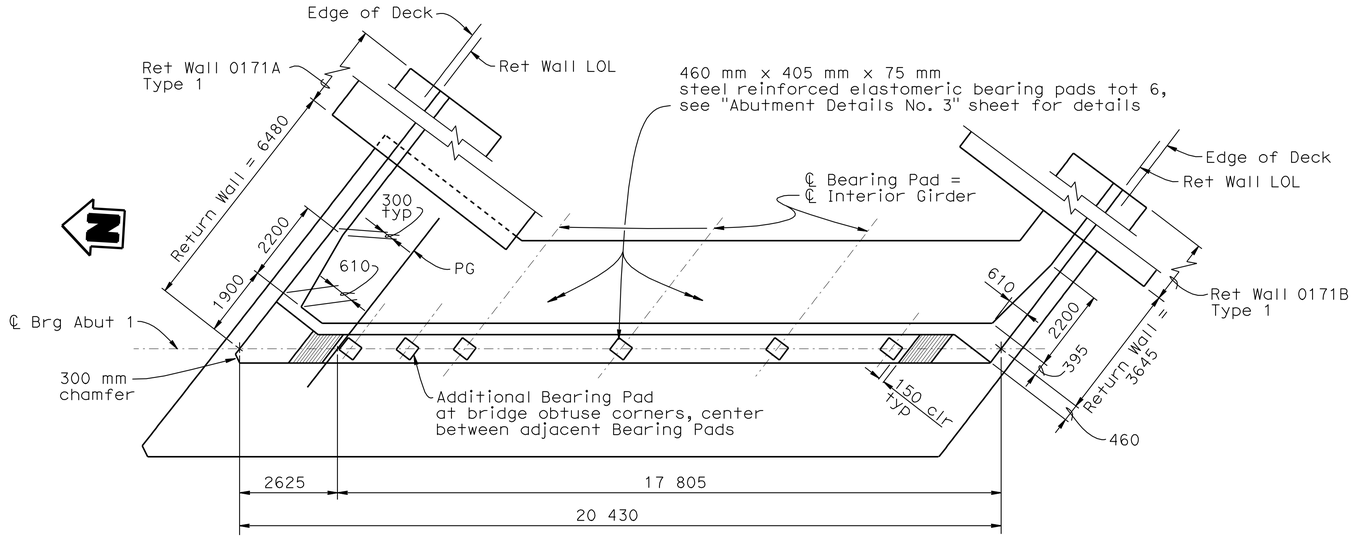

PLAN
1:80

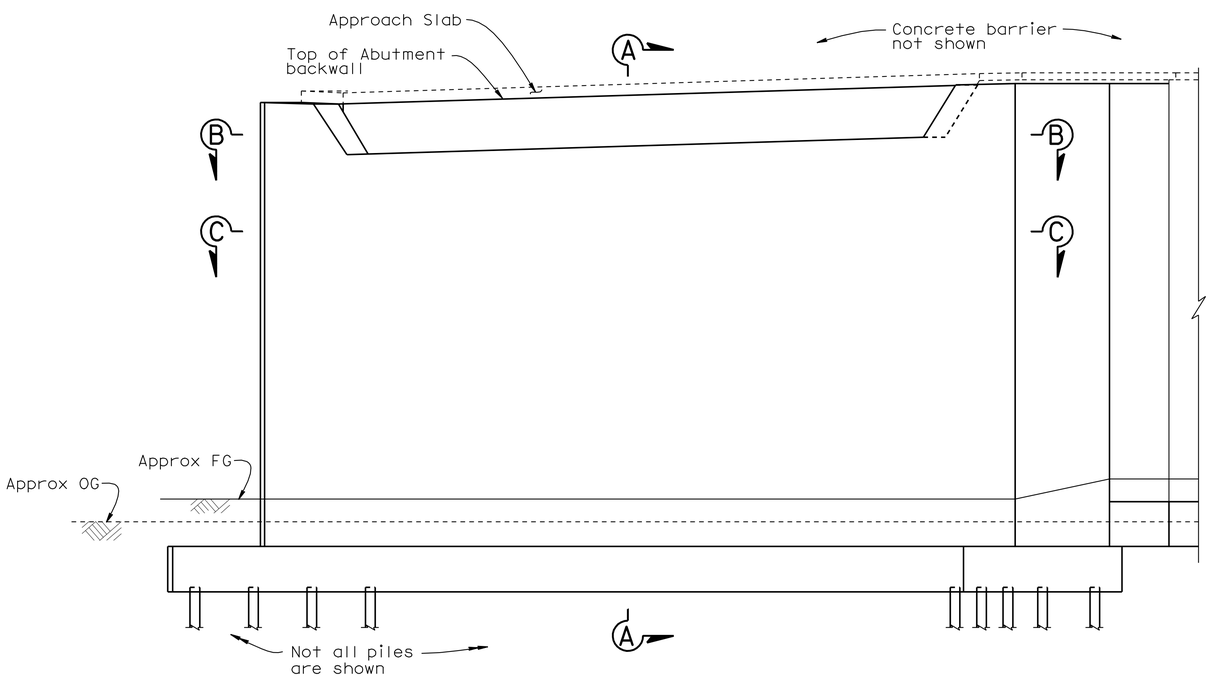

ELEVATION
1:80

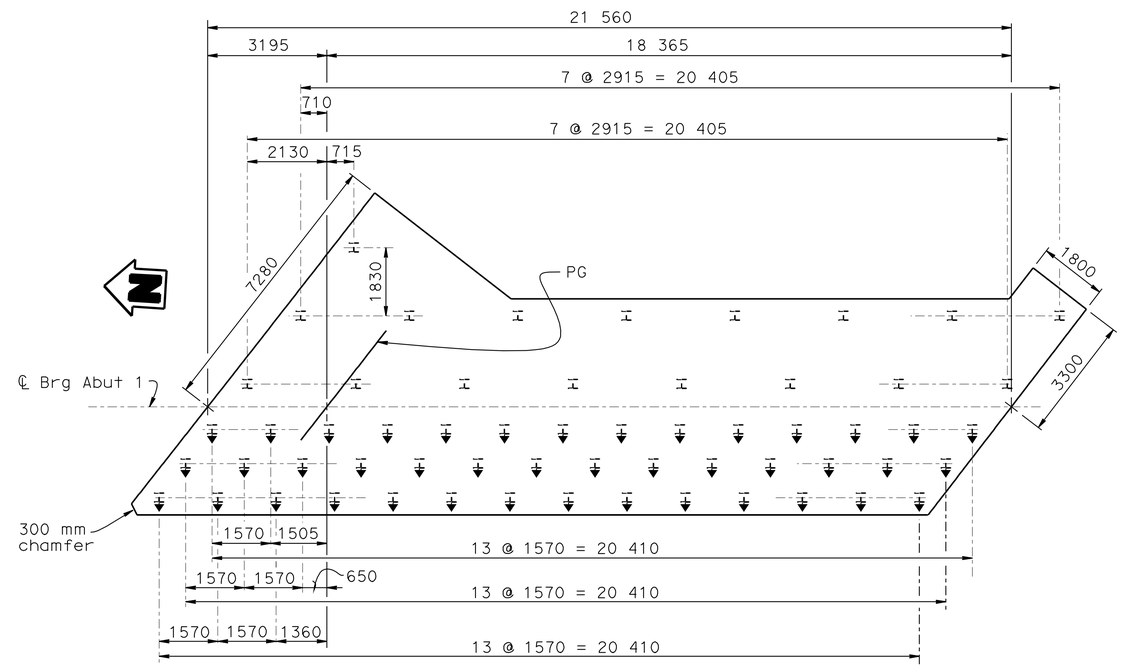

FOOTING PLAN
1:80

Caltrans Metric

	BY	CHECKED
DESIGN	T. Bui	I. Chernioglo
DETAILS	L. Wang/E. Montevirgen	I. Chernioglo
QUANTITIES	I. Chernioglo	T. Bui

STATE OF CALIFORNIA
DEPARTMENT OF TRANSPORTATION

DIVISION OF ENGINEERING SERVICES
STRUCTURE DESIGN
DESIGN BRANCH 2

BRIDGE NO. 10-0171
KILOMETER POST R76.807

WILLITS BYPASS
QUAIL MEADOWS OH
ABUTMENT 1 LAYOUT

ALL DIMENSIONS ARE IN MILLIMETERS UNLESS OTHERWISE SHOWN

ORIGINAL SCALE IN MILLIMETERS FOR REDUCED PLANS 0 10 20 30 40 50 60 70 80 90 100

CU 01
EA 262001

DISREGARD PRINTS BEARING EARLIER REVISION DATES

REVISION DATES: 08-29-08 10-01-08 12-15-08 12-18-08 12-18-08 1-20-09 1-29-09 03-11-09 04-24-09

SHEET 5 OF 25

FILE => 10-0171_hcabut01lo.dgn

STRUCTURES DESIGN DETAIL SHEET (METRIC) (REV.03-17-04)

USERNAME => s12614 DATE PLOTTED => 28-JAN-2012 TIME PLOTTED => 07:53

DIST	COUNTY	ROUTE	KILOMETER POST TOTAL PROJECT	SHEET No	TOTAL SHEETS
01	Men	101	R69.4/R78.9	833	939

REGISTERED CIVIL ENGINEER 9-15-11 DATE

1-23-12
PLANS APPROVAL DATE

REGISTERED PROFESSIONAL ENGINEER M. Friedheim No. 57968 Exp. 6-30-12 CIVIL STATE OF CALIFORNIA

The State of California or its officers or agents shall not be responsible for the accuracy or completeness of electronic copies of this plan sheet.

NOTES:

1. For Section A-A, see "Abutment Details No. 1" sheet
2. For External Shear Key Reinforcement, see "Abutment Details No. 2" sheet
3. For Sections B-B and C-C see "Abutment Details No. 2" sheet

LEGEND:

Indicates vertical piles.

Indicates battered piles.

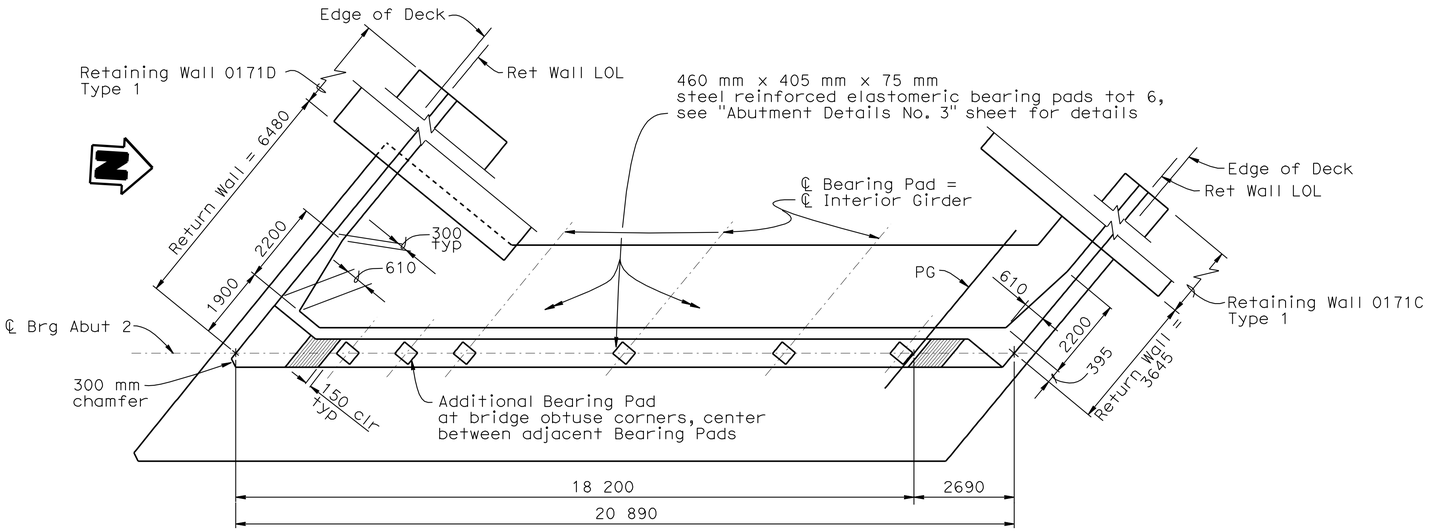

PLAN
1:80

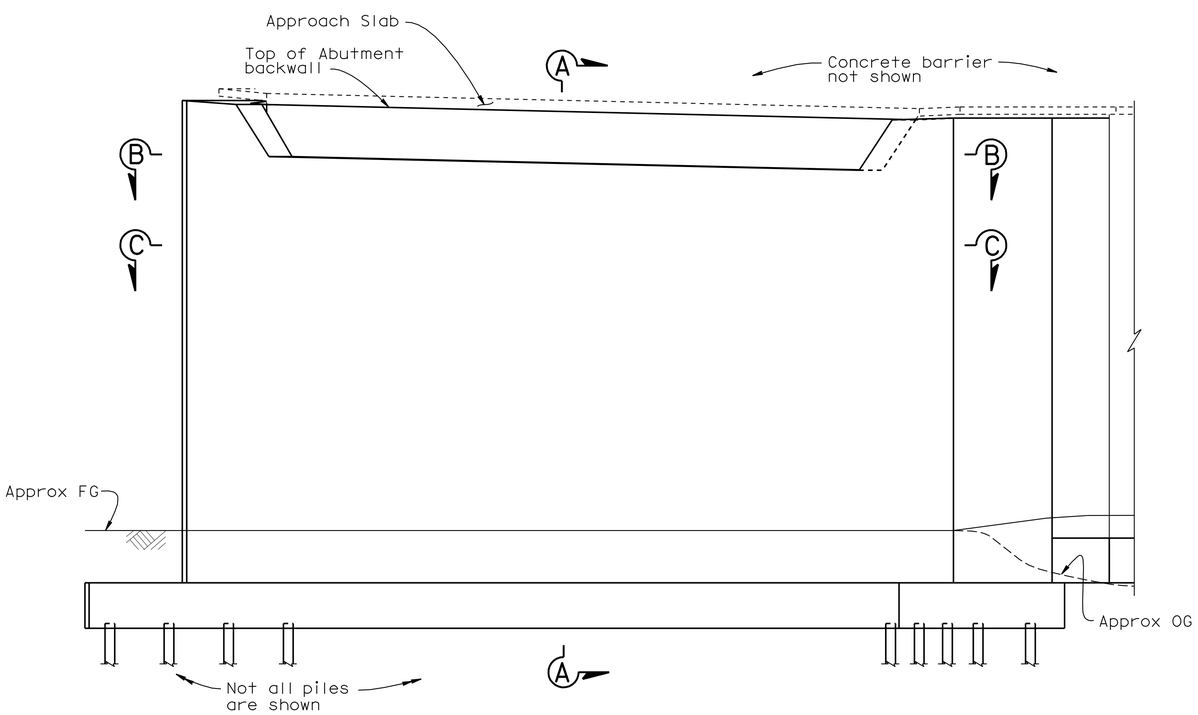

ELEVATION
1:80

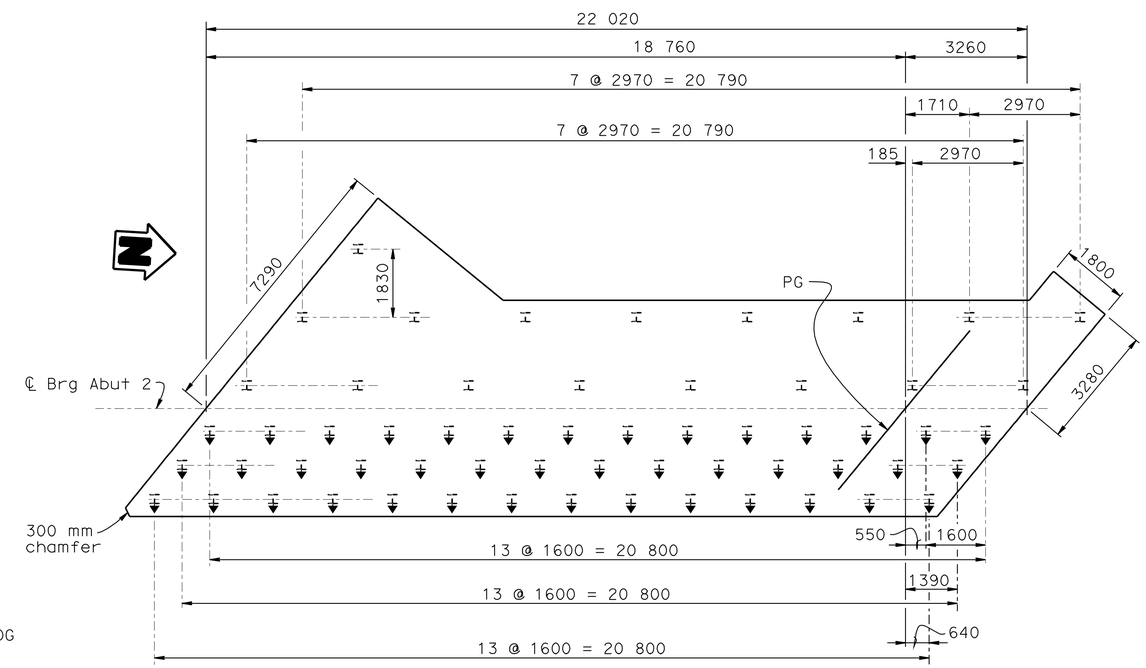

FOOTING PLAN
1:80

DESIGN	BY T. Bui	CHECKED I. Chernioglo	
DETAILS	BY E. Montevirgen	CHECKED I. Chernioglo	
QUANTITIES	BY I. Chernioglo	CHECKED T. Bui	

STATE OF CALIFORNIA DEPARTMENT OF TRANSPORTATION

DIVISION OF ENGINEERING SERVICES STRUCTURE DESIGN
DESIGN BRANCH 2

BRIDGE NO. 10-0171
KILOMETER POST R76.807

WILLITS BYPASS
QUAIL MEADOWS OH
ABUTMENT 2 LAYOUT

ALL DIMENSIONS ARE IN MILLIMETERS UNLESS OTHERWISE SHOWN

ORIGINAL SCALE IN MILLIMETERS FOR REDUCED PLANS 0 10 20 30 40 50 60 70 80 90 100

CU 01
EA 262001

DISREGARD PRINTS BEARING EARLIER REVISION DATES

REVISION DATES: 1-21-09 1-28-09 3-11-09 4-24-09

SHEET 6 OF 25

FILE => 10-0171_hcabut02lo.dgn

STRUCTURES DESIGN DETAIL SHEET (METRIC) (REV.03-17-04)

USERNAME => s12614 DATE PLOTTED => 28-JAN-2012 TIME PLOTTED => 07:53

DIST	COUNTY	ROUTE	KILOMETER POST TOTAL PROJECT	SHEET No	TOTAL SHEETS
01	Men	101	R69.4/R78.9	834	939

REGISTERED CIVIL ENGINEER 9-15-11 DATE

1-23-12
PLANS APPROVAL DATE

REGISTERED PROFESSIONAL ENGINEER M. Friedheim No. 57968 Exp. 06-30-12 CIVIL STATE OF CALIFORNIA

The State of California or its officers or agents shall not be responsible for the accuracy or completeness of electronic copies of this plan sheet.

NOTES:

1. For location of Section A-A, see "Abutment 1 Layout" and "Abutment 2 Layout" sheets
2. For backwall base detail and elastomeric bearing pad details, see "Abutment Details No. 3" sheet

LEGEND:

- Indicates bundled bars

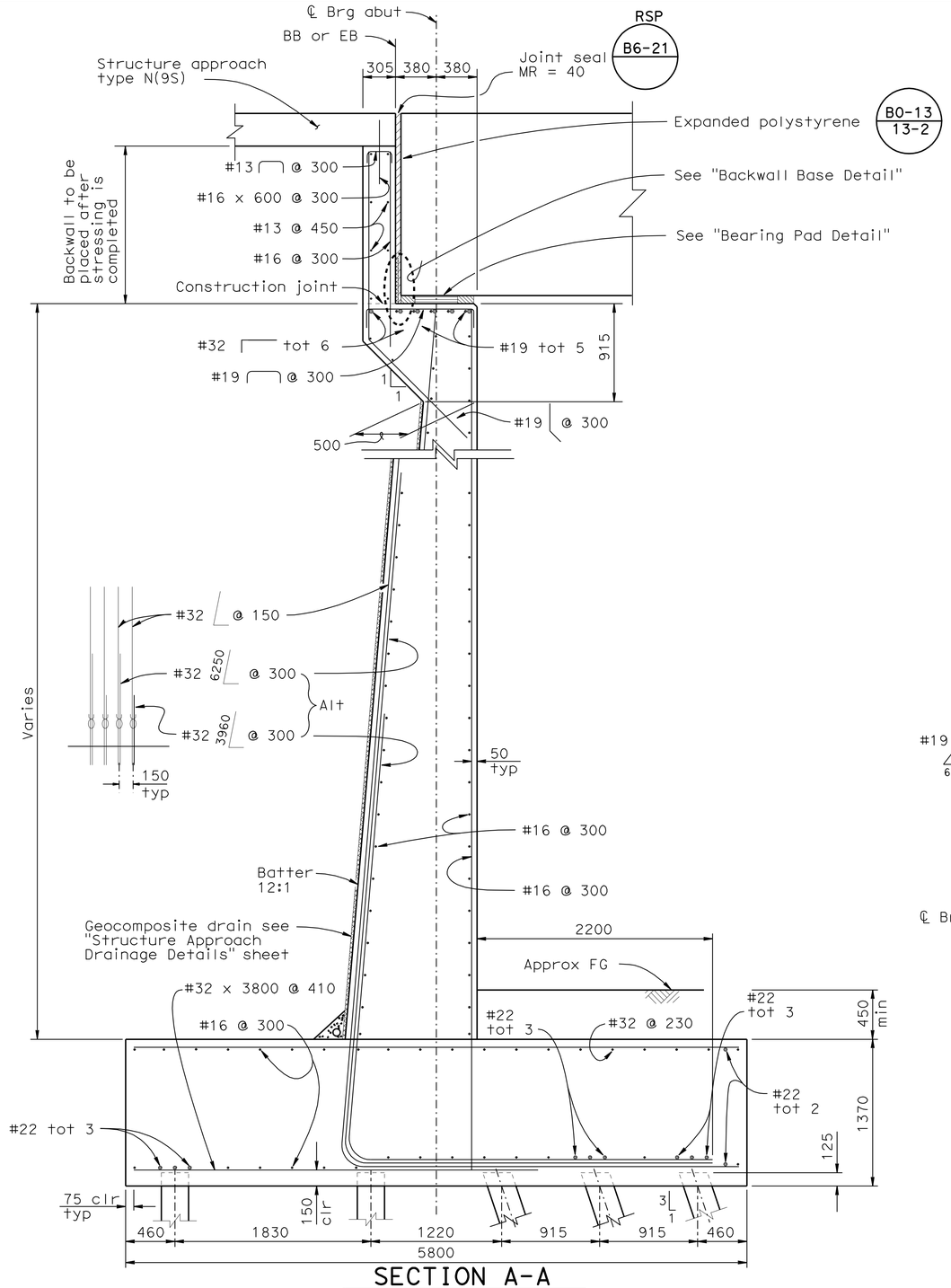

SECTION A-A

1:25

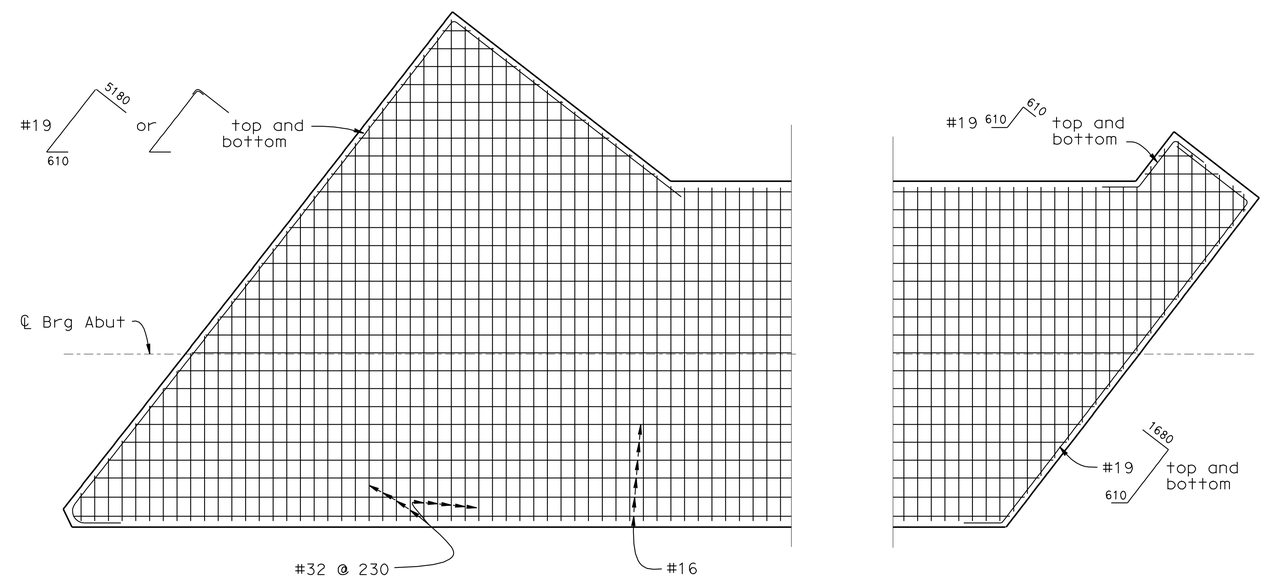

FOOTING REINFORCEMENT

1:80

Caltrans Metric

	BY	CHECKED
DESIGN	T. Bui	I. Chernioglo
DETAILS	L. Wang/J. Yang	I. Chernioglo
QUANTITIES	I. Chernioglo	T. Bui

STATE OF CALIFORNIA DEPARTMENT OF TRANSPORTATION

DIVISION OF ENGINEERING SERVICES STRUCTURE DESIGN

DESIGN BRANCH 2

BRIDGE NO. 10-0171

KILOMETER POST R76.807

WILLITS BYPASS
QUAIL MEADOWS OH
ABUTMENT DETAILS NO. 1

ALL DIMENSIONS ARE IN MILLIMETERS UNLESS OTHERWISE SHOWN

ORIGINAL SCALE IN MILLIMETERS FOR REDUCED PLANS 0 10 20 30 40 50 60 70 80 90 100

CU 01
EA 262001

DISREGARD PRINTS BEARING EARLIER REVISION DATES

REVISION DATES: 10-16-08 11-26-08 12-16-08 12-18-08 02-02-09 02-25-09 03-12-09 4-13-09 4-24-09

SHEET 7 OF 25

FILE => 10-0171_hdabutdet01.dgn

STRUCTURES DESIGN DETAIL SHEET (METRIC) (REV.03-17-04)

USERNAME => s12614 DATE PLOTTED => 28-JAN-2012 TIME PLOTTED => 07:54

DIST	COUNTY	ROUTE	KILOMETER POST TOTAL PROJECT	SHEET No	TOTAL SHEETS
01	Men	101	R69.4/R78.9	835	939

REGISTERED CIVIL ENGINEER 9-15-11 DATE

1-23-12
PLANS APPROVAL DATE

REGISTERED PROFESSIONAL ENGINEER M. Friedheim No. 57968 Exp. 06-30-12 CIVIL STATE OF CALIFORNIA

The State of California or its officers or agents shall not be responsible for the accuracy or completeness of electronic copies of this plan sheet.

NOTES:

1. For location of Sections B-B and C-C, see "Abutment 1 Layout" and "Abutment 2 Layout" sheets

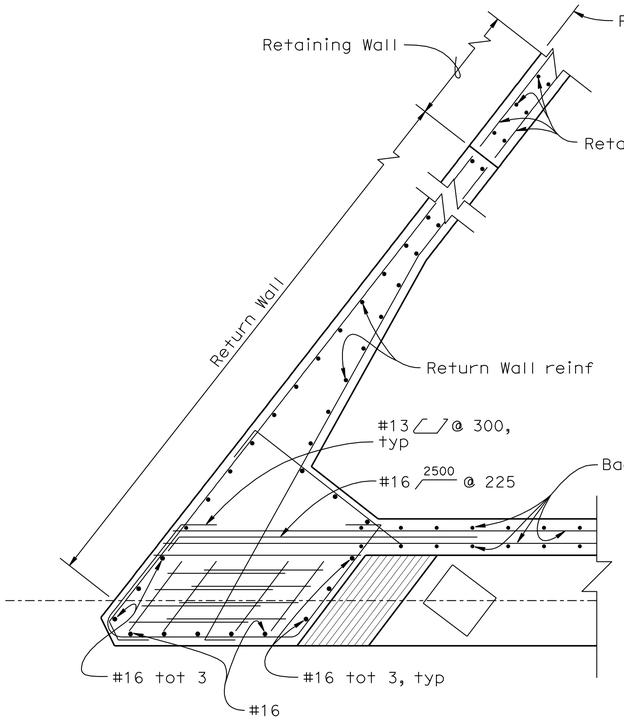

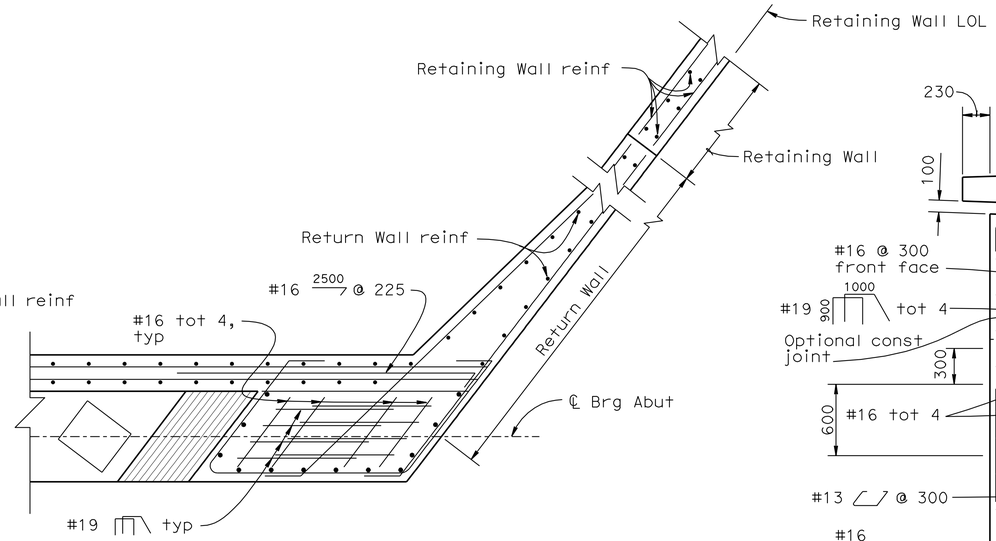

SECTION B-B

1:25

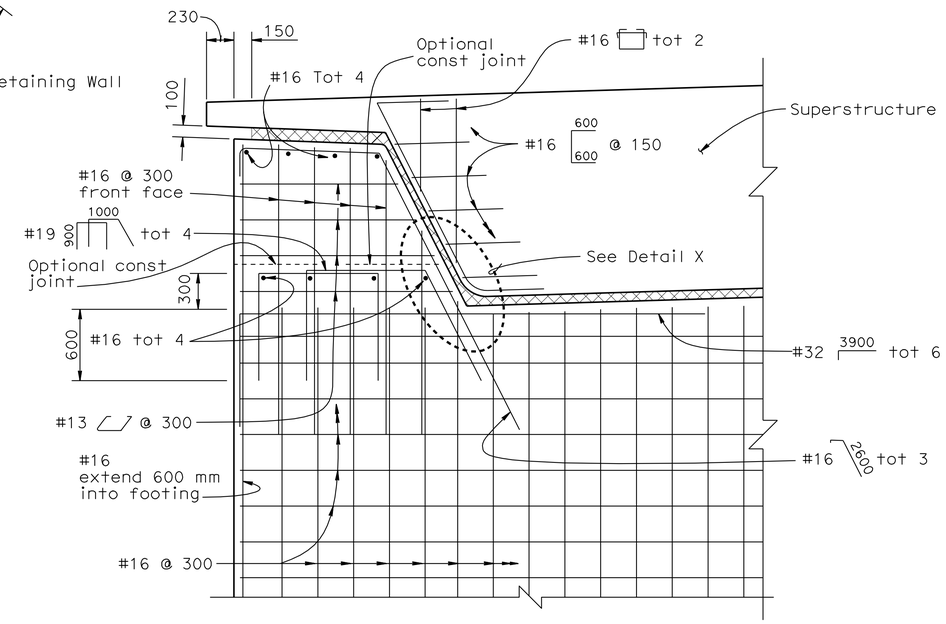

EXTERNAL SHEAR KEY

1:25

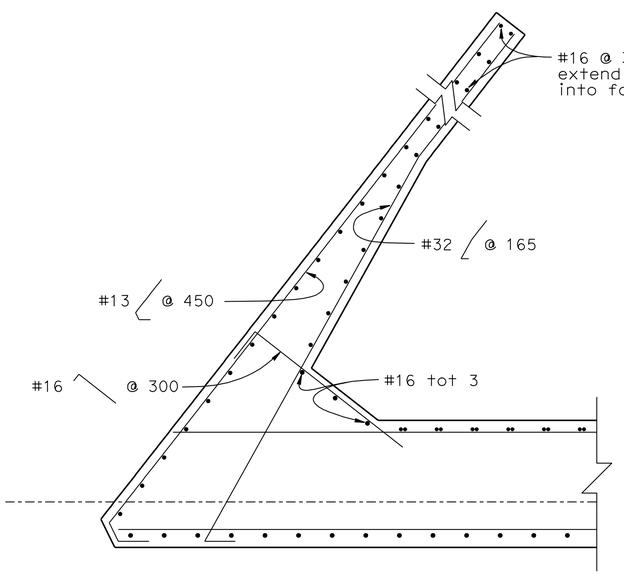

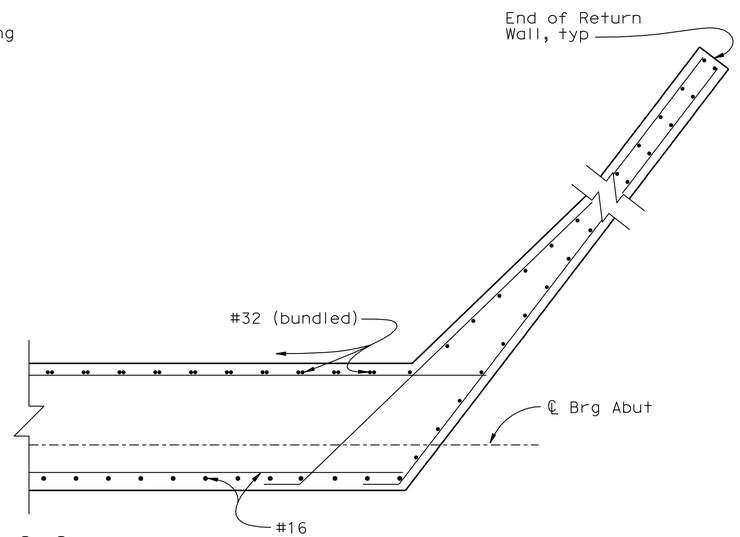

SECTION C-C

1:25

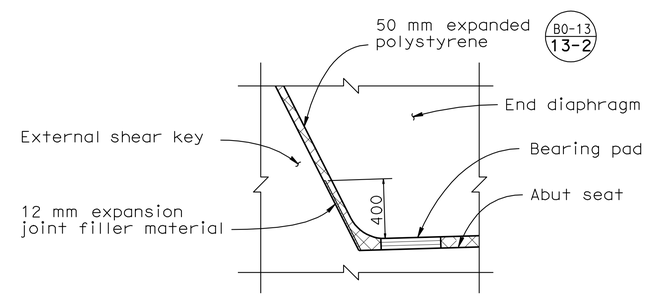

DETAIL X

1:20

Caltrans Metric

DESIGN	BY T. Bui	CHECKED I. Chernioglo	
DETAILS	BY L. Wang/J. Yang	CHECKED I. Chernioglo	
QUANTITIES	BY I. Chernioglo	CHECKED T. Bui	

STATE OF CALIFORNIA
DEPARTMENT OF TRANSPORTATION

DIVISION OF ENGINEERING SERVICES
STRUCTURE DESIGN
DESIGN BRANCH 2

BRIDGE NO. 10-0171
KILOMETER POST R76.807

WILLITS BYPASS
QUAIL MEADOWS OH
ABUTMENT DETAILS NO. 2

ALL DIMENSIONS ARE IN MILLIMETERS UNLESS OTHERWISE SHOWN

ORIGINAL SCALE IN MILLIMETERS FOR REDUCED PLANS 0 10 20 30 40 50 60 70 80 90 100

CU 01
EA 262001

DISREGARD PRINTS BEARING EARLIER REVISION DATES

REVISION DATES: 10-22-08 11-20-08 12-11-08 12-16-08 12-18-08 12-19-08 2-09-09 3-12-09 4-24-09

SHEET 8 OF 25

FILE => 10-0171_hdabutdet02-new.dgn

STRUCTURES DESIGN DETAIL SHEET (METRIC) (REV.03-17-04)

USERNAME => s12614 DATE PLOTTED => 28-JAN-2012 TIME PLOTTED => 07:54

DIST	COUNTY	ROUTE	KILOMETER POST TOTAL PROJECT	SHEET No	TOTAL SHEETS
01	Men	101	R69.4/R78.9	836	939

REGISTERED CIVIL ENGINEER 9-15-11 DATE

1-23-12
PLANS APPROVAL DATE

REGISTERED PROFESSIONAL ENGINEER M. Friedheim No. 57968 Exp. 06-30-12 CIVIL STATE OF CALIFORNIA

The State of California or its officers or agents shall not be responsible for the accuracy or completeness of electronic copies of this plan sheet.

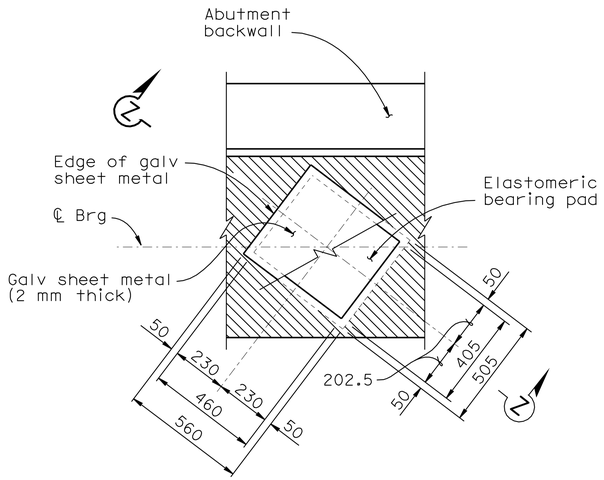

PLAN

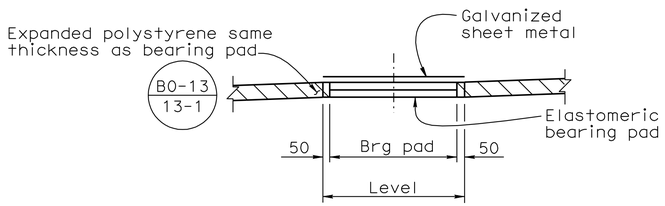

SECTION Z-Z

Note:
Coat top of bearing pad with silicone grease prior to placing sheet metal

BEARING PAD DETAIL
No Scale

Details typical at all bearing pads

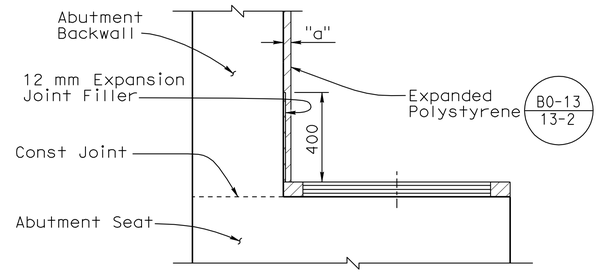

BACKWALL BASE DETAIL
No Scale

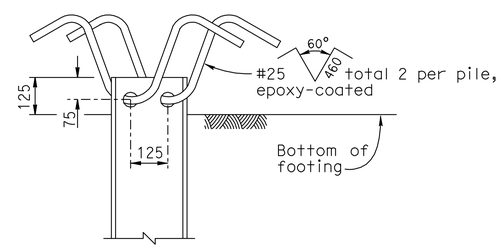

ELEVATION

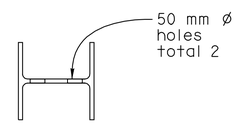

PLAN

STEEL PILE ANCHOR DETAIL
No Scale

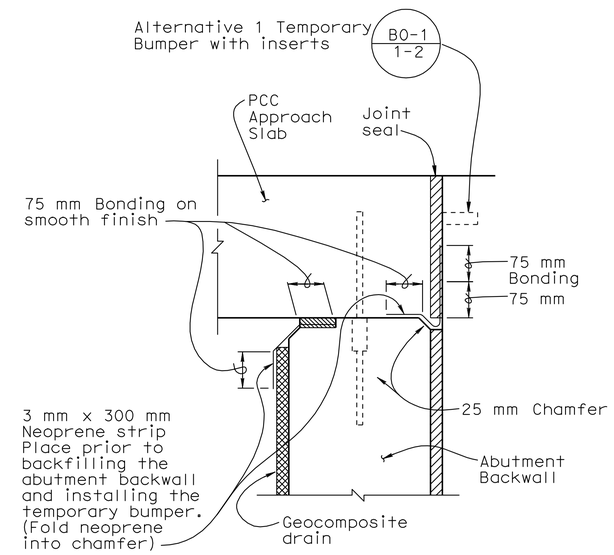

JOINT PROTECTION DETAIL
No Scale

DESIGN	BY T. Bui	CHECKED I. Chernioglo	
DETAILS	BY L. Wang	CHECKED I. Chernioglo	
QUANTITIES	BY I. Chernioglo	CHECKED T. Bui	

STATE OF CALIFORNIA DEPARTMENT OF TRANSPORTATION

DIVISION OF ENGINEERING SERVICES STRUCTURE DESIGN
DESIGN BRANCH 2

BRIDGE NO. 10-0171
KILOMETER POST R76.807

WILLITS BYPASS
QUAIL MEADOWS OH
ABUTMENT DETAILS NO. 3

ALL DIMENSIONS ARE IN MILLIMETERS UNLESS OTHERWISE SHOWN

ORIGINAL SCALE IN MILLIMETERS FOR REDUCED PLANS 0 10 20 30 40 50 60 70 80 90 100

CU 01
EA 262001

DISREGARD PRINTS BEARING EARLIER REVISION DATES

REVISION DATES 11-20-08 02-02-09

SHEET 9 OF 25

FILE => 10-0171_hdabutdet03.dgn

STRUCTURES DESIGN DETAIL SHEET (METRIC) (REV.03-17-04)

USERNAME => s121614 DATE PLOTTED => 28-JAN-2012 TIME PLOTTED => 07:54

DIST	COUNTY	ROUTE	KILOMETER POST TOTAL PROJECT	SHEET No	TOTAL SHEETS
01	Men	101	R69.4/R78.9	837	939

REGISTERED CIVIL ENGINEER 9-15-11 DATE

1-23-12
PLANS APPROVAL DATE

REGISTERED PROFESSIONAL ENGINEER M. Friedheim No. 57968 Exp. 06-30-12 CIVIL STATE OF CALIFORNIA

The State of California or its officers or agents shall not be responsible for the accuracy or completeness of electronic copies of this plan sheet.

NOTES:

1. For Section E-E, see "Retaining Wall 0171B Layout" sheet
2. The limits of pervious backfill are from the end of the structure approach to the end of retaining wall

LEGEND:

Indicates vertical piles

Indicates 3:1 battered piles

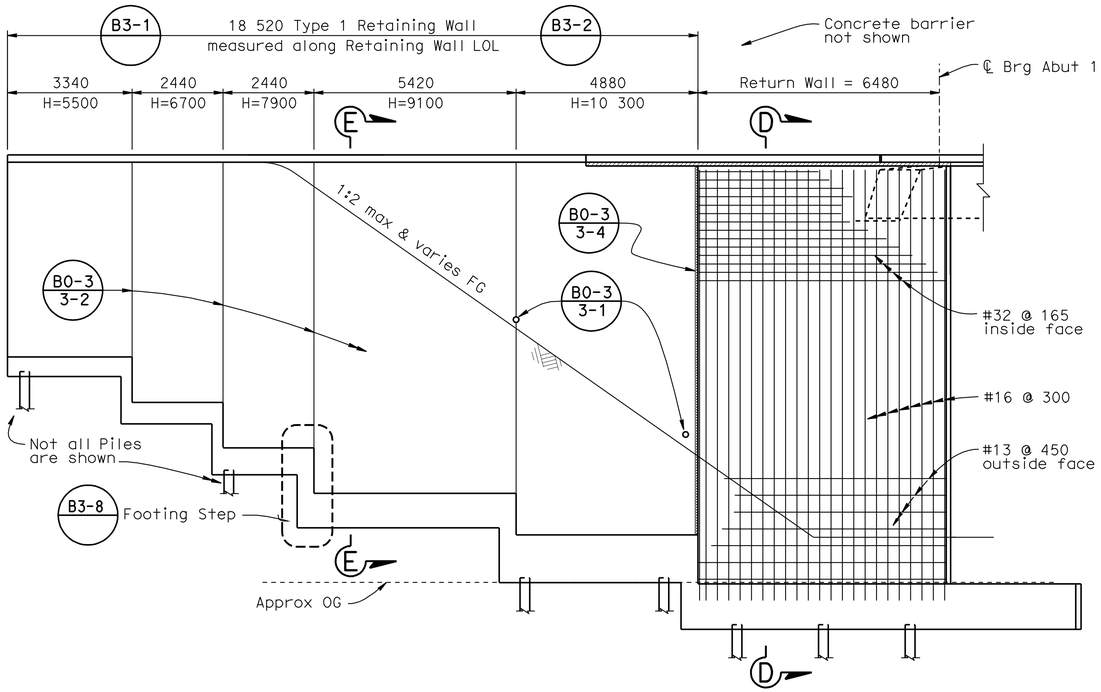

ELEVATION

1:80

Retaining Wall 0171A shown, Retaining Wall 0171D similar

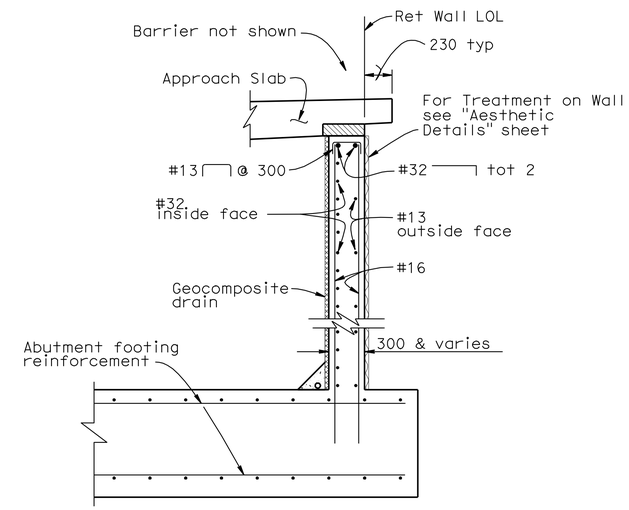

SECTION D-D

1:25

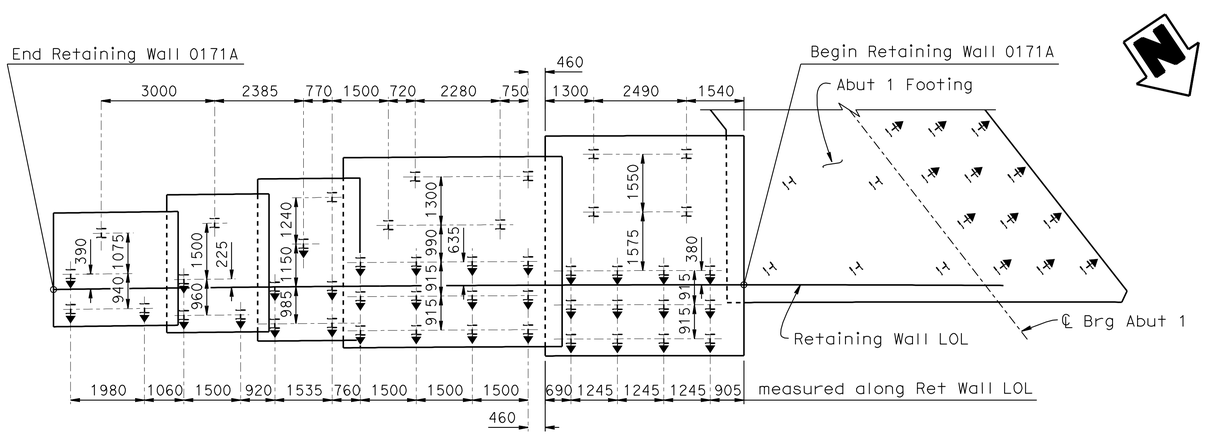

PLAN

1:80

DESIGN	BY T. Bui	CHECKED I. Chernioglo	
DETAILS	BY L. Wang/E. Montevirgen/GS	CHECKED I. Chernioglo	
QUANTITIES	BY I. Chernioglo	CHECKED T. Bui	

STATE OF CALIFORNIA
DEPARTMENT OF TRANSPORTATION

DIVISION OF ENGINEERING SERVICES
STRUCTURE DESIGN
DESIGN BRANCH 2

BRIDGE NO. 10-0171
KILOMETER POST R76.807

WILLITS BYPASS
QUAIL MEADOWS OH
RETAINING WALL 0171A LAYOUT

ALL DIMENSIONS ARE IN MILLIMETERS UNLESS OTHERWISE SHOWN

ORIGINAL SCALE IN MILLIMETERS FOR REDUCED PLANS 0 10 20 30 40 50 60 70 80 90 100

CU 01
EA 262001

DISREGARD PRINTS BEARING EARLIER REVISION DATES

REVISION DATES: 09-21-08 10-21-08 10-24-08 12-16-08 12-18-08 1-28-09 2-10-09 3-11-09 4-24-09

SHEET 10 OF 25

FILE => 10-0171_heretwall0171a-new.dgn

STRUCTURES DESIGN DETAIL SHEET (METRIC) (REV.03-17-04)

USERNAME => s121614 DATE PLOTTED => 28-JAN-2012 TIME PLOTTED => 07:54

DIST	COUNTY	ROUTE	KILOMETER POST TOTAL PROJECT	SHEET No	TOTAL SHEETS
01	Men	101	R69.4/R78.9	838	939

REGISTERED CIVIL ENGINEER 9-15-11 DATE

1-23-12
PLANS APPROVAL DATE

REGISTERED PROFESSIONAL ENGINEER M. Friedheim No. 57968 Exp. 6-30-12 CIVIL STATE OF CALIFORNIA

The State of California or its officers or agents shall not be responsible for the accuracy or completeness of electronic copies of this plan sheet.

NOTES:

1. For Section D-D, see "Retain Wall 0171A Layout" sheet
2. The limits of pervious backfill are from the end of the structure approach to the end of retaining wall

LEGEND:

Indicates vertical piles

Indicates 3:1 battered piles

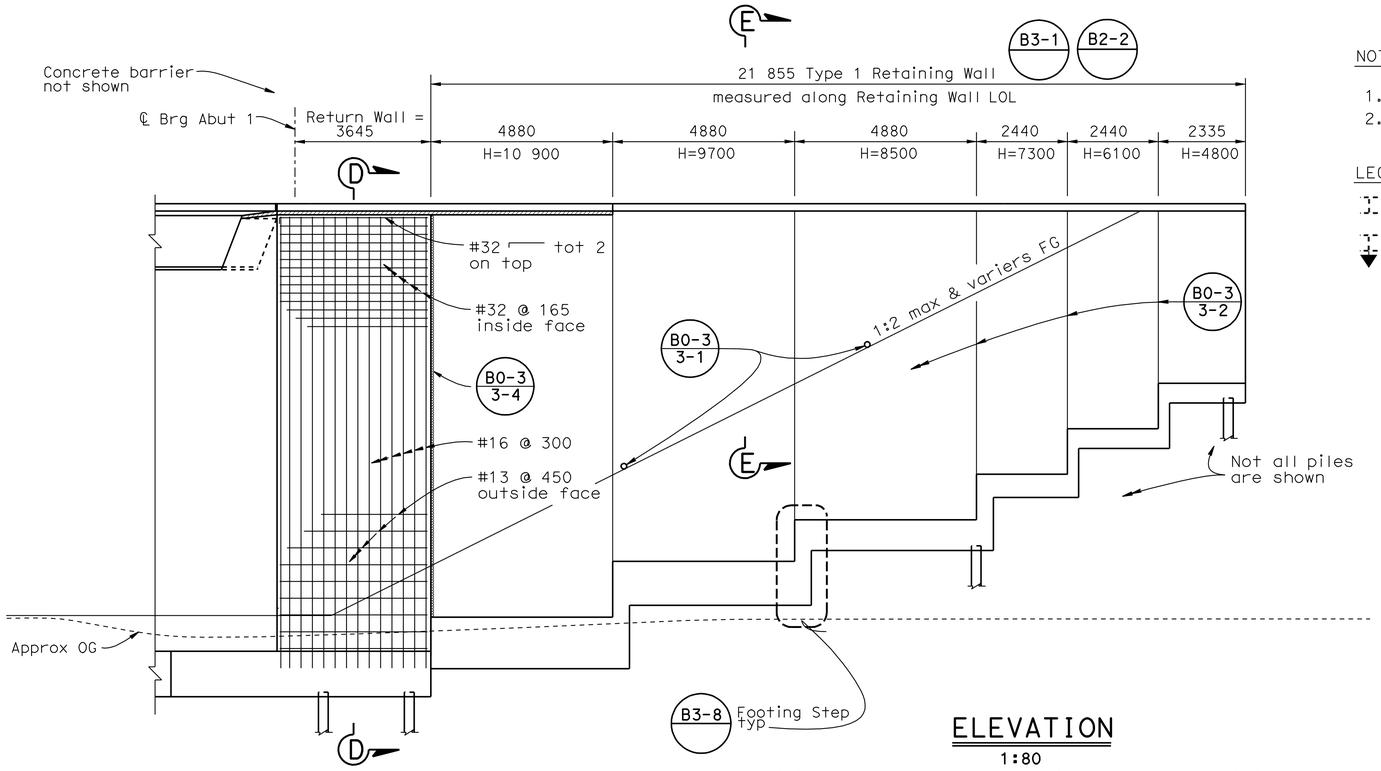

ELEVATION
1:80
Retaining Wall 0171B shown, Retaining Wall 0171C similar

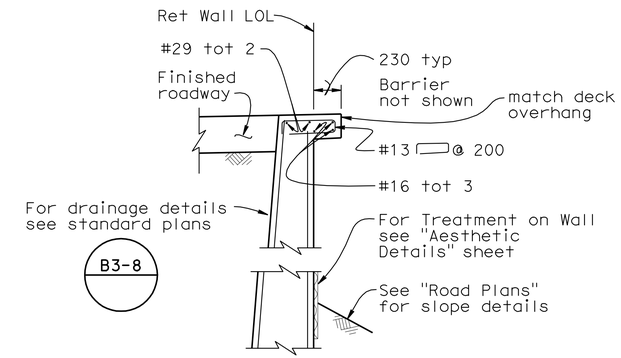

SECTION E-E
1:25

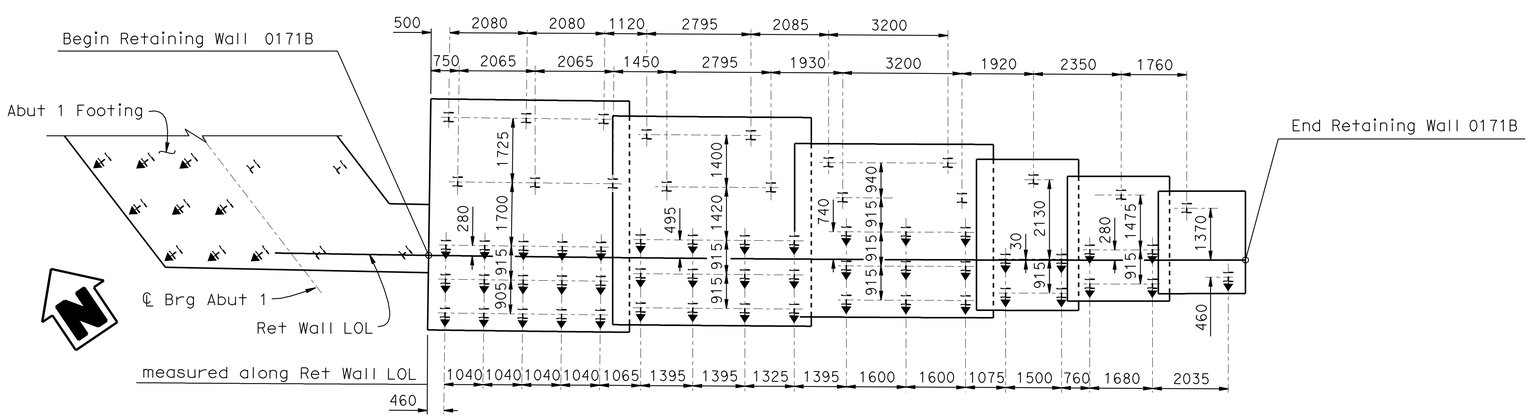

PLAN
1:80

DESIGN	BY T. Bui	CHECKED I. Chernioglo	
DETAILS	BY L. Wang/E. Montevirgen/GS	CHECKED I. Chernioglo	
QUANTITIES	BY I. Chernioglo	CHECKED T. Bui	

STATE OF CALIFORNIA
DEPARTMENT OF TRANSPORTATION

DIVISION OF ENGINEERING SERVICES
STRUCTURE DESIGN
DESIGN BRANCH 2

BRIDGE NO. 10-0171
KILOMETER POST R76.807

WILLITS BYPASS
QUAIL MEADOWS OH
RETAINING WALL 0171B LAYOUT

ALL DIMENSIONS ARE IN MILLIMETERS UNLESS OTHERWISE SHOWN

ORIGINAL SCALE IN MILLIMETERS FOR REDUCED PLANS 0 10 20 30 40 50 60 70 80 90 100

CU 01
EA 262001

DISREGARD PRINTS BEARING EARLIER REVISION DATES

REVISION DATES: 09-16-08 03-11-09 4-13-09 7-14-09 11-25-08 12-09-08 12-16-08 1-28-09 2-13-09

SHEET 11 OF 25

FILE => 10-0171_hfretwall0171b-new.dgn

STRUCTURES DESIGN DETAIL SHEET (METRIC) (REV.03-17-04)

USERNAME => s121614 DATE PLOTTED => 28-JAN-2012 TIME PLOTTED => 07:54

DIST	COUNTY	ROUTE	KILOMETER POST TOTAL PROJECT	SHEET No	TOTAL SHEETS
01	Men	101	R69.4/R78.9	839	939

REGISTERED CIVIL ENGINEER 9-15-11 DATE

1-23-12
PLANS APPROVAL DATE

REGISTERED PROFESSIONAL ENGINEER M. Friedheim No. 57968 Exp. 06-30-12 CIVIL STATE OF CALIFORNIA

The State of California or its officers or agents shall not be responsible for the accuracy or completeness of electronic copies of this plan sheet.

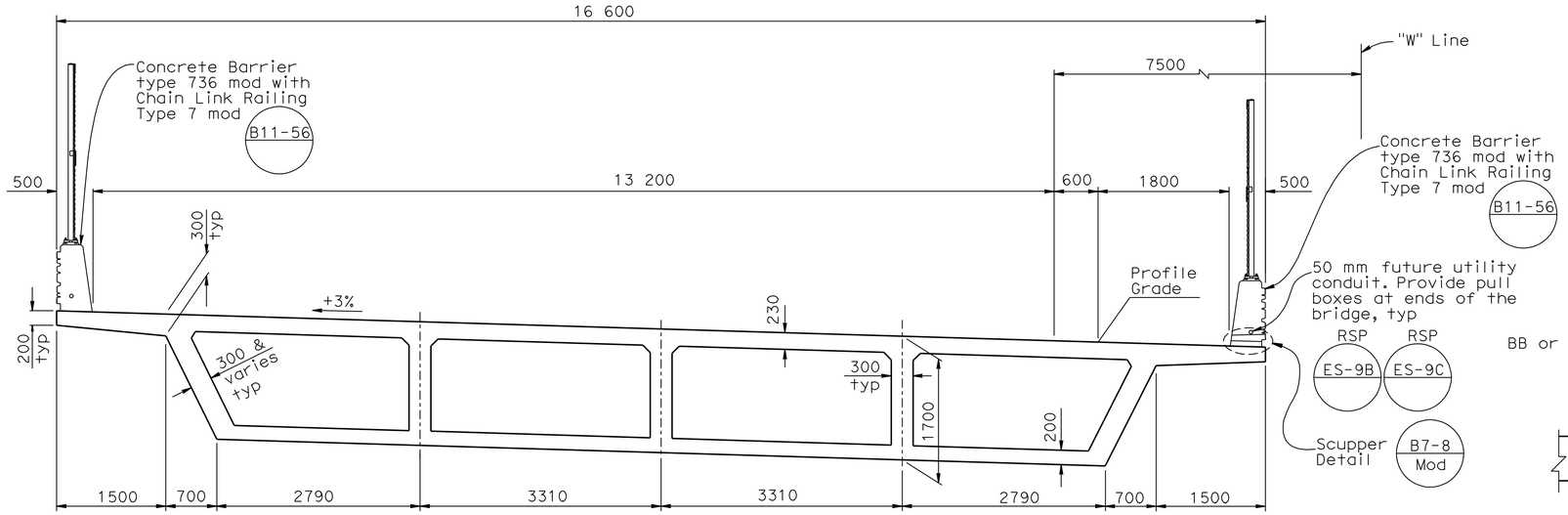

TYPICAL SECTION

1:40

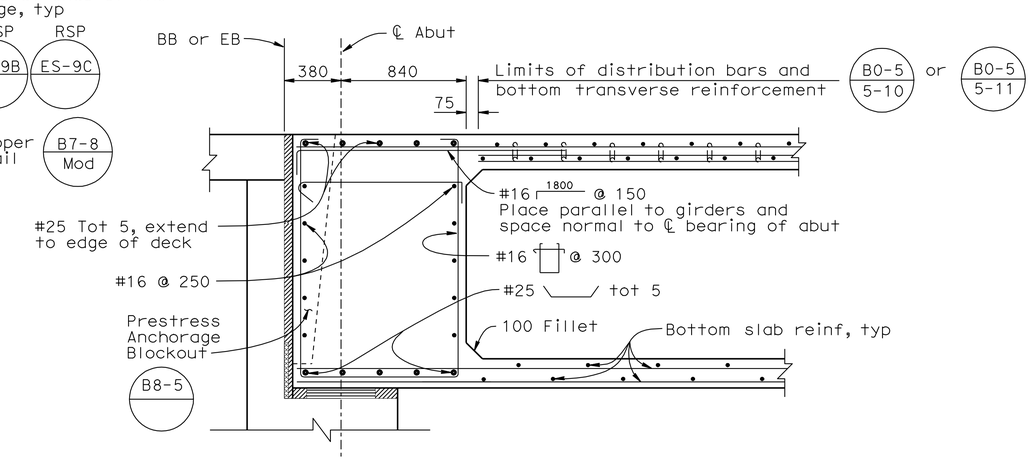

END DIAPHRAGM SECTION

1:20

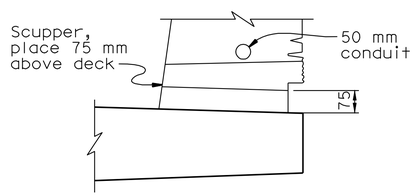

SCUPPER DETAIL

1:10

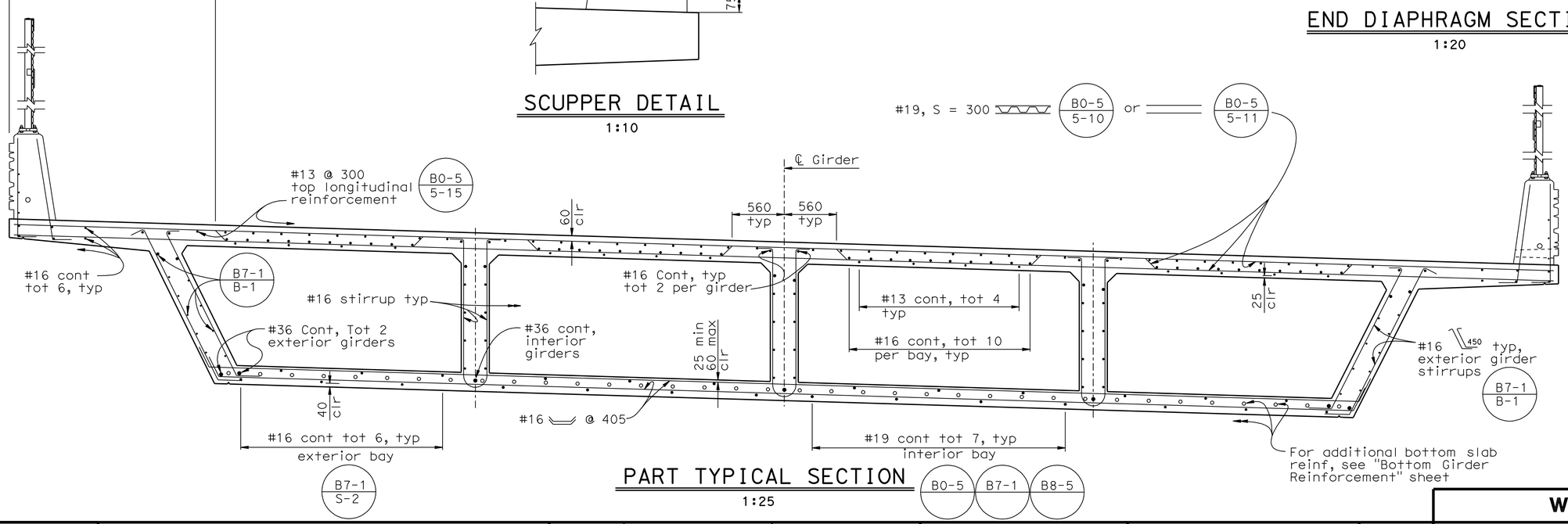

PART TYPICAL SECTION

1:25

B0-5 B7-1 B8-5

Caltrans Metric

	BY	CHECKED
DESIGN	T. Bui	I. Chernioglo
DETAILS	L. Wang/J. Yang/GS	I. Chernioglo
QUANTITIES	I. Chernioglo	T. Bui

STATE OF CALIFORNIA
DEPARTMENT OF TRANSPORTATION

DIVISION OF ENGINEERING SERVICES
STRUCTURE DESIGN
DESIGN BRANCH 2

BRIDGE NO. 10-0171
KILOMETER POST R76.807

WILLITS BYPASS
QUAIL MEADOWS OH
TYPICAL SECTION

ALL DIMENSIONS ARE IN MILLIMETERS UNLESS OTHERWISE SHOWN

ORIGINAL SCALE IN MILLIMETERS FOR REDUCED PLANS 0 10 20 30 40 50 60 70 80 90 100

CU 01
EA 262001

DISREGARD PRINTS BEARING EARLIER REVISION DATES

REVISION DATES: 05-08-08 07-01-08 09-11-08 12-15-08 12-16-08 12-18-08 02-02-09 2-11-09 2-18-09 4-24-09

SHEET 12 OF 25

FILE => 10-0171_hgts01.dgn

STRUCTURES DESIGN DETAIL SHEET (METRIC) (REV.03-17-04)

USERNAME => s121614 DATE PLOTTED => 28-JAN-2012 TIME PLOTTED => 07:54

DIST	COUNTY	ROUTE	KILOMETER POST TOTAL PROJECT	SHEET No	TOTAL SHEETS
01	Men	101	R69.4/R78.9	840	939

REGISTERED CIVIL ENGINEER 9-15-11 DATE

1-23-12
PLANS APPROVAL DATE

REGISTERED PROFESSIONAL ENGINEER M. Friedheim No. 57968 Exp. 06-30-12 CIVIL STATE OF CALIFORNIA

The State of California or its officers or agents shall not be responsible for the accuracy or completeness of electronic copies of this plan sheet.

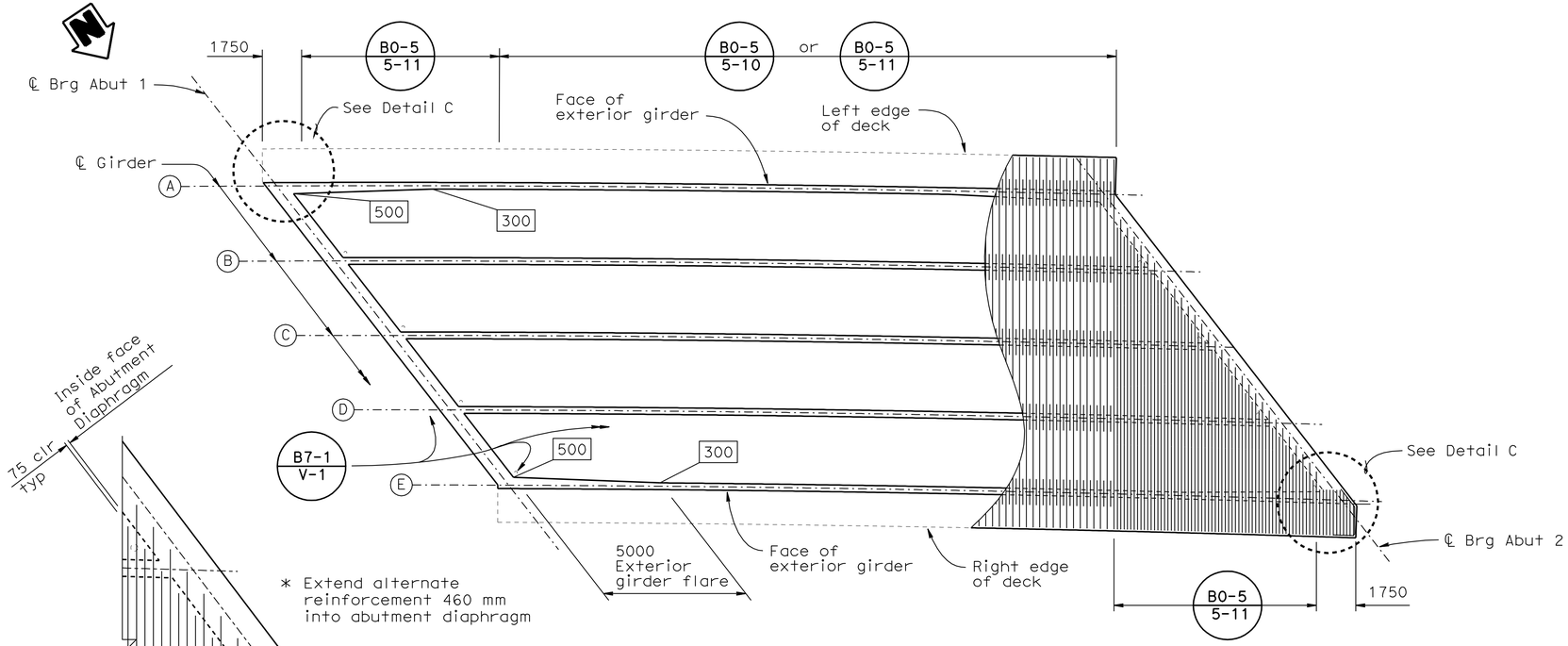

GIRDER LAYOUT

1:125

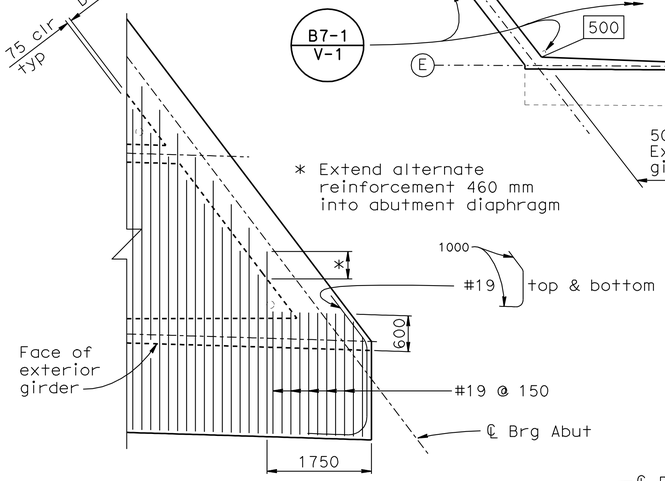

DETAIL C

1:50

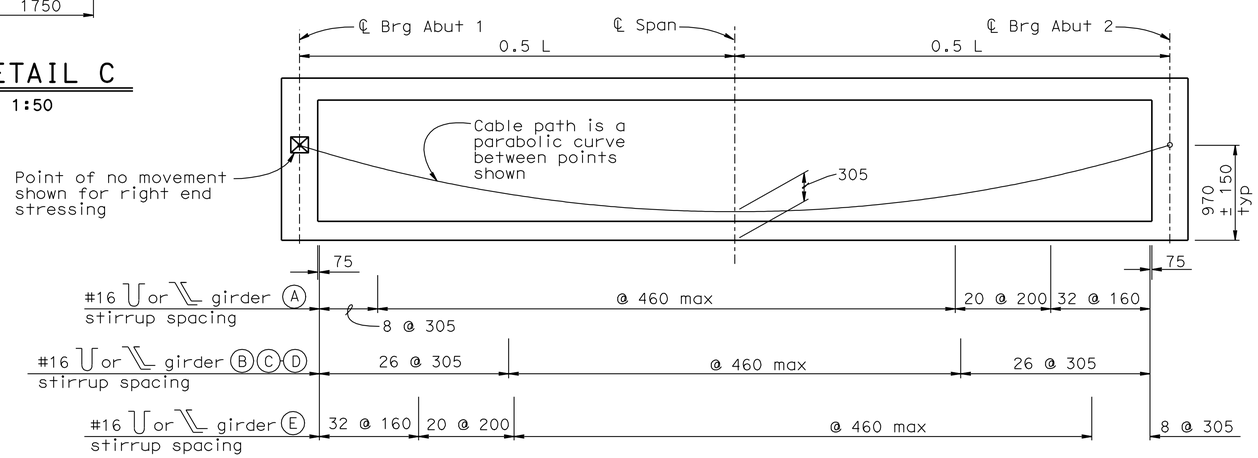

LONGITUDINAL SECTION

No Scale

PRESTRESSING NOTES

Design based on 1860 MPa Low Relaxation Strands:

Pjack = 50,710 KN

Anchor Set = 10 mm

Total Number of Girders = 5

Total long term losses assumed to be 140 MPa

Design based on μ = 0.15 and K = 0.000656/m

Concrete: f'_c = 28 MPa @ 28 days
f'_{ci} = 25 MPa @ time of stressing

Contractor shall submit elongation calculations based on initial stress at ⊠ = 0.956 times jacking stress

One end stressing shall be perform from either end

NOTES:

1. Top mat Reinf shown Bottom mat Reinf similar

Denotes girder stem width

⊠ Indicates point of no movement

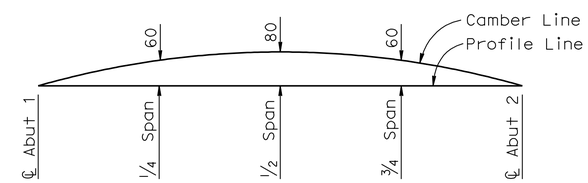

Camber values shown do not include allowance for falsework settlement

CAMBER DIAGRAM

No Scale

DESIGN	BY T. Bui	CHECKED I. Chernioglo	
DETAILS	BY L. Wang\J. Yang	CHECKED I. Chernioglo	
QUANTITIES	BY I. Chernioglo	CHECKED T. Bui	

STATE OF CALIFORNIA DEPARTMENT OF TRANSPORTATION

DIVISION OF ENGINEERING SERVICES STRUCTURE DESIGN
DESIGN BRANCH 2

BRIDGE NO. 10-0171
KILOMETER POST R76.807

WILLITS BYPASS
QUAIL MEADOWS OH
GIRDER LAYOUT

Caltrans Metric

ALL DIMENSIONS ARE IN MILLIMETERS UNLESS OTHERWISE SHOWN

ORIGINAL SCALE IN MILLIMETERS FOR REDUCED PLANS 0 10 20 30 40 50 60 70 80 90 100

CU 01
EA 262001

DISREGARD PRINTS BEARING EARLIER REVISION DATES

REVISION DATES: 05-12-08 07-01-08 08-22-08 10-30-08 11-20-08 12-19-08 02-18-09 3-11-09

SHEET 13 OF 25

STRUCTURES DESIGN DETAIL SHEET (METRIC) (REV.03-17-04)

FILE => 10-0171_hhglo.dgn

USERNAME => s126614 DATE PLOTTED => 28-JAN-2012 TIME PLOTTED => 07:55

DIST	COUNTY	ROUTE	KILOMETER POST TOTAL PROJECT	SHEET No	TOTAL SHEETS
01	Men	101	R69.4/R78.9	841	939

REGISTERED CIVIL ENGINEER 9-15-11 DATE

1-23-12
PLANS APPROVAL DATE

REGISTERED PROFESSIONAL ENGINEER M. Friedheim No. 57968 Exp. 06-30-12 CIVIL STATE OF CALIFORNIA

The State of California or its officers or agents shall not be responsible for the accuracy or completeness of electronic copies of this plan sheet.

NOTES:

1. Splices in continuous bars shall be service level splices
2. For details and reinforcement not shown, see "Typical Section" sheet

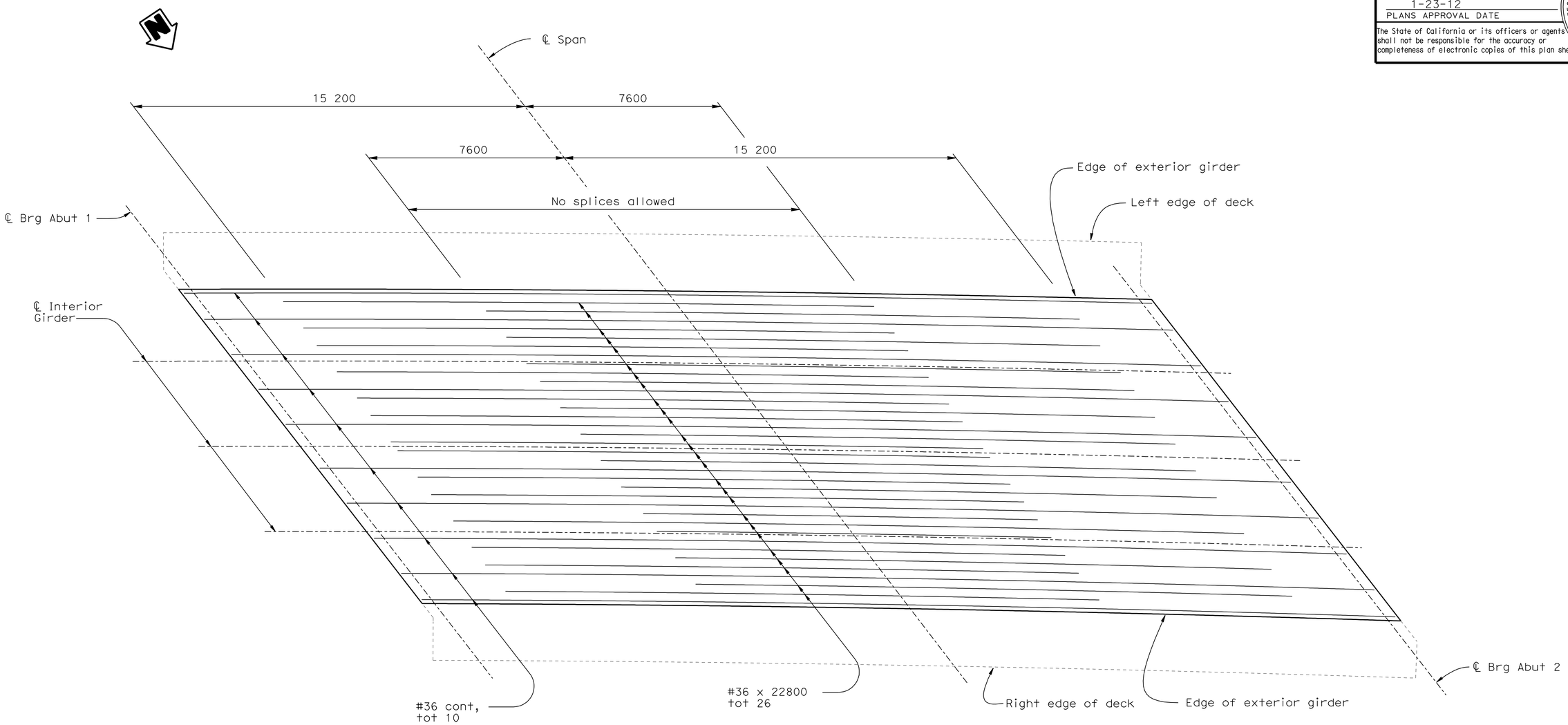

BOTTOM LONGITUDINAL REINFORCEMENT

1:80

DESIGN	BY T. Bui	CHECKED I. Chernioglo	
DETAILS	BY L. Wang\J. Yang	CHECKED I. Chernioglo	
QUANTITIES	BY I. Chernioglo	CHECKED T. Bui	

STATE OF CALIFORNIA
DEPARTMENT OF TRANSPORTATION

DIVISION OF ENGINEERING SERVICES
STRUCTURE DESIGN
DESIGN BRANCH 2

BRIDGE NO. 10-0171
KILOMETER POST R76.807

WILLITS BYPASS
QUAIL MEADOWS OH
BOTTOM GIRDER REINFORCEMENT

Caltrans Metric

ALL DIMENSIONS ARE IN MILLIMETERS UNLESS OTHERWISE SHOWN

ORIGINAL SCALE IN MILLIMETERS FOR REDUCED PLANS 0 10 20 30 40 50 60 70 80 90 100

CU 01
EA 262001

DISREGARD PRINTS BEARING EARLIER REVISION DATES

REVISION DATES: 05-13-08 08-20-08 10-31-08 02-10-09

SHEET 14 OF 25

FILE => 10-0171_hhgreinf.dgn

STRUCTURES DESIGN DETAIL SHEET (METRIC) (REV.03-17-04)

USERNAME => s121614 DATE PLOTTED => 28-JAN-2012 TIME PLOTTED => 07:55

DIST	COUNTY	ROUTE	KILOMETER POST TOTAL PROJECT	SHEET No	TOTAL SHEETS
01	Men	101	R69.4/R78.9	842	939

REGISTERED CIVIL ENGINEER 9-15-11 DATE

1-23-12
PLANS APPROVAL DATE

REGISTERED PROFESSIONAL ENGINEER Marc Friedheim No. 57968 Exp. 06-30-12 CIVIL STATE OF CALIFORNIA

The State of California or its officers or agents shall not be responsible for the accuracy or completeness of electronic copies of this plan sheet.

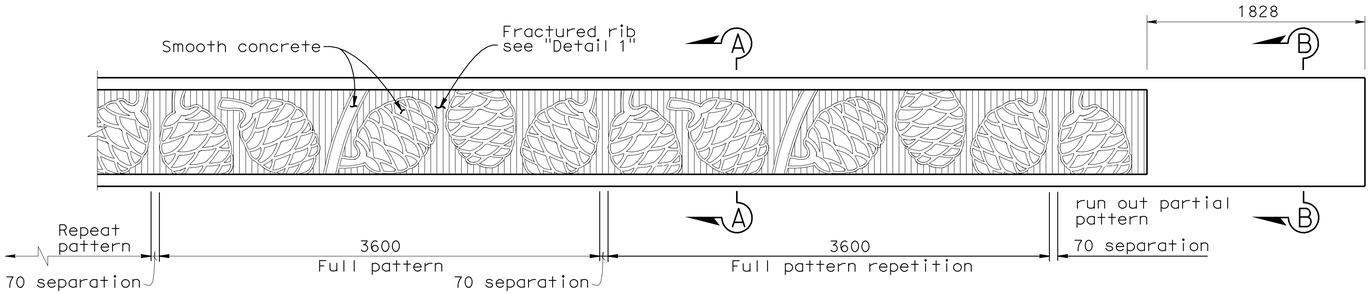

TYPE 736 BARRIER PARTIAL ELEVATION

1:25

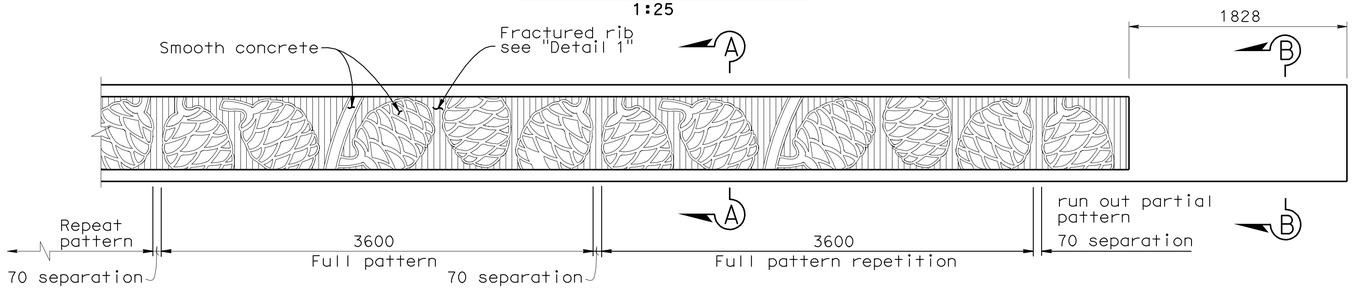

TYPE 732 BARRIER PARTIAL ELEVATION

1:25

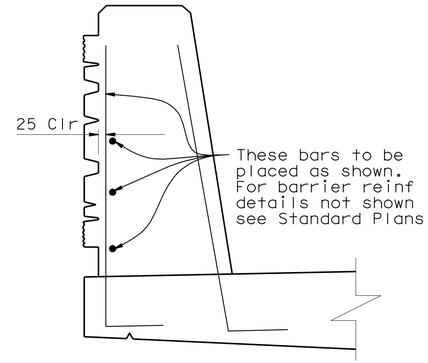

BARRIER REINFORCEMENT MODIFICATION

1:10

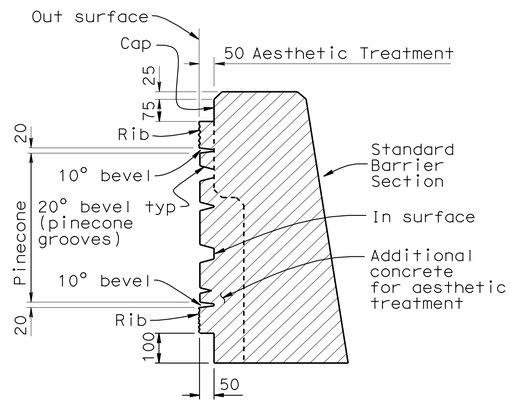

SECTION A-A

1:10

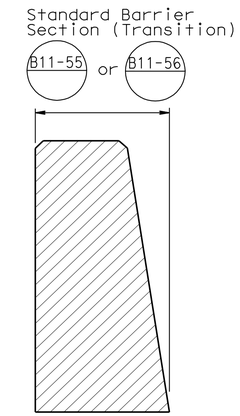

SECTION B-B

1:10

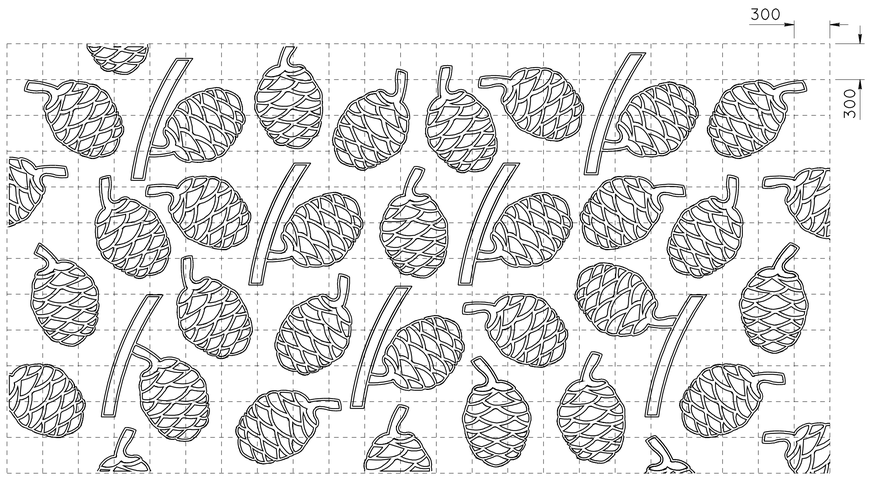

300 mm grid for reference only

RANDOM PINECONE PATTERN FOR WING WALLS

1:25

NOTE: Place random pinecone pattern on Fractured Rib Background
Fractured rib to be at same angle/alignment as abutment wall.
Relief similar to Barrier Section A-A

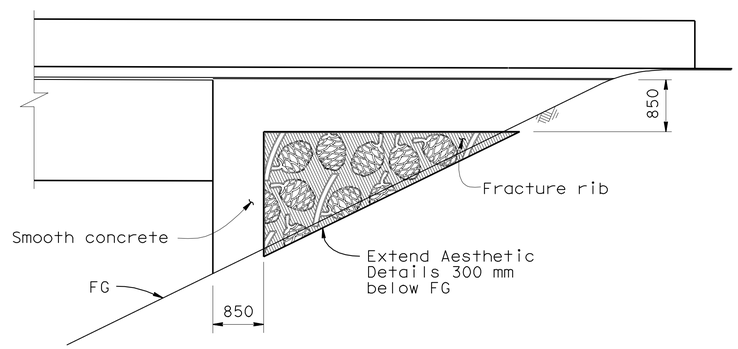

TYPICAL WINGWALL AESTHETIC TREATMENT

No Scale

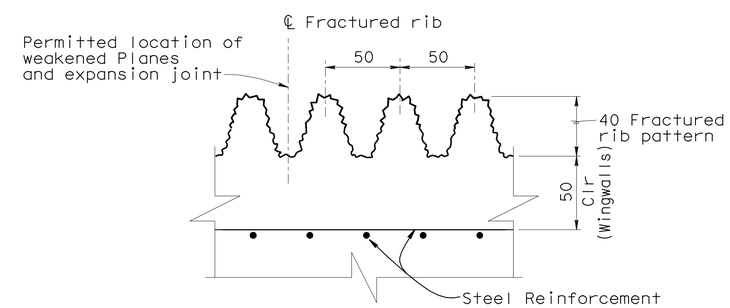

TYPICAL FRACTURED RIB TEXTURE DETAIL 1

1:2

Caltrans Metric

	BY	CHECKED
DESIGN	T. Bui	I. Chernioglo
DETAILS	L. Wang	I. Chernioglo
QUANTITIES	I. Chernioglo	T. Bui

STATE OF CALIFORNIA DEPARTMENT OF TRANSPORTATION

DIVISION OF ENGINEERING SERVICES STRUCTURE DESIGN DESIGN BRANCH 2

BRIDGE NO. 10-0171
KILOMETER POST R76.807

WILLITS BYPASS
QUAIL MEADOWS OH
AESTHETIC DETAILS

ALL DIMENSIONS ARE IN MILLIMETERS UNLESS OTHERWISE SHOWN

ORIGINAL SCALE IN MILLIMETERS FOR REDUCED PLANS 0 10 20 30 40 50 60 70 80 90 100

CU 01
EA 262001

DISREGARD PRINTS BEARING EARLIER REVISION DATES

REVISION DATES: 09-10-08 1-18-09 3-12-09

SHEET 15 OF 25

FILE => 10-0171_hjas.dgn

STRUCTURES DESIGN DETAIL SHEET (METRIC) (REV.03-17-04)

USERNAME => s121614 DATE PLOTTED => 28-JAN-2012 TIME PLOTTED => 07:55

DIST	COUNTY	ROUTE	KILOMETER POST TOTAL PROJECT	SHEET No	TOTAL SHEETS
01	Men	101	R69.4/R78.9	843	939

Caltrans Metric

REGISTERED CIVIL ENGINEER 9-15-11 DATE

1-23-12
PLANS APPROVAL DATE

REGISTERED PROFESSIONAL ENGINEER M. Friedheim No. 57968 Exp. 06-30-12 CIVIL STATE OF CALIFORNIA

The State of California or its officers or agents shall not be responsible for the accuracy or completeness of electronic copies of this plan sheet.

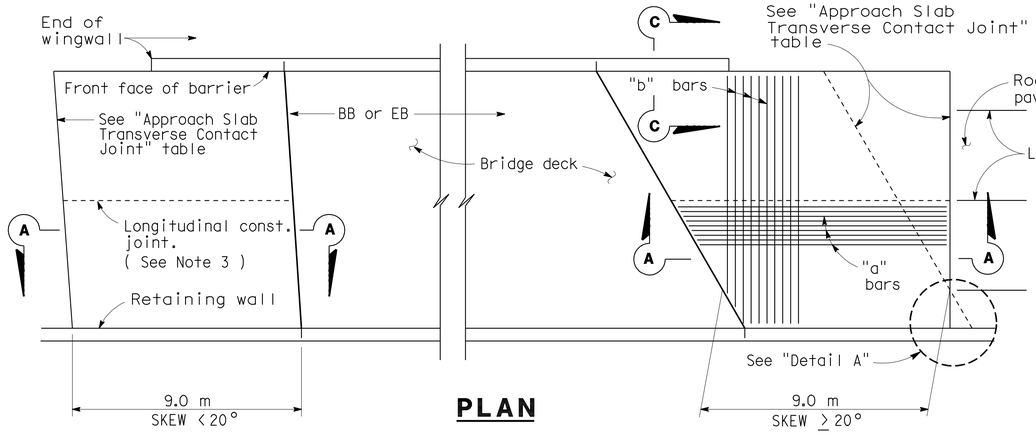

PLAN

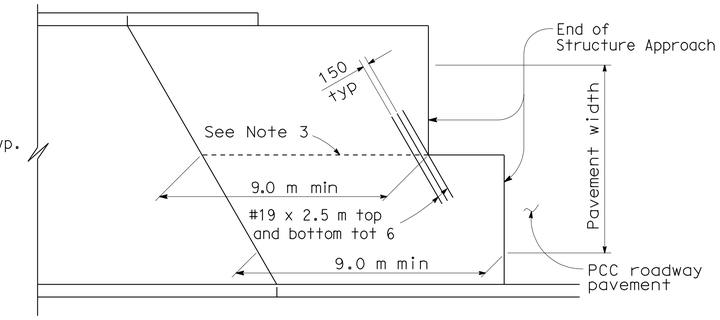

STRUCTURE APPROACH - END STAGGER DETAIL

APPROACH SLAB TRANSVERSE CONTACT JOINT		
APPROACH SKEW	WITH AC ROADWAY PAVEMENT	WITH PCC ROADWAY PAVEMENT
< 20°	Parallel to face of paving notch	Parallel to face of paving notch
20°- 45°	Parallel to face of P N use (Detail A)	Stagger lines 7.2 m to 10.8 m apart.
> 45°	Parallel to face of P N use (Detail A)	Stagger at each lane line.

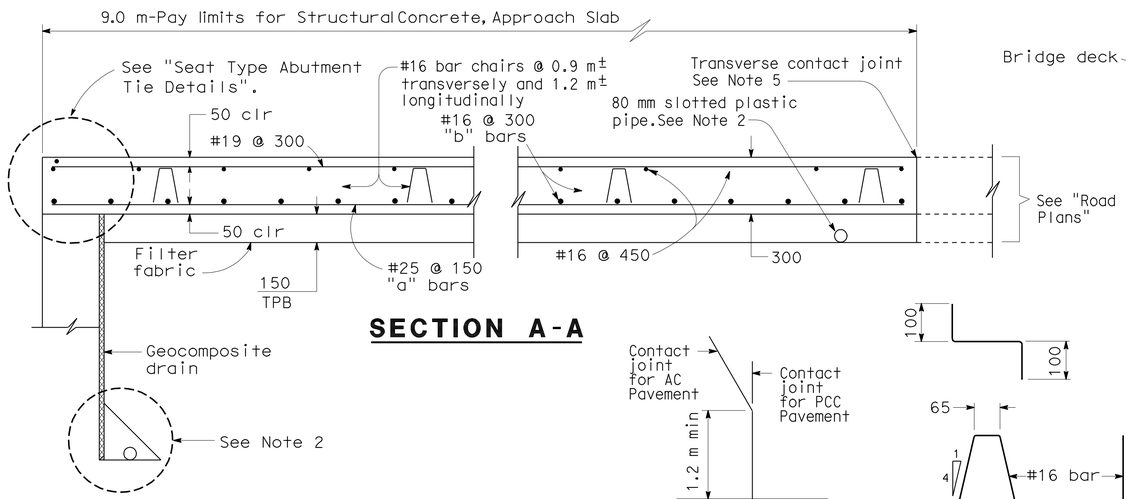

SECTION A-A

DETAIL A

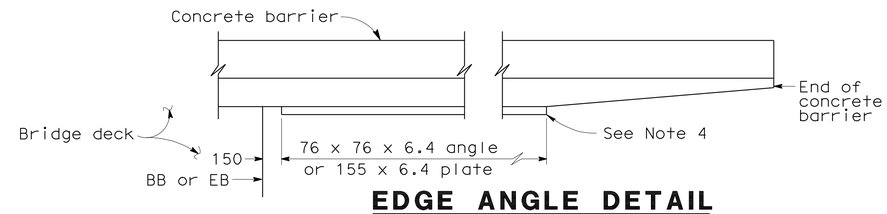

EDGE ANGLE DETAIL

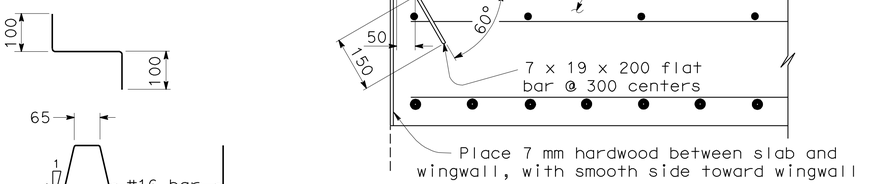

*(TO BE USED WITH TYPE 25 OR TYPE 27 CONCRETE BARRIER)

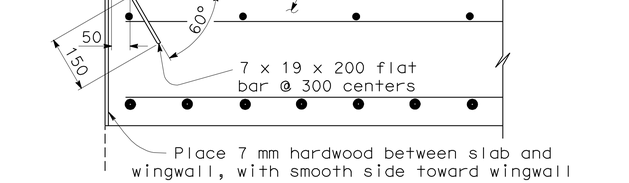

*(TO BE USED WITH TYPE 732 OR TYPE 736 CONCRETE BARRIER)

DETAIL B

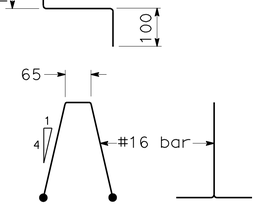

BAR CHAIR DETAIL

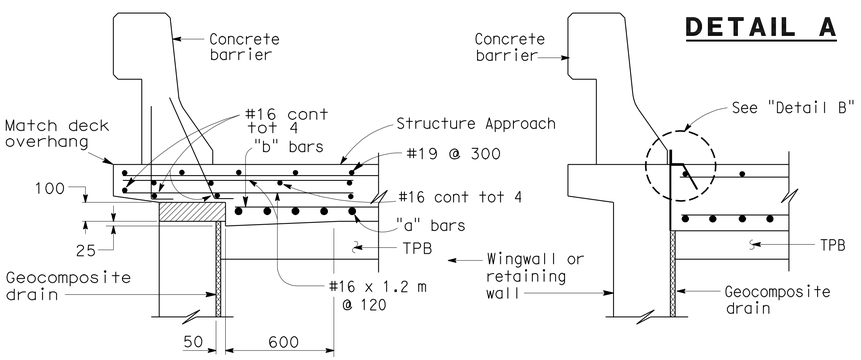

TYPE E-1

TYPE E-2

SECTION C-C

(Type E-1 to be used,unless otherwise shown on plans)

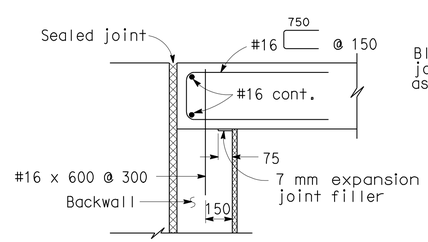

MR ≤ 50 mm

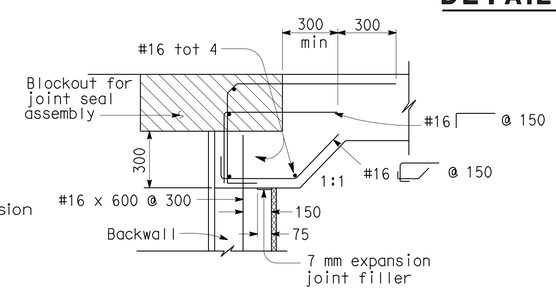

MR > 50 mm

SEAT TYPE ABUTMENT TIE DETAILS (SEE NOTE 1)

NOTES:

1. For details not shown,see Structure Plans. For MR ≤ 50 mm,adjust bar reinforcement to clear a sawcut for sealed joint,when required.
2. For drainage details,see "Structure Approach Drainage Details" sheet.
3. Longitudinal construction joints,when permitted by the Engineer, shall be located on lane lines.
4. End angle or plate at beginning of barrier transition, end of wingwall or end of structure approach as applicable.
5. For transverse contact joint with new PCC paving, refer to Standard Plan P30
6. At the contractor's option, approach slab transverse reinforcement may be placed parallel to paving notch. Spacing of transverse reinforcement is measured along ℄ roadway.

Remove all polystyrene.

NO SCALE

ALL DIMENSIONS ARE IN MILLIMETERS UNLESS OTHERWISE SHOWN

STANDARD DRAWING				
RELEASE DATE 7/9/03	DESIGN	BY M. TRAFFALIS	CHECKED E. THORKILDSEN	RELEASED BY
FILE NO. xs3-120	DETAILS	BY R. YEE	CHECKED E. THORKILDSEN	OFFICE CHIEF
	SUBMITTED	BY M. HA	DRAWING DATE 4/98	

DS OSD 2147A (METRIC) (REV. 2/25/97)

ORIGINAL SCALE IN MILLIMETERS FOR REDUCED PLANS 0 10 20 30 40 50 60 70 80 90 100

STATE OF CALIFORNIA DEPARTMENT OF TRANSPORTATION

DIVISION OF ENGINEERING SERVICES

CU 01
EA 262001

BRIDGE NO. 10-0171
KILOMETER POST R76.807

DISREGARD PRINTS BEARING EARLIER REVISION DATES 2-13-09

WILLITS BYPASS

QUAIL MEADOWS OH

STRUCTURE APPROACH TYPE N(9S)

REVISION DATES (PRELIMINARY STAGE ONLY)

SHEET 16 OF 25

USERNAME => s121614

10-0171_hksa.dgn

DATE PLOTTED => 28-JAN-2012 TIME PLOTTED => 07:55

DIST.	COUNTY	ROUTE	KILOMETER POST TOTAL PROJECT	SHEET NO.	TOTAL SHEETS
01	Men	101	R69.4/R78.9	844	939

Caltrans Metric

Marc Friedheim 9-15-11
REGISTERED ENGINEER - CIVIL

1-23-12
PLANS APPROVAL DATE

REGISTERED PROFESSIONAL ENGINEER Marc Friedheim No. 57968 Exp. 06-30-12 CIVIL STATE OF CALIFORNIA

The State of California or its officers or agents shall not be responsible for the accuracy or completeness of electronic copies of this plan sheet.

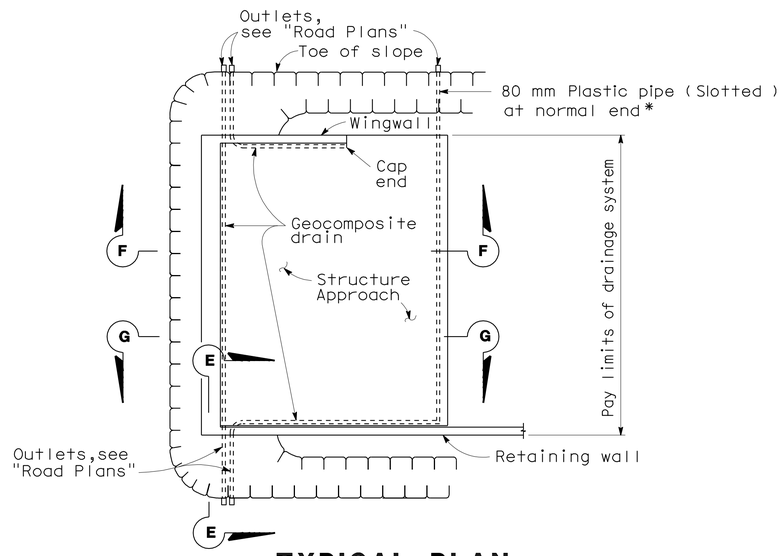

TYPICAL PLAN

*For pipe layout at staggered end,see "Detail B".

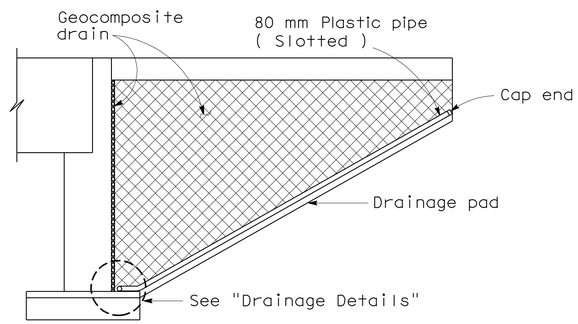

CANTILEVER WINGWALL
SECTION F-F

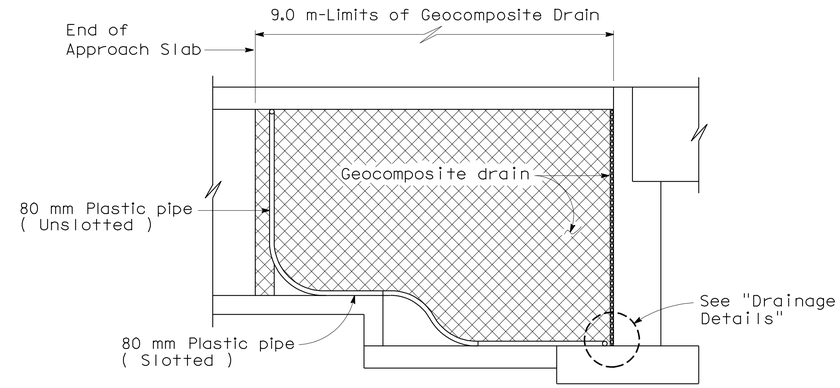

RETAINING WALL WINGWALL
SECTION G-G

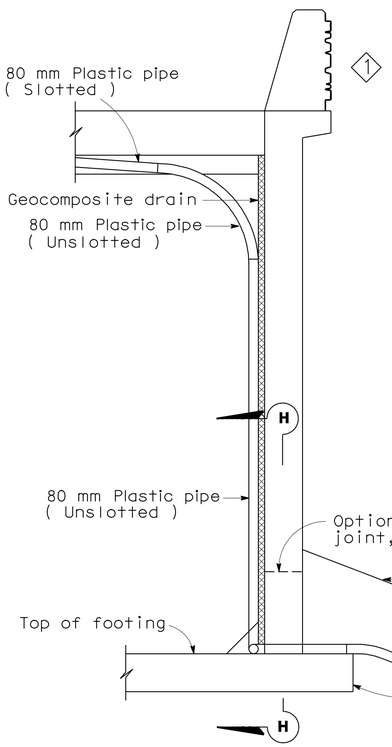

SECTION E-E

NOTE: Bends and junctions in 80 mm plastic pipe are 750 mm radius min.

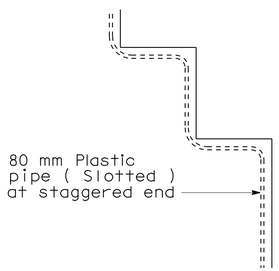

DETAIL B

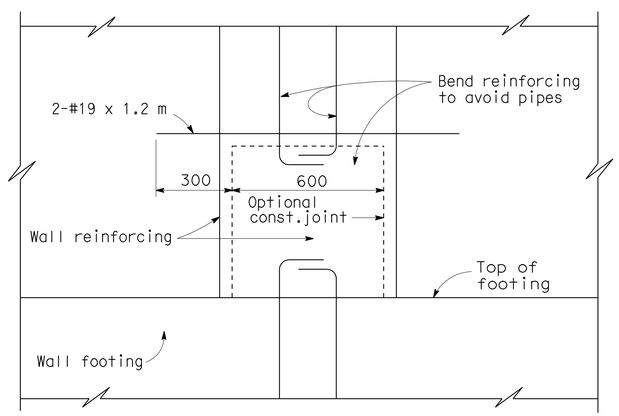

SECTION H-H

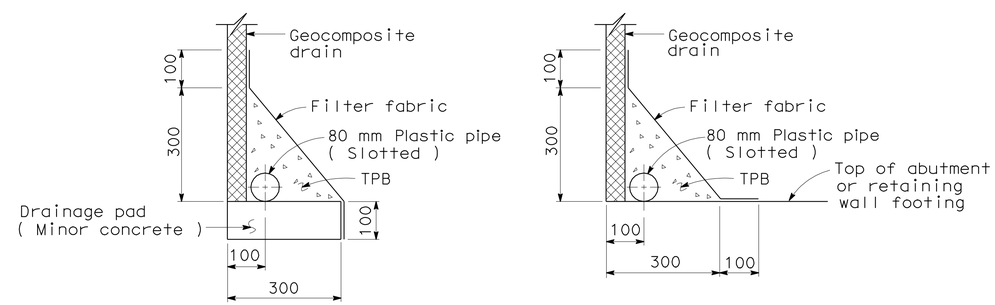

WITHOUT FOOTING **WITH FOOTING**

DRAINAGE DETAILS

SPECIAL DETAILS

NO SCALE

ALL DIMENSIONS ARE IN MILLIMETERS UNLESS OTHERWISE SHOWN

1 Modified barrier

STANDARD DRAWING

RELEASE DATE	REVISED	DESIGN	BY M. TRAFFALIS	CHECKED E. THORKILDSEN	RELEASED BY
		DETAILS	BY R. YEE	CHECKED E. THORKILDSEN	
FILE NO.	xs3-110	SUBMITTED	BY M. HA	DRAWING DATE 4/98	OFFICE CHIEF

STATE OF CALIFORNIA DEPARTMENT OF TRANSPORTATION

DIVISION OF ENGINEERING SERVICES STRUCTURE DESIGN DESIGN BRANCH 2

BRIDGE NO. 10-0171
KILOMETER POST R76.807

WILLITS BYPASS
QUAIL MEADOWS OH
STRUCTURE APPROACH DRAINAGE DETAILS

DS OSD 2147A (METRIC) (REV. 2/25/97)

ORIGINAL SCALE IN MILLIMETERS FOR REDUCED PLANS 0 10 20 30 40 50 60 70 80 90 100

CU 01
EA 262001

DISREGARD PRINTS BEARING EARLIER REVISION DATES 09-16-08 1-28-09

REVISION DATES (PRELIMINARY STAGE ONLY)

SHEET 17 OF 25

USERNAME => s121614

10-0171_hlsad.dgn

DATE PLOTTED => 28-JAN-2012 TIME PLOTTED => 07:56

DIST.	COUNTY	ROUTE	KILOMETER POST TOTAL PROJECT	SHEET NO.	TOTAL SHEETS
01	Men	101	R69.4/R78.9	845	939

Caltrans Metric

Marc Friedheim 9-15-11
REGISTERED ENGINEER - CIVIL

1-23-12
PLANS APPROVAL DATE

REGISTERED PROFESSIONAL ENGINEER Marc Friedheim No. 57968 Exp. 06-30-12 CIVIL STATE OF CALIFORNIA

The State of California or its officers or agents shall not be responsible for the accuracy or completeness of electronic copies of this plan sheet.

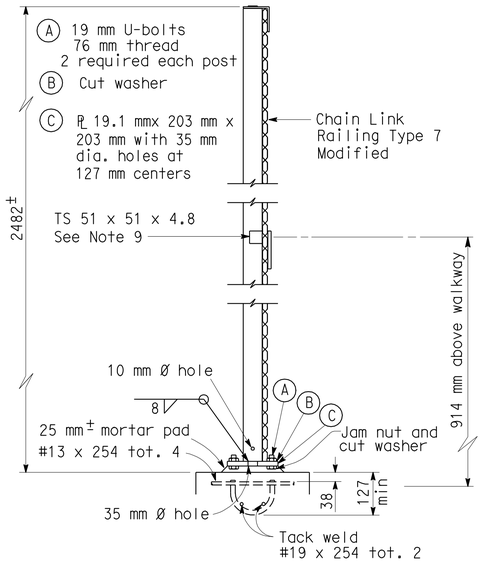

TYPICAL POST DETAIL

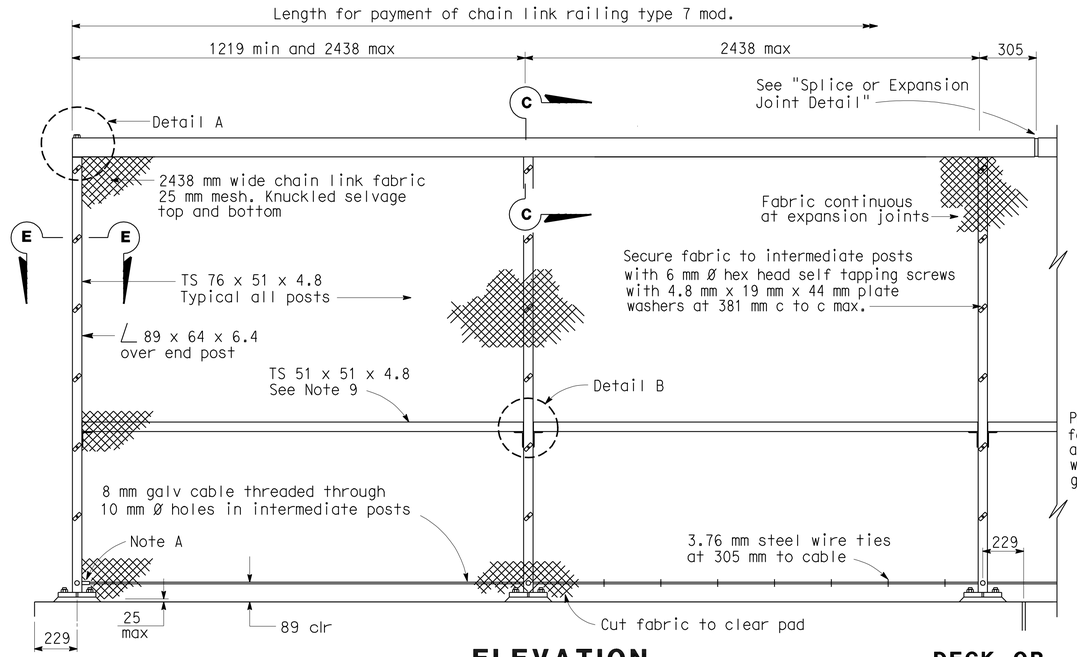

END POST

ELEVATION

DECK OR WALL JOINT

Note A: Anchor 8 mm galvanized cable at end post with 13 mm Ø stud socket assembly or 13 mm Ø welded eyebolt and crimped sleeve clamp. Provide 38 mm min. take-up at each anchorage.

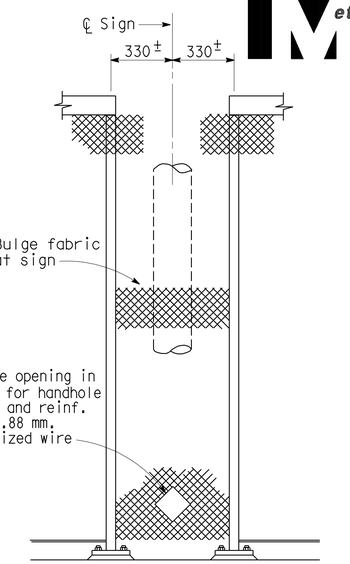

SIGN PANEL

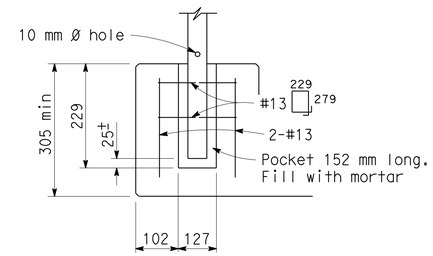

ALTERNATIVE ANCHORAGE DETAIL

May be used when thickness of concrete is 305 mm or more. Not to be used when post contains electrical conduit.

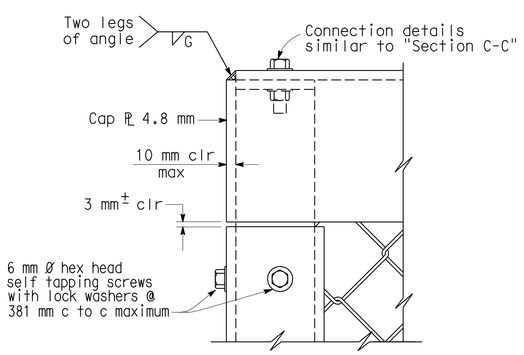

DETAIL A

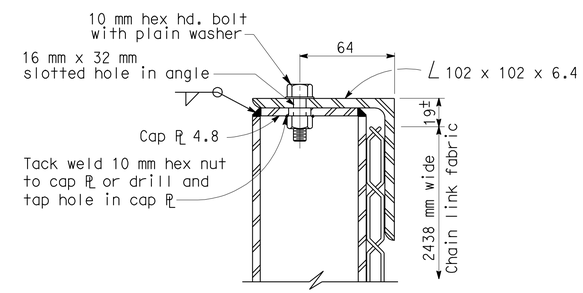

SECTION C-C

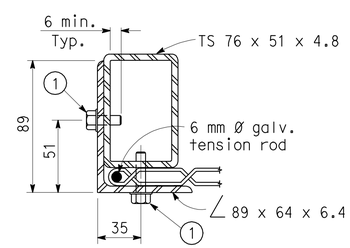

SECTION E-E

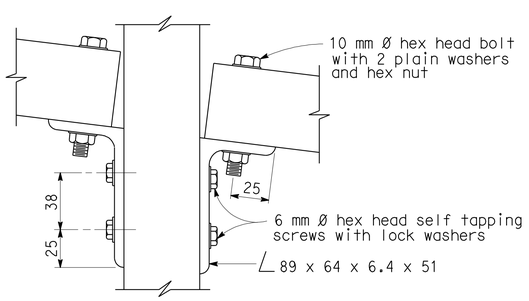

DETAIL B

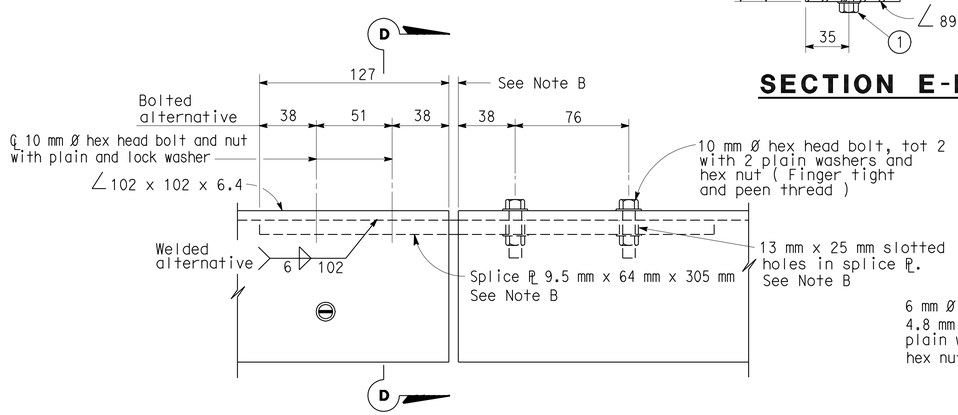

SPLICE OR EXPANSION JOINT DETAIL

Note B: Expansion joint same dimension as expansion joint in deck or wall. Increase slotted hole length and splice PL length correspondingly.

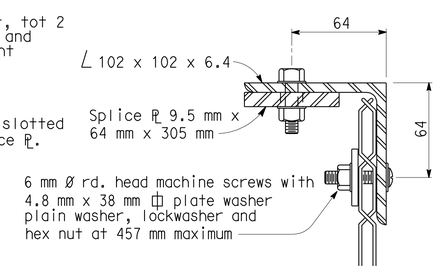

SECTION D-D

NOTES:

1. Railing assembly except chain link fabric to be galvanized after fabrication.
2. Railing shall conform to horizontal and vertical alignment. Post shall be vertical. Horizontal angle shall be bent to conform to horizontal alignment if radius is 45.72 m or less.
3. Horizontal angle shall be continuous over not less than two intermediate posts,except that a shorter length is permitted at expansion joints and other rail discontinuities.
4. When railing is placed on curved horizontal alignment with radius of 45.72 m or less,drill 13 mm Ø x 76 mm deep hole in slab and set in epoxy adhesives 10 mm Ø welded eyebolt for 8 mm cable to limit the midordinate distance between the 8 mm cable and curve to be 25 mm max.
5. Place fabric parallel to slope.
6. Alternative details may be submitted by the Contractor for Engineer's approval.
7. Provide thimbles at all cable loops.
8. Peen all exposed bolts.
9. TS 51 x 51 x 4.8 required for curves with radius of 45.72 or less. Bend to conform to curve.

NO SCALE
ALL DIMENSIONS ARE IN MILLIMETERS UNLESS OTHERWISE SHOWN

STANDARD DRAWING

RELEASE DATE 6/9/98	DESIGN	BY R.W. BISHOP	CHECKED J. HAMAGUCHI	RELEASED BY
	DETAILS	BY R. YEE	CHECKED J. HAMAGUCHI	
FILE NO. xs16-360	SUBMITTED	BY R.W. BISHOP	DRAWING DATE 12/76	OFFICE CHIEF

STATE OF CALIFORNIA
DEPARTMENT OF TRANSPORTATION

DIVISION OF ENGINEERING SERVICES
STRUCTURE DESIGN
DESIGN BRANCH 2

BRIDGE NO. 10-0171
KILOMETER POST R76.807

WILLITS BYPASS
QUAIL MEADOWS OH
CHAIN LINK RAILING TYPE 7 MODIFIED

DS OSD 2147A (METRIC) (REV. 2/25/97)

ORIGINAL SCALE IN MILLIMETERS FOR REDUCED PLANS 0 10 20 30 40 50 60 70 80 90 100

CU 01
EA 262001

DISREGARD PRINTS BEARING EARLIER REVISION DATES 09-10-08

REVISION DATES (PRELIMINARY STAGE ONLY)

SHEET 18 OF 25

USERNAME => s121614

10-0171_hmclf.dgn

DATE PLOTTED => 28-JAN-2012 TIME PLOTTED => 07:56

DIST	COUNTY	ROUTE	KILOMETER POST TOTAL PROJECT	SHEET No	TOTAL SHEETS
01	Men	101	R69.4/R78.9	846	939

CERTIFIED ENGINEERING GEOLOGIST 6-17-09 DATE

REGISTERED GEOLOGIST — Reid Buell — No. 1481 — Exp. 4-30-11 — CERTIFIED ENGINEERING GEOLOGIST — STATE OF CALIFORNIA

1-23-12
PLANS APPROVAL DATE

The State of California or its officers or agents shall not be responsible for the accuracy or completeness of electronic copies of this plan sheet.

BENCH MARK

SURVEY CONTROL

PMV 825
Fnd 1" IP W/PLUG
171.608 m Lt. ℄ "W" Line Rte 101
Sta. 174+09.665
N 695982.800
E 1883440.826
Elev. = 410.952

PRHV 4827
Fnd ALCAR
125.702 m Lt. ℄ "W" Line Rte 101
Sta. 180+84.272
N 696637.399
E 1883088.183
Elev. = 407.464

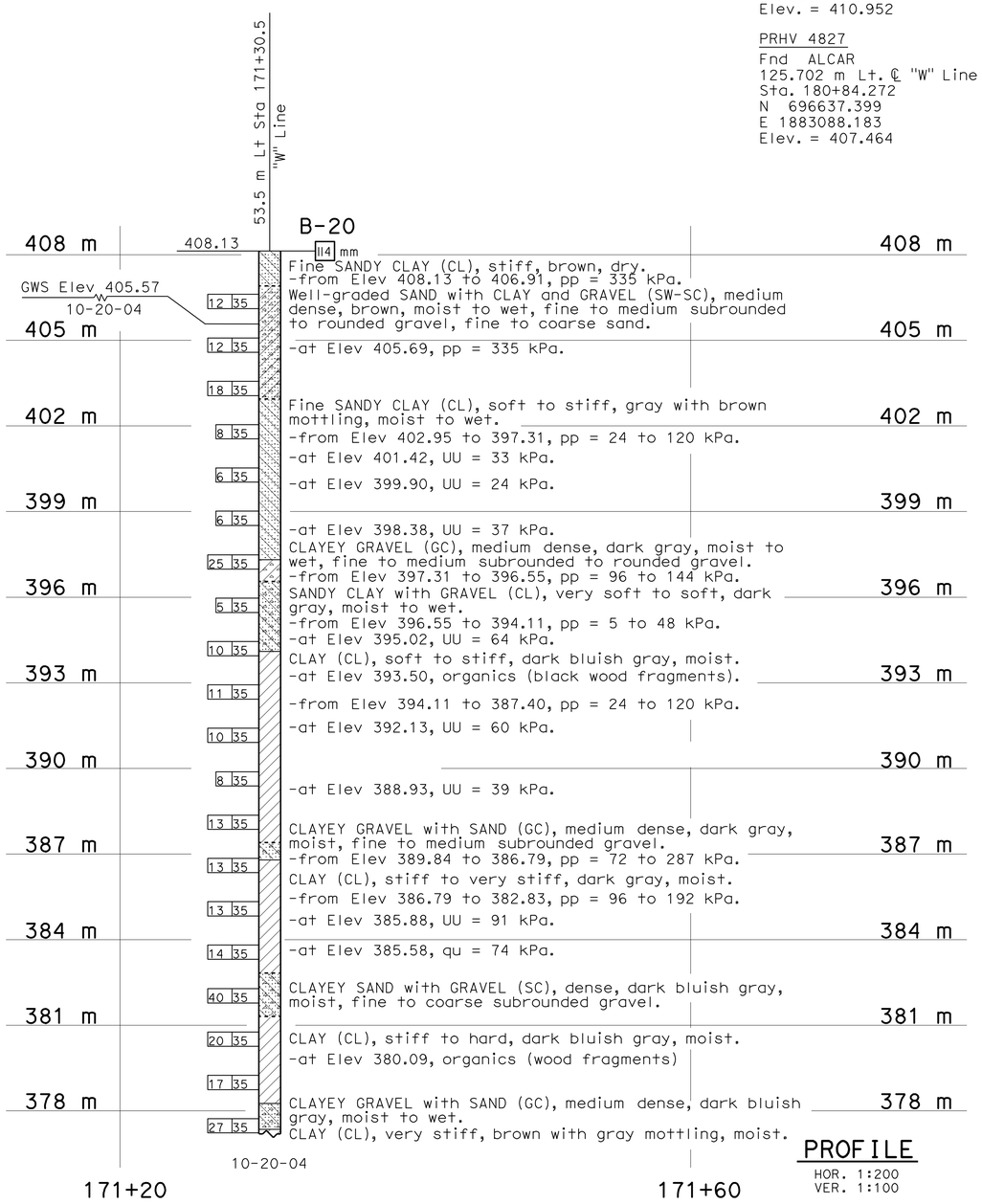

PROFILE
HOR. 1:200
VER. 1:100

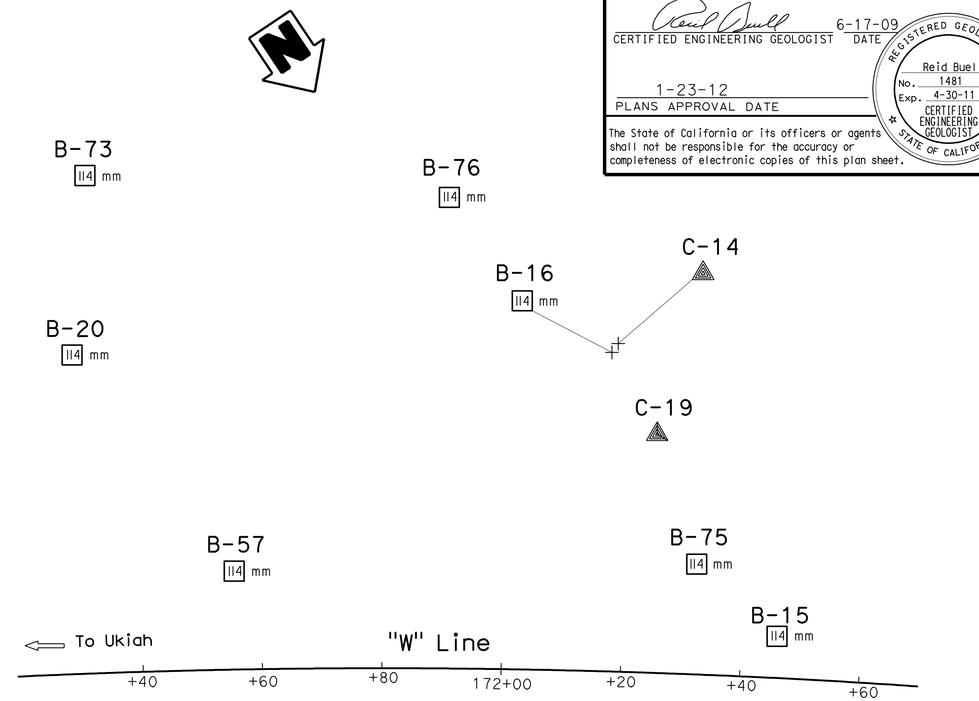

PLAN
1:500

NOTES:

1. Standard Penetration Tests (SPT) performed in Borings B-16, B-20 and B-57 were advanced using a 63.5 kg Safety Hammer.
2. Standard Penetration Tests (SPT) performed in Borings B-15, B-73, B-75 and B-76 were advanced using a 63.5 kg Diedrich Automatic Hammer.
3. E = Blow count for 0.3 m penetration extrapolated from blow count for less than 0.3 m (due to change in material or hard driving).
4. P = Push. Standard Penetration Test (SPT) split barrel sampler penetrated without any impact through the sample interval of 457 mm (18 inches) when placing drive weight assembly on sample rods.
5. pp = Unconfined compressive strength determined in the field by "Pocket Penetrometer." Units shown are kilopascals (kPa).
6. qu = Unconfined compressive strength determined in the laboratory. Units shown are kilopascals (kPa).
7. UU = Undrained shear strength determined in the laboratory by Unconsolidated-Undrained Triaxial Test. Units shown are kilopascals (kPa).
8. Consistency descriptors shown on the LOTB sheets are based on the pocket penetrometer readings.
9. Ground water surface elevations are subject to seasonal fluctuations and may occur at higher or lower elevations depending on conditions at any particular time.

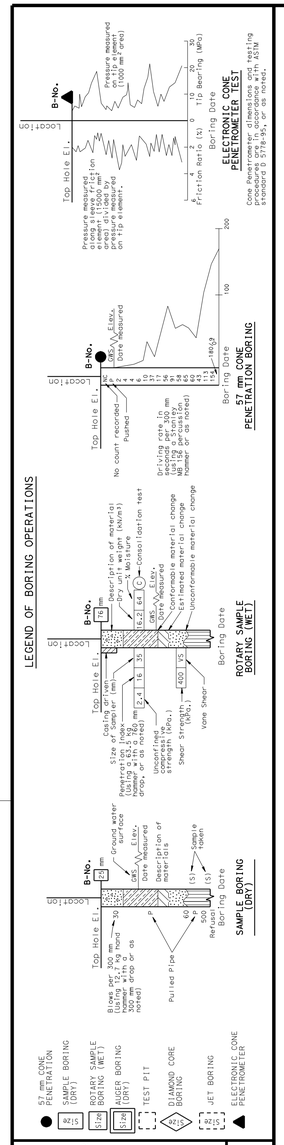

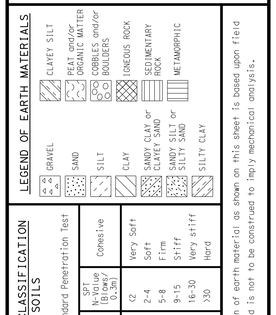

CONSISTENCY CLASSIFICATION FOR SOILS
According to the Standard Penetration Test

SPT N-Value (Blows/0.3m)	Granular	SPT N-Value (Blows/0.3m)	Cohesive
0-4	Very Loose	<2	Very Soft
5-10	Loose	2-4	Soft
11-30	Medium Dense	5-8	Firm
31-50	Dense	9-15	Stiff
>50	Very Dense	16-30	Very stiff
		>30	Hard

NOTE: Classification of earth material as shown on this sheet is based upon field inspection and is not to be construed to imply mechanical analysis.

OGS CIVIL LOG OF TEST BORINGS SHEET (METRIC) (REV. 4/04)

Caltrans Metric

ENGINEERING SERVICES	GEOTECHNICAL SERVICES
DRAWN BY	F. Nguyen 5/09
CHECKED BY	T. Alderman

FIELD INVESTIGATION BY: T. Alderman

STATE OF CALIFORNIA DEPARTMENT OF TRANSPORTATION

DIVISION OF ENGINEERING SERVICES STRUCTURE DESIGN
DESIGN BRANCH 2

BRIDGE NO. 10-0171
KILOMETER POST R76.807

WILLITS BYPASS
QUAIL MEADOWS OH
LOG OF TEST BORINGS 1 OF 7

ALL DIMENSIONS ARE IN METERS UNLESS OTHERWISE SHOWN

ORIGINAL SCALE IN MILLIMETERS FOR REDUCED PLANS 0 10 20 30 40 50 60 70 80 90 100

CU 01
EA 262001

DISREGARD PRINTS BEARING EARLIER REVISION DATES

REVISION DATES (PRELIMINARY STAGE ONLY): 05-19-09

SHEET 19 OF 25

FILE => 10-0171_holotb01.dgn

USERNAME => s121614 DATE PLOTTED => 28-JAN-2012 TIME PLOTTED => 07:56

DIST	COUNTY	ROUTE	KILOMETER POST TOTAL PROJECT	SHEET No	TOTAL SHEETS
01	Men	101	R69.4/R78.9	847	939

CERTIFIED ENGINEERING GEOLOGIST — DATE 6-17-09

REGISTERED GEOLOGIST — Reid Buell No. 1481 Exp. 4-30-11 — CERTIFIED ENGINEERING GEOLOGIST — STATE OF CALIFORNIA

1-23-12
PLANS APPROVAL DATE

The State of California or its officers or agents shall not be responsible for the accuracy or completeness of electronic copies of this plan sheet.

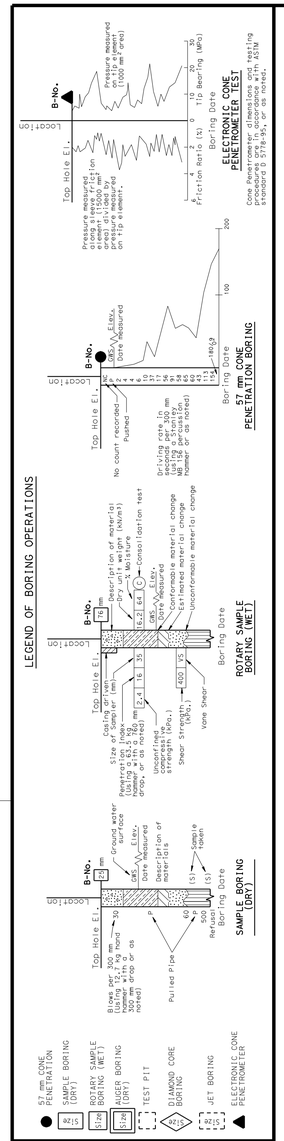

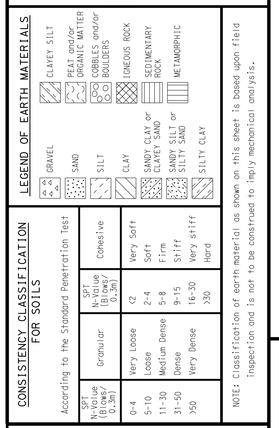

CONSISTENCY CLASSIFICATION FOR SOILS

According to the Standard Penetration Test

SPT N-Value (Blows/ 0.3m)	Granular	SPT N-Value (Blows/ 0.3m)	Cohesive
0-4	Very Loose	<2	Very Soft
5-10	Loose	2-4	Soft
11-30	Medium Dense	5-8	Firm
31-50	Dense	9-15	Stiff
>50	Very Dense	16-30	Very stiff
		>30	Hard

NOTE: Classification of earth material as shown on this sheet is based upon field inspection and is not to be construed to imply mechanical analysis.

OGS CIVIL LOG OF TEST BORINGS SHEET (METRIC) (REV. 4/04)

FOR PLAN VIEW, SEE "LOG OF TEST BORINGS" 1 OF 7

83.5 m Lt Sta 171+31.5
"W" Line

B-73

408.60

408 m — 114 mm CLAY (CL), stiff to hard, brown, dry.
-at Elev 407.99, pp = 287 kPa.
Fine SANDY CLAY (CL), stiff to hard, brown, moist.
-from Elev 407.69 to 406.47, pp = 96 to 431 kPa.
CLAYEY GRAVEL with SAND (GC), loose, brown, moist, fine to medium rounded gravel.
CLAY (CL), soft, greenish gray, wet.

405 m — GWS Elev 404.82 -from Elev 405.86 to 404.64, pp = 24 to 48 kPa.
9-13-06 CLAY (CL), firm to stiff, mottled dark brown and dark greenish gray, wet.
-from Elev 404.64 to 403.11, pp = 72 to 144 kPa.
CLAY (CL), very soft to firm, dark greenish gray, wet.

402 m — -from Elev 403.11 to 402.20, pp = 5 to 96 kPa.
Fine SANDY CLAY (CL), very soft to soft, dark greenish gray, wet.
-from Elev 402.20 to 395.42, pp = 5 to 48 kPa.
-at Elev 401.89, UU = 12 kPa.

399 m — -at Elev 398.85, UU = 18 kPa.
-at Elev 397.32, UU = 17 kPa.
-at Elev 395.80, UU = 28 kPa.

396 m — GRAVELLY CLAY (CL), firm, dark greenish gray, moist, fine to medium subangular to subrounded gravel.

393 m — Fine SANDY CLAY (CL), very soft to firm, dark greenish gray, wet.
-from Elev 393.97 to 390.31, pp = 5 to 72 kPa.
-at Elev 392.90, UU = 9 kPa.

390 m — -from Elev 390.31 to 387.87, pp = 48 to 120 kPa.
-at Elev 389.55, UU = 69 kPa.

387 m — GRAVELLY CLAY (CL), firm, dark greenish gray, moist, fine to medium rounded gravel.
CLAY (CL), firm to stiff, dark greenish gray, moist.
-from Elev 386.65 to 385.44, pp = 72 to 192 kPa.
CLAYEY SAND with GRAVEL (SC), medium dense, dark greenish gray, moist.

384 m — -from Elev 385.44 to 383.76, pp = 48 to 335 kPa.
CLAY (CL), firm to stiff, dark greenish gray, moist.
-at Elev 383.61, pp = 48 to 120 kPa.
CLAYEY GRAVEL with SAND (GC), medium dense, dark greenish gray, moist, fine to medium subrounded to rounded gravel.
GRAVELLY CLAY with SAND (GC), stiff to very stiff, dark greenish gray, moist, fine to coarse subrounded to rounded gravel.

381 m — -from Elev 382.08 to 381.17, pp = 96 to 383 kPa.
Fine SANDY CLAY (CL), firm to stiff, dark greenish gray, moist.
-from Elev 381.17 to 378.73, pp = 72 to 144 kPa.
-at Elev 379.03, UU = 50 kPa.

378 m — CLAY with trace GRAVEL (CL), firm to very stiff, dark greenish gray with brown mottling, moist.
-from Elev 378.73 to 375.68, pp = 96 to 431 kPa.

375 m — Well-graded GRAVEL with CLAY and SAND (GW-GC), medium dense, dark greenish gray, wet, fine to coarse subangular to subrounded gravel.
CLAY with trace SAND and GRAVEL (CL), stiff, dark greenish gray, moist, fine sand, fine to medium gravel.
-from Elev 375.07 to 371.72, pp = 48 to 168 kPa.

372 m — CLAYEY SAND (SC), dense, light greenish gray, moist, fine sand.
-from Elev 371.72 to 371.11, pp = 383 kPa.
CLAY (CL), hard, dark greenish gray with yellowish brown mottling, moist.
-from Elev 371.11to369.89, pp = 335 to 431 kPa.

369 m — CLAY (CL), firm to very stiff, greenish gray, moist.

366 m

171+20 171+60

9-7-06

-from Elev 369.89 to 362.88, pp = 96 to 192 kPa. — 366 m

363 m

-from Elev 362.88 to 352.82, pp = 72 to 144 kPa.

360 m

357 m

354 m

Fine SANDY CLAY (CL), soft to very stiff, dark greenish gray, moist. — 351 m
-from Elev 352.82 to 349.16, pp = 96 to 192 kPa.
-from Elev 349.16 to 348. 55, pp = 24 to 96 kPa.

CLAY (CL), stiff to very stiff, dark greenish gray, moist. — 348 m

345 m

-from Elev 348.55 to 340.17, pp = 96 to 215 kPa.

342 m

CLAYEY fine SAND (SC), very dense, bluish gray, moist.
-from Elev 340.17 to 339.41, pp = 144 to 287 kPa. — 339 m

CLAYEY SAND with GRAVEL (SC), dense to very dense, bluish gray, moist.
-from Elev 337.89 to 333.31, pp = 5 to 96 kPa.
-at Elev 335.45, organics (black wood fragments). — 336 m

Poorly-graded SAND with CLAY (SP-SC), dense to very dense, bluish gray, moist, fine sand.
CLAYEY SAND with GRAVEL (SC), dense to very dense, bluish gray, moist, fine rounded gravel. — 333 m
-from Elev 333.31 to 332.40, pp = 120 to 215 kPa.

PROFILE
HOR. 1:200
VER. 1:100

Caltrans Metric

ENGINEERING SERVICES	GEOTECHNICAL SERVICES
DRAWN BY	F. Nguyen 5/09
CHECKED BY	T. Alderman

ALL DIMENSIONS ARE IN METERS UNLESS OTHERWISE SHOWN

FIELD INVESTIGATION BY: T. Alderman

ORIGINAL SCALE IN MILLIMETERS FOR REDUCED PLANS 0 10 20 30 40 50 60 70 80 90 100

STATE OF CALIFORNIA DEPARTMENT OF TRANSPORTATION

DIVISION OF ENGINEERING SERVICES STRUCTURE DESIGN
DESIGN BRANCH 2

CU 01
EA 262001

BRIDGE NO. 10-0171
KILOMETER POST R76.807

WILLITS BYPASS
QUAIL MEADOWS OH
LOG OF TEST BORINGS 2 OF 7

DISREGARD PRINTS BEARING EARLIER REVISION DATES 05-19-09

REVISION DATES (PRELIMINARY STAGE ONLY)

SHEET 20 OF 25

FILE => 10-0171_holotb02.dgn

USERNAME => s121614 DATE PLOTTED => 28-JAN-2012 TIME PLOTTED => 07:56

DIST	COUNTY	ROUTE	KILOMETER POST TOTAL PROJECT	SHEET No	TOTAL SHEETS
01	Men	101	R69.4/R78.9	848	939

CERTIFIED ENGINEERING GEOLOGIST 6-17-09 DATE

1-23-12
PLANS APPROVAL DATE

REGISTERED GEOLOGIST Reid Buell No. 1481 Exp. 4-30-11 CERTIFIED ENGINEERING GEOLOGIST STATE OF CALIFORNIA

The State of California or its officers or agents shall not be responsible for the accuracy or completeness of electronic copies of this plan sheet.

FOR PLAN VIEW, SEE
"LOG OF TEST BORINGS" 1 OF 7

16.5 m Lt Sta 171+55.5
"W" Line

B-57

114 mm

408.0

CLAYEY SAND (SC), loose, brown, moist, fine to medium sand.

CLAY (CL), hard, brown with gray mottling, moist.
-from Elev 405.10 to 403.43, pp = 215 to 287 kPa.
CLAY with fine SAND (CL), soft to firm, gray with brown mottling, wet.
-from Elev 403.43 to 401.90, pp = 24 to 96 kPa.
-at Elev 402.36, UU = 18 kPa.
-from Elev. 401.90 to 400.07, pp = 5 to 24 kPa.
CLAYEY fine SAND (SC), medium dense, gray with brown mottling, wet.
-at Elev 400.68, UU = 23 kPa.
CLAY with SAND and GRAVEL (CL), very soft to soft, bluish gray, wet, fine sand, fine subrounded gravel.
-at Elev 399.77, pp = 5 to 48 kPa.
CLAYEY GRAVEL with SAND (GC), loose, dark bluish gray, moist, fine to medium rounded gravel.
CLAY (CL), very soft to soft, mottled brown and gray, wet.
-at Elev 398.25, pp = 48 kPa.
-at Elev 397.94, UU = 27 kPa.
-from Elev 397.94 to 394.89, pp = 5 to 48 kPa.
-from Elev 394.89 to 390.93, pp = 48 to 96 kPa.
CLAY with fine SAND (CL), very soft to very stiff, bluish gray, wet.
-at Elev 393.37, UU = 27 kPa.
-at Elev 390.02, UU = 34 kPa.
-from Elev 390.02 to 388.80, pp = 96 to 168 kPa.
CLAYEY SAND (SC) to fine SANDY CLAY (CL), loose/soft, dark bluish gray, moist.
-at Elev 387.27, UU = 19 kPa.
CLAYEY GRAVEL with SAND (GC), medium dense, dark bluish gray, moist, fine to coarse subrounded gravel.
CLAY (CL), firm to very stiff, dark bluish gray, moist.
-from Elev 385.90 to 381.18, pp = 48 to 192 kPa.
-at Elev 382.70, UU = 60 kPa.
CLAYEY GRAVEL with SAND (GC), very dense, dark bluish gray, moist, fine to medium sand, fine to coarse rounded gravel.
CLAY (CL), stiff to hard, dark greenish gray, moist.
-from Elev 379.35 to 377.52, pp = 96 to 311 kPa.
GRAVELLY CLAY with SAND (GC), hard, dark greenish gray, moist, fine to medium sand, fine to medium rounded gravel.
-from Elev 377.52 to 375.69, pp = 239 to 287 kPa.
CLAY with trace GRAVEL (CL), very stiff to hard, dark greenish gray with brown mottling, moist, fine rounded gravel.
-from Elev 375.69 to 374.17, pp = 144 to 239 kPa.
CLAY (CL), very stiff, dark greenish gray, moist.
-from Elev 375.69 to 370.51, pp = 96 to 192 kPa.

408 m, 405 m, 402 m, 399 m, 396 m, 393 m, 390 m, 387 m, 384 m, 381 m, 378 m, 375 m, 372 m, 369 m

GWS Elev 403.28
10-13-05

7 35, 12 35, 6 35, 12 35, 7 35, 6 35, 7 35, 6 35, 6 35, 9 35, 8 35, 13 35, 8 35, 12 35, 14 35, 13 35, 15 35, 108 35, 21 35, 33 35, 23 35

171+40 171+70

372 m

20 35 SANDY CLAY with trace GRAVEL (CL), very stiff, dark greenish gray, moist, fine sand and gravel.
-from Elev 370.51 to 366.55, pp = 96 to 239 kPa.
-at Elev 367.46, UU = 62 kPa.

369 m

19 35 CLAY with trace SAND (CL), very stiff to hard, mottled yellowish brown and gray, moist, fine sand.
-from Elev 366.55 to 363.50, pp = 192 to 335 kPa.

366 m

35 35 CLAY with trace SAND and GRAVEL (CL), very stiff to hard, dark greenish gray, moist, fine sand, fine to medium subrounded gravel.
-from Elev 363.50 to 359.23, pp = 144 to 431 kPa.

363 m

32 35 GRAVELLY CLAY with SAND (CL), soft to hard, dark greenish gray, moist, fine to medium sand, fine to medium rounded gravel.
-from Elev 359.23 to 357.40, pp = 287 to 431 kPa.
-from Elev 357.40 to 356.79, pp = 24 to 48 kPa.
-from Elev 356.79 to 355.57, pp = 144 to 287 kPa.
CLAY (CL), hard, dark grayish green, moist.
-from Elev 355.57 to 353.44, pp = 192 to 407 kPa.

360 m, 357 m, 354 m

E370 35 Clean fine SAND (SP), very dense, greenish gray, moist.

351 m

-at Elev 350.09, 25 mm X 50 mm wood fragment

348 m

E200 35

345 m

CLAY (CL), stiff to very stiff, dark greenish gray, moist.

342 m

-from Elev 344.30 to 340.64, pp = 96 to 192 kPa.

10-13-05

339 m

PROFILE
HOR. 1:200
VER. 1:100

LEGEND OF BORING OPERATIONS

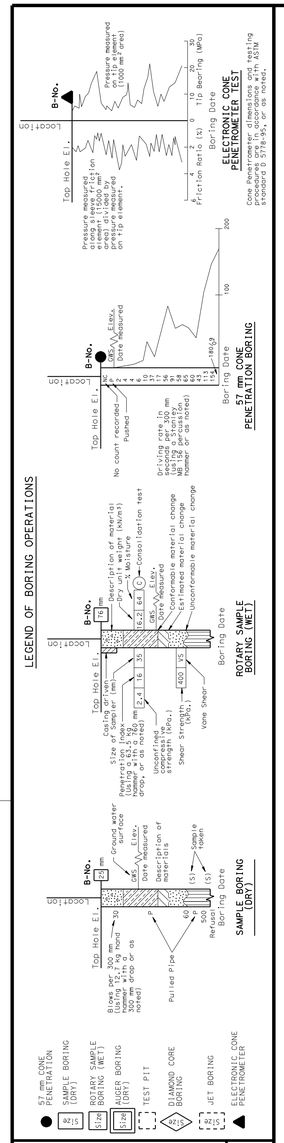

LEGEND OF EARTH MATERIALS

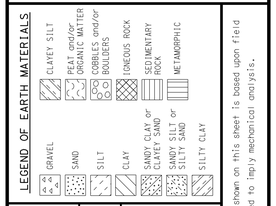

CONSISTENCY CLASSIFICATION FOR SOILS

According to the Standard Penetration Test

SPT N-Value (Blows/ 0.3m)	Granular	SPT N-Value (Blows/ 0.3m)	Cohesive
0-4	Very Loose	<2	Very Soft
5-10	Loose	2-4	Soft
11-30	Medium Dense	5-8	Firm
31-50	Dense	9-15	Stiff
>50	Very Dense	16-30	Very stiff
		>30	Hard

NOTE: Classification of earth material as shown on this sheet is based upon field inspection and is not to be construed to imply mechanical analysis.

OGS CIVIL LOG OF TEST BORINGS SHEET (METRIC) (REV. 4/04)

Caltrans Metric

ENGINEERING SERVICES	GEOTECHNICAL SERVICES
DRAWN BY	F. Nguyen 5/09
CHECKED BY	T. Alderman

FIELD INVESTIGATION BY: T. Alderman

STATE OF CALIFORNIA DEPARTMENT OF TRANSPORTATION

DIVISION OF ENGINEERING SERVICES STRUCTURE DESIGN
DESIGN BRANCH 2

BRIDGE NO. 10-0171
KILOMETER POST R76.807

WILLITS BYPASS
QUAIL MEADOWS OH
LOG OF TEST BORINGS 3 OF 7

ALL DIMENSIONS ARE IN METERS UNLESS OTHERWISE SHOWN

ORIGINAL SCALE IN MILLIMETERS FOR REDUCED PLANS 0 10 20 30 40 50 60 70 80 90 100

CU 01
EA 262001

DISREGARD PRINTS BEARING EARLIER REVISION DATES

REVISION DATES (PRELIMINARY STAGE ONLY) 05-19-09

SHEET 21 OF 25

FILE => 10-0171_holotb03.dgn

USERNAME => s121614 DATE PLOTTED => 28-JAN-2012 TIME PLOTTED => 07:57

DIST	COUNTY	ROUTE	KILOMETER POST TOTAL PROJECT	SHEET No	TOTAL SHEETS
01	Men	101	R69.4/R78.9	849	939

CERTIFIED ENGINEERING GEOLOGIST 6-17-09 DATE

1-23-12
PLANS APPROVAL DATE

REGISTERED GEOLOGIST — Reid Buell No. 1481 Exp. 4-30-11 — CERTIFIED ENGINEERING GEOLOGIST — STATE OF CALIFORNIA

The State of California or its officers or agents shall not be responsible for the accuracy or completeness of electronic copies of this plan sheet.

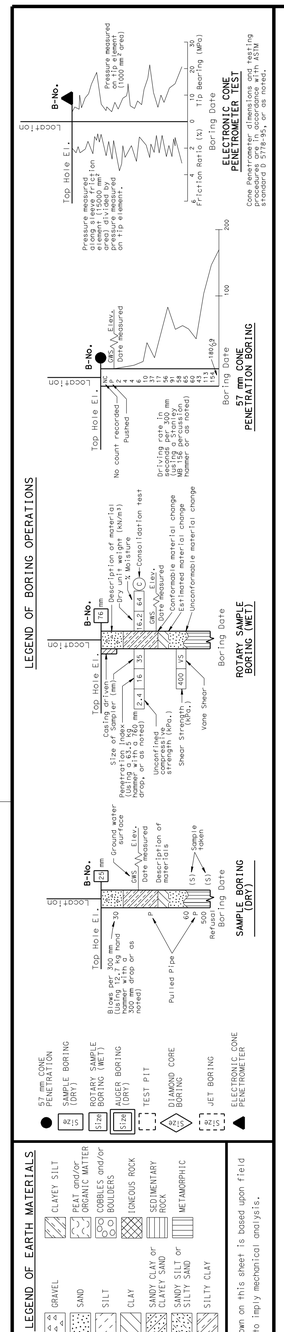

OGS CIVIL LOG OF TEST BORINGS SHEET (METRIC) (REV. 4/04)

FOR PLAN VIEW, SEE "LOG OF TEST BORINGS" 1 OF 7

78.5 m Lt Sta 171+91
"W" Line

B-76

407.90 — 114 mm

408 m

CLAYEY SAND (SC), medium dense, light brownish gray, dry to moist, fine sand.

-from Elev 407.90 to 404.70, pp = 96 to 431 kPa.

405 m

GWS Elev 404.67
10-3-06

Interbedded CLAY (CL) and Well-graded SAND with CLAY (GW-GC), stiff/loose, mottled dark brown and gray, moist.
-from Elev 404.70 to 403.33, pp = 96 to 144 kPa.
CLAYEY SAND (SC), loose, brown, wet, fine to coarse sand.
CLAY (CL), very soft to firm, brown with gray mottling, wet.
-from Elev 402.87 to 401.50, pp = 6 to 25 kPa.
-at Elev 402.41, 150 mm thick lense well graded sand.

402 m

Interbedded CLAY (CL), and fine SANDY CLAY (CL), soft to stiff, dark greenish gray, moist.
-from Elev 401.50 to 396.62, pp = 24 to 96 kPa..

399 m

CLAYEY GRAVEL with SAND (GC), loose, dark greenish gray, wet, fine to coarse subrounded gravel.
-at Elev 398.30, UU = 26 kPa.

396 m

CLAY (CL), soft, dark greenish gray, moist.

-from Elev 396.47 to 391.90, pp = 24 to 96 kPa.

393 m

-at Elev 394.79, UU = 31 kPa.

-at Elev 391.90, UU = 47 kPa.

390 m

-at Elev 389.61, 75 mm thick lense of clayey fine sand
-at Elev 389.00, UU = 33 kPa.
-from Elev 391.90 to 387.48, pp = 48 to 120 kPa.

387 m

Interbedded CLAY (CL) and CLAYEY fine SAND (SC), firm to stiff/loose, dark greenish gray, moist.
-from Elev 387.48 to 386.56, pp = 72 to 120 kPa.
CLAY (CL), stiff to very stiff, dark greenish gray, moist.
-from Elev 386.50 to 384.89, pp = 96 to 192 kPa.

384 m

CLAYEY SAND with GRAVEL (SC), medium dense, dark greenish gray, moist, fine to medium subrounded gravel.

CLAYEY GRAVEL with SAND (GC), very dense, dark greenish gray, moist, fine to coarse subangular to subrounded gravel.

381 m

CLAY (CL), stiff, dark greenish gray, moist.
-from Elev 381.08 to 378.03, pp = 96 to 144 kPa.

378 m

CLAY with GRAVEL (CL), stiff to hard, grayish brown, moist, fine to medium subangular gravel.
-from Elev 378.03 to 376.20, pp = 72 to 335 kPa.

375 m

CLAY with fine SAND (CL), hard, greenish gray, moist.
-from Elev 376.20 to 374.22, pp = 287 to 383 kPa.
CLAY (CL), very stiff to hard, dark greenish gray, moist.

372 m

-from Elev 374.22 to 371.32, pp = 144 to 335 kPa.

CLAY (CL), firm to very stiff, dark greenish gray, moist.

369 m

-from Elev 371.32 to 366.29, pp = 48 to 120 kPa.

171+80 — 172+20

369 m

-from Elev 366.29 to 359.74, pp = 48 to 192 kPa.

366 m

363 m

360 m

SILT (ML), medium dense, dark greenish gray, moist.
-from Elev 359.74 to 358.33, pp = 48 to 72 kPa.
-at Elev 359.74, trace organics (reddish wood fragments-Approx 2 mm X 15 mm)

357 m

CLAY (CL), stiff to hard, dark greenish gray, moist.

-from Elev 358.83 to 341.67, pp = 96 to 263 kPa.

354 m

351 m

348 m

345 m

342 m

CLAYEY fine SAND (SC), very dense, greenish gray, moist.

9-28-06

339 m

PROFILE

HOR. 1:200
VER. 1:100

Caltrans Metric

ENGINEERING SERVICES	GEOTECHNICAL SERVICES
DRAWN BY	F. Nguyen 5/09
CHECKED BY	T. Alderman

FIELD INVESTIGATION BY: T. Alderman

STATE OF CALIFORNIA DEPARTMENT OF TRANSPORTATION

DIVISION OF ENGINEERING SERVICES STRUCTURE DESIGN — DESIGN BRANCH 2

BRIDGE NO. 10-0171
KILOMETER POST R76.807

WILLITS BYPASS
QUAIL MEADOWS OH
LOG OF TEST BORINGS 4 OF 7

ALL DIMENSIONS ARE IN METERS UNLESS OTHERWISE SHOWN

ORIGINAL SCALE IN MILLIMETERS FOR REDUCED PLANS 0 10 20 30 40 50 60 70 80 90 100

CU 01
EA 262001

DISREGARD PRINTS BEARING EARLIER REVISION DATES

REVISION DATES (PRELIMINARY STAGE ONLY): 05-19-09

SHEET 22 OF 25

FILE => 10-0171_holotb04.dgn

USERNAME => s121614 DATE PLOTTED => 28-JAN-2012 TIME PLOTTED => 07:57

DIST	COUNTY	ROUTE	KILOMETER POST TOTAL PROJECT	SHEET No	TOTAL SHEETS
01	Men	101	R69.4/R78.9	850	939

CERTIFIED ENGINEERING GEOLOGIST — 6-17-09 DATE

REGISTERED GEOLOGIST — Reid Buell No. 1481 Exp. 4-30-11 — CERTIFIED ENGINEERING GEOLOGIST — STATE OF CALIFORNIA

1-23-12
PLANS APPROVAL DATE

The State of California or its officers or agents shall not be responsible for the accuracy or completeness of electronic copies of this plan sheet.

FOR PLAN VIEW, SEE
"LOG OF TEST BORINGS" 1 OF 7

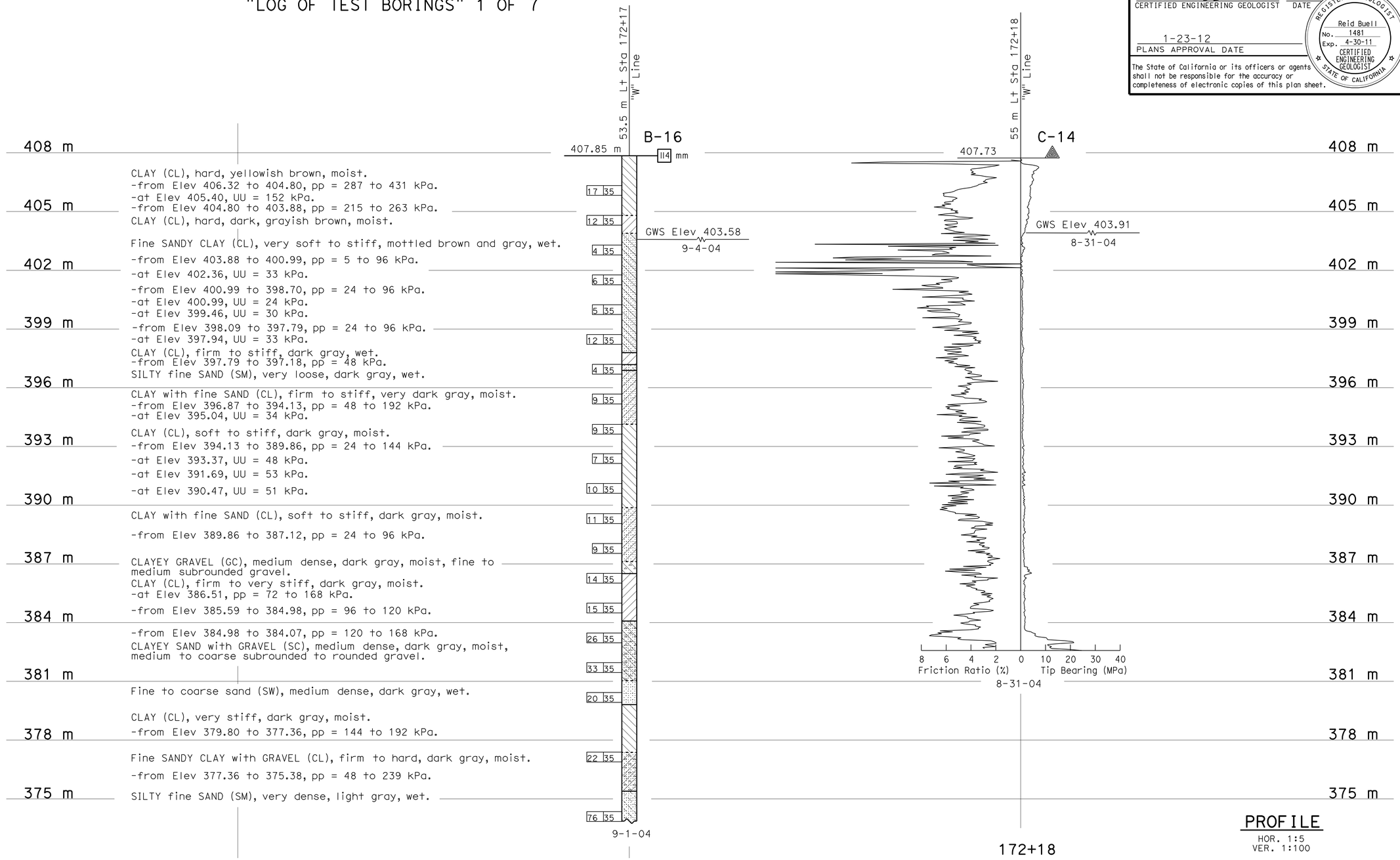

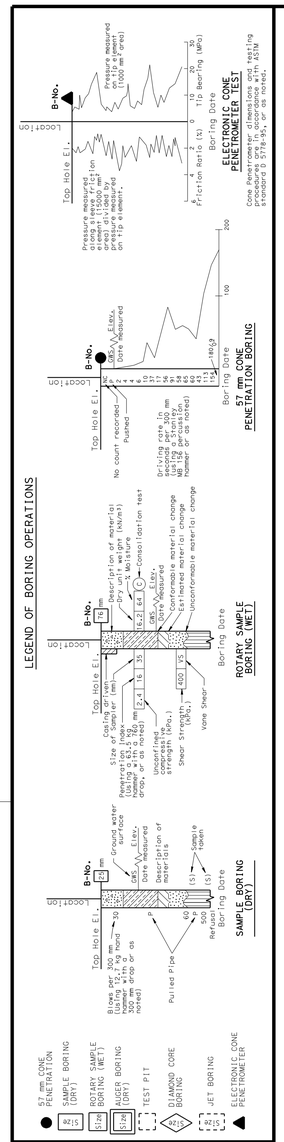

LEGEND OF EARTH MATERIALS

GRAVEL · SAND · SILT · CLAY · SANDY CLAY or CLAYEY SAND · SANDY SILT or SILTY SAND · SILTY CLAY · CLAYEY SILT · PEAT and/or ORGANIC MATTER · COBBLES and/or BOULDERS · IGNEOUS ROCK · SEDIMENTARY ROCK · METAMORPHIC

CONSISTENCY CLASSIFICATION FOR SOILS

According to the Standard Penetration Test

SPT N-Value (Blows/0.3m)	Granular	SPT N-Value (Blows/0.3m)	Cohesive
0-4	Very Loose	<2	Very Soft
5-10	Loose	2-4	Soft
11-30	Medium Dense	5-8	Firm
31-50	Dense	9-15	Stiff
>50	Very Dense	16-30	Very stiff
		>30	Hard

NOTE: Classification of earth material as shown on this sheet is based upon field inspection and is not to be construed to imply mechanical analysis.

OGS CIVIL LOG OF TEST BORINGS SHEET (METRIC) (REV. 4/04)

Caltrans Metric

ENGINEERING SERVICES	GEOTECHNICAL SERVICES
DRAWN BY	F. Nguyen 5/09
CHECKED BY	T. Alderman

FIELD INVESTIGATION BY: T. Alderman

STATE OF CALIFORNIA DEPARTMENT OF TRANSPORTATION

DIVISION OF ENGINEERING SERVICES STRUCTURE DESIGN DESIGN BRANCH 2

BRIDGE NO. 10-0171
KILOMETER POST R76.807

WILLITS BYPASS
QUAIL MEADOWS OH
LOG OF TEST BORINGS 5 OF 7

ALL DIMENSIONS ARE IN METERS UNLESS OTHERWISE SHOWN

ORIGINAL SCALE IN MILLIMETERS FOR REDUCED PLANS 0 10 20 30 40 50 60 70 80 90 100

CU 01
EA 262001

DISREGARD PRINTS BEARING EARLIER REVISION DATES 05-19-09

REVISION DATES (PRELIMINARY STAGE ONLY)

SHEET 23 OF 25

FILE => 10-0171_holotb05.dgn

USERNAME => s612614 DATE PLOTTED => 28-JAN-2012 TIME PLOTTED => 07:57

DIST	COUNTY	ROUTE	KILOMETER POST TOTAL PROJECT	SHEET No	TOTAL SHEETS
01	Men	101	R69.4/R78.9	851	939

CERTIFIED ENGINEERING GEOLOGIST — DATE 6-17-09

REGISTERED GEOLOGIST — Reid Buell No. 1481 Exp. 4-30-11 — CERTIFIED ENGINEERING GEOLOGIST — STATE OF CALIFORNIA

1-23-12
PLANS APPROVAL DATE

The State of California or its officers or agents shall not be responsible for the accuracy or completeness of electronic copies of this plan sheet.

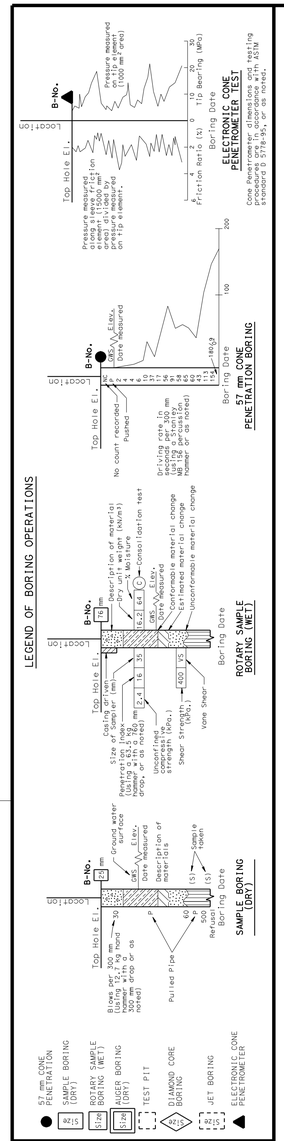

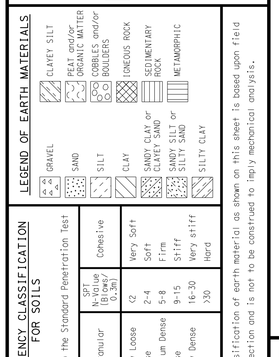

CONSISTENCY CLASSIFICATION FOR SOILS

According to the Standard Penetration Test

SPT N-Value (Blows/0.3m)	Granular	SPT N-Value (Blows/0.3m)	Cohesive
0-4	Very Loose	<2	Very Soft
5-10	Loose	2-4	Soft
11-30	Medium Dense	5-8	Firm
31-50	Dense	9-15	Stiff
>50	Very Dense	16-30	Very stiff
		>30	Hard

NOTE: Classification of earth material as shown on this sheet is based upon field inspection and is not to be construed to imply mechanical analysis.

OGS CIVIL LOG OF TEST BORINGS SHEET (METRIC) (REV. 4/04)

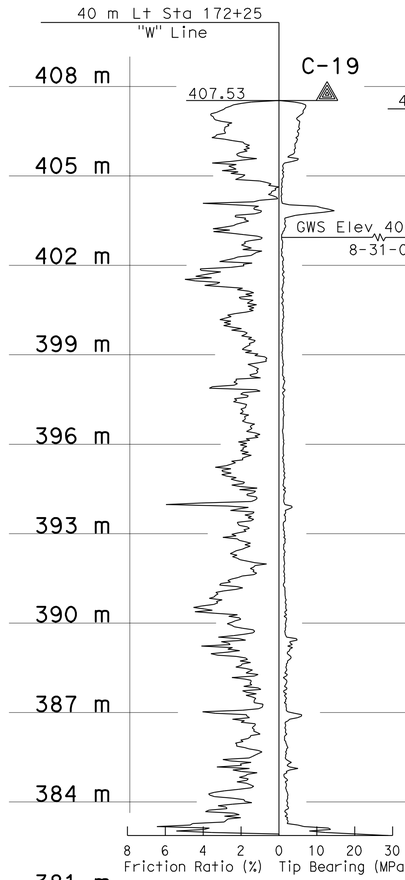

FOR PLAN VIEW, SEE "LOG OF TEST BORINGS" 1 OF 7

18.5 m Lt Sta 172+32
"W" Line

B-75

407.25

114 mm CLAY (CL), very stiff to hard, yellowish brown, dry to moist.

-from Elev 407.45 to 403.59, pp = 144 to 431 kPa.

GWS Elev 404.45
10-5-06

CLAY (CL), very soft to firm, mottled gray and brown, wet.
-from Elev 403.59 to 400.54, pp = 48 to 96 kPa.

-at Elev 402.22, UU = 12 kPa.

-from Elev 400.54 to 397.50, pp = 2 to 72 kPa.

-at Elev 399.02, UU = 16 kPa.

-from Elev 397.50 to 396.58, pp = 24 to 48 kPa.
-at Elev 396.58, UU = 38 kPa.

SANDY SILTY CLAY (CL-ML), firm, dark greenish gray, wet.
-from Elev 396.58 to 394.91, pp = 48 to 96 kPa.
-at Elev 394.91, 150 mm lense of CLAYEY fine SAND
CLAY (CL), soft to firm, dark greenish gray, wet.
-from Elev 394.75 to 393.38, pp = 24 to 72 kPa.
Fine SANDY CLAY (CL), very soft, dark greenish gray, wet.

CLAY (CL), soft to firm, dark greenish gray, wet.

-from Elev 393.23 to 388.66, pp = 48 to 96 kPa.
-at Elev 391.25, UU = 45 kPa.

Fine SANDY CLAY (CL), soft to stiff, dark greenish gray, wet.

-from Elev 388.60 to 386.22, pp = 24 to 120 kPa.

Well-graded GRAVEL with CLAY and SAND (GW-GC), loose, dark greenish gray, wet, fine to coarse rounded gravel.
CLAY (CL), firm, dark greenish gray, moist.
-from Elev 385.91 to 383.32, pp = 48 to 96 kPa.
-at Elev 384.39, 450 mm lense of well-graded gravel with clay
CLAY (CL), stiff, dark greenish gray, moist.
-from Elev 383.32 to 381.95, pp = 120 kPa.

CLAYEY GRAVEL with some small cobbles (GC), medium dense, dark greenish gray, wet, coarse subrounded to rounded gravel.

-from Elev 381.95 to 378.60, pp = 120 to 192 kPa.

CLAY (CL), firm to hard, dark greenish gray, moist.

-from Elev 378.60 to 373.04, pp = 48 to 192 kPa.

CLAYEY SAND with GRAVEL (SC), medium dense, dark greenish gray, moist, fine rounded gravel.
-at Elev 372.96, UU = 338 kPa.
CLAY (CL), stiff to very stiff, greenish gray, moist.
-at Elev 370.06, UU = 82 kPa.
GRAVELLY CLAY with SAND (CL), hard, greenish gray, moist, fine to coarse subrounded to rounded gravel.
-from Elev 370.06 to 368.24, pp = 192 to 239 kPa.
CLAY with SAND (CL), stiff to very stiff, greenish gray, moist, fine sand.
-from Elev 368.24 to 367.02, pp = 96 to 192 kPa.

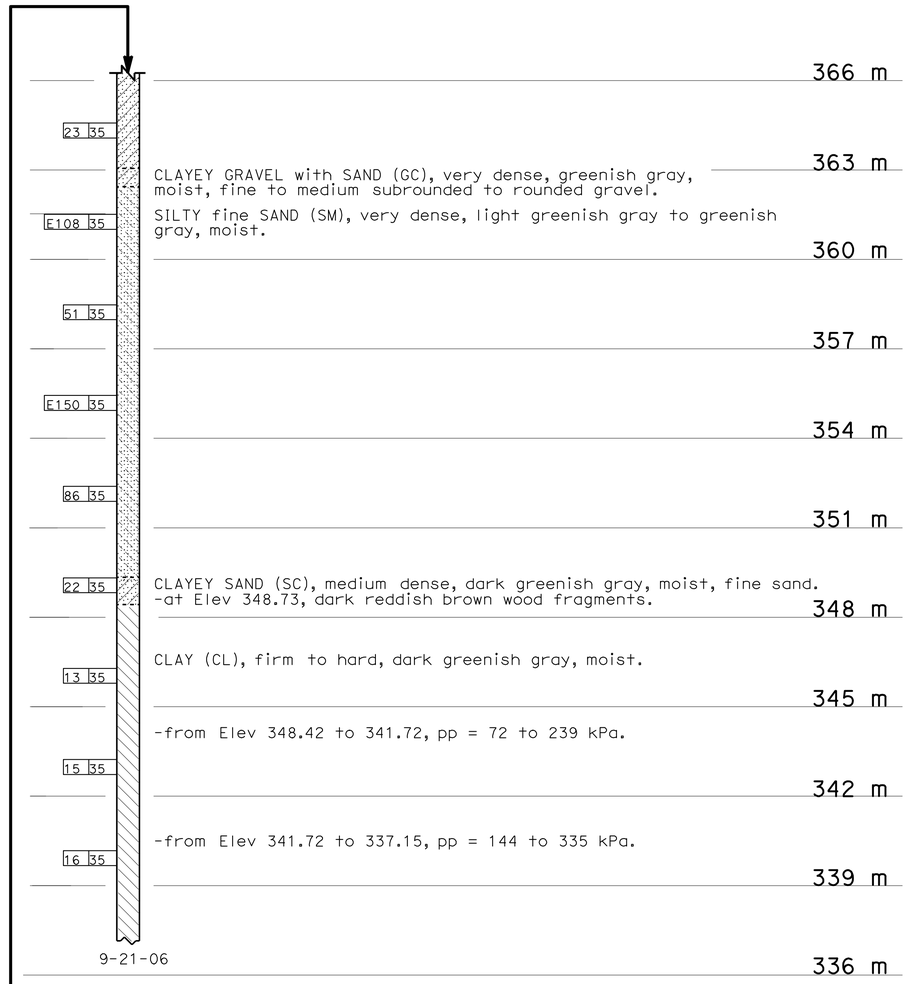

PROFILE
HOR. 1:100
VER. 1:100

172+20 — 172+40

Caltrans Metric

ENGINEERING SERVICES	GEOTECHNICAL SERVICES
DRAWN BY	F. Nguyen 5/09
CHECKED BY	T. Alderman

FIELD INVESTIGATION BY: T. Alderman

STATE OF CALIFORNIA DEPARTMENT OF TRANSPORTATION

DIVISION OF ENGINEERING SERVICES STRUCTURE DESIGN — DESIGN BRANCH 2

BRIDGE NO. 10-0171
KILOMETER POST R76.807

ALL DIMENSIONS ARE IN METERS UNLESS OTHERWISE SHOWN

ORIGINAL SCALE IN MILLIMETERS FOR REDUCED PLANS 0 10 20 30 40 50 60 70 80 90 100

CU 01
EA 262001

DISREGARD PRINTS BEARING EARLIER REVISION DATES 05-19-09

REVISION DATES (PRELIMINARY STAGE ONLY)

SHEET 24 OF 25

WILLITS BYPASS
QUAIL MEADOWS OH
LOG OF TEST BORINGS 6 OF 7

FILE => 10-0171_holotb06.dgn

USERNAME => s124436 DATE PLOTTED => 28-JAN-2012 TIME PLOTTED => 07:31

DIST	COUNTY	ROUTE	KILOMETER POST TOTAL PROJECT	SHEET No	TOTAL SHEETS
01	Men	101	R69.4/R78.9	852	939

CERTIFIED ENGINEERING GEOLOGIST 6-17-09 DATE

REGISTERED GEOLOGIST Reid Buell No. 1481 Exp. 4-30-11 CERTIFIED ENGINEERING GEOLOGIST STATE OF CALIFORNIA

1-23-12
PLANS APPROVAL DATE

The State of California or its officers or agents shall not be responsible for the accuracy or completeness of electronic copies of this plan sheet.

FOR PLAN VIEW, SEE
"LOG OF TEST BORINGS" 1 OF 7

7 m Lt Sta 172+46 "W" Line

B-15

407.22 m — 114 mm

408 m

CLAY with SAND (CL), very stiff, brown, moist, fine sand.

405 m — 24 35

Fine SANDY CLAY (CL), soft to firm, gray, moist.
-from Elev 404.17 to 402.64, pp = 48 kPa.

GWS Elev 404.02
9-2-04 — 5 35

402 m — 4 35

Well-graded GRAVEL with SAND and CLAY (GW-GC), loose, gray, moist.
CLAY with SAND (CL), firm, brown, moist, fine sand.
-from Elev 402.64 to 398.68, pp = 48 to 72 kPa.
-at Elev 399.90, UU = 20 kPa.

399 m

SANDY CLAY with GRAVEL (SC), firm to stiff, gray, moist, fine to coarse sand, fine to coarse gravel.
-from Elev 398.68 to 395.02, pp = 48 to 120 kPa.
-at Elev 398.38, UU = 76 kPa.
-at Elev 396.70, UU = 52 kPa.

396 m

-at Elev 395.18, UU = 44 kPa.
CLAY (CL), very soft to stiff, dark greenish gray, moist.
-from Elev 395.02 to 394.41, pp = 48 to 120 kPa.
-at Elev 393.65, UU = 57 kPa.

5 35

393 m — 5 35

-from Elev 394.41 to 393.50, pp = 5 to 48 kPa.
-from Elev 393.50 to 390.45, pp = 48 to 120 kPa.

7 35

-at Elev 392.13, UU = 56 kPa.
-at Elev 390.60, UU = 54 kPa.

390 m — 13 35

CLAY (CL), firm to hard, dark greenish gray, moist.
-from Elev 390.45 to 389.23, pp = 144 to 239 kPa.

7 35

Fat CLAY (CH), stiff to hard, dark greenish gray, moist.
-from Elev 389.23 to 388.01, pp = 96 to 239 kPa.

387 m — 8 35

CLAY with SAND (CL), firm to very stiff, dark greenish gray, moist.

-from Elev 388.01 to 384.97, pp = 48 to 192 kPa.

10 35

-at Elev 387.56, UU = 67 kPa.

384 m — 18 35

GRAVELLY CLAY with SAND (CL), stiff to hard, dark greenish gray, moist.

-from Elev 384.97 to 381.31, pp = 96 to 239 kPa.
-at Elev 384.66, UU = 165 kPa.

23 35

-at Elev 382.98, UU = 84 kPa.

381 m

SANDY CLAY with GRAVEL (CL), hard, dark greenish gray, moist, fine to coarse sand, fine to coarse gravel.
-at Elev 380.09, UU = 447 kPa.

378 m

-at Elev 378.41, UU = 38 kPa.

CLAY (CL), firm, dark greenish gray, moist.

-from Elev 378.26 to 375.21, pp = 48 to 96 kPa.

375 m

-at Elev 375.52, UU = 35 kPa.

29 35

CLAY (CL), stiff to hard, dark greenish gray, moist.

34 35

-from Elev 375.21 to 372.16, pp = 96 to 383 kPa.

372 m

-at Elev 372.32, UU = 173 kPa.

31 35

CLAY with SAND (CL), hard, dark greenish gray, moist, fine sand.

28 35

CLAYEY SAND (SC), medium dense, brown, moist, fine sand.
-at Elev 370.64, pp = 192 to 287 kPa.

9-1-04

369 m

172+30 172+50 172+70

PROFILE
HOR. 1:100
VER. 1:100

LEGEND OF BORING OPERATIONS

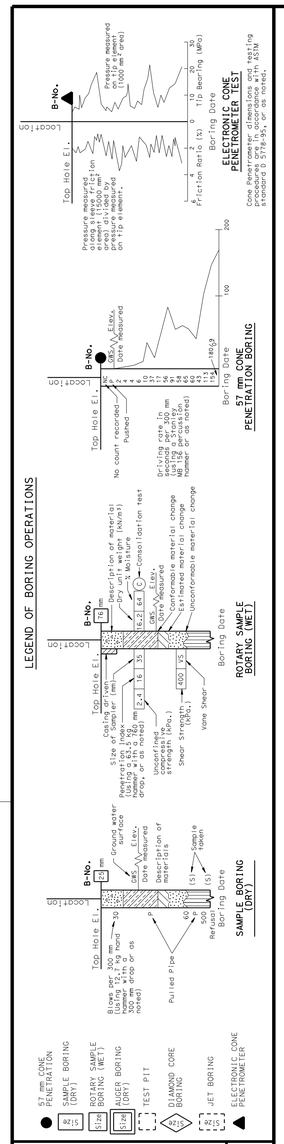

LEGEND OF EARTH MATERIALS

GRAVEL, SAND, SILT, CLAY, SANDY CLAY or CLAYEY SAND, SANDY SILT or SILT SAND, SILTY CLAY, CLAYEY SILT, PEAT and/or ORGANIC MATTER, COBBLES and/or BOULDERS, IGNEOUS ROCK, SEDIMENTARY ROCK, METAMORPHIC

CONSISTENCY CLASSIFICATION FOR SOILS

According to the Standard Penetration Test

SPT N-Value (Blows/0.3m)	Granular	SPT N-Value (Blows/0.3m)	Cohesive
0-4	Very Loose	<2	Very Soft
5-10	Loose	2-4	Soft
11-30	Medium Dense	5-8	Firm
31-50	Dense	9-15	Stiff
>50	Very Dense	16-30	Very stiff
		>30	Hard

NOTE: Classification of earth material as shown on this sheet is based upon field inspection and is not to be construed to imply mechanical analysis.

OGS CIVIL LOG OF TEST BORINGS SHEET (METRIC) (REV. 4/04)

Caltrans Metric

ENGINEERING SERVICES | GEOTECHNICAL SERVICES

DRAWN BY F. Nguyen 5/09
CHECKED BY T. Alderman

FIELD INVESTIGATION BY: T. Alderman

STATE OF CALIFORNIA DEPARTMENT OF TRANSPORTATION

DIVISION OF ENGINEERING SERVICES STRUCTURE DESIGN
DESIGN BRANCH 2

BRIDGE NO. 10-0171
KILOMETER POST R76.807

WILLITS BYPASS
QUAIL MEADOWS OH
LOG OF TEST BORINGS 7 OF 7

ALL DIMENSIONS ARE IN METERS UNLESS OTHERWISE SHOWN

ORIGINAL SCALE IN MILLIMETERS FOR REDUCED PLANS 0 10 20 30 40 50 60 70 80 90 100

CU 01
EA 262001

DISREGARD PRINTS BEARING EARLIER REVISION DATES 05-19-09

REVISION DATES (PRELIMINARY STAGE ONLY)

SHEET 25 OF 25

FILE => 10-0171_holotb07.dgn

USERNAME => s124496 DATE PLOTTED => 28-JAN-2012 TIME PLOTTED => 07:32

DIST	COUNTY	ROUTE	KILOMETER POST TOTAL PROJECT	SHEET No	TOTAL SHEETS
01	Men	101	R69.4/R78.9	853	939

REGISTERED CIVIL ENGINEER 9-15-11 DATE

1-23-12
PLANS APPROVAL DATE

REGISTERED PROFESSIONAL ENGINEER M. Friedheim No. 57968 Exp. 06-30-12 CIVIL STATE OF CALIFORNIA

The State of California or its officers or agents shall not be responsible for the accuracy or completeness of electronic copies of this plan sheet.

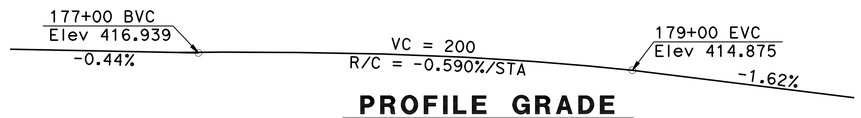

PROFILE GRADE
NO SCALE

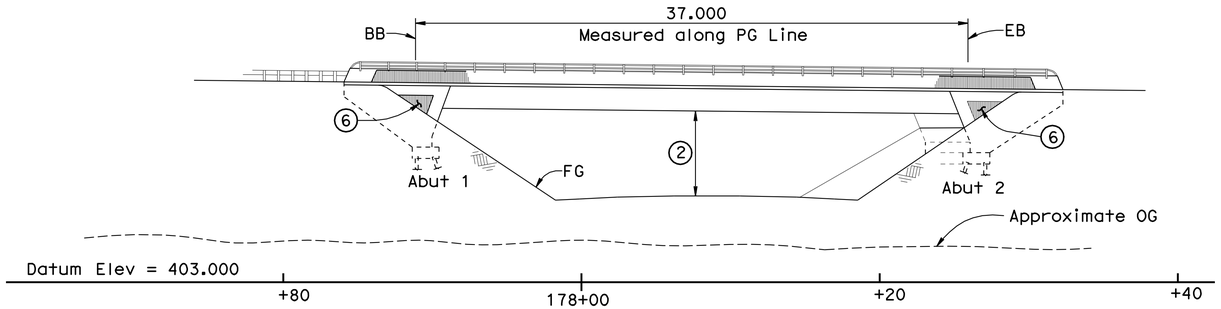

ELEVATION
1:200

NOTES:

1. Metal Beam Guardrail, See Road Plans
2. Minimum Vertical Clearance = 5.625
3. Paint "QUAIL MEADOWS UC"
4. Paint Bridge Number and Year Constructed
5. Structure Approach Slab, Type N(9S)
6. Architectural Treatment
7. Concrete Barrier Type 736 Mod with Tubular Bicycle Railing. Barriers shall extend to the end of wingwall.

◐ Denotes location of minimum vertical clearance.

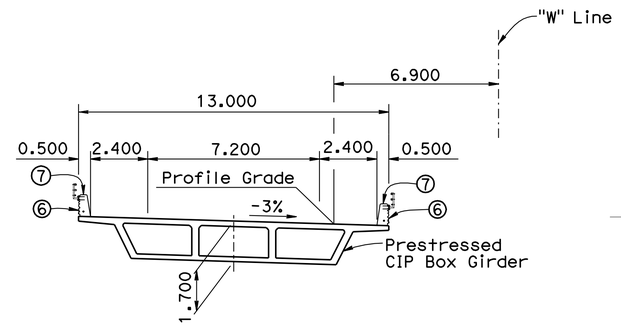

TYPICAL SECTION
1:125

INDEX TO PLANS

1. GENERAL PLAN
2. DECK CONTOURS
3. FOUNDATION PLAN
4. ABUTMENT LAYOUT
5. ABUTMENT DETAILS NO. 1
6. ABUTMENT DETAILS NO. 2
7. TYPICAL SECTION
8. GIRDER LAYOUT
9. BOTTOM GIRDER REINFORCEMENT
10. STRUCTURE APPROACH TYPE N (9S)
11. STRUCTURE APPROACH DRAINAGE DETAILS
12. AESTHETIC DETAILS
13. TUBULAR BICYCLE RAILING
14. LOG OF TEST BORINGS 1 OF 2
15. LOG OF TEST BORINGS 2 OF 2

STANDARD PLANS DATED JULY 2004

A10A	ACRONYMS AND ABBREVIATIONS (A-L)
A10B	ACRONYMS AND ABBREVIATIONS (M-Z)
A10C	SYMBOLS (SHEET 1 OF 2)
A10D	SYMBOLS (SHEET 2 OF 2)
A62C	LIMITS OF PAYMENT FOR EXCAVATION AND BACKFILL-BRIDGE
B0-1	BRIDGE DETAILS
B0-3	BRIDGE DETAILS
B0-5	BRIDGE DETAILS
B0-13	BRIDGE DETAILS
RSP B6-21	JOINT SEALS (MAXIMUM MOVEMENT RATING = 50 MM)
B7-1	BOX GIRDER DETAILS
RSP B8-5	CAST-IN-PLACE PRESTRESSED GIRDER DETAILS
B11-56	CONCRETE BARRIER TYPE 736
RSP ES-9B	ELECTRICAL SYSTEMS (ELECTRICAL DETAILS STRUCTURE INSTALLATIONS)
RSP ES-9C	ELECTRICAL SYSTEMS (ELECTRICAL DETAILS STRUCTURE INSTALLATIONS)

Standard Plan sheet number

Detail number

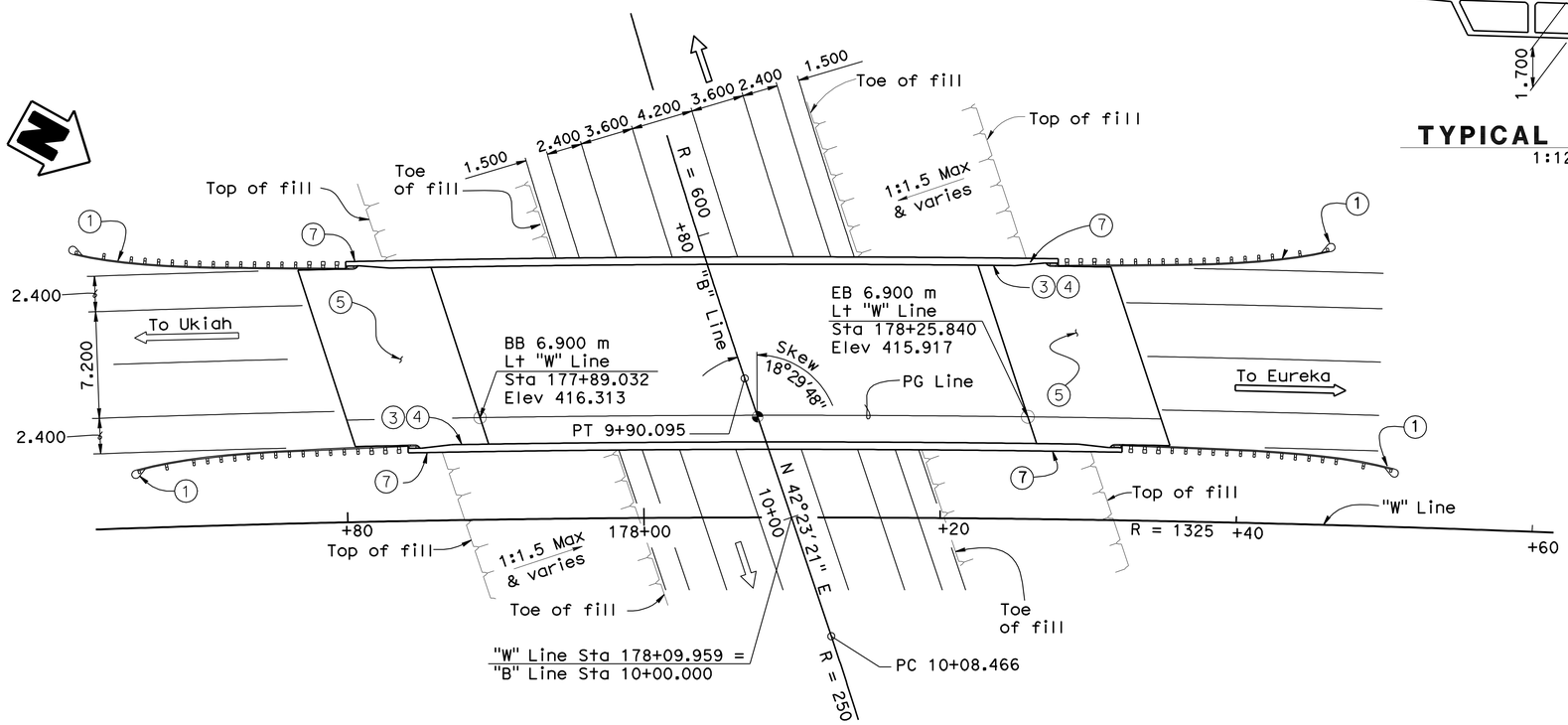

PLAN
1:200

CURVE DATA "W" LINE

R = 1325.000
Δ = 12°6'29"
T = 140.525
L = 280.004

CURVE DATA "B" LINE

R = 250.000	R = 600.000
Δ = 13°21'55"	Δ = 4°52.17"
T = 29.291	T = 25.522
L = 58.317	L = 51.014

Note: For General Notes, Pile Data Table, and Quantities, see "Deck Contours" sheet.

Caltrans Metric

DESIGN ENGINEER

	BY	CHECKED				
DESIGN	M. Friedheim/A. Tern	H. Fang	LOAD FACTOR DESIGN	LIVE LOADING: HS20-44 AND ALTERNATIVE AND PERMIT DESIGN LOAD		
DETAILS	L. Wang	H. Fang	LAYOUT	M. Friedheim	H. Fang	
QUANTITIES	A. Tern	H. Fang	SPECIFICATIONS	I. Huang	I. Huang	PLANS AND SPECS COMPARED

ALL DIMENSIONS ARE IN METERS UNLESS OTHERWISE SHOWN

ORIGINAL SCALE IN MILLIMETERS FOR REDUCED PLANS 0 10 20 30 40 50 60 70 80 90 100

STATE OF CALIFORNIA
DEPARTMENT OF TRANSPORTATION

DIVISION OF ENGINEERING SERVICES
STRUCTURE DESIGN
DESIGN BRANCH 2

CU 01
EA 262001

BRIDGE NO. 10-0173
KILOMETER POST R77.541

WILLITS BYPASS
QUAIL MEADOWS UC
GENERAL PLAN

DISREGARD PRINTS BEARING EARLIER REVISION DATES

REVISION DATES: 01-22-09 01-30-09 02-02-09 02-10-09 02-19-09 3-03-09 03-06-09 12-09-09 10-01-09

SHEET 1 OF 15

FILE => 10-0173_lagp.dgn

STRUCTURES DESIGN GENERAL PLAN SHEET (METRIC) (REV.03-17-04)

USERNAME => s124496 DATE PLOTTED => 28-JAN-2012 TIME PLOTTED => 07:32

DIST	COUNTY	ROUTE	KILOMETER POST TOTAL PROJECT	SHEET No	TOTAL SHEETS
01	Men	101	R69.4/R78.9	854	939

REGISTERED CIVIL ENGINEER 9-15-11 DATE

1-23-12
PLANS APPROVAL DATE

REGISTERED PROFESSIONAL ENGINEER M. Friedheim No. 57968 Exp. 06-30-12 CIVIL STATE OF CALIFORNIA

The State of California or its officers or agents shall not be responsible for the accuracy or completeness of electronic copies of this plan sheet.

Notes:

1. × = 2.5 m interval measured along station line
2. Contours do not include camber
3. Contour interval = 0.05 m

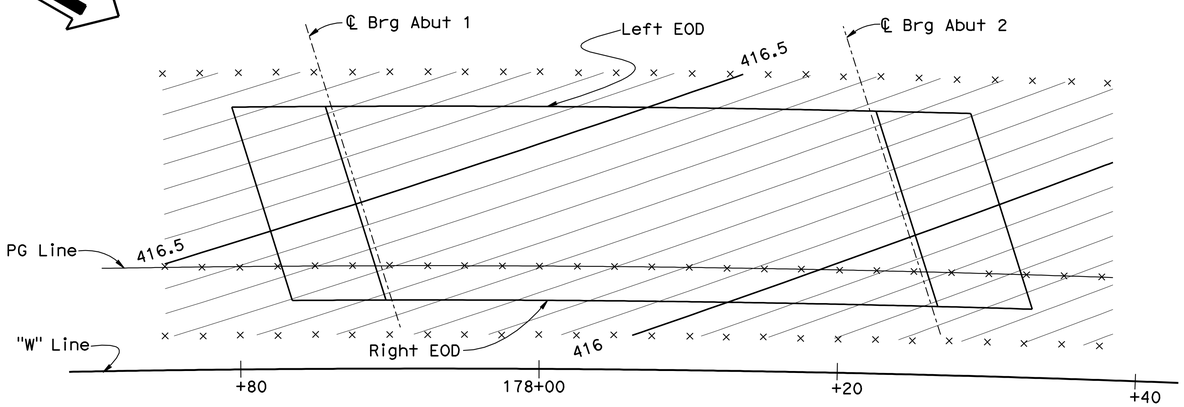

DECK CONTOURS

1:200

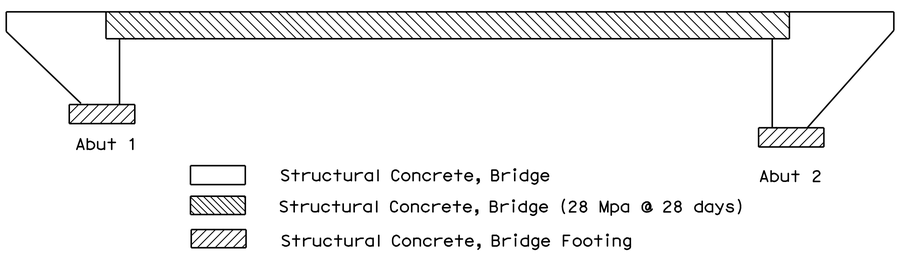

CONCRETE STRENGTH AND TYPE LIMITS

No Scale

PILE DATA TABLE					
Location	Pile Type	Nominal Resistance		Design Tip Elevations	Specified Tip Elevations
		Compression	Tension		
Abut 1	HP 250 x 85	1150 KN	0 KN	380.5 (1)	380.5
Abut 2	HP 250 x 85	1150 KN	0 KN	380.5 (1)	380.5

Note: Design Pile Tip Elevation is controlled by the following demand: (1) compression

QUAIL MEADOWS UC 10-0173
QUANTITIES

STRUCTURE EXCAVATION (BRIDGE)	246	m^3
STRUCTURE BACKFILL (BRIDGE)	145	m^3
FURNISH STEEL PILING (HP 250 X 85)	1 016	m
DRIVE STEEL PILE (HP 250 X 85)	32	EA
PRESTRESSING CAST-IN-PLACE CONCRETE	LUMP	SUM
STRUCTURAL CONCRETE, BRIDGE FOOTING	51	m^3
STRUCTURAL CONCRETE, BRIDGE	407	m^3
STRUCTURAL CONCRETE, APPROACH SLAB (TYPE N)	69	m^3
ARCHITECTURAL TEXTURE	15	m^2
JOINT SEAL (MR 50 MM)	26	m
BAR REINFORCING STEEL (BRIDGE)	51 100	kg
TUBULAR BICYCLE RAILING (MODIFIED)	100	m
CONCRETE BARRIER (TYPE 736 MODIFIED)	100	m

GENERAL NOTES (LOAD FACTOR DESIGN)

DESIGN: Bridge Design Specifications - April 2000 (LFD) (1996 AASHTO with interims and revisions by Caltrans).

Project Specific Design Criteria - March 2009.

SEISMIC DESIGN: Caltrans SDC Version 1.4 - June 2006

DEAD LOAD: Includes 1675 Pa for future wearing surface. Includes 1460 N/m for future utilities.

LIVE LOAD: HS20-44 and alternative and permit design load.

SEISMIC LOADING: Modified Caltrans Seismic Design Criteria for Soil Profile Type D, PBA = 0.7 g. See Response Spectrum below.

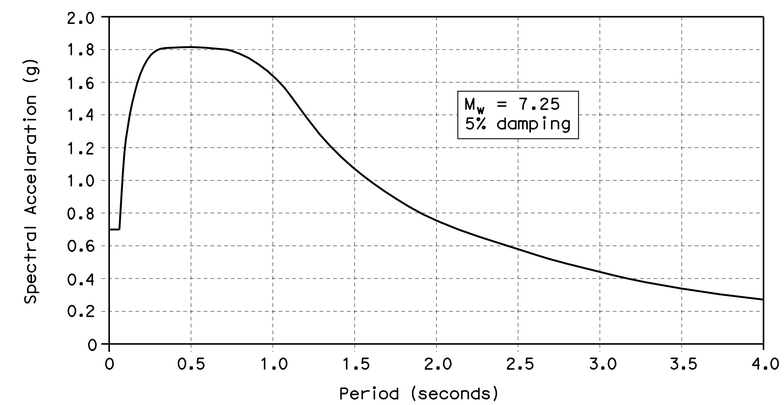

REINFORCED CONCRETE:

fy = 420 MPa
f'c = 25 MPa (See concrete strength and type limits for exceptions)

Transverse Deck Slab (working stress design)
fs = 140 MPa
f'c = 8 MPa
n = 10

PRESTRESSED CONCRETE: See "Prestressing Notes" on Girder Layout sheet

Caltrans Metric

DESIGN	BY A. Tern	CHECKED H. Fang	
DETAILS	BY L. Wang	CHECKED H. Fang	
QUANTITIES	BY A. Tern	CHECKED H. Fang	

STATE OF CALIFORNIA
DEPARTMENT OF TRANSPORTATION

DIVISION OF ENGINEERING SERVICES
STRUCTURE DESIGN
DESIGN BRANCH 2

BRIDGE NO. 10-0173
KILOMETER POST R77.541

WILLITS BYPASS
QUAIL MEADOWS UC
DECK CONTOURS

ALL DIMENSIONS ARE IN METERS UNLESS OTHERWISE SHOWN

ORIGINAL SCALE IN MILLIMETERS FOR REDUCED PLANS 0 10 20 30 40 50 60 70 80 90 100

CU 01
EA 262001

DISREGARD PRINTS BEARING EARLIER REVISION DATES

REVISION DATES: 05-15-08 08-05-08 08-14-08 09-25-08 09-30-08 10-03-08 1-27-09

SHEET 2 OF 15

FILE => 10-0173_iddc.dgn

STRUCTURES DESIGN DETAIL SHEET (METRIC) (REV.03-17-04)

USERNAME => s124496 DATE PLOTTED => 28-JAN-2012 TIME PLOTTED => 07:32

DIST	COUNTY	ROUTE	KILOMETER POST TOTAL PROJECT	SHEET No	TOTAL SHEETS
01	Men	101	R69.4/R78.9	855	939

REGISTERED CIVIL ENGINEER — DATE 9-15-11

1-23-12
PLANS APPROVAL DATE

REGISTERED PROFESSIONAL ENGINEER — M. Friedheim — No. 57968 — Exp. 06-30-12 — CIVIL — STATE OF CALIFORNIA

The State of California or its officers or agents shall not be responsible for the accuracy or completeness of electronic copies of this plan sheet.

Caltrans Metric

CURVE DATA

No.	R	Δ	T	L
Ⓐ	1325.000	12°6′29″	140.525	280.004
Ⓑ	600.000	4°52′17″	25.522	51.004
Ⓒ	250.000	13°21′55″	29.291	58.317

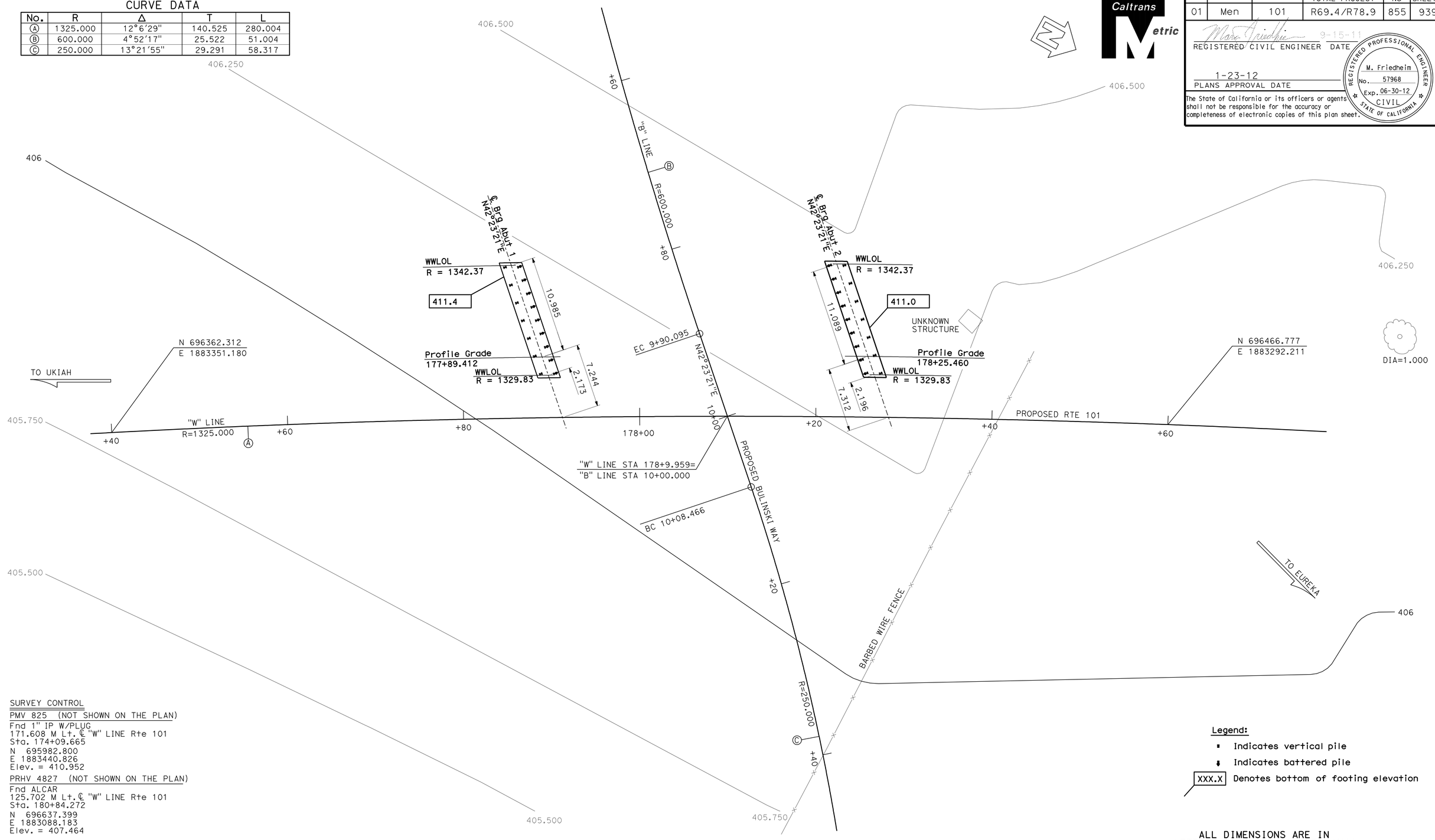

SURVEY CONTROL

PMV 825 (NOT SHOWN ON THE PLAN)
Fnd 1" IP W/PLUG
171.608 M Lt. ℄ "W" LINE Rte 101
Sta. 174+09.665
N 695982.800
E 1883440.826
Elev. = 410.952

PRHV 4827 (NOT SHOWN ON THE PLAN)
Fnd ALCAR
125.702 M Lt. ℄ "W" LINE Rte 101
Sta. 180+84.272
N 696637.399
E 1883088.183
Elev. = 407.464

Legend:

- ▪ Indicates vertical pile
- ⬇ Indicates battered pile
- XXX.X Denotes bottom of footing elevation

ALL DIMENSIONS ARE IN METERS UNLESS OTHERWISE SHOWN

PRELIMINARY INVESTIGATION SECTION

SCALE	VERT. DATUM NAVD88	PHOTOGRAMMETRY AS OF:			
1=200	HORZ. DATUM NAD83 (1991.35)	SURVEYED	BY DISTRICT	CHECKED BY T.GILLETT	01/2009
ALIGNMENT TIES DIST.TRAVERSE SHEET		DRAFTED	BY T.ZOLNIKOVA 01/2009	CHECKED BY T.GILLETT	01/2009

	BY	CHECKED
DESIGN	A. Tern	H. Fang
DETAILS	S. Ng	H. Fang
QUANTITIES	A. Tern	H. Fang

STATE OF CALIFORNIA
DEPARTMENT OF TRANSPORTATION

DIVISION OF ENGINEERING SERVICES
STRUCTURE DESIGN
DESIGN BRANCH

BRIDGE NO. 10-0173
KILOMETER POST R77.104

QUAIL MEADOWS UC
FOUNDATION PLAN

STRUCTURES FOUNDATION PLAN SHEET (METRIC) (REV.10-27-05)

ORIGINAL SCALE IN MILLIMETERS FOR REDUCED PLANS 0 10 20 30 40 50 60 70 80 90 100

CU 01
EA 262001

DISREGARD PRINTS BEARING EARLIER REVISION DATES

REVISION DATES (PRELIMINARY STAGE ONLY) 01-14-09 02-12-09

SHEET 3 OF 15

FILE => 10-0173_iefp101.dgn

USERNAME => s124496 DATE PLOTTED => 28-JAN-2012 TIME PLOTTED => 07:32

DIST	COUNTY	ROUTE	KILOMETER POST TOTAL PROJECT	SHEET No	TOTAL SHEETS
01	Men	101	R69.4/R78.9	856	939

REGISTERED CIVIL ENGINEER 9-15-11 DATE

1-23-12
PLANS APPROVAL DATE

REGISTERED PROFESSIONAL ENGINEER M. Friedheim No. 57968 Exp. 06-30-12 CIVIL STATE OF CALIFORNIA

The State of California or its officers or agents shall not be responsible for the accuracy or completeness of electronic copies of this plan sheet.

Notes:

1. Steel reinforced elastomeric bearing pad 410 mm x 460 mm x 65 mm tot 4, see "BEARING PAD DETAILS" on "ABUTMENT DETAILS NO. 2" sheet.
2. Expanded Polystyrene, same thickness as bearing pad.
3. Angle point elevation shall be 700 mm above top of footing.
4. For Backwall Base and Joint Protection details see "Abutment Details No. 2" sheet

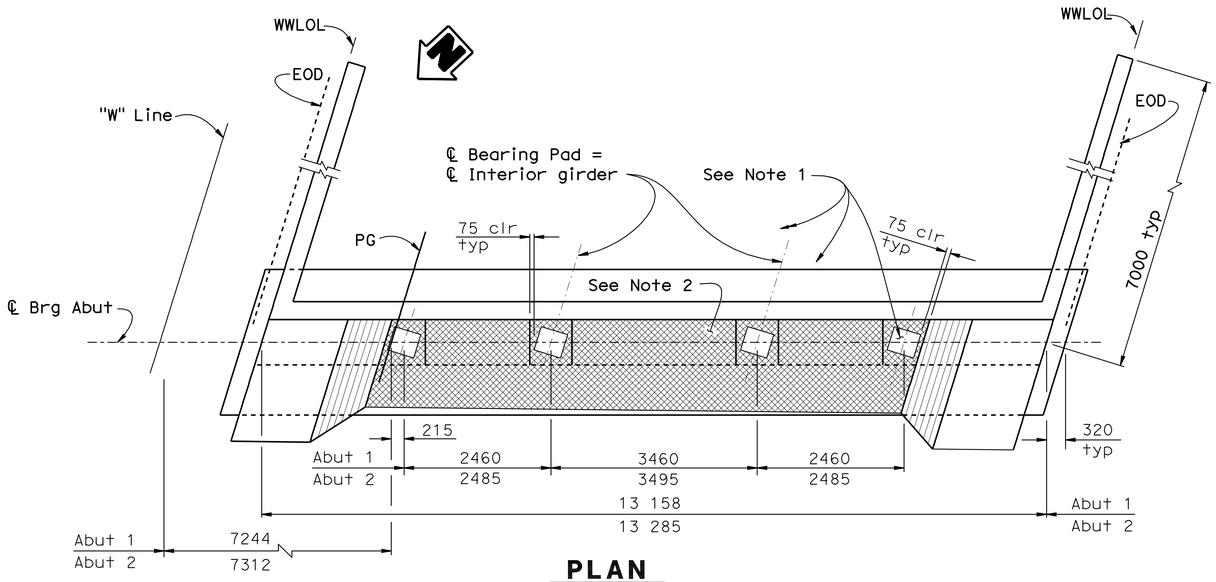

PLAN
1:50

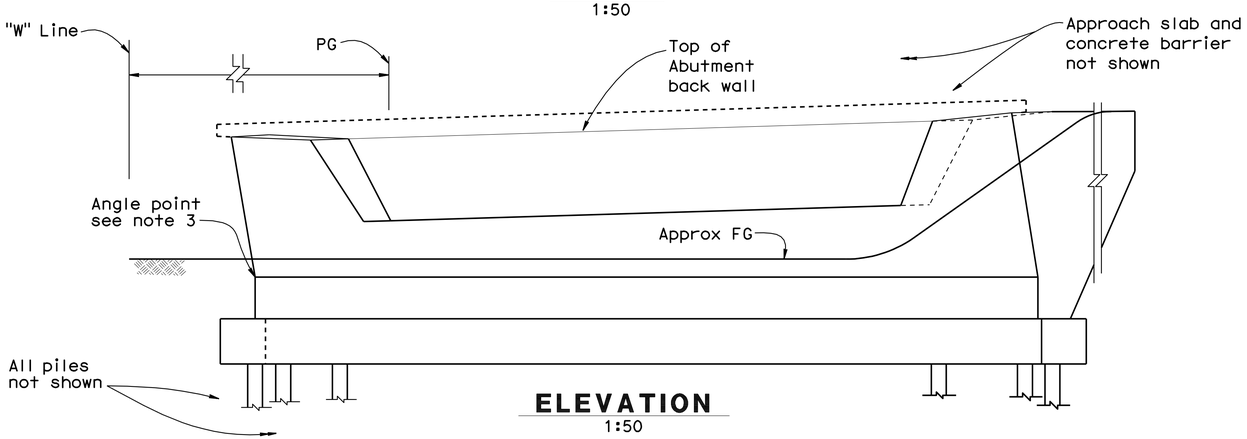

ELEVATION
1:50

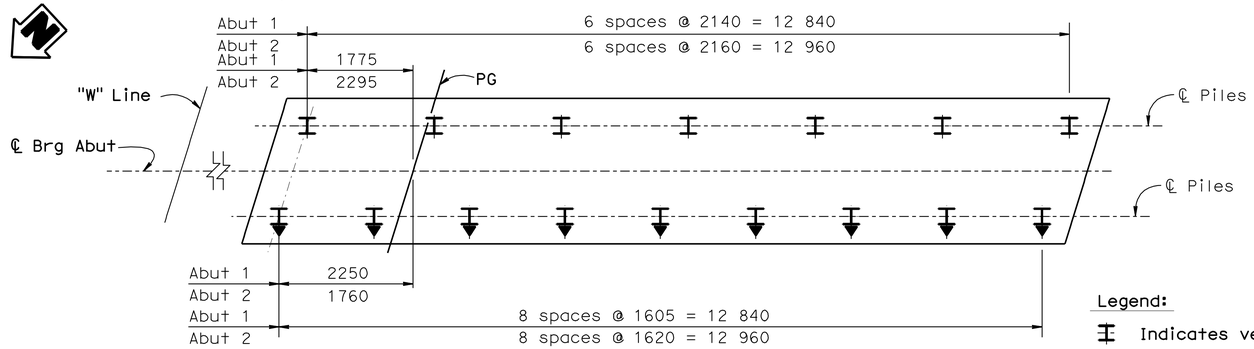

PILE LAYOUT
1:50
Abutment 1 shown, Abutment 2 similar

Legend:

Indicates vertical piles

Indicates battered piles

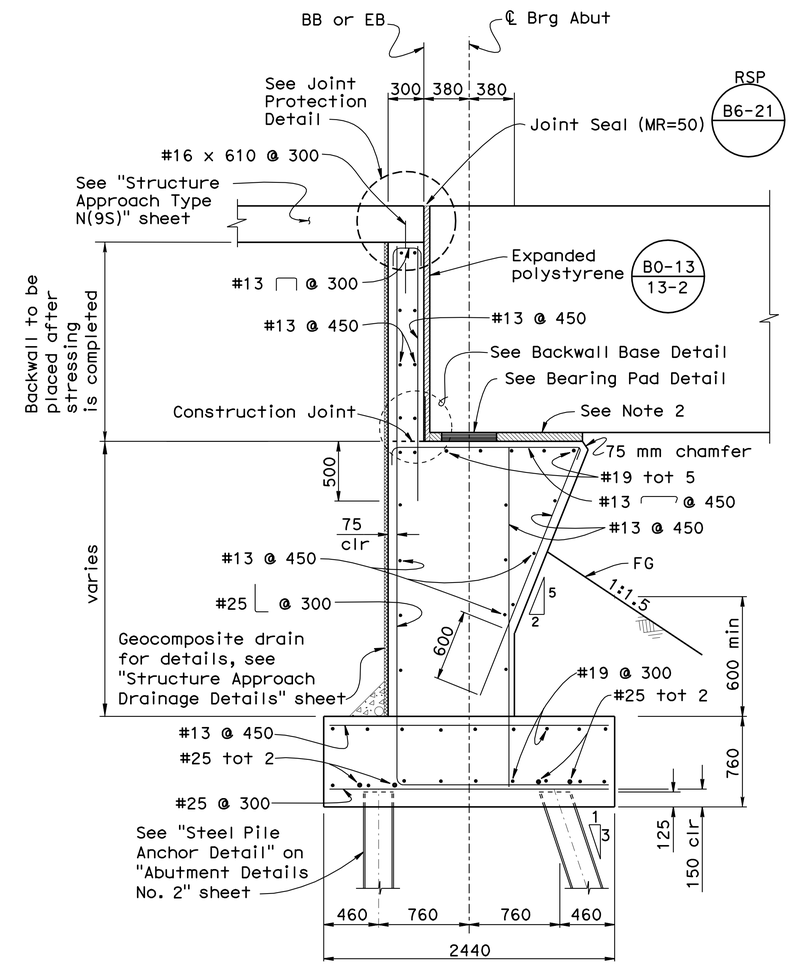

TYPICAL ABUTMENT SECTION
1:25
Abutment 1 shown, Abutment 2 similar

DESIGN	BY A. Tern	CHECKED H. Fang	
DETAILS	BY L. Wang/S. Ng	CHECKED H. Fang	
QUANTITIES	BY A. Tern	CHECKED H. Fang	

STATE OF CALIFORNIA
DEPARTMENT OF TRANSPORTATION

DIVISION OF ENGINEERING SERVICES
STRUCTURE DESIGN
DESIGN BRANCH 2

BRIDGE NO. 10-0173
KILOMETER POST R77.541

WILLITS BYPASS
QUAIL MEADOWS UC
ABUTMENT LAYOUT

ALL DIMENSIONS ARE IN MILLIMETERS UNLESS OTHERWISE SHOWN

ORIGINAL SCALE IN MILLIMETERS FOR REDUCED PLANS 0 10 20 30 40 50 60 70 80 90 100

CU 01
EA 262001

DISREGARD PRINTS BEARING EARLIER REVISION DATES

REVISION DATES: 07-01-08 02-10-09 02-11-09 3-03-09 09-25-08 09-30-08 10-03-08 11-10-08 02-06-09

SHEET 4 OF 15

FILE => 10-0173_ifabt-lo.dgn

STRUCTURES DESIGN DETAIL SHEET (METRIC) (REV.03-17-04)

USERNAME => s124496 DATE PLOTTED => 28-JAN-2012 TIME PLOTTED => 07:33

DIST	COUNTY	ROUTE	KILOMETER POST TOTAL PROJECT	SHEET No	TOTAL SHEETS
01	Men	101	R69.4/R78.9	857	939

REGISTERED CIVIL ENGINEER 9-15-11 DATE

1-23-12
PLANS APPROVAL DATE

REGISTERED PROFESSIONAL ENGINEER M. Friedheim No. 57968 Exp. 06-30-12 CIVIL STATE OF CALIFORNIA

The State of California or its officers or agents shall not be responsible for the accuracy or completeness of electronic copies of this plan sheet.

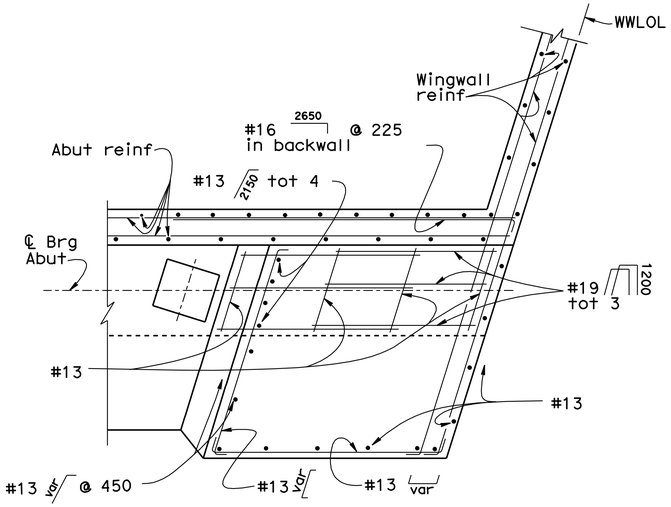

SECTION A-A
1:25

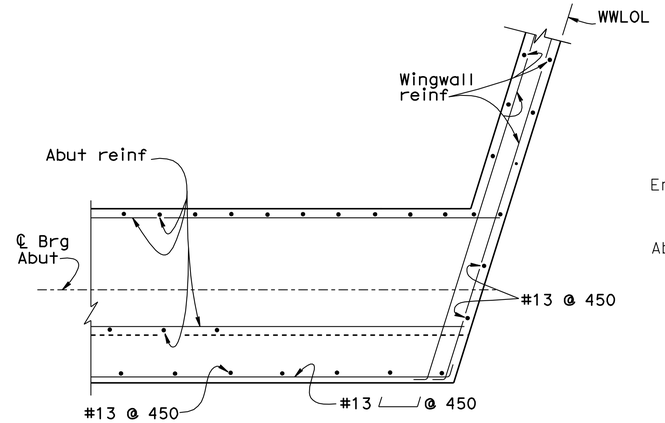

SECTION B-B
1:25

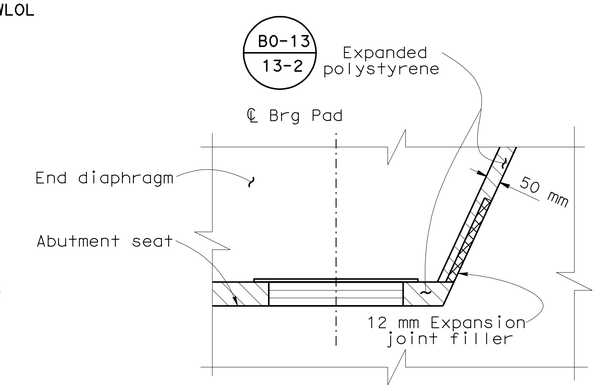

DETAIL X
1:10

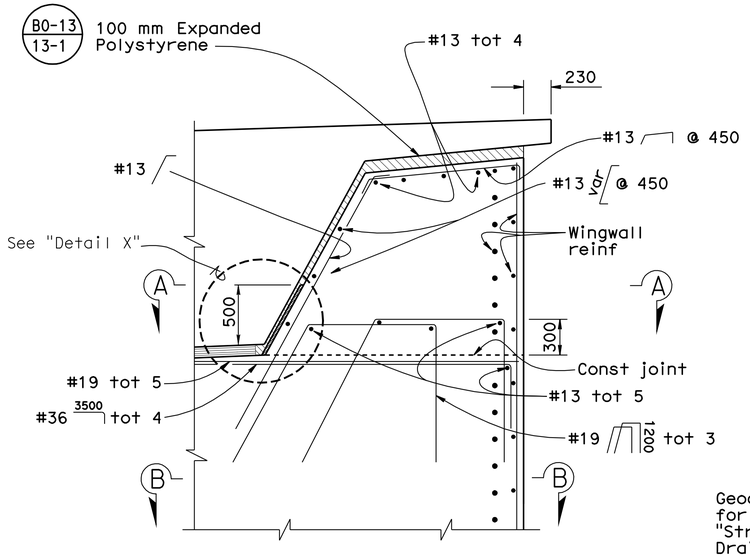

SHEAR KEY DETAILS
1:25

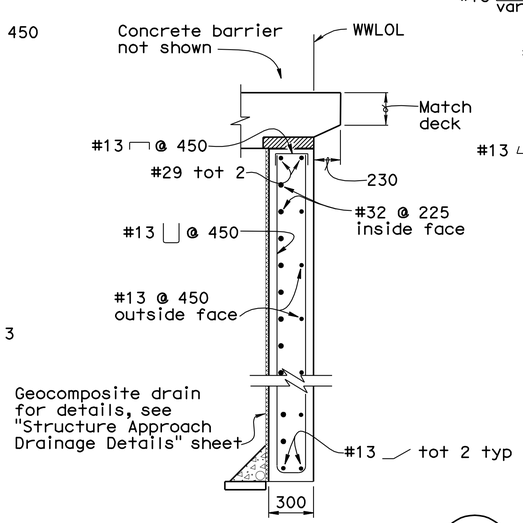

SECTION C-C
1:25

B0-1

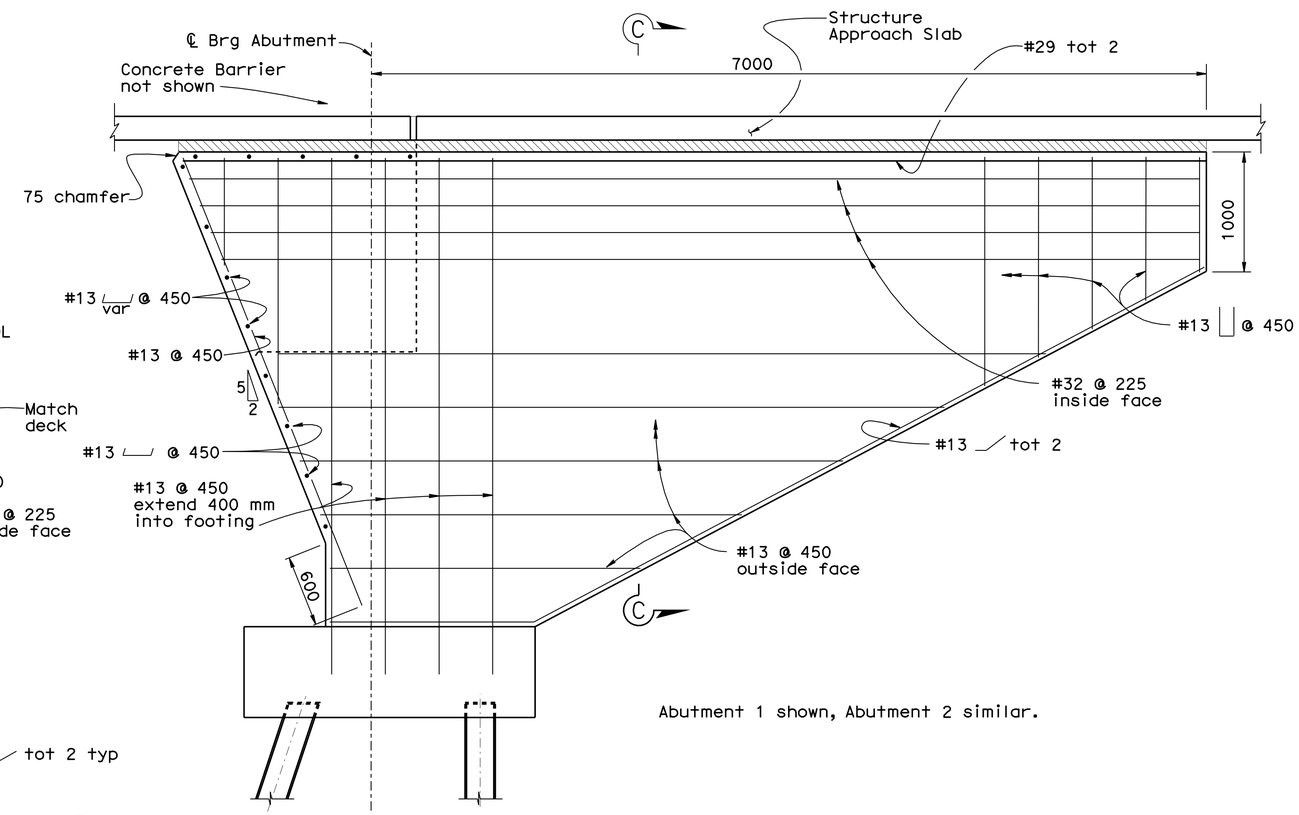

Abutment 1 shown, Abutment 2 similar.

TYPICAL WINGWALL ELEVATION
1:25

Caltrans Metric

	BY	CHECKED
DESIGN	A. Tern	H. Fang
DETAILS	L. Wang	H. Fang
QUANTITIES	A. Tern	H. Fang

STATE OF CALIFORNIA
DEPARTMENT OF TRANSPORTATION

DIVISION OF ENGINEERING SERVICES
STRUCTURE DESIGN
DESIGN BRANCH 2

BRIDGE NO. 10-0173
KILOMETER POST R77.541

WILLITS BYPASS
QUAIL MEADOWS UC
ABUTMENT DETAILS NO. 1

ALL DIMENSIONS ARE IN MILLIMETERS UNLESS OTHERWISE SHOWN

ORIGINAL SCALE IN MILLIMETERS FOR REDUCED PLANS 0 10 20 30 40 50 60 70 80 90 100

CU 01
EA 262001

DISREGARD PRINTS BEARING EARLIER REVISION DATES

REVISION DATES: 07-22-08 08-14-08 09-11-08 09-18-08 09-25-08 09-30-08 10-03-08 11-18-08 02-18-09 3-04-09

SHEET 5 OF 15

FILE => 10-0173_lfadt01.dgn

STRUCTURES DESIGN DETAIL SHEET (METRIC) (REV.03-17-04)

USERNAME => s124496 DATE PLOTTED => 28-JAN-2012 TIME PLOTTED => 07:34

DIST	COUNTY	ROUTE	KILOMETER POST TOTAL PROJECT	SHEET No	TOTAL SHEETS
01	Men	101	R69.4/R78.9	858	939

REGISTERED CIVIL ENGINEER 9-15-11 DATE

1-23-12
PLANS APPROVAL DATE

REGISTERED PROFESSIONAL ENGINEER M. Friedheim No. 57968 Exp. 06-30-12 CIVIL STATE OF CALIFORNIA

The State of California or its officers or agents shall not be responsible for the accuracy or completeness of electronic copies of this plan sheet.

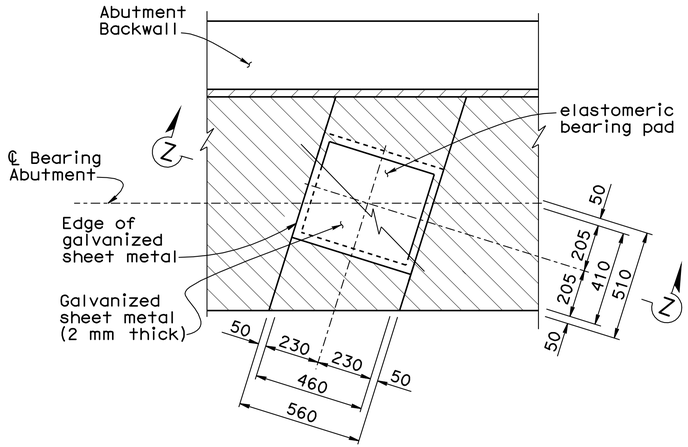

PLAN

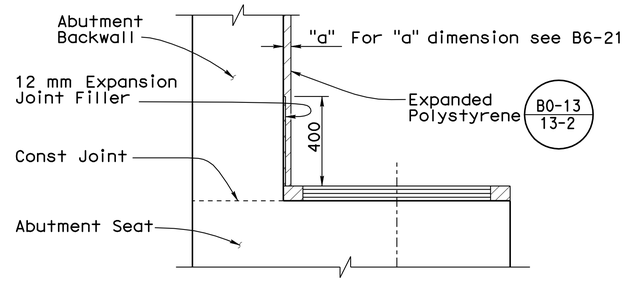

BACKWALL BASE DETAIL

No Scale

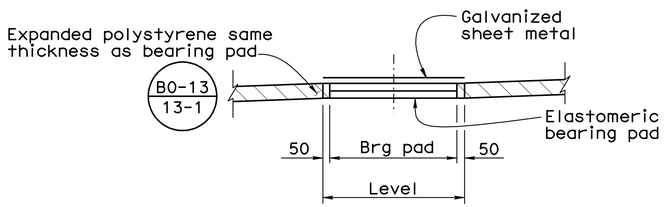

SECTION Z-Z

Note:
Coat top of bearing pad with silicone grease prior to placing sheet metal

BEARING PAD DETAIL

No Scale

Details typical at all bearing pads

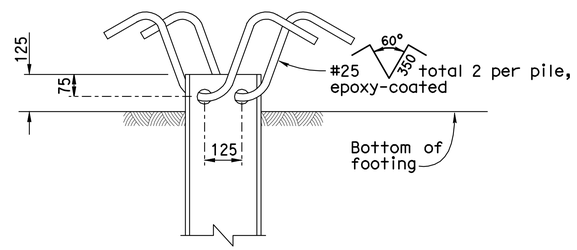

ELEVATION

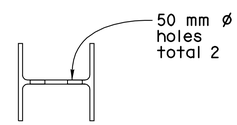

PLAN

STEEL PILE ANCHOR DETAIL

No Scale

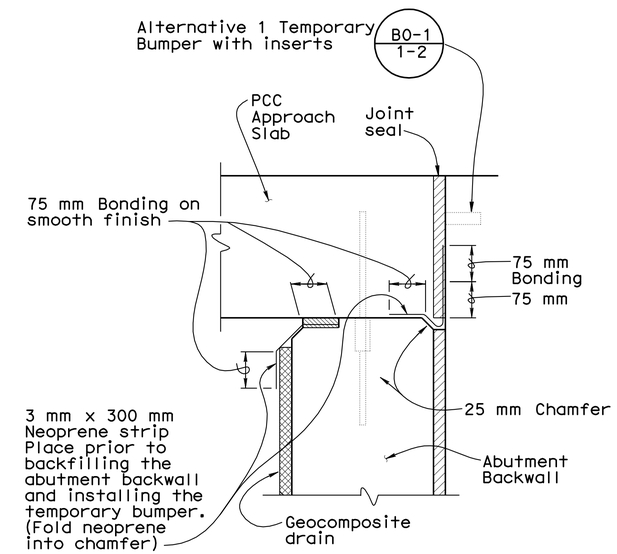

JOINT PROTECTION DETAIL

No Scale

DESIGN	BY A. Tern	CHECKED H. Fang	
DETAILS	BY L. Wang	CHECKED H. Fang	
QUANTITIES	BY A. Tern	CHECKED H. Fang	

STATE OF CALIFORNIA
DEPARTMENT OF TRANSPORTATION

DIVISION OF ENGINEERING SERVICES
STRUCTURE DESIGN
DESIGN BRANCH 2

BRIDGE NO. 10-0173
KILOMETER POST R77.541

WILLITS BYPASS
QUAIL MEADOWS UC
ABUTMENT DETAILS NO. 2

ALL DIMENSIONS ARE IN MILLIMETERS UNLESS OTHERWISE SHOWN

ORIGINAL SCALE IN MILLIMETERS FOR REDUCED PLANS 0 10 20 30 40 50 60 70 80 90 100

CU 01
EA 262001

DISREGARD PRINTS BEARING EARLIER REVISION DATES

REVISION DATES: 07-31-08 09-17-08 09-25-08 10-03-08 11-10-08

SHEET 6 OF 15

FILE => 10-0173_ifadt02.dgn

STRUCTURES DESIGN DETAIL SHEET (METRIC) (REV.03-17-04)

USERNAME => s124496 DATE PLOTTED => 28-JAN-2012 TIME PLOTTED => 07:34

DIST	COUNTY	ROUTE	KILOMETER POST TOTAL PROJECT	SHEET No	TOTAL SHEETS
01	Men	101	R69.4/R78.9	859	939

REGISTERED CIVIL ENGINEER 9-15-11 DATE

1-23-12
PLANS APPROVAL DATE

REGISTERED PROFESSIONAL ENGINEER M. Friedheim No. 57968 Exp. 06-30-12 CIVIL STATE OF CALIFORNIA

The State of California or its officers or agents shall not be responsible for the accuracy or completeness of electronic copies of this plan sheet.

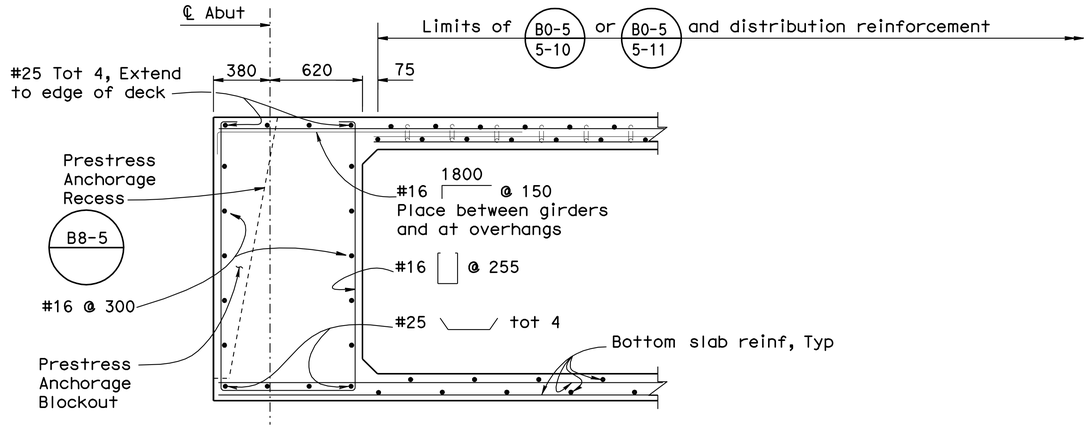

END DIAPHRAGM SECTION B8-5
1:20

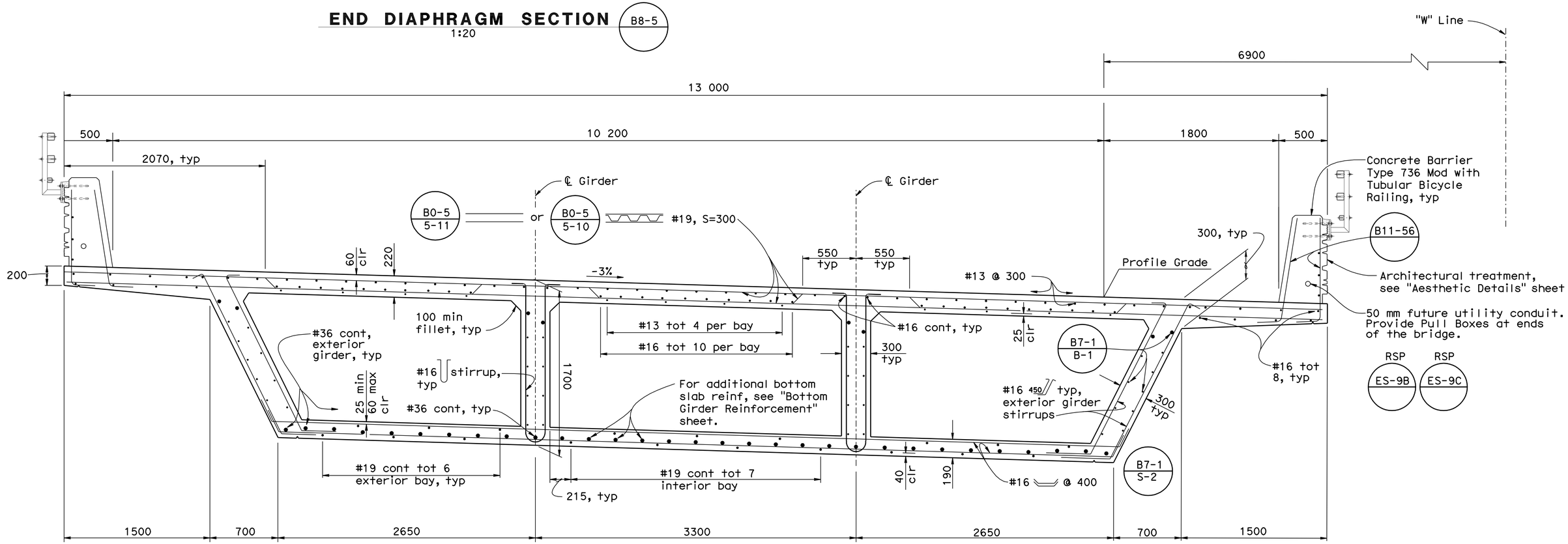

TYPICAL SECTION B0-5 B7-1 B8-5
1:20

Caltrans Metric

	BY	CHECKED
DESIGN	A. Tern	H. Fang
DETAILS	L. Wang	H. Fang
QUANTITIES	A. Tern	H. Fang

STATE OF CALIFORNIA
DEPARTMENT OF TRANSPORTATION

DIVISION OF ENGINEERING SERVICES
STRUCTURE DESIGN
DESIGN BRANCH 2

BRIDGE NO. 10-0173
KILOMETER POST R77.541

WILLITS BYPASS
QUAIL MEADOWS UC
TYPICAL SECTION

ALL DIMENSIONS ARE IN MILLIMETERS UNLESS OTHERWISE SHOWN

ORIGINAL SCALE IN MILLIMETERS FOR REDUCED PLANS 0 10 20 30 40 50 60 70 80 90 100

CU 01
EA 262001

DISREGARD PRINTS BEARING EARLIER REVISION DATES

REVISION DATES: 05-14-08 05-27-08 07-08-08 07-31-08 09-18-08 09-25-08 10-03-08 1-27-09 3-03-09 3-05-09

SHEET 7 OF 15

STRUCTURES DESIGN DETAIL SHEET (METRIC) (REV.03-17-04)

FILE => 10-0173_tkts.dgn

USERNAME => s124496 DATE PLOTTED => 28-JAN-2012 TIME PLOTTED => 07:34

DIST	COUNTY	ROUTE	KILOMETER POST TOTAL PROJECT	SHEET No	TOTAL SHEETS
01	Men	101	R69.4/R78.9	860	939

REGISTERED CIVIL ENGINEER 9-15-11 DATE

1-23-12
PLANS APPROVAL DATE

REGISTERED PROFESSIONAL ENGINEER M. Friedheim No. 57968 Exp. 06-30-12 CIVIL STATE OF CALIFORNIA

The State of California or its officers or agents shall not be responsible for the accuracy or completeness of electronic copies of this plan sheet.

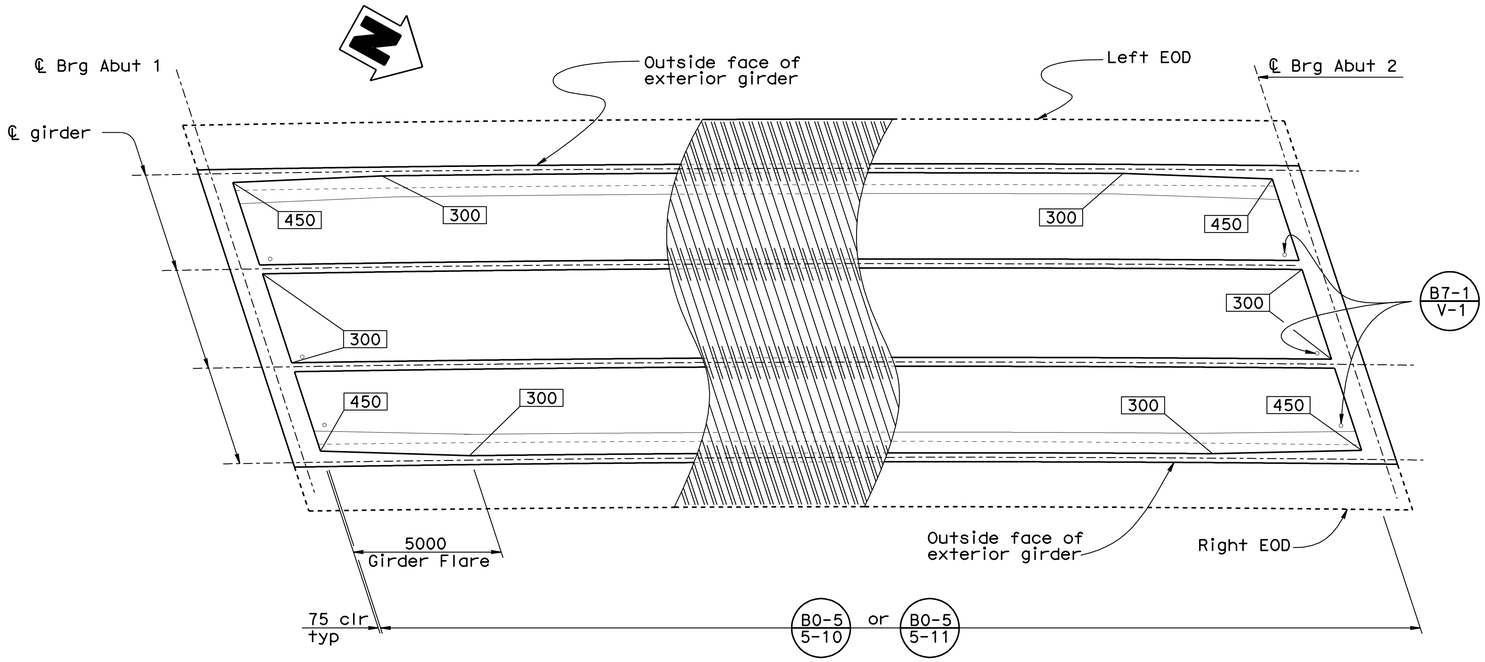

GIRDER LAYOUT
1:100

Notes:

Girder stem width

Theoretical Point of No Movement (Shown for right end stressing)

PRESTRESSING NOTES

Design based on 1860 MPa Low Relaxation Strand:

P_{jack} = 36,300 kN

Anchor Set = 10 mm

Total Number of Girders = 4

Total long term losses assumed to be 175 MPa

Design based on μ = 0.15 and K = 0.000656 /m

Concrete: f'_c = 28 MPa @ 28 days

f'_{ci} = 25 MPa @ time of stressing

Contractor shall submit elongation calculations based on initial stress at

☒ = 0.959 times jacking stress.

One end stressing shall be performed from either end.

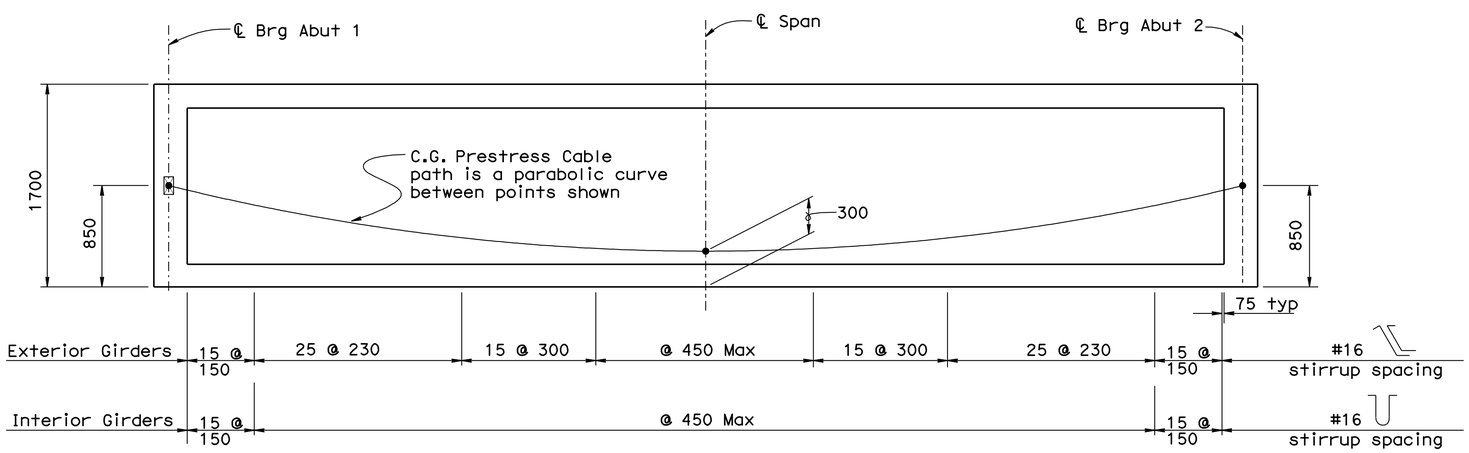

LONGITUDINAL SECTION
No Scale

Caltrans Metric

ALL DIMENSIONS ARE IN MILLIMETERS UNLESS OTHERWISE SHOWN

ORIGINAL SCALE IN MILLIMETERS FOR REDUCED PLANS 0 10 20 30 40 50 60 70 80 90 100

	BY	CHECKED
DESIGN	A. Tern	H. Fang
DETAILS	L. Wang	H. Fang
QUANTITIES	A. Tern	H. Fang

STATE OF CALIFORNIA
DEPARTMENT OF TRANSPORTATION

DIVISION OF ENGINEERING SERVICES
STRUCTURE DESIGN
DESIGN BRANCH 2

CU 01
EA 262001

BRIDGE NO. 10-0173
KILOMETER POST R77.541

WILLITS BYPASS
QUAIL MEADOWS UC
GIRDER LAYOUT

DISREGARD PRINTS BEARING EARLIER REVISION DATES

REVISION DATES: 06-05-08, 08-19-08, 09-17-08, 10-30-08, 03-04-09

SHEET 8 OF 15

STRUCTURES DESIGN DETAIL SHEET (METRIC) (REV.03-17-04)

FILE => 10-0173_iiglo.dgn

USERNAME => s124936 DATE PLOTTED => 28-JAN-2012 TIME PLOTTED => 08:04

DIST	COUNTY	ROUTE	KILOMETER POST TOTAL PROJECT	SHEET No	TOTAL SHEETS
01	Men	101	R69.4/R78.9	861	939

REGISTERED CIVIL ENGINEER 9-15-11 DATE

1-23-12
PLANS APPROVAL DATE

REGISTERED PROFESSIONAL ENGINEER M. Friedheim No. 57968 Exp. 06-30-12 CIVIL STATE OF CALIFORNIA

The State of California or its officers or agents shall not be responsible for the accuracy or completeness of electronic copies of this plan sheet.

NOTES:

1. No splices are allowed in cut-off bars. Splices in continuous bars shall be service level and shall not be located within 8.0 m of each side of ℄ span.
2. Distribution bars not shown.

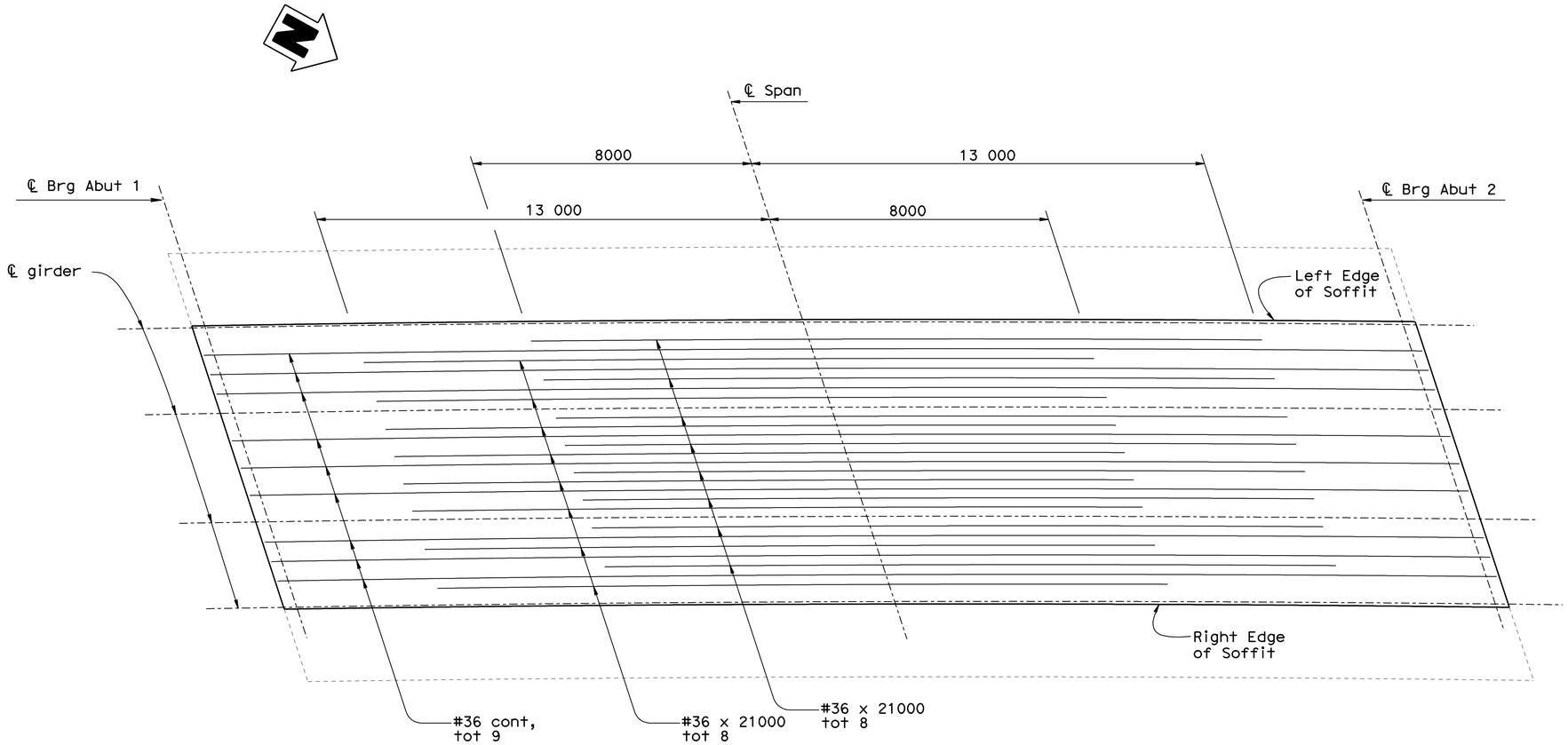

BOTTOM GIRDER REINFORCEMENT

1:80

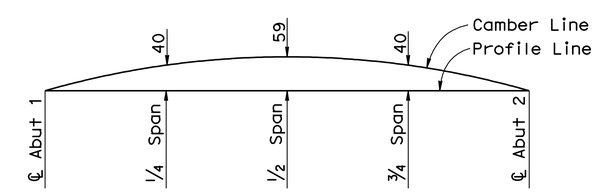

CAMBER DIAGRAM

No Scale

(Does not include allowance for falsework settlement)

DESIGN	BY A. Tern	CHECKED H. Fang	
DETAILS	BY L. Wang	CHECKED H. Fang	
QUANTITIES	BY A. Tern	CHECKED H. Fang	

STATE OF CALIFORNIA
DEPARTMENT OF TRANSPORTATION

DIVISION OF ENGINEERING SERVICES
STRUCTURE DESIGN
DESIGN BRANCH 2

BRIDGE NO. 10-0173
KILOMETER POST R77.541

WILLITS BYPASS
QUAIL MEADOWS UC
BOTTOM GIRDER REINFORCEMENT

ALL DIMENSIONS ARE IN MILLIMETERS UNLESS OTHERWISE SHOWN

ORIGINAL SCALE IN MILLIMETERS FOR REDUCED PLANS 0 10 20 30 40 50 60 70 80 90 100

CU 01
EA 262001

DISREGARD PRINTS BEARING EARLIER REVISION DATES

REVISION DATES: 06-09-08 08-19-08 09-17-08 09-25-08 10-03-08 03-03-09

SHEET 9 OF 15

FILE => 10-0173_logbotrf.dgn

STRUCTURES DESIGN DETAIL SHEET (METRIC) (REV.03-17-04)

USERNAME => s124936 DATE PLOTTED => 28-JAN-2012 TIME PLOTTED => 07:48

DIST.	COUNTY	ROUTE	KILOMETER POST TOTAL PROJECT	SHEET NO.	TOTAL SHEETS
01	Men	101	R69.4/R78.9	862	939

Caltrans Metric

Marc Friedheim 9-15-11
REGISTERED ENGINEER - CIVIL

1-23-12
PLANS APPROVAL DATE

REGISTERED PROFESSIONAL ENGINEER M. Friedheim No. 57968 Exp. 06-30-12 CIVIL STATE OF CALIFORNIA

The State of California or its officers or agents shall not be responsible for the accuracy or completeness of electronic copies of this plan sheet.

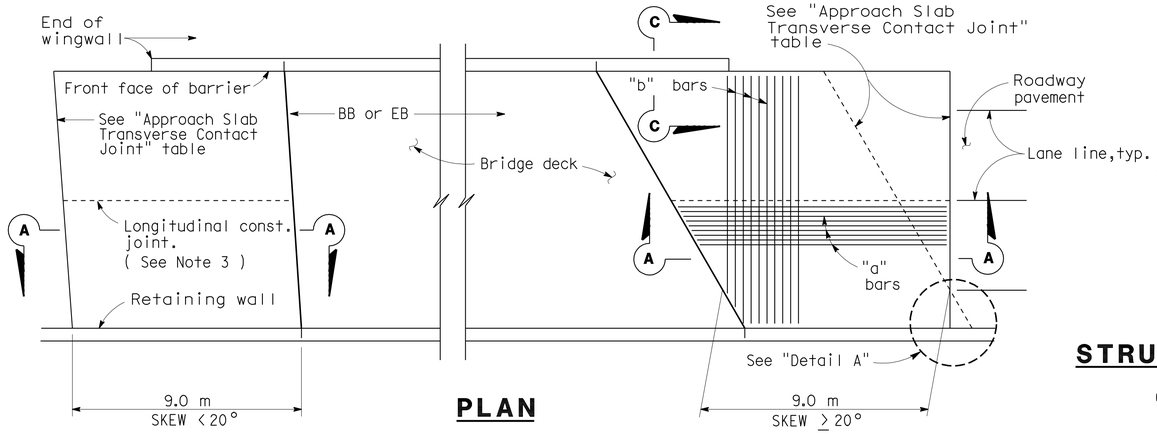

PLAN

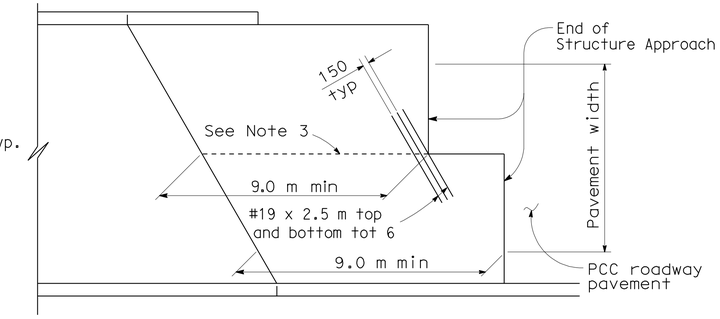

STRUCTURE APPROACH - END STAGGER DETAIL

APPROACH SLAB TRANSVERSE CONTACT JOINT		
APPROACH SKEW	WITH AC ROADWAY PAVEMENT	WITH PCC ROADWAY PAVEMENT
< 20°	Parallel to face of paving notch	Parallel to face of paving notch
20°- 45°	Parallel to face of P N use (Detail A)	Stagger lines 7.2 m to 10.8 m apart.
> 45°	Parallel to face of P N use (Detail A)	Stagger at each lane line.

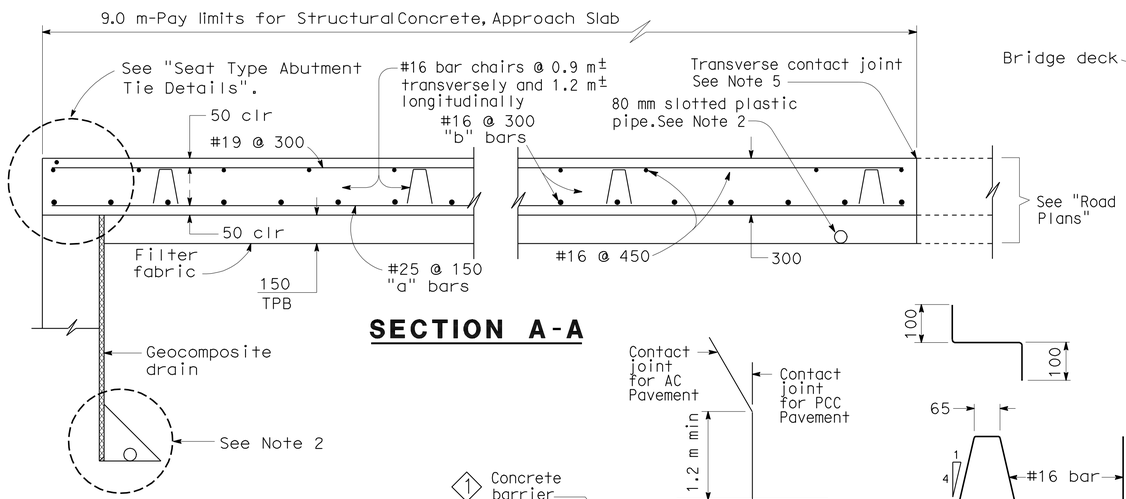

SECTION A-A

DETAIL A

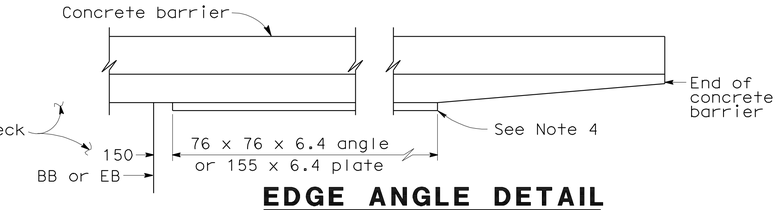

EDGE ANGLE DETAIL

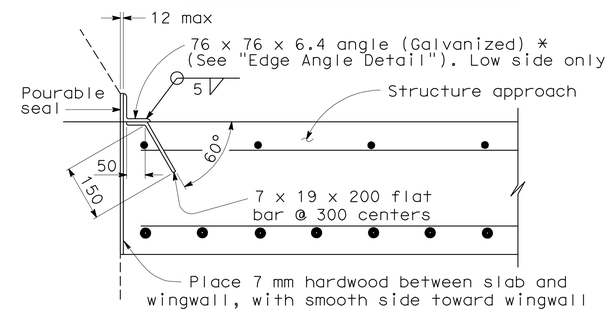

*(TO BE USED WITH TYPE 25 OR TYPE 27 CONCRETE BARRIER)

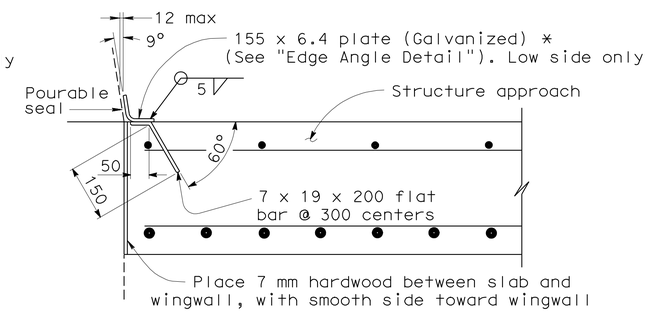

*(TO BE USED WITH TYPE 732 OR TYPE 736 CONCRETE BARRIER)

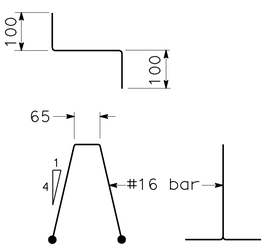

BAR CHAIR DETAIL

DETAIL B

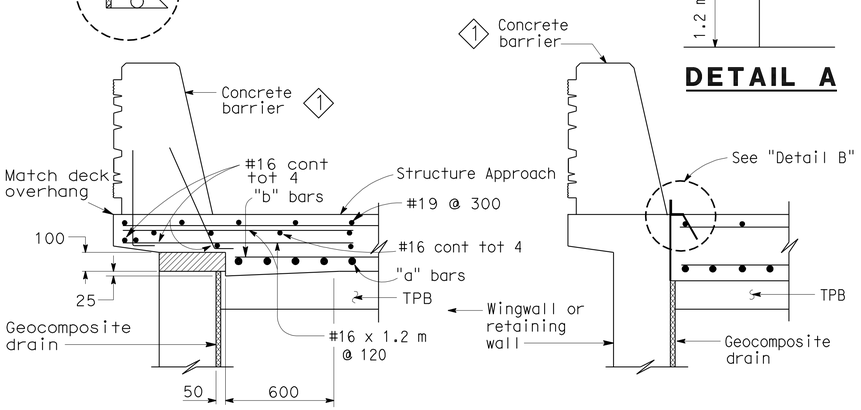

TYPE E-1

TYPE E-2

SECTION C-C

(Type E-1 to be used,unless otherwise shown on plans)

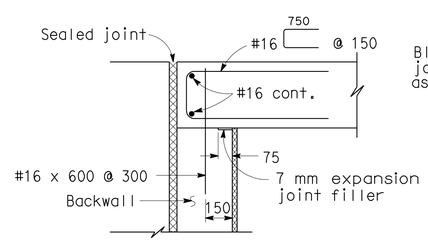

MR ≤ 50 mm

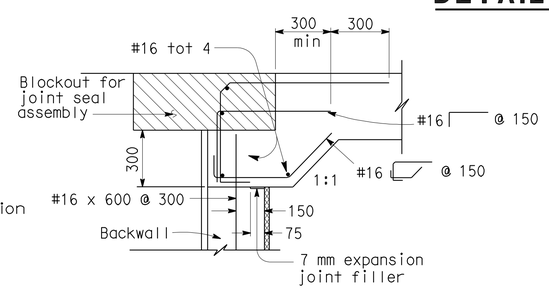

MR > 50 mm

SEAT TYPE ABUTMENT TIE DETAILS (SEE NOTE 1)

NOTES:

1. For details not shown,see Structure Plans. For MR ≤ 50 mm,adjust bar reinforcement to clear a sawcut for sealed joint,when required.
2. For drainage details,see "Structure Approach Drainage Details" sheet.
3. Longitudinal construction joints,when permitted by the Engineer, shall be located on lane lines.
4. End angle or plate at beginning of barrier transition, end of wingwall or end of structure approach as applicable.
5. For transverse contact joint with new PCC paving, refer to Standard Plan P30.
6. At the contractor's option, approach slab transverse reinforcement may be placed parallel to paving notch. Spacing of transverse reinforcement is measured along ℄ roadway.

Remove all polystyrene.

SPECIAL DETAILS
NO SCALE
ALL DIMENSIONS ARE IN MILLIMETERS UNLESS OTHERWISE SHOWN

STANDARD DRAWING

RELEASE DATE	REVISED	DESIGN	BY M. TRAFFALIS	CHECKED E. THORKILDSEN	RELEASED BY
FILE NO.	xs3-120	DETAILS	BY R. YEE	CHECKED E. THORKILDSEN	
		SUBMITTED	BY M. HA	DRAWING DATE 4/98	OFFICE CHIEF

1 Modified barrier

STATE OF CALIFORNIA
DEPARTMENT OF TRANSPORTATION

DIVISION OF ENGINEERING SERVICES
STRUCTURE DESIGN
DESIGN BRANCH 2

BRIDGE NO. 10-0173
KILOMETER POST R77.541

WILLITS BYPASS
QUAIL MEADOWS UC
STRUCTURE APPROACH TYPE N(9S)

DS OSD 2147A (METRIC) (REV. 2/25/97)

ORIGINAL SCALE IN MILLIMETERS FOR REDUCED PLANS 0 10 20 30 40 50 60 70 80 90 100

CU 01
EA 262001

DISREGARD PRINTS BEARING EARLIER REVISION DATES

REVISION DATES (PRELIMINARY STAGE ONLY) 12-20-05 11-31-06 10-04-06 10-18-06 10-03-08 1-27-09

SHEET 10 OF 15

USERNAME => s124496

10-0173_isstap.dgn

DATE PLOTTED => 28-JAN-2012 TIME PLOTTED => 07:48

DIST.	COUNTY	ROUTE	KILOMETER POST TOTAL PROJECT	SHEET NO.	TOTAL SHEETS
01	Men	101	R69.4/R78.9	863	939

Caltrans Metric

Marc Friedheim 9-15-11
REGISTERED ENGINEER - CIVIL

1-23-12
PLANS APPROVAL DATE

REGISTERED PROFESSIONAL ENGINEER Marc Friedheim No. 57968 Exp. 6-30-12 CIVIL STATE OF CALIFORNIA

The State of California or its officers or agents shall not be responsible for the accuracy or completeness of electronic copies of this plan sheet.

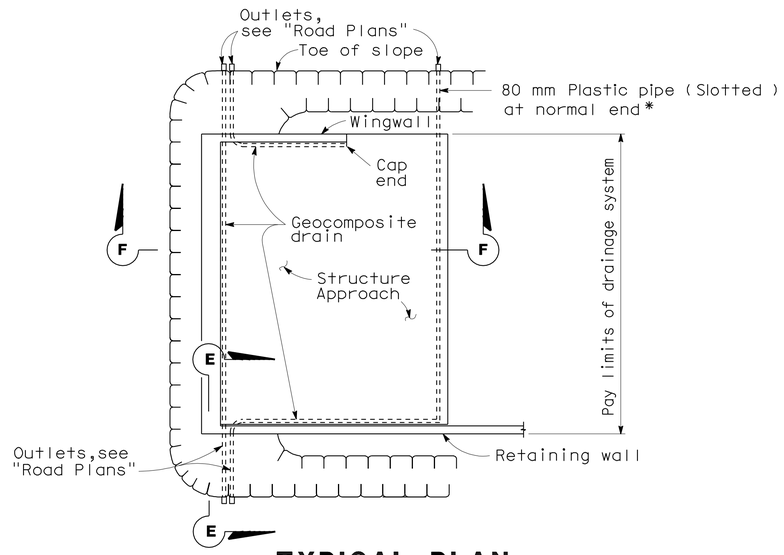

TYPICAL PLAN

*For pipe layout at staggered end, see "Detail B".

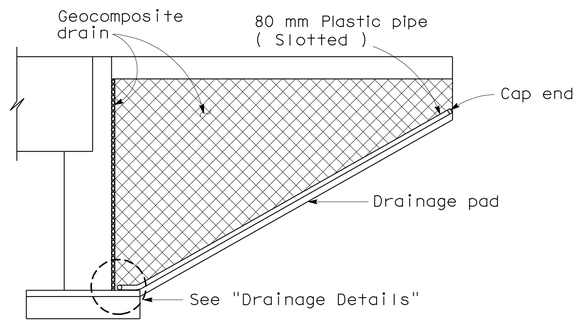

CANTILEVER WINGWALL
SECTION F-F

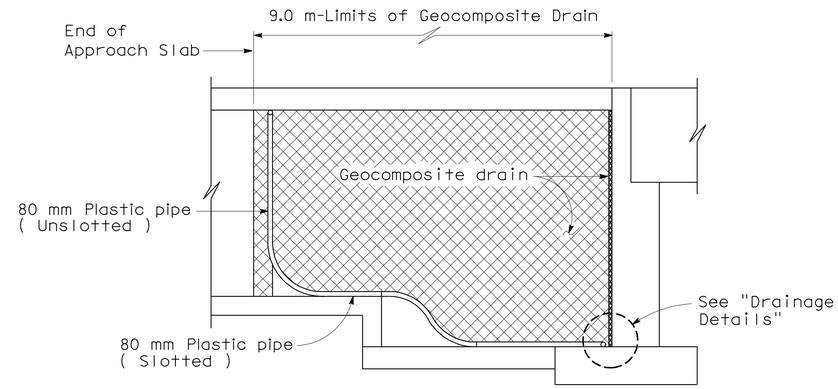

RETAINING WALL WINGWALL
SECTION G-G

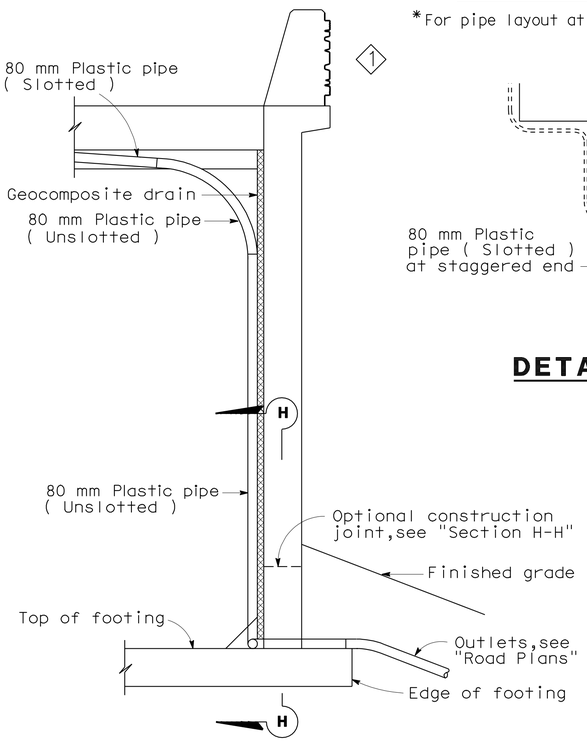

SECTION E-E

NOTE: Bends and junctions in 80 mm plastic pipe are 750 mm radius min.

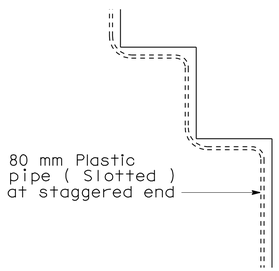

DETAIL B

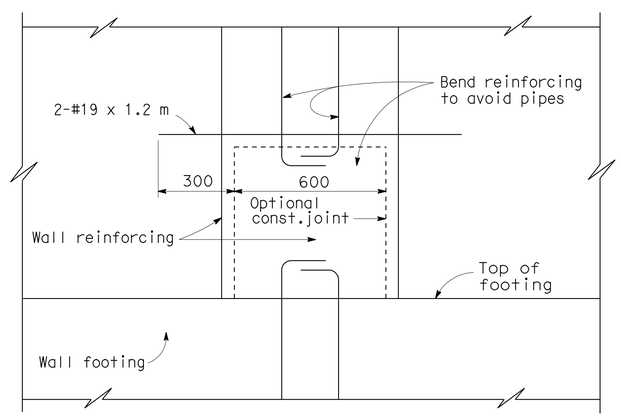

SECTION H-H

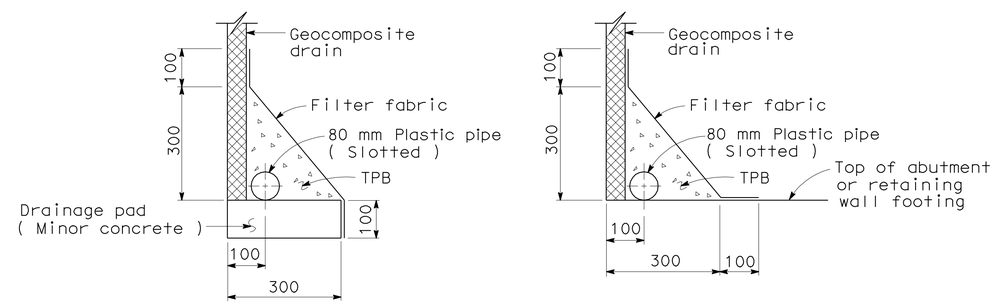

WITHOUT FOOTING **WITH FOOTING**

DRAINAGE DETAILS

NO SCALE

SPECIAL DETAILS

ALL DIMENSIONS ARE IN MILLIMETERS UNLESS OTHERWISE SHOWN

STANDARD DRAWING					
RELEASE DATE REVISED	DESIGN	BY M. TRAFFALIS	CHECKED E. THORKILDSEN	RELEASED BY	
FILE NO. xs3-110	DETAILS	BY R. YEE	CHECKED E. THORKILDSEN	OFFICE CHIEF	
	SUBMITTED	BY M. HA	DRAWING DATE 4/98		

DS OSD 2147A (METRIC) (REV. 2/25/97)

1 Modified barrier

STATE OF CALIFORNIA
DEPARTMENT OF TRANSPORTATION

DIVISION OF ENGINEERING SERVICES
STRUCTURE DESIGN
DESIGN BRANCH 2

BRIDGE NO. 10-0173
KILOMETER POST R77.541

WILLITS BYPASS
QUAIL MEADOWS UC
STRUCTURE APPROACH DRAINAGE DETAILS

ORIGINAL SCALE IN MILLIMETERS FOR REDUCED PLANS 0 10 20 30 40 50 60 70 80 90 100

CU 01
EA 262001

DISREGARD PRINTS BEARING EARLIER REVISION DATES

REVISION DATES (PRELIMINARY STAGE ONLY) 08-26-08 09-30-08 10-05-08 1-27-09 3-05-09

SHEET 11 OF 15

USERNAME => s124496

10-0173_isstapd.dgn

DATE PLOTTED => 28-JAN-2012 TIME PLOTTED => 07:48

DIST	COUNTY	ROUTE	KILOMETER POST TOTAL PROJECT	SHEET No	TOTAL SHEETS
01	Men	101	R69.4/R78.9	864	939

REGISTERED CIVIL ENGINEER 9-15-11 DATE

1-23-12
PLANS APPROVAL DATE

REGISTERED PROFESSIONAL ENGINEER M. Friedheim No. 57968 Exp. 06-30-12 CIVIL STATE OF CALIFORNIA

The State of California or its officers or agents shall not be responsible for the accuracy or completeness of electronic copies of this plan sheet.

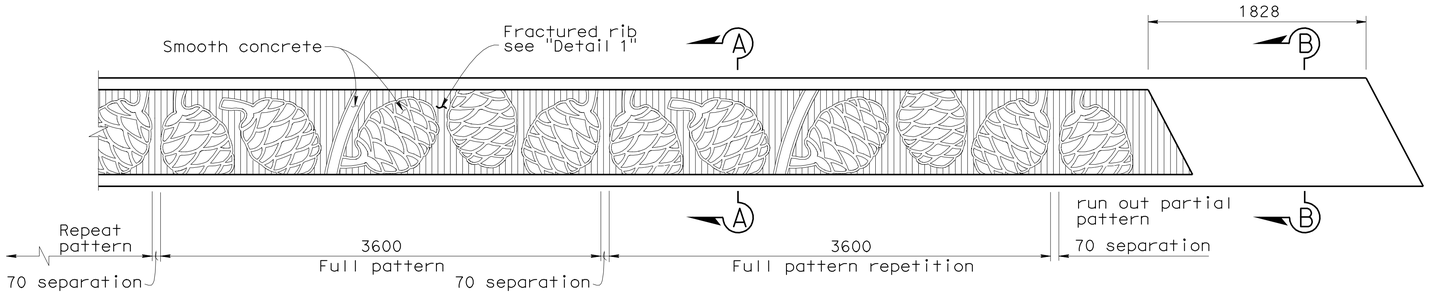

TYPE 736 BARRIER
PARTIAL ELEVATION
1:25

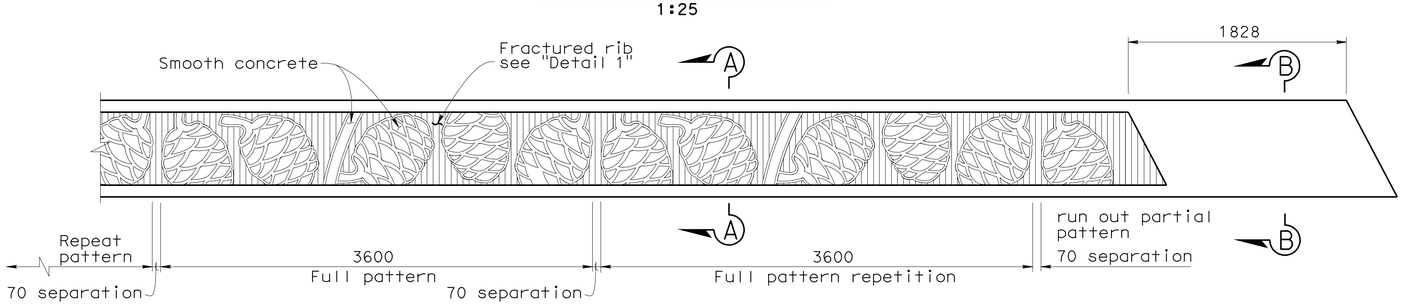

TYPE 732 BARRIER
PARTIAL ELEVATION
1:25

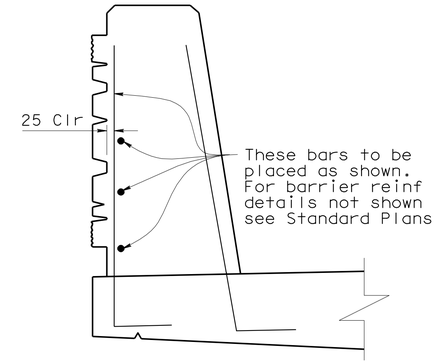

BARRIER REINFORCEMENT MODIFICATION
1:10

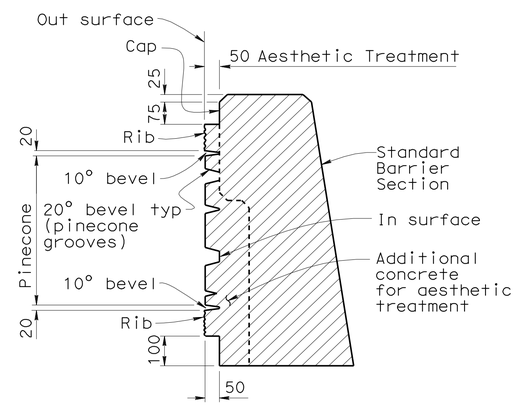

SECTION A-A
1:10

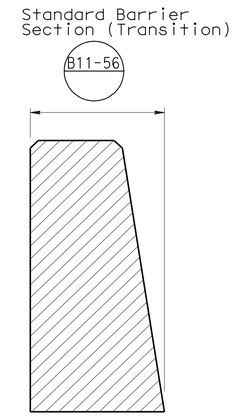

SECTION B-B
1:10

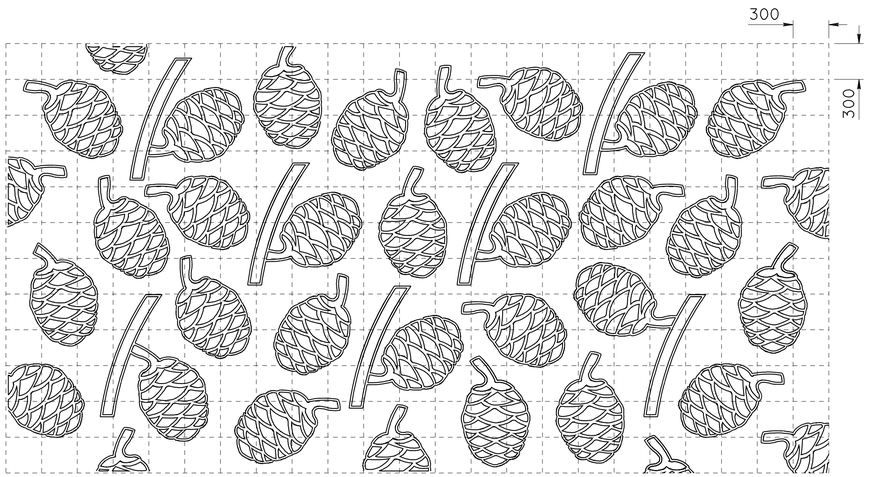

300 mm grid for reference only

RANDOM PINECONE PATTERN FOR WING WALLS
1:25

NOTE: Place random pinecone pattern on Fractured Rib Background
Fractured rib to be at same angle/alignment as abutment wall.
Relief similar to Barrier Section A-A

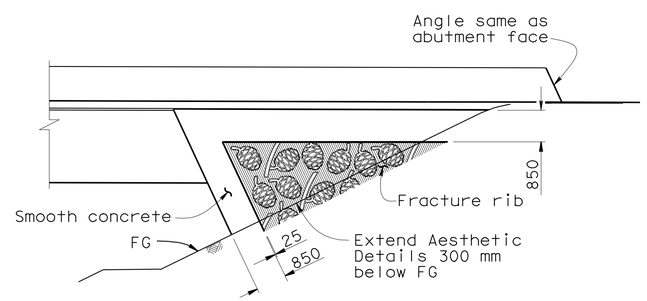

TYPICAL WINGWALL AESTHETIC TREATMENT
1:80

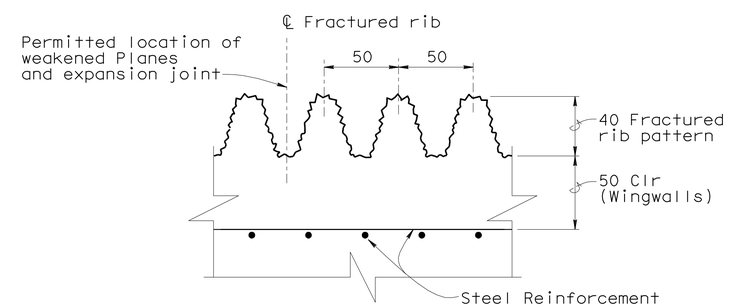

TYPICAL FRACTURED RIB TEXTURE
DETAIL 1
1:2

Caltrans Metric

	BY	CHECKED
DESIGN	A. Tern	M. Friedheim
DETAILS	L. Wang	M. Friedheim
QUANTITIES	A. Tern	H. Fang

STATE OF CALIFORNIA
DEPARTMENT OF TRANSPORTATION

DIVISION OF ENGINEERING SERVICES
STRUCTURE DESIGN
DESIGN BRANCH 2

BRIDGE NO. 10-0173
KILOMETER POST R77.541

WILLITS BYPASS
QUAIL MEADOWS UC
AESTHETIC DETAILS

ALL DIMENSIONS ARE IN MILLIMETERS UNLESS OTHERWISE SHOWN

ORIGINAL SCALE IN MILLIMETERS FOR REDUCED PLANS 0 10 20 30 40 50 60 70 80 90 100

CU 01
EA 262001

DISREGARD PRINTS BEARING EARLIER REVISION DATES

REVISION DATES: 08-29-08 09-30-08 10-03-08 1-24-09 3-03-09

SHEET 12 OF 15

FILE => 10-0173_ltaesthdt.dgn

STRUCTURES DESIGN DETAIL SHEET (METRIC) (REV.03-17-04)

USERNAME => s124496 DATE PLOTTED => 28-JAN-2012 TIME PLOTTED => 07:49

DIST.	COUNTY	ROUTE	KILOMETER POST TOTAL PROJECT	SHEET NO.	TOTAL SHEETS
01	Men	101	R69.4/R78.9	865	939

Caltrans Metric

REGISTERED ENGINEER - CIVIL 9-15-11

1-23-12
PLANS APPROVAL DATE

REGISTERED PROFESSIONAL ENGINEER M. Friedheim No. 57968 Exp. 6-30-12 CIVIL STATE OF CALIFORNIA

The State of California or its officers or agents shall not be responsible for the accuracy or completeness of electronic copies of this plan sheet.

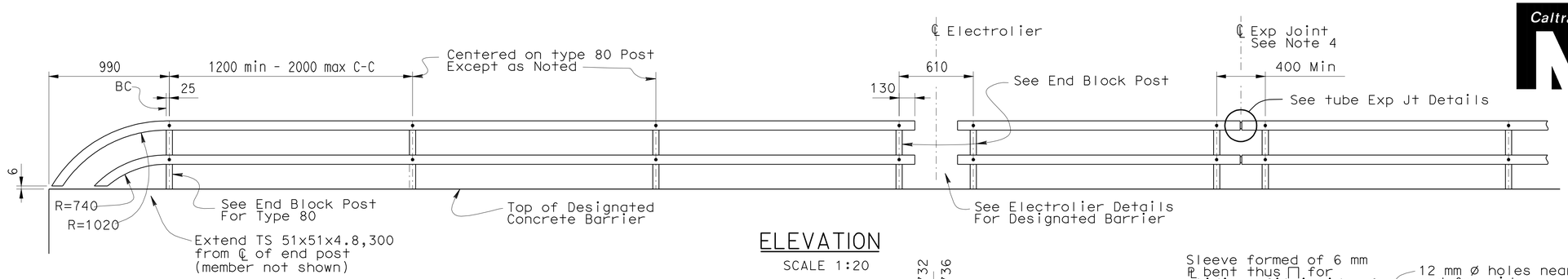

ELEVATION
SCALE 1:20

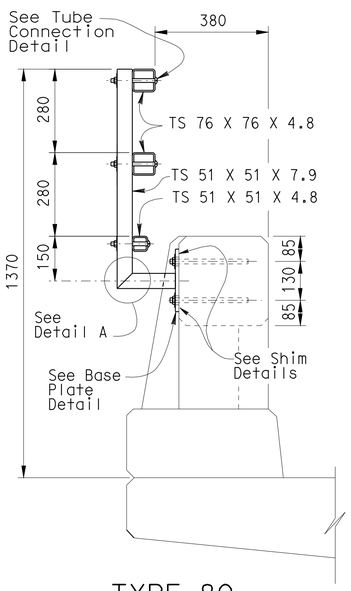

TYPE 80
END BLOCK POST
SCALE 1:10

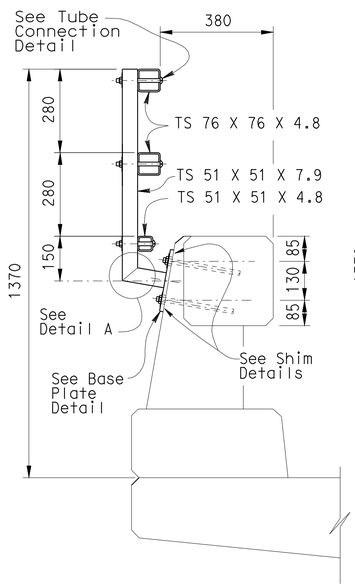

TYPE 80
SCALE 1:10

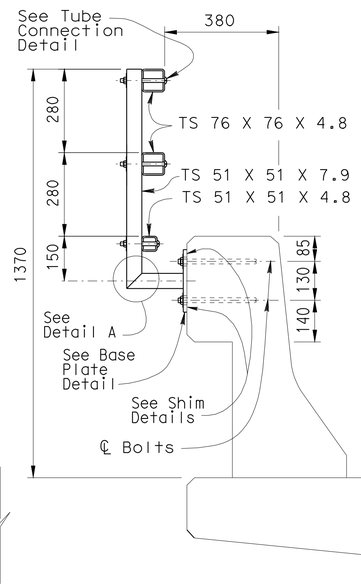

TYPE 25
SCALE 1:10

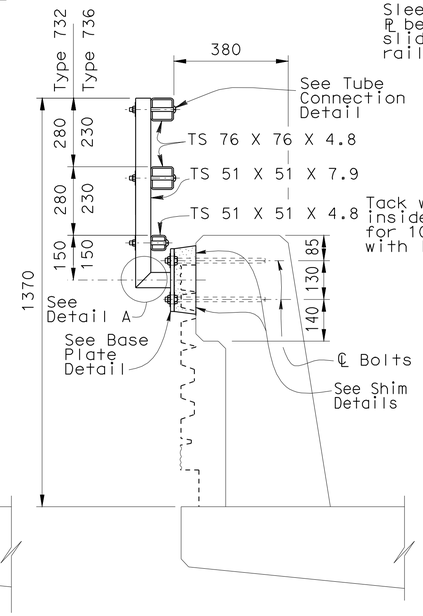

TYPE 732 OR 736 ①
NO SCALE

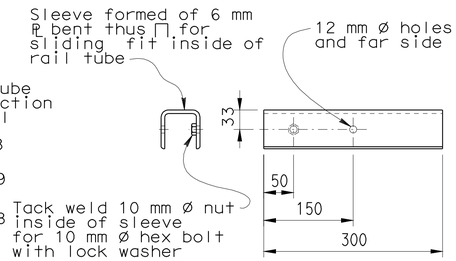

SLEEVE DETAIL
SCALE 1:5

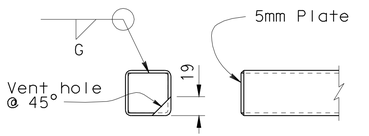

RAIL CAP DETAIL
SCALE 1:5

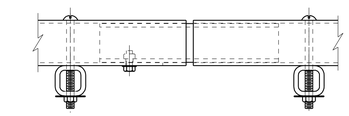

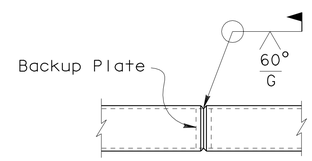

WELDED SPLICE DETAIL
SCALE 1:5

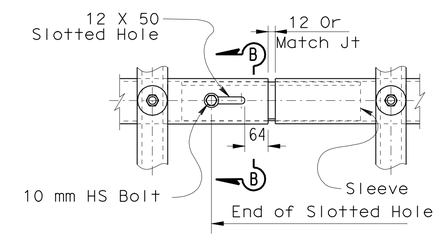

VIEW B-B

TUBE EXPANSION JOINT DETAILS
SCALE 1:5

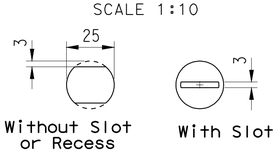

VIEW C-C
SCALE 1:1

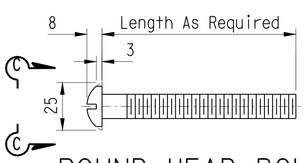

ROUND HEAD BOLT DETAIL
SCALE 1:1

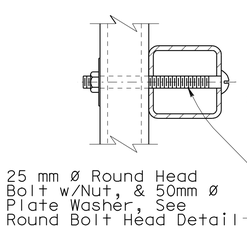

TUBE CONNECTION DETAIL
SCALE 1:2.5

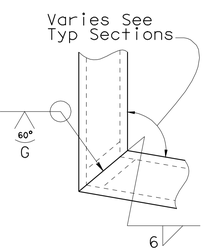

DETAIL A
SCALE 1:2.5

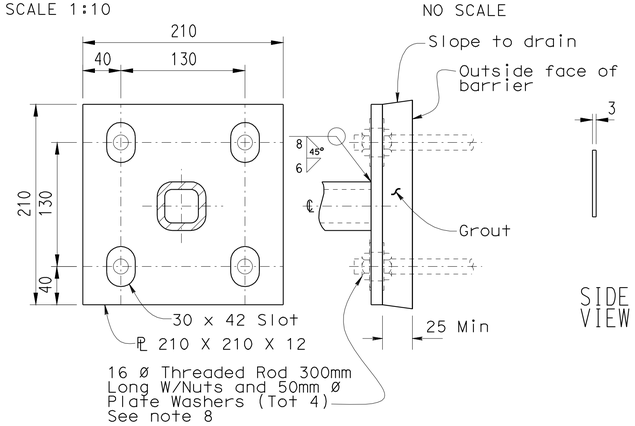

BASE PLATE DETAIL ②
SCALE 1:2.5

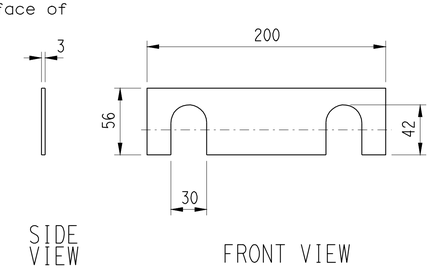

SHIM DETAILS
NO SCALE

NOTES:

1. Galvanize rail assembly after fabrication.
2. Post shall be normal to railing.
3. Rail tubes shall be shop bent or fabricated to fit horizontal curve when radius is less than 300 m.
4. Tube splices shall be located in the tubes spanning deck or wall joints. Increase joint width in tubes to match expansion joint width and increase sleeve length correspondingly.
5. Top rail tube shall be continuous over not less than two posts except a short post spacing is permitted near deck or wall joints, electroliers, or other rail discontinuities as noted.
6. For details and reinforcement not shown see Standard Plans.
7. See project plans for limits of tubular bicycle railing.
8. CIP threaded rods may alternatively be installed using a drill and bond method with epoxy cartridges after forming and pouring barrier concrete. Plates to be placed against level surface.

SPECIAL DETAILS

ALL DIMENSIONS ARE IN MILLIMETERS UNLESS OTHERWISE SHOWN

RELEASE DATE **REVISED**	DESIGN	BY TILLAT SATTER	CHECKED NEELIMA PATIL	RELEASED BY
FILE NO. **XS16-500**	DETAILS	BY H.NGUYEN	CHECKED TILLAT SATTER	OFFICE CHIEF
	SUBMITTED	BY	DRAWING DATE 08/06	

① Barrier modified
② Plate details modified

STATE OF CALIFORNIA
DEPARTMENT OF TRANSPORTATION

DIVISION OF ENGINEERING SERVICES

CU 01
EA 262001

BRIDGE NO. 10-0173
KILOMETER POST R77.541

WILLITS BYPASS
QUAIL MEADOWS UC
TUBULAR BICYCLE RAILING

DS OSD 2I39M (METRIC) (REV. 3/5/97)

ORIGINAL SCALE IN MILLIMETERS FOR REDUCED PLANS 0 10 20 30 40 50 60 70 80 90 100

DISREGARD PRINTS BEARING EARLIER REVISION DATES 05-15-08 1-24-09 1-30-09

REVISION DATES (PRELIMINARY STAGE ONLY)

SHEET 13 OF 15

USERNAME => s124496

FILE => 10-0173_lutbral.dgn

USERNAME => s124496 DATE PLOTTED => 28-JAN-2012 TIME PLOTTED => 07:43

OGS CIVIL LOG OF TEST BORINGS SHEET (METRIC) (REV. 4/04)

CONSISTENCY CLASSIFICATION FOR SOILS

According to the Standard Penetration Test

SPT N-Value (Blows/ 0.3m)	Granular	SPT N-Value (Blows/ 0.3m)	Cohesive
0-4	Very Loose	<2	Very Soft
5-10	Loose	2-4	Soft
11-30	Medium Dense	5-8	Firm
31-50	Dense	9-15	Stiff
>50	Very Dense	16-30	Very stiff
		>30	Hard

NOTE: Classification of earth material as shown on this sheet is based upon field inspection and is not to be construed to imply mechanical analysis.

LEGEND OF EARTH MATERIALS

GRAVEL, SAND, SILT, CLAY, SANDY CLAY or CLAYEY SAND, SANDY SILT or SILTY SAND, SILTY CLAY, CLAYEY SILT, PEAT and/or ORGANIC MATTER, COBBLES and/or BOULDERS, IGNEOUS ROCK, SEDIMENTARY ROCK, METAMORPHIC

LEGEND OF BORING OPERATIONS

57 mm CONE PENETRATION; SAMPLE BORING (DRY); ROTARY SAMPLE BORING (WET); AUGER BORING (DRY); TEST PIT; DIAMOND CORE BORING; JET BORING; ELECTRONIC CONE PENETROMETER

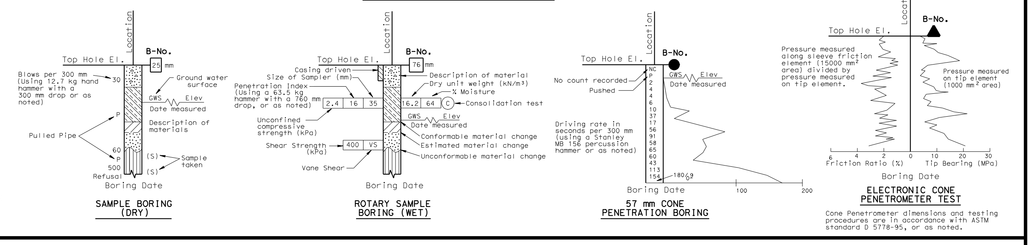

Caltrans Metric

ENGINEERING SERVICES | GEOTECHNICAL SERVICES

DRAWN BY W. Tang 12/2008

CHECKED BY

ALL DIMENSIONS ARE IN METERS UNLESS OTHERWISE SHOWN

FIELD INVESTIGATION BY: T. Alderman

ORIGINAL SCALE IN MILLIMETERS FOR REDUCED PLANS 0 10 20 30 40 50 60 70 80 90 100

STATE OF CALIFORNIA
DEPARTMENT OF TRANSPORTATION

DIVISION OF ENGINEERING SERVICES
STRUCTURE DESIGN
DESIGN BRANCH 2

CU 01
EA 262001

BRIDGE NO. 10-0173
KILOMETER POST R77.541

DISREGARD PRINTS BEARING EARLIER REVISION DATES

REVISION DATES (PRELIMINARY STAGE ONLY) 08-28-09 08-14-09 06-18-09

WILLITS BYPASS

QUAIL MEADOWS UC

LOG OF TEST BORINGS 1 OF 2

SHEET 14 OF 15

FILE => 10-0173_TV101tb01.dgn

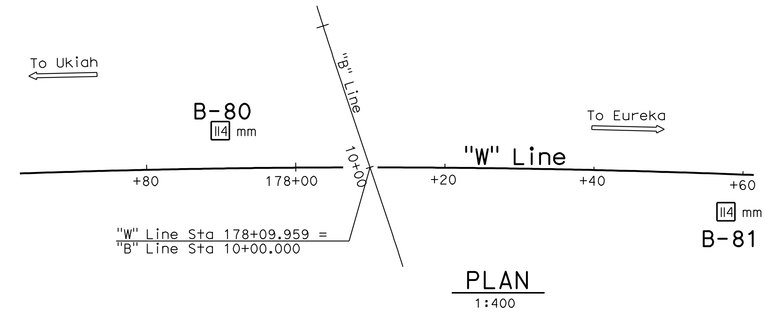

PLAN
1:400

BENCH MARK

SURVEY CONTROL

PMV825
"FD 1" IP W/PLUG"
135.857 m Lt ℄ "A" LINE Rte 101
Sta. 172+68.602
N 695982.800
E 1883440.826
Elev = 410.952

PRHV4827
"ALCAR"
115.936 m Lt ℄ "A" LINE Rte 101
Sta. 179+57.497
N 696637.399
E 1883088.183
Elev = 407.464

Notes:

1. Standard Penetration Tests (SPT) performed in Borings B-80 and B-81 were advanced using a 63.5 kg Safety Hammer.
2. pp= Unconfined commpressive strength determined in the field by "Pocket Penetrometer." Units shown are kilopascals (kPa).
3. UU= Undrained shear strength determined in the laboratory by Unconsolidated-Undrained Triaxial Test. Units shown are kilopascals (kPa).
4. P= Push. Standard Penetration Test (SPT) split barrel sampler penetrated without any impact through the sample interval 457 mm (18 inches) when placing drive weight assembly on sample rods.
5. Consistency descriptors shown on the LOTB sheets are based on the pocket penetromenter readings.
6. Groundwater surface elevations are subject to seasonal fluctuations and may occur at higher or lower elevations depending on conditions at time of construction.

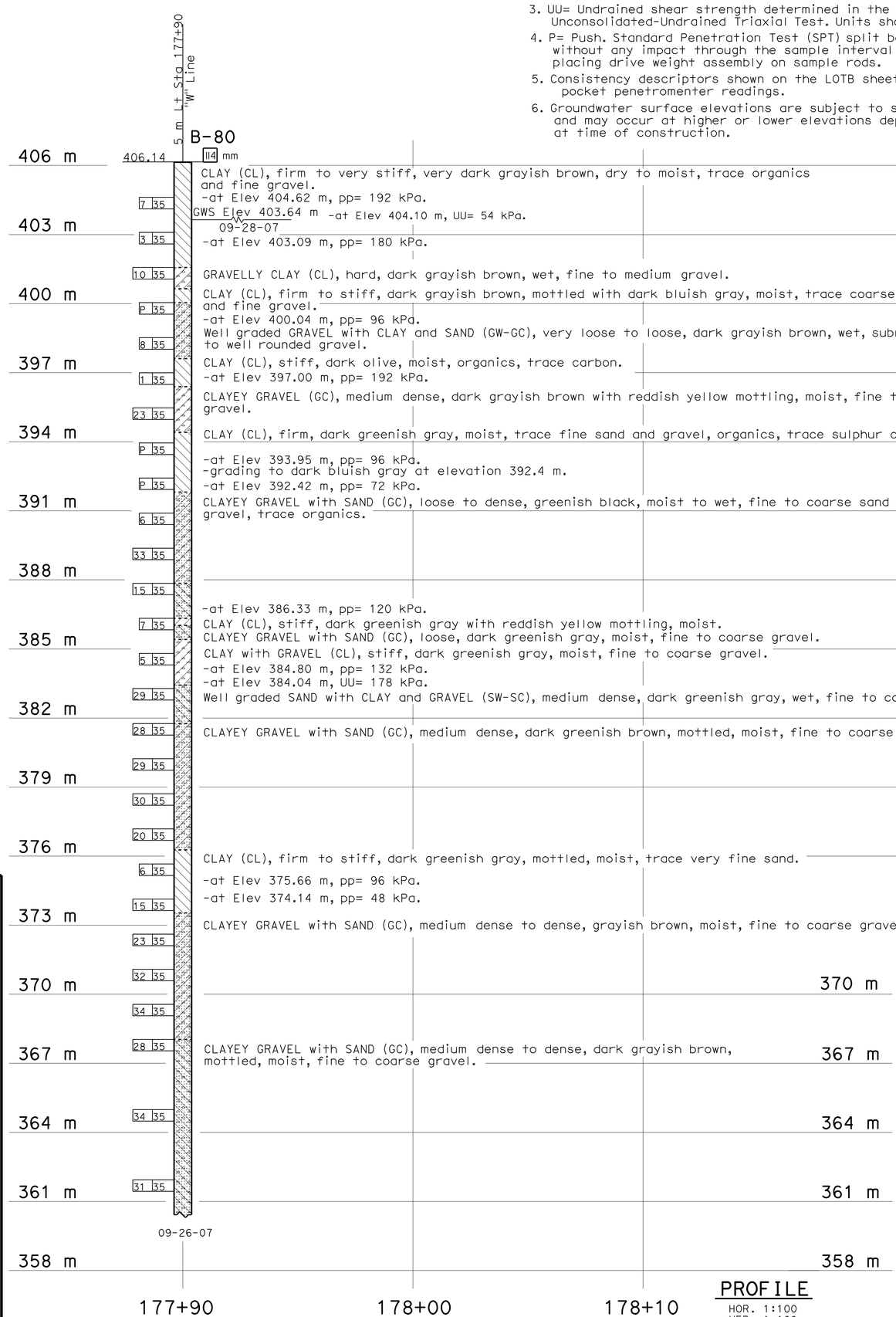

PROFILE
HOR. 1:100
VER. 1:100

The State of California or its officers or agents shall not be responsible for the accuracy or completeness of electronic copies of this plan sheet.

CERTIFIED ENGINEERING GEOLOGIST 5-19-09 DATE

PLANS APPROVAL DATE 1-23-12

REGISTERED GEOLOGIST — CALIFORNIA — Reid Buell — No. 1481 — Exp. 4-30-11 — ENGINEERING GEOLOGIST — STATE OF CALIFORNIA

DIST	COUNTY	ROUTE	KILOMETER POST TOTAL PROJECT	SHEET NO	TOTAL SHEETS
01	Men	101	R69.4/R78.9	866	939

USERNAME => s124496 DATE PLOTTED => 28-JAN-2012 TIME PLOTTED => 07:49

OGS CIVIL LOG OF TEST BORINGS SHEET (METRIC) (REV. 4/04)

CONSISTENCY CLASSIFICATION FOR SOILS

According to the Standard Penetration Test

SPT N-Value (Blows/ 0.3m)	Granular	SPT N-Value (Blows/ 0.3m)	Cohesive
0-4	Very Loose	<2	Very Soft
5-10	Loose	2-4	Soft
11-30	Medium Dense	5-8	Firm
31-50	Dense	9-15	Stiff
>50	Very Dense	16-30	Very stiff
		>30	Hard

NOTE: Classification of earth material as shown on this sheet is based upon field inspection and is not to be construed to imply mechanical analysis.

LEGEND OF EARTH MATERIALS

GRAVEL, SAND, SILT, CLAY, SANDY CLAY or CLAYEY SAND, SANDY SILT or SILTY SAND, SILTY CLAY, CLAYEY SILT, PEAT and/or ORGANIC MATTER, COBBLES and/or BOULDERS, IGNEOUS ROCK, SEDIMENTARY ROCK, METAMORPHIC

LEGEND OF BORING OPERATIONS

57 mm CONE PENETRATION; SAMPLE BORING (DRY); ROTARY SAMPLE BORING (WET); AUGER BORING (DRY); TEST PIT; DIAMOND CORE BORING; JET BORING; ELECTRONIC CONE PENETROMETER

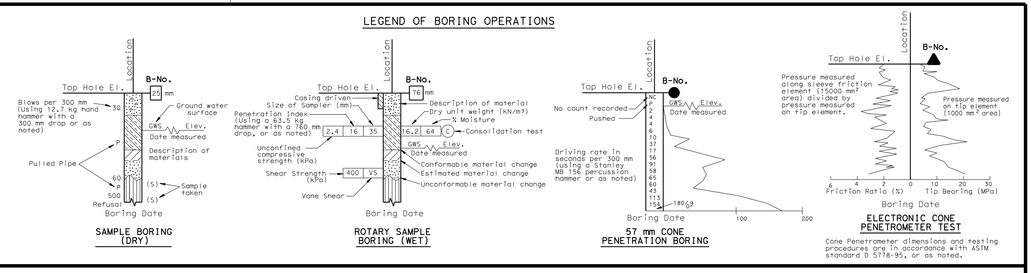

Caltrans Metric

ENGINEERING SERVICES | GEOTECHNICAL SERVICES

DRAWN BY W. Tang 12/2008

CHECKED BY

FIELD INVESTIGATION BY: T. Alderman

ALL DIMENSIONS ARE IN METERS UNLESS OTHERWISE SHOWN

ORIGINAL SCALE IN MILLIMETERS FOR REDUCED PLANS

STATE OF CALIFORNIA
DEPARTMENT OF TRANSPORTATION

DIVISION OF ENGINEERING SERVICES
STRUCTURE DESIGN
DESIGN BRANCH 2

CU 01
EA 262001

BRIDGE NO. 10-0173
KILOMETER POST R77.541

DISREGARD PRINTS BEARING EARLIER REVISION DATES

REVISION DATES (PRELIMINARY STAGE ONLY)

WILLITS BYPASS

QUAIL MEADOWS UC

LOG OF TEST BORINGS 2 OF 2

SHEET 15 OF 15

FILE => 10-0173_rv101b02.dgn

FOR PLAN VIEW, SEE
"LOG OF TEST BORINGS" SHEET 1 OF 2

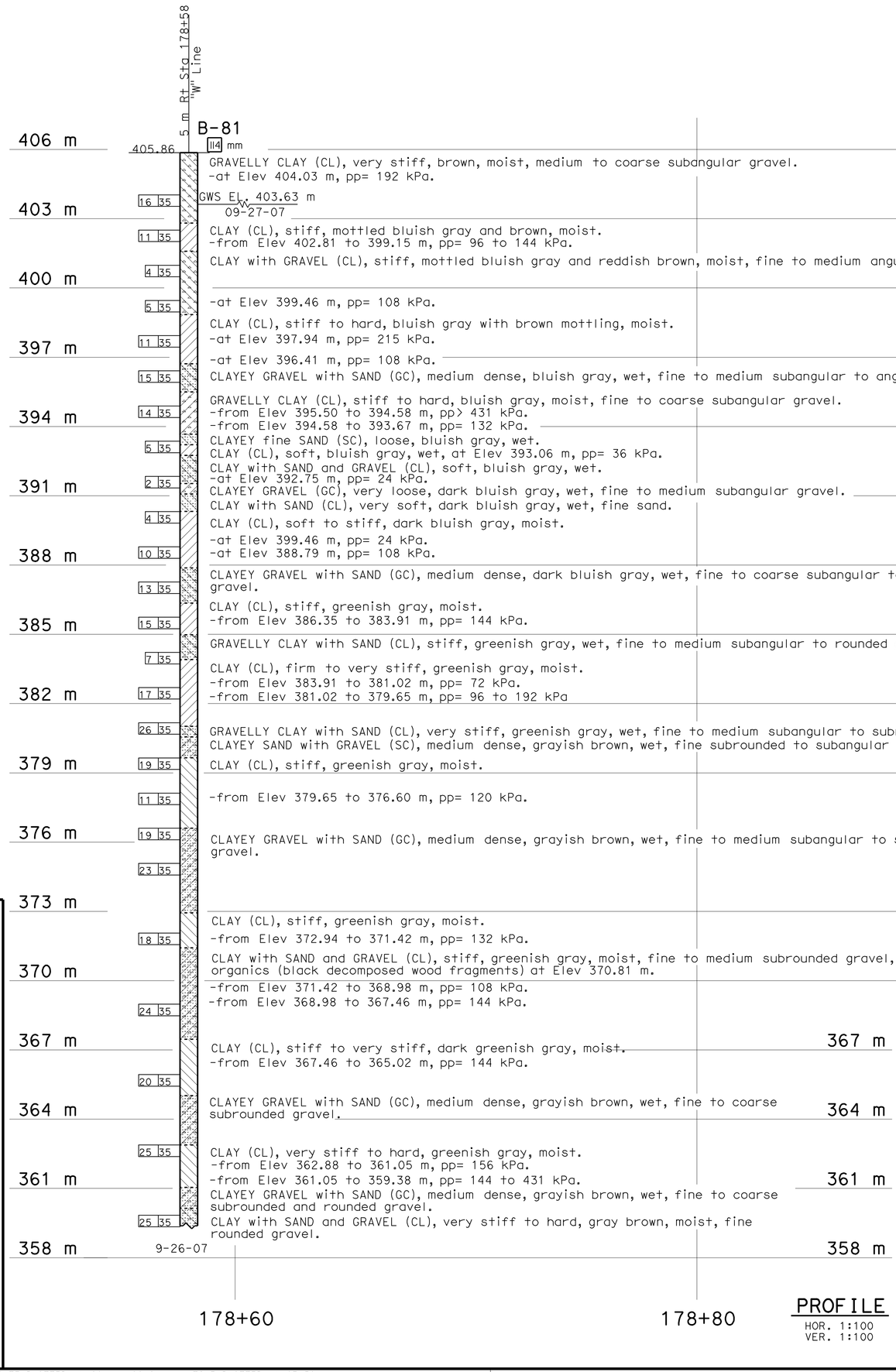

PROFILE
HOR. 1:100
VER. 1:100

CERTIFIED ENGINEERING GEOLOGIST 5-19-09 DATE

PLANS APPROVAL DATE 1-23-12

Reid Buell No. 1481 Exp. 4-30-11 CERTIFIED ENGINEERING GEOLOGIST STATE OF CALIFORNIA REGISTERED GEOLOGIST

The State of California or its officers or agents shall not be responsible for the accuracy or completeness of electronic copies of this plan sheet.

DIST	COUNTY	ROUTE	KILOMETER POST TOTAL PROJECT	SHEET NO	TOTAL SHEETS
01	Men	101	R69.4/R78.9	867	939

USERNAME => s124496 DATE PLOTTED => 28-JAN-2012 TIME PLOTTED => 07:50

DIST	COUNTY	ROUTE	KILOMETER POST TOTAL PROJECT	SHEET No	TOTAL SHEETS
01	Men	101	R69.4/R78.9	868	939

REGISTERED CIVIL ENGINEER 9-15-11 DATE

1-23-12
PLANS APPROVAL DATE

REGISTERED PROFESSIONAL ENGINEER M. Friedheim No. 57968 Exp. 6-30-12 CIVIL STATE OF CALIFORNIA

The State of California or its officers or agents shall not be responsible for the accuracy or completeness of electronic copies of this plan sheet.

NOTES:

1. See "Aesthetic Details" Sheet
2. Structure approach Slab, Type N(9S)
3. Metal Beam Guardrail, See Road Plans
4. Paint "Upp Creek"
5. Paint bridge number and year constructed
6. Concrete Barrier Type 736 MOD with Tubular Bicycle Railing

PROFILE GRADE

NO SCALE

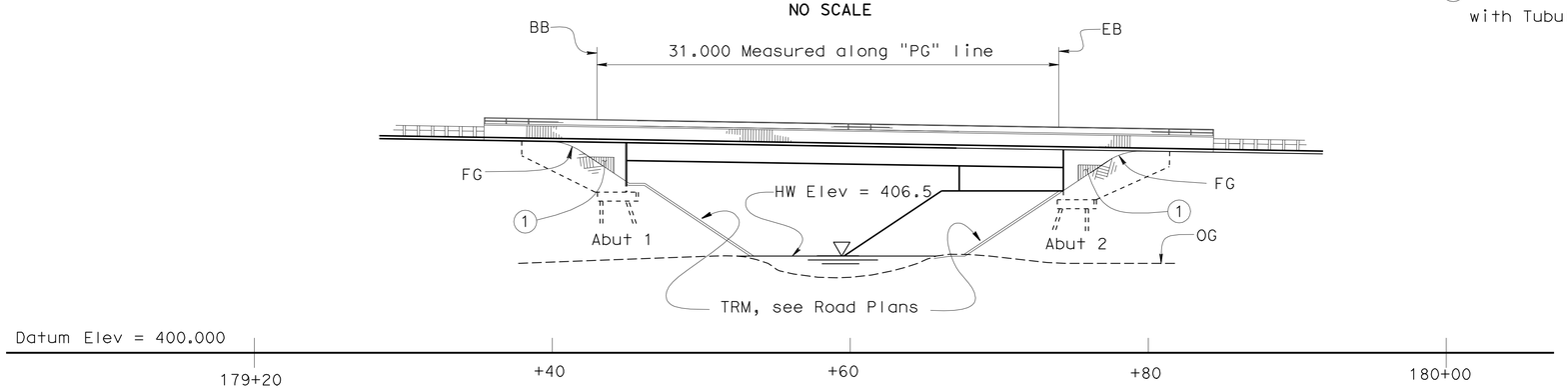

ELEVATION

1:200

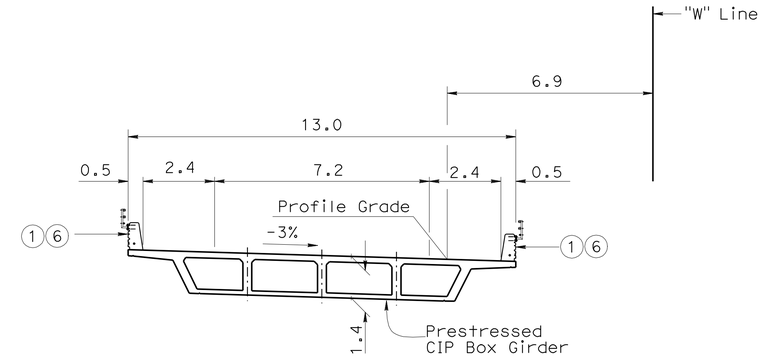

TYPICAL SECTION

1:100

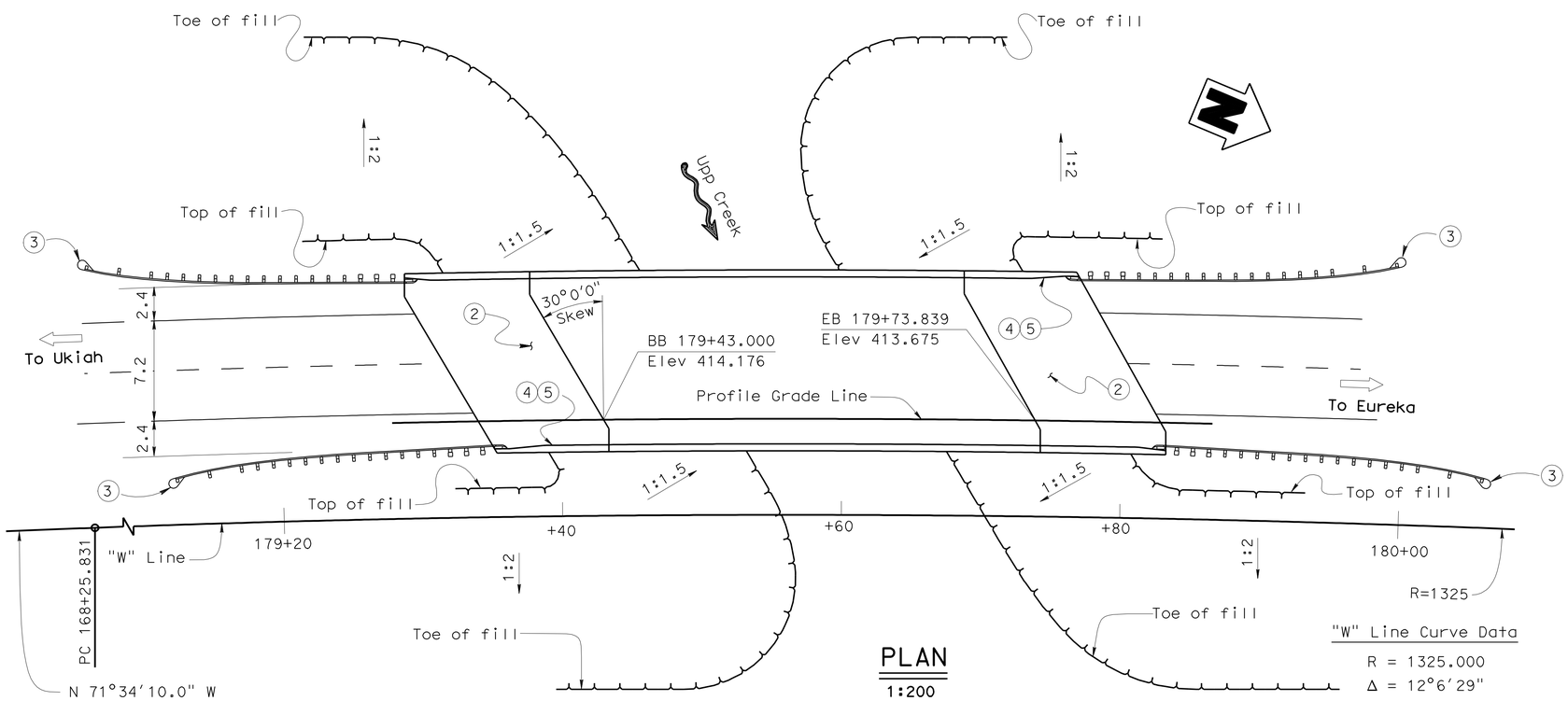

PLAN

1:200

"W" Line Curve Data

R = 1325.000
Δ = 12°6'29"
T = 140.525
L = 280.004

UPP CREEK BRIDGE 10-0174
QUANTITIES

STRUCTURE EXCAVATION (BRIDGE)	236	m^3
STRUCTURE BACKFILL (BRIDGE)	215	m^3
FURNISH STEEL PILING (HP 360 X 132)	696	m
DRIVE STEEL PILE (HP 360 X 132)	22	EA
PRESTRESSING CAST-IN-PLACE CONCRETE	LUMP SUM	
STRUCTURAL CONCRETE, BRIDGE FOOTING	44	m^3
STRUCTURAL CONCRETE, BRIDGE	298	m^3
STRUCTURAL CONCRETE, APPROACH SLAB (TYPE N)	71	m^3
ARCHITECTURAL TEXTURE	15	m^2
JOINT SEAL (MR 25 MM)	29	m
BAR REINFORCING STEEL (BRIDGE)	33 330	kg
TUBULAR BICYCLE RAILING (MODIFIED)	98	m
CONCRETE BARRIER (TYPE 736 MODIFIED)	98	m

Note: For General Notes, Index to Plans, Standard Plans, and Pile Data Table, see "Deck Contours" sheet

Caltrans Metric

	BY	CHECKED		BY	CHECKED
DESIGN	M.Moore/M.Friedheim	R.Odell	LOAD FACTOR DESIGN	LIVE LOADING: HS20-40 AND ALTERNATIVE AND PERMIT DESIGN LOAD	
DETAILS	J.Yang	R.Odell	LAYOUT	M.Moore	R.Odell
QUANTITIES	M. Akkari	K. Selventhiran	SPECIFICATIONS	I. Huang	PLANS AND SPECS COMPARED I. Huang

DESIGN ENGINEER

ALL DIMENSIONS ARE IN METERS UNLESS OTHERWISE SHOWN

ORIGINAL SCALE IN MILLIMETERS FOR REDUCED PLANS 0 10 20 30 40 50 60 70 80 90 100

STATE OF CALIFORNIA DEPARTMENT OF TRANSPORTATION

DIVISION OF ENGINEERING SERVICES STRUCTURE DESIGN
DESIGN BRANCH 2

CU 01
EA 262001

BRIDGE NO. 10-0174
KILOMETER POST R 77.701

WILLITS BYPASS
UPP CREEK BRIDGE
GENERAL PLAN

DISREGARD PRINTS BEARING EARLIER REVISION DATES

REVISION DATES: 7-05-08 1-22-08 1-22-08 9-24-08 10-21-08 1-22-09 3-05-09 3-11-09 4-22-09 12-09-09

SHEET 1 OF 15

STRUCTURES DESIGN GENERAL PLAN SHEET (METRIC) (REV.07-24-06)

FILE => 10-0174_jagp01.dgn

USERNAME => s124936 DATE PLOTTED => 28-JAN-2012 TIME PLOTTED => 07:50

DIST	COUNTY	ROUTE	KILOMETER POST TOTAL PROJECT	SHEET No	TOTAL SHEETS
01	Men	101	R69.4/R78.9	869	939

REGISTERED CIVIL ENGINEER 9-15-11 DATE

1-23-12
PLANS APPROVAL DATE

REGISTERED PROFESSIONAL ENGINEER Marc Friedheim No. 57968 Exp. 6-30-12 CIVIL STATE OF CALIFORNIA

The State of California or its officers or agents shall not be responsible for the accuracy or completeness of electronic copies of this plan sheet.

NOTES:
x = 2.5 m interval measured along station line
Contours do not include camber
Contour interval = 0.05 m
Contours are shown in meters

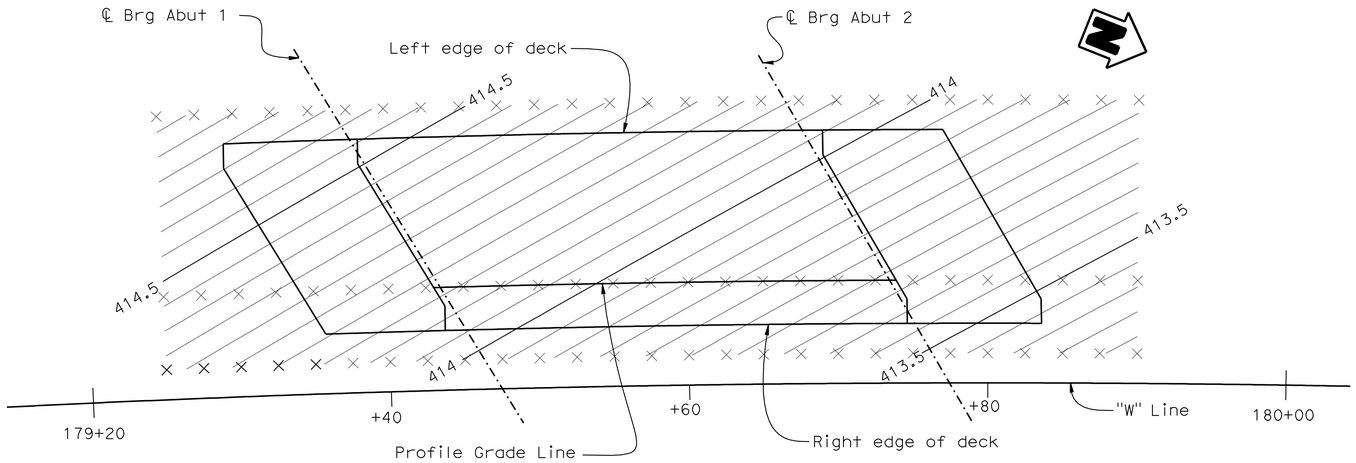

DECK CONTOURS

1:200

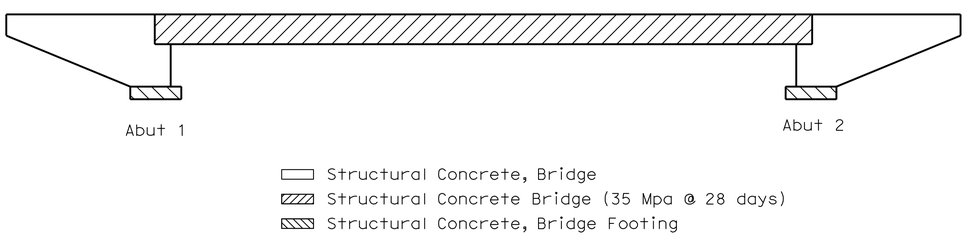

CONCRETE STRENGTH AND TYPE LIMITS

No Scale

INDEX TO PLANS

1. GENERAL PLAN
2. DECK CONTOURS
3. FOUNDATION PLAN
4. ABUTMENT LAYOUT
5. ABUTMENT DETAILS NO.1
6. ABUTMENT DETAILS NO.2
7. TYPICAL SECTION
8. GIRDER LAYOUT
9. BOTTOM GIRDER REINFORCEMENT
10. AESTHETIC DETAILS
11. STRUCTURE APPROACH TYPE N(9S)
12. STRUCTURE APPROACH DRAINAGE DETAILS
13. TUBULAR BICYCLE RAILING
14. LOG OF TEST BORINGS 1 OF 2
15. LOG OF TEST BORINGS 2 OF 2

STANDARD PLANS DATED JULY 2004

A10A	ACRONYMS AND ABBREVIATIONS (A-L)
A10B	ACRONYMS AND ABBREVIATIONS (M-Z)
A10C	SYMBOLS
A10D	SYMBOLS
A62C	LIMITS OF PAYMENT FOR EXCAVATION AND BACKFILL-BRIDGE
B0-1	BRIDGE DETAILS
B0-3	BRIDGE DETAILS
B0-5	BRIDGE DETAILS
B0-13	BRIDGE DETAILS
RSP B6-21	JOINT SEALS (MAXIMUM MOVEMENT RATING = 50 MM)
B7-1	BOX GIRDER DETAILS
RSP B8-5	CAST-IN-PLACE PRESTRESSED GIRDER DETAILS
B11-56	CONCRETE BARRIER TYPE 736
RSP ES-9B	ELECTRICAL SYSTEMS (ELECTRICAL DETAILS STRUCTURE INSTALLATIONS)
RSP ES-9C	ELECTRICAL SYSTEMS (ELECTRICAL DETAILS STRUCTURE INSTALLATIONS)

STANDARD PLAN SHEET NO.

DETAIL NO.

GENERAL NOTES (LOAD FACTOR DESIGN)

DESIGN: Bridge Design Specifications - April 2000 (LFD) (1996 AASHTO with interims and revisions by Caltrans).
Project Specific Design Criteria - March 2009.

SEISMIC DESIGN: Caltrans SDC version 1.4 - June 2006

DEAD LOAD: Includes 1675 Pa for future wearing surface.

LIVE LOAD: HS20-44 and alternative and permit design load.

SEISMIC LOADING: Modified Caltrans Seismic Design Criteria for Soil Profile Type D, PBA = 0.7 g. See Response Spectrum below.

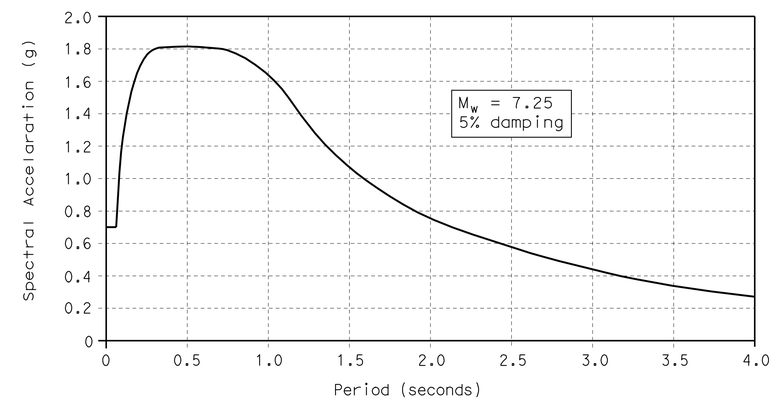

REINFORCED CONCRETE:
fy = 420 MPa
f'c = 25 MPa (See concrete strength and type limits for exceptions)

Transverse Deck Slab (working stress design)
fs = 140 MPa
f'c = 8 MPa
n = 10

PRESTRESSED CONCRETE: See "Prestressing Notes" on "Girder Layout" sheet

PILE DATA TABLE					
Location	Pile Type	Nominal Resistance		Design Tip Elevations	Specified Tip Elevations
		Compression	Tension		
Abut 1	HP 360 x 132	1500 KN	0 KN	379.5 (1)	379.5
Abut 2	HP 360 x 132	1500 KN	0 KN	379.5 (1)	379.5

Tip elevation controlled by the following demands:
(1) Compression
(2) Scour potential exists to elevation 404.8

Caltrans Metric

	BY	CHECKED
DESIGN	M.Moore/M.Friedheim	R.Odell
DETAILS	J.Yang	R.Odell
QUANTITIES	M. Akkari	K. Selventhiran

STATE OF CALIFORNIA
DEPARTMENT OF TRANSPORTATION

DIVISION OF ENGINEERING SERVICES
STRUCTURE DESIGN
DESIGN BRANCH 2

BRIDGE NO. 10-0174
KILOMETER POST R77.701

WILLITS BYPASS
UPP CREEK BRIDGE
DECK CONTOURS

ALL DIMENSIONS ARE IN METERS UNLESS OTHERWISE SHOWN

ORIGINAL SCALE IN MILLIMETERS FOR REDUCED PLANS 0 10 20 30 40 50 60 70 80 90 100

CU 01
EA 262001

DISREGARD PRINTS BEARING EARLIER REVISION DATES

REVISION DATES 7-11-08 7-18-08 8-25-08 11-18-08 01-30-09

SHEET 2 OF 15

FILE => 10-0174_jddc01.dgn

STRUCTURES DESIGN DETAIL SHEET (METRIC) (REV.03-17-04)

USERNAME => s124436 DATE PLOTTED => 28-JAN-2012 TIME PLOTTED => 07:50

DIST	COUNTY	ROUTE	KILOMETER POST TOTAL PROJECT	SHEET No	TOTAL SHEETS
01	Men	101	R69.4/R78.9	870	939

Caltrans Metric

REGISTERED CIVIL ENGINEER 9-15-11 DATE

1-23-12
PLANS APPROVAL DATE

REGISTERED PROFESSIONAL ENGINEER M. Friedheim No. 57968 Exp. 6-30-12 CIVIL STATE OF CALIFORNIA

The State of California or its officers or agents shall not be responsible for the accuracy or completeness of electronic copies of this plan sheet.

CURVE DATA

No.	R	Δ	T	L
(A)	1325.000	12°6'29"	140.525	280.004
(B)	300.000	21°15'11"	59.29	111.28

LEGEND

XXX.X Denotes bottom of footing elevation

Denotes battered HP pile

Denotes verticle HP pile

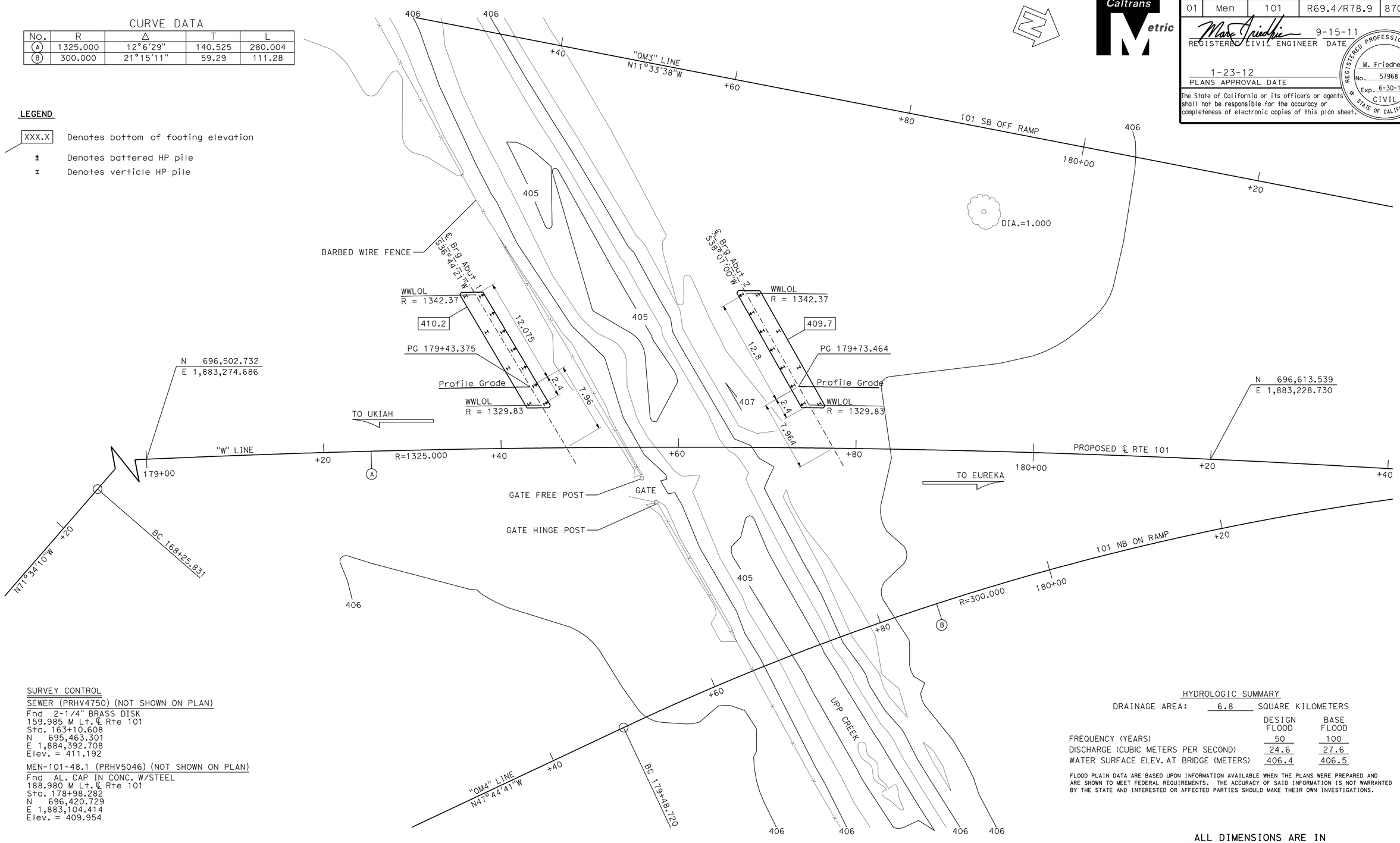

SURVEY CONTROL

SEWER (PRHV4750) (NOT SHOWN ON PLAN)
Fnd 2-1/4" BRASS DISK
159.985 M Lt. ℄ Rte 101
Sta. 163+10.608
N 695,463.301
E 1,884,392.708
Elev. = 411.192

MEN-101-48.1 (PRHV5046) (NOT SHOWN ON PLAN)
Fnd AL. CAP IN CONC. W/STEEL
188.980 M Lt. ℄ Rte 101
Sta. 178+98.282
N 696,420.729
E 1,883,104.414
Elev. = 409.954

HYDROLOGIC SUMMARY

DRAINAGE AREA: 6.8 SQUARE KILOMETERS

	DESIGN FLOOD	BASE FLOOD
FREQUENCY (YEARS)	50	100
DISCHARGE (CUBIC METERS PER SECOND)	24.6	27.6
WATER SURFACE ELEV. AT BRIDGE (METERS)	406.4	406.5

FLOOD PLAIN DATA ARE BASED UPON INFORMATION AVAILABLE WHEN THE PLANS WERE PREPARED AND ARE SHOWN TO MEET FEDERAL REQUIREMENTS. THE ACCURACY OF SAID INFORMATION IS NOT WARRANTED BY THE STATE AND INTERESTED OR AFFECTED PARTIES SHOULD MAKE THEIR OWN INVESTIGATIONS.

ALL DIMENSIONS ARE IN METERS UNLESS OTHERWISE SHOWN

PRELIMINARY INVESTIGATION SECTION

SCALE	VERT. DATUM NGVD29	PHOTOGRAMMETRY AS OF:		
1:200	HORZ. DATUM NAD83 (1991.35)	SURVEYED	BY DISTRICT	CHECKED BY T.GILLETT 1/2009
ALIGNMENT TIES DIST.TRAVERSE SHEET		DRAFTED	BY J.MARTINEZ 1/2009	CHECKED BY T.ZOLNIKOVA 1/2009

	BY	CHECKED
DESIGN	M. Friedheim	R. Odell
DETAILS	S. Ng	R. Odell
QUANTITIES	M. Akkari	K. Selventhiran

STATE OF CALIFORNIA
DEPARTMENT OF TRANSPORTATION

DIVISION OF ENGINEERING SERVICES
STRUCTURE DESIGN
DESIGN BRANCH 2

BRIDGE NO. 10-0174
KILOMETER POST 77.701

UPP CREEK BRIDGE
FOUNDATION PLAN

STRUCTURES FOUNDATION PLAN SHEET (METRIC) (REV.10-27-05)

ORIGINAL SCALE IN MILLIMETERS FOR REDUCED PLANS 0 10 20 30 40 50 60 70 80 90 100

CU 01
EA 262001

DISREGARD PRINTS BEARING EARLIER REVISION DATES 01-31-09

REVISION DATES (PRELIMINARY STAGE ONLY)

SHEET 3 OF 15

FILE => 10-0174_jefpl01.dgn

USERNAME => s121614 DATE PLOTTED => 28-JAN-2012 TIME PLOTTED => 08:17

DIST	COUNTY	ROUTE	KILOMETER POST TOTAL PROJECT	SHEET No	TOTAL SHEETS
01	Men	101	R69.4/R78.9	871	939

REGISTERED CIVIL ENGINEER 9-15-11 DATE

1-23-12
PLANS APPROVAL DATE

REGISTERED PROFESSIONAL ENGINEER M. Friedheim No. 57968 Exp. 6-30-12 CIVIL STATE OF CALIFORNIA

The State of California or its officers or agents shall not be responsible for the accuracy or completeness of electronic copies of this plan sheet.

NOTES:

1. For pile data see "Deck Contours" sheet
2. For Sections G-G and H-H see "Abutment Details No. 1" sheet
3. For typical wingwall elevation see "Abutment Details No. 2" sheet
4. For "a" dimension see Standard Plans
5. Abut 1 shown, Abut 2 similar
6. For bearing pad details, see "Abutment Details No. 2" sheet

** Expanded polystyrene same thickness as bearing pads (B0-13 / 13-1)

I Denotes vertical pile

I Denotes battered pile

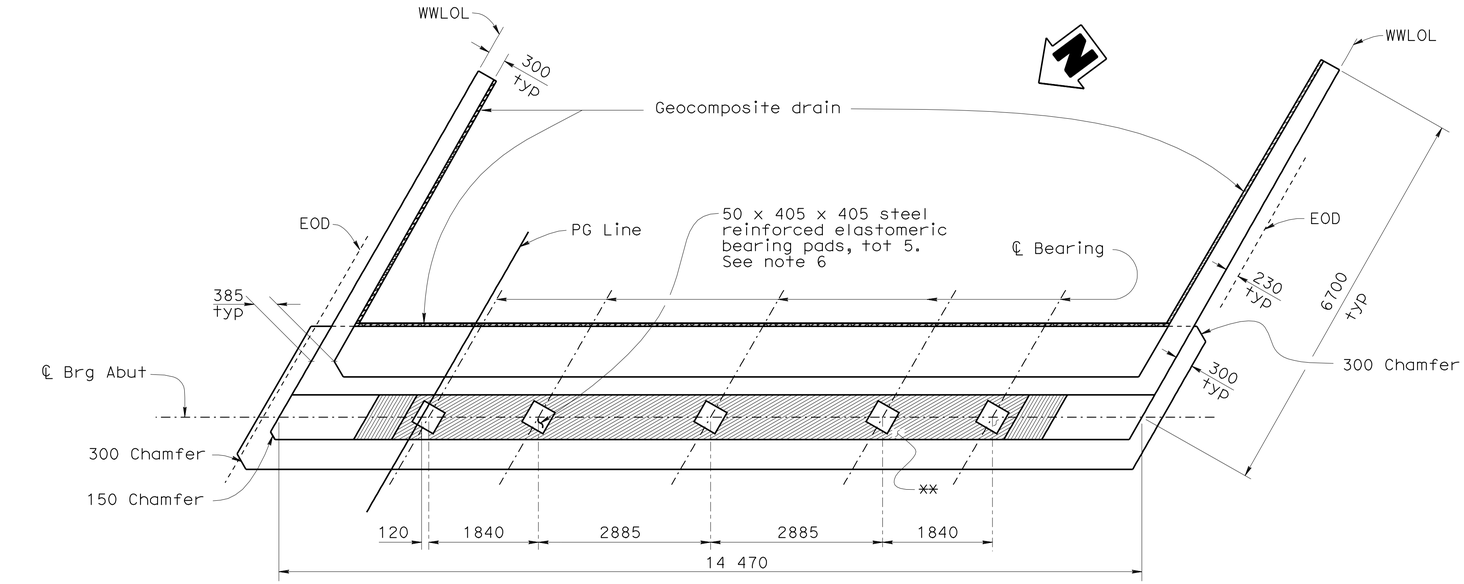

PLAN
1:50

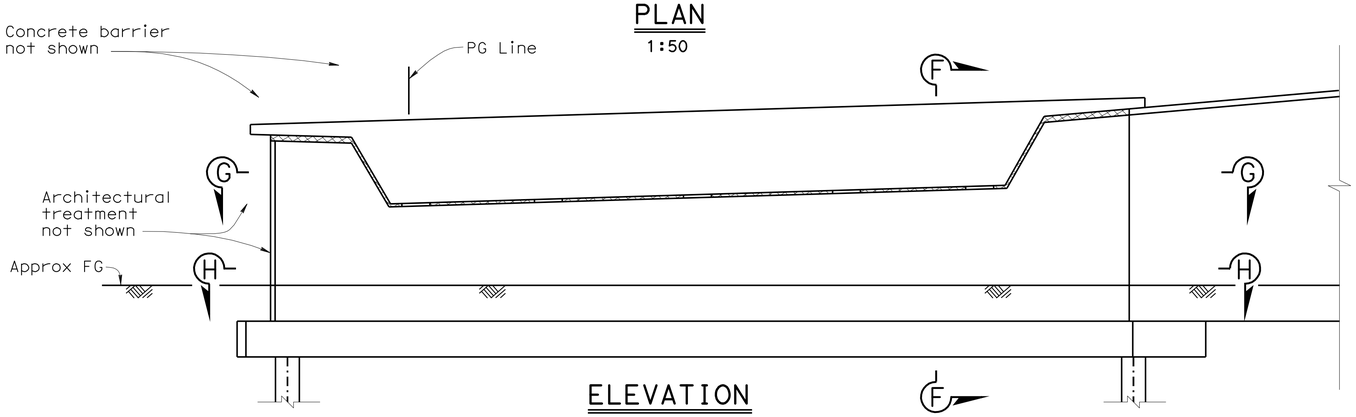

ELEVATION
1:50

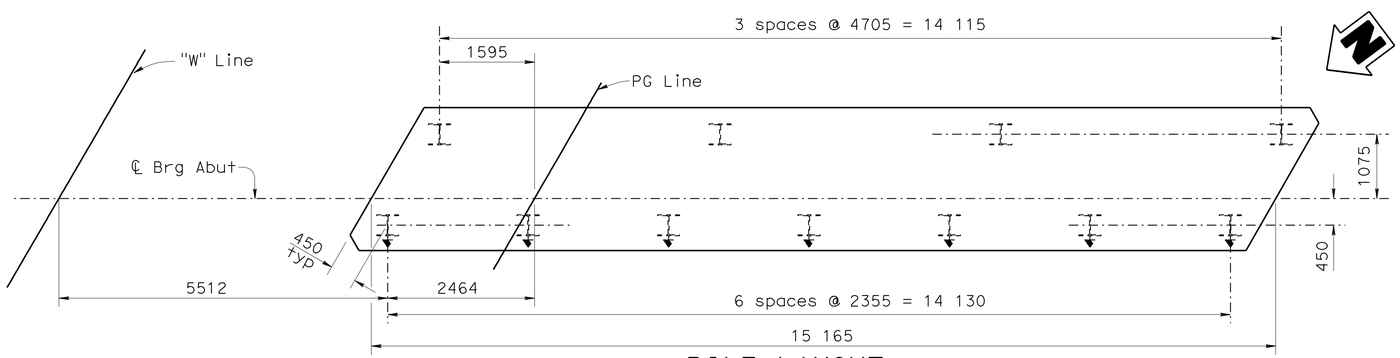

PILE LAYOUT
1:50

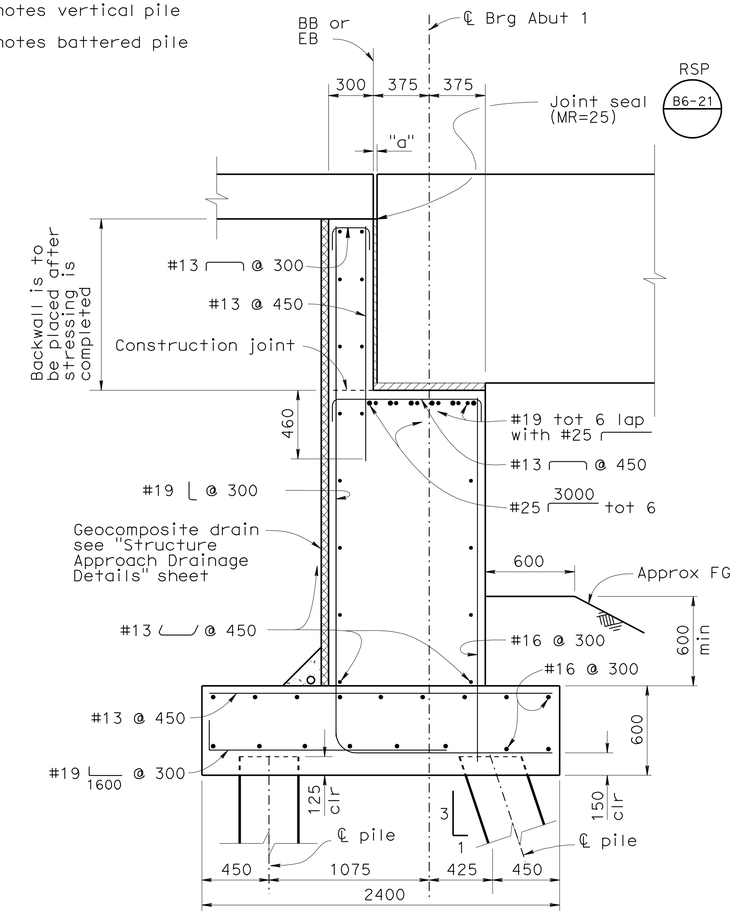

SECTION F-F
1:20

Note: Section taken perpendicular to ℄ Brg Abut

Caltrans Metric

	BY	CHECKED
DESIGN	M.Moore/M.Friedheim	R.Odell
DETAILS	J.Yang	R.Odell
QUANTITIES	M. Akkari	K. Selventhiran

STATE OF CALIFORNIA
DEPARTMENT OF TRANSPORTATION

DIVISION OF ENGINEERING SERVICES
STRUCTURE DESIGN
DESIGN BRANCH 2

BRIDGE NO. 10-0174
KILOMETER POST R77.701

WILLITS BYPASS
UPP CREEK BRIDGE
ABUTMENT LAYOUT

ALL DIMENSIONS ARE IN MILLIMETERS UNLESS OTHERWISE SHOWN

ORIGINAL SCALE IN MILLIMETERS FOR REDUCED PLANS 0 10 20 30 40 50 60 70 80 90 100

CU 01
EA 262001

DISREGARD PRINTS BEARING EARLIER REVISION DATES

REVISION DATES: 8-06-08 9-24-08 11-14-08 1-29-09 3-05-09

SHEET 4 OF 15

FILE => 10-0174_jfaalo_01.dgn

STRUCTURES DESIGN DETAIL SHEET (METRIC) (REV.03-17-04)

USERNAME => s126614 DATE PLOTTED => 28-JAN-2012 TIME PLOTTED => 08:17

DIST	COUNTY	ROUTE	KILOMETER POST TOTAL PROJECT	SHEET No	TOTAL SHEETS
01	Men	101	R69.4/R78.9	872	939

REGISTERED CIVIL ENGINEER 9-15-11 DATE

1-23-12
PLANS APPROVAL DATE

REGISTERED PROFESSIONAL ENGINEER M. Friedheim No. 57968 Exp. 6-30-12 CIVIL STATE OF CALIFORNIA

The State of California or its officers or agents shall not be responsible for the accuracy or completeness of electronic copies of this plan sheet.

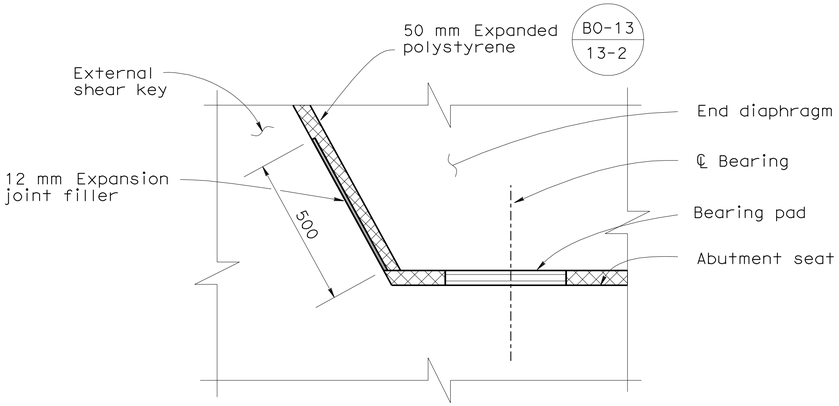

DETAIL X
1:10

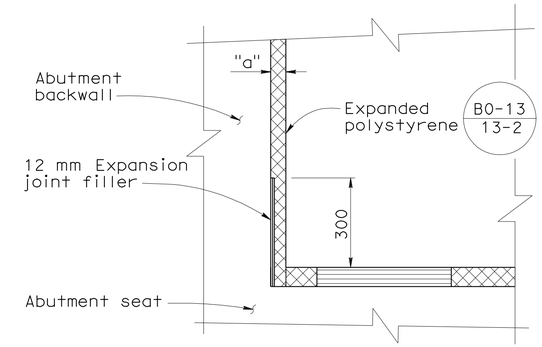

ELEVATION VIEW
BACKWALL BASE DETAIL
NO SCALE

Notes:
1. Abutment 1 shown Abutment 2 similar
2. For bearing pad details, see "Abutment Details No. 2" sheet
3. For location of Sections G-G and H-H, see "Abutment Layout" sheet

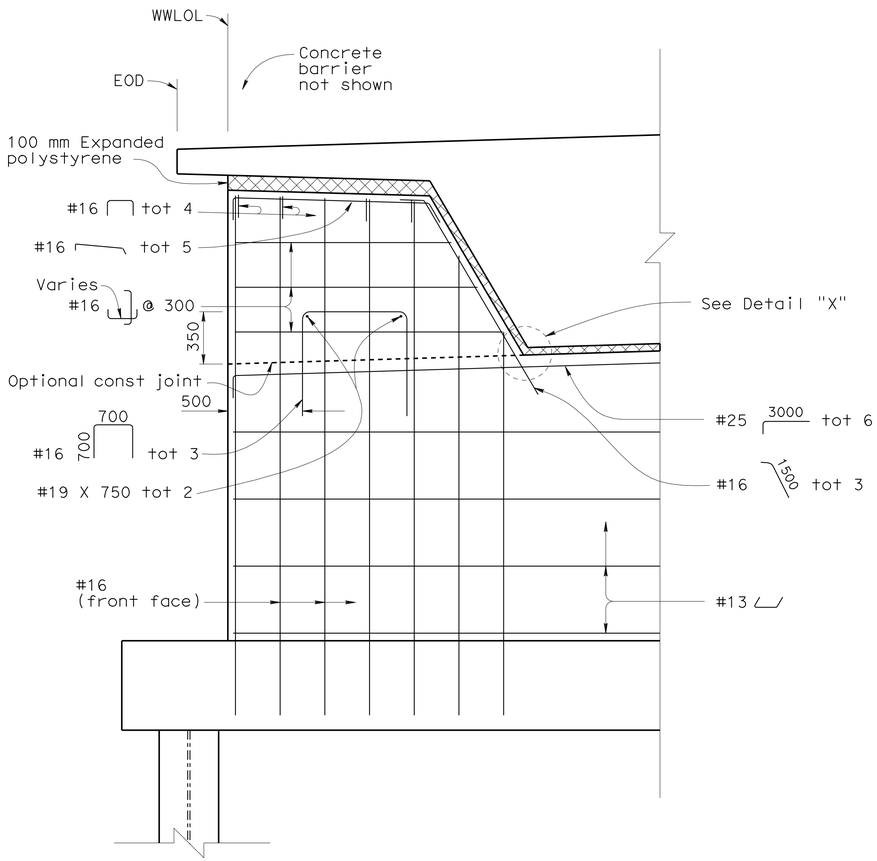

EXTERNAL SHEAR KEY
1:20

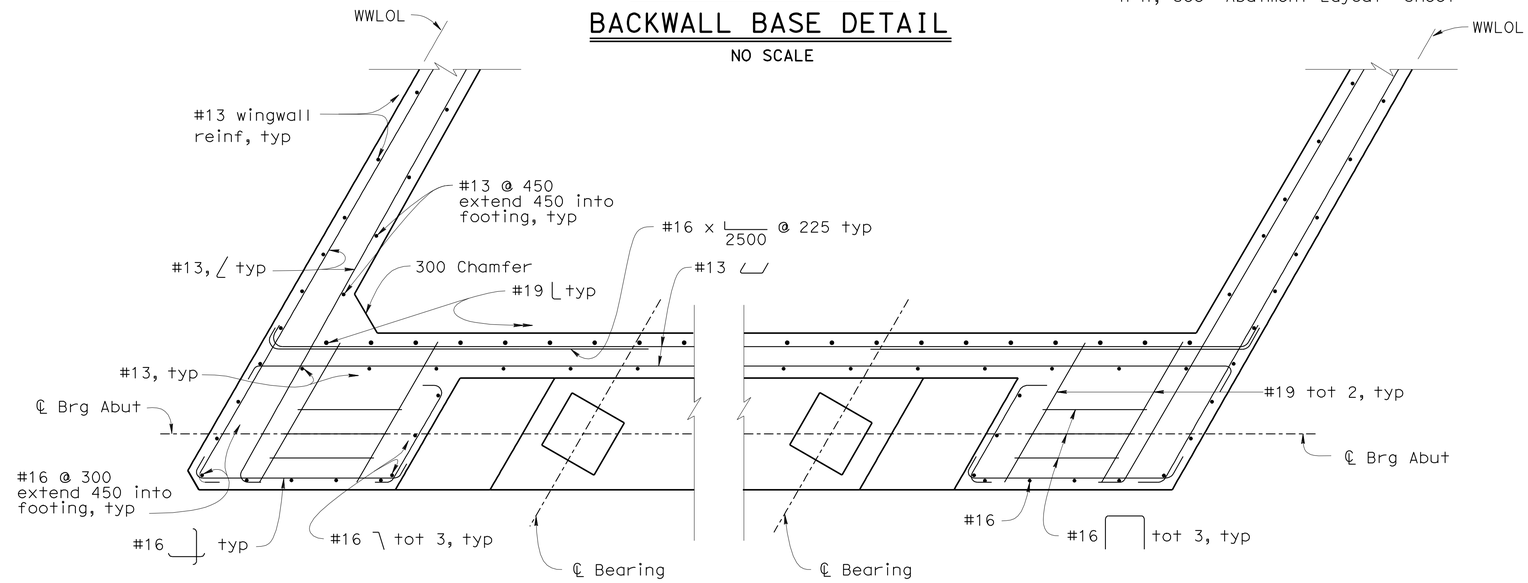

SECTION G-G
1:20

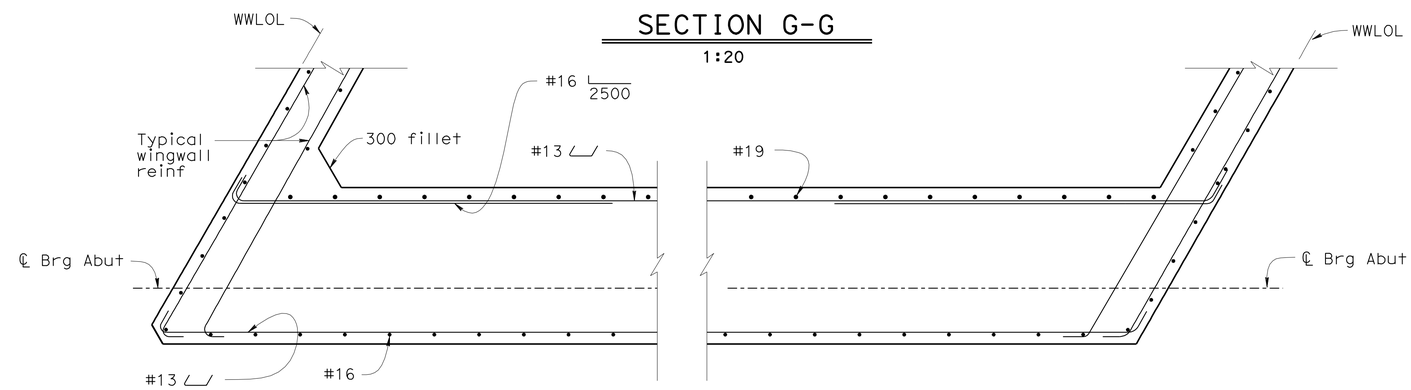

SECTION H-H
1:20

DESIGN	BY M.Moore	CHECKED R. Odell	
DETAILS	BY J.Yang	CHECKED R. Odell	
QUANTITIES	BY M. Akkari	CHECKED K. Selventhiran	

STATE OF CALIFORNIA
DEPARTMENT OF TRANSPORTATION

DIVISION OF ENGINEERING SERVICES
STRUCTURE DESIGN
DESIGN BRANCH 2

BRIDGE NO. 10-0174
KILOMETER POST R77.701

WILLITS BYPASS
UPP CREEK BRIDGE
ABUTMENT DETAILS NO. 1

ALL DIMENSIONS ARE IN MILLIMETERS UNLESS OTHERWISE SHOWN

ORIGINAL SCALE IN MILLIMETERS FOR REDUCED PLANS 0 10 20 30 40 50 60 70 80 90 100

CU 01
EA 262001

DISREGARD PRINTS BEARING EARLIER REVISION DATES

REVISION DATES: 8-11-08 9-24-08 10-08-08 1-29-09 3-10-09

SHEET 5 OF 15

FILE => 10-0174_jfad01.dgn

STRUCTURES DESIGN DETAIL SHEET (METRIC) (REV.03-17-04)

USERNAME => s121614 DATE PLOTTED => 28-JAN-2012 TIME PLOTTED => 08:17

DIST	COUNTY	ROUTE	KILOMETER POST TOTAL PROJECT	SHEET No	TOTAL SHEETS
01	Men	101	R69.4/R78.9	873	939

REGISTERED CIVIL ENGINEER 9-15-11 DATE

1-23-12
PLANS APPROVAL DATE

REGISTERED PROFESSIONAL ENGINEER M. Friedheim No. 57968 Exp. 6-30-12 CIVIL STATE OF CALIFORNIA

The State of California or its officers or agents shall not be responsible for the accuracy or completeness of electronic copies of this plan sheet.

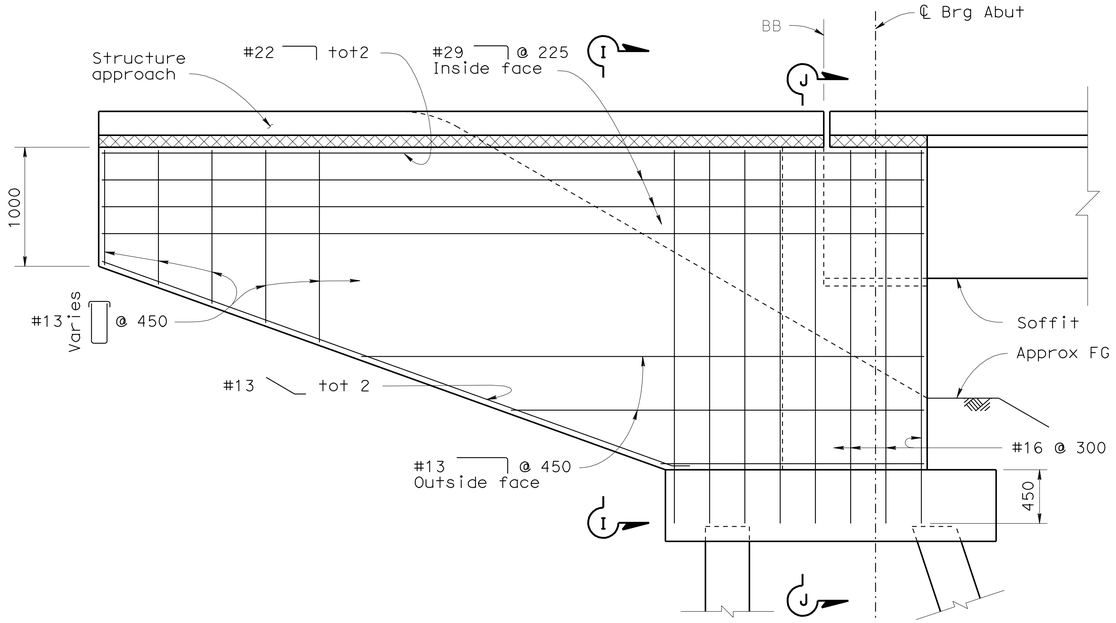

ABUTMENT WINGWALL ELEVATION

1:25

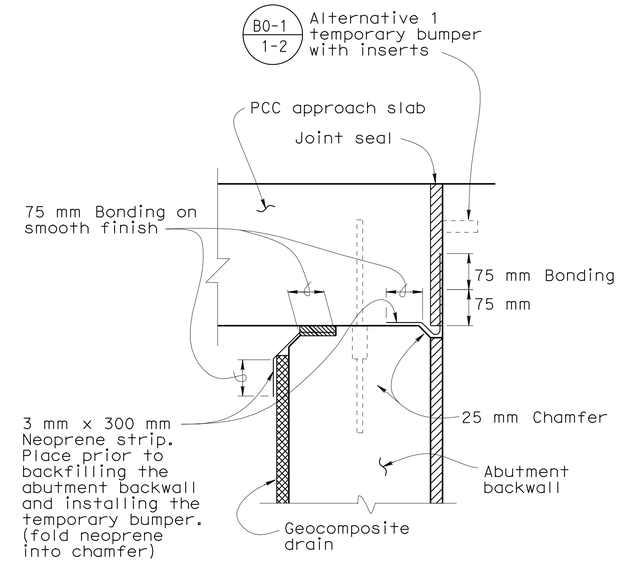

JOINT PROTECTION DETAIL

No Scale

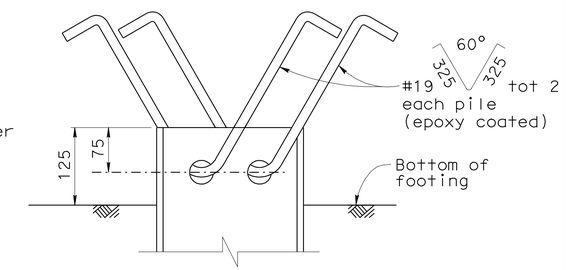

ELEVATION

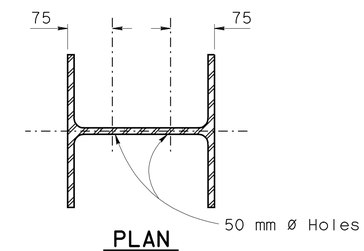

PLAN

STEEL H PILE ANCHOR DETAIL

No Scale

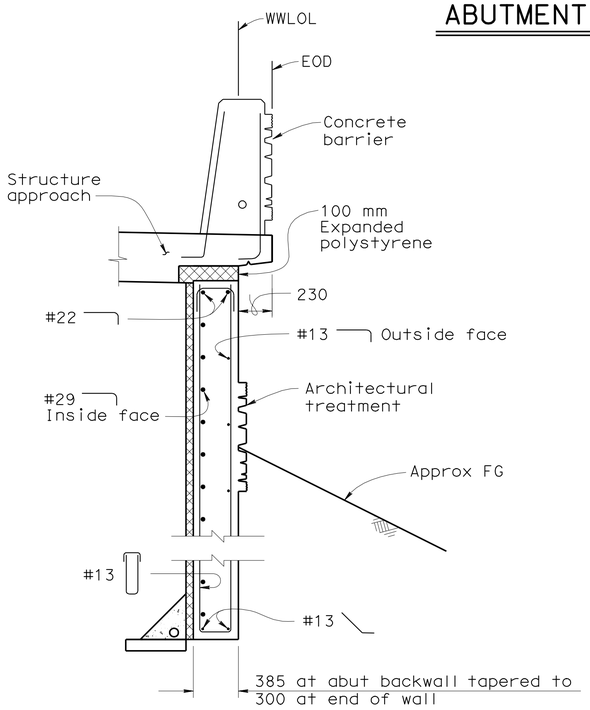

SECTION I-I

1:20

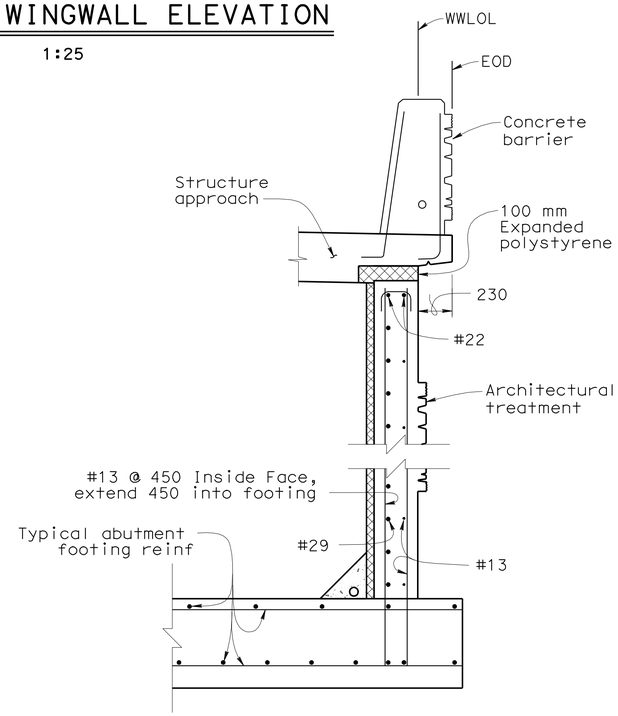

SECTION J-J

1:20

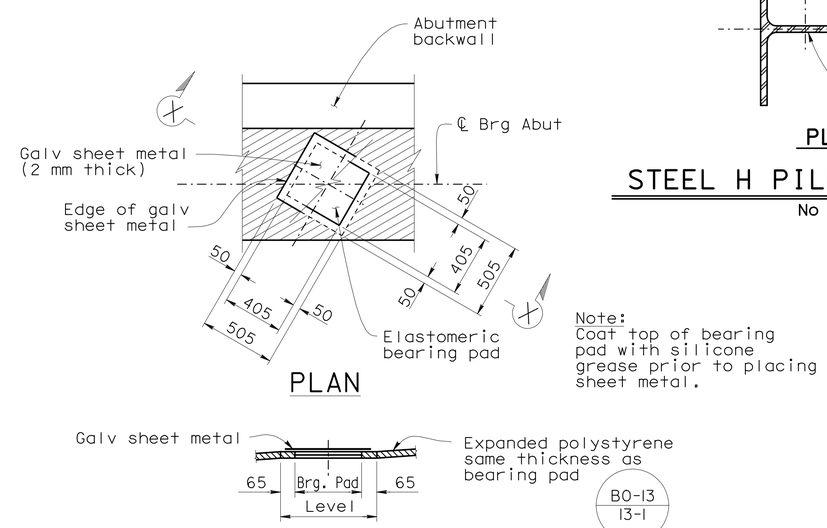

PLAN

Note:
Coat top of bearing pad with silicone grease prior to placing sheet metal.

SECTION X-X

BEARING PAD DETAIL

No Scale
Details typical at all bearing pads

DESIGN	BY M.Moore	CHECKED R. Odell
DETAILS	BY J.Yang	CHECKED R. Odell
QUANTITIES	BY M. Akkari	CHECKED K. Selventhiran

STATE OF CALIFORNIA
DEPARTMENT OF TRANSPORTATION

DIVISION OF ENGINEERING SERVICES
STRUCTURE DESIGN
DESIGN BRANCH 2

BRIDGE NO. 10-0174
KILOMETER POST R77.701

WILLITS BYPASS
UPP CREEK BRIDGE
ABUTMENT DETAILS NO. 2

ALL DIMENSIONS ARE IN MILLIMETERS UNLESS OTHERWISE SHOWN

ORIGINAL SCALE IN MILLIMETERS FOR REDUCED PLANS 0 10 20 30 40 50 60 70 80 90 100

CU 01
EA 262001

DISREGARD PRINTS BEARING EARLIER REVISION DATES

REVISION DATES: 8-11-08 9-24-08 10-08-08 1-27-09 3-10-09

SHEET 6 OF 15

FILE => 10-0174_jfad02.dgn

STRUCTURES DESIGN DETAIL SHEET (METRIC) (REV.03-17-04)

USERNAME => s12614 DATE PLOTTED => 28-JAN-2012 TIME PLOTTED => 08:17

DIST	COUNTY	ROUTE	KILOMETER POST TOTAL PROJECT	SHEET No	TOTAL SHEETS
01	Men	101	R69.4/R78.9	874	939

REGISTERED CIVIL ENGINEER 9-15-11 DATE

1-23-12
PLANS APPROVAL DATE

REGISTERED PROFESSIONAL ENGINEER M. Friedheim No. 57968 Exp. 6-30-12 CIVIL STATE OF CALIFORNIA

The State of California or its officers or agents shall not be responsible for the accuracy or completeness of electronic copies of this plan sheet.

Note:

** For additional bottom reinforcement, see "Bottom Girder Reinforcement" sheet.

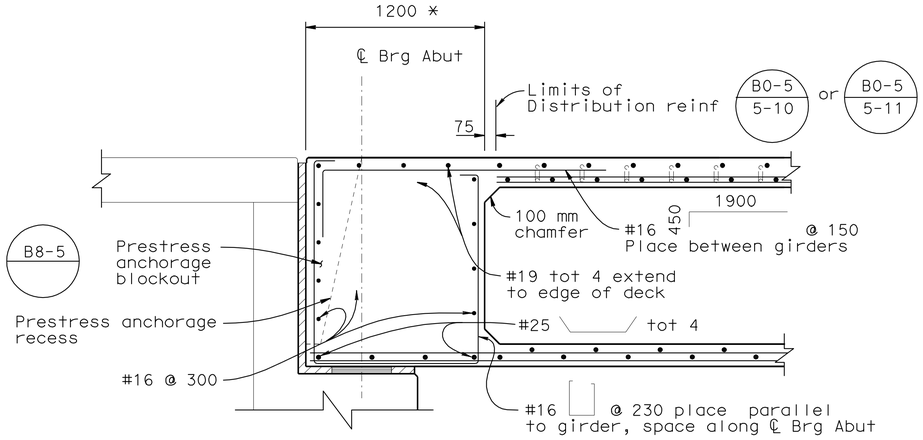

END DIAPHRAGM SECTION

B8-5

1:20

* Measured perpendicular to ℄ Brg Abut

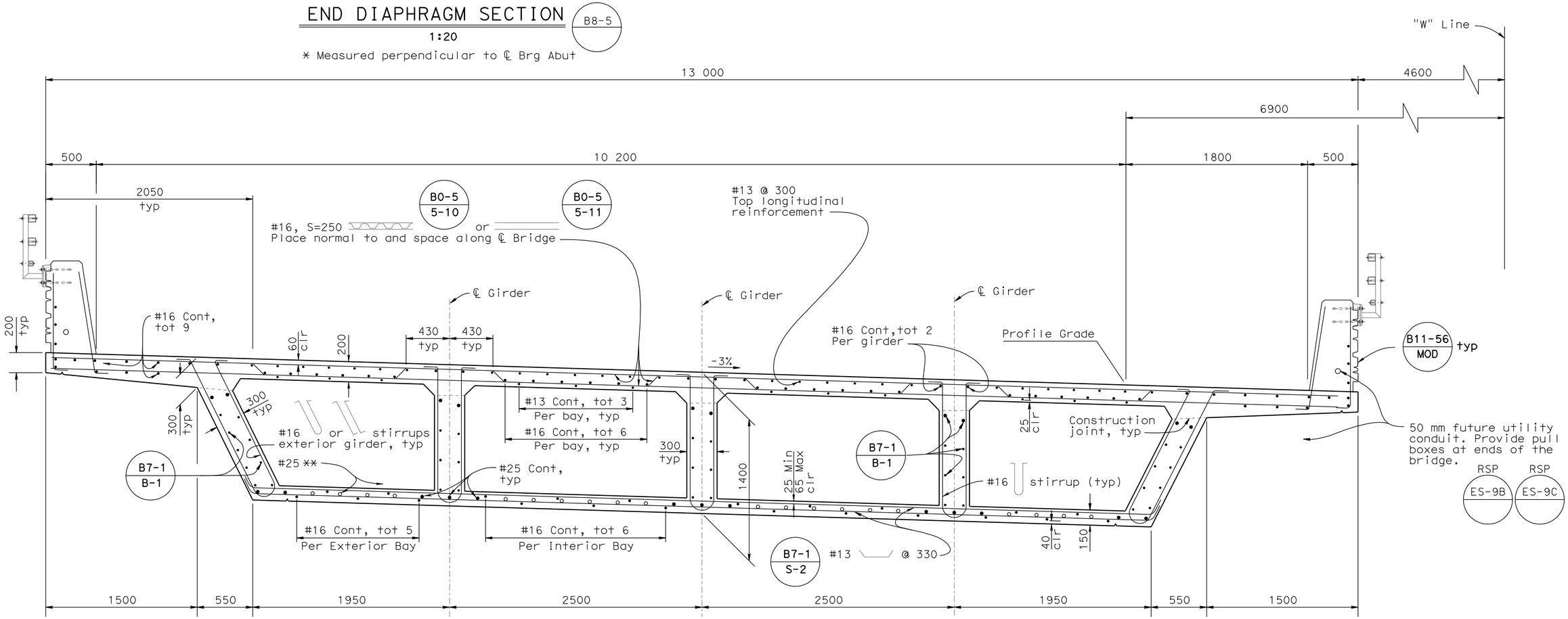

TYPICAL SECTION

1:20

B11-56 B8-5 B7-1 B0-5

DESIGN	BY M.Moore	CHECKED R. Odell	
DETAILS	BY J.Yang	CHECKED R. Odell	
QUANTITIES	BY M. Akkari	CHECKED K. Selventhiran	

STATE OF CALIFORNIA
DEPARTMENT OF TRANSPORTATION

DIVISION OF ENGINEERING SERVICES
STRUCTURE DESIGN
DESIGN BRANCH 2

BRIDGE NO. 10-0174
KILOMETER POST R77.701

WILLITS BYPASS
UPP CREEK BRIDGE
TYPICAL SECTION

ALL DIMENSIONS ARE IN MILLIMETERS UNLESS OTHERWISE SHOWN

ORIGINAL SCALE IN MILLIMETERS FOR REDUCED PLANS 0 10 20 30 40 50 60 70 80 90 100

CU 01
EA 262001

DISREGARD PRINTS BEARING EARLIER REVISION DATES

REVISION DATES: 7-8-08 7-14-08 7-18-08 10-09-08 11-14-08 1-22-09 1-28-09 3-10-09

SHEET 7 OF 15

FILE => 10-0174_jkts01.dgn

STRUCTURES DESIGN DETAIL SHEET (METRIC) (REV.03-17-04)

USERNAME => s121614 DATE PLOTTED => 28-JAN-2012 TIME PLOTTED => 08:17

DIST	COUNTY	ROUTE	KILOMETER POST TOTAL PROJECT	SHEET No	TOTAL SHEETS
01	Men	101	R69.4/R78.9	875	939

REGISTERED CIVIL ENGINEER 9-15-11 DATE

1-23-12
PLANS APPROVAL DATE

REGISTERED PROFESSIONAL ENGINEER M. Friedheim No. 57968 Exp. 6-30-12 CIVIL STATE OF CALIFORNIA

The State of California or its officers or agents shall not be responsible for the accuracy or completeness of electronic copies of this plan sheet.

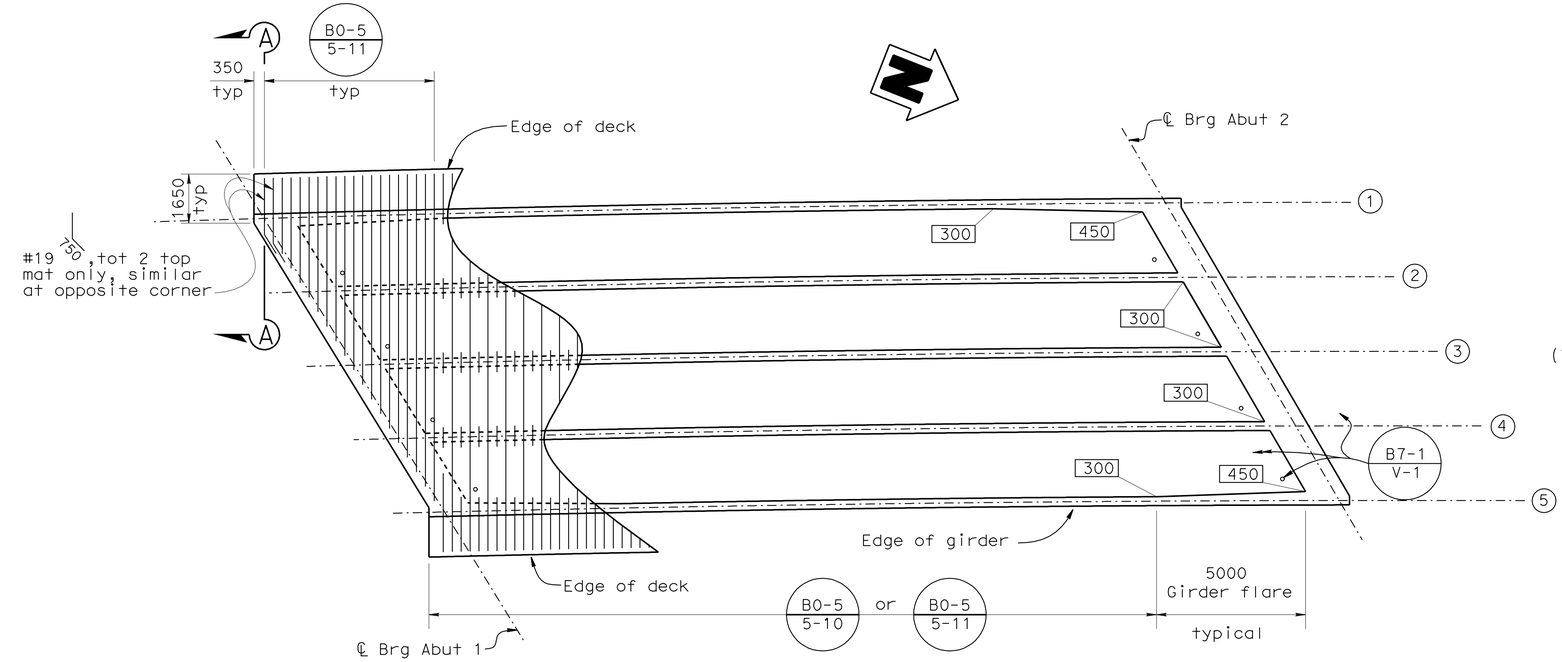

PLAN
1:100

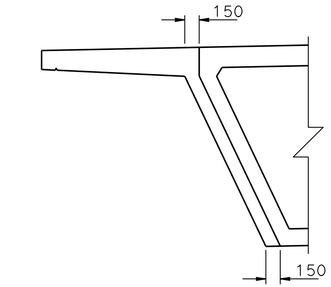

SECTION A-A
No Scale

(Typical at all abutment corners)

Notes:

- Girder stem width
- Theoretical Pt of No Movement (Shown for right end stressing)
- Girder Number

PRESTRESSING NOTES

Design based on 1860 MPa Low Relaxation Strand:

P_{jack} = 29,800 kN

Anchor Set = 10 mm

Total Number of Girders = 5

Concrete: f'_c = 28 MPa @ 28 days

f'_{ci} = 25 MPa @ time of stressing

Prestress: μ = 0.15

K = 0.000656/m

Long term losses = 172 MPa

Contractor shall submit elongation calculations based on initial stress at

☒ = 0.958 times jacking stress.

One end stressing shall be performed from either end.

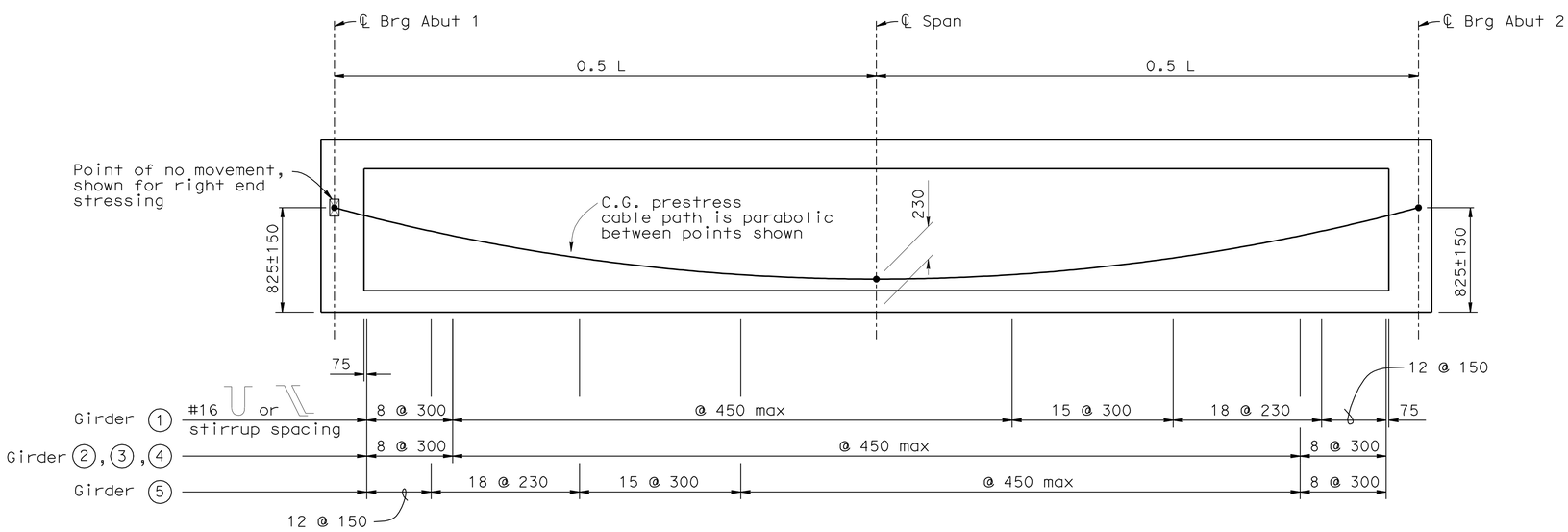

LONGITUDINAL SECTION
No Scale

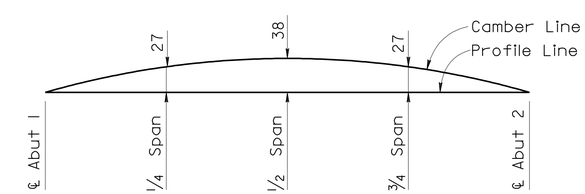

CAMBER DIAGRAM
No Scale

(Does not include allowance for falsework settlement)

Caltrans Metric

	BY	CHECKED
DESIGN	M.Moore/M.Friedheim	R.Odell
DETAILS	J.Yang	R.Odell
QUANTITIES	M. Akkari	K. Selventhiran

STATE OF CALIFORNIA
DEPARTMENT OF TRANSPORTATION

DIVISION OF ENGINEERING SERVICES
STRUCTURE DESIGN
DESIGN BRANCH 2

BRIDGE NO. 10-0174
KILOMETER POST R77.701

WILLITS BYPASS
UPP CREEK BRIDGE
GIRDER LAYOUT

ALL DIMENSIONS ARE IN MILLIMETERS UNLESS OTHERWISE SHOWN

ORIGINAL SCALE IN MILLIMETERS FOR REDUCED PLANS 0 10 20 30 40 50 60 70 80 90 100

CU 01
EA 262001

DISREGARD PRINTS BEARING EARLIER REVISION DATES

REVISION DATES: 7-25-08 7-28-08 11-18-08

SHEET 8 OF 15

FILE => 10-0174_jlglo01.dgn

STRUCTURES DESIGN DETAIL SHEET (METRIC) (REV.03-17-04)

USERNAME => s126614 DATE PLOTTED => 28-JAN-2012 TIME PLOTTED => 08:17

DIST	COUNTY	ROUTE	KILOMETER POST TOTAL PROJECT	SHEET No	TOTAL SHEETS
01	Men	101	R69.4/R78.9	876	939

REGISTERED CIVIL ENGINEER 9-15-11 DATE

1-23-12
PLANS APPROVAL DATE

REGISTERED PROFESSIONAL ENGINEER M. Friedheim No. 57968 Exp. 6-30-12 CIVIL STATE OF CALIFORNIA

The State of California or its officers or agents shall not be responsible for the accuracy or completeness of electronic copies of this plan sheet.

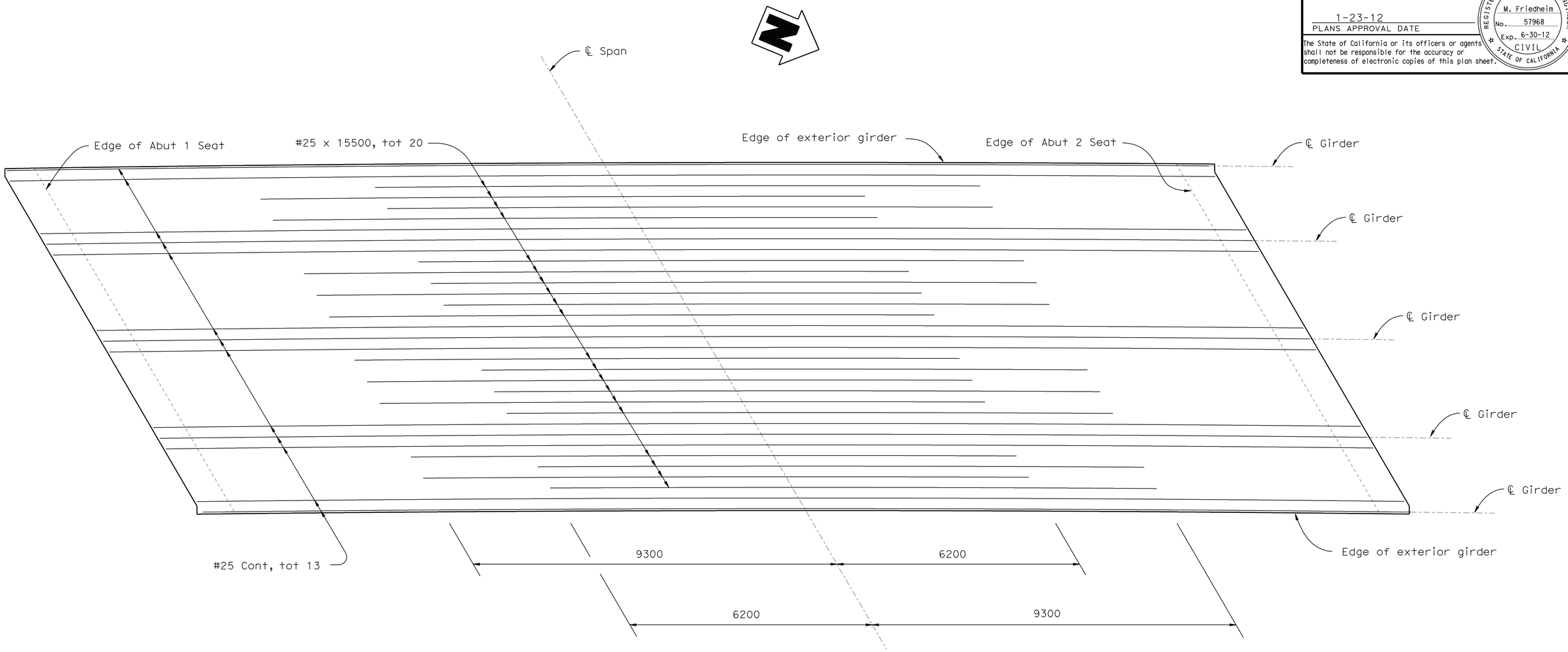

BOTTOM GIRDER REINFORCEMENT

1:50

Note:

No splices are allowed in cut-off bars. Splices in continuous bars shall be service level splices and shall not be located within 7.0 m of each side of CL of Span.

DESIGN	BY M.Moore/M. Freidheim	CHECKED R. Odell	
DETAILS	BY J.Yang	CHECKED R. Odell	
QUANTITIES	BY M. Akkari	CHECKED K. Selventhiran	

STATE OF CALIFORNIA
DEPARTMENT OF TRANSPORTATION

DIVISION OF ENGINEERING SERVICES
STRUCTURE DESIGN
DESIGN BRANCH 2

BRIDGE NO. 10-0174
KILOMETER POST R77.701

WILLITS BYPASS
UPP CREEK BRIDGE
BOTTOM GIRDER REINFORCEMENT

Caltrans Metric

ALL DIMENSIONS ARE IN MILLIMETERS UNLESS OTHERWISE SHOWN

ORIGINAL SCALE IN MILLIMETERS FOR REDUCED PLANS 0 10 20 30 40 50 60 70 80 90 100

CU 01
EA 262001

DISREGARD PRINTS BEARING EARLIER REVISION DATES

REVISION DATES: 7-21-08 10-10-08 11-18-08 1-29-09 3-10-09

SHEET 9 OF 15

FILE => 10-0174_jogbot01.dgn

STRUCTURES DESIGN DETAIL SHEET (METRIC) (REV.03-17-04)

USERNAME => s121614 DATE PLOTTED => 28-JAN-2012 TIME PLOTTED => 08:18

DIST	COUNTY	ROUTE	KILOMETER POST TOTAL PROJECT	SHEET No	TOTAL SHEETS
01	Men	101	R69.4/R78.9	877	939

REGISTERED CIVIL ENGINEER 9-15-11 DATE

1-23-12
PLANS APPROVAL DATE

REGISTERED PROFESSIONAL ENGINEER M. Friedheim No. 57968 Exp. 6-30-12 CIVIL STATE OF CALIFORNIA

The State of California or its officers or agents shall not be responsible for the accuracy or completeness of electronic copies of this plan sheet.

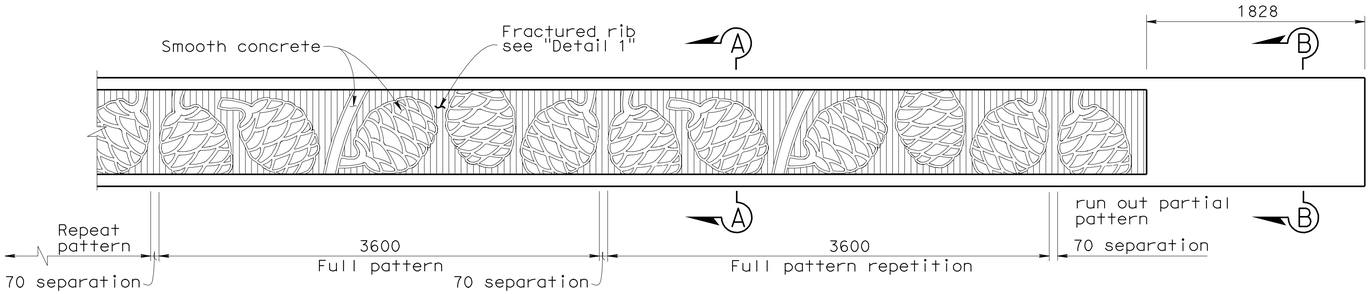

TYPE 736 BARRIER PARTIAL ELEVATION

1:25

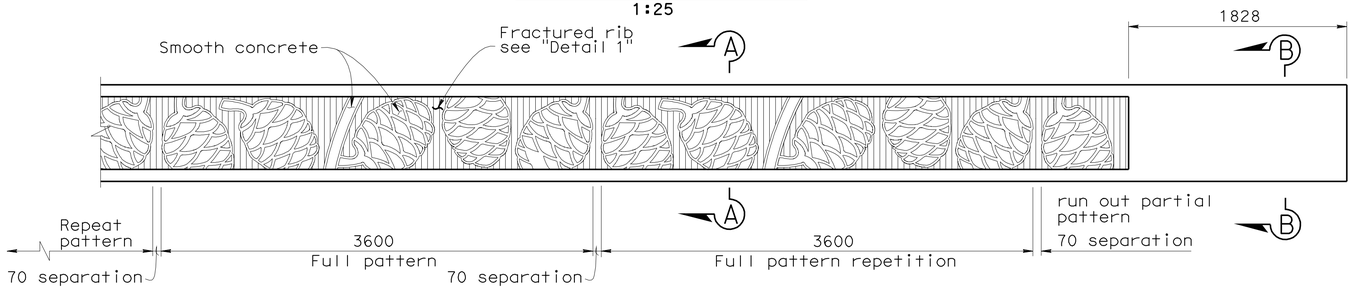

TYPE 732 BARRIER PARTIAL ELEVATION

1:25

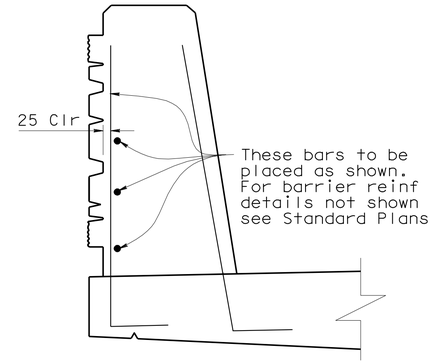

BARRIER REINFORCEMENT MODIFICATION

1:10

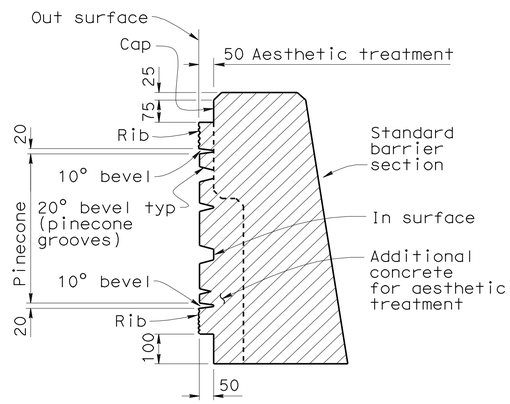

SECTION A-A

1:10

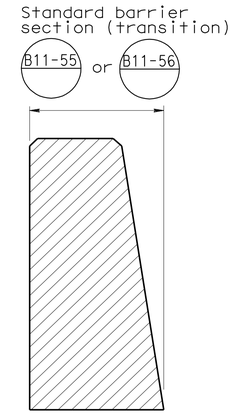

SECTION B-B

1:10

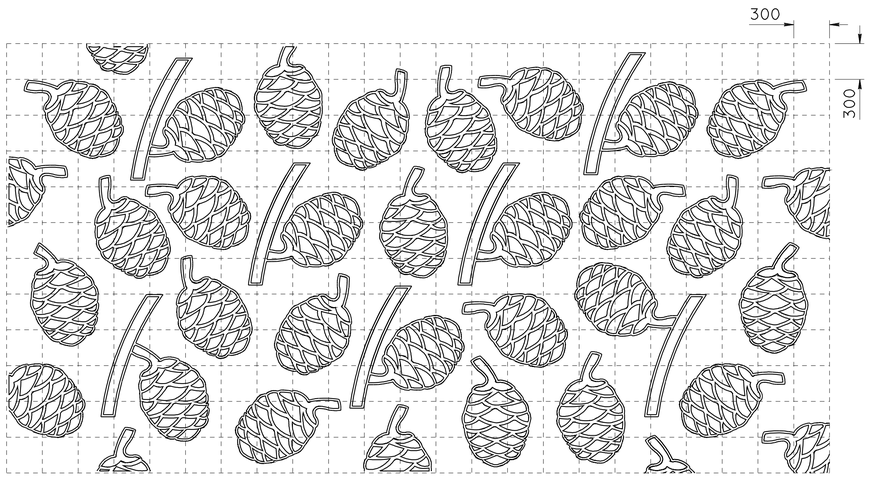

300 mm grid for reference only

RANDOM PINECONE PATTERN FOR WING WALLS

1:25

Note: Place random pinecone pattern on fractured rib background fractured rib to be at same angle/alignment as abutment wall. Relief similar to barrier section a-a

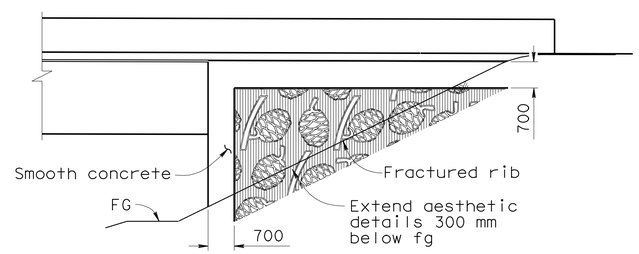

TYPICAL WINGWALL AESTHETIC TREATMENT

DETAIL D

1:80

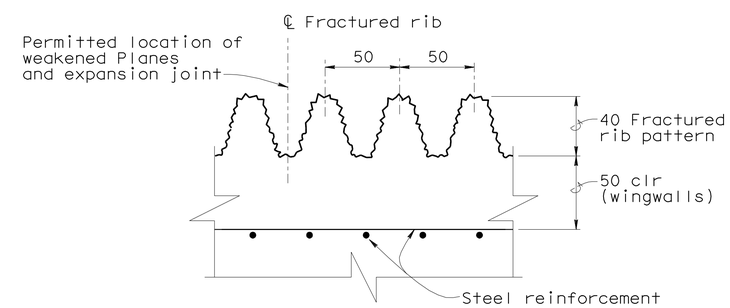

TYPICAL FRACTURED RIB TEXTURE

DETAIL 1

1:2

Caltrans Metric

	BY	CHECKED
DESIGN	V. Moore	M. Friedheim
DETAILS	C. Figuerres	M. Friedheim
QUANTITIES	M. Akkari	K. Selventhiran

STATE OF CALIFORNIA DEPARTMENT OF TRANSPORTATION

DIVISION OF ENGINEERING SERVICES STRUCTURE DESIGN

DESIGN BRANCH 2

BRIDGE NO. 10-0174

KILOMETER POST R77.701

WILLITS BYPASS
UPP CREEK BRIDGE
AESTHETIC DETAILS

ALL DIMENSIONS ARE IN MILLIMETERS UNLESS OTHERWISE SHOWN

ORIGINAL SCALE IN MILLIMETERS FOR REDUCED PLANS 0 10 20 30 40 50 60 70 80 90 100

CU 01
EA 262001

DISREGARD PRINTS BEARING EARLIER REVISION DATES

REVISION DATES: 8-15-08 1-23-09 3-10-09

SHEET 10 OF 15

FILE => 10-0174_jxsfradet1.dgn

STRUCTURES DESIGN DETAIL SHEET (METRIC) (REV.03-17-04)

USERNAME => s121614 DATE PLOTTED => 28-JAN-2012 TIME PLOTTED => 08:18

DIST.	COUNTY	ROUTE	KILOMETER POST TOTAL PROJECT	SHEET NO.	TOTAL SHEETS
01	Men	101	R69.4/R78.9	878	939

Caltrans Metric

REGISTERED ENGINEER - CIVIL 9-15-11

1-23-12
PLANS APPROVAL DATE

REGISTERED PROFESSIONAL ENGINEER M. Friedheim No. 57968 Exp. 6-30-12 CIVIL STATE OF CALIFORNIA

The State of California or its officers or agents shall not be responsible for the accuracy or completeness of electronic copies of this plan sheet.

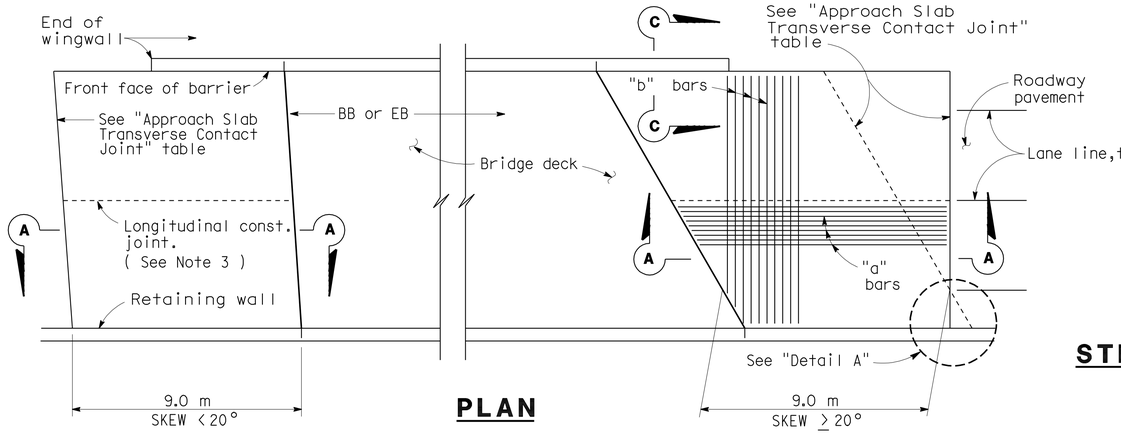

PLAN

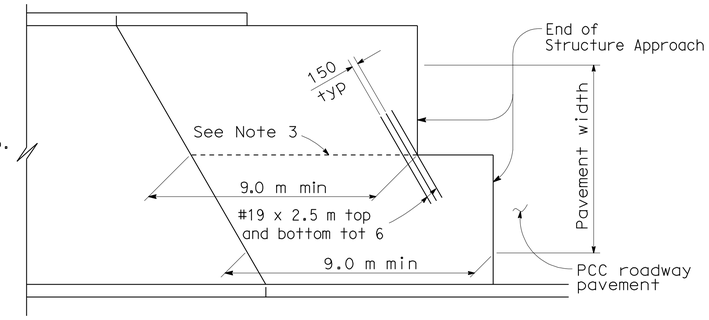

STRUCTURE APPROACH - END STAGGER DETAIL

APPROACH SLAB TRANSVERSE CONTACT JOINT		
APPROACH SKEW	WITH AC ROADWAY PAVEMENT	WITH PCC ROADWAY PAVEMENT
< 20°	Parallel to face of paving notch	Parallel to face of paving notch
20°- 45°	Parallel to face of P N use (Detail A)	Stagger lines 7.2 m to 10.8 m apart.
> 45°	Parallel to face of P N use (Detail A)	Stagger at each lane line.

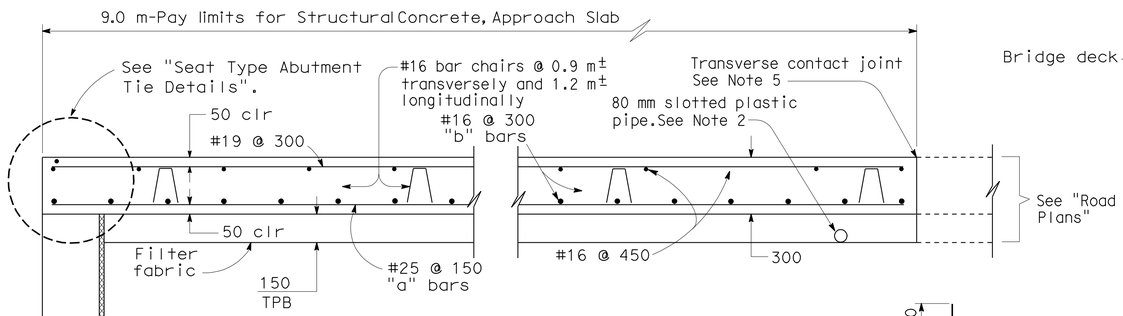

SECTION A-A

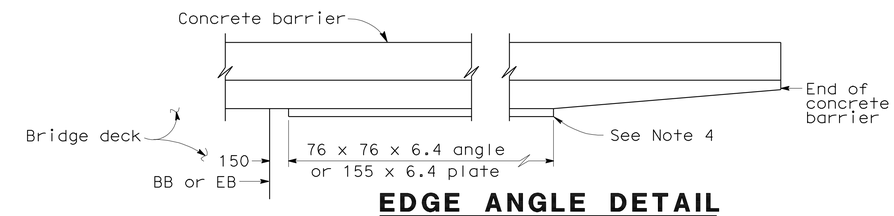

EDGE ANGLE DETAIL

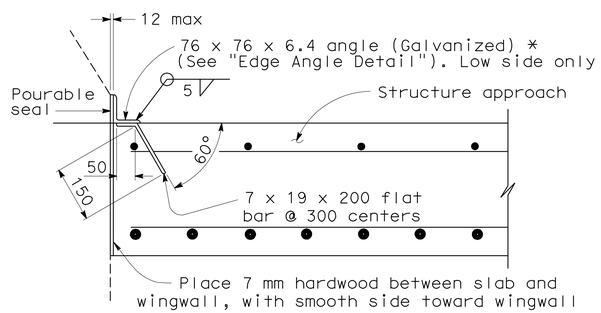

*(TO BE USED WITH TYPE 25 OR TYPE 27 CONCRETE BARRIER)

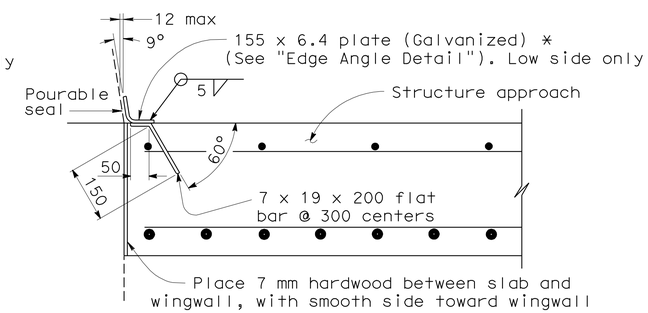

*(TO BE USED WITH TYPE 732 OR TYPE 736 CONCRETE BARRIER)

DETAIL B

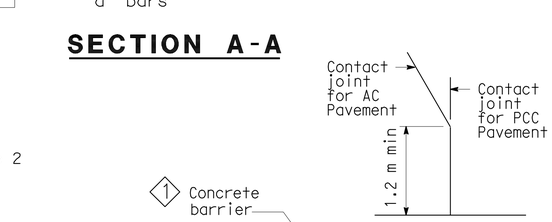

DETAIL A

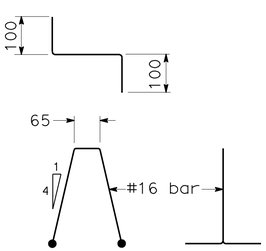

BAR CHAIR DETAIL

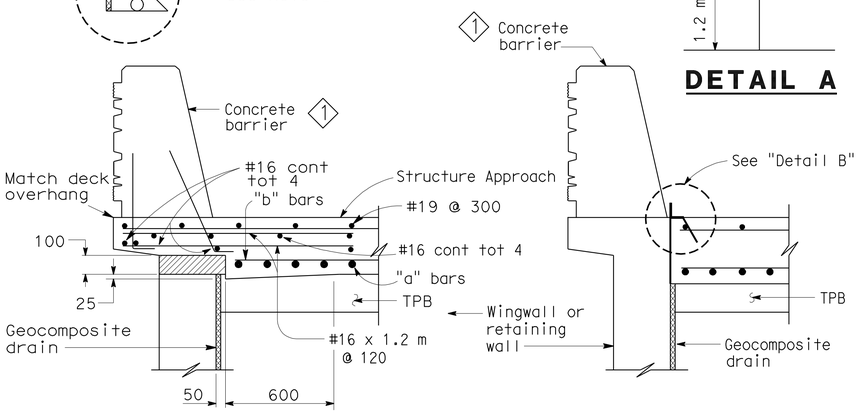

TYPE E-1

TYPE E-2

SECTION C-C

(Type E-1 to be used,unless otherwise shown on plans)

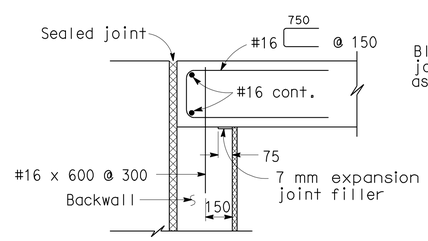

MR ≤ 50 mm

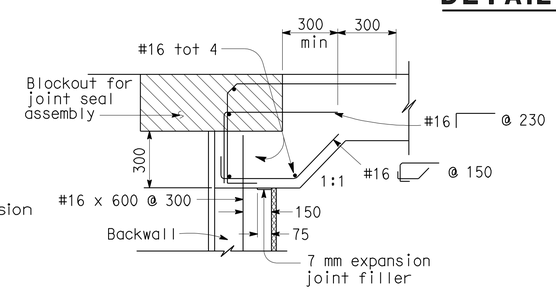

MR > 50 mm

SEAT TYPE ABUTMENT TIE DETAILS (SEE NOTE 1)

NOTES:

1. For details not shown,see Structure Plans. For MR ≤ 50 mm,adjust bar reinforcement to clear a sawcut for sealed joint,when required.
2. For drainage details,see "Structure Approach Drainage Details" sheet.
3. Longitudinal construction joints,when permitted by the Engineer, shall be located on lane lines.
4. End angle or plate at beginning of barrier transition, end of wingwall or end of structure approach as applicable.
5. For transverse contact joint with new PCC paving, refer to Standard Plan P30.
6. At the contractor's option, approach slab transverse reinforcement may be placed parallel to paving notch. Spacing of transverse reinforcement is measured along ℄ roadway.

Remove all polystyrene.

SPECIAL DETAILS
NO SCALE
ALL DIMENSIONS ARE IN MILLIMETERS UNLESS OTHERWISE SHOWN

1 Modified barrier

STANDARD DRAWING				
RELEASE DATE REVISED	DESIGN	BY M. TRAFFALIS	CHECKED E. THORKILDSEN	RELEASED BY
FILE NO. xs3-120	DETAILS	BY R. YEE	CHECKED E. THORKILDSEN	OFFICE CHIEF
	SUBMITTED	BY M. HA	DRAWING DATE 4/98	

DS OSD 2147A (METRIC) (REV. 2/25/97)

ORIGINAL SCALE IN MILLIMETERS FOR REDUCED PLANS 0 10 20 30 40 50 60 70 80 90 100

STATE OF CALIFORNIA
DEPARTMENT OF TRANSPORTATION

DIVISION OF ENGINEERING SERVICES
STRUCTURE DESIGN
DESIGN BRANCH 2

CU 01
EA 262001

BRIDGE NO. 10-0174
KILOMETER POST R77.701

DISREGARD PRINTS BEARING EARLIER REVISION DATES

REVISION DATES (PRELIMINARY STAGE ONLY) 8-15-08 1-27-09

SHEET 11 OF 15

WILLITS BYPASS

UPP CREEK BRIDGE

STRUCTURE APPROACH TYPE N(9S)

USERNAME => s121614

10-0174_jxsfsatn9s.dgn

DATE PLOTTED => 28-JAN-2012 TIME PLOTTED => 08:18

DIST.	COUNTY	ROUTE	KILOMETER POST TOTAL PROJECT	SHEET NO.	TOTAL SHEETS
01	Men	101	R69.4/R78.9	879	939

Caltrans Metric

REGISTERED ENGINEER - CIVIL 9-15-11

1-23-12
PLANS APPROVAL DATE

REGISTERED PROFESSIONAL ENGINEER M. Friedheim No. 57968 Exp. 6-30-12 CIVIL STATE OF CALIFORNIA

The State of California or its officers or agents shall not be responsible for the accuracy or completeness of electronic copies of this plan sheet.

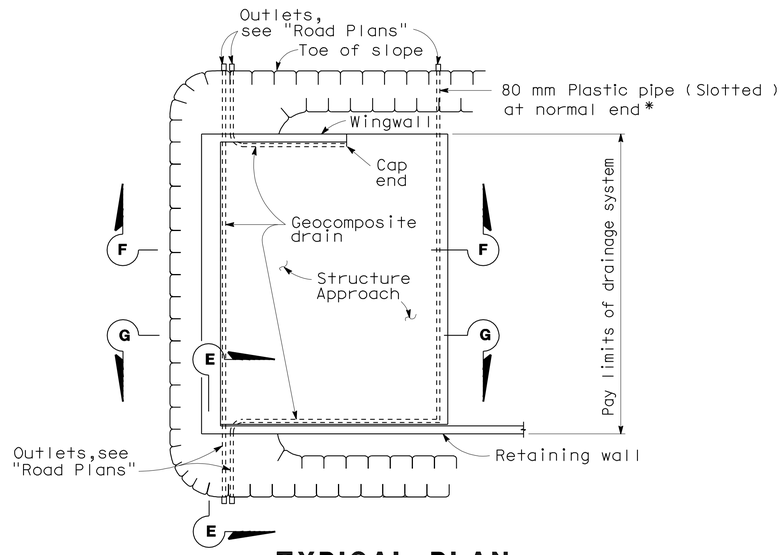

TYPICAL PLAN

*For pipe layout at staggered end,see "Detail B".

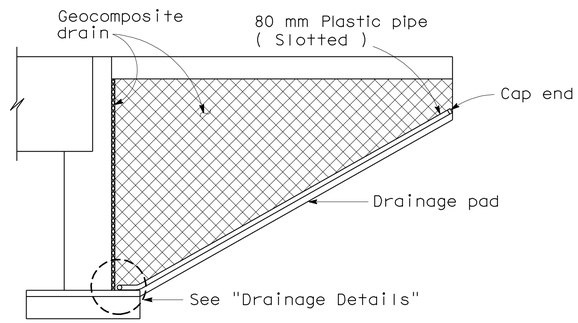

CANTILEVER WINGWALL SECTION F-F

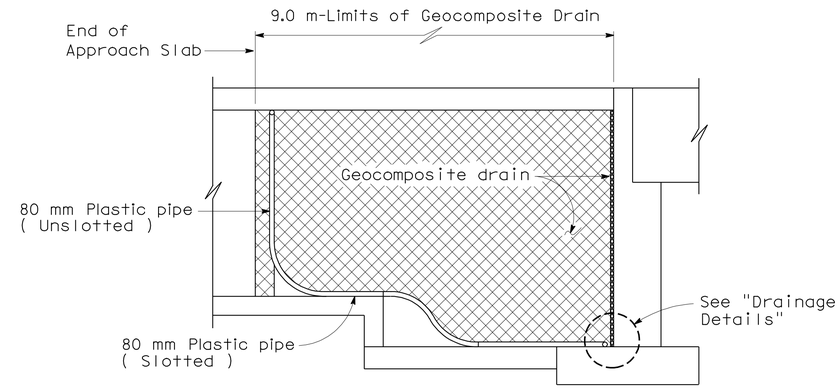

RETAINING WALL WINGWALL SECTION G-G

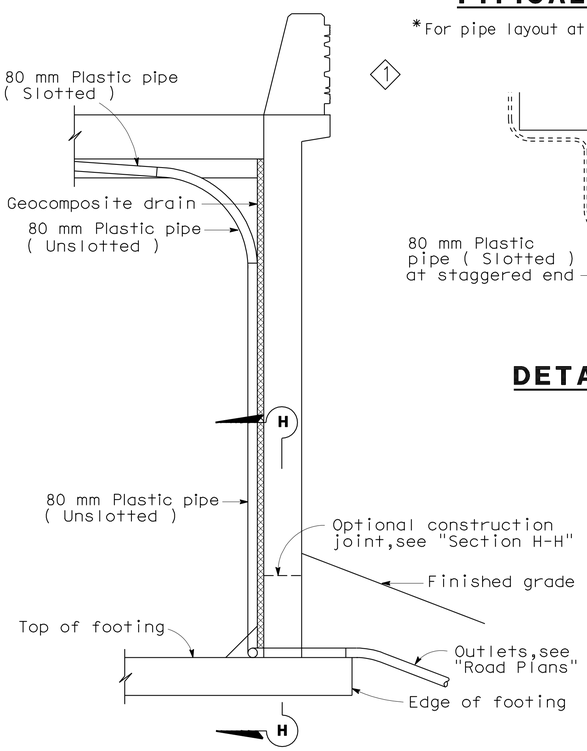

SECTION E-E

NOTE: Bends and junctions in 80 mm plastic pipe are 750 mm radius min.

1

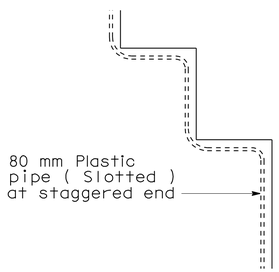

DETAIL B

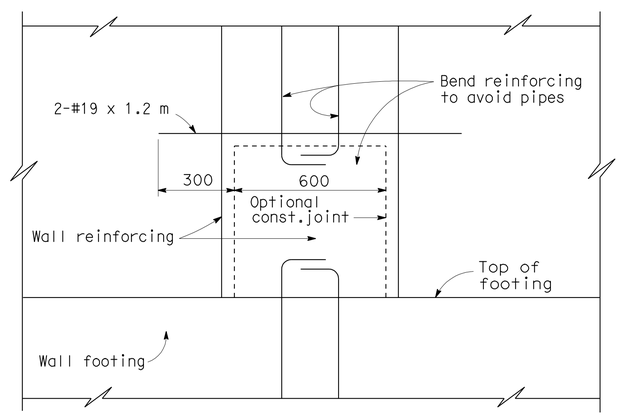

SECTION H-H

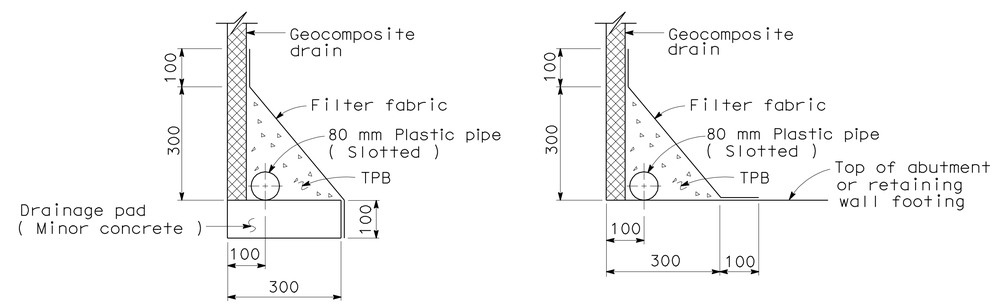

WITHOUT FOOTING WITH FOOTING

DRAINAGE DETAILS

SPECIAL DETAILS
NO SCALE
ALL DIMENSIONS ARE IN MILLIMETERS UNLESS OTHERWISE SHOWN

STANDARD DRAWING

RELEASE DATE	REVISED	DESIGN	BY M. TRAFFALIS	CHECKED E. THORKILDSEN	RELEASED BY
FILE NO.	xs3-110	DETAILS	BY R. YEE	CHECKED E. THORKILDSEN	OFFICE CHIEF
		SUBMITTED	BY M. HA	DRAWING DATE 4/98	

1 Modified barrier

STATE OF CALIFORNIA
DEPARTMENT OF TRANSPORTATION

DIVISION OF ENGINEERING SERVICES
STRUCTURE DESIGN
DESIGN BRANCH 2

BRIDGE NO. 10-0174
KILOMETER POST R77.701

WILLITS BYPASS
UPP CREEK BRIDGE
STRUCTURE APPROACH DRAINAGE DETAILS

DS OSD 2147A (METRIC) (REV. 2/25/97)

ORIGINAL SCALE IN MILLIMETERS FOR REDUCED PLANS 0 10 20 30 40 50 60 70 80 90 100

CU 01
EA 262001

DISREGARD PRINTS BEARING EARLIER REVISION DATES

REVISION DATES (PRELIMINARY STAGE ONLY) 8-13-08 1-27-09

SHEET 12 OF 15

USERNAME => s121614

10-0174_jxsftsadd.dgn

DATE PLOTTED => 28-JAN-2012 TIME PLOTTED => 08:18

DIST.	COUNTY	ROUTE	KILOMETER POST TOTAL PROJECT	SHEET NO.	TOTAL SHEETS
01	Men	101	R69.4/R78.9	880	939

Caltrans Metric

REGISTERED ENGINEER - CIVIL 9-15-11

PLANS APPROVAL DATE 1-23-12

REGISTERED PROFESSIONAL ENGINEER M. Friedheim No. 57968 Exp. 6-30-12 CIVIL STATE OF CALIFORNIA

The State of California or its officers or agents shall not be responsible for the accuracy or completeness of electronic copies of this plan sheet.

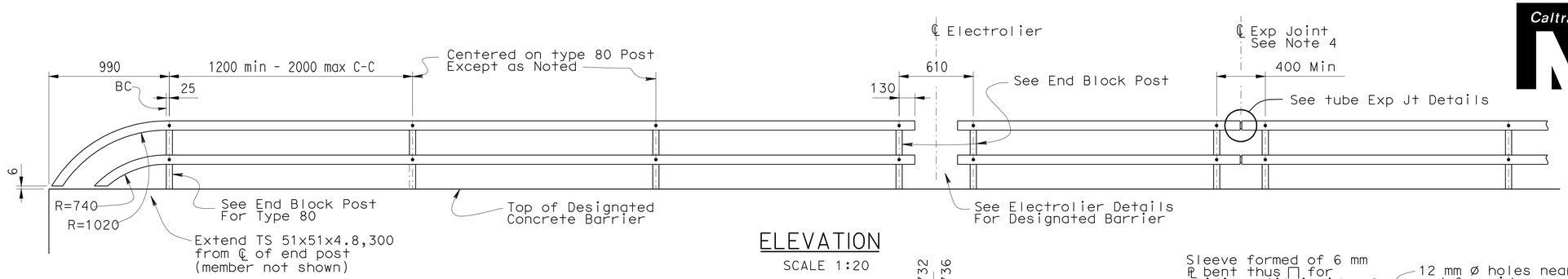

ELEVATION
SCALE 1:20

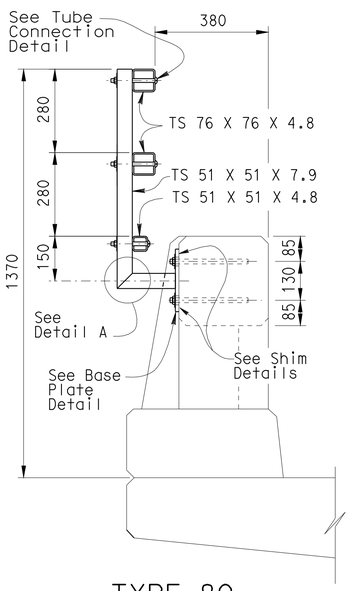

TYPE 80
END BLOCK POST
SCALE 1:10

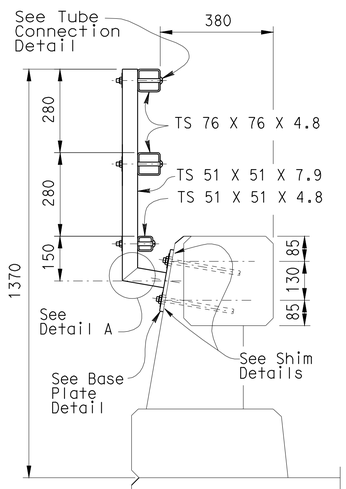

TYPE 80
SCALE 1:10

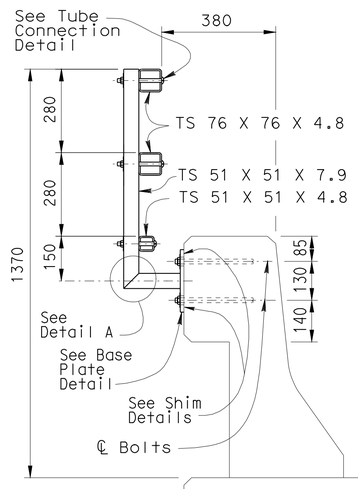

TYPE 25
SCALE 1:10

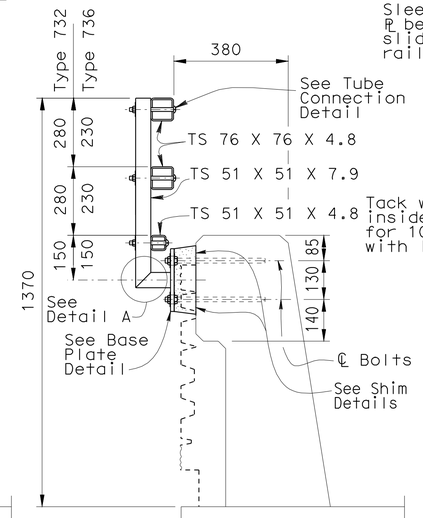

TYPE 732 OR 736 ◇1
NO SCALE

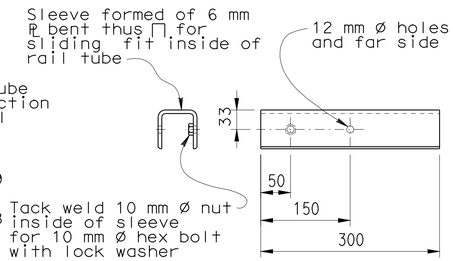

SLEEVE DETAIL
SCALE 1:5

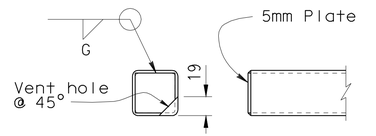

RAIL CAP DETAIL
SCALE 1:5

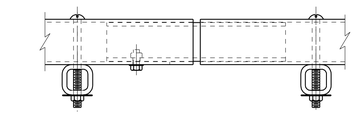

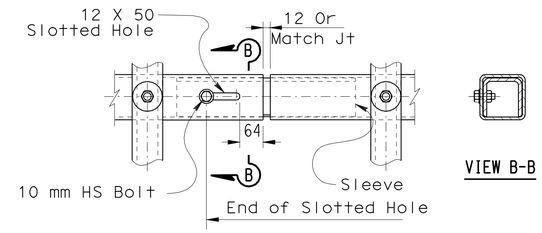

TUBE EXPANSION JOINT DETAILS
SCALE 1:5

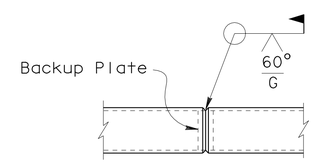

WELDED SPLICE DETAIL
SCALE 1:5

NOTES:

1. Galvanize rail assembly after fabrication.
2. Post shall be normal to railing.
3. Rail tubes shall be shop bent or fabricated to fit horizontal curve when radius is less than 300 m.
4. Tube splices shall be located in the tubes spanning deck or wall joints. Increase joint width in tubes to match expansion joint width and increase sleeve length correspondingly.
5. Top rail tube shall be continuous over not less than two posts except a short post spacing is permitted near deck or wall joints, electroliers, or other rail discontinuities as noted.
6. For details and reinforcement not shown see Standard Plans.
7. See project plans for limits of tubular bicycle railing.
8. CIP threaded rods may alternatively be installed using a drill and bond method with epoxy cartridges after forming and pouring barrier concrete. Plates to be placed against level surface.

SPECIAL DETAILS

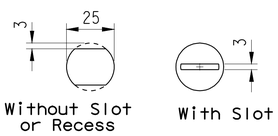

VIEW C-C
SCALE 1:1

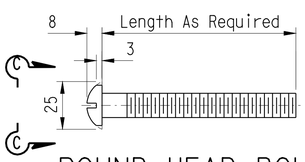

ROUND HEAD BOLT DETAIL
SCALE 1:1

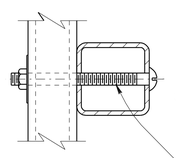

TUBE CONNECTION DETAIL
SCALE 1:2.5

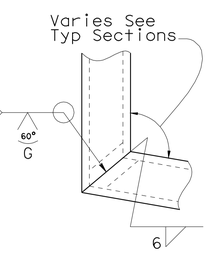

DETAIL A
SCALE 1:2.5

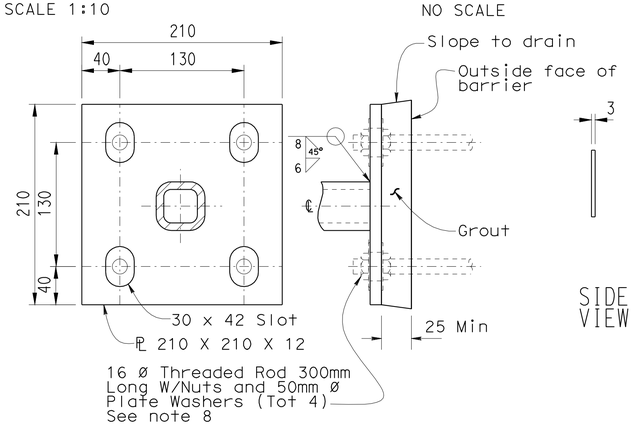

BASE PLATE DETAIL ◇2
SCALE 1:2.5

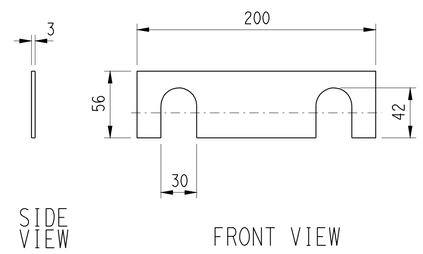

SHIM DETAILS
NO SCALE

ALL DIMENSIONS ARE IN MILLIMETERS UNLESS OTHERWISE SHOWN

◇1 Barrier modified
◇2 Plate details modified

RELEASE DATE	REVISED	DESIGN	BY TILLAT SATTER	CHECKED NEELIMA PATIL	RELEASED BY
FILE NO.	XS16-500	DETAILS	BY H.NGUYEN	CHECKED TILLAT SATTER	OFFICE CHIEF
		SUBMITTED	BY	DRAWING DATE 08/06	

STATE OF CALIFORNIA
DEPARTMENT OF TRANSPORTATION

DIVISION OF ENGINEERING SERVICES

BRIDGE NO. 10-0174
KILOMETER POST R77.701

WILLITS BYPASS
UPP CREEK BRIDGE
TUBULAR BICYCLE RAILING

DS OSD 2139M (METRIC) (REV. 3/5/97)

ORIGINAL SCALE IN MILLIMETERS FOR REDUCED PLANS 0 10 20 30 40 50 60 70 80 90 100

CU 01
EA 262001

DISREGARD PRINTS BEARING EARLIER REVISION DATES

REVISION DATES (PRELIMINARY STAGE ONLY) 8-15-08 1-27-09 1-30-09

SHEET 13 OF 15

USERNAME => s121614 DATE PLOTTED => 28-JAN-2012 TIME PLOTTED => 08:13

USERNAME => s121614 FILE => 10-0174_jxsfutub.dgn VI=1

DIST	COUNTY	ROUTE	KILOMETER POST TOTAL PROJECT	SHEET No	TOTAL SHEETS
01	Men	101	R69.4/R78.9	881	939

CERTIFIED ENGINEERING GEOLOGIST 5-19-09 DATE

REGISTERED GEOLOGIST Reid Buell No. 1481 Exp. 4-30-11 CERTIFIED ENGINEERING GEOLOGIST STATE OF CALIFORNIA

1-23-12
PLANS APPROVAL DATE

The State of California or its officers or agents shall not be responsible for the accuracy or completeness of electronic copies of this plan sheet.

BENCH MARK

SURVEY CONTROL
SEWER (PRHV4750)
Fnd 2-1/4" BRASS DISK
159.985 m Lt ℄ Rte 101
Sta 163+10.608
N 695,463.301
E 1,884,392.708
Elev = 411.192

MEN-101-48.1 (PRHV5046)
Fnd AL.CAP IN CONC. W/STEEL
188.980 m Lt ℄ Rte 101
Sta 178+98.282
N 696,420.729
E 1,883,104.414
Elev = 409.954

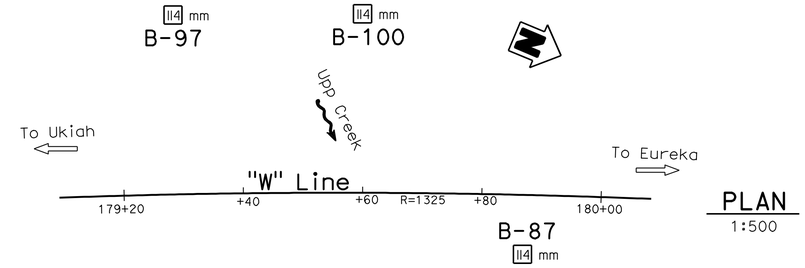

PLAN
1:500

Notes:

1. Standard Penetration Test (SPT) performed in Borings B-82, B-87, B-97 and B-100 were advanced using a 63.5 kg Longyear Automatic Hammer.
2. pp= Unconfined compressive strength determined in the field by "Pocket Penetrometer." Units shown are kilopascals (kPa).
3. UU = Undrained shear strength determined in the laboratory by Unconsolidated-Undrained Triaxial Test. Units shown are kilopascals (kPa).
4. Consistency descriptors shown on the LOTB sheets are based on the pocket penetrometer readings.
5. P = Push. Standard Penetration Test (SPT) split barrel sampler penetrated without any impact through the sample interval of 457 mm (18 inches) when placing drive weight assembly on sample rods.
6. Ground water surface elevations are subject to seasonal fluctuations and may occur at higher or lower elevations depending on conditions at any particular time.

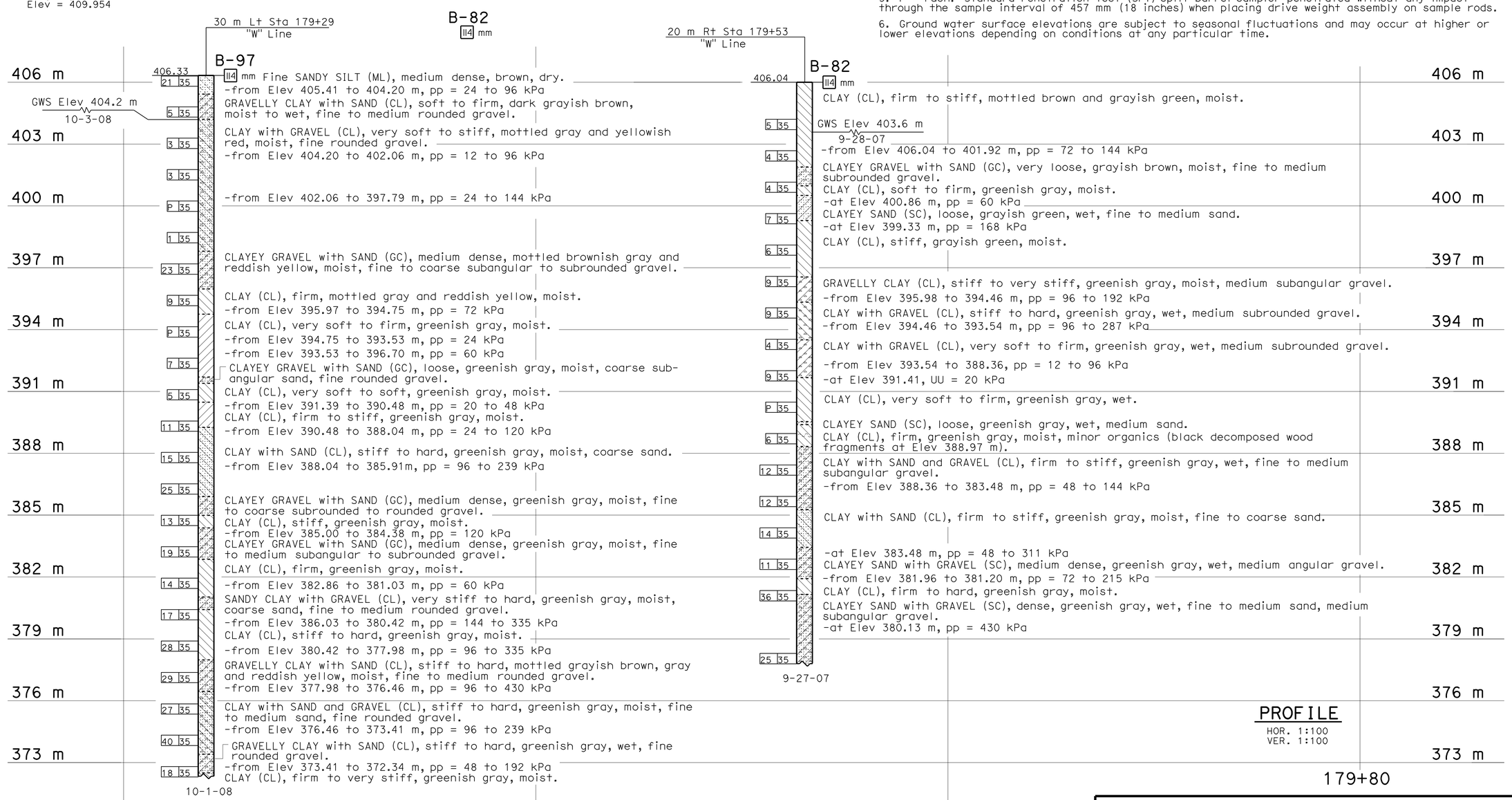

PROFILE
HOR. 1:100
VER. 1:100

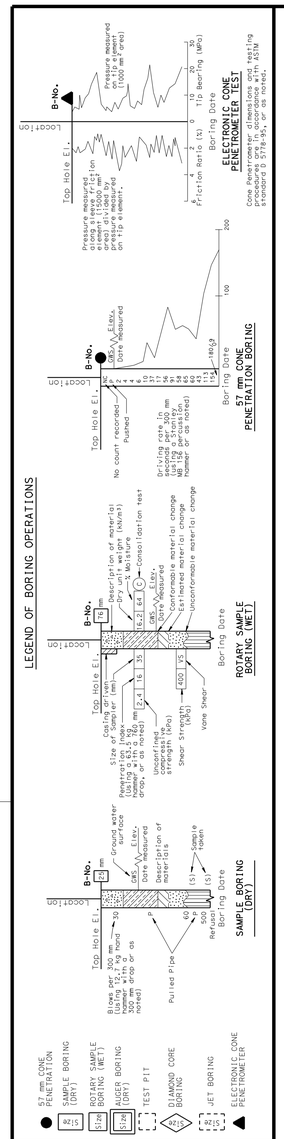

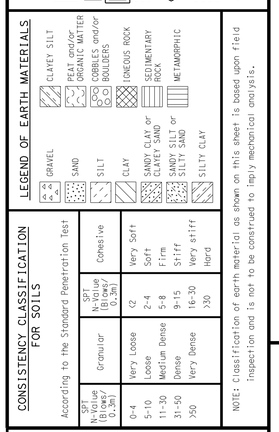

NOTE: Classification of earth material as shown on this sheet is based upon field inspection and is not to be construed to imply mechanical analysis.

OGS CIVIL LOG OF TEST BORINGS SHEET (METRIC) (REV. 4/04)

Caltrans Metric

ENGINEERING SERVICES	GEOTECHNICAL SERVICES
DRAWN BY	I.G-Remmen 5/09
CHECKED BY	T. Alderman

FIELD INVESTIGATION BY: T. Alderman

STATE OF CALIFORNIA DEPARTMENT OF TRANSPORTATION

DIVISION OF ENGINEERING SERVICES STRUCTURE DESIGN
DESIGN BRANCH 2

BRIDGE NO. 10-0174
KILOMETER POST R 77.701

WILLITS BYPASS
UPP CREEK BRIDGE
LOG OF TEST BORINGS 1 OF 2

ALL DIMENSIONS ARE IN METERS UNLESS OTHERWISE SHOWN

ORIGINAL SCALE IN MILLIMETERS FOR REDUCED PLANS 0 10 20 30 40 50 60 70 80 90 100

CU 01
EA 262001

DISREGARD PRINTS BEARING EARLIER REVISION DATES

REVISION DATES (PRELIMINARY STAGE ONLY) 05-19-09

SHEET 14 OF 15

FILE => 10-0174_jylotb01.dgn

USERNAME => s121614 DATE PLOTTED => 28-JAN-2012 TIME PLOTTED => 08:19

DIST	COUNTY	ROUTE	KILOMETER POST TOTAL PROJECT	SHEET No	TOTAL SHEETS
01	Men	101	R69.4/R78.9	882	939

CERTIFIED ENGINEERING GEOLOGIST — 5-19-09 DATE

REGISTERED GEOLOGIST — Reid Buell No. 1481 Exp. 4-30-11 — CERTIFIED ENGINEERING GEOLOGIST — STATE OF CALIFORNIA

1-23-12
PLANS APPROVAL DATE

The State of California or its officers or agents shall not be responsible for the accuracy or completeness of electronic copies of this plan sheet.

FOR PLAN VIEW, SEE
"LOG OF TEST BORINGS" 1 OF 2

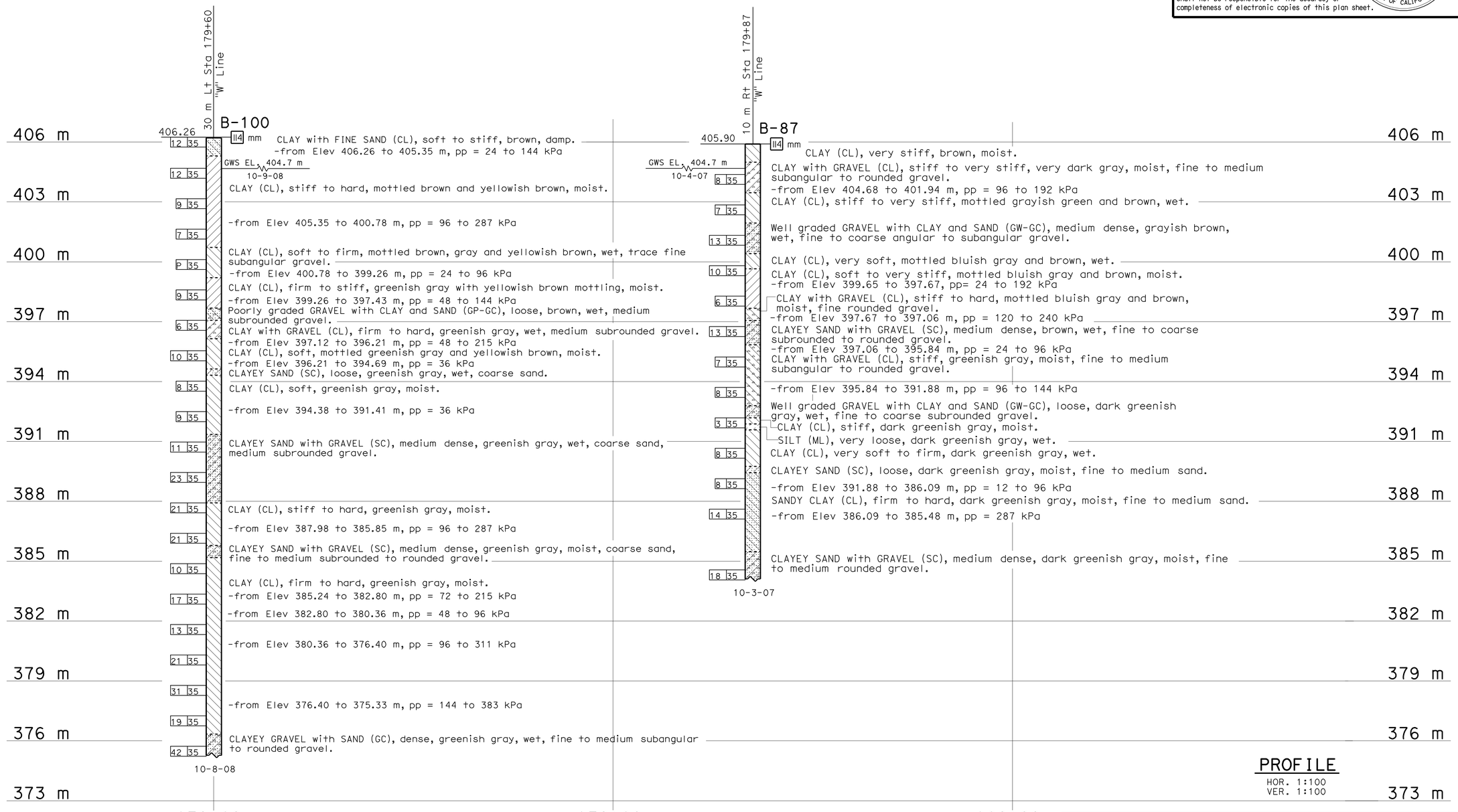

PROFILE
HOR. 1:100
VER. 1:100

LEGEND OF BORING OPERATIONS

ELECTRONIC CONE PENETROMETER TEST — Cone Penetrometer dimensions and testing procedures shall conform with ASTM standard D 5778-95, or as noted.

57 mm CONE PENETRATION BORING

ROTARY SAMPLE BORING (WET)

SAMPLE BORING (DRY)

57 mm CONE PENETRATION | SAMPLE BORING (DRY) | ROTARY SAMPLE BORING (WET) | AUGER BORING (DRY) | TEST PIT | DIAMOND CORE BORING | JET BORING | ELECTRONIC CONE PENETROMETER

LEGEND OF EARTH MATERIALS

GRAVEL | SAND | SILT | CLAY | SANDY CLAY or CLAYEY SAND | SANDY SILT or SILTY SAND | SILTY CLAY | CLAYEY SILT | PEAT and/or ORGANIC MATTER | COBBLES and/or BOULDERS | IGNEOUS ROCK | SEDIMENTARY ROCK | METAMORPHIC

CONSISTENCY CLASSIFICATION FOR SOILS

According to the Standard Penetration Test

SPT N-Value (Blows/0.3m)	Granular	SPT N-Value (Blows/0.3m)	Cohesive
0-4	Very Loose	<2	Very Soft
5-10	Loose	2-4	Soft
11-30	Medium Dense	5-8	Firm
31-50	Dense	9-15	Stiff
>50	Very Dense	16-30	Very stiff
		>30	Hard

NOTE: Classification of earth material as shown on this sheet is based upon field inspection and is not to be construed to imply mechanical analysis.

OGS CIVIL LOG OF TEST BORINGS SHEET (METRIC) (REV. 4/04)

Caltrans Metric

ENGINEERING SERVICES	GEOTECHNICAL SERVICES
DRAWN BY	I.G-Remmen 5/09
CHECKED BY	T. Alderman

FIELD INVESTIGATION BY: T. Alderman

STATE OF CALIFORNIA DEPARTMENT OF TRANSPORTATION

DIVISION OF ENGINEERING SERVICES STRUCTURE DESIGN — DESIGN BRANCH 2

BRIDGE NO. 10-0174
KILOMETER POST R 77.701

WILLITS BYPASS
UPP CREEK BRIDGE
LOG OF TEST BORINGS 2 OF 2

ALL DIMENSIONS ARE IN METERS UNLESS OTHERWISE SHOWN

ORIGINAL SCALE IN MILLIMETERS FOR REDUCED PLANS 0 10 20 30 40 50 60 70 80 90 100

CU 01
EA 262001

DISREGARD PRINTS BEARING EARLIER REVISION DATES 05-19-09

REVISION DATES (PRELIMINARY STAGE ONLY)

SHEET 15 OF 15

FILE => 10-0174_jylotb02.dgn

USERNAME => s121614 DATE PLOTTED => 28-JAN-2012 TIME PLOTTED => 08:13

DIST	COUNTY	ROUTE	KILOMETER POST TOTAL PROJECT	SHEET No	TOTAL SHEETS
01	Men	101	R69.4/R78.9	883	939

REGISTERED CIVIL ENGINEER 9-15-11 DATE

1-23-12
PLANS APPROVAL DATE

REGISTERED PROFESSIONAL ENGINEER M. Friedheim No. 57968 Exp. 6-30-12 CIVIL STATE OF CALIFORNIA

The State of California or its officers or agents shall not be responsible for the accuracy or completeness of electronic copies of this plan sheet.

NOTES:

① Structure Approach, Type N(9S)
② Metal Beam Guard railing, See "Road Plans"
③ Aesthetic Treatment, Typ
④ Paint "Upp Creek (SB Off-Ramp)"
⑤ Paint "Br. No. 10-0174K" and Year Constructed
⑥ Concrete Barrier Type 732 Mod
⑦ Concrete Barrier Type 736 Mod w/ Tubular Bicycle Railing

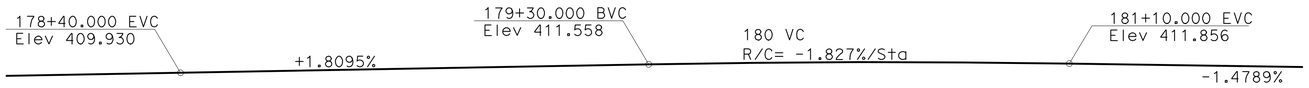

PROFILE GRADE

No Scale

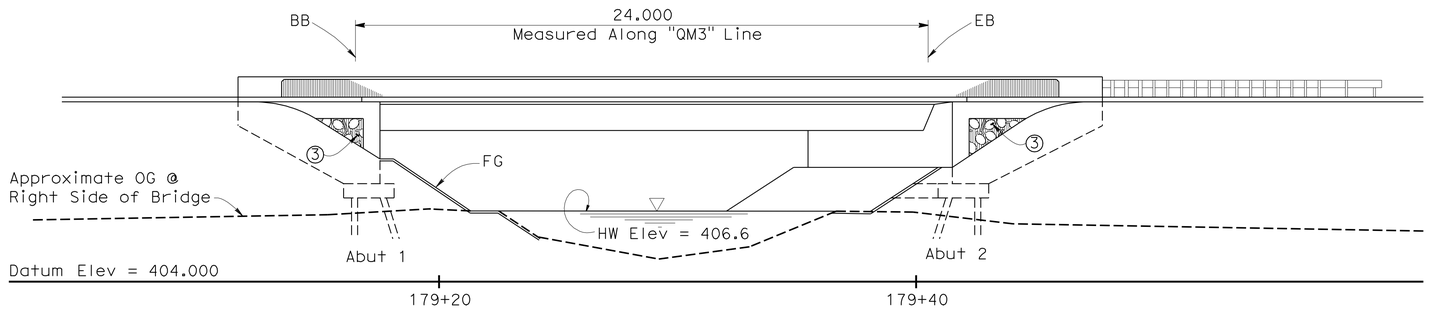

ELEVATION

1:125

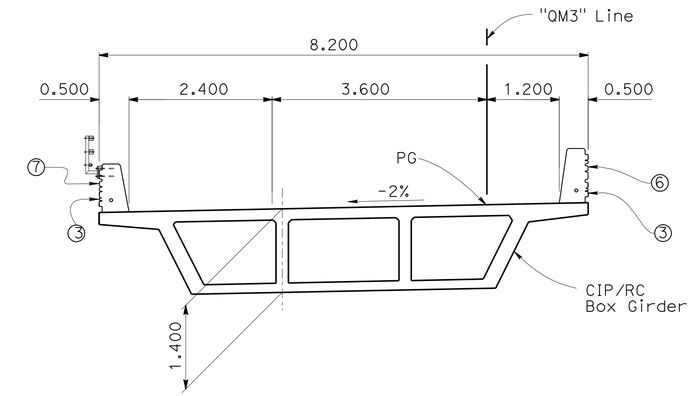

TYPICAL SECTION

1:50

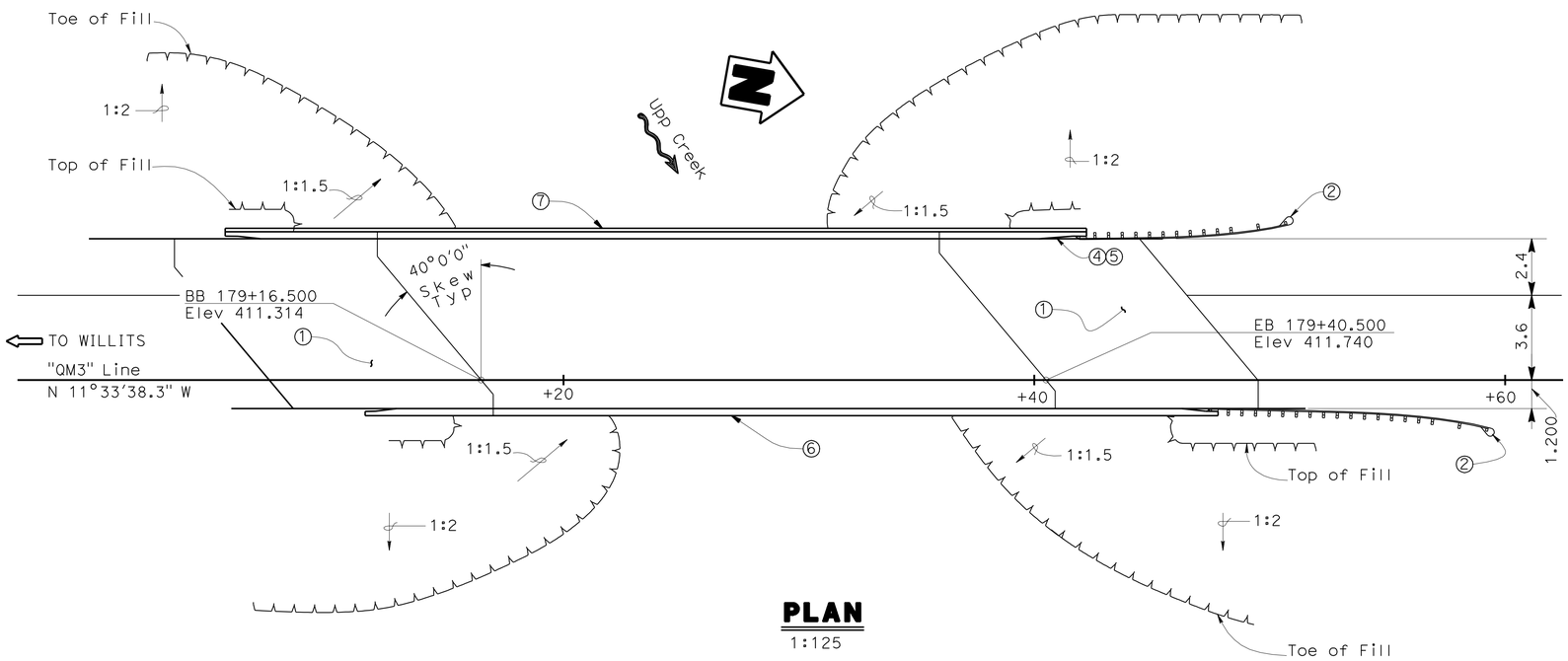

PLAN

1:125

UPP CREEK (SB OFF-RAMP) 10-0174K
QUANTITIES

STRUCTURE EXCAVATION (BRIDGE)	143	m^3
STRUCTURE BACKFILL (BRIDGE)	106	m^3
FURNISH STEEL PILING (HP 250 X 85)	505	m
DRIVE STEEL PILE (HP 250 X 85)	16	EA
STRUCTURAL CONCRETE, BRIDGE FOOTING	28	m^3
STRUCTURAL CONCRETE, BRIDGE	172	m^3
STRUCTURAL CONCRETE, APPROACH SLAB (TYPE N)	45	m^3
ARCHITECTURAL TEXTURE	10	m^2
JOINT SEAL (MR 25 MM)	20	m
BAR REINFORCING STEEL (BRIDGE)	23 360	kg
TUBULAR BICYCLE RAILING (MODIFIED)	35	m
CONCRETE BARRIER (TYPE 732 MOD)	35	m
CONCRETE BARRIER (TYPE 736 MODIFIED)	35	m

Note: For Standard Plans, General Notes, Index to Plans, and Pile Data Table, see "Deck Contours" sheet

Caltrans Metric

J. Setberg
DESIGN ENGINEER

	BY	CHECKED			
DESIGN	M. Schott	N. Nguyen	LOAD FACTOR DESIGN	LIVE LOADING: HS20-44 AND ALTERNATIVE PERMIT DESIGN LOAD	
DETAILS	M. Tran	N. Nguyen	LAYOUT	M. Tran	N. Nguyen
QUANTITIES	N. Nguyen	E. Ward	SPECIFICATIONS	I. Huang	PLANS AND SPECS COMPARED I. Huang

ALL DIMENSIONS ARE IN METERS UNLESS OTHERWISE SHOWN

ORIGINAL SCALE IN MILLIMETERS FOR REDUCED PLANS 0 10 20 30 40 50 60 70 80 90 100

STATE OF CALIFORNIA
DEPARTMENT OF TRANSPORTATION

DIVISION OF ENGINEERING SERVICES
STRUCTURE DESIGN
DESIGN BRANCH 2

CU 01
EA 262001

BRIDGE NO. 10-0174K
KILOMETER POST R77.68

DISREGARD PRINTS BEARING EARLIER REVISION DATES

REVISION DATES: 1-27-09

SHEET 1 OF 15

WILLITS BYPASS
UPP CREEK (SB OFF-RAMP)
GENERAL PLAN

FILE => 10-0174k_kagp01.dgn

STRUCTURES DESIGN GENERAL PLAN SHEET (METRIC) (REV.07-24-06)

USERNAME => s121614 DATE PLOTTED => 28-JAN-2012 TIME PLOTTED => 08:13

DIST	COUNTY	ROUTE	KILOMETER POST TOTAL PROJECT	SHEET No	TOTAL SHEETS
01	Men	101	R69.4/R78.9	884	939

REGISTERED CIVIL ENGINEER 9-15-11 DATE

1-23-12
PLANS APPROVAL DATE

REGISTERED PROFESSIONAL ENGINEER M. Friedheim No. 57968 Exp. 06-30-12 CIVIL STATE OF CALIFORNIA

The State of California or its officers or agents shall not be responsible for the accuracy or completeness of electronic copies of this plan sheet.

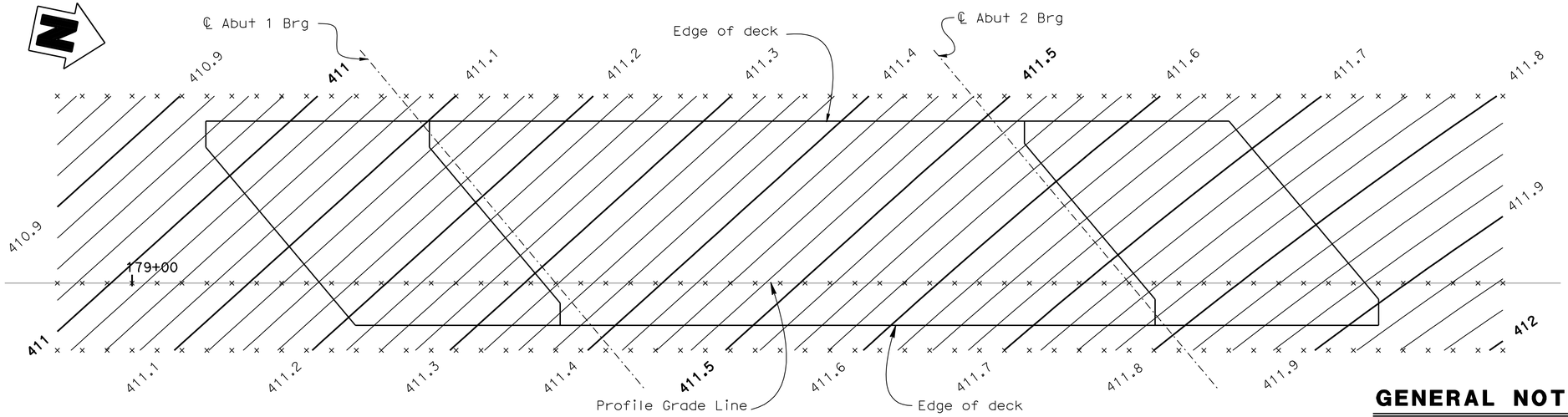

DECK CONTOURS

1:100

NOTES:
x = 1.0 m interval measured along station line
Contours do not include camber
Contour interval = 0.025 m
Contours are shown in meters

GENERAL NOTES (LOAD FACTOR DESIGN)

DESIGN: Bridge Design Specifications - April 2000 (LFD) (1996 AASHTO with interims and revisions by Caltrans).

Project Specific Design Criteria - March 2009.

SEISMIC DESIGN: Caltrans SDC version 1.4 - June 2006

DEAD LOAD: Includes 1675 Pa for future wearing surface.

LIVE LOAD: HS20-44 and alternative and permit design load.

SEISMIC LOADING: Modified Caltrans Seismic Design Criteria for Soil Profile Type D, PBA = 0.7 g. See Response Spectrum below.

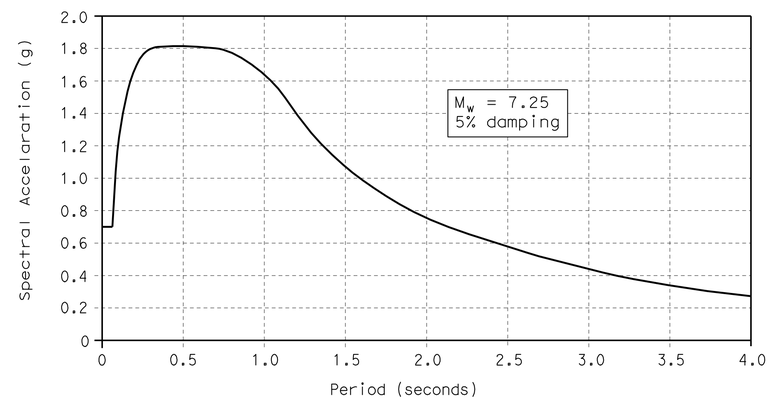

REINFORCED CONCRETE:
fy = 420 MPa
f'c = 25 MPa (See concrete strength and type limits for exceptions)

Transverse Deck Slab (working stress design)
fs = 140 MPa
f'c = 8 MPa
n = 10

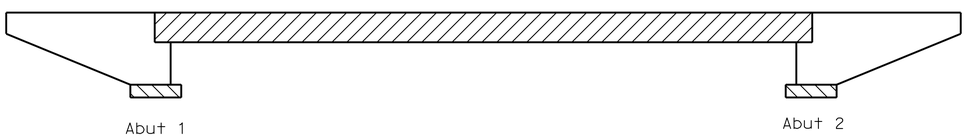

Structural Concrete, Bridge
Structural Concrete Bridge (28 MPa @ 28 days)
Structural Concrete, Bridge Footing

CONCRETE STRENGTH AND TYPE LIMITS

No Scale

INDEX TO PLANS

1. GENERAL PLAN
2. DECK CONTOURS
3. FOUNDATION PLAN
4. ABUTMENT LAYOUT
5. ABUTMENT DETAILS NO. 1
6. ABUTMENT DETAILS NO. 2
7. TYPICAL SECTION
8. GIRDER LAYOUT
9. GIRDER REINFORCEMENT
10. AESTHETIC DETAILS
11. STRUCTURE APPROACH TYPE N(9S)
12. STRUCTURE APPROACH DRAINAGE DETAILS
13. TUBULAR BICYCLE RAILING
14. LOG OF TEST BORINGS 1 OF 2
15. LOG OF TEST BORINGS 2 OF 2

STANDARD PLANS DATED JULY 2004

A10A	ACRONYMS AND ABBREVIATIONS (A-L)
A10B	ACRONYMS AND ABBREVIATIONS (M-Z)
A10C	SYMBOLS
A10D	SYMBOLS
A62C	LIMITS OF PAYMENT FOR EXCAVATION AND BACKFILL-BRIDGE
B0-1	BRIDGE DETAILS
B0-3	BRIDGE DETAILS
B0-5	BRIDGE DETAILS
B0-13	BRIDGE DETAILS
RSP B6-21	JOINT SEALS (MAXIMUM MOVEMENT RATING=50 MM)
B7-1	BOX GIRDER DETAILS
B11-55	CONCRETE BARRIER TYPE 732
B11-56	CONCRETE BARRIER TYPE 736
RSP ES-9B	ELECTRICAL SYSTEMS (ELECTRICAL DETAILS STRUCTURE INSTALLATIONS)
RSP ES-9C	ELECTRICAL SYSTEMS (ELECTRICAL DETAILS STRUCTURE INSTALLATIONS)

STANDARD PLAN SHEET NO.

DETAIL NO.

PILE DATA TABLE

Location	Pile Type	Nominal Resistance Compression kN	Nominal Resistance Tension kN	Bottom of Pile Cap Elevation m	Specified Pile Tip Elevations m	Specified Pile Tip Elevations m
Abut 1	HP 250 x 85	1200	0	406.9	376.5 (1,2)	376.5
Abut 2	HP 250 x 85	1200	0	407.3	376.5 (1,2)	376.5

Note: Design Pile Tip Elevation is controlled by the following demands:
(1) Compression (2) Scour potential exists to Elevation 405.17 m

Caltrans Metric

ALL DIMENSIONS ARE IN METERS UNLESS OTHERWISE SHOWN

ORIGINAL SCALE IN MILLIMETERS FOR REDUCED PLANS 0 10 20 30 40 50 60 70 80 90 100

	BY	CHECKED
DESIGN	M. Schott	N. Nguyen
DETAILS	M. Tran	N. Nguyen
QUANTITIES	N. Nguyen	E. Ward

STATE OF CALIFORNIA
DEPARTMENT OF TRANSPORTATION

DIVISION OF ENGINEERING SERVICES
STRUCTURE DESIGN
DESIGN BRANCH 2

CU 01
EA 262001

BRIDGE NO. 10-0174K
KILOMETER POST R77.68

DISREGARD PRINTS BEARING EARLIER REVISION DATES

REVISION DATES 1-27-09 01-29-09 3-04-09

SHEET 2 OF 15

WILLITS BYPASS
UPP CREEK (SB OFF-RAMP)
DECK CONTOURS

FILE => 10-0174k_kddc01.dgn

STRUCTURES DESIGN DETAIL SHEET (METRIC) (REV.03-17-04)

USERNAME => s121614 DATE PLOTTED => 28-JAN-2012 TIME PLOTTED => 08:20

DIST	COUNTY	ROUTE	KILOMETER POST TOTAL PROJECT	SHEET No	TOTAL SHEETS
01	Men	101	R69.4/R78.9	885	939

Caltrans Metric

REGISTERED CIVIL ENGINEER 9-15-11 DATE

1-23-12
PLANS APPROVAL DATE

REGISTERED PROFESSIONAL ENGINEER M. Friedheim No. 57968 Exp. 6-30-12 CIVIL STATE OF CALIFORNIA

The State of California or its officers or agents shall not be responsible for the accuracy or completeness of electronic copies of this plan sheet.

CURVE DATA

No.	R	Δ	T	L
(A)	240.000	20°25'43"	43.245	85.571
(B)	1325.000	12°6'29"	140.525	280.004

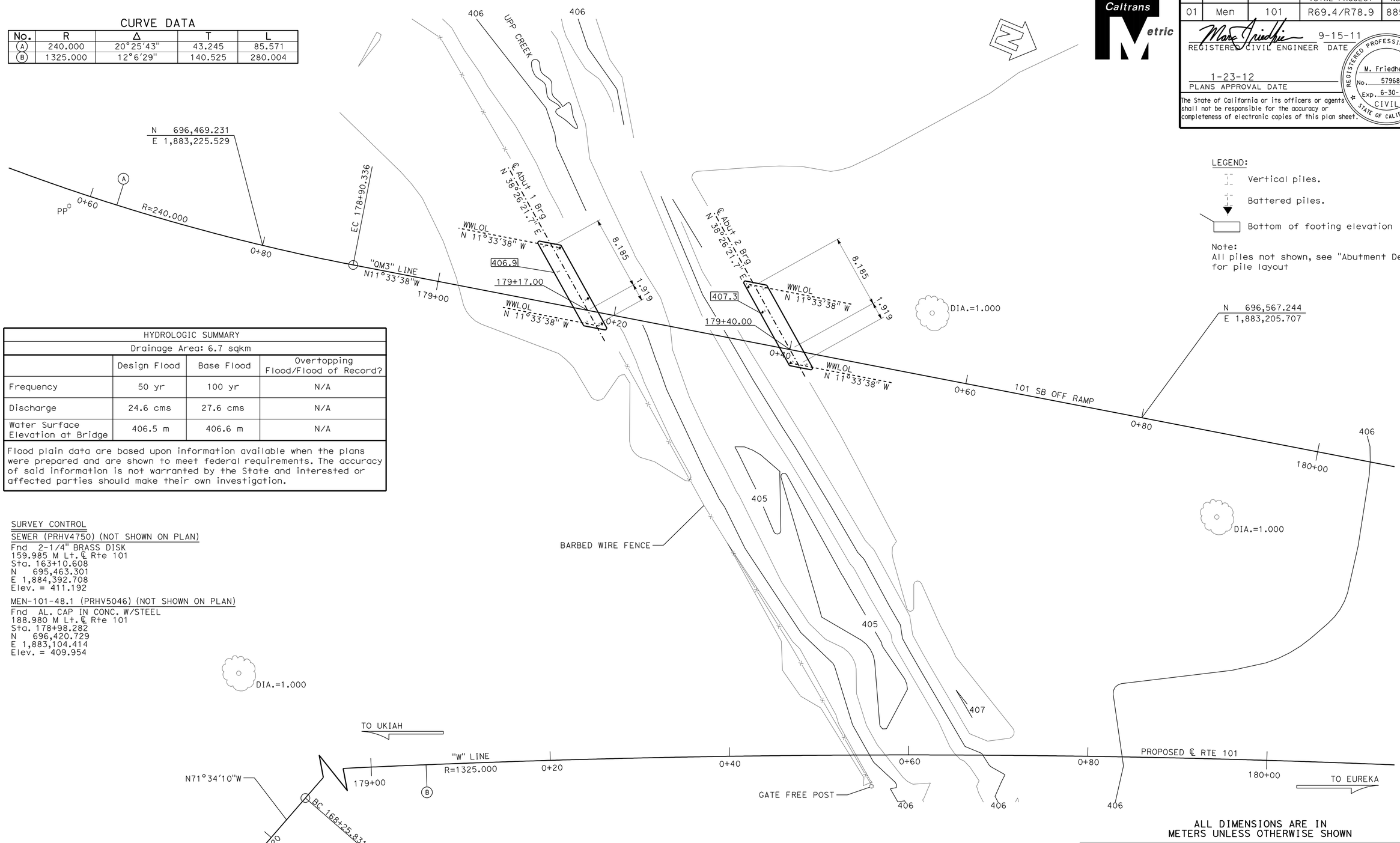

LEGEND:

Vertical piles.

Battered piles.

Bottom of footing elevation

Note:
All piles not shown, see "Abutment Details" for pile layout

HYDROLOGIC SUMMARY			
Drainage Area: 6.7 sqkm			
	Design Flood	Base Flood	Overtopping Flood/Flood of Record?
Frequency	50 yr	100 yr	N/A
Discharge	24.6 cms	27.6 cms	N/A
Water Surface Elevation at Bridge	406.5 m	406.6 m	N/A

Flood plain data are based upon information available when the plans were prepared and are shown to meet federal requirements. The accuracy of said information is not warranted by the State and interested or affected parties should make their own investigation.

SURVEY CONTROL

SEWER (PRHV4750) (NOT SHOWN ON PLAN)
Fnd 2-1/4" BRASS DISK
159.985 M Lt. ℄ Rte 101
Sta. 163+10.608
N 695,463.301
E 1,884,392.708
Elev. = 411.192

MEN-101-48.1 (PRHV5046) (NOT SHOWN ON PLAN)
Fnd AL. CAP IN CONC. W/STEEL
188.980 M Lt. ℄ Rte 101
Sta. 178+98.282
N 696,420.729
E 1,883,104.414
Elev. = 409.954

ALL DIMENSIONS ARE IN METERS UNLESS OTHERWISE SHOWN

WILLITS BYPASS
UPP CREEK (SB OFF RAMP)
FOUNDATION PLAN

PRELIMINARY INVESTIGATION SECTION

SCALE 1:200	VERT. DATUM NGVD29	PHOTOGRAMMETRY AS OF:		
	HORZ. DATUM NAD83 (1991.35)	SURVEYED	BY DISTRICT	CHECKED BY T.GILLETT 1/2009
ALIGNMENT TIES DIST.TRAVERSE SHEET		DRAFTED	BY J.MARTINEZ 1/2009	CHECKED BY T.ZOLNIKOVA 1/2009

DESIGN	BY M. Schott	CHECKED N. Nguyen
DETAILS	BY C. Figuerres	CHECKED N. Nguyen
QUANTITIES	BY N. Nguyen	CHECKED E. Ward

STATE OF CALIFORNIA
DEPARTMENT OF TRANSPORTATION

DIVISION OF ENGINEERING SERVICES
STRUCTURE DESIGN
DESIGN BRANCH 2

BRIDGE NO. 10-0174K
KILOMETER POST R77.68

STRUCTURES FOUNDATION PLAN SHEET (METRIC) (REV.10-27-05)

ORIGINAL SCALE IN MILLIMETERS FOR REDUCED PLANS 0 10 20 30 40 50 60 70 80 90 100

CU 01
EA 262001

DISREGARD PRINTS BEARING EARLIER REVISION DATES

REVISION DATES (PRELIMINARY STAGE ONLY) 01-26-09 03-09-09

SHEET 3 OF 15

FILE => 10-0174k_kefdp101.dgn

USERNAME => s121614 DATE PLOTTED => 28-JAN-2012 TIME PLOTTED => 08:20

DIST	COUNTY	ROUTE	KILOMETER POST TOTAL PROJECT	SHEET No	TOTAL SHEETS
01	Men	101	R69.4/R78.9	886	939

REGISTERED CIVIL ENGINEER 9-15-11 DATE

1-23-12
PLANS APPROVAL DATE

REGISTERED PROFESSIONAL ENGINEER M. Friedheim No. 57968 Exp. 06-30-12 CIVIL STATE OF CALIFORNIA

The State of California or its officers or agents shall not be responsible for the accuracy or completeness of electronic copies of this plan sheet.

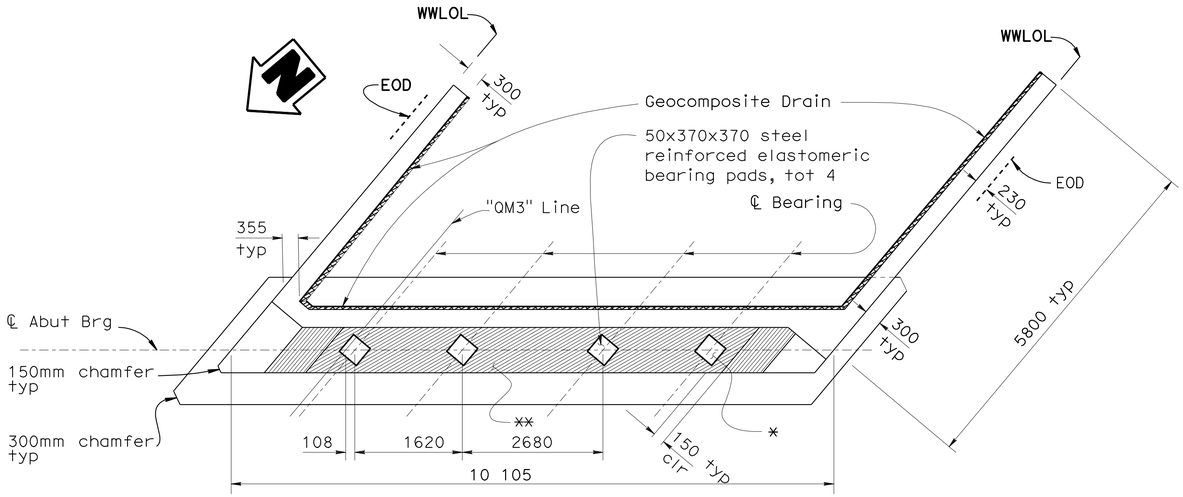

PLAN
1:50

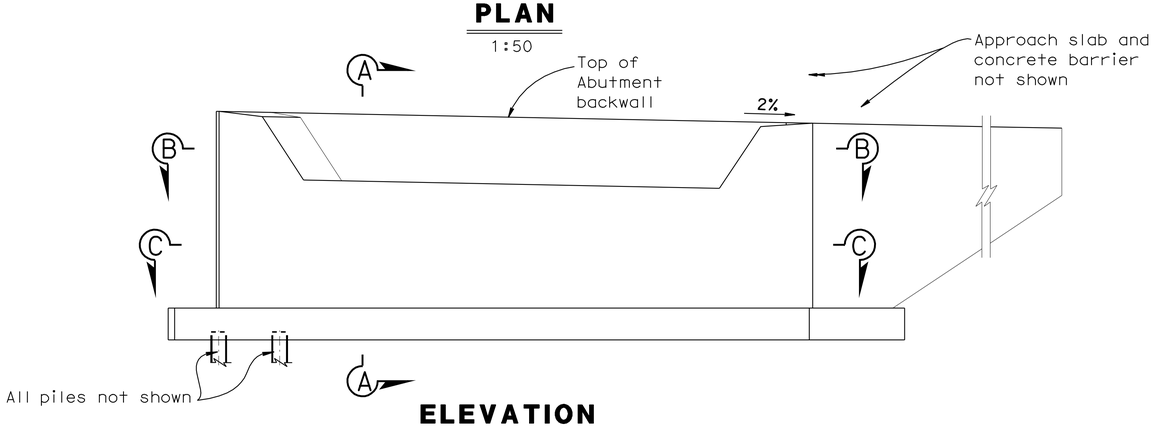

ELEVATION
1:50

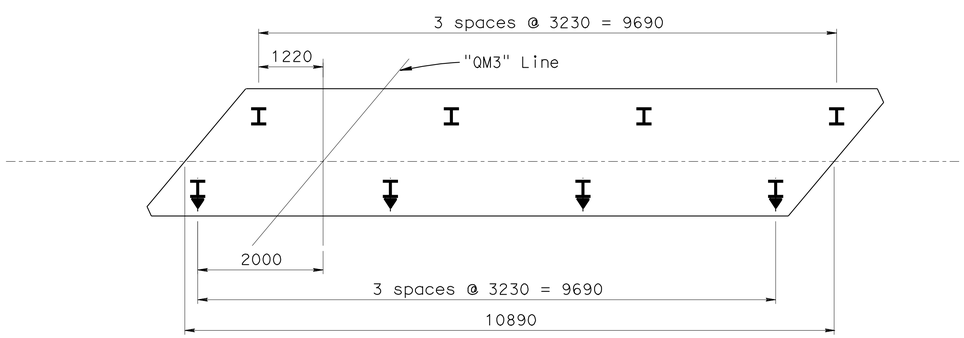

FOOTING PLAN
1:50

NOTES:

1. For pile data see "DECK CONTOURS" sheet
2. For sections B-B and C-C see "ABUTMENT DETAILS NO. 1" sheet
3. For Typical Wingwall Elevation see "ABUTMENT DETAILS NO. 2" Sheet
4. Abut 1 shown, Abut 2 similar

* See "Bearing Pad Detail" on "ABUTMENT DETAILS NO. 2" sheet

** Expanded Polystyrene same thickness as bearing pads

BO-13 / 13-1

I Denotes Vertical Pile

Denotes Battered Pile

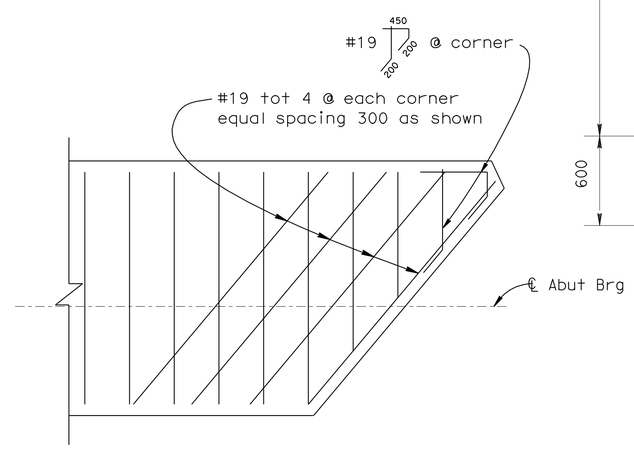

FOOTING CORNER REINFORCEMENT DETAILS
1:20

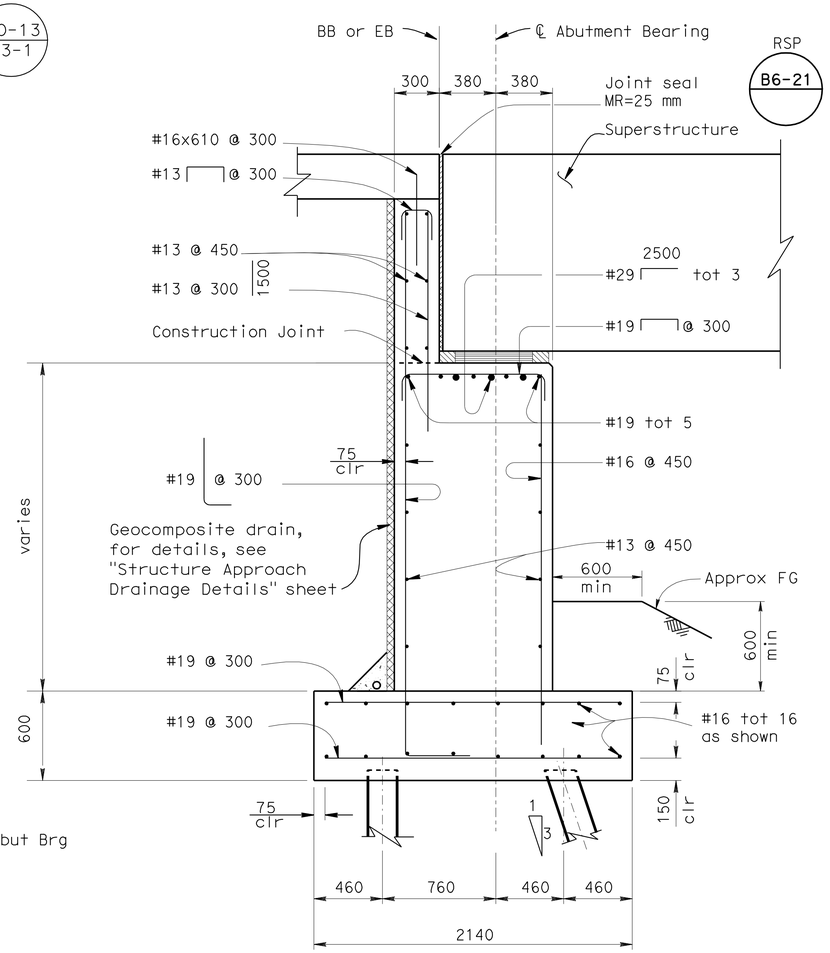

SECTION A-A
1:20

Caltrans Metric	DESIGN	BY M. Schott	CHECKED N. Nguyen	STATE OF CALIFORNIA DEPARTMENT OF TRANSPORTATION	DIVISION OF ENGINEERING SERVICES STRUCTURE DESIGN DESIGN BRANCH 2
	DETAILS	BY M. Tran	CHECKED N. Nguyen		
	QUANTITIES	BY N. Nguyen	CHECKED E. Ward		

BRIDGE NO. 10-0174K
KILOMETER POST R77.68

CU 01
EA 262001

ALL DIMENSIONS ARE IN MILLIMETERS UNLESS OTHERWISE SHOWN

ORIGINAL SCALE IN MILLIMETERS FOR REDUCED PLANS 0 10 20 30 40 50 60 70 80 90 100

DISREGARD PRINTS BEARING EARLIER REVISION DATES

REVISION DATES

SHEET 4 OF 15

WILLITS BYPASS
UPP CREEK (SB OFF-RAMP)
ABUTMENT LAYOUT

FILE => 10-0174k_kfaab101.dgn

STRUCTURES DESIGN DETAIL SHEET (METRIC) (REV.03-17-04)

USERNAME => s121614 DATE PLOTTED => 28-JAN-2012 TIME PLOTTED => 08:20

DIST	COUNTY	ROUTE	KILOMETER POST TOTAL PROJECT	SHEET No	TOTAL SHEETS
01	Men	101	R69.4/R78.9	887	939

REGISTERED CIVIL ENGINEER 9-15-11 DATE

1-23-12
PLANS APPROVAL DATE

REGISTERED PROFESSIONAL ENGINEER M. Friedheim No. 57968 Exp. 06-30-12 CIVIL STATE OF CALIFORNIA

The State of California or its officers or agents shall not be responsible for the accuracy or completeness of electronic copies of this plan sheet.

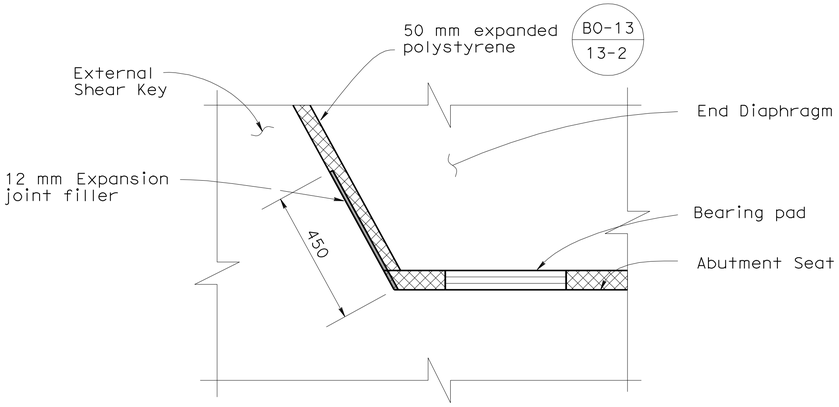

DETAIL X

1:10

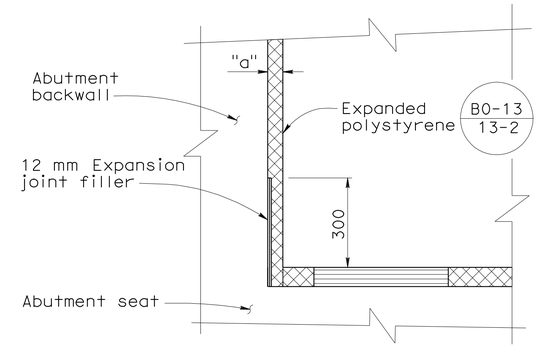

ELEVATION VIEW
BACKWALL BASE DETAIL

NO SCALE

Notes:
1. Abutment 1 shown Abutment 2 similar
2. For bearing pad details, see "Abutment Details No. 2" sheet
3. For location of sections B-B and C-C, see "ABUTMENT LAYOUT" sheet
4. For "a" dimension see RSP B6-21

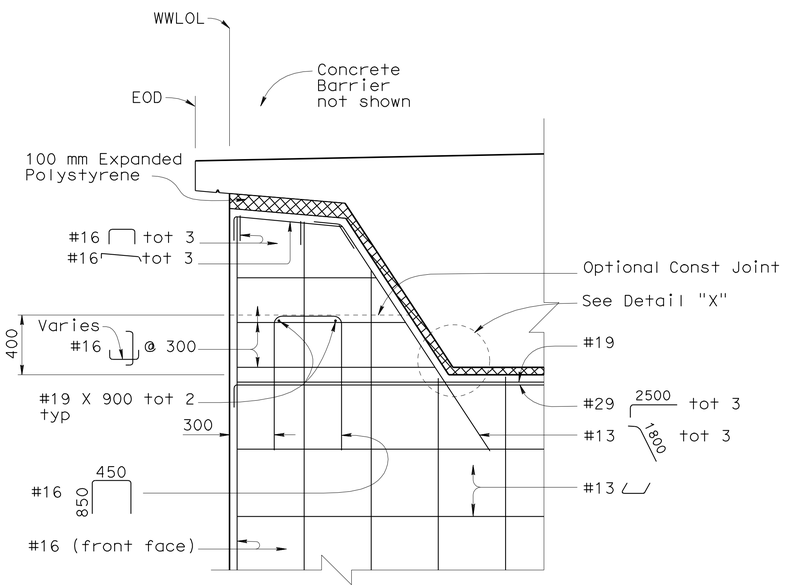

EXTERNAL SHEAR KEY

NO SCALE

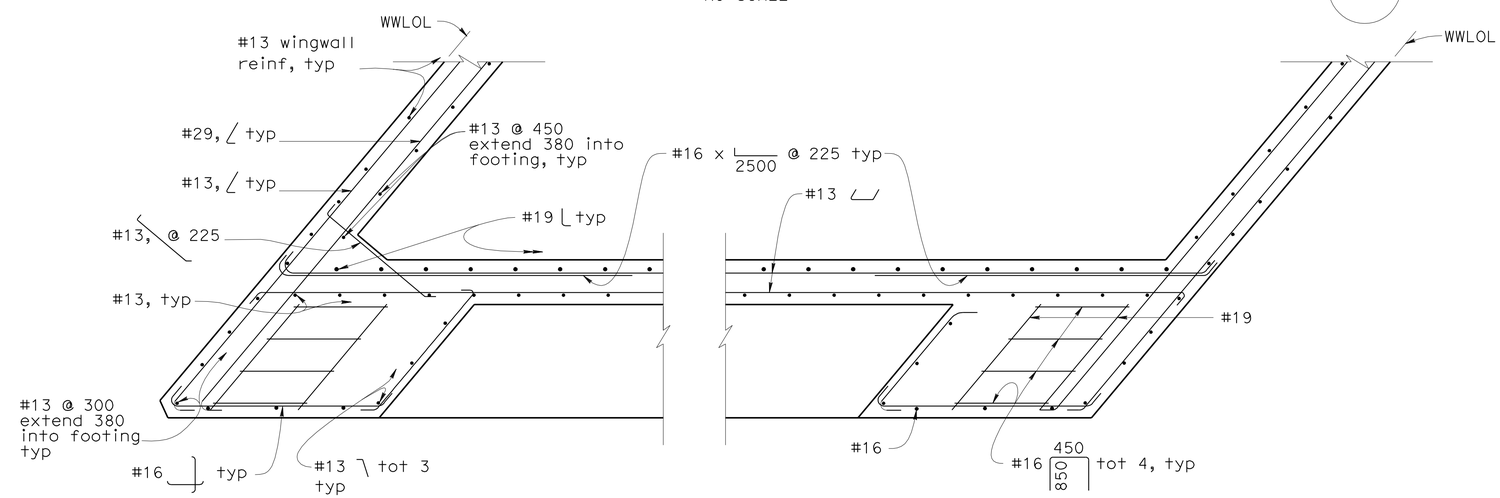

SECTION B-B

1:20

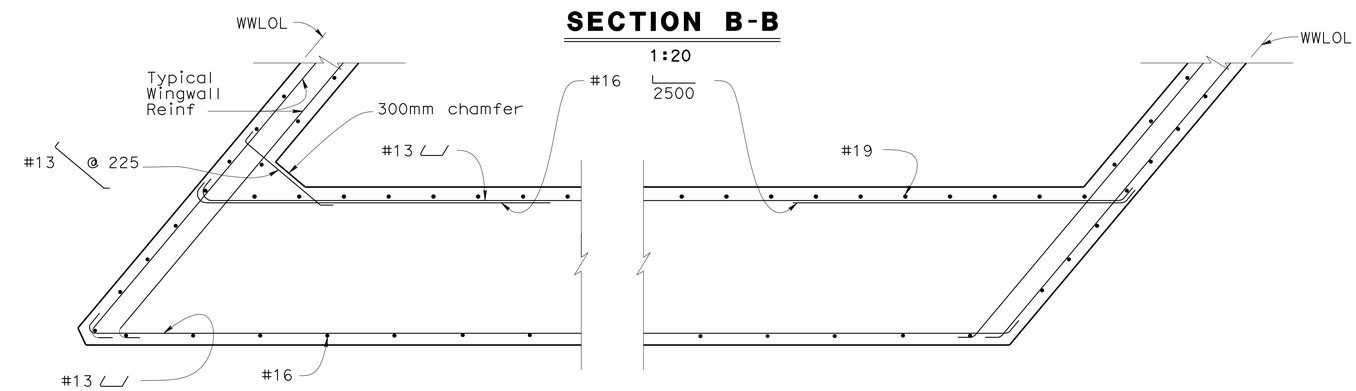

SECTION C-C

1:20

DESIGN	BY M. Schott	CHECKED N. Nguyen	
DETAILS	BY M. Tran	CHECKED N. Nguyen	
QUANTITIES	BY N. Nguyen	CHECKED E. Ward	

STATE OF CALIFORNIA
DEPARTMENT OF TRANSPORTATION

DIVISION OF ENGINEERING SERVICES
STRUCTURE DESIGN
DESIGN BRANCH 2

BRIDGE NO. 10-0174K
KILOMETER POST R77.68

WILLITS BYPASS
UPP CREEK (SB OFF-RAMP)
ABUTMENT DETAILS NO. 1

Caltrans Metric

ALL DIMENSIONS ARE IN MILLIMETERS UNLESS OTHERWISE SHOWN

ORIGINAL SCALE IN MILLIMETERS FOR REDUCED PLANS 0 10 20 30 40 50 60 70 80 90 100

CU 01
EA 262001

DISREGARD PRINTS BEARING EARLIER REVISION DATES

REVISION DATES

SHEET 5 OF 15

FILE => 10-0174k_kfabdt01.dgn

STRUCTURES DESIGN DETAIL SHEET (METRIC) (REV.03-17-04)

USERNAME => s612614 DATE PLOTTED => 28-JAN-2012 TIME PLOTTED => 08:21

DIST	COUNTY	ROUTE	KILOMETER POST TOTAL PROJECT	SHEET No	TOTAL SHEETS
01	Men	101	R69.4/R78.9	888	939

REGISTERED CIVIL ENGINEER 9-15-11 DATE

1-23-12
PLANS APPROVAL DATE

REGISTERED PROFESSIONAL ENGINEER M. Friedheim No. 57968 Exp. 06-30-12 CIVIL STATE OF CALIFORNIA

The State of California or its officers or agents shall not be responsible for the accuracy or completeness of electronic copies of this plan sheet.

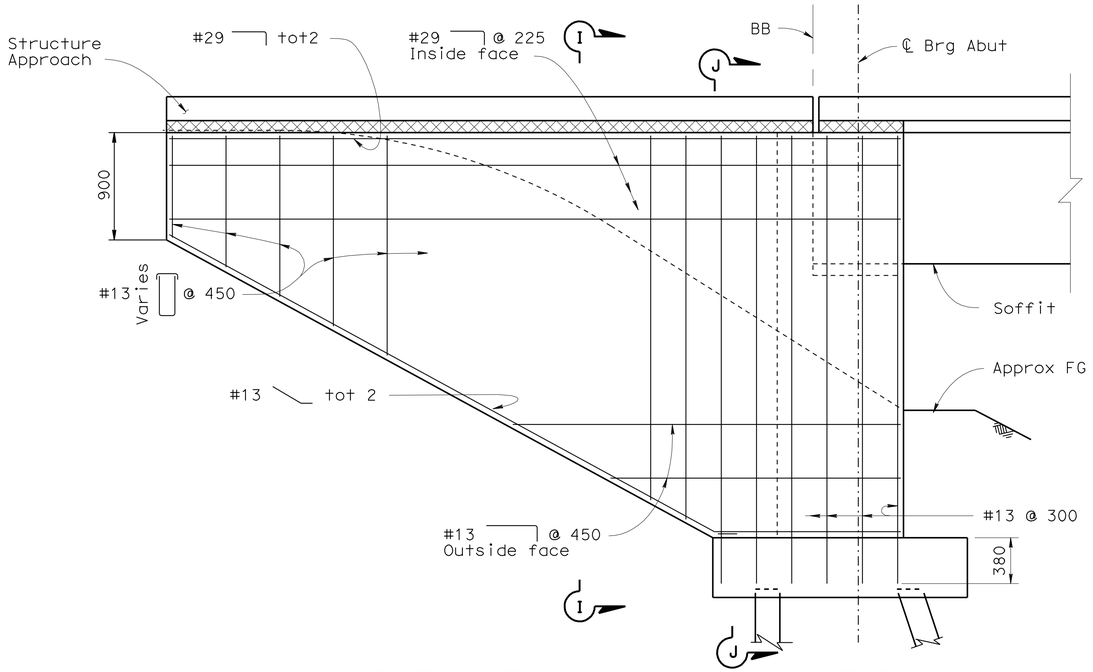

ABUTMENT WINGWALL ELEVATION

1:25

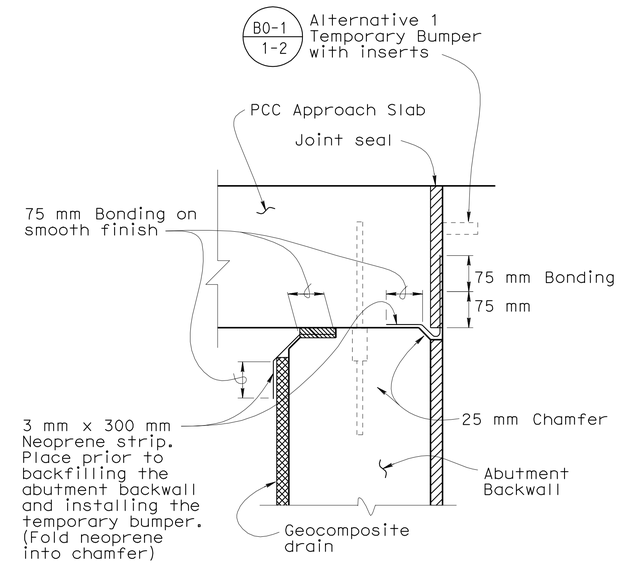

JOINT PROTECTION DETAIL

No Scale

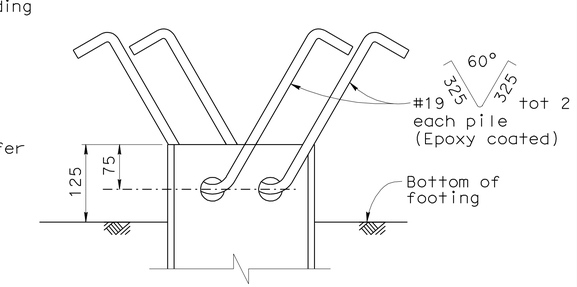

ELEVATION

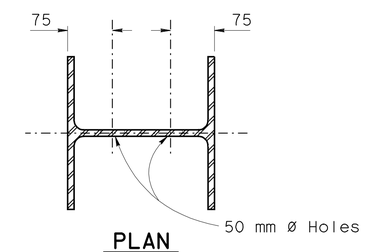

PLAN

STEEL PILE ANCHOR DETAIL

No Scale

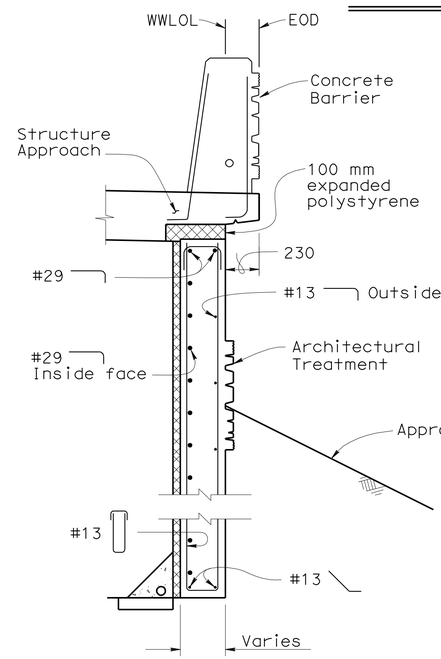

SECTION I-I

1:20

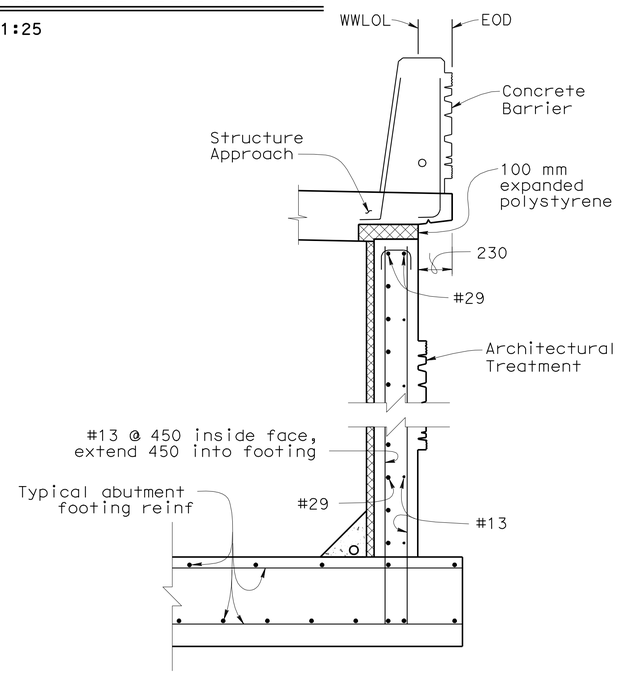

SECTION J-J

1:20

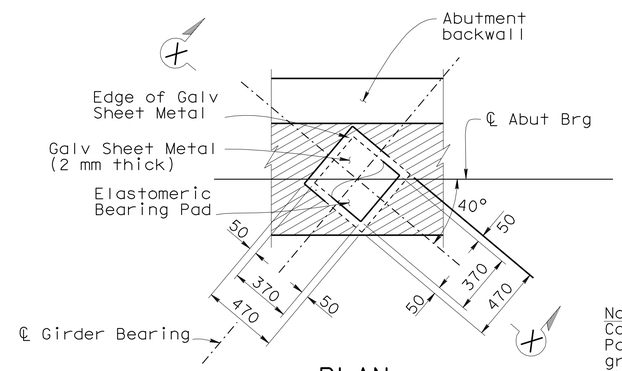

PLAN

Note:
Coat top of Bearing Pad with silicone grease prior to placing sheet metal.

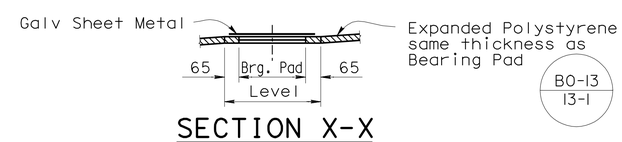

SECTION X-X

BEARING PAD DETAIL

No Scale
Details typical at all bearing pads

Caltrans Metric

	BY	CHECKED
DESIGN	M. Schott	N. Nguyen
DETAILS	M. Tran	N. Nguyen
QUANTITIES	N. Nguyen	E. Ward

STATE OF CALIFORNIA
DEPARTMENT OF TRANSPORTATION

DIVISION OF ENGINEERING SERVICES
STRUCTURE DESIGN
DESIGN BRANCH 2

BRIDGE NO. 10-0174K
KILOMETER POST R77.68

WILLITS BYPASS
UPP CREEK (SB OFF-RAMP)
ABUTMENT DETAILS NO. 2

ALL DIMENSIONS ARE IN MILLIMETERS UNLESS OTHERWISE SHOWN

ORIGINAL SCALE IN MILLIMETERS FOR REDUCED PLANS 0 10 20 30 40 50 60 70 80 90 100

CU 01
EA 262001

DISREGARD PRINTS BEARING EARLIER REVISION DATES 1-27-09

REVISION DATES

SHEET 6 OF 15

FILE => 10-0174k_kfabdt02.dgn

STRUCTURES DESIGN DETAIL SHEET (METRIC) (REV.03-17-04)

USERNAME => s121614 DATE PLOTTED => 28-JAN-2012 TIME PLOTTED => 08:21

DIST	COUNTY	ROUTE	KILOMETER POST TOTAL PROJECT	SHEET No	TOTAL SHEETS
01	Men	101	R69.4/R78.9	889	939

REGISTERED CIVIL ENGINEER 9-15-11 DATE

1-23-12
PLANS APPROVAL DATE

REGISTERED PROFESSIONAL ENGINEER M. Friedheim No. 57968 Exp. 6-30-12 CIVIL STATE OF CALIFORNIA

The State of California or its officers or agents shall not be responsible for the accuracy or completeness of electronic copies of this plan sheet.

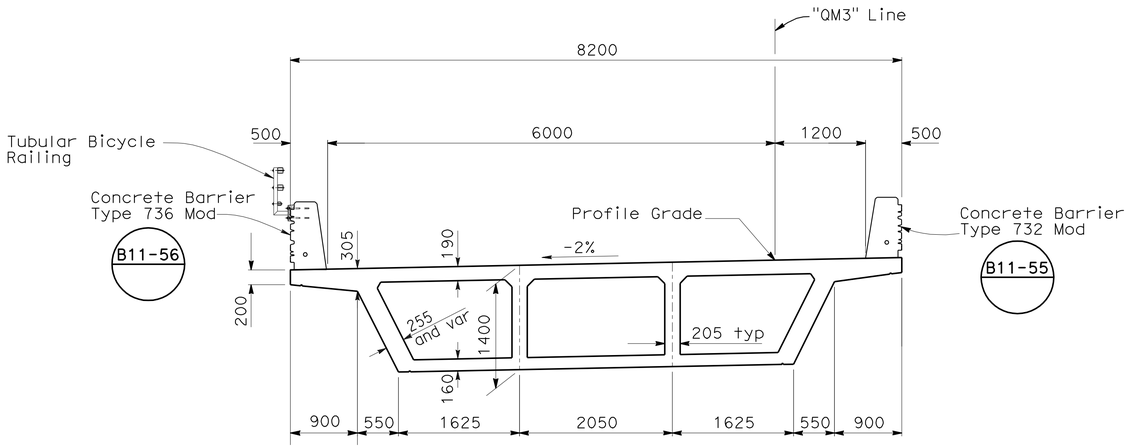

TYPICAL SECTION

1:40

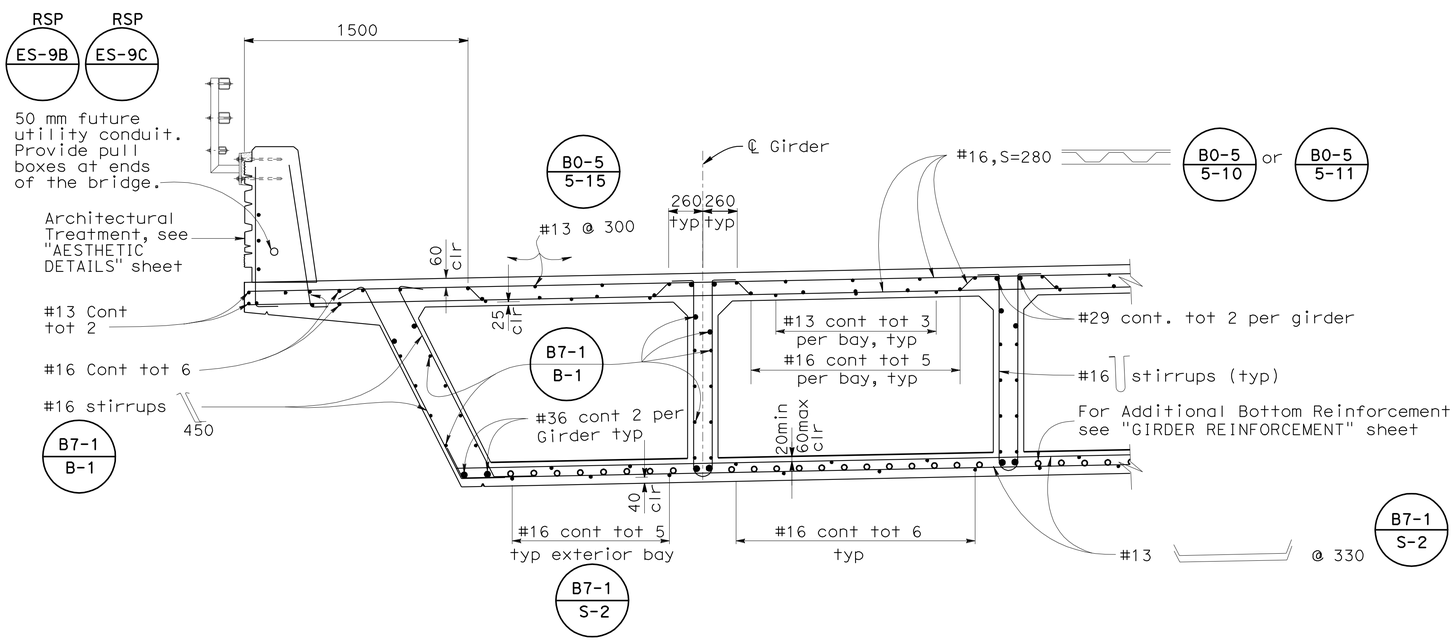

PART TYPICAL SECTION

1:20

B0-5 B7-1 B11-55 B11-56

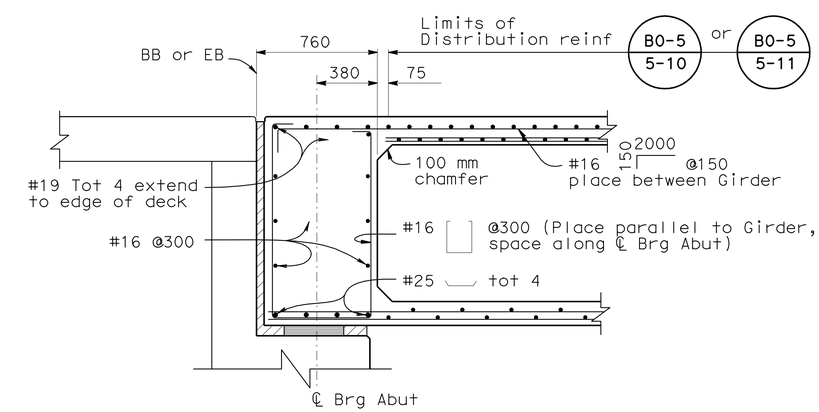

END DIAPHRAGM SECTION

1:20

Caltrans Metric

	BY	CHECKED
DESIGN	M. Schott	N. Nguyen
DETAILS	M. Tran	N. Nguyen
QUANTITIES	N. Nguyen	E. Ward

STATE OF CALIFORNIA
DEPARTMENT OF TRANSPORTATION

DIVISION OF ENGINEERING SERVICES
STRUCTURE DESIGN
DESIGN BRANCH 2

BRIDGE NO. 10-0174K
KILOMETER POST R77.68

WILLITS BYPASS
UPP CREEK (SB OFF-RAMP)
TYPICAL SECTION

ALL DIMENSIONS ARE IN MILLIMETERS UNLESS OTHERWISE SHOWN

ORIGINAL SCALE IN MILLIMETERS FOR REDUCED PLANS 0 10 20 30 40 50 60 70 80 90 100

CU 01
EA 262001

DISREGARD PRINTS BEARING EARLIER REVISION DATES 1-27-09 7-14-09

REVISION DATES

SHEET 7 OF 15

FILE => 10-0174k_kktsd01.dgn

STRUCTURES DESIGN DETAIL SHEET (METRIC) (REV.03-17-04)

USERNAME => s12161d4 DATE PLOTTED => 28-JAN-2012 TIME PLOTTED => 08:21

DIST	COUNTY	ROUTE	KILOMETER POST TOTAL PROJECT	SHEET No	TOTAL SHEETS
01	Men	101	R69.4/R78.9	890	939

REGISTERED CIVIL ENGINEER 9-15-11 DATE

1-23-12
PLANS APPROVAL DATE

REGISTERED PROFESSIONAL ENGINEER M. Friedheim No. 57968 Exp. 6-30-12 CIVIL STATE OF CALIFORNIA

The State of California or its officers or agents shall not be responsible for the accuracy or completeness of electronic copies of this plan sheet.

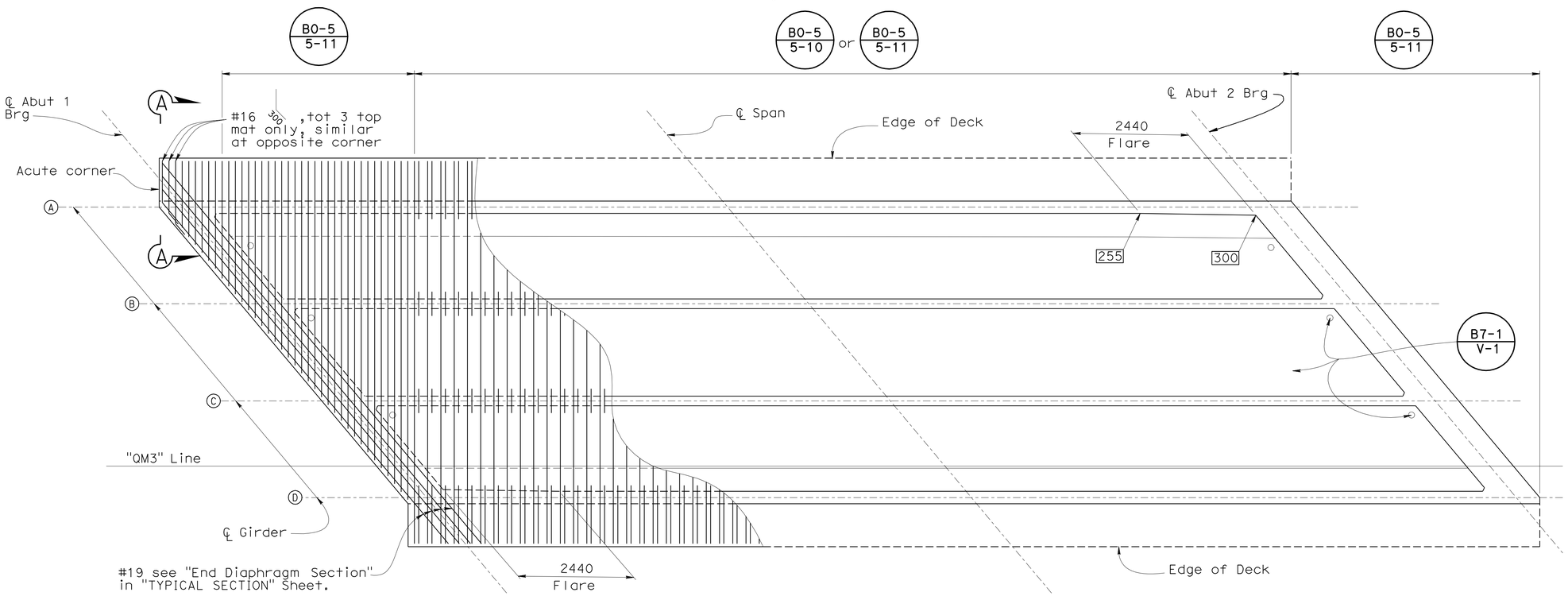

GIRDER LAYOUT

1:50

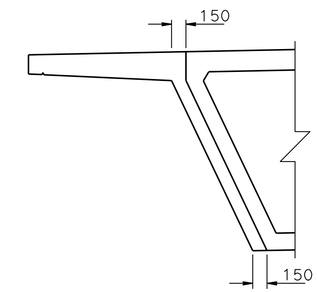

SECTION A-A

No Scale

(Typical at Acute Abutment corners)

Notes:

1. For END DIAPHRAGM SECTION, see "TYPICAL SECTION" Sheet

Girder stem width

Girder Label

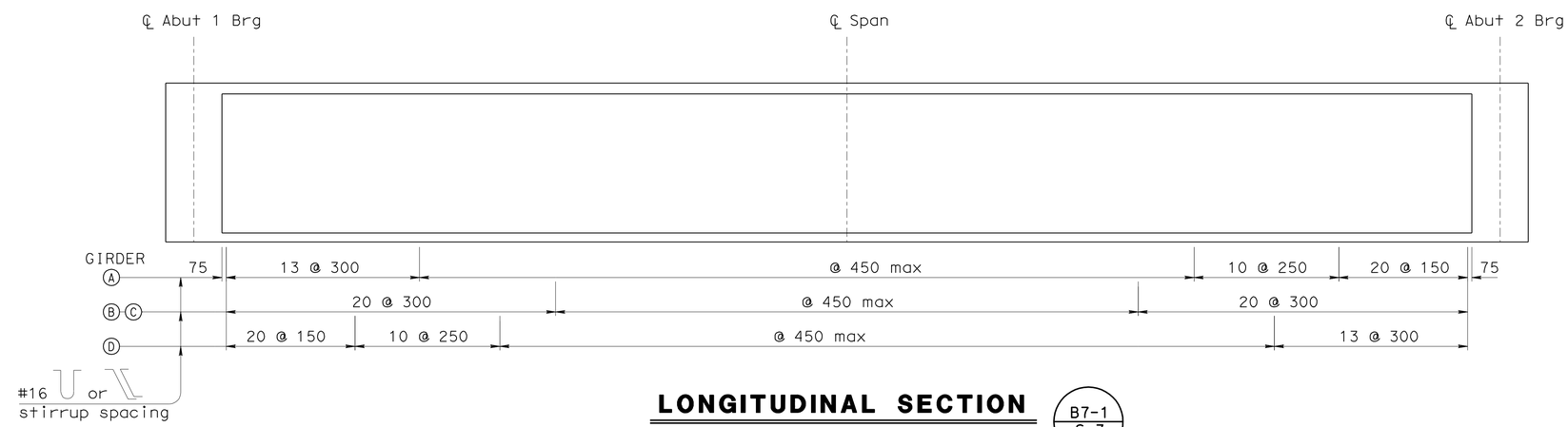

LONGITUDINAL SECTION

No Scale

B7-1 / S-3

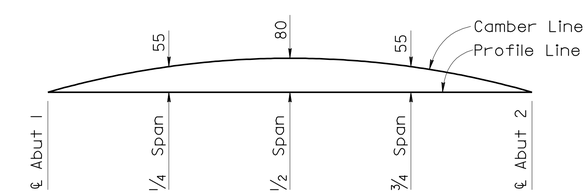

CAMBER DIAGRAM

No Scale

(Does not include allowance for falsework settlement)

DESIGN	BY M.Schott	CHECKED N. Nguyen	
DETAILS	BY M. Tran	CHECKED N. Nguyen	
QUANTITIES	BY N. Nguyen	CHECKED E. Ward	

STATE OF CALIFORNIA
DEPARTMENT OF TRANSPORTATION

DIVISION OF ENGINEERING SERVICES
STRUCTURE DESIGN
DESIGN BRANCH 2

BRIDGE NO. 10-0174K
KILOMETER POST R77.68

WILLITS BYPASS
UPP CREEK (SB OFF-RAMP)
GIRDER LAYOUT

ALL DIMENSIONS ARE IN MILLIMETERS UNLESS OTHERWISE SHOWN

ORIGINAL SCALE IN MILLIMETERS FOR REDUCED PLANS 0 10 20 30 40 50 60 70 80 90 100

CU 01
EA 262001

DISREGARD PRINTS BEARING EARLIER REVISION DATES 03-09-09

REVISION DATES

SHEET 8 OF 15

FILE => 10-0174k_klaglo01.dgn

STRUCTURES DESIGN DETAIL SHEET (METRIC) (REV.03-17-04)

USERNAME => s121614 DATE PLOTTED => 28-JAN-2012 TIME PLOTTED => 08:21

DIST	COUNTY	ROUTE	KILOMETER POST TOTAL PROJECT	SHEET No	TOTAL SHEETS
01	Men	101	R69.4/R78.9	891	939

REGISTERED CIVIL ENGINEER 9-15-11 DATE

1-23-12
PLANS APPROVAL DATE

REGISTERED PROFESSIONAL ENGINEER M. Friedheim No. 57968 Exp. 06-30-12 CIVIL STATE OF CALIFORNIA

The State of California or its officers or agents shall not be responsible for the accuracy or completeness of electronic copies of this plan sheet.

Notes:

1. No splices are allowed in cut-off bars. Splices in continuous bars shall be service level splices and shall not be located within 7.0 m of each side of ℄ Span.

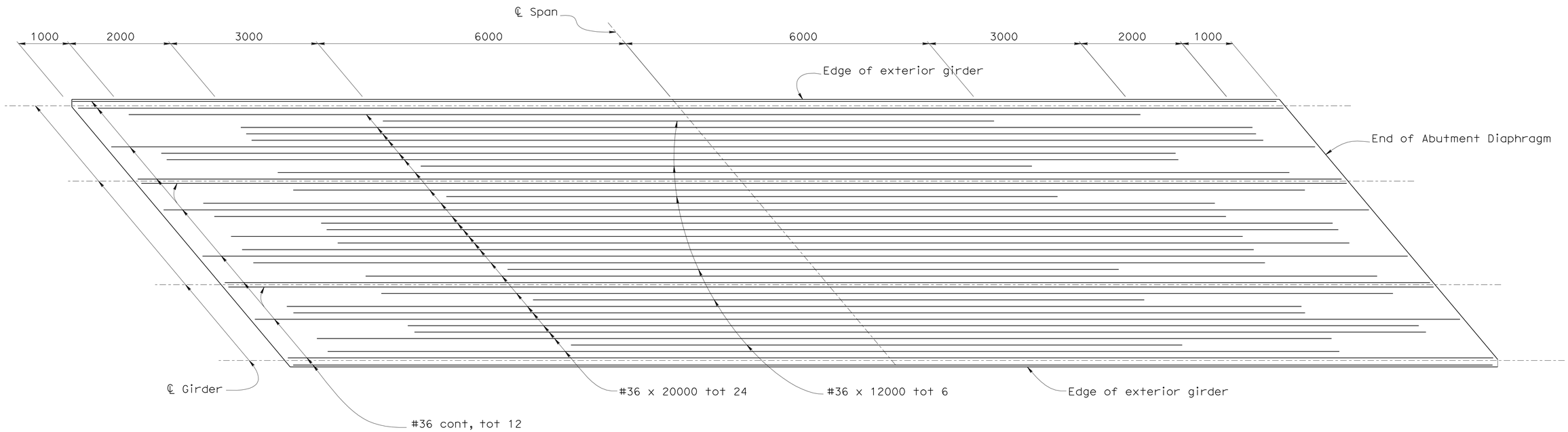

BOTTOM GIRDER REINFORCEMENT

1:40

DESIGN	BY M. Schott	CHECKED N. Nguyen	
DETAILS	BY M. Tran	CHECKED N. Nguyen	
QUANTITIES	BY N. Nguyen	CHECKED E. Ward	

STATE OF CALIFORNIA
DEPARTMENT OF TRANSPORTATION

DIVISION OF ENGINEERING SERVICES
STRUCTURE DESIGN
DESIGN BRANCH 2

BRIDGE NO. 10-0174K
KILOMETER POST R77.68

WILLITS BYPASS
UPP CREEK (SB OFF-RAMP)
GIRDER REINFORCEMENT

Caltrans Metric

ALL DIMENSIONS ARE IN MILLIMETERS UNLESS OTHERWISE SHOWN

ORIGINAL SCALE IN MILLIMETERS FOR REDUCED PLANS 0 10 20 30 40 50 60 70 80 90 100

CU 01
EA 262001

DISREGARD PRINTS BEARING EARLIER REVISION DATES

REVISION DATES: 03-09-09

SHEET 9 OF 15

FILE => 10-0174k_klgdt01.dgn

STRUCTURES DESIGN DETAIL SHEET (METRIC) (REV.03-17-04)

USERNAME => s121614 DATE PLOTTED => 28-JAN-2012 TIME PLOTTED => 08:21

DIST	COUNTY	ROUTE	KILOMETER POST TOTAL PROJECT	SHEET No	TOTAL SHEETS
01	Men	101	R69.4/R78.9	892	939

REGISTERED CIVIL ENGINEER 9-15-11 DATE

1-23-12
PLANS APPROVAL DATE

REGISTERED PROFESSIONAL ENGINEER M. Friedheim No. 57968 Exp. 6-30-12 CIVIL STATE OF CALIFORNIA

The State of California or its officers or agents shall not be responsible for the accuracy or completeness of electronic copies of this plan sheet.

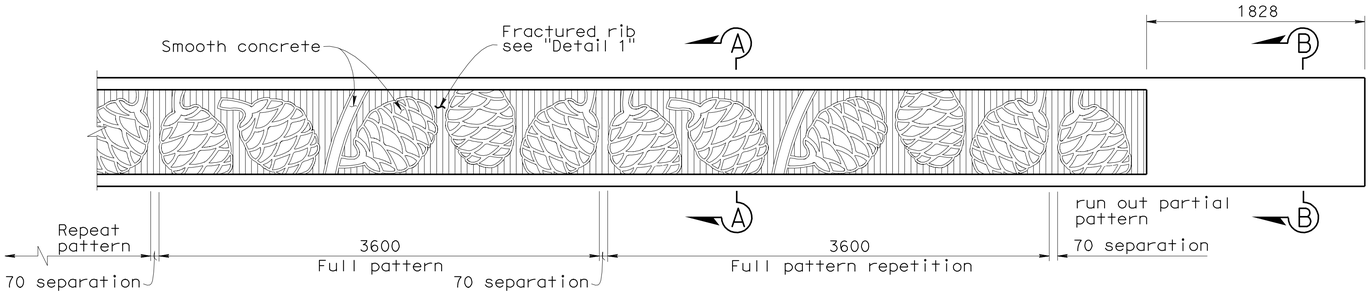

TYPE 736 BARRIER PARTIAL ELEVATION

1:25

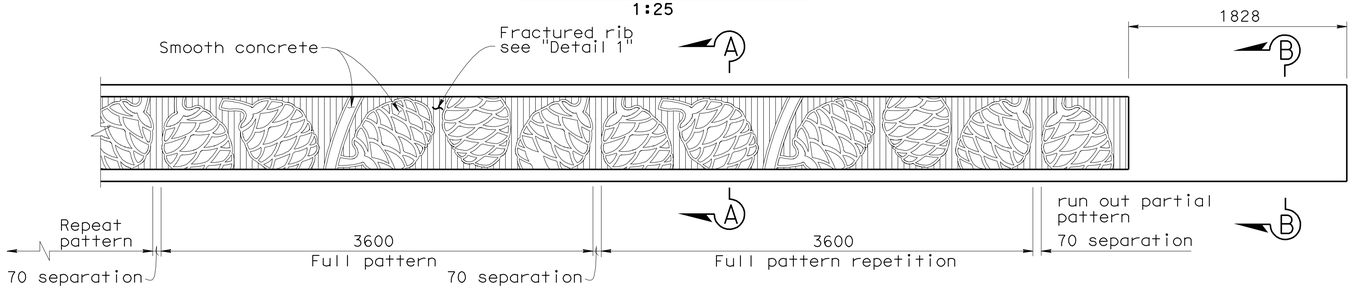

TYPE 732 BARRIER PARTIAL ELEVATION

1:25

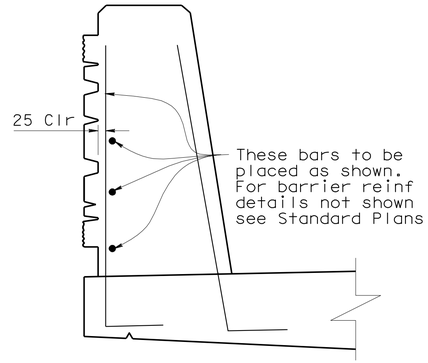

BARRIER REINFORCEMENT MODIFICATION

1:10

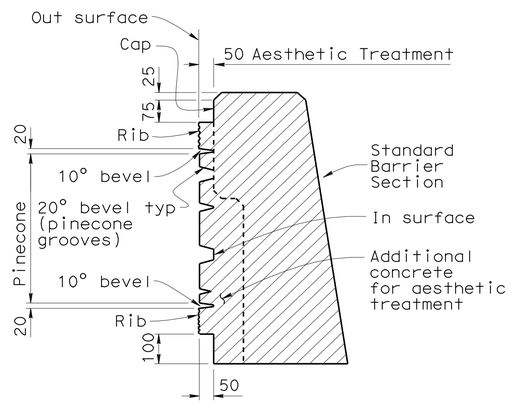

SECTION A-A

1:10

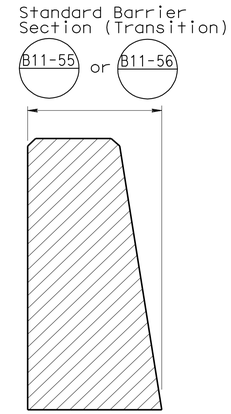

SECTION B-B

1:10

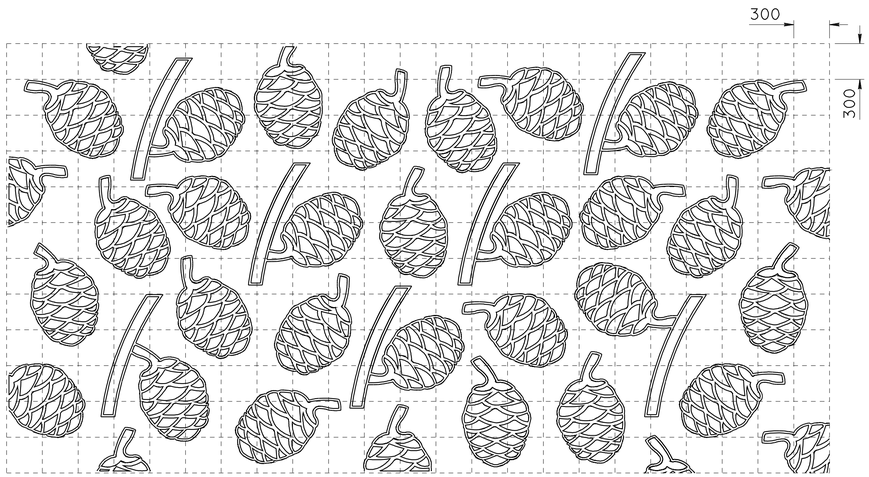

300 mm grid for reference only

RANDOM PINECONE PATTERN FOR WING WALLS

1:25

NOTE: Place random pinecone pattern on Fractured Rib Background
Fractured rib to be at same angle/alignment as abutment wall.
Relief similar to Barrier Section A-A

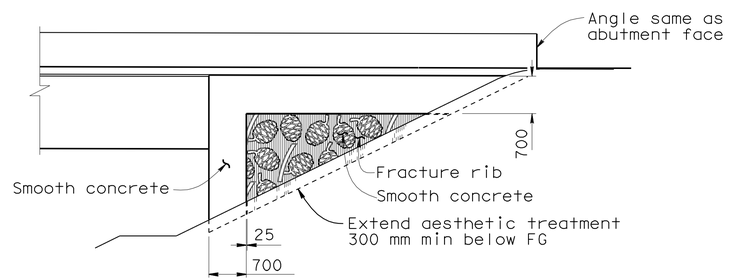

TYPICAL WINGWALL AESTHETIC TREATMENT

DETAIL D

1:80

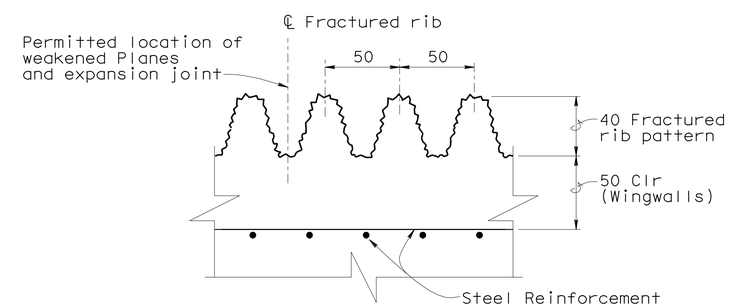

TYPICAL FRACTURED RIB TEXTURE

DETAIL 1

1:2

Caltrans Metric

	BY	CHECKED
DESIGN	V. Moore	M. Friedheim
DETAILS	C. Figuerres	M. Friedheim
QUANTITIES	N. Nguyen	E. Ward

ALL DIMENSIONS ARE IN MILLIMETERS UNLESS OTHERWISE SHOWN

ORIGINAL SCALE IN MILLIMETERS FOR REDUCED PLANS 0 10 20 30 40 50 60 70 80 90 100

STATE OF CALIFORNIA DEPARTMENT OF TRANSPORTATION

DIVISION OF ENGINEERING SERVICES STRUCTURE DESIGN
DESIGN BRANCH 2

CU 01
EA 262001

BRIDGE NO. 10-0174K
KILOMETER POST R77.68

DISREGARD PRINTS BEARING EARLIER REVISION DATES

REVISION DATES: 8-15-08, 1-27-09

SHEET 10 OF 15

WILLITS BYPASS
UPP CREEK (SB OFF-RAMP)
AESTHETIC DETAILS

FILE => 10-0174k_kmradet1.dgn

STRUCTURES DESIGN DETAIL SHEET (METRIC) (REV.03-17-04)

USERNAME => s121614 DATE PLOTTED => 28-JAN-2012 TIME PLOTTED => 08:21

DIST.	COUNTY	ROUTE	KILOMETER POST TOTAL PROJECT	SHEET NO.	TOTAL SHEETS
01	Men	101	R69.4/R78.9	893	939

Caltrans Metric

REGISTERED ENGINEER - CIVIL 9-15-11

1-23-12
PLANS APPROVAL DATE

REGISTERED PROFESSIONAL ENGINEER M. Friedheim No. 57968 Exp. 6-30-12 CIVIL STATE OF CALIFORNIA

The State of California or its officers or agents shall not be responsible for the accuracy or completeness of electronic copies of this plan sheet.

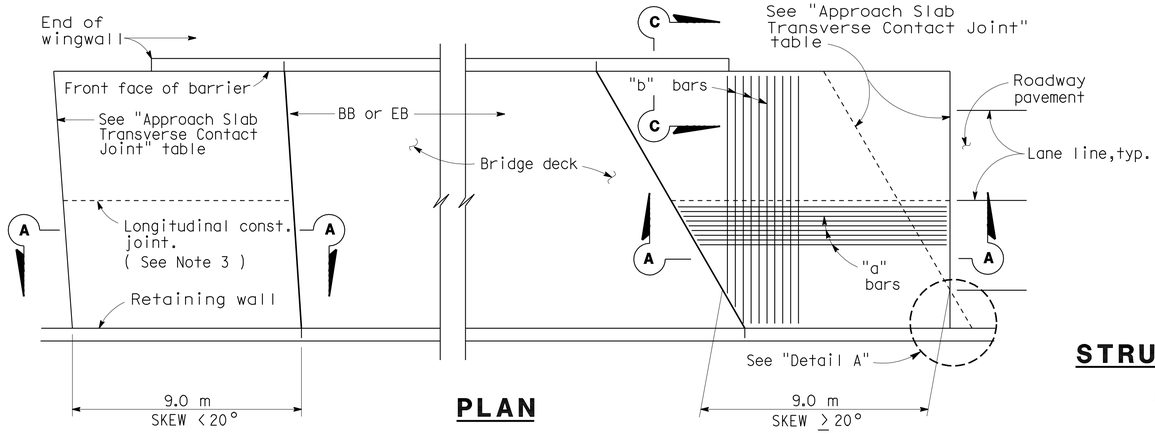

PLAN

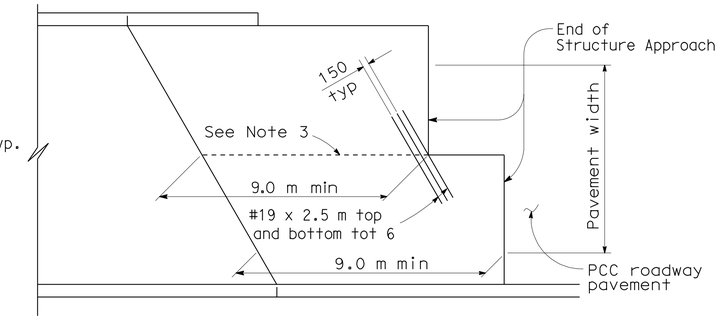

STRUCTURE APPROACH - END STAGGER DETAIL

APPROACH SLAB TRANSVERSE CONTACT JOINT		
APPROACH SKEW	WITH AC ROADWAY PAVEMENT	WITH PCC ROADWAY PAVEMENT
< 20°	Parallel to face of paving notch	Parallel to face of paving notch
20°- 45°	Parallel to face of P N use (Detail A)	Stagger lines 7.2 m to 10.8 m apart.
> 45°	Parallel to face of P N use (Detail A)	Stagger at each lane line.

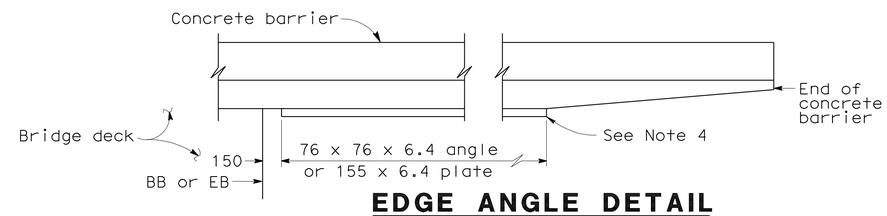

EDGE ANGLE DETAIL

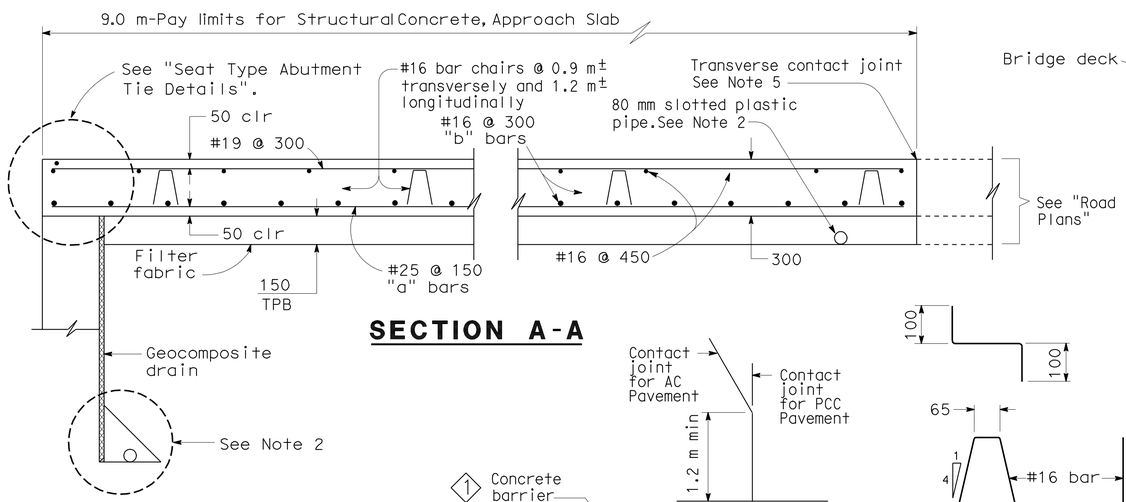

SECTION A-A

DETAIL A

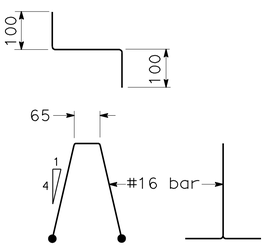

BAR CHAIR DETAIL

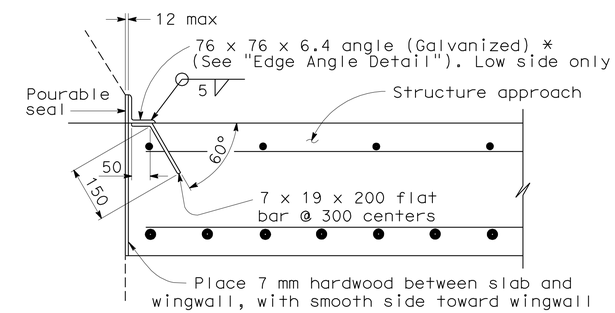

*(TO BE USED WITH TYPE 25 OR TYPE 27 CONCRETE BARRIER)

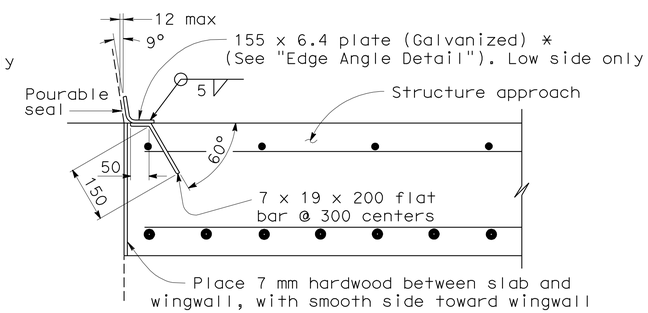

*(TO BE USED WITH TYPE 732 OR TYPE 736 CONCRETE BARRIER)

DETAIL B

NOTES:

1. For details not shown, see Structure Plans. For MR ≤ 50 mm, adjust bar reinforcement to clear a sawcut for sealed joint, when required.
2. For drainage details, see "Structure Approach Drainage Details" sheet.
3. Longitudinal construction joints, when permitted by the Engineer, shall be located on lane lines.
4. End angle or plate at beginning of barrier transition, end of wingwall or end of structure approach as applicable.
5. For transverse contact joint with new PCC paving, refer to Standard Plan P30.
6. At the contractor's option, approach slab transverse reinforcement may be placed parallel to paving notch. Spacing of transverse reinforcement is measured along ℄ roadway.

Remove all polystyrene.

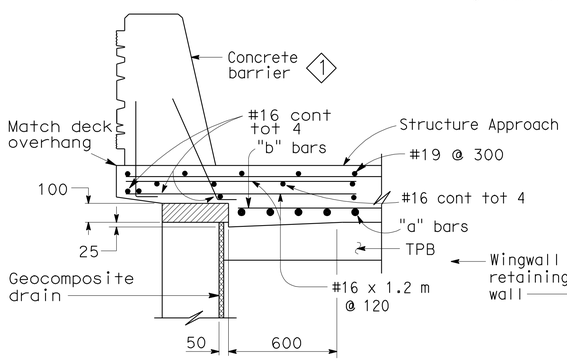

TYPE E-1

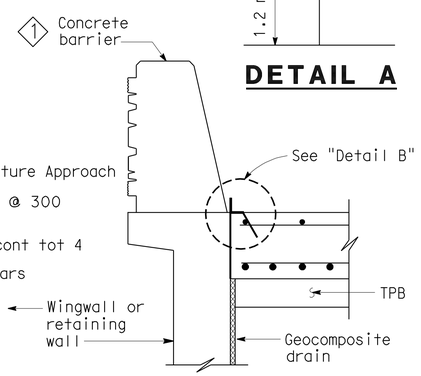

TYPE E-2

SECTION C-C

(Type E-1 to be used, unless otherwise shown on plans)

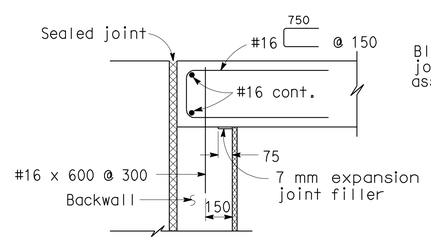

MR ≤ 50 mm

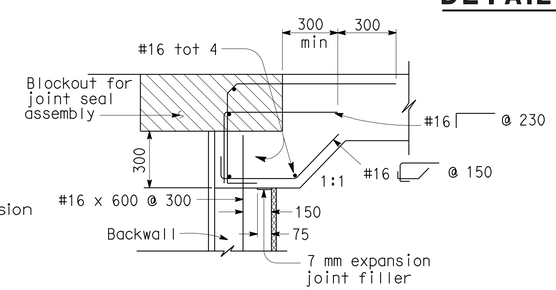

MR > 50 mm

SEAT TYPE ABUTMENT TIE DETAILS (SEE NOTE 1)

SPECIAL DETAILS
NO SCALE
ALL DIMENSIONS ARE IN MILLIMETERS UNLESS OTHERWISE SHOWN

STANDARD DRAWING				
RELEASE DATE REVISED	DESIGN	BY M. TRAFFALIS	CHECKED E. THORKILDSEN	RELEASED BY
FILE NO. xs3-120	DETAILS	BY R. YEE	CHECKED E. THORKILDSEN	OFFICE CHIEF
	SUBMITTED	BY M. HA	DRAWING DATE 4/98	

1 Modified barrier

STATE OF CALIFORNIA
DEPARTMENT OF TRANSPORTATION

DIVISION OF ENGINEERING SERVICES
STRUCTURE DESIGN
DESIGN BRANCH 2

BRIDGE NO. 10-0174K
KILOMETER POST R77.68

WILLITS BYPASS

UPP CREEK (SB OFF-RAMP)

STRUCTURE APPROACH TYPE N(9S)

DS OSD 2147A (METRIC) (REV. 2/25/97)

ORIGINAL SCALE IN MILLIMETERS FOR REDUCED PLANS 0 10 20 30 40 50 60 70 80 90 100

CU 01
EA 262001

DISREGARD PRINTS BEARING EARLIER REVISION DATES

REVISION DATES (PRELIMINARY STAGE ONLY) 8-13-08 1-27-09

SHEET 11 OF 15

USERNAME => s121614

10-0174k_kxssatn9s.dgn

DATE PLOTTED => 28-JAN-2012 TIME PLOTTED => 08:22

DIST.	COUNTY	ROUTE	KILOMETER POST TOTAL PROJECT	SHEET NO.	TOTAL SHEETS
01	Men	101	R69.4/R78.9	894	939

Caltrans Metric

REGISTERED ENGINEER - CIVIL 9-15-11

1-23-12
PLANS APPROVAL DATE

REGISTERED PROFESSIONAL ENGINEER M. Friedheim No. 57968 Exp. 6-30-12 CIVIL STATE OF CALIFORNIA

The State of California or its officers or agents shall not be responsible for the accuracy or completeness of electronic copies of this plan sheet.

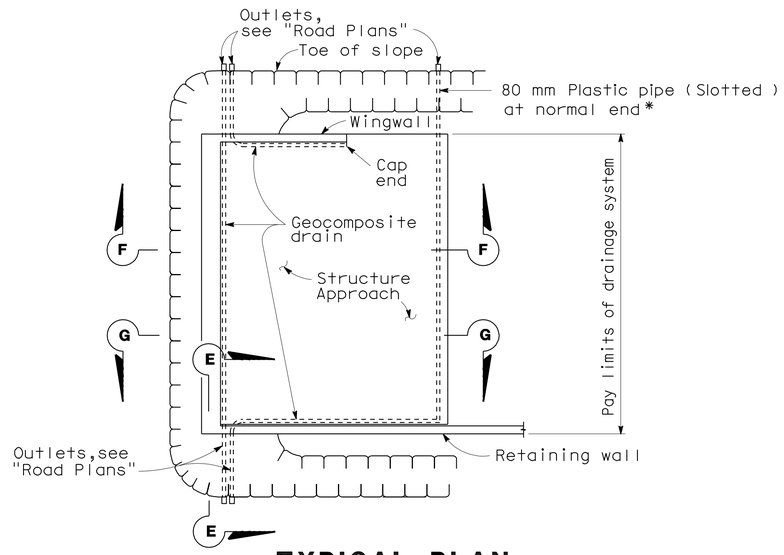

TYPICAL PLAN

*For pipe layout at staggered end, see "Detail B".

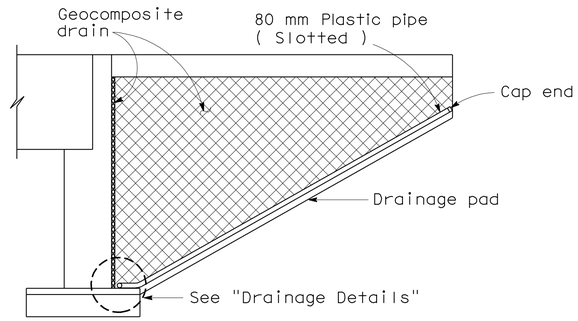

CANTILEVER WINGWALL SECTION F-F

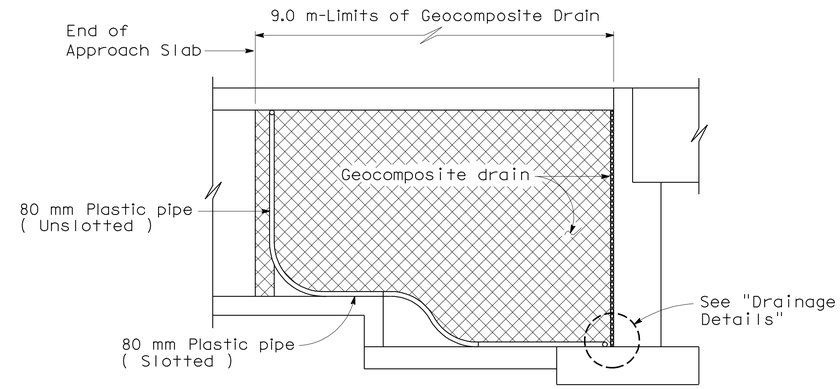

RETAINING WALL WINGWALL SECTION G-G

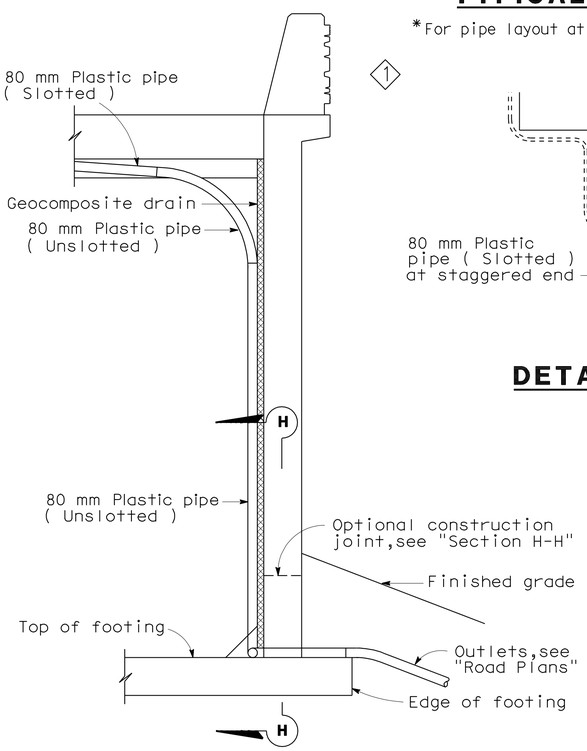

SECTION E-E

NOTE: Bends and junctions in 80 mm plastic pipe are 750 mm radius min.

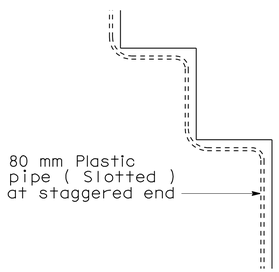

DETAIL B

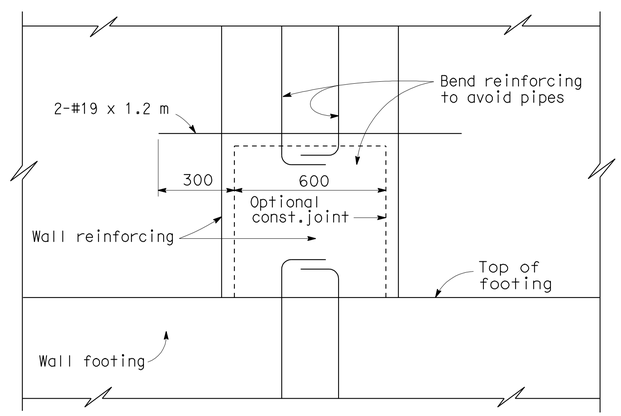

SECTION H-H

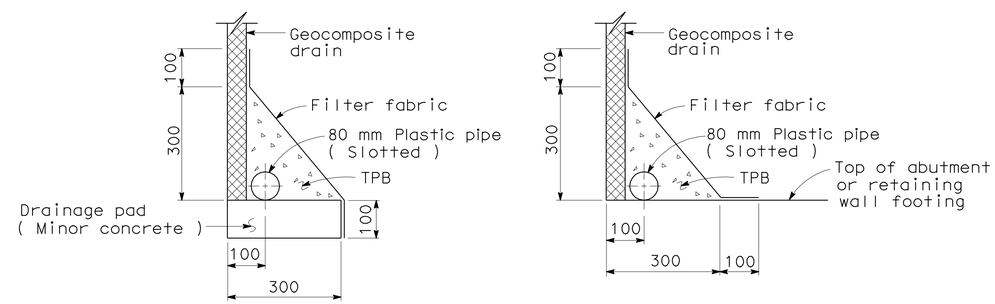

WITHOUT FOOTING WITH FOOTING

DRAINAGE DETAILS

SPECIAL DETAILS
NO SCALE
ALL DIMENSIONS ARE IN MILLIMETERS UNLESS OTHERWISE SHOWN

STANDARD DRAWING

RELEASE DATE	REVISED	DESIGN	BY M. TRAFFALIS	CHECKED E. THORKILDSEN	RELEASED BY
FILE NO.	xs3-110	DETAILS	BY R. YEE	CHECKED E. THORKILDSEN	OFFICE CHIEF
		SUBMITTED	BY M. HA	DRAWING DATE 4/98	

1 Modified barrier

STATE OF CALIFORNIA DEPARTMENT OF TRANSPORTATION

DIVISION OF ENGINEERING SERVICES STRUCTURE DESIGN DESIGN BRANCH 2

BRIDGE NO. 10-0174K
KILOMETER POST R77.68

WILLITS BYPASS
UPP CREEK (SB OFF-RAMP)
STRUCTURE APPROACH DRAINAGE DETAILS

DS OSD 2147A (METRIC) (REV. 2/25/97)

ORIGINAL SCALE IN MILLIMETERS FOR REDUCED PLANS 0 10 20 30 40 50 60 70 80 90 100

CU 01
EA 262001

DISREGARD PRINTS BEARING EARLIER REVISION DATES

REVISION DATES (PRELIMINARY STAGE ONLY) 8-13-08 1-27-09

SHEET 12 OF 15

USERNAME => s121614

10-0174k_kxstsadd.dgn

DATE PLOTTED => 28-JAN-2012 TIME PLOTTED => 08:22

DIST.	COUNTY	ROUTE	KILOMETER POST TOTAL PROJECT	SHEET NO.	TOTAL SHEETS
01	Men	101	R69.4/R78.9	895	939

Caltrans Metric

REGISTERED ENGINEER - CIVIL 9-15-11

PLANS APPROVAL DATE 1-23-12

REGISTERED PROFESSIONAL ENGINEER M. Friedheim No. 57968 Exp. 6-30-12 CIVIL STATE OF CALIFORNIA

The State of California or its officers or agents shall not be responsible for the accuracy or completeness of electronic copies of this plan sheet.

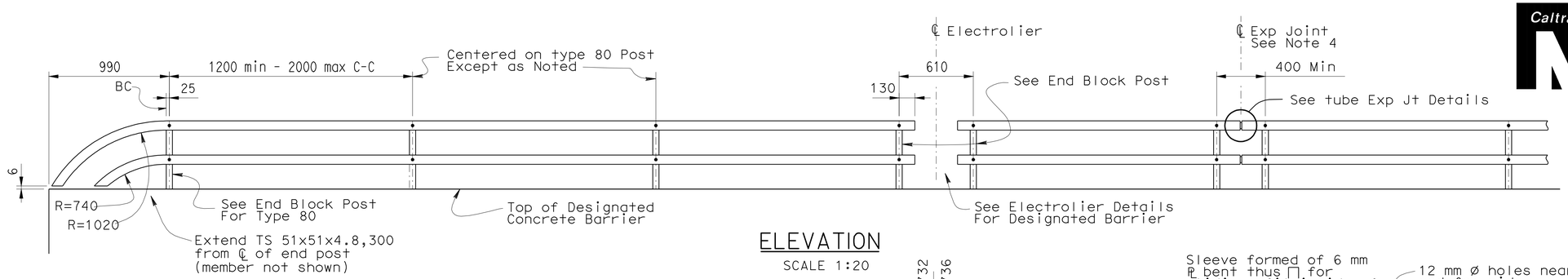

ELEVATION
SCALE 1:20

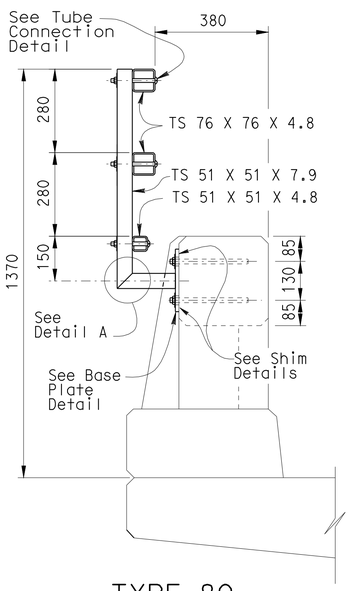

TYPE 80
END BLOCK POST
SCALE 1:10

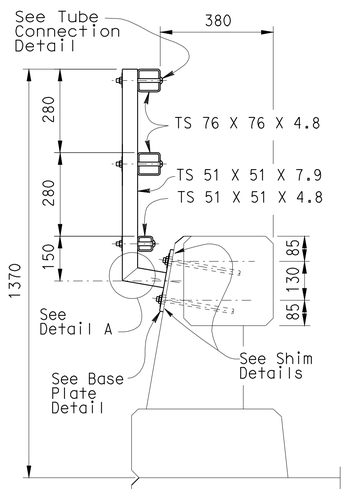

TYPE 80
SCALE 1:10

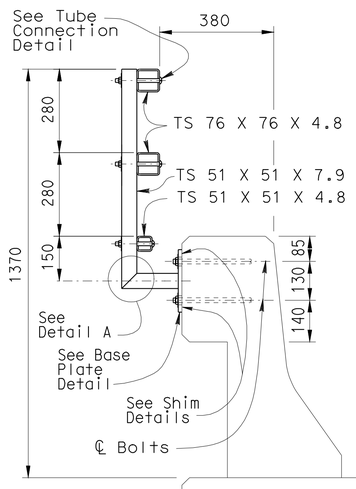

TYPE 25
SCALE 1:10

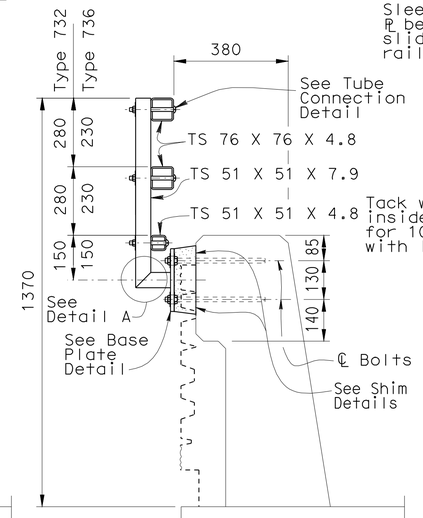

TYPE 732 OR 736 ◇1
NO SCALE

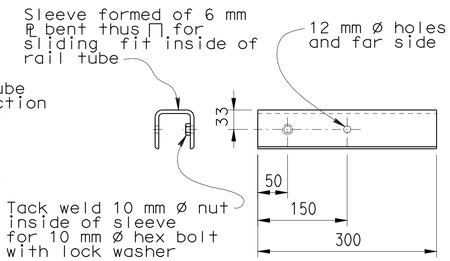

SLEEVE DETAIL
SCALE 1:5

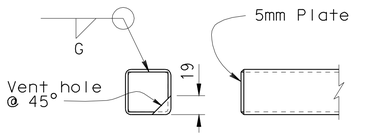

RAIL CAP DETAIL
SCALE 1:5

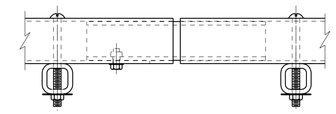

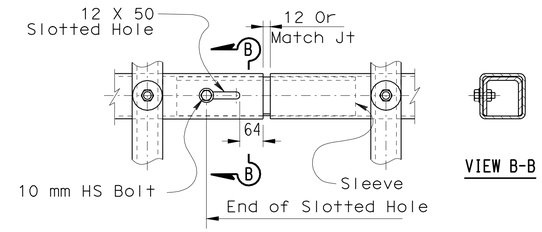

TUBE EXPANSION JOINT DETAILS
SCALE 1:5

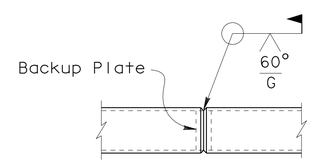

WELDED SPLICE DETAIL
SCALE 1:5

NOTES:

1. Galvanize rail assembly after fabrication.
2. Post shall be normal to railing.
3. Rail tubes shall be shop bent or fabricated to fit horizontal curve when radius is less than 300 m.
4. Tube splices shall be located in the tubes spanning deck or wall joints. Increase joint width in tubes to match expansion joint width and increase sleeve length correspondingly.
5. Top rail tube shall be continuous over not less than two posts except a short post spacing is permitted near deck or wall joints, electroliers, or other rail discontinuities as noted.
6. For details and reinforcement not shown see Standard Plans.
7. See project plans for limits of tubular bicycle railing.
8. CIP threaded rods may alternatively be installed using a drill and bond method with epoxy cartridges after forming and pouring barrier concrete. Plates to be placed against level surface.

SPECIAL DETAILS

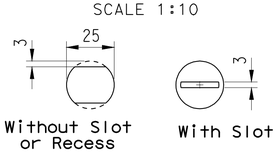

VIEW C-C
SCALE 1:1

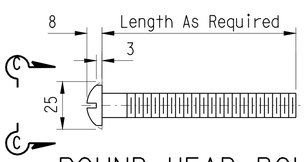

ROUND HEAD BOLT DETAIL
SCALE 1:1

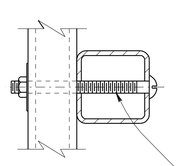

TUBE CONNECTION DETAIL
SCALE 1:2.5

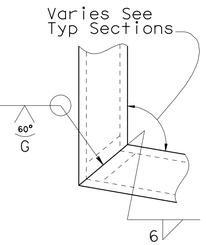

DETAIL A
SCALE 1:2.5

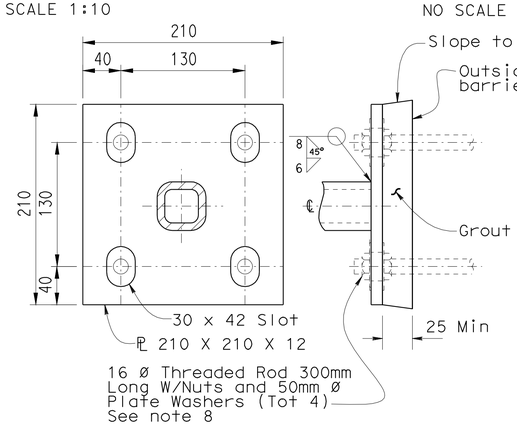

BASE PLATE DETAIL ◇2
SCALE 1:2.5

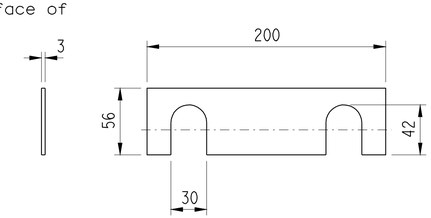

SHIM DETAILS
NO SCALE

ALL DIMENSIONS ARE IN MILLIMETERS UNLESS OTHERWISE SHOWN

◇1 Barrier modified
◇2 Plate details modified

RELEASE DATE	REVISED	DESIGN	BY TILLAT SATTER	CHECKED NEELIMA PATIL	RELEASED BY
FILE NO.	XS16-500	DETAILS	BY H.NGUYEN	CHECKED TILLAT SATTER	OFFICE CHIEF
		SUBMITTED	BY	DRAWING DATE 08/06	

STATE OF CALIFORNIA DEPARTMENT OF TRANSPORTATION

DIVISION OF ENGINEERING SERVICES

BRIDGE NO. 10-0174K
KILOMETER POST R77.68

WILLITS BYPASS
UPP CREEK (SB OFF-RAMP)
TUBULAR BICYCLE RAILING

DS OSD 2139M (METRIC) (REV. 3/5/97)

ORIGINAL SCALE IN MILLIMETERS FOR REDUCED PLANS 0 10 20 30 40 50 60 70 80 90 100

CU 01
EA 262001

DISREGARD PRINTS BEARING EARLIER REVISION DATES 1-21-09 1-28-09

REVISION DATES (PRELIMINARY STAGE ONLY)

SHEET 13 OF 15

USERNAME => s121614 FILE => 10-0174K_kyxstbral.dgn

USERNAME => s121614 DATE PLOTTED => 28-JAN-2012 TIME PLOTTED => 08:22

VI-I

DIST	COUNTY	ROUTE	KILOMETER POST TOTAL PROJECT	SHEET No	TOTAL SHEETS
01	Men	101	R69.4/R78.9	896	939

CERTIFIED ENGINEERING GEOLOGIST — 5-19-09 DATE

REGISTERED GEOLOGIST — Reid Buell — No. 1481 — Exp. 4-30-11 — CERTIFIED ENGINEERING GEOLOGIST — STATE OF CALIFORNIA

1-23-12
PLANS APPROVAL DATE

The State of California or its officers or agents shall not be responsible for the accuracy or completeness of electronic copies of this plan sheet.

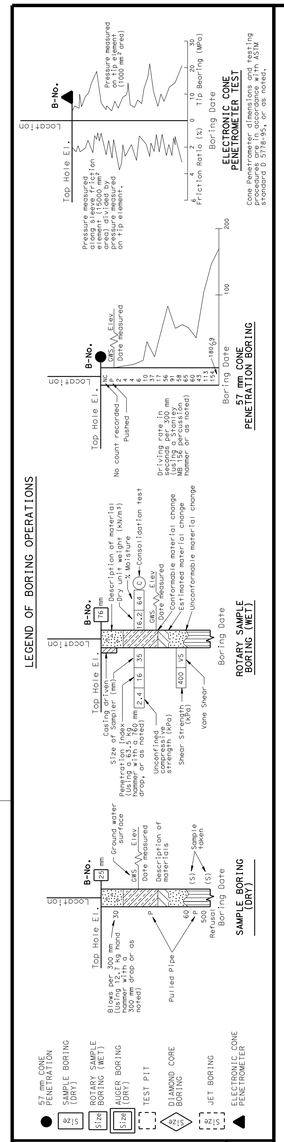

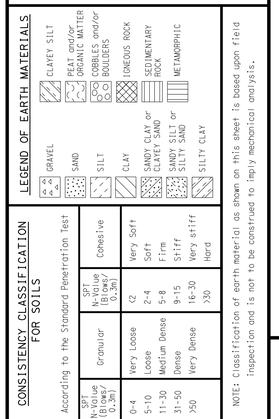

CONSISTENCY CLASSIFICATION FOR SOILS

According to the Standard Penetration Test

SPT N-Value (Blows/0.3m)	Granular	SPT N-Value (Blows/0.3m)	Cohesive
0-4	Very Loose	<2	Very Soft
5-10	Loose	2-4	Soft
11-30	Medium Dense	5-8	Firm
31-50	Dense	9-15	Stiff
>50	Very Dense	16-30	Very stiff
		>30	Hard

NOTE: Classification of earth material as shown on this sheet is based upon field inspection and is not to be construed to imply mechanical analysis.

OGS CIVIL LOG OF TEST BORINGS SHEET (METRIC) (REV. 4/04)

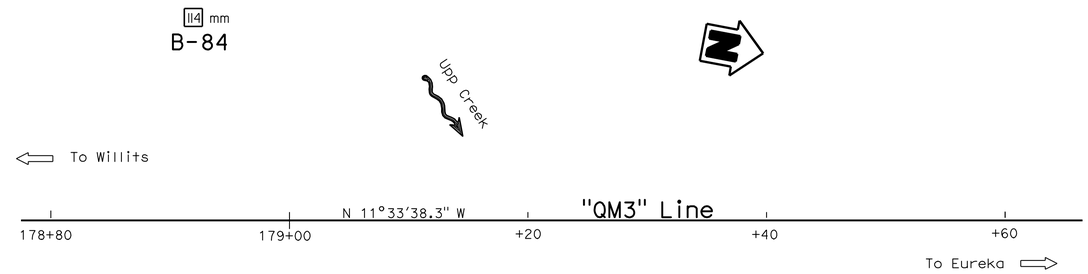

PLAN
1:250

BENCH MARK

SURVEY CONTROL
SEWER (PRHV4750)
Fnd 2-1/4" BRASS DISK
159.985 m Lt.℄ Rte 101
Sta. 163+10.608
N 695,463.301
E 1,884,392.708
Elev = 411.192

MEN-101-48.1 (PRHV5046)
Fnd AL. CAP IN CONC. W/STEEL
188.980 m Lt.℄ Rte 101
Sta. 178+98.282
N 696,420.729
E 1,883,104.414
Elev = 409.954

17 m Lt Sta 178+92 "QM3" Line

B-84
114 mm
406.50

406 m

GRAVELLY SILT (ML), stiff, brown, dry to moist, fine to coarse gravel.

GWS Elev 403.5 m
10-3-07

403 m

GRAVELLY CLAY with SAND (CL), firm to hard, dark brown, wet, fine to coarse sand.
-at Elev 403.46 m, pp = 48 kPa

-from Elev 401.94 to 400.42 m, pp = 96 to 239 kPa

400 m

SANDY CLAY (CL), firm to hard, brown, wet, fine to coarse sand.
-at Elev 400.42 m, pp = 72 to 239 kPa

397 m

CLAYEY SAND with GRAVEL (SC), medium dense, brown, wet, fine to coarse sand, trace cobbles.

394 m

CLAYEY GRAVEL with SAND (GC), loose, dark greenish gray, moist to wet, fine to coarse gravel.

391 m

CLAY (CL), firm to very stiff, dark greenish gray, moist to wet.
-at Elev 392.80 m, pp = 72 to 192 kPa

CLAYEY SAND with GRAVEL (SC), very loose, dark greenish gray, moist to wet, fine to coarse sand, organics (redwood bark).
-at Elev 391.27 m, pp = 72 to 120 kPa
-at Elev 389.75 m, pp = 48 to 96 kPa

388 m

GRAVELLY CLAY with SAND (CL), firm to stiff, dark greenish gray, moist to wet, fine to coarse sand and gravel, some organics (redwood bark).
-at Elev 388.22 m, pp= 72 to 144 kPa

CLAYEY GRAVEL with SAND (GC), dense, dark greenish gray, moist, fine to coarse sand and gravel.

385 m

SANDY CLAY with GRAVEL (CL), firm to stiff, dark greenish gray, moist to wet, fine to coarse sand.

-at Elev 385.18 m, pp = 96 kPa
-at Elev 383.65 m, pp = 72 to 120 kPa
-at Elev 382.13 m, pp = 72 to 144 kPa

382 m

CLAY with SAND (CL), firm to hard, brown with dark greenish gray mottling, moist.
-from Elev 382.13 to 380.60 m, pp = 72 to 335 kPa

CLAY (CL) with trace fine to coarse SAND and GRAVEL, hard, yellowish brown, moist.

379 m

-at Elev 379.08 m, pp = 287 to 430 kPa

12	35
P	35
P	35
4	35
6	35
27	35
28	35
10	35
P	35
P	35
P	35
9	35
31	35
5	35
P	35
23	35
26	35
49	35

10-2-07

178+90 179+10 179+30

PROFILE
HOR. 1:100
VER. 1:100

Notes:

1. Standard Penetration Tests (SPT) performed in Borings B-84, B-97 and B-100 were advanced using a 63.5 kg Longyear Automatic Hammer.

2. pp= Unconfined compressive strength determined in the field by "Pocket Penetrometer." Units shown are kilopascals (kPa).

3. Consistency descriptors shown on the LOTB sheets are based on the pocket penetrometer readings.

4. P= Push. Standard Penetration Test (SPT) split barrel sampler penetrated without any impact through the sample interval of 457 mm (18 inches) when placing drive weight assembly on sample rods.

5. Ground water surface Elevations are subject to seasonal fluctuations and may occur at higher or lower Elevations depending on conditions at any particular time.

Caltrans Metric

ENGINEERING SERVICES | GEOTECHNICAL SERVICES

DRAWN BY W. Tang 4/09
CHECKED BY

FIELD INVESTIGATION BY: T. Alderman

STATE OF CALIFORNIA DEPARTMENT OF TRANSPORTATION

DIVISION OF ENGINEERING SERVICES STRUCTURE DESIGN
DESIGN BRANCH 2

BRIDGE NO. 10-0174K
KILOMETER POST R77.68

WILLITS BYPASS
UPP CREEK (SB OFF-RAMP)
LOG OF TEST BORINGS 1 OF 2

ALL DIMENSIONS ARE IN METERS UNLESS OTHERWISE SHOWN

ORIGINAL SCALE IN MILLIMETERS FOR REDUCED PLANS 0 10 20 30 40 50 60 70 80 90 100

CU 01
EA 262001

DISREGARD PRINTS BEARING EARLIER REVISION DATES

REVISION DATES (PRELIMINARY STAGE ONLY) 04-28-09 05-11-09 05-18-09

SHEET 14 OF 15

FILE => 10-0174k_kzlotb01.dgn

USERNAME => s121614 DATE PLOTTED => 28-JAN-2012 TIME PLOTTED => 08:23

DIST	COUNTY	ROUTE	KILOMETER POST TOTAL PROJECT	SHEET No	TOTAL SHEETS
01	Men	101	R69.4/R78.9	897	939

CERTIFIED ENGINEERING GEOLOGIST — DATE 5-19-09

REGISTERED GEOLOGIST — Reid Buell No. 1481 Exp. 4-30-11 — CERTIFIED ENGINEERING GEOLOGIST — STATE OF CALIFORNIA

1-23-12
PLANS APPROVAL DATE

The State of California or its officers or agents shall not be responsible for the accuracy or completeness of electronic copies of this plan sheet.

FOR PLAN VIEW, SEE
"LOG OF TEST BORINGS" 1 OF 2

B-97

18 m Rt Sta 179+24 "OM3" Line

406.33

114 mm

406 m — Fine SANDY SILT (ML), medium dense, brown, dry.
-from Elev 405.41 to 404.20 m, pp = 24 to 96 kPa

GRAVELLY CLAY with SAND (CL), soft to firm, dark grayish brown, moist to wet, fine to medium rounded gravel.

GWS Elev 404.2 m
10-3-08

403 m — CLAY with GRAVEL (CL), very soft to stiff, mottled gray and yellowish red, moist, fine rounded gravel.
-from Elev 404.20 to 402.06 m, pp = 12 to 96 kPa

400 m — -from Elev 402.06 to 397.79 m, pp = 24 to 144 kPa

397 m — CLAYEY GRAVEL with SAND (GC), medium dense, mottled brownish gray and reddish yellow, moist, fine to coarse subangular to subrounded gravel.

CLAY (CL), firm, mottled gray and reddish yellow, moist.
-from Elev 395.97 to 394.75 m, pp = 72 kPa

394 m — CLAY (CL), very soft to firm, greenish gray, moist.
-from Elev 394.75 to 393.53 m, pp = 24 kPa

-from Elev 393.53 to 396.70 m, pp = 60 kPa

CLAYEY GRAVEL with SAND (GC), loose, greenish gray, moist, coarse subangular sand, fine rounded gravel.

391 m — CLAY (CL), very soft to soft, greenish gray, moist.
-from Elev 391.39 to 390.48 m, pp = 20 to 48 kPa
CLAY (CL), firm to stiff, greenish gray, moist.
-from Elev 390.48 to 388.04 m, pp = 24 to 120 kPa

388 m — CLAY with SAND (CL), stiff to hard, greenish gray, moist, coarse sand.
-from Elev 388.04 to 385.91m, pp = 96 to 239 kPa

385 m — CLAYEY GRAVEL with SAND (GC), medium dense, greenish gray, moist, fine to coarse subrounded to rounded gravel.

CLAY (CL), stiff, greenish gray, moist.
-from Elev 385.00 to 384.38 m, pp = 120 kPa
CLAYEY GRAVEL with SAND (GC), medium dense, greenish gray, moist, fine to medium subangular to subrounded gravel.

382 m — CLAY (CL), firm, greenish gray, moist.
-from Elev 382.86 to 381.03 m, pp = 60 kPa

SANDY CLAY with GRAVEL (CL), very stiff to hard, greenish gray, moist, coarse sand, fine to medium rounded gravel.
-from Elev 386.03 to 380.42 m, pp = 144 to 335 kPa

379 m — CLAY (CL), stiff to hard, greenish gray, moist.

-from Elev 380.42 to 377.98 m, pp = 96 to 335 kPa

GRAVELLY CLAY with SAND (CL), stiff to hard, mottled grayish brown, gray and reddish yellow, moist, fine to medium rounded gravel.

376 m — -from Elev 377.98 to 376.46 m, pp = 96 to 430 kPa

CLAY with SAND and GRAVEL (CL), stiff to hard, greenish gray, moist, fine to medium sand, fine rounded gravel.
-from Elev 376.46 to 373.41 m, pp = 96 to 239 kPa

373 m — GRAVELLY CLAY with SAND (CL), stiff to hard, greenish gray, wet, fine rounded gravel.
-from Elev 373.41 to 372.34 m, pp = 48 to 192 kPa
CLAY (CL), firm to very stiff, greenish gray, moist.

10-1-08

B-100

13 m Rt Sta 179+55 "OM3" Line

406.26

114 mm

406 m — CLAY with fine SAND (CL), soft to stiff, brown, damp.
-from Elev 406.26 to 405.35 m, pp = 24 to 144 kPa

GWS Elev 404.7 m
10-9-08

403 m — CLAY (CL), stiff to hard, mottled brown and yellowish brown, moist.

-from Elev 405.35 to 400.78 m, pp = 96 to 287 kPa

400 m — CLAY (CL), soft to firm, mottled brown, gray and yellowish brown, wet, trace fine subangular gravel.
-from Elev 400.78 to 399.26 m, pp = 24 to 96 kPa
CLAY (CL), firm to stiff, greenish gray with yellowish brown mottling, moist.
-from Elev 399.26 to 397.43 m, pp = 48 to 144 kPa

397 m — Poorly graded GRAVEL with CLAY and SAND (GP-GC), loose, brown, wet, medium subrounded gravel.
CLAY with GRAVEL (CL), firm to hard, greenish gray, wet, medium subrounded gravel.
-from Elev 397.12 to 396.21 m, pp = 48 to 215 kPa
CLAY (CL), soft, mottled greenish gray and yellowish brown, moist.
-from Elev 396.21 to 394.69 m, pp = 36 kPa

394 m — CLAYEY SAND (SC), loose, greenish gray, wet, coarse sand.
CLAY (CL), soft, greenish gray, moist.

-from Elev 394.38 to 391.41 m, pp = 36 kPa

391 m — CLAYEY SAND with GRAVEL (SC), medium dense, greenish gray, wet, coarse sand, medium subrounded gravel.

388 m — CLAY (CL), stiff to hard, greenish gray, moist.

-from Elev 387.98 to 385.85 m, pp = 96 to 287 kPa

385 m — CLAYEY SAND with GRAVEL (SC), medium dense, greenish gray, moist, coarse sand, fine to medium subrounded to rounded gravel.

CLAY (CL), firm to hard, greenish gray, moist.
-from Elev 385.24 to 382.80 m, pp = 72 to 215 kPa

382 m — -from Elev 382.80 to 380.36 m, pp = 48 to 96 kPa

-from Elev 380.36 to 376.40 m, pp = 96 to 311 kPa

379 m

-from Elev 376.40 to 375.33 m, pp = 144 to 383 kPa

376 m — CLAYEY GRAVEL with SAND (GC), dense, greenish gray, wet, fine to medium subangular to rounded gravel.

373 m

10-8-08

179+20 — 179+40 — 179+60

PROFILE
HOR. 1:100
VER. 1:100

LEGEND OF BORING OPERATIONS

ELECTRONIC CONE PENETROMETER TEST — Cone Penetrometer dimensions and testing procedures are in accordance with ASTM standard D 5778-95, or as noted.

57 mm CONE PENETRATION BORING

ROTARY SAMPLE BORING (WET)

SAMPLE BORING (DRY)

57 mm CONE PENETRATION | SAMPLE BORING (DRY) | ROTARY SAMPLE BORING (WET) | AUGER BORING (DRY) | TEST PIT | DIAMOND CORE BORING | JET BORING | ELECTRONIC CONE PENETROMETER

LEGEND OF EARTH MATERIALS

GRAVEL | SAND | SILT | CLAY | SANDY CLAY or CLAYEY SAND | SANDY SILT or SILTY SAND | SILTY CLAY | CLAYEY SILT | PEAT and/or ORGANIC MATTER | COBBLES and/or BOULDERS | IGNEOUS ROCK | SEDIMENTARY ROCK | METAMORPHIC

CONSISTENCY CLASSIFICATION FOR SOILS
According to the Standard Penetration Test

SPT N-Value (Blows/0.3m)	Granular	SPT N-Value (Blows/0.3m)	Cohesive
0-4	Very Loose	<2	Very Soft
5-10	Loose	2-4	Soft
11-30	Medium Dense	5-8	Firm
31-50	Dense	9-15	Stiff
>50	Very Dense	16-30	Very stiff
		>30	Hard

NOTE: Classification of earth material as shown on this sheet is based upon field inspection and is not to be construed to imply mechanical analysis.

OGS CIVIL LOG OF TEST BORINGS SHEET (METRIC) (REV. 4/04)

Caltrans Metric

ENGINEERING SERVICES | GEOTECHNICAL SERVICES

DRAWN BY: W. Tang 4/09
CHECKED BY:

FIELD INVESTIGATION BY: T. Alderman

STATE OF CALIFORNIA
DEPARTMENT OF TRANSPORTATION

DIVISION OF ENGINEERING SERVICES
STRUCTURE DESIGN
DESIGN BRANCH 2

BRIDGE NO. 10-0174K
KILOMETER POST R77.68

WILLITS BYPASS
UPP CREEK (SB OFF-RAMP)
LOG OF TEST BORINGS 2 OF 2

ALL DIMENSIONS ARE IN METERS UNLESS OTHERWISE SHOWN

ORIGINAL SCALE IN MILLIMETERS FOR REDUCED PLANS 0 10 20 30 40 50 60 70 80 90 100

CU 01
EA 262001

DISREGARD PRINTS BEARING EARLIER REVISION DATES

REVISION DATES (PRELIMINARY STAGE ONLY): 04-28-09 05-11-09 05-18-09

SHEET 15 OF 15

FILE => 10-0174k_kzlotb02.dgn

USERNAME => s121614 DATE PLOTTED => 28-JAN-2012 TIME PLOTTED => 08:23

DIST	COUNTY	ROUTE	KILOMETER POST TOTAL PROJECT	SHEET No	TOTAL SHEETS
01	Men	101	R69.4/R78.9	898	939

REGISTERED CIVIL ENGINEER 9-15-11 DATE

1-23-12
PLANS APPROVAL DATE

REGISTERED PROFESSIONAL ENGINEER M. Friedheim No. 57968 Exp. 6-30-12 CIVIL STATE OF CALIFORNIA

The State of California or its officers or agents shall not be responsible for the accuracy or completeness of electronic copies of this plan sheet.

NOTES:

1. See "Aesthetic Details" Sheet
2. Structure approach Slab, Type N(9S)
3. Metal Beam Guardrail, See Road Plans
4. Paint "Upp Creek"
5. Paint bridge number and year constructed
6. TRM, see Road Plans

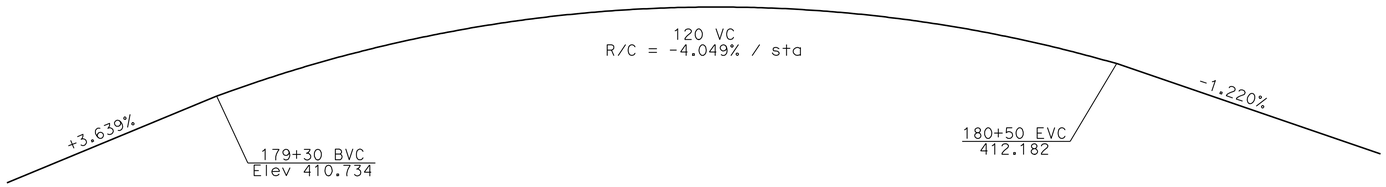

PROFILE GRADE

NO SCALE

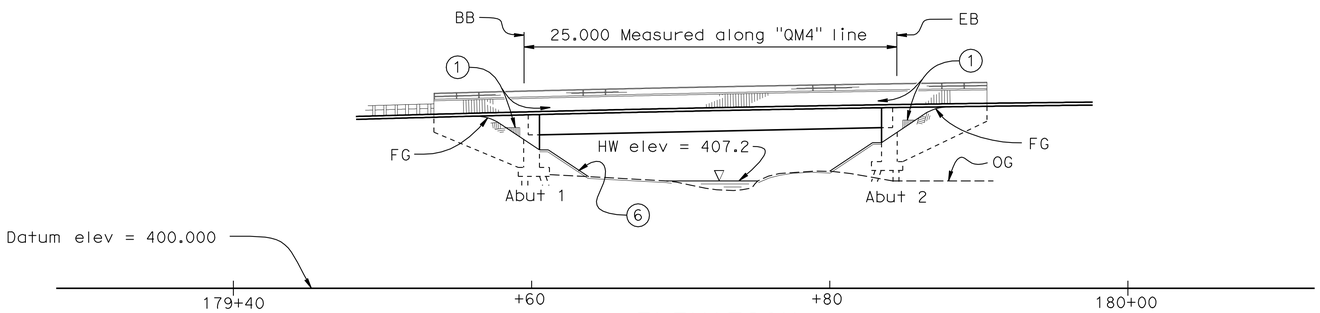

ELEVATION

1:200

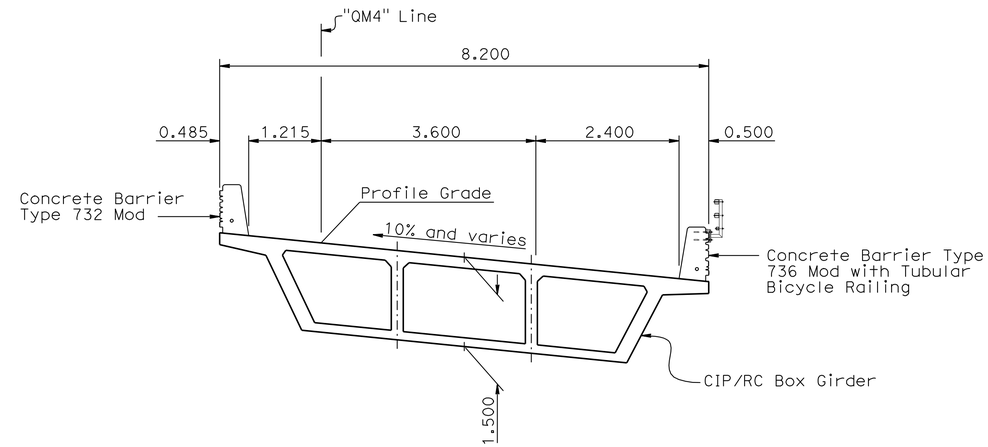

TYPICAL SECTION

1:50

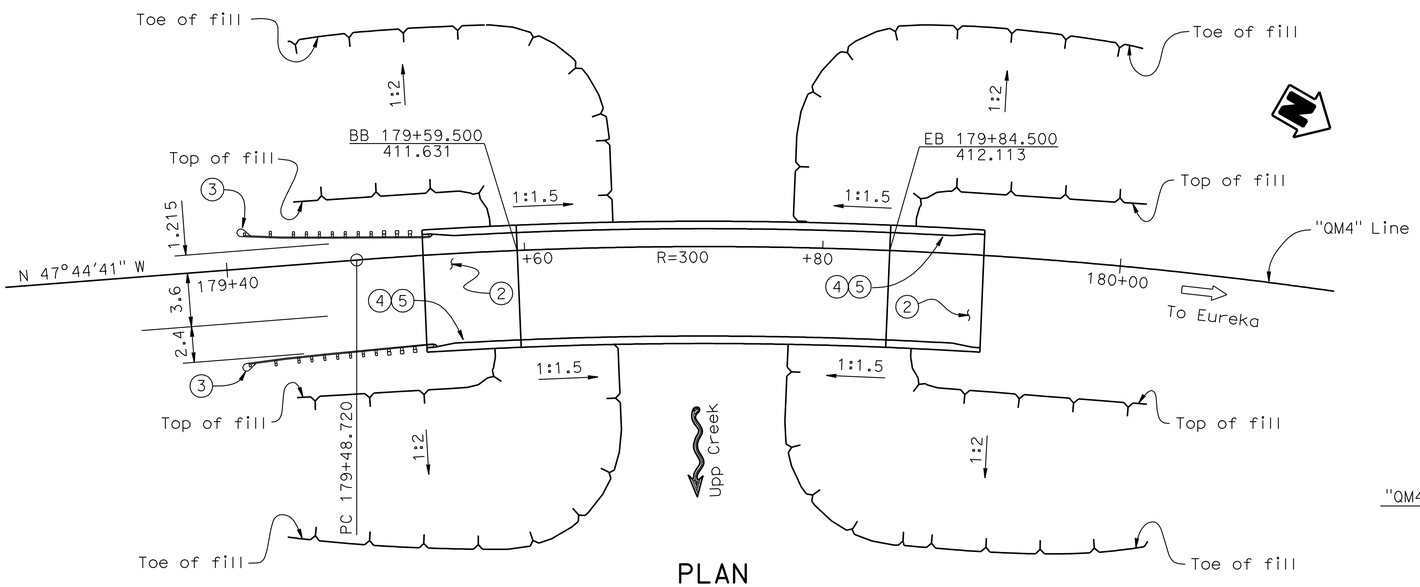

PLAN

1:200

"QM4" LINE CURVE DATA

R = 300.000
Δ = 21°15'11"
T = 56.290
L = 111.280

UPP CREEK (NB ON-RAMP) 10-0174S
QUANTITIES

STRUCTURE EXCAVATION (BRIDGE)	120	m^3
STRUCTURE BACKFILL (BRIDGE)	73	m^3
FURNISH STEEL PILING (HP 250 X 62)	612	m
DRIVE STEEL PILE (HP 250 X 62)	24	EA
STRUCTURAL CONCRETE, BRIDGE FOOTING	28	m^3
STRUCTURAL CONCRETE, BRIDGE	145	m^3
STRUCTURAL CONCRETE, APPROACH SLAB (TYPE N)	45	m^3
ARCHITECTURAL TEXTURE	7	m^2
JOINT SEAL (MR 13 MM)	17	m
BAR REINFORCING STEEL (BRIDGE)	26 600	kg
TUBULAR BICYCLE RAILING (MODIFIED)	43	m
CONCRETE BARRIER (TYPE 732 MOD)	43	m
CONCRETE BARRIER (TYPE 736 MODIFIED)	43	m

Note: For General Notes, Standard Plans, Index to Plans, and Pile Data Table, see "Deck Contours" sheet.

Caltrans Metric

DESIGN ENGINEER

	BY	CHECKED
DESIGN	K. Selventhiran	M. Jimenez
DETAILS	J.Yang	M. Jimenez
QUANTITIES	M. Khalaf	A. Ahmed

LOAD FACTOR DESIGN — LIVE LOADING: HS20-44 AND ALTERNATIVE AND PERMIT DESIGN LOAD

	BY	CHECKED
LAYOUT	K. Selventhiran	M. Jimenez/D. Brown
SPECIFICATIONS	I. Huang	I. Huang — PLANS AND SPECS COMPARED

ALL DIMENSIONS ARE IN METERS UNLESS OTHERWISE SHOWN

ORIGINAL SCALE IN MILLIMETERS FOR REDUCED PLANS 0 10 20 30 40 50 60 70 80 90 100

STATE OF CALIFORNIA
DEPARTMENT OF TRANSPORTATION

DIVISION OF ENGINEERING SERVICES
STRUCTURE DESIGN
DESIGN BRANCH 2

CU 01
EA 262001

BRIDGE NO. 10-0174S
KILOMETER POST R77.701

WILLITS BYPASS
UPP CREEK (NB ON-RAMP)
GENERAL PLAN

DISREGARD PRINTS BEARING EARLIER REVISION DATES

REVISION DATES: 08-29-08 10-30-08 12-12-08 01-12-09 1-27-09 8-28-09 10-26-09 12-21-09

SHEET 1 OF 14

FILE => 10-0174s_agp.dgn

STRUCTURES DESIGN GENERAL PLAN SHEET (METRIC) (REV.07-24-06)

USERNAME => s12614 DATE PLOTTED => 28-JAN-2012 TIME PLOTTED => 08:23

DIST	COUNTY	ROUTE	KILOMETER POST TOTAL PROJECT	SHEET No	TOTAL SHEETS
01	Men	101	R69.4/R78.9	899	939

REGISTERED CIVIL ENGINEER 9-15-11 DATE

1-23-12
PLANS APPROVAL DATE

REGISTERED PROFESSIONAL ENGINEER M. Friedheim No. 57968 Exp. 6-30-12 CIVIL STATE OF CALIFORNIA

The State of California or its officers or agents shall not be responsible for the accuracy or completeness of electronic copies of this plan sheet.

NOTES:

1. x = 5 m interval measured along station line
2. Contours do not include camber
3. Contours interval = 0.025 m
4. Contours are shown in meters

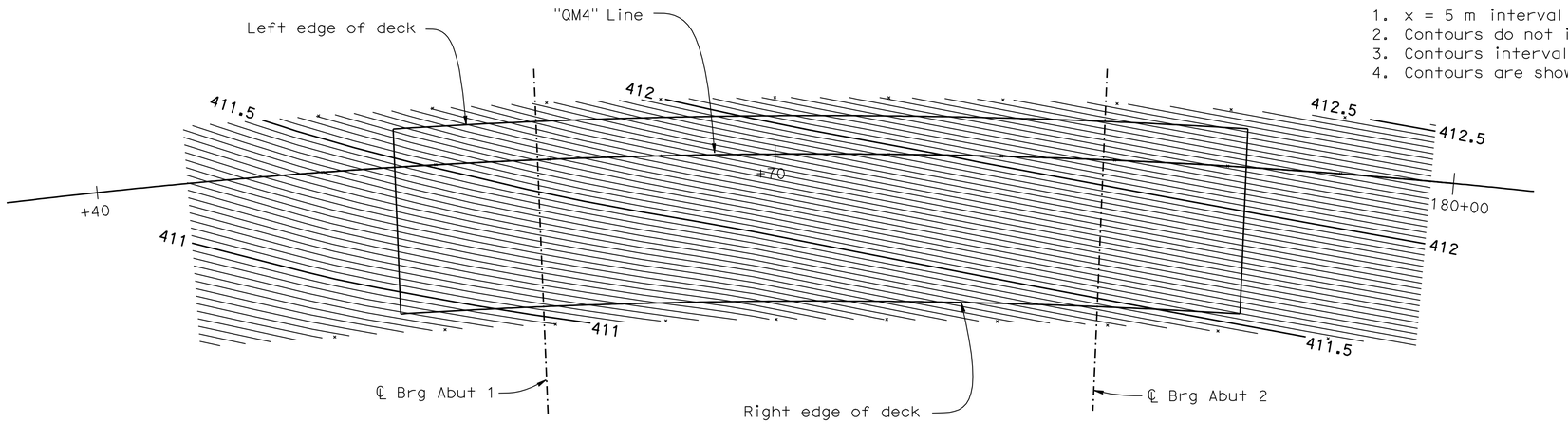

DECK CONTOURS

1:125

GENERAL NOTES (LOAD FACTOR DESIGN)

DESIGN: Bridge Design Specifications - April 2000 (LFD) (1996 AASHTO with interims and revisions by Caltrans).
Project Specific Design Criteria - March 2009.

SEISMIC DESIGN: Caltrans SDC version 1.4 - June 2006

DEAD LOAD: Includes 1675 Pa for future wearing surface.

LIVE LOAD: HS20-44 and alternative and permit design load.

SEISMIC LOADING: Modified Caltrans Seismic Design Criteria for Soil Profile Type D, PBA = 0.7 g. See Response Spectrum below.

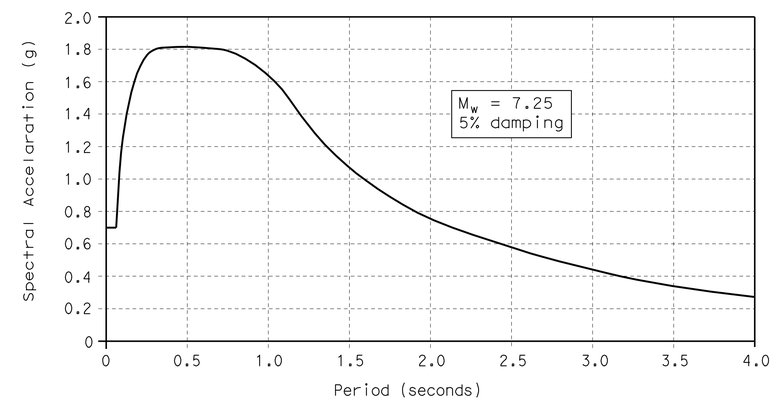

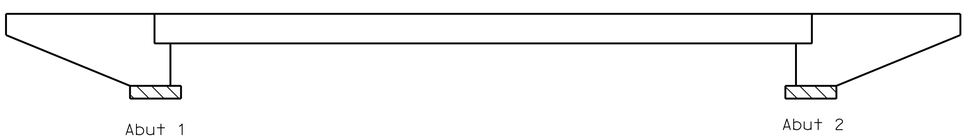

Structural Concrete, Bridge (f'c = 25 MPa @ 28 days)
Structural Concrete, Bridge Footing

INDEX TO PLANS

1. GENERAL PLAN
2. DECK CONTOURS
3. FOUNDATION PLAN
4. ABUTMENT LAYOUT
5. ABUTMENT DETAILS 1
6. ABUTMENT DETAILS 2
7. TYPICAL SECTION
8. GIRDER LAYOUT
9. BOTTOM GIRDER REINFORCEMENT
10. AESTHETIC DETAILS
11. STRUCTURE APPROACH TYPE N(9S)
12. STRUCTURE APPROACH DRAINAGE DETAILS
13. TUBULAR BICYCLE RAILING
14. LOG OF TEST BORINGS

CONCRETE STRENGTH AND TYPE LIMITS

No Scale

REINFORCED CONCRETE:
fy = 420 MPa
f'c = 25 MPa (See concrete strength and type limits for exceptions)

Transverse Deck Slab (working stress design)
fs = 140 MPa
f'c = 8 MPa
n = 10

STANDARD PLANS DATED JULY 2004

A10A	ACRONYMS AND ABBREVIATIONS (A-L)
A10B	ACRONYMS AND ABBREVIATIONS (M-Z)
A10C	SYMBOLS
A10D	SYMBOLS
A62C	LIMITS OF PAYMENT FOR EXCAVATION AND BACKFILL-BRIDGE
B0-1	BRIDGE DETAILS
B0-3	BRIDGE DETAILS
B0-5	BRIDGE DETAILS
B0-13	BRIDGE DETAILS
RSP B6-21	JOINT SEALS (MAXIMUM MOVEMENT RATING = 50 MM)
B7-1	BOX GIRDER DETAILS
B11-55	CONCRETE BARRIER TYPE 732
B11-56	CONCRETE BARRIER TYPE 736
RSP ES-9B	ELECTRICAL SYSTEMS (ELECTRICAL DETAILS STRUCTURE INSTALLATIONS)
RSP ES-9C	ELECTRICAL SYSTEMS (ELECTRICAL DETAILS STRUCTURE INSTALLATIONS)

STANDARD PLAN SHEET NO.
DETAIL NO.

PILE DATA TABLE

Location	Pile Type	Nominal Resistance		Design Tip Elevations	Specified Tip Elevations
		Compression	Tension		
Abut 1	HP 250 x 62	800 KN	0 KN	383.0 (1)	383.0
Abut 2	HP 250 x 62	800 KN	0 KN	383.0 (1)	383.0

Tip elevation controlled by the following demands:
(1) Compression

Caltrans Metric

ALL DIMENSIONS ARE IN METERS UNLESS OTHERWISE SHOWN

ORIGINAL SCALE IN MILLIMETERS FOR REDUCED PLANS 0 10 20 30 40 50 60 70 80 90 100

	BY	CHECKED
DESIGN	K. Selventhiran	M. Jimenez
DETAILS	J.Yang	M. Jimenez
QUANTITIES	M. Khalaf	A. Ahmed

STATE OF CALIFORNIA
DEPARTMENT OF TRANSPORTATION

DIVISION OF ENGINEERING SERVICES
STRUCTURE DESIGN
DESIGN BRANCH 2

CU 01
EA 262001

BRIDGE NO. 10-0174S
KILOMETER POST R77.701

DISREGARD PRINTS BEARING EARLIER REVISION DATES
REVISION DATES 10-31-08 12-09-08 01-12-09 01-30-09 3-04-09

SHEET 2 OF 14

WILLITS BYPASS
UPP CREEK (NB ON-RAMP)
DECK CONTOURS

FILE => 10-0174s_ddc01.dgn

STRUCTURES DESIGN DETAIL SHEET (METRIC) (REV.03-17-04)

USERNAME => s12614 DATE PLOTTED => 28-JAN-2012 TIME PLOTTED => 08:23

DIST	COUNTY	ROUTE	KILOMETER POST TOTAL PROJECT	SHEET No	TOTAL SHEETS
01	Men	101	R69.4/R78.9	900	939

Caltrans Metric

REGISTERED CIVIL ENGINEER 9-15-11 DATE

1-23-12
PLANS APPROVAL DATE

REGISTERED PROFESSIONAL ENGINEER M. Friedheim No. 57968 Exp. 06-30-12 CIVIL STATE OF CALIFORNIA

The State of California or its officers or agents shall not be responsible for the accuracy or completeness of electronic copies of this plan sheet.

CURVE DATA

No.	R	Δ	T	L
(A)	1325.000	12°6'29"	140.525	280.004
(B)	300.000	21°15'11"	56.290	111.280

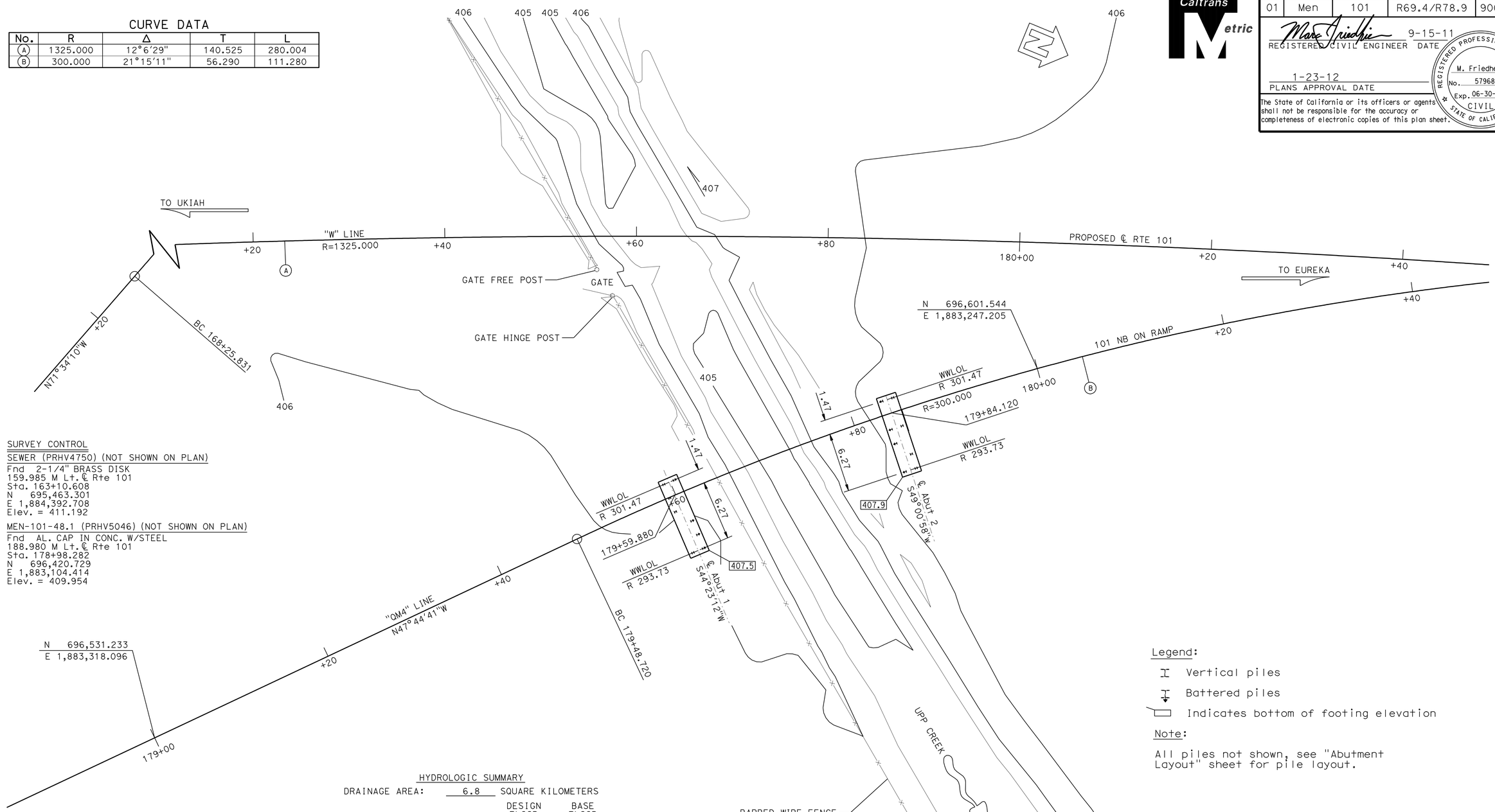

SURVEY CONTROL

SEWER (PRHV4750) (NOT SHOWN ON PLAN)

Fnd 2-1/4" BRASS DISK
159.985 M Lt. ℄ Rte 101
Sta. 163+10.608
N 695,463.301
E 1,884,392.708
Elev. = 411.192

MEN-101-48.1 (PRHV5046) (NOT SHOWN ON PLAN)

Fnd AL. CAP IN CONC. W/STEEL
188.980 M Lt. ℄ Rte 101
Sta. 178+98.282
N 696,420.729
E 1,883,104.414
Elev. = 409.954

Legend:

- Vertical piles
- Battered piles
- Indicates bottom of footing elevation

Note:

All piles not shown, see "Abutment Layout" sheet for pile layout.

HYDROLOGIC SUMMARY

DRAINAGE AREA: 6.8 SQUARE KILOMETERS

	DESIGN FLOOD	BASE FLOOD
FREQUENCY (YEARS)	50	100
DISCHARGE (CUBIC METERS PER SECOND)	24.6	27.6
WATER SURFACE ELEV. AT BRIDGE (METERS)	407.1	407.2

FLOOD PLAIN DATA ARE BASED UPON INFORMATION AVAILABLE WHEN THE PLANS WERE PREPARED AND ARE SHOWN TO MEET FEDERAL REQUIREMENTS. THE ACCURACY OF SAID INFORMATION IS NOT WARRANTED BY THE STATE AND INTERESTED OR AFFECTED PARTIES SHOULD MAKE THEIR OWN INVESTIGATIONS.

ALL DIMENSIONS ARE IN METERS UNLESS OTHERWISE SHOWN

WILLITS BYPASS

UPP CREEK (NB ON RAMP)

FOUNDATION PLAN

PRELIMINARY INVESTIGATION SECTION

SCALE	VERT. DATUM NGVD29	PHOTOGRAMMETRY AS OF:		
1:200	HORZ. DATUM NAD83 (1991.35)	SURVEYED	BY DISTRICT	CHECKED BY T.GILLETT 1/2009
ALIGNMENT TIES DIST.TRAVERSE SHEET		DRAFTED	BY J.MARTINEZ 1/2009	CHECKED BY T.ZOLNIKOVA 1/2009

	BY	CHECKED
DESIGN	K. Selventhiran	M. Jimenez
DETAILS	J. Yang	M. Jimenez
QUANTITIES	M. Khalaf	A. Ahmed

STATE OF CALIFORNIA DEPARTMENT OF TRANSPORTATION

DIVISION OF ENGINEERING SERVICES STRUCTURE DESIGN DESIGN BRANCH 2

BRIDGE NO. 10-0174S
KILOMETER POST R77.701

CU 01
EA 262001

STRUCTURES FOUNDATION PLAN SHEET (METRIC) (REV.10-27-05)

ORIGINAL SCALE IN MILLIMETERS FOR REDUCED PLANS 0 10 20 30 40 50 60 70 80 90 100

DISREGARD PRINTS BEARING EARLIER REVISION DATES

REVISION DATES (PRELIMINARY STAGE ONLY) 01-16-09 03-26-09 07-14-09 08-20-09

SHEET 3 OF 14

FILE => 10-0174s_efp101.dgn

USERNAME => s121614 DATE PLOTTED => 28-JAN-2012 TIME PLOTTED => 08:24