RESEARCH NOTES

March 2008

Contract # 65A0174

Performance of Seismic Isolation Hardware under Service and Seismic Loading

RESULTS: The state-of-the-art knowledge on the behavior of isolators and dampers under service and seismic loading conditions has been collected, systematically analyzed and additional knowledge has been created. The information has been utilized to develop contemporary analysis and design procedures for isolators, propose revised protocols for prototype and production hardware testing, and collect all this information in an extensive technical report. Analysis, design and testing procedures for seismically isolated bridges have been presented in code format and demonstrated through several examples.

Background

Seismic isolation is construction technology that, when properly implemented, may result in substantial improvement in the performance of bridges and other structures. However, the performance of seismic isolators and dampers under the loading conditions encountered in bridge applications-temperature variation, live loadings and seismic events-is not well understood and required further study. The California Department of Transportation funded a study to (a) describe the mechanical properties of seismic isolators and dampers under seismic, service and thermal loading conditions, (b) characterize the effects of history of loading, wear, aging, contamination and temperature on the mechanical properties of seismic isolators and dampers, (c) develop a systematic method for accounting for these effects in analysis and design, and (d) present contemporary analysis and design procedures for seismically isolated bridges and demonstrate the procedures through several examples.

Full size lead-rubber isolator tested as part of the project to determine the behavior under thermal and seismic conditions prior to and after 1.6km cumulative travel

What was Done

The work in this project resulted in two reports:
(1) The first report presents a comprehensive description of the current stage of knowledge on the behavior of hardware used in seismic isolation and in seismic damping systems. Particular emphasis is placed on the description of fundamental behavior under both non-seismic, service-type of loading conditions and under high-speed seismic conditions. Specific problems described and addressed in this report include the following: (a) aging of elastomeric and sliding bearings, (b) effect of ambient temperature on the behavior of elastomeric and sliding bearings, (c) prediction and experimental verification of effects of frictional heating on sliding bearings, (d) prediction and experimental verification of effects of hysteretic heating on lead-rubber bearings, (e) seismic, service analysis of elastomeric and sliding bearings, (f) design of elastomeric and sliding bearings based on principles of LRFD and ASD, (g) establishment of upper and lower bound values of properties of seismic isolation bearings for use in analysis and design and (h) detailed new testing protocols for seismic isolators and dampers.
(2) The second report presented a summary of analysis and design procedures for seismically isolated bridges in the form of specification, and presented six detailed analysis and design examples of seismic isolation systems for bridges. The examples include isolation systems with lead-rubber bearings, friction pendulum bearings, combinations of flat sliding bearings and elastomeric bearings, combinations of lead-rubber and elastomeric bearings and combinations of elastomeric bearings and viscous dampers. Single-mode, multi-mode and response history analysis methods are used and compared in each example. Detailed design of isolators is presented in each example together with specifications for testing and performance.

The products of the research are expected to enable Caltrans engineers and its consultants, and engineers in the U.S. and elsewhere to design bridges with seismic isolators and dampers in such a way that will ensure acceptable performance over the lifetime of the structure and for all types of service and seismic loadings. The end result will be an increased confidence in the use of the technologies of seismic isolation and supplemental damping. These technologies provide the engineer with the capability to achieve high performance levels in strong seismic events.

Examples of Research Results

- **Design of End Plates of Sliding Bearings**

Procedures for the design of sliding bearings have been developed. An example is procedures for the selection of the end plate thickness of sliding bearings. Figure 1. shows a drawing of a Double-Concave FP isolator and illustrates the procedure for selection of the plate thickness. Such procedures

have been developed by considering service, Design-Basis and Maximum Earthquake effects based on LRFD principles.

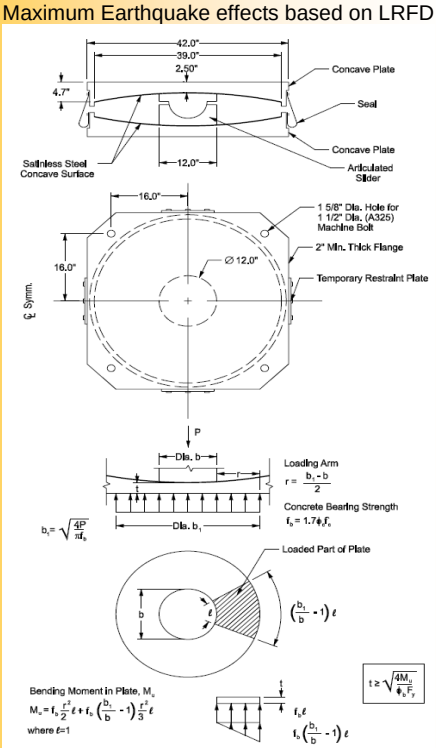

- **Figure 1 Design of Steel Shims of Elastomeric Bearings**

Current design procedures for steel shims in elastomeric bearings (e.g., 2007 LRFD AASHTO) are not based on analysis that considers the actual distribution of stress. Illustrated below in Figure 2. is the stress distribution that results from exact analysis of the shims. The result is a more complex design procedure that accounts for service and seismic effects.

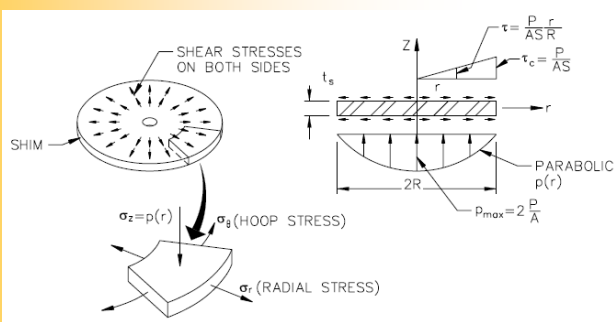

- **Figure 2 Relaxation of Lead-rubber Bearings**

The strength of lead-rubber bearings is *dependent on the rate of strain*, a property that has significant implications in bridge applications. Particularly, the resistance provided by the bearings under thermal loading conditions is much less-as low as ¼ of the resistance under seismic conditions. A related behavior is that of *relaxation,* a condition of reduction of the strength under constant displacement. The implications of this behavior are (a) increased re-centering capability following an earthquake, and (b) reduced resistance under thermal movement conditions. Figure 3. presents the characteristic strength of the full size bearing shown earlier in this report as it was recorded at the conclusion of a seismic test and in the subsequent 30 minutes while the displacement was maintained at zero value. The near instantaneous reduction of strength to near half at the conclusion of the dynamic motion is evident. The strength continues to decrease and is one third within 8 minutes and about one fourth within 30 minutes.

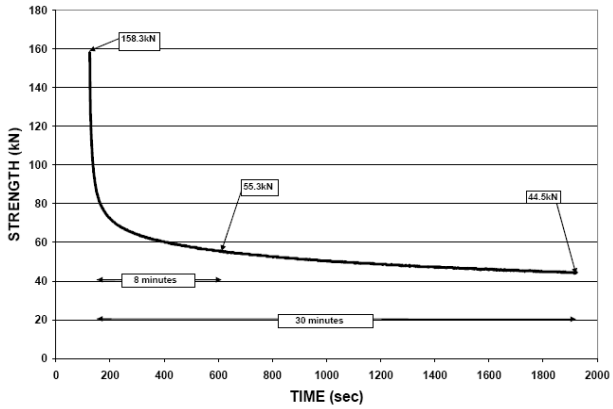

- **Figure 3 Analysis and Design Examples of Bridge Seismic Isolation Systems**

Six analysis and design examples of bridge isolation systems have been presented. The examples include detailed analysis of the bridge for gravity and live loadings, detailed single-mode, multi-mode and response history analysis calculations for seismic loadings, design of isolators and preparation of testing and performance specifications. Figure 4. presents the cross section of a typical bent of the example bridge. The bridge has continuous deck, and two bents and abutments at a skew angle of 30 degrees.

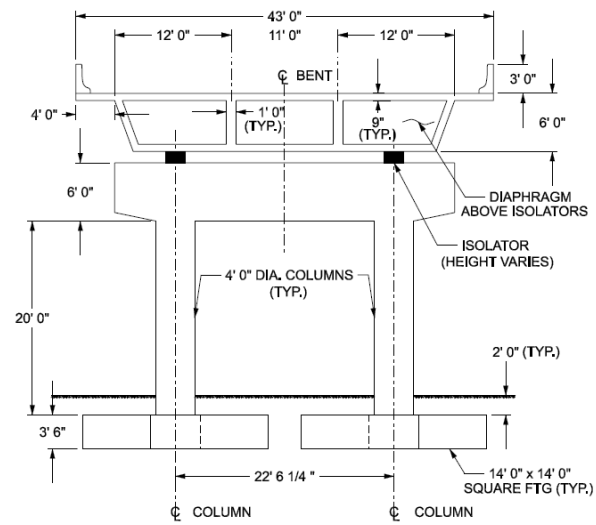

Figure 4 Cross Section of Typical Bent

Loadings were determined based on 2004 AASHTO LRFD Specifications with live load consisting of truck, lane, tandem and brake. Wind was also considered and considerations of rigidity of the structure under wind were presented. The seismic loading was defined per Caltrans Seismic Design Criteria, Version 1.3 (2004) for magnitude 7.25, 0.7g acceleration and soil profile C.

References

Constantinou, M.C., Whittaker, A.S., Kalpakidis, Y., Fenz, D. M. and Warn, G.P.," PERFORMANCE OF SEISMIC ISOLATION HARDWARE UNDER SERVICE AND SEISMIC LOADING", Report No. MCEER-07-0012, Multidisciplinary Center for Earthquake Engineering Research, Buffalo, NY, 2007.

Constantinou, M.C., Whittaker, A.S., Fenz, D. M. and Apostolakis, G.,"SEISMIC ISOLATION OF BRIDGES", Report to Caltrans, Version 2, Department of Civil, Structural and Environmental Engineering, University at Buffalo, June 2007.