CALTRANS

SEISMIC DESIGN CRITERIA

VERSION 1.6

NOVEMBER 2010

Table of Revisions from SDC 1.5 to SDC 1.6

Section	Revision
Table of Contents	New Subsections added: 7.4.5.1 and 7.8.4.1 Caption change to Subsections 3.2.1, 3.6.5.3, 3.6.7, 6.1, 7.4.4, 7.4.4.3, and 8.2.1 Repagination
1., 3.2.1, 3.6.7 3.7.3, 3.8.4, 7.8.3, 8.2, 8.2.1	References to Bridge Design Specifications changed to AASHTO LRFD Bridge Design Specifications with Interims and CA Amendments
1.	Performance goals for Ordinary bridges spelled out
2.1.3	Single span bridges supported on seat type abutments specifically excluded from vertical acceleration requirement
2.1.5	Language changed to be consistent with newly developed Design Spectrum - Appendix B Section rearranged and Equations renumbered
2.2.4	Correction to Figure 2.2 Change in terminology in Figure 2.4: 'Pile Shaft" changed to "Shaft"
3.1.1	MCE changed to Design Seismic Hazards
3.1.4.1	Minor revision
3.2.1	Caption modified Information on resistance factor, ϕ for shear and bending added
3.6.1, 3.6.6.2	Deleted: ϕ = 0.85
3.4	Resistance factor, ϕ for bending added
3.6.2	Limits specified for the value of "$\rho_s f_{yh}$" in Equation 3.20 Figure 3.8 modified Equation 3.20 was rearranged

3.6.5.3	Caption modified Correction to rebar size and spacing of bars in interlocking portion New Figure added – Figure 3.9
3.6.7	Caption modified New information added
4.1.1	Definitions of Δ_D and Δ_C streamlined
4.2	Minor correction to Figure 4.2 Minor correction to Footnote No. 5
5.3	Reference to Sections on abutment modeling guidelines added
6.1	Caption modified New information on Design Seismic Hazards added
6.2.1	MCE changed to Design Seismic Hazards
6.2.2 (A)	MCE level forces changed to ground shaking forces
7.1.1	Correction to Equations (7.1b) and (7.2b) Equations 7.1a, 7.1b, 7.2a, and 7.2b presented in tabular format
7.2.2	Minor revision
7.4.3	Expanded definition of Knee Joint added Footnote No. 8 changed
7.4.4	Caption changed to “Joint Shear Design”
7.4.4.3	Caption changed to “T Joint Shear Reinforcement” Figures 7.8 and 7.10 updated
7.4.5	Major Revision: Detailed provisions for Knee Joint Design
7.4.5.1	New subsection: “Knee Joint Shear Reinforcement” New Figures added: Figures 7.10b – 7.10g-2
7.6.5.1	Gap between column flare and bent cap soffit changed to 4 inches

7.7.1.1	Major revision to Equations 7.30 and 7.31, and Figures 7.11 and 7.12 New Equations added New information and definitions added Information deleted
7.7.1.2.1	New information added to “Lateral Design”
7.7.1.4	Minor revision
7.7.1.7	New Figures added: Figures 7.13c and 7.13d Body of Section revised and new information added
7.8.1	Major revision – Equation 7.43 New information added
7.8.2	Major revision
7.8.4	Major revision with new equations
7.8.4.1	New subsection: “Abutment Shear Key Reinforcement” New Figures: Figures 7.16(A) and 7.16(B)
8.2.1	Revision to Caption and Body of Section
8.2.4	Minor revision Slight modification to Caption
Bibliography	New References added References deleted

TABLE OF CONTENTS

1. INTRODUCTION

1.1 Definition of an Ordinary Standard Bridge 1-2

1.2 Type of Components Addressed in the SDC 1-2

1.3 Bridge Systems 1-3

1.4 Local and Global Behavior 1-4

2. DEMANDS ON STRUCTURE COMPONENTS

2.1 Ground Motion Representation 2-1

2.1.1 Design Spectrum 2-1

2.1.2 Horizontal Ground Motion 2-2

2.1.3 Vertical Ground Motion 2-2

2.1.4 Vertical/Horizontal Load Combination 2-2

2.1.5 Damping 2-3

2.2 Displacement Demand 2-4

2.2.1 Estimated Displacement 2-4

2.2.2 Global Structure Displacement and Local Member Displacement 2-4

2.2.3 Displacement Ductility Demand 2-5

2.2.4 Target Displacement Ductility Demand 2-5

2.3 Force Demand 2-9

2.3.1 Moment Demand 2-9

2.3.2 Shear Demand 2-9

2.3.2.1 Column Shear Demand 2-9

2.3.2.2 Pier Wall Shear Demand 2-9

2.3.3 Shear Demand for Capacity Protected Members 2-10

3. CAPACITIES OF STRUCTURE COMPONENTS

3.1 Displacement Capacity of Ductile Concrete Members 3-1

3.1.1 Ductile Member Definition 3-1

3.1.2 Distinction Between Local Member Capacity & Global Structure System Capacity 3-1

3.1.3 Local Member Displacement Capacity 3-1

3.1.4 Local Member Displacement Ductility Capacity 3-3

3.1.4.1 Minimum Local Displacement Ductility Capacity 3-3

3.2 Material Properties for Concrete Components 3-4

3.2.1 Expected Versus Nominal Material Properties 3-4

3.2.2 Nonlinear Reinforcing Steel Models for Ductile Reinforced Concrete Members 3-6

3.2.3 Reinforcing Steel A706/A706M (Grade 60/Grade 400) 3-6

3.2.4 Nonlinear Prestressing Steel Model 3-7

3.2.5 Nonlinear Concrete Models for Ductile Reinforced Concrete Members 3-9

3.2.6 Normal Weight Portland Cement Concrete Properties 3-9

3.2.7 Other Material Properties 3-10

3.3 Plastic Moment Capacity for Ductile Concrete Members 3-10

3.3.1 Moment Curvature (M-ϕ) Analysis 3-10

3.4 Requirements for Capacity Protected Components 3-11

3.5 Minimum Lateral Strength 3-12

3.6 Seismic Shear Design for Ductile Concrete Members 3-12

3.6.1 Nominal Shear Capacity 3-12

3.6.2 Concrete Shear Capacity 3-12

3.6.3 Shear Reinforcement Capacity 3-14

3.6.4 *Deleted* 3-15

3.6.5 Maximum and Minimum Shear Reinforcement Requirements for Columns 3-15

3.6.5.1 Maximum Shear Reinforcement 3-15

3.6.5.2 Minimum Shear Reinforcement 3-15

3.6.5.3 Minimum Vertical Reinforcement within Interlocking Hoops 3-15

3.6.6 Shear Capacity of Pier Walls 3-16

3.6.6.1 Shear Capacity in the Weak Direction 3-16

3.6.6.2 Shear Capacity in the Strong Direction 3-16

3.6.7 Capacity of Capacity Protected Members 3-17

3.7 Maximum and Minimum Longitudinal Reinforcement 3-17

3.7.1 Maximum Longitudinal Reinforcement 3-17

3.7.2 Minimum Longitudinal Reinforcement 3-17
3.7.3 Maximum Reinforcement Ratio 3-17
3.8 Lateral Reinforcement of Ductile Members 3-17
3.8.1 Lateral Reinforcement Inside the Analytical Plastic Hinge Length 3-17
3.8.2 Lateral Column Reinforcement Inside the Plastic Hinge Region 3-18
3.8.3 Lateral Column Reinforcement Outside the Plastic Hinge Region 3-18
3.8.4 Lateral Reinforcement of Pier Walls 3-18
3.8.5 Lateral Reinforcement Requirements for Columns Supported on Type II Pile Shafts 3-18
3.8.6 Lateral Confinement for Type II Pile Shafts 3-18

4. DEMAND VS. CAPACITY

4.1 Performance Criteria 4-1
4.1.1 Global Displacement Criteria 4-1
4.1.2 Demand Ductility Criteria 4-1
4.1.3 Capacity Ductility Criteria 4-3
4.2 P-Δ Effects 4-3
4.3 Component Overstrength Factors 4-4
4.3.1 Column Overstrength Factor 4-4
4.3.2 Superstructure/Bent Cap Demand & Capacity 4-4
4.3.2.1 Longitudinal Superstructure Capacity 4-5
4.3.2.2 Bent Cap Capacity 4-6
4.3.3 Foundation Capacity 4-6

5. ANALYSIS

5.1 Analysis Requirements 5-1
5.1.1 Analysis Objective 5-1
5.2 Analytical Methods 5-1
5.2.1 Equivalent Static Analysis (ESA) 5-1
5.2.2 Elastic Dynamic Analysis (EDA) 5-1
5.2.3 Inelastic Static Analysis (ISA) 5-3
5.3 Structural System “Global” Analysis 5-3

5.4 Stand-Alone "Local" Analysis 5-4
5.4.1 Transverse Stand-Alone Analysis 5-4
5.4.2 Longitudinal Stand-Alone Analysis 5-4
5.5 Simplified Analysis 5-4
5.6 Effective Section Properties 5-5
5.6.1 Effective Section Properties for Seismic Analysis 5-5
5.6.1.1 I_{eff} for Ductile Members 5-6
5.6.1.2 I_{eff} for Box Girder Superstructures 5-6
5.6.1.3 I_{eff} for Other Superstructure Types 5-6
5.6.2 Effective Torsional Moment of Inertia 5-6
5.7 Effective Member Properties for Non-Seismic Loading 5-7

SEISMICITY AND FOUNDATION PERFORMANCE

6.1 Site Seismicity 6-1
6.1.1 Ground Shaking 6-1
6.1.2 Liquefaction 6-1
6.1.2.1 *Deleted* 6-2
6.1.2.2 *Deleted* 6-2
6.1.3 Fault Rupture Hazard 6-2
6.1.4 Additional Seismic Hazards 6-2
6.2 Foundation Design 6-2
6.2.1 Foundation Performance 6-2
6.2.2 Soil Classification 6-3
6.2.2(A) Competent Soil 6-3
6.2.2(B) Poor Soil 6-4
6.2.2(C) Marginal Soil 6-4
6.2.3 Foundation Design Criteria 6-4
6.2.3.1 Foundation Strength 6-4
6.2.3.2 Foundation Flexibility 6-4

7. DESIGN

7.1 Frame Design 7-1

7.1.1 Balanced Stiffness 7-1

7.1.2 Balanced Frame Geometry 7-2

7.1.3 Adjusting Dynamic Characteristics 7-2

7.1.4 End Span Considerations 7-4

7.2 Superstructure 7-4

7.2.1 Girders 7-4

7.2.1.1 Effective Superstructure Width 7-4

7.2.2 Vertical Acceleration 7-5

7.2.3 Pre-cast Girders 7-7

7.2.4 Slab Bridges 7-7

7.2.5 Hinges 7-7

7.2.5.1 Longitudinal Hinge Performance 7-7

7.2.5.2 Transverse Hinge Performance 7-7

7.2.5.3 Frames Meeting the Requirements of Section 7.1.2 7-8

7.2.5.4 Hinge Seat Width for Frames Meeting the Requirements of Section 7.1.2 7-8

7.2.5.5 Frames Not Meeting the Requirements of Section 7.1.2 7-9

7.2.6 Hinge Restrainers 7-10

7.2.7 Pipe Seat Extenders 7-11

7.2.8 Equalizing Bolts 7-11

7.3 Bent Caps 7-11

7.3.1 Integral Bent Caps 7-11

7.3.1.1 Effective Bent Cap Width 7-11

7.3.2 Non-Integral Bent Caps 7-12

7.3.2.1 Minimum Bent Cap Seat Width 7-12

7.3.3 *Deleted* 7-12

7.3.4 Bent Cap Depth 7-12

7.4 Superstructure Joint Design 7-13

7.4.1 Joint Performance 7-13

7.4.2 Joint Proportioning 7-13

7.4.2.1 Minimum Bent Cap Width 7-13

7.4.3 Joint Description 7-13

7.4.4 Joint Shear Design 7-14

7.4.4.1 Principal Stress Definition 7-14
7.4.4.2 Minimum Joint Shear Reinforcement 7-16
7.4.4.3 T Joint Shear Reinforcement 7-16
7.4.5 Knee Joints 7-21
7.4.5.1 Knee Joint Shear Reinforcement 7-22
7.5 Bearings 7-30
7.5.1 Elastomeric Bearings 7-30
7.5.2 Sliding Bearings 7-31
7.6 Columns & Pier Walls 7-31
7.6.1 Column Dimensions 7-31
7.6.2 Analytical Plastic Hinge Length 7-31
7.6.3 Plastic Hinge Region 7-32
7.6.4 Multi-Column Bents 7-32
7.6.5 Column Flares 7-32
7.6.5.1 Horizontally Isolated Column Flares 7-32
7.6.5.2 Lightly Reinforced Column Flares 7-33
7.6.5.3 Flare Reinforcement 7-33
7.6.6 Pier walls 7-33
7.6.7 Column Key Design 7-34
7.7 Foundations 7-34
7.7.1 Footing Design 7-34
7.7.1.1 Pile Foundations in Competent Soil 7-34
7.7.1.2 Pile Foundations in Marginal Soil 7-37
7.7.1.2.1 Lateral Design 7-37
7.7.1.2.2 Lateral Capacity of Fixed Head Piles 7-38
7.7.1.2.3 Passive Earth Resistance for Pile Caps in Marginal Soil 7-38
7.7.1.3 Rigid Footing Response 7-38
7.7.1.4 Footing Joint Shear 7-38
7.7.1.5 Effective Footing Width for Flexure 7-40
7.7.1.6 Effects of Large Capacity Piles on Footing Design 7-40
7.7.1.7 Use of “T” Headed Stirrups and Bars in Footings 7-40
7.7.2 Pier Wall Pile Foundations 7-41
7.7.2.1 Pier Wall Spread Footing Foundations 7-43
7.7.3 Pile Shafts 7-43

7.7.3.1 Shear Demand on Type I Pile Shafts 7-43
7.7.3.2 Flexure Demand/Capacity Requirements for Type II Pile Shafts 7-43
7.7.3.3 Pile Shaft Diameter 7-43
7.7.3.4 Minimum Pile Shaft Length 7-43
7.7.3.5 Enlarged Pile Shafts 7-44
7.7.4 Pile Extensions 7-44
7.8 Abutments 7-44
7.8.1 Longitudinal Abutment Response 7-44
7.8.2 Transverse Abutment Response 7-48
7.8.3 Abutment Seat Width 7-48
7.8.4 Abutment Shear Key Design 7-50
7.8.4.1 Abutment Shear Key Reinforcement 7-51

8. SEISMIC DETAILING

8.1 Splices in Reinforcing Steel 8-1
8.1.1 No Splice Regions in Ductile Components 8-1
8.1.2 Reinforcement Spliced in Ductile Components & Components Expected to Accept Damage 8-1
8.1.3 Reinforcement Spliced in Capacity Protected Members 8-1
8.1.4 Hoop and Spiral Reinforcement Splices 8-1
8.2 Development of Longitudinal Column Reinforcement 8-1
8.2.1 Minimum Development Length of Column Longitudinal Bars into Cap Beams for Seismic Considerations 8-2
8.2.2 Anchorage of Bundled Bars in Ductile Components 8-2
8.2.3 Flexural Bond Requirements for Columns 8-2
8.2.3.1 Maximum Bar Diameter 8-2
8.2.4 Development Length for Column Reinforcement Extended Into Enlarged Type II Shafts 8-3
8.2.5 Maximum Spacing for Lateral Reinforcement 8-3

APPENDICES

Appendix A	**Notations & Acronyms**	**A1-A8**
Appendix B	**Design Spectrum Development**	**B1-B31**
Appendix C	**Bibliography**	**C1-C2**

FIGURES

Figure 2.1	Local-Global Axis Definition	2-3
Figure 2.2	The Effects of Foundation Flexibility on Force-Deflection Curve of a Single Column Bent	2-6
Figure 2.3	The Effects of Flexibility on Frame Displacements	2-7
Figure 2.4	Pile Shaft Definition	2-8
Figure 3.1	Local Displacement Capacity – Cantilever Column w/Fixed Base	3-3
Figure 3.2	Local Displacement Capacity – Framed Column	3-4
Figure 3.3	Local Ductility Assessment	3-5
Figure 3.4	Steel Stress Strain Model	3-7
Figure 3.5	Prestressing Strand Stress Strain Model	3-9
Figure 3.6	Concrete Stress Strain Model	3-10
Figure 3.7	Moment Curvature Curve	3-11
Figure 3.8	Concrete Shear Factors	3-14
Figure 3.9	Vertical Reinforcement Within Interlocking Hoops	3-16
Figure 4.1	Global Force Deflection Relationship	4-2
Figure 4.2	P-Δ Effects on Bridge Columns	4-3
Figure 4.3	Superstructure Demand Generated By Column Overstrength Moment	4-5
Figure 4.4	Capacity Provided by Superstructure Internal Resultant Force Couple	4-6
Figure 5.1	EDA Modeling Techniques	5-2
Figure 5.2	Stand-Alone Analysis	5-5
Figure 5.3	Effective Stiffness of Cracked Reinforced Concrete Sections	5-7
Figure 7.1	Balanced Stiffness	7-3
Figure 7.2	Effective Superstructure Width	7-5
Figure 7.3	Equivalent Static Vertical Loads & Moments	7-6
Figure 7.4	Seat Width Requirements	7-9
Figure 7.5	Effective Bent Cap Width	7-12
Figure 7.6	Joint Shear Stresses in T Joints	7-14
Figure 7.7	Location of Vertical Joint Reinforcement	7-17
Figure 7.8	Joint Shear Reinforcement Details	7-18
Figure 7.9	Location of Horizontal Joint Reinforcement	7-19
Figure 7.10	Additional Joint Reinforcement for Skewed Bridges	7-20
Figure 7.10b	Knee Joint Failure Modes	7-22

Figure 7.10c	Knee Joint Parameters	7-23
Figure 7.10d	Location of Knee Joint Vertical Shear Reinforcement (Plan View)	7-24
Figure 7.10e	Knee Joint Shear Reinforcement – Skew $\leq 20^o$	7-26
Figure 7.10f	Knee Joint Shear Reinforcement – Skew $> 20^o$	7-27
Figure 7.10g-1/2	3D Representation of Knee Joint Shear Reinforcement	7-28/29
Figure 7.11	Footing Force Equilibrium	7-35
Figure 7.12	Simplified Pile Model for Foundations in Competent Soil	7-36
Figure 7.13A/B	Assumed Effective Dimensions for Footing Joint Stress Calculation	7-40
Figure 7.13C	Footing Reinforcement – Pinned Column	7-42
Figure 7.13D	Footing Reinforcement – Fixed Column	7-42
Figure 7.14A	Effective Abutment Stiffness	7-46
Figure 7.14B	Effective Abutment Area	7-46
Figure 7.14C	Effective Abutment Width for Skewed Bridges	7-46
Figure 7.15	Abutment Seat Width Requirements	7-49

1. INTRODUCTION

The Caltrans Seismic Design Criteria (SDC) specifies the minimum seismic design requirements that are necessary to meet the performance goals for **Ordinary bridges.** When the **Design Seismic Hazards (DSH)** occur, Ordinary bridges designed per these specifications are expected to remain standing but may suffer significant damage requiring closure. See Sections 1.1 and 6.1, respectively, for definitions of **Ordinary bridges** and **Design Seismic Hazards**.

The SDC is a compilation of new and existing seismic design criteria documented in various publications. The goal of this document is to update all the Structure Design (SD) design manuals[1] on a periodic basis to reflect the current state of practice for seismic bridge design. As information is incorporated into the design manuals, the SDC will serve as a forum to document Caltrans' latest changes to the seismic design methodology. Proposed revisions to the SDC will be reviewed by SD management according to the process outlined in MTD 20-11.

The SDC applies to Ordinary Standard bridges as defined in Section 1.1. Ordinary Nonstandard bridges require project specific criteria to address their non-standard features. Designers should refer to the SD design manuals for seismic design criteria not explicitly addressed by the SDC.

The following criteria identify the minimum requirements for seismic design. Each bridge presents a unique set of design challenges. The designer must determine the appropriate methods and level of refinement necessary to design and analyze each bridge on a case-by-case basis. The designer must exercise judgment in the application of these criteria. Situations may arise that warrant detailed attention beyond what is provided in the SDC. The designer should refer to other resources to establish the correct course of action. The SD Senior Seismic Specialists, the General Earthquake Committee, the Earthquake Engineering Office of Structure Policy and Innovation, or Caltrans Structures Design Oversight Representative should be consulted for recommendations.

Deviations to these criteria shall be reviewed and approved by the Design Branch Chief or the Senior Seismic Specialist and documented in the project file. Significant departures shall be presented to the Type Selection Panel and/or the Design Branch Chief for approval as outlined in MTD 20-11.

[1] Caltrans Design Manuals: AASHTO LRFD Bridge Design Specifications and CA Amendments, Memo To Designers, Bridge Design Details, Bridge Design Aids, Bridge Design Practice. Throughout this document, the term "LRFD BDS" shall be used to represent AASHTO LRFD Bridge Design Specifications with Interims and CA Amendments [12,14].

This document is intended for use on bridges designed by and for Caltrans. It reflects the current state of practice at Caltrans. This document contains references specific and unique to Caltrans and may not be applicable to other parties either institutional or private.

1.1 Definition of an Ordinary Standard Bridge

A structure must meet all of the following requirements to be classified as an Ordinary Standard bridge:

- Span lengths less than 300 feet (90 m)
- Constructed with normal weight concrete girder, and column or pier elements
- Horizontal members either rigidly connected, pin connected, or supported on conventional bearings; isolation bearings and dampers are considered nonstandard components.
- Dropped bent caps or integral bent caps terminating inside the exterior girder; C-bents, outrigger bents, and offset columns are nonstandard components.
- Foundations supported on spread footing, pile cap w/piles, or pile shafts
- Soil that is not susceptible to liquefaction, lateral spreading, or scour
- Bridge systems with a fundamental period greater than or equal to 0.7 seconds in the transverse and longitudinal directions of the bridge

1.2 Types of Components Addressed in the SDC

The SDC is focused on concrete bridges. Seismic criteria for structural steel bridges are being developed independently and will be incorporated into the future releases of the SDC. In the interim, inquiries regarding the seismic performance of structural steel components shall be directed to the Structural Steel Technical Specialist and the Structural Steel Committee.

The SDC includes seismic design criteria for Ordinary Standard bridges constructed with the types of components listed in Table 1.

1.3 Bridge Systems

A bridge system consists of superstructure and substructure components. The bridge system can be further characterized as an assembly of subsystems. Examples of bridge subsystems include:

- Longitudinal frames separated by expansion joints
- Multi-column or single column transverse bents supported on footings, piles, or shafts
- Abutments

Abutments	**Substructure Support Systems**
Diaphragm	Single Column
Short Seat	Multi-Column
High Cantilever	Pier Walls
	Pile Extensions
Superstructures	
Cast -In-Place	**Foundations**
· Reinforced concrete	Spread Footings
· Post-tensioned concrete	Driven Piles
Precast	· Steel H/HP and Pipe
· Reinforced concrete	· Precast P/S
· Pre-tensioned concrete	· CISS
· Post-tensioned concrete	Drilled Shafts
	· CIDH
	· Large Diameter Types I & II
	Proprietary

Table 1

Traditionally, the entire bridge system has been referred to as the global system, whereas an individual bent or column has been referred to as a local system. It is preferable to define these terms as relative and not absolute measures. For example, the analysis of a bridge frame is global relative to the analysis of a column subsystem, but is local relative to the analysis of the entire bridge system.

1.4 Local and Global Behavior

The term “local” when pertaining to the behavior of an individual component or subsystem constitutes its response independent of the effects of adjacent components, subsystems or boundary conditions. The term “global” describes the overall behavior of the component, subsystem or bridge system including the effects of adjacent components, subsystems, or boundary conditions. See Section 2.2.2 for the distinction between local and global displacements.

2. DEMANDS ON STRUCTURE COMPONENTS

2.1 Ground Motion Representation

For structural applications, seismic demand is represented using an elastic 5% damped response spectrum. In general, the Design Spectrum (DS) is defined as the greater of:

(1) A probabilistic spectrum based on a 5% in 50 years probability of exceedance (or 975-year return period);

(2) A deterministic spectrum based on the largest median response resulting from the maximum rupture (corresponding to $M_{\max}$) of any fault in the vicinity of the bridge site;

(3) A statewide minimum spectrum defined as the median spectrum generated by a magnitude 6.5 earthquake on a strike-slip fault located 12 kilometers from the bridge site.

A detailed discussion of the development of both the probabilistic and deterministic design spectra as well as possible adjustment factors is given in Appendix B.

2.1.1 Design Spectrum

Several aspects of design spectrum development require special knowledge related to the determination of fault location (utilization of original source mapping where appropriate) and interpretation of the site profile and geologic setting for incorporation of site effects. Consequently, Geotechnical Services or a qualified geo-professional is responsible for providing final design spectrum recommendations.

Several design tools are available to the engineer for use in *preliminary* and final specification of the design spectrum. These tools include the following:

- Deterministic PGA map (http://dap3.dot.ca.gov/shake_stable/references/Deterministic_PGA_Map_8-12-09.pdf)
- Preliminary spectral curves for several magnitudes and soil classes (Appendix B, Figures B.13-B.27)
- Spreadsheet with preliminary spectral curve data (http://dap3.dot.ca.gov/shake_stable/references/Preliminary_Spectral_Curves_Data_073009.xls)
- Recommended fault parameters for California faults meeting criteria specified in Appendix B (http://dap3.dot.ca.gov/shake_stable/references/2007_Fault_Database_120309.xls)
- Deterministic Response Spectrum spreadsheet (http://dap3.dot.ca.gov/shake_stable/references/Deterministic_Response_Spectrum_072809.xls)

- Probabilistic Response Spectrum spreadsheet (http://dap3.dot.ca.gov/shake_stable/references/Probabilistic_Response_Spectrum_080409.xls)
- Caltrans ARS Online (Caltrans intranet: http://10.160.173.178/shake2/shake_index2.php, internet: http://dap3.dot.ca.gov/shake_stable/)
- USGS Earthquake Hazards Program website (http://earthquake.usgs.gov/research/hazmaps/index.php)

2.1.2 Horizontal Ground Motion

Earthquake effects shall be determined from horizontal ground motion applied by either of the following methods:

Method 1 The application of the ground motion in two orthogonal directions along a set of global axes, where the longitudinal axis is typically represented by a chord connecting the two abutments, see Figure 2.1.

Case I: Combine the response resulting from 100% of the transverse loading with the corresponding response from 30% of the longitudinal loading.

Case II: Combine the response resulting from 100% of the longitudinal loading with the corresponding response from 30% of the transverse loading.

Method 2 The application of the ground motion along the principal axes of individual components. The ground motion must be applied at a sufficient number of angles to capture the maximum deformation of all critical components.

2.1.3 Vertical Ground Motions

For Ordinary Standard bridges where the site peak rock acceleration is 0.6g or greater, an equivalent static vertical load shall be applied to the superstructure to estimate the effects of vertical acceleration[2]. The superstructure shall be designed to resist the applied vertical force as specified in Section 7.2.2. Note that this requirement does not apply to single span Ordinary Standard bridges supported on seat type abutments. A case-by-case determination on the effect of vertical load is required for Non-standard and Important bridges.

2.1.4 Vertical/Horizontal Load Combination

A combined vertical/horizontal load analysis is not required for Ordinary Standard Bridges.

[2]This is an interim method of approximating the effects of vertical acceleration on superstructure capacity. The intent is to ensure all superstructure types, especially lightly reinforced sections such as P/S box girders, have a nominal amount of mild reinforcement available to resist the combined effects of dead load, earthquake, and prestressing in the upward or downward direction. This is a subject of continued study.

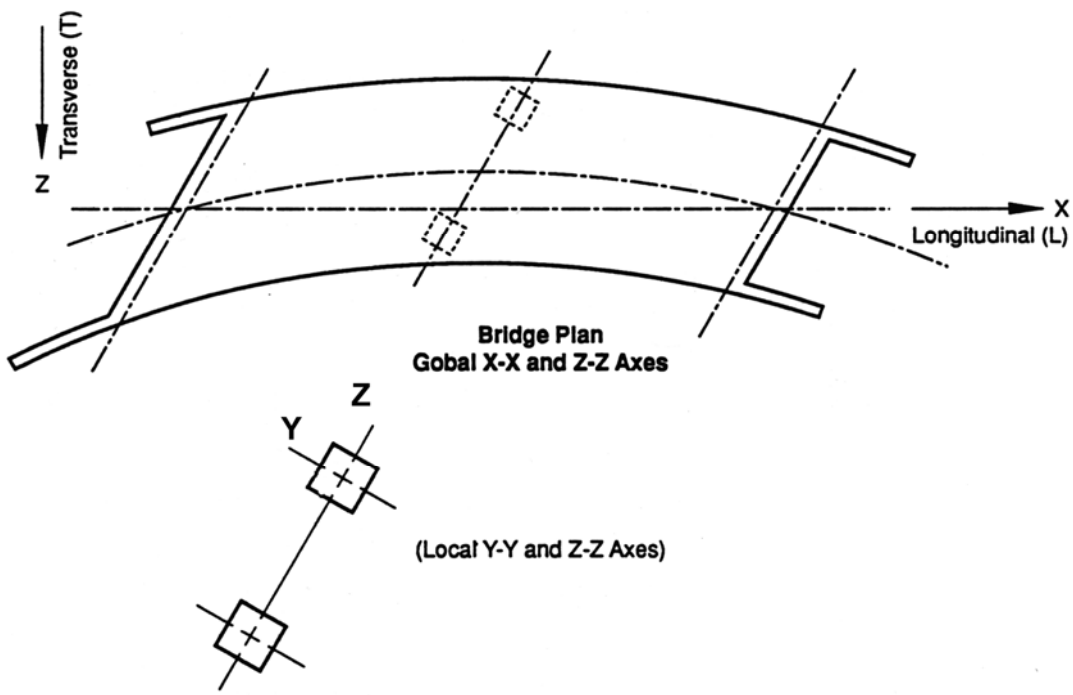

Figure 2.1 Local–Global Axis Definition

2.1.5 Damping

A 5% damped elastic response spectrum shall be used for determining seismic demand in Ordinary Standard concrete bridges. Damping ratios on the order of 10% can be justified for bridges that are heavily influenced by energy dissipation at the abutments and are expected to respond like single-degree-of-freedom systems. A reduction factor, R_D can be applied to the 5% damped response spectrum used to calculate the displacement demand.

$$R_D = \frac{1.5}{[40c+1]} + 0.5 \qquad (2.1a)$$

$$Sd' = (R_D) \times (Sd) \qquad (2.1b)$$

where: c = damping ratio ($0.05 \leq c \leq 0.1$)

Sd = 5% damped spectral displacement

Sd' = spectral displacement modified for higher levels of damping

The following characteristics are typically good indicators that higher damping may be anticipated [3]:

- Total length less than 300 feet (90 m)
- Three spans or less
- Abutments designed for sustained soil mobilization
- Normal or slight skew (less than 20 degrees)
- Continuous superstructure without hinges or expansion joints

However, abutments that are designed to fuse (seat type abutment with backwalls), or respond in a flexible manner, may not develop enough sustained soil-structure interaction to rely on the higher damping ratio.

2.2 Displacement Demand

2.2.1 Estimated Displacement

The global displacement demand estimate, Δ_D for Ordinary Standard Bridges can be determined by linear elastic analysis utilizing effective section properties as defined in Section 5.6.

Equivalent Static Analysis (ESA), as defined in Section 5.2.1, can be used to determine Δ_D if a dynamic analysis will not add significantly more insight into behavior. ESA is best suited for bridges or individual frames with the following characteristics:

- Response primarily captured by the fundamental mode of vibration with uniform translation
- Simply defined lateral force distribution (e.g. balanced spans, approximately equal bent stiffness)
- Low skew

Elastic Dynamic Analysis (EDA) as defined in Section 5.2.2 shall be used to determine Δ_D for all other Ordinary Standard Bridges.

The global displacement demand estimate shall include the effects of soil/foundation flexibility if they are significant.

2.2.2 Global Structure Displacement and Local Member Displacement

Global structure displacement, Δ_D is the total displacement at a particular location within the structure or subsystem. The global displacement will include components attributed to foundation flexibility, Δ_f

(i.e., foundation rotation or translation), flexibility of capacity protected components such as bent caps Δ_b, and the flexibility attributed to elastic and inelastic response of ductile members Δ_y and Δ_p respectively. The analytical model for determining the displacement demands shall include as many of the structural characteristics and boundary conditions affecting the structure's global displacements as possible. The effects of these characteristics on the global displacement of the structural system are illustrated in Figures 2.2 & 2.3.

Local member displacements such as column displacements, Δ_{col} are defined as the portion of global displacement attributed to the elastic displacement Δ_y and plastic displacement Δ_p of an individual member from the point of maximum moment to the point of contra-flexure as shown in Figure 2.2.

2.2.3 Displacement Ductility Demand

Displacement ductility demand is a measure of the imposed post-elastic deformation on a member. Displacement ductility is mathematically defined by Equation 2.2.

$$\mu_D = \Delta_D / \Delta_{Y(i)} \qquad (2.2)$$

Where: Δ_D = The estimated global frame displacement demand defined in Section 2.2.2

$\Delta_{Y(i)}$ = The yield displacement of the subsystem from its initial position to the formation of plastic hinge (*i*) See Figure 2.3

2.2.4 Target Displacement Ductility Demand

The target displacement ductility demand values for various components are identified below. These target values have been calibrated to laboratory test results of fixed base cantilever columns where the global displacement equals the column's displacement. The designer should recognize that as the framing system becomes more complex and boundary conditions are included in the demand model, an increased percentage of the global displacement will be attributed to the flexibility of components other than the ductile members within the frame. These effects are further magnified when elastic displacements are used in the ductility definition specified in equation 2.2 and shown in Figure 2.3. For such systems, including but not limited to, Type I or Type II shafts (see Figure 2.4 for definition of **shaft**), the global ductility demand values listed below may not be achieved. The target values may range between 1.5 and 3.5 where specific values cannot be defined.

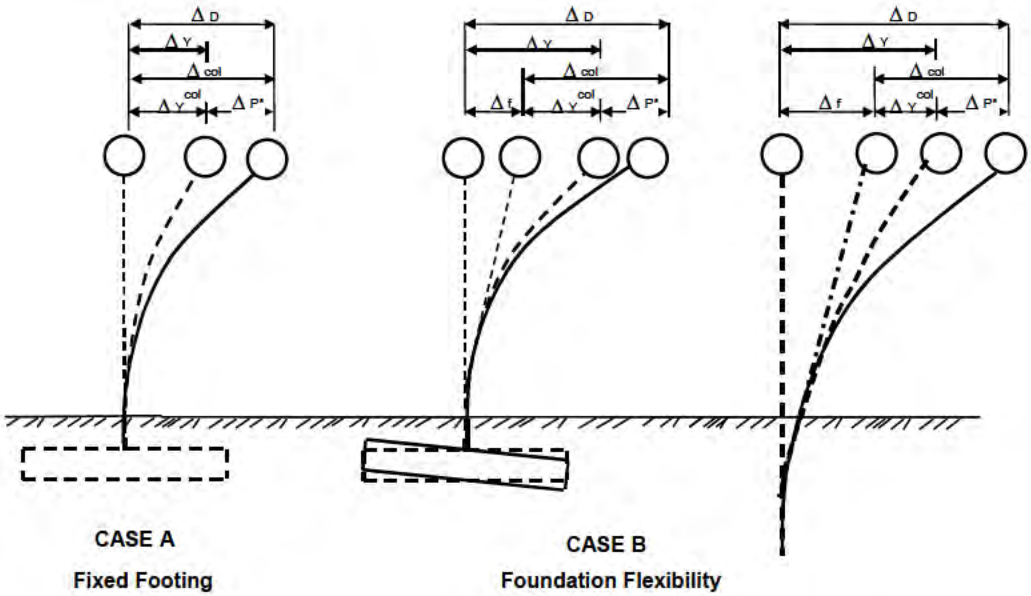

Note: For a cantilever column with fixed base $\Delta_Y^{col} = \Delta_Y$

ΔP^* = portion of the plastic displacement capacity Δ_p

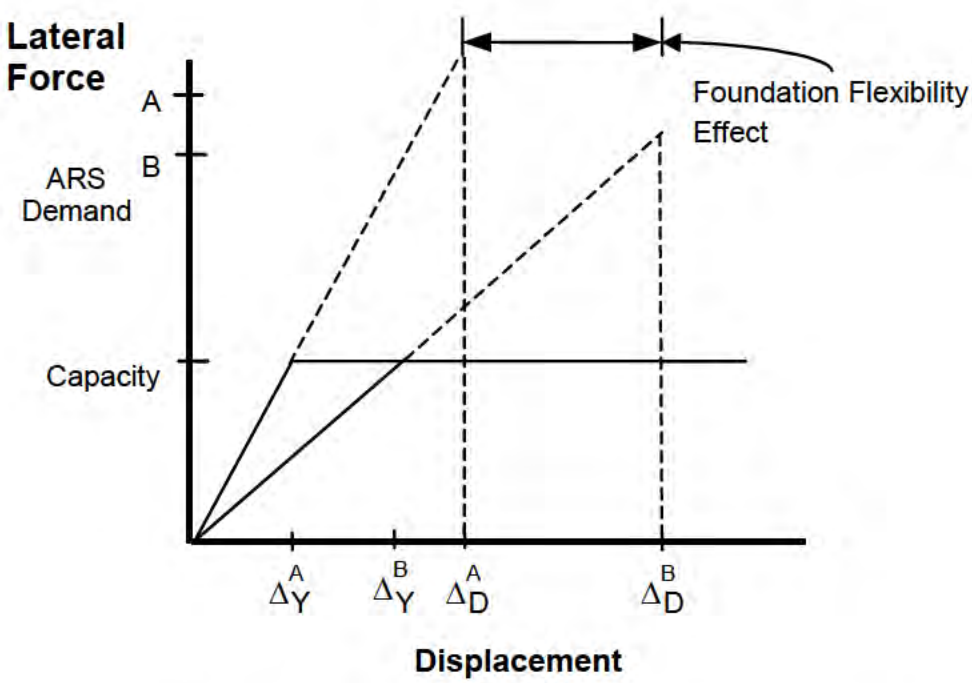

Figure 2.2 The Effects of Foundation Flexibility on the Force-Deflection Curve of a Single Column Bent

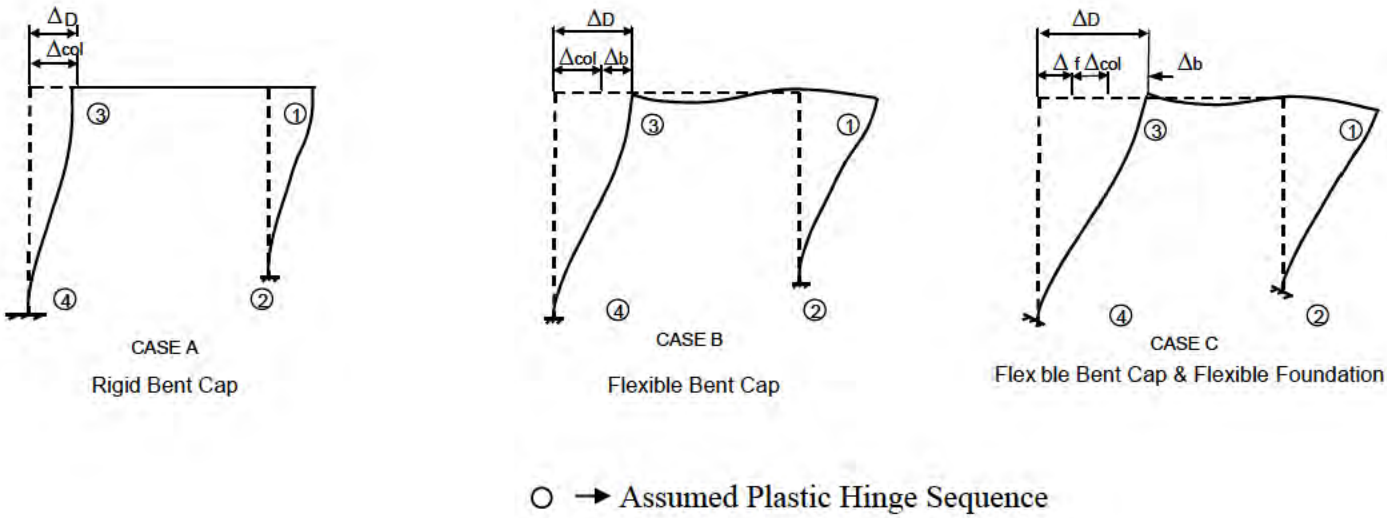

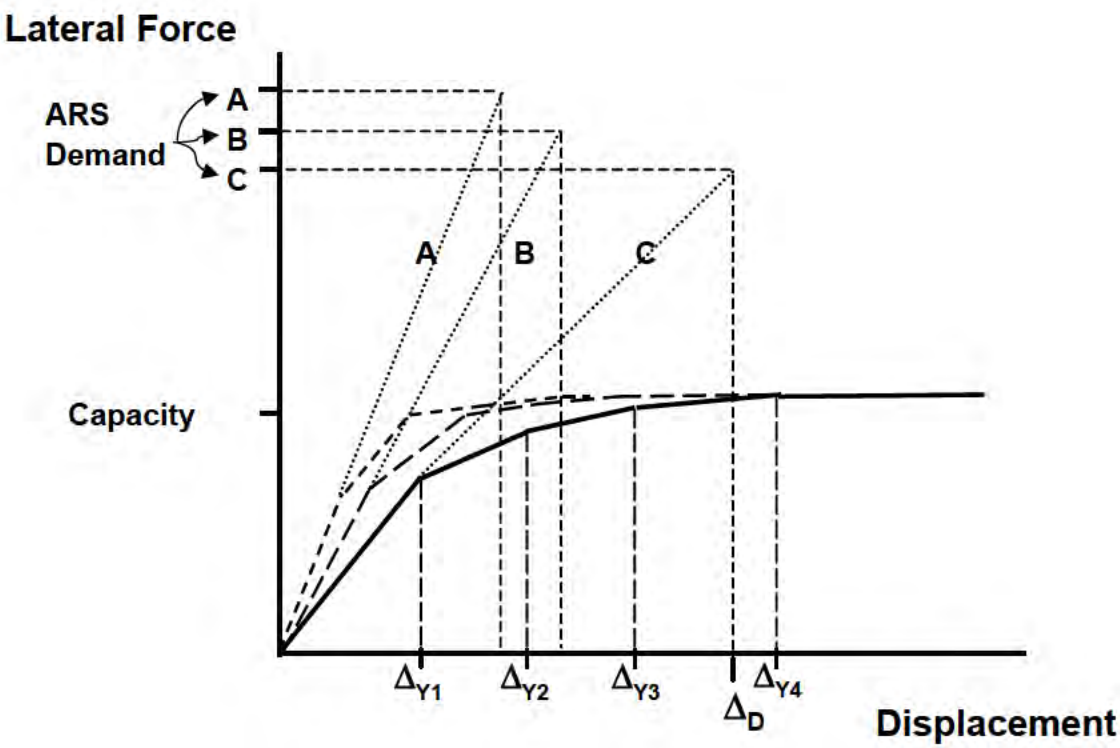

Figure 2.3 The Effects of Bent Cap and Foundation Flexibility on Force-Deflection Curve of a Bent Frame

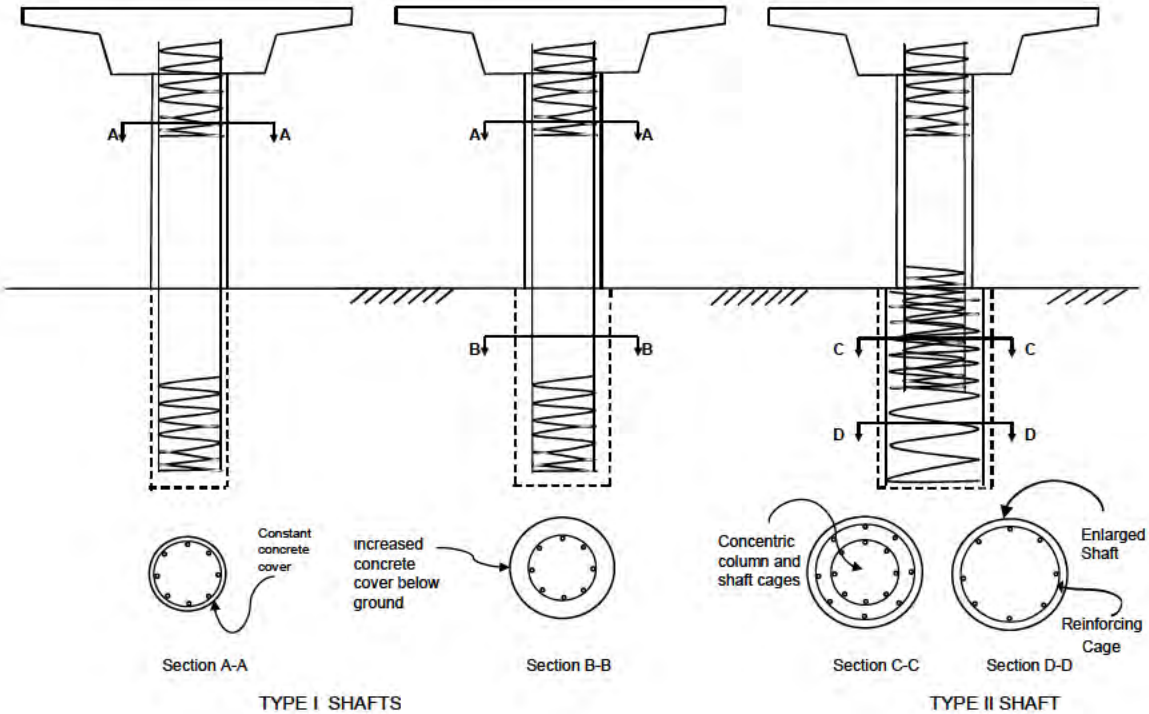

Type I shafts are designed so the plastic hinge will form below ground in the shaft. The concrete cover and area of transverse and longitudinal reinforcement may change between the column and Type I shaft, but the cross section of the confined core is the same for both the column and the shaft. The global displacement ductility demand, μ_D for a Type I shaft shall be as specified in Section 2.2.4, with an upperbound value corresponding to that of the supported column.

Type II shafts are designed so the plastic hinge will form at or above the shaft/column interface, thereby, containing the majority of inelastic action to the ductile column element. Type II shafts are usually enlarged shafts characterized by a reinforcing cage in the shaft that has a core diameter larger than that of the column it supports. Type II shafts shall be designed to remain elastic. See Section 7.7.3.2 for design requirements for Type II shafts.

Figure 2.4 Shaft Definitions

NOTE:
Generally, the use of Type II shafts should be discussed and approved at the Type Selection Meeting. Type II Shafts will increase the foundation costs, compared to Type I Shafts, however there is an advantage of improved post-earthquake inspection and repair. Typically, Type I shafts are appropriate for short columns, while Type II shafts are used in conjunction with taller columns. The end result shall be a structure with a balanced stiffness as discussed in Section 7.

Single Column Bents supported on fixed foundation	$\mu_D \leq 4$
Multi-Column Bents supported on fixed or pinned footings	$\mu_D \leq 5$
Pier Walls (weak direction) supported on fixed or pinned footings	$\mu_D \leq 5$
Pier Walls (strong direction) supported on fixed or pinned footings	$\mu_D \leq 1$

Minimum ductility values are not prescribed. The intent is to utilize the advantages of flexible systems, specifically to reduce the required strength of ductile members and minimize the demand imparted to adjacent capacity protected components. Columns or piers with flexible foundations will naturally have low displacement ductility demands because of the foundation's contribution to Δ_Y. The minimum lateral strength requirement in Section 3.5 or the P-Δ requirements in Section 4.2 may govern the design of frames where foundation flexibility lengthens the period of the structure into the range where the ARS demand is typically reduced.

2.3 Force Demand

The structure shall be designed to resist the internal forces generated when the structure reaches its Collapse Limit State. The Collapse Limit State is defined as the condition when a sufficient number of plastic hinges have formed within the structure to create a local or global collapse mechanism.

2.3.1 Moment Demand

The column design moments shall be determined by the idealized plastic capacity of the column's cross section, M_p^{col} defined in Section 3.3. The overstrength moment M_o^{col} defined in Section 4.3.1, the associated shear V_o^{col} defined in Section 2.3.2, and the moment distribution characteristics of the structural system shall determine the design moments for the capacity protected components adjacent to the column.

2.3.2 Shear Demand

2.3.2.1 Column Shear Demand

The column shear demand and the shear demand transferred to adjacent components shall be the shear force V_o^{col} associated with the overstrength column moment M_o^{col}. The designer shall consider all potential plastic hinge locations to insure the maximum possible shear demand has been determined.

2.3.2.2 Pier Wall Shear Demand

The shear demand for pier walls in the weak direction shall be calculated as described in Section 2.3.2.1. The shear demand for pier walls in the strong direction is dependent upon the boundary conditions

of the pier wall. Pier walls with fixed-fixed end conditions shall be designed to resist the shear generated by the lesser of the unreduced elastic ARS demand or 130% of the ultimate shear capacity of the foundation (based on most probable geotechnical properties). Pier walls with fixed-pinned end conditions shall be designed for the least value of the unreduced elastic ARS demand or 130% of either the shear capacity of the pinned connection or the ultimate capacity of the foundation.

2.3.3 Shear Demand for Capacity Protected Members

The shear demand for essentially elastic capacity protected members shall be determined by the distribution of overstrength moments and associated shear when the frame or structure reaches its Collapse Limit State.

3. CAPACITIES OF STRUCTURE COMPONENTS

3.1 Displacement Capacity of Ductile Concrete Members

3.1.1 Ductile Member Definition

A ductile member is defined as any member that is intentionally designed to deform inelastically for several cycles without significant degradation of strength or stiffness under the demands generated by the **Design Seismic Hazards**. See Section 6.1 for the definition of **Design Seismic Hazards**.

3.1.2 Distinction Between Local Member Capacity and Global Structure System Capacity

Local member displacement capacity, Δ_c is defined as a member's displacement capacity attributed to its elastic and plastic flexibility as defined in Section 3.1.3. The structural system's displacement capacity, Δ_C is the reliable lateral capacity of the bridge or subsystem as it approaches its Collapse Limit State. Ductile members must meet the local displacement capacity requirements specified in Section 3.1.4.1 and the global displacement criteria specified in Section 4.1.1.

3.1.3 Local Member Displacement Capacity

The local displacement capacity of a member is based on its rotation capacity, which in turn is based on its curvature capacity. The curvature capacity shall be determined by M-ϕ analysis, see Section 3.3.1. The local displacement capacity Δ_c of any column may be idealized as one or two cantilever segments presented in Equations 3.1-3.5 and 3.1a-3.5a, respectively. See Figures 3.1 and 3.2 for details.

$$\Delta_c = \Delta_Y^{col} + \Delta_p \tag{3.1}$$

$$\Delta_Y^{col} = \frac{L^2}{3} \times \phi_Y \tag{3.2}$$

$$\Delta_p = \theta_p \times \left(L - \frac{L_p}{2} \right) \tag{3.3}$$

$$\theta_p = L_p \times \phi_p \tag{3.4}$$

$$\phi_p = \phi_u - \phi_Y \tag{3.5}$$

$$\Delta_{c1} = \Delta_{Y1}^{col} + \Delta_{p1} \quad , \quad \Delta_{c2} = \Delta_{Y2}^{col} + \Delta_{p2} \tag{3.1a}$$

$$\Delta_{Y1}^{col} = \frac{L_1^2}{3} \times \phi_{Y1} \quad , \quad \Delta_{Y2}^{col} = \frac{L_2^2}{3} \times \phi_{Y2} \tag{3.2a}$$

$$\Delta_{p1} = \theta_{p1} \times \left(L_1 - \frac{L_{p1}}{2} \right) \quad , \quad \Delta_{p2} = \theta_{p2} \times \left(L_2 - \frac{L_{p2}}{2} \right) \tag{3.3a}$$

$$\theta_{p1} = L_{p1} \times \phi_{p1} \quad , \quad \theta_{p2} = L_{p2} \times \phi_{p2} \tag{3.4a}$$

$$\phi_{p1} = \phi_{u1} - \phi_{Y1} \quad , \quad \phi_{p2} = \phi_{u2} - \phi_{Y2} \tag{3.5a}$$

where:

L = Distance from the point of maximum moment to the point of contra-flexure (in)

L_P = Equivalent analytical plastic hinge length as defined in Section 7.6.2 (in)

Δ_p = Idealized plastic displacement capacity due to rotation of the plastic hinge (in)

Δ_Y^{col} = The idealized yield displacement of the column at the formation of the plastic hinge (in)

ϕ_Y = Idealized yield curvature defined by an elastic-perfectly-plastic representation of the cross section's M-ϕ curve, see Figure 3.7 (rad/in)

ϕ_p = Idealized plastic curvature capacity (assumed constant over L_p) (rad/in)

ϕ_u = Curvature capacity at the Failure Limit State, defined as the concrete strain reaching ε_{cu} or the longitudinal reinforcing steel reaching the reduced ultimate strain ε_{su}^R (rad/in)

θ_p = Plastic rotation capacity (radian)

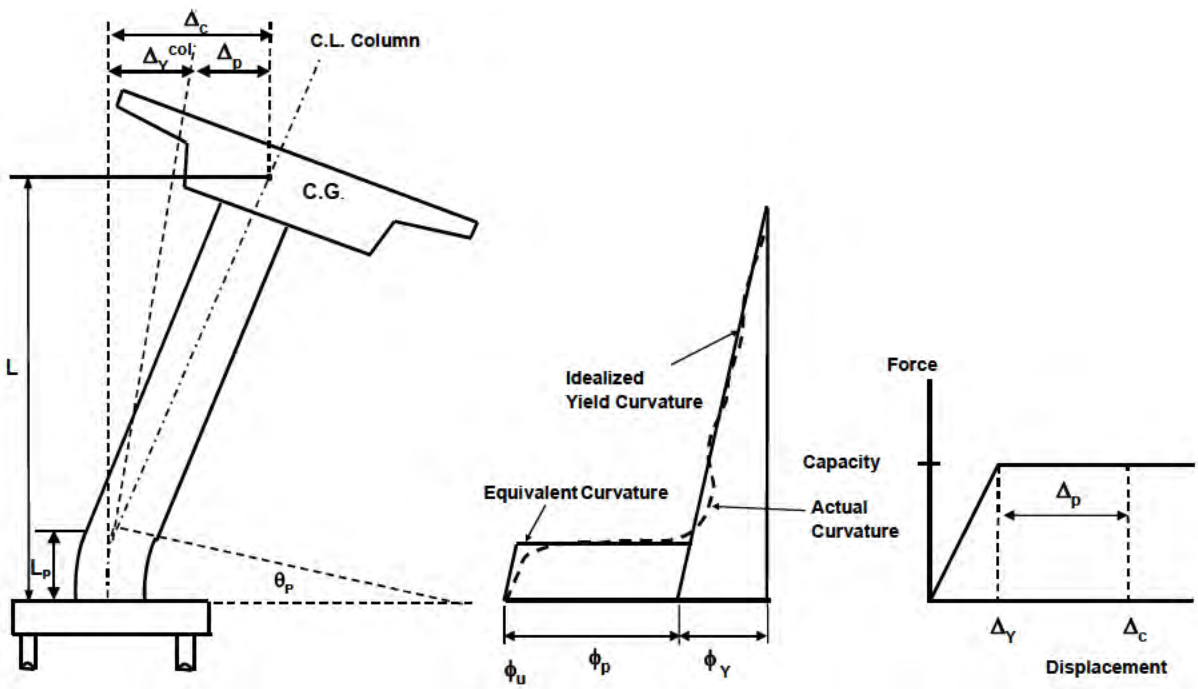

Figure 3.1 Local Displacement Capacity – Cantilever Column w/Fixed Base

3.1.4 Local Member Displacement Ductility Capacity

Local displacement ductility capacity for a particular member is defined in Equations 3.6.

$$\mu_c = \frac{\Delta_c}{\Delta_Y^{col}} \qquad \text{for Cantilever columns,}$$

$$\mu_{c1} = \frac{\Delta_{c1}}{\Delta_{Y1}^{col}} \quad \& \quad \mu_{c2} = \frac{\Delta_{c2}}{\Delta_{Y2}^{col}} \qquad \text{for fixed-fixed columns} \qquad (3.6)$$

3.1.4.1 Minimum Local Displacement Ductility Capacity

Each ductile member shall have a minimum local displacement ductility capacity of $\mu_c = 3$ (or, $\mu_{c1} \geq 3$ and $\mu_{c2} \geq 3$, see Equations 3.6) to ensure dependable rotational capacity in the plastic hinge regions regardless of the displacement demand imparted to that member. The local displacement ductility capacity shall be calculated for an equivalent member that approximates a fixed base cantilever element as defined in Figure 3.3.

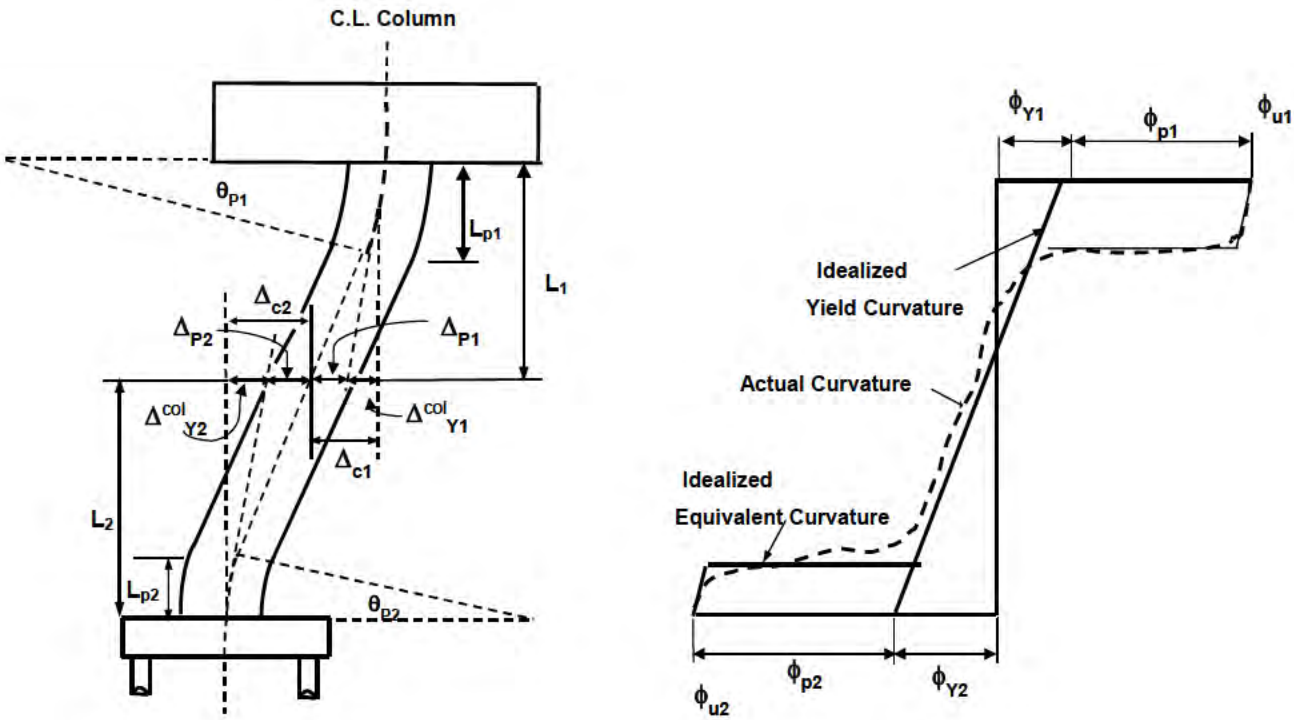

Figure 3.2 Local Displacement Capacity – Framed Column, assumed as fixed-fixed

The minimum displacement ductility capacity $\mu_c = 3$ may be difficult to achieve for columns and Type I pile shafts with large diameters D_c > 10 ft (3m) or components with large L/D ratios. Local displacement ductility capacity less than three (3) requires approval as specified in MTD 20-11.

3.2 Material Properties for Concrete Components

3.2.1 Expected Versus Nominal Material Properties

The capacity of concrete components to resist all seismic demands except shear, shall be based on most probable (expected) material properties to provide a more realistic estimate for design strength. An expected concrete compressive strength, f'_{ce} recognizes the typically conservative nature of concrete batch design, and the expected strength gain with age. The yield stress f_y for ASTM A706 steel can range between 60 ksi and 78 ksi. An expected reinforcement yield stress, f_{ye} is a "characteristic" strength and better represents the actual strength than the specified minimum of 60 ksi. The possibility that the yield stress may be less than f_{ye} in

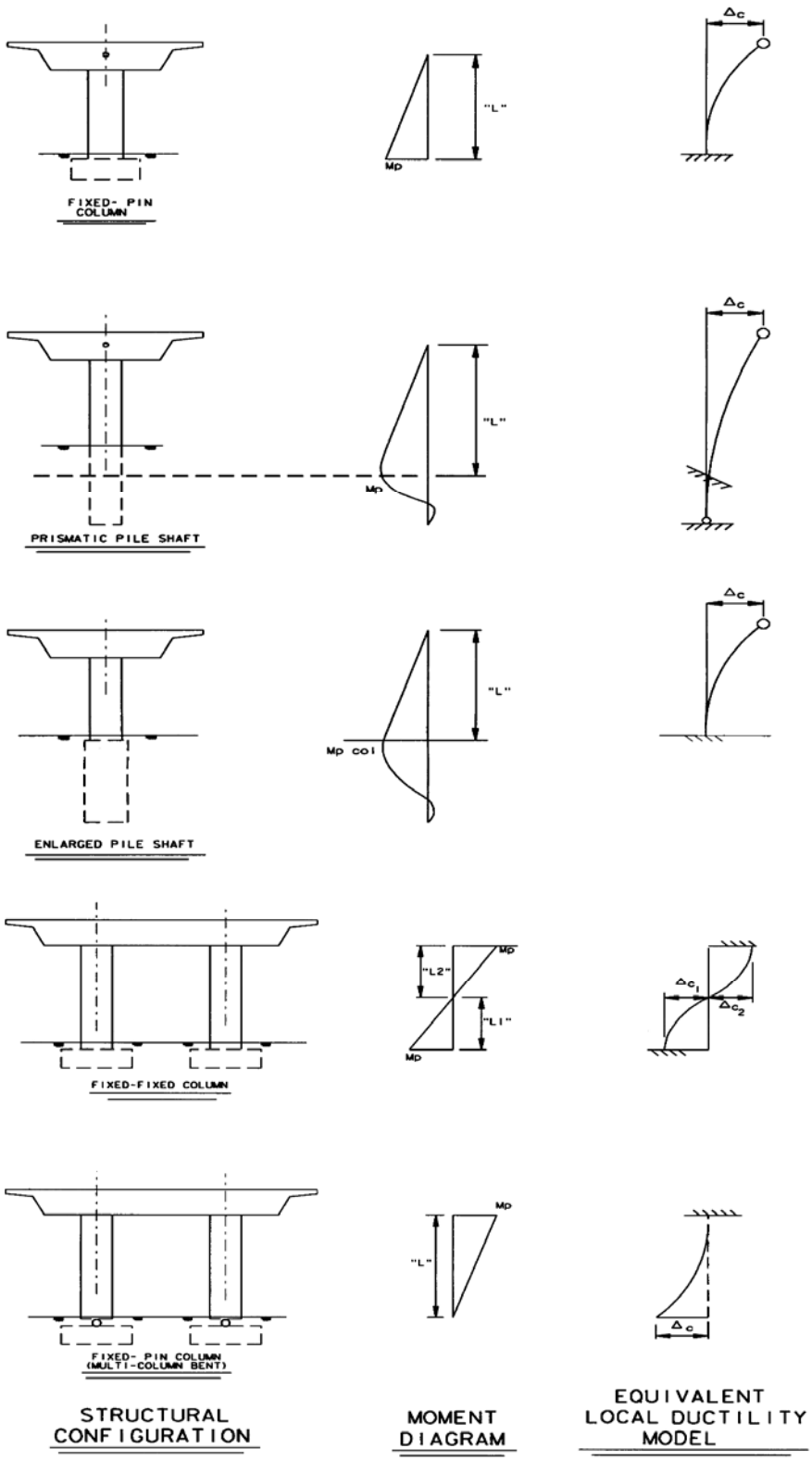

Figure 3.3 Local Ductility Assessment

ductile components will result in a reduced ratio of actual plastic moment strength to design strength, thus conservatively impacting capacity protected components. The possibility that the yield stress may be less than f_{ye} in essentially elastic components is accounted for in the overstrength magnifier specified in Section 4.3.1. Expected material properties shall only be used to assess capacity for earthquake loads.

Seismic shear capacity shall be conservatively based on the nominal material strengths (i.e., f_y, $f_c^{'}$), not the expected material strengths.

For all seismic-related calculations involving capacity of ductile, non-ductile and capacity protected members, the resistance factor, ϕ shall be taken as 0.90 for shear and 1.0 for bending.

3.2.2 Nonlinear Reinforcing Steel Models for Ductile Reinforced Concrete Members

Reinforcing steel shall be modeled with a stress-strain relationship that exhibits an initial linear elastic portion, a yield plateau, and a strain hardening range in which the stress increases with strain.

The yield point should be defined by the expected yield stress of the steel, f_{ye}. The length of the yield plateau shall be a function of the steel strength and bar size. The strain-hardening curve can be modeled as a parabola or other non-linear relationship and should terminate at the ultimate tensile strain, ε_{su}. The ultimate strain should be set at the point where the stress begins to drop with increased strain as the bar approaches fracture. It is Caltrans' practice to reduce the ultimate strain by up to thirty-three percent to decrease the probability of fracture of the reinforcement. The commonly used steel model is shown in Figure 3.4 [4].

3.2.3 Reinforcing Steel A706/A706M (Grade 60/Grade 400)

For A706/A706M reinforcing steel, the following properties based on a limited number of monotonic pull tests conducted by Material Engineering and Testing Services (METS) may be used. The designer may use actual test data if available.

Modulus of elasticity	$E_s = 29{,}000$ ksi	200,000 MPa
Specified minimum yield strength	$f_y = 60$ ksi	420 MPa
Expected yield strength	$f_{ye} = 68$ ksi	475 MPa
Specified minimum tensile strength	$f_u = 80$ ksi	550 MPa
Expected tensile strength	$f_{ue} = 95$ ksi	655 MPa
Nominal yield strain	$\varepsilon_y = 0.0021$	
Expected yield strain	$\varepsilon_{ye} = 0.0023$	

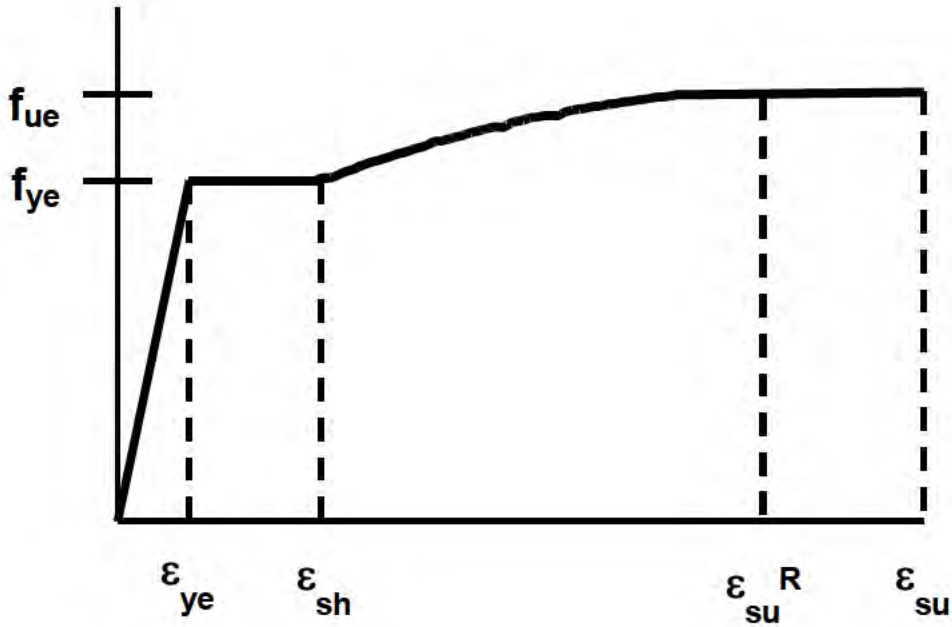

Figure 3.4 Steel Stress Strain Model

Ultimate tensile strain

$$\varepsilon_{su} = \begin{cases} 0.120 & \text{\#10 (\#32m) bars and smaller} \\ 0.090 & \text{\#11 (\#36m) bars and larger} \end{cases}$$

Reduced ultimate tensile strain

$$\varepsilon_{su}^{R} = \begin{cases} 0.090 & \text{\#10 (\#32m) bars and smaller} \\ 0.060 & \text{\#11 (\#36m) bars and larger} \end{cases}$$

Onset of strain hardening

$$\varepsilon_{sh} = \begin{cases} 0.0150 & \text{\#8 (\#25m) bars} \\ 0.0125 & \text{\#9 (\#29m) bars} \\ 0.0115 & \text{\#10 \& \#11 (\#32m \& \#36m) bars} \\ 0.0075 & \text{\#14 (\#43m) bars} \\ 0.0050 & \text{\#18 (\#57m) bars} \end{cases}$$

3.2.4 Nonlinear Prestressing Steel Model

Prestressing steel shall be modeled with an idealized nonlinear stress strain model. Figure 3.5 is an idealized stress-strain model for 7-wire low-relaxation prestressing strand. The curves in Figure 3.5 can be approximated by Equations 3.7 – 3.10. See MTD 20-3 for the material properties pertaining to high strength rods (ASTM A722 Uncoated High-Strength Steel Bar for Prestressing Concrete). Consult the SD Prestressed Concrete Committee for the stress-strain models of other prestressing steels.

Essentially elastic prestress steel strain

$$\varepsilon_{ps,EE} = \begin{cases} 0.0076 & \text{for } f_u = 250\,\text{ksi} \quad (1725\,\text{MPa}) \\ 0.0086 & \text{for } f_u = 270\,\text{ksi} \quad (1860\,\text{MPa}) \end{cases}$$

Reduced ultimate prestress steel strain $\varepsilon^{R}_{ps,u} = 0.03$

<u>250 ksi (1725 MPa) Strand:</u>

$$\varepsilon_{ps} \le 0.0076: \; f_{ps} = 28{,}500 \times \varepsilon_{ps} \quad \text{(ksi)} \qquad f_{ps} = 196{,}500 \times \varepsilon_{ps} \quad \text{(MPa)} \qquad (3.7)$$

$$\varepsilon_{ps} \ge 0.0076: \; f_{ps} = 250 - \frac{0.25}{\varepsilon_{ps}} \quad \text{(ksi)} \qquad f_{ps} = 1725 - \frac{1.72}{\varepsilon_{ps}} \quad \text{(MPa)} \qquad (3.8)$$

<u>270 ksi (1860 MPa) Strand:</u>

$$\varepsilon_{ps} \le 0.0086: \; f_{ps} = 28{,}500 \times \varepsilon_{ps} \quad \text{(ksi)} \qquad f_{ps} = 196{,}500 \times \varepsilon_{ps} \quad \text{(MPa)} \qquad (3.9)$$

$$\varepsilon_{ps} \ge 0.0086: \; f_{ps} = 270 - \frac{0.04}{\varepsilon_{ps} - 0.007} \quad \text{(ksi)} \qquad f_{ps} = 1860 - \frac{0.276}{\varepsilon_{ps} - 0.007} \quad \text{(MPa)} \qquad (3.10)$$

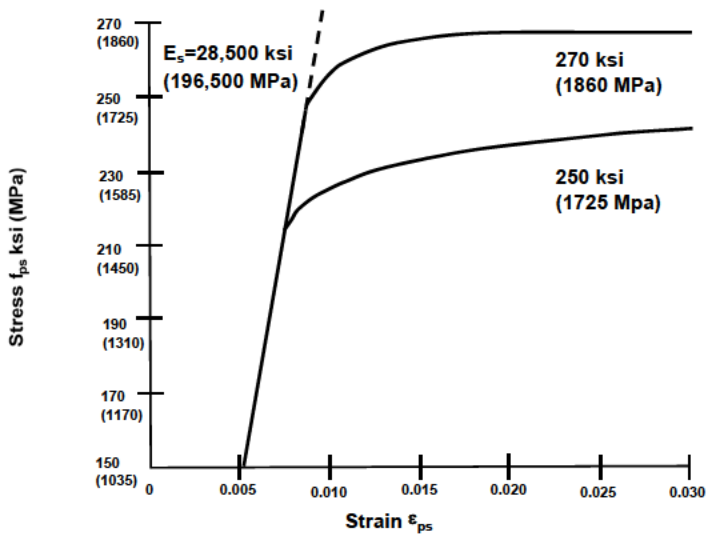

Figure 3.5 Prestressing Strand Stress Strain Model

3.2.5 Nonlinear Concrete Models for Ductile Reinforced Concrete Members

A stress-strain model for confined and unconfined concrete shall be used in the analysis to determine the local capacity of ductile concrete members. The initial ascending curve may be represented by the same equation for both the confined and unconfined model since the confining steel has no effect in this range of strains. As the curve approaches the compressive strength of the unconfined concrete, the unconfined stress begins to fall to an unconfined strain level before rapidly degrading to zero at the spalling strain ε_{sp}, typically $\varepsilon_{sp} \approx 0.005$. The confined concrete model should continue to ascend until the confined compressive strength f'_{cc} is reached. This segment should be followed by a descending curve dependent on the parameters of the confining steel. The ultimate strain ε_{cu} should be the point where strain energy equilibrium is reached between the concrete and the confinement steel. A commonly used model is Mander's stress strain model for confined concrete shown in Figure 3.6 [4].

3.2.6 Normal Weight Portland Cement Concrete Properties

$$\text{Modulus of Elasticity, } E_c = 33 \times w^{1.5} \times \sqrt{f'_{ce}} \quad \text{(psi)}, \qquad E_c = 0.043 \times w^{1.5} \times \sqrt{f'_{ce}} \quad \text{(MPa)} \qquad (3.11)$$

Where w = unit weight of concrete in lb/ft^3 and kg/m^3, respectively. For w = 143.96 lb/ft^3 (2286.05 kg/m^3), Equation 3.11 results in the form presented in other Caltrans documents.

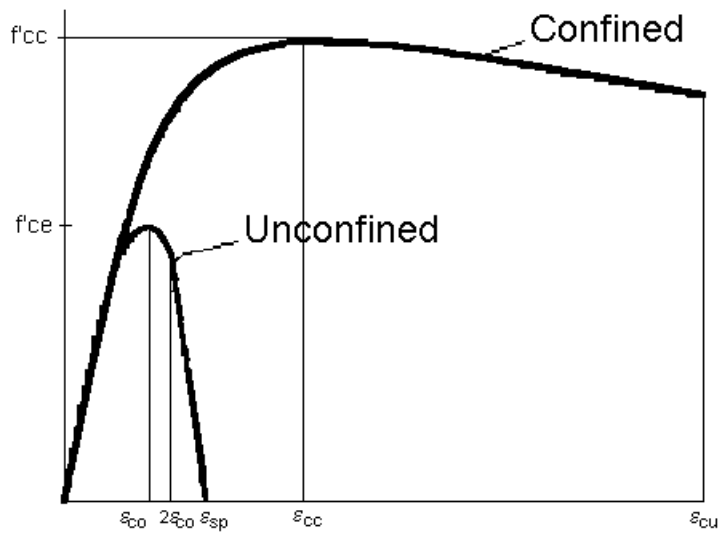

Figure 3.6 Concrete Stress Strain Model

Shear Modulus $$G_c = \frac{E_c}{2 \times (1 + v_c)} \quad (3.12)$$

Poisson's Ratio $v_c = 0.2$

Expected concrete compressive strength f'_{ce} = the greater of: $\begin{cases} 1.3 \times f'_c \\ \text{or} \\ 5000 \text{ (psi)} \quad [34.5 \text{ (MPa)}] \end{cases}$ (3.13)

Unconfined concrete compressive strain
at the maximum compressive stress $\varepsilon_{c0} = 0.002$
Ultimate unconfined compression (spalling) strain $\varepsilon_{sp} = 0.005$

Confined compressive strain $\varepsilon_{cc} = *$

Ultimate compression strain for confined concrete $\varepsilon_{cu} = *$

* Defined by the constitutive stress strain model for confined concrete, see Figure 3.6.

3.2.7 Other Material Properties

Inelastic behavior shall be limited to pre-determined locations. If non-standard components are explicitly designed for ductile behavior, the bridge is classified as non-standard. The material properties and stress-strain relationships for non-standard components shall be included in the project specific design criteria.

3.3 Plastic Moment Capacity for Ductile Concrete Members

3.3.1 Moment Curvature (M–ϕ) Analysis

The plastic moment capacity of all ductile concrete members shall be calculated by M–ϕ analysis based on expected material properties. Moment curvature analysis derives the curvatures associated with a range of moments for a cross section based on the principles of strain compatibility and equilibrium of forces. The M–ϕ curve can be idealized with an elastic perfectly plastic response to estimate the plastic moment capacity of a member's cross section. The elastic portion of the idealized curve should pass through the point marking the first reinforcing bar yield. The idealized plastic moment capacity is obtained by balancing the areas between the actual and the idealized M–ϕ curves beyond the first reinforcing bar yield point, see Figure 3.7 [4].

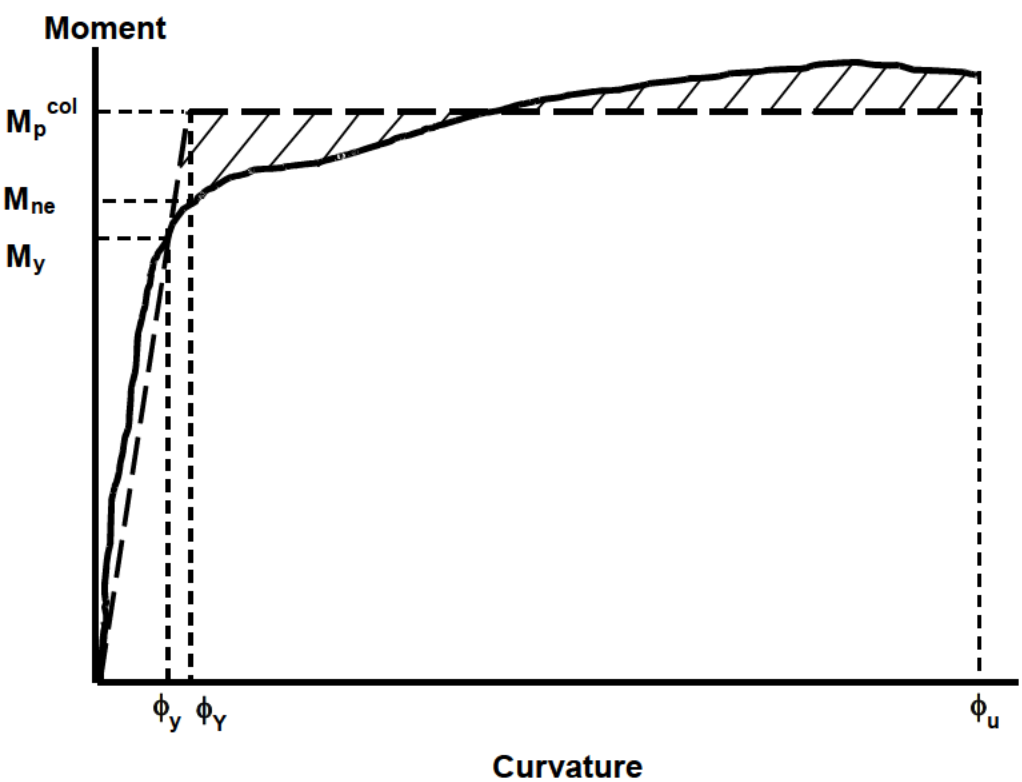

Figure 3.7 Moment Curvature Curve

3.4 Requirements for Capacity Protected Components

Capacity protected concrete components such as footings, Type II pile shafts, bent cap beams, joints and superstructure shall be designed flexurally to remain essentially elastic when the column reaches its overstrength capacity. The expected nominal moment capacity M_{ne} for capacity protected concrete components determined by either $M\text{–}\phi$ or strength design, is the minimum requirement for essentially elastic behavior. Due to cost considerations a factor of safety is not required (i.e., Resistance factor ϕ = 1.0 for flexure). Expected material properties shall only be used to assess flexural component capacity for resisting earthquake loads. The material properties used for assessing all other load cases shall comply with the Caltrans design manuals.

Expected nominal moment capacity for capacity protected concrete components shall be based on the expected concrete and steel strengths when either the concrete strain reaches 0.003 or the reinforcing steel strain reaches ε_{su}^{R} as derived from the steel stress strain model.

3.5 Minimum Lateral Strength

Each bent shall have a minimum lateral flexural capacity (based on expected material properties) to resist a lateral force of $0.1 \times P_{dl}$, where P_{dl} is the tributary dead load applied at the center of gravity of the superstructure.

3.6 Seismic Shear Design for Ductile Concrete Members

3.6.1 Nominal Shear Capacity

The seismic shear demand shall be based on the overstrength shear V_o associated with the overstrength moment M_o defined in Section 4.3. The shear capacity for ductile concrete members shall be conservatively based on the nominal material strengths.

$$\phi V_n \geq V_o \tag{3.14}$$

$$V_n = V_c + V_s \tag{3.15}$$

Where, ϕ = Resistance factor as defined in Section 3.2.1.

3.6.2 Concrete Shear Capacity

The concrete shear capacity of members designed for ductility shall consider the effects of flexure and axial load as specified in Equation 3.16 through 3.21.

$$V_c = v_c \times A_e \tag{3.16}$$

$$A_e = 0.8 \times A_g \tag{3.17}$$

- Inside the plastic hinge zone

$$v_c = \begin{cases} \text{Factor 1} \times \text{Factor 2} \times \sqrt{f_c'} \le 4\sqrt{f_c'} & \text{(psi)} \\ \text{Factor 1} \times \text{Factor 2} \times \sqrt{f_c'} \le 0.33\sqrt{f_c'} & \text{(MPa)} \end{cases} \tag{3.18}$$

- Outside the plastic hinge zone

$$v_c = \begin{cases} 3 \times \text{Factor 2} \times \sqrt{f_c'} \le 4\sqrt{f_c'} & \text{(psi)} \\ 0.25 \times \text{Factor 2} \times \sqrt{f_c'} \le 0.33\sqrt{f_c'} & \text{(MPa)} \end{cases} \tag{3.19}$$

where:

$$\begin{aligned} 0.3 \le \text{Factor1} &= \frac{\rho_s f_{yh}}{0.150\,ksi} + 3.67 - \mu_d \le 3 && (f_{yh} \text{ in ksi units}) \\ 0.025 \le \text{Factor1} &= \frac{\rho_s f_{yh}}{12.5} + 0.305 - 0.083\mu_d \le 0.25 && (f_{yh} \text{ in MPa units}) \end{aligned} \tag{3.20}$$

In Equation (3.20), the value of "$\rho_s f_{yh}$" shall be limited to 0.35 ksi. Figure 3.8 shows how the value of Factor 1 varies over a range of ductility demand ratios, μ_d.

$$\text{Factor 2} = \begin{cases} 1 + \dfrac{P_c}{2000 \times A_g} < 1.5 & \text{(English Units)} \\ 1 + \dfrac{P_c}{13.8 \times A_g} < 1.5 & \text{(Metric Units)} \end{cases} \tag{3.21}$$

In Equation (3.21), P_c is in lb (N), and A_g is in in^2 (mm^2).

For members whose net axial load is in tension, $v_c = 0$.

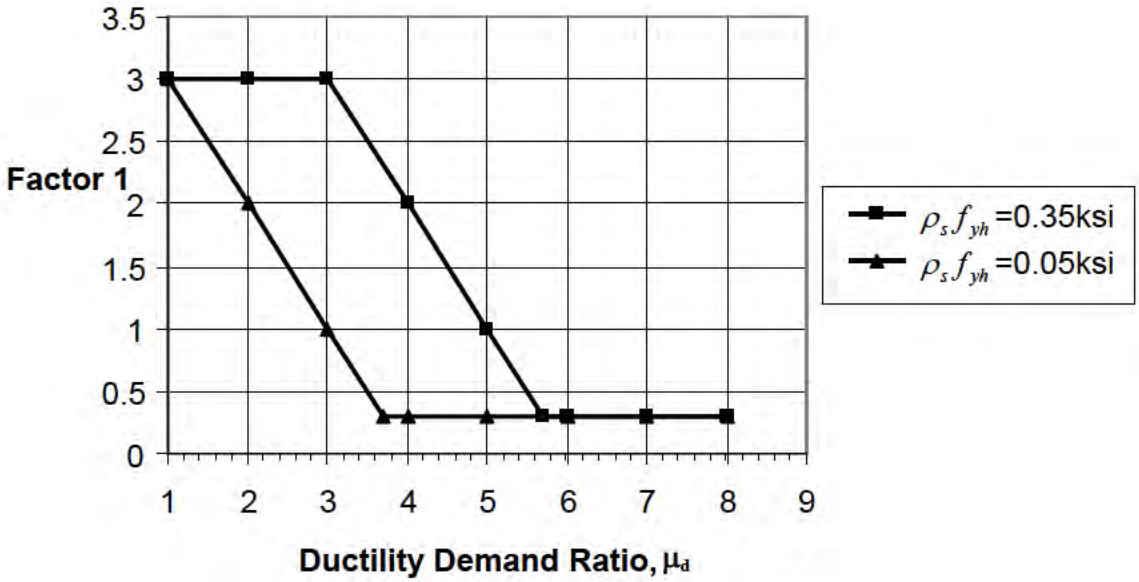

Figure 3.8 Concrete Shear Factors

The global displacement ductility demand, μ_D may be used in the determination of Factor 1 provided a significant portion of the global displacement is attributed to the deformation of the column or pier.

3.6.3 Shear Reinforcement Capacity

For confined circular or interlocking core sections

$$V_s = \left(\frac{A_v \ f_{yh} \ D'}{s} \right), \quad \text{where } A_v = n * \left(\frac{\pi}{2} \right) * A_b \tag{3.22}$$

n = number of individual interlocking spiral or hoop core sections.

For pier walls (in the weak direction)

$$V_s = \left(\frac{A_v \ f_{yh} \ D'}{s} \right) \tag{3.23}$$

A_v = Total area of the shear reinforcement.

Alternative methods for assessing the shear capacity of members designed for ductility must be approved through the process outlined in MTD 20-11.

3.6.4 *Deleted*

3.6.5 Maximum and Minimum Shear Reinforcement Requirements for Columns

3.6.5.1 Maximum Shear Reinforcement

The shear strength V_s provided by the reinforcing steel shall not be taken greater than:

$$8 \times \sqrt{f'_c} A_e \quad \text{(psi)} \qquad 0.67 \times \sqrt{f'_c} A_e \quad \left(\frac{\text{N}}{\text{mm}^2}\right) \tag{3.24}$$

3.6.5.2 Minimum Shear Reinforcement

The area of shear reinforcement provided in columns shall be greater than the area required by Equation 3.25. The area of shear reinforcement for each individual core of columns confined by interlocking spirals or hoops shall be greater than the area required by Equation 3.25.

$$A_v \geq 0.025 \times \frac{D' s}{f_{yh}} \quad (\text{in}^2) \qquad A_v \geq 0.17 \times \frac{D' s}{f_{yh}} \quad (\text{mm}^2) \tag{3.25}$$

3.6.5.3 Minimum Vertical Reinforcement within Interlocking Hoops

The longitudinal rebars in the interlocking portion of the column should have a maximum spacing of 8 inches and need not be anchored in the footing or the bent cap unless deemed necessary for the flexural capacity of the column. The longitudinal rebar size in the interlocking portion of the column ("B" bars in Figure 3.9) shall be chosen to correspond to the rebars outside the interlocking portion as follows:

Size of rebars used outside the interlocking portion (A)	Minimum size of rebars required inside the interlocking portion (B)
#10	#6
#11	#8
#14	#9
#18	#11

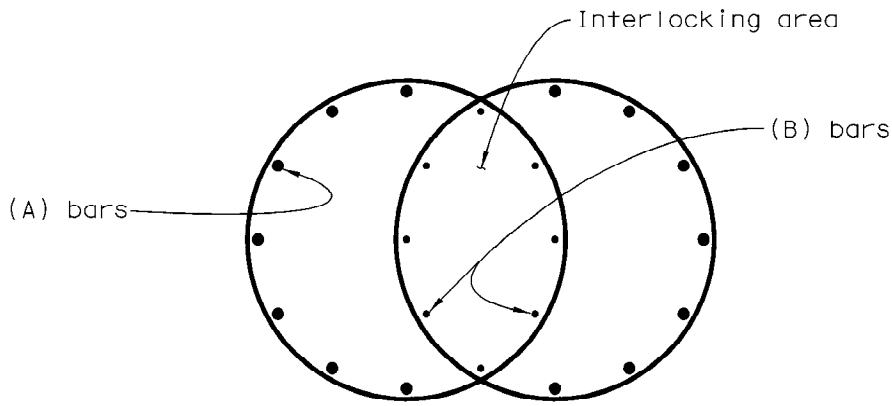

Figure 3.9 Vertical Reinforcement within Interlocking Hoops

3.6.6 Shear Capacity of Pier Walls

3.6.6.1 Shear Capacity in the Weak Direction

The shear capacity for pier walls in the weak direction shall be designed according to Section 3.6.2 & 3.6.3.

3.6.6.2 Shear Capacity in the Strong Direction

The shear capacity of pier walls in the strong direction shall resist the maximum shear demand specified in Section 2.3.2.2.

$$\phi V_n^{pw} > V_u^{pw} \tag{3.26}$$

Studies of squat shear walls have demonstrated that the large shear stresses associated with the moment capacity of the wall may lead to a sliding failure brought about by crushing of the concrete at the base of the wall. The thickness of pier walls shall be selected so the shear stress satisfies equation 3.27 [6].

$$\frac{V_n^{pw}}{0.8 \times A_g} < 8 \times \sqrt{f_c'} \quad \text{(psi)} \qquad \frac{V_n^{pw}}{0.8 \times A_g} < 0.67 \times \sqrt{f_c'} \quad \text{(MPa)} \tag{3.27}$$

3.6.7 Capacity of Capacity Protected Members

The shear capacity of capacity protected members shall be calculated in accordance with LRFD BDS using nominal material properties, with the shear resistance factor ϕ taken as 0.90. The expected nominal moment capacity, M_{ne} for capacity protected members shall be determined as specified in Section 3.4 using expected values of material properties. Moment and shear demands on these structural elements are determined corresponding to the overstrength capacities of the connected ductile components.

3.7 Maximum and Minimum Longitudinal Reinforcement

3.7.1 Maximum Longitudinal Reinforcement

The area of longitudinal reinforcement for compression members shall not exceed the value specified in Equation 3.28.

$$0.04 \times A_g \tag{3.28}$$

3.7.2 Minimum Longitudinal Reinforcement

The minimum area of longitudinal reinforcement for compression members shall not be less than the value specified in Equation 3.29 and 3.30.

$$0.01 \times A_g \quad \text{Columns} \tag{3.29}$$

$$0.005 \times A_g \quad \text{Pier Walls} \tag{3.30}$$

3.7.3 Maximum Reinforcement Ratio

The designer must ensure that members sized to remain essentially elastic (i.e. superstructure, bent caps, footings, Type II shafts) retain a ductile failure mode. The reinforcement ratio, ρ shall meet the requirements in LRFD BDS.

3.8 Lateral Reinforcement of Ductile Members

3.8.1 Lateral Reinforcement Inside the Analytical Plastic Hinge Length

The volume of lateral reinforcement typically defined by the volumetric ratio, ρ_s provided inside the plastic hinge length shall be sufficient to ensure the column or pier wall meets the performance requirements in Section 4.1. ρ_s for columns with circular or interlocking core sections is defined by Equation 3.31.

$$\rho_s = \frac{4A_b}{D' s} \tag{3.31}$$

3.8.2 Lateral Column Reinforcement Inside the Plastic Hinge Region

The lateral reinforcement required inside the plastic hinge region shall meet the volumetric requirements specified in Section 3.8.1, the shear requirements specified in Section 3.6.3, and the spacing requirements in Section 8.2.5. The lateral reinforcement shall be either butt-welded hoops or continuous spiral.[3]

3.8.3 Lateral Column Reinforcement Outside the Plastic Hinge Region

The volume of lateral reinforcement required outside of the plastic hinge region, shall not be less than 50% of the amount specified in Section 3.8.2 and meet the shear requirements specified in Section 3.6.3.

3.8.4 Lateral Reinforcement of Pier Walls

The lateral confinement of pier walls shall be comprised of cross ties. The total cross sectional tie area, A_{sh} required inside the plastic end regions of pier walls shall be the larger of the volume of steel required in Section 3.8.2 or in LRFD BDS.

3.8.5 Lateral Reinforcement Requirements for Columns Supported on Type II Pile Shafts

The volumetric ratio of lateral reinforcement for columns supported on Type II pile shafts shall meet the requirements specified in Section 3.8.1 and 3.8.2. If the Type II pile shaft is enlarged, at least 50% of the confinement reinforcement required at the base of the column shall extend over the entire embedded length of the column cage. The required length of embedment for the column cage into the shaft is specified in Section 8.2.4.

3.8.6 Lateral Confinement for Type II Pile Shafts

The minimum volumetric ratio of lateral confinement in the enlarged Type II shaft shall be 50% of the volumetric ratio required at the base of the column and shall extend along the shaft cage to the point of termination of the column cage.

If this results in lateral confinement spacing which violates minimum spacing requirements in the pile shaft, the bar size and spacing shall be increased proportionally. Beyond the termination of the column cage, the

[3] The SDC development team has examined the longitudinal reinforcement buckling issue. The maximum spacing requirements in Section 8.2.5 should prevent the buckling of longitudinal reinforcement between adjacent layers of transverse reinforcement.

volumetric ratio of the Type II pile shaft lateral confinement shall not be less than half that of the upper pile shaft.

Under certain exceptions a Type II shaft may be designed by adding longitudinal reinforcement to a prismatic column/shaft cage below ground. Under such conditions, the volumetric ratio of lateral confinement in the top segment $4D_{c,\max}$ of the shaft shall be at least 75% of the confinement reinforcement required at the base of the column.

If this results in lateral confinement spacing which violates minimum spacing requirements in the pile shaft, the bar size and spacing shall be increased proportionally. The confinement of the remainder of the shaft cage shall not be less than half that of the upper pile shaft.

4. DEMAND VS. CAPACITY

4.1 Performance Criteria

4.1.1 Global Displacement Criteria

Each bridge or frame shall satisfy Equation 4.1.

$$\Delta_D < \Delta_C \tag{4.1}$$

where:

Δ_C is the bridge or frame displacement capacity when the first ultimate capacity is reached by any plastic hinge. See Figure 4.1 [4, 7].

Δ_D is the displacement demand along the local principal axes of a ductile member generated by seismic deformations applied to the structural system as defined in Section 2.1.2.[4] Δ_D is obtained by performing analyses as defined in Section 5.2.

In applying Equation 4.1, care must be taken to ensure that Δ_D is compared to Δ_C corresponding to the same local principal axis as Δ_D.

4.1.2 Demand Ductility Criteria

The entire structural system as well as its individual subsystems shall meet the displacement ductility demand requirements in Section 2.2.4.

[4] The SDC Development Team elected not to include an interaction relationship for the displacement demand/capacity ratios along the principal axes of ductile members. This decision was based on the inherent factor of safety provided elsewhere in our practice. This factor of safety is provided primarily by the limits placed on permissible column displacement ductility and ultimate material strains, as well as the reserve capacity observed in many of the Caltrans sponsored column tests. Currently test data is not available to conclusively assess the impact of bi-axial displacement demands and their effects on member capacity especially for columns with large cross- sectional aspect ratios.

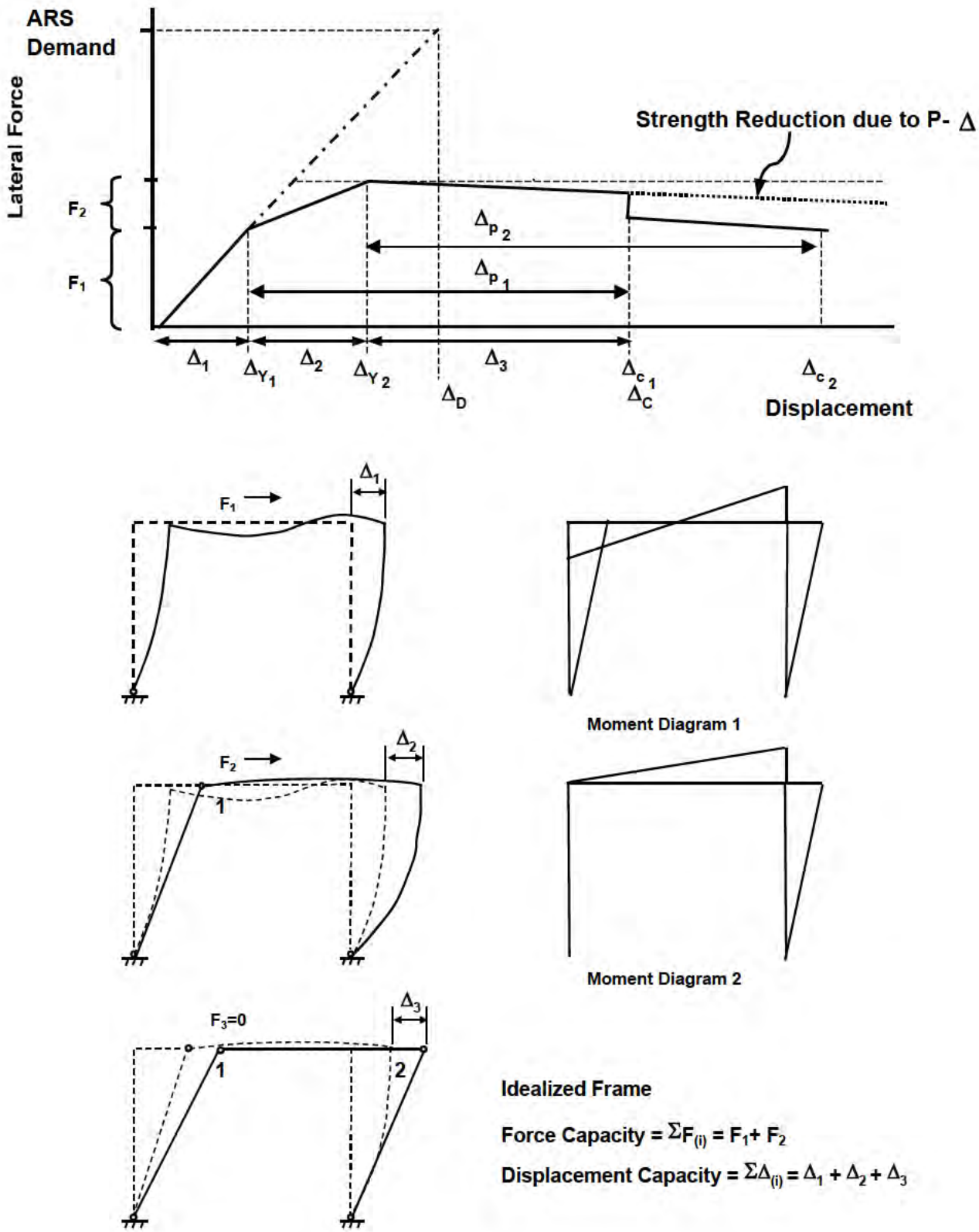

Figure 4.1 Global Force Deflection Relationship

4.1.3 Capacity Ductility Criteria

All ductile members in a bridge shall satisfy the displacement ductility capacity requirements specified in Section 3.1.4.1.

4.2 P-Δ Effects

The dynamic effects of gravity loads acting through lateral displacements shall be included in the design. The magnitude of displacements associated with *P-Δ* effects can only be accurately captured with non-linear time history analysis. In lieu of such analysis, equation 4.3 can be used to establish a conservative limit for lateral displacements induced by axial load for columns meeting the ductility demand limits specified in Section 2.2.4. If equation 4.3 is satisfied, *P-Δ* effects can typically be ignored.[5] See Figure 4.2. [4]

$$P_{dl} \times \Delta_r \leq 0.20 \times M_p^{col} \qquad (4.3)$$

Where: Δ_r = The relative lateral offset between the point of contra-flexure and the base of the plastic hinge. For Type I shafts $\Delta_r = \Delta_D - \Delta_s$

Δ_s = The shaft displacement at the point of maximum moment

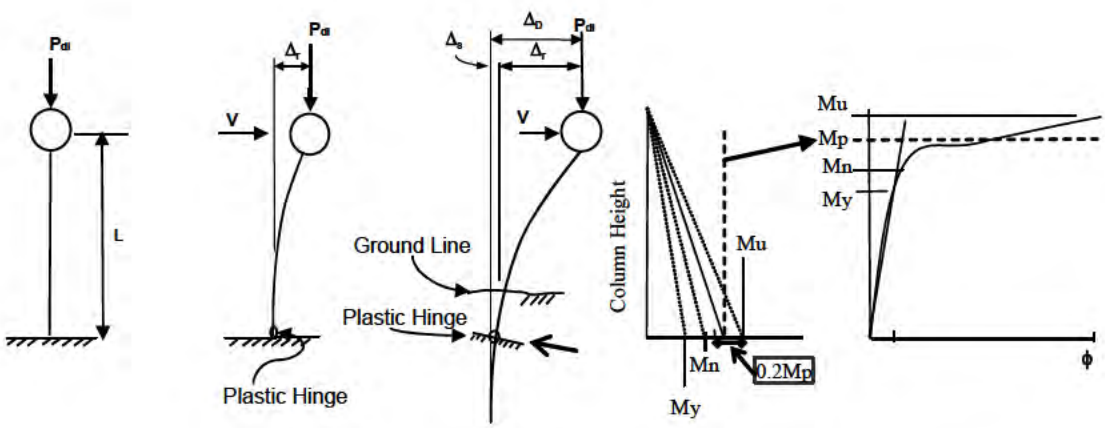

Figure 4.2 P-Δ Effects on Bridge Columns

[5] The moment demand at the point of maximum moment in the shaft is shown in Figure 4.2. As the displacement of the top of column is increased, moment demand values at the base pass through My, Mn, Mp, and Mu (key values defining the moment-curvature curve, see Figure 4.2). The idealized plastic moment Mp is always less than Mu in a well-confined column. Therefore, the 0.2Mp allowance for P-Δ effects is justifiable, given the reserve moment capacities shown above.

4.3 Component Overstrength Factors

4.3.1 Column Overstrength Factor

In order to determine force demands on essentially elastic members, a 20% overstrength magnifier shall be applied to the plastic moment capacity of a column to account for:

- Material strength variations between the column and adjacent members (e.g. superstructure, bent cap, footings, oversized pile shafts)
- Column moment capacities greater than the idealized plastic moment capacity

$$M_o^{col} = 1.2 \times M_p^{col} \tag{4.4}$$

4.3.2 Superstructure/Bent Cap Demand & Capacity

The nominal capacity of the superstructure longitudinally and of the bent cap transversely must be sufficient to ensure the columns have moved well beyond their elastic limit prior to the superstructure or bent cap reaching its expected nominal strength M_{ne}. Longitudinally, the superstructure capacity shall be greater than the demand distributed to the superstructure on each side of the column by the largest combination of dead load moment, secondary prestress moment, and column earthquake moment. The strength of the superstructure shall not be considered effective on the side of the column adjacent to a hinge seat. Transversely, similar requirements are required in the bent cap.

Any moment demand caused by dead load or secondary prestress effects shall be distributed to the entire frame. The distribution factors shall be based on cracked sectional properties. The column earthquake moment represents the amount of moment induced by an earthquake, when coupled with the existing column dead load moment and column secondary prestress moment, will equal the column's overstrength capacity; see Figure 4.3. Consequently, the column earthquake moment is distributed to the adjacent superstructure spans.

$$M_{ne}^{\sup(R)} \geq \sum M_{dl}^{R} + M_{p/s}^{R} + M_{eq}^{R} \tag{4.5}$$

$$M_{ne}^{\sup(L)} \geq \sum M_{dl}^{L} + M_{p/s}^{L} + M_{eq}^{L} \tag{4.6}$$

$$M_o^{col} = M_{dl}^{col} + M_{p/s}^{col} + M_{eq}^{col} \tag{4.7}$$

$$M_{eq}^{R} + M_{eq}^{L} + M_{eq}^{col} + \left(V_o^{col} \times D_{cg}\right) = 0 \tag{4.8}$$

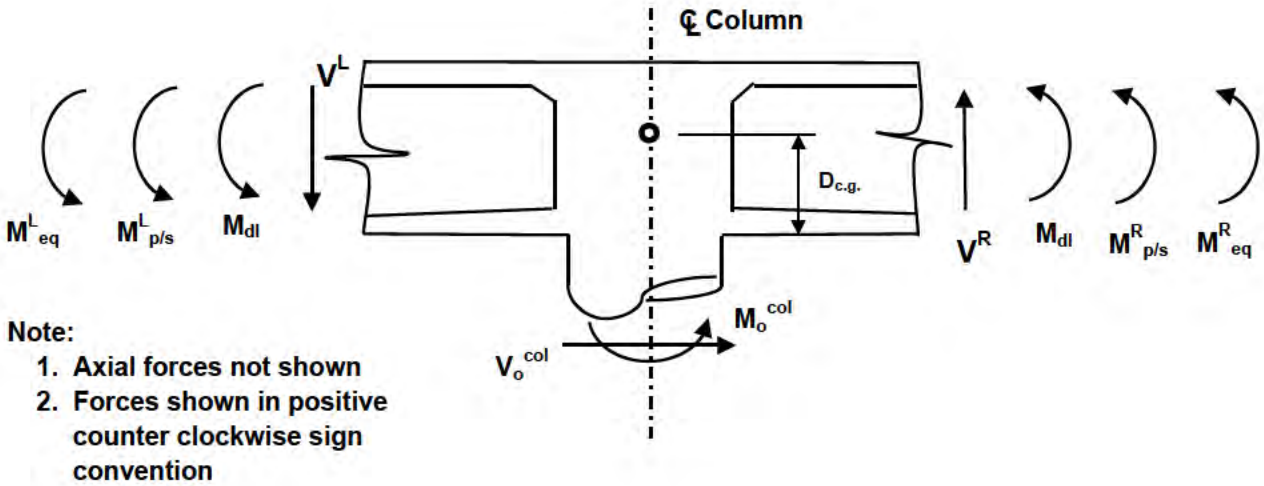

Figure 4.3 Superstructure Demand Generated by Column Overstrength Moment

Where:

$M_{ne}^{\sup R,L}$ = Expected nominal moment capacity of the adjacent left or right superstructure span

M_{dl} = Dead load plus added dead load moment (unfactored)

$M_{p/s}$ = Secondary effective prestress moment (after losses have occurred)

M_{eq}^{col} = The column moment when coupled with any existing dead load and/or secondary prestress moment will equal the column's overstrength moment capacity

$M_{eq}^{R,L}$ = The portion of M_{eq}^{col} and $V_o^{col} \times D_{cg}$ (moment induced by the overstrength shear) distributed to the left or right adjacent superstructure span

4.3.2.1 Longitudinal Superstructure Capacity

Reinforcement can be added to the deck, A_s and/or soffit A_s' to increase the moment capacity of the superstructure, see Figure 4.4. The effective width of the superstructure increases and the moment demand decreases with distance from the bent cap, see Section 7.2.1.1. The reinforcement should be terminated after it has been developed beyond the point where the capacity of the superstructure, $M_{ne}^{\sup}$ exceeds the moment demand without the additional reinforcement.

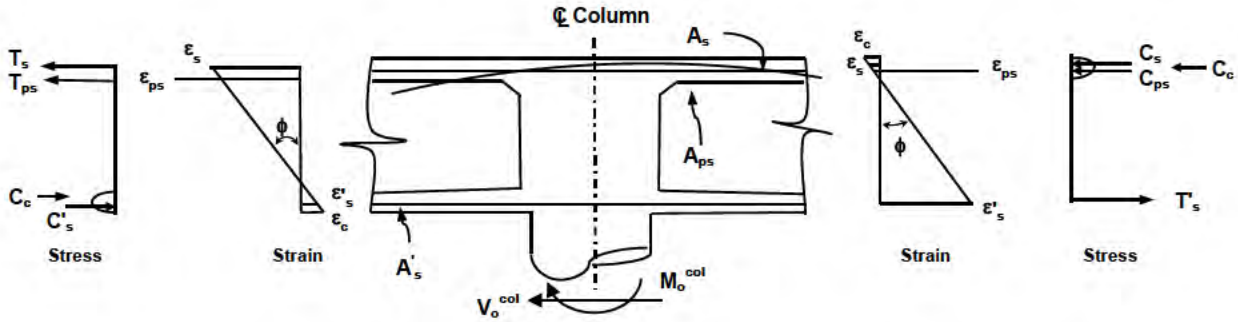

Figure 4.4 Capacity Provided By Superstructure Internal Resultant Force Couple

4.3.2.2 Bent Cap Capacity

The effective width for calculating bent cap capacity is defined in section 7.3.1.1. Bent cap reinforcement required for overstrength must be developed beyond the column cap joint. Cutting off bent cap reinforcement is discouraged because small changes in the plastic hinge capacity may translate into large changes in the moment distribution along the cap due to steep moment gradients.

4.3.3 Foundation Capacity

The foundation must have sufficient strength to ensure the column has moved well beyond its elastic capacity prior to the foundation reaching its expected nominal capacity. Refer to Section 6.2 for additional information on foundation performance.

5. ANALYSIS

5.1 Analysis Requirements

5.1.1 Analysis Objective

The objective of seismic analysis is to assess the force and deformation demands and capacities on the structural system and its individual components. Equivalent static analysis and linear elastic dynamic analysis are the appropriate analytical tools for estimating the displacement demands for Ordinary Standard bridges. Inelastic static analysis is the appropriate analytical tool to establishing the displacement capacities for Ordinary Standard bridges.

5.2 Analytical Methods

5.2.1 Equivalent Static Analysis (ESA)

ESA can be used to estimate displacement demands for structures where a more sophisticated dynamic analysis will not provide additional insight into behavior. ESA is best suited for structures or individual frames with well balanced spans and uniformly distributed stiffness where the response can be captured by a predominant translational mode of vibration.

The seismic load shall be assumed as an equivalent static horizontal force applied to individual frames. The total applied force shall be equal to the product of the ARS and the tributary weight. The horizontal force shall be applied at the vertical center of mass of the superstructure and distributed horizontally in proportion to the mass distribution.

5.2.2 Elastic Dynamic Analysis (EDA)

EDA shall be used to estimate the displacement demands for structures where ESA does not provide an adequate level of sophistication to estimate the dynamic behavior. A linear elastic multi-modal spectral analysis utilizing the appropriate response spectrum shall be performed. The number of degrees of freedom and the number of modes considered in the analysis shall be sufficient to capture at least 90% mass participation in the longitudinal and transverse directions. A minimum of three elements per column and four elements per span shall be used in the linear elastic model.

EDA based on design spectral accelerations will likely produce stresses in some elements that exceed their elastic limit. The presence of such stresses indicates nonlinear behavior. The engineer should recognize that forces generated by linear elastic analysis could vary considerably from the actual force demands on the structure.

Sources of nonlinear response that are not captured by EDA include the effects of the surrounding soil, yielding of structural components, opening and closing of expansion joints, and nonlinear restrainer and abutment behavior. EDA modal results shall be combined using the complete quadratic combination (CQC) method.

Multi-frame analysis shall include a minimum of two boundary frames or one frame and an abutment beyond the frame under consideration. See Figure 5.1.

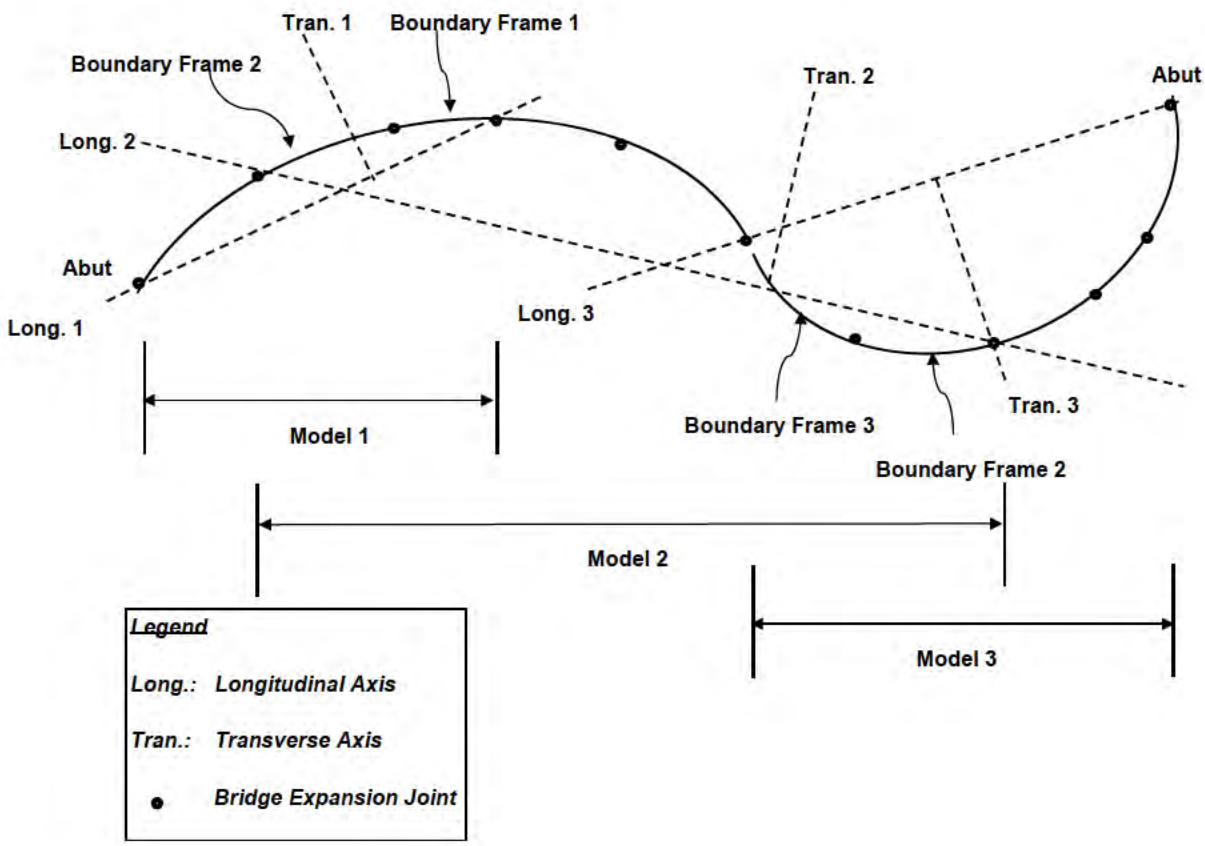

Figure 5.1 EDA Modeling Techniques

5.2.3 Inelastic Static Analysis (ISA)

ISA, commonly referred to as "push over" analysis, shall be used to determine the reliable displacement capacities of a structure or frame as it reaches its limit of structural stability. ISA shall be performed using expected material properties of modeled members. ISA is an incremental linear analysis, which captures the overall nonlinear behavior of the elements, including soil effects, by pushing them laterally to initiate plastic action. Each increment pushes the frame laterally, through all possible stages, until the potential collapse mechanism is achieved. Because the analytical model accounts for the redistribution of internal actions as components respond inelastically, ISA is expected to provide a more realistic measure of behavior than can be obtained from elastic analysis procedures.

5.3 Structural System "Global" Analysis

Structural system or global analysis is required when it is necessary to capture the response of the entire bridge system. Bridge systems with irregular geometry such as curved bridges and skew bridges, bridges with multiple transverse expansion joints, massive substructures components, and foundations supported by soft soil can exhibit dynamic response characteristics that are not necessarily obvious and may not be captured in a separate subsystem analysis [7].

Two global dynamic analyses are normally required to capture the assumed nonlinear response of a bridge because it possesses different characteristics in tension versus compression [3].

In the tension model, the superstructure joints including the abutments are released longitudinally with truss elements connecting the joints to capture the effects of the restrainers. In the compression model, all of the truss (restrainer) elements are inactivated and the superstructure elements are locked longitudinally to capture structural response modes where the joints close up, and the abutments are mobilized. Abutment modeling guidance is given in Sections 7.8.1 and 7.8.2.

The structure's geometry will dictate if both a tension model and a compression model are required. Structures with appreciable superstructure curvature may require additional models, which combine the characteristics identified for the tension and compression models.

Long multi-frame bridges shall be analyzed with multiple elastic models. A single multi-frame model may not be realistic since it cannot account for out-of-phase movement among the frames and may not have enough nodes to capture all of the significant dynamic modes.

Each multi-frame model should be limited to five frames plus a boundary frame or abutment on each end of the model. Adjacent models shall overlap each other by at least one useable frame, see Figure 5.1.

The boundary frames provide some continuity between adjacent models but are considered redundant and their analytical results are ignored. A massless spring should be attached to the unconnected end of the

boundary frames to represent the stiffness of the remaining structure. Engineering judgment should be exercised when interpreting the deformation results among various sets of frames since the boundary frame method does not fully account for the continuity of the structure [3].

5.4 Stand-Alone "Local" Analysis

Stand-alone analysis quantifies the strength and ductility capacity of an individual frame, bent, or column. Stand-alone analysis shall be performed in both the transverse and longitudinal directions. Each frame shall meet all SDC requirements in the stand-alone condition.

5.4.1 Transverse Stand-Alone Analysis

Transverse stand-alone frame models shall assume lumped mass at the columns. Hinge spans shall be modeled as rigid elements with half of their mass lumped at the adjacent column, see Figure 5.2. The transverse analysis of end frames shall include a realistic estimate of the abutment stiffness consistent with the abutment's expected performance. The transverse displacement demand at each bent in a frame shall include the effects of rigid body rotation around the frame's center of rigidity.

5.4.2 Longitudinal Stand-Alone Analysis

Longitudinal stand-alone frame models shall include the short side of hinges with a concentrated dead load, and the entire long side of hinges supported by rollers at their ends; see Figure 5.2. Typically the abutment stiffness is ignored in the stand-alone longitudinal model for structures with more than two frames, an overall length greater than 300 feet (90 m) or significant in plane curvature since the controlling displacement occurs when the frame is moving away from the abutment. A realistic estimate of the abutment stiffness may be incorporated into the stand-alone analysis for single frame tangent bridges and two frame tangent bridges less than 300 feet (90 m) in length.

5.5 Simplified Analysis

The two-dimensional plane frame "push over" analysis of a bent or frame can be simplified to a column model (fixed-fixed or fixed-pinned) if it does not cause a significant loss in accuracy in estimating the displacement demands or the displacement capacities. The effect of overturning on the column axial load and associated member capacities must be considered in the simplified model. Simplifying the demand and capacity models is not permitted if the structure does not meet the stiffness and period requirements in Sections 7.1.1 and 7.1.2.

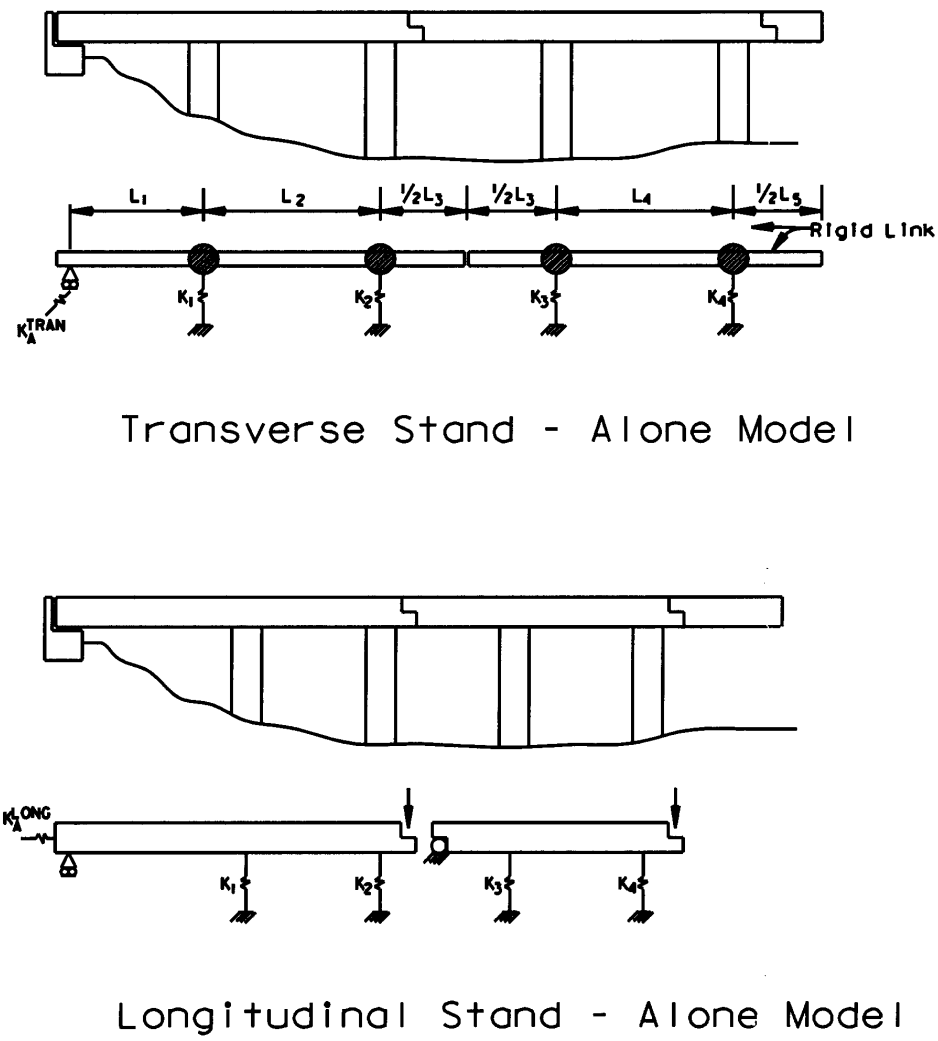

Figure 5.2 Stand-Alone Analysis

5.6 Effective Section Properties

5.6.1 Effective Section Properties for Seismic Analysis

Elastic analysis assumes a linear relationship between stiffness and strength. Concrete members display nonlinear response before reaching their idealized Yield Limit State.

Section properties, flexural rigidity $E_c I$ and torsional rigidity $G_c J$, shall reflect the cracking that occurs before the yield limit state is reached. The effective moments of inertia, I_{eff} and J_{eff} shall be used to obtain realistic values for the structure's period and the seismic demands generated from ESA and EDA analyses.

5.6.1.1 I_{eff} for Ductile Members

The cracked flexural stiffness I_{eff} should be used when modeling ductile elements. I_{eff} can be estimated by Figure 5.3 or the initial slope of the M-ϕ curve between the origin and the point designating the first reinforcing bar yield as defined by equation 5.1.

$$E_c \times I_{eff} = \frac{M_y}{\phi_y} \tag{5.1}$$

M_y = Moment capacity of the section at first yield of the reinforcing steel.

5.6.1.2 I_{eff} for Box Girder Superstructures

I_{eff} in box girder superstructures is dependent on the extent of cracking and the effect of the cracking on the element's stiffness.

I_{eff} for reinforced concrete box girder sections can be estimated between $0.5I_g - 0.75I_g$. The lower bound represents lightly reinforced sections and the upper bound represents heavily reinforced sections.

The location of the prestressing steel's centroid and the direction of bending have a significant impact on how cracking affects the stiffness of prestressed members. Multi-modal elastic analysis is incapable of capturing the variations in stiffness caused by moment reversal. Therefore, no stiffness reduction is recommended for prestressed concrete box girder sections.

5.6.1.3 I_{eff} for Other Superstructure Types

Reductions to I_g similar to those specified for box girders can be used for other superstructure types and cap beams. A more refined estimate of I_{eff} based on M-ϕ analysis may be warranted for lightly reinforced girders and precast elements.

5.6.2 Effective Torsional Moment of Inertia

A reduction of the torsional moment of inertia is not required for bridge superstructures that meet the Ordinary Bridge requirements in Section 1.1 and do not have a high degree of in-plane curvature [7].

The torsional stiffness of concrete members can be greatly reduced after the onset of cracking. The torsional moment of inertia for columns shall be reduced according to equation 5.2.

$$J_{eff} = 0.2 \times J_g \tag{5.2}$$

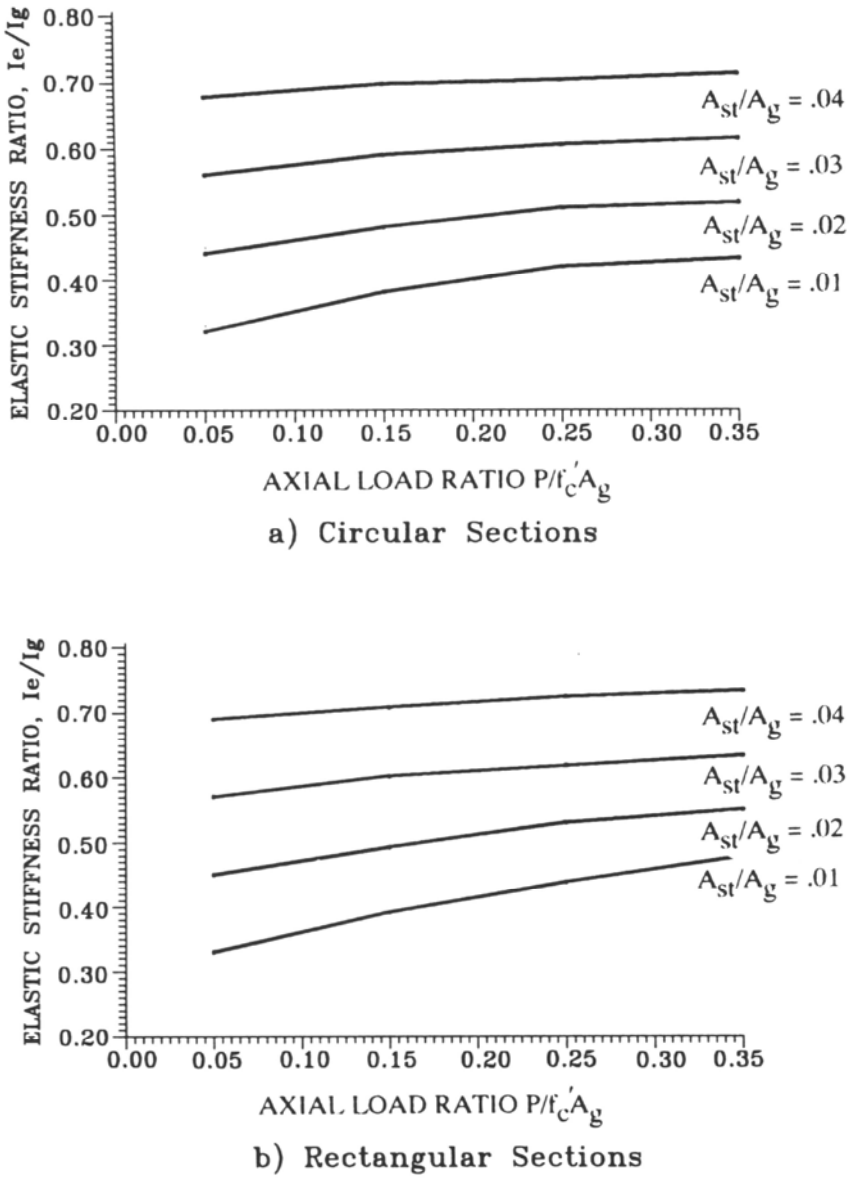

Figure 5.3 Effective Stiffness of Cracked Reinforced Concrete Sections [7]

5.7 Effective Member Properties for Non-Seismic Loading

Temperature and shortening loads calculated with gross section properties may control the column size and strength capacity, often penalizing seismic performance. If this is the case, the temperature or shortening forces should be recalculated based on the effective moment of inertia for the columns.

6. SEISMICITY AND FOUNDATION PERFORMANCE

6.1 Site Seismicity

The **Design Seismic Hazards (DSH)** include ground shaking (defined as ground motion time histories or response spectrum), liquefaction, lateral spreading, surface fault rupture, and tsunami. The response spectrum used in the design is called **Design Spectrum** as defined in Section 2.1 and Appendix B.

6.1.1 Ground Shaking

Generally, ground shaking hazard is characterized for design by the Design Response Spectrum. Methodology for development of the Design Response Spectrum is described in detail in Appendix B, *Design Spectrum Development*. This spectrum reflects the shaking hazard at or near the ground surface.

When bridges are founded on either stiff pile foundations or pile shafts and extend through soft soil, the response spectrum at the ground surface may not reflect the motion of the pile cap or shaft. In these instances, special analysis that considers soil-pile/shaft kinematic interaction is required and will be addressed by the geo-professional on a project specific basis.

Soil profiles can vary significantly along the length of bridges resulting in the need to develop multiple Design Spectra. In the case of bridges with lengths greater than 1000 feet, seismic demand can also vary from seismic waves arriving at different bents at different times (i.e., phase lag). Furthermore, complex wave scattering contributes to incoherence between different bridge bents, particularly at higher frequencies. While incoherence in seismic loading is generally thought to reduce seismic demands overall, it does result in increased relative displacement demand between adjacent bridge frames. In cases with either varying soil profile or extended bridge length, the geo-professional must work in close collaboration with the structural engineer to ensure the bridge can withstand the demands resulting from incoherent loading.

6.1.2 Liquefaction

Preliminary investigation performed by Geotechnical Services will include an assessment of liquefaction potential within the project site per MTD 20-14 and MTD 20-15. When locations are identified as being susceptible to liquefaction, the geo-professional will provide recommendations that include a discussion of the following:

- Need for additional site investigation and soil testing

- Possible consequences of liquefaction including potential horizontal and vertical ground displacements and resulting structural impacts
- Possible remediation strategies including ground improvement, avoidance, and/or structural modification

6.1.2.1 Standard ARS Curves - Deleted

6.1.2.2 Site Specific ARS Curves – Deleted

6.1.3 Fault Rupture Hazard

Preliminary investigation of fault rupture hazard includes the identification of nearby active surface faults that may cross beneath a bridge or proposed bridge, per MTD 20-10. In some instances, the exact location of a fault will not be known because it is concealed by a relatively recent man-made or geologic material or the site is located in a region of complex fault structure. In such cases, a geologist will recommend a fault zone with dimensions based on professional judgment. If a fault trace underlies a structure or the structure falls within the specified fault zone, then Geotechnical Services (GS) will provide the following recommendations:

- Location and orientation of fault traces or zones with respect to structures
- Expected horizontal and vertical displacements
- Description of additional evaluations or investigations that could refine the above information
- Strategies to address ground rupture including avoidance (preferred) and structural design

6.1.4 Additional Seismic Hazards

The following seismic hazards may also exist at a site, and will be addressed by GS if applicable to the location:

- Potential for slope instability and rock-fall resulting from earthquakes
- Loss of bearing capacity/differential settlement
- Tsunami/seiche

6.2 Foundation Design

6.2.1. Foundation Performance

- Bridge foundations shall be designed to respond to seismic loading in accordance with the seismic performance objectives outlined in MTD 20-1

- The capacity of the foundations and their individual components to resist the Design Seismic Hazards shall be based on ultimate structural and soil capacities

6.2.2 Soil Classification[6]

The soil surrounding and supporting a foundation combined with the structural components (i.e. piles, footings, pile caps & drilled shafts) and the seismic input loading determines the dynamic response of the foundation subsystem. Typically, the soil response has a significant effect on the overall foundation response. Therefore, we can characterize the foundation subsystem response based on the quality of the surrounding soil. Soil can be classified as competent, poor, or marginal as described in Section 6.2.2 (A), (B), & (C). Contact the Project Geologist/Geotechnical Engineer if it is uncertain which soil classification pertains to a particular bridge site.

6.2.2(A) Competent Soil

Foundations surrounded by competent soil are capable of resisting ground shaking forces while experiencing small deformations. This type of performance characterizes a stiff foundation subsystem that usually has an insignificant impact on the overall dynamic response of the bridge and is typically ignored in the demand and capacity assessment. Foundations in competent soil can be analyzed and designed using a simple model that is based on assumptions consistent with observed response of similar foundations during past earthquakes. Good indicators that a soil is capable of producing competent foundation performance include the following:

- Standard penetration, upper layer (0-10 ft, 0-3 m) $N = 20$ (Granular soils)
- Standard penetration, lower layer (10-30 ft, 3-9 m) $N = 30$ (Granular soils)
- Undrained shear strength, $s_u > 1500$ psf (72 KPa) (Cohesive soils)
- Shear wave velocity, $v_s > 600\ {}^{\text{ft}}\!/_{\text{sec}}$ ($180\ {}^{\text{m}}\!/_{\text{sec}}$)
- Low potential for liquefaction, lateral spreading, or scour

N = The uncorrected blow count from the Standard Test Method for Penetration Test and Split- Barrel Sampling

[6] Section 6.2 contains interim recommendations. The Caltrans' foundation design policy is currently under review. Previous practice essentially divided soil into two classifications based on standard penetration. Lateral foundation design was required in soft soil defined by N ≤ 10. The SDC includes three soil classifications: competent, marginal, and poor. The marginal classification recognizes that it is more difficult to assess intermediate soils, and their impact on dynamic response, compared to the soils on the extreme ends of the soil spectrum (i.e. very soft or very firm).

The SDC development team recognizes that predicting the soil and foundation response with a few selected geotechnical parameters is simplistic and may not adequately capture soil-structure interaction (SSI) in all situations. The designer must exercise engineering judgement when assessing the impact of marginal soils on the overall dynamic response of a bridge, and should consult with SFB and SD senior staff if they do not have the experience and/or the information required to make the determination themselves.

of Soil

6.2.2(B) Poor Soil

Poor soil has traditionally been characterized as having a standard penetration, N<10. The presence of poor soil classifies a bridge as non-standard, thereby requiring project-specific design criteria that address soil structure interaction (SSI) related phenomena. SSI mechanisms that should be addressed in the project criteria include earth pressure generated by lateral ground displacement, dynamic settlement, and the effect of foundation flexibility on the response of the entire bridge. The assumptions that simplify the assessment of foundation performance in competent soil cannot be applied to poor soil because the lateral and vertical force-deformation response of the soil has a significant effect on the foundation response and subsequently on the overall response of the bridge.

6.2.2(C) Marginal Soil

Marginal defines the range of soil that cannot readily be classified as either competent or poor. The course of action for bridges in marginal soil will be determined on a project-by-project basis. If a soil is classified as marginal, the bridge engineer and foundation designer shall jointly select the appropriate foundation type, determine the impact of SSI, and determine the analytical sophistication required to reasonably capture the dynamic response of the foundation as well as the overall dynamic response of the bridge.

6.2.3 Foundation Design Criteria

6.2.3.1 Foundation Strength

All foundations shall be designed to resist the plastic hinging overstrength capacity of the column or pier wall, M_o defined in Section 4.3.1 and the associated plastic shear V_o.[7] See Section 7.7 for additional foundation design guidelines.

6.2.3.2 Foundation Flexibility

The demand and capacity analyses shall incorporate the expected foundation stiffness if the bridge is sensitive to variations in rotational, vertical, or lateral stiffness.

[7] An exception is permitted for pile cap and spread footing foundations in competent soil, where the foundation may be designed for M_p in lieu of M_o. Designing for a smaller column capacity is justified because of additional capacity inherent to these types of foundation systems that is not typically included in the foundation capacity assessment.

7. DESIGN

7.1 Frame Design

The best way to increase a structure's likelihood of responding to seismic attack in its fundamental mode of vibration is to balance its stiffness and mass distribution. Irregularities in geometry increase the likelihood of complex nonlinear response that cannot be accurately predicted by elastic modeling or plane frame inelastic static modeling.

7.1.1 Balanced Stiffness

It is strongly recommended that the ratio of effective stiffness between any two bents within a frame or between any two columns within a bent satisfy Equation 7.1. It is strongly recommended that the ratio of effective stiffness between adjacent bents within a frame or between adjacent columns within a bent satisfy Equation 7.2. An increase in superstructure mass along the length of the frame should be accompanied by a reasonable increase in column stiffness. For variable width frames the tributary mass supported by each bent or column shall be included in the stiffness comparisons as specified by Equations 7.1(b) and 7.2(b). The simplified analytical technique for calculating frame capacity described in Section 5.5 is only permitted if either Equations 7.1(a) & 7.2(a) or Equations 7.1(b) & 7.2(b) are satisfied.

	Constant Width Frames	**Variable Width Frames**
For any 2 Bents in a frame **or** any 2 Columns in a Bent	$k_i^e / k_j^e \geq 0.5$ (7.1a)	$2 \geq \dfrac{k_i^e / m_i}{k_j^e / m_j} \geq 0.5$ (7.1b)
For adjacent bents in a frame **or** adjacent Columns in a Bent	$k_i^e / k_j^e \geq 0.75$ (7.2a)	$1.33 \geq \dfrac{k_i^e / m_i}{k_j^e / m_j} \geq 0.75$ (7.2b)

k_i^e = The smaller effective bent or column stiffness

k_j^e = The larger effective bent or column stiffness

m_i = Tributary mass of column or bent i

m_j = Tributary mass of column or bent j

The following considerations shall be taken into account when calculating effective stiffness: framing effects, end conditions, column height, percentage of longitudinal and transverse column steel, column diameter, and foundation flexibility. Some of the consequences of not meeting the relative stiffness recommendations defined by Equations 7.1 and 7.2 include:

- Increased damage in the stiffer elements
- An unbalanced distribution of inelastic response throughout the structure
- Increased column torsion generated by rigid body rotation of the superstructure

7.1.2 Balanced Frame Geometry

It is strongly recommend that the ratio of fundamental periods of vibration for adjacent frames in the longitudinal and transverse direction satisfy Equation 7.3.

$$T_i / T_j \geq 0.7 \qquad (7.3)$$

T_i = Natural period of the less flexible frame

T_j = Natural period of the more flexible frame

The consequences of not meeting the fundamental period requirements of Equation 7.3 include a greater likelihood of out-of-phase response between adjacent frames leading to large relative displacements that increase the probability of longitudinal unseating and collision between frames at the expansion joints. The collision and relative transverse translation of adjacent frames will transfer the seismic demand from one frame to the next, which can be detrimental to the stand-alone capacity of the frame receiving the additional seismic demand.

7.1.3 Adjusting Dynamic Characteristics

The following list of techniques should be considered for adjusting the fundamental period of vibration and/or stiffness to satisfy Equations 7.1, 7.2 and 7.3. Refer to MTD 6-1 for additional information on optimizing performance of bridge frames.

- Oversized pile shafts
- Adjust effective column lengths (i.e. lower footings, isolation casing)
- Modified end fixities

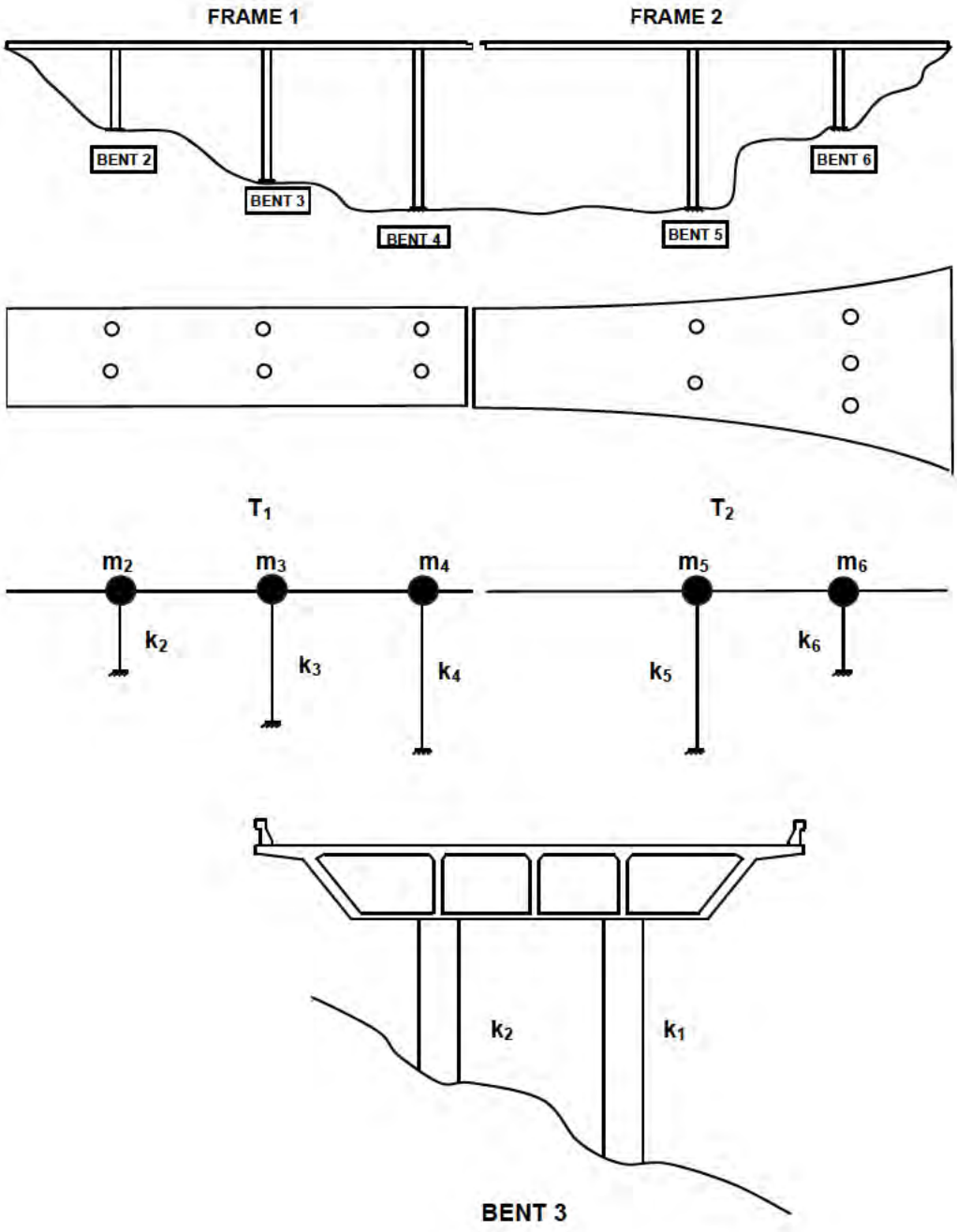

Figure 7.1 Balanced Stiffness

- Reduce/redistribute superstructure mass
- Vary the column cross section and longitudinal reinforcement ratios
- Add or relocate columns
- Modify the hinge/expansion joint layout
- Incorporate isolation bearings or dampers

A careful evaluation of the local ductility demands and capacities is required if project constraints make it impractical to satisfy the stiffness and structure period requirements in Equations 7.1, 7.2, and 7.3.

7.1.4 End Span Considerations

The influence of the superstructure on the transverse stiffness of columns near the abutment, particularly when calculating shear demand, shall be considered.

7.2 Superstructure

7.2.1 Girders

7.2.1.1 Effective Superstructure Width

The effective width of superstructure resisting longitudinal seismic moments is defined by Equation 7.4. The effective width for open soffit structures (e.g. T-Beams & I- Girders) is reduced because they offer less resistance to the torsional rotation of the bent cap. The effective superstructure width can be increased at a 45° angle as you move away from the bent cap until the full section becomes effective. On skewed bridges, the effective width shall be projected normal to the girders where the centerline of girder intersects the face of the bent cap. See Figure 7.2.

$$B_{eff} = \begin{cases} D_c + 2 \times D_s & \text{Box girders \& solid superstructures} \\ D_c + D_s & \text{Open soffit superstructures} \end{cases} \tag{7.4}$$

Additional superstructure width can be considered effective if the designer verifies the torsional capacity of the cap can distribute the rotational demands beyond the effective width stated in Equation 7.4.

If the effective width cannot accommodate enough steel to satisfy the overstrength requirements of Section 4.3.1, the following actions may be taken:

- Thicken the soffit and/or deck slabs
- Increase the resisting section by widening the column*
- Haunch the superstructure
- Add additional columns

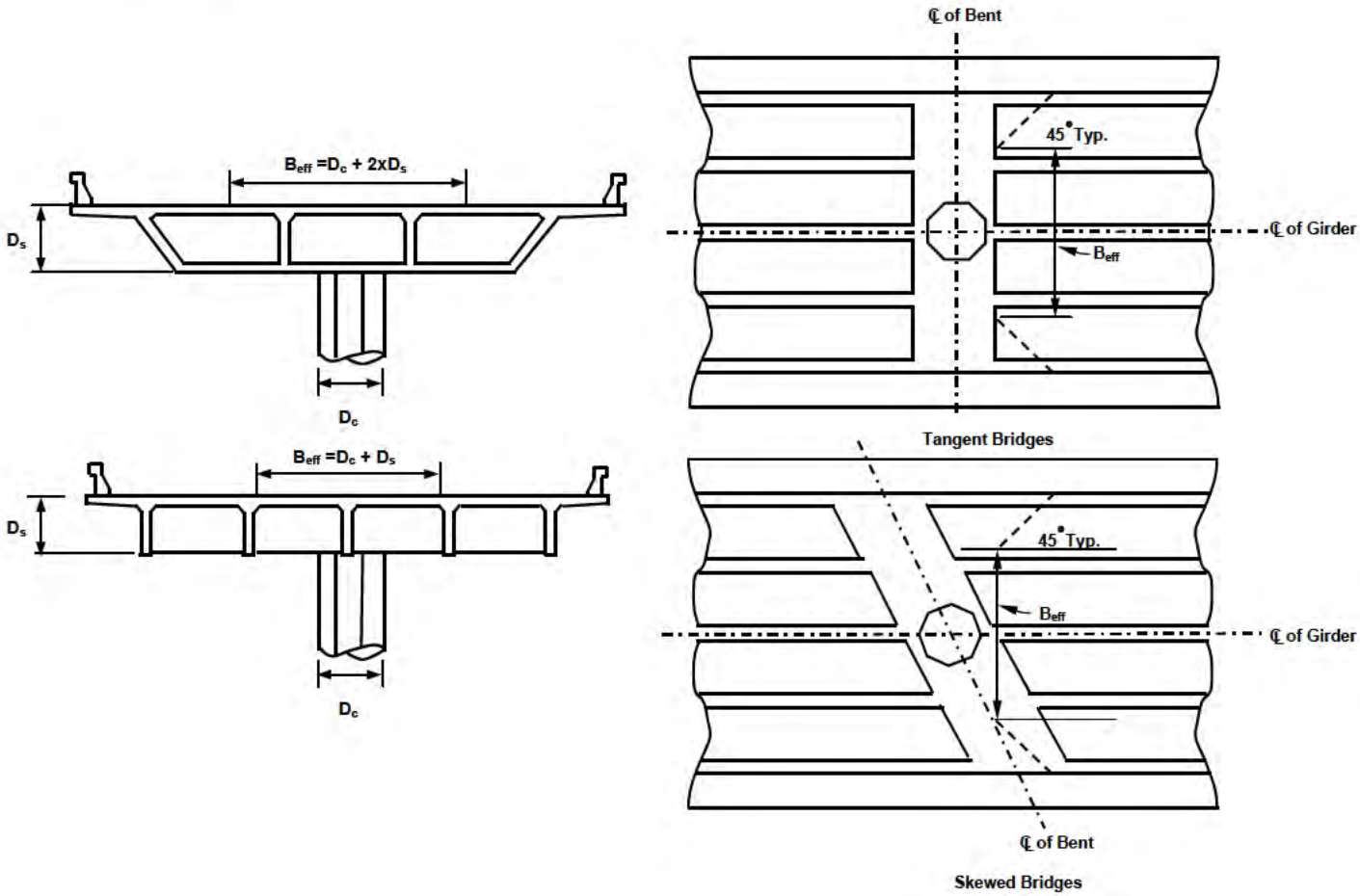

Figure 7.2 Effective Superstructure Width

* The benefit of using wider columns must be carefully weighed against the increased joint shear demands and larger plastic hinging capacity.

Isolated or lightly reinforced flares shall be ignored when calculating the effective superstructure width. See Section 7.6.5 for additional information on flare design.

7.2.2 Vertical Acceleration

If vertical acceleration is considered, per Section 2.1.3, a separate analysis of the superstructure's nominal capacity shall be performed based on a uniformly applied vertical force equal to 25% of the dead load applied upward and downward, see Figure 7.3. The superstructure at seat type abutments is assumed to be pinned in the vertical direction, up or down. The superstructure flexural capacity shall be calculated, based only on mild

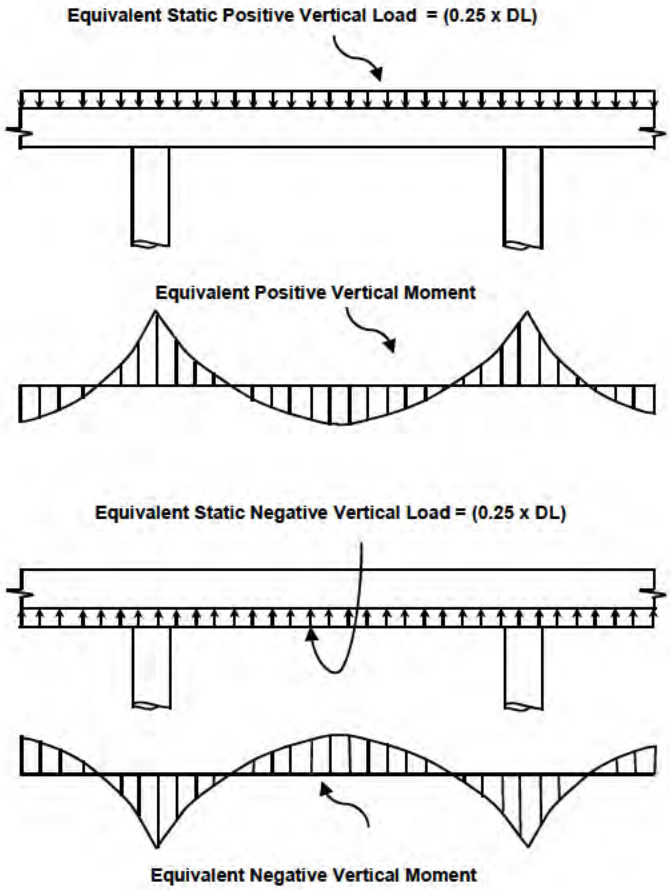

Figure 7.3 Equivalent Static Vertical Loads & Moments

reinforcement distributed evenly across the top and bottom slabs. The effects of dead load, primary prestressing and secondary prestressing shall be ignored. The mild reinforcement shall be spliced with "service level" couplers as defined in Section 8.1.3, and is considered effective in offsetting the mild reinforcement required for other load cases. Lap splices equal to two times the standard lap may be substituted for the "service splices," provided the laps are placed away from the critical zones (mid-spans and near supports).

The longitudinal side reinforcement in the girders, if vertical acceleration is considered per Section 2.1, shall be capable of resisting 125% of the dead load shear at the bent face by means of shear friction. This enhanced longitudinal side reinforcement shall extend continuously for a minimum of $2.5D_s$ beyond the face of the bent cap.

7.2.3 Precast Girders

Historically precast girders lacked a direct positive moment connection between the girders and the cap beam, which could potentially degrade to a pinned connection in the longitudinal direction under seismic demands. Therefore, to provide stability under longitudinal seismic demands, columns shall be fixed at the based unless an integral girder/cap beam connection is provided that is capable of resisting the column over strength demands as outlined in Sections 4.3.1, 4.3.2 and 7.2.2. Recent research has confirmed the viability of pre-cast spliced girders with integral column/superstructure details that effectively resist longitudinal seismic loads. This type of system is considered non-standard until design details and procedures are formally adopted. In the interim, project specific design criteria shall be developed per MTD 20-11.

If continuity of the bottom steel is not required for the longitudinal push analysis of the bridge, such steel need not be placed for vertical acceleration at the bent as required in Section 7.2.2. The required mild reinforcement in the girder bottom to resist positive moment shall be placed during casting of the precast girders while the required top mild steel shall be made continuous and positioned in the top slab.

7.2.4 Slab Bridges

Slab bridges shall be designed to meet all the strength and ductility requirements as specified in the SDC.

7.2.5 Hinges

7.2.5.1 Longitudinal Hinge Performance

Intermediate hinges are necessary for accommodating longitudinal expansion and contraction resulting from prestress shortening, creep, shrinkage and temperature variations. The hinge allows each frame to vibrate independently during an earthquake. Large relative displacements can develop if the vibrations of the frames are out-of-phase. Sufficient seat width must be provided to prevent unseating.

7.2.5.2 Transverse Hinge Performance

Typically hinges are expected to transmit the lateral shear forces generated by small earthquakes and service loads. Determining the earthquake force demand on shear keys is difficult since the magnitude is dependent on how much relative displacement occurs between the frames. Forces generated with EDA should not be used to size shear keys. EDA overestimates the resistance provided by the bents and may predict force demands on the shear keys that differ significantly from the actual forces.

7.2.5.3 Frames Meeting the Requirements of Section 7.1.2

All frames including balanced frames or frames with small differences in mass and/or stiffness will exhibit some out-of-phase response. The objective of meeting the fundamental period recommendations between adjacent frames presented in Section 7.1.2 is to reduce the relative displacements and associated force demands attributed to out-of-phase response.

Longitudinal Requirements

For frames adhering to Section 7.1.2 and expected to be exposed to synchronous ground motion, the minimum longitudinal hinge seat width between adjacent frames shall be determined by Section 7.2.5.4.

Transverse Requirements

The shear key shall be capable of transferring the shear between adjacent frames if the shear transfer mechanism is included in the demand assessment. The upper bound for the transverse shear demand at the hinge can be estimated by the sum of the overstrength shear capacity of all the columns in the weaker frame. The shear keys must have adequate capacity to meet the demands imposed by service loads.

An adequate gap shall be provided around the shear keys to eliminate binding of the hinge under service operation and to ensure lateral rotation will occur thereby minimizing moment transfer across the expansion joint.

Although large relative displacements are not anticipated for frames with similar periods exposed to synchronous ground motion, certain structural configurations may be susceptible to lateral instability if the transverse shear keys completely fail. Particularly susceptible are: skewed bridges, bridges with three or less girders and narrow bridges with significant super elevation. Additional restraint, such as XX strong pipe keys, should be considered if stability is questionable after the keys are severely damaged.

7.2.5.4 Hinge Seat Width for Frames Meeting the Requirements of Section 7.1.2

Enough hinge seat width shall be available to accommodate the anticipated thermal movement, prestress shortening, creep, shrinkage, and the relative longitudinal earthquake displacement demand between the two frames calculated by Equation 7.6. The seat width normal to the centerline of bearing shall be calculated by Equation 7.5 but not less than 24 inches (600 mm).

$$N \geq \begin{cases} \left(\Delta_{p/s} + \Delta_{cr+sh} + \Delta_{temp} + \Delta_{eq} + 4\right) & \text{(in)} \\ \left(\Delta_{p/s} + \Delta_{cr+sh} + \Delta_{temp} + \Delta_{eq} + 100\right) & \text{(mm)} \end{cases} \tag{7.5}$$

N = Minimum seat width normal to the centerline of bearing

$\Delta_{p/s}$ = Displacement attributed to pre-stress shortening

Δ_{cr+sh} = Displacement attributed to creep and shrinkage

Δ_{temp} = Displacement attributed to thermal expansion and contraction

Δ_{eq} = Relative earthquake displacement demand

$$\Delta_{eq} = \sqrt{\left(\Delta_D^1\right)^2 + \left(\Delta_D^2\right)^2} \tag{7.6}$$

$\Delta_D^{(i)}$ = The larger earthquake displacement demand for each frame calculated by the global or stand-alone analysis

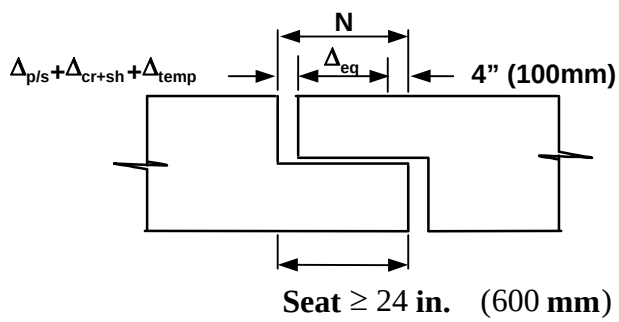

Figure 7.4 Seat Width Requirements

7.2.5.5 Frames Not Meeting the Requirements of Section 7.1.2

Frames that are unbalanced relative to each other have a greater likelihood of responding out-of-phase during earthquakes. Large relative displacements and forces should be anticipated for frames not meeting Equation 7.3.

Elastic Analysis, in general, cannot be used to determine the displacement or force demands at the intermediate expansion joints in multi-frame structures. A more sophisticated analysis such as nonlinear dynamic analysis is required that can capture the directivity and time dependency associated with the relative frame displacements. In lieu of nonlinear analysis, the hinge seat can be sized longitudinally and the shear keys isolated transversely to accommodate the absolute sum of the individual frame displacements determined by ESA, EDA, or the initial slope of a "push over" analysis.

Care must be taken to isolate unbalanced frames to insure the seismic demands are not transferred between frames. The following guidelines should be followed when designing and detailing hinges when Equation 7.3 is not met.

- Isolate adjacent frames longitudinally by providing a large expansion gap to reduce the likelihood of pounding. Permanent gapping created by prestress shortening, creep, and shrinkage can be considered as part of the isolation between frames.
- Provide enough seat width to reduce the likelihood of unseating. If seat extenders are used they should be isolated transversely to avoid transmitting large lateral shear forces between frames.
- Limit the transverse shear capacity to prevent large lateral forces from being transferred to the stiffer frame. The analytical boundary conditions at the hinge should be either released transversely or able to capture the nonlinear shear friction mechanism expected at the shear key. If the hinges are expected to fail, the column shall be designed to accommodate the displacement demand associated with having the hinge released transversely.

One method for isolating unbalanced frames is to support intermediate expansion joints on closely spaced adjacent bents that can support the superstructure by cantilever beam action. A longitudinal gap is still required to prevent the frames from colliding. Bent supported expansion joints need to be approved on a project-by-project basis, see MTD 20-11.

7.2.6 Hinge Restrainers

A satisfactory method for designing the size and number of restrainers required at expansion joints is not currently available. Adequate seat shall be provided to prevent unseating as a primary requirement. Hinge restrainers are considered secondary members to prevent unseating. The following guidelines shall be followed when designing and detailing hinge restrainers.

- Restrainers design should not be based on the force demands predicted by EDA analysis
- A restrainer unit shall be placed in each alternating cell at all hinges (minimum of two restrainer units at each hinge).
- Restrainers shall be detailed to allow for easy inspection and replacement
- Restrainer layout shall be symmetrical about the centerline of the superstructure
- Restrainer systems shall incorporate an adequate gap for expansion

Yield indicators are required on all cable restrainers, see Standard Detail Sheet XS 12-57.1 for details. See MTD 20-3 for material properties pertaining to high strength rods (ASTM A722 Uncoated High-Strength Steel Bar for Prestressing Concrete) and restrainer cables (ASTM A633 Zinc Coated Steel Structural Wire Rope).

7.2.7 Pipe Seat Extenders

Pipes seat extenders shall be designed for the induced moments under single or double curvature depending on how the pipe is anchored. If the additional support width provided by the pipe seat extender is required to meet Equation 7.5 then hinge restrainers are still required. If the pipe seat extenders are provided as a secondary vertical support system above and beyond what is required to satisfy equation 7.5, hinge restrainers are not required. Pipe seat extenders will substantially increase the shear transfer capacity across expansion joints if significant out-of-phase displacements are anticipated. If this is the case, care must be taken to ensure stand-alone frame capacity is not adversely affected by the additional demand transmitted between frames through the pipe seat extenders.

7.2.8 Equalizing Bolts

Equalizing bolts are designed for service loads and are considered sacrificial during an earthquake. Equalizing bolts shall be designed so they will not transfer seismic demand between frames or inhibit the performance of the hinge restrainers. Equalizing bolts shall be detailed so they can be easily inspected for damage and/or replaced after an earthquake.

7.3 Bent Caps

7.3.1 Integral Bent Caps

Bent caps are considered integral if they terminate at the outside of the exterior girder and respond monolithically with the girder system during dynamic excitation.

7.3.1.1 Effective Bent Cap Width

The integral cap width considered effective for resisting flexural demands from plastic hinging in the columns shall be determined by Equation 7.7. See Figure 7.5.

$$B_{eff} = B_{cap} + (12 \times t) \qquad (7.7)$$

t = Thickness of the top or bottom slab

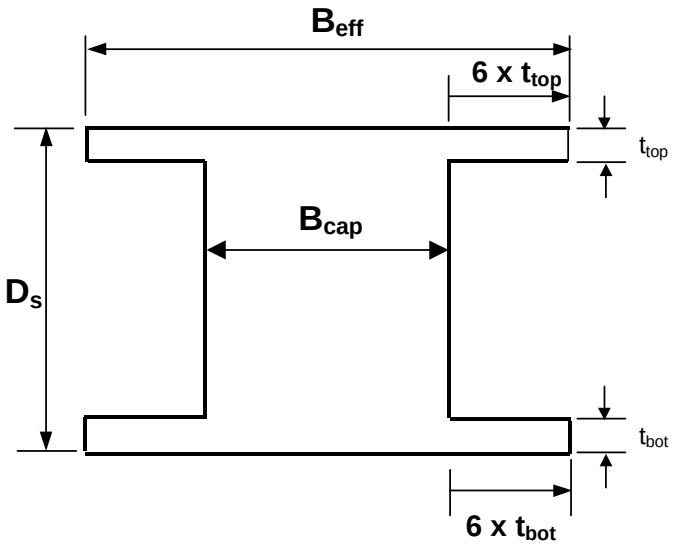

Figure 7.5 Effective Bent Cap Width

7.3.2 Non-Integral Bent Caps

Superstructure members supported on non-integral bent caps shall be simply supported at the bent cap or span continuously with a separation detail such as an elastomeric pad or isolation bearing between the bent cap and the superstructure. Non-integral caps must satisfy all the SDC requirements for frames in the transverse direction.

7.3.2.1 Minimum Bent Cap Seat Width

Drop caps supporting superstructures with expansion joints at the cap shall have sufficient width to prevent unseating. The minimum seat width for non-integral bent caps shall be determined by Equation 7.5. Continuity devices such as rigid restrainers or web plates may be used to ensure unseating does not occur but shall not be used in lieu of adequate bent cap width.

7.3.3 *Deleted*

7.3.4 Bent Cap Depth

Every effort should be made to provide enough cap depth to develop the column longitudinal reinforcement without hooks. See Section 8.2 regarding anchoring column reinforcement into the bent cap.

7.4 Superstructure Joint Design

7.4.1 Joint Performance

Moment resisting connections between the superstructure and the column shall be designed to transmit the maximum forces produced when the column has reached its overstrength capacity M_o^{col} including the effects of overstrength shear V_o^{col}.

7.4.2 Joint Proportioning

All superstructure/column moment resisting joints shall be proportioned so the principal stresses satisfy Equations 7.8 and 7.9. See Section 7.4.4.1 for the numerical definition of principal stress.

Principal compression: $p_c \leq 0.25 \times f_c'$ (7.8)

Principal tension: $p_t \leq 12 \times \sqrt{f_c'}$ (psi) $p_t \leq 1.0 \times \sqrt{f_c'}$ (MPa) (7.9)

7.4.2.1 Minimum Bent Cap Width

The minimum bent cap width required for adequate joint shear transfer is specified in Equation 7.10. Larger cap widths may be required to develop the compression strut outside the joint for large diameter columns.

$B_{cap} = D_c + 2$ (ft) $B_{cap} = D_c + 600$ (mm) (7.10)

7.4.3 Joint Description

The following types of joints are considered T joints for joint shear analysis:

- Integral interior joints of multi-column bents in the transverse direction
- All integral column/superstructure joints in the longitudinal direction
- Exterior column joints for box girder superstructures if the cap beam extends beyond the joint far enough to develop the longitudinal cap reinforcement.

Any exterior column joint that satisfies Equation 7.10b shall be designed as a Knee joint.[8]

$$S < \max(D_c, l_d) \quad (7.10b)$$

[8] It may be desirable to pin the top of the column to avoid knee joint requirements. This eliminates the joint shear transfer through the joint and limits the torsion demand transferred to the cap beam. However, the benefits of a pinned exterior joint should be weighed against increased foundation demands and the effect on the frame's overall performance.

Where:

S = Cap beam short stub length, defined as the minimum distance from the exterior girder edge at soffit to the intersection of the bent centerline and face of the column (see Figure 7.10c),

D_c = Column dimension measured along the centerline of bent, and

l_d = Development length of the main bent cap reinforcement

7.4.4 Joint Shear Design

7.4.4.1 Principal Stress Definition

The principal tension and compression stresses in a joint are defined as follows:

$$p_t = \frac{(f_h + f_v)}{2} - \sqrt{\left(\frac{f_h - f_v}{2}\right)^2 + v_{jv}^2} \qquad (7.11)^9$$

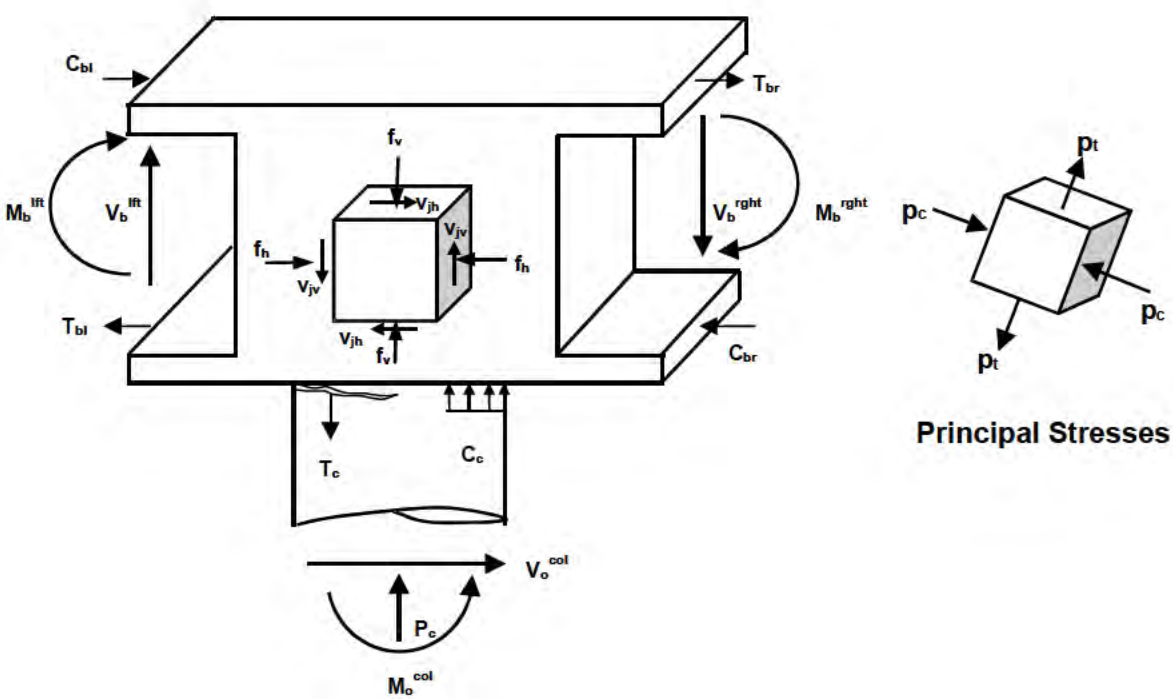

Figure 7.6 Joint Shear Stresses in T Joints

[9] A negative result from Equation 7.11 signifies the joint has nominal principal tensile stresses.

$$p_c = \frac{(f_h + f_v)}{2} + \sqrt{\left(\frac{f_h - f_v}{2}\right)^2 + v_{jv}^2} \tag{7.12}$$

$$v_{jv} = T_c / A_{jv} \tag{7.13}$$

$$A_{jv} = l_{ac} \times B_{cap} \tag{7.14}$$ [10]

$$f_v = \frac{P_c}{A_{jh}} \tag{7.15}$$

$$A_{jh} = (D_c + D_s) \times B_{cap} \tag{7.16}$$

$$f_h = \frac{P_b}{B_{cap} \times D_s} \tag{7.17}$$

Where:

A_{jh} = The effective horizontal joint area

A_{jv} = The effective vertical joint area

B_{cap} = Bent cap width

D_c = Cross–sectional dimension of column in the direction of bending

D_s = Depth of superstructure at the bent cap

l_{ac} = Length of column reinforcement embedded into the bent cap

P_c = The column axial force including the effects of overturning

P_b = The beam axial force at the center of the joint including prestressing

T_c = The column tensile force defined as M_o^{col} / h, where h is the distance from c.g. of tensile force to c.g. of compressive force on the section, or alternatively, T_c may be obtained from the moment-curvature analysis of the cross section.

Note: Unless the prestressing is specifically designed to provide horizontal joint compression, f_h can typically be ignored without significantly affecting the principal stress calculation.

[10] Equation 7.14 defines the effective joint area in terms of the bent cap width regardless of the direction of bending. This lone simplified definition of Ajv may conservatively underestimate the effective joint area for columns with large cross section aspect ratios in longitudinal bending.

7.4.4.2 Minimum Joint Shear Reinforcement

If the principal tension stress p_t does not exceed $3.5 \times \sqrt{f_c'}$ psi ($0.29 \times \sqrt{f_c'}$ MPa) the minimum joint shear reinforcement, as specified in Equation 7.18, shall be provided. This joint shear reinforcement may be provided in the form of column transverse steel continued into the bent cap. No additional joint reinforcement is required. The volumetric ratio of transverse column reinforcement ρ_s continued into the cap shall not be less than the value specified by Equation 7.18.

$$\rho_{s,\min} = \frac{3.5 \times \sqrt{f_c'}}{f_{yh}} \quad \text{(psi)} \qquad\qquad \rho_{s,\min} = \frac{0.29 \times \sqrt{f_c'}}{f_{yh}} \quad \text{(MPa)} \quad (7.18)$$

The reinforcement shall be in the form of spirals, hoops, or intersecting spirals or hoops.

If the principal tension stress p_t exceeds $3.5 \times \sqrt{f_c'}$ psi ($0.29 \times \sqrt{f_c'}$ MPa) the joint shear reinforcement specified in Section 7.4.4.3 is required.

7.4.4.3 T Joint Shear Reinforcement

A) Vertical Stirrups:

$$A_s^{jv} = 0.2 \times A_{st} \qquad (7.19)$$

A_{st} = Total area of column reinforcement anchored in the joint

Vertical stirrups or ties shall be placed transversely within a distance D_c extending from either side of the column centerline. The vertical stirrup area, A_s^{jv} is required on each side of the column or pier wall, see Figures 7.7, 7.8, and 7.10. The stirrups provided in the overlapping areas shown in Figure 7.7 shall count towards meeting the requirements of both areas creating the overlap. These stirrups can be used to meet other requirements documented elsewhere including the shear in the bent cap.

B) Horizontal Stirrups:

Horizontal stirrups or ties shall be placed transversely around the vertical stirrups or ties in two or more intermediate layers spaced vertically at not more than 18 inches (450mm). This horizontal reinforcement A_s^{jh} shall be placed within a distance D_c extending from either side of the column centerline, see Figure 7.9.

$$A_s^{jh} = 0.1 \times A_{st} \qquad (7.20)$$

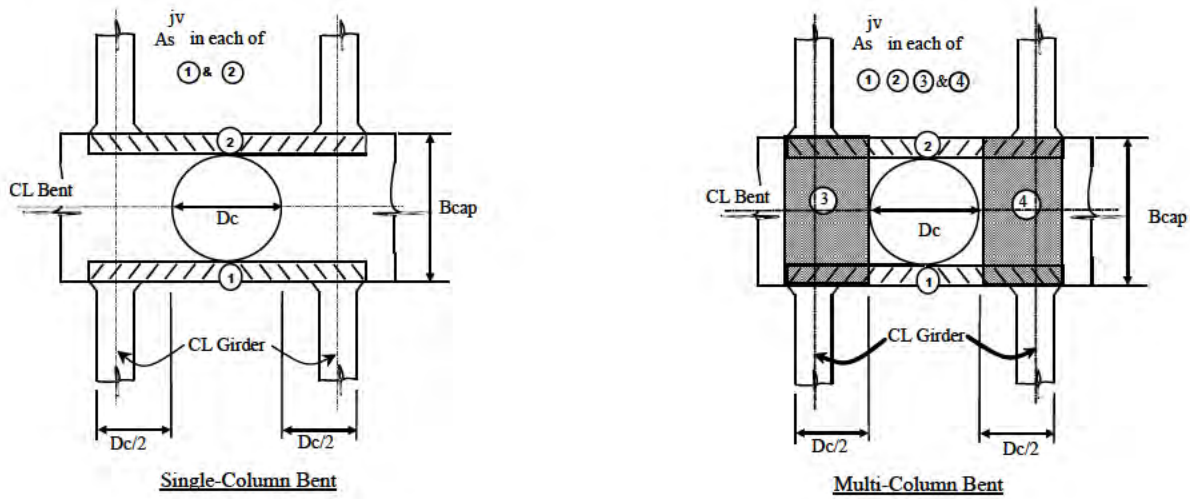

Figure 7.7 Location of Vertical Joint Reinforcement (plan view of bridge)

C) Horizontal Side Reinforcement:

The total longitudinal side face reinforcement in the bent cap shall be at least equal to the greater of the areas specified in equation 7.21 and shall be placed near the side faces of the bent cap with a maximum spacing of 12 inches (300mm), see Figures 7.8 and 7.10. Any side reinforcement placed to meet other requirements shall count towards meeting the requirement in this section.

$$A_s^{sf} \geq \begin{cases} 0.1 \times A_{cap}^{top} \\ \text{or} \\ 0.1 \times A_{cap}^{bot} \end{cases} \qquad A_{cap} = \text{Area of bent cap top or bottom flexural steel} \qquad (7.21)$$

D) J-Dowels

For bents skewed greater than 20°, J-dowels hooked around the longitudinal top deck steel extending alternatively 24 inches (600 mm) and 30 inches (750 mm) into the bent cap are required. The J-dowel reinforcement shall be equal or greater than the area specified in Equation 7.22.

$$A_s^{\text{j-bar}} = 0.08 \times A_{st} \qquad (7.22)$$

The J-dowels shall be placed within a rectangular region defined by the width of the bent cap and the distance D_c on either side of the centerline of the column, see Figure 7.10.

Bent Cap Details, Section at Column for Bridges with 0 to 20-Degree Skew.
(Detail Applies to Sections Within 2 x Diameter of Column, Centered About CL of Column).
(Detail Applies to T-Beam and Box Girder Bridges Where Deck Reinforcement is Placed Parallel to Cap).

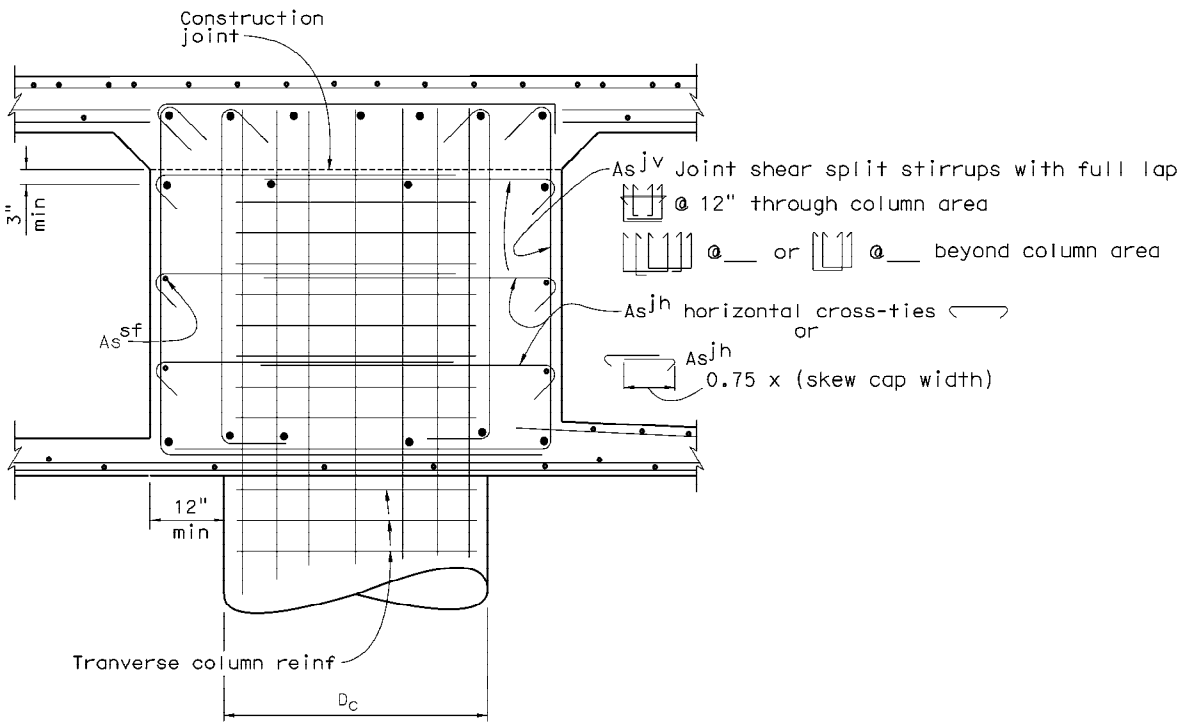

Figure 7.8 Joint Shear Reinforcement Details[11]

[11] Figures 7.8, 7.9 and 7.10 illustrate the general location for joint shear reinforcement in the bent cap.

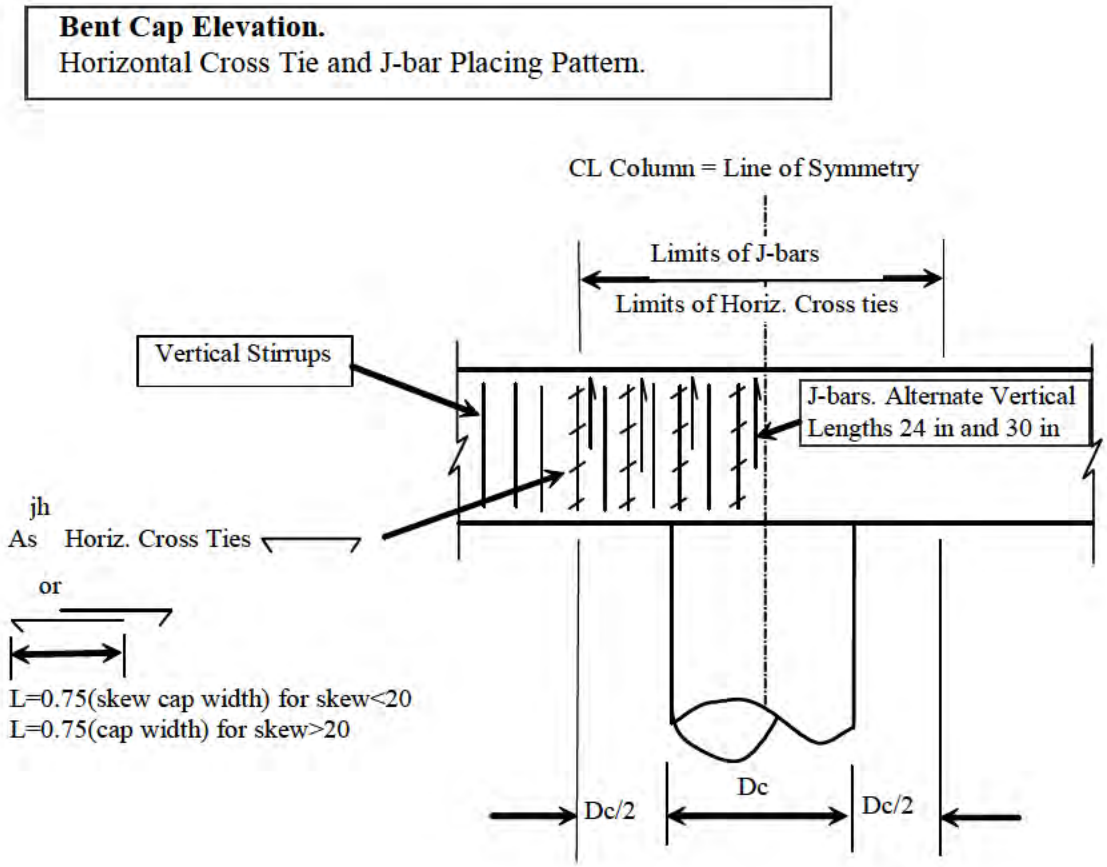

Figure 7.9 Location Of Horizontal Joint Shear Steel[12]

[12] Figures 7.8, 7.9 and 7.10 illustrate the general location for joint shear reinforcement in the bent cap.

Bent Cap Details, Section at Column for Bridges with Skew Larger than 20 Degrees.
(Detail Applies to Sections Within 2 x Diameter of Column, Centered About CL of Column).
(Detail Applies to T-Beam and Box Girder Bridges Where Deck Reinforcement is Placed Normal or Radial to CL Bridge).

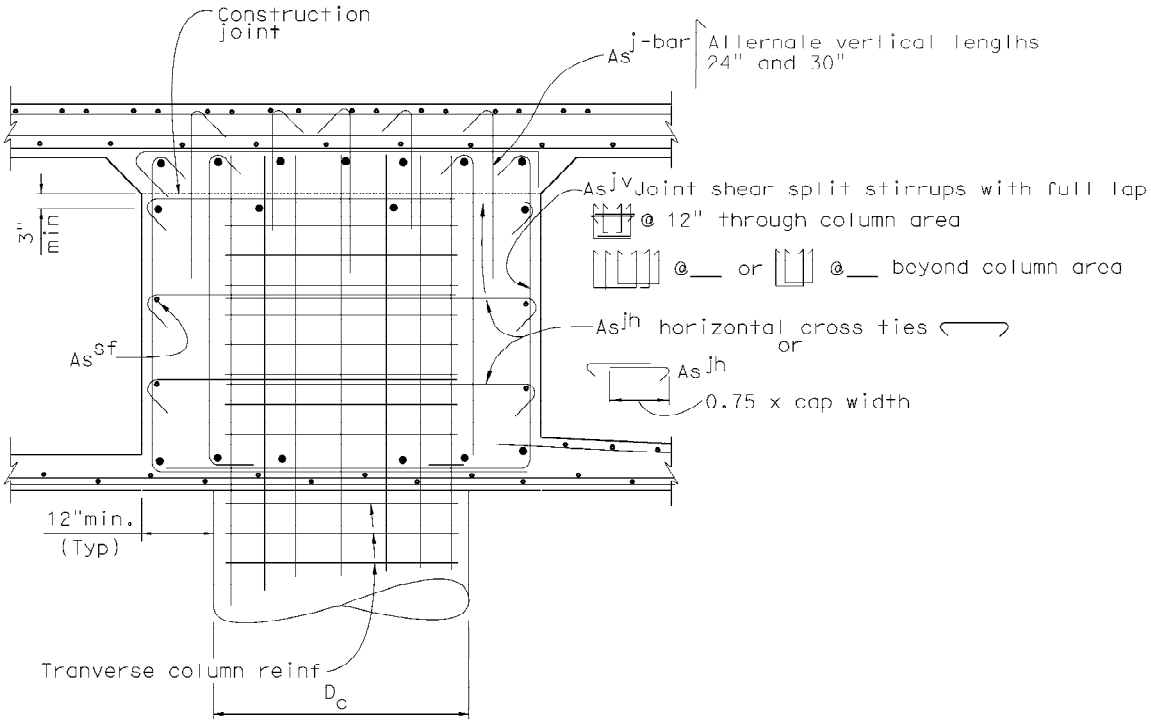

Figure 7.10 Additional Joint Shear Steel For Skewed Bridges[13]

[13] Figures 7.8, 7.9 and 7.10 illustrate the general location for joint shear reinforcement in the bent cap.

E) Transverse Reinforcement

Transverse reinforcement in the joint region shall consist of hoops with a minimum reinforcement ratio specified by Equation 7.23. The column confinement reinforcement extended into the bent cap may be used to meet this requirement.

$$\rho_s = 0.4 \times \frac{A_{st}}{l_{ac}^2} \qquad \text{(in, mm)} \qquad (7.23)$$

For interlocking cores ρ_s shall be based on area of reinforcement (A_{st}) of each core.

All vertical column bars shall be extended as close as possible to the top bent cap reinforcement.

F) Main Column Reinforcement

The main column reinforcement shall extend into the cap as deep as possible to fully develop the compression strut mechanism in the joint.

7.4.5 Knee Joints

Knee joints differ from T joints because the joint response varies with the direction of the moment (opening or closing) applied to the joint (see Figures 7.10b). Therefore, knee joints must be evaluated for both opening and closing failure modes.

In the opening moment case (Figure 7.10b-1), a series of arch-shaped cracks tends to form between the compression zones at the outside of the column and top of the beam. The intersection of the arch strut and the flexural compression zones at the top of the beam and the back of the column create outward-acting resultant forces. If the beam bottom reinforcement is anchored only by straight bar extension, there will virtually be no resistance to the horizontal resultant tensile force. It will cause vertical splitting, reducing competence of the anchorage of the outer column rebars and beam top rebars.

In the closing moment case (Figure 7.10b-2), a fan–shaped pattern of cracks develops, radiating from the outer surfaces of beam and column toward the inside corner. If there is no vertical reinforcement clamping the beam top reinforcement into the joint, the entire beam tension, T_b is transferred to the back of the joint as there isn't an effective mechanism to resist the moment at the base of the wedge-shaped concrete elements caused by bond-induced tension transfer to the concrete.

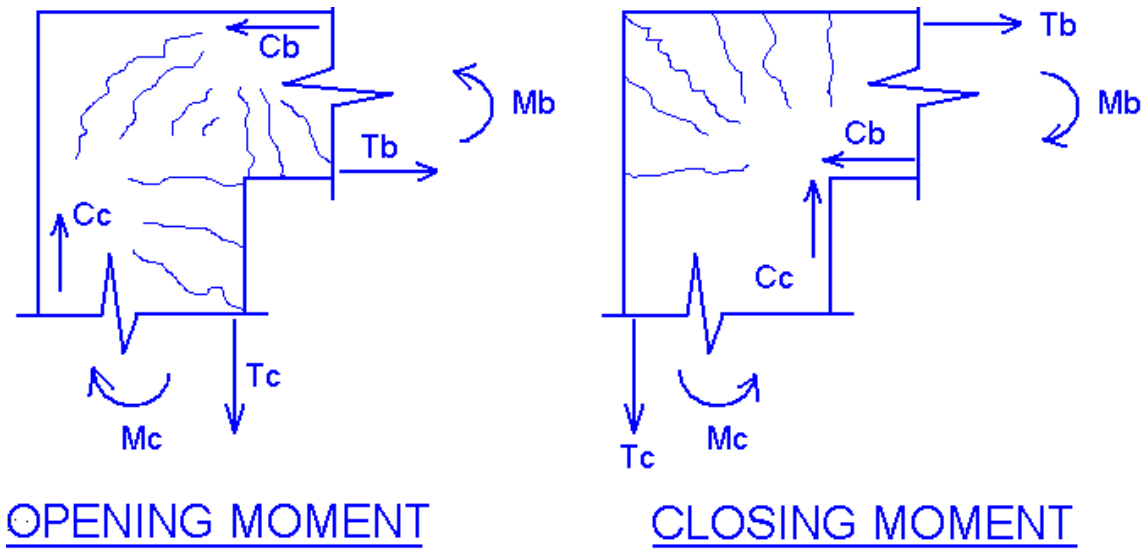

(b-1) (b-2)

Figure 7.10b: Knee Joint Failure Modes

7.4.5.1 Knee Joint Shear Reinforcement

For joint shear reinforcement design, two cases of a knee joint may be identified (see Equations 7.23 and Figure 7.10c):

Case 1: $S < \frac{D_c}{2}$ (7.23b)

Case 2: $\frac{D_c}{2} \le S < \max\left(D_c\ ,\ l_d\right)$ (7.23c)

Knee joint shear reinforcement details for straight ($0 - 20^o$ skew) and skew (> 20° skew) bridge configurations are similar to those shown in Figures 7.8 and 7.10, respectively.

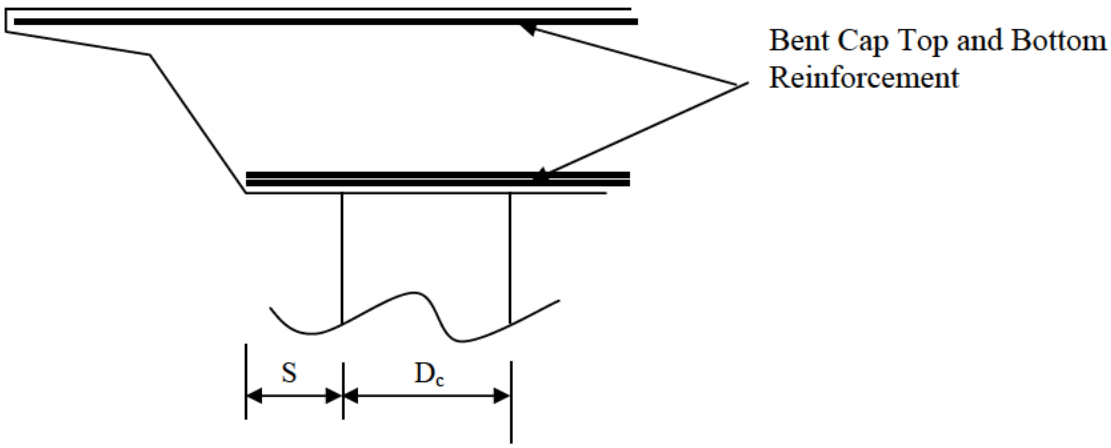

Figure 7.10c: Knee Joint Parameters

A) Bent Cap Top and Bottom Flexural Reinforcement – Use for both Cases 1 and 2

The top and bottom reinforcement within the bent cap width used to meet this provision shall be in the form of continuous U-bars with minimum area as specified in Equation 7.23d (see illustration in Figures 7.10e - 7.10g-1).

$$A_s^{u-bar} = 0.33 \times A_{st} \qquad (7.23d)$$

where, A_{st} = Area of longitudinal column reinforcement anchored in the bent cap

The U-bars may be combined with bentcap main top and bottom reinforcement using mechanical couplers. Splices in the U-bars shall not be located within a distance, l_d from the interior face of the column.

B) Vertical Stirrups – Use for both Cases 1 and 2

Vertical stirrups or ties, A_s^{jv} as specified in Equation 7.23e, shall be placed transversely within each of regions 1, 2, and 3 of Figure 7.10d (see also Figures 7.8, 7.10, and 7.10g-2 for rebar placement).

$$A_s^{jv} = 0.2 \times A_{st} \qquad (7.23e)$$

The stirrups provided in the overlapping areas shown in Figure 7.10d shall count towards meeting the requirements of both areas creating the overlap. These stirrups can be used to meet other requirements documented elsewhere including shear in the bent cap.

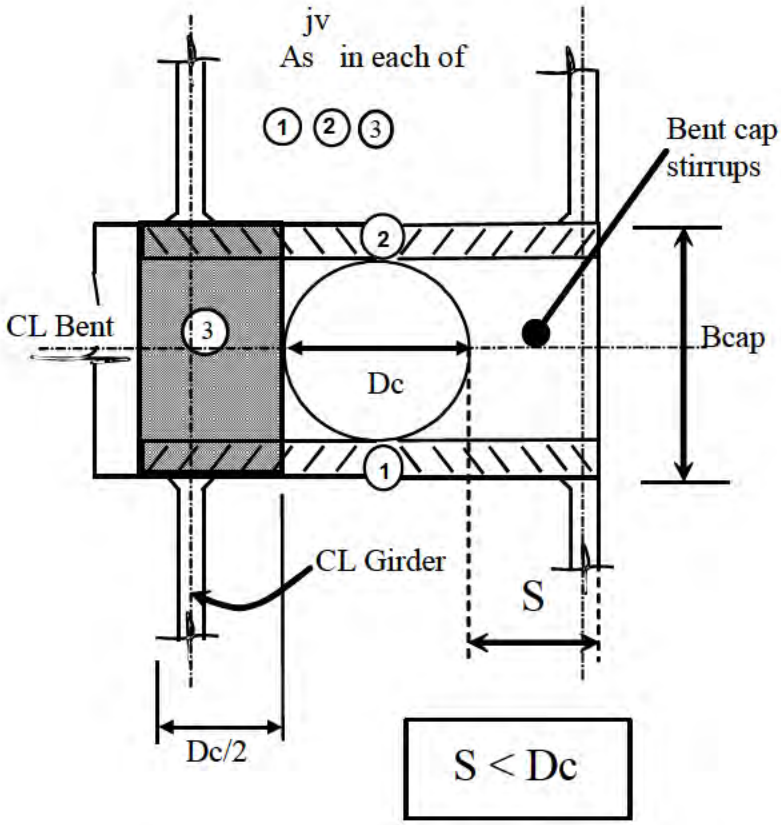

Figure 7.10d: Location of Knee Joint Vertical Shear Reinforcement (Plan view)

C) Horizontal Stirrups - Use for both Cases 1 and 2

Horizontal stirrups or ties, A_s^{jh}, as specified in Equation 7.23f, shall be placed transversely around the vertical stirrups or ties in two or more intermediate layers spaced vertically at not more than 18 inches (see Figures 7.8, 7.10, and 7.10g-2 for illustration).

$$A_s^{jh} = 0.1 \times A_{st} \qquad (7.23f)$$

This horizontal reinforcement shall be placed within the limits shown in Figures 7.10e and 7.10f).

(D) Horizontal Side Reinforcement - Use for both Cases 1 and 2

The total longitudinal side face reinforcement in the bent cap, A_s^{sf} shall be at least equal to the greater of the areas specified in Equation 7.23g and shall be placed near the side faces of the bent cap with a maximum spacing of 12 inches.

$$A_s^{sf} \geq \begin{cases} 0.1 \times A_{cap}^{top} \\ \quad or \\ 0.1 \times A_{cap}^{bot} \end{cases} \qquad (7.23g)$$

Where:

$A_{cap}^{top}, A_{cap}^{bot}$ = Area of bent cap top and bottom flexural steel, respectively.

This side reinforcement shall be in the form of U-bars and shall be continuous over the exterior face of the Knee Joint. Splices in the U-bars shall be located at least a distance l_d from the interior face of the column. Any side reinforcement placed to meet other requirements shall count towards meeting this requirement.

(E) Horizontal Cap End Ties (For Case 1 Only)

The total area of horizontal ties placed at the end of the bent cap, A_s^{jhc} (see Figures 7.10e, 7.10f, and 7.10g-2) shall be as specified in Equation 7.23h.

$$A_s^{jhc} = 0.33 \times A_s^{u-bar} \qquad (7.23h)$$

This reinforcement shall be placed around the intersection of the bent cap horizontal side reinforcement and the continuous bent cap U-bar reinforcement, and spaced at not more than 12 inches vertically and horizontally. The horizontal reinforcement shall extend through the column cage to the interior face of the column.

F) J-Dowels - Use for both Cases 1 and 2

For bents skewed more than 20°, J-dowels hooked around the longitudinal top deck steel extending alternately 24 inches and 30 inches into the bent cap are required (see Figures 7.10, 7.10f, and 7.10g-1). The J-dowel reinforcement, A_s^{j-bar} shall be equal to or greater than the area specified in Equation 7.23i.

$$A_s^{j-bar} = 0.08 \times A_{st} \qquad (7.23i)$$

The J-Dowels shall be placed within a rectangular region defined by the bent cap width and the limits shown in Figure 7.10f.

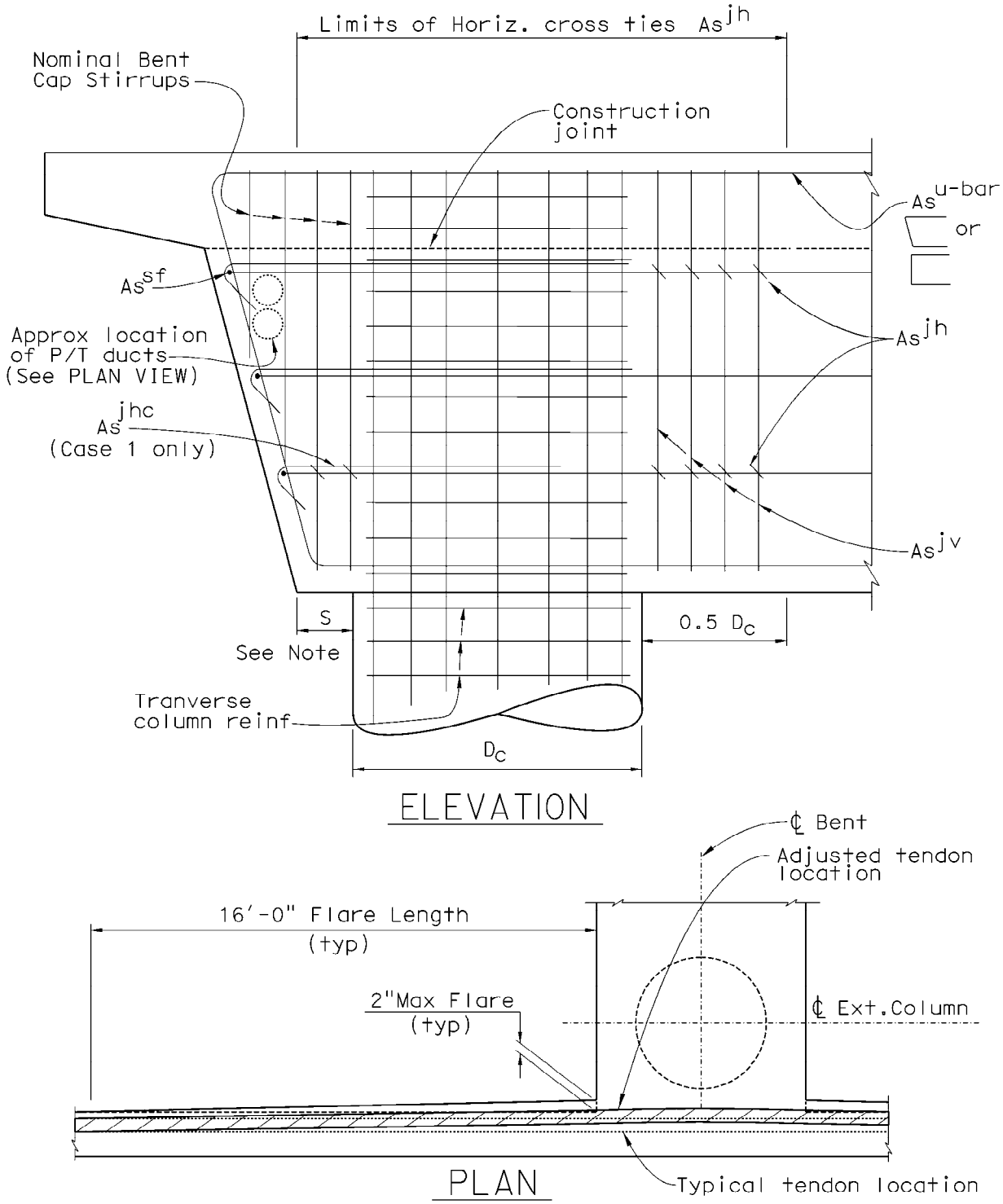

NOTES:

1. CASE 1 Knee Joint: $S < D_c/2$
2. CASE 2 Knee Joint: $D_c/2 \le S < \max\,(D_c, l_d)$
3. Flaring the exterior girders may be required for cast-in-place post-tensioned box girder construction in order to meet clearance requirements for ducts and mild reinforcement. For this situation, the inside face of exterior girders may be flared up to 2.5 inches at the bent cap. The flare length shall be 16 ft. To accommodate all girder and bent cap reinforcement in other situations, it may be necessary to adjust rebar positions to meet required concrete covers.

Figure 7.10e: Knee Joint Shear Reinforcement - Skew $\le 20^o$

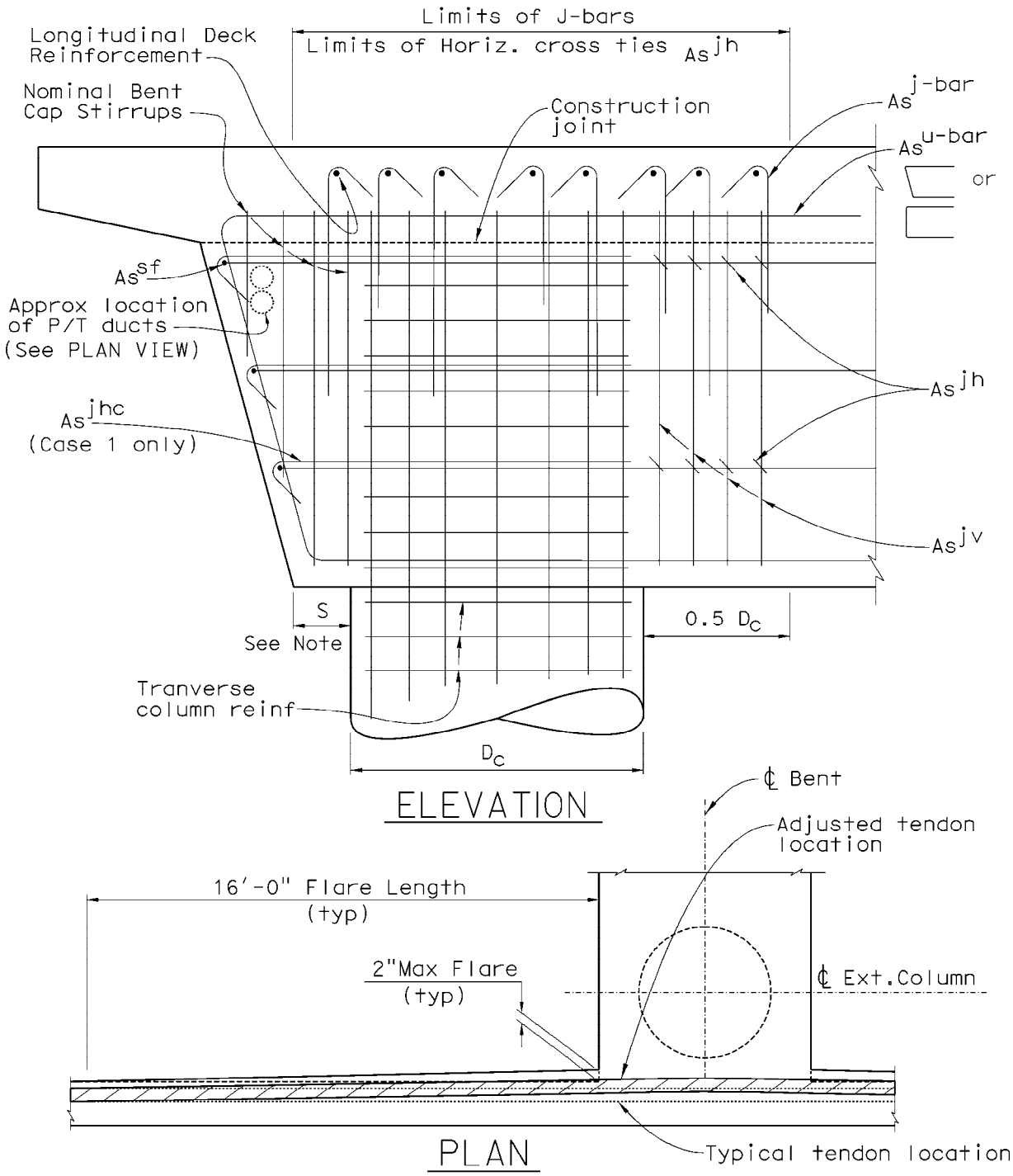

NOTES:

1. CASE 1 Knee Joint: $S < D_c/2$
2. CASE 2 Knee Joint: $D_c/2 \le S < \max\,(D_c, l_d)$
3. Flaring the exterior girders may be required for cast-in-place post-tensioned box girder construction in order to meet clearance requirements for ducts and mild reinforcement. For this situation, the inside face of exterior girders may be flared up to 2.5 inches at the bent cap. The flare length shall be 16 ft. To accommodate all girder and bent cap reinforcement in other situations, it may be necessary to adjust rebar positions to meet required concrete covers.

Figure 7.10f: Knee Joint Shear Reinforcement - skew > 20°

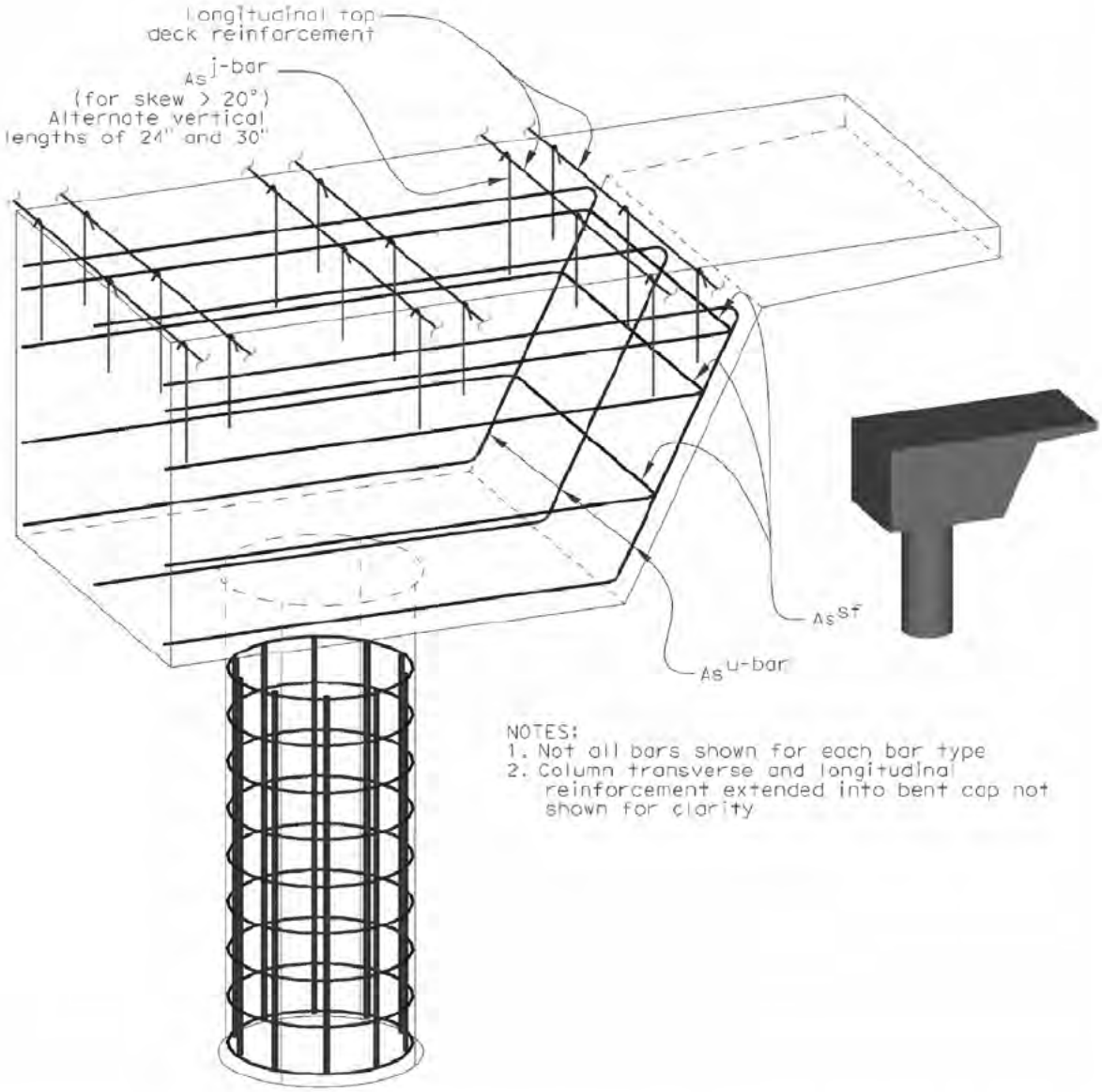

See Figure 7.10g-2 for 3-D representation of other knee joint shear bars not shown

Figure 7.10g-1: 3-D Representation of Knee Joint Shear Reinforcement

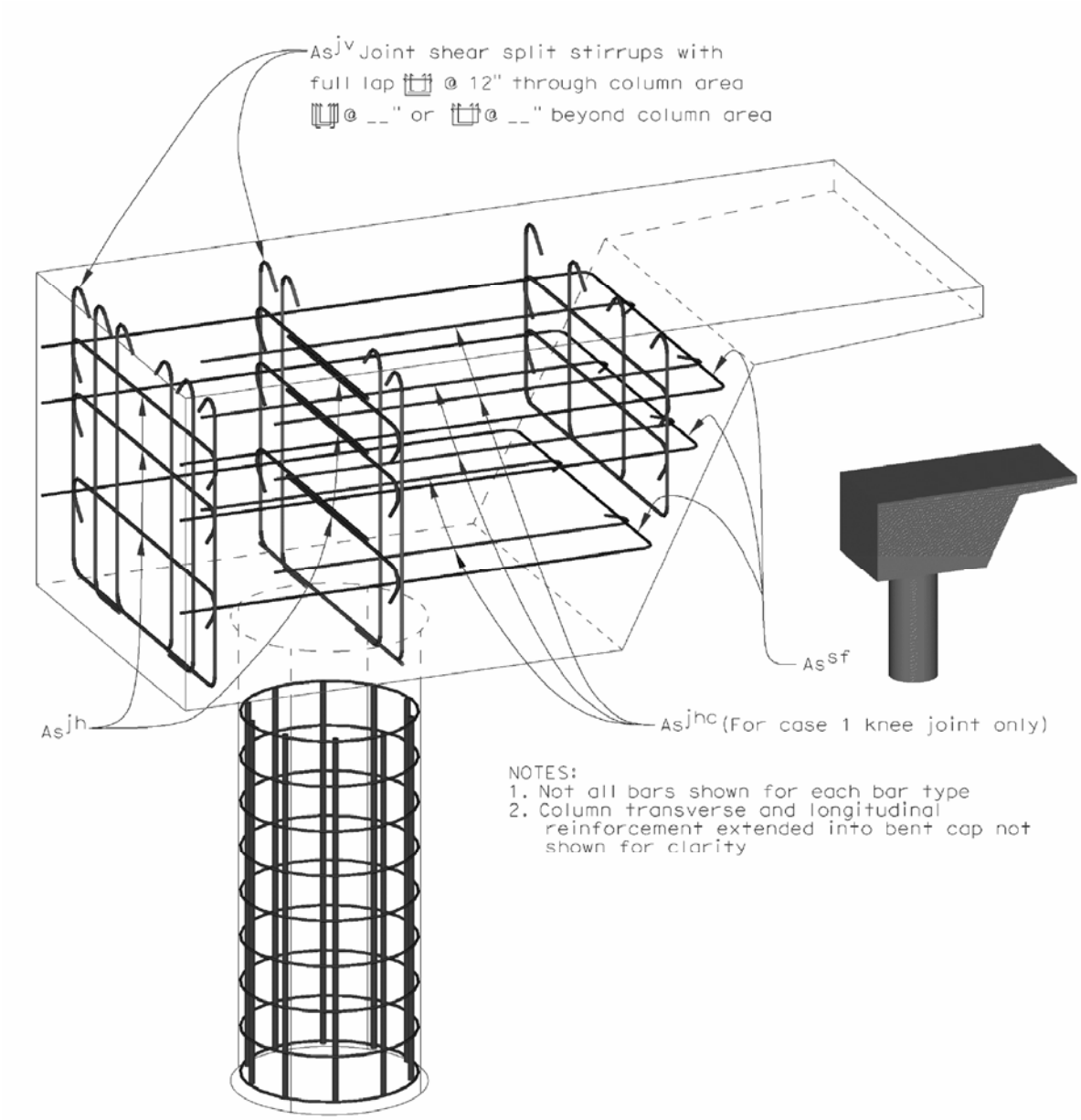

See Figure 7.10g-1 for 3-D representation of other knee joint shear bars not shown

Figure 7.10g-2: 3-D Representation of Knee Joint Shear Reinforcement

G) Transverse Reinforcement

Transverse reinforcement in the joint region shall consist of hoops with a minimum reinforcement ratio as specified in Equations 7.23j - 7.23l.

$$\rho_s = 0.6 \times \frac{\rho_l D_c}{l_{ac,provided}} \qquad \text{(For Case 1 Knee joint)} \qquad (7.23j)$$

$$\rho_s = 0.4 \times \frac{A_{st}}{l^2_{ac,provided}} \qquad \text{(For Case 2 Knee joint, Integral bent cap)} \qquad (7.23k)$$

$$\rho_s = 0.6 \times \frac{A_{st}}{l^2_{ac,provided}} \qquad \text{(For Case 2 Knee joint, Non-integral bent cap)} \qquad (7.23l)$$

where:

$l_{ac,provided}$ = Actual length of column longitudinal reinforcement embedded into the bent cap

ρ_l = Area ratio of longitudinal column reinforcement

The column transverse reinforcement extended into the bent cap may be used to satisfy this requirement. For interlocking cores, ρ_s shall be based on ρ_l of each core (for Case 1 knee joints) and on area of reinforcement A_{st} of each core (for Case 2 knee joints). All vertical column bars shall be extended as close as possible to the top bent cap reinforcement.

7.5 Bearings

For Ordinary Standard bridges bearings are considered sacrificial elements. Typically bearings are designed and detailed for service loads. However, bearings shall be checked to insure their capacity and mode of failure are consistent with the assumptions made in the seismic analysis. The designer should consider detailing bearings so they can be easily inspected for damage and replaced or repaired after an earthquake.

7.5.1 Elastomeric Bearings

The lateral shear capacity of elastomeric bearing pads is controlled by either the dynamic friction capacity between the pad and the bearing seat or the shear strain capacity of the pad. Test results have demonstrated the dynamic coefficient of friction between concrete and neoprene is 0.40 and between neoprene and steel is 0.35. The maximum shear strain resisted by elastomeric pads prior to failure is estimated at $\pm 150\%$.

7.5.2 Sliding Bearings

PTFE spherical bearings and PTFE elastomeric bearings utilize low friction PTFE sheet resin. Typical friction coefficients for these bearings vary between 0.04 to 0.08. The friction coefficient is dependent on contact pressure, temperature, sliding speed, and the number of sliding cycles. Friction values may be as much as 5 to 10 times higher at sliding speeds anticipated under seismic loads compared to the coefficients under thermal expansion.

A common mode of failure for sliding bearings under moderate earthquakes occurs when the PTFE surface slides beyond the limits of the sole plate often damaging the PTFE surface. The sole plate should be extended a reasonable amount to eliminate this mode of failure whenever possible.

7.6 Columns & Pier Walls

7.6.1 Column Dimensions

Every effort shall be made to limit the column cross sectional dimensions to the depth of the superstructure. This requirement may be difficult to meet on columns with high L/D ratios. If the column dimensions exceed the depth of the bent cap it may be difficult to meet the joint shear requirements in Section 7.4.2, the superstructure capacity requirements in Section 4.3.2.1, and the ductility requirements in Section 3.1.4.1.

The relationship between column cross section, bent cap depth and footing depth specified in Equations 7.24a and 7.24b are guidelines based on observation. Maintaining these ratios should produce reasonably well proportioned structures.

$$0.7 \le \frac{D_c}{D_s} \le 1.0 \qquad (7.24a)$$

$$0.7 \le \frac{D_{ftg}}{D_c} \qquad (7.24b)$$

7.6.2 Analytical Plastic Hinge Length

The analytical plastic hinge length is the equivalent length of column over which the plastic curvature is assumed constant for estimating plastic rotation.

7.6.2 (a) Columns & Type II Shafts:

$$L_p = \begin{cases} 0.08L + 0.15 f_{ye} d_{bl} \geq 0.3 f_{ye} d_{bl} & \text{(in, ksi)} \\ 0.08L + 0.022 f_{ye} d_{bl} \geq 0.044 f_{ye} d_{bl} & \text{(mm, MPa)} \end{cases} \tag{7.25}$$

7.6.2 (b) Horizontally Isolated Flared Columns

$$L_p = \begin{cases} G + 0.3 f_{ye} d_{bl} & \text{(in, ksi)} \\ G + 0.044 f_{ye} d_{bl} & \text{(mm, MPa)} \end{cases} \tag{7.26}$$

G = The gap between the isolated flare and the soffit of the bent cap

7.6.2 (c) Non-cased Type I Pile Shafts:

$$L_p = D^* + 0.08 H_{o-\max} \tag{7.27}$$

D^* = Diameter for circular shafts or the least cross section dimension for oblong shafts.

7.6.3 Plastic Hinge Region

The plastic hinge region, L_{pr} defines the portion of the column, pier, or shaft that requires enhanced lateral confinement. L_{pr} is defined by the larger of:

- 1.5 times the cross sectional dimension in the direction of bending
- The region of column where the moment exceeds 75% of the maximum plastic moment, M_p^{col}
- $0.25 \times$(Length of column from the point of maximum moment to the point of contra-flexure)

7.6.4 Multi-Column Bents

The effects of axial load redistribution due to overturning forces shall be considered when calculating the plastic moment capacity for multi-column bents in the transverse direction.

7.6.5 Column Flares

7.6.5.1 Horizontally Isolated Column Flares

The preferred method for detailing flares is to horizontally isolate the top of flared sections from the soffit of the cap beam. Isolating the flare allows the flexural hinge to form at the top of the column, minimizing the seismic shear demand on the column. The added mass and stiffness of the isolated flare typically can be ignored in the dynamic analysis.

A horizontal gap isolating the flare from the cap beam shall extend over the entire cross section of the flare excluding a core region equivalent to the prismatic column cross section. The gap shall be large enough so that it will not close during a seismic event. The gap thickness, *G* shall be based on the estimated ductility demand and corresponding plastic hinge rotation capacity. The minimum gap thickness shall be 4 inches (100 mm). See Section 7.6.2 for the appropriate plastic hinge length of horizontally isolated flares.

If the plastic hinge rotation based on the plastic hinge length specified in Section 7.6.2 (b) provides insufficient column displacement capacity, the designer may elect to add vertical flare isolation. When vertical flare isolation is used, the analytical plastic hinge length shall be taken as the lesser of L_p calculated using Equations 7.25 and 7.26 where G is the length from the bent cap soffit to the bottom of the vertical flare isolation region[14].

7.6.5.2 Lightly Reinforced Column Flares

Column flares that are integrally connected to the bent cap soffit should be avoided whenever possible. Lightly reinforced integral flares shall only be used when required for service load design or aesthetic considerations and the peak rock acceleration is less than 0.5*g*. The flare geometry shall be kept as slender as possible. Test results have shown that slender lightly reinforced flares perform adequately after cracking has developed in the flare concrete, essentially separating the flare from the confined column core. However, integral flares require higher shear forces and moments to form the plastic hinge at the top of column compared to isolated flares. The column section at the base of the flare must have adequate capacity to insure the plastic hinge will form at the top of column. The higher plastic hinging forces must be considered in the design of the column, superstructure and footing.

7.6.5.3 Flare Reinforcement

Column flares shall be nominally reinforced outside the confined column core to prevent the flare concrete from completely separating from the column at high ductility levels.

7.6.6 Pier Walls

Pier walls shall be designed to perform in a ductile manner longitudinally (about the weak axis), and to remain essentially elastic in the transverse direction (about the strong axis). The large difference in stiffness between the strong and weak axis of pier walls leads to complex foundation behavior, see Section 7.7.

[14] The horizontal flare isolation detail is easier to construct than a combined horizontal and vertical isolation detail and is preferred wherever possible. Laboratory testing is scheduled to validate the plastic hinge length specified in equation 7.26.

7.6.7 Column Key Design

Column shear keys shall be designed for the axial and shear forces associated with the column's overstrength moment M_o^{col} including the effects of overturning. The key reinforcement shall be located as close to the center of the column as possible to minimize developing a force couple within the key reinforcement. Steel pipe sections may be used in lieu of reinforcing steel to relieve congestion and reduce the moment generated within the key. Any appreciable moment generated by the key steel should be considered in the footing design.

7.7 Foundations

7.7.1 Footing Design

7.7.1.1 Pile Foundations in Competent Soil

The lateral, vertical, and rotational capacity of the foundation shall exceed the respective demands. The size and number of piles and the pile group layout shall be designed to resist service level moments, shears, and axial loads and the moment demand induced by the column plastic hinging mechanism. Equations 7.28 and 7.29 define lateral shear and moment equilibrium in the foundation when the column reaches its overstrength capacity, see Figure 7.11.

$$V_o^{col} - \sum V_{(i)}^{pile} - R_s = 0 \tag{7.28}$$

$$M_o^{col} + V_o^{col} \times D_{ftg} + \sum M_{(i)}^{pile} - R_s \times (D_{ftg} - D_{R_s}) - \sum (C_{(i)}^{pile} \times c_{(i)}) - \sum (T_{(i)}^{pile} \times c_{(i)}) = 0 \tag{7.29}$$

$c_{(i)}$ = Distance from pile (i) to the center of gravity of the pile group in the X or Y direction
$C_{(i)}^{pile}$ = Axial compression demand on pile (i)
D_{ftg} = Depth of footing
D_{R_s} = Depth of resultant soil resistance measured from the top of footing
$M_{(i)}^{pile}$ = The moment demand generated in pile (i), $M_{(i)}^{pile} = 0$ if the piles are pinned to the footing
R_s = Estimated resultant soil resistance on the end of the footing
$T_{(i)}^{pile}$ = Axial tension demand on pile (i)
$V_{(i)}^{pile}$ = Lateral shear resistance provided by pile (i)

The design of pile foundations in competent soil can be greatly simplified if we rely on inherent capacity that is not directly incorporated in the foundation assessment. For example, typically pile axial resistance exceeds

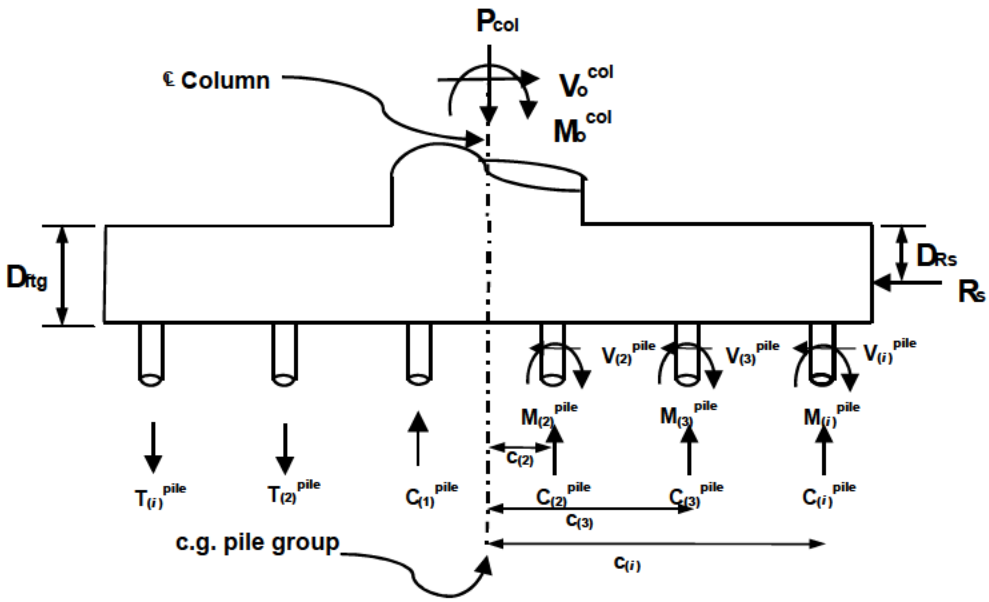

Pile shears and moments shown on right side only, left side similar
Effects of footing weight and soil overburden not shown

Figure 7.11 Footing Force Equilibrium

the designed nominal resistance and axial load redistributes to adjacent piles when an individual pile's geotechnical capacity is exceeded.

The simplified foundation model illustrated in Figure 7.12 is based on the following assumptions. A more sophisticated analysis may be warranted if project specific parameters invalidate any of these assumptions:

- The passive resistance of the soil along the leading edge of the footing and upper 4 to 8 pile diameters combined with the friction along the sides and bottom of the pile cap is sufficient to resist the column overstrength shear V_o^{col}.
- The pile cap is infinitely rigid, its width is entirely effective, and the pile loads can be calculated from the static equations of equilibrium.
- The pile group's nominal moment resistance is limited to the capacity available when any individual pile reaches its nominal axial resistance.
- Group effects for pile footings surrounded by competent soil and a minimum of three diameters center-to-center pile spacing are relatively small and can be ignored.
- Piles designed with a pinned connection to the pile cap will not transfer significant moment to the pile cap.
- In a competent soil, the moment at the top of the pile is relatively small and may be ignored.
- However, in a marginal or liquefiable soil, the effects of the plastic moment at the top of the pile, M_p^{pile} should be considered (see equations 7.31b and 7.31c).

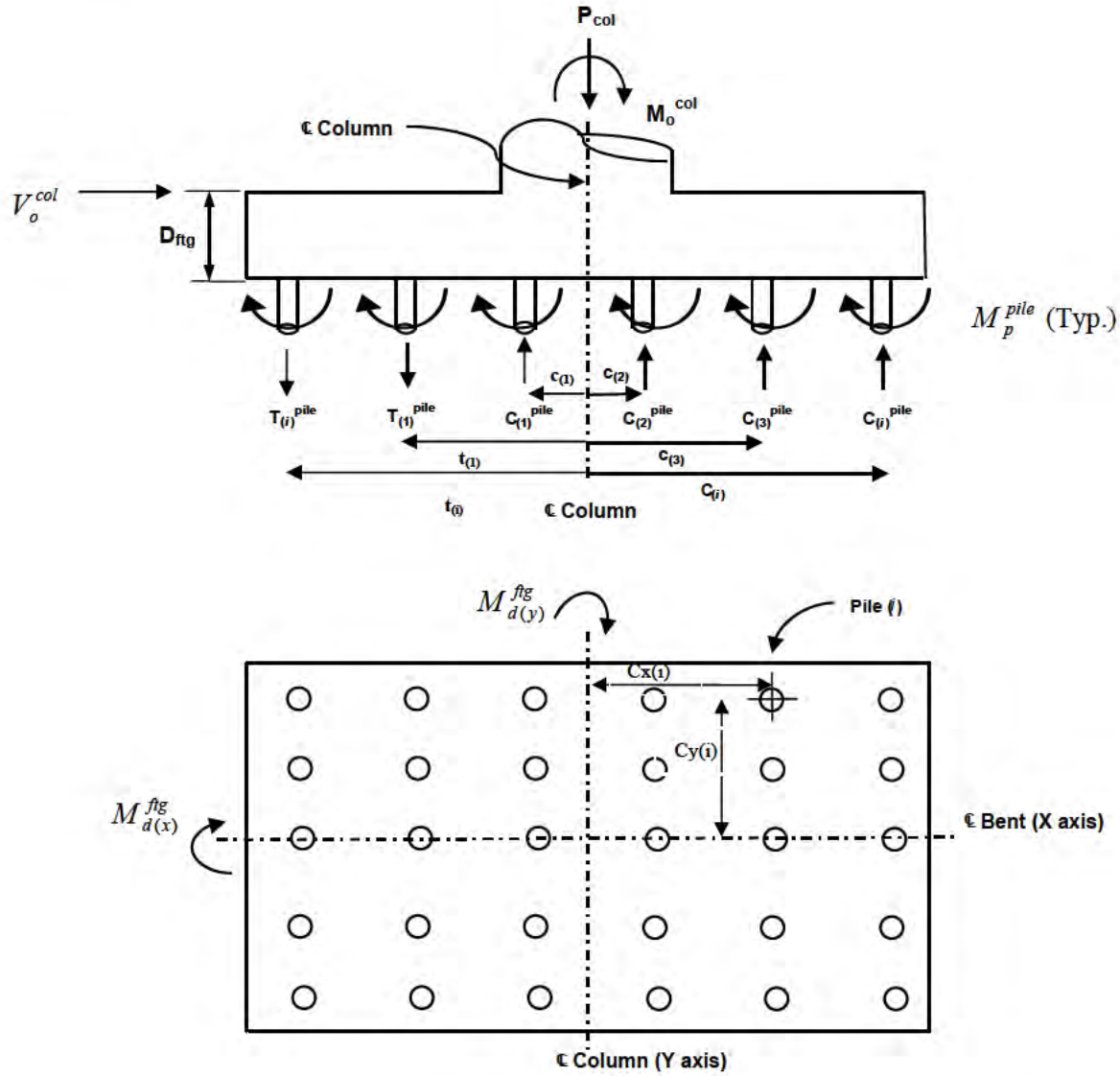

Figure 7.12 Simplified Pile Model for Foundations in Competent Soil

Equation 7.30 defines the axial demand on an individual pile when the column reaches its plastic hinging capacity based on force equilibrium in conjunction with the previously stated assumptions. A similar model can be used to analyze and design spread footing foundations that are surrounded by competent soil.

$$\left.\begin{matrix} C_{(i)}^{pile} \\ T_{(i)}^{pile} \end{matrix}\right\} = \frac{P_p}{N_p} \pm \frac{M_{d_{(y)}}^{ftg} \times c_{x(i)}}{I_{pg\,(y)}} \pm \frac{M_{d_{(x)}}^{ftg} \times c_{y(i)}}{I_{pg\,(x)}} \tag{7.30}$$

Where:

$$I_{pg(x)} = \sum n \times c_{y(i)}^2 \qquad I_{pg(y)} = \sum n \times c_{x(i)}^2 \tag{7.31a}$$

$$M_{d(y)}^{ftg} = M_{o(y)}^{col} + V_{o(x)}^{col} \times D_{ftg} + N_p \times M_{p(y)}^{pile} \tag{7.31b}$$

$$M_{d(x)}^{ftg} = M_{o(x)}^{col} + V_{o(y)}^{col} \times D_{ftg} + N_p \times M_{p(x)}^{pile} \tag{7.31c}$$

$I_{pg(x),(y)}$ = Moment of inertia of the pile group about the X or Y axis as defined in Equation 7.31

$M_{d(x),(y)}^{ftg}$ = The component of the moment demand on the footing about the X or Y axis

$M_{o_{(x),(y)}}^{col}$ = The component of the column overstrength moment capacity about the X or Y axis

N_p = Total number of piles in the pile group

n = The total number of piles at distance $c_{(i)}$ from the centroid of the pile group

P_p = The total axial load on the pile group including column axial load (dead load+EQ load), footing weight, and overburden soil weight

$M_{p(x),(y)}^{pile}$ = The component of the pile plastic moment capacity at the pile cap connection due to total average axial load about the X or Y axis

$V_{o(x),(y)}^{col}$ = The component of column overstrength shear demand along the X or Y axis

Note that Equations 7.30, 7.31a, 7.31b, and 7.31c are used by the Caltrans WinFOOT Computer Program.

7.7.1.2 Pile Foundations in Marginal Soil

7.7.1.2.1 Lateral Design

In marginal soils the pile cap may not dominate the lateral stiffness of the foundation, as is expected in competent soil, possibly leading to significant lateral displacements. The designer shall verify that the lateral capacity of the foundation exceeds the lateral demand transmitted by the column, including the pile's capability of maintaining axial load capacity at the expected lateral displacement. A lateral analysis of pile footings may be performed using a more sophisticated computer program such as LPILE, GROUP, SAP2000, or WFRAME.

The designer should select the most cost effective strategy for increasing the lateral resistance of the foundation when required. The following methods are commonly used to increase lateral foundation capacity.

- Deepen the footing/pile cap to increase passive resistance

- Increase the amount of fixity at the pile/footing connection and strengthen the upper portion of the pile
- Use a more ductile pile type that can develop soil resistance at larger pile deflections
- Add additional piles

7.7.1.2.2 Lateral Capacity of Fixed Head Piles

The lateral capacity assessment of fixed head piles requires a project specific design which considers the effects of shear, moment, axial load, stiffness, soil capacity, and stability.

7.7.1.2.3 Passive Earth Resistance for Pile Caps in Marginal Soil

Assessing the passive resistance of the soil surrounding pile caps under dynamic loading is complex. The designer may conservatively elect to ignore the soil's contribution in resisting lateral loads. In this situation, the piles must be capable of resisting the entire lateral demand without exceeding the force or deformation capacity of the piles.

Alternatively, contact the Project Geologist/Geotechnical Engineer to obtain force deformation relationships for the soil that will be mobilized against the footing. The designer should bear in mind that significant displacement may be associated with the soil's ultimate passive resistance.

7.7.1.3 Rigid Footing Response

The length to thickness ratio along the principal axes of the footing must satisfy Equation 7.32 if rigid footing behavior and the associated linear distribution of pile forces and deflections are assumed.

$$L_{ftg} / D_{ftg} \leq 2.2 \tag{7.32}$$

L_{ftg} = The cantilever length of the pile cap measured from the face of the column to the edge of the footing.

7.7.1.4 Footing Joint Shear

All footing/column moment resisting joints shall be proportioned so the principal stresses meet the following criteria:

Principal compression: $$p_c \leq 0.25 \times f'_c \tag{7.33}$$

Principal tension: $$p_t \leq \begin{cases} 12 \times \sqrt{f'_c} & \text{(psi)} \\ 1.0 \times \sqrt{f'_c} & \text{(MPa)} \end{cases} \tag{7.34}$$

Where:

$$p_t = \frac{f_v}{2} - \sqrt{\left(\frac{f_v}{2}\right)^2 + v_{jv}^2} \tag{7.35}$$

$$p_c = \frac{f_v}{2} + \sqrt{\left(\frac{f_v}{2}\right)^2 + v_{jv}^2} \tag{7.36}$$

$$v_{jv} = \frac{T_{jv}}{B_{eff}^{ftg} \times D_{ftg}} \tag{7.37}$$

(See Figure 7.13)

$$T_{jv} = T_c - \sum T_{(i)}^{pile} \tag{7.38}$$

T_c = Column tensile force associated with M_o^{col}

$\sum T_{(i)}^{pile}$ = Summation of the hold down force in the tension piles.

$$B_{eff}^{ftg} = \begin{cases} \sqrt{2} \times D_c & \text{Circular Column} \\ B_c + D_c & \text{Rectangular Column} \end{cases} \tag{7.39}$$

$$f_v = \frac{P_{col}}{A_{jh}^{ftg}} \tag{7.40}$$

(see Figure 7.13a)

P_{col} = Column axial force including the effects of overturning

$$A_{jh}^{ftg} = \left\{\left(D_c + D_{ftg}\right) \times (B_c + D_{ftg})\right. \tag{7.41}$$

Where:

A_{jh}^{ftg} = the effective horizontal area at mid-depth of the footing, assuming a 45° spread away from the boundary of the column in all directions, see Figure 7.13.

D_c = Column cross-sectional dimension in the direction of interest.

For circular or square columns, $B_c = D_c$.

For rectangular columns, B_c = the other column cross-section dimension.

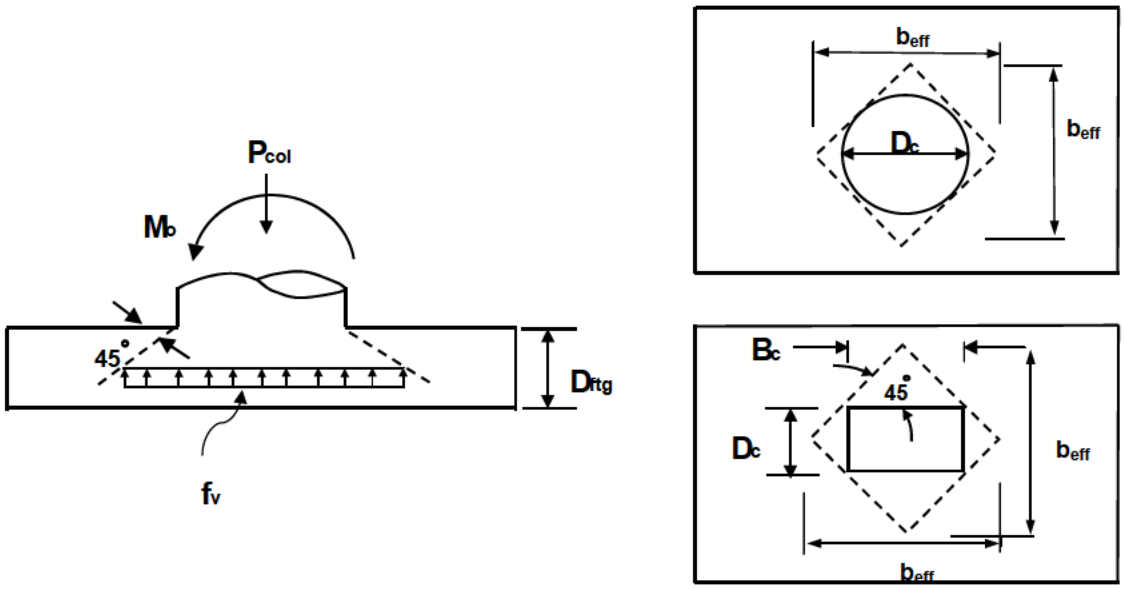

(a) (b)

Figure 7.13 Assumed Effective Dimensions for Footing Joint Stress Calculation

7.7.1.5 Effective Footing Width for Flexure

If the footing is proportioned according to Sections 7.7.1.3 and 7.7.1.4, the entire width of the footing can be considered effective in resisting the column overstrength flexure and the associated shear.

7.7.1.6 Effects of Large Capacity Piles on Footing Design

The designer shall insure the footing has sufficient strength to resist localized pile punching failure for piles exceeding nominal resistance of 400 kips (1800kN). In addition, a sufficient amount of the flexure reinforcement in the top and bottom mat must be developed beyond the exterior piles to insure tensile capacity is available to resist the horizontal component of the shear-resisting mechanism for the exterior piles.

7.7.1.7 Use of "T" Headed Stirrups and Bars in Footings

The types of hooks used for stirrups in footings depends on the column fixity condition and the level of principal tensile stress. To assist engineers with the proper choice of hooks for footing stirrups, the following stirrup configurations are defined: (a) Stirrups with 180-degree hooks at the top and 90-degree hooks at the bottom, (b) Stirrups with 180-degree hooks at the top and T-heads at the bottom, and (c) Fully lapped stirrups with 180-degree hooks at opposite ends.

- For pinned-column footings, stirrup type (a) or (b) or (c) may be used (See Figure 7.13c).
- For fixed-column footings, stirrup type (b) or (c) shall be used if the principal tensile stress demand (see Section 7.7.1.4) in the footing exceeds $3.5\sqrt{f_c^{'}}$ (psi) [$0.29\sqrt{f_c^{'}}$ (MPa)]. The region around the column bounded by a distance of $D_c/2$ from the face of the column is recommended for the stirrup placement (See Figure 7.13d). If the principal tensile stress demand is less than $3.5\sqrt{f_c^{'}}$ (psi) [$0.29\sqrt{f_c^{'}}$ (MPa)], stirrup type (a) or (b) or (c) may be used.

The designer may avoid the use of "T" heads by increasing the depth of the footing and reducing the principal stress demand below $3.5\sqrt{f_c^{'}}$ (psi) [$0.29\sqrt{f_c^{'}}$ (MPa)].

The designer shall ensure development of the main footing bars beyond the centerline of piles and provide a 90-degree hook or "T" head, if development of the bar is needed.

The bar size in the footing mats along with the principal tensile stress level and the spacing of the mat are all critical factors in the choice of the stirrup bar size. Use of #18 bars in footings needs a careful review as it affects the choice of the stirrup bar and hook detailing to fit the mat.

7.7.2 Pier Wall Pile Foundations

Typically, it is not economical to design pier wall pile foundations to resist the transverse seismic shear. Essentially elastic response of the wall in the strong direction will induce large foundation demands that may cause inelastic response in the foundation. If this occurs, piles will incur some damage from transverse demands, most likely near the pile head/pile cap connection. Methods for reducing the inelastic damage in pier wall pile foundations include:

- Utilizing ductile pile head details
- Pinning the pier wall-footing connection in the weak direction to reduce the weak axis demand on the piles that may be damaged by transverse demands
- Pinning the pier wall-soffit connection, thereby limiting the demands imparted to the substructure
- Use a ductile system in lieu of the traditional pier wall. For example, columns or pile extensions with isolated shear walls

The method selected to account for or mitigate inelastic behavior in the pier wall foundations shall be discussed at the Type Selection Meeting.

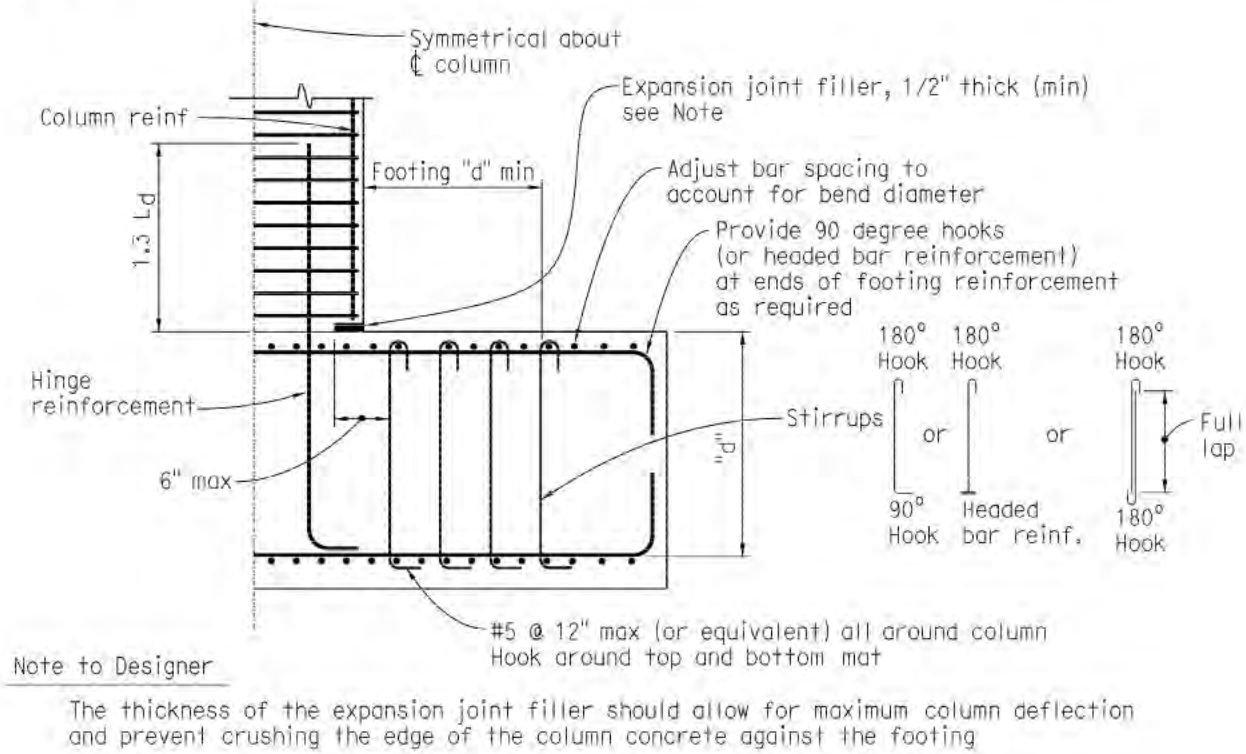

Note to Designer

The thickness of the expansion joint filler should allow for maximum column deflection and prevent crushing the edge of the column concrete against the footing

Figure 7.13c Footing Reinforcement – Pinned Column

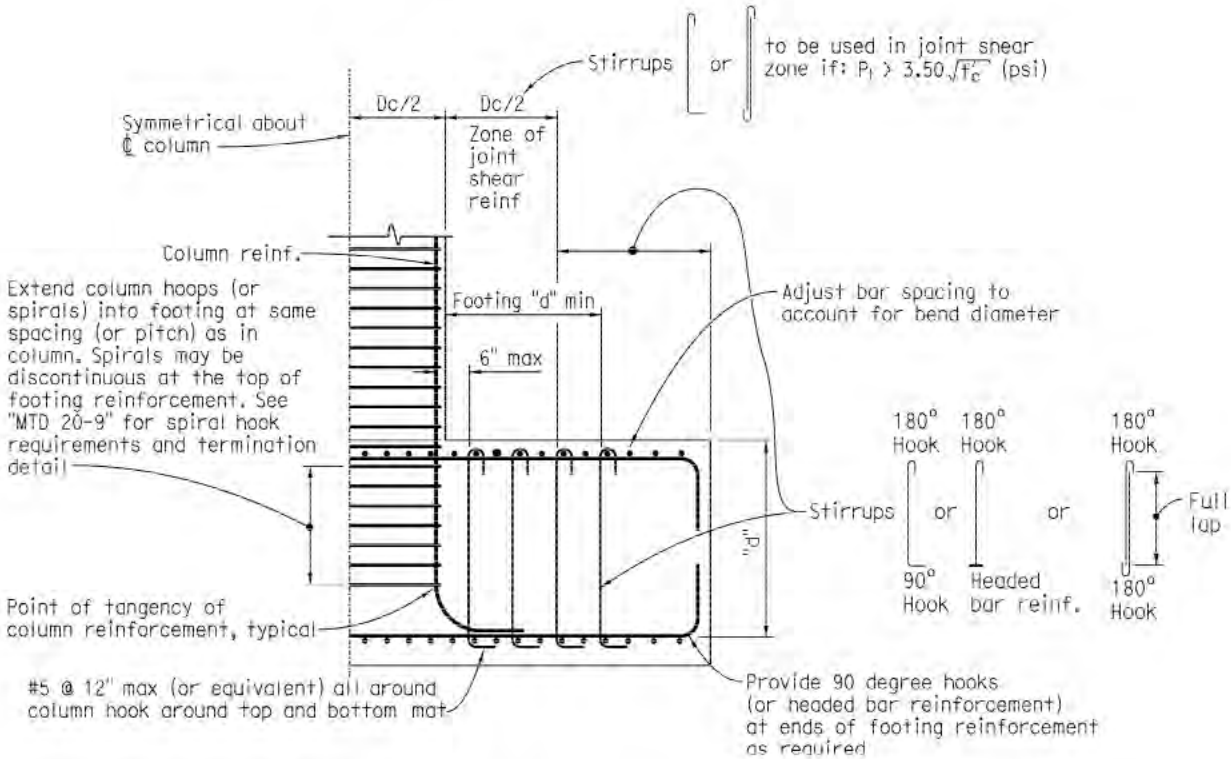

Figure 7.13d Footing Reinforcement – Fixed Column

7.7.2.1 Pier Wall Spread Footing Foundations

If sliding of the pier wall foundation is anticipated, the capacity of the pier wall and foundation must be designed for 130% of a realistic estimate of the sliding resistance at the bottom of the footing.

7.7.3 Pile Shafts

7.7.3.1 Shear Demand on Type I Pile Shafts

Overestimating the equivalent cantilever length of pile shafts will underestimate the shear load corresponding to the plastic capacity of the shaft. The seismic shear force for Type I pile shafts shall be taken as the larger of either the shear reported from the soil/pile interaction analysis when the in-ground plastic hinges form, or the shear calculated by dividing the overstrength moment capacity of the pile shaft by H_s defined as specified in Equation 7.42.

$$H_s \leq \begin{cases} H' + (2 \times D_c) \\ \text{Length of the column / shaft from the point of maximum moment} \\ \text{in the shaft to the point of contraflexure in the column} \end{cases} \tag{7.42}$$

7.7.3.2 Flexure Demand/Capacity Requirements for Type II Pile Shafts

The distribution of moment along a pile shaft is dependent upon the geotechnical properties of the surrounding soil and the stiffness of the shaft. To ensure the formation of plastic hinges in columns and to minimize the damage to type II shafts a factor of safety of 1.25 shall be used in the design of Type II shafts. This factor also accommodates the uncertainty associated with estimates on soil properties and stiffness. The expected nominal moment capacity M_{ne}^{typeII}, at any location along the shaft, must be at least 1.25 times the moment demand generated by the overstrength moment applied at the base of the column. Increasing the pile shaft's capacity to meet the overstrength requirement will affect the moment demand in the shaft. This needs to be considered and may require iteration to achieve the specified overstrength.

7.7.3.3 Pile Shaft Diameter

Pile shaft construction practice often requires the use of temporary casing (straight or telescoping) especially in the upper 20 feet (6 m). Pile shafts diameters are commonly 6 inches (150 mm) larger than specified when straight casing is used, and 1 foot (300 mm) larger for each piece of telescoping casing. The effect of oversized shafts on the foundation's performance should be considered.

7.7.3.4 Minimum Pile Shaft Length

Pile shafts must have sufficient length to ensure stable load-deflection characteristics.

7.7.3.5 Enlarged Pile Shafts

Type II shafts typically are enlarged relative to the column diameter to contain the inelastic action to the column. Enlarged shafts shall be at least 24 inches larger than the column diameter and the reinforcement shall satisfy the clearance requirements for CIP piling specified in Bridge Design Details 13-22.

7.7.4 Pile Extensions

Pile extensions must perform in a ductile manner and meet the ductility requirements of column elements specified in Section 4.1.

7.8 ABUTMENTS

7.8.1 Longitudinal Abutment Response

The backfill passive pressure force resisting movement at the abutment varies nonlinearly with longitudinal abutment displacement and is dependent upon the material properties of the backfill. Abutment longitudinal response analysis may be accomplished by using a bilinear approximation of the force-deformation relationship as detailed herein or by using the nonlinear force-deformation relationship documented in Reference [15].

The bilinear demand model shall include an effective abutment stiffness that accounts for expansion gaps, and incorporates a realistic value for the embankment fill response. Based on passive earth pressure tests and the force deflection results from large-scale abutment testing at UC Davis [13] and UCLA [16] and idealized by Reference [17], the initial stiffness K_i for embankment fill material meeting the requirements of Caltrans Standard Specifications is estimated as shown in Equation 7.43a.

$$K_i \approx \frac{50\,kip/in}{ft} \quad \left(\frac{28.70\,KN/mm}{m}\right) \tag{7.43a}$$

For embankment fill material not meeting the requirements of the Standard Specifications, the initial embankment fill stiffness may be taken as $K_i \approx 25\,\frac{\text{kip/in}}{\text{ft}}$ $(14.35\,\frac{kN/mm}{m})$.

The initial stiffness[15] shall be adjusted proportional to the backwall/diaphragm height, as documented in Equation 7.43b.

[15] This proportionality may be revised in future as more data becomes available.

$$K_{abut} = \begin{cases} K_i \times w \times \left(\dfrac{h}{5.5\ ft} \right) & \text{U.S. units} \\ K_i \times w \times \left(\dfrac{h}{1.7\ m} \right) & \text{S.I. units} \end{cases} \tag{7.43b}$$

where, w is the projected width of the backwall or ~~the~~ diaphragm for seat and diaphragm abutments, respectively (see Figures 7.14B and 7.14C for effective abutment dimensions).

For seat-type abutments, the effective abutment wall stiffness K_{eff} shall account for the expansion hinge gaps as shown in Figure 7.14A.

Based on a bilinear idealization of the force-deformation relationship (see Figure 7.14A), the passive pressure force resisting the movement at the abutment (P_{bw} or P_{dia}) is calculated according to Equation 7.44.

$$P_{bw}\ or\ P_{dia} = \begin{cases} A_e \times 5.0\ ksf \times (\dfrac{h_{bw}\ or\ h_{dia}}{5.5}) & \text{(ft,kip)} \\ A_e \times 239\ kPa \times (\dfrac{h_{bw}\ or\ h_{dia}}{1.7}) & \text{(m,kN)} \end{cases} \tag{7.44}$$

The maximum passive pressure of 5.0 ksf (239 kPa), presented in Equation 7.44 is based on the ultimate static force developed in the full scale abutment testing [13, 16]. The height proportionality factor, $h/5.5\ ft \left(h/1.7\ m \right)$ is based on the height of the tested abutment walls.

The effective abutment wall area, A_e for calculating the ultimate longitudinal force capacity of an abutment is presented in Equation 7.45a.

$$A_e = \begin{cases} h_{bw} \times w_{bw} & \text{for Seat Abutments} \\ h_{dia} \times w_{dia} & \text{for Diaphragm Abutments} \end{cases} \tag{7.45a}$$

where: $h_{dia} = h_{dia}^{*}$ = Effective height if the diaphragm is not designed for full soil pressure (see Figure 7.14B)

$h_{dia} = h_{dia}^{**}$ = Effective height if the diaphragm is designed for full soil pressure (see Figure 7.14B)

w_{bw}, w_{dia}, w_{abut} = Effective abutment widths corrected for skew (see Figures 7.14B and 7.14C)

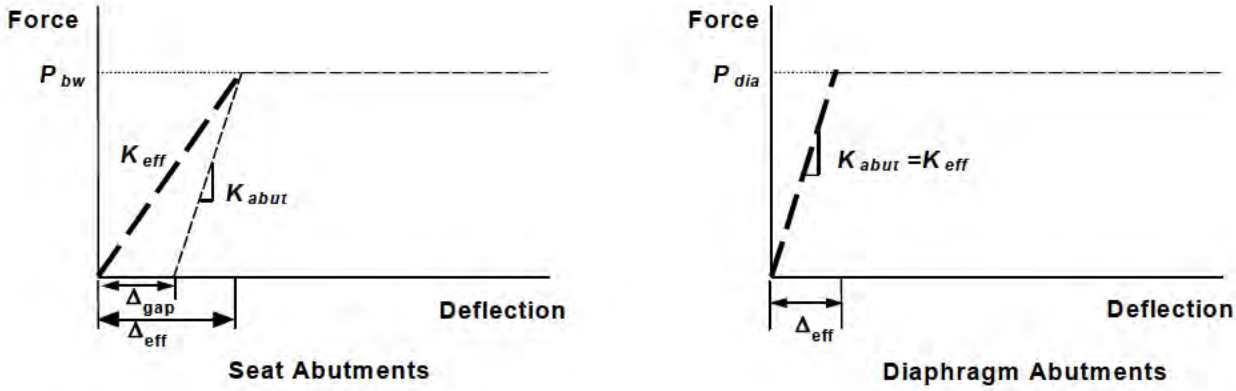

Figure 7.14A Effective Abutment Stiffness

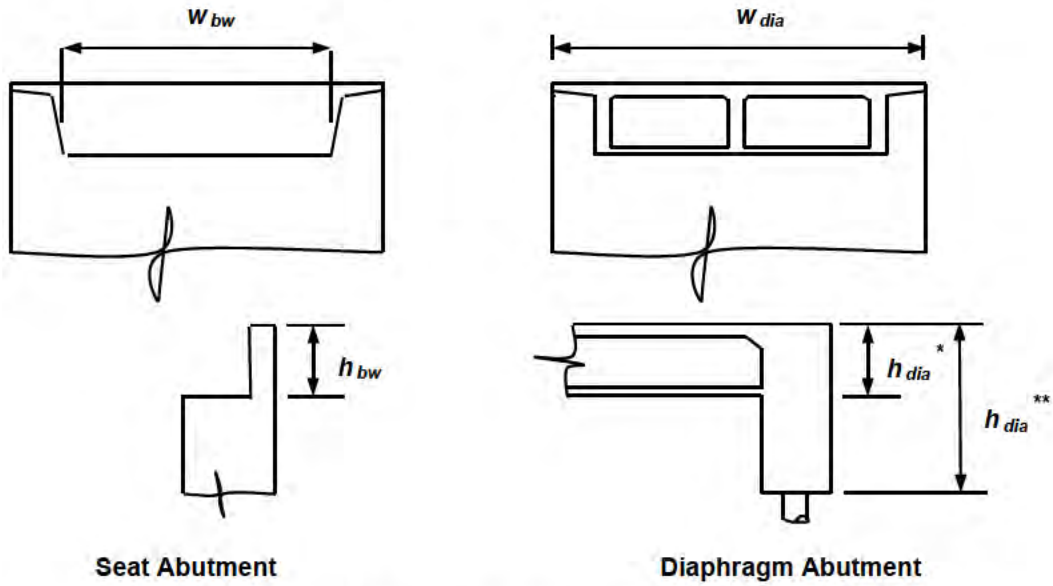

Figure 7.14B Effective Abutment Area

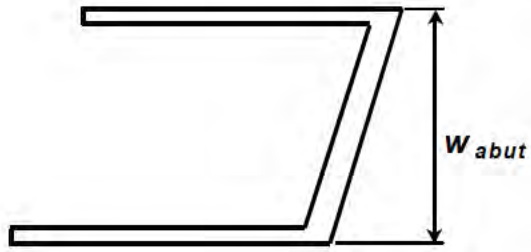

Figure 7.14C Effective Abutment Width For Skewed Bridges

For seat abutments the backwall is typically designed to break off in order to protect the foundation from inelastic action. The area considered effective for mobilizing the backfill longitudinally is equal to the area of the backwall.

For diaphragm abutments the entire diaphragm, above and below the soffit, is typically designed to engage the backfill immediately when the bridge is displaced longitudinally. Therefore, the effective abutment area is equal to the entire area of the diaphragm. If the diaphragm has not been designed to resist the passive earth pressure exerted by the abutment backfill, the effective abutment area is limited to the portion of the diaphragm above the soffit of the girders.

The abutment displacement coefficient, R_A shall be used in the assessment of the effectiveness of the abutment (see Equation 7.45b).

$$R_A = \Delta_D / \Delta_{eff} \tag{7.45b}$$

where:

Δ_D = The longitudinal displacement demand at the abutment from elastic analysis.

Δ_{eff} = The effective longitudinal abutment displacement at idealized yield.

If $R_A \leq 2$: The elastic response is dominated by the abutments. The abutment stiffness is large relative to the stiffness of the bents or piers. The column displacement demands generated by the linear elastic model can be used directly to determine the displacement demand and capacity assessment of the bents or piers.

If $R_A \geq 4$: The elastic model is insensitive to the abutment stiffness. The abutment contribution to the overall bridge response is small and the abutments are insignificant to the longitudinal seismic performance. The bents and piers will sustain significant deformation. The effective abutment stiffness K_{eff} in the elastic model shall be reduced to a minimum residual stiffness K_{res}, (see Equation 7.45c) and the elastic analysis shall be repeated for revised column displacements. The residual spring has no relevance to the actual stiffness provided by the failed backwall or diaphragm but should suppress unrealistic response modes associated with a completely released end condition.

$$K_{res} \approx 0.1 \times K_{eff} \tag{7.45c}$$

If $2 < R_A < 4$: The abutment stiffness in the elastic model shall be adjusted by interpolating effective abutment stiffness between K_{eff} and the residual stiffness K_{res} based on the R_A value. The elastic analysis shall be repeated to obtain revised column displacements.

7.8.2 Transverse Abutment Response

Seat type abutments are designed to resist transverse service load and moderate levels of ground motion elastically. Linear elastic analysis cannot capture the inelastic response of the shear keys, wingwalls, or piles. The transverse capacity of seat abutments should not be considered effective for the design seismic hazards unless the designer can demonstrate the force-deflection characteristics and stiffness for each element that contributes to the transverse resistance.

The magnitude of the transverse abutment stiffness and the resulting displacement is most critical in the design of the adjacent bent, not the abutment itself. Reasonable transverse displacement of superstructure relative to the abutment seat can easily be accommodated without catastrophic consequences. A nominal transverse spring stiffness, K_{nom} equal to 50% of the elastic transverse stiffness of the adjacent bent shall be used at the abutment in the elastic demand assessment models. The nominal spring stiffness, K_{nom} has no direct correlation or relevance to the actual residual stiffness (if any) provided by the failed shear key but should suppress unrealistic response modes associated with a completely released end condition. This approach is consistent with the stand-alone pushover analysis based design of the adjacent bents and it is conservative since additional amounts of lateral resistance at the abutments that are not generally captured by the nominal spring will only reduce the transverse displacement demands at the bents. Any additional element~~,~~ such as pile shafts (used for transverse ductility), shall be included in the transverse analysis with a characteristic force-deflection curve. The initial slope of the force-deflection curve shall be included in the elastic demand assessment model.

Transverse stiffness of diaphragm type abutments supported on standard piles surrounded by dense or hard material can conservatively be estimated, ignoring the wingwalls, as 40 kips/in ($7.0\ {}^{\mathrm{kN}}\!/_{\mathrm{mm}}$) per pile.

7.8.3 Abutment Seat Width

Sufficient abutment seat width shall be available to accommodate the anticipated thermal movement, prestress shortening, creep, shrinkage, and the relative longitudinal earthquake displacement. The seat width normal to the centerline of bearing shall be calculated by Equation 7.46 but shall not be less than 30 inches (760 mm).

$$N_A \geq \begin{cases} \left(\Delta_{p/s} + \Delta_{cr+sh} + \Delta_{temp} + \Delta_{eq} + 4\right) & \text{(in)} \\ \left(\Delta_{p/s} + \Delta_{cr+sh} + \Delta_{temp} + \Delta_{eq} + 100\right) & \text{(mm)} \end{cases} \tag{7.46}$$

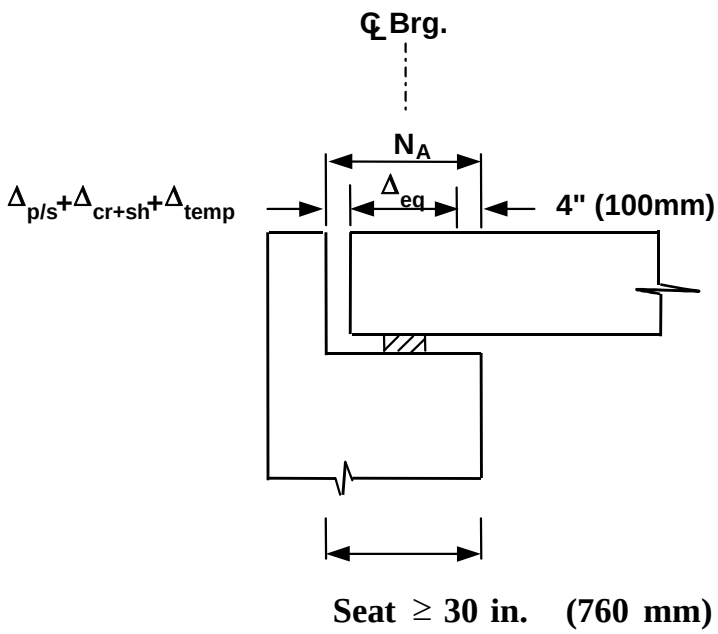

Figure 7.15 Abutment Seat Width Requirements

N_A = Abutment seat width normal to the centerline of bearing

$\Delta_{p/s}$ = Displacement attributed to pre-stress shortening

Δ_{cr+sh} = Displacement attributed to creep and shrinkage

Δ_{temp} = Displacement attributed to thermal expansion and contraction

Δ_{eq} = The largest relative earthquake displacement between the superstructure and the abutment calculated by the global or stand-alone analysis

The "Seat Width" requirements due to the service load considerations (AASHTO LRFD Bridge Design Specifications) shall also be met.

7.8.4 Abutment Shear Key Design

Typically abutment shear keys are expected to transmit the lateral shear forces generated by small to moderate earthquakes and service loads. Determining the earthquake force demand on shear keys is difficult. The forces generated with elastic demand assessment models should not be used to size the abutment shear keys. Shear key capacity for abutments supported on piles and spread footings shall be determined according to Equations 7.47 (a-d).

$$F_{sk} = \alpha \times (0.75 \times V_{piles} + V_{ww}) \qquad \text{For Abutment on piles} \qquad (7.47a)$$

$$F_{sk} = \alpha \times P_{dl} \qquad \text{For Abutment on Spread footing} \qquad (7.47b)$$

in which,

$$0.5 \le \alpha \le 1 \qquad (7.47c)$$

where:

F_{sk} = Abutment shear key force capacity (kips)

V_{piles} = Sum of lateral capacity of the piles (kips)

V_{ww} = Shear capacity of one wingwall (kips)

P_{dl} = Superstructure dead load reaction at the abutment plus the weight of the abutment and its footing (kips)

α = factor that defines the range over which F_{sk} is allowed to vary

It is recognized that the shear key design limits in Equation 7.47a may not be feasible for high abutments where unusually large number of piles support the abutment structure. In such cases it is recommended that the shear key be designed for the lateral strength specified in Equation 7.47d, provided the value of F_{sk} is less than that furnished by Equation 7.47a.

$$F_{sk} = \alpha \times P_{dl}^{\sup} \qquad (7.47d)$$

where:

$P_{dl}^{\sup}$ = Superstructure dead load reaction at the abutment.

The limits of α are as defined in Equation 7.47c.

7.8.4.1 Abutment Shear Key Reinforcement

Abutment shear key reinforcement may be designed using Equations 7.48 and 7.52 (referred to herein as the Isolated shear key method) or Equations 7.49, 7.50, 7.51, and 7.53 (referred to herein as the Non-isolated shear key or Shear friction design method). Shear key construction using normal weight concrete placed monolithically is assumed.

Equations 7.48 and 7.52 and the reinforcement details shown in Figure 7.16(A) are based on experimental tests on exterior shear keys conducted at UCSD [18]. This reinforcing detail (Figure 7.16A) was developed to ensure that exterior shear keys fail through a well-defined horizontal plane that is easily repaired after an earthquake, and is recommended for exterior shear key design for bridge abutments with skews $\leq 20^o$. Figure 7.16 shows typical reinforcing details for abutment shear keys designed using both methods.

A) Vertical Shear Key Reinforcement

For the Isolated key design method, the required area of interface shear reinforcement crossing the shear plane, A_{sk} is given by Equation 7.48.

$$A_{sk} = \frac{F_{sk}}{1.8 \times f_{ye}} \qquad \text{Isolated shear key} \qquad (7.48)$$

The shear key vertical reinforcement provided above should be placed in a single line parallel to the bridge, and as close as possible to the center of the key, transversely (see Figure 7.16A).

If the Non-isolated key or Shear-friction design method is used, A_{sk}, is given by (see Figure 7.16B):

$$A_{sk} = \frac{1}{1.4 \times f_{ye}}\left(F_{sk} - 0.4 \times A_{cv}\right) \qquad \text{Non-isolated shear key} \qquad (7.49)$$

in which:

$$A_{cv} \geq \max\begin{cases} \dfrac{4.0 \times F_{sk}}{f'_{ce}} \\ 0.67 \times F_{sk} \end{cases} \qquad (7.50)$$

$$A_{sk,\min} = \frac{0.05 \times A_{cv}}{f_{ye}} \qquad (7.51)$$

where:

A_{cv} = Area of concrete considered to be engaged in interface shear transfer (in^2)

$A_{sk,\min}$ = Minimum area of interface shear reinforcement (in^2)

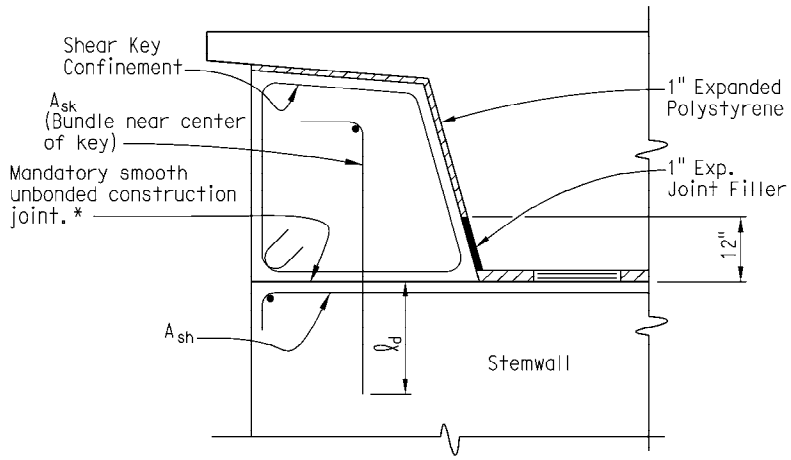

* Smooth construction joint is required at the shear key interfaces with the stemwall and backwall to effectively isolate the key except for specifically designed reinforcement. These interfaces should be trowel-finished smooth before application of a bond breaker such as construction paper. It is not recommended to use form oil as a bond breaker for this purpose.

(A) Isolated shear key

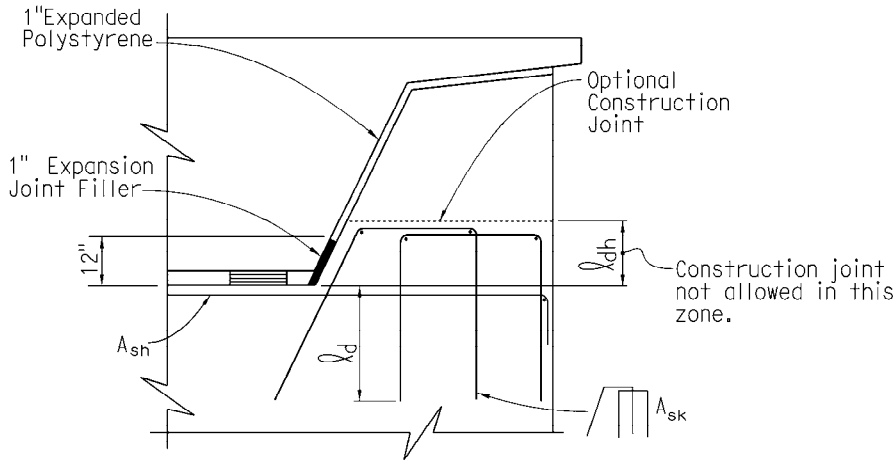

(B) Non-isolated shear key

NOTES:

(a) Not all shear key bars shown

(b) On high skews, use 2" expanded polystyrene with 1" expanded polystyrene over the 1" expansion joint filler to prevent binding on post-tensioned bridges.

Figure 7.16 Abutment Shear key Reinforcement Details

In Equations 7.48 – 7.51, f_{ye} and $f_{ce}^{'}$ have units of ksi, F_{sk} is in kips, and A_{sk} is in in^2.

Due to development length requirements, it is recommended that vertical shear key reinforcement be no larger than #11 bars. If the height of the shear key is not adequate to develop straight bars, hooks or T-heads may be used.

The concrete shear key block should be well confined to ensure shear failure of the vertical key reinforcement instead of deterioration of the key block itself.

B) Horizontal Reinforcement in the Stem wall (Hanger bars)

The horizontal reinforcement in the stem wall below the shear key shall be designed to carry the shear key force elastically. The required area of horizontal reinforcement in the stem wall, A_{sh} is given by Equations 7.52 and 7.53 for Isolated and Non-isolated shear keys, respectively.

$$A_{sh} = 2.0 \times A_{sk(provided)}^{Iso} \qquad \text{Isolated shear key} \qquad (7.52)$$

$$A_{sh} = \max\begin{cases} 2.0 \times A_{sk(provided)}^{Non-iso} \\ \dfrac{F_{sk}}{f_{ye}} \end{cases} \qquad \text{Non-isolated shear key} \qquad (7.53)$$

where:

$A_{sk(provided)}^{Iso}$ = Area of interface shear reinforcement provided in Equation 7.48 for Isolated shear key

$A_{sk(provided)}^{Non-iso}$ = Area of interface shear reinforcement provided in Equation 7.49 for non-isolated shear key

Horizontal stem wall tension reinforcement can be provided using headed bars or standard hooked hanger bars. “T” heads should be considered in place of large radius hooks.

In situations where limited space prevents placement of the required shear key reinforcement, the design engineer must use judgment. Such situations may occur due to non-standard overhangs, high skews, and retrofit conditions at widenings.

Wide bridges may require internal shear keys to ensure adequate lateral resistance is available for service load and moderate earthquakes. Internal shear keys should be avoided whenever possible because of maintenance problems associated with premature failure caused by binding due to superstructure rotation or shortening.

8. SEISMIC DETAILING

8.1 Splices in Reinforcing Steel

8.1.1 No Splice Regions in Ductile Components

Splicing of flexural reinforcement is not permitted in critical locations of ductile elements. The "no splice" region shall be the greater of: The length of the plastic hinge region as defined in Section 7.6.3 or the portion of the column where the moment demand exceeds M_y.. A "no splice" region shall be clearly identified on the plans for both hinge locations of fixed-fixed columns.

8.1.2 Reinforcement Spliced in Ductile Components & Components Expected to Accept Damage

Reinforcing steel splices in ductile components outside of the "no splice" region shall meet the "ultimate splice" performance requirements identified in MTD 20-9.

8.1.3 Reinforcement Spliced in Capacity Protected Members

Reinforcing steel splices designed to meet the SDC requirements in capacity protected components shall meet the "service splice" requirements identified in MTD 20-9. The designer in consultation with the Seismic Specialist may choose to upgrade the splice capacity from service level to ultimate level in capacity protected components where the reinforcing steel strains are expected to significantly exceed yield. These locations are usually found in elements that are critical to ductile performance such as bent caps, footings, and enlarged pile shafts.

8.1.4 Hoop and Spiral Reinforcement Splices

Ultimate splices are required for all spiral and hoop reinforcement in ductile components. Splicing of spiral reinforcement is not permitted in the "no splice" regions of ductile components as defined in Section 8.1.1. Spiral splicing outside the "no splice" regions of ductile components shall meet the ultimate splice requirements.

8.2 Development of Longitudinal Column Reinforcement

Refer to LRFD BDS for the development requirements for all reinforcement not addressed in this Section.

8.2.1 Minimum Development Length of Column Longitudinal Bars into Cap Beams for Seismic Considerations

Column longitudinal reinforcement shall be extended into cap beams as close as practically possible to the opposite face of the cap beam.

If the joint shear reinforcement prescribed in Section 7.4.4.2, and the minimum bar spacing requirements in Section 8.2.5 and AASHTO LRFD Articles 5.10.3.1 and 5.10.3.2 are met, the anchorage for longitudinal column bars developed into the cap beam for seismic loads shall not be less than the length specified in Equation 8.1[1]:

$$l_{ac} = 24 d_{bl} \qquad \text{(in, or mm)} \tag{8.1}$$

The anchorage length specified in Equation 8.1 was based on test data on straight column longitudinal bars extended into the cap beam and therefore should not be reduced by adding hooks or mechanical anchorage devices.

The reinforcing development requirements in other Caltrans documents must be met for all load cases other than seismic. Note that the minimum development length of column longitudinal bars into footings is governed by the reinforcing development provisions in other Caltrans documents.

The column reinforcement shall be confined along the development length l_{ac} by transverse hoops or spirals with the same volumetric ratio as required at the top of the column. If the joint region is not confined by adjacent solid members or prestressing, the volumetric ratio of the confinement along l_{ac} shall not be less than the value specified by Equation 8.2.

$$\rho_s = \frac{0.6 \times \rho_l \times D_c}{l_{ac}} \tag{8.2}$$

8.2.2 Anchorage of Bundled Bars in Ductile Components

The anchorage length of individual column bars within a bundle anchored into a cap beam shall be increased by twenty percent for a two-bar bundle and fifty percent for a three-bar bundle. Four-bar bundles are not permitted in ductile elements.

8.2.3 Flexural Bond Requirements for Columns

8.2.3.1 Maximum Bar Diameter

The nominal diameter of longitudinal reinforcement in columns shall not exceed the value specified by Equation 8.3.

$$d_{bl} = 25 \times \sqrt{f_c'} \times \frac{L_b}{f_{ye}} \quad \text{(in, psi)} \qquad d_{bl} = 2.1 \times \sqrt{f_c'} \times \frac{L_b}{f_{ye}} \quad \text{(mm, MPa)} \qquad (8.3)^{16}$$

$$L_b = L - 0.5 \times D_c \qquad (8.4)$$

L = Length of column from the point of maximum moment to the point of contra-flexure

Where longitudinal bars in columns are bundled, Equation 8.3 shall apply to the nominal effective diameter d_{bb} of the bundle, taken as $1.2 \times d_{bl}$ for two- bar bundles, and $1.5 \times d_{bl}$ for three-bar bundles.

8.2.4 Development Length For Column Reinforcement Extended Into Type II Shafts

Column longitudinal reinforcement shall be extended into Type II (enlarged) shafts in a staggered manner with the minimum recommended embedment lengths of $(D_{c,\max} + l_d)$ and $(D_{c,\max} + 2 \times l_d)$, where $D_{c,\max}$ is the largest cross section dimension of the column, and l_d is the development length in tension of the column longitudinal bars. The development length l_d shall be determined by multiplying the basic tension development length l_{db} as specified in AASHTO LRFD Section 5.11.2.1 by the compounded modification factors of 0.9 and 0.6 for epoxy-coated and non epoxy-coated reinforcement, respectively. Expected values of 68 ksi and 5 ksi for f_y and $f_c^{'}$, respectively, shall be used in calculating l_{db}.

In addition to ensuring adequate anchorage beyond the plastic hinge penetration into the shaft, this provision will ensure that the embedment lengths for a majority of bridge columns supported on Type II shafts are less than 20 ft. Construction cost increases significantly when embedment lengths exceed 20 ft as the shaft excavations are governed by the more stringent Cal-OSHA requirements for tunneling and mining.

8.2.5 Maximum Spacing for Lateral Reinforcement

The maximum spacing for lateral reinforcement in the plastic end regions shall not exceed the smallest of the following:

- One fifth of the least dimension of the cross-section for columns and one-half of the least cross-section dimension of piers
- Six times the nominal diameter of the longitudinal reinforcement
- Eight inches (200 mm)

[16] To ensure conservative results, $f_c^{'}$ rather than $f_{ce}^{'}$ is used in Equation 8.3. [7]

APPENDIX A - NOTATIONS & ACRONYMS

A_b = Area of individual reinforcing steel bar (in2, mm2) (Section 3.8.1)

A_{cap}^{top}, A_{cap}^{bot} = Area of bent cap top and bottom flexural steel, respectively (Sections 7.4.4.3, 7.4.5.1)

A_{cv} = Area of concrete considered to be engaged in interface shear transfer (Section 7.8.4.1)

A_e = Effective shear area (Section 3.6.2)

A_g = Gross cross section area (in2, mm2) (section 3.6.2)

ARS = 5% damped elastic Acceleration Response Spectrum, expressed in terms of *g* (Section 2.1)

A_{jh} = The effective horizontal area of a moment resisting joint (Section 7.4.4.1)

A_{jh}^{ftg} = The effective horizontal area for a moment resisting footing joint (Section 7.7.1.4)

A_{jv} = The effective vertical area for a moment resisting joint (Section 7.4.4.1)

A_{jv}^{ftg} = The effective vertical area for a moment resisting footing joint (Section 7.7.1.4)

A_s = Area of supplemental non-prestressed tension reinforcement (Section 4.3.2.2)

A'_s = Area of supplemental compression reinforcement (Section 4.3.2.2)

A_s^{jh} = Area of horizontal joint shear reinforcement required at moment resisting joints (Section 7.4.4.3)

A_s^{jhc} = The total area of horizontal ties placed at the end of the bent cap in Case 1 knee joints (Section 7.4.5.1)

A_s^{jv} = Area of vertical joint shear reinforcement required at moment resisting joints (Section 7.4.4.3)

A_s^{j-bar} = Area of vertical j-bar reinforcement required at moment resisting joints with a skew angle >20° (Section 7.4.4.3)

A_s^{sf} = Area of bent cap side face steel required at moment resisting joints (Section 7.4.4.3)

A_{st} = Area of longitudinal column steel anchored in the joint (Section 7.4.4.3)

ASTM = American Society for Testing Materials

A_s^{u-bar} = Area of bent cap top and bottom reinforcement bent in the form of u-bars in knee joints (Section 7.4.5.1)

A_{sh} = Area of horizontal shear key reinforcement (Section 7.8.4.1)

$A_{sk(provided)}^{Iso}$ = Area of interface shear reinforcement provided for isolated shear key (Section 7.8.4.1)

$A_{sk(provided)}^{Non-iso}$ = Area of interface shear reinforcement provided for non-isolated shear key (Section 7.8.4.1)

A_v = Area of shear reinforcement perpendicular to flexural tension reinforcement (Section 3.6.3)

B_c = The other cross-sectional dimension of a rectangular column (Section 7.7.1.4)

B_{cap} = Bent cap width (Section 7.4.2.1)

BDD = Caltrans Bridge Design Details

BDS = Bridge Design Specifications

B_{eff} = Effective width of the superstructure for resisting longitudinal seismic moments (Section 7.2.1.1)

B_{eff}^{ftg} = Effective width of the footing for calculating average normal stress in the horizontal direction within a footing moment resisting joint (Section 7.7.1.4)

$C_{(i)}^{pile}$ = Axial compression demand on a pile (Section 7.7.1.1)

CIDH = Cast-in-drilled-hole pile (Section 1.2)

CISS = Cast-in-steel-shell pile (Section 1.2)

D_c = Column cross sectional dimension in the direction of interest (Section 3.1.4.1)

$D_{c.g.}$ = Distance from the top of column to the center of gravity of the superstructure (Section 4.3.2.1)

$D_{c,max}$ = Largest cross sectional dimension of the column (Section 8.2.4)

D_{ftg} = Depth of footing (Section 7.7.1.1, 7.7.1.3)

D_{Rs} = Depth of resultant soil resistance measured from top of footing (Section 7.7.1.1)

DS = Design Spectrum (Sections 2.1, 6.1)

D_s = Depth of superstructure at the bent cap (Section 7.2.1.1)

DSH = Design Seismic Hazards (Sections 1., 3.1.1, 6.1)

D' = Cross-sectional dimension of confined concrete core measured between the centerline of the peripheral hoop or spiral (Section 3.6.3)

D^* = Diameter for circular shafts or the least cross section dimension for oblong shafts (Section 7.6.2)

E_c = Modulus of elasticity of concrete (psi, MPa) (Section 3.2.6)

EDA = Elastic Dynamic Analysis (Section 2.2.1)

E_s = Modulus of elasticity of steel (psi, MPa) (Section 3.2.3)

ESA = Equivalent Static Analysis (Section 2.2.1)

F_{sk} = Abutment shear key force capacity (Section 7.8.4)

G = The gap between an isolated flare and the soffit of the bent cap (Section 7.6.2)

G_c = Shear modulus (modulus of rigidity) for concrete (ksi, MPa) (Section 5.6.1)

GS = Geotechnical Services

H = Average height of column supporting bridge deck between expansion joints (Section 7.8.3)

H' = Length of pile shaft/column from ground surface to the point of zero moment above ground (Section 7.6.2)

$H_{o-\max}$ = Length of pile shaft/column from point of maximum moment to point of contraflexure above ground considering the base of plastic hinge at the point of maximum moment (Section 7.6.2(c))

H_s = Length of column/shaft considered for seismic shear demand on Type I pile shafts (Section 7.7.3.1)

$I_{c.g.}$ = Moment of inertia of the pile group (Section 7.7.1.1)

I_{eff} = Effective moment of inertia for computing member stiffness (Section 5.6.1)

I_g = Moment of inertia about centroidal axis of the gross section of the member (Section 5.6.1)

ISA = Inelastic Static Analysis (Section 5.2.3)

J_{eff} = Effective polar moment of inertia for computing member stiffness (Section 5.6.1)

J_g = Gross polar moment of inertia about centroidal axis of the gross section of the member (Section 5.6.1)

K_{eff} = Effective abutment backwall stiffness $\frac{\text{kip/in}}{\text{ft}}$ ($\frac{\text{kN/mm}}{\text{m}}$) (Section 7.8.1)

K_i = Initial abutment backwall stiffness (Section 7.8.1)

L = Member length from the point of maximum moment to the point of contra-flexure (in, mm) (Section 3.1.3)

L = Length of bridge deck between adjacent expansion joints (Section 7.8.3)

L_b = Length used for flexural bond requirements (Section 8.2.3.1)

L_p = Equivalent analytical plastic hinge length (in, mm) (Section 3.1.3)

L_{pr} = Plastic hinge region which defines the region of a column or pier that requires enhanced lateral confinement (Section 7.6.2)

L_{ftg} = Cantilever length of the footing or pile cap measured from face of column to edge of footing along the principal axis of the footing (Section 7.7.1.3)

LRFD BDS = AASHTO LRFD Bridge Design Specifications with Interims and CA Amendments

$M^{ftg}_{d(x),(y)}$ = The component of the moment demand on the footing about the X or Y axis (Section 7.7.1.1)

M_{dl} = Moment attributed to dead load (Section 4.3.2.1)

M^{col}_{eq} = The column moment when coupled with any existing M_{dl} & $M_{p/s}$ will equal the column's overstrength moment capacity, M_o^{col} (Section 4.3.2)

$M^{R,L}_{eq}$ = Portion of M_{eq}^{col} distributed to the left or right adjacent superstructure spans (Section 4.3.2.1)

$M^{pile}_{(i)}$ = The moment demand generated in pile (i) (Section 7.7.1.1)

M_{max} = Earthquake maximum moment magnitude (Section 2.1, Appendix B)

M_n = Nominal moment capacity based on the nominal concrete and steel strengths when the concrete strain reaches 0.003.

M_{ne} = Nominal moment capacity based on the expected material properties and a concrete strain, ε_c = 0.003 (Section 3.4)

$M_{ne}^{\sup R,L}$ = Expected nominal moment capacity of the right and left superstructure spans utilizing expected material properties (Section 4.3.2.1)

M_{ne}^{typeII} = Expected nominal moment capacity of a type II pile shaft (Section 7.7.3.2)

M_o^{col} = Column overstrength moment (Section 2.3.1)

M_p^{col} = Idealized plastic moment capacity of a column calculated by M-ϕ analysis (kip-ft, N-m) (Section 2.3.1)

$M_{p(x),(y)}^{pile}$ = The component of the pile plastic moment capacity at the pile cap connection due to total average axial load about the X or Y axis (Section 7.7.1.1)

$M_{p/s}$ = Moment attributed to secondary prestress effects (Section 4.3.2)

M_y = Moment capacity of a ductile component corresponding to the first reinforcing bar yielding (Section 5.6.1.1)

M-ϕ = Moment curvature analysis (Section 3.1.3)

MTD = Memo To Designers

N = Blow count per foot (0.3m) for the California Standard Penetration Test (Section 6.2.2)

N_A = Abutment support width normal to centerline of bearing (Section 7.8.3)

N_p = Total number of piles in a footing (Section 7.7.1.1)

P_b = The effective axial force at the center of the joint including prestress (Section 7.4.4.1)

P_c = The column axial force including the effects of overturning (Section 3.6.2)

P_{dl} = Axial load attributed to dead load (Section 3.5)

$P_{dl}^{\sup}$ = Superstructure axial load resultant at the abutment (Section 7.8.4)

PGR = Preliminary Geology Report (Section 2.1)

P_p = Total axial load on the pile group including column axial load (dead load + EQ load due to any overturning effects), footing weight, and overburden soil weight (Section 7.7.1.1)

P/S = Prestressed Concrete (i.e. P/S concrete, P/S strand) (Section 2.1.4)

R_A = Abutment displacement coefficient (Section 7.8.1)

R_D = Displacement reduction factor for damping ratios exceeding 5% (Section 2.1.5)

R_{Rup} = Site to rupture plane distance (Appendix B)

R_s = Total resultant expected soil resistance along the end and sides of a footing (Section 7.7.1.1)

S = Skew angle of abutment (Section 7.8.2)

SD = Structure Design (Section 1.1)

SDC = Seismic Design Criteria

Sd = 5% damped spectral displacement (Section 2.1.5)

Sd' = Spectral displacement modified for higher levels of damping (Section 2.1.5)

SPI = Structure Policy and Innovation

T = Natural period of vibration, in seconds T = $2\pi\sqrt{m/k}$ (Section 7.1.2)

T_c = Total tensile force in column longitudinal reinforcement associated with M_o^{col} (Section 7.4.4.1)

$T_{(i)}^{pile}$ = Axial tension demand on a pile (Section 7.7.1.1)

T_{jv} = Net tension force in moment resisting footing joints (Section 7.7.2.2)

V_c = Nominal shear strength provided by concrete (Section 3.6.1)

$V_{(i)}^{pile}$ = Shear demand on a pile (Section 7.7.1.1)

V_n = Nominal shear strength (Section 3.6.1)

V_n^{pw} = Nominal shear strength of pier wall in the strong direction (Section 3.6.6.2)

V_o = Overstrength shear associated with the overstrength moment Mo (Section 3.6.1)

V_o^{col} = Column overstrength shear, typically defined as M_o^{col}/L (kips, N) (Section 2.3.1)

V_{pile} = Abutment pile shear capacity (Section 7.8.4)

V_p^{col} = Column plastic shear, typically defined as M_p^{col}/L (kips, N) (Section 2.3.2.1)

V_s = Nominal shear strength provided by shear reinforcement (Section 3.6.1)

V_u^{pw} = Shear demand on a pier wall in the strong direction (Section 3.6.6.2)

V_{ww} = Shear capacity of one wingwall (Section 7.8.4)

$c_{(i)}$ = Distance from pile (i) to the center of gravity of the pile group in the X or Y direction (Section 7.7.1.1)

c = Damping ratio (Section 2.1.5)

d_{bl} = Nominal bar diameter of longitudinal column reinforcement (Section 7.6.2)

d_{bb} = Effective diameter of bundled reinforcement (Section 8.2.3.1)

f_h = Average normal stress in the horizontal direction within a moment resisting joint (Section 7.4.4.1)

f_{ps} = Tensile stress for 270 ksi (1900 MPa) 7 wire low relaxation prestress strand (ksi, MPa) (Section 3.2.4)

f_u = Specified minimum tensile strength for A706 reinforcement (ksi, MPa) (Section 3.2.3)

f_{ue} = Expected minimum tensile strength for A706 reinforcement (ksi, MPa) (Section 3.2.3)

f_v = Average normal stress in the vertical direction within a moment resisting joint (Section 7.4.4.1)

f_y = Nominal yield stress for A706 reinforcement (ksi, MPa) (section 3.2.1)

f_{ye} = Expected yield stress for A706 reinforcement (ksi, MPa) (Section 3.2.1)

f_{yh} = Nominal yield stress of transverse column reinforcement (hoops/spirals) (ksi, Mpa) (Section 3.6.2)

$f_c^{'}$ = Compressive strength of unconfined concrete (Section 3.2.6)

$f_{cc}^{'}$ = Confined compression strength of concrete (Section 3.2.5)

$f_{ce}^{'}$ = Expected compressive strength of unconfined concrete (psi, MPa) (Section 3.2.1)

g = Acceleration due to gravity, 32.2 ft/sec^2 (9.81 m/sec^2) (Section 1.1)

h_{bw} = Abutment backwall height (Section 7.8.1)

$k_{(i)}^{e}$ = Effective stiffness of bent or column (i) (Section 7.1.1)

l_{ac} = Length of column reinforcement embedded into bent cap (Section 7.4.4.1)

l_b = Length used for flexural bond requirements (Section 8.2.2.1)

l_d = Development length (Sections 7.4.3, 8.2.4)

$m_{(i)}$ = Tributary mass associated with column or bent (i), m = W/g (kip-sec2/ft, kg) (Section 7.1.1)

n = The total number of piles at distance $c_{(i)}$ from the center of gravity of the pile group (Section 7.7.1.1)

p_{bw} = Maximum abutment backwall soil pressure (Section 7.8.1)

p_c = Nominal principal compression stress in a joint (psi, MPa) (Section 7.4.2)

p_t = Nominal principal tension stress in a joint (psi, MPa) (Section 7.4.2)

s = Spacing of shear/transverse reinforcement measured along the longitudinal axis of the structural member (in, mm) (Section 3.6.3)

s_u = Undrained shear strength (psf, KPa) (Section 6.2.2)

t = Top or bottom slab thickness (Section 7.3.1.1)

v_{jv} = Nominal vertical shear stress in a moment resisting joint (psi, MPa) (Section 7.4.4.1)

v_c = Permissible shear stress carried by concrete (psi, MPa) (Section 3.6.2)

v_s = Shear wave velocity (ft/sec, m/sec) (Section 6.2.2, Appendix Figure B.12)

ε_c	=	Specified concrete compressive strain for essentially elastic members (Section 3.4.1)
ε_{cc}	=	Concrete compressive strain at maximum compressive stress of confined concrete (Section 3.2.6)
ε_{co}	=	Concrete compressive strain at maximum compressive stress of unconfined concrete (Section 3.2.6)
ε_{sp}	=	Ultimate compressive strain (spalling strain)of unconfined concrete (Section 3.2.5)
ε_{cu}	=	Ultimate compression strain for confined concrete (Section 3.2.6)
ε_{ps}	=	Tensile strain for 7-wire low relaxation prestress strand (Section 3.2.4)
$\varepsilon_{ps,EE}$	=	Tensile strain in prestress steel at the essentially elastic limit state (Section 3.2.4)
$\varepsilon_{ps,u}^{R}$	=	Reduced ultimate tensile strain in prestress steel (Section 3.2.4)
ε_{sh}	=	Tensile strain at the onset of strain hardening for A706 reinforcement (Section 3.2.3)
ε_{su}	=	Ultimate tensile strain for A706 reinforcement (Section 3.2.3)
ε_{su}^{R}	=	Reduced ultimate tensile strain for A706 reinforcement (Section 3.2.3)
ε_y	=	Nominal yield tensile strain for A706 reinforcement (Section 3.2.3)
ε_{ye}	=	Expected yield tensile strain for A706 reinforcement (Section 3.2.3)
Δ_b	=	Displacement due to beam flexibility (Section 2.2.2)
Δ_c	=	Local member displacement capacity (Section 3.1.2)
Δ_{col}	=	Displacement attributed to the elastic and plastic deformation of the column (Section 2.2.4)
Δ_C	=	Global displacement capacity (Section 3.1.2)
Δ_{cr+sh}	=	Displacement due to creep and shrinkage (Section 7.2.5.5)
Δ_d	=	Local member displacement demand (Section 2.2.2)
Δ_D	=	Global system displacement (Section 2.2.1)
Δ_{eq}	=	The average displacement at an expansion joint due to earthquake (Section 7.2.5.4)
Δ_f	=	Displacement due to foundation flexibility (Section 2.2.2)
Δ_p	=	Local member plastic displacement capacity (in, mm) (Section 3.1.3)
$\Delta_{p/s}$	=	Displacement due to prestress shortening (Section 7.2.5.5)
Δ_r	=	The relative lateral offset between the point of contra-flexure and the base of the plastic hinge (Section 4.2)
Δ_s	=	The displacement in Type I shafts at the point of maximum moment (Section 4.2)
Δ_{temp}	=	The displacement due to temperature variation (Section 7.2.5.4)
Δ_Y^{col}	=	Idealized yield displacement of the column (Section 2.2.4)

Δ_Y	=	Idealized yield displacement of the subsystem at the formation of the plastic hinge (in, mm) (Section 2.2.3)
θ_p	=	Plastic rotation capacity (radians) (Section 3.1.3)
ρ	=	Ratio of non-prestressed tension reinforcement (Section 4.4)
ρ_l	=	Area ratio of longitudinal column reinforcement (Section 8.2.1)
ρ_s	=	Ratio of volume of spiral or hoop reinforcement to the core volume confined by the spiral or hoop reinforcement (measured out-to-out) (Sections 3.8.1 and 3.6.2)
ρ_{fs}	=	Area ratio of transverse reinforcement in column flare (Section 7.6.5.3)
ϕ	=	Resistance factor (Sections 3.2.1, 3.4, 3.6.1, 3.6.6.2, 3.6.7)
ϕ_p	=	Idealized plastic curvature $1/\text{in}$ ($1/\text{mm}$) (Section 3.1.3)
ϕ_u	=	Ultimate curvature capacity (Section 3.1.3)
ϕ_y	=	Yield curvature corresponding to the yield of the fist tension reinforcement in a ductile component (Section 5.6.1.1)
ϕ_Y	=	Idealized yield curvature (Section 3.1.3)
μ_d	=	Local displacement ductility demand (Section 3.6.2)
μ_D	=	Global displacement ductility demand (Section 2.2.3)
μ_c	=	Local displacement ductility capacity (Section 3.1.4)

APPENDIX B - DESIGN SPECTRUM DEVELOPMENT

California Seismic Hazard

Seismic hazard in California is governed by shallow crustal tectonics, with the sole exception of the Cascadia subduction zone along California's northern coastline. In both regimes, the Design Response Spectrum is based on the envelope of a deterministic and probabilistic spectrum. Instructions for the determination of these spectra, including the application of appropriate adjustment factors, are provided in the sections below.

Deterministic Criteria

Shallow crustal tectonics (all faults other than Cascadia subduction zone)

The deterministic spectrum is calculated as the arithmetic average of median response spectra calculated using the Campbell-Bozorgnia (2008) and Chiou-Youngs (2008) ground motion prediction equations (GMPE's). These equations are applied to all faults in or near California considered to be active in the last 700,000 years (late Quaternary age) and capable of producing a moment magnitude earthquake of 6.0 or greater. In application of these ground motion prediction equations, the earthquake magnitude should be set to the maximum moment magnitude $M_{\max}$, as recommended by California Geological Survey (1997, 2005). Recommended fault parameters, including $M_{\max}$, are provided in the *"2007 Fault Database"* (http://dap3.dot.ca.gov/shake_stable/references/2007_Fault_Database_120309.xls). Updates to these parameters along with additions or deletions to the database of considered faults can be found at *"Errata Report"* (http://dap3.dot.ca.gov/shake_stable/Errata_Report_120309.pdf)

Multi-fault Hazard

In cases where more than one fault contributes maximum spectral values across the period spectrum, an envelope of the spectral values shall be used for the design spectrum.

Eastern California Shear Zone

The Eastern California Shear Zone is a region of distributed shear and complex faulting that makes identification of potential seismic sources challenging. To account for this uncertainty, a minimum response spectrum based on a strike-slip mechanism with moment magnitude **M** 7.6 and a distance to the vertical rupture plane of 10 km (6.2 miles) is imposed. This minimum spectrum is shown for several V_{S30} values in Figure B.1. The Eastern California Shear Zone is shown in Figure B.2.

Cascadia Subduction Zone

Following the general approach of the USGS (Frankel, 2002), the deterministic spectrum for the Cascadia subduction zone is defined by the median spectrum from the Youngs et al. (1997) ground motion prediction equation, with the added criterion that where the Youngs et al. spectrum is less than the average of the Campbell-Bozorgnia (2008) and Chiou-Youngs (2008) models (both without the hanging wall term applied), an arithmetic average of the Youngs et al. and CB-CY average is used.

Minimum Deterministic Spectrum

In recognition of the potential for earthquakes to occur on previously unknown faults, a minimum deterministic spectrum is imposed statewide. This minimum spectrum is defined as the average of the median predictions of Campbell-Bozorgnia (2008) and Chiou-Youngs (2008) for a scenario **M** 6.5 vertical strike-slip event occurring at a distance of 12 km (7.5 miles). While this scenario establishes the minimum spectrum, the spectrum is intended to represent the possibility of a wide range of magnitude-distance scenarios. Although a rupture distance of 12 km strictly meets the criteria for application of a directivity adjustment factor, application of this factor to the minimum spectrum is NOT recommended.

Probabilistic Criteria

The probabilistic spectrum is obtained from the (2008) USGS Seismic Hazard Map (Petersen, 2008) for the 5% in 50 years probability of exceedance (or 975 year return period). Since the USGS Seismic Hazard Map spectral values are published only for V_{S30} = 760m/s, soil amplification factors must be applied for other site conditions. The site amplification factors shall be based on an average of those derived from the Boore-Atkinson (2008), Campbell-Bozorgnia (2008), and Chiou-Youngs (2008) ground motion prediction models (the same models used for the development of the USGS map).

Spectrum Adjustment Factors

The design spectrum may need to be modified to account for seismological effects related to being in close proximity to a rupturing fault and/or placement on top of a deep sedimentary basin. These adjustments are discussed in the following sections.

Near-Fault Factor

Sites located near a rupturing fault may experience elevated levels of shaking at periods longer than 0.5-second due to phenomena such as constructive wave interference, radiation pattern effects, and static fault offset (fling). As a practical matter, these phenomena are commonly combined into a single “near-fault” adjustment factor. This adjustment factor, shown in Figure B.3, is fully applied at locations with a site to rupture plane

distance (R_{Rup}) of 15 km (9.4 miles) or less and linearly tapered to zero adjustment at 25 km (15.6 miles). The adjustment consists of a 20% increase in spectral values with corresponding period longer than one second. This increase is linearly tapered to zero at a period of 0.5-second.

For application to a probabilistic spectrum, a deaggregation of the site hazard should be performed to determine whether the "probabilistic" distance is less than 25 km. The "probabilistic" distance shall be calculated as the smaller of the mean distance and the mode distance (from the peak R, M bin), but not less than the site to rupture plane distance corresponding to the nearest fault in the Caltrans Fault Database. This latter requirement reflects the intention not to apply a near-fault adjustment factor to a background seismic source used in the probabilistic seismic hazard analysis.

Basin Factor

Both the Campbell-Bozorgnia (2008) and Chiou-Youngs (2008) ground motion prediction models include a depth to rock (Z) parameter that allows each model to better predict ground motion in regions with deep sedimentary structure. The two models use different reference velocities for rock, with Campbell-Bozorgnia using a depth to 2.5 km/s shear wave velocity ($Z_{2.5}$) and Chiou-Youngs using a depth to 1.0 km/s shear wave velocity ($Z_{1.0}$). Numerical models suggest that ground shaking in sedimentary basins is impacted by phenomena such as trapped surface waves, constructive and destructive interference, amplifications at the basin edge, and heightened 1-D soil amplification due to a greater depth of soil. Since neither the Campbell-Bozorgnia nor Chiou-Youngs models consider these phenomena explicitly, it is more accurate to refer to predicted amplification due to the Z parameter as a "depth to rock" effect instead of a basin effect. However, since sites with large depth to rock are located in basin structures the term "basin effect" is commonly used.

Amplification factors for the two models are shown for various depths to rock in Figure B.4. These plots assume a V_{S30} of 270 m/s (typical for many basin locations) but are suitable for other V_{S30} values as well since the basin effect is only slightly sensitive to V_{S30} (primarily at periods less than 0.5 second). It should be noted that both models predict a decrease in long period energy for cases of shallow rock ($Z_{2.5}$ < 1 km or $Z_{1.0}$ < 40 m). Since $Z_{2.5}$ and $Z_{1.0}$ data are generally unavailable at non-basin locations, implementation of the basin amplification factors is restricted to locations with $Z_{2.5}$ larger than 3 km or $Z_{1.0}$ larger than 400 m.

Maps of $Z_{1.0}$ and $Z_{2.5}$

Figures B.5 through B.11 show contour maps of $Z_{1.0}$ and $Z_{2.5}$ for regions with sufficient depth to rock to trigger basin amplification. In Southern California, these maps were generated using data from the Community Velocity Model (CVM) Version 4 (http://www.data.scec.org/3Dvelocity/). In Northern California, the $Z_{2.5}$ contour map was generated using tomography data by Thurber (2009) and a generalized velocity profile by Brocher (2005). Details of the contour map development are provided in the *"Deterministic PGA Map and ARS*

Online Report" *(http://dap3.dot.ca.gov/shake_stable/references/Deterministic_PGA_Map_and_ARS_Online_Report_071409.pdf).* A Z_{10} contour map could not be created in Northern California due to insufficient data.

Application of the models

For Southern California locations an average of the Campbell-Bozorgnia and Chiou-Youngs basin amplification factors is applied to both the deterministic and probabilistic spectra. For Northern California locations only the Campbell-Bozorgnia basin amplification factor is applied.

Directional Orientation of Design Spectrum

When recorded horizontal components of earthquake ground motion are mathematically rotated to different orientations, the corresponding response spectrum changes as well. Both the deterministic and probabilistic spectra defined above reflect a spectrum that is equally probable in all orientations. The maximum response spectrum, occurring at a specific but unpredictable orientation, is approximately 15% to 25% larger than the equally probable spectrum calculated using the procedures described above. Since a narrow range of directional orientations typically define the critical loading direction for bridge structures, the equally probable component spectrum is used for design.

Selection of V_{S30} for Site Amplification

The Campbell-Bozorgnia (2008), Chiou-Youngs (2008), and Boore-Atkinson (2008) ground motion prediction models (the latter is included for application to the probabilistic spectrum) use the parameter V_{S30} to characterize near surface soil stiffness as well as infer broader site characteristics. V_{S30} represents the average small strain shear wave velocity in the upper 100 feet (30 meters) of the soil column. This parameter, along with the level of ground shaking, determines the estimated site amplification in each of the above models. If the shear wave velocity (V_S) is known (or estimated) for discrete soil layers, then V_{S30} can be calculated as follows:

$$V_{s30} = \frac{100\ ft}{\frac{D_1}{V_1} + \frac{D_2}{V_2} + \ldots + \frac{D_n}{V_n}}$$

where, D_n represents the thickness of layer n (ft), V_n represents the shear wave velocity of layer n (fps), and the sum of the layer depths equals 100 feet. It is recommended that direct shear wave velocity measurements be used, or, in the absence of available field measurements, correlations to available parameters such as undrained shear strength, cone penetration tip resistance, or standard penetration test blow counts be utilized. Additional recommendations pertaining to determination of V_{S30} for development of the preliminary and final design

spectrum are given in *"Geotechnical Services Design Manual"* (http://dap3.dot.ca.gov/shake_stable/references/GS_Design_Manual _081209.pdf)

Figure B.12 provides a profile classification system that is published in Applied Technology Council–32 (1996) and was adopted in previous versions of SDC. This table includes general guidance on average shear wave velocity that may be useful for development of a preliminary design spectrum. Acceleration and displacement response spectra at V_{S30} values corresponding to the center of the velocity ranges designated for soil profile types B, C, and D are provided at several magnitudes in Figures B.13-B.24. The data for these curves can be found in the *"Preliminary Spectral Curves Data"* spreadsheet (http://dap3.dot.ca.gov/shake_stable/references/ Preliminary_Spectral_Curves_Data_073009.xls).

The Campbell-Bozorgnia and Chiou-Youngs ground motion prediction equations are applicable for V_{S30} ranging from 150 m/s (500 fps) to 1500 m/s (5000 fps). For cases where V_{S30} exceeds 1500 m/s (very rare in California), a value of 1500 m/s should be used. For cases where either (1) V_{S30} is less than 150 m/s, (2) one or more layers of at least five (5) feet thickness has a shear wave velocity less than 120 m/s, or (3) the profile conforms to Soil Profile Type E criteria per Figure B.12, a site-specific response analysis is required for determination of the final design spectrum.

For cases where the site meets the criteria prescribed for Soil Profile Type E, the response spectra presented in Figures B.25-B.27, originally presented in ATC-32, can be used for development of a preliminary design spectrum. In most cases, however, Type E spectra will significantly exceed spectra developed using site response analysis methods. For this reason it is preferred that a site response analysis be performed for the determination of the preliminary design spectrum in Type E soils.

When a soil profile meets the criteria prescribed for Soil Profile Type F (in Figure B.12), a site response analysis is required for both preliminary and final design.

References

- Applied Technology Council, 1996, Improved Seismic Design Criteria for California Bridges: Resource Document, Publication 32-1, Redwood City, California.
- Boore, D., and Atkinson, G., 2008, Ground-motion prediction equations for the average horizontal component of PGA, PGV, and 5%-damped PSA at spectral periods between 0.01 s and 10.0 s: Earthquake Spectra, Vol.24, pp.99-138.
- Brocher, T., M, 2005, A regional view of urban sedimentary basins in Northern California based on oil industry compressional-wave velocity and density logs: Bull. Seism. Soc. Am., v.95, 2093-2114.

- California Geological Survey (CGS), 2005, Bryant, W.A. (compiler), Digital Database of Quaternary and Younger Faults from the Fault Activity Map of California, Version 2.0 (July 2005): http://www.consrv.ca.gov/CGS/information/publications/QuaternaryFaults_ver2.htm
- California Geological Survey (CGS), 1997 (rev.2008), Guidelines for evaluating and mitigating seismic hazards in California: Special Publication 117, 74 pp. http://www.conservation.ca.gov/cgs/shzp/webdocs/Documents/sp117.pdf
- Campbell, K., and Bozorgnia, Y., 2008, NGA ground motion model for the geometric mean horizontal component of PGA, PGV, PGD, and 5% damped linear elastic response spectra for periods ranging from 0.01 to 10 s.: Earthquake Spectra, Vol.24, pp.139-172.
- Chiou, B., and Youngs, R., 2008, An NGA model for the average horizontal component of peak ground motion and response spectra: Earthquake Spectra, Vol.24, pp.173-216
- Frankel, A.D., Petersen, M.D., Mueller, C.S., Haller, K.M.,Wheeler, R.L., Leyendecker, E.V., Wesson, R.L., Harmsen,S.C., Cramer, C.H., Perkins, D.M., Rukstales, K.S., 2002,Documentation for the 2002 update of the National SeismicHazard Maps: U.S. Geological Survey Open-File Report2002–420, 39 p.
- Magistrale, H., S. Day, R.Clayton, and R. Graves, 2000, The SCEC Southern California reference three-dimensional seismic velocity model version 2, Bulletin Seismological Society of America, 90 (6B), S65-S76.
- Petersen, Mark D., Frankel, Arthur D., Harmsen, Stephen C., Mueller, Charles S., Haller, Kathleen M., Wheeler, Russell L., Wesson, Robert L., Zeng, Yuehua, Boyd, Oliver S., Perkins, David M., Luco, Nicolas, Field, Edward H., Wills, Chris J., and Rukstales, Kenneth S., 2008, Documentation for the 2008 Update of the United States National Seismic Hazard Maps: U.S. Geological Survey Open-File Report 2008–1128, 61 p.
- Shantz, T., Merriam, M., 2009, Development of the Caltrans Deterministic PGA Map and Caltrans ARS Online, http://dap3.dot.ca.gov/shake_stable/references/Deterministic_PGA_Map_and_ARS_Online_Report_071409.pdf
- Southern California Basin Models (Community Velocity Model V.4) http://www.data.scec.org/3Dvelocity/
- Thurber, C., Zhang, H., Brocher, T., and Langenheim, V., 2009, Regional three-dimensional seismic velocity model of the crust and uppermost mantle of northern California: *J. Geophys. Res.*, 114, B01304.pp.
- USGS Probabilistic Seismic Hazard Analysis http://earthquake.usgs.gov/research/hazmaps/
- Youngs, R.R., S.J. Chiou, W.J. Silva, and J.R. Humphrey (1997). Strong ground motion attenuation relationships for subduction zone earthquakes, *Seism. Res. Letts.*, v. 68, no. 1, pp. 58-73.

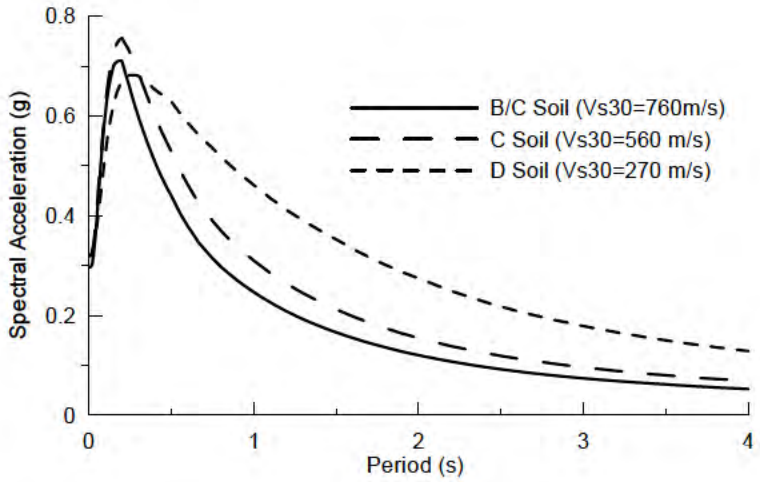

Figure B.1 Minimum response spectrum for Eastern Shear Zone (V_{S30} = 760, 560, and 270 m/s)

Figure B.2 Boundaries of Eastern Shear Zone. Coordinates in decimal degrees (Lat, Long)

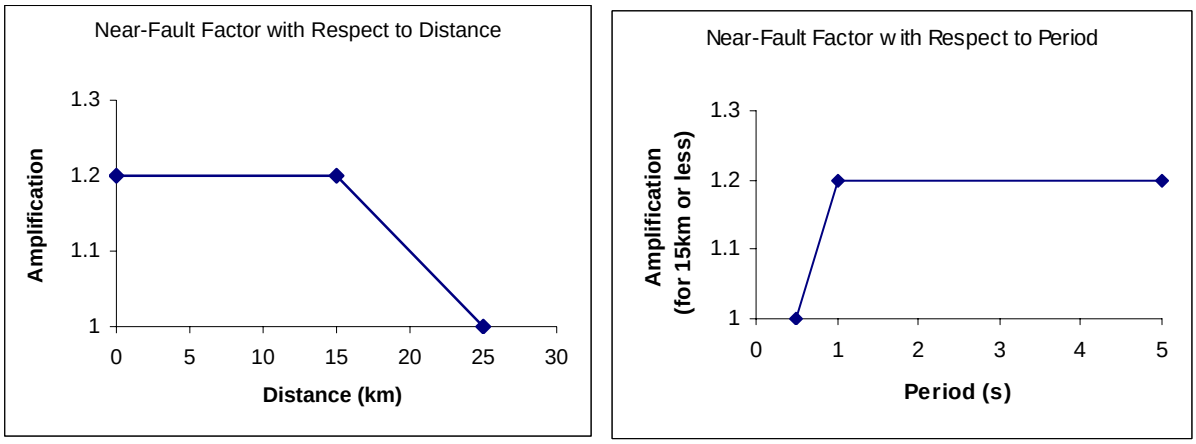

Figure B.3 Near-Fault adjustment factor as a function of distance and spectral period. The distance measure is based on the closest distance to any point on the fault plane.

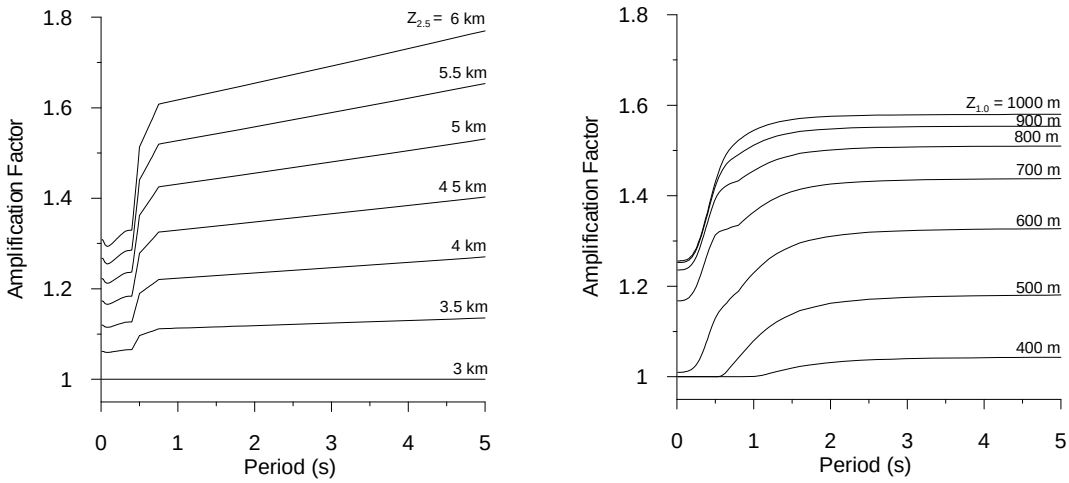

Figure B.4 Basin amplification factors for the Campbell-Bozorgnia (2008) and Chiou-Youngs (2008) ground motion prediction equations. Curves may be slightly conservative at periods less than 0.5 seconds.

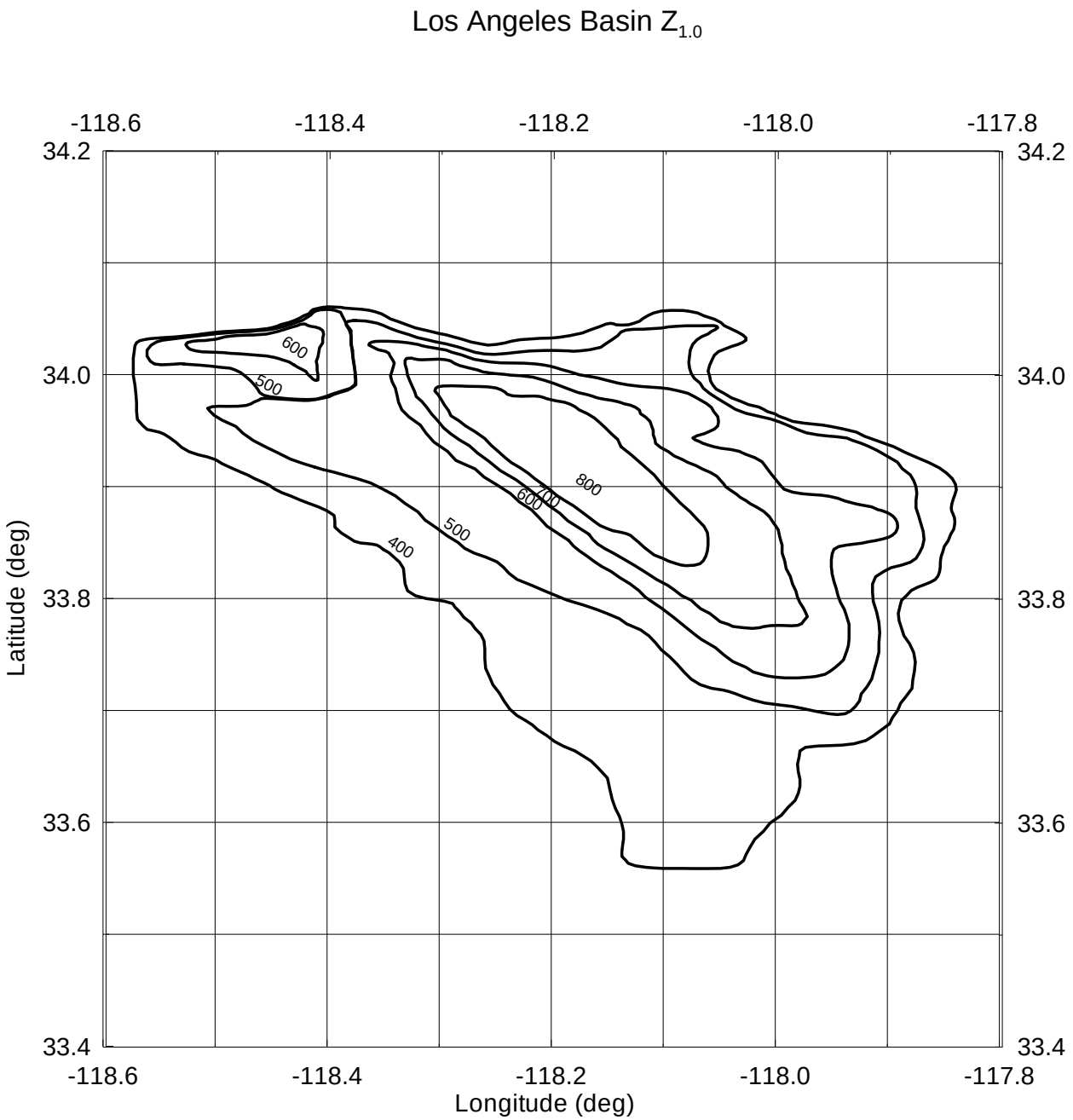

Figure B.5 Contours of depth (meters) to shear wave velocity 1 km/s ($Z_{1.0}$) in the Los Angeles Basin.

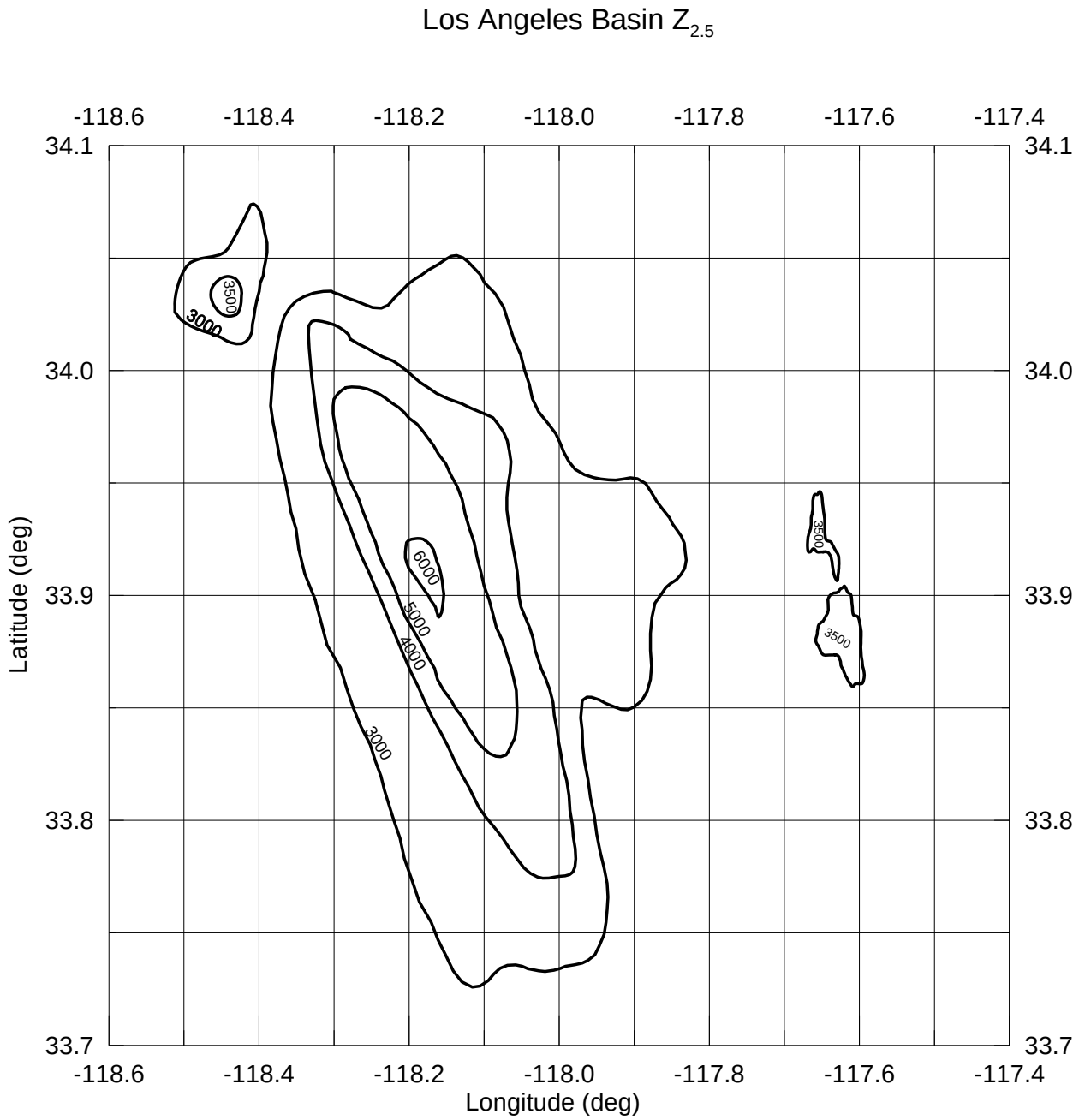

Figure B.6 Contours of depth (meters) to shear wave velocity 2.5 km/s ($Z_{2.5}$) in the Los Angeles Basin.

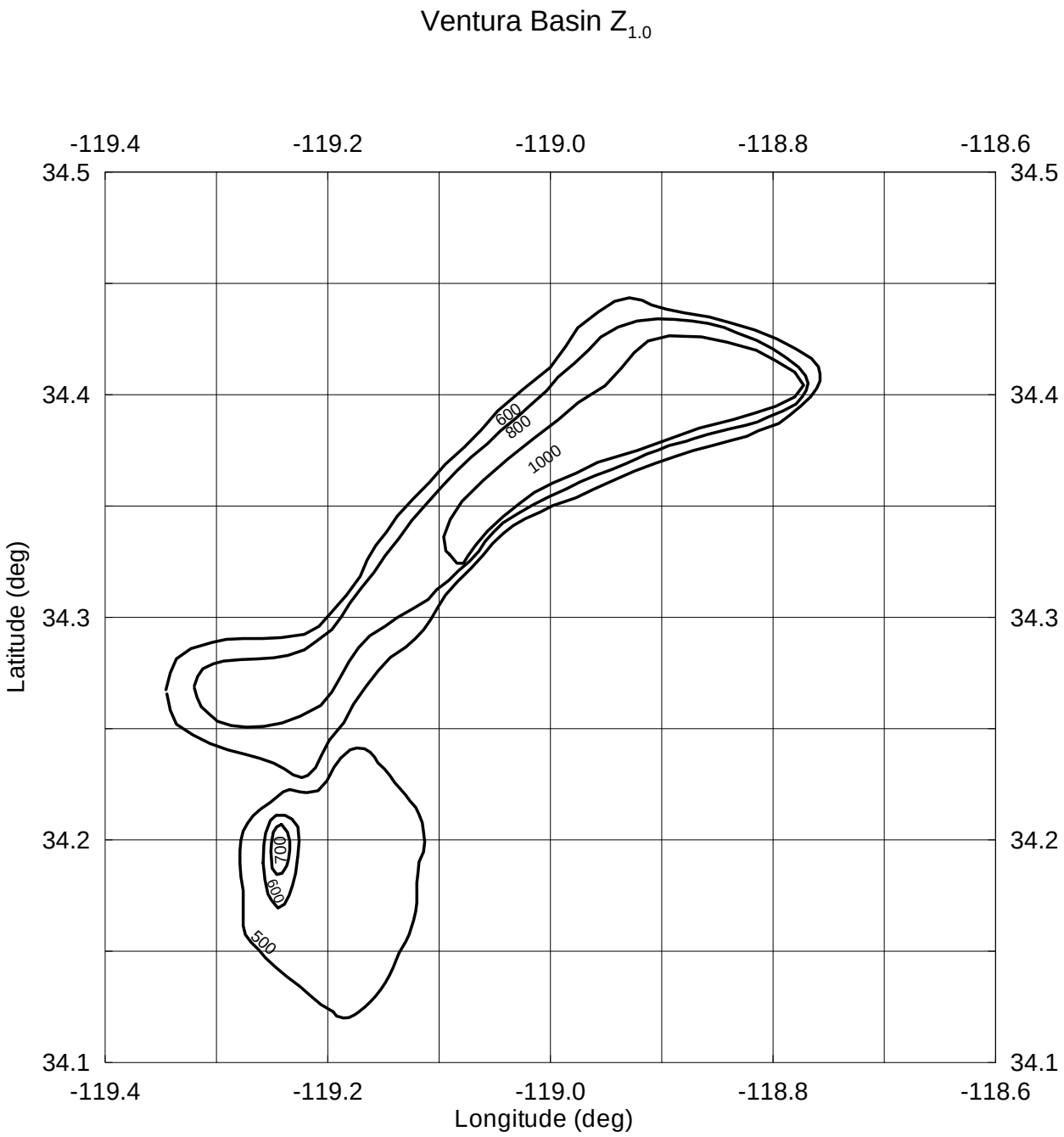

Figure B.7 Contours of depth (meters) to shear wave velocity 1 km/s ($Z_{1.0}$) in the Ventura Basin.

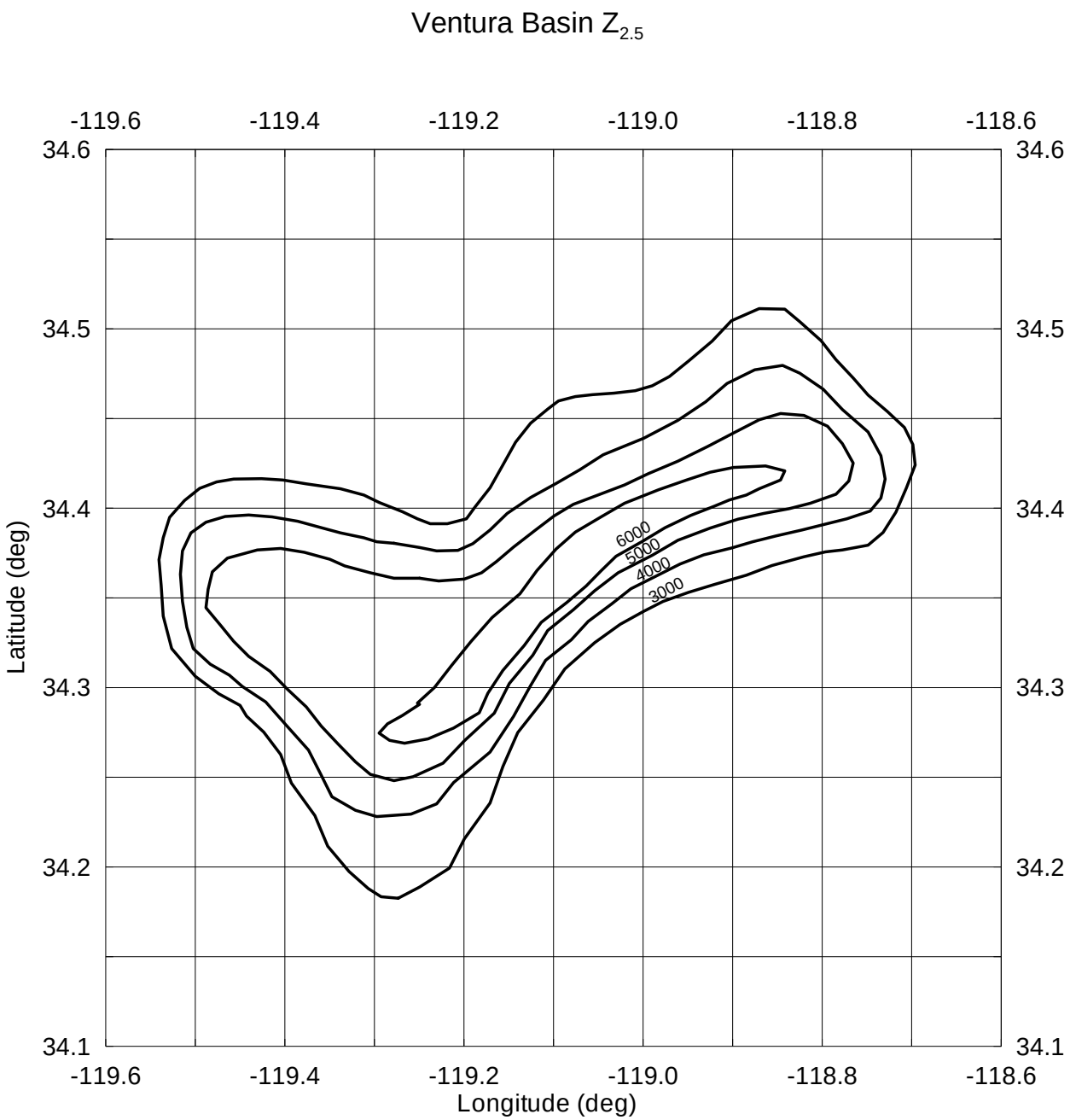

Figure B.8 Contours of depth (meters) to shear wave velocity 2.5 km/s ($Z_{2.5}$) in the Ventura Basin.

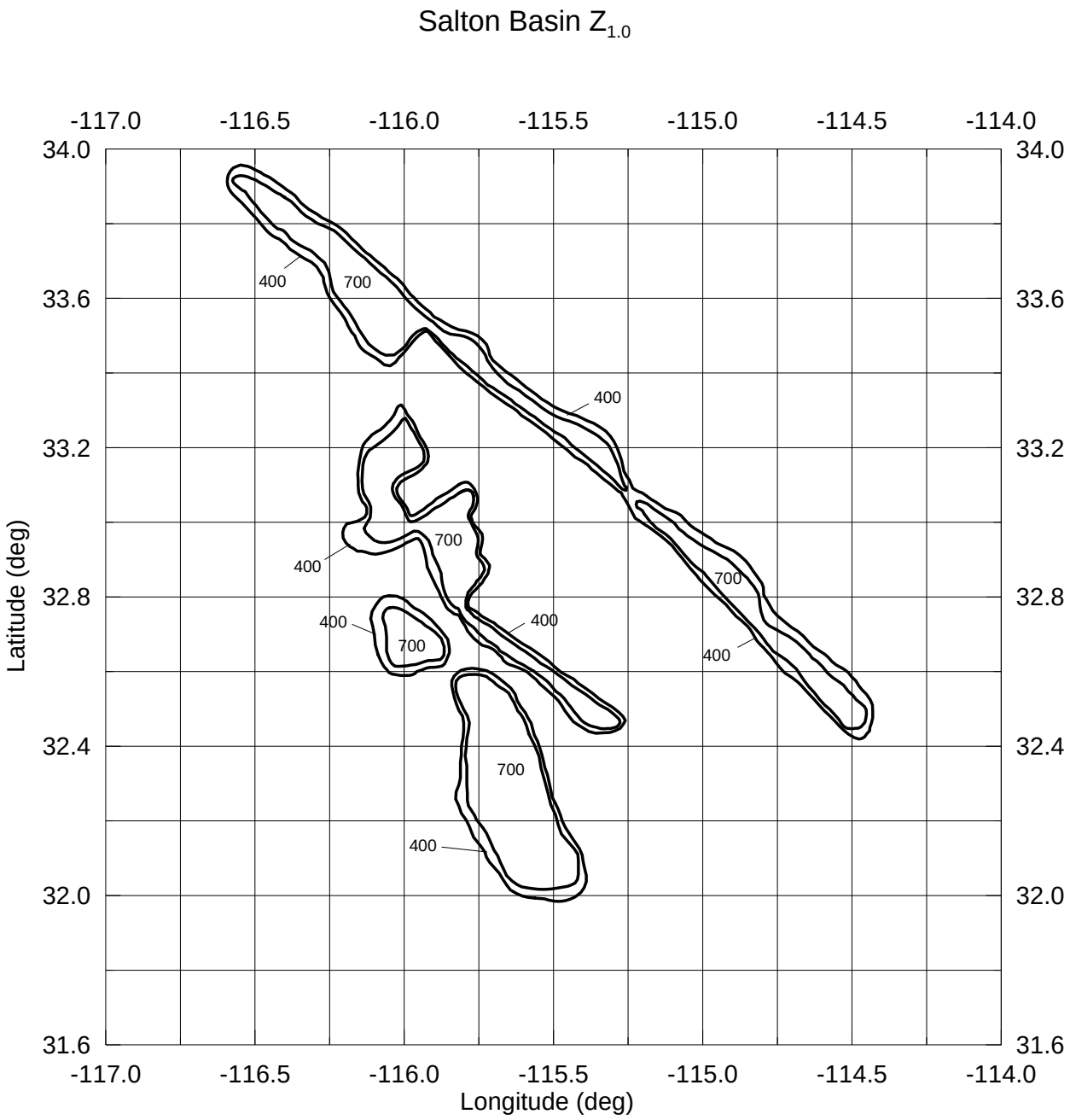

Figure B.9 Contours of depth (meters) to shear wave velocity 1 km/s ($Z_{1.0}$) in the Salton Basin (Imperial Valley).

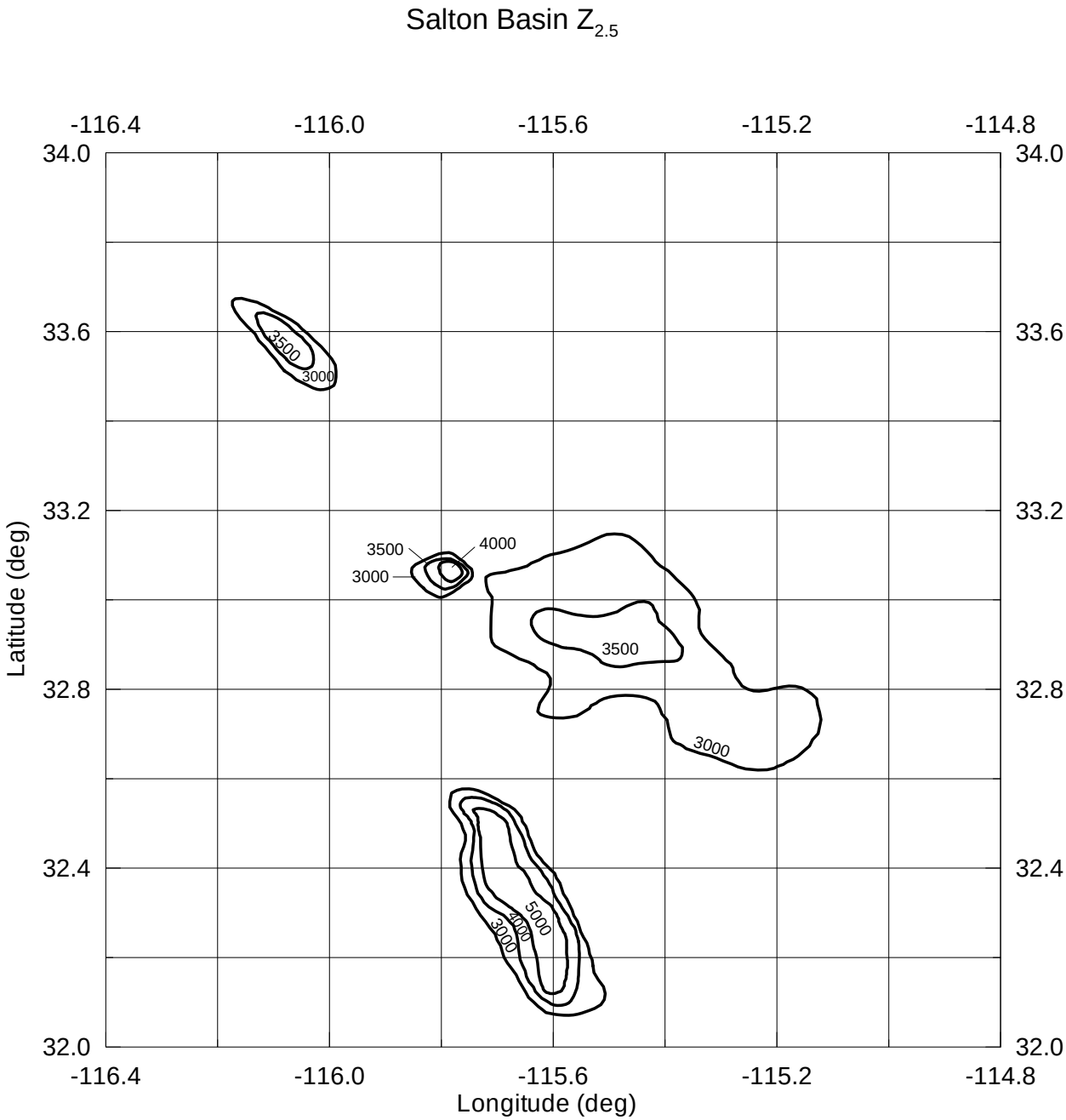

Figure B.10 Contours of depth (meters) to shear wave velocity 2.5 km/s ($Z_{2.5}$) in the Salton Basin (Imperial Valley).

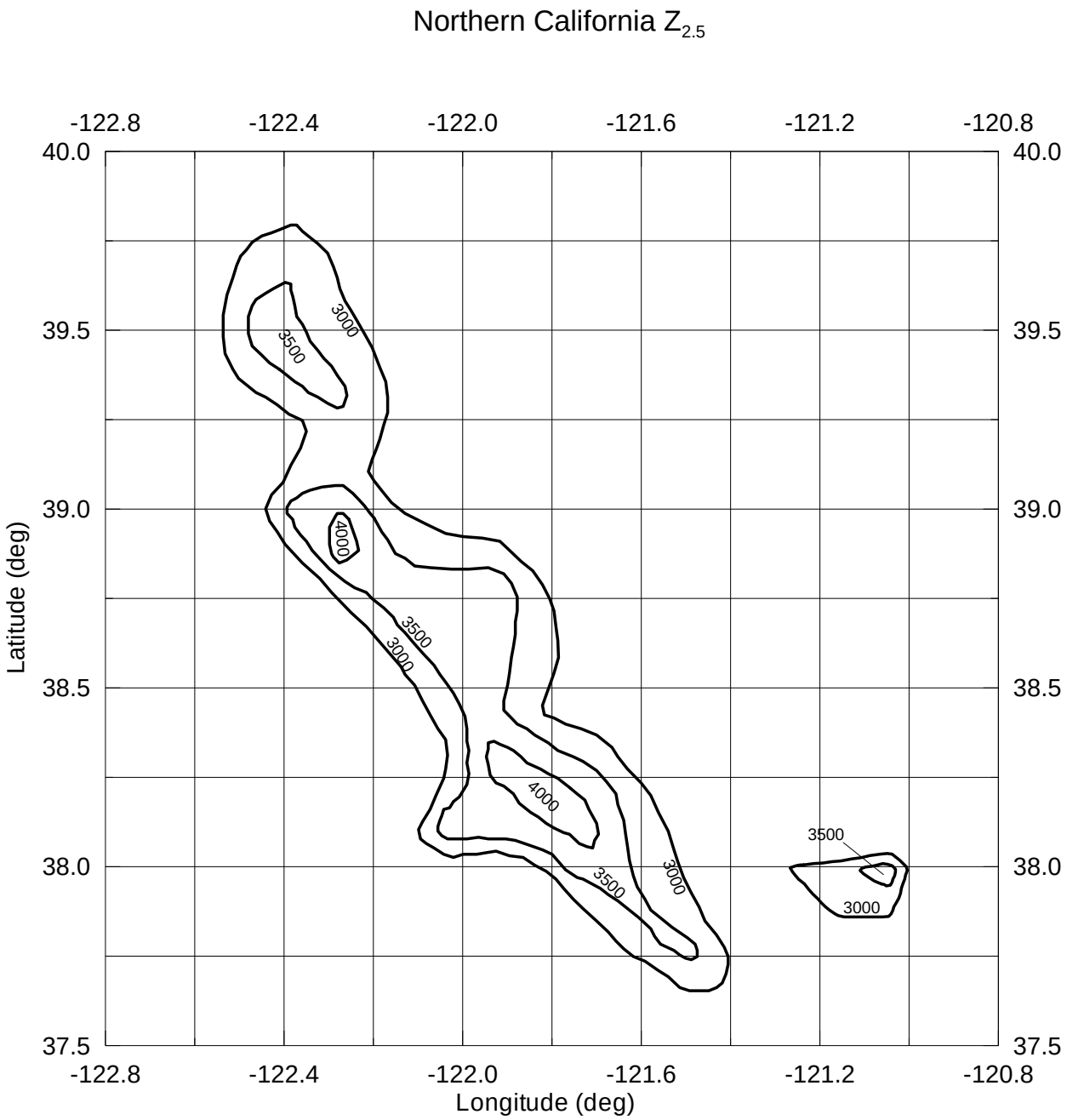

Figure B.11 Contours of depth (meters) to shear wave velocity 2.5 km/s ($Z_{2.5}$) in Northern California.

Soil Profile Type	Soil Profile Description[n]
A	Hard rock with measured shear wave velocity v_{S30} > 5000 ft/s (1,500 m/s)
B	Rock with shear wave velocity 2,500 < v_{S30} < 5000 ft/s (760m/s < v_{S30} < 1,500 m/s)
C	Very dense soil and soft rock with shear wave velocity 1,200 < v_{S30} < 2,500 ft/s (360m/s < v_{S30} < 760 m/s) or with either standard penetration resistance N > 50 or undrained shear strength $s_u \geq$ 2,000 psf (100 kPa)
D	Stiff soil with shear wave velocity 600 < v_{S30} < 1,200 ft/s (180 m/s < v_{S30} < 360 m/s) or with either standard penetration resistance 15 ≤ N ≤ 50 or undrained shear strength 1,000 < s_u < 2,000 psf (50 < s_u < 100 kPa)
E	A soil profile with shear wave velocity v_{S30} < 600 ft/s (180 m/s) or any profile with more than 10 ft (3 m) of soft clay, defined as soil with plasticity index PI > 20, water content $w \geq$ 40 percent, and undrained shear strength s_u < 500 psf (25 kPa)
F	Soil requiring site-specific evaluation: 1. Soils vulnerable to potential failure or collapse under seismic loading; i.e. liquefiable soils, quick and highly sensitive clays, collapsible weakly-cemented soils 2. Peat and/or highly organic clay layers more than 10 ft (3 m) thick 3. Very high-plasticity clay (PI > 75) layers more than 25 ft (8 m) thick 4. Soft-to-medium clay layers more than 120 ft (36 m) thick

Figure B.12 Soil profile types (after Applied Technology Council-32-1, 1996)

[n] The soil profile types shall be established through properly substantiated geotechnical data.

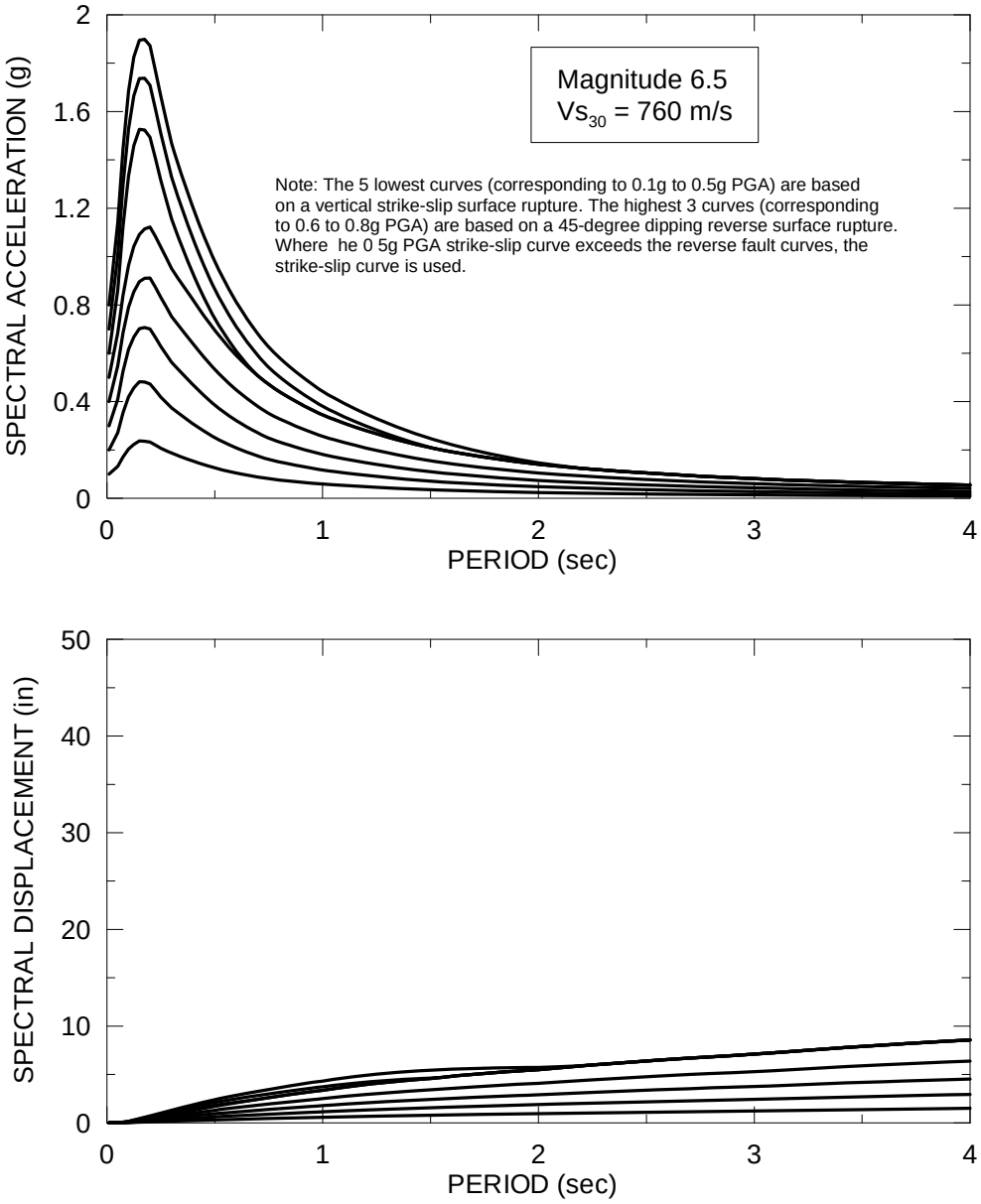

Figure B.13 Spectral Acceleration and Displacement for V_{s30} = 760 m/s (M = 6.5)

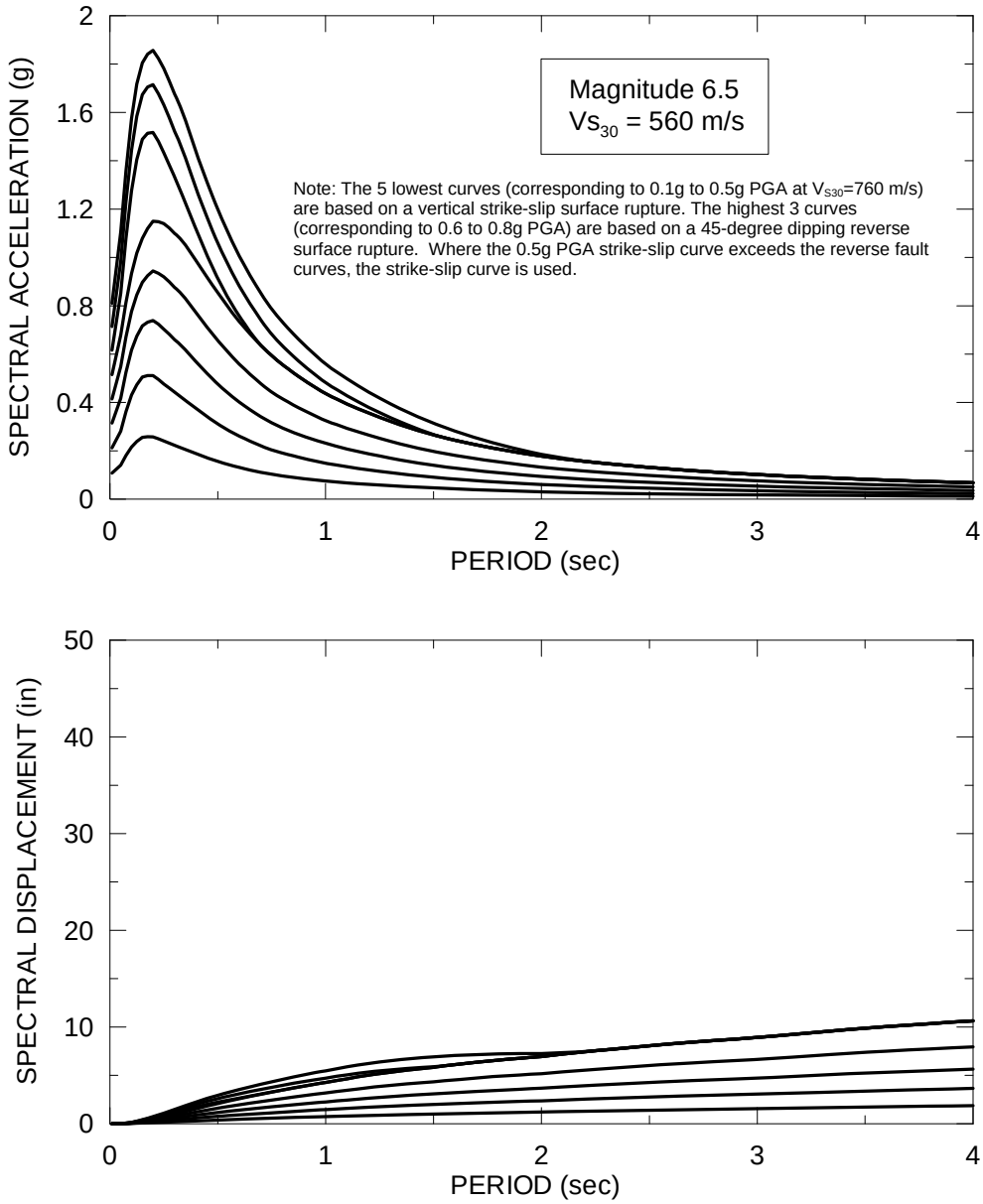

Figure B.14 Spectral Acceleration and Displacement for V_{s30} = 560 m/s (M = 6.5)

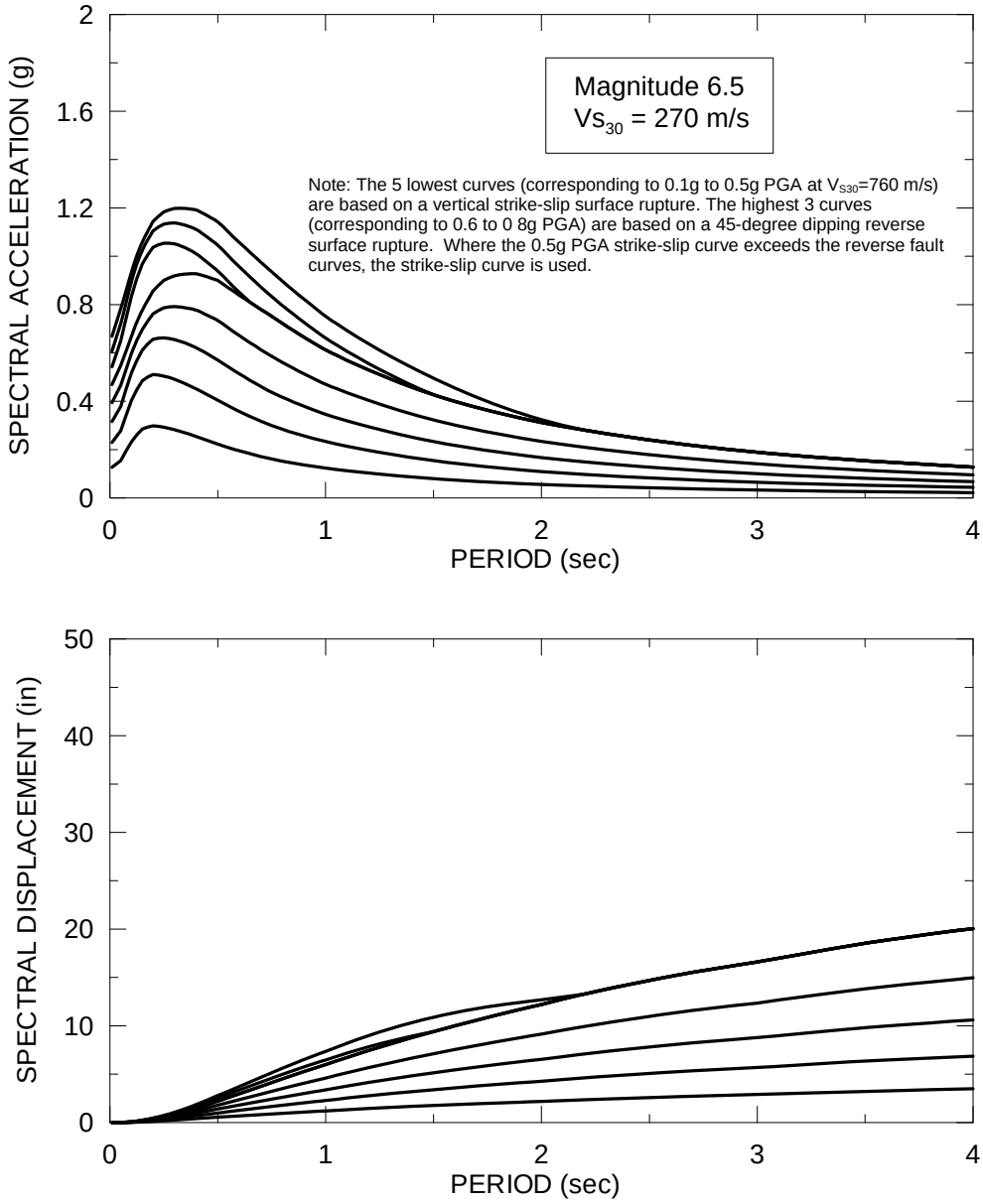

Figure B.15 Spectral Acceleration and Displacement for V_{s30} = 270 m/s (M = 6.5)

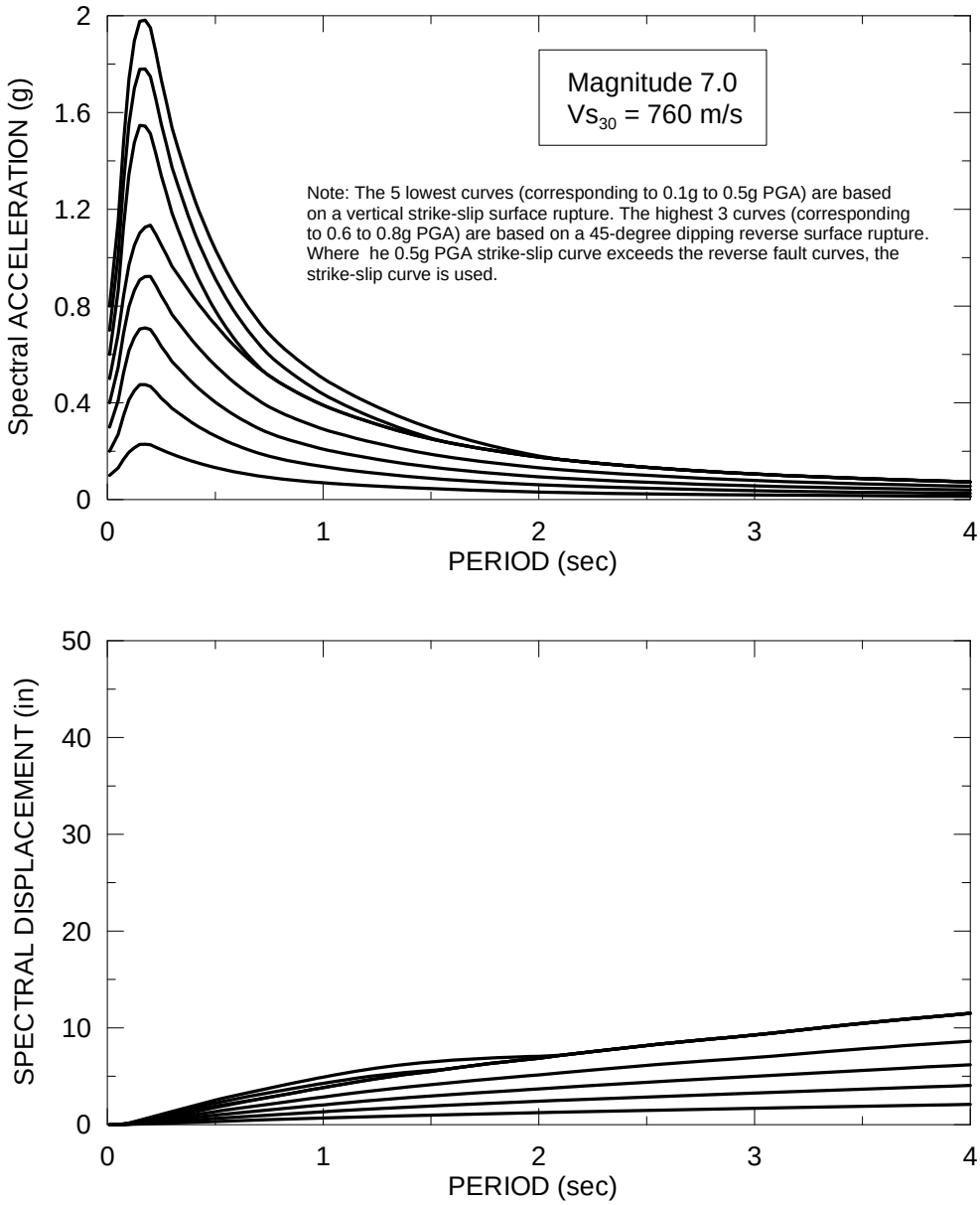

Figure B.16 Spectral Acceleration and Displacement for V_{s30} = 760 m/s (M = 7.0)

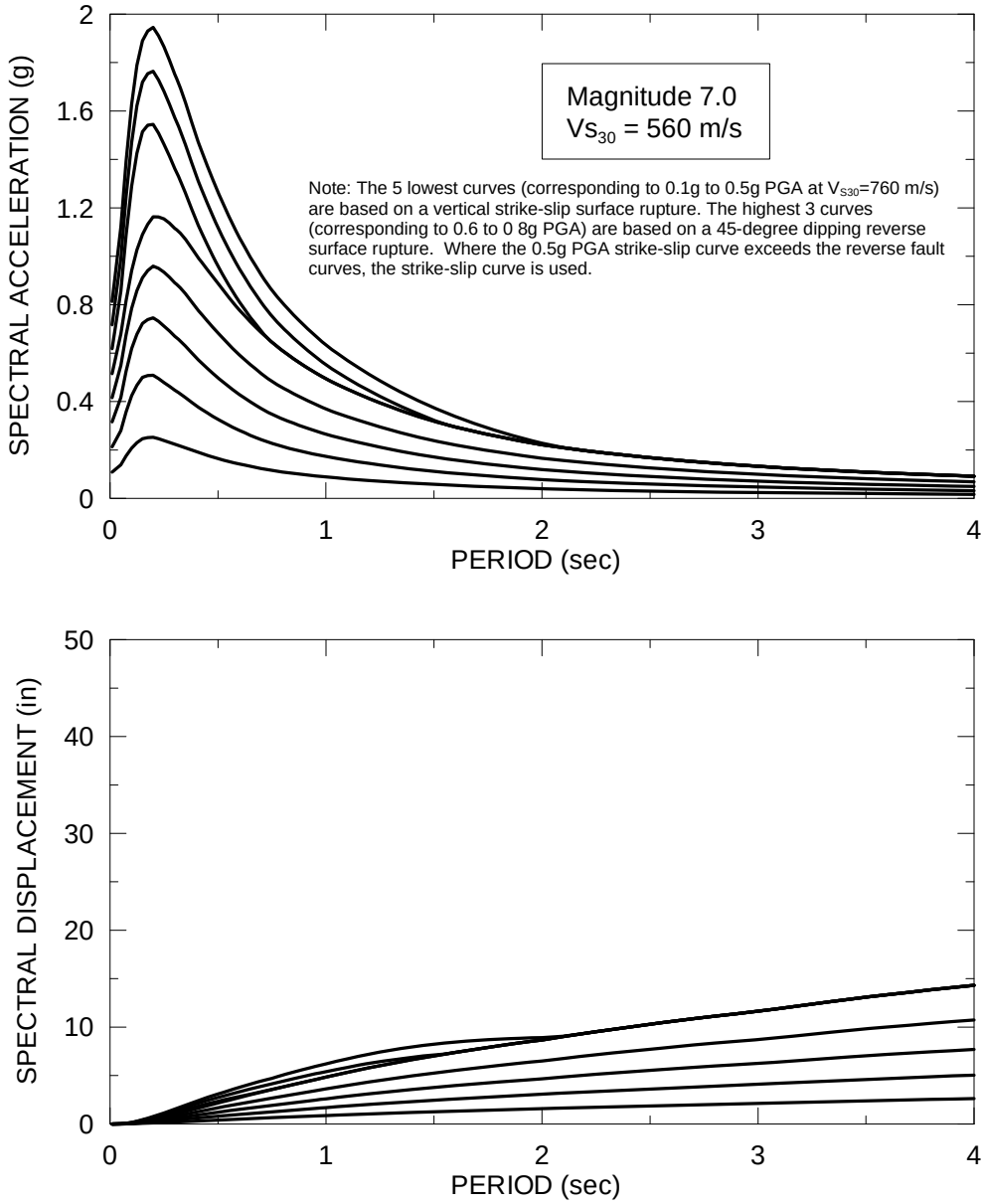

Figure B.17 Spectral Acceleration and Displacement for V_{s30} = 560 m/s (M = 7.0)

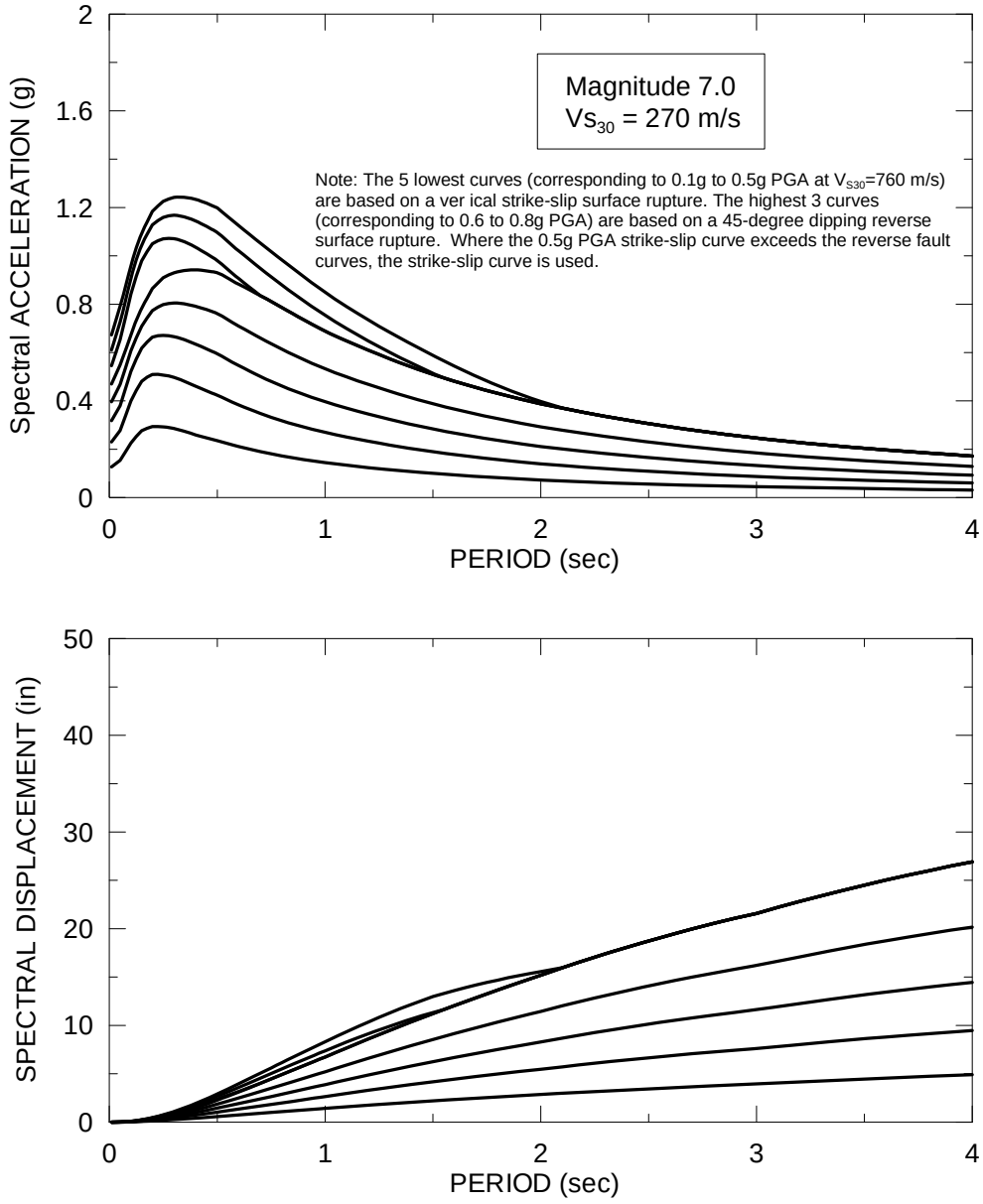

Figure B.18 Spectral Acceleration and Displacement for V_{s30} = 270 m/s (*M* = 7.0)

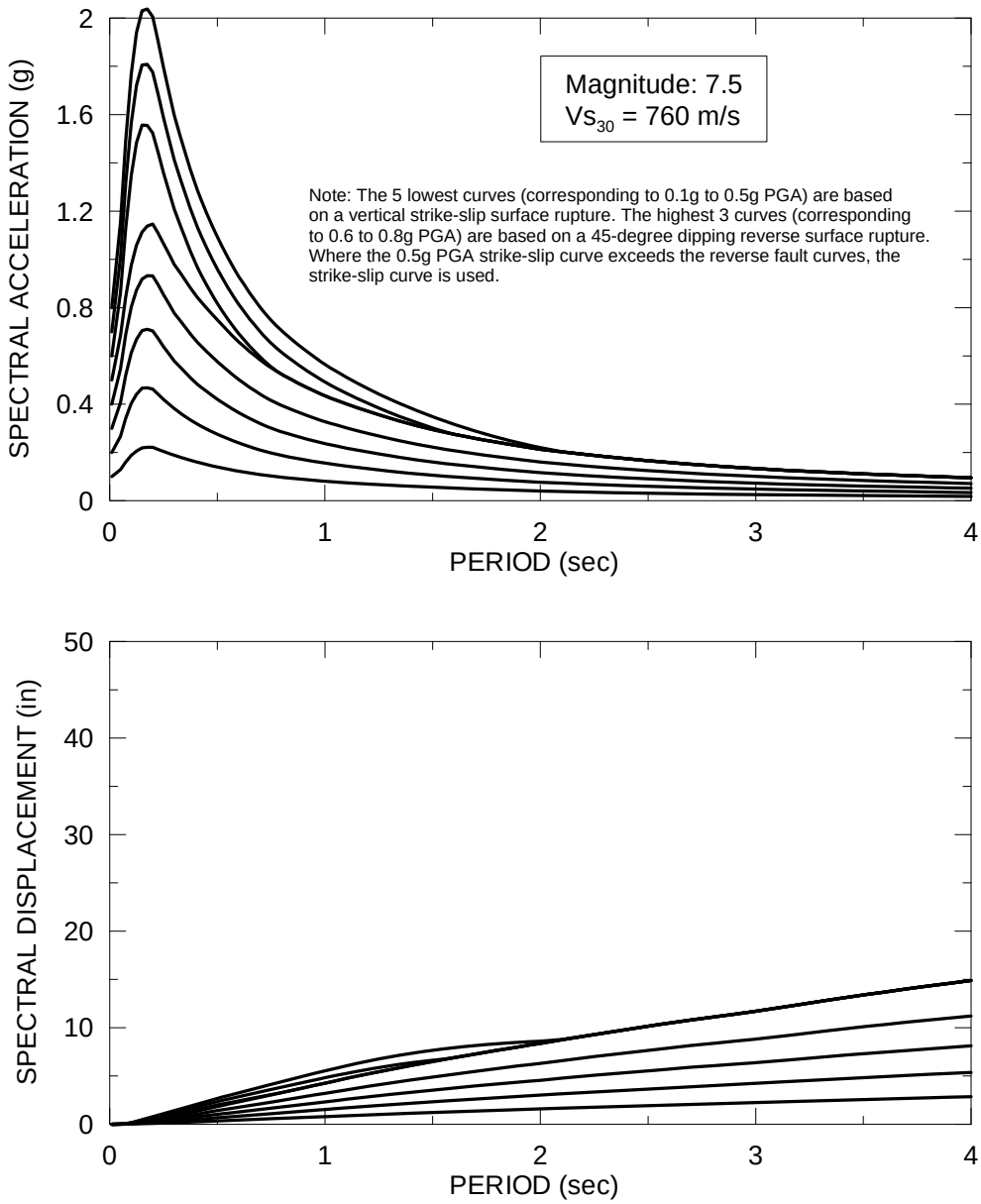

Figure B.19 Spectral Acceleration and Displacement for V_{s30} = 760 m/s (M = 7.5)

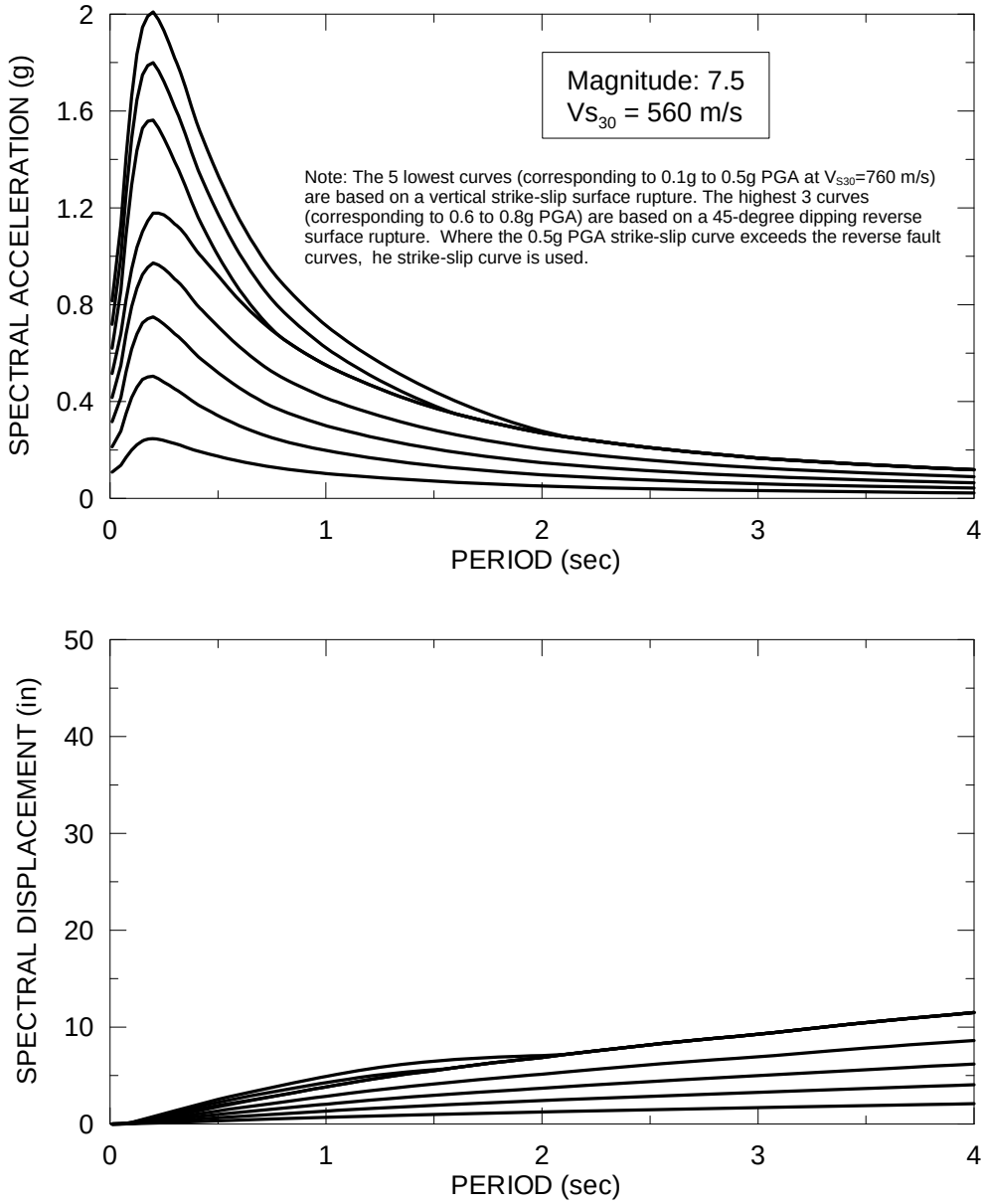

Figure B.20 Spectral Acceleration and Displacement for V_{s30} = 560 m/s (M = 7.5)

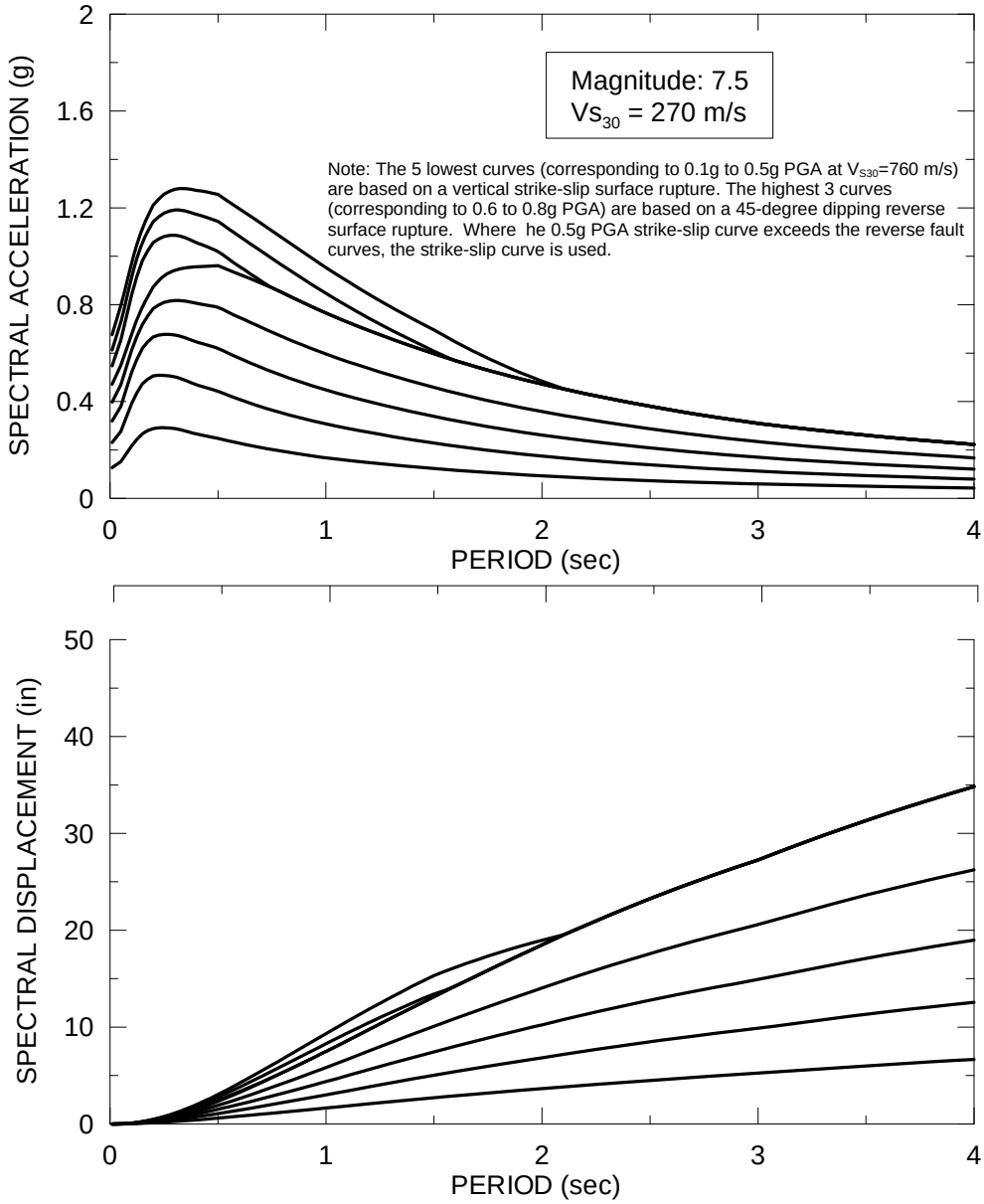

Figure B.21 Spectral Acceleration and Displacement for V_{s30} = 270 m/s (M = 7.5)

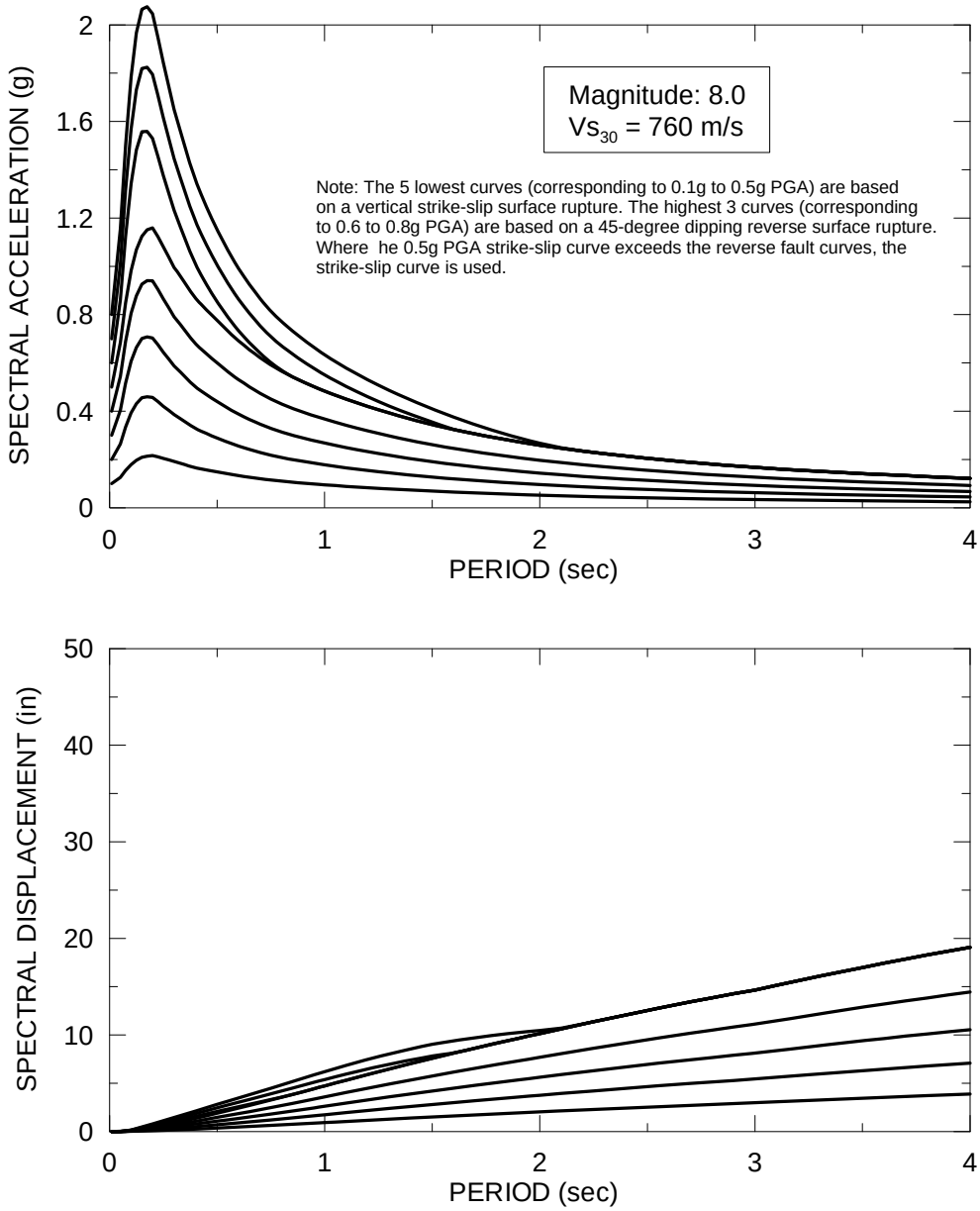

Figure B.22 Spectral Acceleration and Displacement for V_{s30} = 760 m/s (M = 8.0)

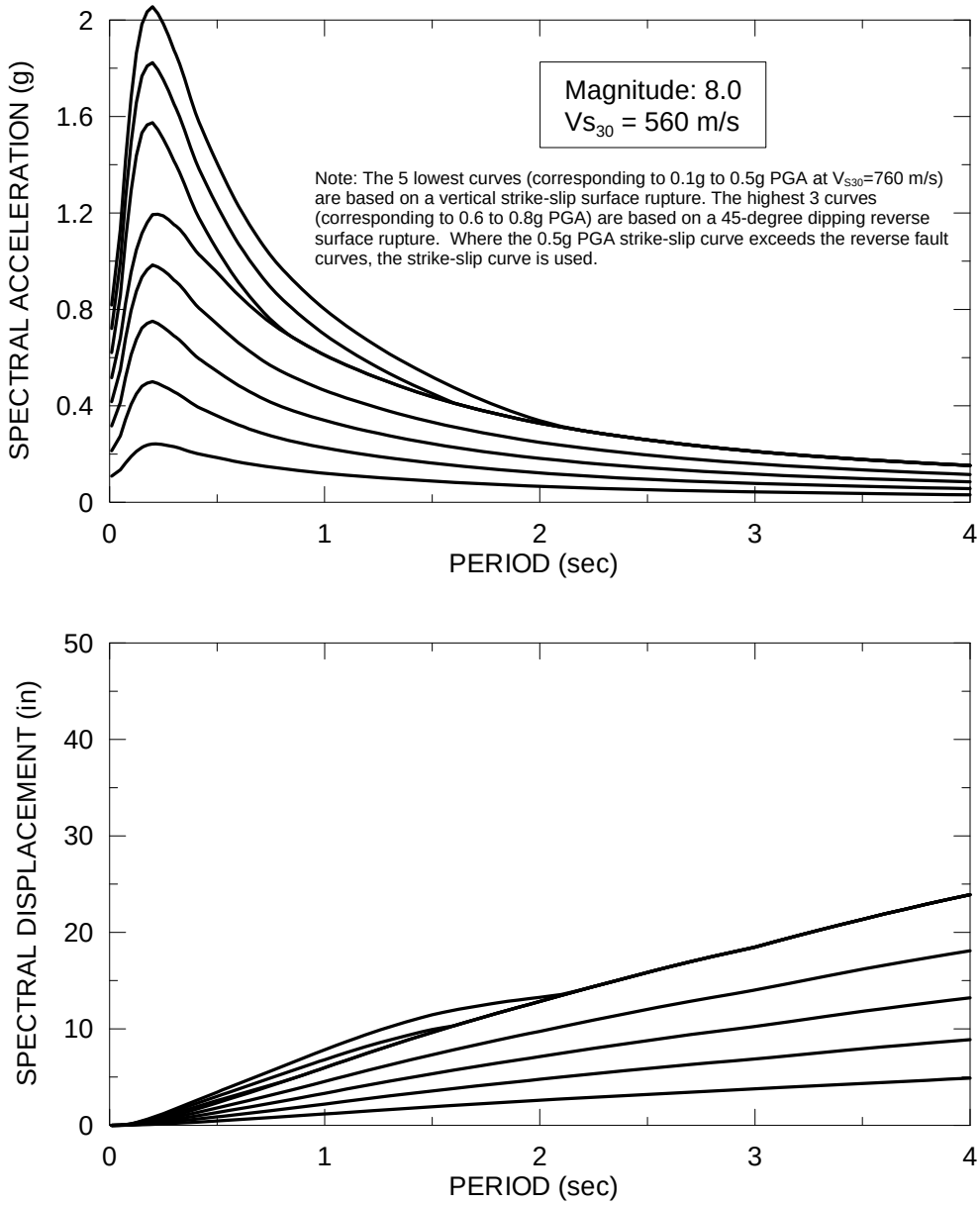

Figure B.23 Spectral Acceleration and Displacement for V_{s30} = 560 m/s (M = 8.0)

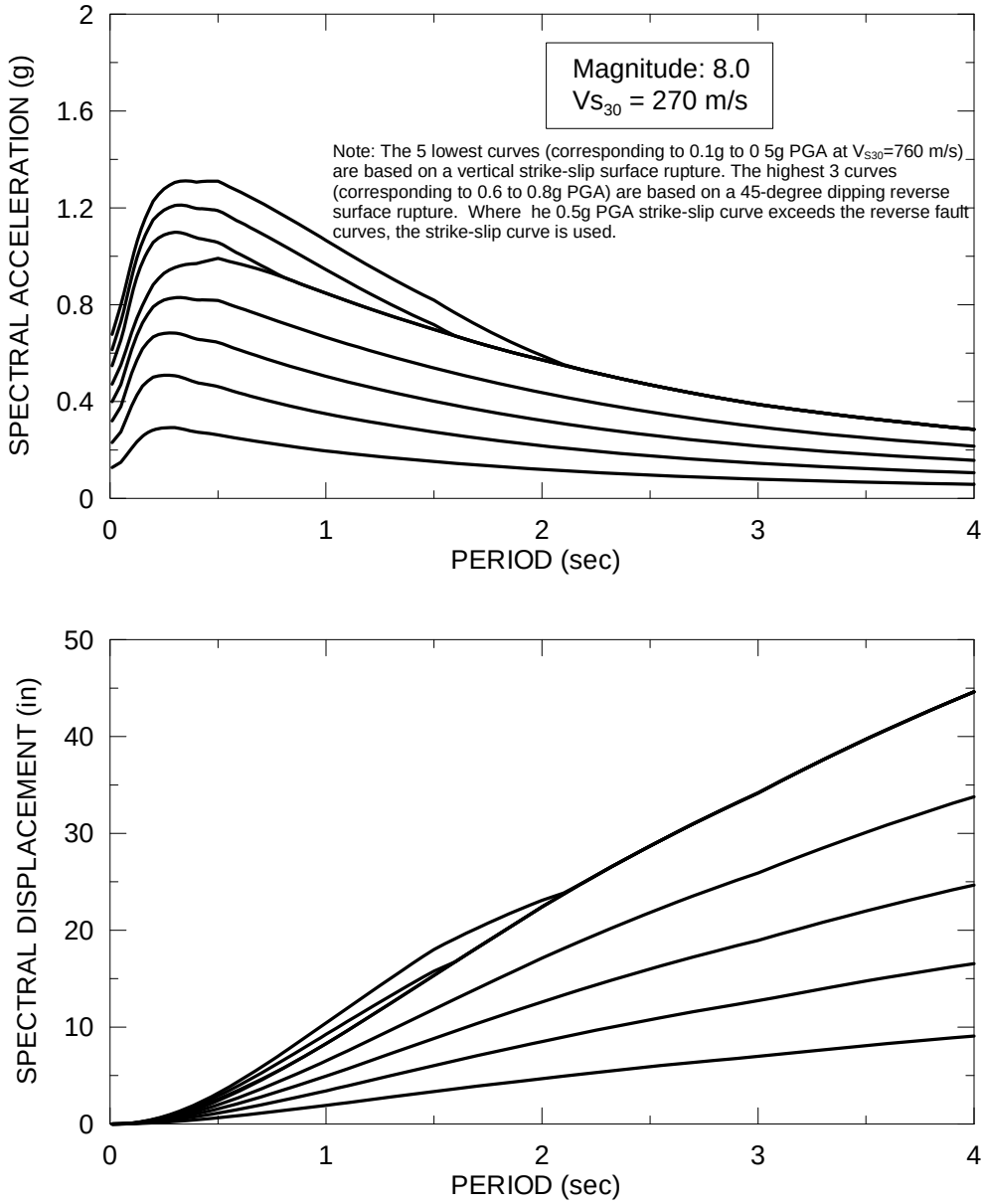

Figure B.24 Spectral Acceleration and Displacement for V_{s30} = 270 m/s (*M* = 8.0)

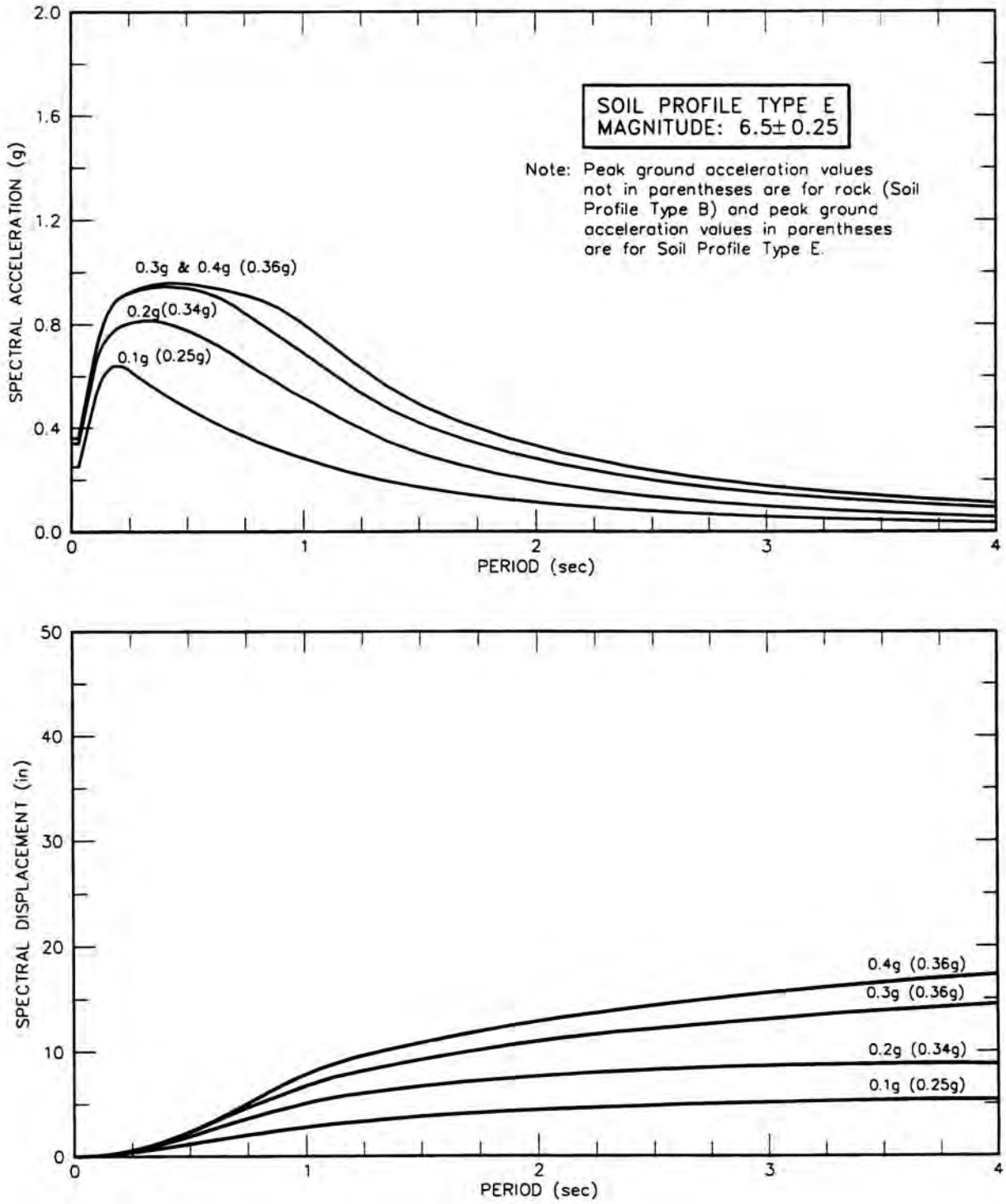

Figure B.25 Spectral Acceleration and Displacement for Soil Profile E (M = 6.5±0.25)

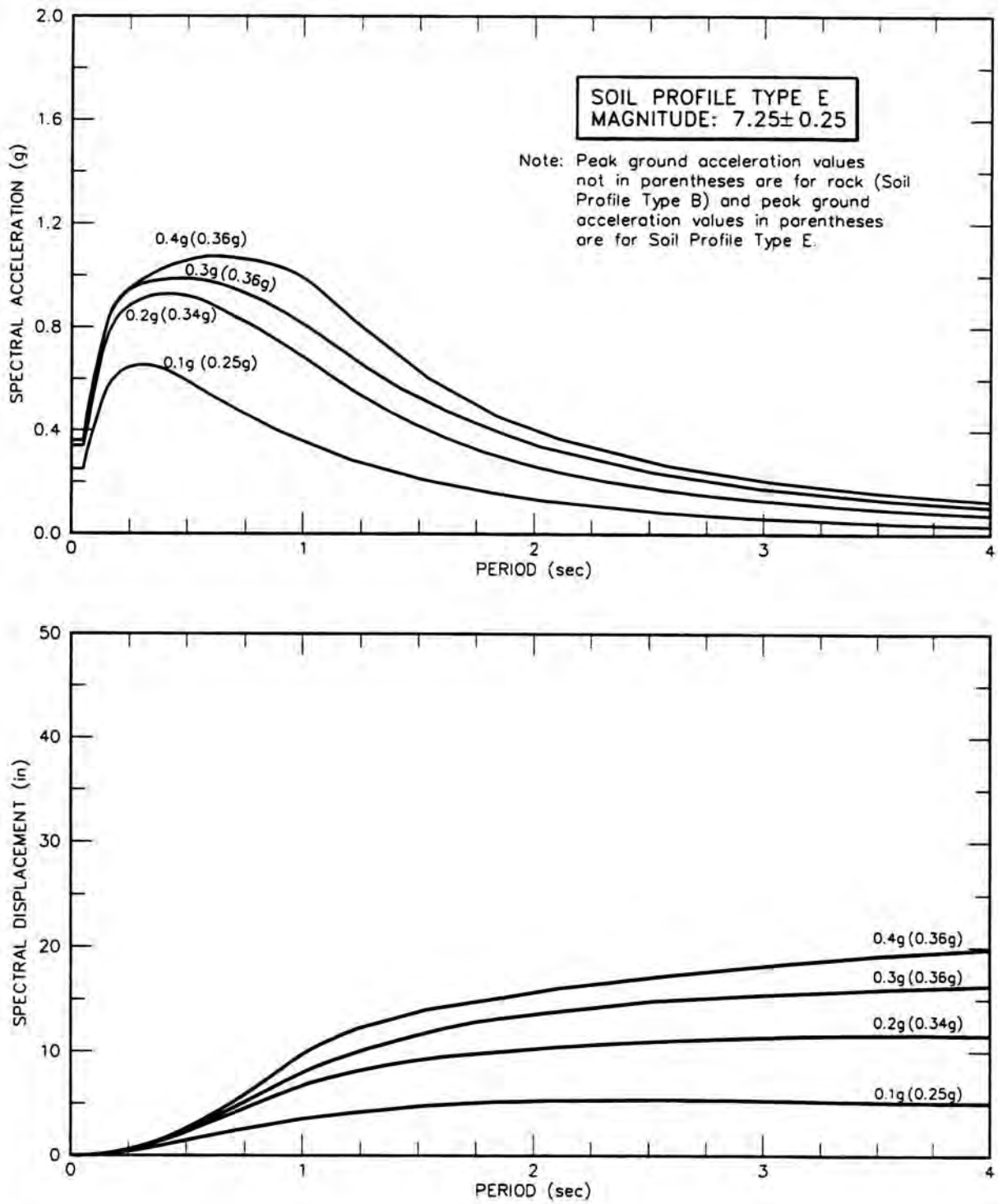

Figure B.26 Spectral Acceleration and Displacement for Soil Profile E (M = 7.25±0.25)

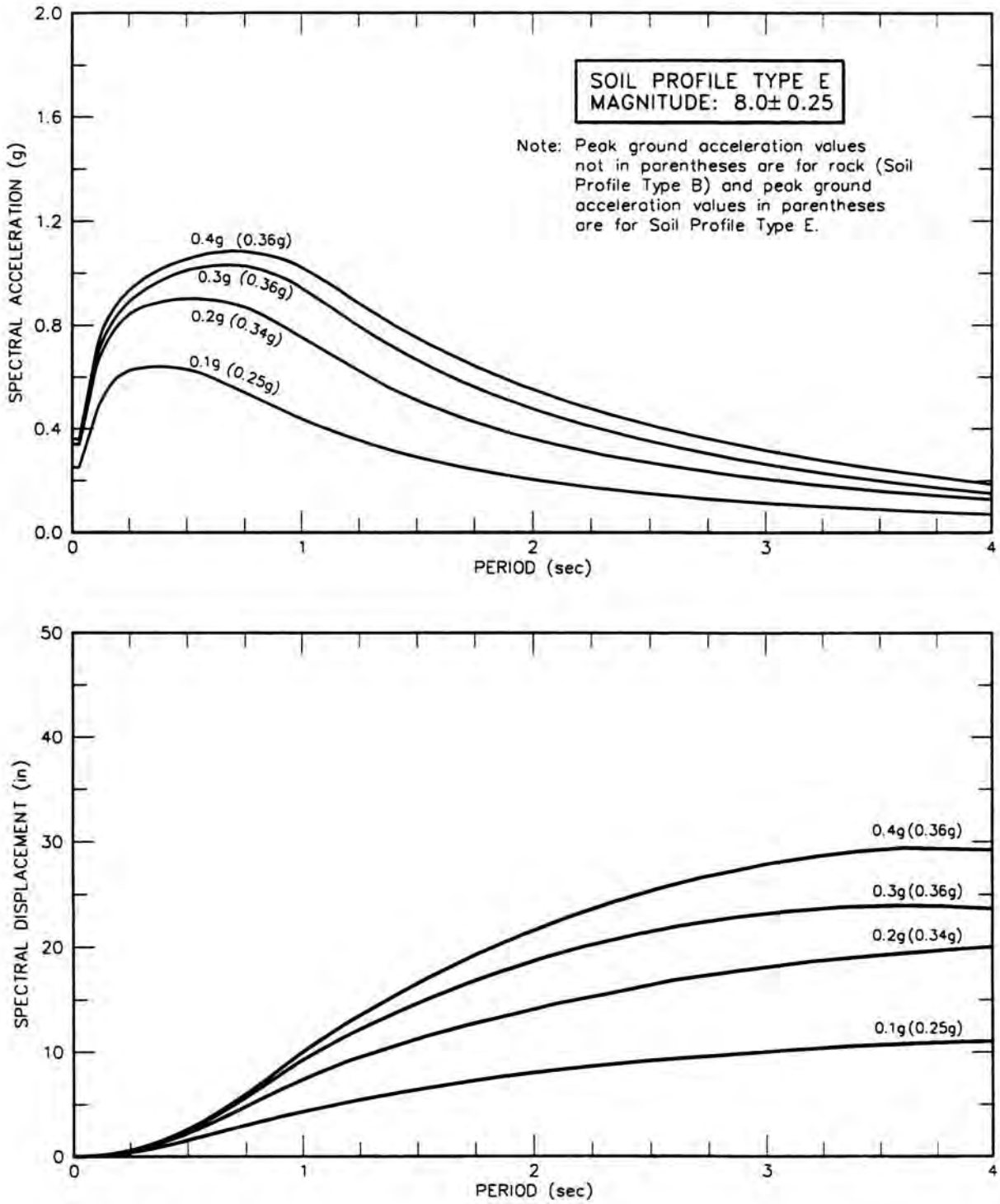

Figure B.27 Spectral Acceleration and Displacement for Soil Profile E (M = 8.0±0.25)

APPENDIX C - BIBLIOGRAPHY

1. Housner, G.W. (Chairman, Seismic Advisory Board), 1994 *"The Continuing Challenge," Report to the Director, California Department of Transportation on the 1994 Northridge Earthquake*, Seismic Advisory Board, Sacramento, California.

2. ATC, 1996, ATC-32, *Improved Seismic Design Criteria for California Bridges: Provisional Recommendations*, Applied Technology Council, Report ATC-32, Redwood City, California.

3. Caltrans (various dates), *Bridge Memo to Designers (MTD)*, California Department of Transportation, Sacramento, California.

4. Seyed-Mahan, M., 1996, *Procedures in Seismic Analysis and Design of Bridge Structures, Release II Draft, Caltrans Division of Structures*, California Department of Transportation, Sacramento, California.

5. Caltrans, 1997, *Seismic Design Criteria Retrofit of the West Approach to the San Francisco-Oakland Bay Bridge Draft #14*, California Department of Transportation, Sacramento, California.

6. Park, R. and T. Paulay, 1975, *Reinforced Concrete Structures*, John Wiley & Sons, New York, NY.

7. Priestley, M.J.N., F. Seible, and G. M. Calvi, 1996, *Seismic Design and Retrofit of Bridges*, John Wiley & Sons, New York, NY.

8. Priestley, M.J.N., and F. Seible, 1991, "*Seismic Assessment and Retrofit of Bridges*," Structural Systems Research Project, Report SSRP-91/03, University of California San Diego, CA.

9. Rinne, E.E., 1994, "*Development of New Site Coefficient of Building Codes*," Proceedings of the Fifth U.S. National Conference on Earthquake Engineering, Vol. III, pp.69-78, Earthquake Engineering Research Institute, Oakland, California.

10. Martin, G. R. and R. Dobry, 1994, "*Earthquake Site Response and Seismic Code Provisions*," NCEER Bulletin, vol. 8, no. 4, National Center for Earthquake Engineering Research, Buffalo, New York.

11. BSSC, 1994, *NEHRP Provisions*, 1994 Edition, Building Seismic Safety Council, Washington, D.C.

12. AASHTO, (2007). "*AASHTO LRFD Bridge Design Specifications*," 4th Edition, American Association of State Highway and Transportation Officials, Washington, D.C.

13. Maroney, B.H., 1995, *Large Scale Abutment Tests to Determine Stiffness and Ultimate Strength Under Seismic Loading*, Ph.D. Dissertation, University of California, Davis.

14. Caltrans, (2008). *California Amendments to AASHTO LRFD Bridge Design Specifications, 4th Edition*, California Department of Transportation, Sacramento, CA, December 2008.

15. Shamsabadi, A., 2007, *Three-Dimensional Nonlinear Seismic Soil-Abutment-Foundation Structure Interaction Analysis of Skewed Bridges*, Ph.D. Dissertation, Department of Civil and Environmental Engineering, University of Southern California (USC), Los Angeles, CA.

16. Stewart, P.S., Taciroglu, E., Wallace, J.W., Ahlberg, E.R., Lemnitzer, A., Rha, C., and Tehrani, P.K., 2007, *Full Scale Cyclic Testing of Foundation Support Systems for Highway Bridges, Part II: Abutment Backwalls*," Report No. UCLA-SGEL 2007/02 conducted under Caltrans Grant No. 59A0247, Department of Civil and Environmental Engineering, University of California, Los Angeles, CA.

17. Shamsabadi, A., Rollins, K.M., and Kapuskar, M., 2007, *Nonlinear Soil-abutment-bridge Structure Interaction for Seismic Performance-based Design*, J. Geotech. & Geoenviron. Eng., ASCE, 133 (6), 707-720.

18. Bozorgzadeh, A., Megally, S.H., Ashford, S., and Restrepo, J.I., 2007, "*Seismic Response of Sacrificial Exterior Shear Keys in Bridge Abutments*," Final Report Submitted to the California Department of Transportation Under Contract No. 59A0337, Department of Structural Engineering, University of California, San Diego, La Jolla, CA.