DIST	COUNTY	ROUTE	POST MILES TOTAL PROJECT	SHEET No.	TOTAL SHEETS

REGISTERED CIVIL ENGINEER DATE

PLANS APPROVAL DATE

REGISTERED PROFESSIONAL ENGINEER No. Exp. CIVIL STATE OF CALIFORNIA

The State of California or its officers or agents shall not be responsible for the accuracy or completeness of scanned copies of this plan sheet.

The Registered Civil Engineer for the project is responsible for the selection and proper application of the component design and any modifications shown.

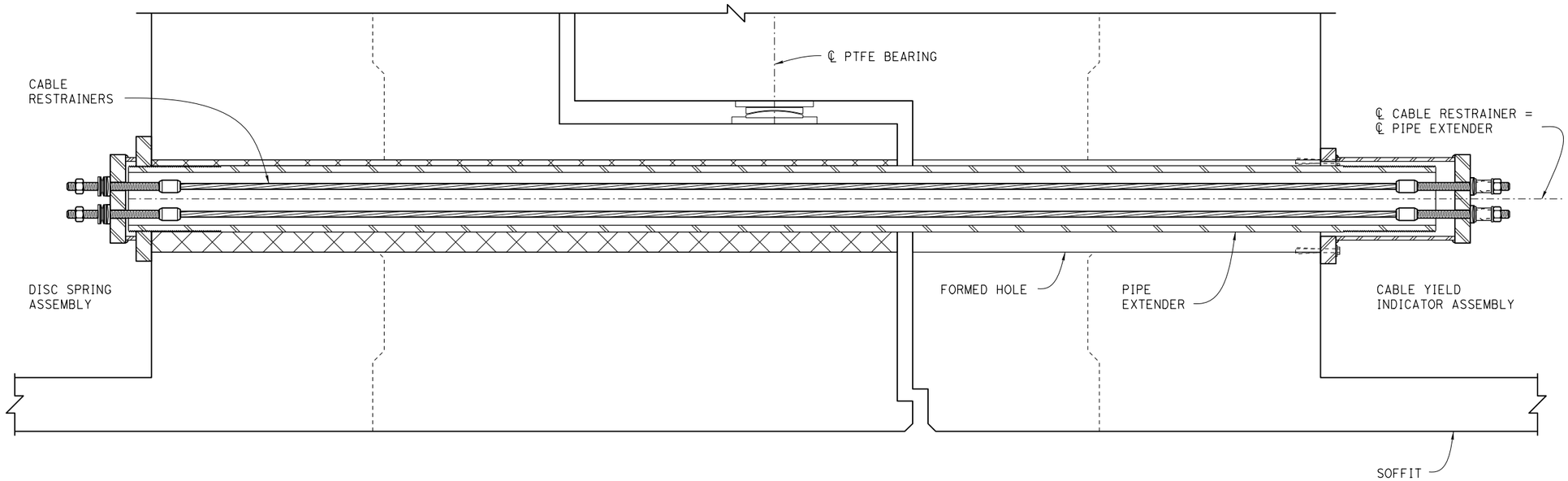

CABLE RESTRAINERS WITH PIPE EXTENDER ELEVATION

1½" = 1'-0"

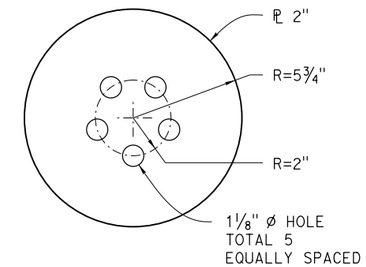

BEARING PLATE

3" = 1'-0"

Notes:

1. The Pipe Extender must be Pipe 8 xx-Strong. For Hole, Pipe Extender and Threaded Plate details see: XS7-080, "Pipe Extender/Shear Key Details (New)" sheet.
2. For Cable Restrainer and Hardware details see: XS7-090, "Cable Restrainer Hardware Details" sheet.

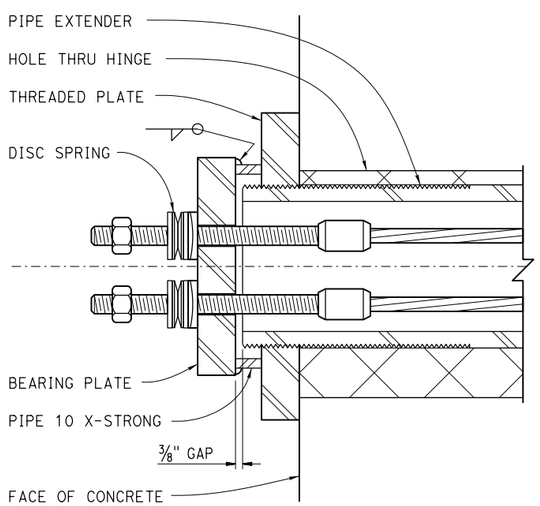

DISC SPRING ASSEMBLY

3" = 1'-0"

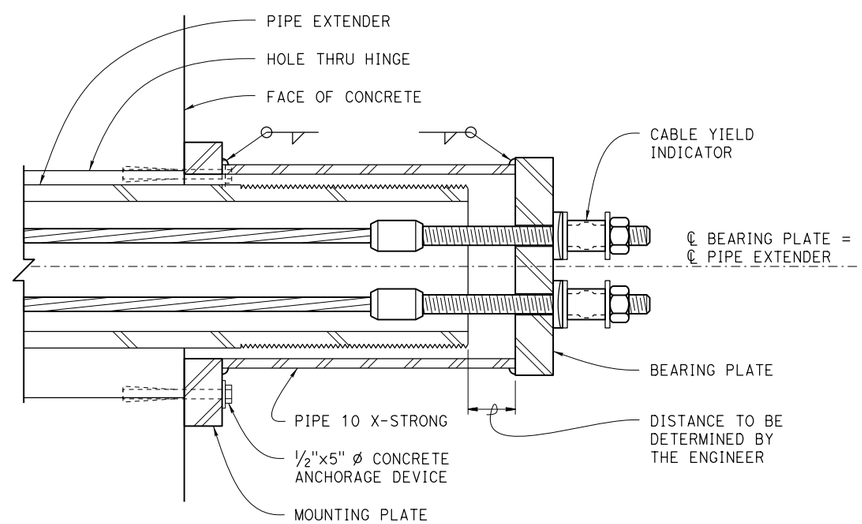

CABLE YIELD INDICATOR ASSEMBLY

3" = 1'-0"

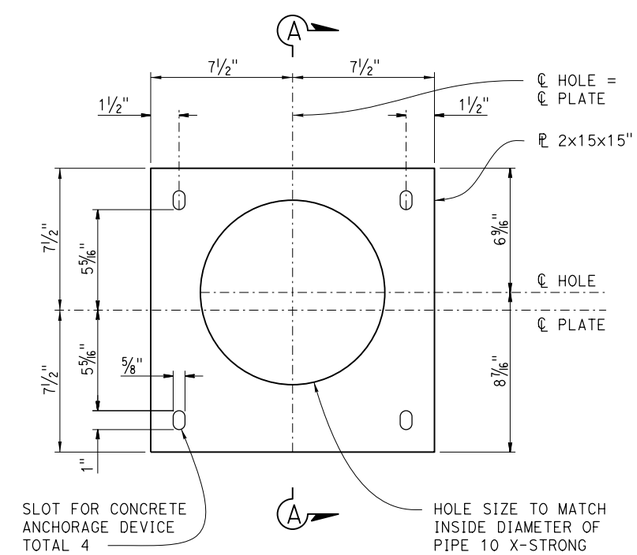

MOUNTING PLATE

3" = 1'-0"

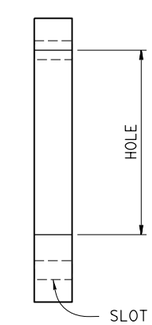

SECTION A-A

BRIDGE STANDARD DETAILS

xs7-070	July 2014	The components of the Bridge Standard Details have been prepared under the responsible charge of the Technical Owner, a registered civil engineer in the State of California
FILE NO.	APPROVAL DATE	

NOTES TO DESIGNER
Remove these notes at PS&E

- "THREADED PLATE FOR FUTURE USE" on xs7-010 is not required when Cable Restrainers are used.

STATE OF CALIFORNIA DEPARTMENT OF TRANSPORTATION

DIVISION OF ENGINEERING SERVICES

BRIDGE NO.

POST MILE

RESTRAINER DETAILS FOR PIPE EXTENDER/SHEAR KEY (NEW)

Refer to: http://www.dot.ca.gov/hq/esc/techpubs/manual/bridgemanuals/bridge-standard-detail-sheets/index.html

FILE => xs7-070.dgn
USERNAME => s136236 TIME PLOTTED => 07:28 DATE PLOTTED => 12-JUL-2016

ORIGINAL SCALE IN INCHES FOR REDUCED PLANS 0 1 2 3

UNIT:
PROJECT NUMBER & PHASE: CONTRACT NO.:

DISREGARD PRINTS BEARING EARLIER REVISION DATES

REVISION DATES 4-18-14 7-8-16 SHEET OF