9-30 DECK JOINTS: CAST-IN-PLACE CONCRETE GIRDER

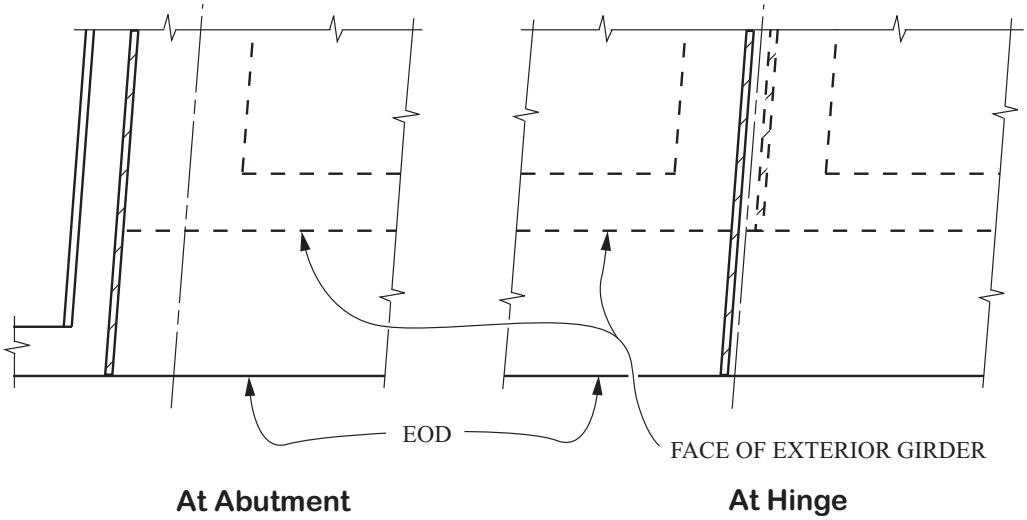

Skew Under 20°

(Vertical and Sloping Exterior Face)

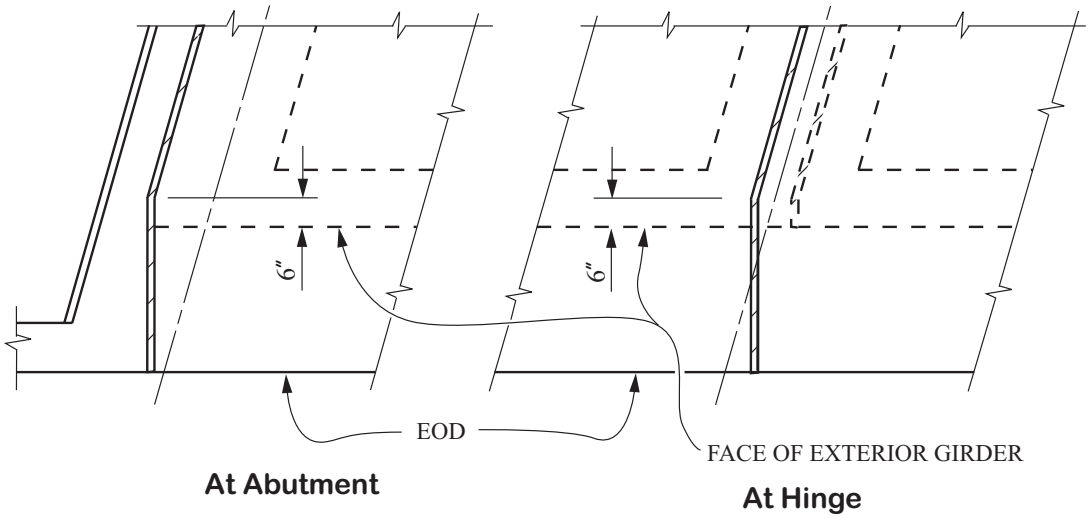

Skew Over 20°

(Vertical Exterior Face Only)

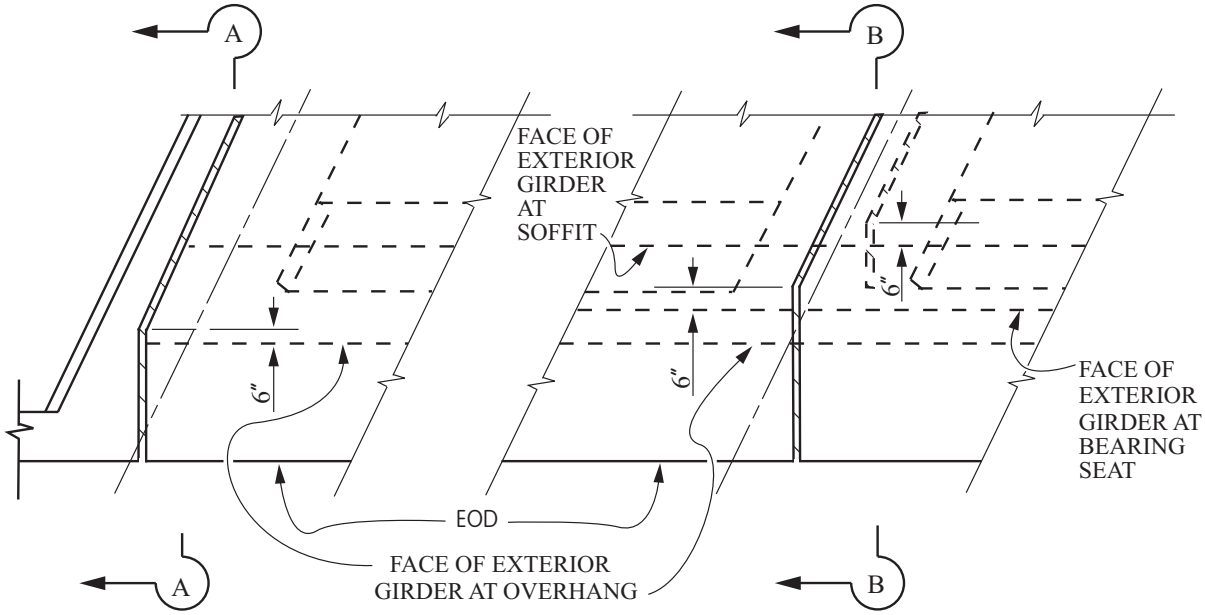

At Abutment **At Hinge**

Skew Over 20°

(Sloping Girder Face)

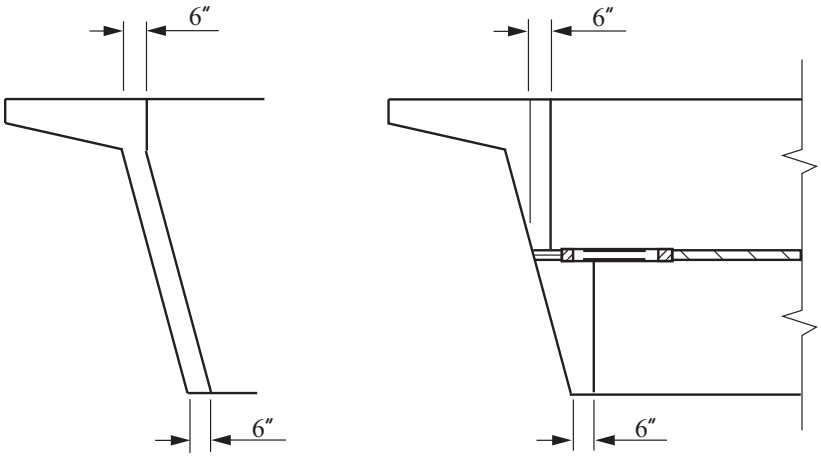

Section A-A **Section B-B**

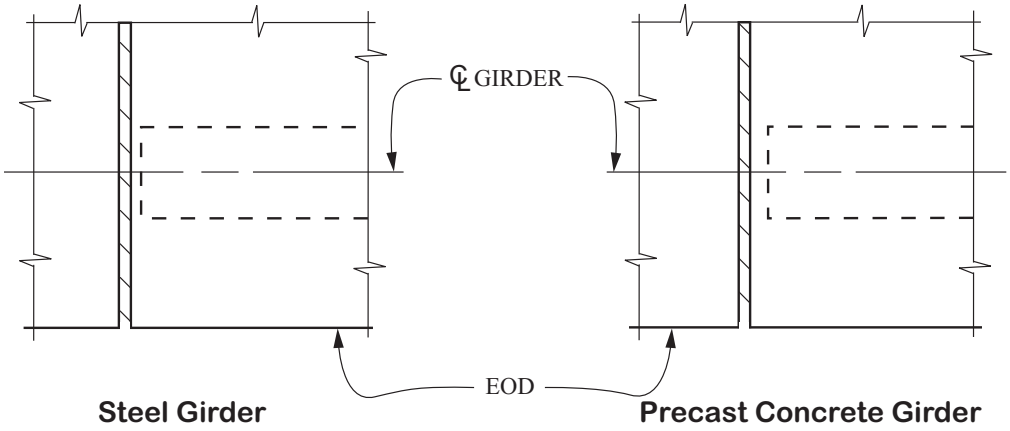

NO SKEW

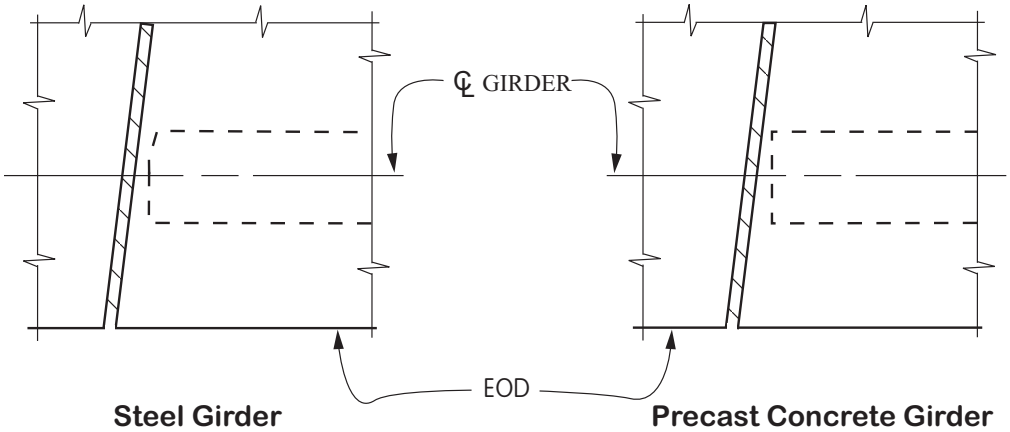

SKEW UNDER 20°

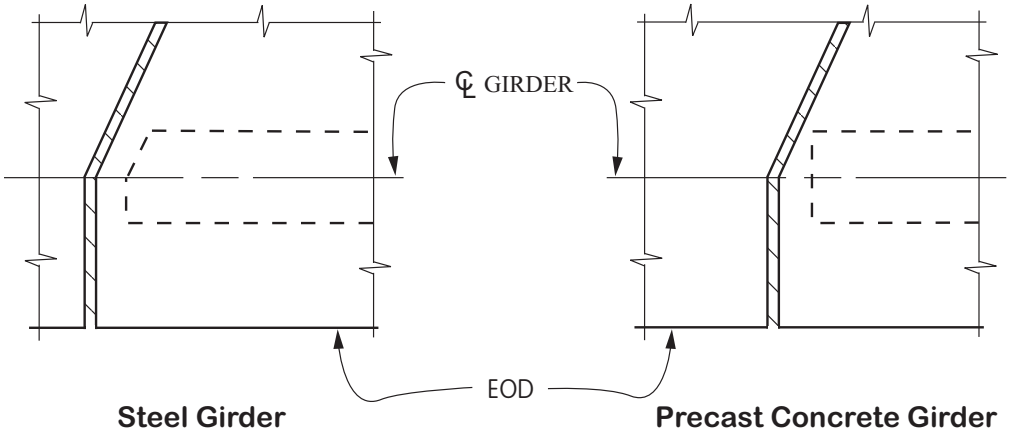

SKEW OVER 20°