Abutment Sheet Check List

A. Plan

1. Place at top, left side of sheet, oriented the same as the General Plan. May be placed horizontal with face down for very long abutments.
2. Show North arrow.
3. Scale 1/4" = 1'-0" usual minimum. Use 1/8" = 1'-0" on large structures, but show less detail.
4. Abutment sheet may be omitted on simple diaphragm type abutments. Layout and Sections should be shown with the girder layout.
5. Check List:
   - Do not repeat stations or bearings shown on Foundation Plan.
   - Dimension along same layout line as is stationed on Foundation Plan.
   - Do not dimension piles from edges of footings.
   - Show only layout dimensions and pile spacing, others should be shown on larger details.
   - Avoid showing any reinforcement.

B. Abutment Elevation

1. Place in front of Plan if "PLAN" is oriented the same as a General Plan, "ELEVATION" may be placed horizontal or looking normal to face of abutment.
2. May be omitted on simple diaphragm type abutments.
3. Rear elevations should be avoided.
4. Same scale as Plan
5. Check List:
   - Show location of weep holes. See Standard Plan B0-3, Bridge Detail 3-1. As an alternative, weep holes and geocomposite drain may be used. See *Bridge Design Details* manual page 6-22.
   - Show elevations on slope paving; exception, a constant dimension below soffit.
   - Do not attempt to show entire skewed wingwalls.
   - Do not show all piles. Note "All piles not shown."
   - It is not necessary to show railing.
   - Avoid detail dimensions.

C. Wingwall Elevation

1. Projection of Abutment Plan if possible. Locate by section symbols if not a projection, or simply call out as WINGWALL ELEVATION.
2. Always show looking normal to wall.
3. Same scale as Plan, unless reinforcement is to be shown. A few bars may be shown at 1/4" = 1'-0", but usually reinforcement should not be shown at less than 3/8" = 1'-0".

4. Check List:
   - Call out standard plans and wall length.
   - Show finished earth or slope paving lines.
   - Wingwall layout dimensions to be shown in Plan view.
   - Show all piles.
   - Railing need not be shown.

D. Sections and Details

1. Sections and details showing reinforcement should not be less than ⅜" = 1'-0" scale; preferred scale is ½" = 1'-0" minimum.
2. Plan of footing corners should be the same orientation as Plan view.
3. Sections should be oriented the same way as the view they are taken from.
4. Sections and details are to be taken from Plan, Elevation, or secondary views rather than from other *sections*.
5. Similar sections need not have all details repeated.
6. Do not shade or show aggregate in sections.
7. Abutment section call out joint seal and movement rating.

E. Retaining Walls

1. Show all layout information along one layout line (usually the face of wall).
2. Do not show dimensions given on standard sheets.
3. Show top of wall details for railings, sidewalks, overhangs, etc.

End Diaphragm Abutment

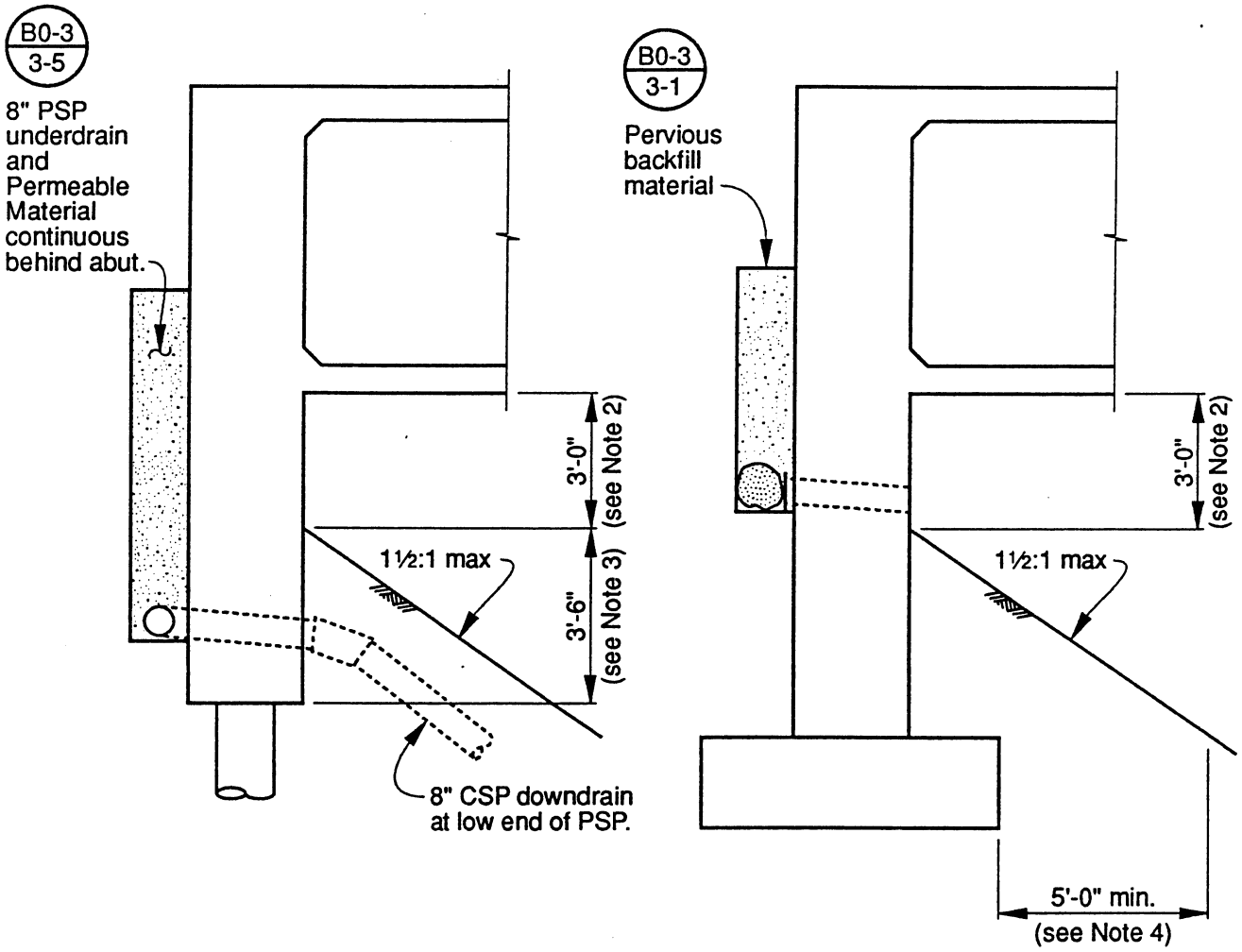

Notes:

1. Reinforce the abutment as shown on pages 1-2, 1-3, and 1-4 of the *Bridge Design Aids*.
2. The clearance between the top of slope and the soffit of the bridge should be about three feet, but may be as little as two feet or as much as four feet, depending upon individual circumstances. This dimension should be shown on the plans.
3. The bottom portion of an end diaphragm abutment on piles should be embedded a minimum of 3½ feet at the intersection of the slope and face of abutment.
4. For end diaphragm abutments on spread footings, the horizontal clearance from the top of footing to the face of slope should be five feet minimum.
5. Continuous pervious backfill material and drains or perforated pipe with permeable material shall be placed in accordance with the instructions in Memo to Designers 5-2. Note that permeable material is only specified when known water bearing material is present behind the abutment.
6. Weep Hole and Geocomposite Drains, Bridge Design Details 6-22, which is an alternative to Bridge Detail B0-3/3-1, should be added to the plans for abutments without structure approaches.
7. End slopes at abutments shall be 1½ to 1 or flatter except under very unusual circumstances.

Weep Hole and Geocomposite Drain

Alternative to Bridge Detail BO-3 / 3-1

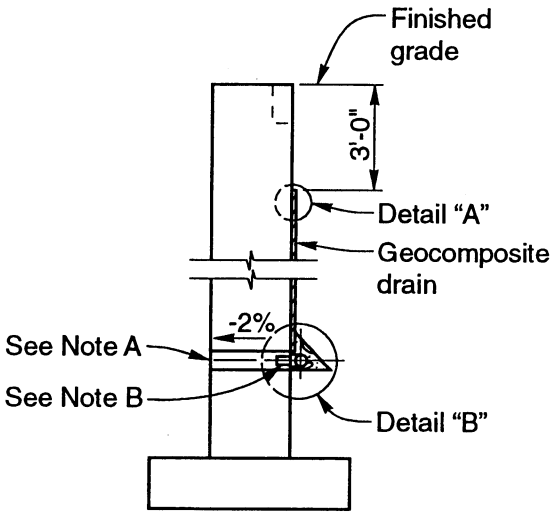

Wall Section

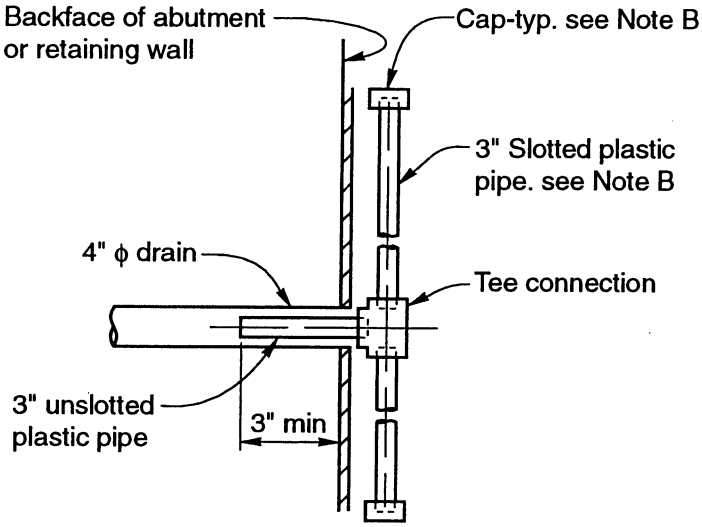

Section A-A

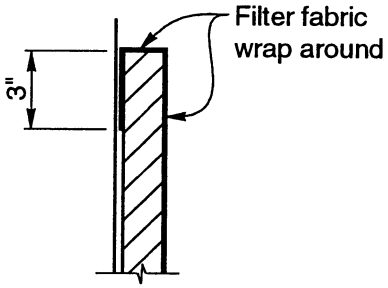

Detail "A"

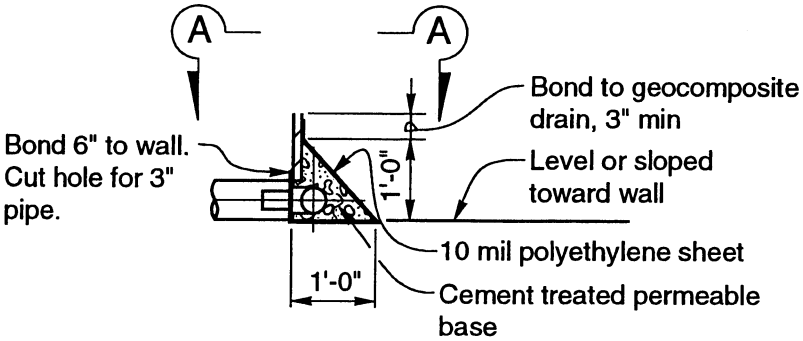

Detail "B"

Notes:

A. 4" drains at intermediate sag points and at 25' max. center to center (9' c-c for Type 3 and 9'-3" c-c for Type 4 retaining walls). For walls adjacent to sidewalks or curbs, provide 4" plastic pipe under sidewalk to discharge through curb face. Exposed wall drains shall be located 3"± above finished grade.

B. Geocomposite drain, cement treated permeable base, and 3" ϕ slotted plastic pipe continuous behind retaining wall or abutment. Cap ends of pipe. Provide "Tee" connection at each 4" ϕ drain.

C. Connect the low end of plastic pipe to the main outlet pipe as applicable.

STIRRUP REINFORCEMENT AT ABUTMENTS

(Sloping Exterior Girder)

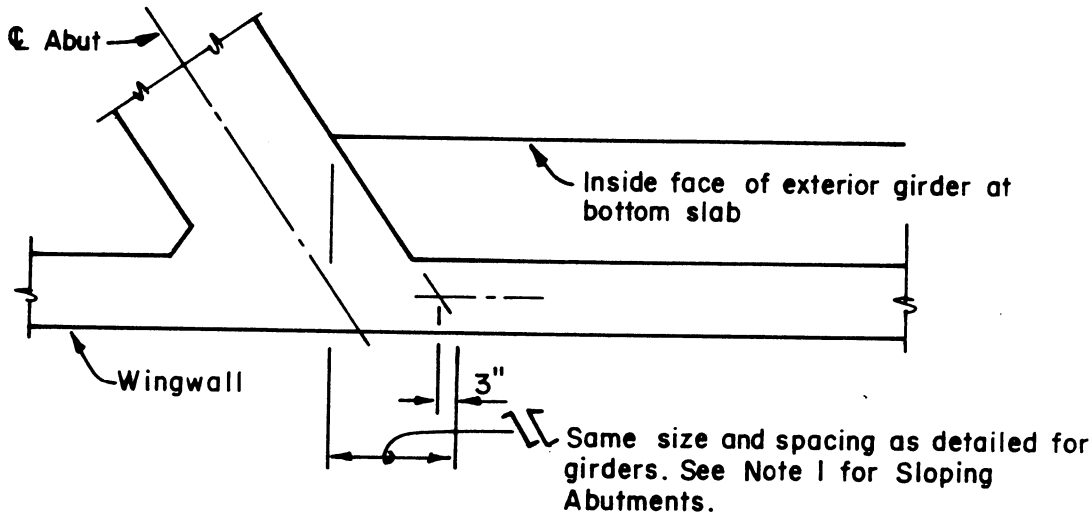

ACUTE ABUTMENT CORNER

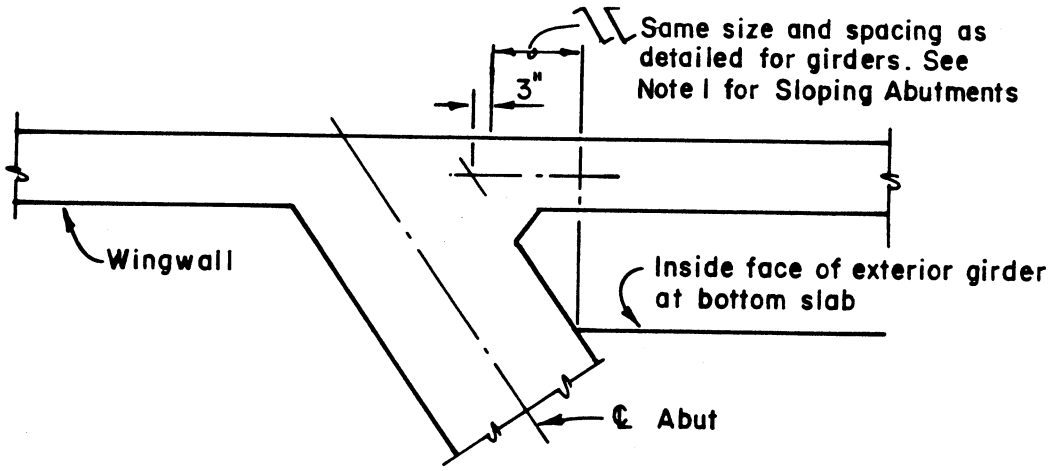

OBTUSE ABUTMENT CORNER

Notes:

1. Additional stirrups or equivalent reinforcing may be required for sloping abutment face.
2. Consideration should be given to potential conflicts when accomodating prestressing flares and assemblies.
3. These details should be shown in addition to requirements on Standard Plans B6-1 and B7-1

BOX GIRDER DIAPHRAGM – SLAB REINFORCEMENT

For Skews Greater Than 20°

At the junction of the bottom slab and end diaphragm of seat-type abutments, for skews greater than 20°, rebar clearance problems may be encountered. The slab thickness may not be adequate to accommodate the "stacking" of longitudinal and transverse slab bars, diaphragm stirrups, and diaphragm bottom bars.

Possible solutions are shown below.

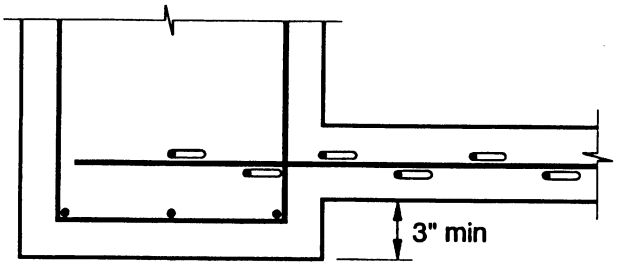

REINFORCED CONCRETE

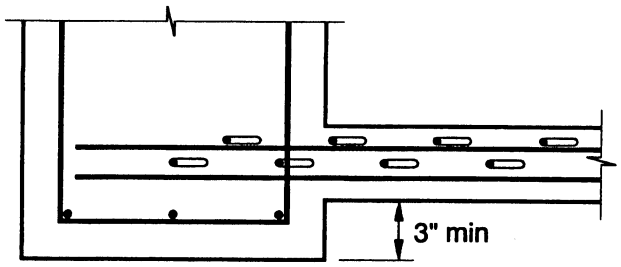

PRESTRESSED CONCRETE

DROP–DIAPHRAGM ALTERNATIVE

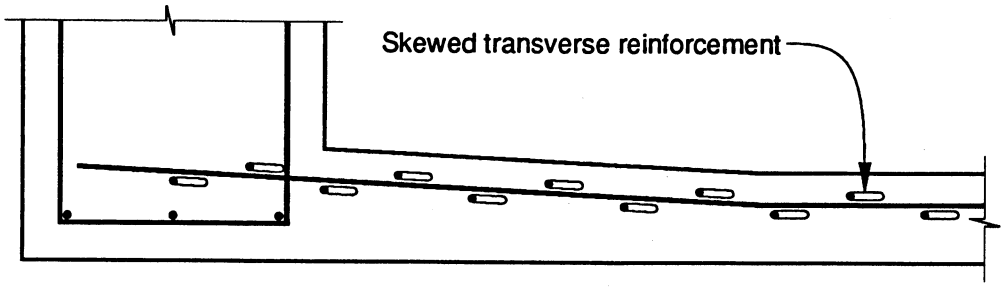

REINFORCED (Shown) — PRESTRESSED (Similar)

FLARED SLAB ALTERNATIVE

Note: Use in conjunction with page 8-32, *Bridge Design Details.*

Pile Footings

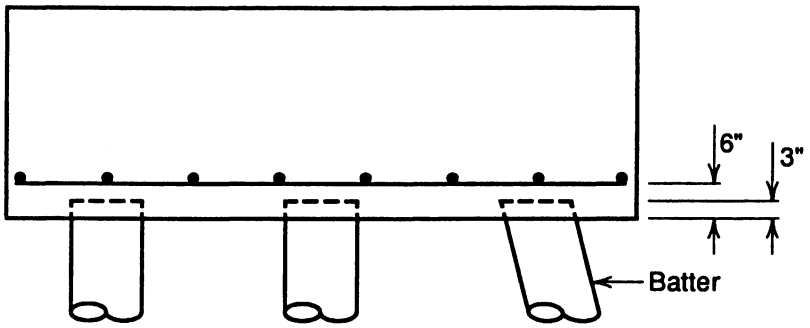

Concrete Piles

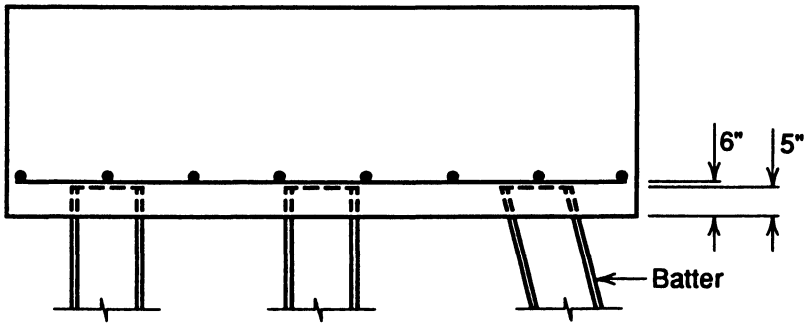

Steel Piles

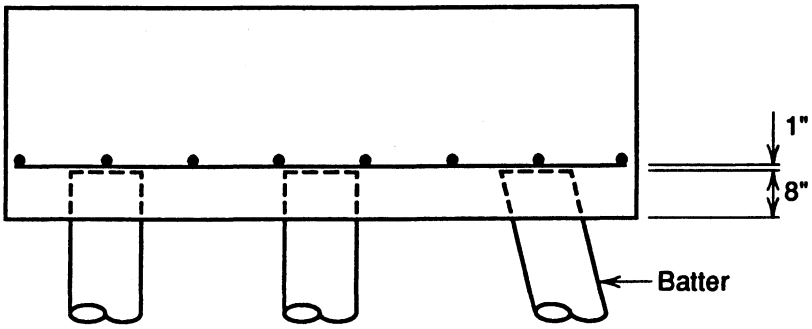

Timber Piles

Piles at Abutment Corners

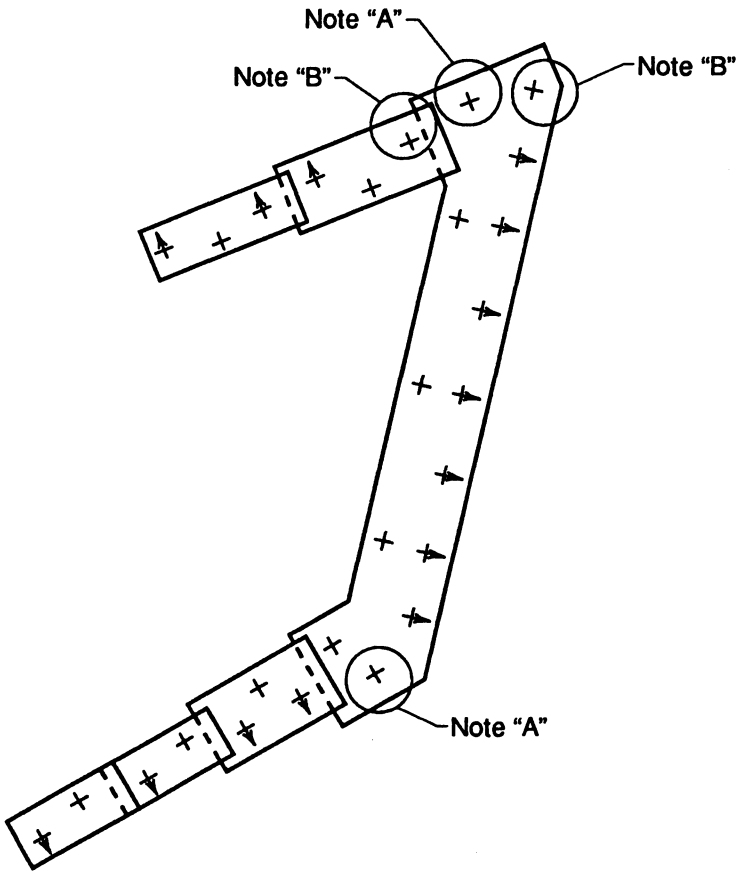

Note "A" Battered pile at this location is unnecessary. Pile should be vertical.

Note "B" Use vertical rather than battered piles at sharp acute corners where it may be difficult to drive battered piles.

Bearing Pad Location at Anchorage Blockout

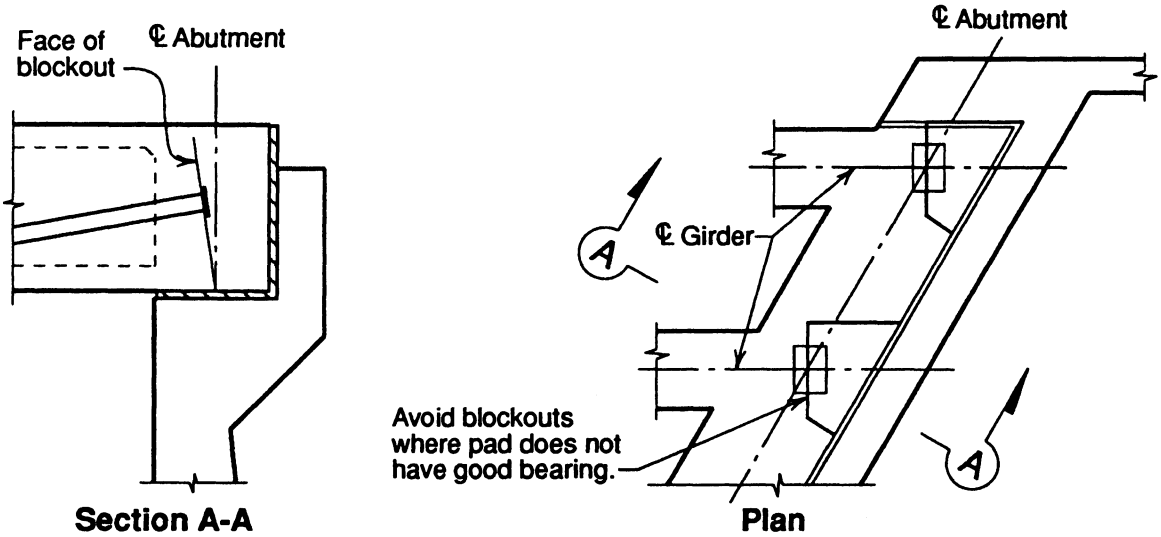

INCORRECT

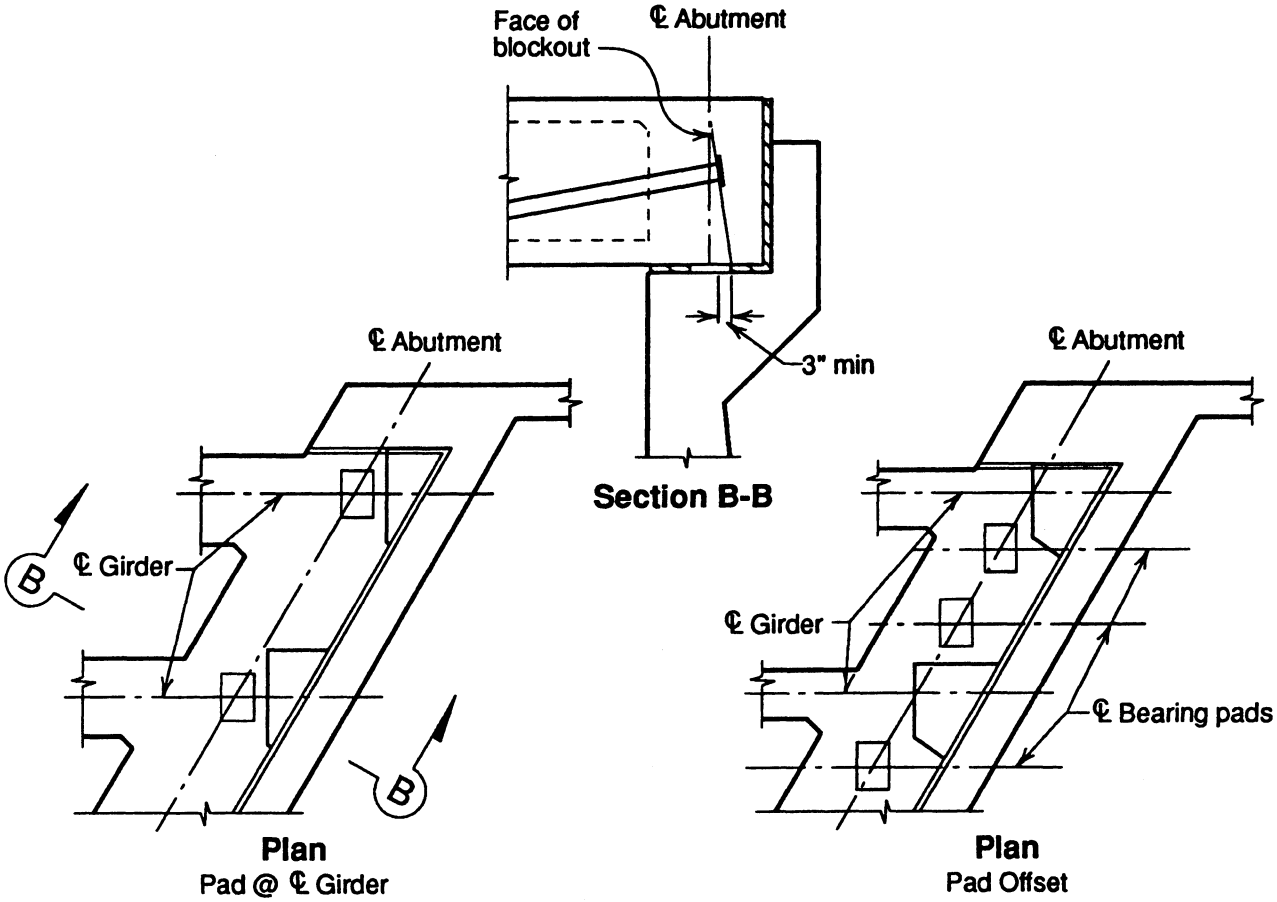

CORRECT

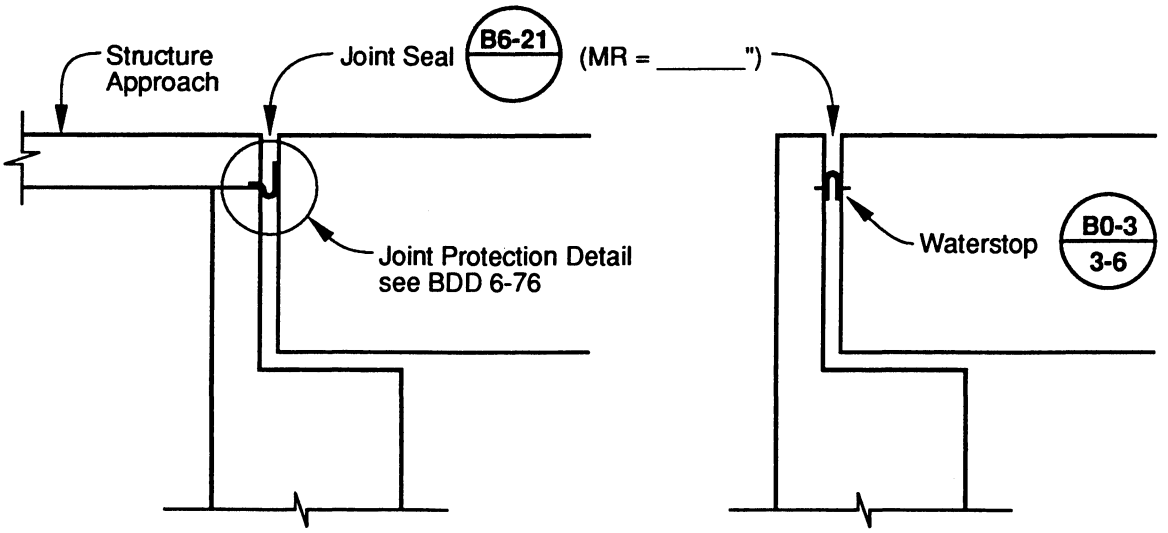

WITH STRUCTURE APPROACH

WITHOUT STRUCTURE APPROACH

MR ≤ 2"

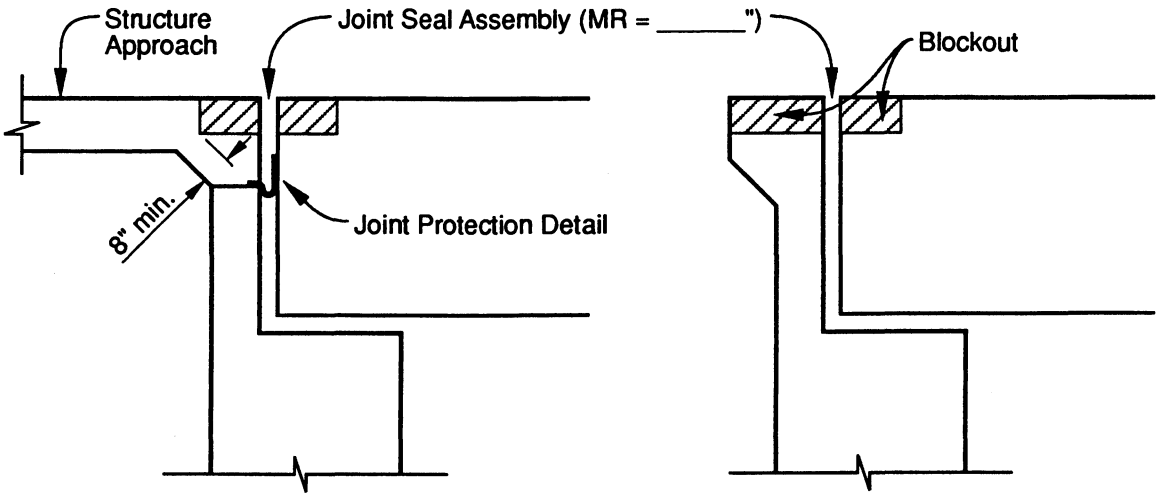

WITH STRUCTURE APPROACH

WITHOUT STRUCTURE APPROACH

MR ≥ 2 ½"

SEALED JOINTS

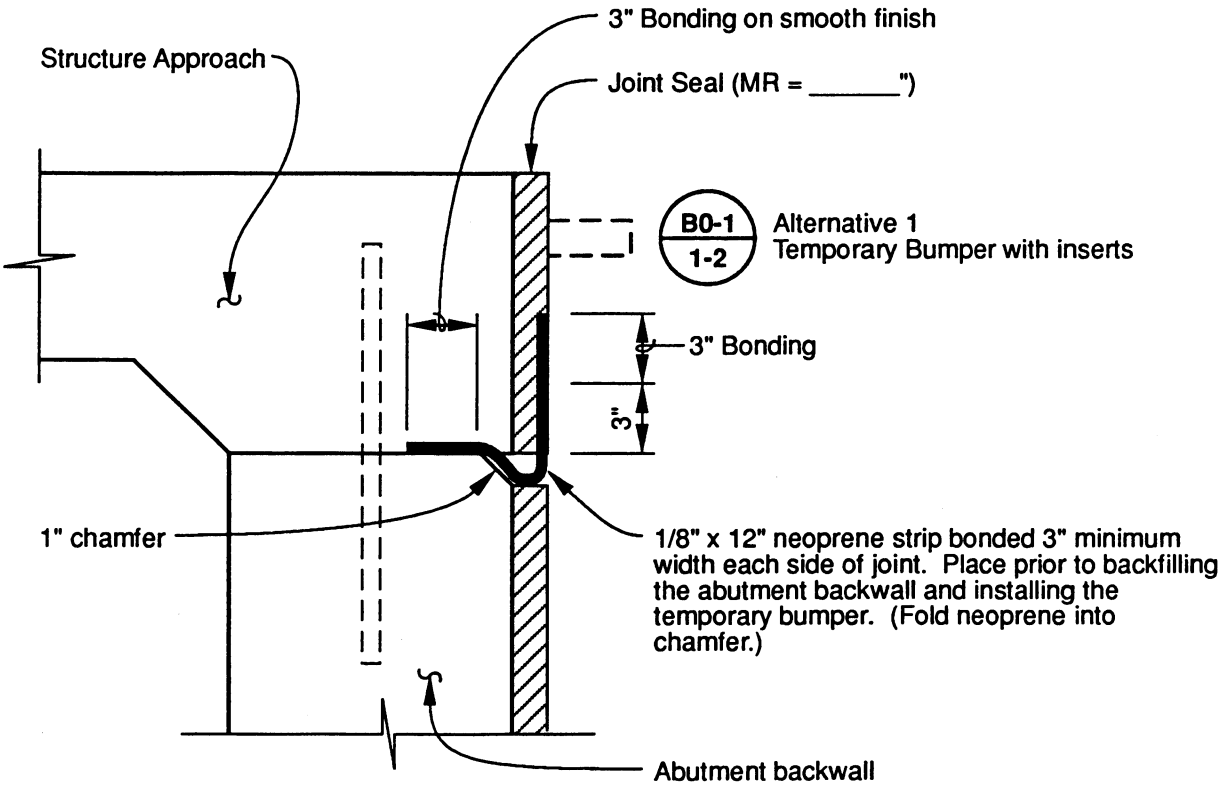

JOINT PROTECTION DETAIL

NOTE:

1. Do not use waterstop B0-3 / 3-6 with this detail.
2. Estimate *12" Neoprene Strip* in linear feet.

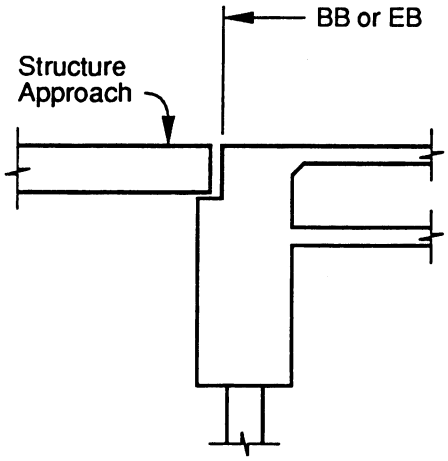

WITH STRUCTURE APPROACH

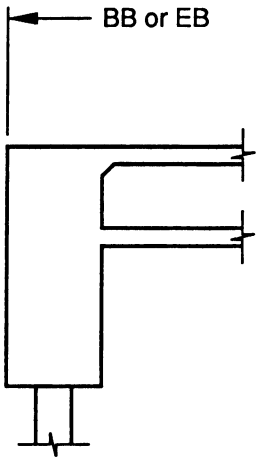

WITHOUT STRUCTURE APPROACH

DIAPHRAGM ABUTMENT

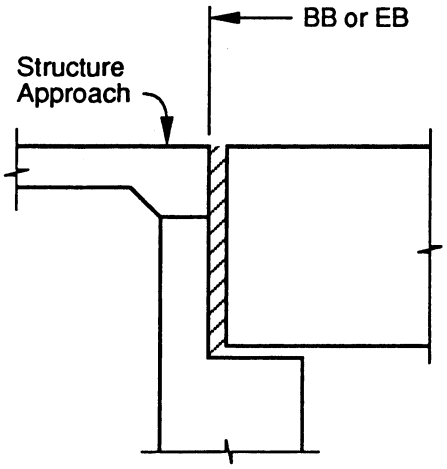

WITH STRUCTURE APPROACH

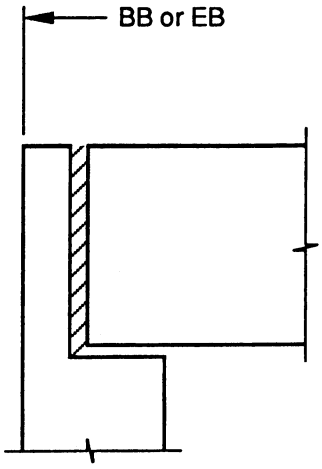

WITHOUT STRUCTURE APPROACH

SEAT ABUTMENT

BB AND EB LOCATIONS

BB = Beginning of Bridge
EB = End of Bridge

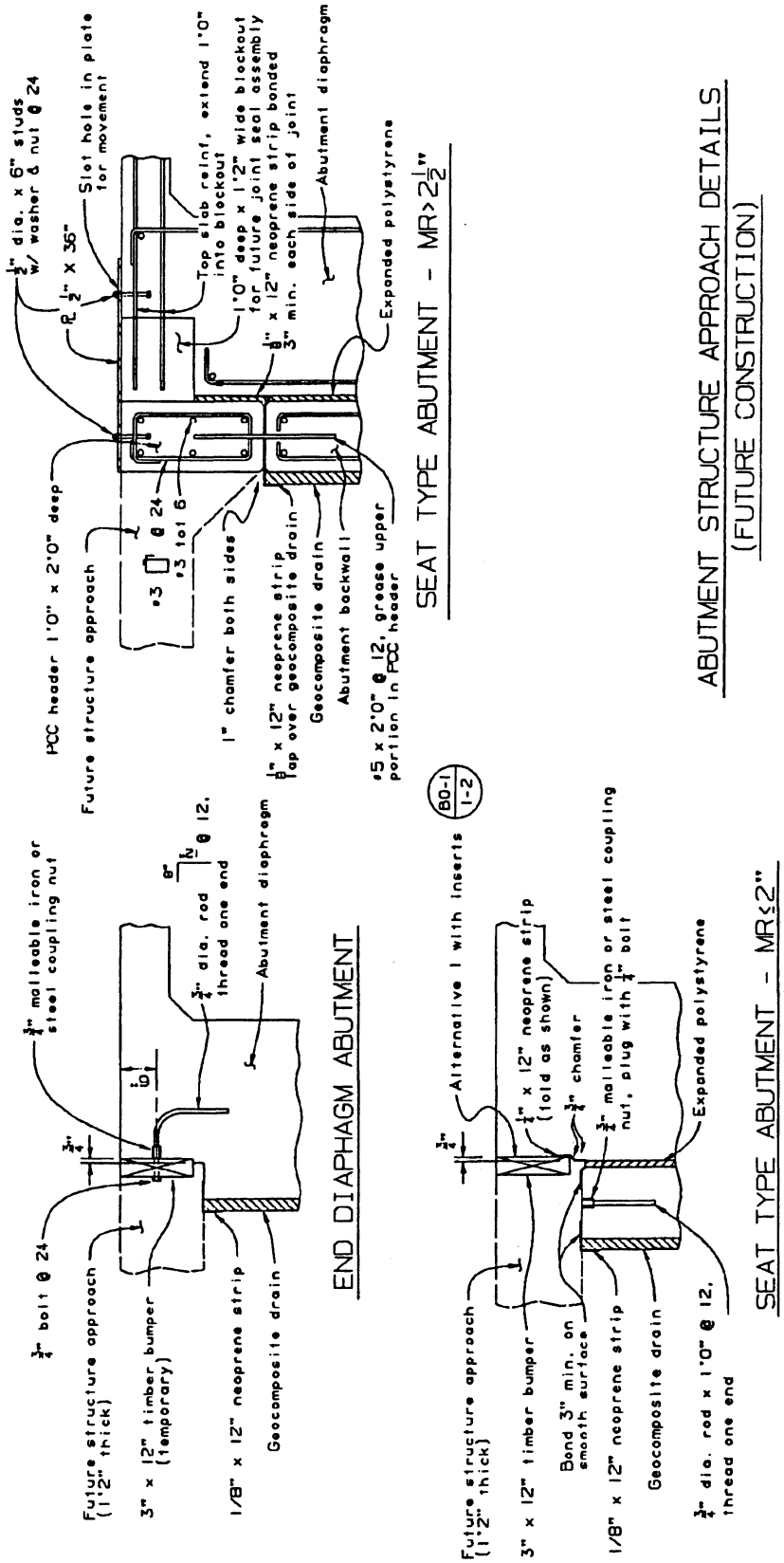
1/2" dia. x 6" studs w/ washer & nut @ 24
1/2" x 36"
Slot hole in plate for movement
Top slab reinf. extend 1'0" into blockout
1'0" deep x 1'2" wide blockout for future joint seal assembly
1/8" x 12" neoprene strip bonded 3" min. each side of joint
Abutment diaphragm
Expanded polystyrene
PCC header 1'0" x 2'0" deep
Future structure approach
#3 @ 24 #3 tot 6
1" chamfer both sides
1/8" x 12" neoprene strip lap over geocomposite drain
Geocomposite drain
Abutment backwall
#5 x 2'0" @ 12, grease upper portion in PCC header
SEAT TYPE ABUTMENT - MR>2 1/2"
ABUTMENT STRUCTURE APPROACH DETAILS
(FUTURE CONSTRUCTION)
3/4" malleable iron or steel coupling nut
3/4" dia. rod thread one end
@ 12.
Abutment diaphragm
3/4" bolt @ 24
Future structure approach (1'2" thick)
3" x 12" timber bumper (temporary)
1/8" x 12" neoprene strip
Geocomposite drain
END DIAPHAGM ABUTMENT
BO-1 1-2
Alternative 1 with inserts
1/8" x 12" neoprene strip (fold as shown)
3/4" chamfer
3/4" malleable iron or steel coupling nut, plug with 1/4" bolt
Expanded polystyrene
Future structure approach (1'2" thick)
3" x 12" timber bumper
Bond 3" min. on smooth surface
1/8" x 12" neoprene strip
Geocomposite drain
3/4" dia. rod x 1'0" @ 12, thread one end
SEAT TYPE ABUTMENT - MR≤2"

CANTILEVERED WINGWALLS
Minimum Soil Cover

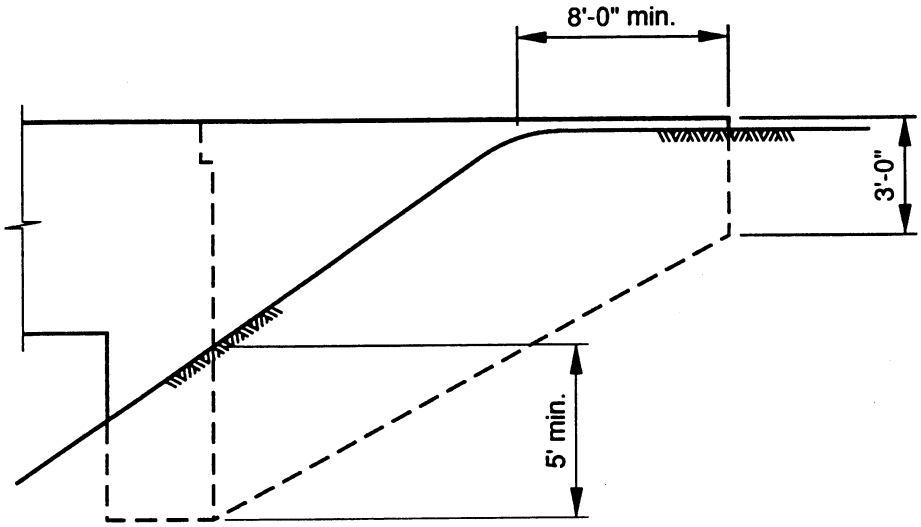

ELEVATION

RETAINING WALL WINGWALL

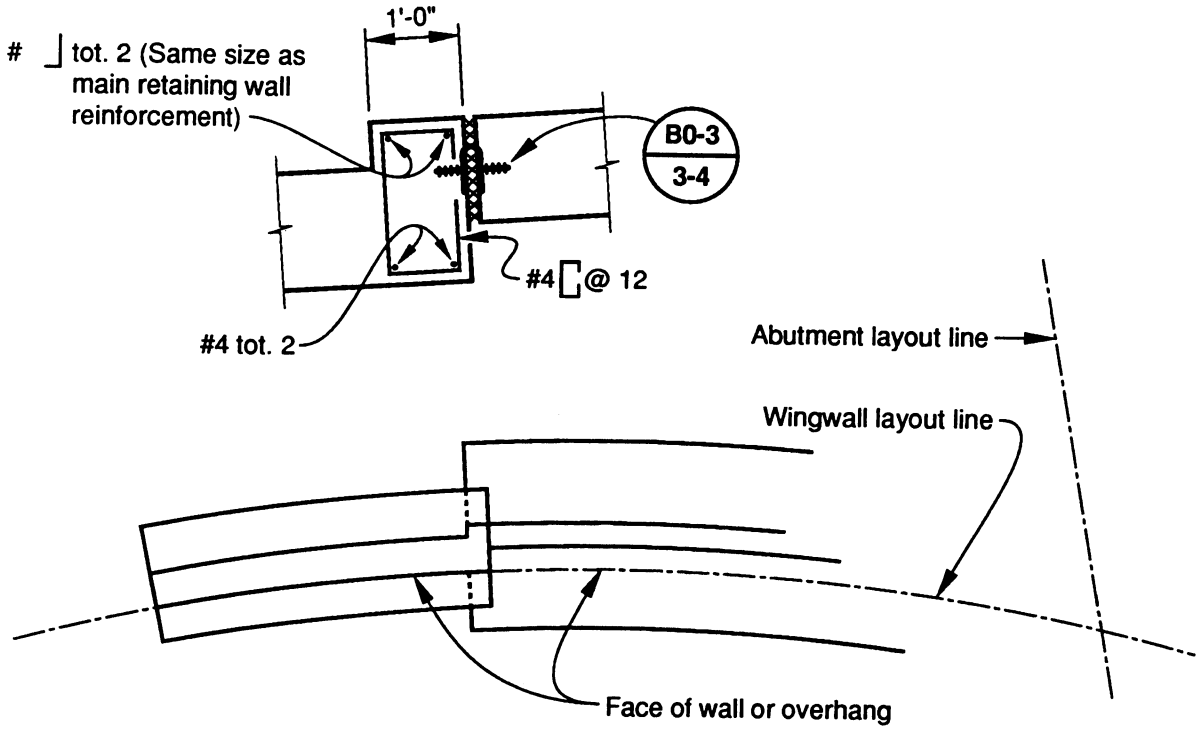

WALL OFFSET

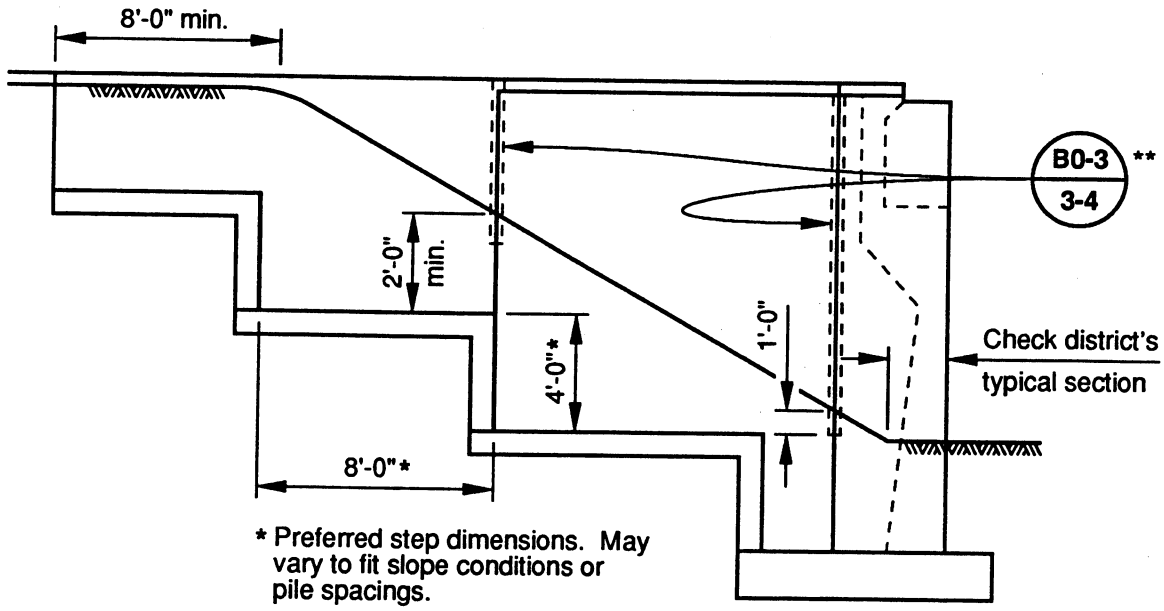

WINGWALL ELEVATION

**Extend waterstop 6" into concrete barrier.

ABUTMENT WINGWALL CORNERS

Tension reinforcement *should not* be bent around a re-entrant corner. The small amount of concrete cover is not sufficient to keep the reinforcing from straightening.

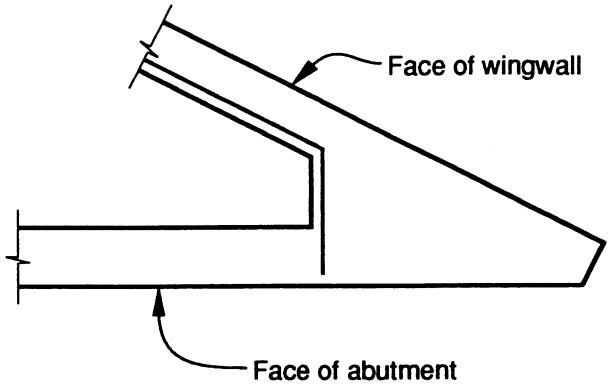

– Incorrect –

Reinforcement in each face *should* be straight and extend the required development length after it crosses the bar from the other direction. Standard practice for detailing reinforcement in *all* re-entrant corners and angle changes in members is shown below.

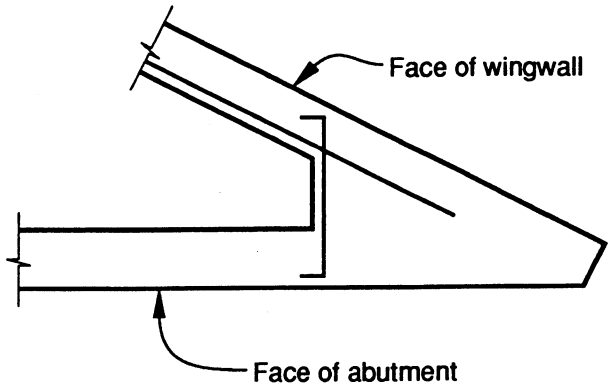

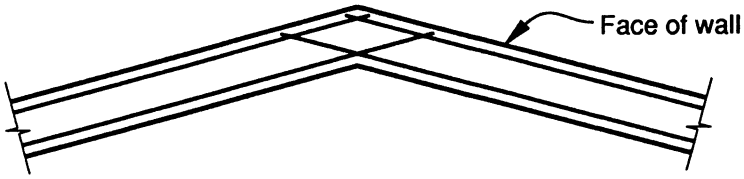

SIDEWALK SUPPORT BRACKET

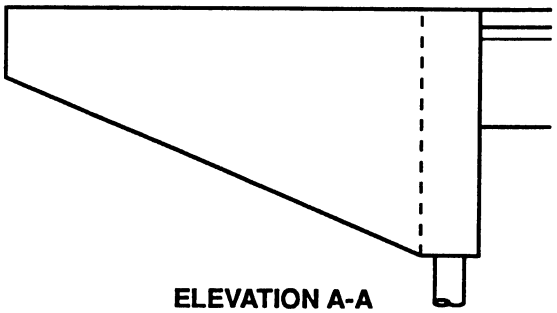

ELEVATION A-A

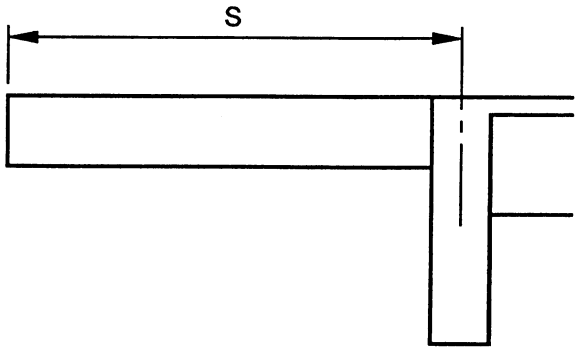

ELEVATION B-B

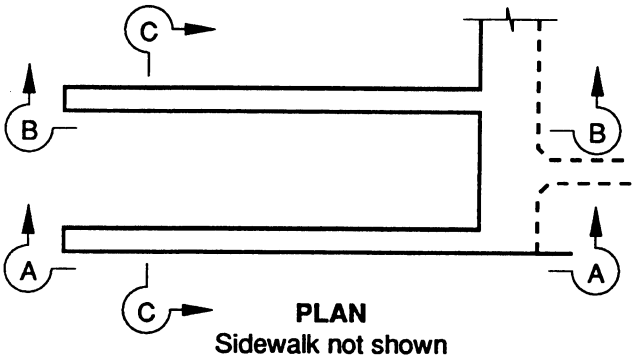

PLAN
Sidewalk not shown

S	D Bars	E Bars
12'	Bundle 4 #9	2 #4
14'	Bundle 4 #10	2 #4
16'	Bundle 2 #10, 2 #11	2 #8
18'	Bundle 4 #11	2 #11

Length of "D" bars = S + 6' or hook into abutment.

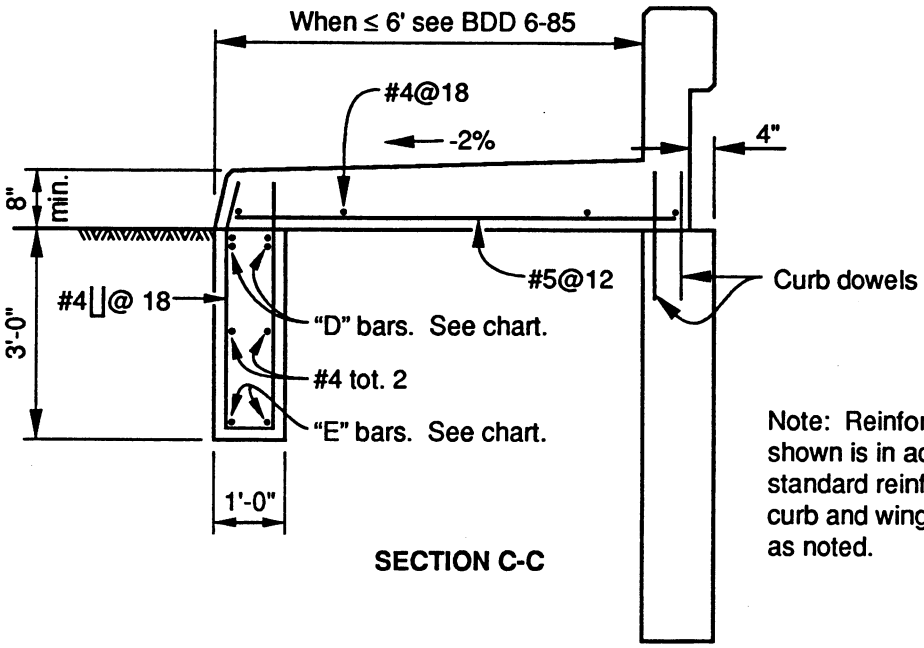

SECTION C-C

Note: Reinforcement shown is in addition to standard reinforcement in curb and wingwall except as noted.

TYPES 26 & 29

SIDEWALK ON WINGWALL

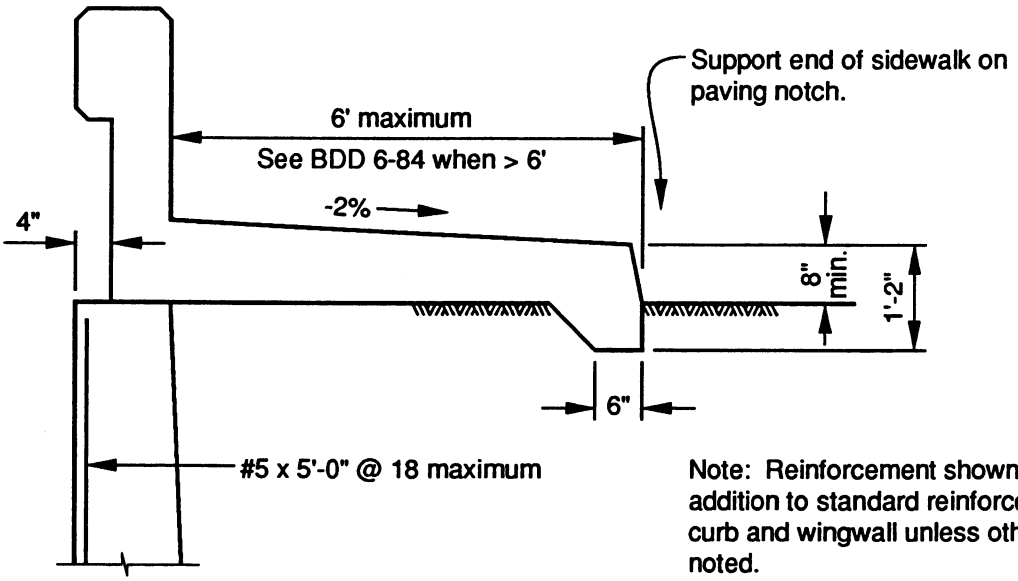

Note: Reinforcement shown is in addition to standard reinforcement in curb and wingwall unless otherwise noted.

TYPES 26 & 29

CONCRETE BARRIER TYPE 25 ON WALLS

When Type 25 is to be placed on wingwalls or retaining walls, the wall must be detailed to alert the contractor of the additional work to be performed. Part of this information is on the Concrete Barrier Type 25 standard. Details below illustrate the minimum additional detail required.

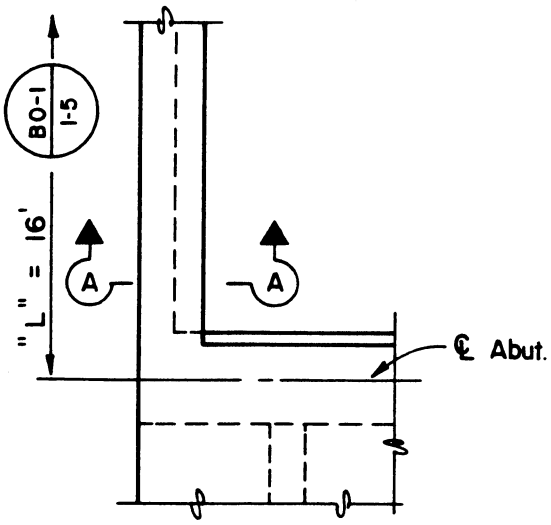

PART PLAN

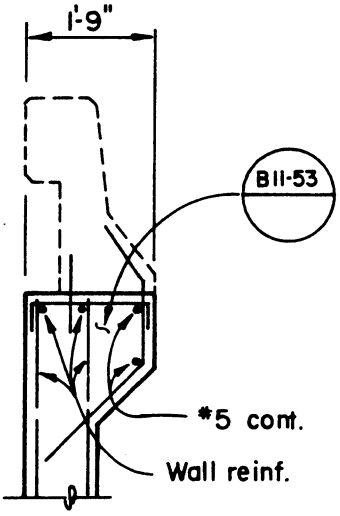

SECTION A-A

DETAILING EXAMPLE

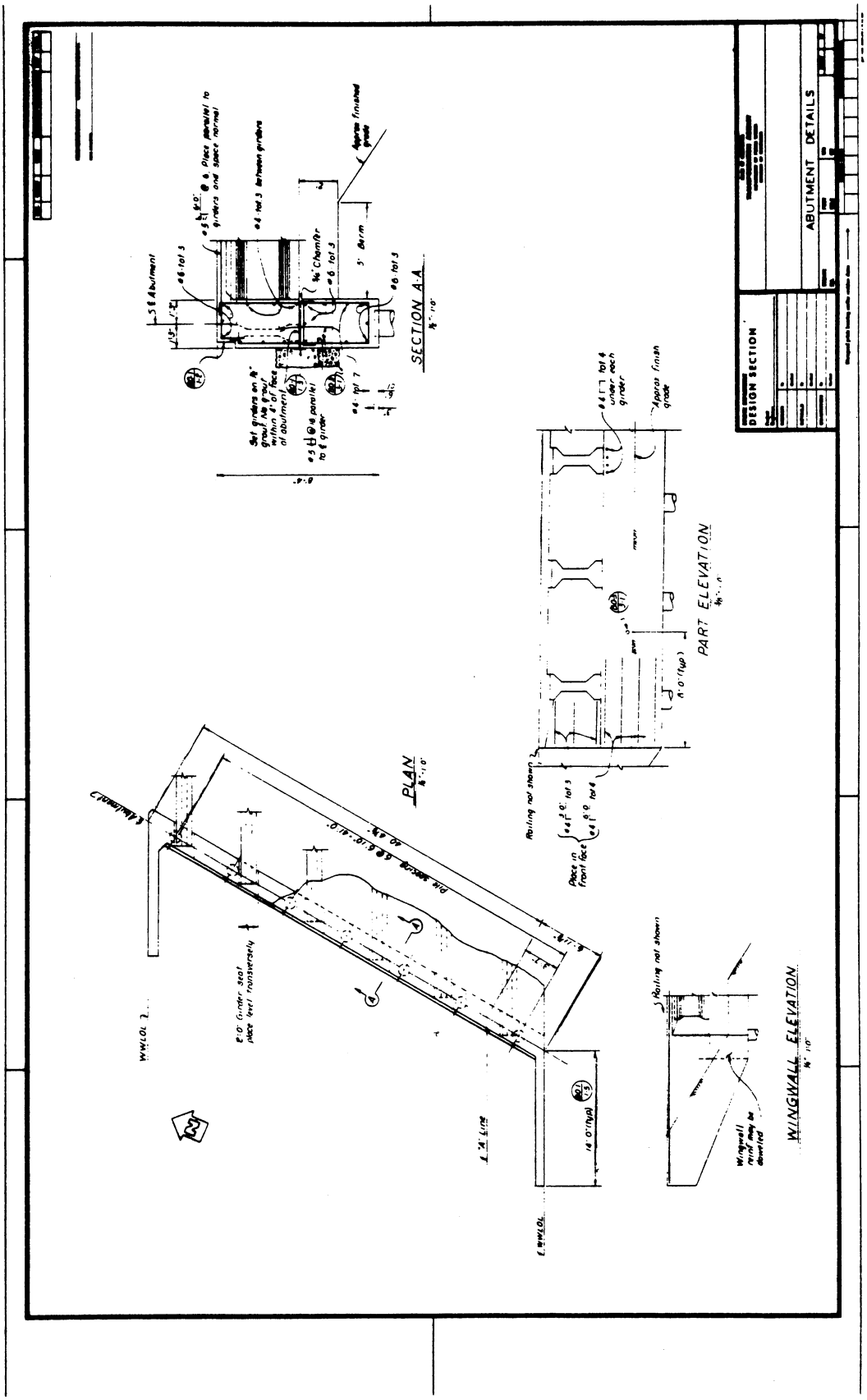

DETAILS SHOWN ARE FOR EXAMPLE ONLY NOT TO BE USED FOR DESIGN PURPOSES

DETAILING EXAMPLE

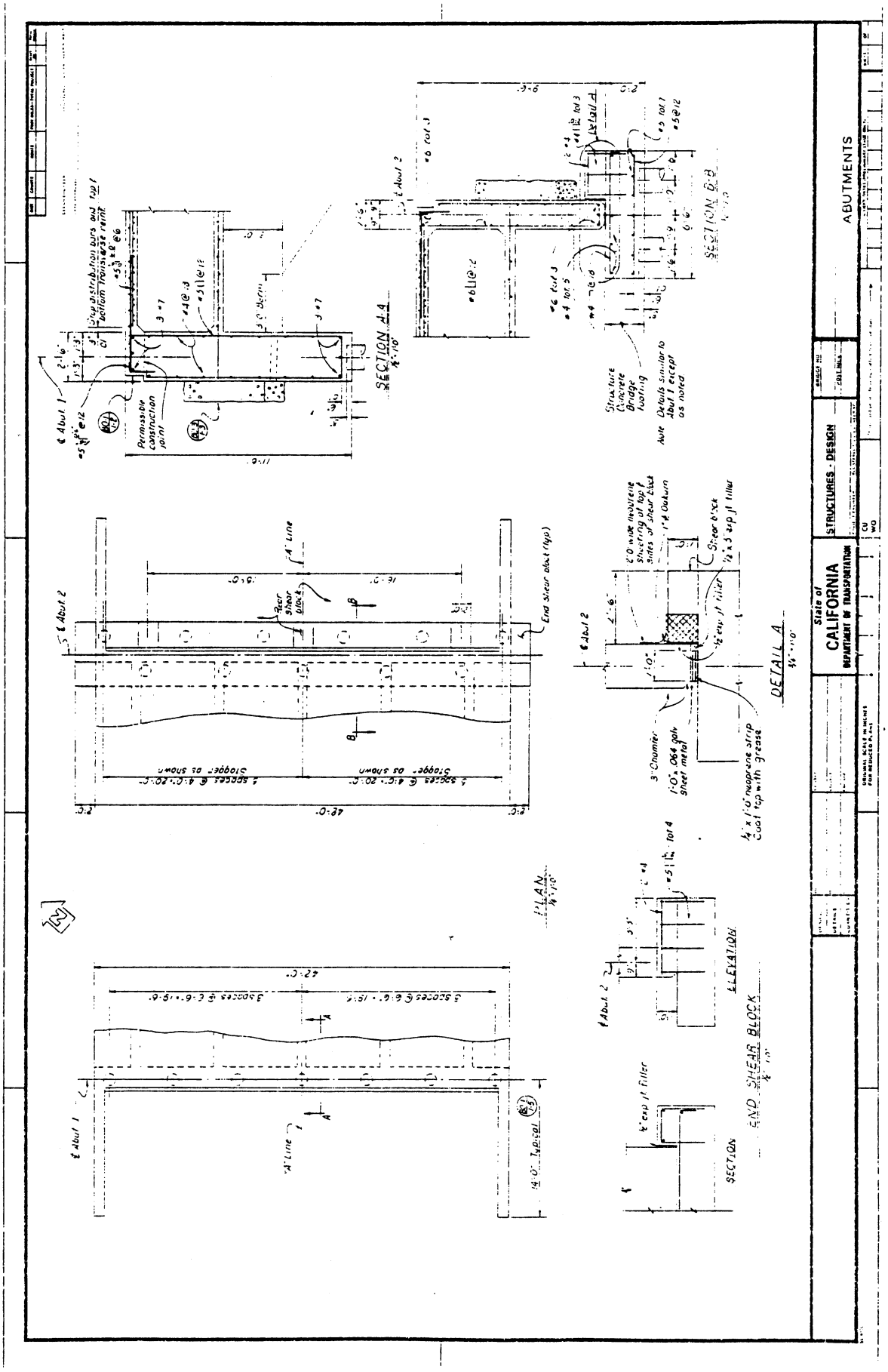

DETAILS SHOWN ARE FOR EXAMPLE ONLY
NOT TO BE USED FOR DESIGN PURPOSES

DETAILING EXAMPLE

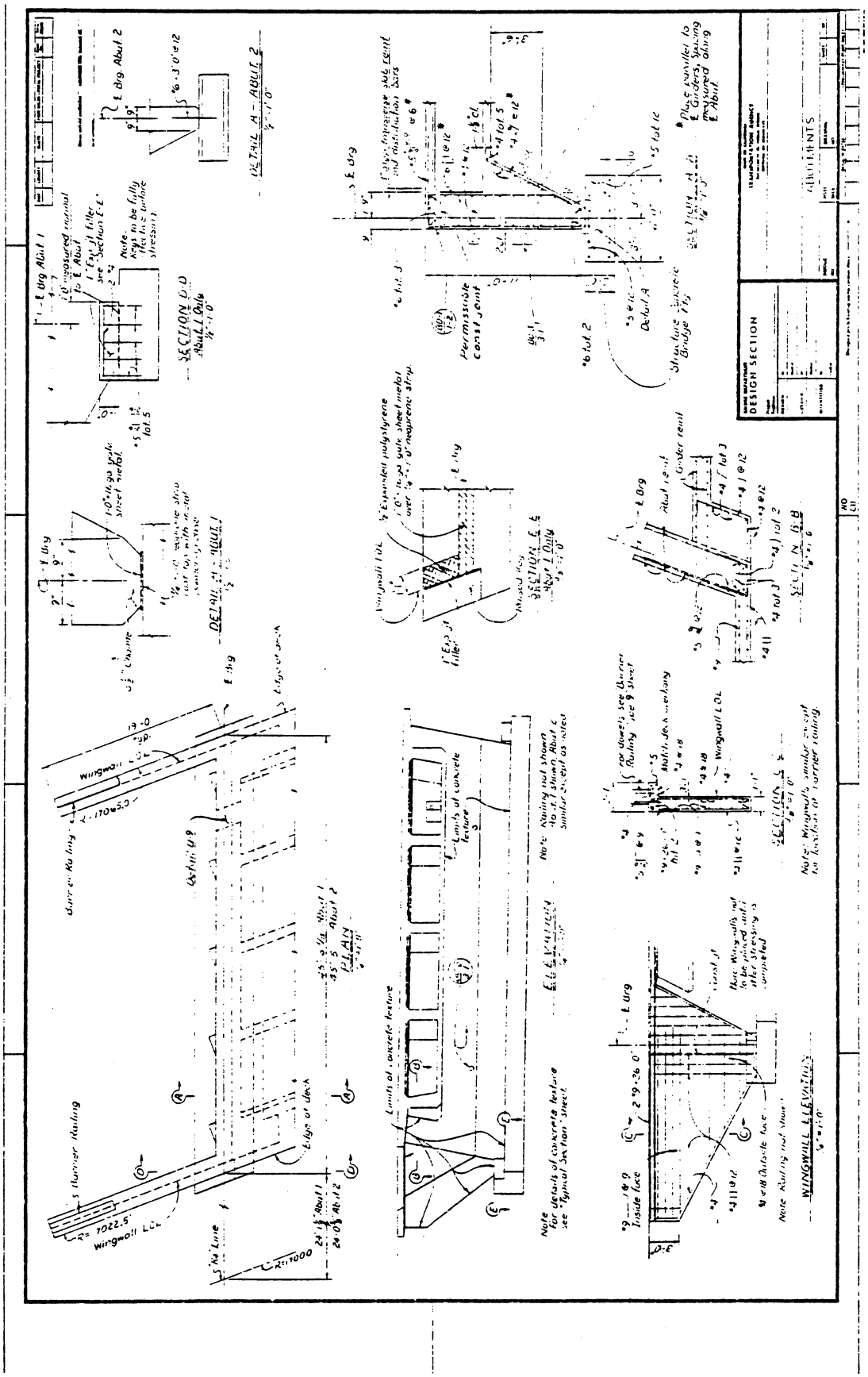

DETAILS SHOWN ARE FOR EXAMPLE ONLY
NOT TO BE USED FOR DESIGN PURPOSES

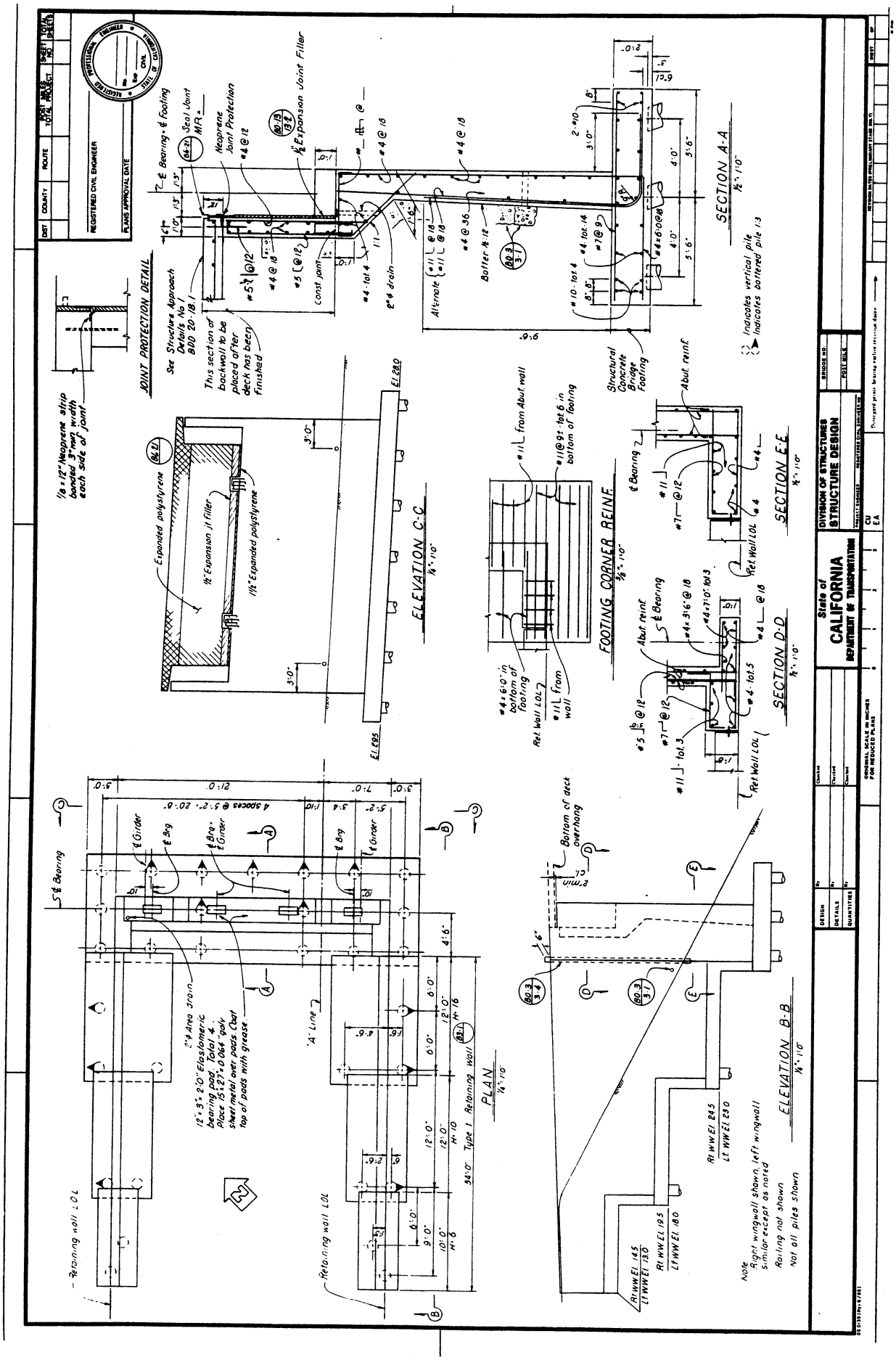
JOINT PROTECTION DETAIL
SECTION A-A
SECTION E-E
SECTION D-D
ELEVATION C-C
FOOTING CORNER REINF.
PLAN
ELEVATION B-B
Expanded polystyrene
Structural Concrete Bridge Footing
Retaining wall Type 1
Right wingwall shown, left wingwall similar except as noted
Railing not shown
Not all piles shown
Indicates vertical pile
Indicates battered pile
State of CALIFORNIA
DEPARTMENT OF TRANSPORTATION
DIVISION OF STRUCTURES
STRUCTURE DESIGN

DETAILING EXAMPLE

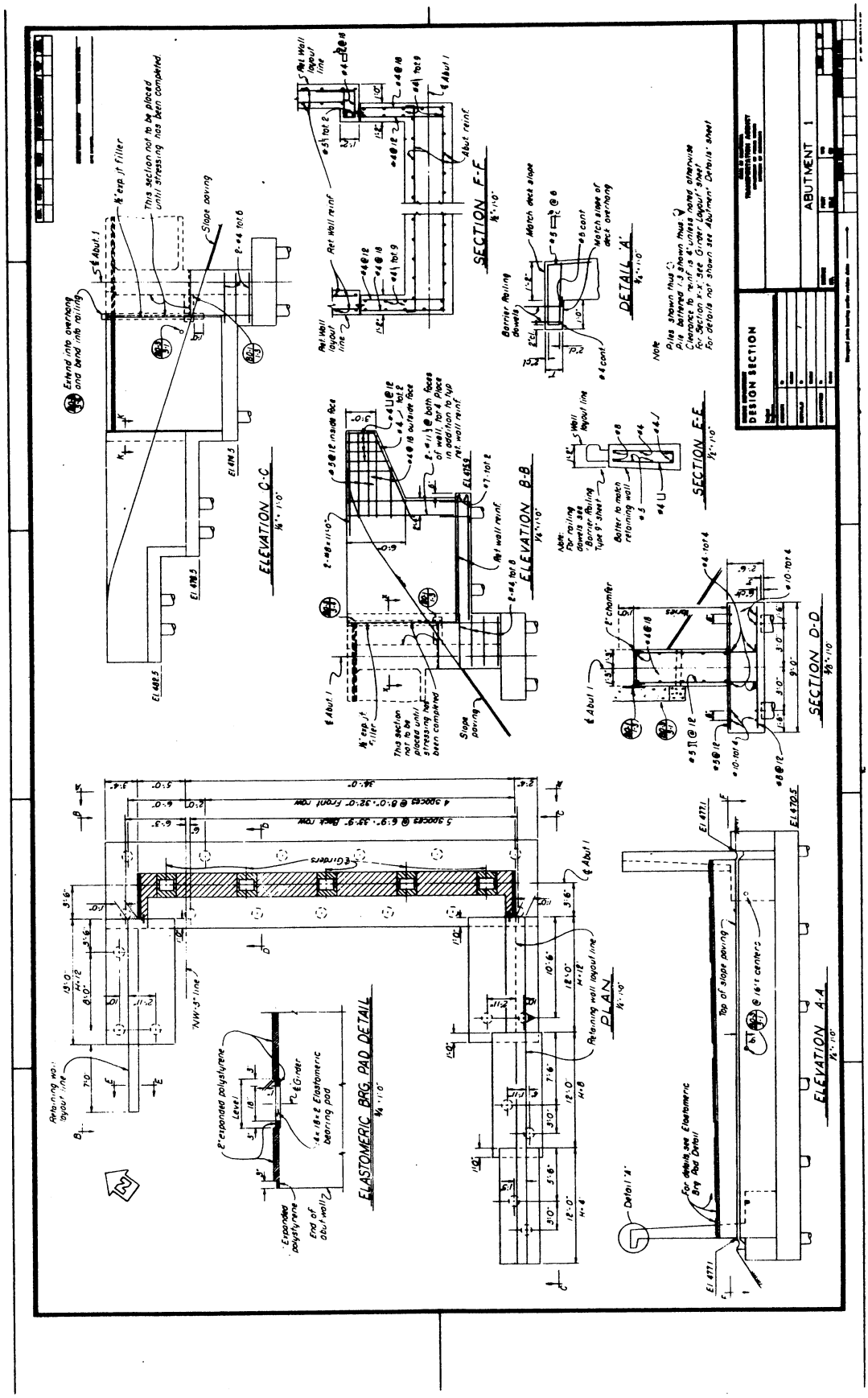

DETAILS SHOWN ARE FOR EXAMPLE ONLY NOT TO BE USED FOR DESIGN PURPOSES

DETAILING EXAMPLE

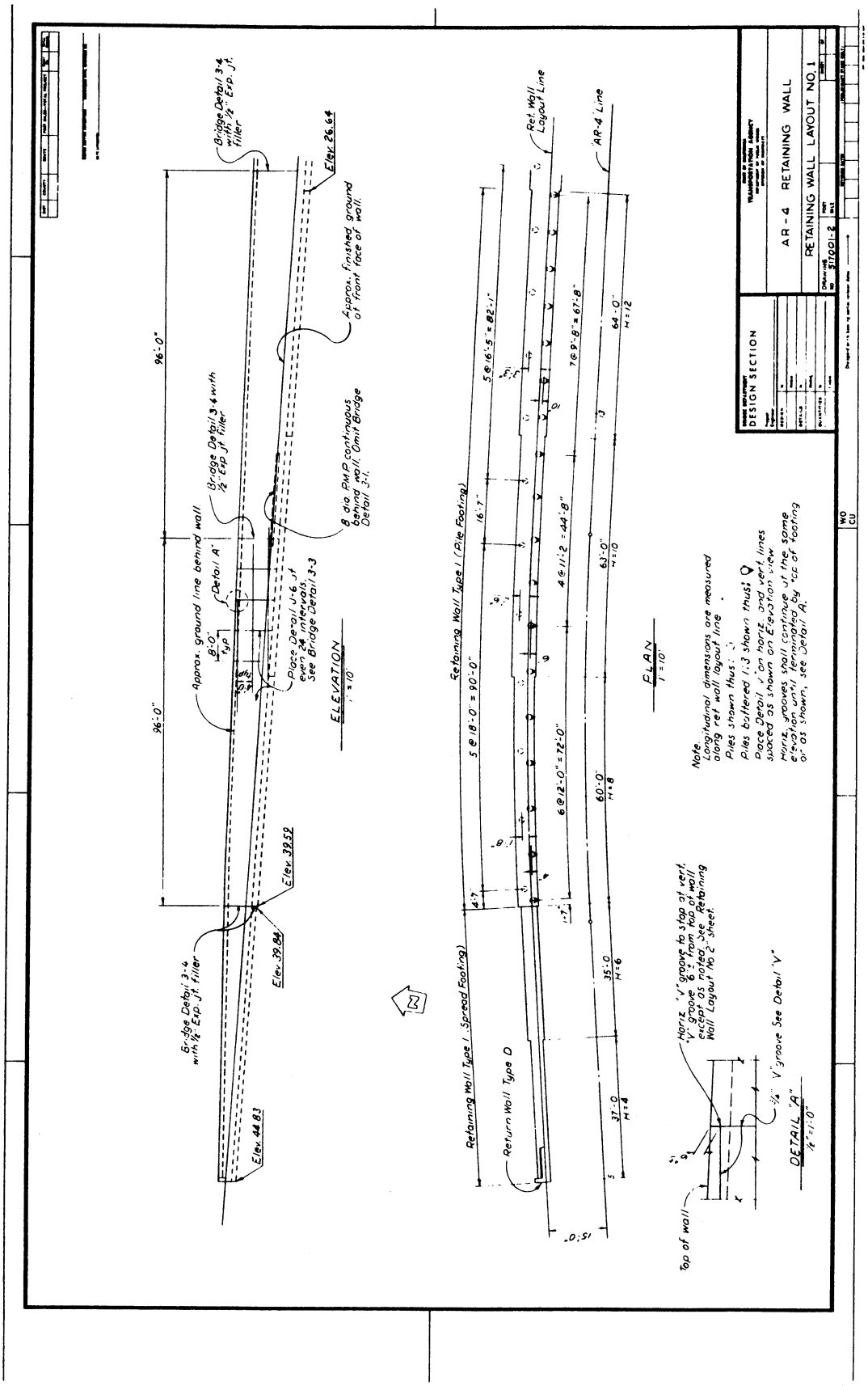

DETAILS SHOWN ARE FOR EXAMPLE ONLY
NOT TO BE USED FOR DESIGN PURPOSES

DETAILING EXAMPLE

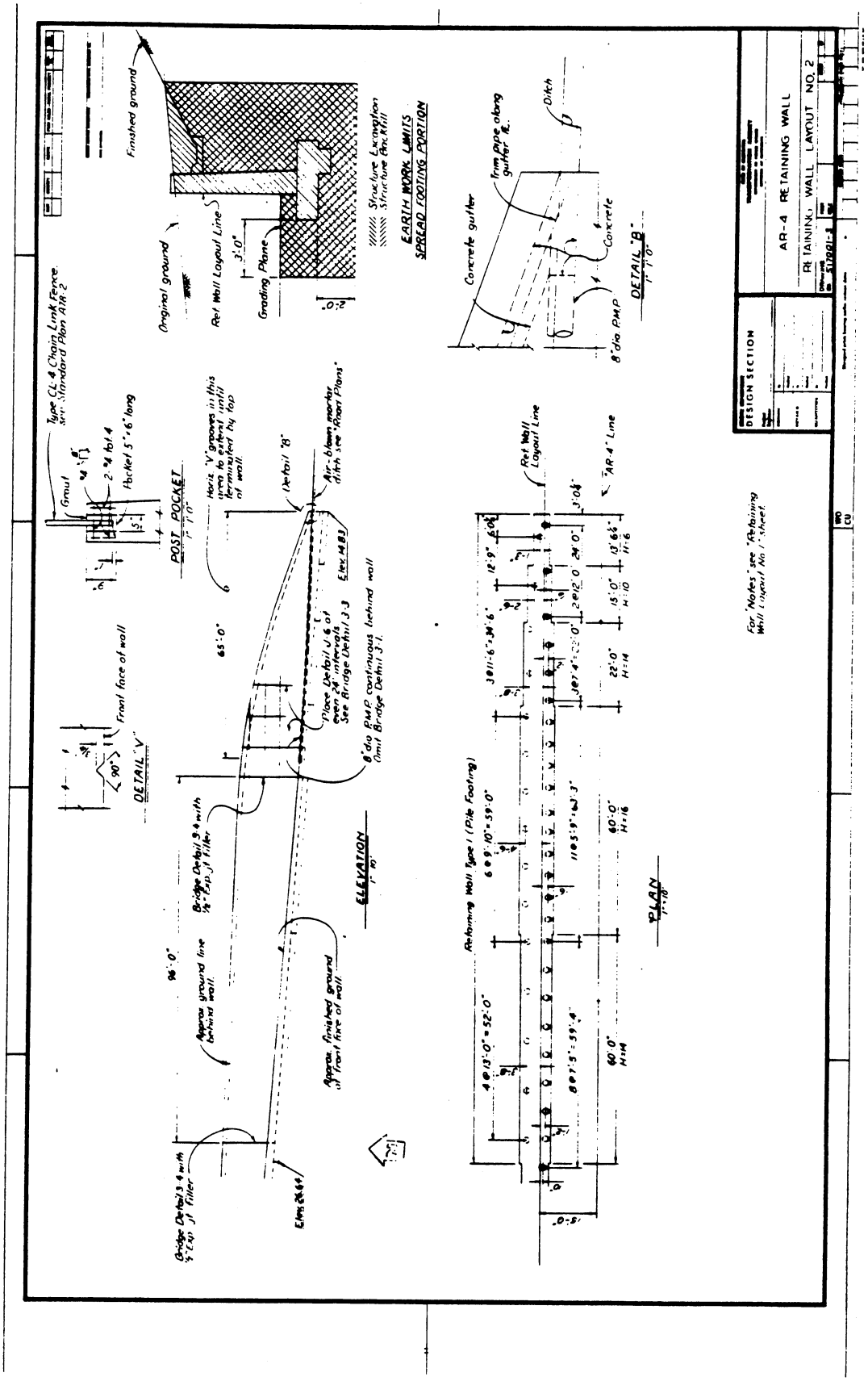

DETAILS SHOWN ARE FOR EXAMPLE ONLY
NOT TO BE USED FOR DESIGN PURPOSES