STATE OF CALIFORNIA - DEPARTMENT OF TRANSPORTATION

MUTCD NUMBER 1-5

CODE G94-1

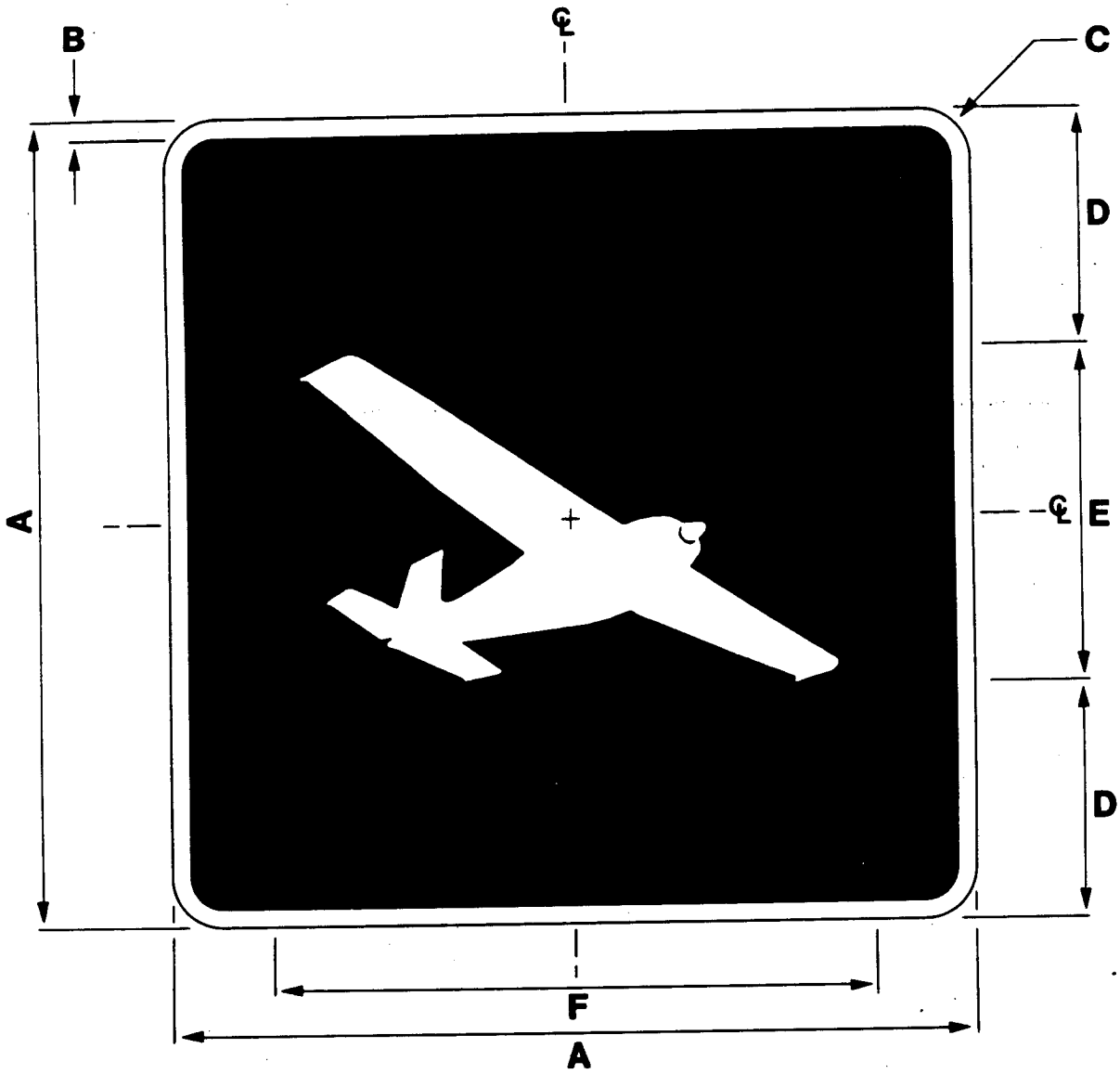

SIGN	DIMENSIONS (INCHES)					
	A	B	C	D	E	F
MINIMUM	18	1/2	1 1/2	5 1/4	7 1/2	13 1/2
CONVENTIONAL	24	1/2	1 1/2	7	10	18
FREEWAY	30	3/4	1 7/8	8 5/8	12 1/2	22 1/2

COLORS

BORDER & LEGEND - WHITE (REFL)

BACKGROUND - GREEN

- THE POLICY FOR INTENDED USAGE OF THIS SIGN IS SHOWN ON THE REVERSE SIDE -

CHIEF, DIVISION OF TRAFFIC ENGINEERING	DATE	REVISION	REVISION
	12/5/89		

DMO - 69 (REV 05/87)