Design Practices and Products for Deterring Copper Wire Theft

Requested by
Agustin Rosales, Caltrans Division of Maintenance

May 22, 2013

The Caltrans Division of Research and Innovation (DRI) receives and evaluates numerous research problem statements for funding every year. DRI conducts Preliminary Investigations on these problem statements to better scope and prioritize the proposed research in light of existing credible work on the topics nationally and internationally. Online and print sources for Preliminary Investigations include the National Cooperative Highway Research Program (NCHRP) and other Transportation Research Board (TRB) programs, the American Association of State Highway and Transportation Officials (AASHTO), the research and practices of other transportation agencies, and related academic and industry research. The views and conclusions in cited works, while generally peer reviewed or published by authoritative sources, may not be accepted without qualification by all experts in the field.

Executive Summary

Background

Recent copper wire thefts throughout the state have had a serious impact on the operations of Caltrans' electrical infrastructure, including roadway lighting, changeable message signs, ramp meters and vehicle detection systems. District maintenance forces have not been able to keep up with the wire theft and other damages, and the damage to the infrastructure has negatively impacted the safety, operational and management capabilities of the districts.

Caltrans has allocated approximately $50 million to wire theft repairs since the department began tracking this effort. When repairs are made, Caltrans tries to employ methods that will deter future wire theft at that site, such as burying pull boxes, installing theft-deterrent pull box covers, and using aluminum conductors (which have less value to thieves). Caltrans is interested in investigating new methods for deterring wire theft. To aid in this effort, this Preliminary Investigation aims to identify strategies used by other state DOTs to deter wire theft, as well as methods used by other industries (power utilities, railroads) that may be applicable to Caltrans' infrastructure.

Deterring copper wire theft is a multifaceted initiative. While this Preliminary Investigation focuses on design practices and products that DOTs can implement directly, a November 2011 Preliminary Investigation, "Laws to Prevent Metal Theft and Recycling of Stolen Metals," summarized key provisions of state statutes regarding metal theft across the country (see http://www.dot.ca.gov/newtech/researchreports/preliminary_investigations/docs/recycling_of_stolen_metals_pi_11-1-11.pdf).

Summary of Findings

To gather information about other states' experiences with strategies for deterring copper wire theft, we contacted DOTs in several states where copper theft is a problem, as well as one large state DOT that has not experienced copper wire theft (New York). We obtained the results of an April 2013 AASHTO survey of state DOTs on this issue, which received responses from 45 agencies. We also contacted two companies that manufacture products designed to deter copper theft. Finally, we reviewed existing

research and publications on this topic, identifying relevant strategies used by power utilities and railroads.

This Preliminary Investigation is organized into four sections, described below:

- National Resources.
- Strategies for Deterring Theft.
- States' Experiences.
- Other Industries.

National Resources

The AASHTO Subcommittees on Construction and Maintenance have begun discussions about whether the committees should address the issue of copper wire theft in some way, such as through a compilation of best practices for mitigating and deterring theft. The committees conducted a survey of states on this issue in April 2013. Of the 45 states and provinces that responded, 31 had experienced wire theft and 22 said the issue was of increasing concern in their state.

The survey results suggested that copper theft is a regional crime problem that is likely affected by factors other than infrastructure design. A 2010 U.S. Department of Energy report on copper theft from electric utilities suggested that these factors may include rates of drug use (particularly crystal methamphetamine), moderate climates, proximity to scrap metal dealers who are willing to buy the wire, population density, and unemployment and poverty rates. The idea that other factors are involved is consistent with our discussion with New York State DOT, which has not experienced copper wire theft from its lighting system despite using standard access plates on its transformer bases.

Strategies for Deterring Theft

This section provides summary tables listing the strategies identified in our research. The strategies are organized by category, and the agencies using the strategies are listed. Following the tables, detail is provided on a few products that were not part of Caltrans' original toolbox of strategies.

States' Experiences

Staff at DOTs that have worked extensively on this issue agreed that there is no single solution that is 100 percent effective in all situations. Tamper-resistant pull boxes provide a valuable first line of defense and are effective at deterring less sophisticated thieves with fewer tools, but ultimately any system that can be opened for maintenance can also be opened by the most determined criminals. For the most theft-prone areas where thieves have repeatedly defeated traditional countermeasures, the DOTs we spoke with were most enthusiastic about the following strategies:

- **Locating pull boxes in highly visible areas**. Arizona DOT is moving to centerline lighting along concrete barriers when possible.
- **Burying pull boxes** with electronic markers, disturbing additional dirt to disguise the location.
- **Installing additional load centers** so that shorter runs of thinner, less valuable copper wire can be used.
- **Using video surveillance,** motion-detecting cameras, circuit monitoring systems, and the Copper Stopper system in key theft-prone areas.

States also recommended:

- At a minimum, **locking all pull boxes** to deter more opportunistic crimes and increase public safety.
- **Using aluminum wire** to replace copper.
- **Increasing public awareness** of the problem, including creating a reward-based wire theft hotline.

This section of the Preliminary Investigation describes the most successful approaches for each state, as well as other methods that the states have considered, evaluated or decided not to use.

Other Industries
The power utility and rail industries are among the other sectors that deal with copper wire theft. Electric utilities tend to focus a portion of their efforts on protecting power substations (such as with fencing, alarms and surveillance), but our review of the published literature identified some strategies that could be applicable to DOTs. Strategies include:

- Using **physical restraints** such as banding wire with steel or rubber sleeves.
- Using **alternative wire types** such as copper-coated steel ground rods, hardened Spanish cable, or copper blends.
- **Tagging wire with agency identification**, such as SmartWater chemical coding technology, DataDots, or micro-encryption.

Gaps in Findings

We were unable to locate published research evaluating and comparing the effectiveness of different products or design strategies at deterring theft from DOT infrastructure. In addition, no study has yet compiled all best practices in this area, although two AASHTO committees are discussing whether AASHTO should be involved in facilitating such a compilation.

Next Steps

Caltrans might consider the following in its continuing evaluation of design practices and products for deterring copper wire theft:

- Investigating the design strategies that the DOTs we spoke with were most enthusiastic about (see page 2).
- Evaluating whether non-design approaches (such as video surveillance or circuit monitoring systems) recommended by state DOTs could be applicable to specific theft-prone areas on Caltrans' system.
- Following up with the agencies we spoke with that are currently testing new products and strategies.
- Advocating for the AASHTO Subcommittees on Construction and Maintenance to address copper wire theft.
- Reviewing the results of the April 2013 AASHTO survey on states' experiences with copper theft, and contacting agencies that have had relevant experiences with copper theft.
    - Contacting one or two other agencies that reported on the AASHTO survey that they have not experienced wire theft. Although other factors appear to influence where copper theft occurs, Caltrans may want to confirm that these states use standard designs for their lighting and ITS systems.
- Talking with DOT staff that have many years of experience in this area, such as Ted Bailey at WSDOT, Chuck McClatchey at Arizona DOT, and Richard Hibbard at Utah DOT.

Contacts

During the course of this Preliminary Investigation, we spoke to or corresponded with the following individuals:

National Agencies

AASHTO
Jim McDonnell, P.E.
Program Director, Engineering
(202) 624-5448, jimm@aashto.org

State DOTs

Arizona DOT
Chuck McClatchey
Electrical Operations Superintendent
(602) 908-9164 (cell phone), cemcclatchey@azdot.gov

Frank Di Bugnara, P.E.
Research Project Manager
Arizona Transportation Research Center
(602) 712-3137, FDiBugnara@azdot.gov

Michigan DOT
Michele Mueller
Senior Project Manager, ITS Engineer
(313) 256-9803, muellerm@michigan.gov

Missouri DOT
Laurel A. McKean, P.E.
District Traffic Engineer
(816) 607-2107, Laurel.McKean@modot.mo.gov

New Jersey DOT
Dan Black
Bureau of Roadway Maintenance Engineering & Operations
(609) 530-5383, dan.black@dot.state.nj.us

New York State DOT
Emilio Sosa
Director of Traffic Operations, Region 10
(631) 904-3014, emilio.sosa@dot.ny.gov

Utah DOT
Richard Hibbard, P.E.
Traffic Lighting Engineer
(801) 965-4171, rhibbard@utah.gov

Washington State DOT
Ted Bailey, P.E.
Signals, Illumination & ITS Engineer
(360) 705-7286, baileyte@wsdot.wa.gov

Municipalities

City of Vallejo, California
Mike Schreiner
Assistant Maintenance Superintendent, Streets & Traffic
(707) 648-4319, mikes@ci.vallejo.ca.us

Manufacturers

The Copper Stopper, LLC
Greg Patterson
Director of Business Development
(616) 309-5221 (cell phone), Greg@TheCopperStopper.com

DOTPLUG
Martin Maners
Vice President & General Counsel, MG Squared, Inc.
(205) 823-6688, ext. 25, martin@mgsquared.com

National Resources

In recent years, no national-level transportation research or resources have addressed the prevention of copper wire theft. However, in April 2013, AASHTO surveyed the members of its Subcommittees on Maintenance and Construction and its Standing Committee on Highways regarding the states' level of concern about copper wire theft. Of the 45 states and provinces that responded, 31 are experiencing copper theft and 22 said this type of theft was an increasing concern.

We spoke with Jim McDonnell, Program Director for Engineering at AASHTO, and he said the survey results were discussed at the AASHTO Spring Meeting in May 2013. The committees identified a desire to compile a toolbox of best practices that all states could reference, but no formal action was taken. McDonnell says he expects that the issue will be discussed again at meetings of the Subcommittees on Maintenance and Construction this summer.

The survey questions were:

1. Is your state experiencing copper theft from transportation facilities?
2. Are you seeing an increase in this type of theft, and is it a concern for your State DOT?
3. What, if anything, do you think AASHTO could assist with related to this issue?

According to the survey, the extent of the problem seems to vary regionally. The 23 states that said copper theft was *not* an increasing concern (reporting only occasional or isolated thefts) are in the following areas (**bold type** indicates the 14 states who reported not experiencing copper theft at all):

- New England (**Connecticut, Delaware, Massachusetts, Rhode Island, Vermont**) and other Atlantic coastal states (Maryland, **New York, South Carolina**)
- Plains states (**Idaho,** Montana, Nebraska, **North Dakota, South Dakota,** Wyoming)
- Midwestern states (**Illinois**, Indiana, Kentucky, Ohio, **Wisconsin**)
- A few other states: **Alabama, Alaska,** Louisiana, New Mexico, Oklahoma, Oregon

A clear reason for the difference in copper theft rates has not been positively identified, but state DOT staff who offered opinions felt that infrastructure design was probably not a key factor, and our discussion with New York State DOT confirmed that that agency (which has not experienced copper theft) does not have an unusually well fortified system. Those we spoke with us hypothesized that other factors related to crime patterns are more likely to blame, such as unemployment rates. For example, states that experienced the greatest housing booms several years ago may now have higher numbers of unemployed construction workers who are aware of copper's value and are familiar with where and how to get it. Warmer climates may also make this type of crime more attractive year-round.

A 2010 U.S. Department of Energy report (see the **Other Industries** section of this Preliminary Investigation) focused on copper theft from electrical utilities suggested that several factors contribute to copper theft rates, including drug use (particularly crystal methamphetamine), moderate climates, proximity to scrap metal dealers, population density, and unemployment and poverty rates.

Contact: Jim McDonnell, P.E., Program Director, Engineering, (202) 624-5448, jimm@aashto.org.

Strategies for Deterring Theft

The tables below summarize the strategies that have been evaluated or used by state DOTs contacted during this Preliminary Investigation, as well as strategies used by electric utilities and railroads (identified through a literature search). Our contacts for this report provided details on the implementation of some of these strategies, which are included in the **States' Experiences** and **Other Industries** sections of this report.

The Caltrans *Wire Theft Prevention Toolbox*, April 2013, provided a baseline for investigating strategies that may be useful and practical for Caltrans. Those strategies already identified by Caltrans appear in bold in the tables. Following the tables, detail is provided on selected products that were not part of Caltrans' toolbox of strategies.

Strategies Used by DOTs

Strategy	Description	States' Experiences
Pull box cover reinforcements		
Tamper-resistant covers **Pull box inserts with locked covers** **Vandal-proof bolts, security lock system** **Welded traffic-rated pull boxes**	These systems may include thick concrete lids, or steel or plastic lids secured with locks, screws or bolts. The heads of security screws have a unique shape and are designed to be accessible only with a special tool. Pull boxes may also be welded shut.	Most states have used these products. No state reported finding a completely impenetrable system, since experienced thieves may be armed with the same tools that maintenance crews use to access the boxes.
Covering bolts with loop sealant		Investigated by WSDOT task force
Wire restraints		
Copper Keeper	Wire locking device that prevents wires from being easily pulled through conduit. Wires are inserted into the pockets of a rubber stopper, then locked in place in the conduit.	Arizona DOT and WSDOT considered this strategy, but neither tested it. WSDOT felt it wouldn't be cost-effective.
Copper Safe cable restraint system	This cable retainer locks cables in place with a clamping force exceeding 3,500 pounds.	Missouri DOT is considering, but installation is not practical for retrofit situations.

Strategy	Description	States' Experiences
Burying and anchoring pull boxes and wire		
Direct burial with slurry concrete **Encasing conduit in slurry**	Wire is buried directly in the ground rather than in conduit, or conduit is used but is encased in slurry concrete. Both make it more difficult for thieves to quickly pull large amounts of wire out of the ground.	Michigan DOT and WSDOT have considered direct-burying wire. Neither mentioned using slurry concrete.
Burying pull boxes with electronic markers	Pull boxes may be buried several feet below the ground, hidden from thieves and identifiable only with a device that locates the electronic tags they are marked with.	Utah DOT has found this to be effective. Arizona DOT, Michigan DOT and WSDOT have also used this strategy. Disturbing additional ground helps make the burial location less obvious to thieves.
Reinforced concrete pull box skirt with soil anchors	Pull boxes are surrounded with a concrete skirt and anchored to the ground, making it more difficult for thieves to dig them up.	Arizona DOT is testing a similar strategy.
Placing large concrete blocks or barriers over pull boxes	Concrete median barriers or "ecology blocks" are placed on top of pull boxes or ITS systems so that they cannot be accessed without heavy equipment.	Arizona DOT has used this strategy, and Michigan DOT and WSDOT have considered it.
Limiting access points		
Calculating appropriate distances between pull boxes		No state mentioned this strategy, but Arizona DOT mentioned installing additional load centers (see below).
Putting pull boxes in highly visible locations	Pull boxes are located in plain view of the traveling public, as opposed to in hidden locations such as behind sound walls. This deters theft by increasing the risk that thieves will be spotted and apprehended.	Arizona DOT has had success with this method, and is moving to centerline lighting for new installations where possible. WSDOT also recommends this strategy. NYSDOT uses this approach with its transformer bases.

Strategy	Description	States' Experiences
Reducing or eliminating copper in the ground		
Using aluminum wire	Copper wire is replaced with less valuable aluminum wire.	Utah DOT recently began using this method; Michigan DOT and Washington State DOT have begun testing it.
Using IMSA cable	IMSA cable contains up to seven polyethylene-insulated conductors in a PVC jacket; it has a lower copper content than conventional cable.	Arizona DOT has used this type of cable in limited applications (shorter runs, replacing No. 10 copper wire).
Installing additional load centers so that copper runs can be shorter	Load centers are installed more frequently, which allows copper runs to be shorter and to use thinner wire. The shorter runs make it more time-consuming for thieves to steal large quantities of wire, and the thinner wire contains less copper, lowering its resale value.	Arizona DOT has had success with this method.
Using solar-powered devices	Devices are powered through solar power when possible, eliminating the need for copper wire in the ground.	Michigan DOT has considered this for limited applications.
Running ITS wiring overhead		Michigan DOT has considered this method.
Alternative wiring systems		
DOTPLUG pole cable distribution system	Breakaway wiring system that limits thieves' ability to access more valuable copper cable (no hand-hole access).	Louisiana DOTD has reportedly used this method.
Splicing within transformer bases rather than pull boxes	Wire is run through transformer bases at bottom of light poles, with several miles between pull boxes. Potential advantages of this system are unclear, but having transformer bases located in plain view of motorists may be helpful.	New York State DOT uses this design.

Strategy	Description	States' Experiences
Monitoring systems and prosecution aids		
Copper Stopper	See www.thecopperstopper.com	City of Vallejo, California, has had success with this method.
Video surveillance	Often involves motion-detecting cameras monitored by a third-party service.	WSDOT has had success with this method. Missouri DOT has also used this method.
Circuit monitoring systems; ITS network monitoring tools	Monitoring systems alert DOT staff when power has been cut to a specific circuit or system.	Utah DOT, Michigan DOT. Also investigated by Arizona DOT, City of Vallejo, WSDOT. Utah DOT has had some success with this method.
Labeling wire (DataDots, laser etching, labeled insulation, etc.)	Wire is marked with agency name to help identify it as stolen when thieves attempt to sell it; also aids in prosecution.	Mentioned by Michigan DOT, New Jersey DOT and WSDOT.
Limiting hand-hole access (especially for ITS systems)		
Protective covers placed over hand holes Securing hand-hole lids with padlocks, epoxy or welding Filling hand holes with sand or concrete plugs Sealing conduit with expanding foam Airtight "access hatch" Sensor device at each hand hole For hand holes located in ground: Paving over hand holes, or placing heavy loads on top of them	These methods work to limit access to hand holes (usually located on poles) by fortifying the hand-hole lids or blocking access to their contents. Some methods are more appropriate for ITS applications than for lighting. For more information, see Appendix A, a matrix of hand-hole protection methods developed by Michigan DOT's ITS program.	Michigan DOT is exploring these methods.

Strategies from Other Industries

Strategy	Description	Industries/Agencies Using or Evaluating
Tagging wire with agency identification; altering wire		
SmartWater chemical coding technology (SmartWater.com)	Wire tagging system that also marks thieves' skin, hair and clothes, placing them at the crime scene.	Railroads—Great Britain
Labeling wire with identifying information (DataDots, nanotechnology, micro-encryption)	Wire is marked with agency name to help identify it as stolen when thieves attempt to sell it; also aids in prosecution.	Power companies, including Missouri (Independence Power & Light), Kentucky Utilities, Puget Sound Energy
Painting wire	Copper wire is covered with paint to disguise it	Power companies
Physical restraints		
Applying physical restraints such as steel bands or sleeves made of recycled truck tires to copper cable.	Restraints make the cable harder to pull out.	Railroads—Great Britain and South Africa
Alternative wire types		
Steel rods with copper coating	Steel wire coated with copper to lower the resale value.	Power companies, including Sacramento Municipal Utility District, Kentucky (Jackson Energy), Missouri (Independence Power & Light)
"Tiger wire"	Wire that incorporates aluminum or bismuth, rendering it useless for resale.	Railroads—South Africa
Spanish cable	Hardened cable that is very difficult to cut.	Railroads—South Africa
Surveillance and warnings		
Surveillance	Security cameras; also fake cameras	Power companies, including Los Angeles Department of Water and Power
Signage	Installing signs (or adding more signs) such as "No Trespassing" or "Area Under Video Surveillance"	Power companies

Expanding public awareness		
Communicating with public, employees	Raising public awareness of the problem through media advertisements, news conferences, customer newsletters; also communicating with employees.	Power companies
Wire theft hotline with reward payout		Power companies, including consortium of Georgia utilities

Detail on Selected Products

This section provides more detail on selected products used or investigated by the agencies we spoke with.

Wire Restraints

Copper Keeper
http://www.copperkeeper.com/
This wire locking tool consists of a rubber stopper that has four pockets that hold wire in place within a conduit. The manufacturer's website describes how the product works:

> The wires are inserted into the pockets in the rubber stopper. The stopper is then inserted into the conduit. Once in place, the compression bolt is tightened. As the proper torque is approached, the rubber stopper is compressed against the conduit and wires. This prevents the wires from being easily pulled through the conduit, thus "locking" the wires in place. The Copper Keeper has four wire pockets in which wire is to be inserted. A reducing sleeve is provided to accommodate a larger range of wire sizes. If the conduit has fewer wires than stopper pockets, a plug is provided to fill the unused pocket. Multiple small wires—whose combined diameter equals the single conductor—may be retained in a single pocket.
>
> Copper Keepers are installed in each opening of the conduit, the wire is "locked" in place preventing the easy removal. Resistances of over 150 pounds pull can be obtained by the proper installation of Copper Keepers.
>
> The Copper Keeper is designed to allow removal by authorized personnel using a security keyed socket tool.

Pelco Copper Safe Cable Retainer
http://www.pelcocoppersafe.com/
This cable retainer locks cables in place with a clamping force exceeding 3,500 pounds. A conductor guide prevents access to the tool's locking pads from a light pole's hand hole. The company also manufacturers several styles of hand-hole covers.

Alternative Wiring Systems

DOTPLUG Breakaway Wiring System (MG Squared, Inc.)
http://www.dot-plug.com/
Designed to comply with guidelines for reducing electrical hazards during light pole knockdowns outlined in AASHTO's 2001 *Standard Specifications for Highway Signs, Luminaires, and Traffic Signals*, the DOTPLUG breakaway wiring system has the added benefit of deterring copper wire theft from lighting systems where it is installed. When a pole is knocked down, the DOTPLUG system allows the electrified pole cable to unplug within a few inches from the pole foundation, leaving the most valuable No. 4 or No. 6 copper wire and the fuses protected below grade in a nearby junction box. The system's modular parts can be replaced quickly and easily if a knockdown does occur.

- Since all fuses are below grade, no hand-hole access is needed in the pole, **eliminating an access point for thieves.** The most valuable cable is not accessible through the base of the pole.
- The junction box for the system can be reinforced, hidden or protected through standard methods.

- The system represents a safety improvement over old-style fuse holders, which contain 1 to 3 feet of stiff cable that may impede the pole's to ability break away as intended. This can create an electrical hazard during knockdowns.
- **Pilot testing program:** DOTPLUG's manufacturer will supply agencies with six units free of charge to test for a period of time, often six to nine months. At the end of the test period, agencies can either return the units or pay for them and keep them.

Resources:
Animation: PCDS vs. Conventional Wiring Method
http://www.aashtosafe.org/media/animation/pcds_pole_cable_system.html
This page includes two brief animations comparing how the DOTPLUG and conventional wiring react during a pole knockdown.

"PCDS—A Solution to Electrical Hazards and Copper Theft"
http://www.aashtosafe.org/PCDS_thwarts_Copper_Thieves.htm
This article describes how PCDS systems deter copper theft.

Specifications, standard drawings and installation instructions for the DOTPLUG system were provided separately to Caltrans.

Contact: Martin Maners, Vice President & General Counsel, MG Squared, Inc., (205) 823-6688, ext. 25, martin@mgsquared.com.

Maners supplied the following customer reference:

Michael A. Armentor, P.E., Illumination and Facilities Electrical Engineer, Bridge Design, Louisiana DOTD, (225) 379-1088, Michael.Armentor@la.gov

The Copper Stopper
http://www.thecopperstopper.com/

States' Experiences

City of Vallejo, California

The city of Vallejo has had some success using the Copper Stopper, and with using the media to expand public awareness of the copper theft problem so that residents can help spot and report it. This approach has helped disrupt the activities of what City of Vallejo Assistant Superintendent Mike Schreiner suspects are a core group of local thieves. He suggested that this approach may be especially effective in smaller, more contained geographic areas such as a single city.

Most successful approaches

- Using the **Copper Stopper** to catch and arrest thieves.
- **Using the media:**
  - **To publicize arrests** and deter theft
  - **To enhance public awareness** of the problem, mobilizing residents to watch for and report suspicious activities.

Other approaches tried or investigated

- Using a circuit monitoring system.

Resources:

> **"Copper Theft Technology Used to Thwart Crime Bonanza,"** *Contra Costa Times,* March 17, 2013.
> http://www.contracostatimes.com/contra-costa-times/ci_22812511/copper-theft-technology-used-thwart-crime-bonanza
> This newspaper article describes the arrest of a suspected copper thief in Vallejo, and outlines the approaches Vallejo and other California cities have taken to combat the problem.

Contact: Mike Schreiner, City of Vallejo Assistant Maintenance Superintendent, Streets & Traffic, (707) 648-4319, mikes@ci.vallejo.ca.us.

Arizona DOT

ADOT has been working to combat copper wire theft since the mid-2000s, and the department sponsored a research project on strategies for reducing copper theft that concluded in 2009 (see "Resources" below). The project did not succeed in recommending new, implementable solutions, but staff said it fed into ADOT's overall efforts to research strategies used by other states. We spoke with Chuck McClatchey, ADOT Electrical Operations Superintendent, who served on the project panel for the study.

McClatchey said ADOT has used a range of approaches to address different system configurations, and noted that as ADOT has made wire more secure in one area, thieves have adjusted to target the system's weakest points. He said Arizona's laws restricting scrap metal sales have not been successful in deterring theft.

Most successful approaches

- **Installing additional load centers** so that copper wire runs can be kept fairly short and thinner wire can be used. This reduces the amount of copper in the ground and makes it more difficult for thieves to pull out large amounts of wire at one time. Using thinner wire also means that ADOT can pull replacement wire in if necessary using in-house crews, rather than having to hire a contractor that has the specialized equipment needed to pull thicker wire.
- **Using centerline lighting** rather than shoulder lighting where possible in new construction in urban areas to limit the accessibility of the wire. Lights are mounted on the concrete barrier, and wire access points are located along the centerline barrier, so that traffic must be blocked off in order to access the wire. ADOT's biggest challenge has been deterring theft in areas where pull boxes are hidden from view, such as behind sound walls, so the centerline lighting addresses this problem.

McClatchey said these approaches have been successful in substantially reducing theft from ADOT's ITS system, but noted that the lighting system was more challenging to protect because of the number of lights and the fact that most are already installed.

Currently deploying and evaluating

- **Tamper-resistant pull boxes and locking lids:** The walls of these pull boxes are made of reinforced concrete that is 2 to 3 inches thick, and they have an adjustable metal lid that resists being pried off. The reinforced pull boxes are twice the cost of regular pull boxes.

  McClatchey says ADOT hasn't had any problems with the pull boxes themselves, but has had a few issues with the new lids, and has worked with vendors to adjust the design. ADOT has tested about three types of lids, and each design update has been an improvement, but it is still a work in progress. McClatchey says the lids have been somewhat effective where they have been installed, but that thieves have then targeted areas without the lids instead. He notes that these strategies are less effective in areas where the pull boxes are hidden from view.
- **Larger pull boxes** (No. 5 or 7 with an extension) with a 4-inch lip on the bottom that is buried. This design deters thieves from digging down the side and accessing the pull box.

McClatchey offered to talk with Caltrans in a couple of months once ADOT has finalized design adjustments and has more data on these methods' effectiveness at deterring theft. He noted that the new pull boxes can be used in retrofit situations as well as new construction. He said ADOT's maintenance and repair contracts allow for installation of new pull box designs on the lighting system if needed.

Other approaches used or investigated

- **Using IMSA cable** (up to seven polyethylene-insulated conductors in a PVC jacket), which has a lower copper content than conventional cable: McClatchey says this method has been effective but that it has limited applications, mostly short runs that use thinner wire (about No. 10 size).
- **Burying pull boxes**.
- **Pouring concrete** into pull boxes.
- **Putting concrete barriers** on top of pull boxes.
- **Circuit monitoring system:** ADOT felt this would not be cost-effective, noting that local law enforcement has limited resources and would not be able to make responding to the system's calls a high priority.
- **Copper Keeper:** Although this tool was recommended by the researchers who conducted ADOT's 2009 research project in this area (see below), ADOT has not tried the Copper Keeper because staff felt the cost and management requirements would be too great.

Resources:

Options for Reducing Copper Theft, Report 657, Arizona DOT, October 2009.
http://www.azdot.gov/TPD/ATRC/publications/project_reports/PDF/AZ657.pdf
This project examined the scope of copper wire theft and investigated countermeasures. Researchers recommended that ADOT (1) work with a private investigation firm and consultants to periodically review and amend theft-deterring strategies, (2) monitor the development of methods used by other organizations, and (3) use the Copper Keeper to lock wire in place.

We spoke with Frank Di Bugnara, project manager for ADOT's research program, about the project. He said the ADOT project panel was disappointed that the project did not identify and recommend more practical, implementable strategies, and said ADOT did not change its approaches based on the study's results.

Contact: Chuck McClatchey, Electrical Operations Superintendent, ADOT, (602) 908-9164 (cell phone), cemcclatchey@azdot.gov; Frank Di Bugnara, P.E., Research Project Manager, Arizona Transportation Research Center, (602) 712-3137, FDiBugnara@azdot.gov.

Michigan DOT

Copper wire theft is a "huge problem" for MDOT, according to the department's response to the AASHTO survey. MDOT has developed a Copper Theft Matrix (see Appendix A) that describes 13 strategies for deterring copper theft, with a specific focus on the department's ITS system. We spoke with MDOT ITS Engineer Michele Mueller, who said the department has had some successes but has not found any one method that deters theft in all situations.

MDOT has had considerable problems with thieves accessing ITS wiring through hand-holes in poles, so many of the solutions in MDOT's matrix focus on limiting access to hand-holes.

Approaches MDOT has used or investigated

- **Securing hand-holes** with padlocks, epoxy, or welding.
- **Burying ITS system components** beneath dirt and grass. However, in one case, thieves saw the disturbed dirt and dug the system up the next day.
- **Filling hand-holes** with sand or a concrete plug. However, this makes maintenance more challenging, and there is the risk of sand getting into sensitive system parts.
- **Using an airtight hand-hole access hatch** similar to on a submarine.
- **Placing a heavy load** on top of hand-holes located in the right of way.
- **Paving over hand-holes with asphalt** (for equipment located in the roadway shoulder).
- **Sealing conduit with expanding foam.**
- **Direct burial of aluminum wire.**
- **Installing a sensor device** at each hand-hole.
- **Working with law enforcement to stake out theft-prone areas**. However, this generally requires more resources than the DOT or law enforcement agencies have available.
- **Using an ITS network monitoring tool** (MDOT uses SolarWinds; http://www.solarwinds.com/) that alerts staff if power is lost. The system was installed to capture other information, such as bandwidth usage, and to allow remote programming of system components, but it is also useful for identifying immediately when wire has been cut. Depending on the location, staff may be able

to view the site on MDOT's network of closed-circuit videocameras and react quickly to a new theft. However, Mueller noted that the cameras are less effective in the dark once a circuit has been cut.

- Changing specifications so that some MDOT property is **marked with the agency name**. (For example, cast iron drainage structure covers have been stolen in the past, so new covers will include identification when they are cast.) Mueller noted that some agencies label their wire insulation with identification, but since thieves strip the insulation off the wire before they take it to a scrap metal recycler, this is only useful if the thieves are caught before they strip the wire.
- **Running lines overhead.**
- **Using solar power** for devices that can be powered that way.
- Working to make scrap metal recycling laws more restrictive.

Resources:

Copper Theft: Possible Solutions, MDOT ITS Program.
See Appendix A.
This matrix describes 13 strategies for preventing copper wire theft, specifically focused on wire theft from ITS systems.

Contact: Michele Mueller, Senior Project Manager, ITS Engineer, Michigan DOT, (313) 256-9803, muellerm@michigan.gov.

Missouri DOT

According to Laurel McKean, District Traffic Engineer at Missouri DOT, MoDOT has not been very successful in deterring copper wire theft. The department has tried the following methods:

- **Installing motion-detecting cameras** in areas where theft has occurred repeatedly (contracting with a monitoring company that alerts police when a theft is in progress).
- **Using steel pull boxes** on high-risk bridges, and considering replacing PVC conduit on bridges with steel conduit.

In addition, McKean says MoDOT has investigated Pelco's Copper Safe cable retainer system (http://www.pelcocoppersafe.com/) or a similar product, which clamps and locks cables in place. McKean says that Kansas City, Missouri, uses this type of system, but MoDOT has not yet tried it because retrofitting existing structures requires pulling the light pole off its base to install the product, which is time-consuming and only stops one break-in point.

Contact: Laurel A. McKean, P.E., District Traffic Engineer, Missouri DOT, (816) 607-2107, Laurel.McKean@modot.mo.gov.

New Jersey DOT

New Jersey DOT sponsored a research project to identify methods for locking junction box covers that concluded in 2009 (see "Resources" below). The researchers determined that a customized solution was necessary and developed three options for different applications. However, the options involved installing new screws or bolts into the department's cast iron junction box frames, which was not practical for

retrofit situations since cast iron is very difficult to drill. We spoke with Dan Black of NJDOT's Bureau of Roadway Maintenance, Engineering & Operations, about the strategies the department has used.

Most successful approaches

- **Tack welding** the cast iron pull box lids to the steel frames. Soon after a tack welding test project was completed in one city, thieves stole over 100,000 feet of lighting wire from nearby boxes that were not welded shut.

Currently in testing

- Replacing cast iron pull box lids with 1-inch-thick **plastic lids** that will be attached to the steel frames with tamper-resistant screws or bolts. (See Appendix B for details.) NJDOT is working with vendors to adjust the lid designs as needed.

Other approaches investigated

- **Laser-etching owner identification** information onto the wire: NJDOT determined that this strategy would be cost-prohibitive.
- **Locking pull box design** used by Iowa DOT and recommended by the researchers who conducted NJDOT's 2009 project (see below; Appendix A of NJDOT's final report). This strategy has not been used in New Jersey; Black noted that the design had moving parts that could be compromised by grit from the roadway.

Resources:

Research and Develop Locking Design for NJDOT Junction Boxes, New Jersey DOT, April 2009.
http://www.nj.gov/transportation/refdata/research/reports/FHWA-NJ-2008-015.pdf
Abstract: The report outlines the guidelines for securing electrical junction box covers to the junction box to prevent vandalism. The report provides detailed drawings that show various methods for securing the junction box cover to the junction box.

Standard Electrical Detail, NJDOT
See Appendix B.
These standard details show a schematic of NJDOT's standard 18-by-36-inch junction box. The following pages show a local vendor's submittals for plastic lids for the boxes.

Contact: Dan Black, Bureau of Roadway Maintenance Engineering & Operations, (609) 530-5383, dan.black@dot.state.nj.us.

New York State DOT

New York State has not encountered significant issues with copper wire theft. We spoke with Emilio Sosa, Director of Traffic Operations for NYSDOT's Region 10, to get his perspective on why.

Sosa says NYSDOT does not use pull boxes on its lighting system; instead wire is run into a transformer base at the bottom of the light pole. Pull boxes are located next to the master controllers, with several miles between each pull box on a limited-access highway. The transformer bases have access panels that can be opened with a pentagonal key or wrench that Sosa said would be relatively easy for a thief to obtain, so Sosa believes other factors probably explain why NYSDOT does not experience this type of crime. He suggested a few possibilities:

- The transformer bases are located in plain sight on busy roads.
- The transformer bases may be perceived as carrying a greater risk of electrocution than pull boxes.
- Regional factors such as differing unemployment levels may be involved.

Sosa offered to send examples of NYSDOT's transformer base design from a recent project, which he needed time to compile; we will forward those when we receive them.

Contact: Emilio Sosa, Director of Traffic Operations, NYSDOT Region 10, (631) 904-3014, emilio.sosa@dot.ny.gov

Utah DOT

Utah DOT experienced its largest ever single copper wire theft in late March 2013—more than 30,000 feet of wire along Interstate 15 that will cost the department $50,000 to replace (see http://www.sltrib.com/sltrib/news/56091816-78/thieves-gleason-wire-udot.html.csp). We spoke with Traffic Lighting Engineer Richard Hibbard, who described UDOT's experience using multiple strategies to deter copper wire theft.

Most successful approaches

- **Burying pull boxes with electronic markers:** This strategy has been effective for UDOT.
- **Filling pull boxes with concrete:** This has been effective on polymer concrete boxes that have a concrete collar. UDOT fills the boxes with crushed rock and then adds a 6-inch concrete cap (about 3,000 to 4,000 psi concrete). On the department's older plastic boxes, UDOT has installed rebar in the concrete to make it more difficult for thieves to break the concrete into chunks and remove it. However, this limits the department's access to the box.
- **Using a circuit monitoring system:** UDOT is testing the use of a monitoring system that alerts the department when power has been cut. The department responds quickly to repair the damage, which lets thieves know the area is being watched. Sometimes a highway patrol unit is able to respond immediately. If thieves begin the process of removing the wire on one night and trigger the monitoring system, UDOT tries to repair the damage before the next night, which sometimes scares thieves off. UDOT is testing a Philips system; the department also investigated Holophane's Roam system (http://www.holophane.com/roam/) but determined that the Philips system was a better fit for its needs.
    - **Using LED lighting** can serve a similar purpose. Because LED lights are long-lasting and aren't subject to other issues that can cause a traditional high-pressure sodium (HPS) light to go dark, if an LED light is observed to be burned out, wires have likely been cut.

Currently deploying and evaluating

- **Installing locking steel lids,** some with tamper-resistant bolts: UDOT is currently investigating this strategy for areas where it is less convenient to apply concrete, such as on boxes located along highway centerlines. UDOT is investigating lids made by M.R. Steel in Phoenix (http://www.mrsteel.com/security-lids.html). Hibbard noted that the city of Sacramento reportedly uses these lids as well.
- **Replacing stolen copper wire with aluminum:** UDOT has recently begun taking this approach. To deter theft, crews use a permanent marker to write on the pull box cover that the wires inside are aluminum, and zip-tag the wires themselves with "AL" labels. Hibbard says "the key is that

you can't lie" on the pull box labels, or thieves will learn not to trust them. Hibbard notes that aluminum wire requires consideration of how terminations are handled to prevent oxidation, and that grounding and bonding are issues. UDOT is considering using aluminum for the runs but using a short length of copper wire from the pole to the junction box. Hibbard also notes that a larger gauge of aluminum wire must be used to replace copper wire, but says UDOT hasn't had a problem so far with the wire taking up too much space.

Resources:

"Copper Wire Theft," UDOT Transportation Blog entry, February 12, 2013.
http://blog.udot.utah.gov/2013/02/copper-wire-theft/
This blog entry describes several strategies UDOT has used to deter theft.

Contact: Richard Hibbard, P.E., Traffic Lighting Engineer, Utah DOT, (801) 965-4171, rhibbard@utah.gov.

Washington State DOT

In response to increasing copper wire theft in the mid-2000s, WSDOT developed a Wire Theft Task Force that recommended a range of strategies to deter theft, including design changes as well as initiatives involving legislation, enforcement and public awareness. Ted Bailey, who chaired the task force, shared both a big-picture perspective and detail on specific strategies.

Recommendations and lessons learned:

- Bailey recommends that **measures to deter copper theft be considered as part of an overall asset management program.** A cost-benefit analysis should weigh the expected benefit in reduced theft against the cost to purchase and install the countermeasures, the cost of any increased maintenance time (such as extra time required to access protected pull boxes), and other relevant factors.
    - Installing locking bolts on pull boxes is a good first-line safety and security measure that is relatively inexpensive. The decision to install more extensive systems should be based on other factors besides theft prevention; for example, installing a circuit monitoring system for its asset management benefits, or direct-burying wire without conduit in some locations as a cost-saving measure (since the cost of the conduit is eliminated).
    - Bailey suggested that a goal of keeping theft at an acceptable level may be more realistic than a zero-theft goal.
- In WSDOT's experience, local jurisdictions often have not had the resources to make prosecuting copper wire thefts a priority, even when evidence is likely to lead to a conviction. To help address this, Bailey said proposed legislation in Washington state would assign a surcharge or licensing fee to copper recyclers, creating a pool of funds that could only be used to investigate, apprehend and prosecute copper thieves.
- The incidence of copper wire theft rises and falls with copper commodity prices. WSDOT was poised to more aggressively evaluate several theft countermeasures in 2008-2009, but then copper prices fell and the theft problem disappeared until 2011.
    - When copper prices are high, thieves include organized crime rings that ship the copper overseas. Because the copper is recycled internationally, these crime rings are not affected by laws that govern local recycling agencies.

Strategies:

Most successful approaches

- Using a third-party **video monitoring system** in key locations where theft has been a problem. Thieves have been observed beginning to tamper with the wire, then spotting the camera and leaving the area. The monitoring service communicates thefts immediately to law enforcement. WSDOT continues to look for other opportunities to add these "video-verified theft" motion detection cameras in theft-prone areas (such as where a high transient population exists or where junction boxes are hidden from view by a sound wall).
- Locating new junction boxes in locations that are **visible to the public, and limiting access points**.
- Creating a **wire theft hotline** that the public can call if they have information about wire thefts. Bailey noted that a reward can be used as an incentive for tips that lead to arrest and conviction of thieves. Bailey believes a hotline is likely to be more effective than public awareness efforts alone.

Other approaches used or investigated

Design strategies

- Modifying WSDOT's standard plans to include a **locking bolt** between the junction box lid and frame. Standard plans are available at http://www.wsdot.wa.gov/Design/Standards/Plans.htm#SectionJ, including locking lid junction boxes in section J-40.
- Covering junction box lid bolts with **loop sealant**.
- Securing previously unlocked pull boxes with customized **security screws**.
- **Welding** access points shut.
- Installing locking mechanisms over **hand-hole access points.**
- **Burying junction boxes** in high-risk locations.
- Using **aluminum wire** instead of copper.
- Putting **"ecology blocks"** cast from leftover concrete on top of pull boxes. Bailey estimated the blocks are 2 by 2 by 4 feet long, and heavy enough that even a few people working together cannot push them aside. Bailey said WSDOT would likely consider using this method only to protect a very expensive unit, such as a fiber-optic system.
- **Copper Keeper:** WSDOT felt that installing this product would not be cost-effective.
- **Direct-burying wire** in some locations, using armored cable rather than pulling wire through conduit. WSDOT has not used this strategy because the lack of conduit would make system expansion much more time-consuming; Bailey also mentioned more minor concerns about rock and ground movement that could potentially pinch or damage the direct-buried wires.

Monitoring, prosecution and public awareness strategies

- Installing **current/conductor monitoring devices.**
- Using **DataDots** (www.datadotdna.com) to label the wire with the owner's name. Bailey noted that jurisdictions' lack of willingness to prosecute copper theft limits this method's effectiveness for WSDOT.
    - **Labeling wire insulation** with the agency's name, or selecting a unique color to help identify ownership.

- **Public outreach** and communication.

Resources:

- Wire Theft Task Force team meeting presentation, February 2009 (provided separately to Caltrans).

- *Wire Thefts Statewide* brochure, September 2008. See Appendix D.
  This WSDOT brochure is aimed at increasing public awareness of copper theft, WSDOT's approaches to deterring it, and the wire theft hotline.

Contact: Ted Bailey, P.E., Signals, Illumination & ITS Engineer, Washington State DOT, (360) 705-7286, baileyte@wsdot.wa.gov.

Other Industries

Our literature search identified several publications on strategies used to deter copper theft from power utilities and from railroad systems, both domestically and internationally. The documents in this section are a representative sample of the resources available on this subject.

Utility Companies

Power companies take many measures to deter copper theft. Those strategies that could be used by DOTs are listed in the summaries below, while strategies specific to power companies are omitted (for example, surrounding substations with barbed wire fencing).

An Updated Assessment of Copper Wire Thefts from Electric Utilities, U.S. Department of Energy, October 2010.
http://www.oe.netl.doe.gov/docs/Updated%20Assessment-Copper-Final-101210%20c.pdf
This report updates a 2007 report on the same subject (see below). Most of the strategies in this report's discussion of mitigation (see page 8) are specific to utility substations. More general strategies include:

- **Using nanotechnology or "micro-encryption"** to mark wire.
- **Painting wires to disguise them** and make them less marketable.
- **Using alternative to copper**, such as copper weld.

The report also discusses regional trends in copper theft. From page 6 of the report:

> Reports of copper theft have been most prevalent in California and Florida, but have also been significant in Ohio, Alabama, Pennsylvania, Michigan, New York, Texas, and Tennessee. Several factors appear to contribute to rates of copper theft. Drug use (particularly crystal methamphetamine), moderate climates, proximity to scrap metal dealers (willing to buy), population density, unemployment, and poverty have been important factors contributing to increased copper wire theft. While many of these factors exist to some degree in each of the States, more of these factors are evident in California, the State with the highest total of copper thefts reported. The greatest number of copper thefts was reported in California in four out of the past five years. Florida had the greatest number of media reports of copper theft in 2009.

Related resources:

> **An Assessment of Copper Wire Thefts from Electric Utilities,** U.S. Department of Energy, April 2007.
> www.oe.netl.doe.gov/docs/copper042707.pdf
> This 2007 report is similar in scope to the 2010 update summarized above. Tables 3 and 4 on pages 13 and 14 of this report provide lists of countermeasures used or considered by utility companies.

"Preventing Copper Thievery," *Public Power,* November–December 2012.
http://www.publicpower.org/Media/magazine/ArticleDetail.cfm?ItemNumber=36171
This article in the magazine of the American Public Power Association describes utilities' responses to copper theft, including:

- Installing security cameras and fake cameras.
- Additional signage ("No Trespassing," "Area Under Video Surveillance," etc.).
- Alarm systems.
- Replacing copper ground wire with copper-clad steel rods.
- Marking copper/painted copper grounds.

- Branding wire with DataDots.
- Communicating with their employees about the problems.
- Communicating directly with the public about the dangers and costs associated with copper theft.
- Establishing a wire theft hotline and a website where the public can report any information they have about wire thefts.
- Establishing an incident tracking system.

"Power Companies Take Steps to Stop Copper Theft," WKYT.com, undated.
www.wkyt.com/news/headlines/19875549.html
This article describes the efforts of Jackson Energy in Kentucky to deter theft by replacing copper wire with copper-coated steel, lowering its resale value.

Railroads

"The Red Gold Rush," *International Railway Journal (IRJ),* January 2012, pages 18 to 19.
http://www.nxtbook.com/nxtbooks/sb/irj0112/
This article about copper wire theft on railways in Europe describes several theft deterrents:

- Using **SmartWater chemical coding technology** to tag the wire. SmartWater also marks thieves' skin, hair and clothes, placing them at the crime scene.
- **Applying steel bands to copper cable** to make the cable harder to pull out.
- Using **Spanish cable,** a hardened cable that is very difficult to cut, in key theft-prone areas. Fiber optic cable has also been used.

"Can We Protect Our Trains from Copper Thieves?" *Mobility,* August 2011, pages 50 to 53.
Citation at http://trid.trb.org/view.aspx?id=1136977
This article focuses on copper cable theft from railways in South Africa, describing countermeasures including:

- The use of **"tiger wire" that incorporates aluminum or bismuth** into the cable, rendering it useless for resale.
- Applying **physical restraints**, such as sleeves of recycled truck tires, to wire.
- Tagging cables with **microscopic identification dots.**

"Chemical Romance," *Rail Professional,* July 2010.
http://www.railpro.co.uk/magazine/?idArticles=277
This article describes how British railroads are using SmartWater chemical coding technology to deter theft. From the abstract:

> SmartWater consists of a liquid containing a special code that can be read under ultraviolet light. The liquid comes in variants that together allow millions of different chemical 'signatures' similar to DNA. Like DNA, only a small amount is needed to identify the code. SmartWater is almost impossible to remove and has been independently tested to withstand burning. Almost anything recovered that has been marked with SmartWater can be traced back to the place where it was stolen. If the thief gets the stuff on their hands, they can still be linked with the crime even if they have already sold the item.
>
> Currently the subject of a major trial in the West Midlands, the plan is to roll SmartWater out in other cable theft hotspots. Trackside cable is sprayed with SmartWater and every kilometer of cable will be marked with a different code, so that police can pinpoint the exact location from where it was taken. British Transport Police is working with local scrap dealers and recyclers who are checking metals for traces of SmartWater before processing. If found, they will refuse to handle it and inform the appropriate authorities. SmartWater has already been successfully tested in other theft prevention

applications. To date more than 600 criminal convictions have been secured through SmartWater. Findings of a recent study into crime deterrents show SmartWater as being more effective than security guards, burglar alarms and CCTV. Simply displaying signs that goods and premises are protected by SmartWater appears to be sufficient in deterring most criminals.

COPPER THEFT: Possible Solutions

OPTIONS	KEY POINTS	PROS	CONS
Option 1: Locking Handhole from Presentation	- $700+ / hand hole - Need to purchase the units and the padlocks separately - Padlocks would be specially keyed for ITS locations	- Appearance should provide a deterrent for thefts -Medium cost	- Cable system can be cut with bold cutters - Padlock can be cut - Could drill through top to access - If not installed correctly they won't work
Option 2: Access Hatch like for a Submarine	- Provides a solid barrier with nothing to cut to access - Airtight (we use for pump house applications currently) - Cost approx $12,000 per lid	- Thieves would not be able to access - Gear system contained in handhole; provides additional security	- Needs to be manufactured to fit our hand holes - Very costly per location - Need special tool; would have to give to contractors -High Cost -Low Impact to Maintenance
Option 3: Epoxy on Handhole lid	- Epoxy applied to adhere the lid to the base so it can't be removed - Cost to apply $ - Cost to release $	- Would seal lid to the base; prevent thieves from opening	- Time consuming to install and open - To release Epoxy bond need to heat the metal to 160 degrees - Not viable during construction due to having to access during project. -High Impact to Maintenance
Option 4: Welding Handhole Lid Shut	- The handhole lid would be welded to the base - Cost to weld $ - Cost to release weld $	- Weld would bond the lid to the base	- If not welded correctly bond will not hold; have to do cast iron weld - Performed this on I-94; thieves broke into the next day - Time consuming to work way around the hand hole to weld it - Not viable during construction as it needs to be accessible.
Option 5: Concrete Plug into Hand Hole	- Cost to make and install concrete plug $ - Would weigh approx 600 lbs - Would fit inside hand hole and hide stuff inside - Would have rebar cast in to be able to pick it up	- Thieves couldn't lift it out even if there was three of them with a lever system - MSP liked the idea and thought it would work - Easy to install - Concrete is easy thing to make - Reuseable	- Heavy; need to use a wench or lifting system on a truck to pull it out to access - Makes maintenance difficult
Option 6: Heavy Load on Top of Cover	- Would set on top of casting - Cost of Concrete Piece $	- Heavy - Easy to install	- Being above the grade of casting which would create an issue with mowing - Hides in tall grass - Could be moved if had the right tools since it can be slid off

COPPER THEFT: Possible Solutions

OPTIONS	KEY POINTS	PROS	CONS
Option 7: Asphalt Over the Top of the Handholes in the Roadway Shoulder	- Handhole top would be placed and asphalt cold patch material placed over the top. - Cost of Asphalt overlay $ - Cost to dig it up $	- Would not be visible to the thieves	-Wouldn't be visible to anyone -Would need to dig up the asphalt when need to work in hand hole - Would have to insure the height is correct so there is not a "ramp" in the roadway. -Would have to re-do every time a handhole had to be opened
Option 8: Aluminum wire via direct burial	- Cost for direct burial vs conduit install method currently use $ - Aluminum would be used in lieu of copper	- Aluminum not as valuable for scrap as copper is	- Aluminum is hard to work with - Need to insure there is a good sand base - Already extensive conduit installed, would be mix up system
Option 9: Solar Powered Locations	- Solar panels would be installed at each device location - Cost of solar panel device $	- Would not need power from power companies	- Not enough power from the solar devices to power the CCTV devices - Michigan, as a State, is not solar power friendly
Option 10: Sensor Device for Hand Holes	- Cost of sensor device $10 - Cost to install device $	- Easy to install - Can use communication to send the alarm to the operations center - Silent alarm	- Need to install and hook to communications - Would have to be powered by itself in case the power got cut - Each handhole would need to be powered - High cost to bring power to each handhole
Option 11: Fill Handhole with sand	- Would cover the items in the hand hole so they can't be seen	- Easy to put sand in the handhole - Low cost	- Sand is everywhere so need to seal the conduits inside the manhole - Would have to rent a vac truck to get sand out when need to work - Would have to buy sand and put back in hand hole everytime you work there - Not condusive for during construction
Option 12: Run Lines Overhead	- Lines would be run overhead in lieu of running underground	- Would be up in the air	- Still accessible (DTE aerial is getting stolen also) - ITS Maintenance would be overhead now in lieu of underground. - Whole new infrastructure, miss matching the existing system

COPPER THEFT: Possible Solutions

OPTIONS	KEY POINTS	PROS	CONS
Option 13: Sealing up conduit	-Use expanding foam to fill conduit entry points	-Low cost -Hides wires	-Can easily be cut

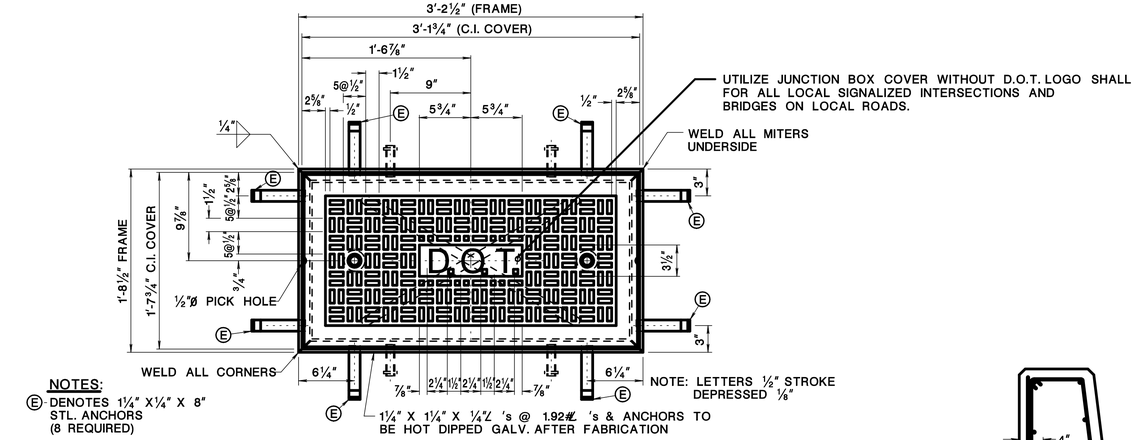

NOTES:

(E) DENOTES 1¼" X ¼" X 8" STL. ANCHORS (8 REQUIRED)

FRAME AND ANCHORS SHALL BE STRUCTURAL STEEL

PLAN-FRAME AND COVER FOR 18" X 36" JUNCTION BOX

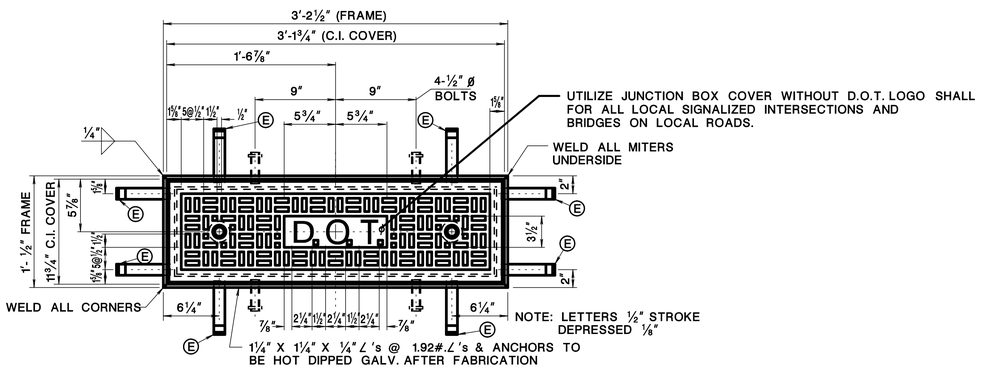

PLAN-FRAME AND COVER FOR 10" X 36" JUNCTION BOX

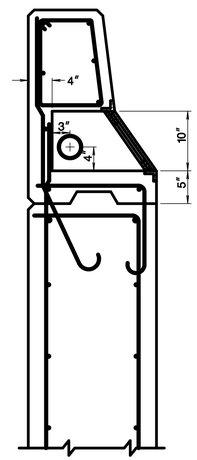

CROSS SECTION

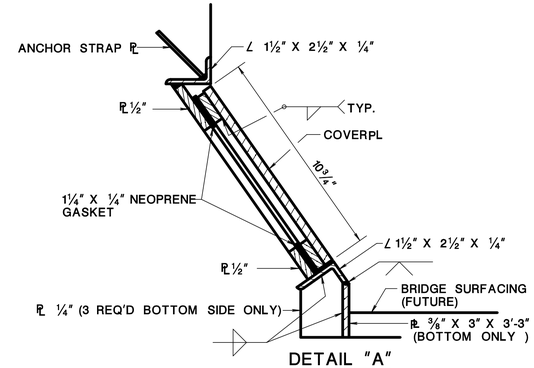

DETAIL "A"

NOTES:

1. BOLT LOCATION ARE SYMMETRICAL ABOUT CENTER LINES.
2. NEOPRENE GASKET SHALL BE CONTINUOUS AND SINGLE PIECE.
3. ALL WELDS SHALL BE ⅜" CONTINUOUS WELDS.

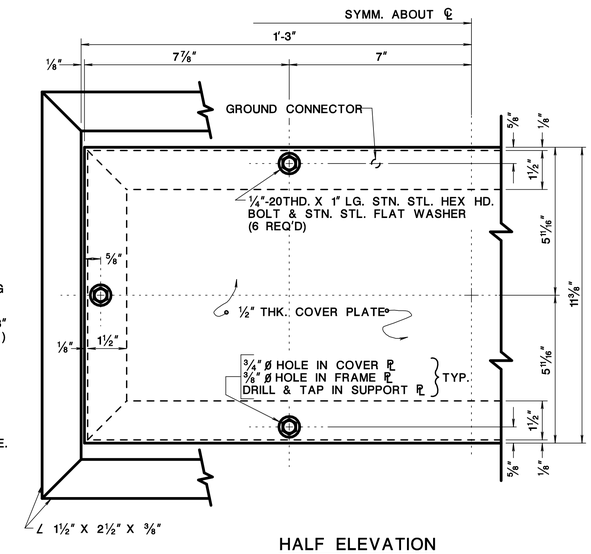

HALF ELEVATION JUNCTION BOX COVER

NOTE:

1. MATERIAL-ASTM A36-HOT DIP GALVANIZED AFTER FABRICATION.
2. FOR LIGHTING BOSS DETAILS SEE BRIDGE PLANS.

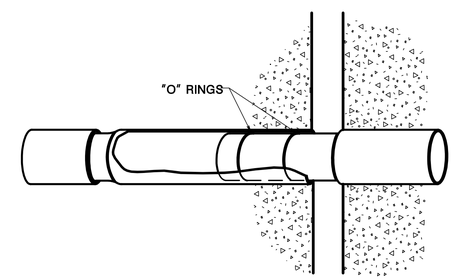

TYPICAL RIGID NON-METALLIC EXPANSION FITTING

NOTES:

1. EXPANSION FITTING TO BE INSTALLED AT ALL EXPANSION JOINTS.
2. EXPANSION FITTING TO BE WEATHERPROOF WITH 6" MIN. MOVEMENT.
3. EXPANSION FITTING SHALL BE INSTALLED ACCORDING TO MANUFACTURER'S SPECIFICATIONS.

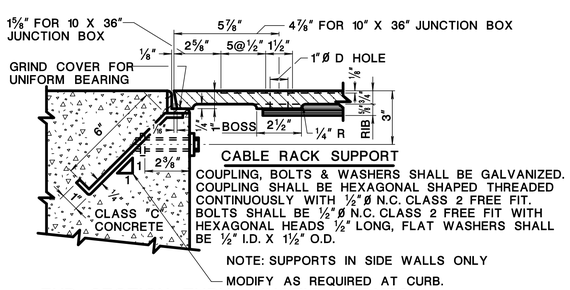

CABLE RACK SUPPORT

COUPLING, BOLTS & WASHERS SHALL BE GALVANIZED. COUPLING SHALL BE HEXAGONAL SHAPED THREADED CONTINUOUSLY WITH ½"ø N.C. CLASS 2 FREE FIT. BOLTS SHALL BE ½"ø N.C. CLASS 2 FREE FIT WITH HEXAGONAL HEADS ½" LONG, FLAT WASHERS SHALL BE ½" I.D. X 1½" O.D.

NOTE: SUPPORTS IN SIDE WALLS ONLY

MODIFY AS REQUIRED AT CURB.

END SECTION THRU JUNCTION BOXES

18" X 36" SHOWN. 10" X 36" SIMILAR EXCEPT AS NOTED

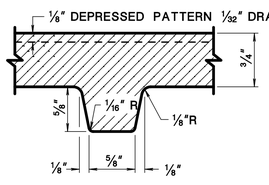

SECTION RIB

CONSTRUCTION REQUIREMENTS

1. UTILIZE RIGID METALLIC CONDUIT UNLESS OTHERWISE SPECIFIED.
2. INSTALL CONDUITS PITCHED TO DRAIN AT OPEN ENDS OR AT "T" DRAINS AS SHOWN ON DRAWING OR AS SET FORTH IN THE SPECIFICATIONS OR AS DIRECTED BY THE DEPARTMENT.
3. A NYLON CORD 500 LB. MIN. TEST SHALL BE INSTALLED IN ALL CONDUITS.
4. INSTALLATION SHALL CONFORM WITH APPLICABLE REQUIREMENT OF N.E.C. AND LOCAL UTILITY COMPANY

PAINTING REQUIREMENTS

JUNCTION BOX FRAME AND COVER SHALL BE PAINTED AS SPECIFIED FOR STRUCTURAL STEEL EXCEPT THAT THE FINAL FIELD COAT SHALL MATCH THE COLOR OF THE ADJACENT CONCRETE.

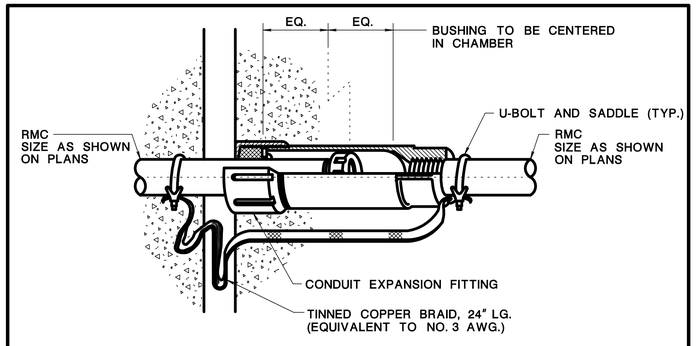

TYPICAL DETAIL CONDUIT EXPANSION FITTING

NOTES:

1. EXPANSION FITTING TO BE INSTALLED AT ALL EXPANSION JOINTS.
2. RIGID METALLIC CONDUIT AND FITTING SHALL BE HOT-DIPPED GALVANIZED.
3. EXPANSION FITTING TO BE WEATHERPROOF WITH 4" MIN. MOVEMENT.

NEW JERSEY DEPARTMENT OF TRANSPORTATION

ELECTRICAL DETAILS

N.T.S.

BRIDGE DETAILS

L-1107

REFERENCE

BDC07D-03

Theft Proof Lectri-Lids™ - Only $99

Quantum Engineering

27520 E. Savannah Trail Lake Barrington, IL 60010 Call Jason For Details
Ph: 847-951-7686 Fx: 847-381-7406 E: QNTMENG@AOL.COM

Summer Special LL-13X24 Cover
3 Covers for only $299 (plus S&H)
(Includes - 2 Free Lift Kit Handles)

20k Load, Steel Center Plate, Theft Proof Fasteners
Premium Quality, Precision Engineered, Theft Resistant

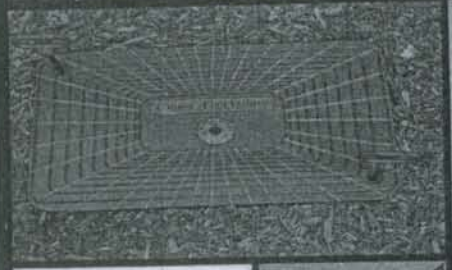

Precision Engineered
Factory Direct
Made In USA
We Accept

Capacity Rating
All Covers 20,000 lbs.
25,000 lbs. Available

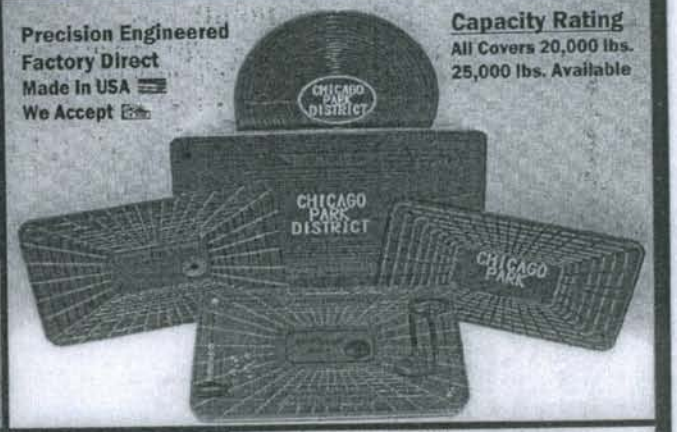

Theft Proof Hardware
Dual Locks - Add $25
Includes Key + 2 Fasteners
Four Corner Locks - Add $40
Incl. Keyed Lag Bolts, Drill-bit

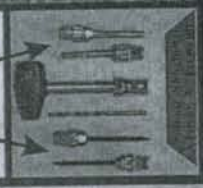

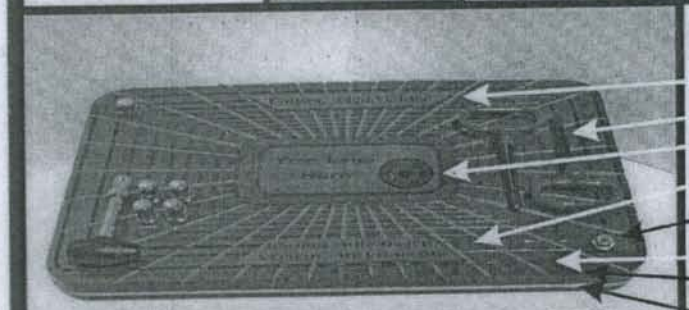

Lectri-Lid (Shown- Model LL-13X24)

Lectri-Lid™ Features

- Warning - Danger High Voltage
- Lift Kit - Free On 10 Pc. Order
- City Logo (One Time $70 Setup)
- Warning- Wire Theft's a Felony
- Key Locks - Two (2) Per Cover
- Sur-Grip™ Top Tread Surface
- Wear Resistant Top-Plate
- 1/8 Inch Steel Centerplate

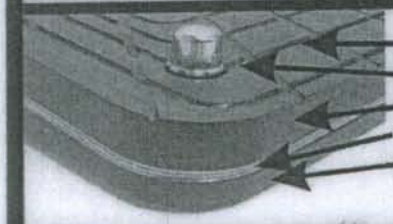

- Sur-Grip™ Tread Surface
- Theft Proof Locks (add $20)
- High Impact PVC Top-Plate
- 1/8 In. Steel Centerplate
- ½ in. Insulating Base Plate

All Lids Rated 20,000 lbs.

Critter Ridder™ Port
Protect Crews From The Unexpected!

Models Available

Size (in.)	Quantum#	Replaces:	Quazite#	Synertech#
17 X 30	LL-17X30		PG1730 & Px1730	S1730HBBOA
18 X 19	LL-18X19		Pg1730	----------
13 X 24	LL-13X24	3/4 in. Thick, Xtra Steel	Pg1324	S1324HBBOA
13 X 24	LL-13X24HD	Heavy Duty 1 -3/4 in.	Pg1324	S1324HBBOA
11 X 21	LL-17X30		Pg1121	----------

The best cover you'll ever buy. Less costly than OEM

Round Lids Now Available

R18 & R20 Pull Boxes - $299

50 - 18"x36" JB
LIDS
DELIVERY TO
TOTOWA

"Your Covered" with Quantum Engineering

Quantum Engineering

27520 E. Savannah Trail Lake Barrington, IL 60010
Ph: 847-951-7686 Fx: 847-381-7406 E: QNTMENG@AOL.COM

Made in USA

"Sur-Lok Covers" - Install in 5 seconds without tools

Insert | Squeeze | Push

Model SLO

Universal - Fits Most
Install In 5 Seconds
Incl: Tamper Proof & Hex - Head Fasteners

"Sur-Lok Covers" - Install in 5 seconds without tools

Insert | Squeeze | Push

Model SLR

Universal - Fits All
Install In 5 Seconds
Incl: Tamper Proof & Hex Head Fasteners

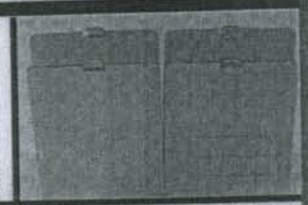

Breakaway Base | TB-1 | TB-2 | TB-3 | TB-5 | 5 second Instation

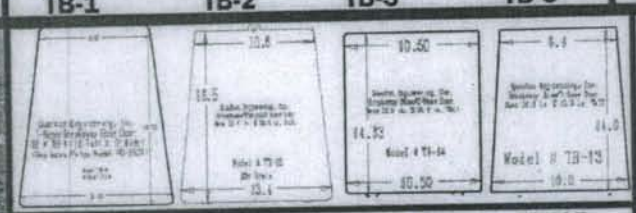

Breakaway Base | TB-4 | TB-13 | TB-14 | TB-15 | Super High Impact

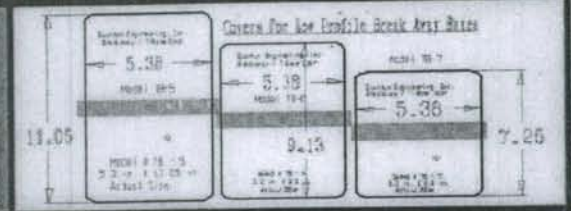

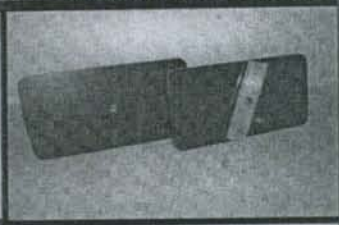

Short Breakaways | TB-5 | TB-6 | TB-7 | Model TB-5 Shown

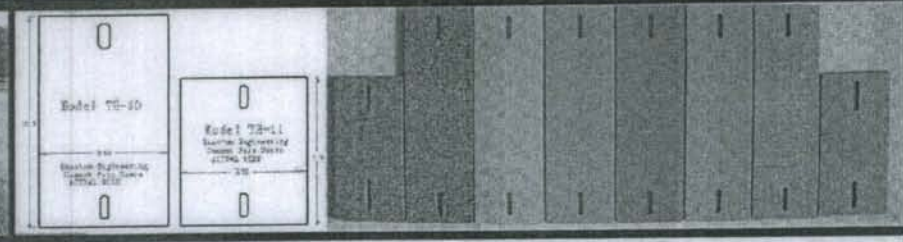

Cement Pole Covers | TB-10 | TB-11 | Granite | Sand | Stucco | Brick | Aggregate | Cement

Pull Box Covers - Replace Quazite and Synertech Lids

Heavy Duty Model - or - Theft Proof with Steel Centerplate

Size (in.)	Model #	Quazite Part#	Synertech #
17 X 30	LL-1730	PG1730 & PX1730	S1730HBBOA
18 X 19	LL-1819	PG1819	——
13 X 23	LL-1323	PG1324 & PX1324	S1324HBBOA
11 X 21	LL-1121	PG1121	——
11 X 18	LL-1118	PG1118	S1118HBBOA
12 X 12	LL-1212	——	S1212HFAOA

Ordering Info

$499 Per Box
48 covers/box
48Hr Shipping
Shipping Free
Custom Cases Our Pleasure

Pack Options

Single 48 pcs One Model

Twin - 24/24 Two Models

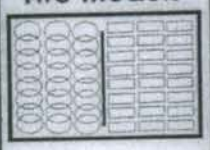

Triple 16/16/16 Three Models

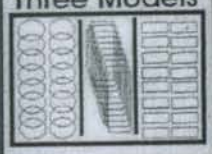

Payment Options

Visa
Mastercard
P - Card
E - Card
Ship & Invoice (Due 30 days)

Contact Information

Jason Raasch
P: 847-951-7686
F: 847-381-7406
Email:QNTMENG @aol.com

Call For Your Free Sample

What the public can do

Motorists can help reduce these crimes by reporting suspicious work zones. If you think you have seen or have information relating to wire theft, WSDOT has a toll-free hotline, **1-866-976-WIRE**. If you see a crime in progress, please call **9-1-1**.

A legitimate work zone includes:

- Signs alerting drivers they are entering a work zone
- Proper lighting
- Orange cones, barriers, signs
- Workers wearing orange, reflective vests, hard hats, gloves, goggles and protective hearing devices

WSDOT also lists all weekly maintenance and construction activities on its Web site:
www.wsdot.wa.gov/construction

Contact

Ted Bailey, WSDOT Traffic
Web site: www.wsdot.wa.gov/maintenance/material
E-mail: baileyte@wsdot.wa.gov
Phone: (360)705-9257

Washington State Department of Transportation

Washington State Department of Transportation

Wire Thefts Statewide

December 2006 to September 2008

September 2008

Public Safety and Public Funds at Risk

Wire theft takes a toll on Maintenance: An already tight budget gets even tighter

WSDOT is experiencing an increasing amount of wire theft along with other materials thieves steal from existing roadway electrical systems and storage facilities around the state. We should all be concerned as these thefts jeopardize public safety.

Since December 2006, WSDOT has lost more than $500,000 in labor and materials from metal theft. Copper wire, which is the primary item being stolen, has been taken from state-owned street lights, signals, variable message signs, storage yards and other electrical systems. In addition, thieves are stealing aluminum, steel, and other WSDOT property.

When theft occurs, public safety can become jeopardized. And, the funds to replace the wire come from state funds budgeted to pay for all WSDOT maintenance. As wire theft continues, other important maintenance activities may be suspended or delayed.

WSDOT and WSP have assembled a Wire Theft Task Force to develop recommendations with input from both public and private sector stakeholders.

Statewide WSDOT wire theft losses have reached more than $500,000

- **Close to 100 thefts in the seven-county Olympic Region since December 2006**
- **More than 18 miles of wire have been stolen**
- **Takes funds from other maintenance work**
- **Pierce County crews spend 1/3 of their time on repairing and replacing stolen wire**

Wire Theft Task Force Recommendations

- Take immediate action to protect existing assets.
- Work with the Legislature to strengthen the law by increasing criminal and civil penalties for both thieves and those recyclers supporting the thieves.
- Change design standards to protect future projects.
- Increase enforcement, conduct stings and respond to wire theft reports.
- Collaborate with local jurisdictions and private companies to implement a pilot prevention project to address some high-risk areas.

Wire Thefts by Region

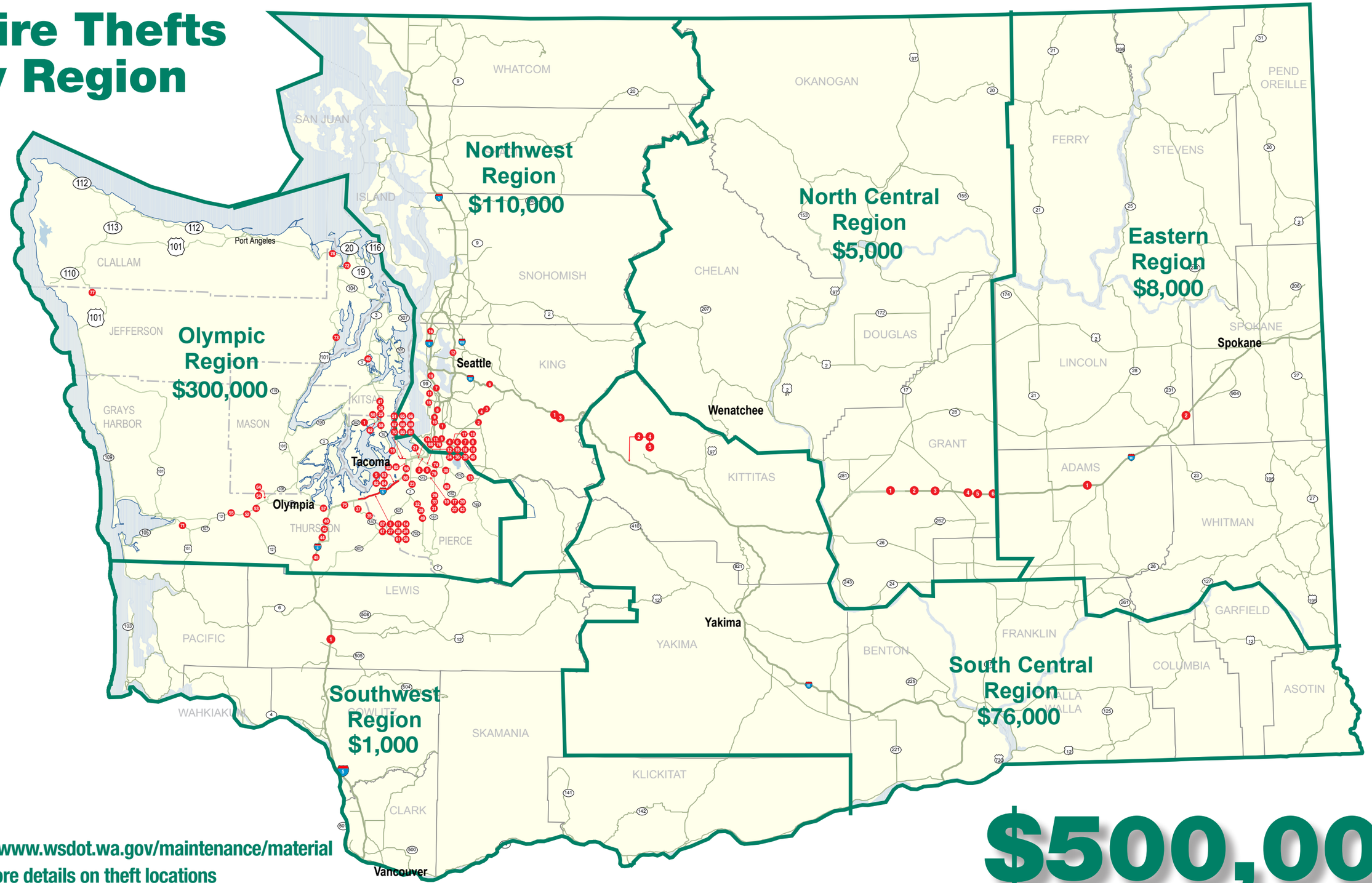

Go to www.wsdot.wa.gov/maintenance/material for more details on theft locations

$500,000