STATE OF CALIFORNIA - DEPARTMENT OF TRANSPORTATION

CONTRACT CHANGE ORDER

Change Requested by: Engineer

CCO 1	Suppl. No. 0	Contract No. 04 - 0120S4	Road SF-80-12.7/13.2	FED. AID LOC.: NO FED AID

To: **M C M CONSTRUCTION INC**

You are directed to make the following changes from the plans and specifications or do the following described work not included in the plans and specifications for this contract. ***NOTE: This change order is not effective until approved by the Engineer.***

Description of work to be done, estimate of quantities and prices to be paid. (Segregate between additional work at contract price, agreed price and force account.) Unless otherwise stated, rates for rental of equipment cover only such time as equipment is actually used and no allowance will be made for idle time. This last percentage shown is the net accumulated increase or decrease from the original quantity in the Engineer's Estimate.

This is a maintain traffic CCO for the project.

Extra Work at Force Account:

Maintain traffic and provide additional traffic control devices as directed by the Engineer for the sole convenience and direction of the public in accordance with Section 7-1.08, Public Convenience, of the Standard Specifications and as authorized by the Engineer.

Provide for the State's share of flagging costs in accordance with Section 12-2.02, Flagging Cost, of the Standard Specifications.

For this work, the Contractor will be compensated in accordance with Section 9-1.03, " Force Account Payment " of the Standard Specifications.

Estimated cost of Extra Work at Force Account $150,000.00

There shall be no adjustment to the time of completion of the contract by reason of this change.

Estimated Cost: Increase ☑ **Decrease** ☐ **$150,000.00**

By reason of this order the time of completion will be adjusted as follows: 0 days

Submitted by

Signature Rajesh Oberoi	Resident Engineer Rajesh Oberoi	Date 5/7/10

Approval Recommended by

Signature Deanna Vilcheck	Area Construction Manager Deanna Vilcheck	Date 5/7/10

Engineer Approval by

Signature Deanna Vilcheck	Area Construction Manager Deanna Vilcheck	Date 6/9/10

We the undersigned contractor, have given careful consideration to the change proposed and agree, if this proposal is approved, that we will provide all equipment, furnish the materials, except as may otherwise be noted above, and perform all services necessary for the work above specified, and will accept as full payment therefor the prices shown above.

NOTE: If you, the contractor, do not sign acceptance of this order, your attention is directed to the requirements of the specifications as to proceeding with the ordered work and filing a written protest within the time therein specified.

Contractor Acceptance by

Signature	(Print name and title) EDMUNDO A. PUCHI, TREASURER	Date 5/25/10

STATE OF CALIFORNIA - DEPARTMENT OF TRANSPORTATION

CONTRACT CHANGE ORDER

Change Requested by: Engineer

CCO: 1	Suppl. No. 1	Contract No. 04 - 0120S4	Road SF-80-12.7/13.2	FED. AID LOC.: NO FED AID

To: M C M CONSTRUCTION INC

You are directed to make the following changes from the plans and specifications or do the following described work not included in the plans and specifications for this contract. ***NOTE: This change order is not effective until approved by the Engineer.***

Description of work to be done, estimate of quantities and prices to be paid. (Segregate between additional work at contract price, agreed price and force account.) Unless otherwise stated, rates for rental of equipment cover only such time as equipment is actually used and no allowance will be made for idle time. This last percentage shown is the net accumulated increase or decrease from the original quantity in the Engineer's Estimate.

Extra Work at Force Account:

Provide additional funds to perform extra work as specified in Contract Change Order No. 001-S0.

Estimated cost of Extra Work at Force Account $250,000.00

There shall be no adjustment to the time of completion of the contract by reason of this change.

Estimated Cost: Increase ☑ Decrease ☐ $250,000.00

By reason of this order the time of completion will be adjusted as follows: 0 days

Submitted by		
Signature Rajesh Oberoi	Resident Engineer Rajesh Oberoi, Senior R.E.	Date 2/15/11
Approval Recommended by		
Signature Deanna Vilcheck	Area Construction Manager Deanna Vilcheck	Date 2/16/11
Engineer Approval by		
Signature Deanna Vilcheck	Area Construction Manager Deanna Vilcheck	Date 2/16/11

We the undersigned contractor, have given careful consideration to the change proposed and agree, if this proposal is approved, that we will provide all equipment, furnish the materials, except as may otherwise be noted above, and perform all services necessary for the work above specified, and will accept as full payment therefor the prices shown above.

NOTE: If you, the contractor, do not sign acceptance of this order, your attention is directed to the requirements of the specifications as to proceeding with the ordered work and filing a written protest within the time therein specified.

Contractor Acceptance by		
Signature N/A	(Print name and title)	Date

STATE OF CALIFORNIA - DEPARTMENT OF TRANSPORTATION

CONTRACT CHANGE ORDER

Change Requested by: Engineer

CCO 1	Suppl. No. 2	Contract No 04 - 0120S4	Road SF-80-12.7/13.2	FED. AID LOC.: NO FED AID

To: **M C M CONSTRUCTION INC**

You are directed to make the following changes from the plans and specifications or do the following described work not included in the plans and specifications for this contract ***NOTE: This change order is not effective until approved by the Engineer.***

Description of work to be done, estimate of quantities and prices to be paid. (Segregate between additional work at contract price, agreed price and force account.) Unless otherwise stated, rates for rental of equipment cover only such time as equipment is actually used and no allowance will be made for idle time. This last percentage shown is the net accumulated increase or decrease from the original quantity in the Engineer's Estimate.

Extra Work at Force Account:

Provide additional funds to perform extra work as specified in Contract Change Order No. 001-S0.

Estimated cost of Extra Work at Force Account $500,000.00

Estimated Cost: Increase ☑ Decrease ☐ **$500,000.00**

By reason of this order the time of completion will be adjusted as follows: 0 days

Submitted by		
Signature	Resident Engineer William Howe, Senior R.E.	Date 06/14/2011
Approval Recommended by		
Signature	Area Construction Manager Deanna Vilcheck	Date 6/14/2011
Engineer Approval by		
Signature	Area Construction Manager Deanna Vilcheck	Date 6/16/11

We the undersigned contractor, have given careful consideration to the change proposed and agree, if this proposal is approved, that we will provide all equipment, furnish the materials, except as may otherwise be noted above, and perform all services necessary for the work above specified, and will accept as full payment therefor the prices shown above.

NOTE: If you, the contractor, do not sign acceptance of this order, your attention is directed to the requirements of the specifications as to proceeding with the ordered work and filing a written protest within the time therein specified.

Contractor Acceptance by		
Signature N/A	(Print name and title)	Date

STATE OF CALIFORNIA - DEPARTMENT OF TRANSPORTATION

CONTRACT CHANGE ORDER MEMORANDUM

DATE: 6/14/2011 Page 1 of 1

TO: Deanna Vilcheck, ACM /

FROM: William Howe, Senior R.E.

FILE: E.A. 04 - 0120S4
CO-RTE-PM SF-80-12.7/13.2
FED. NO. NO FED AID

CCO#: 1 | SUPPLEMENT#: 2 | Category Code: AJZZ

CONTINGENCY BALANCE (incl. this change) $68,270,755.50

COST: $500,000.00 INCREASE ☑ DECREASE ☐

HEADQUARTERS APPROVAL REQUIRED? ☑ YES ☐ NO

SUPPLEMENTAL FUNDS PROVIDED: $0.00

IS THIS REQUEST IN ACCORDANCE WITH ENVIRONMENTAL DOCUMENTS? ☐ YES ☑ NO

CCO DESCRIPTION:
Maintain Traffic

PROJECT DESCRIPTION:
YBITS-1 (Yerba Buena Island Transition Structures)

Original Contract Time:	Time Adj. This Change:	Previously Approved CCO Time Adjustments:	Percentage Time Adjusted: (including this change)	Total # of Unreconciled Deferred Time CCO(s) (including this change)
1390 Day(s)	0 Day(s)	0 Day(s)	0 %	8

THIS CHANGE ORDER PROVIDES FOR:

Additional funds to compensate the Contractor for Maintaining Traffic as specified in Contract Change Order 001-S0.

Reference is made to the previously issued Contract Change Order 001-S0, dated june 09,2010.

Based on the actual cost incurred in the field it is anticipated that the Supplemental funds allocated to Maintain Traffic will not cover the departments share of costs involved . An additional $500,000.00 is requested to cover state's share which will be paid for as extra work at force account and will be financed from the projects Contingency funds.

No adjustment of contract time is warranted, as this change does not affect the controlling operations.

Maintenance concurrence is not required as this work is anticipated in the contract documents.

CONCURRED BY:

Construction Engineer	for William Howe	Date 06/14/11
Bridge Engineer:	Mehran Ardakanian	Date 06/14/11
Project Engineer:	Bob Zandipour	Date 06/20/11
Project Manager:	Ken Terpstra	Date 06/18/11
FHWA Rep.:		Date
Environmental:		Date
Other (specify):		Date
Other (specify):		Date
District Prior Approval By:		Date
HQ (Issue Approve) By:		Date
Resident Engineer's Signature:		Date 06/14/2011

ESTIMATE OF COST

	THIS REQUEST	TOTAL TO DATE
ITEMS	$0.00	$0.00
FORCE ACCOUNT	$500,000.00	$900,000.00
AGREED PRICE	$0.00	$0.00
ADJUSTMENT	$0.00	$0.00
TOTAL	$500,000.00	$900,000.00

FEDERAL PARTICIPATION

☐ PARTICIPATING ☐ PARTICIPATING IN PART ☑ NONE
☐ NON-PARTICIPATING (MAINTENANCE) ☐ NON-PARTICIPATING

FEDERAL SEGREGATION (If more than one Funding Source or P.I.P. type)
☑ CCO FUNDED PER CONTRACT ☐ CCO FUNDED AS FOLLOWS

FEDERAL FUNDING SOURCE	PERCENT

ADA Notice: For individuals with sensory disabilities, this document is available in alternate formats. For information call: (916) 654-6410 or TDD (916) 654-3880 or write Records and Forms Management, 1120 N Street, MS-89, Sacramento, CA 95814.

STATE OF CALIFORNIA - DEPARTMENT OF TRANSPORTATION

CONTRACT CHANGE ORDER

Change Requested by: Engineer

CCO: 1	Suppl. No. 3	Contract No. 04 - 012084	Road SF-80-12.7/13.2	FED. AID LOC.: NO FED AID

To: **M C M CONSTRUCTION INC**

You are directed to make the following changes from the plans and specifications or do the following described work not included in the plans and specifications for this contract. ***NOTE: This change order is not effective until approved by the Engineer.***

Description of work to be done, estimate of quantities and prices to be paid. (Segregate between additional work at contract price, agreed price and force account.) Unless otherwise stated, rates for rental of equipment cover only such time as equipment is actually used and no allowance will be made for idle time. This last percentage shown is the net accumulated increase or decrease from the original quantity in the Engineer's Estimate.

Extra Work at Force Account:

Provide additional funds to maintain traffic and provide additional traffic control measures as provided for under the original Change Order No. 1, Supplement No. 0 and as determined necessary by the Engineer.

Estimated cost of Extra Work at Force Account $1,500,000.00

Estimated Cost: Increase ☑ Decrease ☐ **$1,500,000.00**

By reason of this order the time of completion will be adjusted as follows: 0 days

Submitted by

Signature	Resident Engineer	Date
Debra Valdez	William Howe, Senior R.E.	9/14/11

Approval Recommended by

Signature	Construction Manager	Date
Mike Forner	Mike Forner	9-14-2011

Engineer Approval by

Signature	Construction Manager	Date
Mike Forner	Mike Forner	9/26/2011

We the undersigned contractor, have given careful consideration to the change proposed and agree, if this proposal is approved, that we will provide all equipment, furnish the materials, except as may otherwise be noted above, and perform all services necessary for the work above specified, and will accept as full payment therefor the prices shown above.

NOTE: If you, the contractor, do not sign acceptance of this order, your attention is directed to the requirements of the specifications as to proceeding with the ordered work and filing a written protest within the time therein specified.

Contractor Acceptance by

Signature	(Print name and title)	Date
N/A		

STATE OF CALIFORNIA - DEPARTMENT OF TRANSPORTATION

CONTRACT CHANGE ORDER MEMORANDUM

TO: Deanna Vilcheck, ACM / DV	FILE: E.A. 04 - 0120S4
	CO-RTE-PM SF-80-12.7/13.2
FROM: William Howe, Senior R.E.	FED. NO. NO FED AID
CCO#: 1 SUPPLEMENT#: 3 Category Code: AJZZ	CONTINGENCY BALANCE (incl. this change) $84,494,325.29
COST: $1,500,000.00 INCREASE ☑ DECREASE ☐	HEADQUARTERS APPROVAL REQUIRED? ☑ YES ☐ NO
SUPPLEMENTAL FUNDS PROVIDED: $0.00	IS THIS REQUEST IN ACCORDANCE WITH ENVIRONMENTAL DOCUMENTS? ☑ YES ☐ NO
CCO DESCRIPTION: Maintain Traffic on Macalla Road	**PROJECT DESCRIPTION:** YBITS-1 (Yerba Buena Island Transition Structures)

Original Contract Time:	Time Adj. This Change:	Previously Approved CCO Time Adjustments:	Percentage Time Adjusted: (including this change)	Total # of Unreconciled Deferred Time CCO(s): (including this change)
1390 Day(s)	0 Day(s)	0 Day(s)	0 %	9

THIS CHANGE ORDER PROVIDES FOR:

Additional funds to compensate the contractor for maintaining traffic and provide additional traffic control measures as provided for under the original Change Order No. 1.

This project, the Yerba Buena Island Transition Structure (YBITS), provides for the construction of two bridges which will connect eastbound and westbound traffic on the new east span of the San Francisco Oakland Bay Bridge (SFOBB) to the existing Yerba Buena Island (YBI) tunnel. The structures are comprised of concrete box girder bridges each approximately 40 meters high and 450 meters in length.

The project takes place directly adjacent to a U.S. Coast Guard (USCG) facility which has provided construction easements to the Department for this project. The only access to the USCG facility flows directly through the project site on Macalla Road. This road drops 40 meters into the jobsite through 3 hairpin turns which restrict traffic flow.

Under the license agreement between the Department and the USCG (License No. HSCG-Z7111-09-RP-060L), the Department is required to provide one-way traffic control along the restricted area of Macalla Road during all hours of the contractor's operations. The YBITS contract currently requires that the contractor provide 2 flaggers on Macalla Road during their normal working hours from 6:30 a.m. through 3:30 p.m with a flagger at each end of the roadway. The flagging costs incurred during these hours are split equally between the contractor and the Department in accordance with Section 12-2 "Flagging" of the Standard Specifications.

When the contractor works extended shifts or weekends there is no contractual obligation for the contractor to provide flagging on Macalla Road unless it is required for trucks delivering materials to the jobsite. In order to comply with the USCG license agreement, the contractor has been ordered to provide flaggers at all times during their extended work shifts. Additional flaggers are also regularly ordered by the Department in order to mitigate disruptions to the USCG. The cost of this extended shift flagging and added flaggers is being borne fully be the Department under Change Order No. 1.

Concurrently, in order to meet the Seismic Safety Opening (SSO) date established by the Toll Bridge Project Oversight Committee (TBPOC) for the new SFOBB east span, this project has implemented extended work shifts and weekend work which is anticipated to be implemented through the summer of 2013. These extended shifts will require additional expenditures under Change order No. 1. With these added costs, it is estimated that the current change order funding will be expended within a few months. Under the current expenditure rate, additional funding of $1,500,000 will be required to fund the work through the end of the contract in December of 2013. This change order provides for this added funding.

This work shall be paid as extra work at force account at an estimated cost of $1,500,000 which shall be financed from the contract's contingency funds. A cost estimate is on file.

This change order was approved by the Toll Bridge Program Oversight Committee on September 8, 2011.

No adjustment of contract time is warranted as the work will not affect the controlling operation.

Maintenance concurrence is not required as this change doesn't affect any permanent roadway features.

ADA Notice: For individuals with sensory disabilities, this document is available in alternate formats. For information call: (916) 654-6410 or TDD (916) 654-3880 or write Records and Forms Management, 1120 N Street, MS-89, Sacramento, CA 95814.

CONCURRED BY:		
Construction Engineer:	William Howe	Date 9/14/11
Bridge Engineer:		Date
Project Engineer:	Bob Zandipour, Design	Date 9/19/11
Project Manager:	Ken Terpstra	Date 9/19/11
FHWA Rep.:		Date
Environmental:		Date
Other (specify):		Date
Other (specify):		Date
District Prior Approval By:		Date
HQ (Issue Approve) By:	Larry Salhaney	Date 9/16/11
Resident Engineer's Signature:		Date 9/14/11

ESTIMATE OF COST

	THIS REQUEST	TOTAL TO DATE
ITEMS	$0.00	$0.00
FORCE ACCOUNT	$1,500,000.00	$2,400,000.00
AGREED PRICE	$0.00	$0.00
ADJUSTMENT	$0.00	$0.00
TOTAL	$1,500,000.00	$2,400,000.00

FEDERAL PARTICIPATION

☐ PARTICIPATING ☐ PARTICIPATING IN PART ☑ NONE
☐ NON-PARTICIPATING (MAINTENANCE) ☐ NON-PARTICIPATING

FEDERAL SEGREGATION (if more than one Funding Source or P.I.P. type)
☐ CCO FUNDED PER CONTRACT ☐ CCO FUNDED AS FOLLOWS

FEDERAL FUNDING SOURCE	PERCENT

ADA Notice: For individuals with sensory disabilities, this document is available in alternate formats. For information call: (916) 654-6410 or TDD (916) 654-3880 or write Records and Forms Management, 1120 N Street, MS-89, Sacramento, CA 95814.

STATE OF CALIFORNIA • DEPARTMENT OF TRANSPORTATION

CONTRACT CHANGE ORDER

SHEET 1 OF 1

CEM-4900 (REV 05/2001) CT#7541-35-0

Change requested by: ☒ engineer ☐ contractor

CCO NUMBER	SUPPL. NUMBER	CONTRACT NUMBER	ROAD	FEDERAL NUMBER(S)
02	00	04-0120S4	04-SF-80-12.7/13.2	NO FED AID

TO **MCM Construction Inc**, Contractor

You are directed to make the following changes from the plans and specifications or do the following described work not included in the plans and specifications for this contract. **NOTE: This change order is not effective until approved by Engineer.**

Description of work to be done, estimate of quantities and prices to be paid. (Segregated between additional work at contract price, agreed price and force account). Unless otherwise stated, rates for rental equipment cover only such time as equipment is actually used and no allowance will be made for idle time. The last percentage shown is the net accumulated increase or decrease from the original quantity in the Engineers estimate.

THIS CHANGE ORDER PROVIDES FOR:

EXTRA WORK AT FORCE ACCOUNT:

Establish a Partnering Relationship for this contract in accordance with Section 5-1.03 "Partnering," of the Special Provisions.

The cost of this work shall be borne by the Contractor and/or the State as provided in accordance with Section 5-1.03, "Partnering," of the Special Provisions.

Estimated Cost of Extra Work at Force Account..... $50,000.00

No markups shall be allowed in payment of the States share of the cost of the work provided herein.

There shall be no adjustment to the time of completion of the contract by reason of this change.

Total Estimated Cost: $ 50,000.00 ☐ Decrease ☒ Increase

By reason of this order the time of completion will be adjusted as follows: **NONE**

SUBMITTED BY		
SIGNATURE Rajesh Oberoi	(PRINT NAME & TITLE) Rajesh Oberoi, Resident Engineer	DATE 4/16/10
APPROVAL RECOMMENDED BY		
SIGNATURE Rajesh Oberoi	(PRINT NAME & TITLE) Rajesh Oberoi, Sr Const. Engr.	DATE 4/16/10
ENGINEER APPROVAL BY		
SIGNATURE Rajesh Oberoi	(PRINT NAME & TITLE) Rajesh Oberoi, Sr Const. Engr.	DATE 5/10/10

We, the undersigned contractor, have given careful consideration to the change proposed and agree, if this proposal is approved, that we will provide all equipment, furnish all materials, except as may otherwise noted above, and perform all services necessary for the work above specified, and will accept as full payment therefore the prices shown above. **NOTE: If you, the contractor, do not sign acceptance of this order, your attention is directed to the requirements of the specifications as to proceeding with the ordered work and filing a written protest within the time therein specified.**

CONTRACTOR ACCEPTANCE BY		
SIGNATURE	(PRINT NAME & TITLE) Treasurer Edmundo A. Ruchi	DATE 4-27-2010

STATE OF CALIFORNIA - DEPARTMENT OF TRANSPORTATION

CONTRACT CHANGE ORDER MEMORANDUM

DATE: 4/30/2010 Page 1 of 1

TO: DEANNA VILCHECK, ACM /	FILE: E.A. 04 - 0120S4
FROM: RAJESH OBEROI, Senior R.E.	CO-RTE-PM SF-80-12.7/13.2
	FED. NO. NO FED AID
CCO#: 2 SUPPLEMENT#: 0 Category Code: AUZZ	CONTINGENCY BALANCE (incl. this change) $32,216,042.00
COST: $50,000.00 INCREASE ☑ DECREASE ☐	HEADQUARTERS APPROVAL REQUIRED? ☐ YES ☑ NO
SUPPLEMENTAL FUNDS PROVIDED: $100,000.00	IS THIS REQUEST IN ACCORDANCE WITH ENVIRONMENTAL DOCUMENTS? ☑ YES ☐ NO
CCO DESCRIPTION: Partnering	**PROJECT DESCRIPTION:** YBITS-1 (Yerba Buena Island Transition Structures)

Original Contract Time:	Time Adj. This Change:	Previously Approved CCO Time Adjustments:	Percentage Time Adjusted: (including this change)	Total # of Unreconciled Deferred Time CCO(s): (including this change)
1390 Day(s)	0 Day(s)	0 Day(s)	0 %	0

THIS CHANGE ORDER PROVIDES FOR:

Reimbursing the Contractor for the State's share of the costs involved the initial partnering session and additional progress sessions throughout the life of the contract in accordance with Section 5-1.03, Partnering, of the Contract Special Provisions.

This work will be done as Extra Work at Force Account at an estimated cost of $50,000.00, which will be financed from the supplemental funds provided for this contract. Supplemental funds have been provided for this change in the amount of $100,000.00.

No adjustment of contract time is warranted by this change.

Design and Maintenance concurrence is not required as this work is anticipated by the contract documents.

The Resident Engineer recommends this change order be approved.

CONCURRED BY:	
Construction Engineer:	Date 5/7/10
Bridge Engineer:	Date
Project Engineer:	Date
Project Manager:	Date
FHWA Rep.:	Date
Environmental:	Date
Other (specify):	Date
Other (specify):	Date
District Prior Approval By:	Date
HQ (Issue Approve) By:	Date
Resident Engineer's Signature: Rajesh Oberoi	Date 5/7/10

ESTIMATE OF COST

	THIS REQUEST	TOTAL TO DATE
ITEMS	$0.00	$0.00
FORCE ACCOUNT	$50,000.00	$50,000.00
AGREED PRICE	$0.00	$0.00
ADJUSTMENT	$0.00	$0.00
TOTAL	$50,000.00	$50,000.00

FEDERAL PARTICIPATION

☐ PARTICIPATING ☐ PARTICIPATING IN PART ☑ NONE

☐ NON-PARTICIPATING (MAINTENANCE) ☐ NON-PARTICIPATING

FEDERAL SEGREGATION (if more than one Funding Source or P.I.P. type)

☑ CCO FUNDED PER CONTRACT ☐ CCO FUNDED AS FOLLOWS

FEDERAL FUNDING SOURCE	PERCENT

ADA Notice: For individuals with sensory disabilities, this document is available in alternate formats. For information call: (916) 654-6410 or TDD (916) 654-3880 or write Records and Forms Management, 1120 N Street, MS-89, Sacramento, CA 95814.

STATE OF CALIFORNIA - DEPARTMENT OF TRANSPORTATION

CONTRACT CHANGE ORDER

Change Requested by: Engineer

CCO 3	Suppl. No. 0	Contract No. 04 - 0120S4	Road SF-80-12.7/13.2	FED. AID LOC.: NO FED AID

To: **M C M CONSTRUCTION INC**

You are directed to make the following changes from the plans and specifications or do the following described work not included in the plans and specifications for this contract. ***NOTE: This change order is not effective until approved by the Engineer.***

Description of work to be done, estimate of quantities and prices to be paid. (Segregate between additional work at contract price, agreed price and force account.) Unless otherwise stated, rates for rental of equipment cover only such time as equipment is actually used and no allowance will be made for idle time. This last percentage shown is the net accumulated increase or decrease from the original quantity in the Engineer's Estimate.

Extra Work at Force Account:

Establish a Dispute Review Board (DRB) for this contract as provided in Section 5-1.05 of the Special Provisions.

The DRB agreement and certifications of the Contractor, State and DRB members (see sheets 2 thru 7 of this change order) shall be executed by the parties and made a part of this contract upon full execution.

The cost of this work shall be borne equally by the Contractor and the State, as provided in the above agreement. No markups or surcharges will be allowed in payment of the State's share of the cost of the work provided herein.

Estimated cost of Extra Work at Force Account .....$ 52,500.00

There shall be no adjustment to the time of completion of the contract by reason of this change

Estimated Cost: Increase ☑ **Decrease** ☐ **$52,500.00**

By reason of this order the time of completion will be adjusted as follows: 0 days

Submitted by

Signature	Resident Engineer	Date
Rajesh Oberoi	Rajesh Oberoi	8/4/10

Approval Recommended by

Signature	Area Construction Manager	Date
Deanna Vilcheck	Deanna Vilcheck	8/4/10

Engineer Approval by

Signature	Area Construction Manager	Date
Deanna Vilcheck	Deanna Vilcheck	8/4/10

We the undersigned contractor, have given careful consideration to the change proposed and agree, if this proposal is approved, that we will provide all equipment, furnish the materials, except as may otherwise be noted above, and perform all services necessary for the work above specified, and will accept as full payment therefor the prices shown above.

NOTE: If you, the contractor, do not sign acceptance of this order, your attention is directed to the requirements of the specifications as to proceeding with the ordered work and filing a written protest within the time therein specified.

Contractor Acceptance by

Signature	(Print name and title)	Date
	Edmund A Rocha Treasurer	8/4/2010

CONTRACT NO. 04-0120S4

CONTRACT CHANGE ORDER NO 003

SHEET 2 OF 7

DISPUTE REVIEW BOARD AGREEMENT

YERBA BUENA ISLAND TRANSITION STRUCTURE
(Contract Identification)

Contract No: **04-0120S4**

THIS DISPUTE REVIEW BOARD AGREEMENT, hereinafter called "AGREEMENT", made and entered into this 4th day of **August, 2010**, between the State of California, acting through the California Department of Transportation and the Director of Transportation, hereinafter called the "STATE," **M C M CONSTRUCTION INC.** Hereinafter called the "CONTRACTOR," and the Dispute Review Board, hereinafter called the "DRB" consisting of the following members:

Ronald P. Reading,
(Contractor Appointee)

Ernie P. Holt,
(State Appointee)

and **David McCracken**
(Third Person)

WITNESSETH, that

WHEREAS, the STATE and the CONTRACTOR, hereinafter called the "parties," are now engaged in the construction on the State Highway project referenced above; and

WHEREAS, the special provisions for the above referenced contract provides for the establishment and operation of the DRB to assist in resolving disputes; and

WHEREAS, the DRB is composed of three members, one selected by the STATE, one selected by the CONTRACTOR, and the third member selected by the other two members and approved by the parties;

NOW THEREFORE, in consideration of the terms, conditions, covenants, and performance contained herein, or attached and incorporated and made a part hereof, the STATE, the CONTRACTOR, and the DRB members hereto agree as follows:

SECTION I DESCRIPTION OF WORK
To assist in the resolution of disputes between the parties, the contract provides for the establishment and the operation of the DRB. The intent of the DRB is to fairly and impartially consider disputes placed before it and provide written recommendations for resolution of these disputes to both parties. The members of this DRB shall perform the services necessary to participate in the DRB's actions as designated in Section II, Scope of Work.

SECTION II SCOPE OF WORK
The scope of work of the DRB includes, but is not limited to, the following:

A. OBJECTIVE
The principal objective of the DRB is to assist in the timely resolution of disputes between the parties arising from performance of this contract. It is not intended for either party to default on their normal responsibility to amicably and fairly settle their differences by indiscriminately assigning them to the DRB. It is intended that the mere existence of the DRB will encourage the parties to resolve disputes without resorting to this review procedure. But when a dispute that is serious enough to warrant the DRB's review does develop, the process for prompt and efficient action will be in place.

B. PROCEDURES

The DRB shall render written reports on disputes between the parties arising from the construction contract. Prior to consideration of a dispute, the DRB shall establish rules and regulations that will govern the conduct of its business and reporting procedures in conformance with the requirements of the contract and the terms of this AGREEMENT. DRB recommendations, resulting from its consideration of a dispute, shall be furnished in writing to both parties. The recommendations shall be based on facts and circumstances involved in the dispute, pertinent contract provisions, applicable laws and regulations. The recommendations shall find one responsible party in a dispute; shared or "jury" determinations shall not be rendered. The DRB shall make recommendations on the merit of the dispute, and if appropriate, recommend guidelines for determining compensation. If the parties cannot agree on compensation within 60 days of the acceptance by both parties of the DRB's recommendation, either party may request the DRB to make a recommendation regarding compensation.

The DRB shall refrain from officially giving advice or consulting services to anyone involved in the contract. The individual members shall act in a completely independent manner and while serving as members of the DRB shall have no consulting business connections with either party or its principals or attorneys or other affiliates (subcontractors, suppliers, etc.) who have a beneficial interest in the contract.

During scheduled meetings of the DRB as well as during dispute meetings, DRB members shall refrain from expressing opinions on the merits of statements on matters under dispute or potential dispute. Opinions of DRB members expressed in private sessions shall be kept strictly confidential. Individual DRB members shall not meet with, or discuss contract issues with individual parties, except as directed by the DRB Chairperson. Such discussions or meetings shall be disclosed to both parties. Other discussions regarding the project between the DRB members and the parties shall be in the presence of all three members and both parties. Individual DRB members shall not undertake independent investigations of any kind pertaining to disputes or potential disputes, except with the knowledge of both parties and as expressly directed by the DRB Chairperson.

C. CONSTRUCTION SITE VISITS, PROGRESS MEETINGS AND FIELD INSPECTIONS

The DRB members shall visit the project site and meet with representatives of the parties to keep abreast of construction activities and to develop familiarity with the work in progress. Scheduled progress meetings shall be held at or near the project site. The DRB shall meet at least once at the start of the project, and at least once every 4 months thereafter. The frequency, exact time, and duration of additional site visits and progress meetings shall be as recommended by the DRB and approved by the parties consistent with the construction activities or matters under consideration and dispute. Each meeting shall consist of a round table discussion and a field inspection of the work being performed on the contract, if necessary. Each meeting shall be attended by representatives of both parties. The agenda shall generally be as follows:

1. Meeting opened by the DRB Chairperson.
2. Remarks by the STATE's representative.
3. A description by the CONTRACTOR's representative of work accomplished since the last meeting; the current schedule status of the work; and a forecast for the coming period.
4. An outline by the CONTRACTOR's representative of potential problems and a description of proposed solutions.
5. An outline by the STATE's representative of the status of the work as the STATE views it.
6. A brief description by the CONTRACTOR's or STATE's representative of potential claims or disputes which have surfaced since the last meeting.
7. A summary by the STATE's representative, the CONTRACTOR's representative, or the DRB of the status of past disputes and potential claims.

The STATE's representative will prepare minutes of all progress meetings and circulate them for revision and approval by all concerned within 10 days of the meeting.

The field inspection shall cover all active segments of the work, the DRB being accompanied by both parties' representatives. The field inspection may be waived upon mutual agreement of the parties.

D. DRB CONSIDERATION AND HANDLING OF DISPUTES

Upon receipt by the DRB of a written referral of a dispute, the DRB shall convene to review and consider the dispute. The dispute meeting shall be held no earlier than 30 days and no later than 60 days after receipt of the written referral, unless otherwise agreed to by all parties. The DRB shall determine the time and location of DRB dispute meetings, with due consideration for the needs and preferences of the parties while recognizing the paramount importance of speedy resolution of issues. No dispute meetings shall take place later than 30 days prior to acceptance of contract.

Normally, dispute meetings shall be conducted at or near the project site. However, any location that would be more convenient and still provide required facilities and access to necessary documentation shall be satisfactory.

Both parties shall be given the opportunity to present their evidence at these dispute meetings. It is expressly understood that the DRB members are to act impartially and independently in the consideration of the contract provisions, applicable laws and regulations, and the facts and conditions surrounding any dispute presented by either party, and that the recommendations concerning any such dispute are advisory and nonbinding on the parties.

The DRB may request that written documentation and arguments from both parties be sent to each DRB member, through the DRB Chairperson, for review before the dispute meeting begins. A party furnishing written documentation to the DRB shall furnish copies of such information to the other party at the same time that such information is supplied to the DRB.

DRB dispute meetings shall be informal. There shall be no testimony under oath or cross-examination. There shall be no reporting of the procedures by a shorthand reporter or by electronic means. Documents and verbal statements shall be received by the DRB in conformance with acceptance standards established by the DRB. These standards need not comply with prescribed legal laws of evidence.

The third DRB member shall act as Chairperson for dispute meetings and all other DRB activities. The parties shall have a representative at all dispute meetings. Failure to attend a duly noticed dispute meeting by either of the parties shall be conclusively considered by the DRB as indication that the non-attending party considers written submittals as their entire and complete argument. The claimant shall discuss the dispute, followed by the other party. Each party shall then be allowed one or more rebuttals until all aspects of the dispute are thoroughly covered. DRB members shall ask questions, seek clarification, and request further data from either of the parties as may be necessary to assist in making a fully informed recommendation. The DRB may request from either party documents or information that would assist the DRB in making its findings and recommendations including, but not limited to, documents used by the CONTRACTOR in preparing the bid for the project. A refusal by a party to provide information requested by the DRB may be considered by the DRB as an indication that the requested material would tend to disprove that party's position. In large or complex cases, additional dispute meetings may be necessary in order to consider all the evidence presented by both parties. All involved parties shall maintain the confidentiality of all documents and information, as provided in this AGREEMENT.

During dispute meetings, no DRB member shall express an opinion concerning the merit of any facet of the case. DRB deliberations shall be conducted in private, with interim individual views kept strictly confidential.

After dispute meetings are concluded, the DRB shall meet in private and reach a conclusion supported by 2 or more members. Private sessions of the DRB may be held at a location other than the job site or by electronic conferencing as deemed appropriate, in order to expedite the process.

The DRB's findings and recommendations, along with discussion of reasons therefor, shall then be submitted as a written report to both parties. Recommendations shall be based on the pertinent contract provisions, applicable laws and regulations, and facts and circumstances related to the dispute. The report shall be thorough in discussing the facts considered, the contract language, law or regulation viewed by the DRB as pertinent to the issues, and the DRB's interpretation and philosophy in arriving at its conclusions and recommendations. The DRB's report shall stand on its own, without attachments or appendices. The DRB Chairperson shall furnish a copy of the written recommendation report to the DRB Coordinator, Division of Construction, MS 44, P.O. Box 942874, Sacramento, CA 94274.

With prior written approval of both parties, the DRB may obtain technical services necessary to adequately review the disputes presented, including audit, geotechnical, schedule analysis and other services. The parties' technical staff may supply those services as appropriate. The cost of technical services, as agreed to by the

parties, shall be borne equally by the 2 parties as specified in an approved contract change order. The CONTRACTOR will not be entitled to markups for the payments made for these services.
The DRB shall resist submittal of incremental portions of information by either party, in the interest of making a fully informed decision and recommendation.
The DRB shall make every effort to reach a unanimous decision. If this proves impossible, the dissenting member shall prepare a minority opinion, which shall be included in the DRB's report.
Although both parties should place weight upon the DRB's recommendations, they are not binding. Either party may appeal a recommendation to the DRB for reconsideration. However, reconsideration shall only be allowed when there is new evidence to present, and the DRB shall accept only one appeal from each party pertaining to an individual DRB recommendation. The DRB shall hear appeals in conformance with the terms described in the Section entitled "Dispute Review Board" in the special provisions.

E. DRB MEMBER REPLACEMENT
Should the need arise to appoint a replacement DRB member, the replacement DRB member shall be appointed in the same manner as the original DRB members were appointed. The selection of a replacement DRB member shall begin promptly upon notification of the necessity for a replacement and shall be completed within 15 days. This AGREEMENT shall be amended to indicate change in DRB membership.

SECTION III CONTRACTOR RESPONSIBILITIES
The CONTRACTOR shall furnish to each DRB member one copy of pertinent documents that are or may become necessary for the DRB to perform their function. Pertinent documents are written notices of potential claim, responses to those notices, drawings or sketches, calculations, procedures, schedules, estimates, or other documents which are used in the performance of the work or in justifying or substantiating the CONTRACTOR's position. The CONTRACTOR shall also furnish a copy of such pertinent documents to the STATE, in conformance with the terms outlined in the special provisions.

SECTION IV STATE RESPONSIBILITIES
The STATE will furnish the following services and items:

A. CONTRACT RELATED DOCUMENTS
The STATE will furnish to each DRB member one copy of Notice to Contractors and Special Provisions, Proposal and Contract, Plans, Standard Specifications, and Standard Plans, change orders, written instructions issued by the STATE to the CONTRACTOR, or other documents pertinent to any dispute that has been referred to the DRB and necessary for the DRB to perform its function.

B. COORDINATION AND SERVICES
The STATE, through the Engineer, will, in cooperation with the CONTRACTOR, coordinate the operations of the DRB. The Engineer will arrange or provide conference facilities at or near the project site and provide secretarial and copying services to the DRB without charge to the CONTRACTOR.

SECTION V TIME FOR BEGINNING AND COMPLETION
Once established, the DRB shall be in operation until the day of acceptance of the contract. The DRB members shall not begin work under the terms of this AGREEMENT until authorized in writing by the STATE.

SECTION VI PAYMENT

A. ALL INCLUSIVE RATE PAYMENT
The STATE and the CONTRACTOR shall bear the costs and expenses of the DRB equally. Each DRB member shall be compensated at an agreed rate of $1,200 per day if time spent per meeting, including on-site time plus one hour of travel time, is greater than 4 hours. Each DRB member shall be compensated at an agreed rate of $700 per day if time spent per meeting, including on-site time plus one hour of travel time, is less than or equal to 4 hours. The agreed rates shall be considered full compensation for on-site time, travel expenses, transportation, lodging, time for travel and incidentals for each day, or portion thereof, that the DRB member is at an authorized DRB meeting. No additional compensation will be made for time spent by DRB members in review and research activities outside the official DRB meetings unless that time has been specifically agreed to in advance by the STATE and CONTRACTOR. Time away from the project that has been specifically agreed

to in advance by the parties will be compensated at an agreed rate of $125 per hour. The agreed amount of $125 per hour shall include all incidentals including expenses for telephone, fax, and computer services. Members serving on more than one DRB involving the State, regardless of the number of meetings per day, shall not be paid more than the all inclusive rate per day or rate per hour for an individual project. The STATE will provide, at no cost to the CONTRACTOR, administrative services such as conference facilities and secretarial services to the DRB.

B. PAYMENTS

DRB members shall be compensated at the same rate. The CONTRACTOR shall make direct payments to each DRB member for their participation in authorized meetings and approved hourly rate charges from invoices submitted by each DRB member. The STATE will reimburse the CONTRACTOR for its share of the costs of the DRB.

The DRB members may submit invoices to the CONTRACTOR for partial payment for work performed and services rendered for their participation in authorized meetings not more often than once per month during the progress of the work. The invoices shall be in a format approved by the parties and accompanied by a general description of activities performed during that billing period. Payment for hourly fees, at the agreed rate, shall not be paid to a DRB member until the amount and extent of those fees are approved by the STATE and CONTRACTOR.

Invoices shall be accompanied by original supporting documents, which the CONTRACTOR shall include with the extra work billing when submitting for reimbursement of the STATE's share of cost from the STATE. The CONTRACTOR will be reimbursed for one-half of approved costs of the DRB. No markups will be added to the CONTRACTOR's payment.

C. INSPECTION OF COSTS RECORDS

The DRB members and the CONTRACTOR shall keep available for inspection by representatives of the STATE and the United States, for a period of 3 years after final payment, the cost records and accounts pertaining to this AGREEMENT. If any litigation, claim, or audit arising out of, in connection with, or related to this contract is initiated before the expiration of the 3-year period, the cost records and accounts shall be retained until such litigation, claim, or audit involving the records is completed.

SECTION VII ASSIGNMENT OF TASKS OF WORK

The DRB members shall not assign the work of this AGREEMENT.

SECTION VIII TERMINATION OF DRB MEMBERS

DRB members may resign from the DRB by providing not less than 15 days written notice of the resignation to the STATE and CONTRACTOR. DRB members may be terminated by their original appointing power or by either party, for failing to fully comply at all times with all required employment and financial disclosure conditions of DRB membership in conformance with the terms of the contract.

SECTION IX LEGAL RELATIONS

The parties hereto mutually understand and agree that the DRB member in the performance of duties on the DRB, is acting in the capacity of an independent agent and not as an employee of either party.

No party to this AGREEMENT shall bear a greater responsibility for damages or personal injury than is normally provided by Federal or State of California Law.

Notwithstanding the provisions of this contract that require the CONTRACTOR to indemnify and hold harmless the STATE, the parties shall jointly indemnify and hold harmless the DRB members from and against all claims, damages, losses, and expenses, including but not limited to attorney's fees, arising out of and resulting from the findings and recommendations of the DRB.

SECTION X CONFIDENTIALITY

The parties hereto mutually understand and agree that all documents and records provided by the parties in reference to issues brought before the DRB, which documents and records are marked "Confidential - for use by the DRB only," shall be kept in confidence and used only for the purpose of resolution of subject disputes, and for assisting in development of DRB findings and recommendations; that such documents and records will not be utilized or revealed to others, except to officials of the parties who are authorized to act on the subject disputes, for any purposes, during the life of the DRB. Upon termination of this AGREEMENT, said

confidential documents and records, and all copies thereof, shall be returned to the parties who furnished them to the DRB. However, the parties understand that such documents shall be subsequently discoverable and admissible in court or arbitration proceedings unless a protective order has been obtained by the party seeking further confidentiality.

SECTION XI DISPUTES

Disputes between the parties hereto, including disputes between the DRB members and either party or both parties, arising out of the work or other terms of this AGREEMENT, which cannot be resolved by negotiation and mutual concurrence between the parties, or through the administrative process provided in the contract, shall be resolved by arbitration as provided in Section 9-1.10, "Arbitration," of the Standard Specifications.

SECTION XII VENUE, APPLICABLE LAW, AND PERSONAL JURISDICTION

In the event that any party, including an individual member of the DRB, deems it necessary to institute arbitration proceedings to enforce any right or obligation under this AGREEMENT, the parties hereto agree that such action shall be initiated in the Office of Administrative Hearings of the State of California. The parties hereto agree that all questions shall be resolved by arbitration by application of California law and that the parties to such arbitration shall have the right of appeal from such decisions to the Superior Court in conformance with the laws of the State of California. Venue for the arbitration shall be Sacramento or any other location as agreed to by the parties.

SECTION XIII FEDERAL REVIEW AND REQUIREMENTS

On Federal-Aid contracts, the Federal Highway Administration shall have the right to review the work of the DRB in progress, except for private meetings or deliberations of the DRB.
Other Federal requirements in this agreement shall only apply to Federal-Aid contracts.

SECTION XIV CERTIFICATION OF THE CONTRACTOR, THE DRB MEMBERS, AND THE STATE

IN WITNESS WHEREOF, the parties hereto have executed this AGREEMENT as of the day and year first above written.

DRB MEMBER

By: [signature]

Title: DRB Chair

DRB MEMBER

By: [signature]

Title: DRB Member

DRB MEMBER

By: [signature]

Title: DRB MEMBER

CONTRACTOR

By: [signature]

Title: Treasurer
MCM Constraction, Inc.

CALIFORNIA STATE DEPARTMENT OF TRANSPORTATION

By: Rajesh Oberoi

Title: RESIDENT ENGINEER

STATE OF CALIFORNIA - DEPARTMENT OF TRANSPORTATION

CONTRACT CHANGE ORDER MEMORANDUM

DATE: 5/7/2010 Page 1 of 1

TO: Deanna Vilcheck, ACM /

FROM: Rajesh Oberoi, Senior R.E.

FILE: E.A. 04 - 0120S4
CO-RTE-PM SF-80-12.7/13.2
FED. NO. NO FED AID

CCO#: 3 | SUPPLEMENT#: 0 | Category Code: ARZZ

CONTINGENCY BALANCE (incl. this change) **$32,163,542.00**

COST: **$52,500.00** INCREASE ☑ DECREASE ☐

HEADQUARTERS APPROVAL REQUIRED? ☐ YES ☑ NO

SUPPLEMENTAL FUNDS PROVIDED: **$52,500.00**

IS THIS REQUEST IN ACCORDANCE WITH ENVIRONMENTAL DOCUMENTS? ☑ YES ☐ NO

CCO DESCRIPTION:
Dispute Review Board

PROJECT DESCRIPTION:
YBITS-1 (Yerba Buena Island Transition Structures)

Original Contract Time:	Time Adj. This Change:	Previously Approved CCO Time Adjustments:	Percentage Time Adjusted: (including this change)	Total # of Unreconciled Deferred Time CCO(s): (including this change)
1390 Day(s)	0 Day(s)	0 Day(s)	0 %	0

THIS CHANGE ORDER PROVIDES FOR:

Establishing a Disputes Review Board (DRB) in accordance with the terms specified in the DRB specifications, guidelines, agreement and certifications specified in Section 5-1.05 of the Special Provisions. The purpose of the Board is to assist in the resolution of disputes and potential claims arising from the contract work.

The cost of providing a DRB for this contract shall be borne equally by the Contractor and the State. For the purposes of enabling partial payment to the Contractor on a monthly basis, the method of payment shall be Extra Work at Force Account with an estimated cost of $52,500.00. Supplemental funds have been provided for the work of this change in the amount of $52,500.00. Payments shall be made on a lump sum basis from invoices submitted by the Board, not more often than once a month. Markups will not be allowed in the payment of the State's share of the invoiced costs.

No adjustment of contract time is warranted by this change.

Design and Maintenance concurrence is not required as this work is anticipated by the contract documents.

The Resident Engineer recommends this change order be approved.

CONCURRED BY:

Construction Engineer:	Rajesh Oberoi	Date 8/4/10
Bridge Engineer:		Date
Project Engineer:		Date
Project Manager:		Date
FHWA Rep.:		Date
Environmental:		Date
Other (specify):		Date
Other (specify):		Date
District Prior Approval By:		Date
HQ (Issue Approve) By:		Date
Resident Engineer's Signature:	Rajesh Oberoi	Date 8/4/10

ESTIMATE OF COST

	THIS REQUEST	TOTAL TO DATE
ITEMS	$0.00	$0.00
FORCE ACCOUNT	$52,500.00	$52,500.00
AGREED PRICE	$0.00	$0.00
ADJUSTMENT	$0.00	$0.00
TOTAL	$52,500.00	$52,500.00

FEDERAL PARTICIPATION

☐ PARTICIPATING ☐ PARTICIPATING IN PART ☑ NONE
☐ NON-PARTICIPATING (MAINTENANCE) ☐ NON-PARTICIPATING

FEDERAL SEGREGATION (if more than one Funding Source or P.I.P. type)
☐ CCO FUNDED PER CONTRACT ☐ CCO FUNDED AS FOLLOWS

FEDERAL FUNDING SOURCE	PERCENT

ADA Notice: For individuals with sensory disabilities, this document is available in alternate formats. For information call: (916) 654-6410 or TDD (916) 654-3880 or write

STATE OF CALIFORNIA - DEPARTMENT OF TRANSPORTATION

CONTRACT CHANGE ORDER

Change Requested by: Engineer

CCO: 5	Suppl. No. 0	Contract No. 04 - 0120S4	Road SF-80-12.7/13.2	FED. AID LOC.: NO FED AID

To: **M C M CONSTRUCTION INC**

You are directed to make the following changes from the plans and specifications or do the following described work not included in the plans and specifications for this contract. ***NOTE: This change order is not effective until approved by the Engineer.***

Description of work to be done, estimate of quantities and prices to be paid. (Segregate between additional work at contract price, agreed price and force account.) Unless otherwise stated, rates for rental of equipment cover only such time as equipment is actually used and no allowance will be made for idle time. This last percentage shown is the net accumulated increase or decrease from the original quantity in the Engineer's Estimate.

Eliminate the work specified under Section 10-1.25 DOCUMENT MANAGEMENT SYSTEM of the Contract Special Provisions.

In lieu of the requirements eliminated under Section 10-1.25, the Contractor shall be responsible to submit all Contract documents to the Department in an electronic format compatible with the latest Microsoft Windows operating system utilized by the Department. These documents include but are not limited to letters, submittals, transmittals, shop drawings and calculations, Requests for Information, memorandums and plan sheets.

Estimate of Decrease in Contract Item at Contract Price:

Item No. 3: DOCUMENT MANAGEMENT SYSTEM
-1 LS (–100.00%) @$599,610.00 /LS = –$599,610.00 (–100.00%)

Any adjustment due in accordance with Section 4-1.03B(3), "Eliminated Items," of the Standard Specifications, due to the elimination of Item No. 3, Document Management System is deferred. Any adjustment shall be compensated under a Supplement to this Change Order.

Estimated total cost for Decrease in Contract Item.....($599,610.00)

No adjustment in contract time will be made since this work is not a controlling item.

Estimated Cost: Increase ☐ **Decrease** ☑ **($599,610.00)**

By reason of this order the time of completion will be adjusted as follows: 0 days

Submitted by

Signature Deanna Vilcheck for	Resident Engineer Rajesh Oberoi	Date 10/18/10

Approval Recommended by

Signature Deanna Vilcheck	Area Construction Manager Deanna Vilcheck	Date 10/18/10

Engineer Approval by

Signature Michael Forner	Principal T.E. Mike Forner	Date 11/12/10

We the undersigned contractor, have given careful consideration to the change proposed and agree, if this proposal is approved, that we will provide all equipment, furnish the materials, except as may otherwise be noted above, and perform all services necessary for the work above specified, and will accept as full payment therefor the prices shown above.

NOTE: If you, the contractor, do not sign acceptance of this order, your attention is directed to the requirements of the specifications as to proceeding with the ordered work and filing a written protest within the time therein specified.

Contractor Acceptance by

Signature	(Print name and title) Edmundo A. Puchi - Treasurer	Date 10-25-2010

STATE OF CALIFORNIA - DEPARTMENT OF TRANSPORTATION

CONTRACT CHANGE ORDER MEMORANDUM

TO: Deanna Vilcheck, ACM /	FILE: **E.A.** 04 - 0120S4
FROM: Rajesh Oberoi, Senior R.E.	**CO-RTE-PM** SF-80-12.7/13.2
	FED. NO. NO FED AID
CCO#: **5** SUPPLEMENT#: **0** Category Code: **CXSA**	CONTINGENCY BALANCE (incl. this change) **$31,873,742.00**
COST: **($599,610.00)** INCREASE ☐ DECREASE ☑	HEADQUARTERS APPROVAL REQUIRED? ☑ YES ☐ NO
SUPPLEMENTAL FUNDS PROVIDED: **$0.00**	IS THIS REQUEST IN ACCORDANCE WITH ENVIRONMENTAL DOCUMENTS? ☑ YES ☐ NO
CCO DESCRIPTION: Eliminate Document Management System	**PROJECT DESCRIPTION:** YBITS-1 (Yerba Buena Island Transition Structures)

Original Contract Time:	Time Adj. This Change:	Previously Approved CCO Time Adjustments:	Percentage Time Adjusted: (including this change)	Total # of Unreconciled Deferred Time CCO(s): (including this change)
1390 Day(s)	**0** Day(s)	**0** Day(s)	**0** %	**0**

THIS CHANGE ORDER PROVIDES FOR:

The elimination of the specified document management system.

This project, the Yerba Buena Island Transition Structure (YBITS), provides for the construction of two bridges which will connect eastbound and westbound traffic on the new east span of the San Francisco Oakland Bay Bridge (SFOBB) to the existing Yerba Buena Island (YBI) tunnel. The structures are comprised of concrete box girder bridges each approximately 40 meters high and 450 meters in length.

The contract special provisions provide for the use a specific document management software system which is compensated under Contract Bid Item No. 3. This work incorporates the management of contractual letters, submittals, transmittals, shop drawing and calculations, Request for Information, memorandums and plan sheets. The lump sum bid item for this work provided for the supply and maintenance of the software along with furnishing specified electronic hardware that was necessary to implement the system.

It has now been that determined that this document management shall be performed with an internal web based document management system which can be used at no cost to the Department. This web based system will eliminate the need for the specified document management system provided for under the contract bid item. Accordingly, the contract bid item work will be eliminated.

The elimination of the document management system will result in the elimination of the contract bid item at a cost savings of $599,610.00. Any costs incurred related to this deleted bid item is deferred and shall be determined in accordance with Section 4-1.03B(3) "Eliminated Items" of the Standard Specifications.

It is anticipated that preparation costs have been incurred by the software developer prior to the deletion of this item. Cost will also be incurred in the supply of a portion of the hardware that was to be provided to implement the as-planned document control system and that is still required to implement the proposed web based system. These costs have not been determined to date and shall be compensated under a supplement to this change order. The net result of this change is anticipated to provide a significant cost savings to the Department.

No adjustment of contract time is warranted as this is an administrative change which will not affect the controlling operation.

Maintenance concurrence is not required as this is an administrative change which doesn't affect any permanent roadway features.

ADA Notice: For individuals with sensory disabilities, this document is available in alternate formats. For information call: (916) 654-6410 or TDD (916) 654-3880 or write Records and Forms Management, 1120 N Street, MS-89, Sacramento, CA 95814.

CONCURRED BY:		
Construction Engineer: for Rajesh Oberoi	Date 12/01/10	
Bridge Engineer:	Date	
Project Engineer:	Date	
Project Manager:	Date	
FHWA Rep.:	Date	
Environmental:	Date	
Other (specify):	Date	
Other (specify):	Date	
District Prior Approval By:	Date	
HQ (Issue Approval By: Larry Salhaney	Date 10/18/10	
Resident Engineer's Signature:	Date 12/01/10	

ESTIMATE OF COST

	THIS REQUEST	TOTAL TO DATE
ITEMS	($599,610.00)	($599,610.00)
FORCE ACCOUNT	$0.00	$0.00
AGREED PRICE	$0.00	$0.00
ADJUSTMENT	$0.00	$178,000.00
TOTAL	($599,610.00)	($421,610.00)

FEDERAL PARTICIPATION

☑ PARTICIPATING ☐ PARTICIPATING IN PART ☑ NONE
☐ NON-PARTICIPATING (MAINTENANCE) ☐ NON-PARTICIPATING

FEDERAL SEGREGATION (if more than one Funding Source or P.I.P. type)
☐ CCO FUNDED PER CONTRACT ☐ CCO FUNDED AS FOLLOWS

FEDERAL FUNDING SOURCE	PERCENT

ADA Notice: For individuals with sensory disabilities, this document is available in alternate formats. For information call: (916) 654-6410 or TDD (916) 654-3880 or write Records and Forms Management, 1120 N Street, MS-89, Sacramento, CA 95814.

CONTRACT CHANGE ORDER

Change Requested by: Engineer

CCO: 5	Suppl. No. 1	Contract No. 04 - 0120S4	Road SF-80-12.7/13.2	FED. AID LOC.: NO FED AID

To: **M C M CONSTRUCTION INC**

You are directed to make the following changes from the plans and specifications or do the following described work not included in the plans and specifications for this contract. ***NOTE: This change order is not effective until approved by the Engineer.***

Description of work to be done, estimate of quantities and prices to be paid. (Segregate between additional work at contract price, agreed price and force account.) Unless otherwise stated, rates for rental of equipment cover only such time as equipment is actually used and no allowance will be made for idle time. This last percentage shown is the net accumulated increase or decrease from the original quantity in the Engineer's Estimate.

Furnish all system components for both the Contractor and the Department as specified under Section 10-1.25 DOCUMENT MANAGEMENT SYSTEM of the Contract Special Provisions. These components shall be provided for use with the Department's web based document management system. System components furnished shall be modified as listed in the following 5 items:

1)Eliminate all PMIV software licenses specified.
2)Eliminate all PMIV training session requirements specified.
3)Eliminate all PMIV technical support requirements specified.
4)Eliminate furnishing all flash drives specified.
5)All computer systems and network copiers furnished will be compatible with the latest Microsoft Windows operating system utilized by the Department in lieu of being compatible with PMIV software.

Adjustment of Compensation at Lump Sum:

Compensate the Contractor for furnishing all system components as specified under this change order and for all additiona costs incurred in establishing their own document management system, including but not limited to furnishing and maintaining a server, document management software and an FTP site for managing large files.

For this change, the Contractor shall be compensated an agreed lump sum of $178,800.00 which constitutes full and final compensation, including all markups, for all additional costs incurred.

This change order excludes outstanding costs to be submitted by Integral Vision associated with startup costs incurred for the now eliminated PMIV document management software system. These costs shall be compensated under a supplemental change order.

Cost of Adjustment of Compensation at Lump Sum $178,000.00

CONTRACT CHANGE ORDER

Change Requested by: Engineer

CCO: 5	Suppl. No. 1	Contract No. 04 - 0120S4	Road SF-80-12.7/13.2	FED. AID LOC.: NO FED AID

Estimated Cost: Increase ☑ Decrease ☐ $178,000.00

By reason of this order the time of completion will be adjusted as follows: 0 days

Submitted by

Signature	Resident Engineer	Date
	for Rajesh Oberoi, Senior R.E.	12/06/10

Approval Recommended by

Signature	Area Construction Manager	Date
Deanna Vilcheck	Deanna Vilcheck	12/6/10

Engineer Approval by

Signature	Area Construction Manager	Date
Michael Fraum	Deanna Vilcheck	12/22/10

We the undersigned contractor, have given careful consideration to the change proposed and agree, if this proposal is approved, that we will provide all equipment, furnish the materials, except as may otherwise be noted above, and perform all services necessary for the work above specified, and will accept as full payment therefor the prices shown above.

NOTE: If you, the contractor, do not sign acceptance of this order, your attention is directed to the requirements of the specifications as to proceeding with the ordered work and filing a written protest within the time therein specified.

Contractor Acceptance by

Signature	(Print name and title)	Date
	Edmund A. Ruchi - Treasurer	12-14-2010

STATE OF CALIFORNIA - DEPARTMENT OF TRANSPORTATION

CONTRACT CHANGE ORDER MEMORANDUM

TO: Deanna Vilcheck, ACM /	FILE: E.A. 04 - 0120S4
	CO-RTE-PM SF-80-12.7/13.2
FROM: Rajesh Oberoi, Senior R.E.	FED. NO. NO FED AID
CCO#: 5 SUPPLEMENT#: 1 Category Code: CXSA	CONTINGENCY BALANCE (incl. this change) $28,052,782.00
COST: $178,000.00 INCREASE ☑ DECREASE ☐	HEADQUARTERS APPROVAL REQUIRED? ☑ YES ☐ NO
SUPPLEMENTAL FUNDS PROVIDED: $0.00	IS THIS REQUEST IN ACCORDANCE WITH ENVIRONMENTAL DOCUMENTS? ☑ YES ☐ NO
CCO DESCRIPTION: DMS (Furnish System Components)	**PROJECT DESCRIPTION:** YBITS-1 (Yerba Buena Island Transition Structures)

Original Contract Time:	Time Adj. This Change:	Previously Approved CCO Time Adjustments:	Percentage Time Adjusted: (including this change)	Total # of Unreconciled Deferred Time CCO(s): (including this change)
1390 Day(s)	0 Day(s)	0 Day(s)	0 %	0

THIS CHANGE ORDER PROVIDES FOR:

Compensation to the contractor for costs incurred in setting up the new web based document management system.

This project, the Yerba Buena Island Transition Structure (YBITS), provides for the construction of two bridges which will connect eastbound and westbound traffic on the new east span of the San Francisco Oakland Bay Bridge (SFOBB) to the existing Yerba Buena Island (YBI) tunnel. The structures are comprised of concrete box girder bridges each approximately 40 meters high and 450 meters in length.

The contract special provisions provide for the use a specific document management software system, PMIV, which was to be compensated under Contract Bid Item No. 3. This work incorporated the management of contractual letters, submittals, transmittals, shop drawing and calculations, Request for Information, memorandums and plan sheets. The lump sum bid item for this work provided for the supply and maintenance of the software along with furnishing specified electronic hardware that was necessary to implement the system.

The original Change Order No. 5 eliminated the use of the planned PMIV software in favor of a less expensive web based system developed by the Department. The web based system, however, still requires some of the system components specified to be furnished under Section 10-1.25 DOCUMENT MANAGEMENT SYSTEM of the Contract Special Provisions such as computer systems and network copiers along with the maintenance of these systems over the 3 ½ year contract duration. The contractor also will incur costs of setting up their own document management system including furnishing and maintaining a server, document management software and an FTP site for managing large files. These items were to be provided by the PMIV software provider under the now deleted contract bid item.

Compensation for these costs shall be paid as an adjustment of compensation at an agreed lump sum of $178,800.00 which shall be financed from the contract's contingency funds. A cost analysis is on file.

It is anticipated that preparation costs have been incurred by the PMIV software developer prior to the deletion of this item. These costs have not been determined to date and shall be compensated under a supplement to this change order. The net result of this change is anticipated to provide a significant cost savings to the Department.

No adjustment of contract time is warranted as this is an administrative change which will not affect the controlling operation.

Maintenance concurrence is not required as this is an administrative change which doesn't affect any permanent roadway features.

ADA Notice: For individuals with sensory disabilities, this document is available in alternate formats. For information call: (916) 654-6410 or TDD (916) 654-3880 or write Records and Forms Management, 1120 N Street, MS-89, Sacramento, CA 95814.

CONCURRED BY:		
Construction Engineer: Rajesh Oberoi	Date 11/24/10	
Bridge Engineer:	Date	
Project Engineer:	Date	
Project Manager:	Date	
FHWA Rep.:	Date	
Environmental:	Date	
Other (specify):	Date	
Other (specify):	Date	
District Prior Approval By:	Date	
HQ (Issue Approve) By: Larry Salhanay	Date 11/2/10	
Resident Engineer's Signature: Rajesh Oberoi	Date 11/24/10	

ESTIMATE OF COST

	THIS REQUEST	TOTAL TO DATE
ITEMS	$0.00	($599,610.00)
FORCE ACCOUNT	$0.00	$0.00
AGREED PRICE	$0.00	$0.00
ADJUSTMENT	$178,000.00	$178,000.00
TOTAL	$178,000.00	($421,610.00)

FEDERAL PARTICIPATION

☐ PARTICIPATING ☐ PARTICIPATING IN PART ☑ NONE
☐ NON-PARTICIPATING (MAINTENANCE) ☐ NON-PARTICIPATING

FEDERAL SEGREGATION (if more than one Funding Source or P.I.P. type)
☑ CCO FUNDED PER CONTRACT ☐ CCO FUNDED AS FOLLOWS

FEDERAL FUNDING SOURCE	PERCENT

ADA Notice: For individuals with sensory disabilities, this document is available in alternate formats. For information call: (916) 654-6410 or TDD (916) 654-3880 or write Records and Forms Management, 1120 N Street, MS-89, Sacramento, CA 95814.

STATE OF CALIFORNIA - DEPARTMENT OF TRANSPORTATION

CONTRACT CHANGE ORDER

Change Requested by: Engineer

CCO: 5	Suppl. No. 2	Contract No. 04 - 0120S4	Road SF-80-12.7/13.2	FED. AID LOC.: NO FED AID

To: **M C M CONSTRUCTION INC**

You are directed to make the following changes from the plans and specifications or do the following described work not included in the plans and specifications for this contract. ***NOTE: This change order is not effective until approved by the Engineer.***

Description of work to be done, estimate of quantities and prices to be paid. (Segregate between additional work at contract price, agreed price and force account.) Unless otherwise stated, rates for rental of equipment cover only such time as equipment is actually used and no allowance will be made for idle time. This last percentage shown is the net accumulated increase or decrease from the original quantity in the Engineer's Estimate.

Adjustment of Compensation at Lump Sum:

Compensate the Contractor for all costs incurred by Integral Vision associated with the startup of the PMIV document management software system prior to the elimination of the system that was implemented under the original Change Order No. 5.

For these costs, the Contractor shall be compensated an agreed lump sum of $90,677.50 which constitutes full and final compensation, including all markups, for all costs incurred.

This change order resolves all costs associated with the elimination of Contract Bid Item No. 3 "Document Management System".

Estimated cost of Adjustment of Compensation at Lump Sum $90,677.50

Estimated Cost: Increase ☑ **Decrease** ☐ **$90,677.50**

By reason of this order the time of completion will be adjusted as follows: 0 days

Submitted by		
Signature Rajesh Oberoi	Resident Engineer Rajesh Oberoi, Senior R.E.	Date 02/25/11
Approval Recommended by		
Signature Deanna Vilcheck	Area Construction Manager Deanna Vilcheck	Date 2/25/11
Engineer Approval by		
Signature Deanna Vilcheck	Area Construction Manager Deanna Vilcheck	Date 3/14/11

We the undersigned contractor, have given careful consideration to the change proposed and agree, if this proposal is approved, that we will provide all equipment, furnish the materials, except as may otherwise be noted above, and perform all services necessary for the work above specified, and will accept as full payment therefor the prices shown above.

NOTE: If you, the contractor, do not sign acceptance of this order, your attention is directed to the requirements of the specifications as to proceeding with the ordered work and filing a written protest within the time therein specified.

Contractor Acceptance by		
Signature	(Print name and title) Edmundo A Pachi - Treasurer	Date 3-8-2011

STATE OF CALIFORNIA - DEPARTMENT OF TRANSPORTATION

CONTRACT CHANGE ORDER MEMORANDUM

TO: Deanna Vilcheck, ACM /	FILE: **E.A.** 04 - 0120S4
FROM: Rajesh Oberoi, Senior R.E.	**CO-RTE-PM** SF-80-12.7/13.2
	FED. NO. NO FED AID
CCO#: **5** SUPPLEMENT#: **2** Category Code: **CXSA**	CONTINGENCY BALANCE (incl. this change) **$18,909,843.50**
COST: **$90,677.50** INCREASE ☑ DECREASE ☐	HEADQUARTERS APPROVAL REQUIRED? ☑ YES ☐ NO
SUPPLEMENTAL FUNDS PROVIDED: **$0.00**	IS THIS REQUEST IN ACCORDANCE WITH ENVIRONMENTAL DOCUMENTS? ☑ YES ☐ NO
CCO DESCRIPTION: Closeout of Integral Vision startup cost	**PROJECT DESCRIPTION:** YBITS-1 (Yerba Buena Island Transition Structures)

Original Contract Time:	Time Adj. This Change:	Previously Approved CCO Time Adjustments:	Percentage Time Adjusted: (including this change)	Total # of Unreconciled Deferred Time CCO(s): (including this change)
1390 Day(s)	**0** Day(s)	**0** Day(s)	**0** %	**7**

THIS CHANGE ORDER PROVIDES FOR:

Compensation to the contractor for cost incurred by the specified PMIV document management system provider prior to the elimination of this system from the contract.

This project, the Yerba Buena Island Transition Structure (YBITS), provides for the construction of two bridges which will connect eastbound and westbound traffic on the new east span of the San Francisco Oakland Bay Bridge (SFOBB) to the existing Yerba Buena Island (YBI) tunnel. The structures are comprised of concrete box girder bridges each approximately 40 meters high and 450 meters in length.

The contract special provisions provide for the use of a specific document management software system, PMIV, which was to be compensated under Contract Bid Item No. 3. This work incorporated the management of contractual letters, submittals, transmittals, shop drawing and calculations, Request for Information, memorandums and plan sheets. The lump sum bid item for this work provided for the supply and maintenance of the software along with furnishing specified electronic hardware that was necessary to implement the system.

The original Change Order No. 5 eliminated the use of the planned PMIV software in favor of a less expensive web based system developed by the Department. Change Order No. 5, Supplement No. 1 provided for system components specified to be furnished under Section 10-1.25 DOCUMENT MANAGEMENT SYSTEM of the Contract Special Provisions that were still required for the web based system. Supplement No. 1 deferred costs associated with the PMIV provider Integral Vision that were incurred prior to the elimination of the PMIV system. This change order provides compensation for those startup costs incurred.

The original agreement between the Department and Integral Vision that was signed in August of 2009 called for Integral Vision to provide the specified PMIV system over the 3 and ½ year duration of the contract at a guaranteed price of $599,610. The actual YBITS1 contract was awarded in February 2010 with the PMIV system being eliminated from the contract by letter in September of 2010 and then officially eliminated by change order in October of 2010. During the 6 month lead up to the award of the contract and the 7 to 8 months between the award of the contract and elimination of the PMIV system, Integral Vision incurred preparation and startup costs concerning the PMIV system. These costs are primarily made up of direct engineering labor and indirect overhead costs as documented by Integral Vision. This change order pays for these costs.

Compensation for these costs shall be paid as an adjustment of compensation at an agreed lump sum of $90,677.50 which shall be financed from the contract's contingency funds. A cost analysis is on file.

The elimination of the PMIV system, including this change order, the original Change Order No. 5 and Supplement No. 1, shall result in a net $330,932.50 savings to the Department.

No adjustment of contract time is warranted as this is an administrative change which will not affect the controlling operation.

Maintenance concurrence is not required as this is an administrative change which doesn't affect any permanent roadway features.

ADA Notice: For individuals with sensory disabilities, this document is available in alternate formats. For information call: (916) 654-6410 or TDD (916) 654-3880 or write Records and Forms Management, 1120 N Street, MS-89, Sacramento, CA 95814.

CONCURRED BY:		
Construction Engineer:	Rajesh Oberoi	Date 02/25/11
Bridge Engineer:		Date
Project Engineer:		Date
Project Manager:		Date
FHWA Rep.:		Date
Environmental:		Date
Other (specify):		Date
Other (specify):		Date
District Prior Approval By:		Date
HQ (Issue Approve) By:		Date
Resident Engineer's Signature:	Rajesh Oberoi 02/25/11	Date

ESTIMATE OF COST

	THIS REQUEST	TOTAL TO DATE
ITEMS	$0.00	($599,610.00)
FORCE ACCOUNT	$0.00	$0.00
AGREED PRICE	$0.00	$0.00
ADJUSTMENT	$90,677.50	$268,677.50
TOTAL	$90,677.50	($330,932.50)

FEDERAL PARTICIPATION

☐ PARTICIPATING ☐ PARTICIPATING IN PART ☑ NONE
☐ NON-PARTICIPATING (MAINTENANCE) ☐ NON-PARTICIPATING

FEDERAL SEGREGATION (if more than one Funding Source or P.I.P. type)
☑ CCO FUNDED PER CONTRACT ☐ CCO FUNDED AS FOLLOWS

FEDERAL FUNDING SOURCE	PERCENT

ADA Notice: For individuals with sensory disabilities, this document is available in alternate formats. For information call: (916) 654-6410 or TDD (916) 654-3880 or write Records and Forms Management, 1120 N Street, MS-89, Sacramento, CA 95814.

STATE OF CALIFORNIA - DEPARTMENT OF TRANSPORTATION

CONTRACT CHANGE ORDER

Change Requested by: Engineer

CCO 5	Suppl. No. 3	Contract No. 04 - 0120S4	Road SF-80-12.7/13.2	FED. AID LOC.: NO FED AID

To: **M C M CONSTRUCTION INC**

You are directed to make the following changes from the plans and specifications or do the following described work not included in the plans and specifications for this contract. ***NOTE: This change order is not effective until approved by the Engineer.***

Description of work to be done, estimate of quantities and prices to be paid. (Segregate between additional work at contract price, agreed price and force account.) Unless otherwise stated, rates for rental of equipment cover only such time as equipment is actually used and no allowance will be made for idle time. This last percentage shown is the net accumulated increase or decrease from the original quantity in the Engineer's Estimate.

Furnish the following additional system component for the Department as specified under Section 10-1.25, Document Management System, of the Special Provisions for use by the Department in conjunction with the Department's document management system through the life of the contract:

One Color copier / laser printer / scanner, Ricoh Aficio MP2851SP or equal. Machine shall include 50-Sheet Automatic Reversing Document Feeder; 2 each 500 sheet cassettes; Cabinet; full Toner/Developer; Data Security Kit; Surge Protector; and print or scan data through a Universal Serial Bus (USB) port (non-network) compatable with the latest Microsoft Windows operating system utilized by the Department. Maintenance through the life of the contract is included, assuming a maximum of 120,000 copes are printed.

Adjustment of Compensation at Lump Sum:

Compensate the Contractor for furnishing this additional system component as specified under this change order supplement.

For this change, the Contractor shall be compensated an Agreed Lump sum of $9,425.00, which constitutes full and final compensation, including all markups, for all additional costs incurred.

Adjustment of Compensation at Lump Sum = $9,425.00

Estimated Cost: Increase ☑ **Decrease** ☐ **$9,425.00**

By reason of this order the time of completion will be adjusted as follows: 0 days

Submitted by

Signature	Resident Engineer	Date
William Howe	William Howe, Senior R.E.	05·25·12

Approval Recommended by

Signature	Senior Resident Engineer	Date
William Howe Deanna Vilchez	William Howe ACM Deanna Vilchez 6/4/12	05·25·12

Engineer Approval by

Signature	Senior Resident Engineer	Date
Deanna Vilchez	William Howe ACM Deanna Vilchez	6/8/12

We the undersigned contractor, have given careful consideration to the change proposed and agree, if this proposal is approved, that we will provide all equipment, furnish the materials, except as may otherwise be noted above, and perform all services necessary for the work above specified, and will accept as full payment therefor the prices shown above.

NOTE: If you, the contractor, do not sign acceptance of this order, your attention is directed to the requirements of the specifications as to proceeding with the ordered work and filing a written protest within the time therein specified.

Contractor Acceptance by

Signature	(Print name and title)	Date
	JAMES A. CARTER, PRESIDENT	6/4/12

STATE OF CALIFORNIA - DEPARTMENT OF TRANSPORTATION

CONTRACT CHANGE ORDER

Change Requested by: Engineer

CCO 13	Suppl. No. 1	Contract No. 04 - 0120S4	Road SF-80-12.7/13.2	FED. AID LOC.: NO FED AID

To: **M C M CONSTRUCTION INC**

You are directed to make the following changes from the plans and specifications or do the following described work not included in the plans and specifications for this contract. ***NOTE: This change order is not effective until approved by the Engineer.***

Description of work to be done, estimate of quantities and prices to be paid. (Segregate between additional work at contract price, agreed price and force account.) Unless otherwise stated, rates for rental of equipment cover only such time as equipment is actually used and no allowance will be made for idle time. This last percentage shown is the net accumulated increase or decrease from the original quantity in the Engineer's Estimate.

Revise the project construction limits to encompass the limits between the Sterling Substation east of 2nd St. in the City and County of San Francisco to the San Francisco Oakland Bay Bridge Toll Plaza in Alameda County. The new construction limits shall be revised as listed below:

Revised Construction Limits: 04-SF-80 KP 8.5/KP 14.3, 04-ALA-80 KP 0.0/KP 4.0

Compensation for additional cost or time impacts associated with performing extra work within the extended construction limits will be addressed under separate change orders that will incorporate the additional work into the Contract.

This change order does not change any provisions of Section 5-1.11 "Areas for Contractor's Use" of the Contract Special Provisions.

There is no cost associated with this change order.

Estimated Cost: **Increase** ☐ **Decrease** ☐ **$0.00**

By reason of this order the time of completion will be adjusted as follows: 0 days

Submitted by		
Signature Michael Frame FOR	**Resident Engineer** William Howe, Senior R.E.	**Date** 5/11/12
Approval Recommended by		
Signature	**Region Construction Division Chief** Tony Anziano	**Date** 5/11/12
Engineer Approval by		
Signature	**Region Construction Division Chief** Tony Anziano	**Date** 8/1/12

We the undersigned contractor, have given careful consideration to the change proposed and agree, if this proposal is approved, that we will provide all equipment, furnish the materials, except as may otherwise be noted above, and perform all services necessary for the work above specified, and will accept as full payment therefor the prices shown above.

NOTE: If you, the contractor, do not sign acceptance of this order, your attention is directed to the requirements of the specifications as to proceeding with the ordered work and filing a written protest within the time therein specified.

Contractor Acceptance by		
Signature	**(Print name and title)** JAMES A. CARTER, PRESIDENT	**Date** 5/25/12

STATE OF CALIFORNIA - DEPARTMENT OF TRANSPORTATION

CONTRACT CHANGE ORDER

Change Requested by: Engineer

CCO 21	Suppl. No. 2	Contract No. 04 - 0120S4	Road SF-80-12.7/13.2	FED. AID LOC.: NO FED AID

To: **M C M CONSTRUCTION INC**

You are directed to make the following changes from the plans and specifications or do the following described work not included in the plans and specifications for this contract. ***NOTE: This change order is not effective until approved by the Engineer.***

Description of work to be done, estimate of quantities and prices to be paid. (Segregate between additional work at contract price, agreed price and force account.) Unless otherwise stated, rates for rental of equipment cover only such time as equipment is actually used and no allowance will be made for idle time. This last percentage shown is the net accumulated increase or decrease from the original quantity in the Engineer's Estimate.

Extra Work at Force Account:

Provide additional funds for performing all work necessary in order to comply with the Department's current Statewide General Permit issued by the State Water Resources Control Board (SWRCB) titled "Order No. 2009-0009-DWQ, National Pollutant Discharge Elimination System (NPDES) General Permit No. CAS000002, Waste Discharge Requirements for Discharges of Storm Water Runoff Associated with Construction and Land Disturbance Activities", as specified under the Special Provision sections listed under Change Order No. 21, Supplement No. 1, including the revisions incorporated unde the original Change Order No. 21, Supplement No. 0, and as determined by the Engineer.

Estimated Cost of Extra Work at Force Account = $1,500,000.00

Consideration of a time adjustment will be deferred until completion of the work specified herein. Determination of a commensurate time extension will be made in accordance with Section 8-1.07, "Liquidated Damages", of the Standard Specifications.

Estimated Cost: **Increase** ☑ **Decrease** ☐ **$1,500,000.00**

By reason of this order the time of completion will be adjusted as follows: Deferred

Submitted by		
Signature William Howe	Resident Engineer William Howe, Senior R.E.	Date 05.08.12
Approval Recommended by		
Signature Michael Forner	Principal T.E. Mike Forner	Date 5/8/12
Engineer Approval by		
Signature Michael Forner	Principal T.E. Mike Forner	Date 6/14/12

We the undersigned contractor, have given careful consideration to the change proposed and agree, if this proposal is approved, that we will provide all equipment, furnish the materials, except as may otherwise be noted above, and perform all services necessary for the work above specified, and will accept as full payment therefor the prices shown above.

NOTE: If you, the contractor, do not sign acceptance of this order, your attention is directed to the requirements of the specifications as to proceeding with the ordered work and filing a written protest within the time therein specified.

Contractor Acceptance by		
Signature	(Print name and title) Edmund A. Pucchi, Treasurer	Date 6-12-2012

RECEIVED JUN 13 2012

STATE OF CALIFORNIA - DEPARTMENT OF TRANSPORTATION

CONTRACT CHANGE ORDER

Change Requested by: Engineer

CCO 21	Suppl. No. 2	Contract No. 04 - 0120S4	Road SF-80-12.7/13.2	FED. AID LOC.: NO FED AID

To: **M C M CONSTRUCTION INC**

You are directed to make the following changes from the plans and specifications or do the following described work not included in the plans and specifications for this contract. ***NOTE: This change order is not effective until approved by the Engineer.***

Description of work to be done, estimate of quantities and prices to be paid. (Segregate between additional work at contract price, agreed price and force account.) Unless otherwise stated, rates for rental of equipment cover only such time as equipment is actually used and no allowance will be made for idle time. This last percentage shown is the net accumulated increase or decrease from the original quantity in the Engineer's Estimate.

Extra Work at Force Account:

Provide additional funds for performing all work necessary in order to comply with the Department's current Statewide General Permit issued by the State Water Resources Control Board (SWRCB) titled "Order No. 2009-0009-DWQ, National Pollutant Discharge Elimination System (NPDES) General Permit No. CAS000002, Waste Discharge Requirements for Discharges of Storm Water Runoff Associated with Construction and Land Disturbance Activities", as specified under the Special Provision sections listed under Change Order No. 21, Supplement No. 1, including the revisions incorporated unde the original Change Order No. 21, Supplement No. 0, and as determined by the Engineer.

Estimated Cost of Extra Work at Force Account = $1,500,000.00

Consideration of a time adjustment will be deferred until completion of the work specified herein. Determination of a commensurate time extension will be made in accordance with Section 8-1.07, "Liquidated Damages", of the Standard Specifications.

Estimated Cost: **Increase** ☑ **Decrease** ☐ **$1,500,000.00**

By reason of this order the time of completion will be adjusted as follows: Deferred

Submitted by		
Signature William Howe	Resident Engineer William Howe, Senior R.E.	Date 05.08.12
Approval Recommended by		
Signature Michael Forner	Principal T.E. Mike Forner	Date 5/8/12
Engineer Approval by		
Signature Michael Forner	Principal T.E. Mike Forner	Date 6/14/12

We the undersigned contractor, have given careful consideration to the change proposed and agree, if this proposal is approved, that we will provide all equipment, furnish the materials, except as may otherwise be noted above, and perform all services necessary for the work above specified, and will accept as full payment therefor the prices shown above.

NOTE: If you, the contractor, do not sign acceptance of this order, your attention is directed to the requirements of the specifications as to proceeding with the ordered work and filing a written protest within the time therein specified.

Contractor Acceptance by		
Signature	(Print name and title) Edmund A. Pucchi, Treasurer	Date 6-12-2012

RECEIVED JUN 13 2012

STATE OF CALIFORNIA - DEPARTMENT OF TRANSPORTATION

CONTRACT CHANGE ORDER

Change Requested by: Engineer

CCO 5	Suppl. No. 3	Contract No. 04 - 0120S4	Road SF-80-12.7/13.2	FED. AID LOC.: NO FED AID

To: **M C M CONSTRUCTION INC**

You are directed to make the following changes from the plans and specifications or do the following described work not included in the plans and specifications for this contract. ***NOTE: This change order is not effective until approved by the Engineer.***

Description of work to be done, estimate of quantities and prices to be paid. (Segregate between additional work at contract price, agreed price and force account.) Unless otherwise stated, rates for rental of equipment cover only such time as equipment is actually used and no allowance will be made for idle time. This last percentage shown is the net accumulated increase or decrease from the original quantity in the Engineer's Estimate.

Furnish the following additional system component for the Department as specified under Section 10-1.25, Document Management System, of the Special Provisions for use by the Department in conjunction with the Department's document management system through the life of the contract:

One Color copier / laser printer / scanner, Ricoh Aficio MP2851SP or equal. Machine shall include 50-Sheet Automatic Reversing Document Feeder; 2 each 500 sheet cassettes; Cabinet; full Toner/Developer; Data Security Kit; Surge Protector; and print or scan data through a Universal Serial Bus (USB) port (non-network) compatable with the latest Microsoft Windows operating system utilized by the Department. Maintenance through the life of the contract is included, assuming a maximum of 120,000 copes are printed.

Adjustment of Compensation at Lump Sum:

Compensate the Contractor for furnishing this additional system component as specified under this change order supplement.

For this change, the Contractor shall be compensated an Agreed Lump sum of $9,425.00, which constitutes full and final compensation, including all markups, for all additional costs incurred.

Adjustment of Compensation at Lump Sum = $9,425.00

Estimated Cost: Increase ☑ **Decrease** ☐ **$9,425.00**

By reason of this order the time of completion will be adjusted as follows: 0 days

Submitted by

Signature	Resident Engineer	Date
William Howe	William Howe, Senior R.E.	05·25·12

Approval Recommended by

Signature	Senior Resident Engineer	Date
William Howe Deanna Vilchez	William Howe ACM Deanna Vilchez 6/4/12	05·25·12

Engineer Approval by

Signature	Senior Resident Engineer	Date
Deanna Vilchez	William Howe ACM Deanna Vilchez	6/8/12

We the undersigned contractor, have given careful consideration to the change proposed and agree, if this proposal is approved, that we will provide all equipment, furnish the materials, except as may otherwise be noted above, and perform all services necessary for the work above specified, and will accept as full payment therefor the prices shown above.

NOTE: If you, the contractor, do not sign acceptance of this order, your attention is directed to the requirements of the specifications as to proceeding with the ordered work and filing a written protest within the time therein specified.

Contractor Acceptance by

Signature	(Print name and title)	Date
	JAMES A. CARTER, PRESIDENT	6/4/12

STATE OF CALIFORNIA - DEPARTMENT OF TRANSPORTATION

CONTRACT CHANGE ORDER

Change Requested by: Engineer

CCO 13	Suppl. No. 1	Contract No. 04 - 0120S4	Road SF-80-12.7/13.2	FED. AID LOC.: NO FED AID

To: **M C M CONSTRUCTION INC**

You are directed to make the following changes from the plans and specifications or do the following described work not included in the plans and specifications for this contract. ***NOTE: This change order is not effective until approved by the Engineer.***

Description of work to be done, estimate of quantities and prices to be paid. (Segregate between additional work at contract price, agreed price and force account.) Unless otherwise stated, rates for rental of equipment cover only such time as equipment is actually used and no allowance will be made for idle time. This last percentage shown is the net accumulated increase or decrease from the original quantity in the Engineer's Estimate.

Revise the project construction limits to encompass the limits between the Sterling Substation east of 2nd St. in the City and County of San Francisco to the San Francisco Oakland Bay Bridge Toll Plaza in Alameda County. The new construction limits shall be revised as listed below:

Revised Construction Limits: 04-SF-80 KP 8.5/KP 14.3, 04-ALA-80 KP 0.0/KP 4.0

Compensation for additional cost or time impacts associated with performing extra work within the extended construction limits will be addressed under separate change orders that will incorporate the additional work into the Contract.

This change order does not change any provisions of Section 5-1.11 "Areas for Contractor's Use" of the Contract Special Provisions.

There is no cost associated with this change order.

Estimated Cost: **Increase** ☐ **Decrease** ☐ **$0.00**

By reason of this order the time of completion will be adjusted as follows: 0 days

Submitted by		
Signature Michael Frame FOR	**Resident Engineer** William Howe, Senior R.E.	**Date** 5/11/12
Approval Recommended by		
Signature	**Region Construction Division Chief** Tony Anziano	**Date** 5/11/12
Engineer Approval by		
Signature	**Region Construction Division Chief** Tony Anziano	**Date** 8/1/12

We the undersigned contractor, have given careful consideration to the change proposed and agree, if this proposal is approved, that we will provide all equipment, furnish the materials, except as may otherwise be noted above, and perform all services necessary for the work above specified, and will accept as full payment therefor the prices shown above.

NOTE: If you, the contractor, do not sign acceptance of this order, your attention is directed to the requirements of the specifications as to proceeding with the ordered work and filing a written protest within the time therein specified.

Contractor Acceptance by		
Signature	**(Print name and title)** JAMES A. CARTER, PRESIDENT	**Date** 5/25/12

STATE OF CALIFORNIA - DEPARTMENT OF TRANSPORTATION

CONTRACT CHANGE ORDER MEMORANDUM

TO: Deanna Vilcheck, ACM / Td	FILE: E.A. 04 - 0120S4
	CO-RTE-PM SF-80-12.7/13.2
FROM: William Howe, Senior R.E.	FED. NO. NO FED AID
CCO#: 13 SUPPLEMENT#: 1 Category Code: CXSX	CONTINGENCY BALANCE (incl. this change) $70,685,316.00
COST: $0.00 INCREASE ☐ DECREASE ☐	HEADQUARTERS APPROVAL REQUIRED? ☑ YES ☐ NO
SUPPLEMENTAL FUNDS PROVIDED: $0.00	IS THIS REQUEST IN ACCORDANCE WITH ENVIRONMENTAL DOCUMENTS? ☑ YES ☐ NO
CCO DESCRIPTION: Extend Contract Project Limits to SF	**PROJECT DESCRIPTION:** YBITS-1 (Yerba Buena Island Transition Structures)

Original Contract Time:	Time Adj. This Change:	Previously Approved CCO Time Adjustments:	Percentage Time Adjusted: (including this change)	Total # of Unreconciled Deferred Time CCO(s): (including this change)
1390 Day(s)	0 Day(s)	0 Day(s)	0 %	9

THIS CHANGE ORDER PROVIDES FOR:

This change order provides for revising the projects limits along the Route 80 corridor to encompass the limits between the Sterling Substation east of 2nd St. in the City and County of San Francisco to the San Francisco Oakland Bay Bridge (SFOBB) Toll Plaza in Alameda County.

The original Change Order No. 13 S0 extended the original projects construction limits to the east to allow for required SFOBB east span corridor wide electrical work to be performed up to the SFOBB Toll Plaza. This supplemental change order will extend the construction limits to the west in order to complete electrical work across the entire SFOBB corridor (both east and west span).

The project limits are being revised in order for the Contractor to perform anticipated additional work within the extended limits. The change order work will need to be performed at the Sterling Substation at the west approach of the SFOBB in San Francisco in order to synchronize the relays for the 15 KV power line, which spans the entire SFOBB corridor. This work was not anticipated under the original contract work limits. A separate change order shall be issued to incorporate the actual work into the contract.

This change order has been discussed and concurred with Jon Tapping, Headquarters Construction Coordinator, Toll Bridge, on May 8, 2012, in regard to the need for a Director's Order as addressed in Section 5-302 of the Construction Manual. It has been determined that this change order is within the scope of the project and therefore a Director's Order is not required.

This change order has been discussed and concurred with Mike Forner, Principal Transportation Engineer, on May 9, 2012.

This change order has been discussed, concurred and recommended by Tony Anziano, Region Construction Division Chief, on May 10, 2012.

This revision to the project work limits shall be issued as a no cost change order.

No adjustment of contract time is warranted, as this change will not affect the controlling operation.

Maintenance concurrence is not required, as this is an administrative change and does not affect any permanent roadway features.

ADA Notice: For individuals with sensory disabilities, this document is available in alternate formats. For information call [illegible]
Records and Forms Management, 1120 N Street, MS-89, Sacramento, CA 95814

CONCURRED BY:		
Construction Engineer:	William Howe	Date 05.10.12
Bridge Engineer:	Mehran Ardakanian	Date
Project Engineer:	Bob Zandipour, Design	Date 5-9-12
Project Manager:	Ken Terpstra	Date 5-9-12
FHWA Rep.:		Date
Environmental:		Date
Other (specify):		Date
Other (specify):		Date
District Prior Approval By:		Date
HQ (Issue Approve) By:	Larry Salhaney	Date 5-11-12
Resident Engineer's Signature: William Howe		Date 05-10-12

ESTIMATE OF COST

	THIS REQUEST	TOTAL TO DATE
ITEMS	$0.00	$0.00
FORCE ACCOUNT	$0.00	$0.00
AGREED PRICE	$0.00	$0.00
ADJUSTMENT	$0.00	$0.00
TOTAL	$0.00	$0.00

FEDERAL PARTICIPATION

☐ PARTICIPATING ☐ PARTICIPATING IN PART ☑ NONE
☐ NON-PARTICIPATING (MAINTENANCE) ☐ NON-PARTICIPATING

FEDERAL SEGREGATION (if more than one Funding Source or P.I.P. type)
☐ CCO FUNDED PER CONTRACT ☐ CCO FUNDED AS FOLLOWS

FEDERAL FUNDING SOURCE	PERCENT

ADA Notice For individuals with sensory disabilities, this document is available in alternate formats. For information call (916) 654-6410 or TDD (916) 654-3880 or write Records and Forms Management, 1120 N Street, MS-89, Sacramento, CA 95814.

STATE OF CALIFORNIA - DEPARTMENT OF TRANSPORTATION

CONTRACT CHANGE ORDER MEMORANDUM

TO: Deanna Vilcheck, ACM /	FILE: E.A. 04 - 0120S4
FROM: William Howe, Senior R.E.	CO-RTE-PM SF-80-12.7/13.2
	FED. NO. NO FED AID
CCO#: 21 SUPPLEMENT#: 2 Category Code: CXSA	CONTINGENCY BALANCE (incl. this change) $68,635,316.00
COST: $1,500,000.00 INCREASE ☑ DECREASE ☐	HEADQUARTERS APPROVAL REQUIRED? ☑ YES ☐ NO
SUPPLEMENTAL FUNDS PROVIDED: $0.00	IS THIS REQUEST IN ACCORDANCE WITH ENVIRONMENTAL DOCUMENTS? ☑ YES ☐ NO
CCO DESCRIPTION: Additional SWPP Funding	**PROJECT DESCRIPTION:** YBITS-1 (Yerba Buena Island Transition Structures)

Original Contract Time:	Time Adj. This Change:	Previously Approved CCO Time Adjustments:	Percentage Time Adjusted: (including this change)	Total # of Unreconciled Deferred Time CCO(s): (including this change)
1390 Day(s)	DEF Day(s)	0 Day(s)	0 %	9

THIS CHANGE ORDER PROVIDES FOR:

Additional funding for implementing Storm Water Pollution Prevention (SWPP) measures as specified under Contract Change Order No. 21, Supplements No. 0 and No. 1.

This project, the Yerba Buena Island Transition Structure (YBITS), provides for the construction of two bridges which will connect eastbound and westbound traffic on the new east span of the San Francisco Oakland Bay Bridge (SFOBB) from the signature Self-Anchored Suspension Bridge to the existing Yerba Buena Island tunnel. The structures are comprised of concrete box girder bridges each approximately 40 meters high and 450 meters in length.

The original Contract Change Order No. 21, Supplement No. 0, incorporated the Department's new National Pollutant Discharge Elimination System (NPDES) General Permit for Storm Water Discharges Associated with Construction and Land Disturbance (Order No. 2009-009-DWQ), Construction General Permit (CGP) effective July 1, 2010. The new permit implements year-round soil stabilization and sediment control best management practices in place of current rainy season requirements, increases the reporting and monitoring requirements for storm water discharges and provides changes for existing storm water pollution prevention plans to be in compliance with the new CGP. Several sections of the Contract Special Provisions were modified under the original change order to reflect these changes.

Change Order No. 21, Supplement No. 1, was subsequently issued to eliminate the contract item work associated with SWPP and provide for all SWPP work to be performed on a force account basis. As the work has progressed over the last year and a half, it has become apparent that the cost of the work will exceed the funding provided under Supplement No. 1. This change order will provide additional funding to cover the current estimated cost of the work through the anticipated end of the project in the Summer of 2013. Extensive costs have been incurred in properly controlling the storm water flows from the hills in the east and the west of the project limits. This storm water flows towards the center of the project and then drains to drainage inlets that drain directly to the San Francisco Bay.

The additional funding will be provided as extra work at force account at an estimated additional cost of $1,500,000.00, which shall be financed from the Contract's contingency balance. A cost analysis is on file.

This change was approved by the TBPOC on June 6, 2012, copy attached.

Any adjustment of contract time is deferred as the additional requirements may affect the controlling operation.

Maintenance concurrence is not required as the change doesn't affect any permanent roadway features.

ADA Notice: For individuals with sensory disabilities, this document is available in alternate formats. For information, call (916) 654-6410 or TDD (916) 654-3880 or write to Records and Forms Management, 1120 N Street, MS-89, Sacramento, CA 95814

CONCURRED BY:		
Construction Engineer:	William Howe	Date 05.08.12
Bridge Engineer:	Mehran Ardakanian	Date
Project Engineer:	Bob Zandipour, Design	Date 5-9-12
Project Manager:	Ken Terpstra	Date 6-8-12
FHWA Rep.:		Date
Environmental:		Date
Other (specify):		Date
Other (specify):		Date
District Prior Approval By:		Date
HQ (Issue Approve) By:	Larry Salhaney	Date 6-7-12
Resident Engineer's Signature: William Howe		Date 05.08.12

ESTIMATE OF COST

	THIS REQUEST	TOTAL TO DATE
ITEMS	$0.00	($149,940.00)
FORCE ACCOUNT	$1,500,000.00	$4,200,000.00
AGREED PRICE	$0.00	$0.00
ADJUSTMENT	$0.00	$0.00
TOTAL	$1,500,000.00	$4,050,060.00

FEDERAL PARTICIPATION

☐ PARTICIPATING ☐ PARTICIPATING IN PART ☑ NONE
☐ NON-PARTICIPATING (MAINTENANCE) ☐ NON-PARTICIPATING

FEDERAL SEGREGATION (if more than one Funding Source or P.I.P. type)
☐ CCO FUNDED PER CONTRACT ☐ CCO FUNDED AS FOLLOWS

FEDERAL FUNDING SOURCE	PERCENT

ADA Notice: For individuals with sensory disabilities, this document is available in alternate formats. For information call (916) 654-6410 or TDD (916) 654-3880 or write Records and Forms Management, 1120 N Street, MS-89, Sacramento, CA 95814

STATE OF CALIFORNIA - DEPARTMENT OF TRANSPORTATION

CONTRACT CHANGE ORDER MEMORANDUM

DATE: 5/23/2012 Page 1 of 1

TO: Deanna Vilcheck, ACM /	FILE: E.A. 04 - 0120S4
	CO-RTE-PM SF-80-12.7/13.2
FROM: William Howe, Senior R.E.	FED. NO. NO FED AID
CCO#: 5 SUPPLEMENT#: 3 Category Code: CXSA	CONTINGENCY BALANCE (incl. this change) $68,593,820.00
COST: $9,425.00 INCREASE ☑ DECREASE ☐	HEADQUARTERS APPROVAL REQUIRED? ☐ YES ☑ NO
SUPPLEMENTAL FUNDS PROVIDED: $0.00	IS THIS REQUEST IN ACCORDANCE WITH ENVIRONMENTAL DOCUMENTS? ☑ YES ☐ NO
CCO DESCRIPTION: Additional Field Office Scanner	**PROJECT DESCRIPTION:** YBITS-1 (Yerba Buena Island Transition Structures)

Original Contract Time:	Time Adj. This Change:	Previously Approved CCO Time Adjustments:	Percentage Time Adjusted: (including this change)	Total # of Unreconciled Deferred Time CCO(s): (including this change)
1390 Day(s)	0 Day(s)	0 Day(s)	0 %	9

THIS CHANGE ORDER PROVIDES FOR:

This change order provides for compensation to the Contractor for costs incurred to add a scanner / printer to the document management system.

This contract provides for the construction of the Yerba Buena Island Transition Structures for the east span of the new San Francisco Oakland Bay Bridge (SFOBB).

Original Contract Change Order No. 5 S0, along with supplements S1 and S2, eliminated the use of a specific document management software system (PMIV) in favor of a less expensive web based system developed by the Department. The CCO and supplements 1 and 2 provided components such as computer systems and network copier / scanners, which had been eliminated when the PMIV system was eliminated, but are still necessary to run the project's current document management system. As the work has progressed, one limitation of the document management system has been that the Yerba Buena Island site trailer does not have a scanner; at times, this has resulted in delays in processing documents. CCO supplement 3 will add a scanner / printer for the Yerba Buena Island site trailer, which will be used in addition to the equipment provided at the site's Burma Road trailer, to make the overall Document Management System more efficient.

For this work the Contractor will be compensated $9,425.00 as a Lump Sum, which will be financed from the contract's contingency funds. A detailed cost analysis for this change is on file in the project records.

No time adjustment is warranted for this change, as it does not affect the controlling operation.

Deanna Vilcheck, Supervisory Engineer for Construction, requested this change.

Maintenance concurrence is not required as this is an administrative change, which does not affect any permanent roadway features.

CONCURRED BY:		
Construction Engineer:	William Howe	Date 05-25-12
Bridge Engineer:	Mehran Ardakanian	Date
Project Engineer:	Bob Zandipour, Design	Date 5-25-12
Project Manager:	Ken Terpstra	Date 5-26-12
FHWA Rep.:		Date
Environmental:		Date
Other (specify):		Date
Other (specify):		Date
District Prior Approval By:		Date
HQ (Issue Approve) By:	Larry Salhaney	Date 6-8-12
Resident Engineer's Signature:	William Howe	Date 05-25-12

ESTIMATE OF COST

	THIS REQUEST	TOTAL TO DATE
ITEMS	$0.00	($599,610.00)
FORCE ACCOUNT	$0.00	$0.00
AGREED PRICE	$0.00	$0.00
ADJUSTMENT	$9,425.00	$278,102.50
TOTAL	$9,425.00	($321,507.50)

FEDERAL PARTICIPATION

☐ PARTICIPATING ☐ PARTICIPATING IN PART ☑ NONE
☐ NON-PARTICIPATING (MAINTENANCE) ☐ NON-PARTICIPATING

FEDERAL SEGREGATION (if more than one Funding Source or P.I.P. type)
☐ CCO FUNDED PER CONTRACT ☐ CCO FUNDED AS FOLLOWS

FEDERAL FUNDING SOURCE	PERCENT

ADA Notice: For individuals with sensory disabilities, this document is available in alternate formats. For information call [illegible]
Records and Forms Management, 1120 N Street, MS-89, Sacramento, CA 95814.

CONTRACT CHANGE ORDER

Change Requested by: Engineer

CCO: 6	Suppl. No. 0	Contract No. 04 - 0120S4	Road SF-80-12.7/13.2	FED. AID LOC.: NO FED AID

To: **M C M CONSTRUCTION INC**

You are directed to make the following changes from the plans and specifications or do the following described work not included in the plans and specifications for this contract. ***NOTE: This change order is not effective until approved by the Engineer.***

Description of work to be done, estimate of quantities and prices to be paid. (Segregate between additional work at contract price, agreed price and force account.) Unless otherwise stated, rates for rental of equipment cover only such time as equipment is actually used and no allowance will be made for idle time. This last percentage shown is the net accumulated increase or decrease from the original quantity in the Engineer's Estimate.

Provide Safety Quality Control Manager and Daily Status Reports.

Extra Work at Unit Price:

In addition to Safety requirements of the contract, the Contractor shall have a full-time, 100% project dedicated, on-site Safety Quality Control Manager (SQCM) for the duration of this contract. The SQCM must be competent and qualified person with a sound knowledge of safety procedures for all types of work being performed on this contract. The SQCM shall have a minimum of five years of experience in heavy construction safety. The SQCM shall be up to date on Caltrans, CAL-OSHA, Federal OSHA, California Manual on Uniform Traffic Control Devices (CA MUTCD) and other Safety agency requirements.

The Contractor shall submit a resume of the SQCM for review and approval to the Engineer prior to starting work on the project. If the Engineer determines the SQCM is not meeting the intended duties, they may be asked to replace with another individual. The Contractor shall terminate and/or replace the SQCM upon 2 weeks written notice from the Engineer. The Contractor may also terminate and/or replace the SQCM upon 2 weeks written notice to the Engineer.

Duties of SQCM shall include but are not limited to:

Safety Quality Control:

A. Reviewing the construction work plans for each subcontractor prior to starting work
B. Conducting or attending pre-planning sessions for high hazard work-demolition, crane hoisting, etc
C. Conducting weekly jobsite safety meetings
D. Attending subcontractors meeting to review safety concerns and issues
E. Conducting daily walks of the project site for hazards and compliance with the OCIP safety requirements
F. Investigating any near miss or reported incidents in a timely manner
G. Shall submit daily status reports to the Engineer through the Contractor's onsite Construction Manager on all activities underway to document safety conditions, and if necessary, measures taken to improve safety. All reports shall include the name of the individual preparing the report, date, location, contractor and weather conditions. This provision does not relieve the Contractor of his responsibility to comply with all safety requirements of the contract.

At a minimum, Daily Status Reports shall include:

a) Documentation of daily work activity
b) Documentation of safety related field activities
c) Documentation of safety deficiencies and corrective actions taken
d) Documentation of meetings, conversations, and other communications related to safety issues
e) Any reported near misses or incidents

Contractor employees must use ANSI approved Class B or E protective helmets on the job site.

For all the above-mentioned work, the Contractor shall be paid $23,000.00 per month for approximately 38.67 months (October 11, 2010 through December 28, 2013). The agreed unit price constitutes full compensation, including markups, for the work of this change.

Estimated cost of Extra Work at Agreed Unit Price $889,410.00

CONTRACT CHANGE ORDER

Change Requested by: Engineer

CCO: 6	Suppl. No. 0	Contract No. 04 - 0120S4	Road SF-80-12.7/13.2	FED. AID LOC.: NO FED AID

This Change Order does not relieve the Contractor of his responsibility to comply with all safety requirements.

Estimated Cost: **Increase** ☑ **Decrease** ☐ **$889,410.00**

By reason of this order the time of completion will be adjusted as follows: 0 days

Submitted by		
Signature Rajesh Oberoi	**Resident Engineer** Rajesh Oberoi	**Date** 10/7/10
Approval Recommended by		
Signature Deanna Vilcheck	**Area Construction Manager** Deanna Vilcheck	**Date** 10/7/10
Engineer Approval by		
Signature Michael Forner	**Principal T.E.** Mike Forner	**Date** 10/14/10

We the undersigned contractor, have given careful consideration to the change proposed and agree, if this proposal is approved, that we will provide all equipment, furnish the materials, except as may otherwise be noted above, and perform all services necessary for the work above specified, and will accept as full payment therefor the prices shown above.

NOTE: If you, the contractor, do not sign acceptance of this order, your attention is directed to the requirements of the specifications as to proceeding with the ordered work and filing a written protest within the time therein specified.

Contractor Acceptance by		
Signature	**(Print name and title)** Edmundo Ruchi - Treasurer	**Date** 10-13-2010

STATE OF CALIFORNIA - DEPARTMENT OF TRANSPORTATION

CONTRACT CHANGE ORDER MEMORANDUM

DATE: 4/30/2010 Page 1 of 1

TO: Deanna Vilcheck, ACM /	FILE: E.A. 04 - 0120S4
FROM: Rajesh Oberoi, Senior R.E.	CO-RTE-PM SF-80-12.7/13.2
	FED. NO. NO FED AID
CCO#: 6 SUPPLEMENT#: 0 Category Code: CXXX	CONTINGENCY BALANCE (incl. this change) $31,274,132.00
COST: $889,410.00 INCREASE ☑ DECREASE ☐	HEADQUARTERS APPROVAL REQUIRED? ☑ YES ☐ NO
SUPPLEMENTAL FUNDS PROVIDED: $0.00	IS THIS REQUEST IN ACCORDANCE WITH ENVIRONMENTAL DOCUMENTS? ☑ YES ☐ NO
CCO DESCRIPTION: Environmental and Safety Quality Reports	**PROJECT DESCRIPTION:** YBITS-1 (Yerba Buena Island Transition Structures)

Original Contract Time:	Time Adj. This Change:	Previously Approved CCO Time Adjustments:	Percentage Time Adjusted: (including this change)	Total # of Unreconciled Deferred Time CCO(s): (including this change)
1390 Day(s)	0 Day(s)	0 Day(s)	0 %	0

THIS CHANGE ORDER PROVIDES FOR:

Providing a full-time, 100% project dedicated, on-site Safety Quality Control Manager (SQCM) for the duration of the contract.

This change is necessary to provide full time monitoring and reporting of this contract's safety programs. This contract is a part of the SFOBB East Span Replacement project connecting the Single Anchor Suspension (SAS) Bridge to the Tunnel. The contract also involves work within the San Francisco Bay. This contract is highly visible to the public and outside agencies. Cal OSHA makes regular inspections of the project. This change is to enhance Caltrans' monitoring of safety issues. The Contractor will appoint a SQCM to produce daily Safety Status Report. The SQCM will also be responsible for providing safety training above and beyond contract requirements. The SQCM shall meet the qualifications shown on the CCO.

The requirement to have a SQCM was mistakenly omitted from the Contract Special provisions. Office of Risk Management requested that this requirement be incorporated into the contract .The change has been discussed and concurred with Mike Forner, Principal Transportation Engineer, Jon Tapping, Headquarters Construction Coordinator and Ken Terpstra, Project Manager.

The costs associated with hiring a full time SQCM will be paid as extra work at an agreed unit price of $ 23,000.00 per month for 38.67 months (October 11, 2010 through December 28, 2013) for a total of $ 8,89410.00.

Maintenance concurrence is not required as this work is for administration only.

No adjustment of contract time is warranted since this change does not affect the controlling operation.

CONCURRED BY:		
Construction Engineer:	Rajesh Oberoi	Date 10/12/10
Bridge Engineer:		Date
Project Engineer:		Date
Project Manager:		Date
FHWA Rep.:		Date
Environmental:		Date
Other (specify):	Victor Salazar, Office of Risk Mgmt	Date 7/26/10
Other (specify):		Date
District Prior Approval By:		Date
HQ (Issue Approve) By:	SEY HOSSNIEH	Date 8/30/10
Resident Engineer's Signature:	Rajesh Oberoi	Date 10/12/10

ESTIMATE OF COST

	THIS REQUEST	TOTAL TO DATE
ITEMS	$0.00	$0.00
FORCE ACCOUNT	$0.00	$0.00
AGREED PRICE	$889,410.00	$889,410.00
ADJUSTMENT	$0.00	$0.00
TOTAL	$889,410.00	$889,410.00

FEDERAL PARTICIPATION

☐ PARTICIPATING ☐ PARTICIPATING IN PART ☑ NONE
☐ NON-PARTICIPATING (MAINTENANCE) ☐ NON-PARTICIPATING

FEDERAL SEGREGATION (if more than one Funding Source or P.I.P. type)
☑ CCO FUNDED PER CONTRACT ☐ CCO FUNDED AS FOLLOWS

FEDERAL FUNDING SOURCE	PERCENT

ADA Notice: For individuals with sensory disabilities, this document is available in alternate formats. For information call: (916) 654-6410 or TDD (916) 654-3880 or write Records and Forms Management, 1120 N Street, MS-89, Sacramento, CA 95814.

CONTRACT CHANGE ORDER

Change Requested by: Engineer

CCO 7	Suppl. No. 0	Contract No. 04 - 0120S4	Road SF-80-12.7/13.2	FED. AID LOC.: NO FED AID

To: M C M CONSTRUCTION INC

You are directed to make the following changes from the plans and specifications or do the following described work not included in the plans and specifications for this contract. ***NOTE: This change order is not effective until approved by the Engineer.***

Description of work to be done, estimate of quantities and prices to be paid. (Segregate between additional work at contract price, agreed price and force account.) Unless otherwise stated, rates for rental of equipment cover only such time as equipment is actually used and no allowance will be made for idle time. This last percentage shown is the net accumulated increase or decrease from the original quantity in the Engineer's Estimate.

Adjustment of Compensation at Lump Sum:

Modifying the riding surface texture pattern for the seismic joints at Abutment W11R and Bent W10AL as shown on the revised contract plan sheet numbers 686, 687, 688, 690, 692, 693 and 694 of 806 (sheets 2 to 8 of this change order.)

For this work the contractor will be paid an adjustment of compensation at an agreed Lump Sum price of $91,380.00. This sum constitutes full and complete compensation, including all markups, for this change.

Estimated cost of Adjustment of Compensation at Lump Sum $91,380.00

No adjustment to contract time is warranted, as this change does not affect the controlling operation.

Estimated Cost: Increase ☑ Decrease ☐ **$91,380.00**

By reason of this order the time of completion will be adjusted as follows: 0 days

Submitted by

Signature	Resident Engineer	Date
Rajesh Oberoi	Rajesh Oberoi, Senior R.E.	6/22/10

Approval Recommended by

Signature	Area Construction Manager	Date
Deanna Vilcheck	Deanna Vilcheck	6/23/10

Engineer Approval by

Signature	Area Construction Manager	Date
Deanna Vilcheck	Deanna Vilcheck	8/2/10

We the undersigned contractor, have given careful consideration to the change proposed and agree, if this proposal is approved, that we will provide all equipment, furnish the materials, except as may otherwise be noted above, and perform all services necessary for the work above specified, and will accept as full payment therefor the prices shown above.

NOTE: **If you, the contractor, do not sign acceptance of this order, your attention is directed to the requirements of the specifications as to proceeding with the ordered work and filing a written protest within the time therein specified.**

Contractor Acceptance by

Signature	(Print name and title)	Date
[illegible]	Edmundo A. Pacheco - Treasurer	7/27/2010

DIST	COUNTY	ROUTE	KILOMETER POST TOTAL PROJECT	SHEET No	TOTAL SHEETS
04	SF	80	12.7/13.2	686	806

REGISTERED CIVIL ENGINEER DATE

PLANS APPROVAL DATE

REGISTERED PROFESSIONAL ENGINEER EFTHYMIOS DELIS No. 51434 Exp. 6-30-08 CIVIL STATE OF CALIFORNIA

The State of California or its officers or agents shall not be responsible for the accuracy or completeness of electronic copies of this plan sheet.

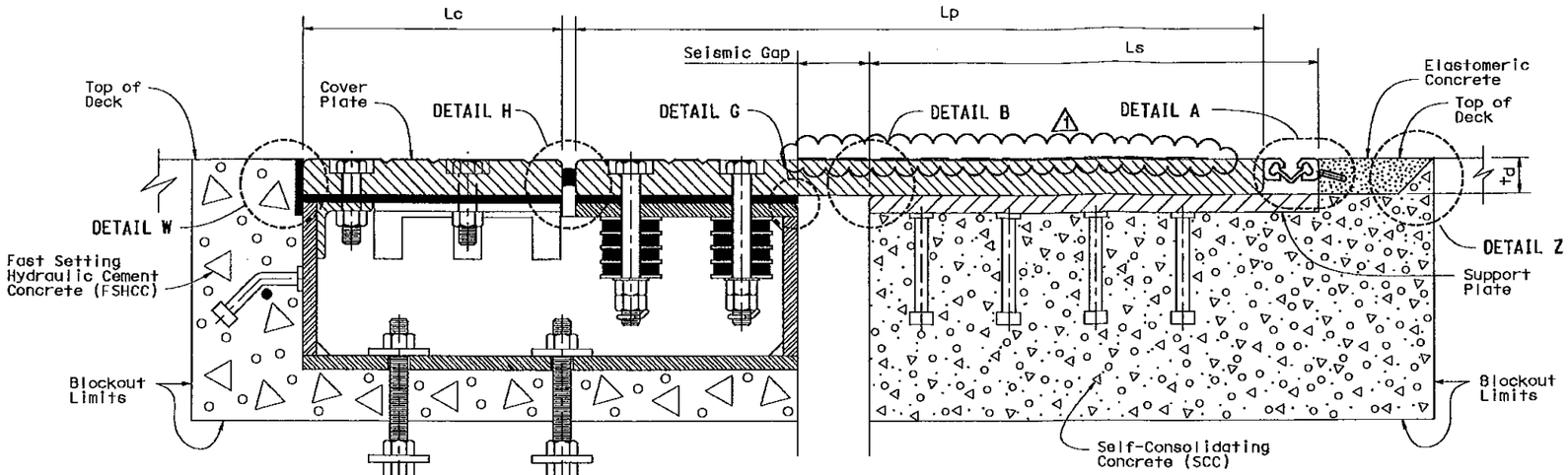

ELEVATION

SCALE = 1:5

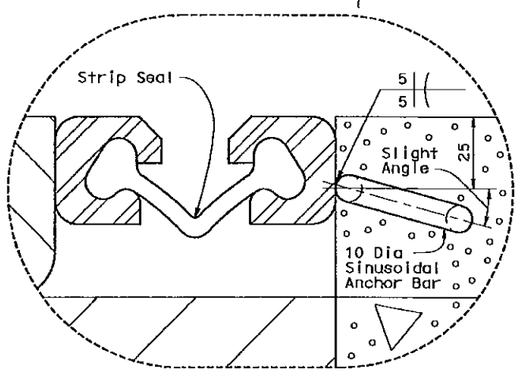

DETAIL A

SCALE = 1:1

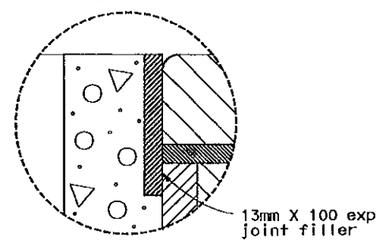

DETAIL W

SCALE = 1:2

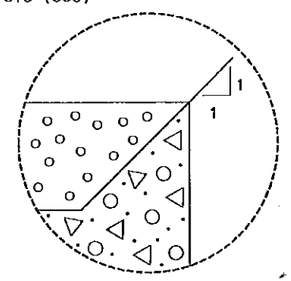

DETAIL Z

SCALE = 1:2

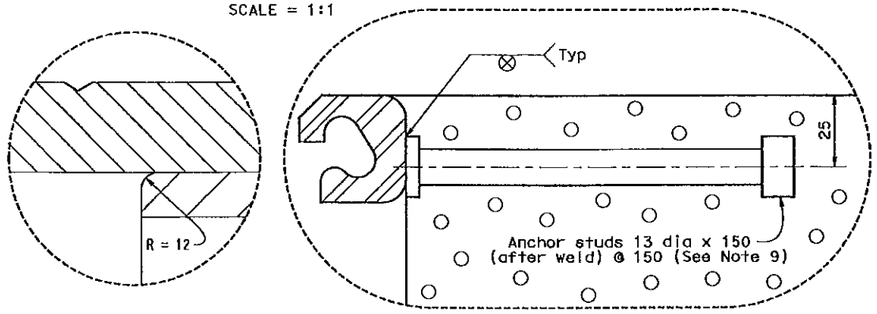

DETAIL B

SCALE = 1:2

DETAIL C

SCALE = 1:1

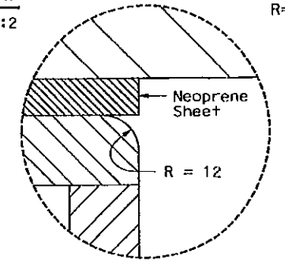

DETAIL G

SCALE = 1:1

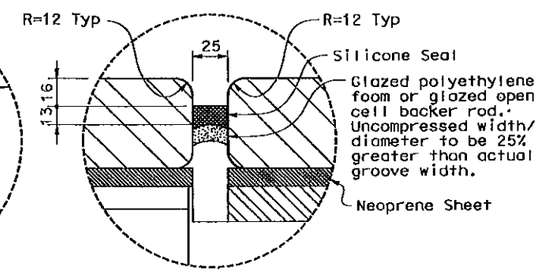

DETAIL H

SCALE = 1:2

JOINT INFORMATION			
LOCATION		W1ØAL	W11R
SKEW (°)		0	0
DECK PLATE	Thickness td (mm)	64	64
	Length Lp (mm)	1650	1500
SUPPORT PLATE	Thickness ts (mm)	32	32
	Length Ls (mm)	1000	820
COVER PLATE	Thickness tc (mm)	64	64
	Length Lc (mm)	475	475
SEISMIC GAP @ 20°	(mm)	350	380

NOTES:

1. Install Seismic Joint after erecting bike path, placing deck overlay up to the limit of the blockout if needed, utilities and barrier.
2. Top of deck plate, elastomeric and FSHCC concrete shall match top of deck profile.
3. For deck and cover plate details see "DECK PLATE DETAILS NO. 1" and "DECK PLATE DETAILS NO. 2" sheets for TYPE I Joint.
4. For channel assembly details, see "CHANNEL ASSEMBLY DETAILS NO 1" and "CHANNEL ASSEMBLY DETAILS NO 2" for TYPE I joint.
5. Place deck plate, support plate and channel assembly so that full bearing is achieved between i) deck and support plates and ii) deck, cover plates and channel assembly.
6. Maximum depth of edge beam in strip steel shall be 40 mm.
7. Strip seal shall be one continuous piece. No field splice shall be permitted.
8. Strip seal shall have a movement rating of 100mm, manufactured specifically for highway bridges.
9. The sinusoidal anchor bar may be replaced with anchor studs (see Detail C).
10. For support plate details see "SUPPORT PLATE DETAILS" sheet for TYPE I joint.
11. Deck plate and Elastomeric concrete have the same thickness (td = tc).
12. For mild reinforcement in blockout areas see "REINFORCEMENT DETAILS NO. 1" and "REINFORCEMENT DETAILS NO. 2" SHEETS for TYPE I joint. Not all mild reinforcement is shown for clarity.

REGISTERED PROFESSIONAL ENGINEER ENRICO C. MAGGENTI No. 46920 Exp. 6/30/11 CIVIL STATE OF CALIFORNIA

MARK	DATE	DESCRIPTIONS	BY	CH'D
1	3-29-10	REVISED SOME V-GROOVES TO TRACTION RIBS	BM	RM

REVISIONS

FOR REVISION 1 ONLY

CONTRACT CHANGE ORDER NO. 7
SHEET 2 OF 8

THE CONTRACTOR SHALL VERIFY ALL CONTROLLING FIELD DIMENSIONS BEFORE ORDERING OR FABRICATING ANY MATERIAL.

SAN FRANCISCO OAKLAND BAY BRIDGE
EAST SPAN SEISMIC SAFETY PROJECT

YBI TRANSITION STRUCTURES

SEISMIC JOINT (TYPE I)

CROSS SECTION

DESIGN	BY E DELIS	CHECKED A KARTOUM	
DETAILS	BY A R DUDSAK	CHECKED A KARTOUM	
QUANTITIES	BY E DELIS	CHECKED A KARTOUM	

STATE OF CALIFORNIA
DEPARTMENT OF TRANSPORTATION

DIVISION OF ENGINEERING SERVICES
STRUCTURE DESIGN
SPECIAL DESIGNS BRANCH

BRIDGE NO. 34-0006 L/R
KILOMETER POST 12.8

CU 04251
EA 0120S1

ALL DIMENSIONS ARE IN MILLIMETERS UNLESS OTHERWISE SHOWN

ORIGINAL SCALE IN MILLIMETERS FOR REDUCED PLANS 0 10 20 30 40 50 60 70 80 90 100

DISREGARD PRINTS BEARING EARLIER REVISION DATES 10/26/01 11/28/01 1/31/04 2/25/04

REVISION DATES

SHEET 137 OF 209

FILE => spec_des_br_proj/2007sd/04-0120S1/p:\4141-06\CADD\TS\Checked Plans\YBI Structures Design Detail Sheets (Array Items Removed)\032910\Seismic

USERNAME => fsomson DATE PLOTTED => 4/13/2010 TIME PLOTTED => 9:59:14 AM

DIST	COUNTY	ROUTE	TOTAL PROJECT	No	SHEETS
04	SF	80	12.7/13.2	687	806

REGISTERED CIVIL ENGINEER DATE

PLANS APPROVAL DATE

REGISTERED PROFESSIONAL ENGINEER EFTHYMIOS DELIS No. 51434 Exp. CIVIL STATE OF CALIFORNIA

The State of California or its officers or agents shall not be responsible for the accuracy or completeness of electronic copies of this plan sheet.

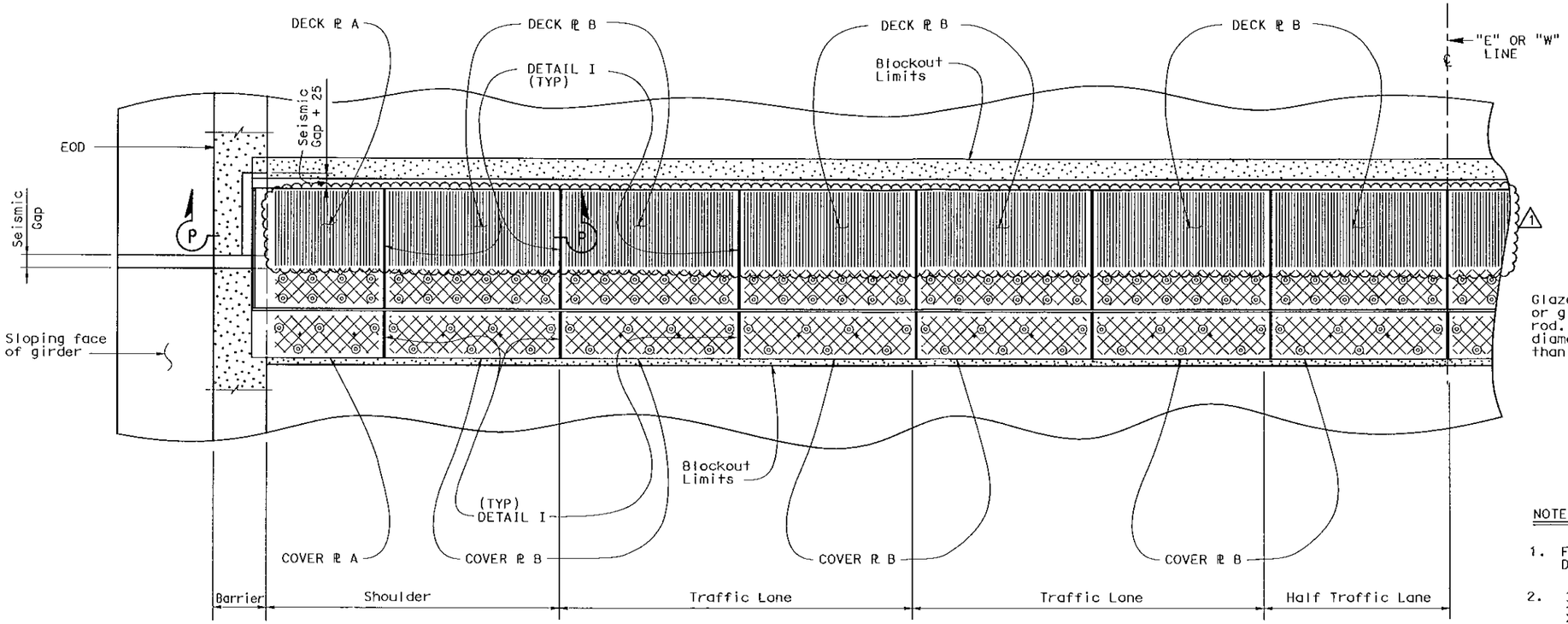

EASTBOUND/WESTBOUND EXPANSION JOINT (HALF) PLAN

SCALE 1:25

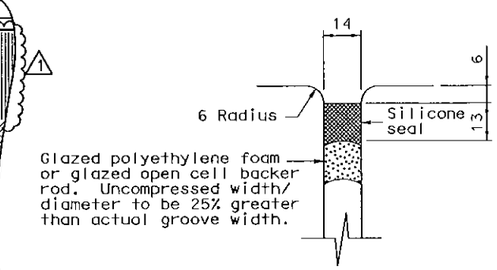

DETAIL I

SCALE = 1:1

NOTES:

1. For Plates A and B see "DECK PLATE DETAILS NO 2" sheet.
2. Denotes deck Steel Plate with V-grooves at 45°.

   1 Denotes traction ribs.
3. Deck Plate A matches with Support Plate A and the Channel Assembly A (Module A) Likewise for Module B. Channel assemblies are 14 mm wider than their corresponding deck plates.
4. One Module B is placed per half traffic lane.
5. Portions of barriers are not shown for clarity.
6. For SECTION P-P see "DECK PLATE DETAILS NO 2" sheet for TYPE I joint.

REGISTERED PROFESSIONAL ENGINEER ENRICO C. MACCENTI No. 46920 Exp. 6/30/11 CIVIL STATE OF CALIFORNIA

FOR REVISION 1 ONLY

MARK	DATE	DESCRIPTIONS	BY	CH'D
1	3-29-10	REVISED SOME V-GROOVES TO TRACTION RIBS	BM	RM

REVISIONS

CONTRACT CHANGE ORDER NO. 7
SHEET 3 OF 8

THE CONTRACTOR SHALL VERIFY ALL CONTROLLING FIELD DIMENSIONS BEFORE ORDERING OR FABRICATING ANY MATERIAL.

Caltrans Metric

	BY	CHECKED
DESIGN	E DEUS	A KARTOUM
DETAILS	A R DUDSAK	A KARTOUM
QUANTITIES	E DEUS	A KARTOUM

ALL DIMENSIONS ARE IN MILLIMETERS UNLESS OTHERWISE SHOWN

ORIGINAL SCALE IN MILLIMETERS FOR REDUCED PLANS 0 10 20 30 40 50 60 70 80 90 100

STATE OF CALIFORNIA DEPARTMENT OF TRANSPORTATION

DIVISION OF ENGINEERING SERVICES STRUCTURE DESIGN SPECIAL DESIGNS BRANCH

CU 04251
EA 0120L1

BRIDGE NO. 34-0006 L/R
KILOMETER POST 12.8

SAN FRANCISCO OAKLAND BAY BRIDGE
EAST SPAN SEISMIC SAFETY PROJECT

YBI TRANSITION STRUCTURES

SEISMIC JOINT (TYPE I)

DECK PLATE DETAILS NO 1

DISREGARD PRINTS BEARING EARLIER REVISION DATES → 10/22/07 1/23/08 2/25/08

REVISION DATES

SHEET 138 OF 209

FILE => spec_des_br_proj/2007sd/04-0120S1/p:\4141-06\CADD\TS\Checked Plans\YBI Structures Design Details (Series)\032910\Seismic

USERNAME => fsamson DATE PLOTTED => 4/13/2010 TIME PLOTTED => 9:59:56 AM

DIST	COUNTY	ROUTE	KILOMETER POST TOTAL PROJECT	SHEET No	TOTAL SHEETS
04	SF	80	12.7/13.2	688	806

REGISTERED CIVIL ENGINEER DATE

PLANS APPROVAL DATE

REGISTERED PROFESSIONAL ENGINEER EFTYMIOS DELIS No. 51434 Exp. 6-30-08 CIVIL STATE OF CALIFORNIA

The State of California or its officers or agents shall not be responsible for the accuracy or completeness of electronic copies of this plan sheet.

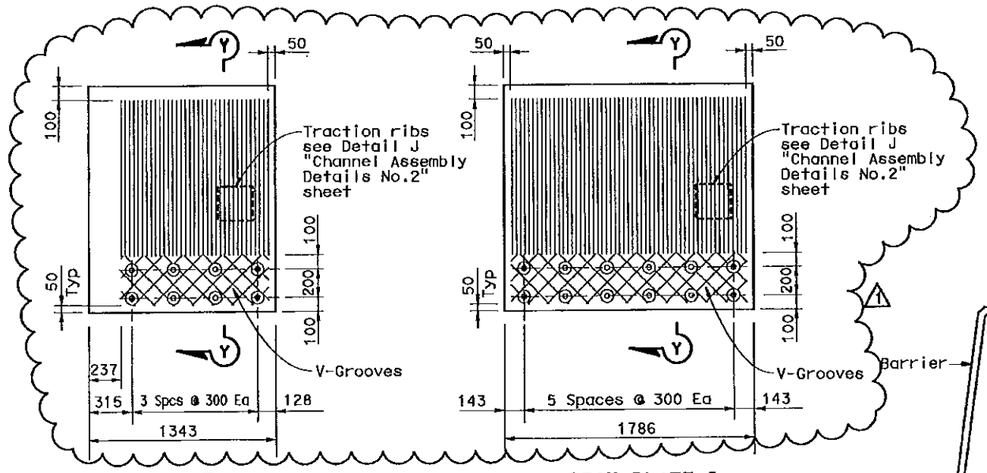

DECK PLATE A

SCALE = 1:20

Note: Barrier not shown for clarity

DECK PLATE B

SCALE = 1:20

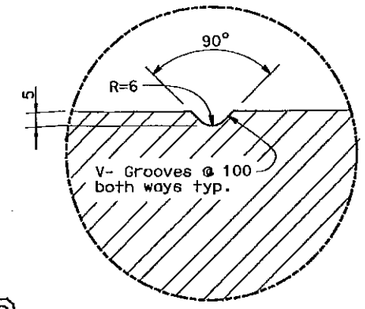

DETAIL K

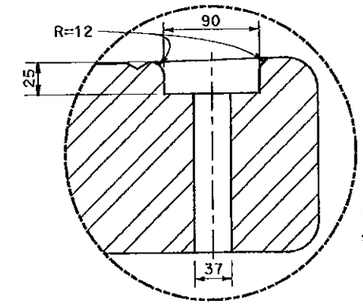

DETAIL L

NOTES:

1. V-Groove pattern is similar for all Plates
2. For deck plate plan see "DECK PLATE DETAILS NO 1" sheet for TYPE I joint.
3. In Section P-P, Y may vary from 10 mm (min) to 20 mm (max) at the thickest end of the deck ℞ (td). △1
4. Traction ribs to be machined.
5. For td, Lp, Lc, tc and Ls values see "CROSS SECTION" sheet for TYPE I joint.
6. Eye bolts can be used at set screw locations for lifting of cover plates.

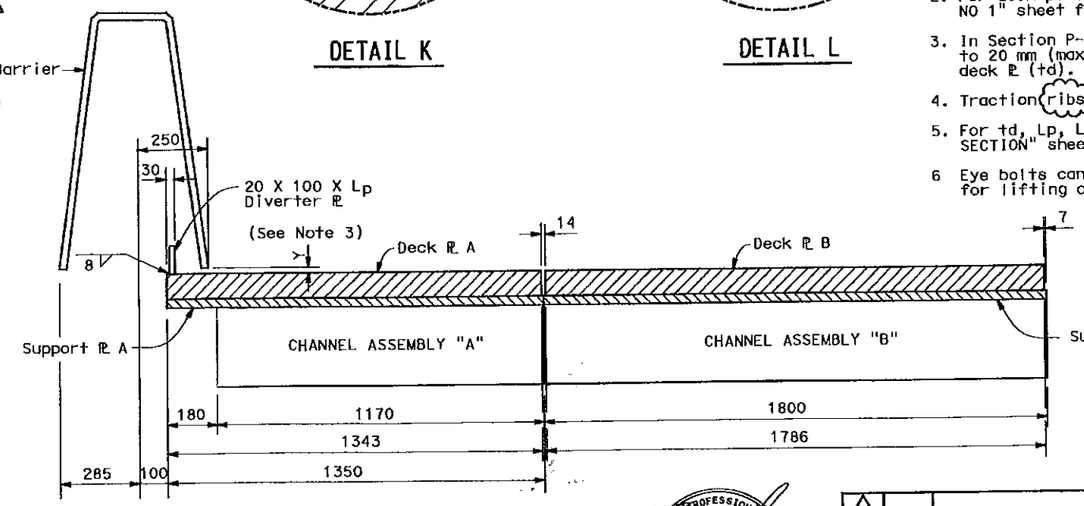

SECTION P-P

SCALE = 1:10

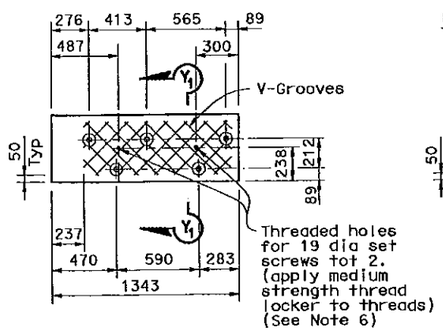

COVER PLATE A

SCALE = 1:20

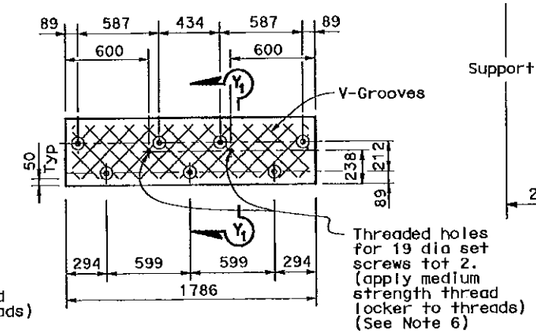

COVER PLATE B

SCALE = 1:20

MARK	DATE	DESCRIPTIONS	BY	CH'D
△1	3-29-10	REVISED SOME V-GROOVES TO TRACTION RIBS	BM	RM

REVISIONS

REGISTERED PROFESSIONAL ENGINEER EVANGELOS G. MAGDENTI No. 46920 Exp. 6/30/11 CIVIL STATE OF CALIFORNIA

FOR REVISION △1 ONLY

CONTRACT CHANGE ORDER NO. 7

SHEET 4 OF 6

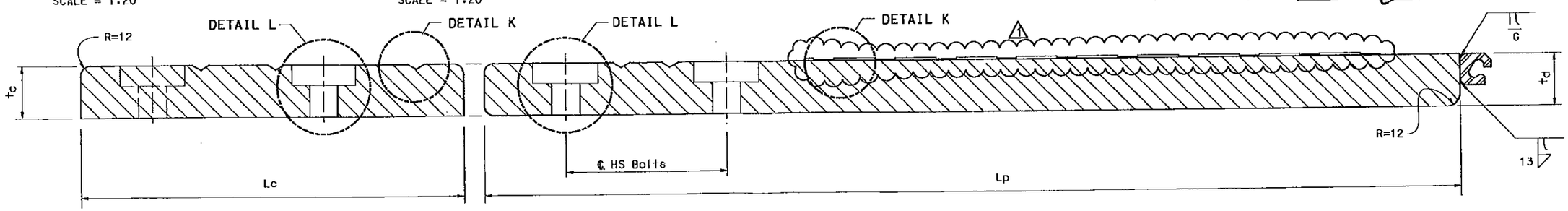

SECTION Y_1-Y_1

SCALE = 1:2.5

SECTION Y-Y

SCALE = 1:2.5

THE CONTRACTOR SHALL VERIFY ALL CONTROLLING FIELD DIMENSIONS BEFORE ORDERING OR FABRICATING ANY MATERIAL.

	BY	CHECKED
DESIGN	E DELIS	A KARTOUM
DETAILS	A R DUDSAK	A KARTOUM
QUANTITIES	E DELIS	A KARTOUM

STATE OF CALIFORNIA DEPARTMENT OF TRANSPORTATION

DIVISION OF ENGINEERING SERVICES STRUCTURE DESIGN

SPECIAL DESIGNS BRANCH

BRIDGE NO. 34-0006 L/R

KILOMETER POST 12.8

CU 04251

EA 0120S1

ALL DIMENSIONS ARE IN MILLIMETERS UNLESS OTHERWISE SHOWN

ORIGINAL SCALE IN MILLIMETERS FOR REDUCED PLANS 0 10 20 30 40 50 60 70 80 90 100

DISREGARD PRINTS BEARING EARLIER REVISION DATES 10/28/07 1/23/08 1/25/08

REVISION DATES

SHEET 139 OF 209

SAN FRANCISCO OAKLAND BAY BRIDGE
EAST SPAN SEISMIC SAFETY PROJECT

YBI TRANSITION STRUCTURES

SEISMIC JOINT (TYPE I)

DECK PLATE DETAILS NO 2

FILE => spec_des_br_proj/2007sd/04-0120S1/p:\4141-06\CADD\TS\Checked Plans\YBITS_JT1_DECK_DETAILS_NO2.dgn

USERNAME => fcamson DATE PLOTTED => 4/13/2010 TIME PLOTTED => 10:00:37 AM

DIST	COUNTY	ROUTE	KILOMETER POST TOTAL PROJECT	SHEET No	TOTAL SHEETS
04	SF	80	12.7/13.2	690	806

REGISTERED CIVIL ENGINEER DATE

PLANS APPROVAL DATE

The State of California or its officers or agents shall not be responsible for the accuracy or completeness of electronic copies of this plan sheet.

REGISTERED PROFESSIONAL ENGINEER EFTHYMIOS DELIS No. 51434 Exp. 6-30-08 CIVIL STATE OF CALIFORNIA

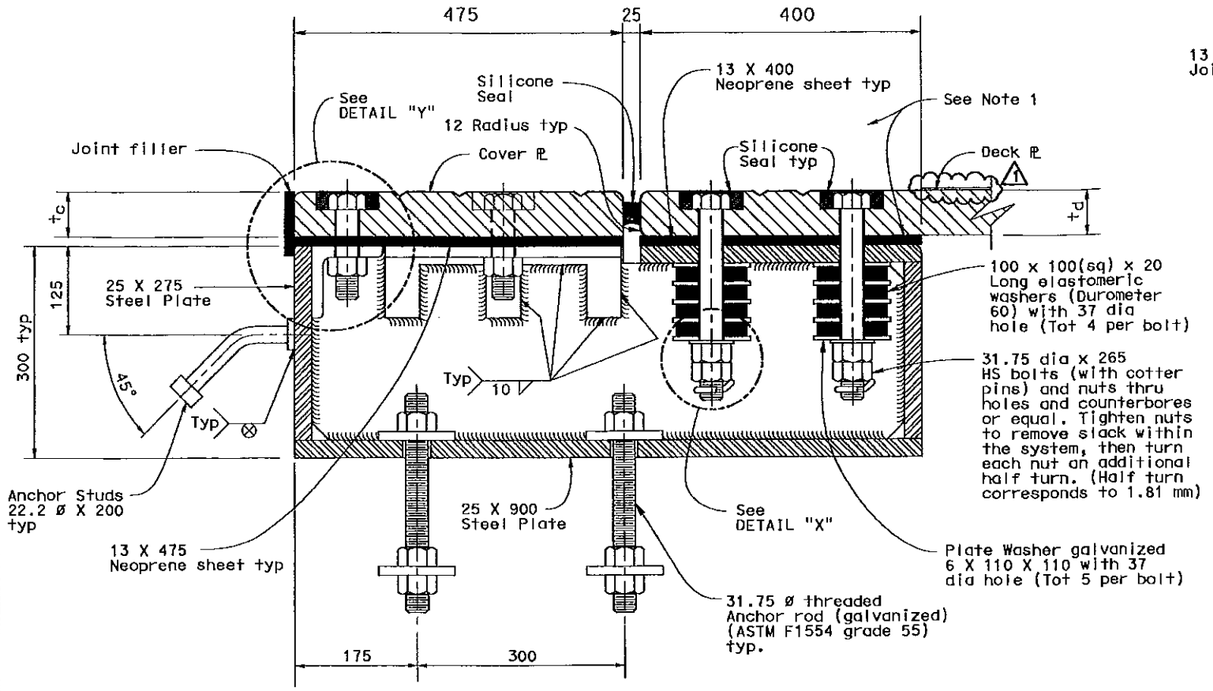

SECTION F-F

NO SCALE

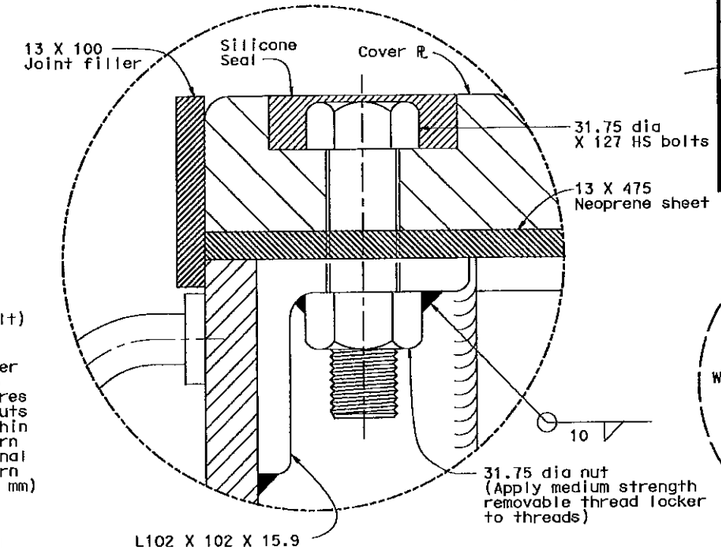

DETAIL Y

NO SCALE

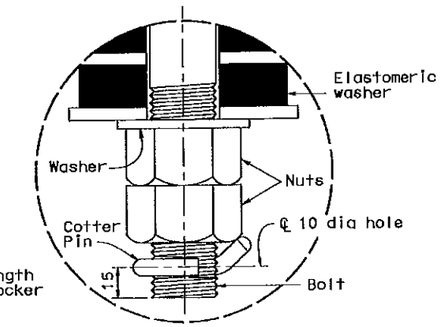

DETAIL X

NO SCALE

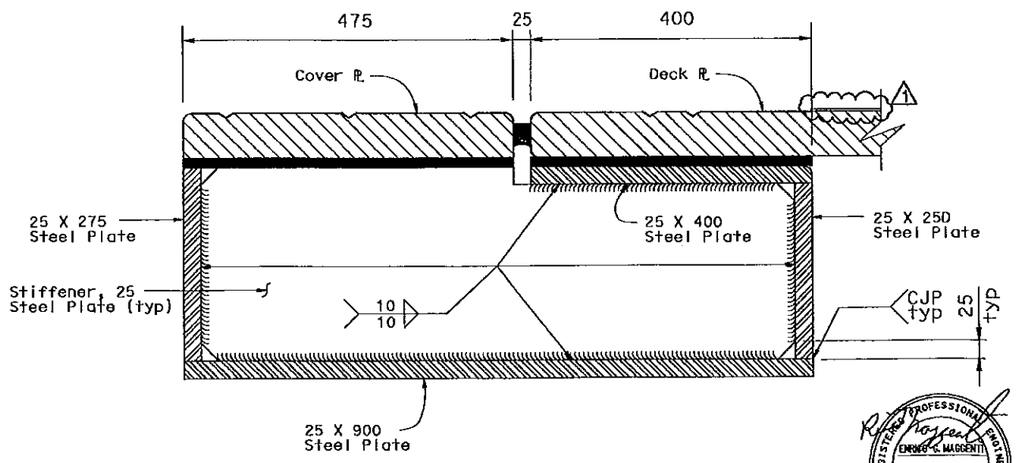

SECTION G-G

NO SCALE

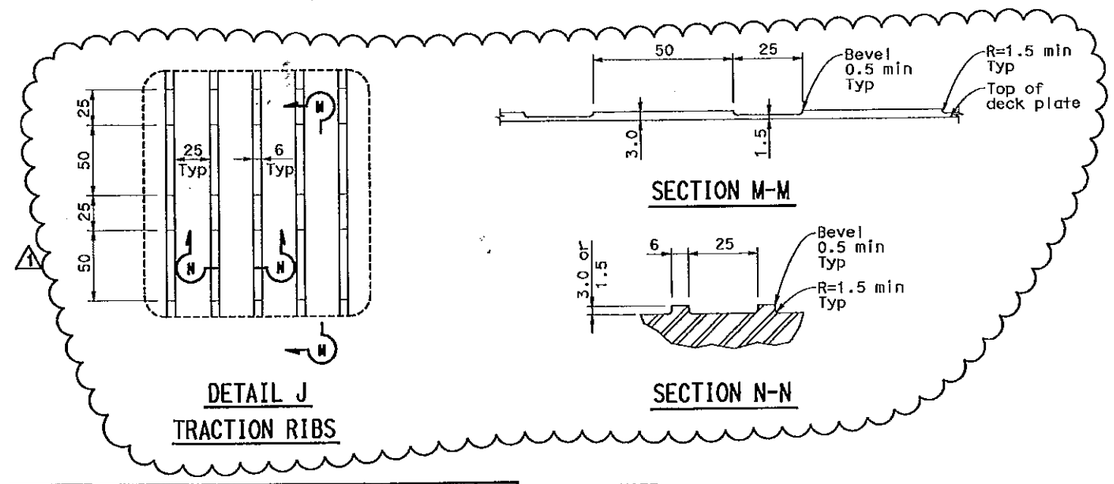

DETAIL J

TRACTION RIBS

SECTION M-M

SECTION N-N

REGISTERED PROFESSIONAL ENGINEER ENRICO C. MAGGENTI No. 46920 Exp. 6/30/11 CIVIL STATE OF CALIFORNIA

FOR REVISION 1 ONLY

MARK	DATE	DESCRIPTIONS	BY	CH'D
1	3-29-10	REVISED SOME V-GROOVES TO TRACTION RIBS	BM	RM

REVISIONS

NOTE:

1. Thirty-seven mm holes in neoprene sheets shall be drilled or punched so that the neoprene is not distorted at the time of installation.

CONTRACT CHANGE ORDER NO. 7

SHEET 5 OF 8

THE CONTRACTOR SHALL VERIFY ALL CONTROLLING FIELD DIMENSIONS BEFORE ORDERING OR FABRICATING ANY MATERIAL.

SAN FRANCISCO OAKLAND BAY BRIDGE
EAST SPAN SEISMIC SAFETY PROJECT

YBI TRANSITION STRUCTURES

SEISMIC JOINT (TYPE I)

CHANNEL ASSEMBLY DETAILS NO 2

DESIGN	BY E DELIS	CHECKED	A KARTOUM
DETAILS	BY A R DUDSAK	CHECKED	A KARTOUM
QUANTITIES	BY E DELIS	CHECKED	A KARTOUM

ALL DIMENSIONS ARE IN MILLIMETERS UNLESS OTHERWISE SHOWN

ORIGINAL SCALE IN MILLIMETERS FOR REDUCED PLANS 0 10 20 30 40 50 60 70 80 90 100

STATE OF CALIFORNIA
DEPARTMENT OF TRANSPORTATION

DIVISION OF ENGINEERING SERVICES
STRUCTURE DESIGN
SPECIAL DESIGNS BRANCH

CU 04251
EA 0120S1

BRIDGE NO. 34-0006 L/R
KILOMETER POST 12.8

DISREGARD PRINTS BEARING EARLIER REVISION DATES 10/22/07 11/23/07 1/23/08 2/25/08

REVISION DATES

SHEET 141 OF 209

FILE => spec_des_br_proj/2007sd/04-0120S1/p1\4141-06\CADD\TS\Checked Plans\SJ\Checked Plans\032910\Seismic

USERNAME => fsamson DATE PLOTTED => 4/13/2010 TIME PLOTTED => 10:01:05 AM

DIST	COUNTY	ROUTE	KILOMETER POST TOTAL PROJECT	SHEET No	TOTAL SHEETS
04	SF	80	12.7/13.2	692	806

REGISTERED CIVIL ENGINEER DATE

PLANS APPROVAL DATE

REGISTERED PROFESSIONAL ENGINEER EFTHYMIOS DELIS No. 51431 Exp. 6-30-08 CIVIL STATE OF CALIFORNIA

The State of California or its officers or agents shall not be responsible for the accuracy or completeness of electronic copies of this plan sheet.

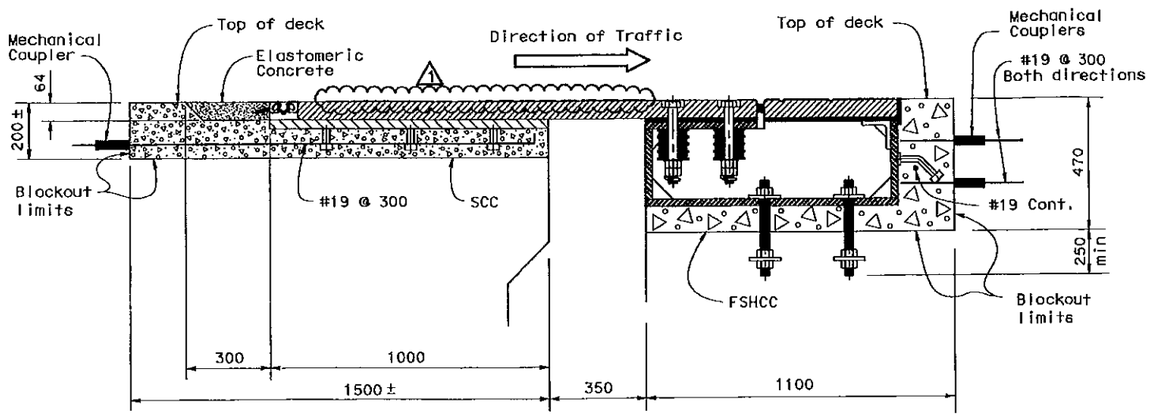

SAN FRANCISCO SIDE

OAKLAND SIDE

HINGE W1ØAL

SCALE = 1:10

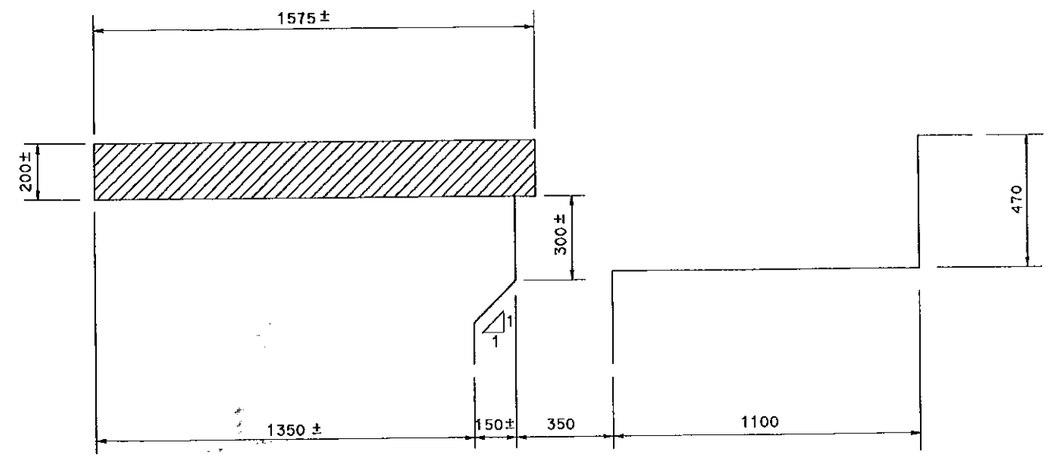

SAN FRANCISCO SIDE

OAKLAND SIDE

HINGE W1ØAL (CONCRETE REMOVAL)

SCALE = 1:10

NOTES:

1. Rebars with mechanical couplers extend beyond blockout limits by at least 50 d_b
2. Top deck placed at deck profile.
3. Top of support plate parallel to top deck plate.
4. Seismic joint shown position at 20°C.
5. For HINGE W1ØAL North edge details see "REINFORCEMENT DETAILS NO. 2" sheet for TYPE I joint.

REGISTERED PROFESSIONAL ENGINEER ENRICO C. MAGGENTI No. 46920 Exp. 6/30/11 CIVIL STATE OF CALIFORNIA

FOR REVISION 1 ONLY

MARK	DATE	DESCRIPTIONS	BY	CH'D
1	3-29-10	REVISED SOME V-GROOVES TO TRACTION RIBS	BM	RM

REVISIONS

CONTRACT CHANGE ORDER NO. 7
SHEET 6 OF 8

THE CONTRACTOR SHALL VERIFY ALL CONTROLLING FIELD DIMENSIONS BEFORE ORDERING OR FABRICATING ANY MATERIAL.

SAN FRANCISCO OAKLAND BAY BRIDGE
EAST SPAN SEISMIC SAFETY PROJECT

YBI TRANSITION STRUCTURES

SEISMIC JOINT (TYPE I)

REINFORCEMENT DETAILS NO. 1

	BY	CHECKED
DESIGN	E DELIS	A KARTOUM
DETAILS	A R DUDSAK	A KARTOUM
QUANTITIES	E DELIS	A KARTOUM

STATE OF CALIFORNIA
DEPARTMENT OF TRANSPORTATION

DIVISION OF ENGINEERING SERVICES
STRUCTURE DESIGN
SPECIAL DESIGNS BRANCH

BRIDGE NO. 34-0006
KILOMETER POST 12.8

CU 04251
EA 0120S1

ALL DIMENSIONS ARE IN MILLIMETERS UNLESS OTHERWISE SHOWN

ORIGINAL SCALE IN MILLIMETERS FOR REDUCED PLANS 0 10 20 30 40 50 60 70 80 90 100

DISREGARD PRINTS BEARING EARLIER REVISION DATES 10/26/01 11/23/01 1/21/04 2/25/04

REVISION DATES

SHEET 143 OF 209

FILE => spec_des_br_proj/2007sd/04-0120S1/p:\4141-06\CADD\TS\Checked Plans\Structure Details\Seismic Details (Rev.Removed)\032910\Seismic

USERNAME => fecman DATE PLOTTED => 4/13/2010 TIME PLOTTED => 10:01:28 AM

DIST	COUNTY	ROUTE	KILOMETER POST TOTAL PROJECT	SHEET No.	TOTAL SHEETS
04	SF	80	12.7/13.2	693	806

REGISTERED CIVIL ENGINEER DATE

PLANS APPROVAL DATE

The State of California or its officers or agents shall not be responsible for the accuracy or completeness of electronic copies of this plan sheet.

REGISTERED PROFESSIONAL ENGINEER EFTHYMIOS DELIS No. 51434 Exp. 6-30-08 CIVIL STATE OF CALIFORNIA

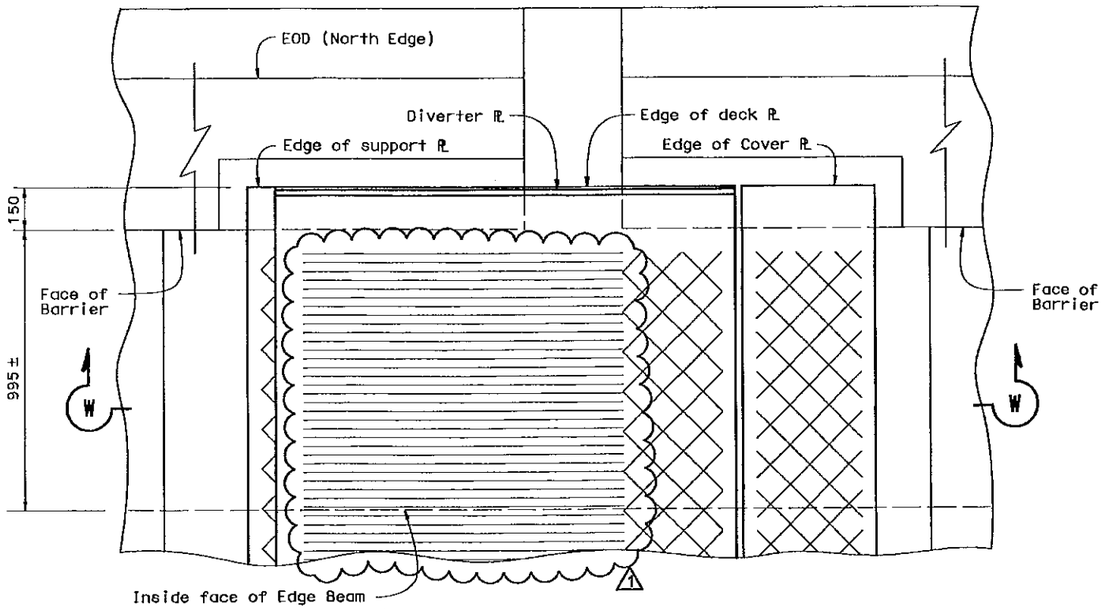

PARTIAL PLAN VIEW NORTH EDGE

SCALE = 1:10

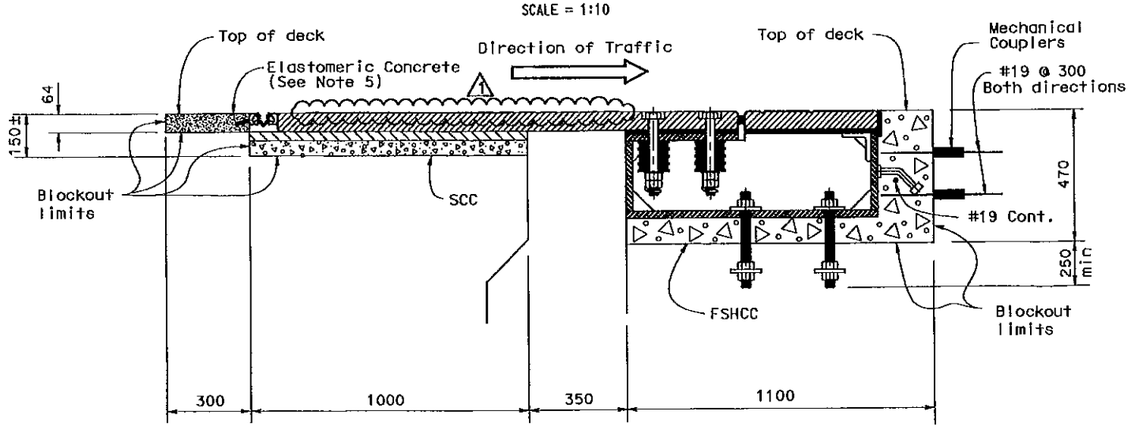

SECTION W-W
HINGE W1ØAL NORTH EDGE

SCALE = 1:10

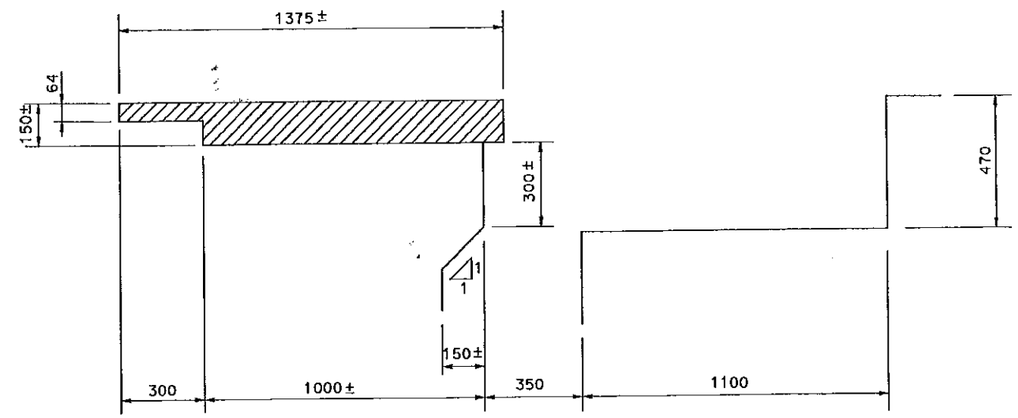

HINGE W1ØAL
(CONCRETE REMOVAL NORTH EDGE)

SCALE = 1:10

NOTES:

1. Rebars with mechanical couplers extend beyond blockout limits by at least 50 d_b
2. Top deck placed at deck profile.
3. Top of support plate parallel to top deck plate.
4. Seismic joint shown position at 20°C.
5. Remove concrete cover and replace with elastomeric concrete.

REGISTERED PROFESSIONAL ENGINEER ENRICO C. MAGGENTI No. 46920 Exp. 6/30/11 CIVIL STATE OF CALIFORNIA

FOR REVISION 1 ONLY

MARK	DATE	DESCRIPTIONS	BY	CH'D
1	3-29-10	REVISED SOME V-GROOVES TO TRACTION RIBS	BM	RM

REVISIONS

CONTRACT CHANGE ORDER NO. 7
SHEET 7 OF 8

THE CONTRACTOR SHALL VERIFY ALL CONTROLLING FIELD DIMENSIONS BEFORE ORDERING OR FABRICATING ANY MATERIAL.

Caltrans Metric

	BY	CHECKED
DESIGN	E DELIS	A KARTOUM
DETAILS	A R DUDSAK	A KARTOUM
QUANTITIES	E DELIS	A KARTOUM

ALL DIMENSIONS ARE IN MILLIMETERS UNLESS OTHERWISE SHOWN

ORIGINAL SCALE IN MILLIMETERS FOR REDUCED PLANS 0 10 20 30 40 50 60 70 80 90 100

STATE OF CALIFORNIA DEPARTMENT OF TRANSPORTATION

DIVISION OF ENGINEERING SERVICES STRUCTURE DESIGN
SPECIAL DESIGNS BRANCH

CU 04251
EA 0120S1

BRIDGE NO. 34-0006
KILOMETER POST 12.8

DISREGARD PRINTS BEARING EARLIER REVISION DATES 1/21/04 2/25/04

SAN FRANCISCO OAKLAND BAY BRIDGE
EAST SPAN SEISMIC SAFETY PROJECT

YBI TRANSITION STRUCTURES

SEISMIC JOINT (TYPE I)

REINFORCEMENT DETAILS NO. 2

SHEET 144 OF 209

FILE => spec_des_br_proj/2007sd/04-0120S1/p:\4141-06\CADD\TS\Checked Plans\YBITS_SeismicJoint_Details(Type1)_Rev.Barrera1\032910\Seismic

USERNAME => fscmson DATE PLOTTED => 4/13/2010 TIME PLOTTED => 10:01:53 AM

DIST	COUNTY	ROUTE	KILOMETER POST TOTAL PROJECT	SHEET No	TOTAL SHEETS
04	SF	80	12.7/13.2	694	806

REGISTERED CIVIL ENGINEER DATE

PLANS APPROVAL DATE

REGISTERED PROFESSIONAL ENGINEER EFTHYMIOS DELIS No. 51434 Exp. 6-30-08 CIVIL STATE OF CALIFORNIA

The State of California or its officers or agents shall not be responsible for the accuracy or completeness of electronic copies of this plan sheet.

Caltrans now has a web site! To get to the web site, go to: http://www.dot.ca.gov

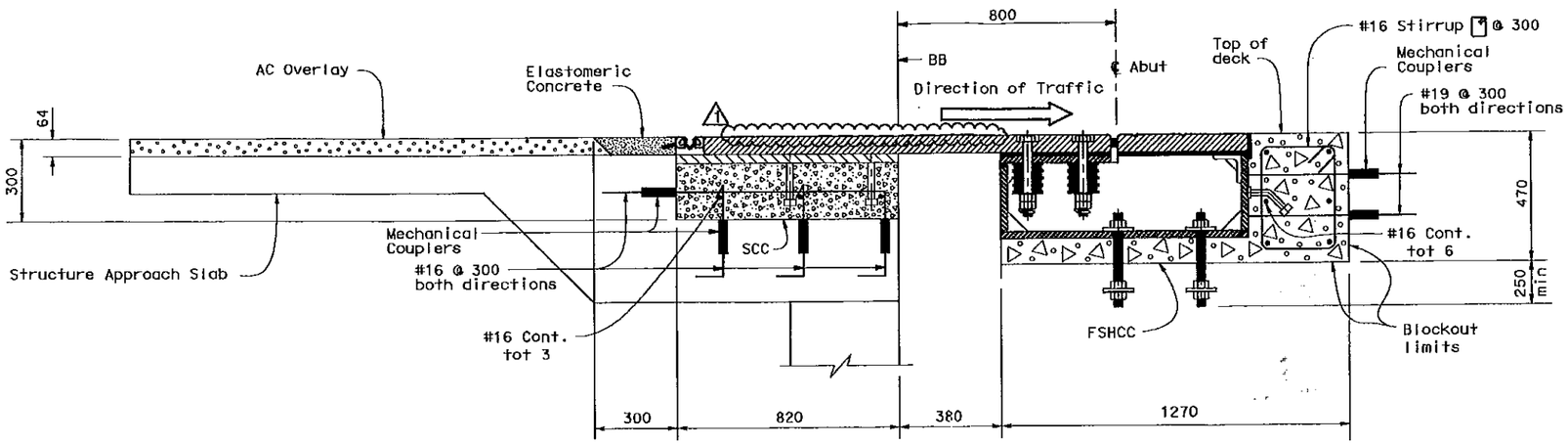

SAN FRANCISCO SIDE

OAKLAND SIDE

HINGE W11R

SCALE = 1:10

NOTES:

1. Rebars with mechanical couplers extend beyond blockout limits by at least 50 d_b
2. Top deck placed at deck profile.
3. Top of support plate parallel to top deck plate.
4. Seismic joint shown position at 20°C.

REGISTERED PROFESSIONAL ENGINEER ENRICO C. MAGGENTI No. 46920 Exp. 6/30/11 CIVIL STATE OF CALIFORNIA

FOR REVISION △1 ONLY

MARK	DATE	DESCRIPTIONS	BY	CH'D
△				
△1	3-29-10	REVISED SOME V-GROOVES TO TRACTION RIBS	BM	RM

REVISIONS

CONTRACT CHANGE ORDER NO. 7
SHEET 62 OF 62

THE CONTRACTOR SHALL VERIFY ALL CONTROLLING FIELD DIMENSIONS BEFORE ORDERING OR FABRICATING ANY MATERIAL.

SAN FRANCISCO OAKLAND BAY BRIDGE
EAST SPAN SEISMIC SAFETY PROJECT

YBI TRANSITION STRUCTURES

SEISMIC JOINT (TYPE I)

REINFORCEMENT DETAILS NO. 3

Caltrans Metric

	BY	CHECKED
DESIGN	E DELIS	A KARTOUM
DETAILS	A R DUDSAK	A KARTOUM
QUANTITIES	E DELIS	A KARTOUM

ALL DIMENSIONS ARE IN MILLIMETERS UNLESS OTHERWISE SHOWN

ORIGINAL SCALE IN MILLIMETERS FOR REDUCED PLANS 0 10 20 30 40 50 60 70 80 90 100

STATE OF CALIFORNIA
DEPARTMENT OF TRANSPORTATION

DIVISION OF ENGINEERING SERVICES
STRUCTURE DESIGN
SPECIAL DESIGNS BRANCH

CU 04251
EA 0120S1

BRIDGE NO. 34-0006
KILOMETER POST 12.8

DISREGARD PRINTS BEARING EARLIER REVISION DATES 10/26/07 11/23/07 1/21/08 2/25/08

REVISION DATES

SHEET 145 OF 209

FILE => spec_des_br_proj/2007sd/04-0120S1/p1\4141-06\CADD\TS\Checked Plans\YBI Structures Details\032910\Seismic

USERNAME => fscmson DATE PLOTTED => 4/13/2010 TIME PLOTTED => 10:02:17 AM

STATE OF CALIFORNIA - DEPARTMENT OF TRANSPORTATION

CONTRACT CHANGE ORDER MEMORANDUM

DATE: 6/9/2010 Page 1 of 1

TO: Deanna Vilcheck, ACM / DV	FILE: E.A. 04 - 0120S4
	CO-RTE-PM SF-80-12.7/13.2
FROM: Rajesh Oberoi, Senior R.E.	FED. NO. NO FED AID
CCO#: 7 SUPPLEMENT#: 0 Category Code: CHPT	CONTINGENCY BALANCE (incl. this change) $31,926,772.00
COST: $91,380.00 INCREASE ☑ DECREASE ☐	HEADQUARTERS APPROVAL REQUIRED? ☐ YES ☑ NO
SUPPLEMENTAL FUNDS PROVIDED: $0.00	IS THIS REQUEST IN ACCORDANCE WITH ENVIRONMENTAL DOCUMENTS? ☑ YES ☐ NO
CCO DESCRIPTION:	**PROJECT DESCRIPTION:** YBITS-1 (Yerba Buena Island Transition Structures)

Original Contract Time:	Time Adj. This Change:	Previously Approved CCO Time Adjustments:	Percentage Time Adjusted: (including this change)	Total # of Unreconciled Deferred Time CCO(s): (including this change)
1390 Day(s)	0 Day(s)	0 Day(s)	0 %	0

THIS CHANGE ORDER PROVIDES FOR:

Modifying the riding surface texture pattern for the seismic joints at Abutment W11R and Bent W10AL as shown on revised contract plan sheet number 686, 687, 688, 690, 692, 693 and 694 of 806 (sheets 2 to 8 of this change order.)

This change has been requested by Toll Bridge Design to address the substandard coefficient of friction of the riding surface at the seismic joints mentioned above. The contract plans called for a texture that did not meet the Departments requirement of coefficient of friction, which is supposed to be greater than 0.35. Toll Bridge Design revised the texture. The new texture has a coefficient of friction 0.40 and exceeds the requirement of the California Test Method 342 as specified in Caltrans Standard Specification 51-1.17, Finishing Bridge Deck.

For this work the contractor will be paid an adjustment in compensation at agreed price of $91,380.00. The mentioned amount can be financed from the contingency fund. A detailed cost analysis is on file.

This change has been requested by Toll Bridge Design and concurred by Structure Maintenance .

No adjustment to contract time is warranted, as this change does not affect the controlling operation.

CONCURRED BY:		
Construction Engineer:	Rajesh Oberoi	Date 6/22/10
Bridge Engineer:	Mehran Ardakanian	Date 6/22/10
Project Engineer:	Mike Whiteside	Date 8/11/10
Project Manager:		Date
FHWA Rep.:		Date
Environmental:		Date
Other (specify):	Bill Zantec - Sto. Maint.	Date 5/7/10
Other (specify):		Date
District Prior Approval By:		Date
HQ (Issue Approve) By:		Date
Resident Engineer's Signature:	Rajesh Oberoi	Date 6/22/10

ESTIMATE OF COST

	THIS REQUEST	TOTAL TO DATE
ITEMS	$0.00	$0.00
FORCE ACCOUNT	$0.00	$0.00
AGREED PRICE	$0.00	$0.00
ADJUSTMENT	$91,380.00	$91,380.00
TOTAL	$91,380.00	$91,380.00

FEDERAL PARTICIPATION

☐ PARTICIPATING ☐ PARTICIPATING IN PART ☐ NONE
☐ NON-PARTICIPATING (MAINTENANCE) ☑ NON-PARTICIPATING

FEDERAL SEGREGATION (if more than one Funding Source or P.I.P. type)
☐ CCO FUNDED PER CONTRACT ☐ CCO FUNDED AS FOLLOWS

FEDERAL FUNDING SOURCE	PERCENT

ADA Notice: For individuals with sensory disabilities, this document is available in alternate formats. For information call: (916) 654-6410 or TDD (916) 654-3880 or write Records and Forms Management, 1120 N Street, MS-89, Sacramento, CA 95814

STATE OF CALIFORNIA - DEPARTMENT OF TRANSPORTATION

CONTRACT CHANGE ORDER

Change Requested by: Engineer

CCO: 8	Suppl. No. 0	Contract No. 04 - 0120S4	Road SF-80-12.7/13.2	FED. AID LOC.: NO FED AID

To: **M C M CONSTRUCTION INC**

You are directed to make the following changes from the plans and specifications or do the following described work not included in the plans and specifications for this contract. ***NOTE: This change order is not effective until approved by the Engineer.***

Description of work to be done, estimate of quantities and prices to be paid. (Segregate between additional work at contract price, agreed price and force account.) Unless otherwise stated, rates for rental of equipment cover only such time as equipment is actually used and no allowance will be made for idle time. This last percentage shown is the net accumulated increase or decrease from the original quantity in the Engineer's Estimate.

Eliminate the work specified to be performed under Section 10-1.08 INTEGRATED SHOP DRAWINGS of the Contract Special Provisions.

Adjustment of Compensation at Lump Sum:

For the work eliminated under this change order, the Contractor shall credit the Department an agreed lump sum of $423,410.00 which constitutes full and final compensation, including all markups, for all cost savings associated with the elimination of this work.

This change order includes costs pertaining to Autodesk NavisWorks Manage 2011 software purchased by the Contractor for their planned ISD work. This software shall be made available for the Department's use in developing their own integrated shop drawings. These costs are included in the lump sum credit provided and no additional compensation shall be paid.

Estimated cost of Adjustment of Compensation at Lump Sum .....($423,410.00)

No adjustment of contract time is warranted as this is an administrative change which will not affect the controlling operation.

Estimated Cost: Increase ☐ Decrease ☑ **($423,410.00)**

By reason of this order the time of completion will be adjusted as follows: 0 days

Submitted by:		
Signature Rajesh Oberoi	Resident Engineer Rajesh Oberoi, Senior R.E.	Date 10/25/10
Approval Recommended by:		
Signature Deanna Vilcheck	Area Construction Manager Deanna Vilcheck	Date 10/25/10
Engineer Approval by:		
Signature Mike Forner	Principal T.E. Mike Forner	Date 11/12/10

We the undersigned contractor, have given careful consideration to the change proposed and agree, if this proposal is approved, that we will provide all equipment, furnish the materials, except as may otherwise be noted above, and perform all services necessary for the work above specified, and will accept as full payment therefor the prices shown above.

NOTE: If you, the contractor, do not sign acceptance of this order, your attention is directed to the requirements of the specifications as to proceeding with the ordered work and filing a written protest within the time therein specified.

Contractor Acceptance by:		
Signature	(Print name and title) EDMUNDO A. PUCHI, TREASURER	Date 11/10/10

STATE OF CALIFORNIA - DEPARTMENT OF TRANSPORTATION

CONTRACT CHANGE ORDER MEMORANDUM

TO: Deanna Vilcheck, ACM /	FILE: E.A. 04 - 0120S4
FROM: Rajesh Oberoi, Senior R.E.	CO-RTE-PM SF-80-12.7/13.2
	FED. NO. NO FED AID
CCO#: 8 SUPPLEMENT#: 0 Category Code: **AXZZ**	CONTINGENCY BALANCE (incl. this change) **$28,737,142.00**
COST: **($423,410.00)** INCREASE ☐ DECREASE ☑	HEADQUARTERS APPROVAL REQUIRED? ☑ YES ☐ NO
SUPPLEMENTAL FUNDS PROVIDED: **$0.00**	IS THIS REQUEST IN ACCORDANCE WITH ENVIRONMENTAL DOCUMENTS? ☑ YES ☐ NO
CCO DESCRIPTION: Eliminate Integrated Shop Drawings	**PROJECT DESCRIPTION:** YBITS-1 (Yerba Buena Island Transition Structures)

Original Contract Time:	Time Adj. This Change:	Previously Approved CCO Time Adjustments:	Percentage Time Adjusted: (including this change)	Total # of Unreconciled Deferred Time CCO(s): (including this change)
1390 Day(s)	**0** Day(s)	**0** Day(s)	**0** %	**0**

THIS CHANGE ORDER PROVIDES FOR:

The elimination of the work pertaining to the contractor developing integrated shop drawings.

This project, the Yerba Buena Island Transition Structure (YBITS), provides for the construction of two bridges which will connect eastbound and westbound traffic on the new east span of the San Francisco Oakland Bay Bridge (SFOBB) to the existing Yerba Buena Island (YBI) tunnel. The structures are comprised of concrete box girder bridges each approximately 40 meters high and 450 meters in length.

The contract special provisions provide for the contractor to develop three-dimensional integrated shop drawings (ISD's) for the YBITS structure. The ISD's are used to identify potential conflicts between the reinforcing steel, prestressing ducts and utilities within the structure particularly within congested areas of the bent caps. If conflicts are identified through the ISD process, revised contract plans are developed to eliminate the conflict with these revised plans issued through a change order. That change order would also address any costs associated with the required revisions.

Due to potential conflicts between the contractor's planned ISD consultant and Department forces, it has been determined that the Department will assume the responsibility for these ISD's. This assumption of the responsibility for developing the ISD's has been requested by Ade Akinsanya the SFOBB contract manager and concurred by Mike Whiteside the YBI Coordination Engineer. Accordingly, this change order eliminates this work from the contractor's scope.

The contractor's cost of developing the ISD's was specified to be included in the various contract bid items associated with the work. This change will result in a cost savings to this contract based upon the contractor's estimated costs associated with this work. Similar costs will be incurred by the Department for performing this work, however, these costs will be incurred outside of this contract. The credit provided includes costs incurred by the contractor in purchasing software for performing their planned ISDs. This software shall be made available for the Department's use for the actual integrated shop drawings development.

The elimination of this scope of work will result in an adjustment of compensation at an agreed lump sum credit of $423,410.00. A cost analysis is on file.

No adjustment of contract time is warranted as this is an administrative change which will not affect the controlling operation.

Maintenance concurrence is not required as this is an administrative change which doesn't affect any permanent roadway features.

ADA Notice: For individuals with sensory disabilities, this document is available in alternate formats. For information call: (916) 654-6410 or TDD (916) 654-3880 or write Records and Forms Management, 1120 N Street, MS-89, Sacramento, CA 95814.

CONCURRED BY:		
Construction Engineer:	Rajesh Oberoi	Date 10/25/10
Bridge Engineer:	Mehran Ardakanian	Date 10/25/10
Project Engineer:		Date
Project Manager:		Date
FHWA Rep.:		Date
Environmental:		Date
Other (specify):		Date
Other (specify):		Date
District Prior Approval By:		Date
HQ (Issue Approve) By:	Larry Salhaney	Date 10/27/10
Resident Engineer's Signature:	Rajesh Oberoi	Date 11/2/10

ESTIMATE OF COST

	THIS REQUEST	TOTAL TO DATE
ITEMS	$0.00	$0.00
FORCE ACCOUNT	$0.00	$0.00
AGREED PRICE	$0.00	$0.00
ADJUSTMENT	($423,410.00)	($423,410.00)
TOTAL	($423,410.00)	($423,410.00)

FEDERAL PARTICIPATION

[ ] PARTICIPATING [ ] PARTICIPATING IN PART [✓] NONE
[ ] NON-PARTICIPATING (MAINTENANCE) [ ] NON-PARTICIPATING

FEDERAL SEGREGATION (if more than one Funding Source or P.I.P. type)
[✓] CCO FUNDED PER CONTRACT [ ] CCO FUNDED AS FOLLOWS

FEDERAL FUNDING SOURCE	PERCENT

ADA Notice: For individuals with sensory disabilities, this document is available in alternate formats. For information call: (916) 654-6410 or TDD (916) 654-3880 or write Records and Forms Management, 1120 N Street, MS-89, Sacramento, CA 95814.

CONTRACT CHANGE ORDER

Change Requested by: Engineer

CCO 9	Suppl. No. 0	Contract No. 04 - 0120S4	Road SF-80-12.7/13.2	FED. AID LOC.: NO FED AID

To: **M C M CONSTRUCTION INC**

You are directed to make the following changes from the plans and specifications or do the following described work not included in the plans and specifications for this contract. ***NOTE: This change order is not effective until approved by the Engineer.***

Description of work to be done, estimate of quantities and prices to be paid. (Segregate between additional work at contract price, agreed price and force account.) Unless otherwise stated, rates for rental of equipment cover only such time as equipment is actually used and no allowance will be made for idle time. This last percentage shown is the net accumulated increase or decrease from the original quantity in the Engineer's Estimate.

Extra Work at Lump Sum:

Replace sheets 602, 608, 609, 612, 666, 669 and 714 of 806 of contract plans with attached sheets 2 to 8 of the contract change order.

For this work the Contractor will be paid the sum of $0.00. This sum constitutes full compensation, including all markups, for this change.

No adjustment to contact time is warranted, as this change does not affect the controlling operations.

Estimated Cost of Extra Work at Agreed Lump Sum ..... $ 0.00

There shall be no adjustment to the time of completion of the contract by reason of this change.

Estimated Cost: **Increase** ☐ **Decrease** ☐ **$0.00**

By reason of this order the time of completion will be adjusted as follows: 0 days

Submitted by

Signature	Resident Engineer	Date
Rajesh Oberoi	Rajesh Oberoil, Senior R.E.	6/7/10

Approval Recommended by

Signature	Construction Engineer	Date
Rajesh Oberoi	Rajesh Oberoi	8/2/10

Engineer Approval by

Signature	Area Construction Manager	Date
Deanna Vilcheck	Deanna Vilcheck	8/2/10

We the undersigned contractor, have given careful consideration to the change proposed and agree, if this proposal is approved, that we will provide all equipment, furnish the materials, except as may otherwise be noted above, and perform all services necessary for the work above specified, and will accept as full payment therefor the prices shown above.

NOTE: If you, the contractor, do not sign acceptance of this order, your attention is directed to the requirements of the specifications as to proceeding with the ordered work and filing a written protest within the time therein specified.

Contractor Acceptance by

Signature	(Print name and title)	Date
	Edmund Arpachi - Treasurer	7/27/2010

DIST.	COUNTY	ROUTE	KILOMETER POST TOTAL PROJECT	SHEET NO.	TOTAL SHEETS
04	SF	80	12.7/13.2	602	806

REGISTERED ENGINEER - CIVIL
6-23-08
PLANS APPROVAL DATE
The State of California or its officers or agents shall not be responsible for the accuracy or completeness of electronic copies of this plan sheet.

REGISTERED PROFESSIONAL ENGINEER A.L. ELY No. 18880 Exp. 6-30-09 CIVIL STATE OF CALIFORNIA

T.Y. LIN / MOFFATT & NICHOL
TWO HARRISON STREET
SAN FRANCISCO, CA 94105

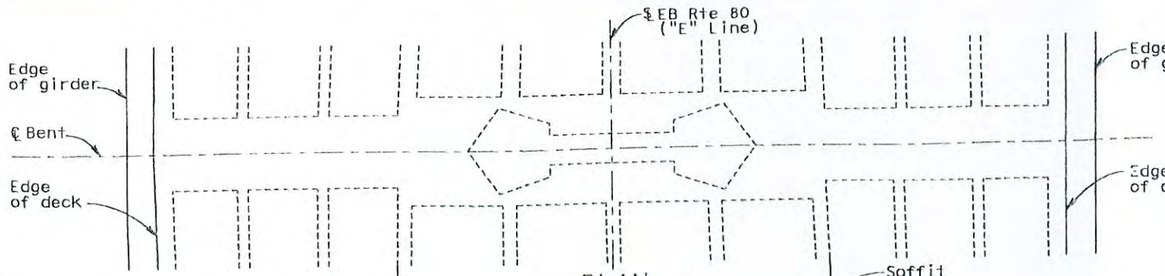

PLAN
1:80

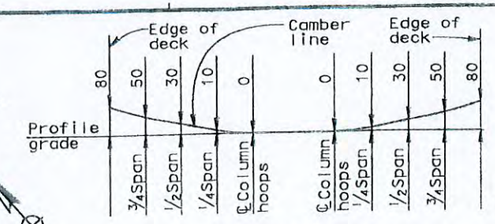

BENT CAP
CAMBER DIAGRAM
NO SCALE

Note: Camber diagram does not include allowance for falsework settlement

NOTE:
For Bent cap details see "Bent W7R Details No.2" sheet.

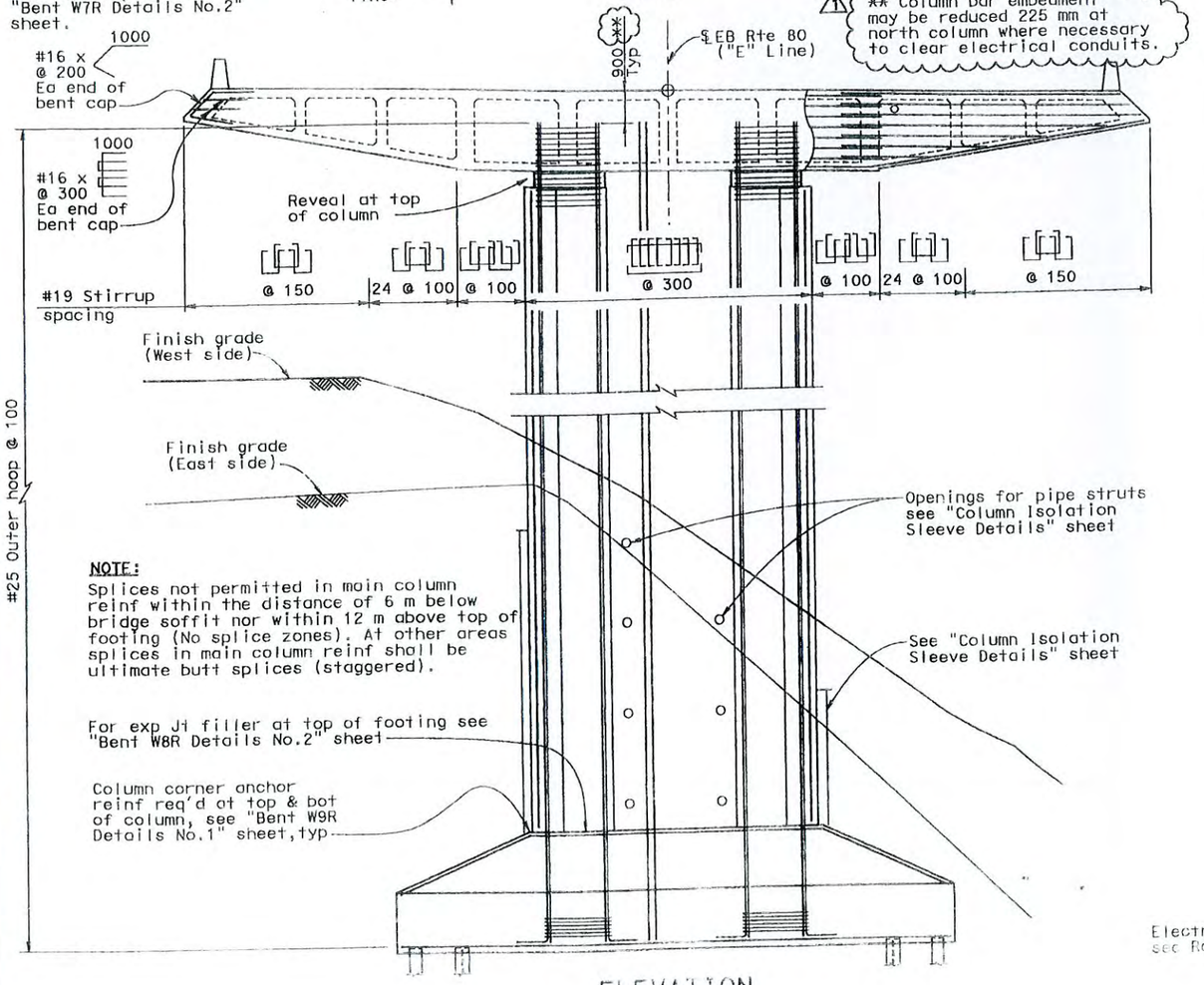

NOTE:
Splices not permitted in main column reinf within the distance of 6 m below bridge soffit nor within 12 m above top of footing (No splice zones). At other areas splices in main column reinf shall be ultimate butt splices (staggered).

For exp Jt filler at top of footing see "Bent W8R Details No.2" sheet

Column corner anchor reinf req'd at top & bot of column, see "Bent W9R Details No.1" sheet, typ

ELEVATION
1:80

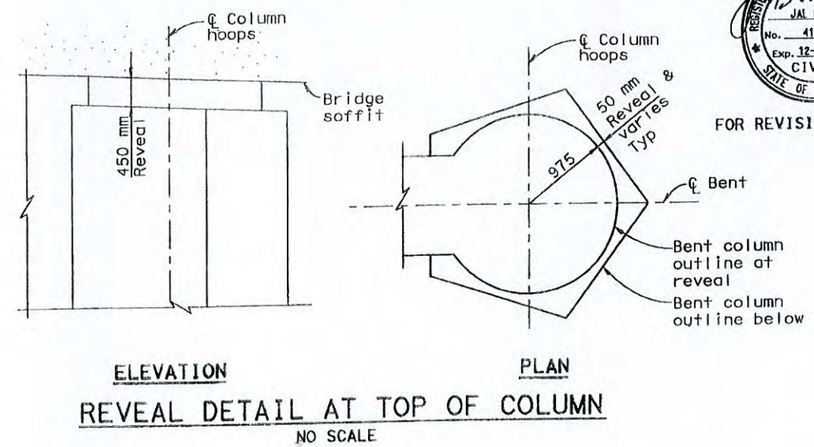

ELEVATION
PLAN

REVEAL DETAIL AT TOP OF COLUMN
NO SCALE

FOR REVISION 1 ONLY

REGISTERED PROFESSIONAL ENGINEER JAL BIRDY No. 41547 Exp. 12-31-11 CIVIL STATE OF CALIFORNIA

MARK	DATE	DESCRIPTIONS	BY	CH'D
1	3-29-10	ISD REVISIONS	AE	JB

REVISIONS

CONTRACT CHANGE ORDER NO. 9
SHEET 2 OF 3

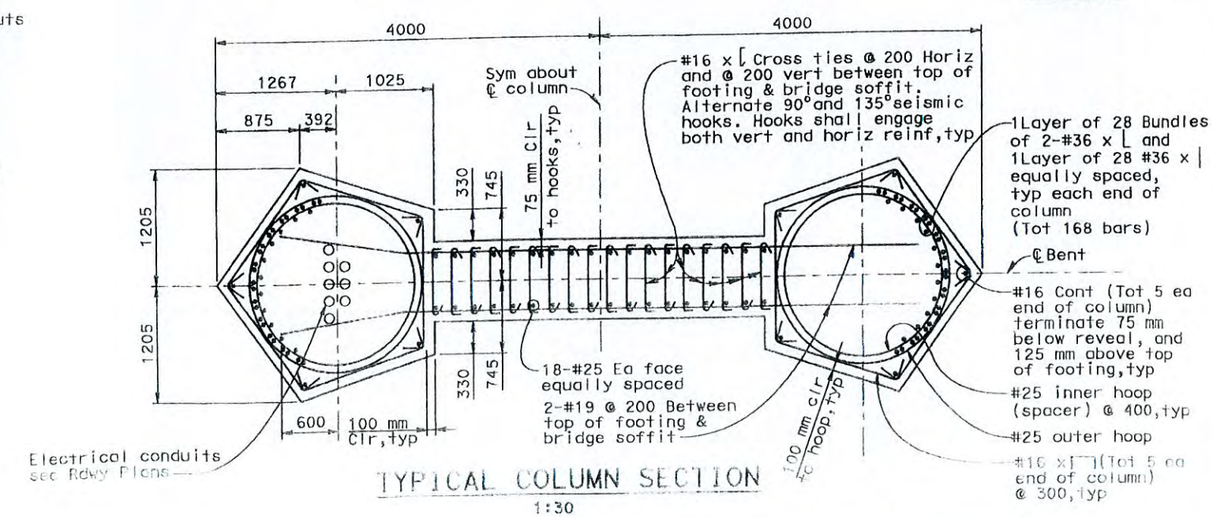

TYPICAL COLUMN SECTION
1:30

ALL DIMENSIONS ARE IN MILLIMETERS UNLESS OTHERWISE SHOWN

SAN FRANCISCO OAKLAND BAY BRIDGE
EAST SPAN SEISMIC SAFETY PROJECT

YBI TRANSITION STRUCTURES

BENT W8R DETAILS NO.1

DESIGN OVERSIGHT
JOHN MOOK, BERNARD CHAN, JUAN F. CARPIO, HASAN ELL-NATOR
SIGN OFF DATE 4/15/2010
Rev. Date: 5-16-98

	BY	CHECKED
DESIGN	Darrah/Shangkuan	Ahn
DETAILS	van Ryn/Zucchi/Wai	Jain
QUANTITIES	Liao	L. Nichol

PREPARED FOR THE STATE OF CALIFORNIA DEPARTMENT OF TRANSPORTATION

Jal Birdy
PROJECT ENGINEER

BRIDGE NO. 34-0006 L/R
KILOMETER POST 12.8

CU 04251
EA 0120S1

DISREGARD PRINTS BEARING EARLIER REVISION DATES

REVISION DATES (PRELIMINARY STAGE ONLY)

SHEET 53 OF 209

ORIGINAL SCALE IN MILLIMETERS FOR REDUCED PLANS 0 10 20 30 40 50 60 70 80 90 100

FILE => D:\M141-06\CADD\TS\Checked Plans\YBITS #1-100X No. 2 03-03-08 (Final Renoised)\032910\04 0120S1-34-0006L-h-Ldet36.dgn

TIME PLOTTED => 9:24:30 AM
DATE PLOTTED => 4/14/2010
TIME PLOTTED => 4:50:50

DIST.	COUNTY	ROUTE	KILOMETER POST TOTAL PROJECT	SHEET NO.	TOTAL SHEETS
04	SF	80	12.7/13.2	608	806

REGISTERED ENGINEER - CIVIL

6-23-08
PLANS APPROVAL DATE

REGISTERED PROFESSIONAL ENGINEER A.L. ELY No. 18880 Exp. 6-30-09 CIVIL STATE OF CALIFORNIA

The State of California or its officers or agents shall not be responsible for the accuracy or completeness of electronic copies of this plan sheet.

T.Y. LIN / MOFFATT & NICHOL
TWO HARRISON STREET
SAN FRANCISCO, CA 94105

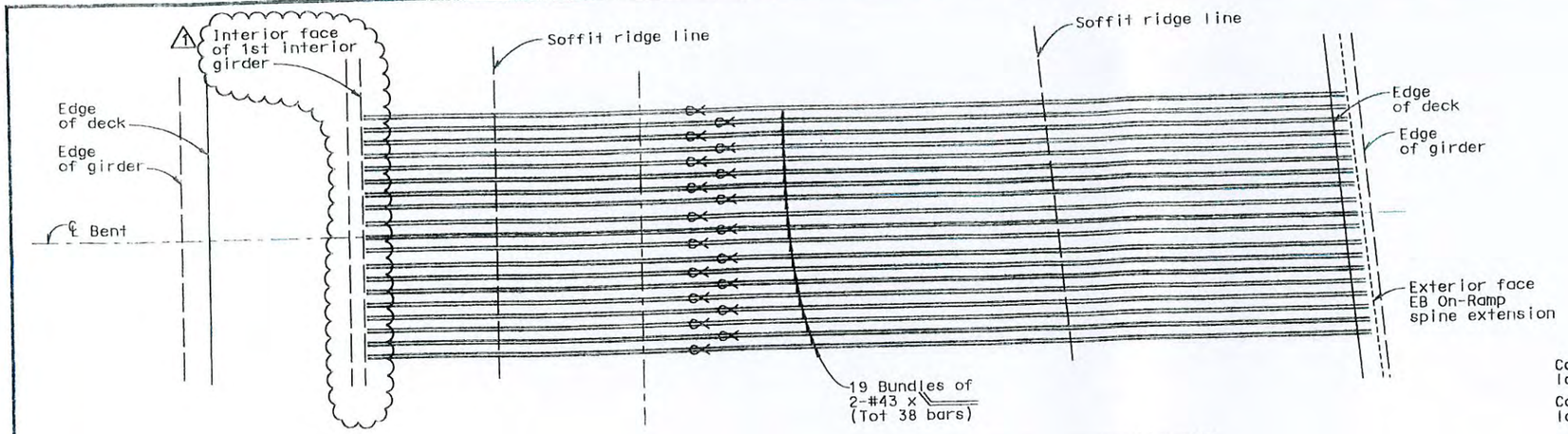

SCHEMATIC PLAN - CAP BOTTOM UPPER LAYER REINFORCEMENT
No scale

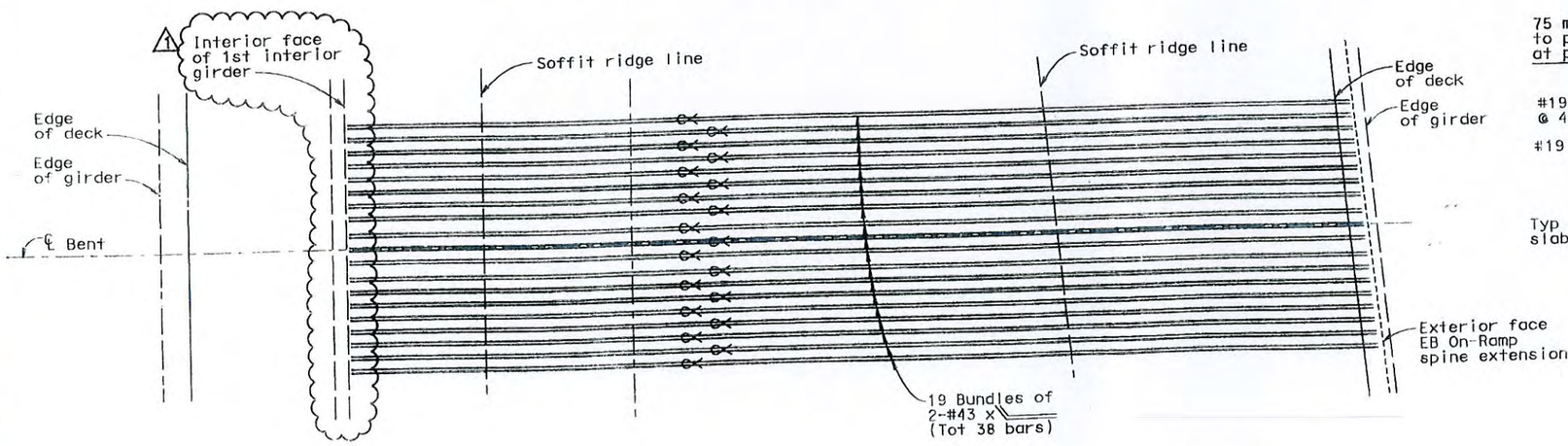

SCHEMATIC PLAN - CAP BOTTOM LOWER LAYER REINFORCEMENT
No scale

Note: Lap splices not permitted in bent cap main top and bottom reinf

Indicates bundled bars

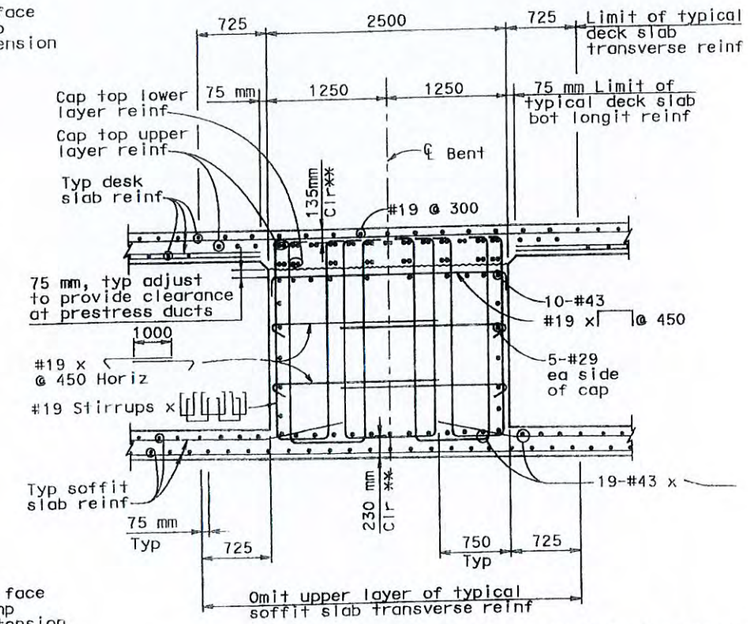

SECTION C-C
1:30

** Indicates clearance to main reinf

Note:
For location of Section C-C see "Bent W6R Details No.2" sheet.

REGISTERED PROFESSIONAL ENGINEER JAL BIRDY No. 41547 Exp. 12-31-11 CIVIL STATE OF CALIFORNIA

FOR REVISION 1 ONLY

MARK	DATE	DESCRIPTIONS	BY	CH'D
1	3-29-10	ISD REVISIONS	AE	JB

REVISIONS

CONTRACT CHANGE ORDER NO. 9
SHEET 3 OF 8

ALL DIMENSIONS ARE IN MILLIMETERS UNLESS OTHERWISE SHOWN

SAN FRANCISCO OAKLAND BAY BRIDGE
EAST SPAN SEISMIC SAFETY PROJECT

YBI TRANSITION STRUCTURES

BENT W6R DETAILS NO.3

DESIGN OVERSIGHT
JOHN MOOK, BERNARD CHAN, JUAN F. CARPIO, HASAN EL-NATOR
SIGN OFF DATE 4/15/2010

	BY	CHECKED
DESIGN	Wang	Greer
DETAILS	van Ryn/Zucchi/Mal	Jain
QUANTITIES	Liao	E. Nichol

PREPARED FOR THE STATE OF CALIFORNIA DEPARTMENT OF TRANSPORTATION

Jal Birdy
PROJECT ENGINEER

CU 04251
EA 012051

BRIDGE NO. 34-0006 L/R
KILOMETER POST 12.8

DISREGARD PRINTS BEARING EARLIER REVISION DATES

REVISION DATES (PRELIMINARY STAGE ONLY)

SHEET 59 OF 209

ORIGINAL SCALE IN MILLIMETERS FOR REDUCED PLANS 0 10 20 30 40 50 60 70 80 90 100

FILE => D:\4141-06\CADD\TS\Checked Plans\YBITS #1-100% No. 2 03-03-08 (Final Renamed)\0229104-012081-34 006R1-n-bdet42.dgn

Rev. Date: 5-18-98

March 3, 2008

TIME PLOTTED => 03:25:50 AM

DIST.	COUNTY	ROUTE	KILOMETER POST TOTAL PROJECT	SHEET NO.	TOTAL SHEETS
04	SF	80	12.7/13.2	609	806

REGISTERED ENGINEER - CIVIL
6-23-08
PLANS APPROVAL DATE
REGISTERED PROFESSIONAL ENGINEER A.L. ELY No. 18880 Exp. 6-30-09 CIVIL STATE OF CALIFORNIA
The State of California or its officers or agents shall not be responsible for the accuracy or completeness of electronic copies of this plan sheet.

T.Y. LIN / MOFFATT & NICHOL
TWO HARRISON STREET
SAN FRANCISCO, CA 94105

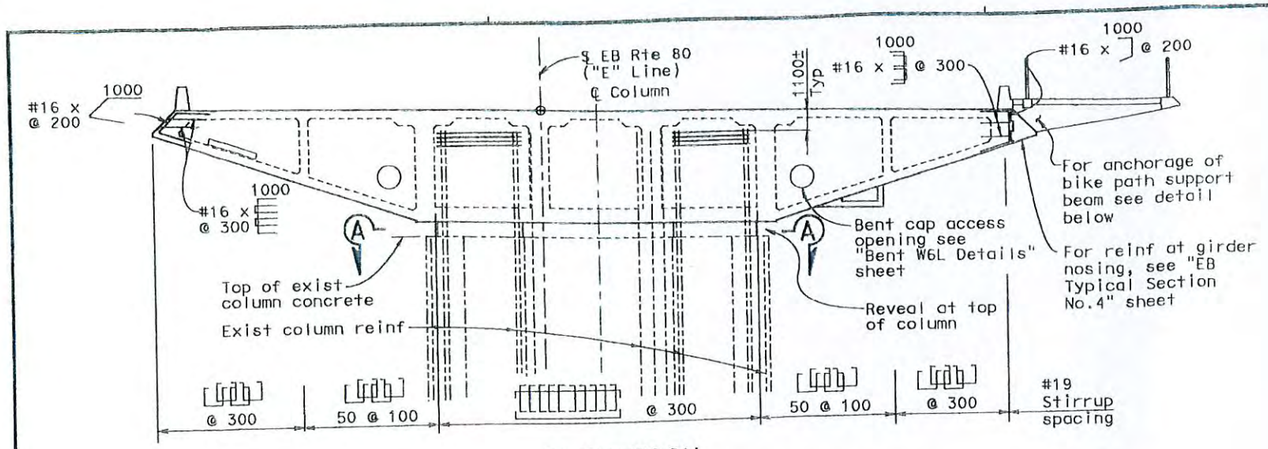

ELEVATION
1:100

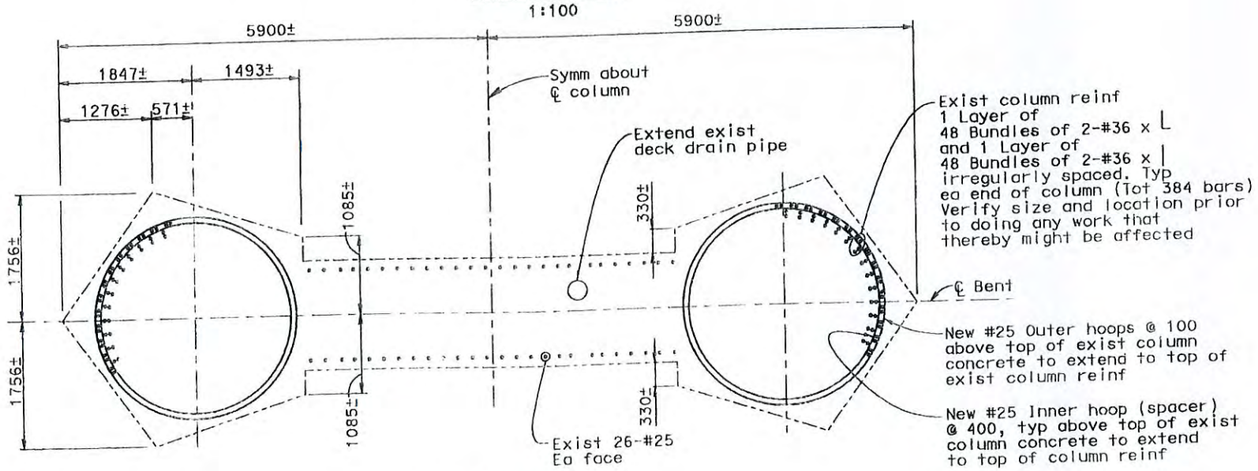

SECTION A-A
1:40

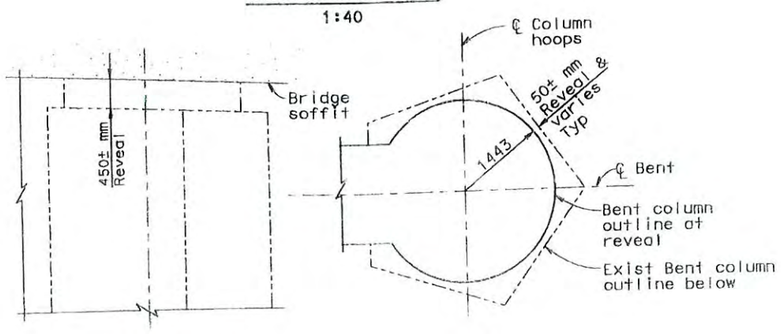

ELEVATION PLAN

REVEAL DETAIL AT TOP OF COLUMN
(Typical Bents W5R & W4R)
NO SCALE

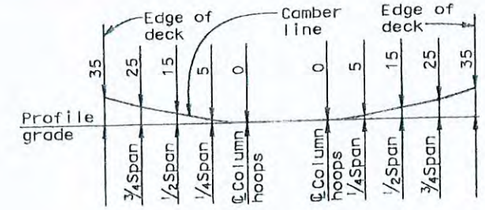

BENT CAP
CAMBER DIAGRAM
NO SCALE

Note: Camber diagram does not include allowance for falsework settlement

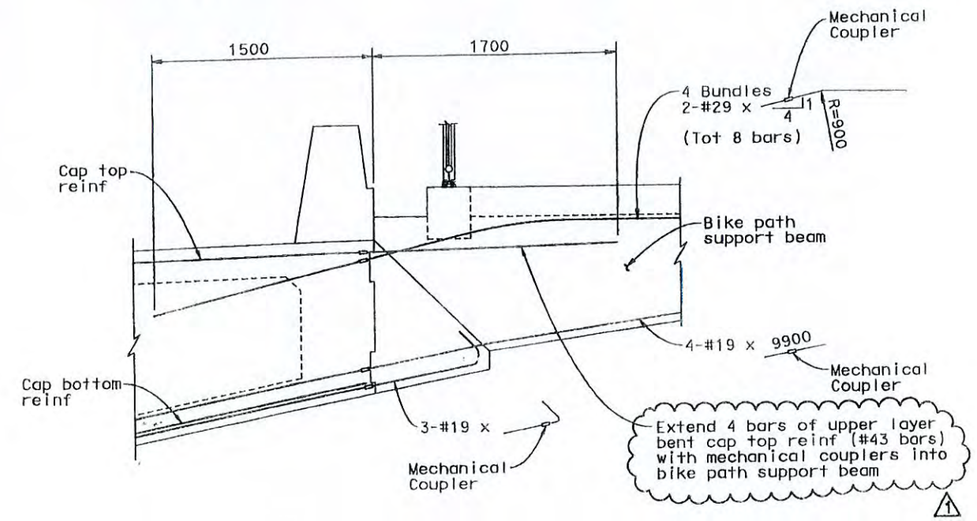

ANCHORAGE OF BIKEPATH SUPPORT BEAM
(Shown at Bent W5R, similar at Bent W6R, for details not shown see "Bike Path Details No.1" sheet)
1:20

REGISTERED PROFESSIONAL ENGINEER JAL BIRDY No. 41547 Exp. 12-31-11 CIVIL STATE OF CALIFORNIA

FOR REVISION 1 ONLY

MARK	DATE	DESCRIPTIONS	BY	CH'D
1	3-29-10	ISD REVISIONS	AE	JB

REVISIONS

CONTRACT CHANGE ORDER NO. 9
SHEET 4 OF 8

ALL DIMENSIONS ARE IN MILLIMETERS UNLESS OTHERWISE SHOWN

DESIGN OVERSIGHT: JOHN MOOK, BERNARD CHAN, JUAN F. CARPIO, HASAN EL-NATUR
SIGN OFF DATE 4/15/2010
Rev. Date: 5-18-98

DESIGN	BY Darrah/Shangkuan	CHECKED Ann
DETAILS	BY van Ryn/Zucchi/Mai	CHECKED Jain
QUANTITIES	BY Liao	CHECKED E. Nichol

ORIGINAL SCALE IN MILLIMETERS FOR REDUCED PLANS 0 10 20 30 40 50 60 70 80 90 100

PREPARED FOR THE STATE OF CALIFORNIA DEPARTMENT OF TRANSPORTATION

Jal Birdy
PROJECT ENGINEER

CU 04251
EA 0120S1

BRIDGE NO. 34-0006 L/R
KILOMETER POST 12.8

DISREGARD PRINTS BEARING EARLIER REVISION DATES

REVISION DATES (PRELIMINARY STAGE ONLY)

SHEET 60 OF 209

SAN FRANCISCO OAKLAND BAY BRIDGE
EAST SPAN SEISMIC SAFETY PROJECT

YBI TRANSITION STRUCTURES
BENT W5R DETAILS NO.1

FILE => p:\4141-06\CADD\TS\Checked Plans\YBITS #1-100% No. 2 03-08 (Final Renamed)\0320610\04 0120s1-34-0006rl-h-bde143.dgn

Sept 29, 2009
TIME PLOTTED => 9:27:48 AM
DATE PLOTTED => 4/14/2010
USERNAME => fsamson

DIST.	COUNTY	ROUTE	KILOMETER POST TOTAL PROJECT	SHEET NO.	TOTAL SHEETS
04	SF	80	12.7/13.2	612	806

REGISTERED ENGINEER - CIVIL
6-23-08
PLANS APPROVAL DATE
The State of California or its officers or agents shall not be responsible for the accuracy or completeness of electronic copies of this plan sheet.
REGISTERED PROFESSIONAL ENGINEER A.L. ELY No. 18880 Exp. 6-30-09 CIVIL STATE OF CALIFORNIA

T.Y. LIN / MOFFATT & NICHOL
TWO HARRISON STREET
SAN FRANCISCO, CA 94105

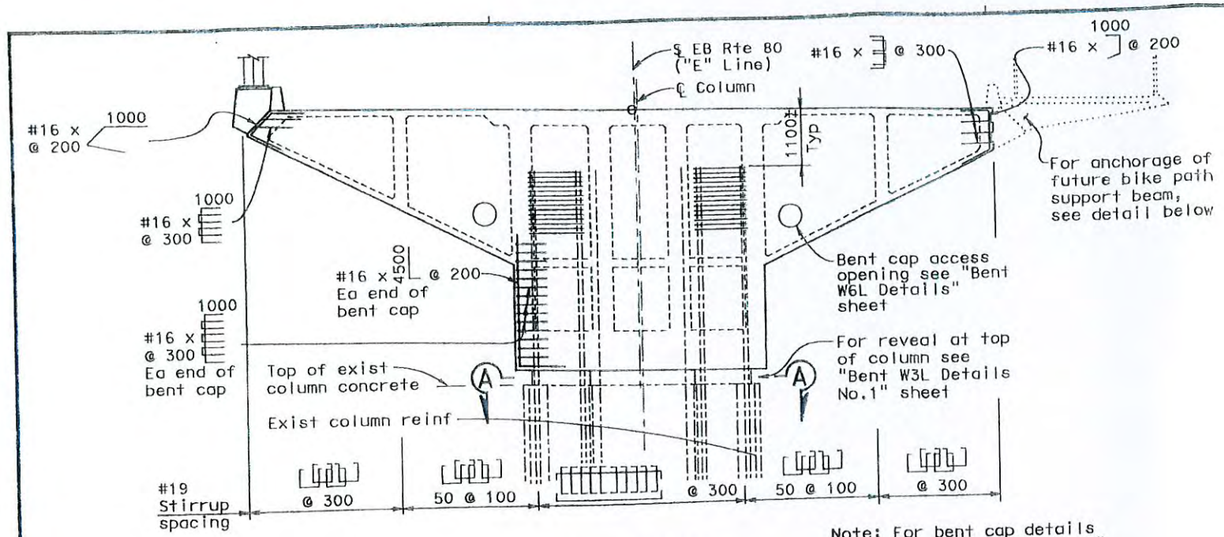

Note: For bent cap details see "Bent W3L Details No.2" sheet

ELEVATION
1:100

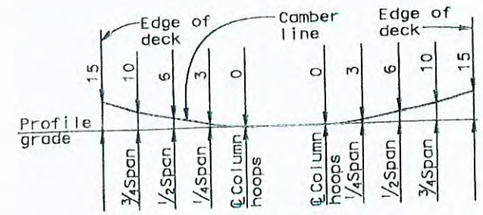

BENT CAP
CAMBER DIAGRAM
NO SCALE

Note: Camber diagram does not include allowance for falsework settlement

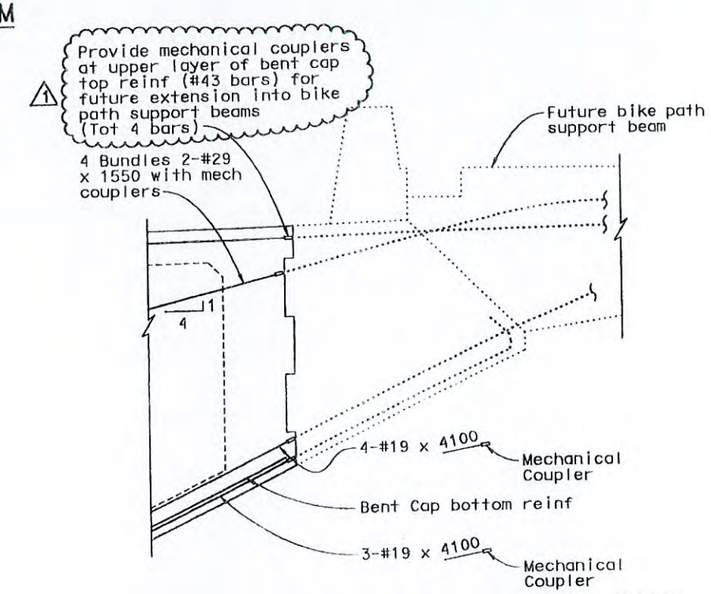

ANCHORAGE OF BIKEPATH SUPPORT BEAM
(Shown at Bent W3R, similar at Bent W4R, for details not shown see "Future Bike Path Details No.1" sheet)
1:20

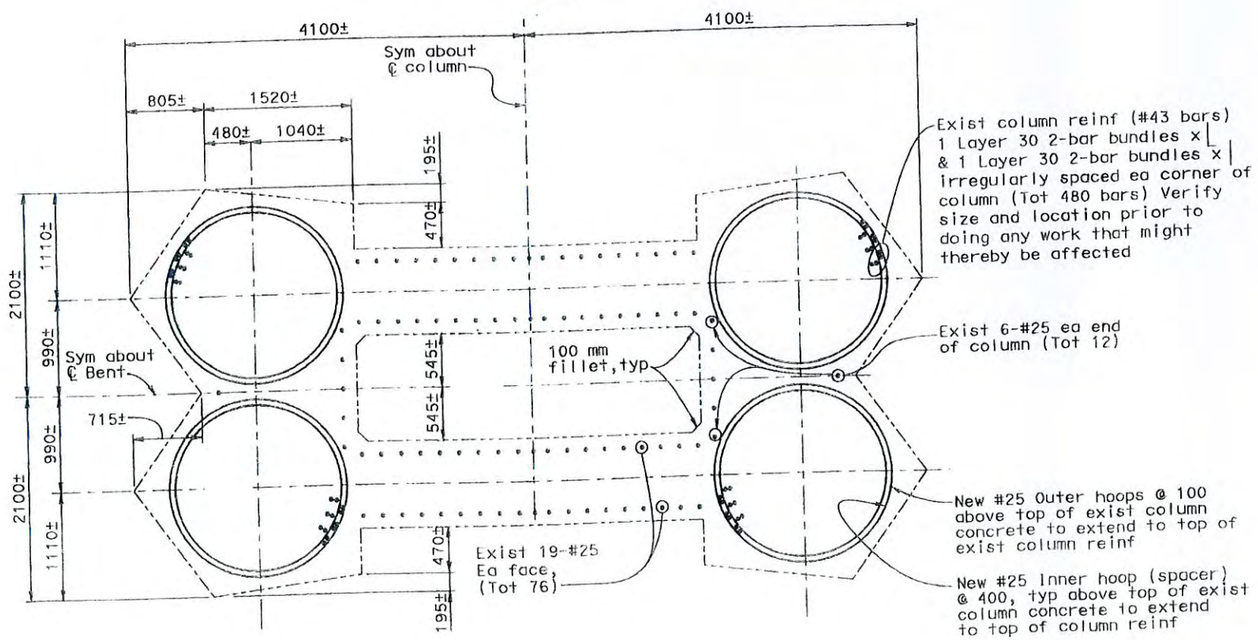

SECTION A-A
1:30

REGISTERED PROFESSIONAL ENGINEER JAL BIRDY No. 41547 Exp. 12-31-11 CIVIL STATE OF CALIFORNIA

FOR REVISION 1 ONLY

MARK	DATE	DESCRIPTIONS	BY	CH'D
1	3-29-10	ISD REVISIONS	AE	JB

REVISIONS

CONTRACT CHANGE ORDER NO. 9
SHEET 5 OF 8

ALL DIMENSIONS ARE IN MILLIMETERS UNLESS OTHERWISE SHOWN

DESIGN OVERSIGHT
JOHN MOOK, BERNARD CHAN, JUAN F. CARPIO
HASAN EL-NATUR
4/15/2010
SIGN OFF DATE

	BY	CHECKED
DESIGN	Darrah/Shangkuan	Ahn
DETAILS	von Ryn/Zucchi/Mai	Jain
QUANTITIES	Liao	E. Nichol

PREPARED FOR THE STATE OF CALIFORNIA DEPARTMENT OF TRANSPORTATION

Jal Birdy
PROJECT ENGINEER

BRIDGE NO. 34-0006 L/R
KILOMETER POST 12.8

CU 04251
EA 0120S1

DISREGARD PRINTS BEARING EARLIER REVISION DATES

SAN FRANCISCO OAKLAND BAY BRIDGE
EAST SPAN SEISMIC SAFETY PROJECT

YBI TRANSITION STRUCTURES
BENT W3R DETAILS

REVISION DATES (PRELIMINARY STAGE ONLY) SHEET 63 OF 205

ORIGINAL SCALE IN MILLIMETERS FOR REDUCED PLANS 0 10 20 30 40 50 60 70 80 90 100

FILE => p:\4141-06\CADD\TS\Checked Plans\YBITS #1-100% No. 2 03-08 (Final Retainer)\032910\04-012081-34-0006r1-h-bde146.dgn

Rev. Date: 5-18-98

Sept 29, 2009

DIST.	COUNTY	ROUTE	KILOMETER POST TOTAL PROJECT	SHEET NO.	TOTAL SHEETS
04	SF	80	12.7/13.2	666	806

Caltrans Metric

A.L. Ely
REGISTERED ENGINEER - CIVIL
6-23-08
PLANS APPROVAL DATE

REGISTERED PROFESSIONAL ENGINEER A.L. ELY No. 18880 Exp. 6-30-09 CIVIL STATE OF CALIFORNIA

The State of California or its officers or agents shall not be responsible for the accuracy or completeness of electronic copies of this plan sheet.

T.Y. LIN / MOFFATT & NICHOL
TWO HARRISON STREET
SAN FRANCISCO, CA 94105

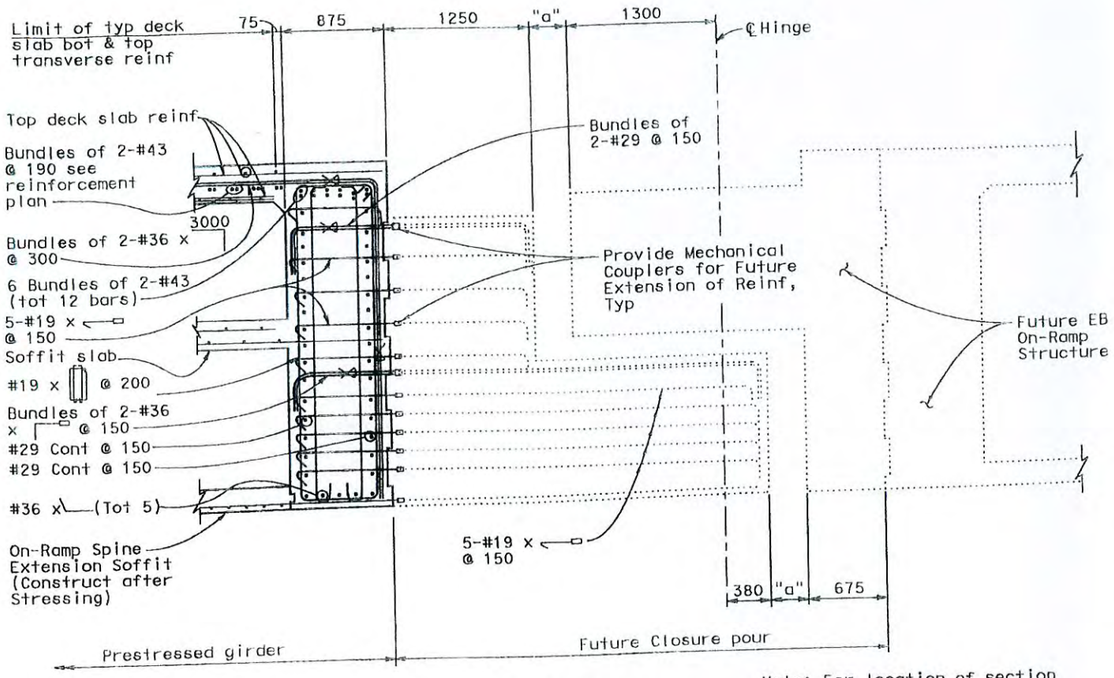

SECTION G-G
1:25

Note: For location of section G-G, see "Hinge W6RB Details No.1" sheet

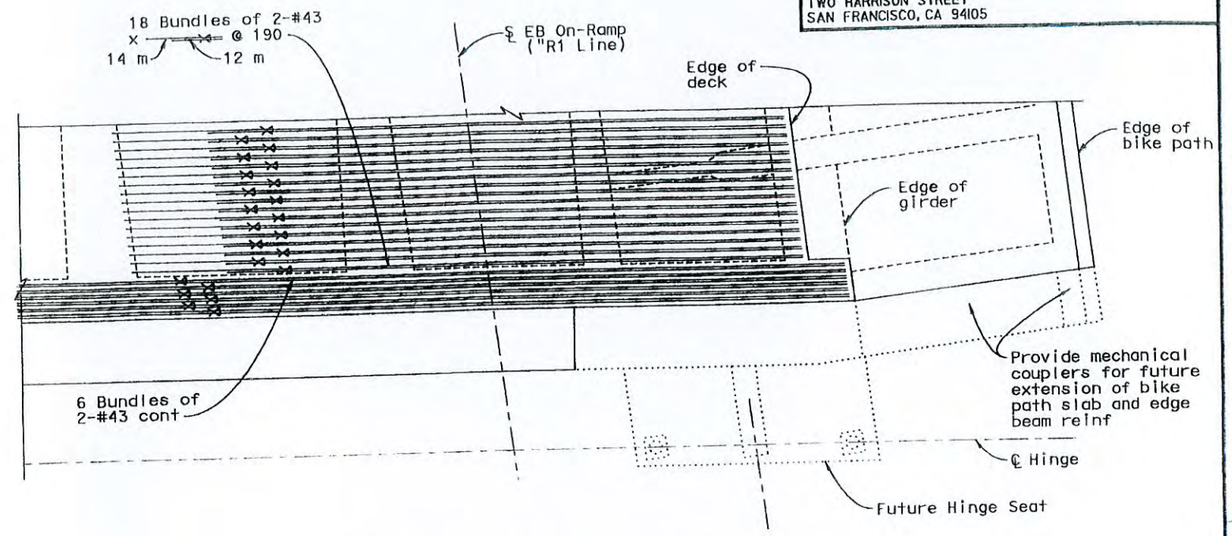

PARTIAL TOP REINFORCEMENT PLAN
No Scale

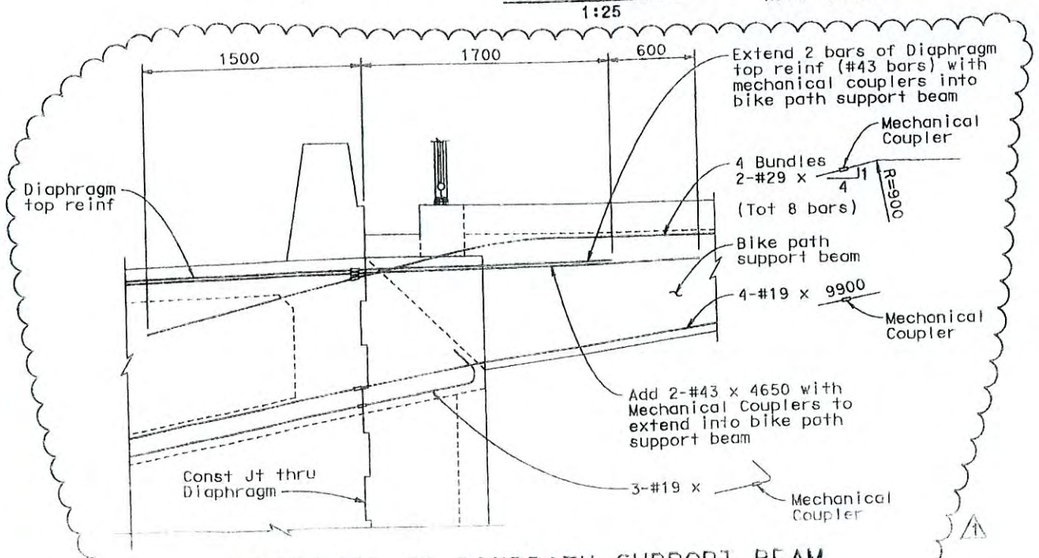

ANCHORAGE OF BIKEPATH SUPPORT BEAM
(Shown at Hinge W6RB Diaphragm
for details not shown see "Bike Path Details No.1" sheet)
1:20

REGISTERED PROFESSIONAL ENGINEER JAL BIRDY No. 41547 Exp. 12-31-11 CIVIL STATE OF CALIFORNIA

FOR REVISION 1 ONLY

MARK	DATE	DESCRIPTIONS	BY	CH'D
1	3-29-10	ISD REVISIONS	AE	JB

REVISIONS

CONTRACT CHANGE ORDER NO. 9
SHEET 6 OF 8

ALL DIMENSIONS ARE IN MILLIMETERS UNLESS OTHERWISE SHOWN

SAN FRANCISCO OAKLAND BAY BRIDGE
EAST SPAN SEISMIC SAFETY PROJECT

YBI TRANSITION STRUCTURES

HINGE W6RB DETAILS NO.4

DESIGN OVERSIGHT
JOHN MOOK, BERNARD CHAN, JUAN F. CARPIO — HASAN EL-NATUR
SIGN OFF DATE 4/15/2010
Rev. Date: 5-18-98

	BY	CHECKED
DESIGN	Lee	Atiqullah
DETAILS	Von Ryn/Zucchi/Wai	Jain
QUANTITIES	Liao	E. Nichol

ORIGINAL SCALE IN MILLIMETERS FOR REDUCED PLANS 0 10 20 30 40 50 60 70 80 90 100

PREPARED FOR THE STATE OF CALIFORNIA DEPARTMENT OF TRANSPORTATION

Jal Birdy
PROJECT ENGINEER

BRIDGE NO. 34-0006 L/R
KILOMETER POST 12.8

CU 04251
EA 0120S1

DISREGARD PRINTS BEARING EARLIER REVISION DATES

REVISION DATES (PRELIMINARY STAGE ONLY) 3/19/07 11/27/07 3/13/08 10/10/08 10/09/09 12/14/09 10/09/09 10/09/09 10/09/09 10/09/09

SHEET 117 OF 209

TILE => p:\4141-06\CADD\TS\Checked Plans\YBITS #1-100% No. 2 03-03 OF (Final Reference)\032910\04-012081-36 006r1-n-hinged01.dgn

March 3, 2008

TIME PLOTTED => 9:29:55 AM

DIST.	COUNTY	ROUTE	KILOMETER POST TOTAL PROJECT	SHEET NO.	TOTAL SHEETS
04	SF	80	12.7/13.2	669	806

REGISTERED ENGINEER - CIVIL

6-23-08

PLANS APPROVAL DATE

The State of California or its officers or agents shall not be responsible for the accuracy or completeness of electronic copies of this plan sheet.

REGISTERED PROFESSIONAL ENGINEER A.L. ELY No. 18880 Exp. 6-30-09 CIVIL STATE OF CALIFORNIA

T.Y. LIN / MOFFATT & NICHOL
TWO HARRISON STREET
SAN FRANCISCO, CA 94105

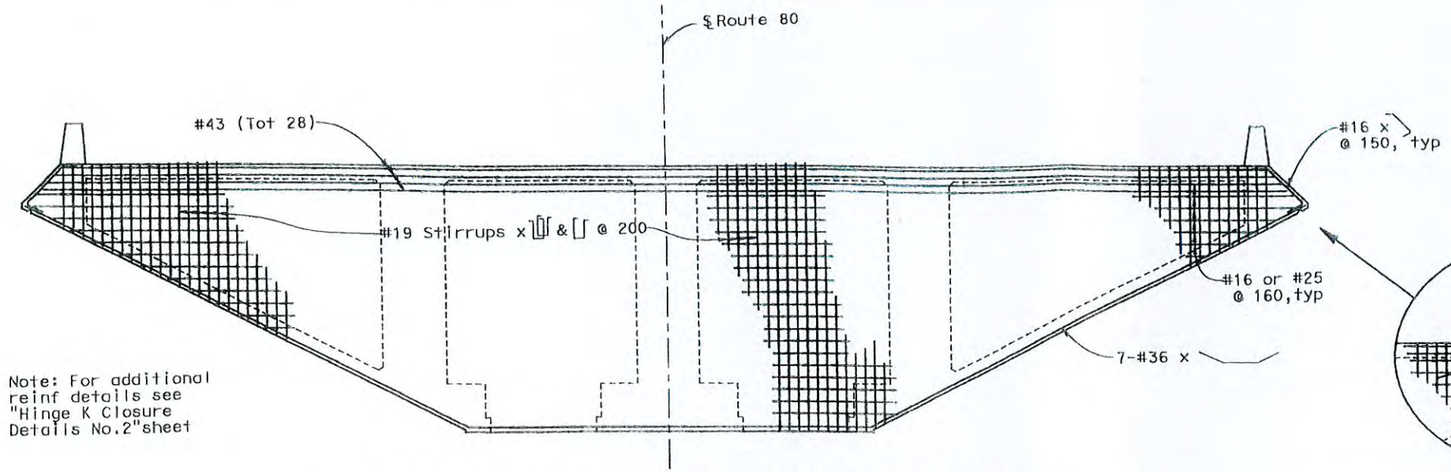

Note: For additional reinf details see "Hinge K Closure Details No.2" sheet

ELEVATION HINGE K CLOSURE ANCHORAGE DIAPHRAGM

(WB Structure shown, EB Structure similar except as noted)

1:60

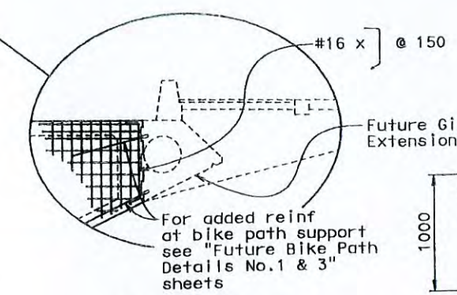

SOUTH EDGE AT EB STRUCTURE

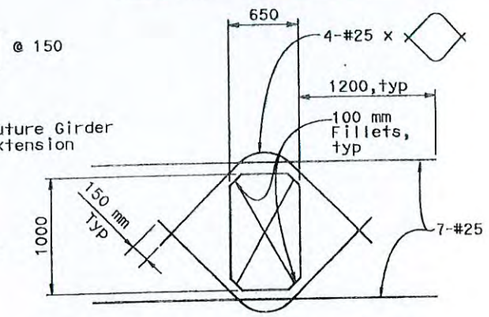

LONGIT DIAPHRAGM ACCESS OPENING

1:25

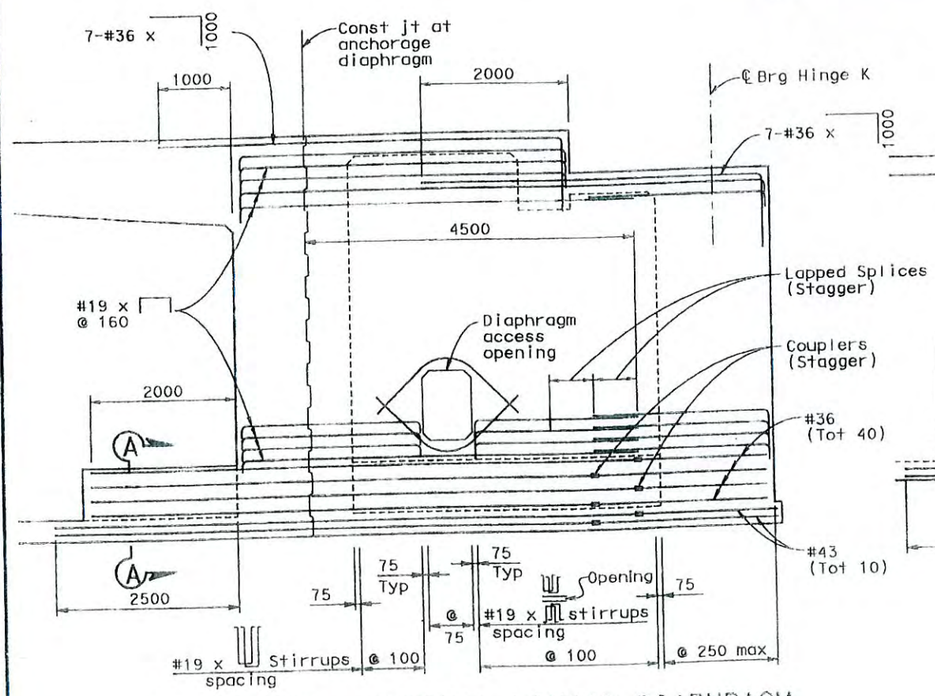

ELEVATION - CENTRAL LONGIT DIAPHRAGM

1:40

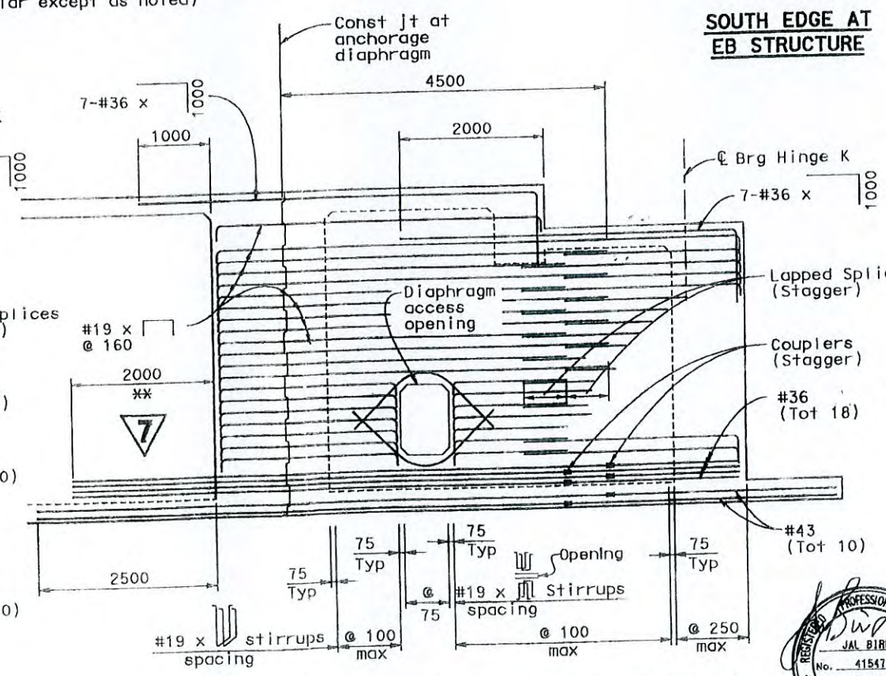

ELEVATION - OUTER LONGIT DIAPHRAGM

1:40

1 ** Bend #36 bars as required to align bars with girder web.

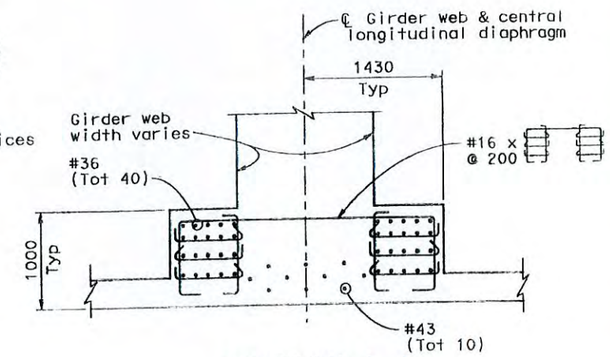

SECTION A-A

(Applicable at central longitudinal diaphragm for WB Structure only)

1:30

REGISTERED PROFESSIONAL ENGINEER JAL BIRDY No. 41547 Exp. 12-31-11 CIVIL STATE OF CALIFORNIA

FOR REVISION 1 ONLY

MARK	DATE	DESCRIPTIONS	BY	CH'D
1	3-29-10	ISD REVISIONS	AE	JB

REVISIONS

CONTRACT CHANGE ORDER NO. 9
SHEET 7 OF 8

ALL DIMENSIONS ARE IN MILLIMETERS UNLESS OTHERWISE SHOWN

DESIGN OVERSIGHT: JOHN MOOK, BERNARD CHAN, JUAN F. CARPIO — HASAN EL-NATOUR

SIGN OFF DATE 4/15/2010

Rev. Date: 5-16-98

	BY	CHECKED
DESIGN	Lee	Wang
DETAILS	von Ryn/Zucchi/Mai	Jain
QUANTITIES	Liao	E. Nichol

ORIGINAL SCALE IN MILLIMETERS FOR REDUCED PLANS 0 10 20 30 40 50 60 70 80 90 100

PREPARED FOR THE STATE OF CALIFORNIA DEPARTMENT OF TRANSPORTATION

Jal Birdy
PROJECT ENGINEER

CU 04251
EA 012051

BRIDGE NO. 34-0006 L/R
KILOMETER POST 12.8

DISREGARD PRINTS BEARING EARLIER REVISION DATES

REVISION DATES (PRELIMINARY STAGE ONLY)

SAN FRANCISCO OAKLAND BAY BRIDGE
EAST SPAN SEISMIC SAFETY PROJECT

YBI TRANSITION STRUCTURES

HINGE K CLOSURE DETAILS NO.3

SHEET 120 OF 209

FILE => p:\4141-06\CADD\TS\Checked Plans\YBITS #1-100% No. 2 03-03-08 (Final Reviewed)\032810\04 012051 34 0006rl-n-hinged10.dgn

Sept 29, 2009

TIME PLOTTED => 9:10:34 AM

DIST.	COUNTY	ROUTE	KILOMETER POST TOTAL PROJECT	SHEET NO.	TOTAL SHEETS
04	SF	80	12.7/13.2	714	806

REGISTERED ENGINEER - CIVIL
6-23-08
PLANS APPROVAL DATE
A.L. ELY No. 18880 Exp. 6-30-11 CIVIL STATE OF CALIFORNIA
The State of California or its officers or agents shall not be responsible for the accuracy or completeness of electronic copies of this plan sheet.

T.Y. LIN / MOFFATT & NICHOL
TWO HARRISON STREET
SAN FRANCISCO, CA 94105

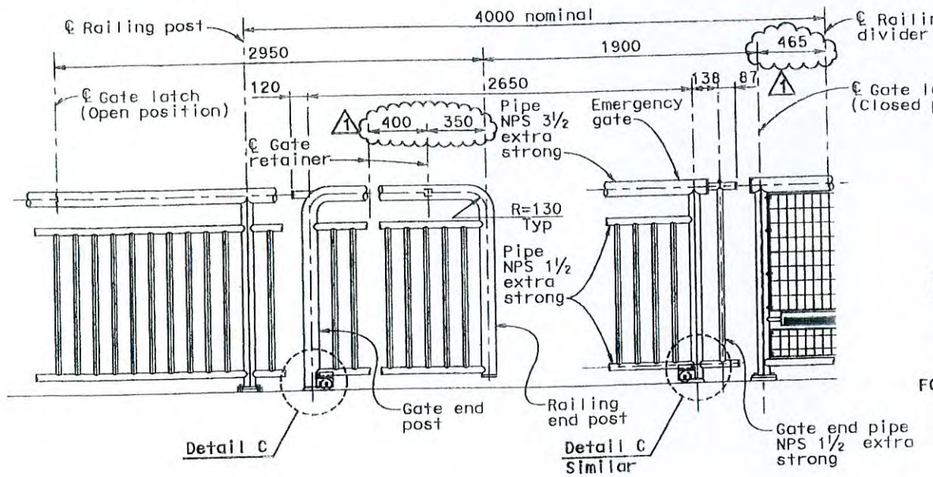

ELEVATION - EMERGENCY GATE
1:20

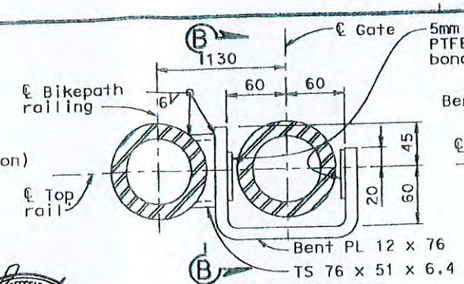

GATE RETAINER SECTION A-A
1:3

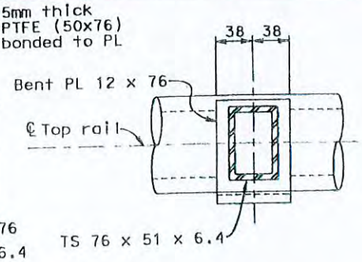

SECTION B-B
1:3

FOR REVISION 1 ONLY

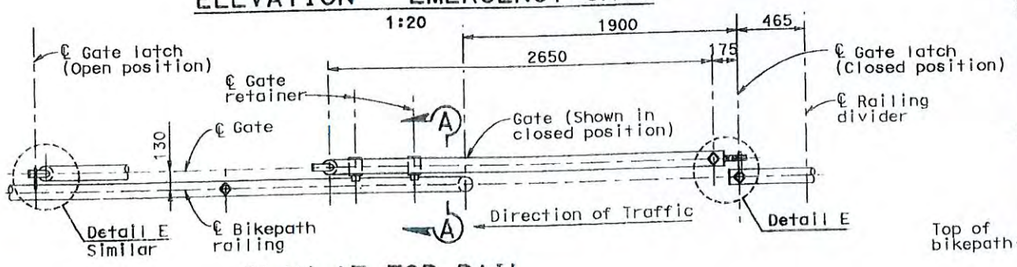

PLAN AT TOP RAIL
1:20

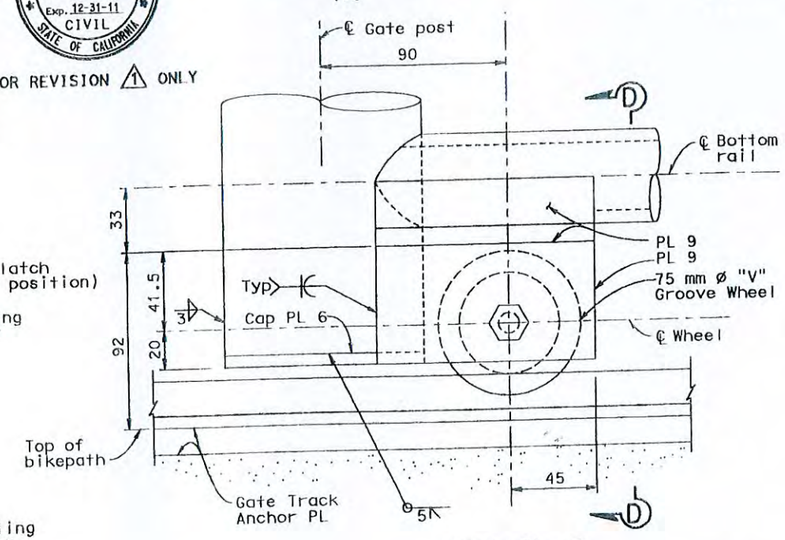

DETAIL C
1:1.5

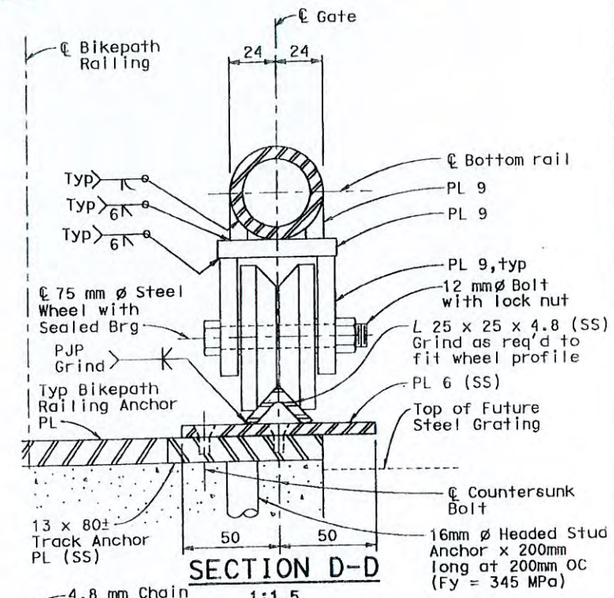

SECTION D-D
1:1.5

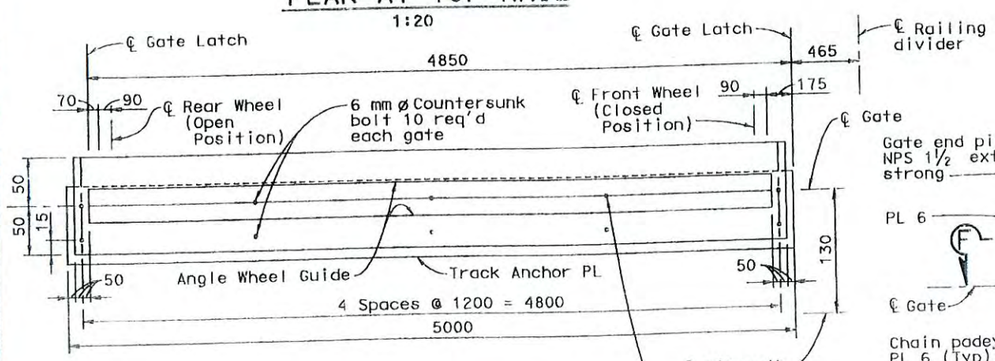

PLAN AT GATE TRACK
No Scale

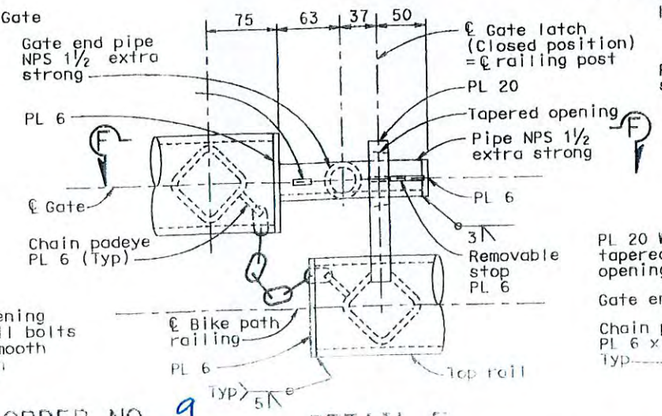

DETAIL E
1:3

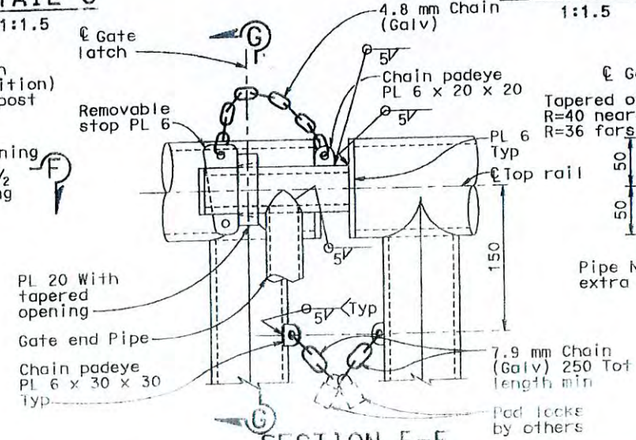

SECTION F-F
1:3

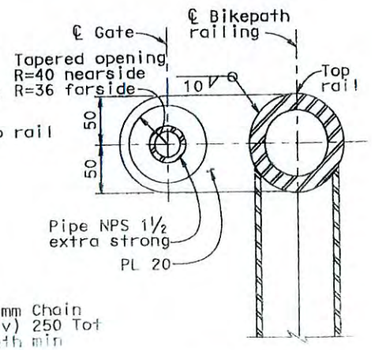

SECTION G-G
1:3

MARK	DATE	DESCRIPTIONS	BY	CH'D
1	3-29-10	ISD REVISIONS	AE	JB

REVISIONS

CONTRACT CHANGE ORDER NO. 9
SHEET 8 OF 8

ALL DIMENSIONS ARE IN MILLIMETERS UNLESS OTHERWISE SHOWN

DESIGN OVERSIGHT
JOHN MOOK, BERNARD CHAN, JUAN F. CARPIO — HASAN EL-NATOR
4/15/2010
SIGN OFF DATE
Rev. Date: 5-18-95

DESIGN	BY Shangkuan	CHECKED Alqullah
DETAILS	BY van Ryn/Zucchi/Mai	CHECKED Jain
QUANTITIES	BY Liao	CHECKED E. Nichol

ORIGINAL SCALE IN MILLIMETERS FOR REDUCED PLANS 0 10 20 30 40 50 60 70 80 90 100

PREPARED FOR THE STATE OF CALIFORNIA DEPARTMENT OF TRANSPORTATION

Jai Birdy
PROJECT ENGINEER

CU 04251
EA 0120S1

BRIDGE NO. 34-0006 L/R
KILOMETER POST 12.8

DISREGARD PRINTS BEARING EARLIER REVISION DATES

REVISION DATES (PRELIMINARY STAGE ONLY)

SAN FRANCISCO OAKLAND BAY BRIDGE
EAST SPAN SEISMIC SAFETY PROJECT

YBI TRANSITION STRUCTURES
BIKE PATH RAILING DETAILS NO. 4

SHEET 165 OF 209

FILE => p:\4141-06\CADD\TS\Checked Plans\YBITS #1-100% No. 2 03-03 08 (Final Renamed)\032910\04 0120s1-34-0006l-b-rbll.pd104.dgn

April 9, 2009

STATE OF CALIFORNIA - DEPARTMENT OF TRANSPORTATION

CONTRACT CHANGE ORDER MEMORANDUM

DATE: 6/4/2010 Page 1 of 1

TO: Deanna Vilcheck, ACM / DV

FROM: Rajesh Oberoi, Senior R.E.

FILE: E.A. 04 - 0120S4
CO-RTE-PM SF-80-12.7/13.2
FED. NO. NO FED AID

CCO#: 9 | SUPPLEMENT#: 0 | Category Code: CHPT

CONTINGENCY BALANCE (incl. this change) $32,018,152.00

COST: $0.00 INCREASE ☐ DECREASE ☐

HEADQUARTERS APPROVAL REQUIRED? ☐ YES ☑ NO

SUPPLEMENTAL FUNDS PROVIDED: $0.00

IS THIS REQUEST IN ACCORDANCE WITH ENVIRONMENTAL DOCUMENTS? ☑ YES ☐ NO

CCO DESCRIPTION:
Replace the Plan Sheets

PROJECT DESCRIPTION:
YBITS-1 (Yerba Buena Island Transition Structures)

Original Contract Time:	Time Adj. This Change:	Previously Approved CCO Time Adjustments:	Percentage Time Adjusted: (including this change)	Total # of Unreconciled Deferred Time CCO(s): (including this change)
1390 Day(s)	0 Day(s)	0 Day(s)	0 %	0

THIS CHANGE ORDER PROVIDES FOR:

Replacing sheets 602, 608, 609, 612, 666, 669 and 714 of 806 of contract plans as shown on sheets 2 to 8 of this change order.

This change is necessary to resolve conflicts in reinforcement, post-tensioning, and utility conduits. These conflicts were identified during the Design phase Integrated Shop Drawing (ISD) generation.

These changes are in accordance with Special Provisions section 5-1.08 "Integrated Shop Drawings" and Standard Specifications 4-1.03 "Changes".

This is a Design requested change order.

This is a no cost no credit change order.

Structure Maintenance concurrence is not required, As this change does not affect controlling item, no adjustment of contract time is warranted.

CONCURRED BY:

Construction Engineer:	Rajesh Oberoi	Date 6/7/10
Bridge Engineer:		Date 6/7/10
Project Engineer:		Date
Project Manager:		Date
FHWA Rep.:		Date
Environmental:		Date
Other (specify):	Brian Maroney, Chief, Toll Design	Date 6/7/10
Other (specify):		Date
District Prior Approval By:		Date
HQ (Issue Approve) By:		Date
Resident Engineer's Signature:	Rajesh Oberoi 6/7/10	Date

ESTIMATE OF COST

	THIS REQUEST	TOTAL TO DATE
ITEMS	$0.00	$0.00
FORCE ACCOUNT	$0.00	$0.00
AGREED PRICE	$0.00	$0.00
ADJUSTMENT	$0.00	$0.00
TOTAL	$0.00	$0.00

FEDERAL PARTICIPATION

☐ PARTICIPATING ☐ PARTICIPATING IN PART ☑ NONE
☐ NON-PARTICIPATING (MAINTENANCE) ☐ NON-PARTICIPATING

FEDERAL SEGREGATION (if more than one Funding Source or P.I.P. type)
☐ CCO FUNDED PER CONTRACT ☐ CCO FUNDED AS FOLLOWS

FEDERAL FUNDING SOURCE	PERCENT

ADA Notice: For individuals with sensory disabilities, this document is available in alternate formats. For information call: (916) 654-6410 or TDD (916) 654-3880 or write Records and Forms Management, 1120 N Street, MS-89, Sacramento, CA 95814.

STATE OF CALIFORNIA - DEPARTMENT OF TRANSPORTATION

CONTRACT CHANGE ORDER

Change Requested by: Engineer

CCO 9	Suppl. No. 1	Contract No. 04 - 0120S4	Road SF-80-12.7/13.2	FED. AID LOC.: NO FED AID

To: **M C M CONSTRUCTION INC**

You are directed to make the following changes from the plans and specifications or do the following described work not included in the plans and specifications for this contract. ***NOTE: This change order is not effective until approved by the Engineer.***

Description of work to be done, estimate of quantities and prices to be paid. (Segregate between additional work at contract price, agreed price and force account.) Unless otherwise stated, rates for rental of equipment cover only such time as equipment is actually used and no allowance will be made for idle time. This last percentage shown is the net accumulated increase or decrease from the original quantity in the Engineer's Estimate.

Adjustment of Compensation at Lump Sum:

Furnish and install headed bar reinforcement, bar reinforcing steel and accessories, and perform rework at Bent W5L as directed by the Engineer during the Integrated Shop Drawing (ISD) process.

For this work the Contractor will be paid an Adjustment in Compensation at Agreed Lump Sum of $133,166.00. This sum constitutes full and complete compensation for detailing, furnishing, testing and erecting reinforcement bars and also includes all markups, for this change.

No adjustment to contact time is warranted, as this change does not affect the controlling operations.

Adjustment of Compensation at Agreed Lump Sum: $133,166.00

Estimated Cost: Increase ☑ **Decrease** ☐ **$133,166.00**

By reason of this order the time of completion will be adjusted as follows: 0 days

Submitted by

Signature William Howe	Resident Engineer William Howe, Senior R.E.	Date 01-18-12

Approval Recommended by

Signature Mike Frame FOR	Area Construction Manager Deanna Vilcheck	Date 1-19-12

Engineer Approval by

Signature Deanna Vilcheck	Area Construction Manager Deanna Vilcheck	Date 4/23/12

4-23-12

We the undersigned contractor, have given careful consideration to the change proposed and agree, if this proposal is approved, that we will provide all equipment, furnish the materials, except as may otherwise be noted above, and perform all services necessary for the work above specified, and will accept as full payment therefor the prices shown above.

NOTE: If you, the contractor, do not sign acceptance of this order, your attention is directed to the requirements of the specifications as to proceeding with the ordered work and filing a written protest within the time therein specified.

Contractor Acceptance by

Signature	(Print name and title) JAMES A. CARTER, PRESIDENT	Date 4/16/12

RESIDENT ENGINEER HOWE, WILLIAM

PHONE NUMBER 510 385-7084

C O N T R A C T C H A N G E O R D E R 0 0 9 - 0 1 S

CONTRACT NO. 04-0120S4

FILING DATE 04/27/12

DESCRIPTION ISD REVISIONS REBAR CHANGES BENT W5L CCO CATEGORY CHPT

APPROVAL DATE 04/23/12

TIME EXTENSION DAY NONE

ITEM NO.	DESCRIPTION OF CHANGE	APPROVED CHANGE QUANTITY	APPROVED CHANGE AMOUNT	CHANGES TO DATE CCO	CHANGES TO DATE QB	AUTHORIZED QUANTITY	QUANTITY PAID TO DATE	EST NO.
	ADJUSTMENT OF COMPENSATION -- LUMP SUM (+)		$133,166.00					

NET CHANGE THIS C.C.O. $133,166.00

AMOUNT OF 'BRIDGEWORK' $133,166.00

*** C.C.O. ACCEPTED AND FILED. ***

F E D E R A L		P A R T I C I P A T I O N		F E D E R A L S E G R E G A T I O N				
DISP	TYPE	COST	TYPE	COST	TYPE	FUNDING SOURCE	PCT	FUNDING SOURCE	PCT
NEW	N	133,166.00		.00					

STATE OF CALIFORNIA - DEPARTMENT OF TRANSPORTATION

CONTRACT CHANGE ORDER MEMORANDUM

TO: Deanna Vilcheck, ACM / DV	FILE: E.A. 04 - 0120S4
	CO-RTE-PM SF-80-12.7/13.2
FROM: William Howe, Senior R.E.	FED. NO. NO FED AID
CCO#: 9 SUPPLEMENT#: 1 Category Code: CHPT	CONTINGENCY BALANCE (incl. this change) $61,976,068.00
COST: $133,166.00 INCREASE ☑ DECREASE ☐	HEADQUARTERS APPROVAL REQUIRED? ☑ YES ☐ NO
SUPPLEMENTAL FUNDS PROVIDED: $0.00	IS THIS REQUEST IN ACCORDANCE WITH ENVIRONMENTAL DOCUMENTS? ☑ YES ☐ NO
CCO DESCRIPTION: ISD Revisions:Rebar Changes Bent W5L	**PROJECT DESCRIPTION:** YBITS-1 (Yerba Buena Island Transition Structures)

Original Contract Time:	Time Adj. This Change:	Previously Approved CCO Time Adjustments:	Percentage Time Adjusted: (including this change)	Total # of Unreconciled Deferred Time CCO(s): (including this change)
1390 Day(s)	0 Day(s)	0 Day(s)	0 %	9

THIS CHANGE ORDER PROVIDES FOR:

This change provides for furnishing and installing headed bar reinforcement, bar reinforcing steel and accessories, and performing rework at Bent W5L as directed by the Engineer during the Integrated Shop Drawing (ISD) process and formalized during the shop drawing submittal review process.

Reinforcing bars placement at Bent W5L was revised by the Engineer to resolve the ISD generated placement conflict issues. The changes include switching from seismic hook reinforcing bars to headed reinforcing bars and providing supporting bars and accessories for the precise placement of the reinforcing bars. These changes were accepted and formalized by the Department with the approval of reinforcing bar shop drawings.

Rework was also necessary to resolve placement conflicts encountered during erection.

Payment for this work will be an Adjustment in Compensation at Agreed Lump Sum of $133,166.00, which can be financed from the contract contingency fund.

Design concurrence for this change is on file.

Structure Maintenance concurrence is not required as this change does not affect any controlling items.

No adjustment to contract time is required due to these changes as they do not affect controlling operations.
A detailed cost analysis is on file.

CONCURRED BY:		
Construction Engineer:	William Howe	Date 04-20-12
Bridge Engineer:	Mehran Ardakanian	Date 4-23-12
Project Engineer:	Bob Zandipour, Design	Date 12-27-11
Project Manager:	Ken Terpstra	Date 12-27-11
FHWA Rep.:		Date
Environmental:		Date
Other (specify):		Date
Other (specify):		Date
District Prior Approval By:		Date
HQ (Issue Approve) By:	Larry Salhaney	Date 4-23-12
Resident Engineer's Signature:	William Howe	Date 04-20-12

4-23-12

ESTIMATE OF COST	THIS REQUEST	TOTAL TO DATE
ITEMS	$0.00	$0.00
FORCE ACCOUNT	$0.00	$0.00
AGREED PRICE	$0.00	$0.00
ADJUSTMENT	$133,166.00	$133,166.00
TOTAL	$133,166.00	$133,166.00

FEDERAL PARTICIPATION

☐ PARTICIPATING ☐ PARTICIPATING IN PART ☑ NONE
☐ NON-PARTICIPATING (MAINTENANCE) ☐ NON-PARTICIPATING

FEDERAL SEGREGATION (if more than one Funding Source or P.I.P. type)
☐ CCO FUNDED PER CONTRACT ☐ CCO FUNDED AS FOLLOWS

FEDERAL FUNDING SOURCE	PERCENT

ADA Notice: For individuals with sensory disabilities, this document is available in alternate formats. For information call (916) 654-6410 or TDD (916) 654-3880 or write Records and Forms Management, 1120 N Street, MS-89, Sacramento, CA 95814.

CONTRACT CHANGE ORDER

Change Requested by: Engineer

CCO 9	Suppl. No. 2	Contract No. 04 - 0120S4	Road SF-80-12.7/13.2	FED. AID LOC.: NO FED AID

To: **M C M CONSTRUCTION INC**

You are directed to make the following changes from the plans and specifications or do the following described work not included in the plans and specifications for this contract. ***NOTE: This change order is not effective until approved by the Engineer.***

Description of work to be done, estimate of quantities and prices to be paid. (Segregate between additional work at contract price, agreed price and force account.) Unless otherwise stated, rates for rental of equipment cover only such time as equipment is actually used and no allowance will be made for idle time. This last percentage shown is the net accumulated increase or decrease from the original quantity in the Engineer's Estimate.

Incorporate the following changes into the contract as shown on sheets 2 to 8 of 8 of this change order:

1. Revise footing pile orientation at Abutment W11R. (Sheet 564R1 of 806)
2. Revise reinforcement bar layout at Bent W5L Stem. (Sheet 593R2 of 806)
3. Revise reinforcement bar layout at Bent W4L. (Sheets 594AR2 and 594BR2 of 806)
4. Revise girder flare and stirrup spacing at Bent W3L. (Sheet 635R2)
5. Revise girder concrete cover. (Sheet 644R1 of 806)
6. Revise eastbound Bent W8 outer column hoop layout. (Sheet 776R1). Drainage and utility layout revisions shown on Sheet No. 776R1 shall be addressed by a subsequent contract change order.

Estimate of Increase in Contract Item at Contract Price:

Item No. 90: STRUCTURAL CONCRETE BRIDGE
26 M3 (+0.08%) $855.00 /M3 = +$22,230.00 (-1.08%)

Item No. 110: BAR REINFORCING STEEL (BRIDGE)
8388 KG (+0.13%) $1.70 /KG = +$14,259.60 (-2.17%)

Estimated total cost for Increase in Contract Item.....$36,489.60

Adjustment of Compensation at Lump Sum:

In addition to the contract item prices paid for the work associated with this change, the Contractor shall be compensated at an Agreed Lump Sum of $8,000.00. The lump sum, along with the item prices paid, constitutes full and complete compensation for providing all labor, material, equipment, tools and incidentals, including all markups by the reason of this change.

Adjustment of Compensation at Lump Sum $8,000.00

Estimated Cost: Increase ☑ Decrease ☐ **$44,489.60**

By reason of this order the time of completion will be adjusted as follows: 0 days

Submitted by

Signature	Resident Engineer	Date
William Howe	William Howe, Senior R.E.	06.19.12

Approval Recommended by

Signature	Area Construction Manager	Date
Deanna Vilcheck	Deanna Vilcheck	6/22/12

Engineer Approval by

Signature	Area Construction Manager	Date
Deanna Vilcheck	Deanna Vilcheck	12/4/12

6/25/12

We the undersigned contractor, have given careful consideration to the change proposed and agree, if this proposal is approved, that we will provide all equipment, furnish the materials, except as may otherwise be noted above, and perform all services necessary for the work above specified, and will accept as full payment therefor the prices shown above.

NOTE: If you, the contractor, do not sign acceptance of this order, your attention is directed to the requirements of the specifications as to proceeding with the ordered work and filing a written protest within the time therein specified.

Contractor Acceptance by

Signature	(Print name and title)	Date
	EDMUNDO A. PUCHI, TREASURER	11/30/12

DIST.	COUNTY	ROUTE	KILOMETER POST TOTAL PROJECT	SHEET NO.	TOTAL SHEETS
04	SF	80	12.7/13.2	564R1	806

REGISTERED ENGINEER - CIVIL
6-23-08
PLANS APPROVAL DATE
The State of California or its officers or agents shall not be responsible for the accuracy or completeness of electronic copies of this plan sheet.
A.L. ELY No. 11119 Exp. 6-30-09 CIVIL STATE OF CALIFORNIA
T.Y. LIN / MOFFATT & NICHOL
TWO HARRISON STREET
SAN FRANCISCO, CA 94105

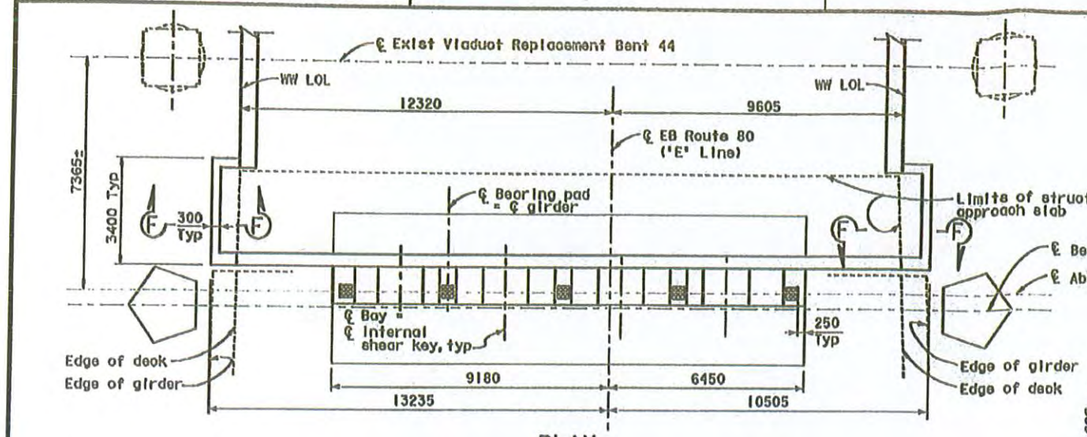

PLAN
1:80

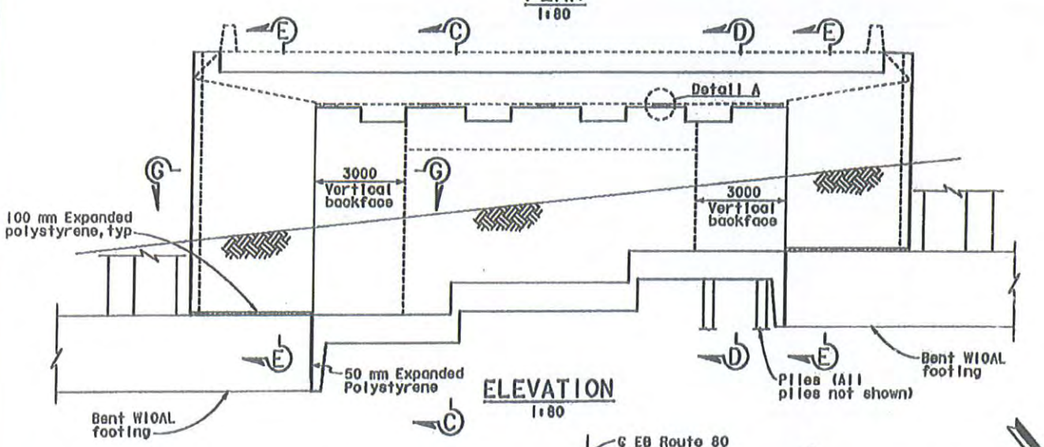

ELEVATION
1:80

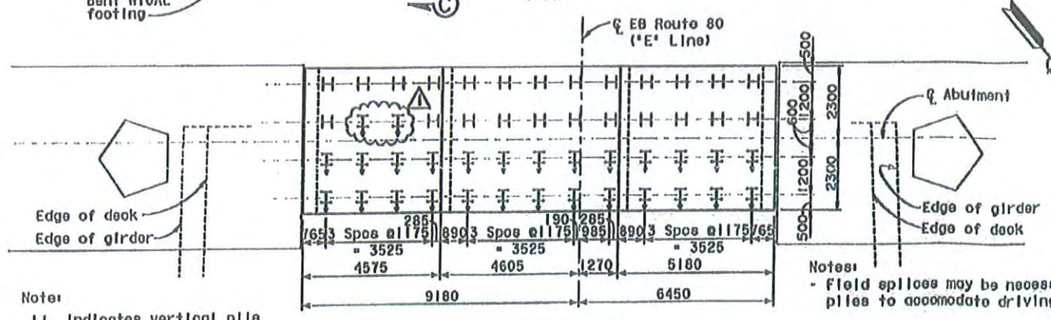

Notes:
H Indicates vertical pile
Indicates pile battered 3:1 in direction of arrow

FOOTING PLAN
1:80

Notes:
- Field splices may be necessary at batter piles to accomodate driving clearances.
- For sections C-C thru G-G see 'Abut W11R Details No. 2' sheet.

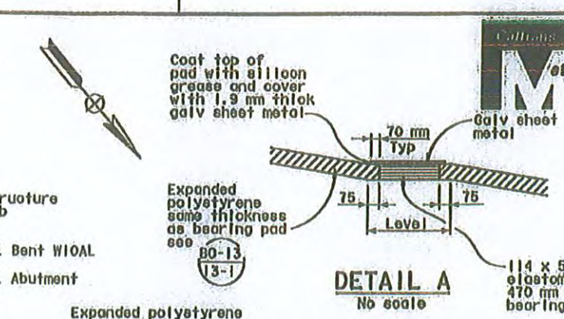

DETAIL A
No scale

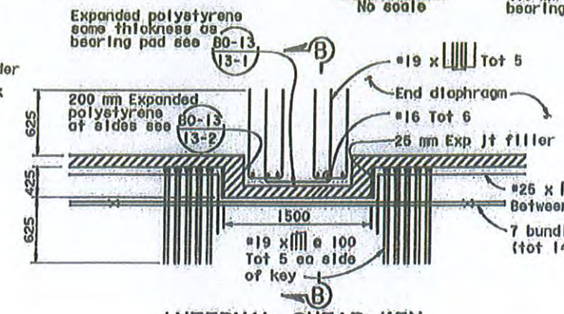

INTERNAL SHEAR KEY
No scale

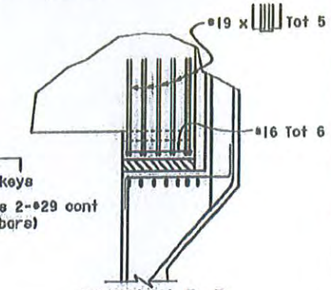

SECTION B-B
No scale

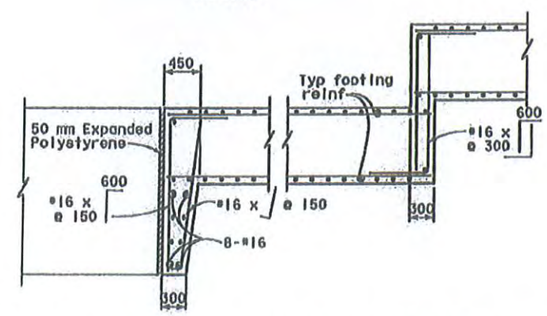

ABUTMENT FOOTING STEP DETAILS
No scale

FOR REVISION ⚠ ONLY

MARK	DATE	DESCRIPTIONS	BY	CH'D
⚠	2-8-11	Rev pile orientation	TL	JB

REVISIONS

CONTRACT CHANGE ORDER NO. 952
SHEET 2 OF 8

ALL DIMENSIONS ARE IN MILLIMETERS UNLESS OTHERWISE SHOWN

SAN FRANCISCO OAKLAND BAY BRIDGE
EAST SPAN SEISMIC SAFETY PROJECT

YBI TRANSITION STRUCTURES
ABUTMENT W11R DETAILS NO. 1

DESIGN OVERSIGHT: John Hook, Bernard Chan, Juan F. Carrio, Hatem El-Natour — March 3, 2008 — 2/24/11
SIGN OFF DATE
Rev. Date: 8-18-08

DESIGN	J. Ely	Aliquilch
DETAILS	von Ryn/Zuccht/Mol	Jain
QUANTITIES	L.Ico	E. Nichol

PREPARED FOR THE STATE OF CALIFORNIA DEPARTMENT OF TRANSPORTATION

Jal Birdy
PROJECT ENGINEER

BRIDGE NO. 34-0008 L/R
KILOMETER POST 12.8

CU 04251
EA 012051

DIRECTOR'S CONTROL DRAWING — DIRECTOR'S REVISION DATES

SHEET 15 OF 209

ORIGINAL SCALE IN MILLIMETERS FOR REDUCED COPY 0 10 20 30 40 50 60 70 80 90 100

FILE => \\vmlbfs\LD.Projects\4141-06\CADD\TS\Checked Plans\YD115 01-100X No. 2.03-03-08 (Final Renamed)\020811 Hinge K 17 CCO\04-0

February 8, 2011

DIST.	COUNTY	ROUTE	KILOMETER POST TOTAL PROJECT	SHEET NO.	TOTAL SHEETS
04	SF	80	12.7/13.2	593R2	806

REGISTERED ENGINEER - CIVIL

PLANS APPROVAL DATE

The State of California or its officers or agents shall not be responsible for the accuracy or completeness of electronic copies of this plan sheet.

T.Y. LIN / MOFFATT & NICHOL
TWO HARRISON STREET
SAN FRANCISCO, CA 94105

MARK	DATE	DESCRIPTIONS	BY	CH'D
2	2-4-11	ISD Revision	TL	AE
1	10-15-10	WB Ramp Revisions	TL	AE

REVISIONS

CONTRACT CHANGE ORDER NO. 9S2
SHEET 3 OF 8

CCO No. 9S2

FOR REVISION 1 & 2 ONLY

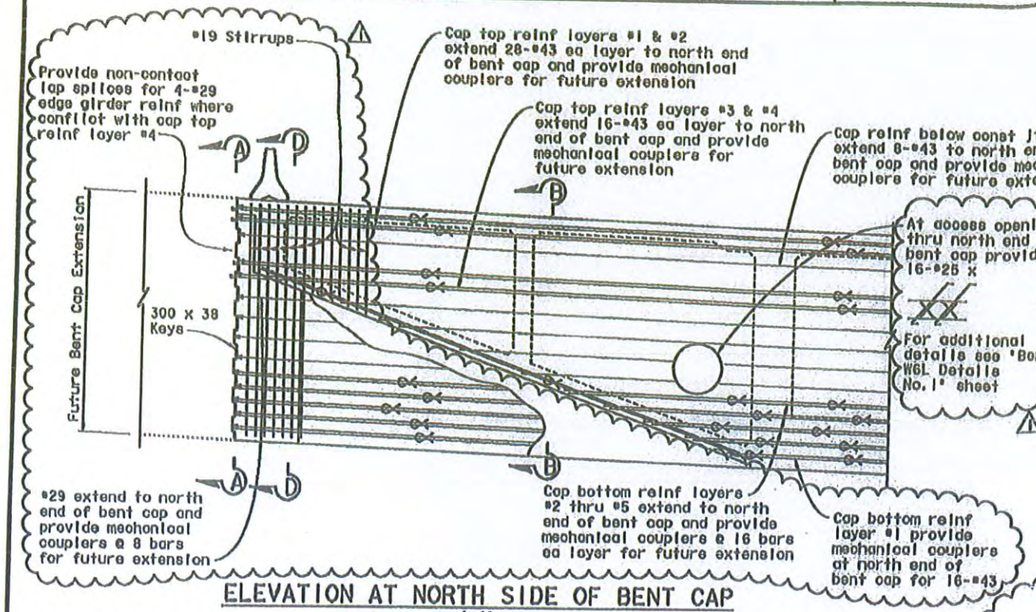

ELEVATION AT NORTH SIDE OF BENT CAP
1:40

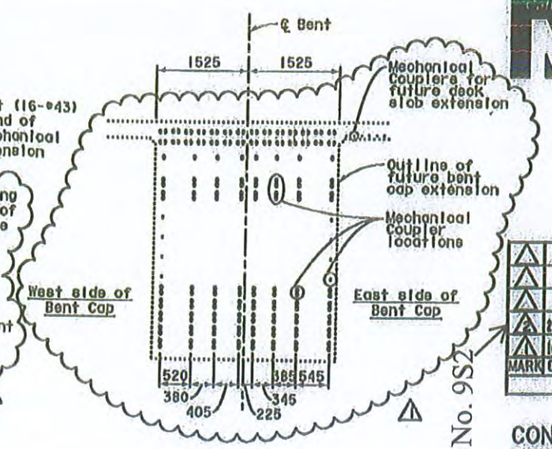

SECTION A-A
1:40

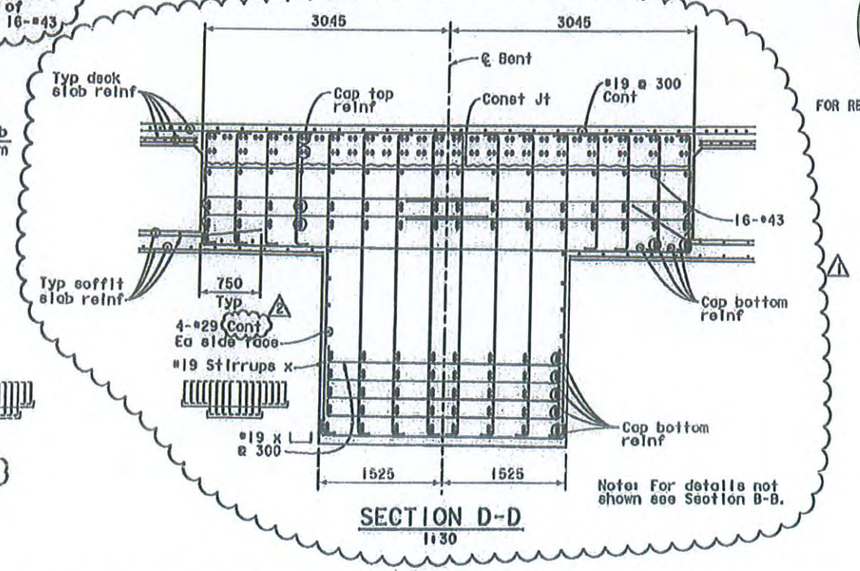

SECTION D-D
1:30

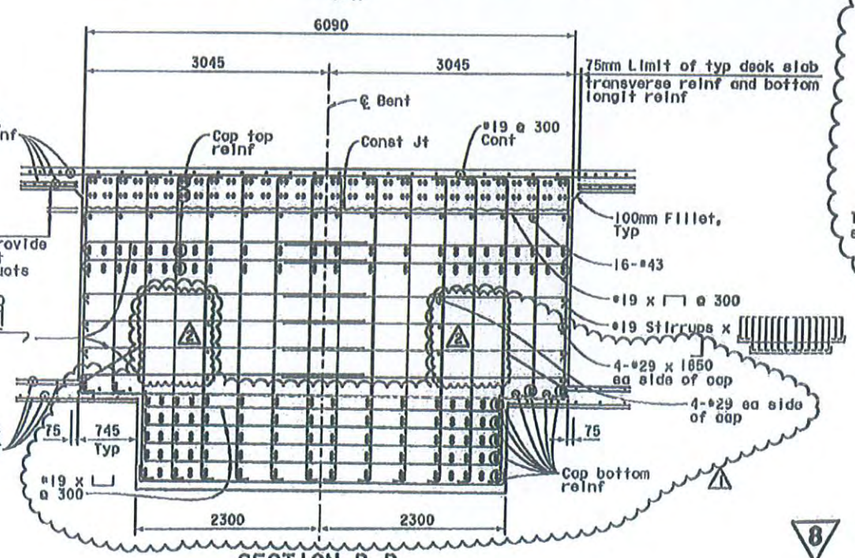

SECTION B-B
1:30

REVISED PER ADDENDUM NO. 8 DATED NOVEMBER 12, 2009

ALL DIMENSIONS ARE IN MILLIMETERS UNLESS OTHERWISE SHOWN

SAN FRANCISCO OAKLAND BAY BRIDGE
EAST SPAN SEISMIC SAFETY PROJECT

YBI TRANSITION STRUCTURES

BENT W5L DETAILS NO. 2

DESIGN OVERSIGHT: JUAN F. CARPIO — DESIGN REVIEWER: 2/24/11
SIGN OFF DATE
Rev. Date: 6-18-99

DESIGN	BY Wang	CHECKED Lee	
DETAILS	BY Sanson	CHECKED Jain	
QUANTITIES	BY Jain	CHECKED Birdy	

PREPARED FOR THE STATE OF CALIFORNIA DEPARTMENT OF TRANSPORTATION

Jai Birdy
PROJECT ENGINEER

CU 04251
EA 0120S1

BRIDGE NO. 34-006 L/R
KILOMETER POST 12.8

SHEET 44 OF 209

February 8, 2011

TIME PLOTTED => 11:11:27 AM
DATE PLOTTED => 2/8/2011
USERNAME => FSANSON

FILE => \\mnlbfs\LB.Projects\4141-06\CADD\TS\Checked Plans\YDITS #1 | 100X No. 2.03-03-08 (Final Renamed)\020811 Hingo K 17 CCO\04-0120s1-34-006R1-h-bds127.dgn

DIST.	COUNTY	ROUTE	KILOMETER POST TOTAL PROJECT	SHEET NO.	TOTAL SHEETS
04	SF	80	12.7/13.2	394ARZ	606

REGISTERED ENGINEER - CIVIL

PLANS APPROVAL DATE

The State of California or its officers or agents shall not be responsible for the accuracy or completeness of electronic copies of this plan sheet.

REGISTERED PROFESSIONAL ENGINEER A.L. ELY No. 18110 Exp. 6-30-09 CIVIL STATE OF CALIFORNIA

T.Y. LIN / MOFFATT & NICHOL
TWO HARRISON STREET
SAN FRANCISCO, CA 94105

Note: For Section A-A, see 'Bent W4L Details No. 1' sheet. For Section C-C, see 'Bent W4L Details No. 3' sheet.

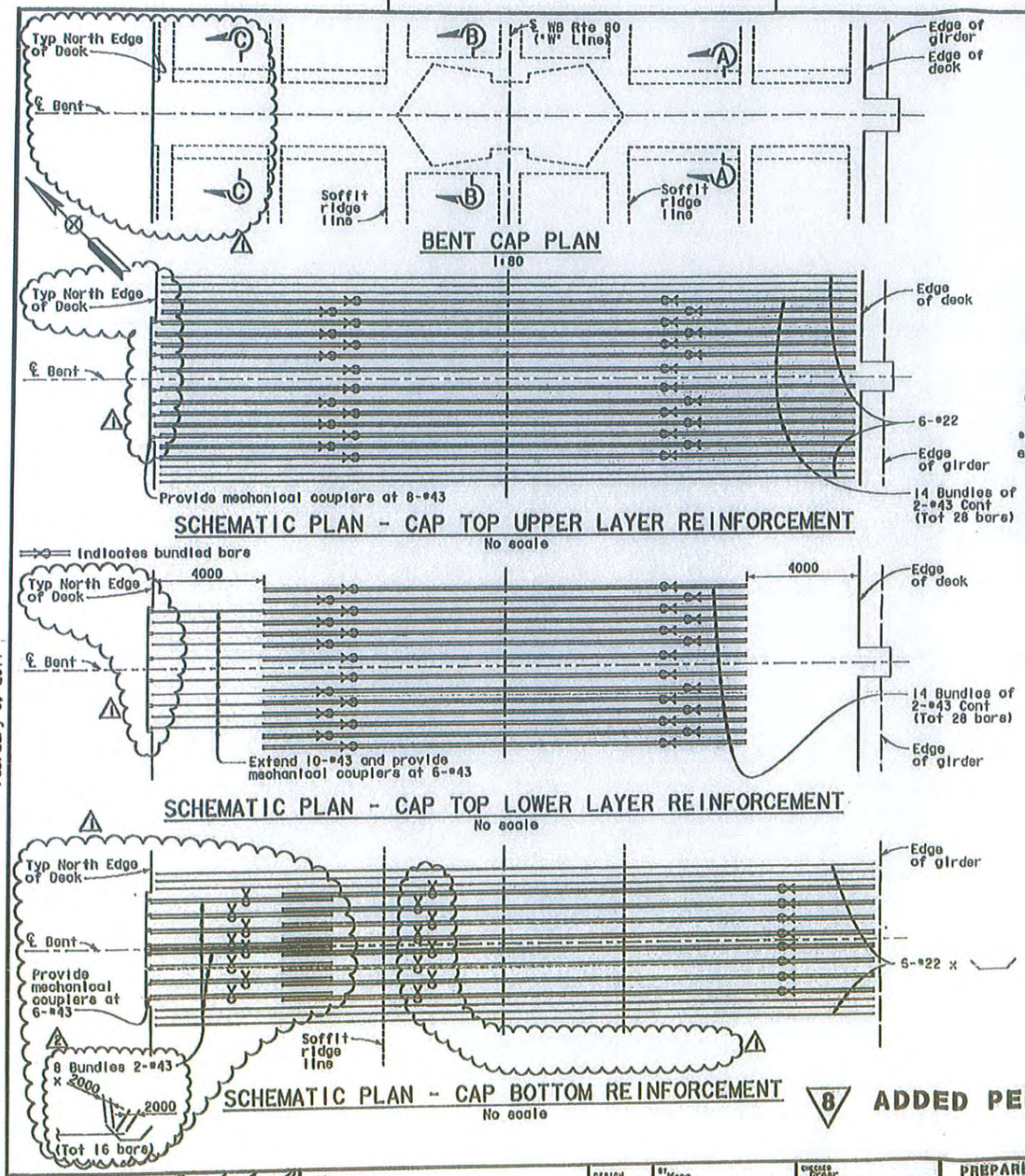

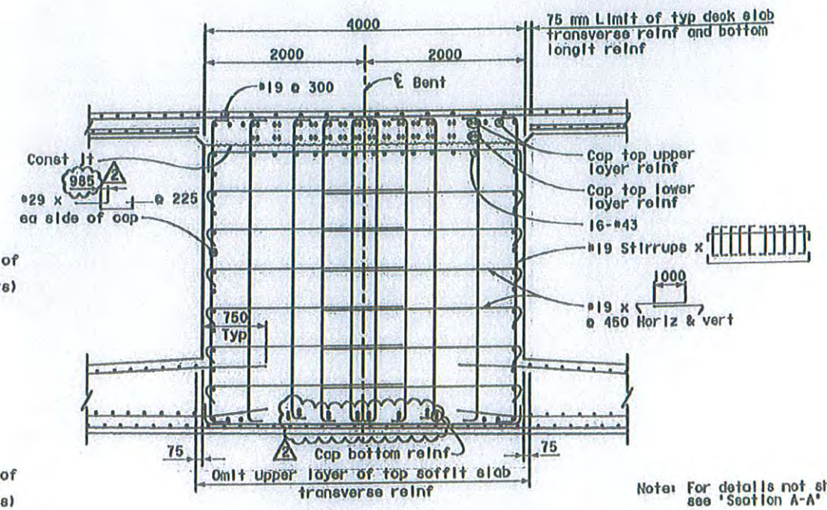

SECTION B-B
1:30

FOR REVISION 1 & 2 ONLY

CCO No. 9S2

MARK	DATE	DESCRIPTIONS	BY	CH'D
2	2-8-11	ISD Revisions	TL	AE
1	6-27-10	WB Ramp Revisions	TL	AE

REVISIONS

CONTRACT CHANGE ORDER NO. 9S2
SHEET 4 OF 8

8 ADDED PER ADDENDUM NO. 8 DATED NOVEMBER 12, 2009

ALL DIMENSIONS ARE IN MILLIMETERS UNLESS OTHERWISE SHOWN

SAN FRANCISCO OAKLAND BAY BRIDGE
EAST SPAN SEISMIC SAFETY PROJECT

YBI TRANSITION STRUCTURES

BENT W4L DETAILS NO. 2

DESIGN OVERSIGHT: JUAN F. CARPIO, HAZAM EL-NAYOR 2/02 V/11

DESIGN: BY Wong — CHECKED Grover
DETAILS: BY Von Ryn/Zucchi/Mol — CHECKED Jain
QUANTITIES: BY Liao — CHECKED E. Nichol

PREPARED FOR THE STATE OF CALIFORNIA DEPARTMENT OF TRANSPORTATION

Jaj Birdy
PROJECT ENGINEER

BRIDGE NO. 34-0006 L/R
KILOMETER POST 12.8

CU 04251
EA 0120S1

BRIDGE PLANS ENGINEER SIGNATURE

SHEET 45A OF 209

Rev. Date: 8-11-98

FILE => \\mnlbfs\LD_Projects\4141-06\CADD\TS\Checked Plans\YBITS #1 | 100% No. 2.03-03-08 (Final Renondi\020811 Hingo K 17 CCO\04-0120s1-34-0006r1-h-bdt128a.dgn

February 8, 2011 — TIME PLOTTED => 11:11:38 AM — DATE PLOTTED => 2/8/2011

DIST.	COUNTY	ROUTE	KILOMETER POST TOTAL PROJECT	SHEET NO.	TOTAL SHEETS
04	SF	80	12.7/13.2	594BR2	806

REGISTERED ENGINEER - CIVIL

PLANS APPROVAL DATE

The State of California or its officers or agents shall not be responsible for the accuracy or completeness of electronic copies of this plan sheet.

T.Y. LIN / MOFFATT & NICHOL
TWO HARRISON STREET
SAN FRANCISCO, CA 94105

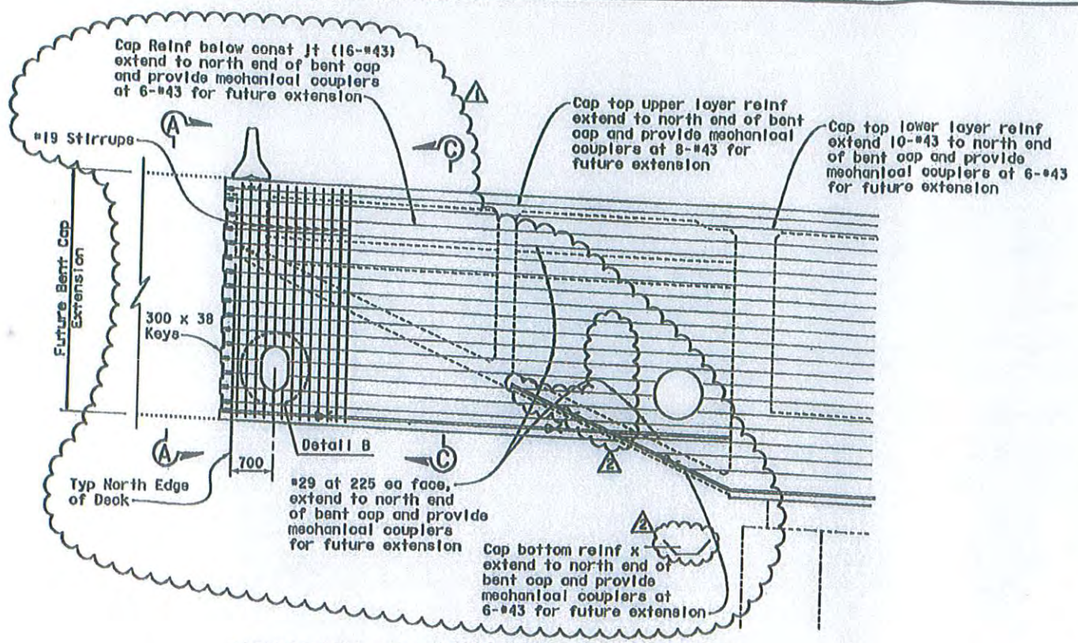

ELEVATION AT NORTH SIDE OF BENT CAP
1:40

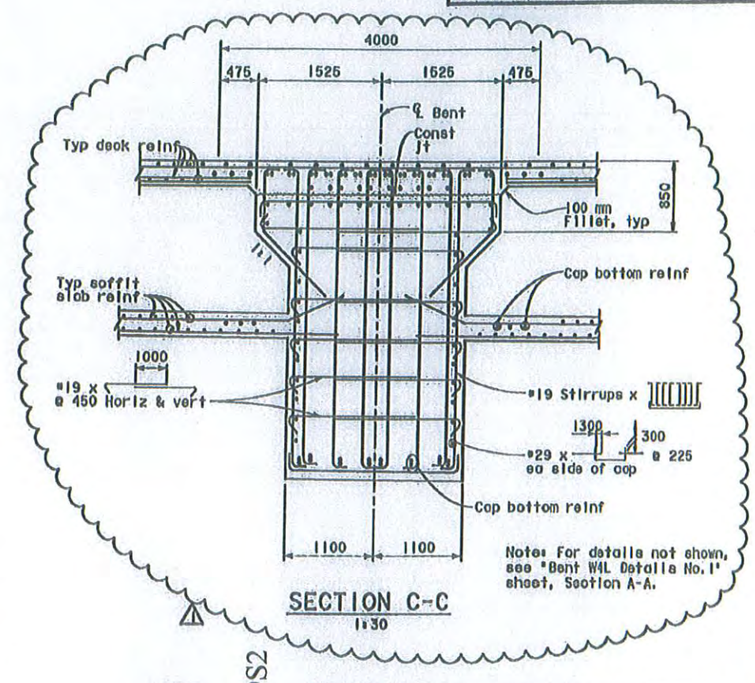

SECTION C-C
1:30

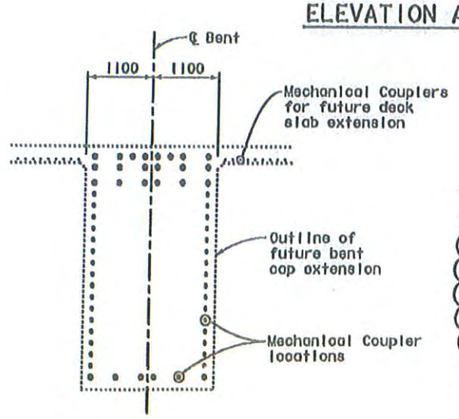

SECTION A-A
1:40

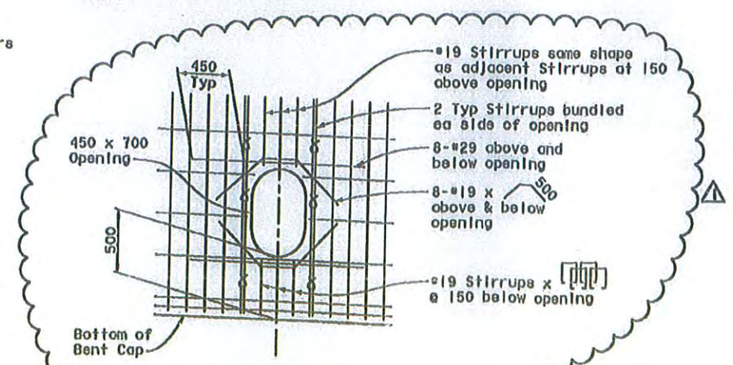

DETAIL B
1:20

FOR REVISION 1 & 2 ONLY

CCO No. 9S2

MARK	DATE	DESCRIPTIONS	BY	CH'D
2	2-8-11	ISD Revisions	TL	AE
1	5-27-10	WB Ramp Revisions	TL	AE

REVISIONS

CONTRACT CHANGE ORDER NO. 9S2
SHEET 5 OF 8

8 ADDED PER ADDENDUM NO. 8 DATED NOVEMBER 12, 2009

ALL DIMENSIONS ARE IN MILLIMETERS UNLESS OTHERWISE SHOWN

DESIGN OVERSIGHT Juan P. Carrio / Hazem El-Hafar 3/24/11
SIGN OFF DATE
Rev. Date: 5-12-99

DESIGN	BY Wong	CHECKED Lee	
DETAILS	BY Samson	CHECKED Jain	
QUANTITIES	BY Jain	CHECKED Birdy	

PREPARED FOR THE STATE OF CALIFORNIA DEPARTMENT OF TRANSPORTATION

Jol Birdy
PROJECT ENGINEER

BRIDGE NO. 34-0061 L/R
KILOMETER POST 12.8

CU 04251
EA 012051

SAN FRANCISCO OAKLAND BAY BRIDGE, EAST SPAN SEISMIC SAFETY PROJECT

YBI TRANSITION STRUCTURES

BENT W4L DETAILS NO. 3

ORIGINAL SCALE IN MILLIMETERS FOR REDUCED PLANS 0 10 20 30 40 50 60 70 80 90 100

DISREGARD PRINTS BEARING EARLIER REVISION DATES

REVISION DATES (PRELIMINARY STAGE ONLY)

SHEET 459 OF 209

FILE => \\nnlbfs\LB_Projects\4141-06\CADD\TS\Checked Plans\YBITS #1 | BDX No. 2.03-03-06 Final Renamed\020811 Hinge K 17 CCO\04-012051-34-0061-h-bdet2ab.dgn

February 8, 2011

USERNAME => FAGRSON DATE PLOTTED => 2/8/2011 TIME PLOTTED => 11:11:53 AM

CCO No. 952

MARK	DATE	DESCRIPTIONS	BY	CH'D
2	2-8-11	Rev stem flares & stirrups	TL	AE
1	12-23-09	WB Ramp Revisions	TL	AE

REVISIONS

CONTRACT CHANGE ORDER NO. 952
SHEET 6 OF 8

FOR REVISION 1 & 2 ONLY

DIST.	COUNTY	ROUTE	KILOMETER POST TOTAL PROJECT	SHEET NO.	TOTAL SHEETS
04	SF	80	12.7/13.2	535R2	806

REGISTERED ENGINEER - CIVIL
6-23-08
PLANS APPROVAL DATE
The State of California or its officers or agents shall not be responsible for the accuracy or completeness of electronic copies of this plan sheet.
T.Y. LIN / MOFFATT & NICHOL
TWO HARRISON STREET
SAN FRANCISCO, CA 94105

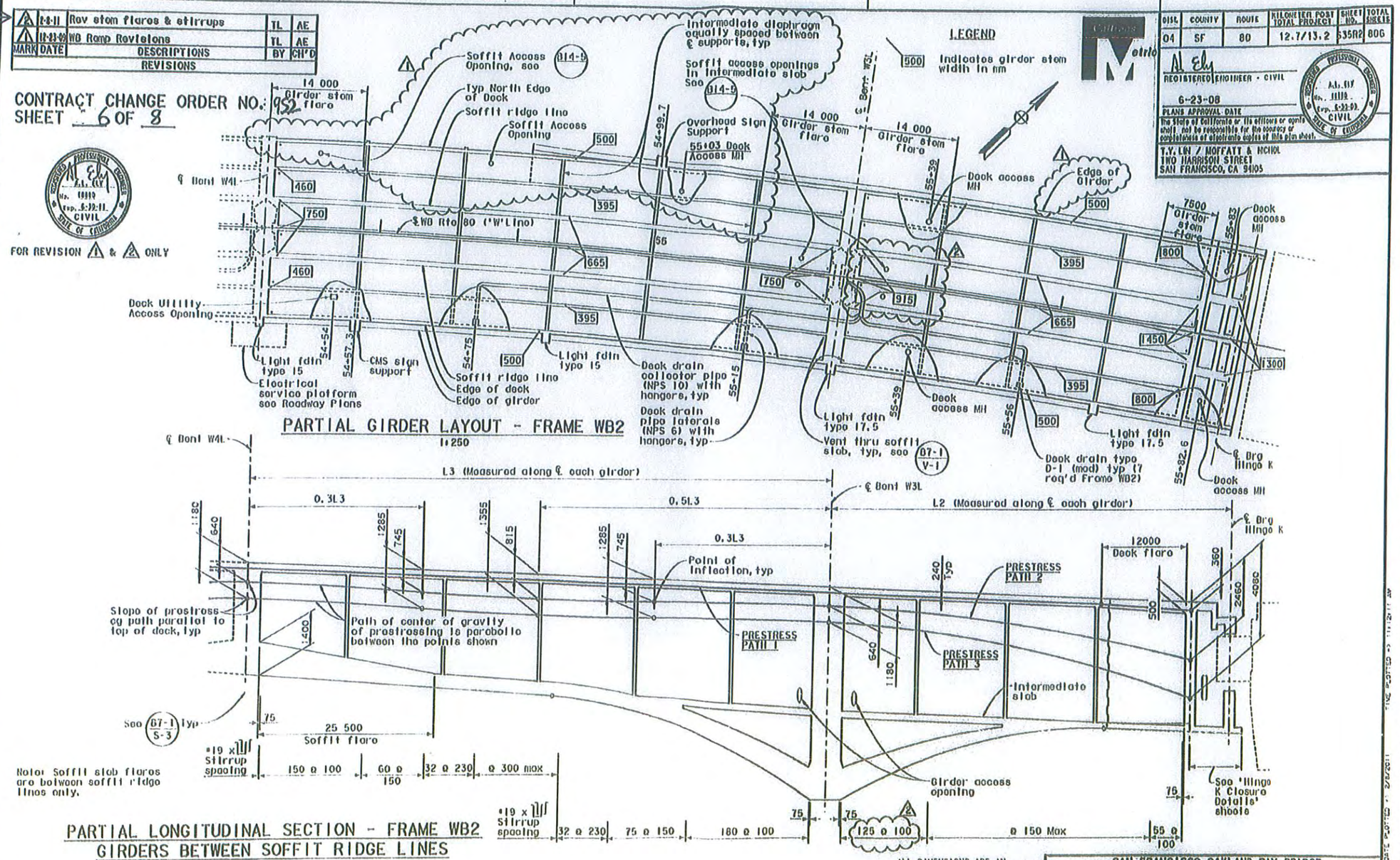

DESIGN OVERSIGHT
JOHN LOCH, BERNARD CHAN, JOHN F. CARPIO, HASAN EL-HASAN
March 3, 2008
DESIGN OFF DATE
2/24/11

DESIGN	BY Cavallon	CHECKED Shangkuan	
DETAILS	BY Von Ryn/Zuschlag	CHECKED Jain	
QUANTITIES	BY Liao	CHECKED L. Nichol	

PREPARED FOR THE STATE OF CALIFORNIA DEPARTMENT OF TRANSPORTATION

Jal Birdy
PROJECT ENGINEER

BRIDGE NO. 34-0006 L/R
KILOMETER POST 12.8

SAN FRANCISCO OAKLAND BAY BRIDGE
EAST SPAN SEISMIC SAFETY PROJECT

YBI TRANSITION STRUCTURES

WESTBOUND GIRDER LAYOUT NO. 4

CU 04251
EA 012051

SHEET 06 OF 209

FILE => \\mnlbfs18.Projects\4141-06\CADD\FS\Checked Plans\YD115 #1-100% No. 2.03-03-08 (Final Revised)\070811 Hinge K T1 CCO952.dgn

February 8, 2011

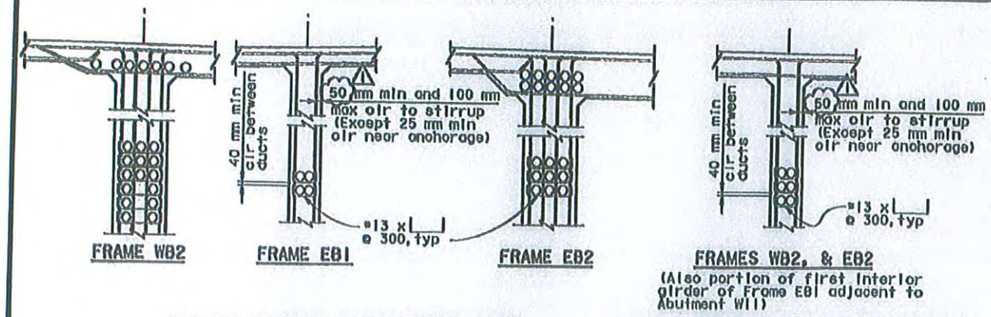

TYPICAL PRESTRESS DUCT ARRANGEMENTS

No Scale

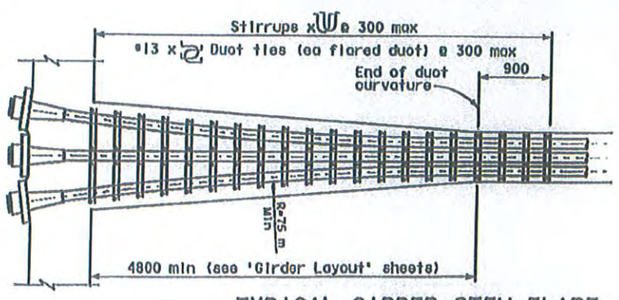

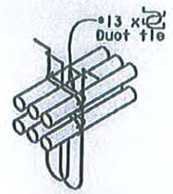

TYPICAL GIRDER STEM FLARE

No Scale

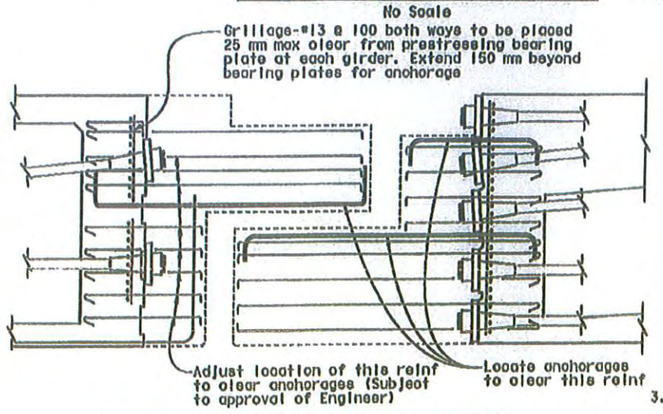

PRESTRESS ANCHORAGE AT HINGES

(Hinge WGRB shown, others similar)

No Scale

NOTES

1. Tendon Arrangement
   Prestress duct arrangements shown are for illustrative purposes only; actual prestress duct arrangements are the responsibility of the Contractor.
2. Stressing Sequence
   The Contractor shall develop a stressing sequence that minimizes the introduction of tensile stresses in the girders and also minimizes lateral eccentricity of prestress. The Contractor shall submit details of the stressing sequence for the Engineers's approval. It is expected that a minimum of two stressing stages will be required for each girder outside of the soffit ridge lines (including deck edge beams) and that a minimum of four stressing stages will be required for each girder between soffit ridge lines. No more than 50% of the prestressing force shall be applied to girders between soffit ridge lines until after 100% of the prestressing force is applied to girders outside soffit ridge lines (including deck edge beams). It is expected that initial stressing of girders between soffit ridge lines will include the uppermost draped tendons and that initial stressing of girders outside soffit ridge lines will include lower path tendons. At all stressing stages the resultant prestress force shall lie within the middle third of the deck width.
3. For additional notes and details not shown see B8-6

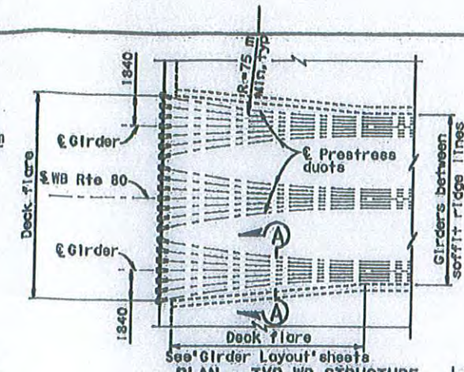

PLAN - TYP WB STRUCTURE ADJACENT TO HINGE

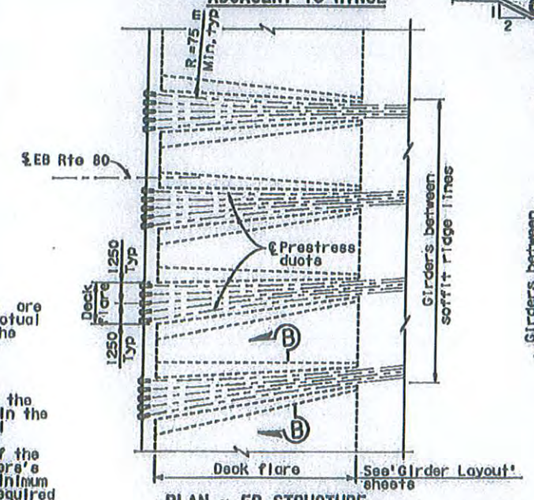

PLAN - EB STRUCTURE ADJACENT TO HINGE WGRB

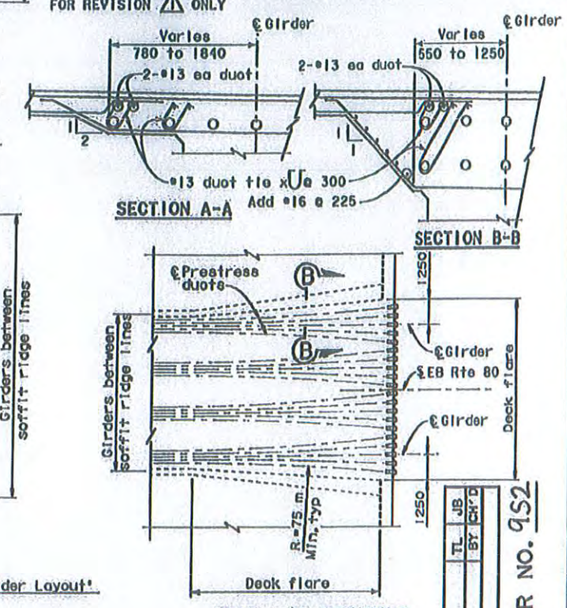

PLAN - EB STRUCTURE AT HINGE K ANCHORAGE

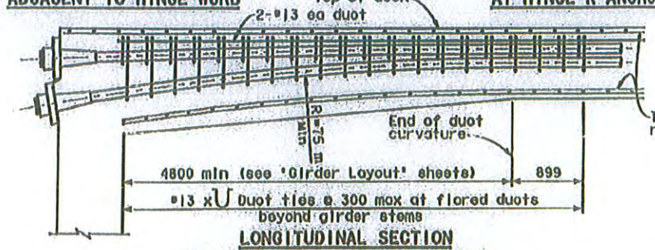

LONGITUDINAL SECTION

(Frame EB2 shown, Frame WB2 similar)

DECK FLARE DETAILS

No Scale

ALL DIMENSIONS ARE IN MILLIMETERS UNLESS OTHERWISE SHOWN

DIST.	COUNTY	ROUTE	KILOMETER POST TOTAL PROJECT	SHEET NO.	TOTAL SHEETS
04	SF	80	12.7/13.2	64A1	806

REGISTERED ENGINEER - CIVIL
6-23-08
PLANS APPROVAL DATE
A.L. ELY No. 11114 Exp. 6-30-09 CIVIL STATE OF CALIFORNIA
T.Y. LIN / MOFFATT & NICHOL
TWO HARRISON STREET
SAN FRANCISCO, CA 94105

FOR REVISION △1 ONLY

MARK/DATE	DESCRIPTIONS	BY	CHK'D
△1 8-8-11	Rev girder concrete cover	TL	JB

REVISIONS

CONTRACT CHANGE ORDER NO. 952
SHEET 7 OF 8

DESIGN OVERSIGHT: JOHN BOOK, BERNARD CHAN, JUAN F. CARPIO, HAZIM EL-NATAR
March 3, 2008
SIGN OFF DATE
Rev. Date 5-18-98

DESIGN	BY Cavallon	CHECKED Shangkuan	
DETAILS	BY von Ryn/Zucchi/Mol	CHECKED Jain	
QUANTITIES	BY Liao	CHECKED L. Nichol	

PREPARED FOR THE STATE OF CALIFORNIA DEPARTMENT OF TRANSPORTATION

Jal Birdy
PROJECT ENGINEER

CU 04251
EA 0120S1

BRIDGE NO. 34-0006 L/R
KILOMETER POST 12.8

SAN FRANCISCO OAKLAND BAY BRIDGE
EAST SPAN SEISMIC SAFETY PROJECT

YBI TRANSITION STRUCTURES

GIRDER PRESTRESS DETAILS

DIRECTOR'S REVIEW DESIGN
DIRECTOR'S REVIEW DETAIL
REVISION DATES (PRELIMINARY ISSUE DATE)
SHEET 95 OF 209

PRELIMINARY NOT FOR CONSTRUCTION
PRELIMINARY PLANS IN MILLIMETERS
0 10 20 30 40 50 60 70 80 90 100

FILE => \\mnlbfs\LD_Projects\4141-05\CADD\TS\Checked Plans\YBITS #1-100% No. 2.03-03-08 (Final Renamed)\020811 Hinge K TT CCO\04-0

February 8, 2011

DATE PLOTTED => 2/8/2011 TIME PLOTTED => 11:12:40 AM

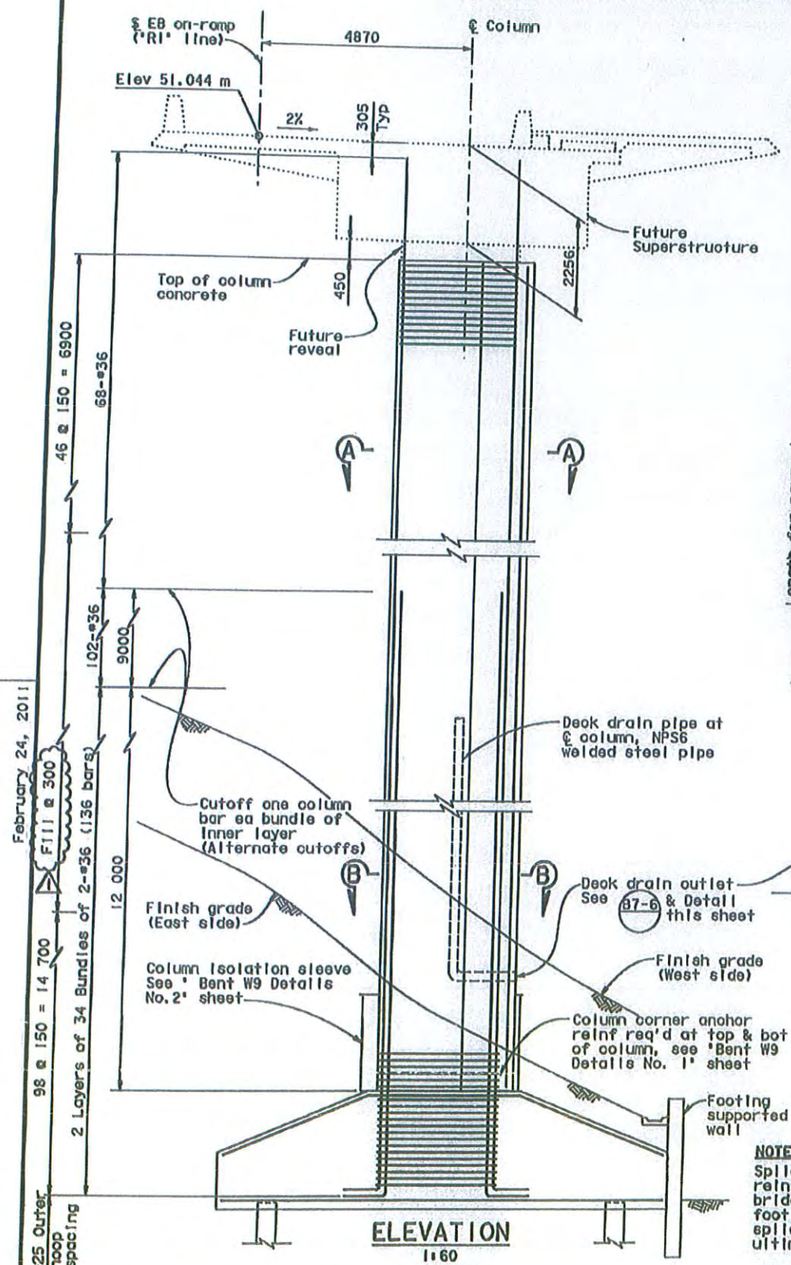

ELEVATION
1:60

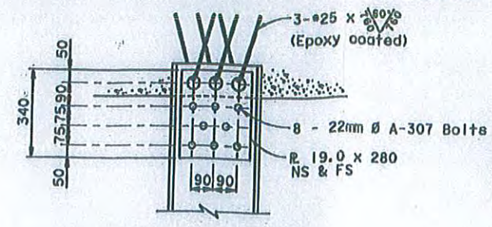

OPTIONAL PILE ANCHORAGE

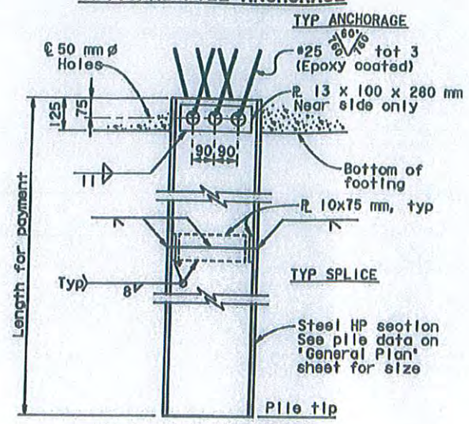

TYPICAL PILE DETAIL
(Typical Bents W8 and W9)
1:10

MARK	DATE	DESCRIPTIONS	BY	CH'D
1	2-24-11	Rev column hoop spacing & drain pipe location.	TL	JB

REVISIONS

CONTRACT CHANGE ORDER NO. 952
SHEET 8 OF 8

FOR REVISION 1 ONLY

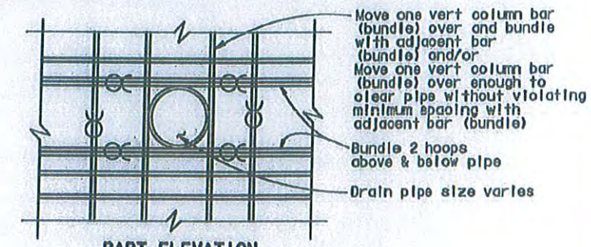

PART ELEVATION

DECK DRAIN PIPE OUTLET AT COLUMNS
(For details not shown see 87-6)
No Scale

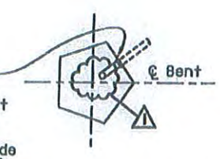

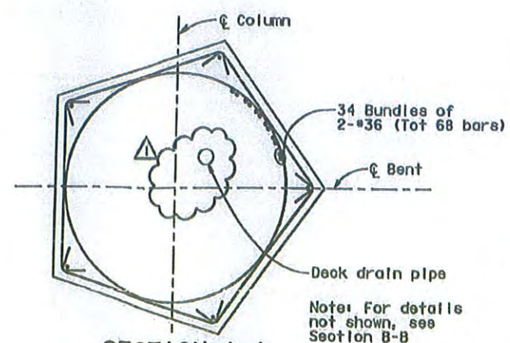

Note: For details not shown, see Section B-B

SECTION A-A
1:30

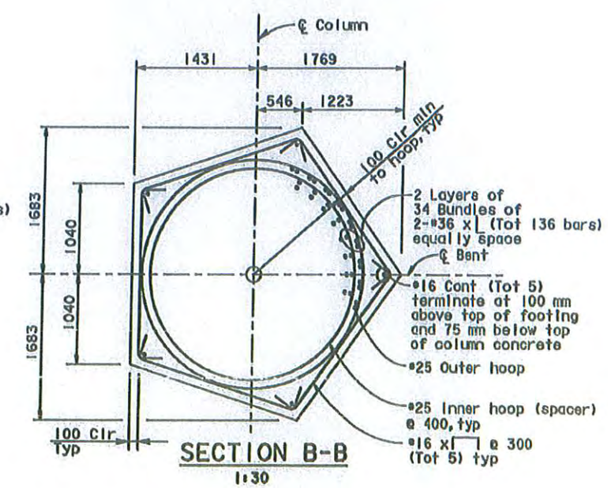

SECTION B-B
1:30

NOTE:
Splices not permitted in main column reinf within the distance of 5 m below bridge soffit nor 12 m above top of footing (no splice zones). At other areas splices in main column reinf shall be ultimate butt splices (staggered)

ALL DIMENSIONS ARE IN MILLIMETERS UNLESS OTHERWISE SHOWN

DIST.	COUNTY	ROUTE	KILOMETER POST TOTAL PROJECT	SHEET NO.	TOTAL SHEETS
04	SF	80	12.7/13.2	776R1	806

REGISTERED ENGINEER - CIVIL
6-23-08
PLANS APPROVAL DATE
The State of California or its officers or agents shall not be responsible for the accuracy or completeness of electronic copies of this plan sheet.

REGISTERED PROFESSIONAL ENGINEER A.L. ELY No. 18882 Exp. 6-30-09 CIVIL STATE OF CALIFORNIA

T.Y. LIN / MOFFATT & NICHOL
TWO HARRISON STREET
SAN FRANCISCO, CA 94105

DESIGN OVERSIGHT
JOHN MOOR, BERNARD CHAN, JUAN F. CARPIO HASAN EK-NATUR
SIGN OFF DATE 2/25/11
Rev. Date 5-12-10

DESIGN	BY Chou	CHECKED Atiquiah	
DETAILS	BY van Ryn/Zuochi/Wai	CHECKED Chou	
QUANTITIES	BY Chou	CHECKED Liao	

PREPARED FOR THE STATE OF CALIFORNIA DEPARTMENT OF TRANSPORTATION

Jai Birdy
PROJECT ENGINEER

CU 04251
EA 0120S1

BRIDGE NO. 34-1725
KILOMETER POST 12.8

SAN FRANCISCO OAKLAND BAY BRIDGE
EAST SPAN SEISMIC SAFETY PROJECT

YBI EB ON-RAMP STRUCTURE (INITIAL)

BENT W8 DETAILS NO. 1

SHEET 5 OF 17

ORIGINAL SCALE IN MILLIMETERS FOR REDUCED PLANS 0 10 20 30 40 50 60 70 80 90 100

FILE => \\mnlbfs\LB_Projects\4141-06\CADD\TS\Checked Plans\YBITS #1-100X No. 2_03-03-08 (Final Renamed)\020811 Hinge K 17 CCO\04-01

USERNAME => fadmson DATE PLOTTED => 2/25/2011 TIME PLOTTED => 10:14:35 AM

February 24, 2011

STATE OF CALIFORNIA - DEPARTMENT OF TRANSPORTATION

CONTRACT CHANGE ORDER MEMORANDUM

TO: Deanna Vilcheck, ACM /	FILE: E.A. 04 - 0120S4
FROM: William Howe, Senior R.E.	CO-RTE-PM SF-80-12.7/13.2
	FED. NO. NO FED AID
CCO#: 9 SUPPLEMENT#: 2 Category Code: CHPT	CONTINGENCY BALANCE (incl. this change) $61,651,898.40
COST: $44,489.60 INCREASE ☑ DECREASE ☐	HEADQUARTERS APPROVAL REQUIRED? ☐ YES ☑ NO
SUPPLEMENTAL FUNDS PROVIDED: $0.00	IS THIS REQUEST IN ACCORDANCE WITH ENVIRONMENTAL DOCUMENTS? ☑ YES ☐ NO
CCO DESCRIPTION: ISD Revisions-Various WB Locations	**PROJECT DESCRIPTION:** YBITS-1 (Yerba Buena Island Transition Structures)

Original Contract Time:	Time Adj. This Change:	Previously Approved CCO Time Adjustments:	Percentage Time Adjusted: (including this change)	Total # of Unreconciled Deferred Time CCO(s): (including this change)
1390 Day(s)	0 Day(s)	0 Day(s)	0 %	9

THIS CHANGE ORDER PROVIDES FOR:

Revisions to footing pile orientation at Abutment W11R, reinforcement bar layout at Bent W5L, reinforcement bar layout at Bent W4L, girder flare at Bent W3L, reinforcement bars at Bent W3L, girder concrete cover, and eastbound on-ramp Bent W8 outer column hoop layout as shown on revised drawing sheet Nos. 564R1, 593R2, 594AR2, 594BR2, 635R2, 644R1, and 776R1 of 806, respectively. (Sheets 2 to 8 of 8 of this contact change order.)

Drainage and utility layout revisions shown on Sheet No. 776R1 shall be addressed by a subsequent contract change order.

Orientation for two piles at Abutment W11R have been revised at the request of the Contractor. Orientation of these piles, as built in the field, is rotated 90 degrees from what is shown on the original contract plans. The designer concurs that this change does not affect the functionality of the structure. In order to avoid delays to the project, these piles have been allowed to stay in place.

Revisions to reinforcing bar placement at Bents W4L and W5L and girder concrete cover has been requested by the Designer. These changes are necessary to resolve reinforcing bars, post tensioning, and utility conduit conflicts that were discovered during ISD development process.

Revisions to girder concrete flare and reinforcement bar spacing at the girders has been requested by the Designer. These changes are necessary to account for increased pipe beam loads submitted by the SAS contract designer.

Revision to eastbound on-ramp Bent W8 outer column hoop layout is a detailing error that is being corrected by the Designer. The layout spacing is revised to 300 mm in lieu of 900 mm as shown on the original contract plan.

Payment for this work will be an increase in contract items for a net increase of $36,489.60.

The Contractor has also agreed to an Adjustment in Compensation at Agreed Lump Sum of $8,000.00 for change in character of work.

Total cost of this change order is $44,489.60, which can be financed from the contract's contingency fund. A detailed cost analysis is on file.

Design concurrence for these changes are on file.

Maintenance concurrence is not required for these changes.

No adjustment to contract time is required due to these changes as they do not affect controlling operations.

ADA Notice: For individuals with sensory disabilities, this document is available in alternate formats. For information call (916) 654-6410 or TDD (916) 654-3880 or write Records and Forms Management, 1120 N Street, MS-89, Sacramento, CA 95814.

CONCURRED BY:		
Construction Engineer:	William Howe	Date 06-19-12
Bridge Engineer:	Mehran Ardakanian	Date 06/25/12
Project Engineer:	Bob Zandipour, Design	Date 6-25-12
Project Manager:	Ken Terpstra	Date 7-13-12
FHWA Rep.:		Date
Environmental:		Date
Other (specify):		Date
Other (specify):		Date
District Prior Approval By:		Date
HQ (Issue Approve) By:		Date
Resident Engineer's Signature: William Howe		Date 06-19-12

ESTIMATE OF COST

	THIS REQUEST	TOTAL TO DATE
ITEMS	$36,489.60	$36,489.60
FORCE ACCOUNT	$0.00	$0.00
AGREED PRICE	$0.00	$0.00
ADJUSTMENT	$8,000.00	$141,166.00
TOTAL	$44,489.60	$177,655.60

FEDERAL PARTICIPATION

☐ PARTICIPATING ☐ PARTICIPATING IN PART ☑ NONE
☐ NON-PARTICIPATING (MAINTENANCE) ☐ NON-PARTICIPATING

FEDERAL SEGREGATION (if more than one Funding Source or P.I.P. type)
☐ CCO FUNDED PER CONTRACT ☐ CCO FUNDED AS FOLLOWS

FEDERAL FUNDING SOURCE	PERCENT

ADA Notice: For individuals with sensory disabilities, this document is available in alternate formats. For information, call: (916) 654-6410 or TDD (916) 654-3880 or write Records and Forms Management, 1120 N Street, MS-89, Sacramento, CA 95814.

CONTRACT CHANGE ORDER

Change Requested by: Engineer

CCO 9	Suppl. No. 3	Contract No. 04 - 0120S4	Road SF-80-12.7/13.2	FED. AID LOC.: NO FED AID

To: **M C M CONSTRUCTION INC**

You are directed to make the following changes from the plans and specifications or do the following described work not included in the plans and specifications for this contract. ***NOTE: This change order is not effective until approved by the Engineer.***

Description of work to be done, estimate of quantities and prices to be paid. (Segregate between additional work at contract price, agreed price and force account.) Unless otherwise stated, rates for rental of equipment cover only such time as equipment is actually used and no allowance will be made for idle time. This last percentage shown is the net accumulated increase or decrease from the original quantity in the Engineer's Estimate.

Incorporate the following changes into the contract as shown on sheets 2 to 8 of this change order:

1.Drawing Sheet No. 602R2: Revise reinforcement bar layout and electrical conduit layout at Column W8R north. Column reinforcing bar embedment changes shown on this drawing shall be addressed under Contract Change Order No. 12.
2.Drawing Sheet No. 632R3: Revise girder access opening layout and provide openings for electrical conduits. Changes associated with City of San Francisco Ramps and changes associated with deck drainage shown on this drawing sheet shall be associated with CCO Nos. 53 and 61, respectively.
3.Drawing Sheet No. 634R3: Revised girder access opening layout. Change to reaction forces at Hinge W7LA shown on this drawing sheet shall be associated with CCO No. 12 and changes to the camber values also shown on this drawing sheet have been formalized under CCO No. 73.
4.Drawing Sheet No. 635R3: Revised girder access opening layout. Changes associated with City of San Francisco Ramps and changes associated with the girder flares west of Bent W3L shown on this drawing sheet shall be associated with CCO Nos. 53 and 9S2, respectively.
5.Drawing Sheet No. 636R1: Revised girder access opening layout.
6.Drawing Sheet No. 641R2: Add reaction force at Abutment W11R that is to be included in falsework design. Changes to reaction forces at Hinge W6RB shall be associated with CCO No. 12.
7.Drawing Sheet No. 665R2: Revise hinge W6RB diaphragm dimensions. Changes related to the expansion joint blockout have been addressed under CCO No. 33.

Estimate of Increase in Contract Item at Contract Price:

Item No. 90: STRUCTURAL CONCRETE BRIDGE

8 M3	(+0.02%)	$855.00 /M3	=	+$6,840.00	(	-1.05%)

Estimated total cost for Increase in Contract Item.....$6,840.00

Adjustment of Compensation at Lump Sum:

For additional work required to complete changes shown including revisions to reinforcement bars and electrical conduit layout, girder access opening layout and furnishing and installing additional headed reinforcement bars, the Contractor will be paid an Adjustment in Compensation at an Agreed Lump Sum $15,000.00. This Agreed Lump Sum, along with the contract item paid, constitutes full and complete compensation, including all markups, for these changes.

Adjustment of Compensation @ Agreed Lump Sum = $15,000.00

CONTRACT CHANGE ORDER

Change Requested by: Engineer

CCO 9	Suppl. No. 3	Contract No. 04 - 0120S4	Road SF-80-12.7/13.2	FED. AID LOC.: NO FED AID

Estimated Cost: Increase ☑ Decrease ☐ $21,840.00

By reason of this order the time of completion will be adjusted as follows: 0 days

Submitted by

Signature	Resident Engineer	Date
William Howe	William Howe, Senior R.E.	06.19.12

Approval Recommended by

Signature	Area Construction Manager	Date
Deanna Vilcheck	Deanna Vilcheck	6/22/12

Engineer Approval by

Signature	Area Construction Manager	Date
Deanna Vilcheck	Deanna Vilcheck	12/4/12

We the undersigned contractor, have given careful consideration to the change proposed and agree, if this proposal is approved, that we will provide all equipment, furnish the materials, except as may otherwise be noted above, and perform all services necessary for the work above specified, and will accept as full payment therefor the prices shown above.

NOTE: If you, the contractor, do not sign acceptance of this order, your attention is directed to the requirements of the specifications as to proceeding with the ordered work and filing a written protest within the time therein specified.

Contractor Acceptance by

Signature	(Print name and title)	Date
	EDMUNDO A. PUCHI, TREASURER	11/30/12

6/25/12

DIST.	COUNTY	ROUTE	KILOMETER POST TOTAL PROJECT	SHEET NO.	TOTAL SHEETS
04	SF	80	12.7/13.2	502R2	806

REGISTERED ENGINEER - CIVIL
6-23-08
PLANS APPROVAL DATE
The State of California or its officers or agents shall not be responsible for the accuracy or completeness of electronic copies of this plan sheet.
REGISTERED PROFESSIONAL ENGINEER A.L. ELY No. 18880 Exp. 6-30-09 CIVIL STATE OF CALIFORNIA

T.Y. LIN / MOFFATT & NICHOL
TWO HARRISON STREET
SAN FRANCISCO, CA 94105

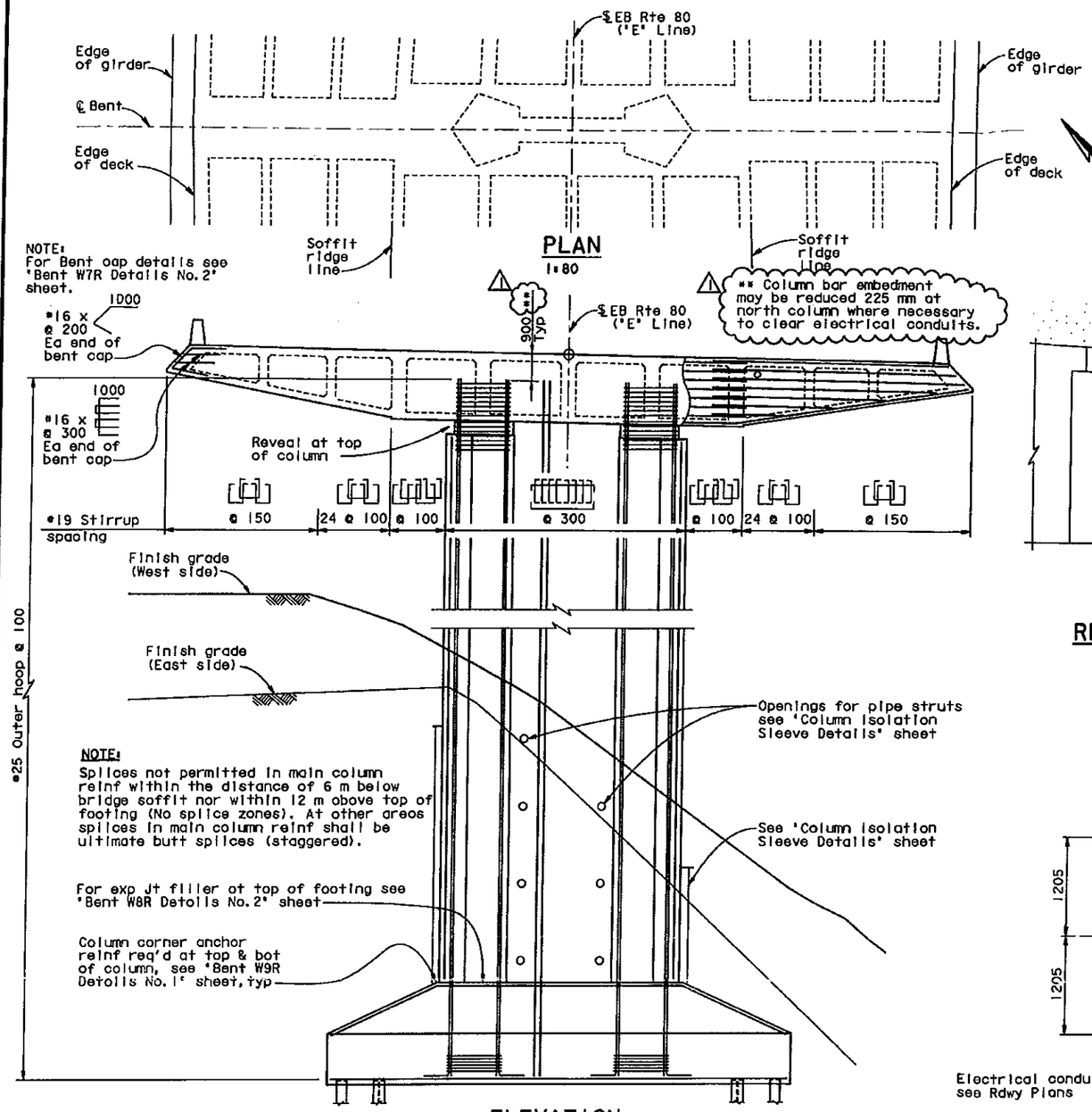

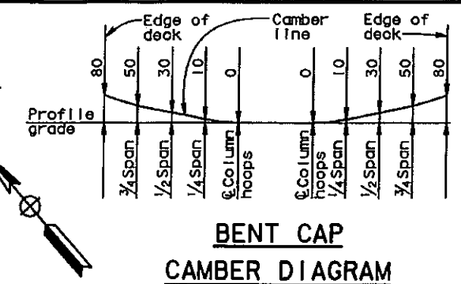

BENT CAP
CAMBER DIAGRAM
NO SCALE

Note: Camber diagram does not include allowance for falsework settlement

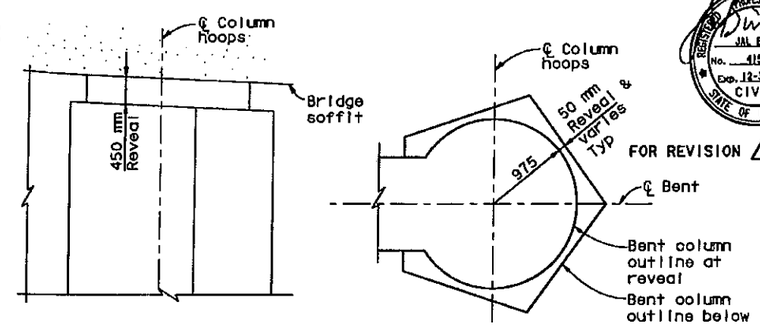

ELEVATION
PLAN
REVEAL DETAIL AT TOP OF COLUMN
NO SCALE

REGISTERED PROFESSIONAL ENGINEER JAL BIRDY No. 41547 Exp. 12-31-11 CIVIL STATE OF CALIFORNIA

FOR REVISION 1 & 2 ONLY

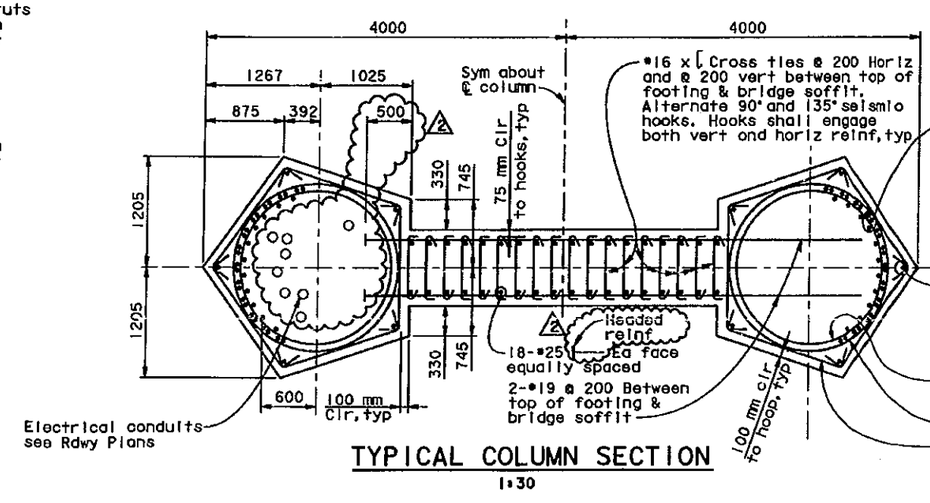

TYPICAL COLUMN SECTION
1:30

MARK	DATE	DESCRIPTIONS	BY	CH'D
2	7-30-11	Rev elec conduits, added headed reinf	AE	JB
1	7-23-10	ISD REVISIONS	AE	JB

REVISIONS

CONTRACT CHANGE ORDER NO. 9S3
SHEET 3 OF 9

CCO No. 9S3

ALL DIMENSIONS ARE IN MILLIMETERS UNLESS OTHERWISE SHOWN

DESIGN OVERSIGHT
JOHN MOOK, BERNARD CHAN, JUAN F. CARPIO, HASSAN EL-NATUR
4/25/11
SIGN OFF DATE
Rev. Date: 5-13-98

	BY	CHECKED
DESIGN	Darrah/Shangkuan	Ahn
DETAILS	van Ryn/Zucchi/Wal	Jain
QUANTITIES	Liao	E. Nichol

PREPARED FOR THE STATE OF CALIFORNIA DEPARTMENT OF TRANSPORTATION

Jal Birdy
PROJECT ENGINEER

BRIDGE NO. 34-0006 L/R
KILOMETER POST 12.8

SAN FRANCISCO OAKLAND BAY BRIDGE
EAST SPAN SEISMIC SAFETY PROJECT
YBI TRANSITION STRUCTURES
BENT W8R DETAILS NO. 1

ORIGINAL SCALE IN MILLIMETERS FOR REDUCED PLANS 0 10 20 30 40 50 60 70 80 90 100

CU 04251
EA 0120S1

DISREGARD PRINTS BEARING EARLIER REVISION DATES
REVISION DATES (PRELIMINARY STAGE ONLY)
SHEET 53 OF 209

FILE => \\mnlbfs\LB_Projects\4141-06\CADD\TS\Checked Plans\YBITS #1-100% No. 2.03-03-08 (Final Renamed)\033011 Openings T9 CCO\04-(

March 30, 2011
USERNAME => fcamson DATE PLOTTED => 3/29/2011 TIME PLOTTED => 11:02:48 AM

DIST.	COUNTY	ROUTE	KILOMETER POST TOTAL PROJECT	SHEET NO.	TOTAL SHEETS
04	SF	80	12.7/13.2	632R3	806

REGISTERED ENGINEER - CIVIL
6-23-08
PLANS APPROVAL DATE
The State of California or its officers or agents shall not be responsible for the accuracy or completeness of electronic copies of this plan sheet.

REGISTERED PROFESSIONAL ENGINEER A.L. ELY No. 18880 Exp. 6-30-09 CIVIL STATE OF CALIFORNIA

T.Y. LIN / MOFFATT & NICHOL
TWO HARRISON STREET
SAN FRANCISCO, CA 94105

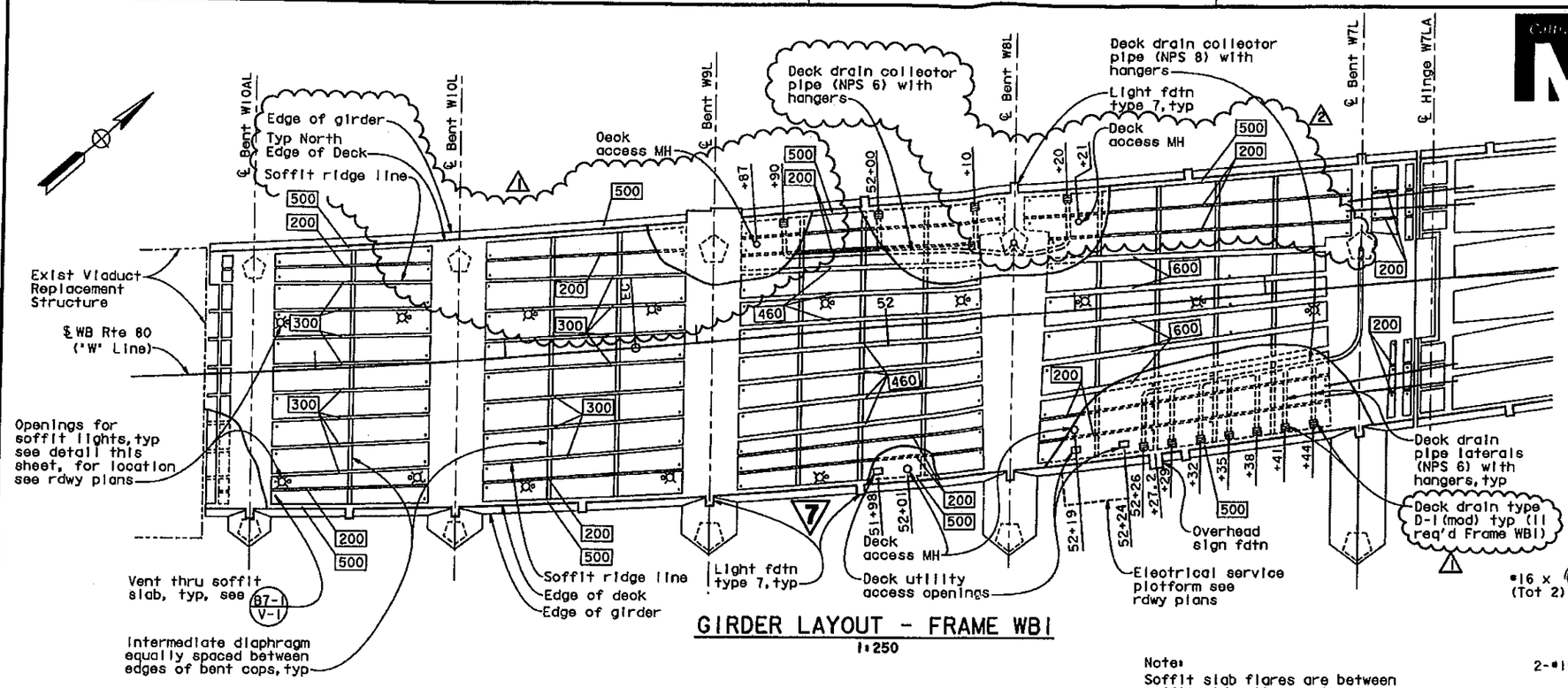

GIRDER LAYOUT - FRAME WB1

1:250

Note:
Soffit slab flares are between soffit ridge lines only.

LEGEND

500 Indicates girder stem width in mm

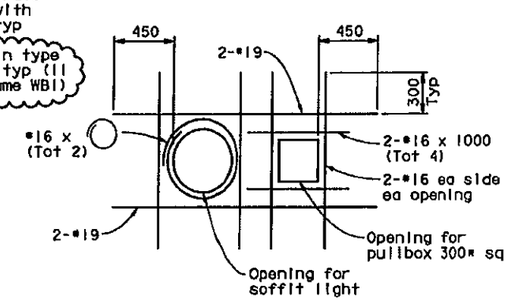

PLAN AT SOFFIT LIGHT OPENING

For details not shown, see B7-1
No Scale

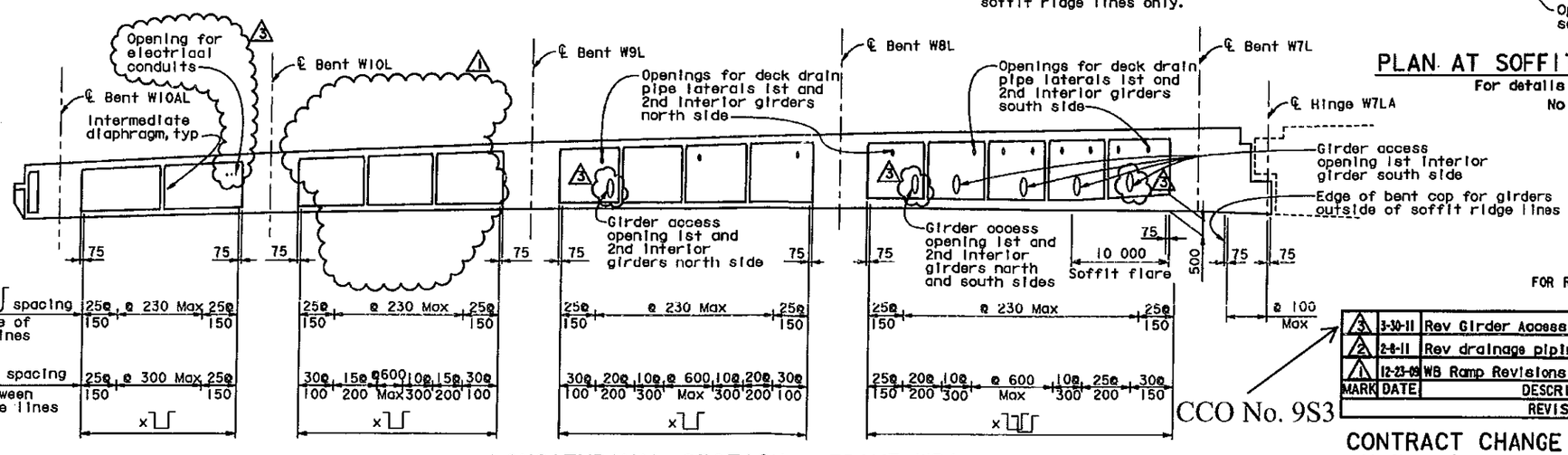

LONGITUDINAL SECTION - FRAME WB1

No Scale

FOR REVISION 1 2 & 3 ONLY

REGISTERED PROFESSIONAL ENGINEER A.L. ELY No. 18880 Exp. 6-30-11 CIVIL STATE OF CALIFORNIA

MARK	DATE	DESCRIPTIONS	BY	CH'D
3	3-30-11	Rev Girder Access Openings	TL	AE
2	2-8-11	Rev drainage piping	TL	AE
1	12-23-09	WB Ramp Revisions	TL	AE

REVISIONS

CCO No. 9S3

CONTRACT CHANGE ORDER NO. 9S3
SHEET 4 OF 9

7 **REVISED PER ADDENDUM NO. 7 DATED OCTOBER 19, 2009**

ALL DIMENSIONS ARE IN MILLIMETERS UNLESS OTHERWISE SHOWN

DESIGN OVERSIGHT: JOHN MOOK, BERNARD CHAN, JUAN F. CARPIO — March 3, 2008 — SIGN OFF DATE
HASAN EL-NATUR — 4/25/11

	BY	CHECKED
DESIGN	Cavafian	Shangkuan
DETAILS	van Ryn/Zucchi/Mal	Jain
QUANTITIES	Liao	E. Nichol

PREPARED FOR THE STATE OF CALIFORNIA DEPARTMENT OF TRANSPORTATION

Jal Birdy, PROJECT ENGINEER

BRIDGE NO. 34-0006 L/R
KILOMETER POST 12.8

SAN FRANCISCO OAKLAND BAY BRIDGE
EAST SPAN SEISMIC SAFETY PROJECT

YBI TRANSITION STRUCTURES

WESTBOUND GIRDER LAYOUT NO. 1

Rev. Date: 5-15-98

ORIGINAL SCALE IN MILLIMETERS FOR REDUCED PLANS 0 10 20 30 40 50 60 70 80 90 100

CU 04251
EA 0120S1

DISREGARD PRINTS BEARING EARLIER REVISION DATES — REVISION DATES (PRELIMINARY STATE ONLY)

SHEET 83 OF 209

FILE => \\mnlbfs\LB_Projects\4141-06\CADD\TS\Checked Plans\YBITS #1-100% No. 2_03-03-08 (Final Renamed)\033011 Openings T9 CCO\04-

March 30, 2011

USERNAME => fcamson DATE PLOTTED => 3/29/2011 TIME PLOTTED => 11:01:46 AM

CCO No. 9S3

MARK	DATE	DESCRIPTIONS	BY	CH'D
3	3-30-11	Rev Girder Access Openings	TL	JB
2	1-28-11	Rev Camber	TL	JB
1	9-1-10	Rev reaction at Hinge W7LA	TL	JB

REVISIONS

CONTRACT CHANGE ORDER NO. 9S3
SHEET 5 OF 9

DIST.	COUNTY	ROUTE	KILOMETER POST TOTAL PROJECT	SHEET NO.	TOTAL SHEETS
04	SF	80	12.7/13.2	634R3	806

REGISTERED ENGINEER - CIVIL
6-23-08
PLANS APPROVAL DATE

The State of California or its officers or agents shall not be responsible for the accuracy or completeness of electronic copies of this plan sheet.

T.Y. LIN / MOFFATT & NICHOL
TWO HARRISON STREET
SAN FRANCISCO, CA 94105

FOR REVISION 1 2 & 3 ONLY

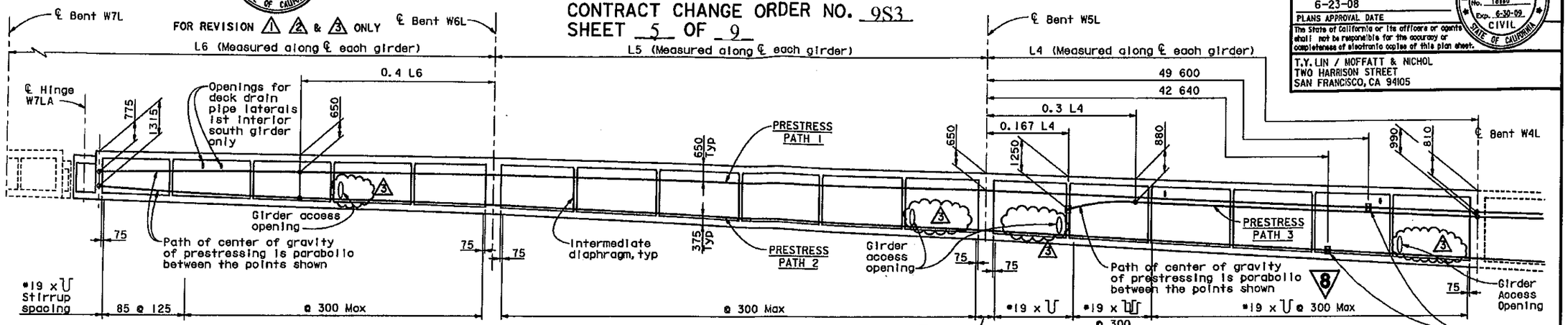

PARTIAL LONGITUDINAL SECTION - FRAME WB2
GIRDERS OUTSIDE SOFFIT RIDGE LINES

No Scale

See B7-1 / S-3 Typ

Bent W7L - Add 6-#16 ea bay (Tot 24)
Bent W6L - Add 13-#19 ea bay (Tot 26)
Bent W5L - Add 13-#22 ea bay (Tot 26)
Bent W4L - Add 14-#29 ea bay (Tot 28)

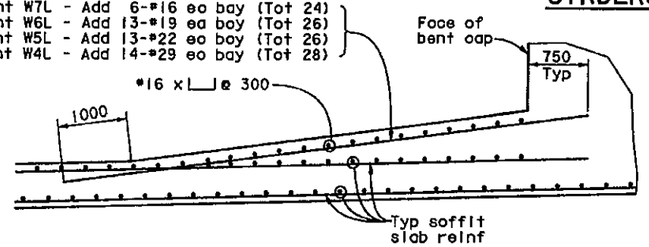

SOFFIT SLAB FLARE DETAIL

No Scale

HINGE DEAD LOAD + PRESTRESS REACTIONS

Hinge W7LA	Hinge K
16200 KN	1105 KN **

** Target value just after closure and counterweight removal

TIME DEPENDENT CAMBER VALUES ("C") AT HINGE K CLOSURE

Time Between Casting & Stressing, Days	Time Between Stressing & Counterweight, Days				
					12
25					110 mm

NOTES:

1. Time Dependent Camber "C" values shown represent amount that top of deck is to be above profile grade at time of concrete placement. Values shown do not include allowance for falsework settlement.
2. Time Dependent Camber "C" values shown are to be adjusted after Contractor submits concrete modulus, creep and shrinkage test results.

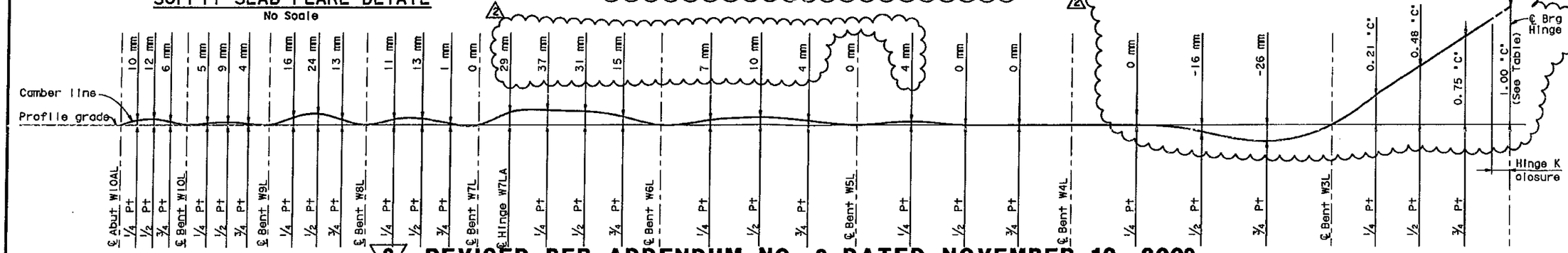

Note: Camber diagram does not include allowance for falsework settlement

REVISED PER ADDENDUM NO. 8 DATED NOVEMBER 12, 2009

WB GIRDER CAMBER DIAGRAM

No Scale

ALL DIMENSIONS ARE IN MILLIMETERS UNLESS OTHERWISE SHOWN

March 30, 2011

DESIGN OVERSIGHT: JOHN MOOK, BERNARD CHAN, JUAN F. CARPIO, HASAN EL-NAJJAR
March 3, 2008
SIGN OFF DATE
Rev. Dates 5-18-98

	BY	CHECKED
DESIGN	Cavafian	Shangkuan
DETAILS	van Ryn/Zucchi/Wai	Jain
QUANTITIES	Liao	E. Nichol

PREPARED FOR THE STATE OF CALIFORNIA DEPARTMENT OF TRANSPORTATION

Jal Birdy
PROJECT ENGINEER

CU 04251
EA 0120S1

BRIDGE NO. 34-0006 L/R
KILOMETER POST 12.8

SAN FRANCISCO OAKLAND BAY BRIDGE
EAST SPAN SEISMIC SAFETY PROJECT

YBI TRANSITION STRUCTURES
WESTBOUND GIRDER LAYOUT NO. 3

ORIGINAL SCALE IN MILLIMETERS FOR REDUCED PLANS 0 10 20 30 40 50 60 70 80 90 100

DISREGARD PRINTS BEARING EARLIER REVISION DATES

REVISION DATES (PRELIMINARY STAGE ONLY)

SHEET 85 OF 209

FILE => \\mnlbfs\LB_Projects\4141-06\CADD\TS\Checked Plans\YBITS #1-100% No. 2_03-03-08 (Final Renamed)\033011 Openings T9 CCO\04-(

USERNAME => fspmson DATE PLOTTED => 3/29/2011 TIME PLOTTED => 11:03:17 AM

CCO No. 9S3

MARK	DATE	DESCRIPTIONS	BY	CH'D
3	3-30-11	Rev Girder Access Openings	TL	AE
2	2-8-11	Rev stem flares & stirrups	TL	AE
1	12-23-09	WB Ramp Revisions	TL	AE

REVISIONS

CONTRACT CHANGE ORDER NO. 9S3
SHEET 6 OF 9

FOR REVISION 1 2 & 3 ONLY

DIST.	COUNTY	ROUTE	KILOMETER POST TOTAL PROJECT	SHEET NO.	TOTAL SHEETS
04	SF	80	12.7/13.2	635R3	806

REGISTERED ENGINEER - CIVIL
6-23-08
PLANS APPROVAL DATE

The State of California or its officers or agents shall not be responsible for the accuracy or completeness of electronic copies of this plan sheet.

T.Y. LIN / MOFFATT & NICHOL
TWO HARRISON STREET
SAN FRANCISCO, CA 94105

LEGEND

500 Indicates girder stem width in mm

Metric

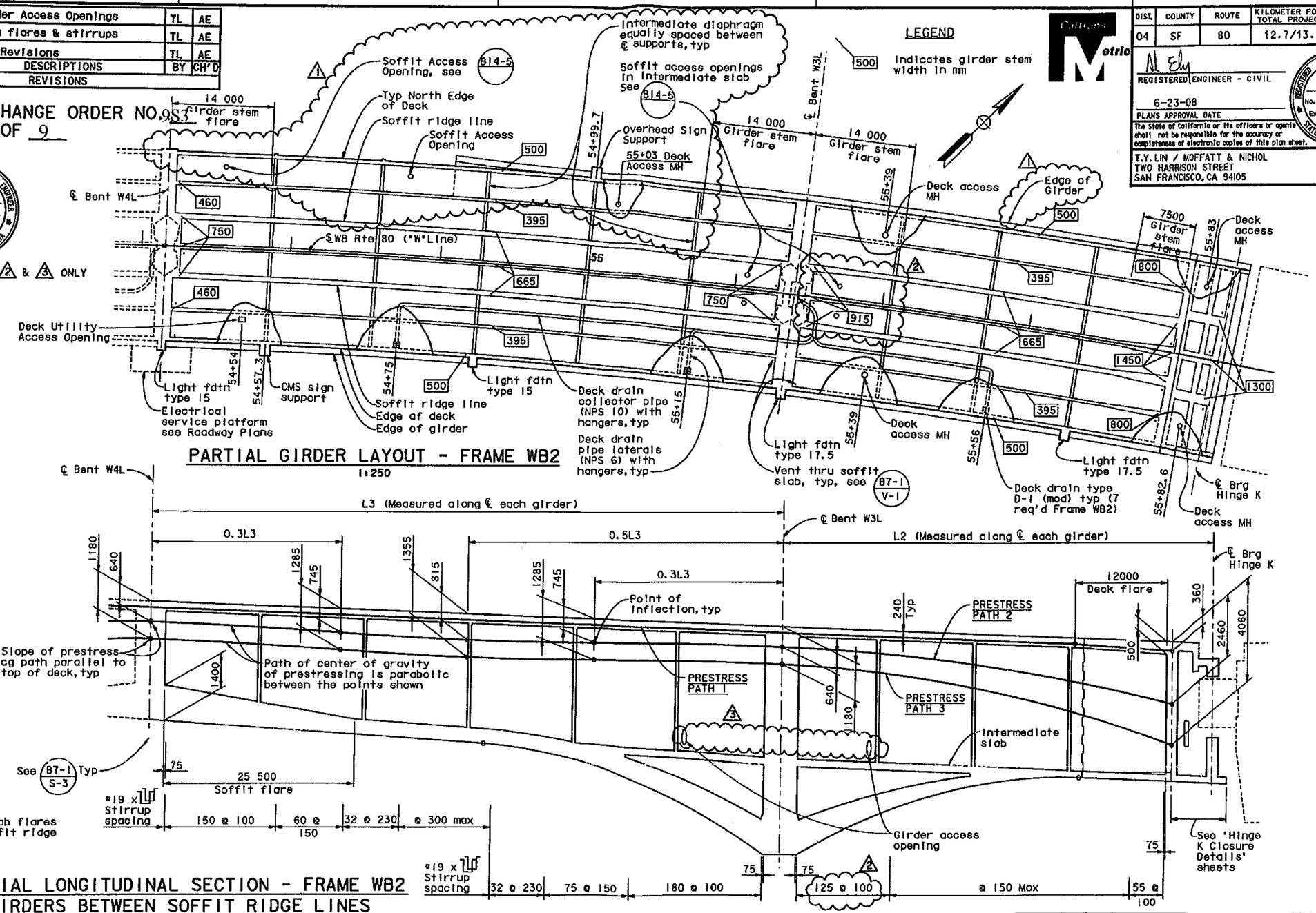

PARTIAL GIRDER LAYOUT - FRAME WB2
1:250

Note: Soffit slab flares are between soffit ridge lines only.

PARTIAL LONGITUDINAL SECTION - FRAME WB2
GIRDERS BETWEEN SOFFIT RIDGE LINES
No Scale

ALL DIMENSIONS ARE IN MILLIMETERS UNLESS OTHERWISE SHOWN

DESIGN OVERSIGHT
JOHN MOOK, BERNARD CHAN, JUAN F. CARPIO HASAN EL-NATIR
March 3, 2008
SIGN OFF DATE
4/25/11

	BY	CHECKED
DESIGN	Cavafian	Shangkuan
DETAILS	van Ryn/Zucchi/Mal	Jain
QUANTITIES	Lloo	E. Nichol

PREPARED FOR THE STATE OF CALIFORNIA DEPARTMENT OF TRANSPORTATION

Jal Birdy
PROJECT ENGINEER

BRIDGE NO. 34-0006 L/R
KILOMETER POST 12.8

SAN FRANCISCO OAKLAND BAY BRIDGE
EAST SPAN SEISMIC SAFETY PROJECT

YBI TRANSITION STRUCTURES

WESTBOUND GIRDER LAYOUT NO. 4

Rev. Date: 5-18-98

ORIGINAL SCALE IN MILLIMETERS FOR REDUCED PLANS 0 10 20 30 40 50 60 70 80 90 100

CU 04251
EA 0120S1

DISREGARD PRINTS BEARING EARLIER REVISION DATES

REVISION DATES (PRELIMINARY STAGE ONLY)

SHEET 86 OF 209

FILE => \\mnlbfs\LB_Projects\4141-06\CADD\TS\Checked Plans\YBITS *1-100% No. 2_03-03-08 (Final Renamed)\033011 Openings T9 CCO\04-

March 30, 2011

USERNAME => fdamson DATE PLOTTED => 3/29/2011 TIME PLOTTED => 11:01:56 AM

DIST.	COUNTY	ROUTE	KILOMETER POST TOTAL PROJECT	SHEET NO.	TOTAL SHEETS
04	SF	80	12.7/13.2	636R1	806

REGISTERED ENGINEER - CIVIL

6-23-08

PLANS APPROVAL DATE

The State of California or its officers or agents shall not be responsible for the accuracy or completeness of electronic copies of this plan sheet.

REGISTERED PROFESSIONAL ENGINEER A.L. ELY No. 18880 Exp. 6-30-09 CIVIL STATE OF CALIFORNIA

T.Y. LIN / MOFFATT & NICHOL
TWO HARRISON STREET
SAN FRANCISCO, CA 94105

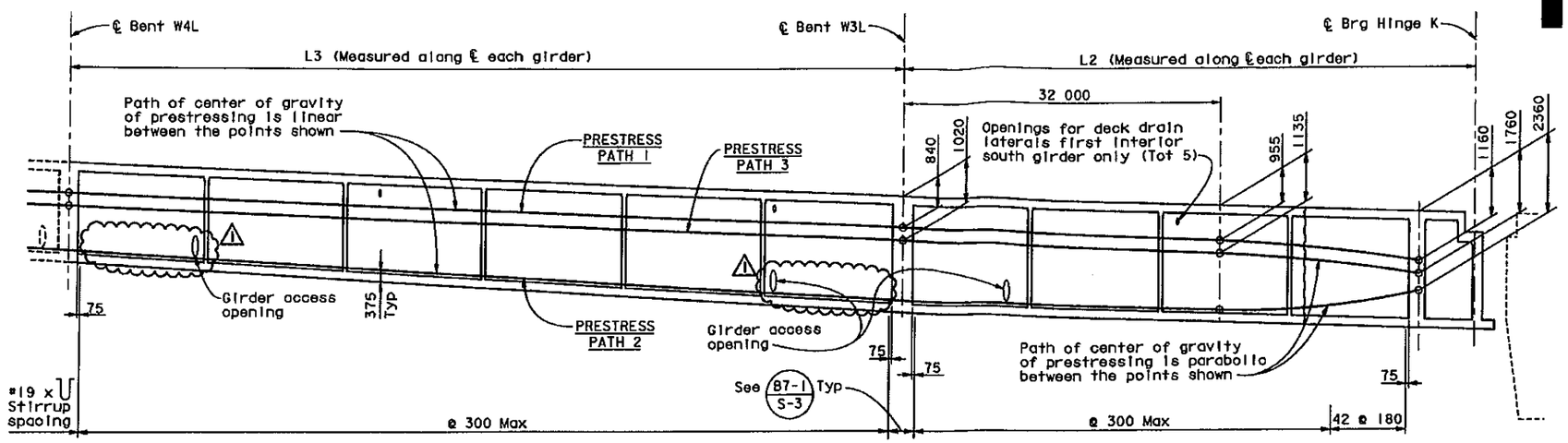

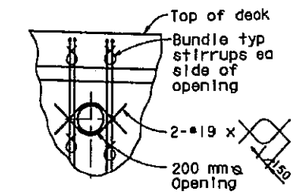

AT DECK DRAIN PIPE LATERALS

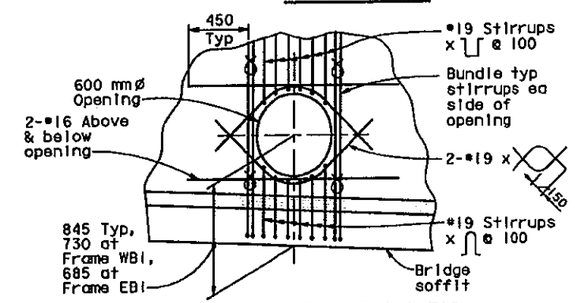

AT GIRDER ACCESS OPENING FOR GIRDER OUTSIDE SOFFIT RIDGE LINES

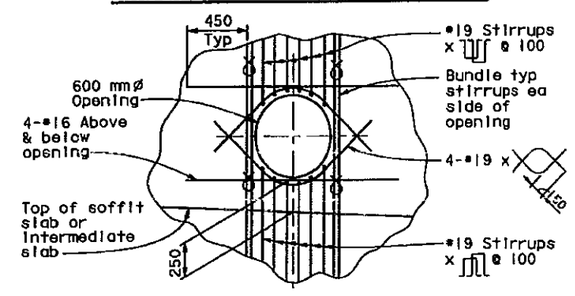

AT GIRDER ACCESS OPENING FOR GIRDER BETWEEN SOFFIT RIDGE LINES

OPENINGS THRU GIRDER STEM

MARK	DATE	DESCRIPTIONS	BY	CH'D
8				
1	3-30-11	Rev Girder Access Openings	TL	AE

REVISIONS

CONTRACT CHANGE ORDER NO. 9S3
SHEET 7 OF 9

PRESTRESSING NOTES

1860 mpa LOW RELAXATION STRAND

PJACK = SEE PRESTRESSING TABLE

ANCHOR SET = 10 mm

CONCRETE: SEE PRESTRESSING TABLE

CONTRACTOR SHALL SUBMIT ELONGATION CALCULATIONS BASED ON AN INITIAL STRESS AT ☒ EQUAL TO THE INITIAL STRESS COEFFICIENT GIVEN IN THE PRESTRESSING TABLE TIMES THE JACKING STRESS

STRESSING SHALL BE PERFORMED FROM BOTH ENDS EXCEPT ONE END STRESSING FROM HINGE K ANCHORAGE FOR PATH 3.

FOR GIRDERS OUTSIDE SOFFIT RIDGE LINES AND FOR DECK EDGE BEAMS PRESTRESS FORCE (Pjack)) SHALL BE EQUALLY DISTRIBUTED BETWEEN GIRDERS. FOR GIRDERS BETWEEN SOFFIT RIDGE LINES DISTRIBUTION OF PRESTRESS FORCE (Pjack) BETWEEN GIRDERS SHALL NOT EXCEED THE RATIO OF 3:2. MAXIMUM FINAL FORCE VARIATION BETWEEN GIRDERS SHALL NOT EXCEED 3000 kN SEE 'GIRDER PRESTRESS DETAILS' SHEET.

DESIGN BASED ON FRICTION CURVATURE COEFFICIENT (U) = 0.20 AND FRICTION WOBBLE COEFFICIENT (K) = 0.0007/m

REGISTERED PROFESSIONAL ENGINEER A.L. ELY No. 18880 Exp. 6-30-11 CIVIL STATE OF CALIFORNIA

FOR REVISION 1 ONLY

PARTIAL LONGITUDINAL SECTION - FRAME WB2
GIRDERS OUTSIDE SOFFIT RIDGE LINES

No Scale

PRESTRESSING TABLE

Location			PJACK	Number of girders	Initial stress coefficient	f'c @ 28 days	f'ci @ time of stressing
Frame WB2	Girders between soffit ridge lines	Path 1	107 050 kN	3	0.897	46 MPa	42 MPa
		Path 2	137 650 kN		0.805		
		Path 3	91 750 kN		0.615		
	Girders outside soffit ridge lines	Path 1	20 400 kN	2	0.894		
		Path 2	20 400 kN		0.889		
		Path 3	20 400 kN		0.852		
	Deck edge beams		11 600 kN	2	0.899		

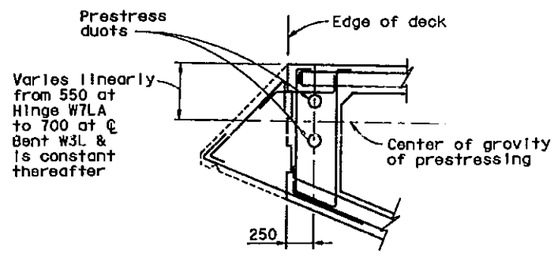

NORTH EDGE OF DECK

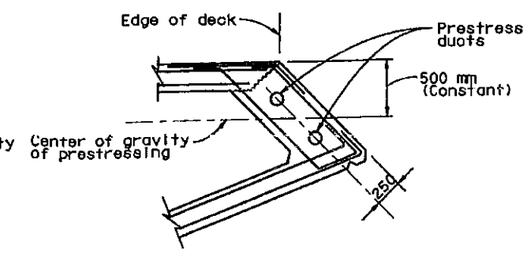

SOUTH EDGE OF DECK

DECK EDGE BEAM DETAIL

No Scale

8 REVISED PER ADDENDUM NO. 8 DATED NOVEMBER 12, 2009

ALL DIMENSIONS ARE IN MILLIMETERS UNLESS OTHERWISE SHOWN

DESIGN OVERSIGHT: JOHN HOOK, BERNARD CHAN, JUAN F. CARPIO, HASAN EL-NATUR
March 3, 2008 — 4/25/11
SIGN OFF DATE

Rev. Date: 5-18-99

	BY	CHECKED
DESIGN	Cavafian	Shangkuan
DETAILS	van Ryn/Zucchi/Wal	Jain
QUANTITIES	Liao	E. Nichol

PREPARED FOR THE STATE OF CALIFORNIA DEPARTMENT OF TRANSPORTATION

Jal Birdy
PROJECT ENGINEER

CU 04251
EA 0120S1

BRIDGE NO. 34-0006 L/R
KILOMETER POST 12.8

SAN FRANCISCO OAKLAND BAY BRIDGE
EAST SPAN SEISMIC SAFETY PROJECT

YBI TRANSITION STRUCTURES

WESTBOUND GIRDER LAYOUT NO. 5

DISREGARD PRINTS BEARING EARLIER REVISION DATES

REVISION DATES (PRELIMINARY STAGE ONLY)

SHEET 87 OF 209

ORIGINAL SCALE IN MILLIMETERS FOR REDUCED PLANS 0 10 20 30 40 50 60 70 80 90 100

FILE => \\mnlbfs\LB_Projects\4141-06\CADD\TS\Checked Plans\YBITS #1 100% No. 2_03-03-08 (Final Renamed)\033011 Openings T9 CCO\04-0120S1-34-006R1-1-g_to05.dgn

March 30, 2011

USERNAME => fasmson DATE PLOTTED => 3/29/2011 TIME PLOTTED => 11:03:26 AM

DIST.	COUNTY	ROUTE	KILOMETER POST TOTAL PROJECT	SHEET NO.	TOTAL SHEETS
04	SF	80	12.7/13.2	641R2	806

REGISTERED ENGINEER - CIVIL

6-23-08

PLANS APPROVAL DATE

The State of California or its officers or agents shall not be responsible for the accuracy or completeness of electronic copies of this plan sheet.

REGISTERED PROFESSIONAL ENGINEER A.L. ELY No. 18880 Exp. 6-30-09 CIVIL STATE OF CALIFORNIA

T.Y. LIN / MOFFATT & NICHOL
TWO HARRISON STREET
SAN FRANCISCO, CA 94105

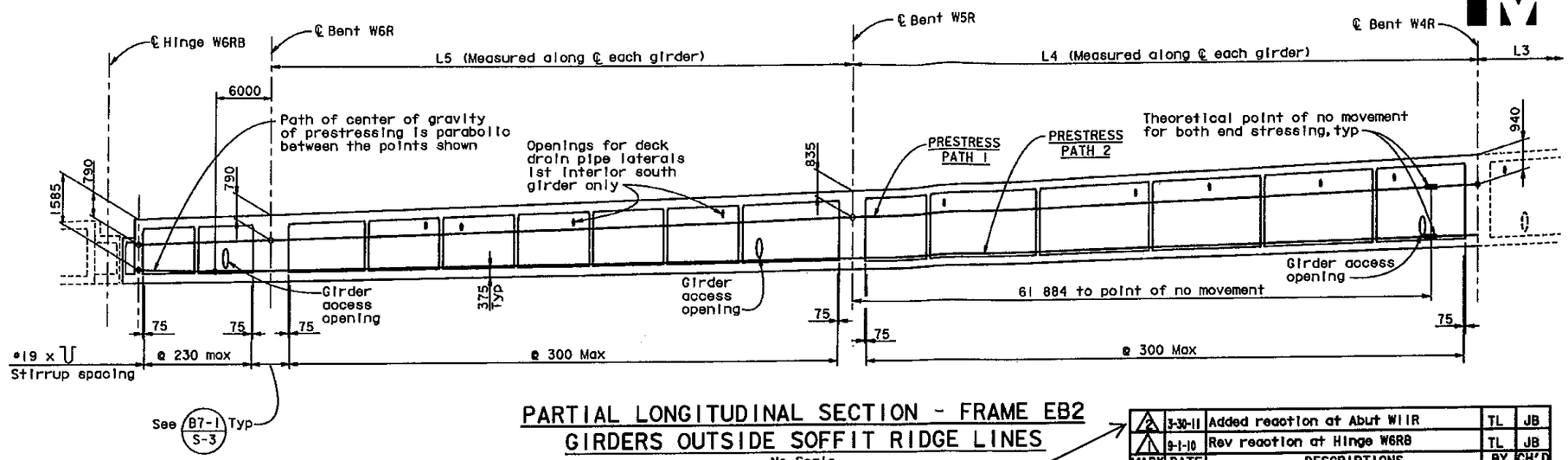

PARTIAL LONGITUDINAL SECTION - FRAME EB2
GIRDERS OUTSIDE SOFFIT RIDGE LINES

No Scale

MARK	DATE	DESCRIPTIONS	BY	CH'D
2	3-30-11	Added reaction at Abut W11R	TL	JB
1	9-1-10	Rev reaction at Hinge W6RB	TL	JB

REVISIONS

CCO No. 9S3

CONTRACT CHANGE ORDER NO. 9S3
SHEET 8 OF 9

TIME DEPENDENT CAMBER VALUES ('C') AT HINGE K CLOSURE

Time Between Casting & Stressing, Days	Time Between Stressing & Closure, Days				
	30	60	90	120	150
10	92	113	123	129	133
20	94	115	124	130	135
30	95	115	124	130	134
60	94	113	122	127	131
90	94	112	120	125	129

NOTES:

1. Camber 'A' = Anticipated camber of short hinge side at time of load transfer. Construct long hinge side to match.
2. Camber 'B' = Camber value for construction short hinge side.
3. Time Dependent Camber 'C' values shown represent amount that top of deck is to be above profile grade at time of concrete placement. Values shown do not include allowance for falsework settlement.
4. Time Dependent Camber 'C' values shown are to be adjusted after Contractor submits concrete modulus, creep and shrinkage test results. Values shown assume counterweight placed 20 days after stressing.

TIME DEPENDENT CAMBER VALUES AT HINGE W6RB

* Elapsed time in days	Hinge W6RB		
	Camber 'A'	Camber 'B'	
30 Days	146 mm	23 mm	
60 Days	137 mm	-21 mm	
90 Days	128 mm	-65 mm	
120 Days	123 mm	-87 mm	
180 Days	122 mm	-93 mm	
240 Days	121 mm	-98 mm	
360 Days	119 mm	-109 mm	
720 Days	116 mm	-126 mm	
1080 Days			
1440 Days			

* Indicates elapsed time in days from prestressing short (Cantilever) hinge side until closure and load transfer.

FOR REVISION 1 & 2 ONLY

HINGE DEAD LOAD + PRESTRESS REACTIONS

Abut W11R	Hinge W6RB	Hinge K
5120 KN	15650 KN	1105 KN **

** Target value just after closure and removal of hinge counterweight

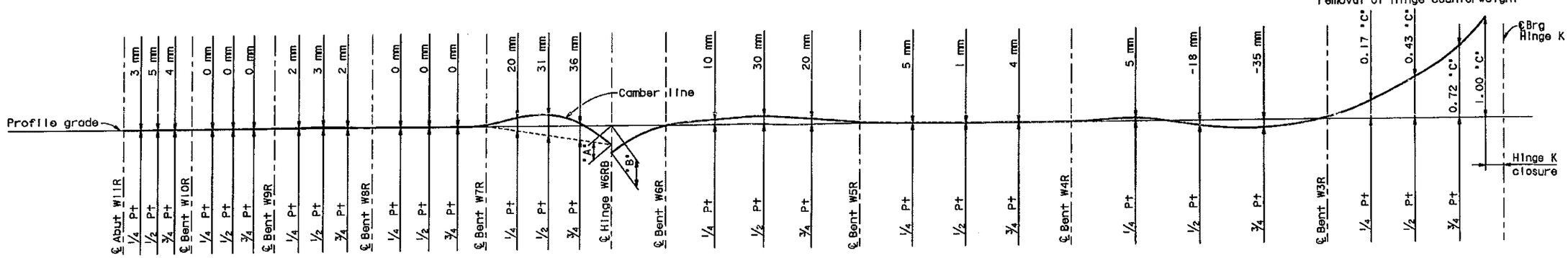

Note: Camber diagram does not include allowance for falsework settlement

EB GIRDER CAMBER DIAGRAM

NO SCALE

ALL DIMENSIONS ARE IN MILLIMETERS UNLESS OTHERWISE SHOWN

DESIGN OVERSIGHT
JOHN MOOK, BERNARD CHAN, JUAN F. CARPIO, HASAN EL-NAGGAR
SIGN OFF DATE 4/20/11

	BY	CHECKED
DESIGN	Cavafian	Shangkuan
DETAILS	van Ryn/Zucchi/Wal	Jain
QUANTITIES	Liao	E. Nichol

PREPARED FOR THE STATE OF CALIFORNIA DEPARTMENT OF TRANSPORTATION

Jal Birdy
PROJECT ENGINEER

BRIDGE NO. 34-0006 L/R
KILOMETER POST 12.8

SAN FRANCISCO OAKLAND BAY BRIDGE
EAST SPAN SEISMIC SAFETY PROJECT

YBI TRANSITION STRUCTURES

EASTBOUND GIRDER LAYOUT NO. 4

CU 04251
EA 0120S1

DISREGARD PRINTS BEARING EARLIER REVISION DATES

REVISION DATES (PRELIMINARY STAGE ONLY)

SHEET 92 OF 209

Rev. Dates 5-18-22

ORIGINAL SCALE IN MILLIMETERS FOR REDUCED PLANS 0 10 20 30 40 50 60 70 80 90 100

FILE => \\mnlbfs\LB_Projects\4141-06\CADD\TS\Checked Plans\YBITS *1-100% No. 2.03-03-08 (Final Renamed)\033011 Openings T9 CCO\04-

March 30, 2011

USERNAME => fsemson DATE PLOTTED => 3/30/2011 TIME PLOTTED => 11:54:12 PM

DIST.	COUNTY	ROUTE	KILOMETER POST TOTAL PROJECT	SHEET NO.	TOTAL SHEETS
04	SF	80	12.7/13.2	665R2	806

REGISTERED ENGINEER - CIVIL
6-23-08
PLANS APPROVAL DATE
REGISTERED PROFESSIONAL ENGINEER A.L. ELY No. 18880 Exp. 6-30-09 CIVIL STATE OF CALIFORNIA

The State of California or its officers or agents shall not be responsible for the accuracy or completeness of electronic copies of this plan sheet.

T.Y. LIN / MOFFATT & NICHOL
TWO HARRISON STREET
SAN FRANCISCO, CA 94105

Note: For locations of Sections D-D, E-E & F-F see 'Hinge W6RB Details No. 1' sheet.

Indicates polystyrene

Indicates concrete placed when deck joint installed

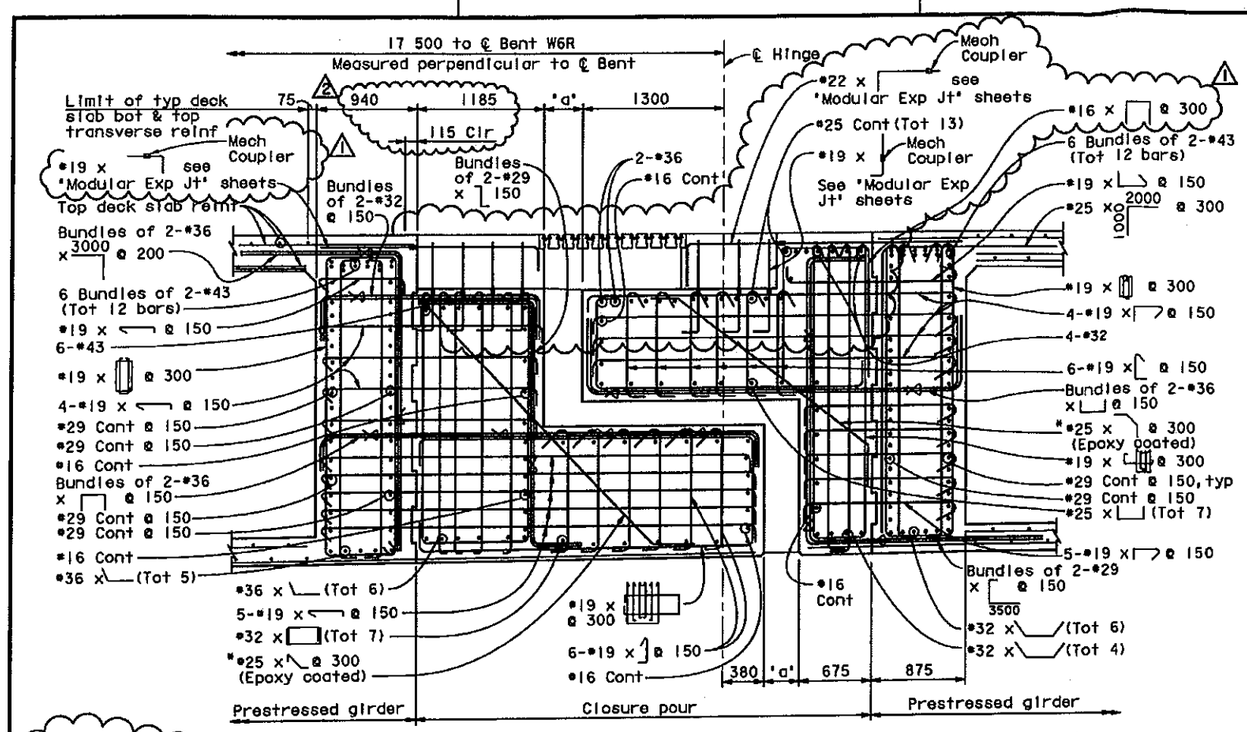

SECTION D-D
1:25

*Min concrete cover for *25 epoxy coated bar to be 25 mm clr from the corner

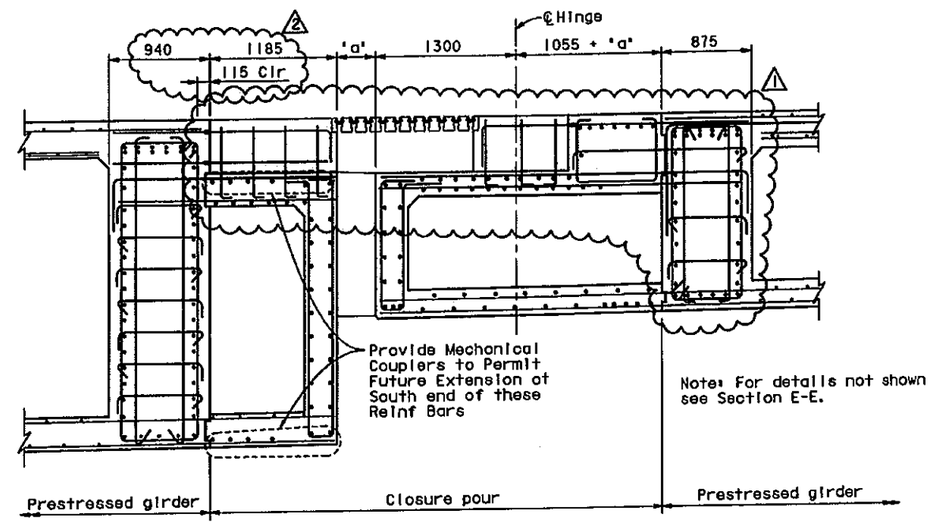

Note: For details not shown see Section E-E.

CANTILEVER SIDE

SUSPENDED SIDE

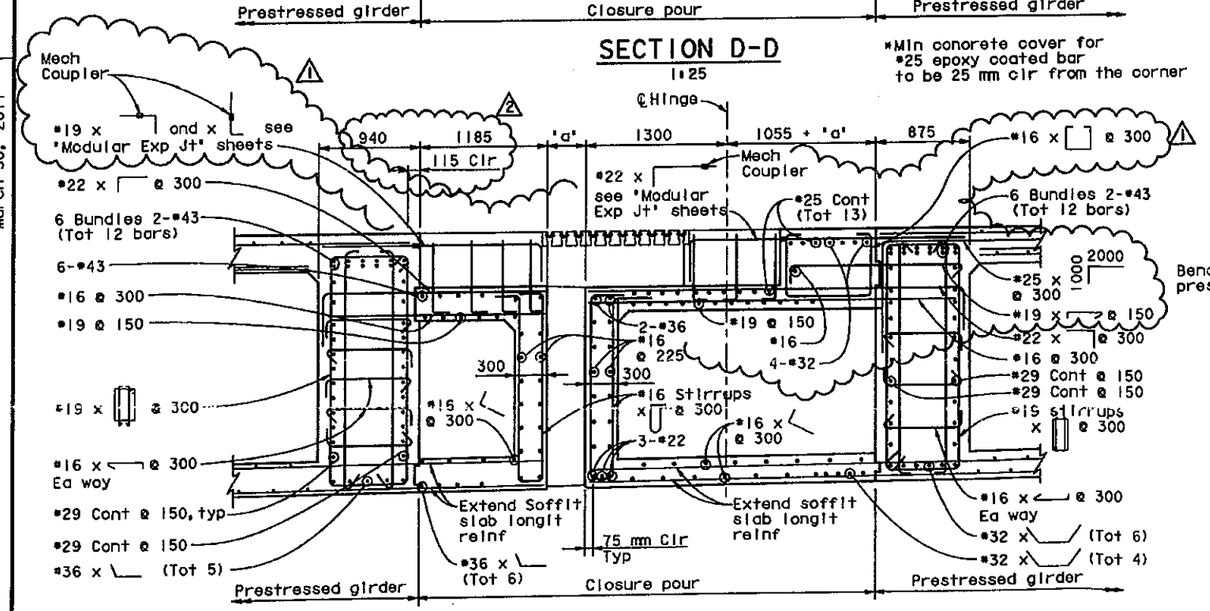

CANTILEVER SIDE

SECTION E-E
1:25

SUSPENDED SIDE

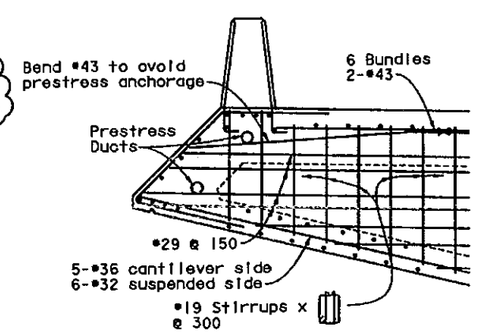

SECTION L-L
1:25

SECTION F-F
1:25

REGISTERED PROFESSIONAL ENGINEER JAL BIRDY No. 41547 Exp. 12-31-11 CIVIL STATE OF CALIFORNIA

FOR REVISION 1 & 2 ONLY

CCO No. 9S3

MARK	DATE	DESCRIPTIONS	BY	CH'D
2	3-30-11	Rev Hinge Diaph Dims	TL	JB
1	10-14-10	Rev deck expansion joint blockout	TL	JB

REVISIONS

CONTRACT CHANGE ORDER NO. 9S3
SHEET 9 OF 9

ALL DIMENSIONS ARE IN MILLIMETERS UNLESS OTHERWISE SHOWN

DESIGN OVERSIGHT
JOHN MOOK, BERNARD CHAN, JUAN F. CARPIO, HASAN EL-NATUR
March 3, 2008
SIGN OFF DATE
Rev. Date: 5-15-98

	BY	CHECKED
DESIGN	Lee	Atiqullah
DETAILS	van Ryn/Zucchi/Mal	Jain
QUANTITIES	Liao	E. Nichol

ORIGINAL SCALE IN MILLIMETERS FOR REDUCED PLANS 0 10 20 30 40 50 60 70 80 90 100

PREPARED FOR THE STATE OF CALIFORNIA DEPARTMENT OF TRANSPORTATION

Jal Birdy
PROJECT ENGINEER

CU 04251
EA 0120S1

BRIDGE NO. 34-0006 L/R
KILOMETER POST 12.8

SAN FRANCISCO OAKLAND BAY BRIDGE
EAST SPAN SEISMIC SAFETY PROJECT

YBI TRANSITION STRUCTURES
HINGE W6RB DETAILS NO. 3

DISREGARD PRINTS BEARING EARLIER REVISION DATES
REVISION DATES (PRELIMINARY STAGE ONLY)
SHEET 116 OF 209

FILE => \\mnlbfs\LB_Projects\4141-06\CADD\TS\Checked Plans\YBITS #1-100% No. 2_03-03-08 (Final Renamed)\033011 Openings T9 CCO\04-(

March 30, 2011
USERNAME => fecmson DATE PLOTTED => 3/29/2011 TIME PLOTTED => 11:02:16 AM

STATE OF CALIFORNIA - DEPARTMENT OF TRANSPORTATION

CONTRACT CHANGE ORDER MEMORANDUM

TO: Deanna Vilcheck, ACM /	FILE: E.A. 04 - 0120S4
FROM: William Howe, Senior R.E.	CO-RTE-PM SF-80-12.7/13.2
	FED. NO. NO FED AID
CCO#: 9 SUPPLEMENT#: 3 Category Code: CHPT	CONTINGENCY BALANCE (incl. this change) $61,630,058.40
COST: $21,840.00 INCREASE ☑ DECREASE ☐	HEADQUARTERS APPROVAL REQUIRED? ☐ YES ☑ NO
SUPPLEMENTAL FUNDS PROVIDED: $0.00	IS THIS REQUEST IN ACCORDANCE WITH ENVIRONMENTAL DOCUMENTS? ☑ YES ☐ NO
CCO DESCRIPTION: ISD Revisions - various WB Locations	**PROJECT DESCRIPTION:** YBITS-1 (Yerba Buena Island Transition Structures)

Original Contract Time:	Time Adj. This Change:	Previously Approved CCO Time Adjustments:	Percentage Time Adjusted: (including this change)	Total # of Unreconciled Deferred Time CCO(s): (including this change)
1390 Day(s)	0 Day(s)	0 Day(s)	0 %	9

THIS CHANGE ORDER PROVIDES FOR:

Revisions to reinforcement bar layout and electrical conduit layout at Column W8R north, girder access opening layouts, additional electrical conduit openings west of Bent W10L, addition of reaction force at Abutment W11R, and revision to hinge W6RB diaphragm dimensions, as shown on revised Drawing Sheet Nos. 602R2, 632R3, 634R3, 635R3, 636R1, 641R2 and 665R2 of 806, and as described in this Contract Change Order.

Reinforcement bar layout, electrical conduit layout, and the switch to headed reinforcement bars at the face to the walls for Bent W8R, as shown on Drawing Sheet No. 602R2 has been requested by the Designer to accommodate the internal guying system installed per Contract Change Order No. 71.

Girder access opening layout and additional electrical conduit openings as shown on Drawing Sheet Nos. 632R3, 634R3, 635R3 and 636R1 have been revised by the Designer to resolve the ISD generated conflict issues. These changes were accepted and formalized by the Department with the approval of reinforcement bar shop drawings.

Reaction force at Abutment W11R has been added to Drawing Sheet No. 641R2 by the Designer. Reaction force is necessary for falsework design.

Hinge W6RB diaphragm dimensions, shown on Drawing Sheets No. 665R2 has been revised by the Designer to provide adequate concrete clearance for reinforcement.

These changes will result in an increase in Contract Item No. 90, Structural Concrete (Bridge), for a net increase of $6,840.00. The Contractor has also agreed to an Adjustment of Compensation at Agreed Lump Sum of $15,000.00 for revisions to reinforcement bar and electrical conduit layout, girder access opening layout, and furnishing and installing additional headed reinforcement bars. Net cost of this change order is $21,840.00, which can be financed from the contract's contingency fund. A detailed cost estimate is on file.

Design concurrence for this change is on file.

Maintenance concurrence is not required for these changes.

No adjustment to contract time is required due to these changes as they do not affect controlling operations.

CONCURRED BY:		
Construction Engineer:	William Howe	Date 06-19-12
Bridge Engineer:	Mehran Ardakanian	Date 06/25/12
Project Engineer:	Bob Zandipour, Design	Date 6-25-12
Project Manager:	Ken Terpstra	Date 6-25-12
FHWA Rep.:		Date
Environmental:		Date
Other (specify):		Date
Other (specify):		Date
District Prior Approval By:		Date
HQ (Issue Approve) By:		Date
Resident Engineer's Signature:		Date
William Howe		06-19-12

ESTIMATE OF COST

	THIS REQUEST	TOTAL TO DATE
ITEMS	$6,840.00	$43,329.60
FORCE ACCOUNT	$0.00	$0.00
AGREED PRICE	$0.00	$0.00
ADJUSTMENT	$15,000.00	$156,166.00
TOTAL	$21,840.00	$199,495.60

FEDERAL PARTICIPATION

☐ PARTICIPATING ☐ PARTICIPATING IN PART ☑ NONE
☐ NON-PARTICIPATING (MAINTENANCE) ☐ NON-PARTICIPATING

FEDERAL SEGREGATION (if more than one Funding Source or P.I.P. type)
☐ CCO FUNDED PER CONTRACT ☐ CCO FUNDED AS FOLLOWS

FEDERAL FUNDING SOURCE	PERCENT

ADA Notice: For individuals with sensory disabilities, this document is available in alternate formats. For information call (916) 654-6410 or TDD (916) 654-3880 or write Records and Forms Management, 1120 N Street, MS-89, Sacramento, CA 95814

STATE OF CALIFORNIA - DEPARTMENT OF TRANSPORTATION

CONTRACT CHANGE ORDER

Change Requested by: Engineer

CCO 9	Suppl. No. 4	Contract No. 04 - 0120S4	Road SF-80-12.7/13.2	FED. AID LOC.: NO FED AID

To: **M C M CONSTRUCTION INC**

You are directed to make the following changes from the plans and specifications or do the following described work not included in the plans and specifications for this contract. ***NOTE: This change order is not effective until approved by the Engineer.***

Description of work to be done, estimate of quantities and prices to be paid. (Segregate between additional work at contract price, agreed price and force account.) Unless otherwise stated, rates for rental of equipment cover only such time as equipment is actually used and no allowance will be made for idle time. This last percentage shown is the net accumulated increase or decrease from the original quantity in the Engineer's Estimate.

Adjustment of Compensation at Lump Sum:

Furnish and install headed bar reinforcement, bar reinforcing steel and accessories, and perform rework at Bent W7LA as directed by the Engineer during the Integrated Shop Drawing (ISD) process.

For this work the Contractor will be paid an Adjustment in Compensation at Agreed Lump Sum of $156,890.00. This sum constitutes full and complete compensation for detailing, furnishing, testing and erecting reinforcement bars and also includes all markups, for this change.

Adjustment of Compensation at Agreed Lump Sum: $156,890.00

Estimated Cost: Increase ☑ Decrease ☐ **$156,890.00**

By reason of this order the time of completion will be adjusted as follows: 0 days

Submitted by

Signature	Resident Engineer	Date
William Howe	William Howe, Senior R.E.	07-13-12

Approval Recommended by

Signature	Area Construction Manager	Date
Deanna Vilcheck	Deanna Vilcheck	7/13/12

Engineer Approval by

Signature	Area Construction Manager	Date
Deanna Vilcheck	Deanna Vilcheck	12/4/12

12-5-12

We the undersigned contractor, have given careful consideration to the change proposed and agree, if this proposal is approved, that we will provide all equipment, furnish the materials, except as may otherwise be noted above, and perform all services necessary for the work above specified, and will accept as full payment therefor the prices shown above.

NOTE: If you, the contractor, do not sign acceptance of this order, your attention is directed to the requirements of the specifications as to proceeding with the ordered work and filing a written protest within the time therein specified.

Contractor Acceptance by

Signature	(Print name and title)	Date
	EDMUNDO A. PUCHI, TREASURER	11/30/12

STATE OF CALIFORNIA - DEPARTMENT OF TRANSPORTATION

CONTRACT CHANGE ORDER MEMORANDUM

DATE: 1/12/2012 Page 1 of 1

TO: Deanna Vilcheck, ACM	FILE: E.A. 04 - 0120S4
	CO-RTE-PM SF-80-12.7/13.2
FROM: William Howe, Senior R.E.	FED. NO. NO FED AID
CCO#: 9 SUPPLEMENT#: 4 Category Code: CHPT	CONTINGENCY BALANCE (incl. this change) $61,473,168.40
COST: $156,890.00 INCREASE ☑ DECREASE ☐	HEADQUARTERS APPROVAL REQUIRED? ☑ YES ☐ NO
SUPPLEMENTAL FUNDS PROVIDED: $0.00	IS THIS REQUEST IN ACCORDANCE WITH ENVIRONMENTAL DOCUMENTS? ☑ YES ☐ NO
CCO DESCRIPTION: ISD Revisions - Rebar Changes Bent W7LA	**PROJECT DESCRIPTION:** YBITS-1 (Yerba Buena Island Transition Structures)

Original Contract Time:	Time Adj. This Change:	Previously Approved CCO Time Adjustments:	Percentage Time Adjusted: (including this change)	Total # of Unreconciled Deferred Time CCO(s): (including this change)
1390 Day(s)	0 Day(s)	0 Day(s)	0 %	9

THIS CHANGE ORDER PROVIDES FOR:

This change provides for furnishing and installing headed bar reinforcement, bar reinforcing steel and accessories, and performing rework at Bent W7LA as directed by the Engineer during the Integrated Shop Drawing (ISD) process and formalized during the shop drawing submittal review process.

Reinforcing bars placement at Bent W7LA was revised by the Engineer to resolve the ISD generated placement conflict issues. The changes include switching from seismic hook reinforcing bars to headed reinforcing bars and providing supporting bars and accessories for the precise placement of the reinforcing bars. These changes were accepted and formalized by the Department with the approval of reinforcing bar shop drawings.

Rework was also necessary to resolve placement conflicts encountered during erection.

Payment for this work will be an adjustment in compensation at agreed lump sum of $156,890.00, which can be financed from the contract contingency fund. A detailed cost analysis is on file.

Design concurrence for this change is on file.

Structure Maintenance concurrence is not required as this change does not affect any controlling items.

No adjustment to contract time is required due to these changes as they do not affect controlling operations.

CONCURRED BY:		
Construction Engineer:	William Howe	Date 07-13-12
Bridge Engineer:	for Mehran Ardakanian	Date 10/5/12
Project Engineer:	Bob Zandipour, Design	Date 7-16-12
Project Manager:	Ken Terpstra	Date 7-14-12
FHWA Rep.:		Date
Environmental:		Date
Other (specify):		Date
Other (specify):		Date
District Prior Approval By:		Date
HQ (Issue Approve) By:	Bob Molera	Date 7-16-12
Resident Engineer's Signature:	William Howe	Date 07-13-12

ESTIMATE OF COST

	THIS REQUEST	TOTAL TO DATE
ITEMS	$0.00	$43,329.60
FORCE ACCOUNT	$0.00	$0.00
AGREED PRICE	$0.00	$0.00
ADJUSTMENT	$156,890.00	$313,056.00
TOTAL	$156,890.00	$356,385.60

FEDERAL PARTICIPATION

☐ PARTICIPATING ☐ PARTICIPATING IN PART ☑ NONE
☐ NON-PARTICIPATING (MAINTENANCE) ☐ NON-PARTICIPATING

FEDERAL SEGREGATION (if more than one Funding Source or P.I.P. type)
☐ CCO FUNDED PER CONTRACT ☐ CCO FUNDED AS FOLLOWS

FEDERAL FUNDING SOURCE	PERCENT

ADA Notice. For individuals with sensory disabilities, this document is available in alternate formats. For information call: (916) 654-6410 or TDD (916) 654-3880 or write to Records and Forms Management, 1120 N Street, MS-89, Sacramento, CA 95814.

STATE OF CALIFORNIA - DEPARTMENT OF TRANSPORTATION

CONTRACT CHANGE ORDER MEMORANDUM

TO: Deanna Vilcheck, ACM /	FILE: E.A. 04 - 0120S4
FROM: Rajesh Oberoi, Senior R.E.	CO-RTE-PM SF-80-12.7/13.2
	FED. NO. NO FED AID
CCO#: 10 SUPPLEMENT#: 0 Category Code: CDSA	CONTINGENCY BALANCE (incl. this change) $29,055,812.00
COST: $0.00 INCREASE ☐ DECREASE ☐	HEADQUARTERS APPROVAL REQUIRED? ☑ YES ☐ NO
SUPPLEMENTAL FUNDS PROVIDED: $0.00	IS THIS REQUEST IN ACCORDANCE WITH ENVIRONMENTAL DOCUMENTS? ☑ YES ☐ NO
CCO DESCRIPTION: REVISED SPECIFICATIONS FOR TEMPORARY SHORING	PROJECT DESCRIPTION: YBITS-1 (Yerba Buena Island Transition Structures)

Original Contract Time:	Time Adj. This Change:	Previously Approved CCO Time Adjustments:	Percentage Time Adjusted: (including this change)	Total # of Unreconciled Deferred Time CCO(s): (including this change)
1390 Day(s)	DEF Day(s)	0 Day(s)	0 %	0

THIS CHANGE ORDER PROVIDES FOR:

Replacing the temporary shoring specification from the special provisions to provide for an increased seismic acceleration design standard.

This project, the Yerba Buena Island Transition Structure (YBITS), provides for the construction of two bridges which will connect eastbound and westbound traffic on the new east span of the San Francisco Oakland Bay Bridge (SFOBB) to the existing Yerba Buena Island (YBI) tunnel. The structures are comprised of concrete box girder bridges each approximately 40 meters high and 450 meters in length.

The project includes the construction of 11 footings, as large as 15.5 meters long, 12 meters wide and 3.5 meters deep, that will be constructed along a steep hill approximately 40 meters in height. The slope of this hill exceeds 1 to 1 in many locations and is comprised of loose sand. Mike Whiteside the YBI Coordination Engineer has issued a request to increase the design for earthquake loading of the temporary shoring required to construct these foundations to a minimum seismic acceleration of 0.20g. This change order provides for this design revision.

This requirement was intended to be included in the contract special provisions but was mistakenly omitted. The increased design standard will mitigate risk associated with constructing these foundations under the severe slope and geotechnical conditions present.

This change order incorporates this increased design standard for the temporary shoring into the contract. Compensation for the additional costs resulting from this change is deferred and shall be compensated under a forthcoming supplement to this change order. Costs associated with this change will include grading to relieve overburden material and increase temporary shoring members.

This change is being issued with deferred compensation in order to proceed with the temporary shoring design in a timely manner and mitigate potential delay to the contract completion. The cost of this change is not anticipated to exceed $950,000.

Adjustment of contract time is deferred as the change may affect the controlling operation.

Maintenance concurrence is not required as this change affects a temporary structure and doesn't affect any permanent roadway features.

ADA Notice: For individuals with sensory disabilities, this document is available in alternate formats. For information call: (916) 654-6410 or TDD (916) 654-3880 or write Records and Forms Management, 1120 N Street, MS-89, Sacramento, CA 95814.

CONCURRED BY:		
Construction Engineer:	Rajesh Oberoi RO	Date 10/21/10
Bridge Engineer:	Mehran Ardakanian	Date
Project Engineer:		Date
Project Manager:		Date
FHWA Rep.:		Date
Environmental:		Date
Other (specify):		Date
Other (specify):	Mike Whiteside (Co ordination Engi	Date 5/12/10
District Prior Approval By:		Date
HQ (Issue Approve) By:	LARRY SALHANEY	Date 09/21/10
Resident Engineer's Signature:	Rajesh Oberoi	Date 10/21/10

ESTIMATE OF COST

	THIS REQUEST	TOTAL TO DATE
ITEMS	$0.00	$0.00
FORCE ACCOUNT	$0.00	$0.00
AGREED PRICE	$0.00	$0.00
ADJUSTMENT	$0.00	$0.00
TOTAL	$0.00	$0.00

FEDERAL PARTICIPATION

☐ PARTICIPATING ☐ PARTICIPATING IN PART ☑ NONE
☐ NON-PARTICIPATING (MAINTENANCE) ☐ NON-PARTICIPATING

FEDERAL SEGREGATION (if more than one Funding Source or P.I.P. type)
☐ CCO FUNDED PER CONTRACT ☐ CCO FUNDED AS FOLLOWS

FEDERAL FUNDING SOURCE	PERCENT

ADA Notice: For individuals with sensory disabilities, this document is available in alternate formats. For information call: (916) 654-6410 or TDD (916) 654-3880 or write Records and Forms Management, 1120 N Street, MS-89, Sacramento, CA 95814.

CONTRACT CHANGE ORDER

Change Requested by: Engineer

CCO: 10	Suppl. No. 0	Contract No. 04 - 0120S4	Road SF-80-12.7/13.2	FED. AID LOC.: NO FED AID

To: **M C M CONSTRUCTION INC**

You are directed to make the following changes from the plans and specifications or do the following described work not included in the plans and specifications for this contract. ***NOTE: This change order is not effective until approved by the Engineer.***

Description of work to be done, estimate of quantities and prices to be paid. (Segregate between additional work at contract price, agreed price and force account.) Unless otherwise stated, rates for rental of equipment cover only such time as equipment is actually used and no allowance will be made for idle time. This last percentage shown is the net accumulated increase or decrease from the original quantity in the Engineer's Estimate.

Replace Subsection "TEMPORARY SHORING" of Section 10-1.45 "EARTHWORK" of the Contract Special Provisions as shown on Page 2 of this change order.

Any additional costs resulting from this change order are deferred and shall be compensated under a supplement to this change order.

Consideration of a time adjustment will be deferred until completion of the work specified herein. Determination of a commensurate time extension will be made in accordance with Section 8-1.07, "Liquidated Damages", of the Standard Specifications and Section 10-1.22 " Progress Schedule (Critical Path Method)" of the Special Provisions.

Estimated Cost: **Increase** ☐ **Decrease** ☐ **$0.00**

By reason of this order the time of completion will be adjusted as follows: Deferred

Submitted by

Signature	Resident Engineer	Date
Rajesh Oberoi	Rajesh Oberoi, Senior R.E.	9/20/10

Approval Recommended by

Signature	Area Construction Manager	Date
Deanna Vilcheck	Deanna Vilcheck	9/20/10

Engineer Approval by

Signature	Area Construction Manager	Date
Deanna Vilcheck	Deanna Vilcheck	10/21/10

We the undersigned contractor, have given careful consideration to the change proposed and agree, if this proposal is approved, that we will provide all equipment, furnish the materials, except as may otherwise be noted above, and perform all services necessary for the work above specified, and will accept as full payment therefor the prices shown above.

NOTE: If you, the contractor, do not sign acceptance of this order, your attention is directed to the requirements of the specifications as to proceeding with the ordered work and filing a written protest within the time therein specified.

Contractor Acceptance by

Signature	(Print name and title)	Date
	EDMUNDO A. PUCHI, TREASURER	10/5/10

TEMPORARY SHORING

Temporary shoring for footing excavations at the locations shown in the table below shall conform to the requirements in Section 5-1.02A, "Excavation Safety Plans," of the Standard Specifications and these special provisions.

Attention is directed to Section "Geotechnical Information Handout" in "Supplemental Project Information" of these special provisions.

STRUCTURE	BENT	FOOTING
YBI EB On-Ramp	W9, W8	All
YBI Transition Structures	W10L	South
YBI Transition Structures	W9R	All
YBI Transition Structures	W9L	All
YBI Transition Structures	W8R	All
YBI Transition Structures	W8L	All

The Contractor shall submit detailed plans and design calculations for temporary shoring in conformance with the provisions in "Working Drawings" of these special provisions. Working drawings shall be prepared and sealed by an engineer who is registered as a Civil Engineer in the State of California. The Contractor shall allow 6 weeks for the Engineer's review of the working drawings after a complete submittal has been received.

Temporary shoring shall meet the following additional requirements:

A. Soil passive pressure calculations used to resist lateral loads shall include a reduction factor due to the presence of sloped surfaces.
B. Drainage systems shall include provisions to ensure there is no build-up of water pressure behind the shoring. In addition, provisions shall be made for surficial slope stabilization and drainage of surface water away from the excavations.
C. Shoring shall be designed for earthquake loading with a minimum seismic acceleration of 0.20g.

Temporary shoring left in place shall meet the following condition: Hydrostatic pressures on both sides of the shoring shall be equalized. This may require removal of portions of temporary shoring.

Full compensation for furnishing and constructing temporary shoring, including subsequent removal, shall be considered as included in the contract price paid per cubic meter for the type of structure excavation involved, and no additional compensation will be allowed therefor.

REGISTERED PROFESSIONAL ENGINEER
STEVE MARGARIS
No. 36845
Exp. 6/2010
CIVIL
STATE OF CALIFORNIA

CONTRACT NO. 04-012054
CONTRACT CHANGE ORDER NO. 010
SHEET 2 OF 2

STATE OF CALIFORNIA - DEPARTMENT OF TRANSPORTATION

CONTRACT CHANGE ORDER

Change Requested by: Engineer

CCO: 10	Suppl. No. 1	Contract No. 04 - 0120S4	Road SF-80-12.7/13.2	FED. AID LOC.: NO FED AID

To: **M C M CONSTRUCTION INC**

You are directed to make the following changes from the plans and specifications or do the following described work not included in the plans and specifications for this contract. ***NOTE: This change order is not effective until approved by the Engineer.***

Description of work to be done, estimate of quantities and prices to be paid. (Segregate between additional work at contract price, agreed price and force account.) Unless otherwise stated, rates for rental of equipment cover only such time as equipment is actually used and no allowance will be made for idle time. This last percentage shown is the net accumulated increase or decrease from the original quantity in the Engineer's Estimate.

Extra Work at Force Account:

Furnish all additional materials at Bent W8R, W8L, W9R and W9L (south column only) necessary to provide for the enhanced shoring specifications incorporated under the original Change Order No. 10 as determined by the Engineer.

All materials furnished under this change order shall be the property of the Department.

Estimated cost of Extra Work at Force Account $450,000.00

Labor and equipment costs associated with the actual installation and removal of the additional shoring materials are deferred.

Consideration of a time adjustment will be deferred until completion of the work specified herein. Determination of a commensurate time extension will be made in accordance with Section 8-1.07, "Liquidated Damages", of the Standard Specifications and Section 10-1.22 " Progress Schedule (Critical Path Method)" of the Special Provisions.

Estimated Cost: Increase ☑ **Decrease** ☐ **$450,000.00**

By reason of this order the time of completion will be adjusted as follows: Deferred

Submitted by		
Signature Rajesh Oberoi	**Resident Engineer** Rajesh Oberoi, Senior R.E.	**Date** 1/24/11
Approval Recommended by		
Signature Deanna Vilcheck	**Area Construction Manager** Deanna Vilcheck	**Date** 1/24/11
Engineer Approval by		
Signature Deanna Vilcheck	**Area Construction Manager** Deanna Vilcheck	**Date** 2/9/11

We the undersigned contractor, have given careful consideration to the change proposed and agree, if this proposal is approved, that we will provide all equipment, furnish the materials, except as may otherwise be noted above, and perform all services necessary for the work above specified, and will accept as full payment therefor the prices shown above.

NOTE: If you, the contractor, do not sign acceptance of this order, your attention is directed to the requirements of the specifications as to proceeding with the ordered work and filing a written protest within the time therein specified.

Contractor Acceptance by		
Signature	**(Print name and title)** EDMUNDO A. PUCHI, TREASURER	**Date** 2/4/11

STATE OF CALIFORNIA - DEPARTMENT OF TRANSPORTATION

CONTRACT CHANGE ORDER MEMORANDUM

TO: Deanna Vilcheck, ACM /	FILE: E.A. 04 - 0120S4
	CO-RTE-PM SF-80-12.7/13.2
FROM: Rajesh Oberoi, Senior R.E.	FED. NO. NO FED AID
CCO#: 10 SUPPLEMENT#: 1 Category Code: CDSA	CONTINGENCY BALANCE (incl. this change) $22,135,099.00
COST: $450,000.00 INCREASE ☑ DECREASE ☐	HEADQUARTERS APPROVAL REQUIRED? ☑ YES ☐ NO
SUPPLEMENTAL FUNDS PROVIDED: $0.00	IS THIS REQUEST IN ACCORDANCE WITH ENVIRONMENTAL DOCUMENTS? ☑ YES ☐ NO
CCO DESCRIPTION: REVISED SPECIFICATION FOR TEMPORARY SHORING	**PROJECT DESCRIPTION:** YBITS-1 (Yerba Buena Island Transition Structures)

Original Contract Time:	Time Adj. This Change:	Previously Approved CCO Time Adjustments:	Percentage Time Adjusted: (including this change)	Total # of Unreconciled Deferred Time CCO(s): (including this change)
1390 Day(s)	DEF Day(s)	0 Day(s)	0 %	6

THIS CHANGE ORDER PROVIDES FOR:

Furnishing all additional materials necessary to provide for the enhanced shoring specifications incorporated under the original Change Order No. 10.

This project, the Yerba Buena Island Transition Structure (YBITS), provides for the construction of two bridges which will connect eastbound and westbound traffic on the new east span of the San Francisco Oakland Bay Bridge (SFOBB) to the existing Yerba Buena Island (YBI) tunnel. The structures are comprised of concrete box girder bridges each approximately 40 meters high and 450 meters in length.

The project includes the construction of 11 footings, as large as 15.5 meters long, 12 meters wide and 3.5 meters deep, that will be constructed along a steep hill approximately 40 meters in height. The slope of this hill exceeds 1 to 1 in many locations and is comprised of loose sand. The original Change Order No. 10 provided for an increased design specification for earthquake loading of the temporary shoring required to construct these foundations to a minimum seismic acceleration of 0.20g. Mike Whiteside the YBI Coordination Engineer requested the change.

The design of this enhanced shoring has now been completed and this change order provides for the additional materials resulting from this enhanced design to be furnished. The major portion of the design enhancements provides for 2 rows of steel H piles to be driven uphill from the functioning sheet pile shoring. Some increases to the sizing of the actual shoring may also be provided. Five separate footings are affected by this change at four bent locations.

Labor and equipment costs associated with the actual installation of the H piles and other enhancements are deferred and shall be compensated under a supplemental change order. This change order is being processed in order to provide timely delivery of the added materials which will help to mitigate Department delays associated with the design enhancements.

The costs associated with furnishing the additional materials shall be compensated as extra work at force account at an estimated cost of $450,000.00 which shall be financed from the contract's contingency funds. A cost estimate is on file.

The total cost of this change including the deferred labor and equipment installation costs is not anticipated to exceed $950,000.

Adjustment of contract time is deferred as the change may affect the controlling operation.

Maintenance concurrence is not required as this change affects a temporary structure and doesn't affect any permanent roadway features.

ADA Notice: For individuals with sensory disabilities, this document is available in alternate formats. For information call: (916) 654-6410 or TDD (916) 654-3880 or write Records and Forms Management, 1120 N Street, MS-89, Sacramento, CA 95814.

CONCURRED BY:		
Construction Engineer:	Rajesh Oberoi	Date 1/24/11
Bridge Engineer: for	Mehran Ardakanian	Date 2/9/11
Project Engineer:		Date
Project Manager:	KEN TERPSTRA	Date 02/14/11
FHWA Rep.:		Date
Environmental:		Date
Other (specify):	Mike Whiteside (Coordination Eng)	Date 5/12/10
Other (specify):		Date
District Prior Approval By:		Date
HQ (Issue Approve) By:	SEY HOSNIEH	Date 1/24/11
Resident Engineer's Signature:	Rajesh Oberoi 1/24/11	Date

ESTIMATE OF COST

	THIS REQUEST	TOTAL TO DATE
ITEMS	$0.00	$0.00
FORCE ACCOUNT	$450,000.00	$450,000.00
AGREED PRICE	$0.00	$0.00
ADJUSTMENT	$0.00	$0.00
TOTAL	$450,000.00	$450,000.00

FEDERAL PARTICIPATION

☐ PARTICIPATING ☐ PARTICIPATING IN PART ☑ NONE
☐ NON-PARTICIPATING (MAINTENANCE) ☐ NON-PARTICIPATING

FEDERAL SEGREGATION (if more than one Funding Source or P.I.P. type)
☑ CCO FUNDED PER CONTRACT ☐ CCO FUNDED AS FOLLOWS

FEDERAL FUNDING SOURCE	PERCENT

ADA Notice: For individuals with sensory disabilities, this document is available in alternate formats. For information call: (916) 654-6410 or TDD (916) 654-3880 or write Records and Forms Management, 1120 N Street, MS-89, Sacramento, CA 95814.

STATE OF CALIFORNIA - DEPARTMENT OF TRANSPORTATION

CONTRACT CHANGE ORDER

Change Requested by: Engineer

CCO 10	Suppl. No. 2	Contract No. 04 - 0120S4	Road SF-80-12.7/13.2	FED. AID LOC.: NO FED AID

To: **M C M CONSTRUCTION INC**

You are directed to make the following changes from the plans and specifications or do the following described work not included in the plans and specifications for this contract. ***NOTE: This change order is not effective until approved by the Engineer.***

Description of work to be done, estimate of quantities and prices to be paid. (Segregate between additional work at contract price, agreed price and force account.) Unless otherwise stated, rates for rental of equipment cover only such time as equipment is actually used and no allowance will be made for idle time. This last percentage shown is the net accumulated increase or decrease from the original quantity in the Engineer's Estimate.

Extra Work at Force Account:

Provide additional funds for furnishing materials as specified under Change Order No. 10, Supplement No. 1 and as defined under this change order.

All materials furnished under this change order shall be the property of the Department.

Estimated cost of Extra Work at Force Account $150,000.00

Extra Work at Lump Sum:

Compensate the Contractor for all additional costs in the construction and design of the temporary shoring at Bent W8R, W8L, W9R and W9L (south column only) for the Westbound and Eastbound Structures (Br. No. 34-0006 L) due to the enhancements incorporated into the approved design as provided for under the original Change Order No. 10. Compensation includes but is not limited to all costs associated with driving additional piles and installing and removing additional bracing and supports.

For these costs, the Contractor shall be compensation an agreed lump sum $322,190.00. Except for the procurement of added shoring materials as defined herein, this lump sum constitutes full and final compensation, including all markups, for all additional costs incurred pertaining to all enhancements incorporated into the temporary shoring.

Materials to be compensated on a force account basis shall be defined by the 3 items listed below:

1) HP 14 x 117 steel piles to relieve overburden above the shoring.
2) WF 14 x 211steel beams to strengthen shoring walls
3) 48-inch diameter steel pipe piles 1-inch in thickness to relieve overburden above the piles

The cost of all other miscellaneous materials to be furnished shall be considered to be included in the lump sum compensation provided under this change order and no additional compensation shall be paid.

Compensation at force account shall provide for the procurement and shipment of materials to the project site. All unloading and handling costs associated with the materials shall be considered as included in the lump sum compensation provided under this change order and no additional compensation shall be paid.

Compensation provided herein is based on the HP 14x117 steel piles being left in place. In the event the removal of these piles is ordered by the Engineer, the Contractor shall be compensated for the cost of the removal.

This change order provides full compensation for all costs deferred under the original Change Order No. 10.

Cost of Extra Work at Lump Sum $322,190.00

A determination of the delay in the completion of the Contract due to this change order, the original Change Order No. 10 and Change Order No. 10, Supplement No. 1 has been made in accordance with the provisions of Change Order No. 72. There shall be no time extension as a result of these change orders.

STATE OF CALIFORNIA - DEPARTMENT OF TRANSPORTATION

CONTRACT CHANGE ORDER

Change Requested by: Engineer

CCO 10	Suppl. No. 2	Contract No. 04 - 0120S4	Road SF-80-12.7/13.2	FED. AID LOC.: NO FED AID

OK

Estimated Cost: Increase ☑ Decrease ☐ $472,190.00

By reason of this order the time of completion will be adjusted as follows: 0 days

Submitted by:		
Signature Rajesh Oberoi	Resident Engineer Rajesh Oberoi, Senior R.E.	Date 04/1/11
Approval Recommended by:		
Signature Deanna Vilcheck	Area Construction Manager Deanna Vilcheck	Date 4/6/11
Engineer Approval by:		
Signature Michael Frasca	Area Construction Manager Deanna Vilcheck	Date 4/19/11

We the undersigned contractor, have given careful consideration to the change proposed and agree, if this proposal is approved, that we will provide all equipment, furnish the materials, except as may otherwise be noted above, and perform all services necessary for the work above specified, and will accept as full payment therefor the prices shown above.

NOTE: If you, the contractor, do not sign acceptance of this order, your attention is directed to the requirements of the specifications as to proceeding with the ordered work and filing a written protest within the time therein specified.

Contractor Acceptance by:		
Signature	(Print name and title) Edmundo A. Pachi - Treasurer	Date 4-12-2011

STATE OF CALIFORNIA - DEPARTMENT OF TRANSPORTATION

CONTRACT CHANGE ORDER MEMORANDUM

TO: Deanna Vilcheck, ACM	FILE: E.A. 04 - 0120S4
	CO-RTE-PM SF-80-12.7/13.2
FROM: Rajesh Oberoi, Senior R.E.	FED. NO. NO FED AID
CCO#: 10 SUPPLEMENT#: 2 Category Code: CDSA	CONTINGENCY BALANCE (incl. this change) $5,861,878.50
COST: $472,190.00 INCREASE ☑ DECREASE ☐	HEADQUARTERS APPROVAL REQUIRED? ☑ YES ☐ NO
SUPPLEMENTAL FUNDS PROVIDED: $0.00	IS THIS REQUEST IN ACCORDANCE WITH ENVIRONMENTAL DOCUMENTS? ☑ YES ☐ NO
CCO DESCRIPTION: Shoring Enhancements	**PROJECT DESCRIPTION:** YBITS-1 (Yerba Buena Island Transition Structures)

Original Contract Time:	Time Adj. This Change:	Previously Approved CCO Time Adjustments:	Percentage Time Adjusted: (including this change)	Total # of Unreconciled Deferred Time CCO(s): (including this change)
1390 Day(s)	0 Day(s)	0 Day(s)	0 %	7

THIS CHANGE ORDER PROVIDES FOR:

Compensation to the contractor for all costs associated with the enhanced shoring specifications incorporated under the original Change Order No. 10.

This project, the Yerba Buena Island Transition Structure (YBITS), provides for the construction of two bridges which will connect eastbound and westbound traffic on the new east span of the San Francisco Oakland Bay Bridge (SFOBB) to the existing Yerba Buena Island (YBI) tunnel. The structures are comprised of concrete box girder bridges each approximately 40 meters high and 450 meters in length.

The project includes the construction of 11 footings, as large as 15.5 meters long, 12 meters wide and 3.5 meters deep, that will be constructed along a steep hill approximately 40 meters in height. The slope of this hill exceeds 1 to 1 in many locations and is comprised of loose sand. The original Change Order No. 10 provided for an increased design specification for earthquake loading of the temporary shoring required to construct these foundations to a minimum seismic acceleration of 0.20g. Mike Whiteside the YBI Coordination Engineer requested the change.

The design of this enhanced shoring has now been completed and Change Order No. 10, Supplement No. 1 provided funding for additional materials resulting from this enhanced design to be furnished. This change order will provide additional funding to furnish these materials and compensation for the installation of these materials into the shoring. The major portion of the design enhancements provides for 2 rows of steel H piles to be driven uphill from the functioning sheet pile shoring at Bents W8 and W9. Addition bracing within the shoring walls will also be provided. Five separate footings are affected by this change at four bent locations.

Labor and equipment costs along with miscellaneous materials associated with the actual installation of the H piles and additional bracing shall be compensated as an agreed lump sum price. Additional funding will also be provided for the major material procurements provided for under Change Order No. 10, Supplement No. 1. These materials are defined under this change order as the 3 major components required to be furnished. All other miscellaneous materials are compensated under the agreed lump sum price.

The costs associated with the actual installation of the H piles and additional bracing shall be compensated as extra work at an agreed lump sum of $322,190.00. Additional funding for the material procurement shall be provided as extra work at force account at an estimated cost of $150,000.00. The total change order cost of $472,190.00 shall be financed from the contract's contingency funds. A cost estimate is on file.

No adjustment of contract time shall be granted as specified under Change Order No. 72 which acted to mitigate any delay associated with this change.

Maintenance concurrence is not required as this change affects a temporary structure and doesn't affect any permanent roadway features.

ADA Notice: For individuals with sensory disabilities, this document is available in alternate formats. For information call: (916) 654-6410 or TDD (916) 654-3880 or write Records and Forms Management, 1120 N Street, MS-89, Sacramento, CA 95814.

CONCURRED BY:		
Construction Engineer: Rajesh Oberoi	RO	Date 4/1/11
Bridge Engineer:	BK	Date 4/4/11
Project Engineer:		Date
Project Manager: KEN TERPSTRA		Date 04/26/11
FHWA Rep.:		Date
Environmental:		Date
Other (specify): MIKE WHITESIDE		Date 05/06/11
Other (specify):		Date
District Prior Approval By:		Date
HQ (Issue Approve) By: LARRY SALHANEY		Date 04/06/11
Resident Engineer's Signature: Rajesh Oberoi		Date 4/1/11

ESTIMATE OF COST

	THIS REQUEST	TOTAL TO DATE
ITEMS	$0.00	$0.00
FORCE ACCOUNT	$150,000.00	$600,000.00
AGREED PRICE	$322,190.00	$322,190.00
ADJUSTMENT	$0.00	$0.00
TOTAL	$472,190.00	$922,190.00

FEDERAL PARTICIPATION

☐ PARTICIPATING ☐ PARTICIPATING IN PART ☑ NONE
☐ NON-PARTICIPATING (MAINTENANCE) ☐ NON-PARTICIPATING

FEDERAL SEGREGATION (if more than one Funding Source or P.I.P. type)
☐ CCO FUNDED PER CONTRACT ☐ CCO FUNDED AS FOLLOWS

FEDERAL FUNDING SOURCE	PERCENT

ADA Notice: For individuals with sensory disabilities, this document is available in alternate formats. For information call: (916) 654-6410 or TDD (916) 654-3880 or write Records and Forms Management, 1120 N Street, MS-89, Sacramento, CA 95814.

CONTRACT CHANGE ORDER

Change Requested by: Engineer

CCO 10	Suppl. No. 3	Contract No. 04 - 0120S4	Road SF-80-12.7/13.2	FED. AID LOC.: NO FED AID

To: **M C M CONSTRUCTION INC**

You are directed to make the following changes from the plans and specifications or do the following described work not included in the plans and specifications for this contract. ***NOTE: This change order is not effective until approved by the Engineer.***

Description of work to be done, estimate of quantities and prices to be paid. (Segregate between additional work at contract price, agreed price and force account.) Unless otherwise stated, rates for rental of equipment cover only such time as equipment is actually used and no allowance will be made for idle time. This last percentage shown is the net accumulated increase or decrease from the original quantity in the Engineer's Estimate.

Extra Work at Force Account:

Furnish and transport to the project site 55 each W14x120 or HP14X117 steel piles for Bent W8 and W9 of the YBI EB On-Ramp Structure necessary to provide for the enhanced shoring specifications incorporated under the original Change Order No. 10 as determined by the Engineer.

All materials furnished under this change order shall be the property of the Department.

Estimated cost of Extra Work at Force Account $200,000.00

Extra Work at Lump Sum:

Compensate the Contractor for all additional costs in the handling and driving of the 55 each W14x120 or HP14X117 steel piles for Bent W8 and W9 of the YBI EB On-Ramp Structure due to the enhancements incorporated into the approved design as provided for under the original Change Order No. 10.

For these costs, the Contractor shall be compensation an agreed lump sum $83,475.00. Except for the procurement of the 55 each steel piles as defined herein, this lump sum constitutes full and final compensation, including all markups, for all additional costs incurred.

Compensation provided herein is based on the 55 each steel piles being left in place. In the event the removal of these piles is ordered by the Engineer, the Contractor shall be compensated for the cost of the removal.

Estimated cost of Extra Work at Lump Sum $83,475.00

Consideration of a time adjustment will be deferred until completion of the work specified herein. Determination of a commensurate time extension will be made in accordance with Section 8-1.07, "Liquidated Damages", of the Standard Specifications and Section 10-1.22 " Progress Schedule (Critical Path Method)" of the Special Provisions.

CONTRACT CHANGE ORDER

Change Requested by: Engineer

CCO 10	Suppl. No. 3	Contract No. 04 - 0120S4	Road SF-80-12.7/13.2	FED. AID LOC.: NO FED AID

Estimated Cost: Increase ☑ Decrease ☐ $283,475.00

By reason of this order the time of completion will be adjusted as follows: Deferred

Submitted by		
Signature	Resident Engineer William Howe, Senior R.E.	Date 06/14/2011
Approval Recommended by		
Signature	Principal T.E. Mike Forner	Date 6/14/2011
Engineer Approval by		
Signature	Principal T.E. Mike Forner	Date 7/12/11

We the undersigned contractor, have given careful consideration to the change proposed and agree, if this proposal is approved, that we will provide all equipment, furnish the materials, except as may otherwise be noted above, and perform all services necessary for the work above specified, and will accept as full payment therefor the prices shown above.

NOTE: If you, the contractor, do not sign acceptance of this order, your attention is directed to the requirements of the specifications as to proceeding with the ordered work and filing a written protest within the time therein specified.

Contractor Acceptance by		
Signature	(Print name and title) Edmundo A. Ruchi - Treasurer	Date 7-1-2011

STATE OF CALIFORNIA - DEPARTMENT OF TRANSPORTATION

CONTRACT CHANGE ORDER MEMORANDUM

TO: Deanna Vilcheck, ACM /	FILE: E.A. 04 - 0120S4
	CO-RTE-PM SF-80-12.7/13.2
FROM: William Howe, Senior R.E.	FED. NO. NO FED AID
CCO#: 10 SUPPLEMENT#: 3 Category Code: CDSA	CONTINGENCY BALANCE (incl. this change) $69,779,820.50
COST: $283,475.00 INCREASE ☑ DECREASE ☐	HEADQUARTERS APPROVAL REQUIRED? ☑ YES ☐ NO
SUPPLEMENTAL FUNDS PROVIDED: $0.00	IS THIS REQUEST IN ACCORDANCE WITH ENVIRONMENTAL DOCUMENTS? ☑ YES ☐ NO
CCO DESCRIPTION: SHORING ENHANCEMENTS	**PROJECT DESCRIPTION:** YBITS-1 (Yerba Buena Island Transition Structures)

Original Contract Time:	Time Adj. This Change:	Previously Approved CCO Time Adjustments:	Percentage Time Adjusted: (including this change)	Total # of Unreconciled Deferred Time CCO(s): (including this change)
1390 Day(s)	DEF Day(s)	0 Day(s)	0 %	8

THIS CHANGE ORDER PROVIDES FOR:

Compensating the contractor for furnishing and driving additional steel piles for the YBI EB On-Ramp structure associated with the enhanced shoring specifications incorporated under the original Change Order No. 10.

This project, the Yerba Buena Island Transition Structure (YBITS), provides for the construction of two bridges which will connect eastbound and westbound traffic on the new east span of the San Francisco Oakland Bay Bridge (SFOBB) to the existing Yerba Buena Island (YBI) tunnel. The structures are comprised of concrete box girder bridges each approximately 40 meters high and 450 meters in length.

The project includes the construction of 11 footings, as large as 15.5 meters long, 12 meters wide and 3.5 meters deep, that will be constructed along a steep hill approximately 40 meters in height. The slope of this hill exceeds 1 to 1 in many locations and is comprised of loose sand. The original Change Order No. 10 provided for an increased design specification for earthquake loading of the temporary shoring required to construct these foundations to a minimum seismic acceleration of 0.20g. Mike Whiteside the YBI Coordination Engineer requested the change.

Consistent with the minimum design standard established, the placement of additional steel piles are being requested for the 2 foundations associated with the YBI EB On-Ramp structure that is being constructed adjacent to the mainline structure. The work includes furnishing and driving 55 each W14x120 or HP14X117 steel piles. The piles shall be located on the uphill side of the shoring for the 2 foundations and will act to relieve the overburden on the shoring for these foundations.

The original Change Order No. 10 was approved by Head Quarters Construction with the cost anticipated not to exceed $950,000. This cost didn't anticipate enhancements being required for the YBI EB On-Ramp Structure. Consistent with the prior supplements to this change order, compensation for furnishing the piles will be paid as extra work at force account with the costs of handling and driving the piles being compensated at an agreed lump sum price.

The costs associated with the actual installation of the 55 piles shall be compensated as extra work at an agreed lump sum of $83,475.00. Additional funding for the procurement of the steel piles shall be provided as extra work at force account at an estimated cost of $200,000.00. The total change order cost of $283,475.00 shall be financed from the contract's contingency funds. A cost estimate is on file.

This change has been approved by TBPOC on June 2nd, 2011.

Adjustment of contract time is deferred as the work may affect the controlling operation.

Maintenance concurrence is not required as this change affects a temporary structure and doesn't affect any permanent roadway features.

DA Notice: For individuals with sensory disabilities, this document is available in alternate formats. For information call: (916) 654-6410 or TDD (916) 654-3880 or write Records and Forms Management, 1120 N Street, MS-89, Sacramento, CA 95814.

CONCURRED BY:		
Construction Engineer:	for William Howe	Date 6/14/11
Bridge Engineer:	Mehran Ardakanian	Date 6/14/11
Project Engineer:	Bob Zandipour	Date 07/14/11
Project Manager:	Ken Terpstra	Date 07/13/11
FHWA Rep.:		Date
Environmental:		Date
Other (specify):		Date
Other (specify):		Date
District Prior Approval By:		Date
HQ (Issue Approve) By:		Date
Resident Engineer's Signature:		Date 6/14/11

ESTIMATE OF COST

	THIS REQUEST	TOTAL TO DATE
ITEMS	$0.00	$0.00
FORCE ACCOUNT	$200,000.00	$800,000.00
AGREED PRICE	$83,475.00	$405,665.00
ADJUSTMENT	$0.00	$0.00
TOTAL	$283,475.00	$1,205,665.00

FEDERAL PARTICIPATION

☐ PARTICIPATING ☐ PARTICIPATING IN PART ☑ NONE
☐ NON-PARTICIPATING (MAINTENANCE) ☐ NON-PARTICIPATING

FEDERAL SEGREGATION (if more than one Funding Source or P.I.P. type)
☑ CCO FUNDED PER CONTRACT ☐ CCO FUNDED AS FOLLOWS

FEDERAL FUNDING SOURCE	PERCENT

ADA Notice: For individuals with sensory disabilities, this document is available in alternate formats. For information call: (916) 654-6410 or TDD (916) 654-3880 or write Records and Forms Management, 1120 N Street, MS-89, Sacramento, CA 95814.

STATE OF CALIFORNIA - DEPARTMENT OF TRANSPORTATION

CONTRACT CHANGE ORDER

Change Requested by: Engineer

CCO 11	Suppl. No. 0	Contract No. 04 - 0120S4	Road SF-80-12.7/13.2	FED. AID LOC.: NO FED AID

To: **M C M CONSTRUCTION INC**

You are directed to make the following changes from the plans and specifications or do the following described work not included in the plans and specifications for this contract. ***NOTE: This change order is not effective until approved by the Engineer.***

Description of work to be done, estimate of quantities and prices to be paid. (Segregate between additional work at contract price, agreed price and force account.) Unless otherwise stated, rates for rental of equipment cover only such time as equipment is actually used and no allowance will be made for idle time. This last percentage shown is the net accumulated increase or decrease from the original quantity in the Engineer's Estimate.

Extra Work at Force Account:

In accordance with § 9-1.03B " Work Performed by Special Forces or Other Special Services " of the Standard Specifications and as directed by the Engineer, the Contractor shall hire a Commercial pilot and helicopter for the purpose of taking aerial digital photographs. Each flight will be aproximately 2 hours in length.

The State shall provide a photographer and the photographic equipment.

Estimated cost of Extra Work at Force Account ..... $ 10,000.00

Time adjustment is not warranted, as the affected work is not anticipated to be a controlling operation on this contract.

Estimated Cost: **Increase** ☑ **Decrease** ☐ **$10,000.00**

By reason of this order the time of completion will be adjusted as follows: 0 days

Submitted by

Signature	Resident Engineer	Date
Rajesh Oberoi	RAJESH OBEROI, Senior R.E.	5/12/10

Approval Recommended by

Signature	Senior Resident Engineer	Date
Rajesh Oberoi	Rajesh Oberoi	5/12/10

Engineer Approval by

Signature	Senior Resident Engineer	Date
Rajesh Oberoi	Rajesh Oberoi	7/12/10

We the undersigned contractor, have given careful consideration to the change proposed and agree, if this proposal is approved, that we will provide all equipment, furnish the materials, except as may otherwise be noted above, and perform all services necessary for the work above specified, and will accept as full payment therefor the prices shown above.

NOTE: If you, the contractor, do not sign acceptance of this order, your attention is directed to the requirements of the specifications as to proceeding with the ordered work and filing a written protest within the time therein specified.

Contractor Acceptance by

Signature	(Print name and title)	Date
	COMUNDO A. PUCHI, TREASURER	6/29/10

STATE OF CALIFORNIA - DEPARTMENT OF TRANSPORTATION

CONTRACT CHANGE ORDER MEMORANDUM

DATE: 5/12/2010 Page 1 of 1

TO: DEANNA VILCHECK, ACM / DV	FILE: E.A. 04 - 0120S4
FROM: RAJESH OBEROI, Senior R.E.	CO-RTE-PM SF-80-12.7/13.2
	FED. NO. NO FED AID
CCO#: 11 SUPPLEMENT#: 0 Category Code: ~~AXZZ~~ CXXX	CONTINGENCY BALANCE (incl. this change) $32,018,152.00
COST: $10,000.00 INCREASE ☑ DECREASE ☐	HEADQUARTERS APPROVAL REQUIRED? ☐ YES ☑ NO
SUPPLEMENTAL FUNDS PROVIDED: $0.00	IS THIS REQUEST IN ACCORDANCE WITH ENVIRONMENTAL DOCUMENTS? ☑ YES ☐ NO
CCO DESCRIPTION:	**PROJECT DESCRIPTION:** YBITS-1 (Yerba Buena Island Transition Structures)

Original Contract Time:	Time Adj. This Change:	Previously Approved CCO Time Adjustments:	Percentage Time Adjusted: (including this change)	Total # of Unreconciled Deferred Time CCO(s): (including this change)
1390 Day(s)	0 Day(s)	0 Day(s)	0 %	0

THIS CHANGE ORDER PROVIDES FOR:

A Commercial Pilot and helicopter for the purpose of taking aerial digital photographs.

The photographs will be used to document the progress of the Yerba Buena Island Transition Structure (YBITS-1) project and by the public Information Office for public outreach.

This work will be done at Extra Work at Force Account at a cost of $10,000.00 and in accordance with § 9-1.03B "Work Performed by Special Forces or Other Special Services" of the Standard Specifications. This change can be financed from Contingency Funds.

No adjustment of contract time is warranted, as this change does not affect the controlling operation.

Maintenance concurrence is not necessary for this chane.

CONCURRED BY:	
Construction Engineer: RO	Date 5/12/10
Bridge Engineer:	Date
Project Engineer:	Date
Project Manager:	Date
FHWA Rep.:	Date
Environmental:	Date
Other (specify):	Date
Other (specify):	Date
District Prior Approval By:	Date
HQ (Issue Approve) By:	Date
Resident Engineer's Signature: Rajesh Oberoi	Date 5/12/10

ESTIMATE OF COST

	THIS REQUEST	TOTAL TO DATE
ITEMS	$0.00	$0.00
FORCE ACCOUNT	$10,000.00	$10,000.00
AGREED PRICE	$0.00	$0.00
ADJUSTMENT	$0.00	$0.00
TOTAL	$10,000.00	$10,000.00

FEDERAL PARTICIPATION

☐ PARTICIPATING ☐ PARTICIPATING IN PART ☑ NONE
☐ NON-PARTICIPATING (MAINTENANCE) ☐ NON-PARTICIPATING

FEDERAL SEGREGATION (if more than one Funding Source or P.I.P. type)
☑ CCO FUNDED PER CONTRACT ☐ CCO FUNDED AS FOLLOWS

FEDERAL FUNDING SOURCE	PERCENT

ADA Notice: For individuals with sensory disabilities, this document is available in alternate formats. For information call: (916) 654-6410 or TDD (916) 654-3880 or write Records and Forms Management, 1120 N Street, MS-69, Sacramento, CA 95814.

STATE OF CALIFORNIA - DEPARTMENT OF TRANSPORTATION

CONTRACT CHANGE ORDER

Change Requested by: Engineer

CCO 11	Suppl. No. 1	Contract No. 04 - 0120S4	Road SF-80-12.7/13.2	FED. AID LOC.: NO FED AID

To: **M C M CONSTRUCTION INC**

You are directed to make the following changes from the plans and specifications or do the following described work not included in the plans and specifications for this contract. ***NOTE: This change order is not effective until approved by the Engineer.***

Description of work to be done, estimate of quantities and prices to be paid. (Segregate between additional work at contract price, agreed price and force account.) Unless otherwise stated, rates for rental of equipment cover only such time as equipment is actually used and no allowance will be made for idle time. This last percentage shown is the net accumulated increase or decrease from the original quantity in the Engineer's Estimate.

Extra Work at Force Account:

Provide additional funds to perform extra work as specified in Contract Change Order No. 011 S0.

Estimated cost of Extra Work at Force Account $75,000.00

This work will be done as Extra Work at Force Account and in accordance with Section 9-1.03B "Work Performed by Special Forces or Other Special Services" of the Standard Specifications.

Estimated Cost: Increase ☑ Decrease ☐ **$75,000.00**

By reason of this order the time of completion will be adjusted as follows: 0 days

Submitted by

Signature William Howe	Resident Engineer William Howe, Senior R.E.	Date 12·13·11

Approval Recommended by

Signature Deanna Vilcheck	Area Construction Manager Deanna Vilcheck	Date 12/15/11

Engineer Approval by

Signature Michael Foum FOR	Area Construction Manager Deanna Vilcheck	Date 12/21/11

We the undersigned contractor, have given careful consideration to the change proposed and agree, if this proposal is approved, that we will provide all equipment, furnish the materials, except as may otherwise be noted above, and perform all services necessary for the work above specified, and will accept as full payment therefor the prices shown above.

NOTE: If you, the contractor, do not sign acceptance of this order, your attention is directed to the requirements of the specifications as to proceeding with the ordered work and filing a written protest within the time therein specified.

Contractor Acceptance by

Signature Signature Not Required	(Print name and title)	Date

STATE OF CALIFORNIA - DEPARTMENT OF TRANSPORTATION

CONTRACT CHANGE ORDER MEMORANDUM

DATE: 12/12/2011 Page 1 of 1

TO: Deanna Vilcheck, ACM / DV	FILE: E.A. 04 - 0120S4
	CO-RTE-PM SF-80-12.7/13.2
FROM: William Howe, Senior R.E.	FED. NO. NO FED AID
CCO#: 11 SUPPLEMENT#: 1 Category Code: CXXX	CONTINGENCY BALANCE (incl. this change) $86,579,021.49
COST: $75,000.00 INCREASE ☑ DECREASE ☐	HEADQUARTERS APPROVAL REQUIRED? ☐ YES ☑ NO
SUPPLEMENTAL FUNDS PROVIDED: $0.00	IS THIS REQUEST IN ACCORDANCE WITH ENVIRONMENTAL DOCUMENTS? ☑ YES ☐ NO
CCO DESCRIPTION: Supplemental funds Aerial Photography	**PROJECT DESCRIPTION:** YBITS-1 (Yerba Buena Island Transition Structures)

Original Contract Time:	Time Adj. This Change:	Previously Approved CCO Time Adjustments:	Percentage Time Adjusted: (including this change)	Total # of Unreconciled Deferred Time CCO(s): (including this change)
1390 Day(s)	0 Day(s)	0 Day(s)	0 %	9

THIS CHANGE ORDER PROVIDES FOR:

Additional funds to compensate costs incurred for Commercial Pilot and helicopter for the purpose of taking aerial digital photographs.

This project, the Yerba Buena Island Transition Structure (YBITS), provides for the construction of two bridges which will connect eastbound and westbound traffic on the new east span of the San Francisco Oakland Bay Bridge (SFOBB) to the existing Yerba Buena Island (YBI) tunnel.

It was requested by the Engineer to take aerial photographs during the construction phase of the project to document the progress of the project and also to utilize them for public outreach.

The original Change Order 11 S0 provided $10,000 to compensate for the costs incurred .The intial Change Order underestimiated scope and time of work to be performed and has considerably increased costs.This change order provides additional funds based on a revised scope and time of work to be done.

This work will be done as Extra Work at Force Account at an estimaed cost of $75,000.00, and will be financed from Contracts Contingency Funds. A detailed cost estimate is on file.

No adjustment of contract time is warranted, as this change does not affect the controlling operation.

Maintenance concurrence is not necessary for this change.

CONCURRED BY:		
Construction Engineer:	William Howe	Date 12-13-11
Bridge Engineer:		Date
Project Engineer:	Bob Zandipour, Design	Date 12-16-11
Project Manager:	Ken Terpstra KT	Date 12-20-11
FHWA Rep.:		Date
Environmental:		Date
Other (specify):		Date
Other (specify):		Date
District Prior Approval By:		Date
HQ (Issue Approve) By:		Date
Resident Engineer's Signature: William Howe		Date 12-13-11

ESTIMATE OF COST

	THIS REQUEST	TOTAL TO DATE
ITEMS	$0.00	$0.00
FORCE ACCOUNT	$75,000.00	$85,000.00
AGREED PRICE	$0.00	$0.00
ADJUSTMENT	$0.00	$0.00
TOTAL	$75,000.00	$85,000.00

FEDERAL PARTICIPATION

☐ PARTICIPATING ☐ PARTICIPATING IN PART ☑ NONE
☐ NON-PARTICIPATING (MAINTENANCE) ☐ NON-PARTICIPATING

FEDERAL SEGREGATION (if more than one Funding Source or P.I.P. type)
☑ CCO FUNDED PER CONTRACT ☐ CCO FUNDED AS FOLLOWS

FEDERAL FUNDING SOURCE	PERCENT

ADA Notice: For individuals with sensory disabilities, this document is available in alternate formats. For information call: (916) 654-6410 or TDD (916) 654-3880 or write Records and Forms Management, 1120 N Street, MS-89, Sacramento, CA 95814.

STATE OF CALIFORNIA - DEPARTMENT OF TRANSPORTATION

CONTRACT CHANGE ORDER

Change Requested by: Engineer

CCO: 13	Suppl. No. 0	Contract No. 04 - 0120S4	Road SF-80-12.7/13.2	FED. AID LOC.: NO FED AID

To: **M C M CONSTRUCTION INC**

You are directed to make the following changes from the plans and specifications or do the following described work not included in the plans and specifications for this contract. ***NOTE: This change order is not effective until approved by the Engineer.***

Description of work to be done, estimate of quantities and prices to be paid. (Segregate between additional work at contract price, agreed price and force account.) Unless otherwise stated, rates for rental of equipment cover only such time as equipment is actually used and no allowance will be made for idle time. This last percentage shown is the net accumulated increase or decrease from the original quantity in the Engineer's Estimate.

Revise the project limits to encompass the limits between the Yerba Buena Island (YBI) tunnel to the San Francisco Oakland Bay Bridge Toll Plaza as follows:

Previous Construction Limits: 04-SF-80-KP 12.7/13.2

Revised Construction Limits: 04-SF-80 KP 12.2/KP 14.3, 04-ALA-80 KP 0.0/KP 4.0

Compensation for additional cost and / or time impacts associated with performing extra work within the extended contract limits will be addressed in separate change orders that direct the additional work.

This change order does not change any of the provisions of Special Provision section 5-1.11 Areas for Contractor's Use.

There shall be no cost or credit to the state by reason of this change.

Estimated Cost: Increase ☐ Decrease ☐ **$0.00**

By reason of this order the time of completion will be adjusted as follows: 0 days

Submitted by

Signature Rajesh Oberoi	Resident Engineer Rajesh Oberoi, Senior R.E.	Date 9/22/10

Approval Recommended by

Signature [illegible]	Area Construction Manager Deanna Vilcheck	Date 9/27/10

Engineer Approval by

Signature Deanna Vilcheck	Area Construction Manager Deanna Vilcheck	Date 10/14/10

We the undersigned contractor, have given careful consideration to the change proposed and agree, if this proposal is approved, that we will provide all equipment, furnish the materials, except as may otherwise be noted above, and perform all services necessary for the work above specified, and will accept as full payment therefor the prices shown above.

NOTE: If you, the contractor, do not sign acceptance of this order, your attention is directed to the requirements of the specifications as to proceeding with the ordered work and filing a written protest within the time therein specified.

Contractor Acceptance by

Signature [illegible]	(Print name and title) Edmund Pucci - Treasurer	Date 10-11-2010

STATE OF CALIFORNIA - DEPARTMENT OF TRANSPORTATION

CONTRACT CHANGE ORDER MEMORANDUM

DATE: 8/5/2010 Page 1 of 1

TO: Deanna Vilcheck, ACM /	FILE: E.A. 04 - 0120S4
FROM: Rajesh Oberoi, Senior R.E.	CO-RTE-PM SF-80-12.7/13.2
	FED. NO. NO FED AID
CCO#: 13 SUPPLEMENT#: 0 Category Code: CXSX	CONTINGENCY BALANCE (incl. this change) $31,926,772.00
COST: $0.00 INCREASE ☐ DECREASE ☐	HEADQUARTERS APPROVAL REQUIRED? ☑ YES ☐ NO
SUPPLEMENTAL FUNDS PROVIDED: $0.00	IS THIS REQUEST IN ACCORDANCE WITH ENVIRONMENTAL DOCUMENTS? ☑ YES ☐ NO
CCO DESCRIPTION:	**PROJECT DESCRIPTION:** YBITS-1 (Yerba Buena Island Transition Structures)

Original Contract Time:	Time Adj. This Change:	Previously Approved CCO Time Adjustments:	Percentage Time Adjusted: (including this change)	Total # of Unreconciled Deferred Time CCO(s): (including this change)
1390 Day(s)	0 Day(s)	0 Day(s)	0 %	0

THIS CHANGE ORDER PROVIDES FOR:

Revising the projects limits to encompass the limits between the yerba buena Island (YBI) tunnel to the San Francisco Oakland Bay Bridge (SFOBB) toll Plaza along the Route 80 corridor in Sanfrancisco and Alameda counties.

The project limits are being revised in order for the Contractor to perform anticipated additional work within the extended limits. For any additional work there will be a separate new change order issued.

Anticipated additional change order work includes the construction of additional traffic control measures on the existing bridge related to the temporary bypass (South South Detour), Coast Guard road related activities, completion of some of the features of the Skyway and Oakland Touchdown (such as bikepath measures and electrical measures) that have not been completed, and any toll plaza measures.

This change order has been discussed with Jon Tapping, Headquarters Construction Coordinator – Toll Bridge, in regard to the need for a Director's Order as addressed in Section 5-302 of the Construction manual. It has been determined that this change order is within the scope of the project and therefore a Director's Order is not required.

This Change Order received concurrence from Deanna Vilcheck, Area Construction Manager.

No adjustment of contract time is warranted, as this change will not affect the controlling operation.

Maintenance concurrence is not required, as this work does not affect any permanent roadway features.

CONCURRED BY:		
Construction Engineer:	Rajesh Oberoi RO.	Date 9/22/10
Bridge Engineer:		Date
Project Engineer:		Date
Project Manager:		Date
FHWA Rep.:		Date
Environmental:		Date
Other (specify):		Date
Other (specify):		Date
District Prior Approval By:		Date
HQ (Issue Approve) By:	L. SALHANEY	Date 9/28/10
Resident Engineer's Signature:	Rajesh Oberoi	Date 9/22/10

ESTIMATE OF COST

	THIS REQUEST	TOTAL TO DATE
ITEMS	$0.00	$0.00
FORCE ACCOUNT	$0.00	$0.00
AGREED PRICE	$0.00	$0.00
ADJUSTMENT	$0.00	$0.00
TOTAL	$0.00	$0.00

FEDERAL PARTICIPATION

☐ PARTICIPATING ☐ PARTICIPATING IN PART ☑ NONE
☐ NON-PARTICIPATING (MAINTENANCE) ☐ NON-PARTICIPATING

FEDERAL SEGREGATION (if more than one Funding Source or P.I.P. type)
☐ CCO FUNDED PER CONTRACT ☐ CCO FUNDED AS FOLLOWS

FEDERAL FUNDING SOURCE	PERCENT

ADA Notice: For individuals with sensory disabilities, this document is available in alternate formats. For information call: (916) 654-6410 or TDD (916) 654-3880 or write Records and Forms Management, 1120 N Street, MS-89, Sacramento, CA 95814.

STATE OF CALIFORNIA - DEPARTMENT OF TRANSPORTATION

CONTRACT CHANGE ORDER

Change Requested by: Engineer

CCO 5	Suppl. No. 3	Contract No. 04 - 0120S4	Road SF-80-12.7/13.2	FED. AID LOC.: NO FED AID

To: **M C M CONSTRUCTION INC**

You are directed to make the following changes from the plans and specifications or do the following described work not included in the plans and specifications for this contract. ***NOTE: This change order is not effective until approved by the Engineer.***

Description of work to be done, estimate of quantities and prices to be paid. (Segregate between additional work at contract price, agreed price and force account.) Unless otherwise stated, rates for rental of equipment cover only such time as equipment is actually used and no allowance will be made for idle time. This last percentage shown is the net accumulated increase or decrease from the original quantity in the Engineer's Estimate.

Furnish the following additional system component for the Department as specified under Section 10-1.25, Document Management System, of the Special Provisions for use by the Department in conjunction with the Department's document management system through the life of the contract:

One Color copier / laser printer / scanner, Ricoh Aficio MP2851SP or equal. Machine shall include 50-Sheet Automatic Reversing Document Feeder; 2 each 500 sheet cassettes; Cabinet; full Toner/Developer; Data Security Kit; Surge Protector; and print or scan data through a Universal Serial Bus (USB) port (non-network) compatable with the latest Microsoft Windows operating system utilized by the Department. Maintenance through the life of the contract is included, assuming a maximum of 120,000 copes are printed.

Adjustment of Compensation at Lump Sum:

Compensate the Contractor for furnishing this additional system component as specified under this change order supplement.

For this change, the Contractor shall be compensated an Agreed Lump sum of $9,425.00, which constitutes full and final compensation, including all markups, for all additional costs incurred.

Adjustment of Compensation at Lump Sum = $9,425.00

Estimated Cost: Increase ☑ **Decrease** ☐ **$9,425.00**

By reason of this order the time of completion will be adjusted as follows: 0 days

Submitted by

Signature	Resident Engineer	Date
William Howe	William Howe, Senior R.E.	05·25·12

Approval Recommended by

Signature	Senior Resident Engineer	Date
William Howe Deanna Vilchez	William Howe ACM Deanna Vilchez 6/4/12	05·25·12

Engineer Approval by

Signature	Senior Resident Engineer	Date
Deanna Vilchez	William Howe ACM Deanna Vilchez	6/8/12

We the undersigned contractor, have given careful consideration to the change proposed and agree, if this proposal is approved, that we will provide all equipment, furnish the materials, except as may otherwise be noted above, and perform all services necessary for the work above specified, and will accept as full payment therefor the prices shown above.

NOTE: If you, the contractor, do not sign acceptance of this order, your attention is directed to the requirements of the specifications as to proceeding with the ordered work and filing a written protest within the time therein specified.

Contractor Acceptance by

Signature	(Print name and title)	Date
	JAMES A. CARTER, PRESIDENT	6/4/12

STATE OF CALIFORNIA - DEPARTMENT OF TRANSPORTATION

CONTRACT CHANGE ORDER

Change Requested by: Engineer

CCO 13	Suppl. No. 1	Contract No. 04 - 0120S4	Road SF-80-12.7/13.2	FED. AID LOC.: NO FED AID

To: **M C M CONSTRUCTION INC**

You are directed to make the following changes from the plans and specifications or do the following described work not included in the plans and specifications for this contract. ***NOTE: This change order is not effective until approved by the Engineer.***

Description of work to be done, estimate of quantities and prices to be paid. (Segregate between additional work at contract price, agreed price and force account.) Unless otherwise stated, rates for rental of equipment cover only such time as equipment is actually used and no allowance will be made for idle time. This last percentage shown is the net accumulated increase or decrease from the original quantity in the Engineer's Estimate.

Revise the project construction limits to encompass the limits between the Sterling Substation east of 2nd St. in the City and County of San Francisco to the San Francisco Oakland Bay Bridge Toll Plaza in Alameda County. The new construction limits shall be revised as listed below:

Revised Construction Limits: 04-SF-80 KP 8.5/KP 14.3, 04-ALA-80 KP 0.0/KP 4.0

Compensation for additional cost or time impacts associated with performing extra work within the extended construction limits will be addressed under separate change orders that will incorporate the additional work into the Contract.

This change order does not change any provisions of Section 5-1.11 "Areas for Contractor's Use" of the Contract Special Provisions.

There is no cost associated with this change order.

Estimated Cost: **Increase** ☐ **Decrease** ☐ **$0.00**

By reason of this order the time of completion will be adjusted as follows: 0 days

Submitted by		
Signature Michael Frame FOR	**Resident Engineer** William Howe, Senior R.E.	**Date** 5/11/12
Approval Recommended by		
Signature	**Region Construction Division Chief** Tony Anziano	**Date** 5/11/12
Engineer Approval by		
Signature	**Region Construction Division Chief** Tony Anziano	**Date** 8/1/12

We the undersigned contractor, have given careful consideration to the change proposed and agree, if this proposal is approved, that we will provide all equipment, furnish the materials, except as may otherwise be noted above, and perform all services necessary for the work above specified, and will accept as full payment therefor the prices shown above.

NOTE: If you, the contractor, do not sign acceptance of this order, your attention is directed to the requirements of the specifications as to proceeding with the ordered work and filing a written protest within the time therein specified.

Contractor Acceptance by		
Signature	**(Print name and title)** JAMES A. CARTER, PRESIDENT	**Date** 5/25/12

STATE OF CALIFORNIA - DEPARTMENT OF TRANSPORTATION

CONTRACT CHANGE ORDER

Change Requested by: Engineer

CCO 21	Suppl. No. 2	Contract No. 04 - 0120S4	Road SF-80-12.7/13.2	FED. AID LOC.: NO FED AID

To: **M C M CONSTRUCTION INC**

You are directed to make the following changes from the plans and specifications or do the following described work not included in the plans and specifications for this contract. ***NOTE: This change order is not effective until approved by the Engineer.***

Description of work to be done, estimate of quantities and prices to be paid. (Segregate between additional work at contract price, agreed price and force account.) Unless otherwise stated, rates for rental of equipment cover only such time as equipment is actually used and no allowance will be made for idle time. This last percentage shown is the net accumulated increase or decrease from the original quantity in the Engineer's Estimate.

Extra Work at Force Account:

Provide additional funds for performing all work necessary in order to comply with the Department's current Statewide General Permit issued by the State Water Resources Control Board (SWRCB) titled "Order No. 2009-0009-DWQ, National Pollutant Discharge Elimination System (NPDES) General Permit No. CAS000002, Waste Discharge Requirements for Discharges of Storm Water Runoff Associated with Construction and Land Disturbance Activities", as specified under the Special Provision sections listed under Change Order No. 21, Supplement No. 1, including the revisions incorporated unde the original Change Order No. 21, Supplement No. 0, and as determined by the Engineer.

Estimated Cost of Extra Work at Force Account = $1,500,000.00

Consideration of a time adjustment will be deferred until completion of the work specified herein. Determination of a commensurate time extension will be made in accordance with Section 8-1.07, "Liquidated Damages", of the Standard Specifications.

Estimated Cost: **Increase** ☑ **Decrease** ☐ **$1,500,000.00**

By reason of this order the time of completion will be adjusted as follows: Deferred

Submitted by		
Signature William Howe	Resident Engineer William Howe, Senior R.E.	Date 05.08.12
Approval Recommended by		
Signature Michael Forner	Principal T.E. Mike Forner	Date 5/8/12
Engineer Approval by		
Signature Michael Forner	Principal T.E. Mike Forner	Date 6/14/12

We the undersigned contractor, have given careful consideration to the change proposed and agree, if this proposal is approved, that we will provide all equipment, furnish the materials, except as may otherwise be noted above, and perform all services necessary for the work above specified, and will accept as full payment therefor the prices shown above.

NOTE: If you, the contractor, do not sign acceptance of this order, your attention is directed to the requirements of the specifications as to proceeding with the ordered work and filing a written protest within the time therein specified.

Contractor Acceptance by		
Signature	(Print name and title) Edmund A. Pucchi, Treasurer	Date 6-12-2012

RECEIVED JUN 13 2012

STATE OF CALIFORNIA - DEPARTMENT OF TRANSPORTATION

CONTRACT CHANGE ORDER MEMORANDUM

DATE: 5/23/2012 Page 1 of 1

TO: Deanna Vilcheck, ACM /	FILE: E.A. 04 - 0120S4
	CO-RTE-PM SF-80-12.7/13.2
FROM: William Howe, Senior R.E.	FED. NO. NO FED AID
CCO#: 5 SUPPLEMENT#: 3 Category Code: CXSA	CONTINGENCY BALANCE (incl. this change) $68,593,820.00
COST: $9,425.00 INCREASE ☑ DECREASE ☐	HEADQUARTERS APPROVAL REQUIRED? ☐ YES ☑ NO
SUPPLEMENTAL FUNDS PROVIDED: $0.00	IS THIS REQUEST IN ACCORDANCE WITH ENVIRONMENTAL DOCUMENTS? ☑ YES ☐ NO
CCO DESCRIPTION: Additional Field Office Scanner	**PROJECT DESCRIPTION:** YBITS-1 (Yerba Buena Island Transition Structures)

Original Contract Time:	Time Adj. This Change:	Previously Approved CCO Time Adjustments:	Percentage Time Adjusted: (including this change)	Total # of Unreconciled Deferred Time CCO(s): (including this change)
1390 Day(s)	0 Day(s)	0 Day(s)	0 %	9

THIS CHANGE ORDER PROVIDES FOR:

This change order provides for compensation to the Contractor for costs incurred to add a scanner / printer to the document management system.

This contract provides for the construction of the Yerba Buena Island Transition Structures for the east span of the new San Francisco Oakland Bay Bridge (SFOBB).

Original Contract Change Order No. 5 S0, along with supplements S1 and S2, eliminated the use of a specific document management software system (PMIV) in favor of a less expensive web based system developed by the Department. The CCO and supplements 1 and 2 provided components such as computer systems and network copier / scanners, which had been eliminated when the PMIV system was eliminated, but are still necessary to run the project's current document management system. As the work has progressed, one limitation of the document management system has been that the Yerba Buena Island site trailer does not have a scanner; at times, this has resulted in delays in processing documents. CCO supplement 3 will add a scanner / printer for the Yerba Buena Island site trailer, which will be used in addition to the equipment provided at the site's Burma Road trailer, to make the overall Document Management System more efficient.

For this work the Contractor will be compensated $9,425.00 as a Lump Sum, which will be financed from the contract's contingency funds. A detailed cost analysis for this change is on file in the project records.

No time adjustment is warranted for this change, as it does not affect the controlling operation.

Deanna Vilcheck, Supervisory Engineer for Construction, requested this change.

Maintenance concurrence is not required as this is an administrative change, which does not affect any permanent roadway features.

CONCURRED BY:		
Construction Engineer:	William Howe	Date 05-25-12
Bridge Engineer:	Mehran Ardakanian	Date
Project Engineer:	Bob Zandipour, Design	Date 5-25-12
Project Manager:	Ken Terpstra	Date 5-26-12
FHWA Rep.:		Date
Environmental:		Date
Other (specify):		Date
Other (specify):		Date
District Prior Approval By:		Date
HQ (Issue Approve) By:	Larry Salhaney	Date 6-8-12
Resident Engineer's Signature:	William Howe	Date 05-25-12

ESTIMATE OF COST

	THIS REQUEST	TOTAL TO DATE
ITEMS	$0.00	($599,610.00)
FORCE ACCOUNT	$0.00	$0.00
AGREED PRICE	$0.00	$0.00
ADJUSTMENT	$9,425.00	$278,102.50
TOTAL	$9,425.00	($321,507.50)

FEDERAL PARTICIPATION

☐ PARTICIPATING ☐ PARTICIPATING IN PART ☑ NONE
☐ NON-PARTICIPATING (MAINTENANCE) ☐ NON-PARTICIPATING

FEDERAL SEGREGATION (if more than one Funding Source or P.I.P. type)
☐ CCO FUNDED PER CONTRACT ☐ CCO FUNDED AS FOLLOWS

FEDERAL FUNDING SOURCE	PERCENT

ADA Notice: For individuals with sensory disabilities, this document is available in alternate formats. For information call [illegible]
Records and Forms Management, 1120 N Street, MS-89, Sacramento, CA 95814.

STATE OF CALIFORNIA - DEPARTMENT OF TRANSPORTATION

CONTRACT CHANGE ORDER MEMORANDUM

TO: Deanna Vilcheck, ACM / Td	FILE: E.A. 04 - 0120S4
	CO-RTE-PM SF-80-12.7/13.2
FROM: William Howe, Senior R.E.	FED. NO. NO FED AID
CCO#: 13 SUPPLEMENT#: 1 Category Code: CXSX	CONTINGENCY BALANCE (incl. this change) $70,685,316.00
COST: $0.00 INCREASE ☐ DECREASE ☐	HEADQUARTERS APPROVAL REQUIRED? ☑ YES ☐ NO
SUPPLEMENTAL FUNDS PROVIDED: $0.00	IS THIS REQUEST IN ACCORDANCE WITH ENVIRONMENTAL DOCUMENTS? ☑ YES ☐ NO
CCO DESCRIPTION: Extend Contract Project Limits to SF	**PROJECT DESCRIPTION:** YBITS-1 (Yerba Buena Island Transition Structures)

Original Contract Time:	Time Adj. This Change:	Previously Approved CCO Time Adjustments:	Percentage Time Adjusted: (including this change)	Total # of Unreconciled Deferred Time CCO(s): (including this change)
1390 Day(s)	0 Day(s)	0 Day(s)	0 %	9

THIS CHANGE ORDER PROVIDES FOR:

This change order provides for revising the projects limits along the Route 80 corridor to encompass the limits between the Sterling Substation east of 2nd St. in the City and County of San Francisco to the San Francisco Oakland Bay Bridge (SFOBB) Toll Plaza in Alameda County.

The original Change Order No. 13 S0 extended the original projects construction limits to the east to allow for required SFOBB east span corridor wide electrical work to be performed up to the SFOBB Toll Plaza. This supplemental change order will extend the construction limits to the west in order to complete electrical work across the entire SFOBB corridor (both east and west span).

The project limits are being revised in order for the Contractor to perform anticipated additional work within the extended limits. The change order work will need to be performed at the Sterling Substation at the west approach of the SFOBB in San Francisco in order to synchronize the relays for the 15 KV power line, which spans the entire SFOBB corridor. This work was not anticipated under the original contract work limits. A separate change order shall be issued to incorporate the actual work into the contract.

This change order has been discussed and concurred with Jon Tapping, Headquarters Construction Coordinator, Toll Bridge, on May 8, 2012, in regard to the need for a Director's Order as addressed in Section 5-302 of the Construction Manual. It has been determined that this change order is within the scope of the project and therefore a Director's Order is not required.

This change order has been discussed and concurred with Mike Forner, Principal Transportation Engineer, on May 9, 2012.

This change order has been discussed, concurred and recommended by Tony Anziano, Region Construction Division Chief, on May 10, 2012.

This revision to the project work limits shall be issued as a no cost change order.

No adjustment of contract time is warranted, as this change will not affect the controlling operation.

Maintenance concurrence is not required, as this is an administrative change and does not affect any permanent roadway features.

ADA Notice: For individuals with sensory disabilities, this document is available in alternate formats. For information call [illegible]
Records and Forms Management, 1120 N Street, MS-89, Sacramento, CA 95814

CONCURRED BY:		
Construction Engineer:	William Howe	Date 05.10.12
Bridge Engineer:	Mehran Ardakanian	Date
Project Engineer:	Bob Zandipour, Design	Date 5-9-12
Project Manager:	Ken Terpstra	Date 5-9-12
FHWA Rep.:		Date
Environmental:		Date
Other (specify):		Date
Other (specify):		Date
District Prior Approval By:		Date
HQ (Issue Approve) By:	Larry Salhaney	Date 5-11-12
Resident Engineer's Signature: William Howe		Date 05-10-12

ESTIMATE OF COST

	THIS REQUEST	TOTAL TO DATE
ITEMS	$0.00	$0.00
FORCE ACCOUNT	$0.00	$0.00
AGREED PRICE	$0.00	$0.00
ADJUSTMENT	$0.00	$0.00
TOTAL	$0.00	$0.00

FEDERAL PARTICIPATION

☐ PARTICIPATING ☐ PARTICIPATING IN PART ☑ NONE
☐ NON-PARTICIPATING (MAINTENANCE) ☐ NON-PARTICIPATING

FEDERAL SEGREGATION (if more than one Funding Source or P.I.P. type)
☐ CCO FUNDED PER CONTRACT ☐ CCO FUNDED AS FOLLOWS

FEDERAL FUNDING SOURCE	PERCENT

ADA Notice For individuals with sensory disabilities, this document is available in alternate formats. For information call (916) 654-6410 or TDD (916) 654-3880 or write Records and Forms Management, 1120 N Street, MS-89, Sacramento, CA 95814.

STATE OF CALIFORNIA - DEPARTMENT OF TRANSPORTATION

CONTRACT CHANGE ORDER MEMORANDUM

TO: Deanna Vilcheck, ACM /	FILE: E.A. 04 - 0120S4
FROM: William Howe, Senior R.E.	CO-RTE-PM SF-80-12.7/13.2
	FED. NO. NO FED AID
CCO#: 21 SUPPLEMENT#: 2 Category Code: CXSA	CONTINGENCY BALANCE (incl. this change) $68,635,316.00
COST: $1,500,000.00 INCREASE ☑ DECREASE ☐	HEADQUARTERS APPROVAL REQUIRED? ☑ YES ☐ NO
SUPPLEMENTAL FUNDS PROVIDED: $0.00	IS THIS REQUEST IN ACCORDANCE WITH ENVIRONMENTAL DOCUMENTS? ☑ YES ☐ NO
CCO DESCRIPTION: Additional SWPP Funding	**PROJECT DESCRIPTION:** YBITS-1 (Yerba Buena Island Transition Structures)

Original Contract Time:	Time Adj. This Change:	Previously Approved CCO Time Adjustments:	Percentage Time Adjusted: (including this change)	Total # of Unreconciled Deferred Time CCO(s): (including this change)
1390 Day(s)	DEF Day(s)	0 Day(s)	0 %	9

THIS CHANGE ORDER PROVIDES FOR:

Additional funding for implementing Storm Water Pollution Prevention (SWPP) measures as specified under Contract Change Order No. 21, Supplements No. 0 and No. 1.

This project, the Yerba Buena Island Transition Structure (YBITS), provides for the construction of two bridges which will connect eastbound and westbound traffic on the new east span of the San Francisco Oakland Bay Bridge (SFOBB) from the signature Self-Anchored Suspension Bridge to the existing Yerba Buena Island tunnel. The structures are comprised of concrete box girder bridges each approximately 40 meters high and 450 meters in length.

The original Contract Change Order No. 21, Supplement No. 0, incorporated the Department's new National Pollutant Discharge Elimination System (NPDES) General Permit for Storm Water Discharges Associated with Construction and Land Disturbance (Order No. 2009-009-DWQ), Construction General Permit (CGP) effective July 1, 2010. The new permit implements year-round soil stabilization and sediment control best management practices in place of current rainy season requirements, increases the reporting and monitoring requirements for storm water discharges and provides changes for existing storm water pollution prevention plans to be in compliance with the new CGP. Several sections of the Contract Special Provisions were modified under the original change order to reflect these changes.

Change Order No. 21, Supplement No. 1, was subsequently issued to eliminate the contract item work associated with SWPP and provide for all SWPP work to be performed on a force account basis. As the work has progressed over the last year and a half, it has become apparent that the cost of the work will exceed the funding provided under Supplement No. 1. This change order will provide additional funding to cover the current estimated cost of the work through the anticipated end of the project in the Summer of 2013. Extensive costs have been incurred in properly controlling the storm water flows from the hills in the east and the west of the project limits. This storm water flows towards the center of the project and then drains to drainage inlets that drain directly to the San Francisco Bay.

The additional funding will be provided as extra work at force account at an estimated additional cost of $1,500,000.00, which shall be financed from the Contract's contingency balance. A cost analysis is on file.

This change was approved by the TBPOC on June 6, 2012, copy attached.

Any adjustment of contract time is deferred as the additional requirements may affect the controlling operation.

Maintenance concurrence is not required as the change doesn't affect any permanent roadway features.

ADA Notice: For individuals with sensory disabilities, this document is available in alternate formats. For information, call (916) 654-6410 or TDD (916) 654-3880 or write to Records and Forms Management, 1120 N Street, MS-89, Sacramento, CA 95814

CONCURRED BY:		
Construction Engineer:	William Howe	Date 05.08.12
Bridge Engineer:	Mehran Ardakanian	Date
Project Engineer:	Bob Zandipour, Design	Date 5-9-12
Project Manager:	Ken Terpstra	Date 6-8-12
FHWA Rep.:		Date
Environmental:		Date
Other (specify):		Date
Other (specify):		Date
District Prior Approval By:		Date
HQ (Issue Approve) By:	Larry Salhaney	Date 6-7-12
Resident Engineer's Signature: William Howe		Date 05.08.12

ESTIMATE OF COST

	THIS REQUEST	TOTAL TO DATE
ITEMS	$0.00	($149,940.00)
FORCE ACCOUNT	$1,500,000.00	$4,200,000.00
AGREED PRICE	$0.00	$0.00
ADJUSTMENT	$0.00	$0.00
TOTAL	$1,500,000.00	$4,050,060.00

FEDERAL PARTICIPATION

☐ PARTICIPATING ☐ PARTICIPATING IN PART ☑ NONE
☐ NON-PARTICIPATING (MAINTENANCE) ☐ NON-PARTICIPATING

FEDERAL SEGREGATION (if more than one Funding Source or P.I.P. type)
☐ CCO FUNDED PER CONTRACT ☐ CCO FUNDED AS FOLLOWS

FEDERAL FUNDING SOURCE	PERCENT

ADA Notice: For individuals with sensory disabilities, this document is available in alternate formats. For information call (916) 654-6410 or TDD (916) 654-3880 or write Records and Forms Management, 1120 N Street, MS-89, Sacramento, CA 95814

STATE OF CALIFORNIA - DEPARTMENT OF TRANSPORTATION

CONTRACT CHANGE ORDER

Change Requested by: Engineer

CCO: 14	Suppl. No. 0	Contract No. 04 - 0120S4	Road SF-80-12.7/13.2	FED. AID LOC.: NO FED AID

To: **M C M CONSTRUCTION INC**

You are directed to make the following changes from the plans and specifications or do the following described work not included in the plans and specifications for this contract. ***NOTE: This change order is not effective until approved by the Engineer.***

Description of work to be done, estimate of quantities and prices to be paid. (Segregate between additional work at contract price, agreed price and force account.) Unless otherwise stated, rates for rental of equipment cover only such time as equipment is actually used and no allowance will be made for idle time. This last percentage shown is the net accumulated increase or decrease from the original quantity in the Engineer's Estimate.

Increase pile embedment at Bents W10AL North column and W10L North column footings as shown on revised contract plan sheet no. 563R1 of 806 (sheets 2 to 2 of this change order).

Estimate of Increase in Contract Item at Contract Price:

Item No. 81: FURNISH STEEL PILING (HP 360 X 132)
40.5 M (+0.44%) @ $150.00 /M = +$6,075.00 (+0.44%)

The quantity shown herein for Item No.81, "FURNISH STEEL PILING (HP 360 X 12)", when combined with the quantities specified in the Engineer's Estimate, and as modified by any previous change orders, shall be the final quantity for which payment will be made.

Extra Work at Lump Sum:

The Contractor shall receive an Agreed Lump Sum in the amount of $45,592.00 for all additional costs associated with this change. This sum constitutes full and complete compensation for all markups, associated with this change order and all additional work required to complete the work, which includes field welding, handling, and driving the added length of piles.

Estimated cost of Extra Work at Lump Sum $45,592.00

Estimated Cost: Increase ☑ Decrease ☐ **$51,667.00**

By reason of this order the time of completion will be adjusted as follows: 0 days

Submitted by

Signature	Resident Engineer	Date
Rajesh Oberoi	Rajesh Oberoi, Senior R.E.	8/31/10

Approval Recommended by

Signature	Area Construction Manager	Date
Michael Fraum	Deanna Vilcheck	9-1-2010

Engineer Approval by

Signature	Area Construction Manager	Date
Deanna Vilcheck	Deanna Vilcheck	9/7/10

We the undersigned contractor, have given careful consideration to the change proposed and agree, if this proposal is approved, that we will provide all equipment, furnish the materials, except as may otherwise be noted above, and perform all services necessary for the work above specified, and will accept as full payment therefor the prices shown above.

NOTE: If you, the contractor, do not sign acceptance of this order, your attention is directed to the requirements of the specifications as to proceeding with the ordered work and filing a written protest within the time therein specified.

Contractor Acceptance by

Signature	(Print name and title)	Date
	Edmundo A. Robi - Treasurer	9-2-2010

DIST.	COUNTY	ROUTE	KILOMETER POST TOTAL PROJECT	SHEET NO.	TOTAL SHEETS
04	SF	BO	12.7/13.2	563R1	806

REGISTERED ENGINEER - CIVIL

6-23-08

PLANS APPROVAL DATE

REGISTERED PROFESSIONAL ENGINEER A.L. ELY No. 18880 Exp. 6-30-09 CIVIL STATE OF CALIFORNIA

The State of California or its officers or agents shall not be responsible for the accuracy or completeness of electronic copies of this plan sheet.

T.Y. LIN / MOFFATT & NICHOL
TWO HARRISON STREET
SAN FRANCISCO, CA 94105

PILE DATA							
LOCATION	DESIGN LOADING	NOMINAL RESISTANCE COMPRESSION	NOMINAL RESISTANCE TENSION	DESIGN TIP ELEVATION (1)	(2)	(3)	SPECIFIED TIP ELEVATION
PILE TYPE HP 360 x 132							
BENT W10AL NORTH COLUMN	725 kN	1450 kN	725 kN	32.0	34.5	39.0	32.0/30.5 **
BENT W10AL SOUTH COLUMN	725 kN	1450 kN	725 kN	31.0	32.5	37.0	31.0
BENT W10L NORTH COLUMN	725 kN	1450 kN	725 kN	31.5	34.5	38.0	31.5/30.0 ***
BENT W10L SOUTH COLUMN	725 kN	1450 kN	725 kN	29.0	32.5	34.0	29.0
BENT W9L NORTH COLUMN	725 kN	1450 kN	725 kN	30.0	32.5	35.0	30.0
BENT W9L SOUTH COLUMN	725 kN	1450 kN	725 kN	17.5	19.0	20.5	17.5
BENT W8L NORTH COLUMN	725 kN	1450 kN	725 kN	21.0	24.5	27.5	21.0
BENT W8L SOUTH COLUMN	725 kN	1450 kN	725 kN	2.5	4.0	5.0	2.5
ABUT W11R	725 kN	1450 kN	350 kN	32.0	36.0	39.0	32.0
BENT W10R	725 kN	1450 kN	725 kN	30.5	33.5	37.0	30.5
BENT W9R	725 kN	1450 kN	725 kN	22.0	25.5	29.0	22.0
PILE TYPE W 360 x 196 ASTM A-779 (GRADE 345 MPa)							
BENT W8R	1350 kN	2700 kN	1350 kN	8.5	11.0	15.0	8.5

Design tip elevation is controlled by the following demands:
(1) Compression, (2) Tension, (3) Lateral.

** For most northerly 15 piles use elev 30.5 other piles use elev 32.0

*** For most northerly 12 piles use elev 30.0 other piles use elev 31.5

TRANSITION STRUCTURES		
Location	Hazardous (Type H) D1 (m)	D2 (m)
WESTBOUND		
Bent W10AL (N)		
Bent W10AL (S)		
Bent W10L (N)	0.0	0.3
Bent W10L (S)		
Bent W9L (N)	0.0	0.3
Bent W9L (S)		
Bent WBL (N)	0.0	0.3
Bent WBL (S)	0.0	0.6
EASTBOUND		
Abut W11R		
Bent W10R		
Bent W9R		
Bent WBR	0.0	0.3

Note:
N - Indicates North footing
S - Indicates South footing

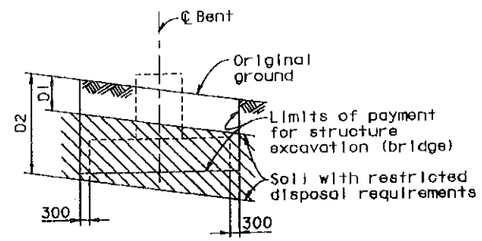

LIMITS OF PAYMENT FOR STRUCTURE EXCAVATION TYPE H

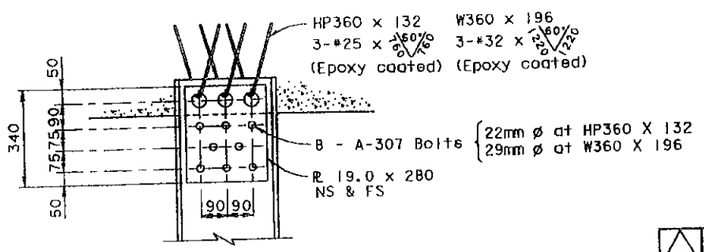

OPTIONAL PILE ANCHORAGE

REGISTERED PROFESSIONAL ENGINEER A.L. ELY No. 18880 Exp. 6-30-11 CIVIL STATE OF CALIFORNIA

FOR REVISION ⚠1 ONLY

MARK	DATE	DESCRIPTIONS	BY	CH'D
1	6-14-10	WB Ramp Revisions	TL	AE
		REVISIONS		

CONTRACT CHANGE ORDER NO. 014
SHEET 2 OF 2

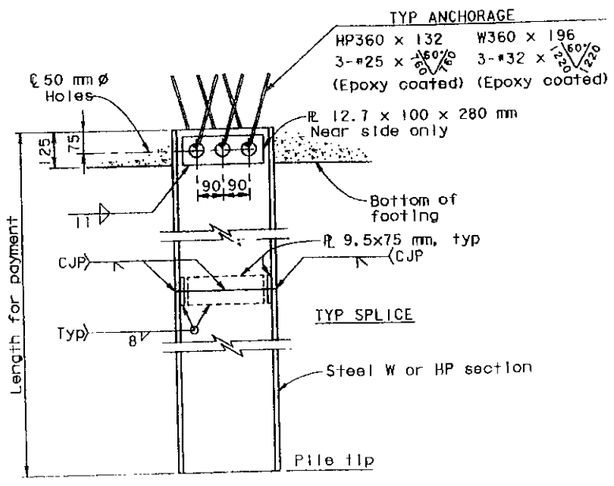

TYPICAL STEEL PILE DETAIL
1:10

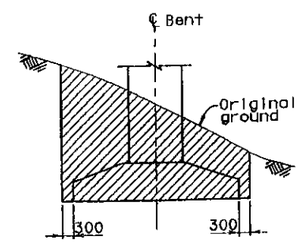

STRUCTURE EXCAVATION

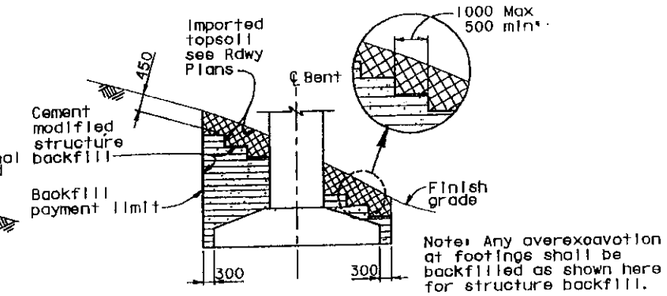

STRUCTURE BACKFILL

LIMITS OF PAYMENT FOR STRUCTURE EXCAVATION & BACKFILL
(Shown for Bents W9L south column, W8L north & south columns, W9R & W8R)
For other locations and details not shown see A62C
NO SCALE

ALL DIMENSIONS ARE IN MILLIMETERS UNLESS OTHERWISE SHOWN

SAN FRANCISCO OAKLAND BAY BRIDGE
EAST SPAN SEISMIC SAFETY PROJECT

YBI TRANSITION STRUCTURES

PILE DETAILS

DESIGN OVERSIGHT
JOHN MOOK, BERNARD CHAN, JUAN F. CARPIO, HASAN EL-NATUR
March 3, 2008
SIGN OFF DATE

	BY	CHECKED
DESIGN	Desai	Jain
DETAILS	van Ryn/Zucchi/Mai	Jain
QUANTITIES	Liao	E. Nichol

PREPARED FOR THE STATE OF CALIFORNIA DEPARTMENT OF TRANSPORTATION

Jai Birdy
PROJECT ENGINEER

BRIDGE NO. 34-0006 L/R
KILOMETER POST 12.8

CU 04251

DISREGARD PRINTS BEARING EARLIER REVISION DATES

REVISION DATES (PRELIMINARY STAGE ONLY)

SHEET 14 OF 209

ORIGINAL SCALE IN MILLIMETERS

Rev. Date: 5-18-98

WB RAMP CCO

June 14, 2010

STATE OF CALIFORNIA - DEPARTMENT OF TRANSPORTATION

CONTRACT CHANGE ORDER MEMORANDUM

DATE: 8/24/2010 Page 1 of 1

TO: Deanna Vilcheck, ACM /	FILE: E.A. 04 - 0120S4
FROM: Rajesh Oberoi, Senior R.E.	CO-RTE-PM SF-80-12.7/13.2
	FED. NO. NO FED AID
CCO#: 14 SUPPLEMENT#: 0 Category Code: AWZZ	CONTINGENCY BALANCE (incl. this change) $30,634,105.00
COST: $51,667.00 INCREASE ☑ DECREASE ☐	HEADQUARTERS APPROVAL REQUIRED? ☐ YES ☑ NO
SUPPLEMENTAL FUNDS PROVIDED: MA $51,667.00	IS THIS REQUEST IN ACCORDANCE WITH ENVIRONMENTAL DOCUMENTS? ☑ YES ☐ NO
CCO DESCRIPTION: PILE EXTENSIONS @ BENT W10L & W10AL NORTH	PROJECT DESCRIPTION: YBITS-1 (Yerba Buena Island Transition Structures)

Original Contract Time:	Time Adj. This Change:	Previously Approved CCO Time Adjustments:	Percentage Time Adjusted: (including this change)	Total # of Unreconciled Deferred Time CCO(s): (including this change)
1390 Day(s)	0 Day(s)	0 Day(s)	0 %	0

THIS CHANGE ORDER PROVIDES FOR:

Increasing the pile embedment for 15 northerly piles at Bents W10AL North column and 12 northerly piles at W10L North column footings by 1.5 meters.

This project, the Yerba Buena Island Transition Structure (YBITS), was awarded in February 2010 to construct the tie in of the new east span of the San Francisco Oakland Bay Bridge to Yerba Buena Island. Structures design did not anticipate westbound off-ramp and on-ramp that the City and County of San Francisco now plans to build due to which additional embedment of piles is necessary to address the drawdown and potential overloading of these piles.

This change is being requested by Mike Whiteside-Toll Bridge Design.

For this work the contractor will be paid an increase in contract items at an estimated cost of $6075.00 to "FURNISH STEEL PILING (HP 360 X 12)". The contractor will also be paid an agreed Lump Sum in the amount of $45,592.00 for field welding, handling, and driving the added length of piles.The total estimated cost of this change is $51,667.00. The work can be financed from supplemental funds. A detailed cost analysis is on file.

Maintenance concurrence is not required for this work.

No adjustment in contract time is warranted as this change does not affect any controlling operation.

CONCURRED BY:		
Construction Engineer:	Rajesh Oberoi	Date 8/31/10
Bridge Engineer:	Mehran Ardakanian	Date 9/2/10
Project Engineer:		Date
Project Manager:		Date
FHWA Rep.:		Date
Environmental:		Date
Other (specify):	Mike Whiteside	Date 7/6/10
Other (specify):		Date
District Prior Approval By:		Date
HQ (Issue Approve) By:		Date
Resident Engineer's Signature:	Rajesh Oberoi	Date 8/31/10

ESTIMATE OF COST	THIS REQUEST	TOTAL TO DATE
ITEMS	$6,075.00	$6,075.00
FORCE ACCOUNT	$0.00	$0.00
AGREED PRICE	$45,592.00	$45,592.00
ADJUSTMENT	$0.00	$0.00
TOTAL	$51,667.00	$51,667.00

FEDERAL PARTICIPATION

☐ PARTICIPATING ☐ PARTICIPATING IN PART ☑ NONE
☐ NON-PARTICIPATING (MAINTENANCE) ☐ NON-PARTICIPATING

FEDERAL SEGREGATION (if more than one Funding Source or P.I.P. type)
☐ CCO FUNDED PER CONTRACT ☐ CCO FUNDED AS FOLLOWS

FEDERAL FUNDING SOURCE	PERCENT

ADA Notice: For individuals with sensory disabilities, this document is available in alternate formats. For information call: (916) 654-6410 or TDD (916) 654-3880 or write Records and Forms Management, 1120 N Street, MS-89, Sacramento, CA 95814.

CONTRACT CHANGE ORDER

Change Requested by: Engineer

CCO 15 Suppl. No. 0 Contract No. 04 - 0120S4 Road SF-80-12 7/13.2 FED. AID LOC.: NO FED AID

To: **M C M CONSTRUCTION INC**

You are directed to make the following changes from the plans and specifications or do the following described work not included in the plans and specifications for this contract. ***NOTE: This change order is not effective until approved by the Engineer.***

Description of work to be done, estimate of quantities and prices to be paid. (Segregate between additional work at contract price, agreed price and force account.) Unless otherwise stated, rates for rental of equipment cover only such time as equipment is actually used and no allowance will be made for idle time. This last percentage shown is the net accumulated increase or decrease from the original quantity in the Engineer's Estimate.

Extra Work at Lump Sum:

Incorporate into the Contract all revisions to the underground electrical duct bank as shown on Sheets No. 2 through 10 of this change order (Revised Plan Sheets No. 54R1, 59R1, 60R1, 126R1, 127R1, 133R1, 134R1, 135R1and 151R1).

For all additional costs resulting from this change, the Contractor shall be compensated an agreed lump sum of $378,440.00 which constitutes full compensation, including all markups, complete in place, for this change.

Cost of Extra Work at Lump Sum $378,440.00

Estimated Cost: **Increase** ✔ **Decrease** **$378,440.00**

By reason of this order the time of completion will be adjusted as follows: 0 days

Submitted by		
Signature William Howe	Resident Engineer William Howe, Senior R.E.	Date 07-21-11
Approval Recommended by		
Signature Deanna Vilcheck	Area Construction Manager Deanna Vilcheck	Date 7/21/11
Engineer Approval by		
Signature	Area Construction Manager Deanna Vilcheck	Date

We the undersigned contractor, have given careful consideration to the change proposed and agree, if this proposal is approved, that we will provide all equipment, furnish the materials, except as may otherwise be noted above, and perform all services necessary for the work above specified, and will accept as full payment therefor the prices shown above.

NOTE: If you, the contractor, do not sign acceptance of this order, your attention is directed to the requirements of the specifications as to proceeding with the ordered work and filing a written protest within the time therein specified.

Contractor Acceptance by		
Signature	(Print name and title) Edmund Pachi Treasurer	Date 8-22-2011

Dist	COUNTY	ROUTE	KILOMETER POST TOTAL PROJECT	SHEET No.	TOTAL SHEETS
04	SF	80	12.7/13.2	54 R1	806

REGISTERED CIVIL ENGINEER DATE

6-23-08
PLANS APPROVAL DATE

REGISTERED PROFESSIONAL ENGINEER T.T. Lai No. 63630 Exp. 9-30-08 CIVIL STATE OF CALIFORNIA

THE STATE OF CALIFORNIA OR ITS OFFICERS OR AGENTS SHALL NOT BE RESPONSIBLE FOR THE ACCURACY OR COMPLETENESS OF ELECTRONIC COPIES OF THIS PLAN SHEET.

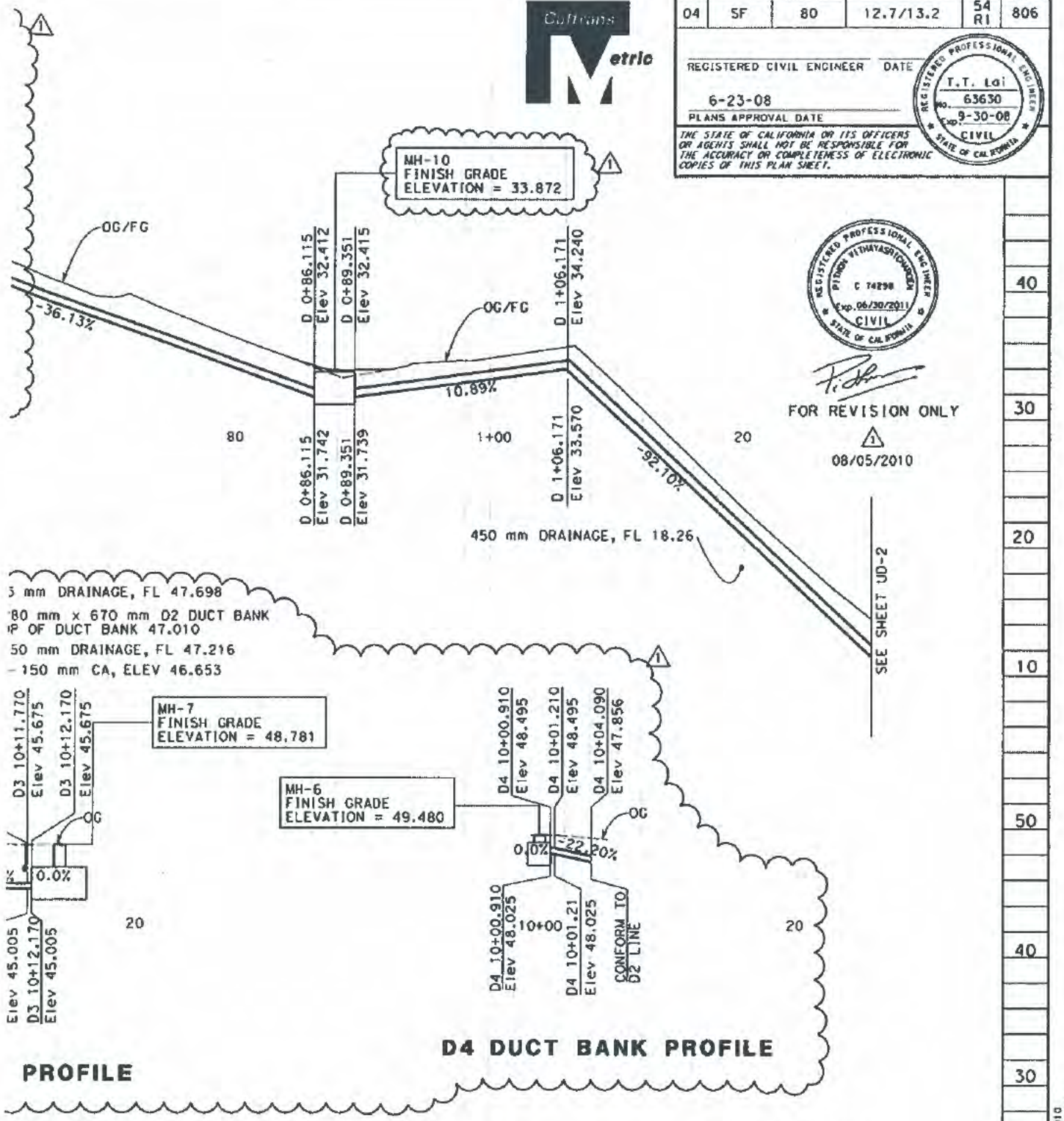

REGISTERED PROFESSIONAL ENGINEER PITHON VITHAYASRICHAROEN C 74298 Exp. 06/30/2011 CIVIL STATE OF CALIFORNIA

FOR REVISION ONLY
1
08/05/2010

ALL DIMENSIONS ARE IN METERS UNLESS OTHERWISE SHOWN

CONTRACT NO. 04-0120S4

CONTRACT CHANGE ORDER NO. 015

SHEET 2 OF 10

UTILITY DETAILS
DUCT BANK PROFILE

SCALE HORIZ 1:200
VERT 1:200

UD-1

LAST REVISION 03-04-08 DATE PLOTTED => 8/5/2010 TIME PLOTTED => 2:37:35 PM

USERNAME => llorico
DGN FILE => T:\13103\MS\pse\YBI Struc-Contract 1\CCO\Coord_S3 YBI Comp\Working Files\40120skb001r01.dgn

CU 04251 EA 0120S1

Dist	COUNTY	ROUTE	PM/KILOMETER POST TOTAL PROJECT	SHEET NO.	TOTAL SHEETS
04	SF	80	12.7/13.2	59 R1	606

REGISTERED CIVIL ENGINEER DATE

6-23-08

PLANS APPROVAL DATE

THE STATE OF CALIFORNIA OR ITS OFFICERS OR AGENTS SHALL NOT BE RESPONSIBLE FOR THE ACCURACY OR COMPLETENESS OF ELECTRONIC COPIES OF THIS PLAN SHEET.

REGISTERED PROFESSIONAL ENGINEER J.T. Lai No. 63630 Exp. 9-30-08 CIVIL STATE OF CALIFORNIA

NOTES:

1. SEE E-SHEETS FOR DUCT BANK SECTIONS.
2. CONTRACTOR SHALL STAKE LOCATION OF FUTURE FOOTINGS PRIOR TO CONSTRUCTION.
3. CONTRACTOR SHALL ENSURE DUCT BANK MAINTAINS A MINIMUM 450 mm OF CLEARANCE OUTSIDE FOOTING FOOTPRINT, UNLESS OTHERWISE NOTED.

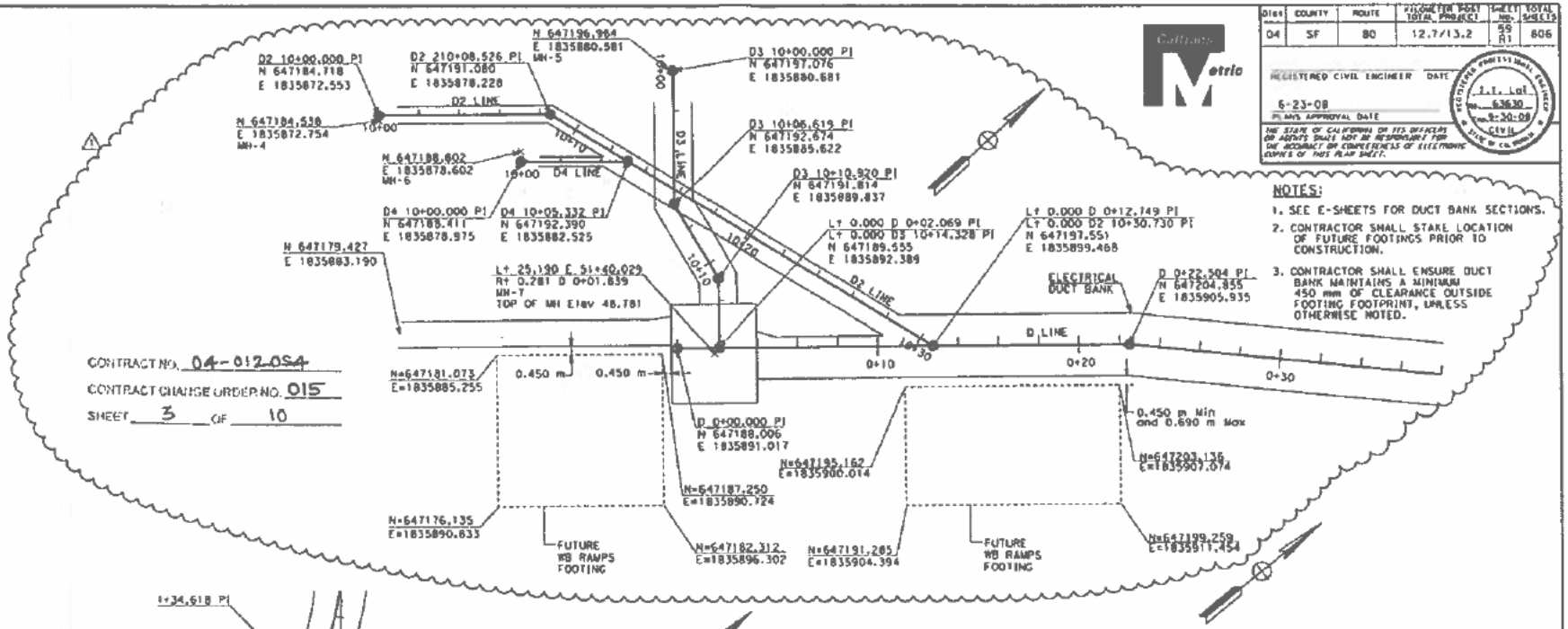

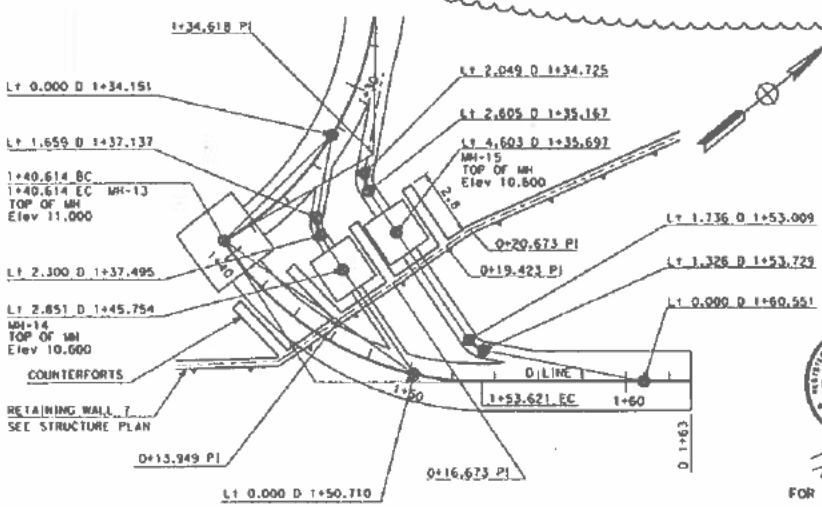

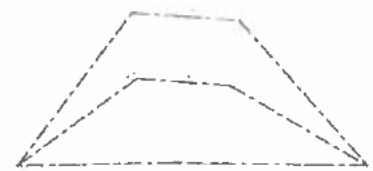

FOR REVISION ONLY

08/05/2010

NO WORK AT THIS LOCATION FOR INFORMATION ONLY.

UTILITY DETAILS
DUCT BANK MANHOLE LAYOUT

NO SCALE

ALL DIMENSIONS ARE IN METERS UNLESS OTHERWISE SHOWN

UD-6

STATE OF CALIFORNIA - DEPARTMENT OF TRANSPORTATION

DESIGN

FUNCTIONAL SUPERVISOR: BOB ZANDIPOUR

CALCULATED-DESIGNED BY: TRINH LAI

CHECKED BY: BOB ZANDIPOUR

REVISED BY: TL

DATE REVISED: 10/07

DATE PLOTTED => 08/05/2010

TIME PLOTTED => 2:36:16 PM

BORDER L451 REVISED 3/1/2007

RELATIVE BORDER SCALE IS IN MILLIMETERS

0 20 40 60 80

USERNAME => hlai1ko

FILE => H:\51\5183\MS\Geo\MB Struc-Contract 1\CEO\Board_51_MB

FILE NAME: Files\4012054UD01.dgn

CU: 04251

EA: 012051

DIST	COUNTY	ROUTE	KILOMETER POST TOTAL PROJECT	SHEET NO.	TOTAL SHEETS
04	SF	80	12.7/13.2	60 R1	806

REGISTERED CIVIL ENGINEER DATE

6-23-08

PLANS APPROVAL DATE

THE STATE OF CALIFORNIA OR ITS OFFICERS OR AGENTS SHALL NOT BE RESPONSIBLE FOR THE ACCURACY OR COMPLETENESS OF ELECTRONIC COPIES OF THIS PLAN SHEET.

REGISTERED PROFESSIONAL ENGINEER T.T. LOI 63630 09-30-08 CIVIL STATE OF CALIFORNIA

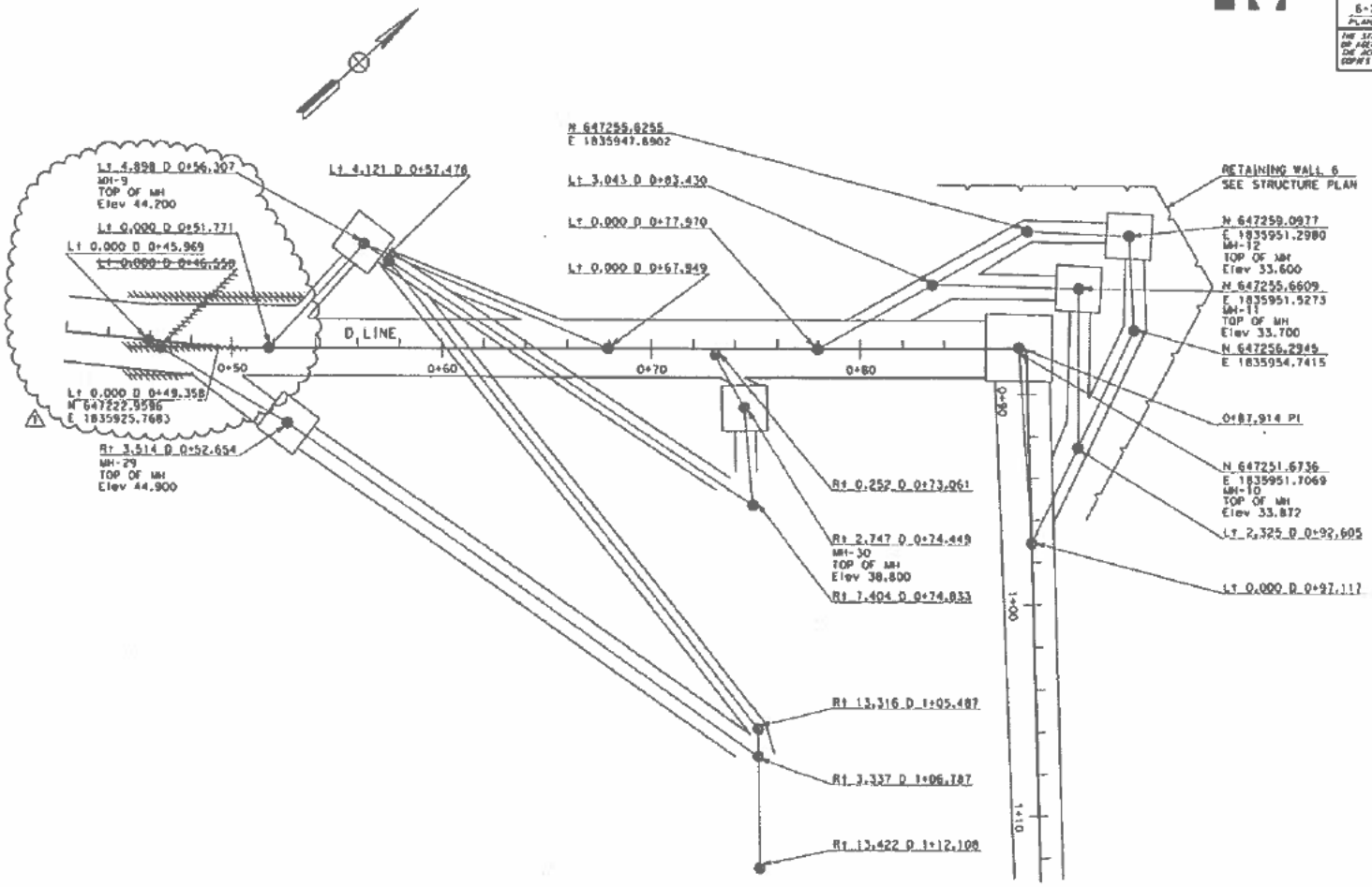

FOR REVISION ONLY

08/05/2010

CONTRACT NO. 04-012054

CONTRACT CHANGE ORDER NO. 015

SHEET 4 OF 10

UTILITY DETAILS
DUCT BANK MANHOLE LAYOUT

SCALE: 1:100

ALL DIMENSIONS ARE IN METERS UNLESS OTHERWISE SHOWN

UD-7

STATE OF CALIFORNIA - DEPARTMENT OF TRANSPORTATION

Caltrans

DESIGN

FUNCTIONAL SUPERVISOR: BOB ZANDIPOUR

CALCULATED-DESIGNED BY: TRINH LAI

CHECKED BY: BOB ZANDIPOUR

REVISED BY: TL

DATE REVISED: 10/07

BORDER LAST REVISED 3/1/2007

RELATIVE BORDER SCALE IS IN MILLIMETERS 0 20 40 60 80

USERNAME => tlorleo

DGN FILE => T:\183103\MS\gmm\TBI Struc-Contract 1\ECO\Copy of 53 TBI

CU 04251

EA 012051

LAST REVISION 08-27-07 DATE PLOTTED => 8/5/2010 TIME PLOTTED => 2:59:15 PM

DIST.	COUNTY	ROUTE	KILOMETER POST TOTAL PROJECT	SHEET NO.	TOTAL SHEETS
04	SF	80	12.7/13.2	E26 R1	806

REGISTERED ELECTRICAL ENGINEER — DATE 2/14/08

6-23-08
PLANS APPROVAL DATE

THE STATE OF CALIFORNIA OR ITS OFFICERS OR AGENTS SHALL NOT BE RESPONSIBLE FOR THE ACCURACY OR COMPLENESS OF ELECTRONIC COPIES OF THIS PLAN SHEET.

PB AMERICAS, Inc.
A Parsons Brinckerhoff Company
303 Second St., Suite 800
San Francisco, CA 94107-1317

CONTRACT NO. 04-012054
CONTRACT CHANGE ORDER NO. 015
SHEET 5 OF 10

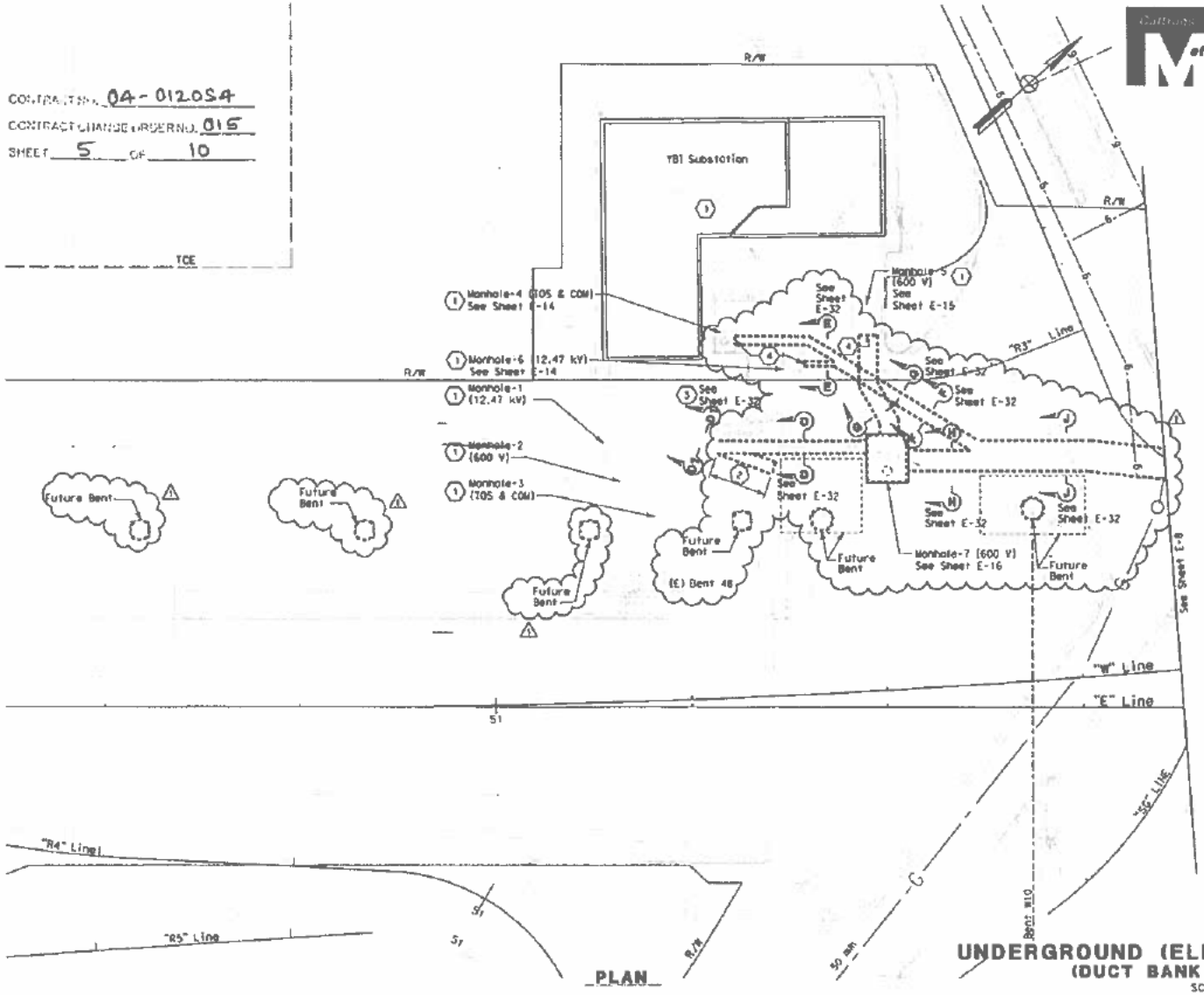

PLAN

SHEET NOTES:

1. Not in contract.
2. Contractor shall cut back existing underground conduits for connection to new location of underground conduits to MH-1.
3. Not in contract. Conduits shown are existing installed on previous contract. It is provided as reference for routing cable/circuits only. Existing conduit is tagged with prefixed (N) on conduit and tray schedules.
4. The Contractor shall verify existing and the provisions for conduit entry to manholes. see sheet E-35.

NOTES:

1. References:
   - For manhole plans and sections, see sheets E-14 through E-16.
   - For duct bank sections, see sheet E-32.
   - For typical manhole and duct bank details, see sheet E-35.
   - For substation conduit stub-ups, see sheet E-30.
2. For exact location of Manhole-1, and location of underground duct bank including profiles, see Utility Details sheets UD-1 and UD-6.

Sylvia Chin
FOR REVISION ONLY
08/05/2010

UNDERGROUND (ELECTRICAL DUCT BANK)
(DUCT BANK AND MANHOLES)
SCALE: 1:200

E-7

STATE OF CALIFORNIA - DEPARTMENT OF TRANSPORTATION
CONSULTANT FUNCTIONAL SUPERVISOR: BENZAD GOLEMOHAMMADI
CALCULATED-DESIGNED BY: AB
CHECKED BY: FK
REVISED BY
DATE REVISED

THIS PLAN ACCURATE FOR ELECTRICAL WORK ONLY.

ALL DIMENSIONS ARE IN METERS UNLESS OTHERWISE SHOWN

BORDER LAST REVISED 3/1/2007

RELATIVE BORDER SCALE IS IN MILLIMETERS 0 20 40 60 80

USERNAME => fkerlico
DGN FILE => I:\13103445\model\TBI Strut-Contract 1\CONTRACTS\ELECTRICAL\CO 15 Manhole MH-1 & u.g duct bank (Electrical)E26.dgn

CH 04251 | EA 012051

DATE PLOTTED => 8/5/2010
TIME PLOTTED => 11:54:40 PM
100-00-00

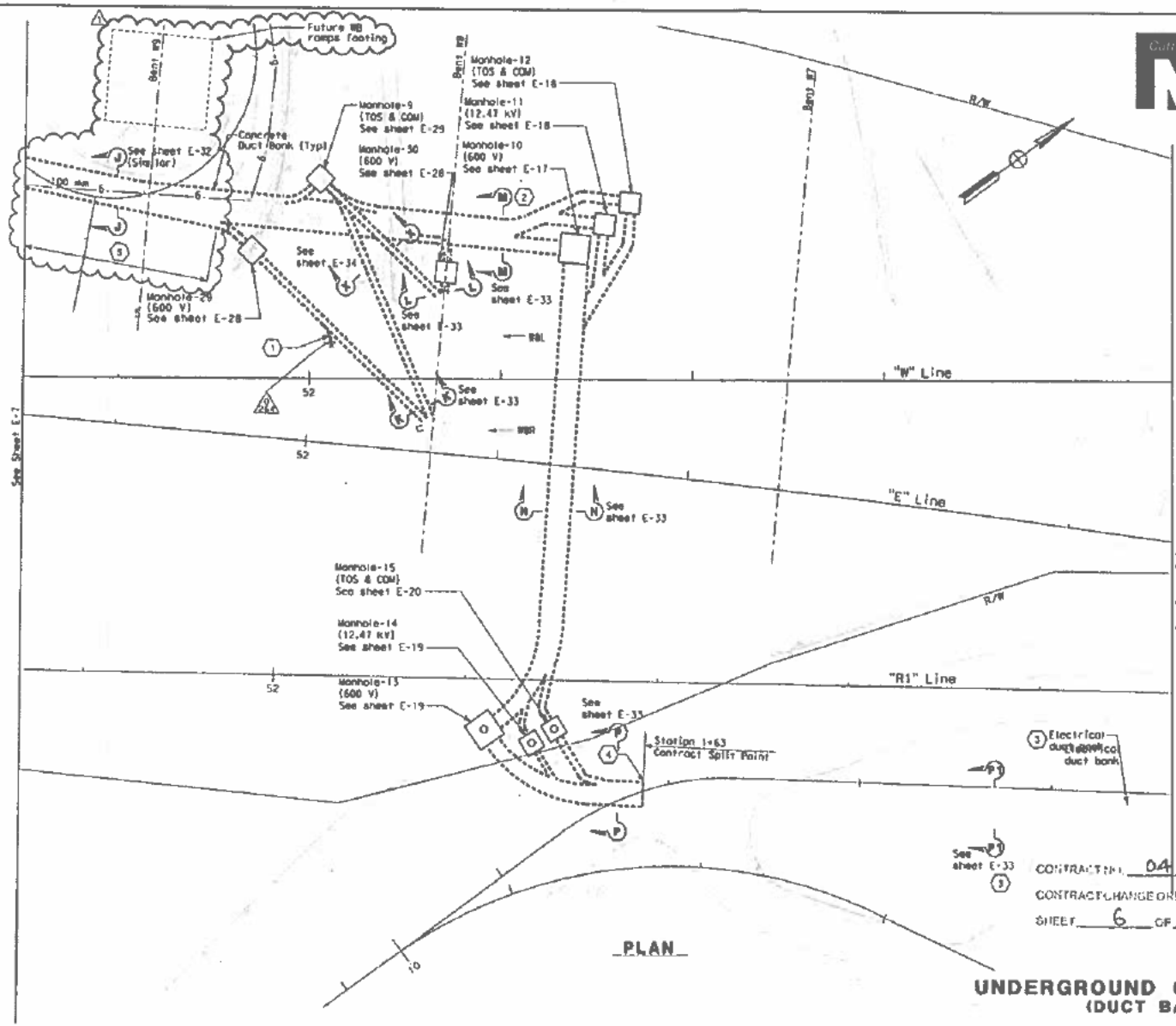

DIST	COUNTY	ROUTE	KILOMETER POST TOTAL PROJECT	SHEET NO.	TOTAL SHEETS
04	SF	80	12.7/13.2	127 R1	806

REGISTERED ELECTRICAL ENGINEER — DATE 7/14/08

6-23-08
PLANS APPROVAL DATE

THE STATE OF CALIFORNIA OR ITS OFFICERS OR AGENTS SHALL NOT BE RESPONSIBLE FOR THE ACCURACY OR COMPLETENESS OF ELECTRONIC COPIES OF THIS PLAN SHEET.

PB WORLD, Inc.
A Parsons Brinckerhoff Company
303 Second St., Suite 900N
San Francisco, CA 94107-1317

Caltrans Metro

NOTES:

1. References:
   - For manhole plans and sections, see sheets E-17 through E-20, E-28 and E-29.
   - For typical manholes and duct bank details, see sheet E-35.
   - For duct bank sections, see sheets E-32, E-33 and E-34.
   - For bent WBL elevation and sections, see sheet E-78.
   - For bent WBR elevation and sections, see sheet E-127.
   - For duct bank anchors on slopes, see Utility Sheets.
2. For location of manholes, see Utility Sheets.

SHEET NOTES:

1. Stub-out conduit for future extension.
2. Duct banks shall be swept.
3. Not in contract. Conduits shown are existing installed on previous contract. It is provided as reference for routing cable/circuits only. Existing conduit is tagged with prefixed (x) on conduit and tray schedules.
4. The Contractor to extend existing duct bank from station 1+63 to manholes #13, #14 and #15. Connect conduits to existing stub-out conduits.
5. For location of underground duct bank starting from manhole MH-7, see Utility Details sheets UD-1 and UD-6.

CONTRACT NO. 04-012054
CONTRACT CHANGE ORDER NO. 015
SHEET 6 OF 10

Joyce Chin
FOR REVISION ONLY
08/05/2010

UNDERGROUND (ELECTRICAL DUCT BANK)
(DUCT BANK AND MANHOLES)

SCALE: 1:200

E-8

THIS PLAN ACCURATE FOR ELECTRICAL WORK ONLY.

ALL DIMENSIONS ARE IN METERS UNLESS OTHERWISE SHOWN

STATE OF CALIFORNIA - DEPARTMENT OF TRANSPORTATION
Caltrans
CONSULTANT FUNCTIONAL SUPERVISOR: BEHZAD GOLEMOHAMMADI
CALCULATED-DESIGNED BY: KB
CHECKED BY: FK
REVISED BY / DATE REVISED

BORDER LAST REVISED 3/1/2007

RELATIVE BORDER SCALE IS IN MILLIMETERS 0 20 40 60 80

USERNAME = tiarloo
DGN FILE = T:\1\31\31\5\pwa\TBI Group-Contract 1\CCO\Electrical\CCO-15 Manhole MH-7 & U.G duct bank\04012054CCO015-1.dgn

DATE PLOTTED = 09/30/2010
TIME PLOTTED = 21:08:09 PM

04 SF 80 PM 0.4/21.1 | EA 012054

DIST	COUNTY	ROUTE	KILOMETER POST TOTAL PROJECT	SHEET NO.	TOTAL SHEETS
04	SF	80	12.7/13.2	135 R1	806

REGISTERED ELECTRICAL ENGINEER 2/14/08 DATE

6-23-08
PLANS APPROVAL DATE

THE STATE OF CALIFORNIA OR ITS OFFICERS OR AGENTS SHALL NOT BE RESPONSIBLE FOR THE ACCURACY OR COMPLETENESS OF ELECTRONIC COPIES OF THIS PLAN SHEET.

© MERCER, Inc.
A Parsons Brinckerhoff Company
303 Second St., Suite 600N
San Francisco, CA 94107-1317

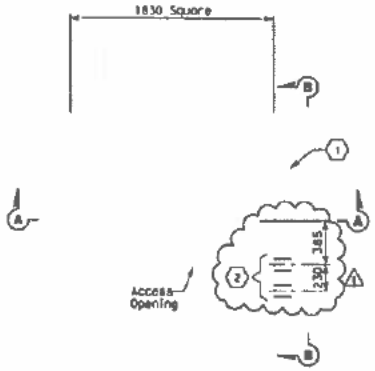

PLAN-MANHOLE-6
SCALE: 1:20 (12.47 kV)

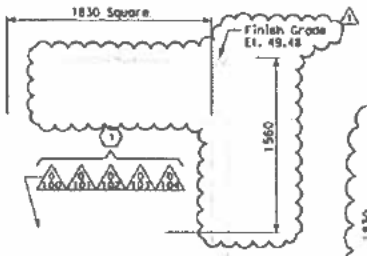

SECTION A-A
SCALE: 1:20

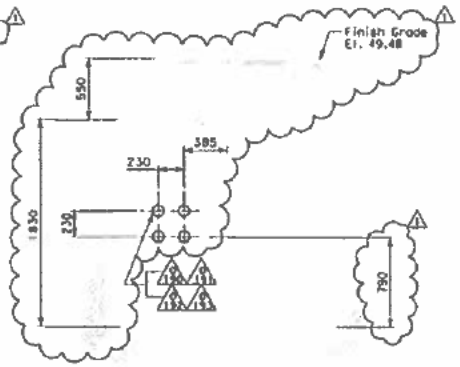

SECTION B-B
SCALE: 1:20

NOTES:

1. References:
   - For duct bank and manhole plan, see sheet E-7.
   - For substation conduit stub-ups, see sheet E-30.
   - For duct bank sections, see sheet E-32.
   - For typical manhole and duct bank details, see sheet E-35.

SHEET NOTES:

1. Not in contract. Conduits and manholes shown are existing installed on previous contract. It is provided as reference for routing cable/circuits only.
2. The Contractor to provide conduit opening for conduits as shown. See sheet E-35 for requirement. Ensure the conduit opening shall be water seal-tight.

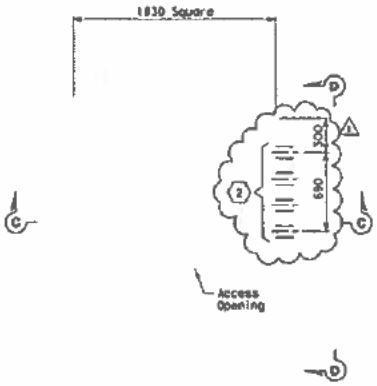

PLAN-MANHOLE-4
SCALE: 1:20 (TOS & COMMUNICATION)

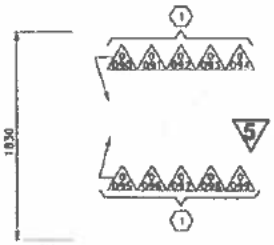

SECTION C-C
SCALE: 1:20

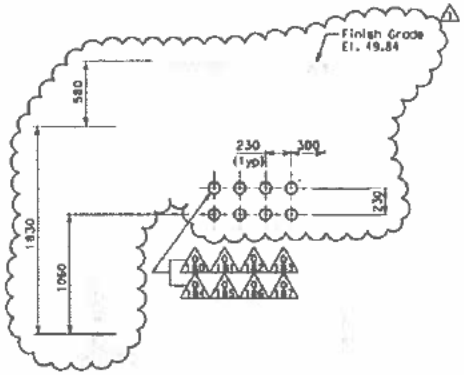

SECTION D-D
SCALE: 1:20

FOR REVISION ONLY

CONTRACT NO. 04-012054 08/05/2010
CONTRACT CHANGE ORDER NO. 015
SHEET 7 OF 10

DETAILS
UNDERGROUND (ELECTRICAL DUCT BANK)
(MANHOLE PLANS AND SECTIONS)

SCALE AS NOTED

5 REVISED PER ADDENDUM No. 5 DATED JULY 30, 2009

E-14

THIS PLAN ACCURATE FOR ELECTRICAL WORK ONLY.

ALL DIMENSIONS ARE IN MILLIMETERS UNLESS OTHERWISE SHOWN

STATE OF CALIFORNIA - DEPARTMENT OF TRANSPORTATION

CONSULTANT FUNCTIONAL SUPERVISOR: BEHZAD COLEMOHAMMADI

CALCULATED-DESIGNED BY | CHECKED BY | REVISED | DATE | REVISED BY | DATE REVISED

BORDER LAST REVISED 5/1/2007

RELATIVE BORDER SCALE IS IN MILLIMETERS 0 20 40 60 80

USERNAME = s33lerlee

EA 012051

DIST	COUNTY	ROUTE	KILOMETER POST TOTAL PROJECT	SHEET No.	TOTAL SHEETS
04	SF	80	12.7/13.2	138 R1	806

REGISTERED ELECTRICAL ENGINEER — DATE 12/1/08

6-23-08
PLANS APPROVAL DATE

THE STATE OF CALIFORNIA OR ITS OFFICERS OR AGENTS SHALL NOT BE RESPONSIBLE FOR THE ACCURACY OR COMPLETENESS OF ELECTRONIC COPIES OF THIS PLAN SHEET.

PB DEWITT, Inc.
a Parsons Brinckerhoff Company
343 Sansome St., Suite 700
San Francisco, CA 94104-1331

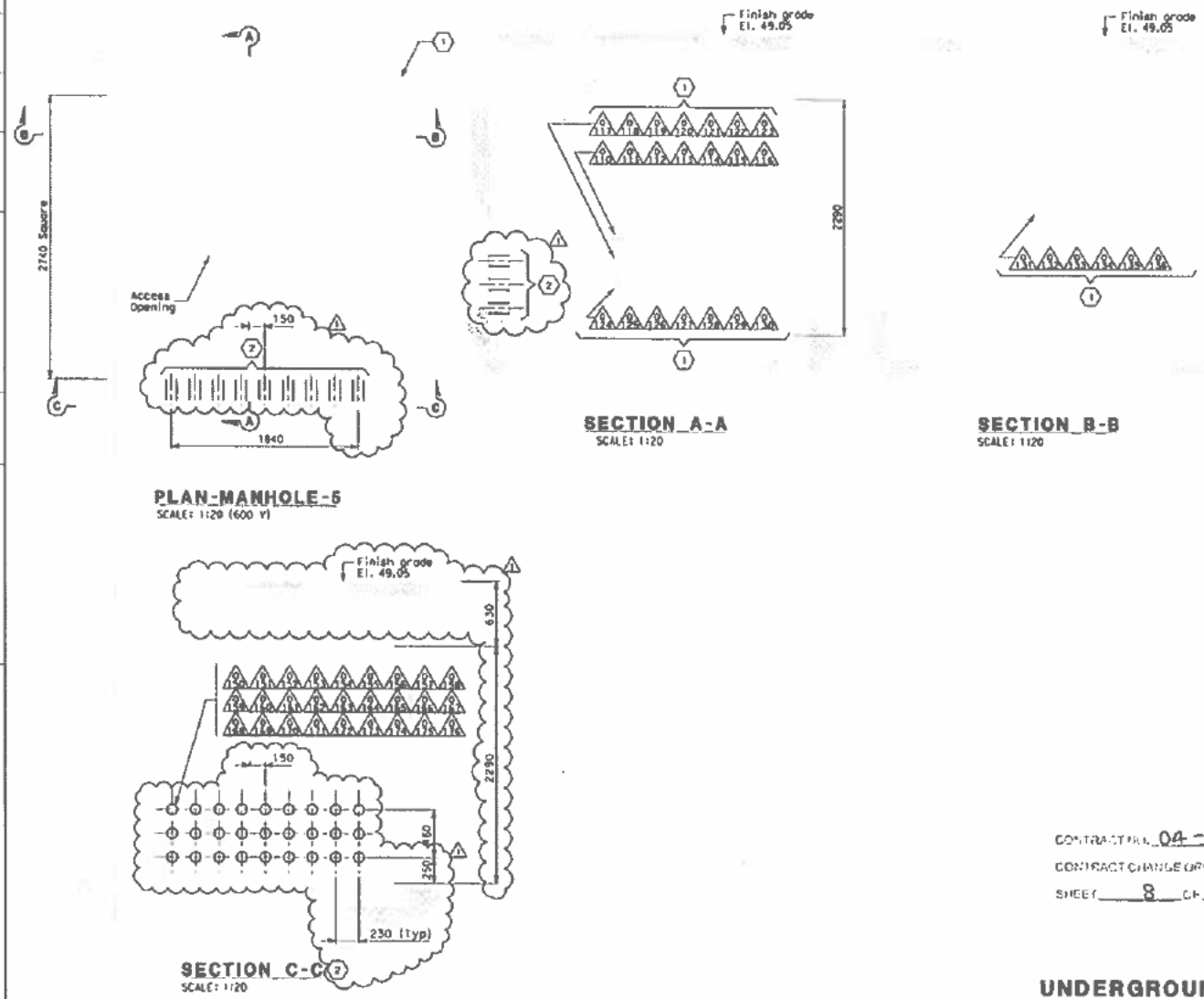

NOTES:

1. References:
   - For duct bank and manhole plan, see sheet E-7.
   - For substation conduit stub-ups, see sheet E-30.
   - For duct bank sections, see sheets E-31 and E-32.
   - For typical manhole and duct bank details, see sheet E-35.

SHEET NOTES:

1. Not in contract. Conduits and manhole shown are existing installed on previous contract. It is provided as reference for routing cable/circuits only.
2. The Contractor to provide conduit opening for conduits as shown. See sheet E-35 for requirement. Ensure the conduit openings shall be water seal-tight.

Sonyee Chin
FOR REVISION ONLY
1
08/05/2010

CONTRACT NO. 04-0120S4
CONTRACT CHANGE ORDER NO. 815
SHEET 8 OF 10

DETAILS
UNDERGROUND (ELECTRICAL DUCT BANK)
(MANHOLE PLANS AND SECTIONS)

SCALE AS NOTED

E-15

STATE OF CALIFORNIA • DEPARTMENT OF TRANSPORTATION — Caltrans

CONSULTANT FUNCTIONAL SUPERVISOR: BENZAD GOLEMOHAMMADI
CALCULATED-DESIGNED BY: AB
CHECKED BY: FC
REVISED BY / DATE REVISED

THIS PLAN ACCURATE FOR ELECTRICAL WORK ONLY.

ALL DIMENSIONS ARE IN MILLIMETERS UNLESS OTHERWISE SHOWN

BORDER LAST REVISED 3/1/2001

RELATIVE BORDER SCALE IS IN MILLIMETERS 0 20 40 60 80

USERNAME => bjgrlee
DGN FILE => E:\13\2103WS\BW\WB Stage-Contract C\ECCO\Electrical\CD-E-15 Manhole & u.g duct bank\04-0120S4-e01-5r1.dgn

FILE NAME: 04-0120S4-e01-5r1.dgn
DATE PLOTTED => 8/5/2010
TIME PLOTTED => 2:01:15 PM

DIST	COUNTY	ROUTE	KILOMETER POST TOTAL PROJECT	SHEET NO.	TOTAL SHEETS
04	SF	80	12.7/13.2	135 R1	806

REGISTERED ELECTRICAL ENGINEER — DATE 7/14/08

6-23-08
PLANS APPROVAL DATE

THE STATE OF CALIFORNIA OR ITS OFFICERS OR AGENTS SHALL NOT BE RESPONSIBLE FOR THE ACCURACY OF COMPUTRAPES OF ELECTRONIC COPIES OF THIS PLAN SHEET.

PB AMERICAS, INC.
A Parsons Brinckerhoff Company
201 Second St., Suite 1000
San Francisco, CA 94107-4317

Caltrans Metric

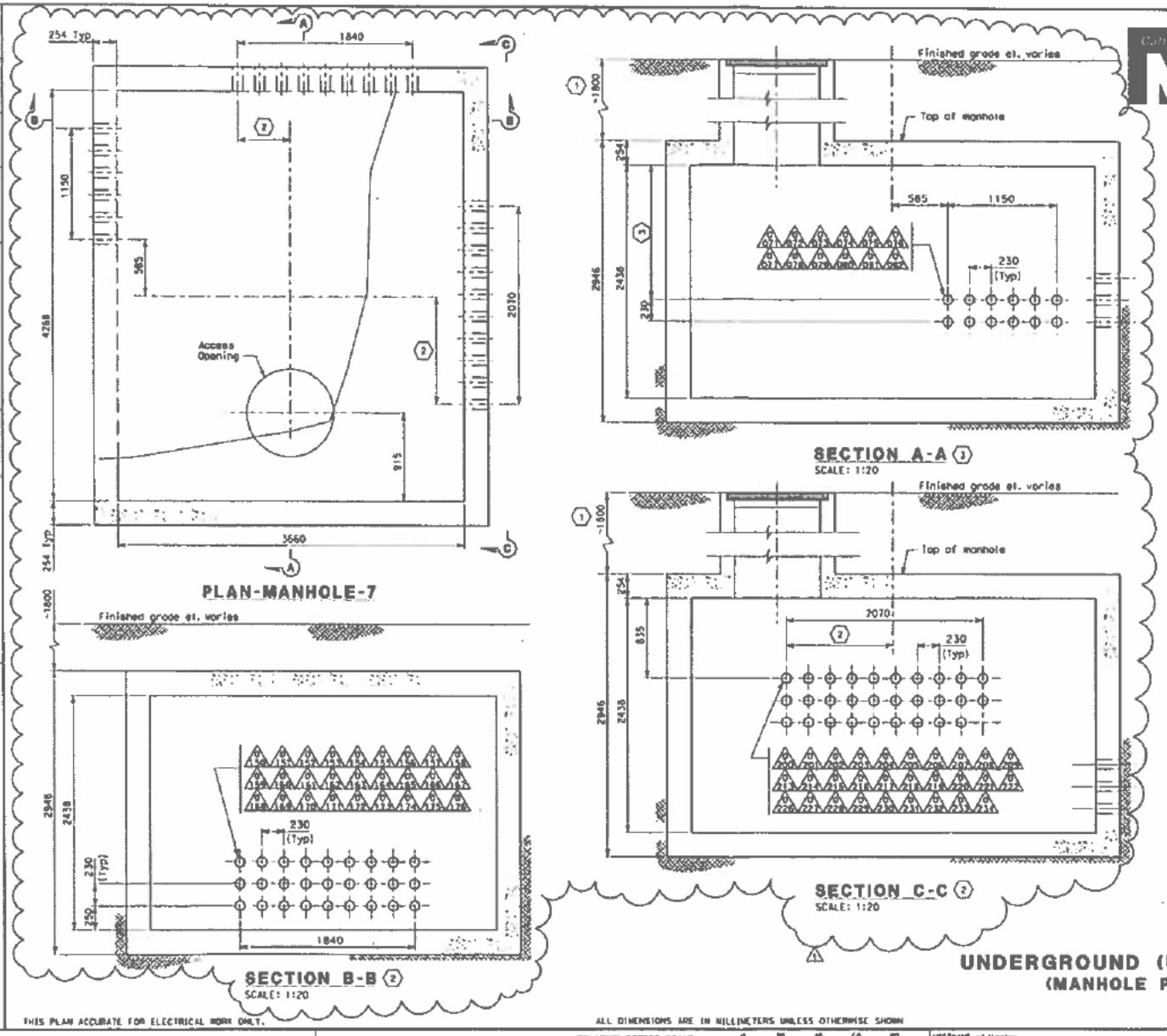

NOTES:

1. References:
   - For duct bank and manhole plan, see sheet E-7.
   - For duct bank sections, see sheet E-32.
   - For typical manhole and duct bank details, see sheet E-35.

SHEET NOTES:

1. Approximate distance of manhole necking or riser is ~~(see the unlabeled scale and top of manhole). Minimum length of manhole necking or riser shall be 914 mm.~~
2. The location of conduit opening shall be determined by the Contractor. Coordinate this drawing with the utility details, sheet UD-6.
3. The location of conduit opening entering the manhole shall be the same elevation of the existing ductbank. See sheets E-7 and E-32.

Syn Lee Chin
FOR REVISION ONLY
08/05/2010

04-012054
015
9 10

DETAILS
UNDERGROUND (ELECTRICAL DUCT BANK)
(MANHOLE PLANS AND SECTIONS)

SCALE AS NOTED

E-16

THIS PLAN ACCURATE FOR ELECTRICAL WORK ONLY.

ALL DIMENSIONS ARE IN MILLIMETERS UNLESS OTHERWISE SHOWN

STATE OF CALIFORNIA - DEPARTMENT OF TRANSPORTATION
Caltrans
CONSULTANT FUNCTIONAL SUPERVISOR: BEHZAD GOLEMOHAMMADI
CALCULATED-DESIGNED BY: NB
CHECKED BY: TK
REVISED BY / DATE REVISED

BORDER LAST REVISED 5/1/2007

RELATIVE BORDER SCALE IS IN MILLIMETERS 0 20 40 60 80

USERNAME => tlorton
DGN FILE => T:\STIDS\US\oak\TBI Struc-Contract 1\ECON\electrical\E-15 Manhole MH-7 & u.g duct bank.dgn

CU 04251 | EA 012051

DATE PLOTTED => 8/4/2010
TIME PLOTTED => 3:09:52 PM

Dist	COUNTY	ROUTE	KILOMETER POST TOTAL PROJECT	SHEET NO.	TOTAL SHEETS
04	SF	80	12.7/13.2	151 R1	806

REGISTERED ELECTRICAL ENGINEER 2/14/08 DATE

6-23-08
PLANS APPROVAL DATE

THE STATE OF CALIFORNIA OR ITS OFFICERS OR AGENTS SHALL NOT BE RESPONSIBLE FOR THE ACCURACY OR COMPLETENESS OF ELECTRONIC COPIES OF THIS PLAN SHEET.

Caltrans Metro

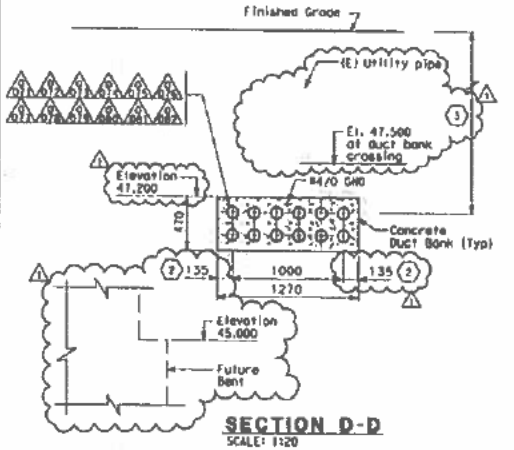

SECTION D-D
SCALE: 1:20

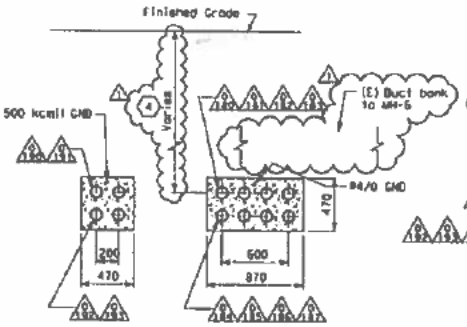

SECTION E-E
SCALE: 1:20

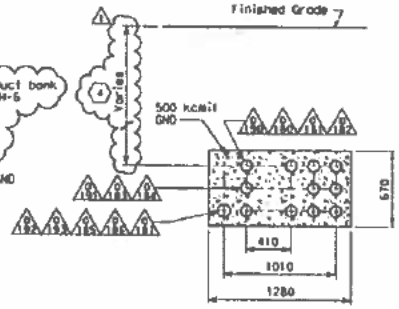

SECTION F-F
SCALE: 1:20

NOTES:

1. References:
   - For duct banks and manholes, see sheets E-7 and E-8.
   - For manhole plans and sections, see sheets E-14 thru E-17, E-28 and E-29.
   - For typical manhole and duct bank details, see sheet E-35.

SHEET NOTES:

1. Not in contract. Conduits and grounds shown are existing installed on previous contract. It is provided as reference for routing cables/circuits only. Existing conduit is tag prefixed (N) on conduit and tray schedules.
2. The dimension indicated shall be maintained as the maximum distance of concrete cover from the conduit. Contractor to ensure the location and overall size of the underground duct bank along the future bent is maintained as indicated on the Utility Details UD-6.
3. The elevation of conduit duct bank shall be the same as existing.
4. Work this drawing with utility details, sheet UD-1.

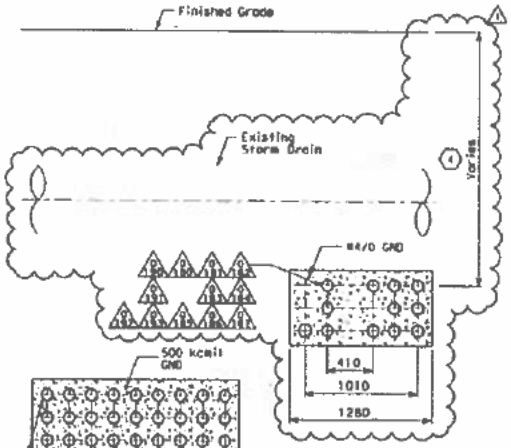

SECTION G-G
SCALE: 1:20

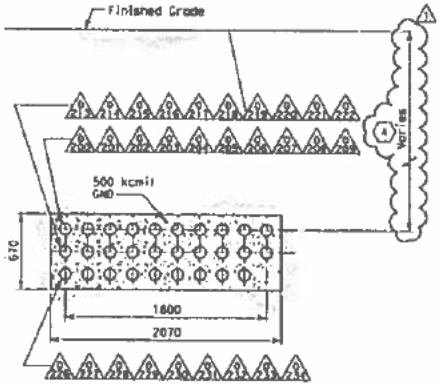

SECTION H-H
SCALE: 1:20

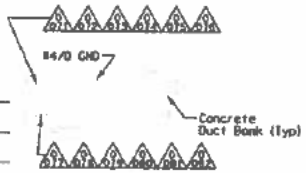

SECTION D1-D1 (1)
SCALE: 1:20

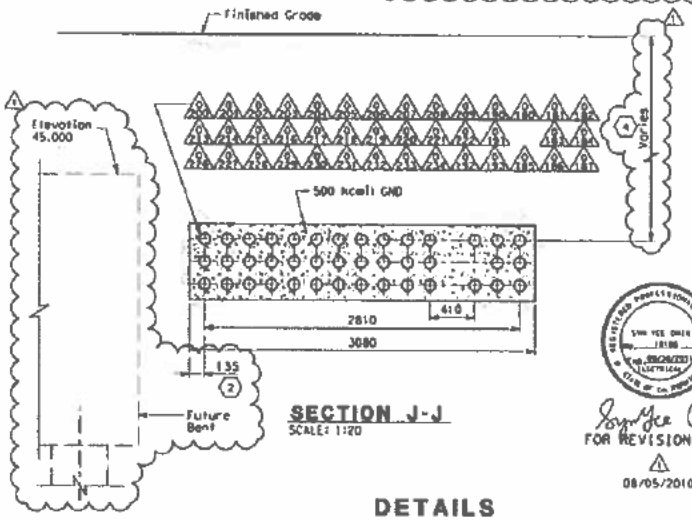

SECTION J-J
SCALE: 1:20

CONTRACT NO. 04-012054
CONTRACT CHANGE ORDER NO. 015
SHEET 10 OF 10

Sophia Chin
FOR REVISION ONLY
08/05/2010

DETAILS
UNDERGROUND (ELECTRICAL DUCT BANK)
(DUCT BANK SECTIONS)

SCALE AS NOTED

E-32

STATE OF CALIFORNIA - DEPARTMENT OF TRANSPORTATION
Caltrans
CONSULTANT FUNCTIONAL SUPERVISOR: BEHZAD DOLEMOHAMADI
CALCULATED-DESIGNED BY
CHECKED BY
REVISED BY
DATE REVISED

THIS PLAN ACCURATE FOR ELECTRICAL WORK ONLY.

ALL DIMENSIONS IN MILLIMETERS UNLESS OTHERWISE SHOWN

BORDER LAST REVISED 3/1/2007

RELATIVE BORDER SCALE IS IN MILLIMETERS 0 20 40 60 80

USERNAME = jthorlac
DGN FILE = H:\EST&DES\ms\H81 Struc-Contract 1\ECON\electrical\04231_ea-f4u-8 duct bank\ed02d01.dgn

04231
EA 012051

DATE PLOTTED = 22-8-2010
TIME PLOTTED = 13:27:56 PM

STATE OF CALIFORNIA - DEPARTMENT OF TRANSPORTATION

CONTRACT CHANGE ORDER

Change Requested by: Contractor

CCO: 16	Suppl. No. 0	Contract No. 04 - 0120S4	Road SF-80-12.7/13.2	FED. AID LOC.: NO FED AID

To: M C M CONSTRUCTION INC

You are directed to make the following changes from the plans and specifications or do the following described work not included in the plans and specifications for this contract. ***NOTE: This change order is not effective until approved by the Engineer.***

Description of work to be done, estimate of quantities and prices to be paid. (Segregate between additional work at contract price, agreed price and force account.) Unless otherwise stated, rates for rental of equipment cover only such time as equipment is actually used and no allowance will be made for idle time. This last percentage shown is the net accumulated increase or decrease from the original quantity in the Engineer's Estimate.

Extra Work at Lump Sum:

1."Aggregate Grading" of Section 10-1.59, "Concrete Structures" in Contract Special Provisions is amended to read as "The aggregate grading of concrete for footings, columns, and bent caps may be 25-mm maximum combined aggregate grading conforming to section 90-3. "Aggregate Grading" of Standard Specification provided that 100 percent passes 25 mm and no less than 90 percent passes 19 mm."

2. Replace Contract Special Provisions Section 90-2.01B, "Supplementary Cementatious Material (SCM)" with sheets 2 to 5 of this Contract Change Order.

3. After the fifth paragraph of Contract Special Provisions Section 8-2.02, "Corrosion Control for Portland Cement Concrete", insert the following statement:
"Footing concrete having more than 25% flyash and meeting mass concrete requirement may be accepted as corrosion concrete provided that the water/cement ratio does not exceed 0.4."

There will be no cost or credit to the state by reason of this change.

No adjustment to contact time is warranted, as this change does not affect the controlling operations.

Estimated Cost: Increase ☐ Decrease ☐ **$0.00**

By reason of this order the time of completion will be adjusted as follows: 0 days

Submitted by		
Signature Rajesh Oberoi	Resident Engineer Rajesh Oberoi, Senior R.E.	Date 8/5/10
Approval Recommended by		
Signature Michael Fromm	Area Construction Manager Deanna Vilcheck	Date 8/5/10
Engineer Approval by		
Signature Deanna Vilcheck	Area Construction Manager Deanna Vilcheck	Date 9/7/10

We the undersigned contractor, have given careful consideration to the change proposed and agree, if this proposal is approved, that we will provide all equipment, furnish the materials, except as may otherwise be noted above, and perform all services necessary for the work above specified, and will accept as full payment therefor the prices shown above.

NOTE: If you, the contractor, do not sign acceptance of this order, your attention is directed to the requirements of the specifications as to proceeding with the ordered work and filing a written protest within the time therein specified.

Contractor Acceptance by		
Signature	(Print name and title) EDMUNDO A. PUCHI, TREASURER	Date 8/12/10

90-2.01B Supplementary Cementitious Materials

Each supplementary cementitious material shall conform to one of the following:

A. Fly ash conforming to the requirements in AASHTO Designation: M 295, Class F, and these specifications. The available alkali, as sodium oxide equivalent, shall not exceed 1.5 percent when determined in conformance with the requirements in ASTM Designation: C 311 or the total alkali, as sodium oxide equivalent, shall not exceed 5.0 percent when determined in conformance with the requirements in AASHTO Designation: T 105.

B. Ultra fine fly ash (UFFA) conforming to the requirements in AASHTO Designation: M 295, Class F, and the following chemical and physical requirements:

Chemical Requirements	Percent
Sulfur Trioxide (SO_3)	1.5 max.
Loss on ignition	1.2 max.
Available Alkalies (as Na_2O) equivalent	1.5 max.

Physical Requirements	Percent
Particle size distribution	
. Less than 3.5 microns	50
. Less than 9.0 microns	90
Strength Activity Index with portland cement	
7 days	95 (minimum % of control)
28 days	110 (minimum % of control)
Expansion at 16 days when testing job materials in conformance with ASTM C 1567*	0.10 max.

* In the test mix, Type II or Type V portland cement shall be replaced with at least 12% UFFA by weight.

C. Raw or calcined natural pozzolans conforming to the requirements in AASHTO Designation: M 295, Class N. and the following requirements and these specifications. The available alkali, as sodium oxide equivalent, shall not exceed 1.5 percent when determined in conformance with the requirements in ASTM Designation: C 311 or the total alkali, as sodium oxide equivalent, shall not exceed 5.0 percent when determined in conformance with the requirements in AASHTO Designation: T 105.

D. Metakaolin conforming to the requirements in AASHTO Designation: M 295, Class N, and the following chemical and physical requirements:

Chemical Requirements	Percent
Silicon Dioxide (SiO_2) + Aluminum Oxide (Al_2O_3)	92.0 min.
Calcium Oxide (CaO)	1.0 max
Sulfur Trioxide (SO_3)	1.0 max.
Loss on ignition	1.2 max.
Available Alkalies (as Na_2O) equivalent	1.0 max.

Physical Requirements	Percent
Particle size distribution Less than 45 microns	95
Strength Activity Index with portland cement 7 days 28 days	100 (minimum % of control) 100 (minimum % of control)

E. Ground Granulated Blast Furnace Slag (GGBFS) conforming to the requirements in AASHTO Designation: M 302, Grade 100 or Grade 120.
F. Silica Fume conforming to the requirements of AASHTO Designation: M 307, with reduction in mortar expansion of 80 percent, minimum, using the cement from the proposed mix design.

Commingling of fly ash from different sources at uncontrolled ratios is permissible only if the following criteria are satisfied:

A. Sources of fly ash to be commingled shall each produce fly ash that conforms to the requirements in AASHTO Designation: M 295, Class F.
B. Testing of the commingled product is the responsibility of the fly ash supplier.
C. Each fly ash's running average of relative density shall not differ from any other by more than 0.25 pound per cubic inch at the time of commingling.
D. Each fly ash's running average of loss on ignition shall not differ from any other by more than one percent at the time of commingling.
E. The final product of commingled fly ash shall conform to the requirements in AASHTO Designation: M 295, Class F.

90-2.01C Required Use Of Supplementary Cementitious Materials

General

The amount of portland cement and SCM used in portland cement concrete shall conform to the minimum cementitious material content provisions in Section 90-1.01, "Description," or Section 90-4.05, "Optional Use of Chemical Admixtures," and these specifications.

The SCM content in portland cement concrete shall conform to one of the following:

A. Any combination of portland cement and at least one SCM, satisfying Equations (1) and (2):

Equation (1)

$$\frac{(25 \times UF) + (12 \times FA) + (10 \times FB) + (6 \times SL)}{MC} \geq X$$

Where:

UF = Silica fume, metakaolin, or UFFA, including the amount in blended cement, pounds per cubic yard.

FA = Fly ash or natural pozzolan conforming to the requirements in AASHTO Designation: M 295, Class F or N with a CaO content up to 10 percent, including the amount in blended cement, pounds per cubic yard.

FB = Fly ash or natural pozzolan conforming to the requirements in AASHTO Designation: M 295, Class F or N with a CaO content up to 15 percent, including the amount in blended cement, pounds per cubic yard.
SL = GGBFS, including the amount in blended cement, pounds per cubic yard.
MC = Minimum amount of cementitious material specified, pounds per cubic yard.
X = 1.8 for innocuous aggregate, 3.0 for all other aggregate.

Equation (2)

$$MC - MSCM - PC \geq 0$$

Where:

MC = Minimum amount of cementitious material specified, pounds per cubic yard.
MSCM = The minimum sum of SCMs that satisfies Equation (1) above, pounds per cubic yard.
PC = The amount of portland cement, including the amount in blended cement, pounds per cubic yard.

B. 15 percent of Class F fly ash with at least 48 ounces of $LiNO_3$ solution added per 100 pounds of portland cement. CaO content of the fly ash shall not exceed 15 percent.

Precast Concrete

The SCM content in precast portland cement concrete shall conform to one of the following:

A. Any combination of portland cement and SCM, satisfying the following equation:

Equation (3)

$$\frac{(25 \times UF) + (12 \times FA) + (10 \times FB) + (6 \times SL)}{TC} \geq X$$

Where:

UF = Silica fume, metakaolin, or UFFA, including the amount in blended cement, pounds per cubic yard.
FA = Fly ash or natural pozzolan conforming to the requirements in AASHTO Designation: M 295, Class F or N with a CaO content up to 10 percent, including the amount in blended cement, pounds per cubic yard.
FB = Fly ash or natural pozzolan conforming to the requirements in AASHTO Designation: M 295, Class F or N with a CaO content up to 15 percent, including the amount in blended cement, pounds per cubic yard.
SL = GGBFS, including the amount in blended cement, pounds per cubic yard.
TC = Total amount of cementitious material used in the mix, pounds per cubic yard.
X = 0.0 if precast members are constructed with portland cement concrete using aggregate that is "innocuous" in conformance with the provisions in Section 90-2.02, "Aggregates."
X = 3.0 for all other aggregate.

B. 15 percent of Class F fly ash with at least 48 ounces of $LiNO_3$ solution added per 100 pounds of portland cement. CaO content of the fly ash shall not exceed 15 percent.

C. Any combination of supplementary cementitious material and portland cement may be used if the expansion of cementitious material and aggregate does not exceed 0.10 percent when tested in conformance with the requirements in ASTM C 1567. Test data shall be submitted with each mix design. Test data accepted by the Engineer no more than 3 years prior to the first working day of this contract will be acceptable for this entire contract, provided the data was for the same concrete mix and the same materials and material sources to be used on this contract.

STATE OF CALIFORNIA - DEPARTMENT OF TRANSPORTATION

CONTRACT CHANGE ORDER MEMORANDUM

DATE: 8/2/2010 Page 1 of 2

TO: Deanna Vilcheck, ACM / DV	FILE: E.A. 04 - 0120S4
FROM: Rajesh Oberoi, Senior R.E.	CO-RTE-PM SF-80-12.7/13.2
	FED. NO. NO FED AID
CCO#: 16 SUPPLEMENT#: 0 Category Code: CHSA	CONTINGENCY BALANCE (incl. this change) $31,926,772.00
COST: $0.00 INCREASE ☐ DECREASE ☐	HEADQUARTERS APPROVAL REQUIRED? ☑ YES ☐ NO
SUPPLEMENTAL FUNDS PROVIDED: $0.00	IS THIS REQUEST IN ACCORDANCE WITH ENVIRONMENTAL DOCUMENTS? ☑ YES ☐ NO
CCO DESCRIPTION: CONCRETE SPECIFICATIONS CHANGE	PROJECT DESCRIPTION: YBITS-1 (Yerba Buena Island Transition Structures)

Original Contract Time:	Time Adj. This Change:	Previously Approved CCO Time Adjustments:	Percentage Time Adjusted: (including this change)	Total # of Unreconciled Deferred Time CCO(s): (including this change)
1390 Day(s)	0 Day(s)	0 Day(s)	0 %	0

THIS CHANGE ORDER PROVIDES FOR:

1. Revising the Maximum combined aggregate grading for footings, columns, and bent caps from 12.5 mm to 25 mm provided that aggregate grading conforms with Section 90-03, "Aggregate Grading" of Standard Specifications and 100 percent passes 25 mm and no less than 90 percent passes the 19mm.

2. Replacing Contract Special Provisions Section 90-2.01B, "Supplementary Cementitious Materials (SCM)" with sheets 2 to 5 of this contract change order.

3. Allowing the Contractor to use more that 25% percent fly ash by mass of total amount of cementitious material in Corrosion control concrete for footings provided the concrete meets the mass concrete requirements and water/cement ratio does not exceed 0.4.

REASONS FOR CHANGE:

The Contractor requested to change maximum combined aggregate grading to 25mm for footings, columns, and bent caps. The Contractor built five mock-ups to evaluate the viability of 25mm aggregate concrete for the congested element of the structure. The Department determined the sections of the structure that were replicated by the mockups. Concrete core samples obtained from the mockup sections showed that the concrete was well consolidated and did not contain any rock pockets or voids. Aggregate gradation proposed by the Contractor improves gradation ,creep and shrinkage characteristics of the concrete.

The change in supplementary cementitious material requirements allows the Contractor to conform to the most recent Standard Specification Section 90 issued by the Department. The revised requirements conform with Assembly Bill 32 and permits increased use of supplementary cementations material is encouraged by the Department.

The increased use of flyash in thermal concrete also meets the intent of the corrosion specifications. This change also resolves the conflict between corrosion concrete and mass concrete requirements. This change has been allowed on a previous Caltrans project and is also consistent with Assembly Bill 32.

Ric Maggenti, Toll Bridge Design, Materials & Research Engineer, concurred to this change on 07/06/10.

Structure Maintenance concurrence is not required.

There will be no cost or credit to the state by reason of this change.

These changes do not affect controlling item and no adjustment of contract time is warranted.

ADA Notice: For individuals with sensory disabilities, this document is available in alternate formats. For information call: (916) 654-6410 or TDD (916) 654-3880 or write Records and Forms Management, 1120 N Street, MS-89, Sacramento, CA 95814.

CONCURRED BY:		
Construction Engineer: Rajesh Oberoi	RO	Date 8/5/10
Bridge Engineer: for Mehran Ardakanian	GK	Date 8/5/10
Project Engineer:		Date
Project Manager:		Date
FHWA Rep.:		Date
Environmental:		Date
Other (specify):		Date
Other (specify):		Date
District Prior Approval By:		Date
HQ (Issue Approve) By:		Date
Resident Engineer's Signature: Rajesh Oberoi		Date 8/5/10

ESTIMATE OF COST

	THIS REQUEST	TOTAL TO DATE
ITEMS	$0.00	$0.00
FORCE ACCOUNT	$0.00	$0.00
AGREED PRICE	$0.00	$0.00
ADJUSTMENT	$0.00	$0.00
TOTAL	$0.00	$0.00

FEDERAL PARTICIPATION

☐ PARTICIPATING ☐ PARTICIPATING IN PART ☑ NONE
☐ NON-PARTICIPATING (MAINTENANCE) ☐ NON-PARTICIPATING

FEDERAL SEGREGATION (if more than one Funding Source or P.I.P. type)
☐ CCO FUNDED PER CONTRACT ☐ CCO FUNDED AS FOLLOWS

FEDERAL FUNDING SOURCE	PERCENT

ADA Notice: For individuals with sensory disabilities, this document is available in alternate formats. For information call: (916) 654-6410 or TDD (916) 654-3880 or write Records and Forms Management, 1120 N Street, MS 89, Sacramento, CA 95814

STATE OF CALIFORNIA - DEPARTMENT OF TRANSPORTATION

CONTRACT CHANGE ORDER

Change Requested by: Engineer

CCO: 17	Suppl. No. 0	Contract No. 04 - 0120S4	Road SF-80-12.7/13.2	FED. AID LOC.: NO FED AID

To: **M C M CONSTRUCTION INC**

You are directed to make the following changes from the plans and specifications or do the following described work not included in the plans and specifications for this contract. ***NOTE: This change order is not effective until approved by the Engineer.***

Description of work to be done, estimate of quantities and prices to be paid. (Segregate between additional work at contract price, agreed price and force account.) Unless otherwise stated, rates for rental of equipment cover only such time as equipment is actually used and no allowance will be made for idle time. This last percentage shown is the net accumulated increase or decrease from the original quantity in the Engineer's Estimate.

Extra Work at Force Account:

Implement specific sampling and analytical procedures to monitor the effectiveness of water pollution control practices, in accordance with Section 10-1.04 "Water Pollution Control", subsection "Sampling and Analysis", of the contract Special Provisions, and as authorized by the Engineer.

Storm water sampling and analysis will be paid for as extra work as provided in Section 5-1.17 "Force Account Payment" of the Special Provisions, and Section 4-1.03D, "Extra Work," of the Standard Specifications. No payment will be made for the preparation, collection, analysis, and reporting of storm water samples where appropriate water pollution control practices are not implemented before precipitation or if a failure of a water pollution control practice is not corrected before precipitation.
Implementation of water pollution control practices in areas outside the highway right of way not specifically provided for in the SWPPP or in these special provisions will not be paid for.

Water pollution control practices for which there are separate contract items of work will be measured and paid for as those contract items of work.

Estimated cost of Extra Work at Force Account $15,000.00

No adjustment of the contract time is warranted, as this change does not affect the controlling operation.

Estimated Cost: **Increase** ☑ **Decrease** ☐ **$15,000.00**

By reason of this order the time of completion will be adjusted as follows: 0 days

Submitted by

Signature	Resident Engineer	Date
Rajesh Oberoi	Rajesh Oberoi, Senior R.E.	8/31/10

Approval Recommended by

Signature	Construction Engineer	Date
Rajesh Oberoi	Rajesh Oberoi	8/31/10

Engineer Approval by

Signature	Construction Engineer	Date
Rajesh Oberoi	Rajesh Oberoi	9/7/10

We the undersigned contractor, have given careful consideration to the change proposed and agree, if this proposal is approved, that we will provide all equipment, furnish the materials, except as may otherwise be noted above, and perform all services necessary for the work above specified, and will accept as full payment therefor the prices shown above.

NOTE: If you, the contractor, do not sign acceptance of this order, your attention is directed to the requirements of the specifications as to proceeding with the ordered work and filing a written protest within the time therein specified.

Contractor Acceptance by

Signature	Print name and title	Date
[illegible]	Edmund H. Pucci - Treasurer	9-9-2010

STATE OF CALIFORNIA - DEPARTMENT OF TRANSPORTATION

CONTRACT CHANGE ORDER MEMORANDUM

DATE: 8/27/2010 Page 1 of 1

TO: Deanna Vilcheck, ACM /

FROM: Rajesh Oberoi, Senior R.E.

FILE: E.A. 04 - 0120S4
CO-RTE-PM SF-80-12.7/13.2
FED. NO. NO FED AID

CCO#: 17 | SUPPLEMENT#: 0 | Category Code: ~~CXSA~~ AWZZ

CONTINGENCY BALANCE (incl. this change) **$31,691,772.00**

COST: **$15,000.00** INCREASE ☑ DECREASE ☐

HEADQUARTERS APPROVAL REQUIRED? ☐ YES ☑ NO

SUPPLEMENTAL FUNDS PROVIDED: **$15,000.00**

IS THIS REQUEST IN ACCORDANCE WITH ENVIRONMENTAL DOCUMENTS? ☑ YES ☐ NO

CCO DESCRIPTION:
Storm Water Sampling and Analysis

PROJECT DESCRIPTION:
YBITS-1 (Yerba Buena Island Transition Structures)

Original Contract Time:	Time Adj. This Change:	Previously Approved CCO Time Adjustments:	Percentage Time Adjusted: (including this change)	Total # of Unreconciled Deferred Time CCO(s): (including this change)
1390 Day(s)	0 Day(s)	0 Day(s)	0 %	0

THIS CHANGE ORDER PROVIDES FOR:

Compensate the Contractor for implementing specific storm water sampling and analytical procedures, in accordance with Section 10-1.04 "Water Pollution Control", subsection "Sampling and Analysis" of the contract Special Provisions, and as authorized by the Engineer.

The project has the potential to discharge non-visible pollutants in storm water from the construction site. The project Storm Water Pollution Prevention Plan (SWPPP) will contain a Sampling and Analysis Plan (SAP) that describes the sampling and analysis strategy and schedule to be implemented on the project for monitoring and preventing non-visible pollutants from causing or contributing to exceedances of water quality objectives.

This work will be paid for as extra work at force account with an estimated cost of $15,000.00, which will be financed from the supplemental funds allocated for this work. A cost analysis is on file.

Design concurrence is not required, as this work was anticipated in the contract documents.

Maintenance concurrence is not required, as this work does not affect any permanent features.

No adjustment of contract time is warranted, as this change will not affect the controlling operation.

CONCURRED BY:

Construction Engineer:	Rajesh Oberoi RO.	Date 8/31/10
Bridge Engineer:		Date
Project Engineer:		Date
Project Manager:		Date
FHWA Rep.:		Date
Environmental:		Date
Other (specify):		Date
Other (specify):		Date
District Prior Approval By:		Date
HQ (Issue Approve) By:		Date
Resident Engineer's Signature:	Rajesh Oberoi	Date 8/31/10

ESTIMATE OF COST

	THIS REQUEST	TOTAL TO DATE
ITEMS	$0.00	$0.00
FORCE ACCOUNT	$15,000.00	$15,000.00
AGREED PRICE	$0.00	$0.00
ADJUSTMENT	$0.00	$0.00
TOTAL	$15,000.00	$15,000.00

FEDERAL PARTICIPATION

☐ PARTICIPATING ☐ PARTICIPATING IN PART ☑ NONE
☐ NON-PARTICIPATING (MAINTENANCE) ☐ NON-PARTICIPATING

FEDERAL SEGREGATION (if more than one Funding Source or P.I.P. type)
☑ CCO FUNDED PER CONTRACT ☐ CCO FUNDED AS FOLLOWS

FEDERAL FUNDING SOURCE	PERCENT

ADA Notice: For individuals with sensory disabilities, this document is available in alternate formats. For information call: (916) 654-6410 or TDD (916) 654-3880 or write

STATE OF CALIFORNIA - DEPARTMENT OF TRANSPORTATION

CONTRACT CHANGE ORDER

Change Requested by: Engineer

CCO: 18	Suppl. No. 0	Contract No. 04 - 0120S4	Road SF-80-12.7/13.2	FED. AID LOC.: NO FED AID

To: M C M CONSTRUCTION INC

You are directed to make the following changes from the plans and specifications or do the following described work not included in the plans and specifications for this contract. ***NOTE: This change order is not effective until approved by the Engineer.***

Description of work to be done, estimate of quantities and prices to be paid. (Segregate between additional work at contract price, agreed price and force account.) Unless otherwise stated, rates for rental of equipment cover only such time as equipment is actually used and no allowance will be made for idle time. This last percentage shown is the net accumulated increase or decrease from the original quantity in the Engineer's Estimate.

Extra Work at Force Account:

Provide temporary shuttle van service in addition to Contract Item 193 " Temporary Shuttle Van Service" for transporting United States Coast Guard personnel to Yerba Buena Island, Treasure Island, and other locations as directed by the Engineer.

Shuttle vans shall conform to the provisions of Section 10-1.19 " TEMPORARY SHUTTLE VAN SERVICE" Paragraph A of the Special Provisions.

Estimated cost of Extra Work at Force Account $600,000.00

No adjustment in contract time is warranted as this change does not affect any controlling operation.

Estimated Cost: Increase ☑ Decrease ☐ **$600,000.00**

By reason of this order the time of completion will be adjusted as follows: 0 days

Submitted by

Signature	Resident Engineer	Date
Rajesh Oberoi	Rajesh Oberoi, Senior R.E.	8/31/10

Approval Recommended by

Signature	Area Construction Manager	Date
Michael Frame	Deanna Vilcheck	9-1-10

Engineer Approval by

Signature	Principal T.E.	Date
Michael Frame	Mike Forner	9-30-10

We the undersigned contractor, have given careful consideration to the change proposed and agree, if this proposal is approved, that we will provide all equipment, furnish the materials, except as may otherwise be noted above, and perform all services necessary for the work above specified, and will accept as full payment therefor the prices shown above.

NOTE: If you, the contractor, do not sign acceptance of this order, your attention is directed to the requirements of the specifications as to proceeding with the ordered work and filing a written protest within the time therein specified.

Contractor Acceptance by

Signature	(Print name and title)	Date
[illegible]	Edmund Pirchi - Treasurer	9-28-2010

STATE OF CALIFORNIA - DEPARTMENT OF TRANSPORTATION

CONTRACT CHANGE ORDER MEMORANDUM

DATE: 8/17/2010 Page 1 of 1

TO: Deanna Vilcheck, ACM /	FILE: E.A. 04 - 0120S4
FROM: Rajesh Oberoi, Senior R.E.	CO-RTE-PM SF-80-12.7/13.2
	FED. NO. NO FED AID
CCO#: 18 SUPPLEMENT#: 0 Category Code: AWZZ	CONTINGENCY BALANCE (incl. this change) $31,071,772.00
COST: $600,000.00 INCREASE ☑ DECREASE ☐	HEADQUARTERS APPROVAL REQUIRED? ☐ YES ☑ NO
SUPPLEMENTAL FUNDS PROVIDED: $600,000.00	IS THIS REQUEST IN ACCORDANCE WITH ENVIRONMENTAL DOCUMENTS? ☑ YES ☐ NO
CCO DESCRIPTION: TEMPORARY SHUTTLE SERVICE	PROJECT DESCRIPTION: YBITS-1 (Yerba Buena Island Transition Structures)

Original Contract Time:	Time Adj. This Change:	Previously Approved CCO Time Adjustments:	Percentage Time Adjusted: (including this change)	Total # of Unreconciled Deferred Time CCO(s): (including this change)
1390 Day(s)	0 Day(s)	0 Day(s)	0 %	0

THIS CHANGE ORDER PROVIDES FOR:

Providing shuttle van service for Coast Guard personnel, as authorized by the Engineer.

This project, the Yerba Buena Island Transition Structure (YBITS) ties in the new east span of the San Francisco Oakland Bay Bridge to Yerba Buena Island.This work, in addition to the other SFOBB construction work, such as the ongoing SAS construction, and the now completing Yerba Buena Island Detour (YBID), will have significant impacts on the US Coast Guard facility adjacent to the YBITS job site.

The YBID structure had been built directly over Macalla Road, the only access into the Coast Guard base. In addition, the Coast Guard has allowed the Department the use of a large areas for construction trailers, construction vehicle parking, and construction laydown areas, resulting in less parking and storage area availability for the Coast Guard personnel. To minimize impediments to the Coast Guard operations and their personnel due to Caltrans road and ramp closures, The Coast Guard requested that Caltrans provide shuttle van service so that their personnel can get to the YBI Coast Guard Station from Alameda housing office, the Federal Building in Oaklnad and West Oakland Bart Station on an on-call basis as requested by US Coast Guard or by the Engineer.

The contract already specifies that the contractor provide shuttle vans for replacement of a City of San Francisco Bus Service (Muni Railway), this CCO provides additional shuttle vans for coast guard personnel.

This work will be performed under Extra Work at Force Account for an estimated cost of 600,000.00. Supplemental funds have been provided for this work in the amount of $ $1,750,000.00. A cost analysis is on file.

Maintenance concurrence is not required, as this work does not affect any permanent features.

No adjustment in contract time is warranted as this change does not affect any controlling operation.

CONCURRED BY:

Construction Engineer:	Rajesh Oberoi RO	Date 8/31/10
Bridge Engineer:		Date
Project Engineer:		Date
Project Manager:		Date
FHWA Rep.:		Date
Environmental:		Date
Other (specify):		Date
Other (specify):		Date
District Prior Approval By:		Date
HQ (Issue Approve) By:		Date
Resident Engineer's Signature:	Rajesh Oberoi	Date 8/31/10

ESTIMATE OF COST

	THIS REQUEST	TOTAL TO DATE
ITEMS	$0.00	$0.00
FORCE ACCOUNT	$600,000.00	$600,000.00
AGREED PRICE	$0.00	$0.00
ADJUSTMENT	$0.00	$0.00
TOTAL	$600,000.00	$600,000.00

FEDERAL PARTICIPATION

☐ PARTICIPATING ☐ PARTICIPATING IN PART ☑ NONE
☐ NON-PARTICIPATING (MAINTENANCE) ☐ NON-PARTICIPATING

FEDERAL SEGREGATION (if more than one Funding Source or P.I.P. type)
☐ CCO FUNDED PER CONTRACT ☐ CCO FUNDED AS FOLLOWS

FEDERAL FUNDING SOURCE	PERCENT

ADA Notice: For individuals with sensory disabilities, this document is available in alternate formats. For information call: (916) 654-6410 or TDD (916) 654-3880 or write Records and Forms Management, 1120 N Street, MS-89, Sacramento, CA 95814.

DEPARTMENT OF TRANSPORTATION - District 4

Caltrans

Department of Transportation
325 Burma Road
Oakland, CA 94607
Telephone (510) 622-4200 Facsimile (510)622-4266

LETTER OF TRANSMITTAL No. 643

TO: MCM CONSTRUCTION INC. 6413 32nd St. North Highlands, Ca. 95660 ATTN: Richard McCall	DATE: 4/23/2013 EA #: 04-0120S4 04-SF-80-12.7/13.2 YBITS-1

Enclosed please find the following items:

- [X] CONTRACT CHANGE ORDER
- [ ] PROGRESS PAYMENT
- [ ] PLANS
- [ ] SHOP DRAWINGS
- [ ] OTHER
- [ ] COPY OF LETTER
- [ ] SPECIFICATIONS
- [ ] CERTIFIED PAYROLL
- [ ] SUBMITTALS
- [ ] OTHERS - SURVEY STAKING REQUEST
- [ ] WEEKLY STATEMENT OF WORKING DAYS WEEK ENDING:
- [ ] DAILY EXTRA WORK REPORT(S) CCO #: ..... REPORT #: .....

COPIES	DATE	NO.	DESCRIPTION
1	4/23/2013	18 S1	ADDITIONAL FUNDS - SHUTTLE SERVICE

These are transmitted as checked below:

- [ ] FOR APPROVAL OR ACTION
- [ ] FOR YOUR FILES
- [ ] FOR REVIEW & COMMENT
- [ ] SIGN & RETURN BOTH COPIES
- [ ] SIGN & RETURN SIGNED COPY
- [ ] RETURNED SIGNED AS REQUESTED
- [ ] RETURNED FOR CORRECTIONS
- [X] APPROVED AS NOTED
- [ ] SEE REMARKS BELOW

REMARKS:

FROM:
- [ ] WILLIAM HOWE, (510) 385-7084
- [ ]
- [X] LINDA TRUDELL, (510) 622-4210
- [ ] BHALINDER PANDHER, (510) 867-6010

COPY TO: 05.21, 49.18 S1

SIGNED: Linda Trudell

TITLE: Office Engineer

COPY

STATE OF CALIFORNIA - DEPARTMENT OF TRANSPORTATION

CONTRACT CHANGE ORDER

Change Requested by: Engineer

CCO 18	Suppl. No. 1	Contract No 04 - 0120S4	Road SF-80-12.7/13.2	FED. AID LOC.: NO FED AID

To: **M C M CONSTRUCTION INC**

You are directed to make the following changes from the plans and specifications or do the following described work not included in the plans and specifications for this contract. ***NOTE: This change order is not effective until approved by the Engineer.***

Description of work to be done, estimate of quantities and prices to be paid. (Segregate between additional work at contract price, agreed price and force account.) Unless otherwise stated, rates for rental of equipment cover only such time as equipment is actually used and no allowance will be made for idle time. This last percentage shown is the net accumulated increase or decrease from the original quantity in the Engineer's Estimate.

Extra Work at Force Account:

Provide additional funds for temporary shuttle van service in addition to Contract Item 193 " Temporary Shuttle Van Service" for transporting United States Coast Guard personnel to Yerba Buena Island, Treasure Island, and other locations as directed by the Engineer.

Shuttle vans shall conform to the provisions of Section 10-1.19 " TEMPORARY SHUTTLE VAN SERVICE" Paragraph A of the Special Provisions.

Estimate of Extra Work at Force Account = $300,000.00

Estimated Cost: Increase ☑ Decrease ☐ $300,000.00

By reason of this order the time of completion will be adjusted as follows: 0 days

Submitted by

Signature	Resident Engineer	Date
William Howe	William Howe, Senior R E	04.09.13

Approval Recommended by

Signature	Area Construction Manager	Date
Deanna Vilcheck	Deanna Vilcheck	4/10/13

Engineer Approval by

Signature	Area Construction Manager	Date
Deanna Vilcheck	Deanna Vilcheck	4/10/13

We the undersigned contractor, have given careful consideration to the change proposed and agree, if this proposal is approved, that we will provide all equipment, furnish the materials, except as may otherwise be noted above, and perform all services necessary for the work above specified, and will accept as full payment therefor the prices shown above.

NOTE: If you, the contractor, do not sign acceptance of this order, your attention is directed to the requirements of the specifications as to proceeding with the ordered work and filing a written protest within the time therein specified.

Contractor Acceptance by

Signature	(Print name and title)	Date
Not Required		

STATE OF CALIFORNIA - DEPARTMENT OF TRANSPORTATION

CONTRACT CHANGE ORDER MEMORANDUM

DATE: 4/5/2013 Page 1 of 1

TO: Deanna Vilcheck, ACM

FROM: William Howe, Senior R.E.

FILE: E.A. 04 - 0120S4
CO-RTE-PM SF-80-12.7/13.2
FED. NO. NO FED AID

CCO#: 18 | SUPPLEMENT#: 1 | Category Code: AWZZ

CONTINGENCY BALANCE (incl. this change) $39,255,854.15

COST: $300,000.00 INCREASE ☑ DECREASE ☐

HEADQUARTERS APPROVAL REQUIRED? ☐ YES ☑ NO

SUPPLEMENTAL FUNDS PROVIDED: $300,000.00

IS THIS REQUEST IN ACCORDANCE WITH ENVIRONMENTAL DOCUMENTS? ☑ YES ☐ NO

CCO DESCRIPTION:
additional funds-shuttle service

PROJECT DESCRIPTION:
YBITS-1 (Yerba Buena Island Transition Structures)

Original Contract Time:	Time Adj. This Change:	Previously Approved CCO Time Adjustments:	Percentage Time Adjusted: (including this change)	Total # of Unreconciled Deferred Time CCO(s): (including this change)
1390 Day(s)	0 Day(s)	0 Day(s)	0 %	9

THIS CHANGE ORDER PROVIDES FOR:

Providing shuttle van service for Coast Guard personnel, as authorized by the Engineer.

This project, the Yerba Buena Island Transition Structure (YBITS) ties in the new east span of the San Francisco Oakland Bay Bridge to Yerba Buena Island.This work, in addition to the other SFOBB construction work, such as the ongoing SAS construction, and the now completing Yerba Buena Island Detour (YBID), will have significant impacts on the US Coast Guard facility adjacent to the YBITS job site.

The YBID structure had been built directly over Macalla Road, the only access into the Coast Guard base. In addition, the Coast Guard has allowed the Department the use of a large areas for construction trailers, construction vehicle parking, and construction laydown areas, resulting in less parking and storage area availability for the Coast Guard personnel. To minimize impediments to the Coast Guard operations and their personnel due to Caltrans road and ramp closures, The Coast Guard requested that Caltrans provide shuttle van service so that their personnel can get to the YBI Coast Guard Station from Alameda housing office, the Federal Building in Oaklnad and West Oakland Bart Station on an on-call basis as requested by US Coast Guard or by the Engineer.

The contract already specifies that the Contractor provide shuttle vans for replacement of a City of San Francisco Bus Service (Muni Railway), this CCO provides additional shuttle vans for U. S. Coast Guard (USCG) personnel.

This CCO provides for additional funds as Extra Work at Force Account for an estimated cost of $300,000.00. The orginal CCO No. 18 S0 provided for $600,000.00, for a total cost of $900,000.00. This change order will be funded from supplemental funds, which have been provided for in the amount of $2,250,000.00. A cost analysis is on file.

Maintenance concurrence is not required, as this work does not affect any permanent features.

No adjustment in contract time is warranted as this change does not affect any controlling operation.

CONCURRED BY:

Construction Engineer:	William Howe	Date 04.09.13
Bridge Engineer:	Mehran Ardakanian	Date
Project Engineer:	Bob Zandipour, Design	Date 4-10-13
Project Manager:	Ken Terpstra	Date 4/10/13
FHWA Rep.:		Date
Environmental:		Date
Other (specify):		Date
Other (specify):		Date
District Prior Approval By:		Date
HQ (Issue Approve) By:		Date
Resident Engineer's Signature:	William Howe	Date 04.09.13

ESTIMATE OF COST

	THIS REQUEST	TOTAL TO DATE
ITEMS	$0.00	$0.00
FORCE ACCOUNT	$300,000.00	$900,000.00
AGREED PRICE	$0.00	$0.00
ADJUSTMENT	$0.00	$0.00
TOTAL	$300,000.00	$900,000.00

FEDERAL PARTICIPATION

☐ PARTICIPATING ☐ PARTICIPATING IN PART ☑ NONE
☐ NON-PARTICIPATING (MAINTENANCE) ☐ NON-PARTICIPATING

FEDERAL SEGREGATION (if more than one Funding Source or P.I.P. type)
☐ CCO FUNDED PER CONTRACT ☐ CCO FUNDED AS FOLLOWS

FEDERAL FUNDING SOURCE	PERCENT

ADA Notice: For individuals with sensory disabilities, this document is available in alternate formats. For information call: (916) 654-6410 or TDD (916) 654-3880 or write Records and Forms Management, 1120 N Street, MS-89, Sacramento, CA 95814.

RESIDENT ENGINEER HOWE, WILLIAM

PHONE NUMBER 510 385-7084

C O N T R A C T C H A N G E O R D E R 0 1 8 - 0 1 S

CONTRACT NO. 04-0120S4

FILING DATE 04/11/13

DESCRIPTION ADDITIONAL FUNDS - SHUTTLE SERVICE CCO CATEGORY AWZZ

APPROVAL DATE 04/10/13

TIME EXTENSION DAY NONE

ITEM NO.	DESCRIPTION OF CHANGE	APPROVED CHANGE QUANTITY	APPROVED CHANGE AMOUNT	CHANGES TO DATE CCO	CHANGES TO DATE QB	AUTHORIZED QUANTITY	QUANTITY PAID TO DATE	EST NO.
	EXTRA WORK -- FORCE ACCOUNT (+)		$300,000.00					

NET CHANGE THIS C.C.O. $300,000.00

AMOUNT OF 'BRIDGEWORK' $0.00

*** C.C.O. ACCEPTED AND FILED. ***

F E D E R A L		P A R T I C I P A T I O N		F E D E R A L		S E G R E G A T I O N	
DISP	TYPE	COST	TYPE	COST	TYPE	FUNDING SOURCE	PCT	FUNDING SOURCE	PCT
NEW	N	300,000.00		.00					

STATE OF CALIFORNIA - DEPARTMENT OF TRANSPORTATION

CONTRACT CHANGE ORDER

Change Requested by: Engineer

CCO 20	Suppl. No. 0	Contract No. 04 - 0120S4	Road SF-80-12.7/13.2	FED. AID LOC.: NO FED AID

To: **M C M CONSTRUCTION INC**

You are directed to make the following changes from the plans and specifications or do the following described work not included in the plans and specifications for this contract. ***NOTE: This change order is not effective until approved by the Engineer.***

Description of work to be done, estimate of quantities and prices to be paid. (Segregate between additional work at contract price, agreed price and force account.) Unless otherwise stated, rates for rental of equipment cover only such time as equipment is actually used and no allowance will be made for idle time. This last percentage shown is the net accumulated increase or decrease from the original quantity in the Engineer's Estimate.

Extra Work at Lump Sum:

Incorporate into the Contract all revisions to the relocation or installation of the underground utilities and all revisions to the stage construction of Macalla Road into the Contract as shown on Sheets No. 2 through 12 of this change order (Revised Plan Sheets No. 32R1, 42R1, 43R1, 43A, 44R1, 46R1, 48R1, 50R1, 67R1, 84A and 84B).

For all additional costs resulting from this change, the Contractor shall be compensated an agreed lump sum of $260,370.00 which constitutes full compensation, including all markups, complete in place, for this change.

Compensation provided herein includes all costs associated with working extended shifts and weekends in order to mitigate the impacts of the work on the local community and all costs associated with existing utility obstructions encountered during the relocation of the utilities pertaining to this change and the Macalla Road roadway.

Cost of Extra Work at Lump Sum $260,370.00

Estimated Cost: Increase ✔ Decrease ☐ **$260,370.00**

By reason of this order the time of completion will be adjusted as follows: 0 days

Submitted by

Signature William Howe	Resident Engineer William Howe, Senior R.E.	Date 07-21-11

Approval Recommended by

Signature Deanna Vilcheck	Area Construction Manager Deanna Vilcheck	Date 7/21/11

Engineer Approved by

Signature Deanna Vilcheck	Area Construction Manager Deanna Vilcheck	Date 8/17/11

We the undersigned contractor, have given careful consideration to the change proposed and agree, if this proposal is approved, that we will provide all equipment, furnish the materials, except as may otherwise be noted above, and perform all services necessary for the work above specified, and will accept as full payment therefor the prices shown above.

NOTE: If you, the contractor, do not sign acceptance of this order, your attention is directed to the requirements of the specifications as to proceeding with the ordered work and filing a written protest within the time therein specified.

Contractor Accepted by

Signature	(Print name and title) EDMUNDO A. PUCHI, TREASURER	Date 8/8/11

Dist	COUNTY	ROUTE	KILOMETER POST TOTAL PROJECT	SHEET No.	TOTAL SHEETS
04	SF	80	12.7/13.2	32R1	806

REGISTERED CIVIL ENGINEER DATE

PLANS APPROVAL DATE

REGISTERED PROFESSIONAL ENGINEER No. Exp. CIVIL STATE OF CALIFORNIA

THE STATE OF CALIFORNIA OR ITS OFFICERS OR AGENTS SHALL NOT BE RESPONSIBLE FOR THE ACCURACY OR COMPLETENESS OF ELECTRONIC COPIES OF THIS PLAN SHEET.

Caltrans Metric

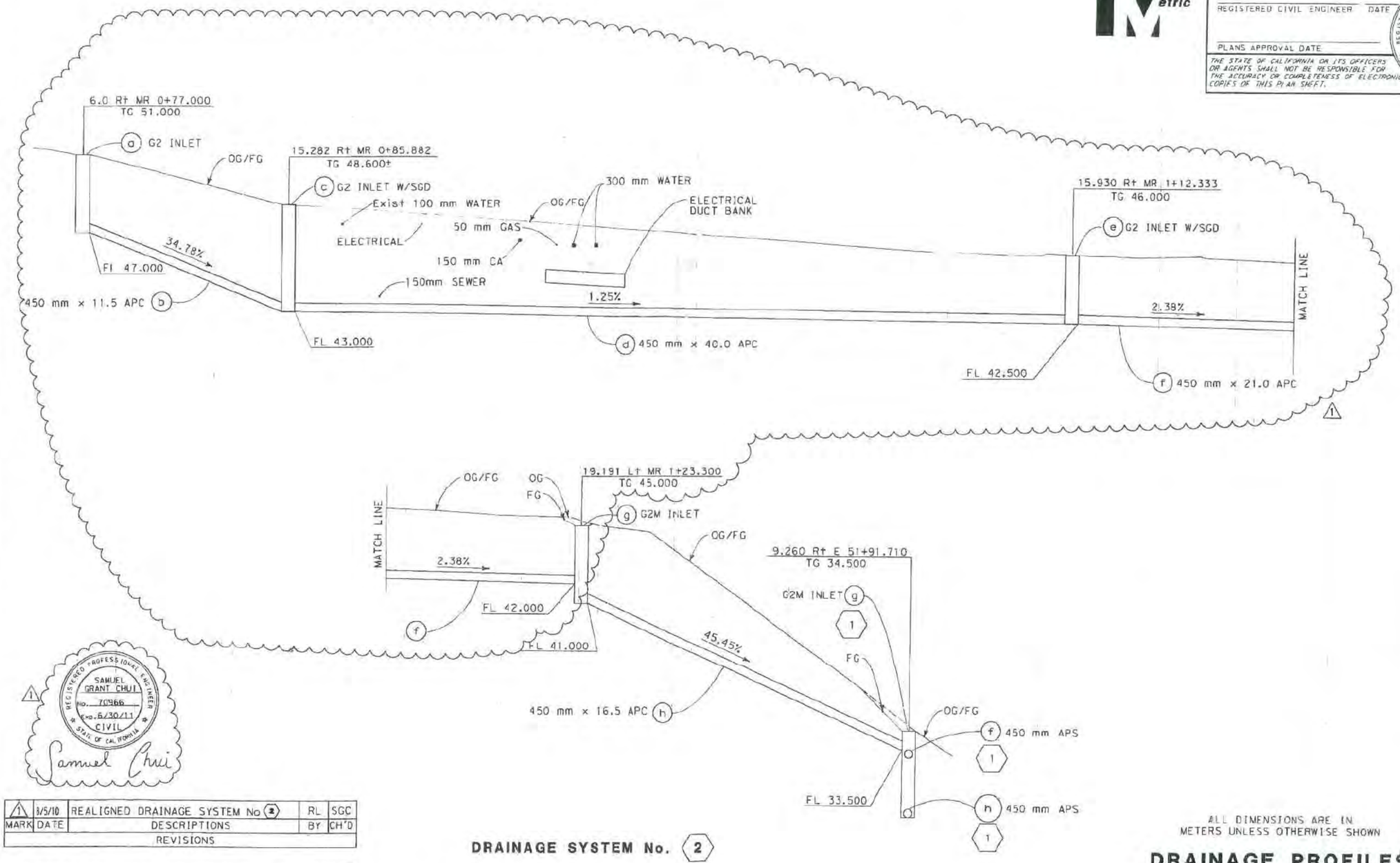

1 REGISTERED PROFESSIONAL ENGINEER SAMUEL GRANT CHUI No. 70966 Exp. 6/30/11 CIVIL STATE OF CALIFORNIA

Samuel Chui

MARK	DATE	DESCRIPTIONS	BY	CH'D
1	3/5/10	REALIGNED DRAINAGE SYSTEM No 2	RL	SGC

REVISIONS

CONTRACT CHANGE ORDER NO. 20
SHEET 2 OF 12

DRAINAGE SYSTEM No. 2

ALL DIMENSIONS ARE IN METERS UNLESS OTHERWISE SHOWN

DRAINAGE PROFILES

SCALE HORIZ 1:100
VERT 1:100

DP-3

REVISED BY	DATE REVISED
TL	10/07

TRINH LAI — ISAAC PEREZ — CALCULATED-DESIGNED BY — CHECKED BY

FUNCTIONAL SUPERVISOR: BOB ZANDIPOUR

STATE OF CALIFORNIA - DEPARTMENT OF TRANSPORTATION — DESIGN — Caltrans

Station	
m³ Exc	
m³ Emb	

LAST REVISION 03-29-08 — DATE PLOTTED => 3/5/2010 — TIME PLOTTED => 5:45:31 PM

Dist	COUNTY	ROUTE	KILOMETER POST TOTAL PROJECT	SHEET No.	TOTAL SHEETS
04	SF	80	12.7/13.2	42R1	806

REGISTERED CIVIL ENGINEER DATE

PLANS APPROVAL DATE

REGISTERED PROFESSIONAL ENGINEER No. Exp. CIVIL STATE OF CALIFORNIA

THE STATE OF CALIFORNIA OR ITS OFFICERS OR AGENTS SHALL NOT BE RESPONSIBLE FOR THE ACCURACY OR COMPLETENESS OF ELECTRONIC COPIES OF THIS PLAN SHEET.

PB AMERICAS, Inc.
A Parsons Brinckerhoff Company
303 Second St., Suite 700N
San Francisco, CA 94107-1317

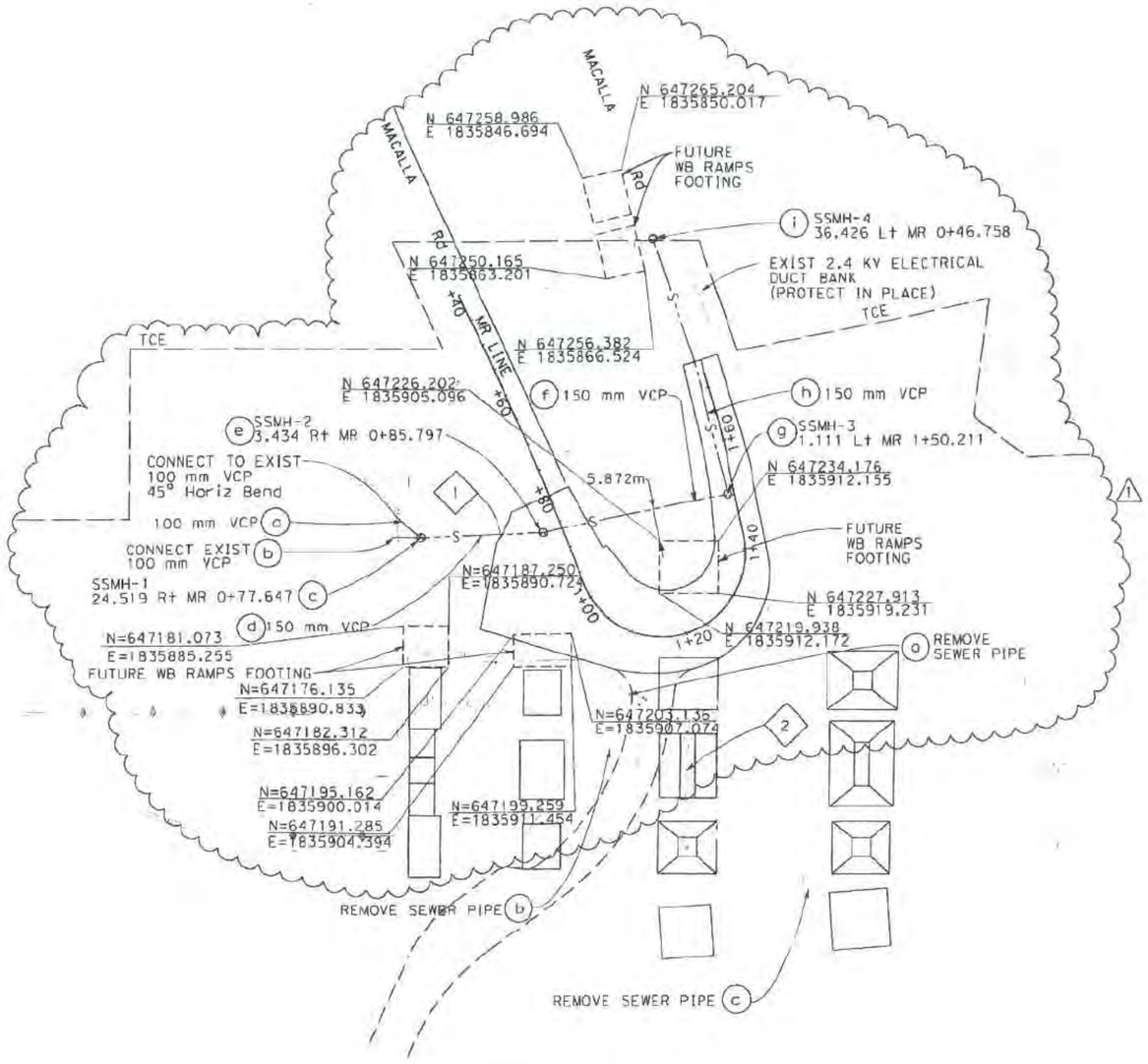

ROUTE 80 DETOUR

TEMPORARY USCG ACCESS Rd

ABBREVIATIONS

SSMH	SANITARY SEWER MANHOLE
TCE	TEMPORARY CONSTRUCTION EASEMENT
USCG	UNITED STATES COAST GUARD
DIP	DUCTILE IRON PIPE
KV	KILO VOLT

SYMBOLS

oS EXISTING SANITARY SEWER MANHOLE

LEGEND

—--S— SEWER LINE

No. SANITARY SEWER SYSTEM No.

x SANITARY UNIT No.

NOTES:

1. ALL EXISTING SANITARY SEWERS ARE CLAY PIPE, UNLESS OTHERWISE NOTED.
2. SEE U-SHEET FOR UTILITY POTHOLING INFORMATION.
3. SEE U-SHEET FOR UTILITY RELOCATION ALONG AND ACROSS MACALLA RD.
4. CONTRACTOR SHALL STAKE LOCATION OF FUTURE FOOTINGS PRIOR TO CONSTRUCTION.
5. CONTRACTOR SHALL POTHOLE TO VERIFY LOCATION OF EXISTING SEWER AT CONNECTION POINTS AND EXISTING UTILITIES AT ALL CROSSINGS PRIOR TO CONSTRUCTION.
6. LIMITS OF REMOVAL TO BE DETERMINED BY THE ENGINEER.
7. CONTRACTOR SHALL PLACE CONCRETE PLUG AT END OF REMAINING SEWER

MARK	DATE	DESCRIPTIONS	BY	CH'D
1	8/5/10	REALIGNED SYSTEM 1	RL	SGC

REVISIONS

CONTRACT CHANGE ORDER NO. 20
SHEET 3 OF 12

REGISTERED PROFESSIONAL ENGINEER SAMUEL GRANT CHUI No. 70966 Exp. 6/30/11 CIVIL STATE OF CALIFORNIA
Samuel Chui

SANITARY SEWER PLAN

SCALE 1:500

SS-1

THIS PLAN ACCURATE FOR SEWER WORK ONLY

ALL DIMENSIONS ARE IN METERS UNLESS OTHERWISE SHOWN

STATE OF CALIFORNIA - DEPARTMENT OF TRANSPORTATION
Caltrans

CONSULTANT FUNCTIONAL SUPERVISOR: BOB ZANDIPOUR
CALCULATED-DESIGNED BY: H. NGUYEN
CHECKED BY: B. NADELL
REVISED BY
DATE REVISED

LAST REVISION 03-17-08
DATE PLOTTED => 8/5/2010
TIME PLOTTED => 6:59:11 PM

BORDER LAST REVISED 3/1/2007

RELATIVE BORDER SCALE IS IN MILLIMETERS 0 20 40 60 80

USERNAME => CHUIS
DGN FILE => P:\60046943\CADD\Civil\Utility CCO\40120sja001_SS-1.dgn

CU 04251

EA 0120S1

Dist	COUNTY	ROUTE	KILOMETER POST TOTAL PROJECT	SHEET No.	TOTAL SHEETS
04	SF	80	12.7/13.2	43R1	806

Caltrans Metric

REGISTERED CIVIL ENGINEER DATE

PLANS APPROVAL DATE

REGISTERED PROFESSIONAL ENGINEER No. Exp. CIVIL STATE OF CALIFORNIA

THE STATE OF CALIFORNIA OR ITS OFFICERS OR AGENTS SHALL NOT BE RESPONSIBLE FOR THE ACCURACY OR COMPLETENESS OF ELECTRONIC COPIES OF THIS PLAN SHEET.

PB AMERICAS, Inc.
A Parsons Brinckerhoff Company
303 Second St., Suite 700N
San Francisco, CA 94107-1317

REGISTERED PROFESSIONAL ENGINEER SAMUEL GRANT CHUI No. 70966 Exp. 6/30/11 CIVIL STATE OF CALIFORNIA

Samuel Chui

MARK	DATE	DESCRIPTIONS	BY	CH'D
1	8/5/10	REALIGNED SYSTEM 1	RL	SGC

REVISIONS

CONTRACT CHANGE ORDER NO. 20
SHEET 4 OF 12

NOTE:

1. ALL CROSSING UTILITIES SHALL MAINTAIN MINIMUM 300mm CLEARANCE FROM SEWER LINE. 1

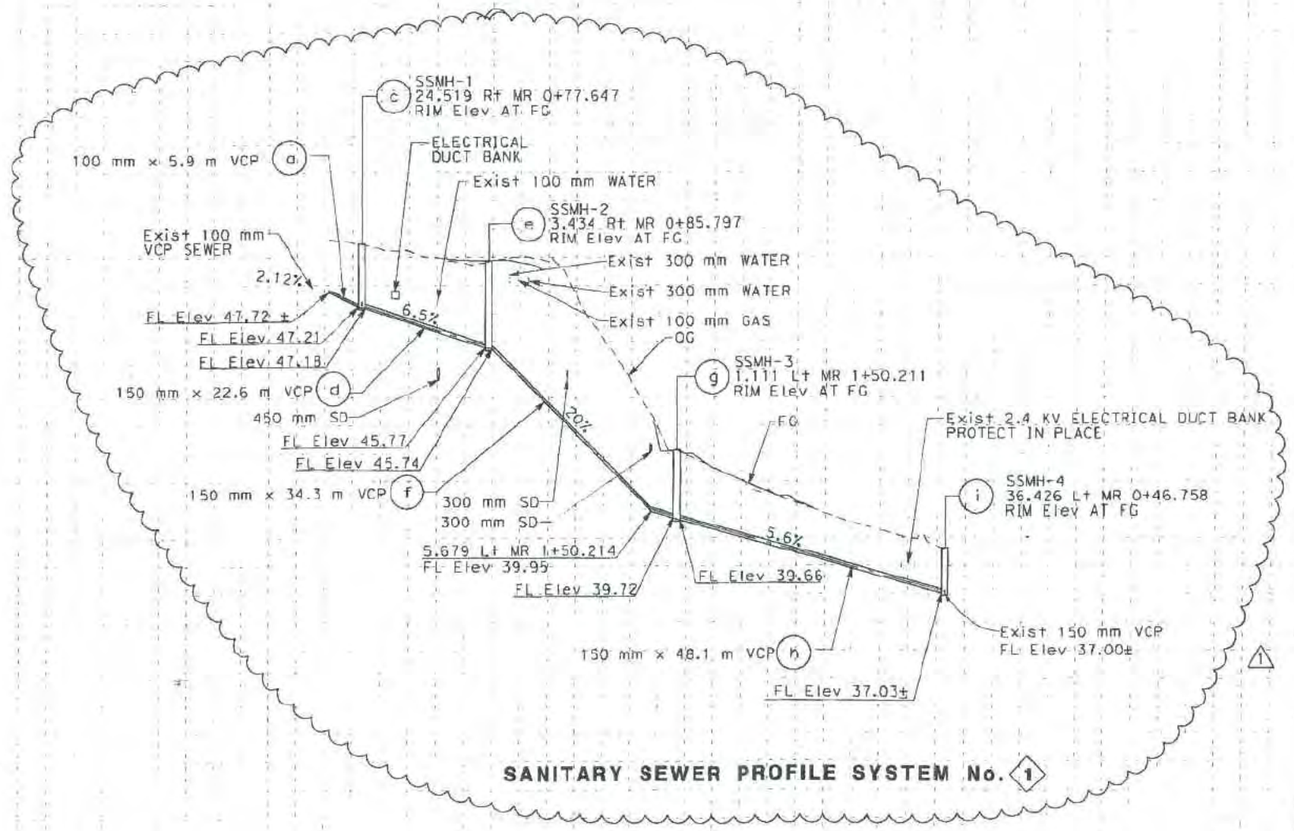

SANITARY SEWER PROFILE SYSTEM No. 1

ALL DIMENSIONS ARE IN METERS UNLESS OTHERWISE SHOWN

SANITARY SEWER PROFILE

SCALE HORIZ 1:500 VERT 1:100

SSP-1

STATE OF CALIFORNIA - DEPARTMENT OF TRANSPORTATION

Caltrans

CONSULTANT FUNCTIONAL SUPERVISOR: BOB ZANDIPOUR

CALCULATED-DESIGNED BY: H. NGUYEN

CHECKED BY: B. NADELL

REVISED BY / DATE REVISED

50 48 46 44 42 40 38 36 34

Station

m^3 Exc / Emb

LAST REVISION 03-06-08 DATE PLOTTED => 8/5/2010 TIME PLOTTED => 7:18:11 PM

BORDER LAST REVISED 3/1/2007

RELATIVE BORDER SCALE IS IN MILLIMETERS 0 20 40 60 80

USERNAME => chuis
DGN FILE => P:\60046943\CADD\Civil\Utility CCO\40120sjb001_SSP-1.dgn

CU 04251

EA 0120S1

Dist	COUNTY	ROUTE	KILOMETER POST TOTAL PROJECT	SHEET No.	TOTAL SHEETS
04	SF	82	12.7/3.7	84B	906

REGISTERED CIVIL ENGINEER DATE

6-23-08

PLANS APPROVAL DATE

THE STATE OF CALIFORNIA OR ITS OFFICERS OR AGENTS SHALL NOT BE RESPONSIBLE FOR THE ACCURACY OR COMPLETENESS OF ELECTRONIC COPIES OF THIS PLAN SHEET.

REGISTERED PROFESSIONAL ENGINEER JOHNNY HUO No. C 50036 Exp. 6/30/09 CIVIL STATE OF CALIFORNIA

PB AMERICAS, Inc.
A Parsons Brinckerhoff Company
303 Second St., Suite 700N
San Francisco, CA 94107-1317

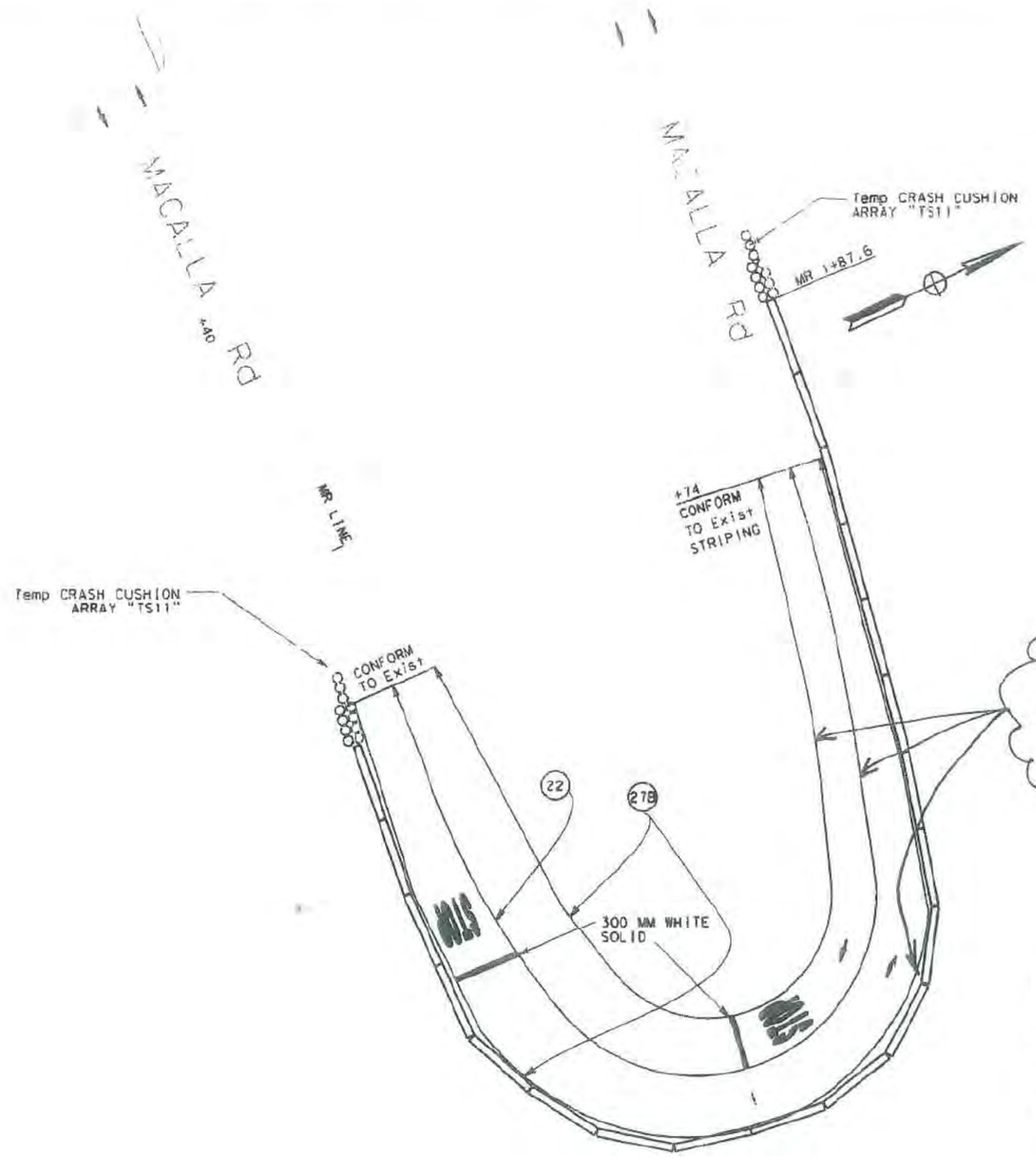

NOTE:

1. FOR COMPLETE R/W AND ACCURATE ACCESS DATA, SEE R/W RECORD MAPS AT DISTRICT OFFICE.
2. CONSTRUCTION DETAILS OF MACALLA ROAD ARE LOCATED ON SHEET C-1.
3. CONTRACTOR SHALL INSTALL PAVEMENT DETAIL 27B PER SHEET PD-6
4. RELOCATE ALL THE CONSTRUCTION AREA SIGNS FROM STAGE 1- PHASE 1
5. TEMPORARY SIGNAL SYSTEM TO REMAIN FROM STAGE 1- PHASE1.
6. ALL CONSTRUCTION AREA SIGNS TO BE MOUNTED ON A TEMPORARY STAND.
7. FOR SECTION B-B, SEE SHEET SCD-4.
8. ACCESS TO BUILDING 267 SHALL REMAIN OPEN AT ALL TIMES.
8. SEE SHEET SC-1 FOR LEGEND.

REVISED TEMPORARY STRIPING PLAN

REGISTERED PROFESSIONAL ENGINEER MOHAN S. AYADURAI No. C63095 Exp. 6/30/2012 CIVIL STATE OF CALIFORNIA

CONTRACT NO. 04-012054

CONTRACT CHANGE ORDER NO 20

SHEET 12 OF 12

INTERMEDIATE PAVEMENT DELINEATION PLAN

STAGE CONSTRUCTION DETAILS

~~STAGE 1 - PHASE 2~~

SCALE 1:200

SCD-3B

ALL DIMENSIONS ARE IN METERS UNLESS OTHERWISE SHOWN

STATE OF CALIFORNIA - DEPARTMENT OF TRANSPORTATION

Caltrans

CONSULTANT FUNCTIONAL SUPERVISOR: BOB ZANDIPOUR

CALCULATED-DESIGNED BY: H. NGUYEN

CHECKED BY: B. NADELL

REVISED BY

DATE REVISED

LAST REVISION 03-17-08

DATE PLOTTED => DATE

TIME PLOTTED => TIME

BORDER LAST REVISED 3/1/2007

RELATIVE BORDER SCALE IS IN MILLIMETERS 0 20 40 60 80

USERNAME => $USER
DGN FILE => $REQUEST

CU 04251

EA 012051

40120smb003-1.dgn 9/3/2010 12:48:41 PM

Dist	COUNTY	ROUTE	KILOMETER POST TOTAL PROJECT	SHEET No.	TOTAL SHEETS
04	SF	80	12.7/13.2	44R1	806

REGISTERED CIVIL ENGINEER DATE

PLANS APPROVAL DATE

REGISTERED PROFESSIONAL ENGINEER No. Exp. CIVIL STATE OF CALIFORNIA

THE STATE OF CALIFORNIA OR ITS OFFICERS OR AGENTS SHALL NOT BE RESPONSIBLE FOR THE ACCURACY OR COMPLETENESS OF ELECTRONIC COPIES OF THIS PLAN SHEET.

PB AMERICAS, Inc.
A Parsons Brinckerhoff Company
303 Second St., Suite 700N
San Francisco, CA 94107-1317

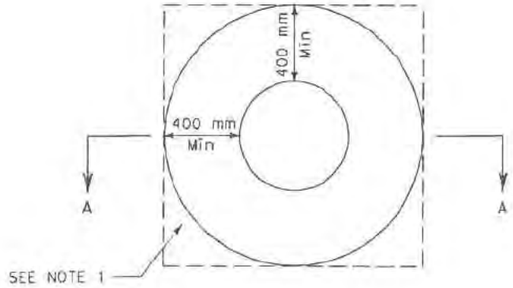

PLAN

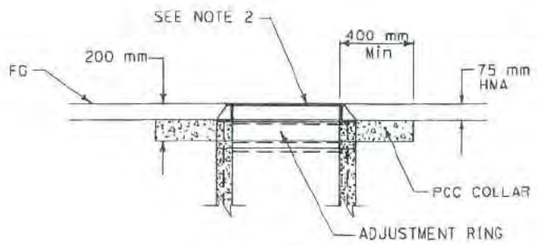

SECTION A-A

MANHOLE PCC COLLAR

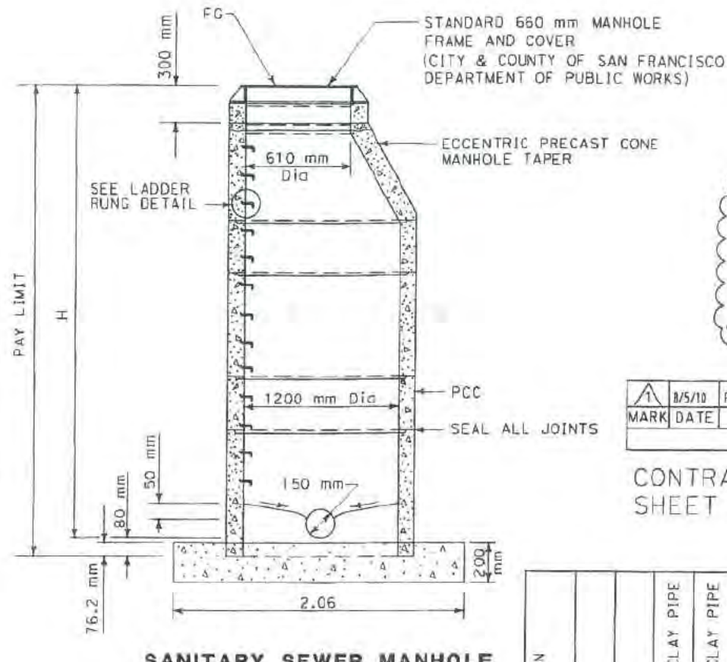

SANITARY SEWER MANHOLE

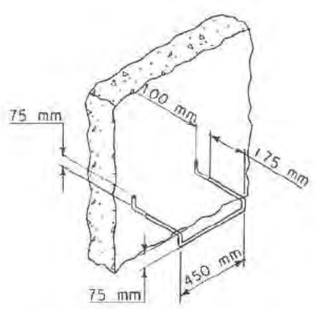

LADDER RUNG DETAIL

NOTE
SPACE LADDER RUNG AT 300 mm
20 mm Ø CLASS 304 STAINLESS STEEL

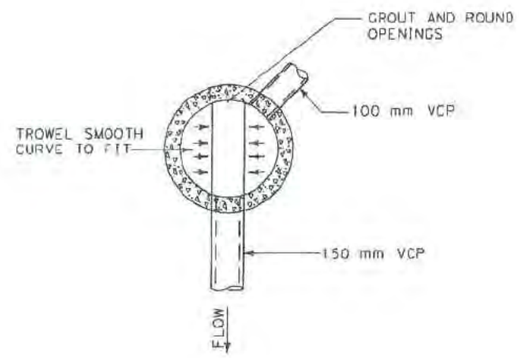

PLAN-BOTTOM PORTION
MANHOLE

REGISTERED PROFESSIONAL ENGINEER SAMUEL GRANT CHUI No. 70966 Exp. 6/30/11 CIVIL STATE OF CALIFORNIA
Samuel Chui

NOTES:

1. CONSTRUCT CONCRETE COLLAR SQUARE OR ROUND.
2. SET TO STREET GRADE AFTER FINAL AC LIFT HAS BEEN PLACED.
3. ALL PRECAST COMPONENTS SHALL BE MANUFACTURED IN ACCORDANCE WITH ASTM C-478.
4. MANHOLE FRAME AND ALL JOINTS SHALL BE SET IN CLASS C MORTAR.
5. CONTRACTOR SHALL MINIMIZE THE NUMBER OF SECTION RINGS BY UTILIZING LARGEST SECTIONS AVAILABLE.
6. THE VERTICAL WALL OF THE ECCENTRIC CONE SHALL BE UPSTREAM OR AS OTHERWISE DIRECTED BY THE ENGINEER. 1

MARK	DATE	DESCRIPTIONS	BY	CH'D
1	8/5/10	REALIGNED SYSTEM 1	RL	SGC

REVISIONS

CONTRACT CHANGE ORDER NO. 20
SHEET 5 OF 12

SANITARY SEWER QUANTITIES

SANITARY SEWER PLAN SHEET NO.	SYSTEM No.	UNIT No.	100 mm VITRIFIED CLAY PIPE	150 mm VITRIFIED CLAY PIPE	SEWER MANHOLE	SSMH FRAME & COVER [N]	REMOVE SEWER PIPE	DESCRIPTION	STATION / OFFSET (FOR MANHOLES ONLY)	SYSTEM No.	UNIT No.
				m	EA	EA	m				
SS-1	1	a	5.9					100 mm VITRIFIED CLAY PIPE (CONNECT TO EXIST 100 mm VCP)		1	a
		b	5.1					CONNECT TO EXIST 100 mm VCP			b
		c			1	1		SANITARY SEWER MANHOLE	24.519 Rt MR 0+77.647		c
		d		22.6				150 mm VITRIFIED CLAY PIPE			d
		e			1	1		SANITARY SEWER MANHOLE	3.434 Rt MR 0+85.797		e
		f		34.3				150 mm VITRIFIED CLAY PIPE			f
		g			1	1		SANITARY SEWER MANHOLE	1.111 Lt MR 1+50.211		g
		h		48.1				150 mm VITRIFIED CLAY PIPE			h
		i			1	1		SANITARY SEWER MANHOLE	36.426 Lt MR 0+46.758		i
SS-1	2	a					109	REMOVE SEWER PIPE		2	a
		b					55	REMOVE SEWER PIPE			b
		c					70	REMOVE SEWER PIPE			c
TOTAL			11	105	4	4	234				

[N] NOT A SEPARATE PAY ITEM, FOR INFORMATION ONLY.

SANITARY SEWER DETAILS AND QUANTITIES

ALL DIMENSIONS ARE IN METERS UNLESS OTHERWISE SHOWN

NO SCALE

SSD-1

STATE OF CALIFORNIA - DEPARTMENT OF TRANSPORTATION
Caltrans

CONSULTANT FUNCTIONAL SUPERVISOR: BOB ZANDIPOUR
CALCULATED-DESIGNED BY: H. NGUYEN
CHECKED BY: B. NADELL
REVISED BY / DATE REVISED

LAST REVISION 03-20-08 DATE PLOTTED => 8/5/2010 TIME PLOTTED => 6:40:45 PM

Dist	COUNTY	ROUTE	KILOMETER POST TOTAL PROJECT	SHEET NO.	TOTAL SHEETS
04	SF	80	12.7/13.2	46R1	806

REGISTERED CIVIL ENGINEER DATE

PLANS APPROVAL DATE

REGISTERED PROFESSIONAL ENGINEER No. EXP. CIVIL STATE OF CALIFORNIA

THE STATE OF CALIFORNIA OR ITS OFFICERS OR AGENTS SHALL NOT BE RESPONSIBLE FOR THE ACCURACY OR COMPLETENESS OF ELECTRONIC COPIES OF THIS PLAN SHEET.

Caltrans Metric

FOR COMPLETE RIGHT OF WAY AND ACCURATE ACCESS DATA, SEE RIGHT OF WAY RECORD MAPS AT DISTRICT OFFICE.

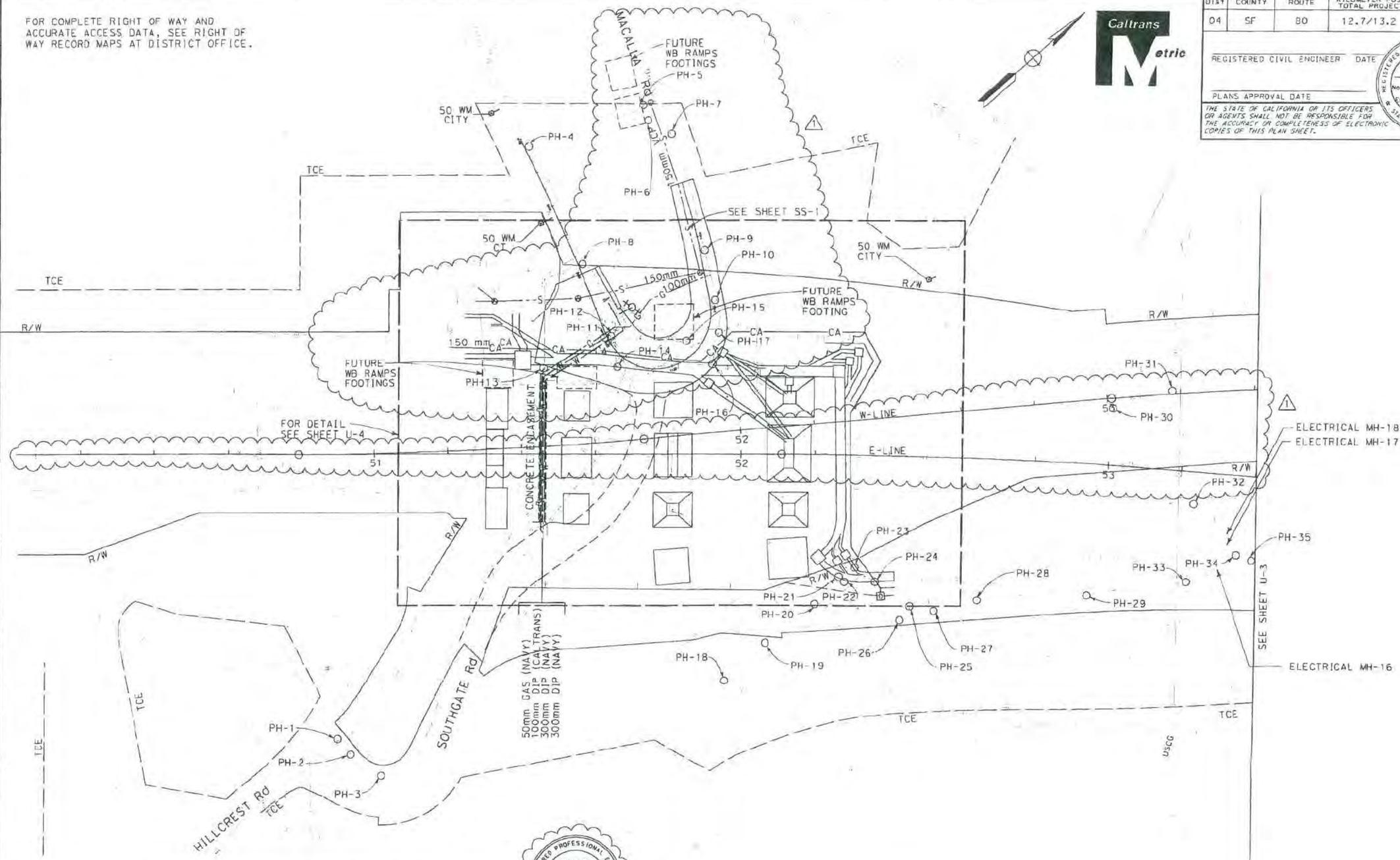

MARK	DATE	DESCRIPTIONS	BY	CH'D
1	8/5/10	RELOCATED GAS AND CA LINE	RL	SGC

REVISIONS

REGISTERED PROFESSIONAL ENGINEER SAMUEL GRANT CHUI No. 70966 Exp. 6/30/11 CIVIL STATE OF CALIFORNIA

Samuel Chui

CONTRACT CHANGE ORDER NO. 20

SHEET 6 OF 12

FOR NOTES, ABBREVIATIONS &/OR LEGEND, SEE SHEET U-1

THIS PLAN ACCURATE FOR UTILITY WORK ONLY

ALL DIMENSIONS ARE IN METERS UNLESS OTHERWISE SHOWN

UTILITY PLAN

SCALE 1:500

U-2

STATE OF CALIFORNIA - DEPARTMENT OF TRANSPORTATION

Caltrans DESIGN

FUNCTIONAL SUPERVISOR: BOB ZANDIPOUR

CALCULATED-DESIGNED BY: TRINH LAI

CHECKED BY: BOB ZANDIPOUR

REVISED BY: TL

DATE REVISED: 10/07

LAST REVISION 03-17-08

DATE PLOTTED => 8/5/2010

TIME PLOTTED => 6:41:08 PM

BORDER LAST REVISED 3/1/2007

RELATIVE BORDER SCALE IS IN MILLIMETERS 0 20 40 60 80

USERNAME => chuis

DGN FILE => P:\60046933\CADD\CIVIL\Utility CCO\10120ska002-U-2.dgn

CU 04251

EA 0120S1

Dist	COUNTY	ROUTE	KILOMETER POST TOTAL PROJECT	SHEET No.	TOTAL SHEETS
04	SF	80	12.7/13.2	48R1	806

REGISTERED CIVIL ENGINEER DATE

PLANS APPROVAL DATE

REGISTERED PROFESSIONAL ENGINEER No. Exp. CIVIL STATE OF CALIFORNIA

THE STATE OF CALIFORNIA OR ITS OFFICERS OR AGENTS SHALL NOT BE RESPONSIBLE FOR THE ACCURACY OR COMPLETENESS OF ELECTRONIC COPIES OF THIS PLAN SHEET.

Caltrans Metric

FOR COMPLETE RIGHT OF WAY AND ACCURATE ACCESS DATA, SEE RIGHT OF WAY RECORD MAPS AT DISTRICT OFFICE.

CONNECT TO Exist WATER
CONNECT TO Exist GAS
N 647226.202
E 1835905.096
RELOCATE FH
150mm VCP
100 mm
FROM
TO
CONNECT TO Exist GAS
N 647234.176
E 1835912.155
PH-10
FUTURE WB RAMPS FOOTING
PH-17
1.8 m
(b) REMOVE WATER PIPE
6.367 Rt MR 1+35.290
N 647237.032
E 1835924.628
CONNECT TO Exist WATER
ELECTRICAL MH-7
PH-11
PH-12
N=647187.250
E=1835890.724
3.285 Rt MR 1+00.496
N 647206.784
E 1835904.432
PH-15
ELECTRICAL MH-9
150 mm CA
ELECTRICAL MH-12
ELECTRICAL MH-11
ELECTRICAL MH-10
ELECTRICAL MH-30
RETAINING WALL No. 6
40.900 Rt MR 0+84.760
CONNECT TO Exist COMPRESSED AIR
N=647181.073
E=1835885.255
PH-13
N=647203.136
E=1835907.074
PH-14
PH-16
N 647219.938
E 1835912.172
N 647227.913
E 1835919.231
(e) REMOVE GAS PIPE
FUTURE WB RAMPS FOOTING
N=647176.135
E=1835890.833
N=647182.312
E=1835896.302
N=647195.162
E=1835900.014
N=647191.285
E=1835904.394
FUTURE WB RAMPS FOOTING
N=647199.259
E=1835911.454
ELECTRICAL MH-29
3.085 Rt MR 1+26.685
N 647225.445
E 1835925.130
(h) REMOVE WATER PIPE
UNDERGROUND UTILITY ENCASEMENT (SEE UD-5)
E LINE
52
(g) REMOVE WATER PIPE
(a) REMOVE WATER PIPE
(d) REMOVE GAS PIPE
(f) REMOVE WATER PIPE
(c) REMOVE WATER PIPE
ELECTRICAL DUCT BANK
150 mm CA
ELECTRICAL MH-13
ELECTRICAL MH-14
ELECTRICAL MH-15
R/W
CONNECT TO Exist GAS
CONNECT TO Exist WATER
FUTURE SOUTHGATE Rd (BY OTHERS)
PH-23
PH-24
CONNECT TO Exist COMPRESSED AIR
PH-21
PH-22
PH-20
RETAINING WALL No. 7
D
PH-25
50 mm GAS (NAVY)
100 mm WATER (CALTRANS)
300 mm WATER (NAVY)
300 mm WATER (NAVY)

NOTES:

1. CONTRACTOR SHALL STAKE LOCATION OF FUTURE FOOTINGS PRIOR TO CONSTRUCTION.
2. CONTRACTOR SHALL ENSURE PROPOSED UTILITIES MAINTAIN A MINIMUM 1.5 METERS OF CLEARANCE OUTSIDE FOOTING FOOTPRINT
3. SEE SHEET UD-4A FOR COMPRESSED AIR PROFILE

MARK	DATE	DESCRIPTIONS	BY	CH'D
1	8/5/10	RELOCATED GAS AND CA LINE	RL	SGC
		REVISIONS		

REGISTERED PROFESSIONAL ENGINEER SAMUEL GRANT CHUI No. 70966 Exp. 6/30/11 CIVIL STATE OF CALIFORNIA

Samuel Chui

DETAIL A

CONTRACT CHANGE ORDER NO. 20
SHEET 7 OF 12

THIS PLAN ACCURATE FOR UTILITY WORK ONLY

ALL DIMENSIONS ARE IN METERS UNLESS OTHERWISE SHOWN

UTILITY PLAN

SCALE 1:200

U-4

REVISED BY	DATE REVISED
TL	10/07

TRINH LAI
BOB ZANDIPOUR

CALCULATED-DESIGNED BY
CHECKED BY

FUNCTIONAL SUPERVISOR
BOB ZANDIPOUR

STATE OF CALIFORNIA - DEPARTMENT OF TRANSPORTATION
Caltrans
DESIGN

LAST REVISION 05-19-08
DATE PLOTTED => 8/5/2010
TIME PLOTTED => 6:46:22 PM

BORDER LAST REVISED 3/1/2007

RELATIVE BORDER SCALE IS IN MILLIMETERS 0 20 40 60 80

USERNAME => chuis
DGN FILE => P:\60046843\CADD\Civil\Utility CCO\40120sk0003_U-4.dgn

CU 04251

EA 01205J

Dist	COUNTY	ROUTE	KILOMETER POST TOTAL PROJECT	SHEET No.	TOTAL SHEETS
04	SF	80	12.7/13.2	50R1	806

REGISTERED CIVIL ENGINEER DATE

PLANS APPROVAL DATE

REGISTERED PROFESSIONAL ENGINEER No. Exp. CIVIL STATE OF CALIFORNIA

THE STATE OF CALIFORNIA OR ITS OFFICERS OR AGENTS SHALL NOT BE RESPONSIBLE FOR THE ACCURACY OR COMPLETENESS OF ELECTRONIC COPIES OF THIS PLAN SHEET.

Caltrans Metric

FOR COMPLETE RIGHT OF WAY AND ACCURATE ACCESS DATA, SEE RIGHT OF WAY RECORD MAPS AT DISTRICT OFFICE.

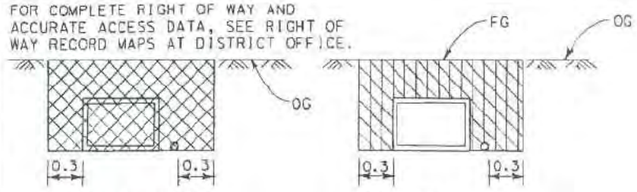

TYPICAL FOR DUCTBANK AND MANHOLES

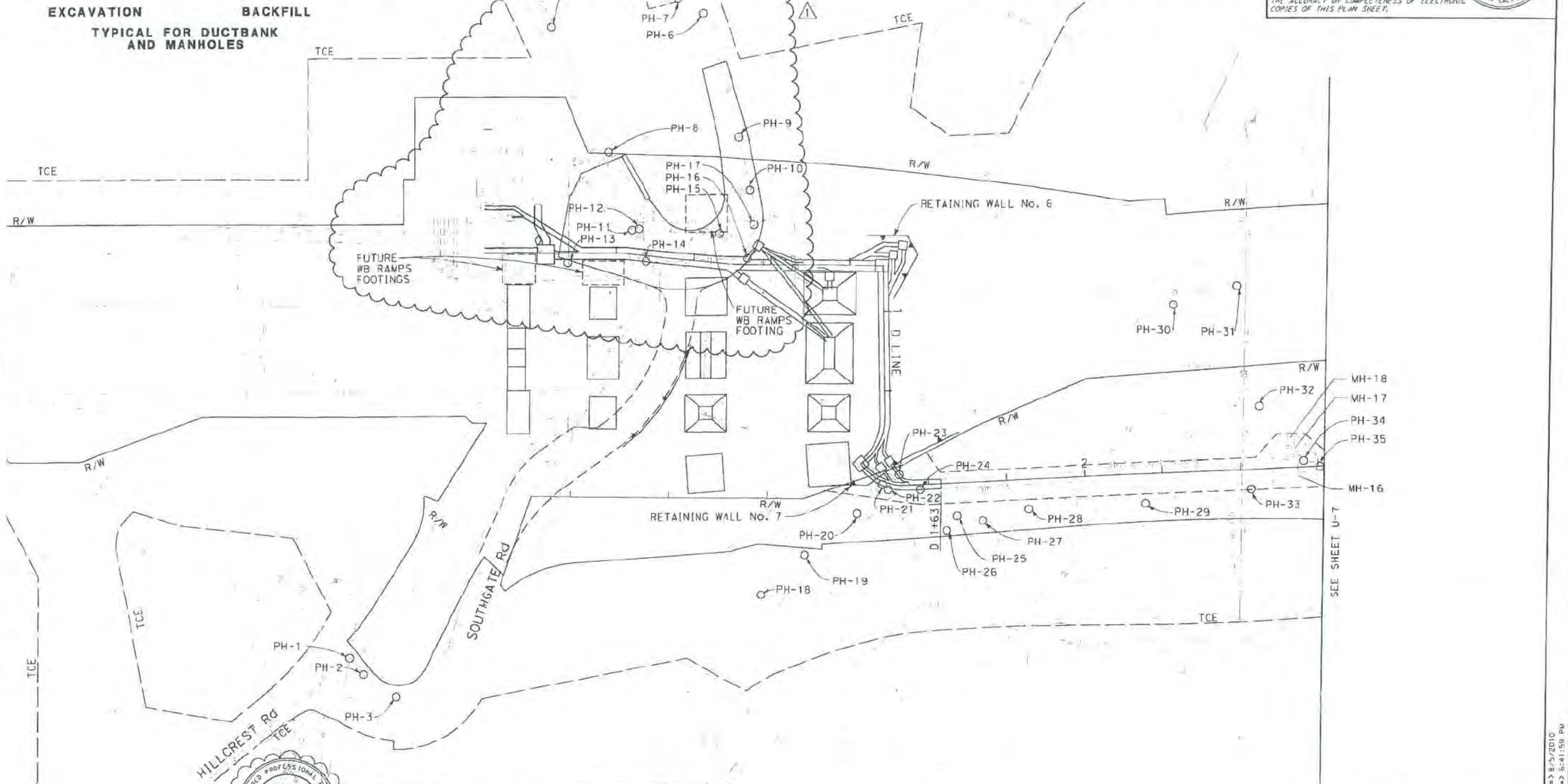

MARK	DATE	DESCRIPTIONS	BY	CH'D
1	8/5/10	REALIGNED ELECTRICAL DUCTBANK	RL	SGC

REVISIONS

SAMUEL GRANT CHUI No. 70966 Exp. 6/30/11 CIVIL STATE OF CALIFORNIA

Samuel Chui

CONTRACT CHANGE ORDER NO. 20
SHEET 8 OF 12

FOR NOTES, ABBREVIATIONS &/OR LEGEND, SEE SHEET U-1

THIS PLAN ACCURATE FOR UTILITY WORK ONLY

ALL DIMENSIONS ARE IN METERS UNLESS OTHERWISE SHOWN

UTILITY PLAN
ELECTRICAL DUCT BANK AND MANHOLES

SCALE 1:500

U-6

LAST REVISION 03-04-08 | DATE PLOTTED => 8/5/2010 | TIME PLOTTED => 8:41:59 PM

STATE OF CALIFORNIA - DEPARTMENT OF TRANSPORTATION
Caltrans DESIGN

FUNCTIONAL SUPERVISOR: BOB ZANDIPOUR
CALCULATED-DESIGNED BY: TRINH LAI
CHECKED BY: BOB ZANDIPOUR
REVISED BY: TL
DATE REVISED: 10/07

BORDER LAST REVISED 3/1/2007

RELATIVE BORDER SCALE IS IN MILLIMETERS 0 20 40 60 80

USERNAME => chuis
DGN FILE => P:\60046943\CADD\Civil\Utility ECO\40120skd006.dgn

CU 04251

EA 0120S1

Dist	COUNTY	ROUTE	KILOMETER POST TOTAL PROJECT	SHEET NO.	TOTAL SHEETS
04	SF	80	12.7/13.2	43A	806

REGISTERED CIVIL ENGINEER DATE

PLANS APPROVAL DATE

THE STATE OF CALIFORNIA OR ITS OFFICERS OR AGENTS SHALL NOT BE RESPONSIBLE FOR THE ACCURACY OR COMPLETENESS OF ELECTRONIC COPIES OF THIS PLAN SHEET.

REGISTERED PROFESSIONAL ENGINEER No. Exp. CIVIL STATE OF CALIFORNIA

REGISTERED PROFESSIONAL ENGINEER SAMUEL GRANT CHUI No. 70966 Exp. 6/30/11 CIVIL STATE OF CALIFORNIA

Samuel Chui

MARK	DATE	DESCRIPTIONS	BY	CH'D
1	8/5/10	REALIGNED 150 mm CA	RL	SCC

REVISIONS

CONTRACT CHANGE ORDER NO. 20
SHEET 9 OF 12

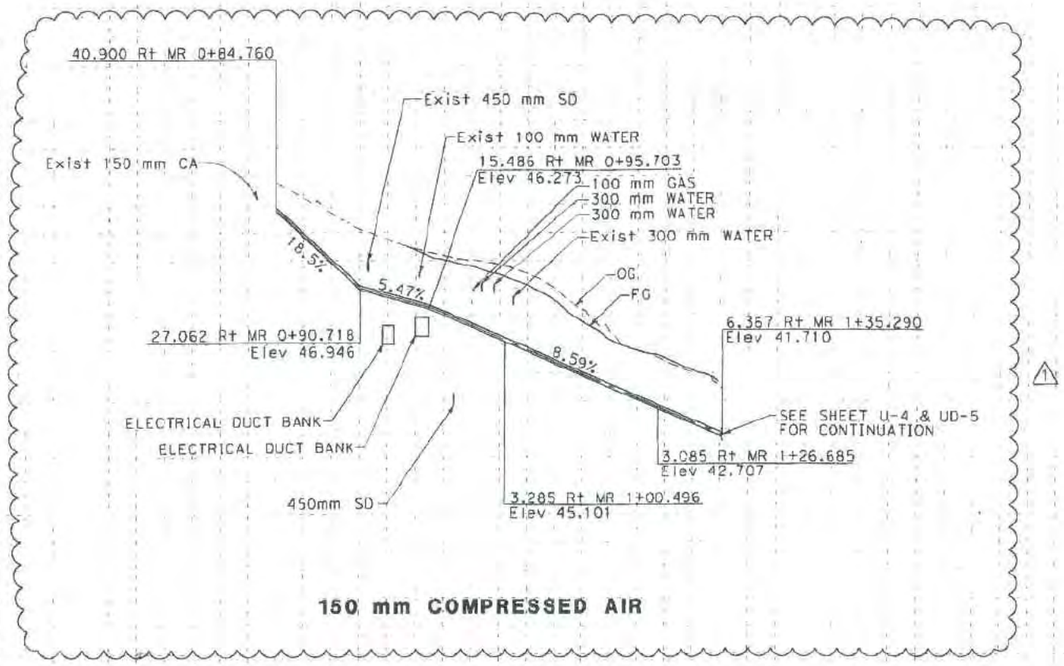

ALL DIMENSIONS ARE IN METERS UNLESS OTHERWISE SHOWN

UTILITY DETAILS
COMPRESSED AIR PROFILE

SCALE HORIZ 1:500 VERT. 1:100

UD-4A

STATE OF CALIFORNIA - DEPARTMENT OF TRANSPORTATION

Caltrans

CONSULTANT FUNCTIONAL SUPERVISOR: BOB ZANDIPOUR

CALCULATED-DESIGNED BY: H. NGUYEN

CHECKED BY: B. NADELL

REVISED BY / DATE REVISED

Station / m^3 Exc / Emb

LAST REVISION 03-06-08

DATE PLOTTED => 8/5/2010
TIME PLOTTED => 6:43:14 PM

BORDER LAST REVISED 3/1/2007

RELATIVE BORDER SCALE IS IN MILLIMETERS 0 20 40 60 80

USERNAME => chuis
DGN FILE => P:\60046943\CADD\Civil\Utility CCO\150mmCA- P1.dgn

CU 04251

EA 0120S1

67K2

Dist	COUNTY	ROUTE	KILOMETER POST TOTAL PROJECT	SHEET No.	TOTAL SHEETS
04	SF	80	12.7/13.2	~~67~~	806

REGISTERED CIVIL ENGINEER DATE

PLANS APPROVAL DATE

THE STATE OF CALIFORNIA OR ITS OFFICERS OR AGENTS SHALL NOT BE RESPONSIBLE FOR THE ACCURACY OR COMPLETENESS OF ELECTRONIC COPIES OF THIS PLAN SHEET.

REGISTERED PROFESSIONAL ENGINEER SAMUEL GRANT CHUI No. 70966 EXP. 6/30/11 CIVIL STATE OF CALIFORNIA

Samuel Chui

MARK	DATE	DESCRIPTIONS	BY	CH'D
1	8/5/10	RELOCATED GAS AND CA LINE	RL	SGC

REVISIONS

CONTRACT CHANGE ORDER NO. 20
SHEET 10 OF 12

ABBREVIATIONS:

DIP DUCTILE IRON PIPE
PE POLYETHYLENE

UTILITY QUANTITIES

SHEET No.	LOCATION	75 mm GSP	100 mm WATER DIP	200 mm WATER DIP	300 mm WATER DIP	50 mm GAS PE PIPE	100 mm GAS PE PIPE	150 mm COMPRESSED AIR PIPE	OWNER
		m							
U-2	E 51+20 TO 52+43							~~194~~ 195	CALTRANS
U-4	E 51+45 TO 51+65					60			NAVY
U-4	E 51+65 TO 51+92						~~30~~ 32		NAVY
U-4	E 51+45 TO 51+45		40						CALTRANS
U-4	E 51+45 TO 51+64				57				NAVY
U-4	E 51+45 TO 51+69				71				NAVY
U-5	E 55+52 TO 55+76			56					NAVY
U-5	E 55+76 TO 55+93	83							CALTRANS
U-5	E 55+76 TO 56+16	42							NAVY
U-5	E 55+52 TO 55+92							95	CALTRANS
	TOTAL	125	40	56	128	60	~~30~~ 32	~~289~~ 290	

WATER METERS

SHEET No.	LOCATION	METER SIZE (Each) 50 mm	METER SIZE (Each) 75 mm	GATE VALVE 75 mm [N]	BACKFLOW DEVICE 75 mm [N]	OWNER	REMARKS
U-2	3.4 m Rt MR 0+30.000	1				NAVY	LANDSCAPE
U-2	4.6 m Rt MR 0+63.000	1				CALTRANS	LANDSCAPE
U-2	30.0 m Lt W 52+53.900	1				NAVY	LANDSCAPE
U-5	13.2 m Lt E 55+75.700		1			CALTRANS	BRIDGE
U-5	15 m Lt E 55+75.700			1		CALTRANS	BRIDGE
U-5	12 m Lt E 55+75.700				1	CALTRANS	BRIDGE
	SUBTOTAL	3	1				
	TOTAL	4					

[N] NOT A SEPARATE PAY ITEM, FOR INFORMATION ONLY

RELOCATE FIRE HYDRANT

SHEET No.	LOCATION		RELOCATE FIRE HYDRANT	OWNER
U-4	MR 0+94	Lt	1	NAVY
	TOTAL		1	

UTILITY QUANTITIES (REMOVAL)

SHEET No.	LOCATION	UTILITY No.	REMOVE PIPE WATER PIPE	REMOVE PIPE GAS PIPE	OWNER
			m		
U-4	E 51+45 TO 52+05	a	55		NAVY
U-4	E 51+65 TO 51+80	b	24		NAVY
U-4	E 51+35 TO 51+70	c	55		NAVY
U-4	E 51+45 TO 51+70	d		32	NAVY
U-4	E 51+70 TO 51+93	e		24	NAVY
U-4	E 51+45	f	58		CALTRANS
U-4	E 51+10 TO 51+45	g	53		NAVY
U-4	E 51+80 TO 52+10	h	30		NAVY
U-5	E 55+66 TO 55+92	i	113		NAVY
U-5	E 55+68 TO 55+69	j	32		NAVY
	SUBTOTAL		420	56	
	TOTAL		476		

UNDERGROUND UTILITY ENCASEMENT

SHEET No.	LOCATION	MINOR CONCRETE (MINOR STRUCTURE)	BAR REINFORCEMENT STEEL (N)
		m3	kg
U-4	Lt & Rt E 51+46	40	3300
	TOTAL	40	3300

UTILITY QUANTITIES

UQ-1

TL | 10/07
REVISED BY | DATE REVISED
TRINH LAI | BOB ZANDIPOUR
CALCULATED-DESIGNED BY | CHECKED BY
FUNCTIONAL SUPERVISOR | BOB ZANDIPOUR
STATE OF CALIFORNIA - DEPARTMENT OF TRANSPORTATION
Caltrans
DESIGN

LAST REVISION 05-20-08 | DATE PLOTTED => 8/5/2010 TIME PLOTTED => 5:46:52 PM

Dist	COUNTY	ROUTE	KILOMETER POST TOTAL PROJECT	SHEET No.	TOTAL SHEETS
04	SF	280	12.7/13.7	84A	806

REGISTERED CIVIL ENGINEER DATE

6-23-08

PLANS APPROVAL DATE

REGISTERED PROFESSIONAL ENGINEER — MOHAN S. AYADURAI — No. C 63098 — Exp. 6/30/08 — CIVIL — STATE OF CALIFORNIA

THE STATE OF CALIFORNIA OR ITS OFFICERS OR AGENTS SHALL NOT BE RESPONSIBLE FOR THE ACCURACY OR COMPLETENESS OF ELECTRONIC COPIES OF THIS PLAN SHEET.

PB AMERICAS, INC.
A Parsons Brinckerhoff Company
303 Second St., Suite 700N
San Francisco, CA 94107-1317

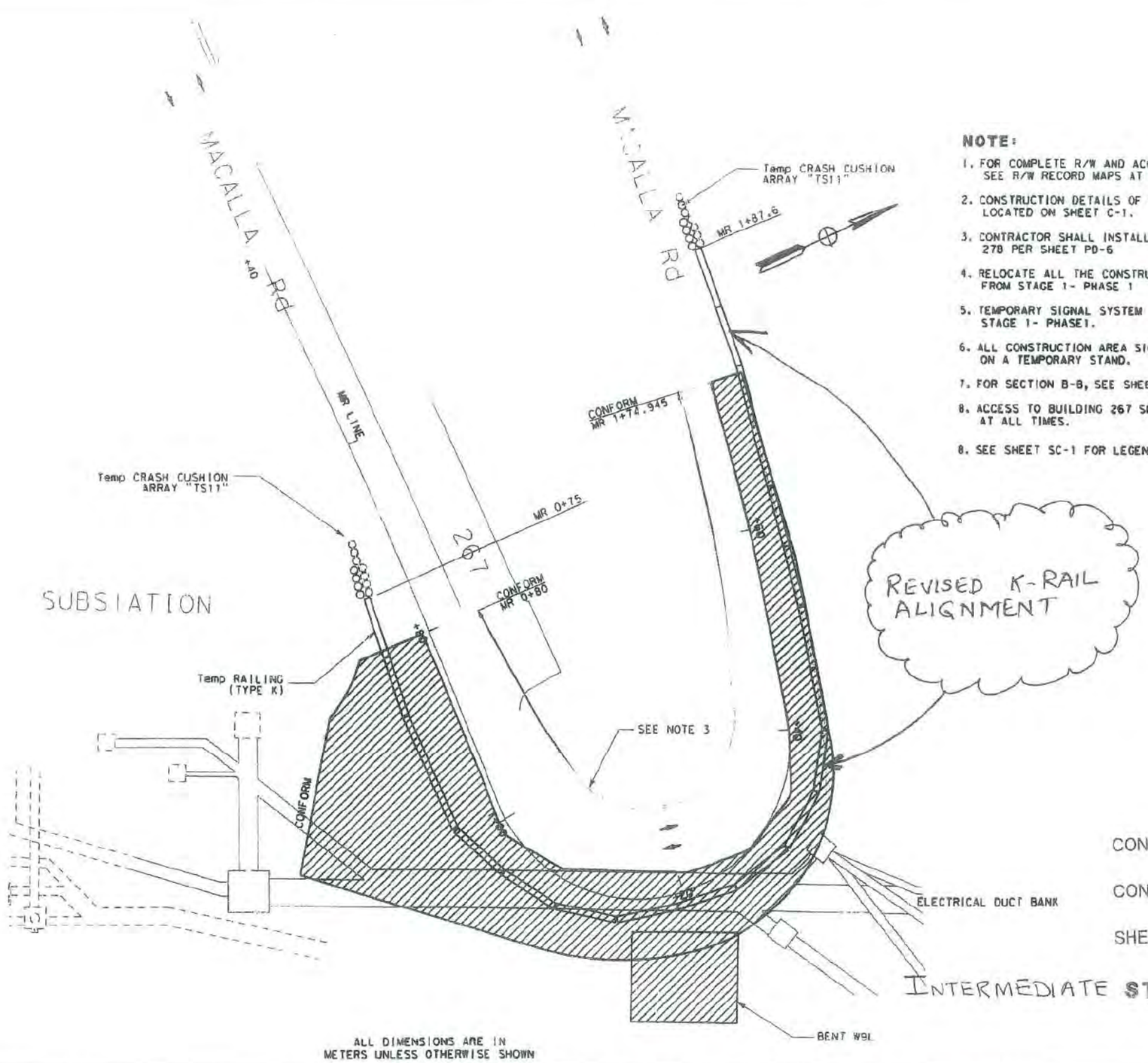

ALL DIMENSIONS ARE IN METERS UNLESS OTHERWISE SHOWN

NOTE:

1. FOR COMPLETE R/W AND ACCURATE ACCESS DATA, SEE R/W RECORD MAPS AT DISTRICT OFFICE.
2. CONSTRUCTION DETAILS OF MACALLA ROAD ARE LOCATED ON SHEET C-1.
3. CONTRACTOR SHALL INSTALL PAVEMENT DETAIL 27B PER SHEET PD-6
4. RELOCATE ALL THE CONSTRUCTION AREA SIGNS FROM STAGE 1- PHASE 1
5. TEMPORARY SIGNAL SYSTEM TO REMAIN FROM STAGE 1- PHASE1.
6. ALL CONSTRUCTION AREA SIGNS TO BE MOUNTED ON A TEMPORARY STAND.
7. FOR SECTION B-B, SEE SHEET SCD-4.
8. ACCESS TO BUILDING 267 SHALL REMAIN OPEN AT ALL TIMES.
9. SEE SHEET SC-1 FOR LEGEND.

REGISTERED PROFESSIONAL ENGINEER — MOHAN S. AYADURAI — No C63098 — Exp. 6/30/2012 — CIVIL — STATE OF CALIFORNIA

CONTRACT NO. 04-012054

CONTRACT CHANGE ORDER NO 20

SHEET 11 OF 12

INTERMEDIATE STAGE CONSTRUCTION DETAILS

~~STAGE 1 - PHASE 2~~

SCALE 1:200

SCD-3A

REVISED BY	DATE REVISED
H. NGUYEN	B. NADELL

CALCULATED-DESIGNED BY / CHECKED BY

CONSULTANT FUNCTIONAL SUPERVISOR: BOB ZANDIPOUR

STATE OF CALIFORNIA - DEPARTMENT OF TRANSPORTATION

Caltrans

DATE PLOTTED => 03-17-08 TIME PLOTTED => 07:00

BORDER LAST REVISED 3/1/2007 | RELATIVE BORDER SCALE IS IN MILLIMETERS 0 20 40 60 80 | USERNAME => RUSER DGN FILE => NREQUEST | CU 04251 | EA 012051

40120smb003-1.dgn 9/2/2010 2:23:46 PM

STATE OF CALIFORNIA - DEPARTMENT OF TRANSPORTATION

CONTRACT CHANGE ORDER MEMORANDUM

TO: Deanna Vilcheck, ACM	FILE: E.A. 04 - 0120S4
FROM: William Howe, Senior R.E.	CO-RTE-PM SF-80-12.7/13.2
	FED. NO. NO FED AID
CCO#: 20 SUPPLEMENT#: 0 Category Code: CLPV	CONTINGENCY BALANCE (incl. this change) $68,581,284.19
COST: $260,370.00 INCREASE ☑ DECREASE ☐	HEADQUARTERS APPROVAL REQUIRED? ☐ YES ☑ NO
SUPPLEMENTAL FUNDS PROVIDED: $200,000.00	IS THIS REQUEST IN ACCORDANCE WITH ENVIRONMENTAL DOCUMENTS? ☑ YES ☐ NO
CCO DESCRIPTION: Relocate Underground Utilities on Macall	**PROJECT DESCRIPTION:** YBITS-1 (Yerba Buena Island Transition Structures)

Original Contract Time:	Time Adj. This Change:	Previously Approved CCO Time Adjustments:	Percentage Time Adjusted: (including this change)	Total # of Unreconciled Deferred Time CCO(s): (including this change)
1390 Day(s)	0 Day(s)	0 Day(s)	0 %	9

THIS CHANGE ORDER PROVIDES FOR:

Revisions to the underground utilities to provide for the construction of future on-ramp structures.

This project, the Yerba Buena Island Transition Structure (YBITS), provides for the construction of two bridges which will connect eastbound and westbound traffic on the new east span of the San Francisco Oakland Bay Bridge (SFOBB) to the existing Yerba Buena Island (YBI) tunnel. The structures are comprised of concrete box girder bridges each approximately 26 meters wide, 40 meters high and 450 meters in length.

The contract calls for the installation and relocation of underground utilities along the adjacent Macalla Road which will service both the local City of San Francisco communities and the new east span of the SFOBB. The utilities include storm and sanitary sewers and natural gas and compressed air lines. Along Macalla Road it has been determined that a future City of San Francisco project will construct on and off ramps to the new westbound SFOBB structure. Based on these future structures, Project Development has issued revised plan sheets for the utilities along Macalla Road that will avoid any conflicts between the utilities being installed and the future on and off ramp footings. The alignment and profile of the utilities will be revised to reflect this.

Additionally changes are also being made to the temporary concrete barrier and pavement delineation for the staged construction of Macalla Road in order to provide additional turning capacity and limit the impacts of the construction to the local community.

The major cost of the change order are comprised of performing the actual modified relocations, costs associated with obstructions already encountered and mitigation costs associated with expediting the relocations in order to limit the impact to the local community.

Compensation for this work shall be paid as extra work at an agreed lump sum of $260,370.00. The cost shall be financed from $200,000.00 in supplemental funds provided for changes to the duct bank and by $60,370.00 from the contract's contingency funds. A cost analysis is on file.

No adjustment of contract time is warranted as the change will not affect the controlling operation.

Maintenance concurs with this change.

ADA Notice: For individuals with sensory disabilities, this document is available in alternate formats. For information call: (916) 654-6410 or TDD (916) 654-3880 or write Records and Forms Management, 1120 N Street, MS-89, Sacramento, CA 95814.

CONCURRED BY:		
Construction Engineer:	William Howe	Date 07.25.11
Bridge Engineer:		Date
Project Engineer:	Bob Zandipour, Design	Date 08/17/11
Project Manager:	Ken Terpstra	Date 8/11/2011
FHWA Rep.:		Date
Environmental:		Date
Other (specify):	LINA G ELLIS (OSM)	Date 07/25/11
Other (specify):		Date
District Prior Approval By:		Date
HQ (Issue Approve) By:		Date
Resident Engineer's Signature: William Howe		Date 07.25.11

ESTIMATE OF COST

	THIS REQUEST	TOTAL TO DATE
ITEMS	$0.00	$0.00
FORCE ACCOUNT	$0.00	$0.00
AGREED PRICE	$260,370.00	$260,370.00
ADJUSTMENT	$0.00	$0.00
TOTAL	$260,370.00	$260,370.00

FEDERAL PARTICIPATION

☐ PARTICIPATING ☐ PARTICIPATING IN PART ☑ NONE
☐ NON-PARTICIPATING (MAINTENANCE) ☐ NON-PARTICIPATING

FEDERAL SEGREGATION (If more than one Funding Source or P.I.P. type)
☐ CCO FUNDED PER CONTRACT ☐ CCO FUNDED AS FOLLOWS

FEDERAL FUNDING SOURCE	PERCENT

ADA Notice: For individuals with sensory disabilities, this document is available in alternate formats. For information call: (916) 654-6410 or TDD (916) 654-3880 or write Records and Forms Management, 1120 N Street, MS-89, Sacramento, CA 95814.

CONTRACT CHANGE ORDER

Change Requested by: Engineer

CCO: 21	Suppl. No. 0	Contract No. 04 - 0120S4	Road SF-80-12.7/13.2	FED. AID LOC.: NO FED AID

To: **M C M CONSTRUCTION INC**

You are directed to make the following changes from the plans and specifications or do the following described work not included in the plans and specifications for this contract. ***NOTE: This change order is not effective until approved by the Engineer.***

Description of work to be done, estimate of quantities and prices to be paid. (Segregate between additional work at contract price, agreed price and force account.) Unless otherwise stated, rates for rental of equipment cover only such time as equipment is actually used and no allowance will be made for idle time. This last percentage shown is the net accumulated increase or decrease from the original quantity in the Engineer's Estimate.

The Contractor shall reference and incorporate into the Contract the Department's new National Pollutant Discharge Elimination System (NPDES) General Permit for Storm Water Discharges Associated with Construction and Land Disturbance (Order No. 2009-009-DWQ), Construction General Permit effective July 1, 2010.

The Department's permit references and incorporates by reference the current statewide general permit issued by the State Water Resources Control Board (SWRCB) titled "Order No. 2009-0009-DWQ, National Pollutant Discharge Elimination System (NPDES) General Permit No. CAS000002, Waste Discharge Requirements for Discharges of Storm Water Runoff Associated with Construction and Land Disturbance Activities" that regulates discharges of storm water and non-storm water from construction activities disturbing one or more acres of soil in a common plan of development. Copies of the statewide permit and its modifications are available for review from the SWRCB, Division of Water Quality, 1001 "I" Street, P.O. Box 100, Sacramento, California 95812-0100, Telephone fax: (916) 341-5463 and may also be obtained at:

http://www.waterboards.ca.gov/water_issues/programs/stormwater/

Said document shall be considered a part of, and shall become, an integral part of the Special Provisions and Contract for this project.

The requirements of this permit shall supersede the Department's permit referenced under Section 10-1.02 "WATER POLLUTION CONTROL" of the Contract Special Provisions entitled: "Order No. 99-06-DWQ, NPDES No. CAS000003, National Pollutant Discharge Elimination System Permit, Storm Water Permit and Waste Discharge Requirements for the State of California, Department of Transportation Properties. Facilities, and Activities". The requirements of this new permit shall govern over all relevant aspects of the Contract.

This Contract shall comply to the requirements pertaining to Risk Level 2 as defined under the permit.

The Contract Special Provisions shall be revised as follows:

1)Replace Section 5-1.26 RELATIONS WITH CALFIORNIA REGIONAL WATER QUALITY CONTROL BOARD of the special provisions with Section 5-1.26 RELATIONS WITH CALIFORNIA REGIONAL WATER QUALITY CONTROL BOARD as shown on Pages No. 63 of this change order (Attachment 5).

2)Replace Section 10-1.04 WATER POLLUTION CONTROL of the special provisions with Section 10-1.04 WATER POLLUTION CONTROL as shown on Pages No. 3 through 20 of this change order (Attachment 1).

3)Replace Section 10-1.05 CONSTRUCTION SITE MANAGEMENT of the special provisions with Section 10-1.05 CONSTRUCTION SITE MANAGEMENT as shown on Pages No. 21 through 34 of this change order (Attachment 2).

The Storm Water Pollution Prevention Plan (SWPPP) and Construction Site Monitoring Program for this project will be revised based on a project risk level of 2. A qualified SWPPP developer who meets the qualification and certification requirements of Section VII of the new CGP will develop the SWPPP. The project water pollution control manager must meet the requirements for a qualified SWPPP developer. These requirements are summarized on Page No. 35 of this change order (Attachment 3).

Storm water site inspections shall be conducted on a weekly basis year-round. The water pollution control manager must complete rain event action plans before any likely precipitation event. Sampling and analyses of storm water discharge locations, run-on locations and receiving water locations must be collected and analyzed daily for turbidity and pH during qualifying rain events. A qualifying rain event is defined as any storm event that produces precipitation of 1/2 inch or more of rain.

CONTRACT CHANGE ORDER

Change Requested by: Engineer

CCO: 21	Suppl. No. 0	Contract No. 04 - 0120S4	Road SF-80-12.7/13.2	FED. AID LOC.: NO FED AID

The water pollution control manager must prepare rain event action plans, notice of discharge reports, numeric action level exceedance reports, numeric effluent limitation violation reports and storm water annual reports. Use forms included on Pages No. 36 through 62 of this change order (Attachment 4) for preparing Rain Event Action Plan, and Sampling Field Log Sheets, Storm Water Site Inspection Report, Quarterly Non-Storm Water Site Inspection Report.

Any additional costs resulting from this change order are deferred and shall be compensated under a supplement to this change order.

Consideration of a time adjustment will be deferred until completion of the work specified herein. Determination of a commensurate time extension will be made in accordance with Section 8-1.07, "Liquidated Damages", of the Standard Specifications and Section 10-1.22 " Progress Schedule (Critical Path Method)" of the Special Provisions.

Estimated Cost: Increase ☐ Decrease ☐ **$0.00**

By reason of this order the time of completion will be adjusted as follows: Deferred

Submitted by

Signature	Resident Engineer	Date
Rajesh Oberoi	Rajesh Oberoi, Senior R.E.	9/23/10

Approval Recommended by

Signature	Area Construction Manager	Date
Deanna Vilcheck	Deanna Vilcheck	9/28/10

Engineer Approval by

Signature	Area Construction Manager	Date
Deanna Vilcheck	Deanna Vilcheck	9/28/10

We the undersigned contractor, have given careful consideration to the change proposed and agree, if this proposal is approved, that we will provide all equipment, furnish the materials, except as may otherwise be noted above, and perform all services necessary for the work above specified, and will accept as full payment therefor the prices shown above.

NOTE: If you, the contractor, do not sign acceptance of this order, your attention is directed to the requirements of the specifications as to proceeding with the ordered work and filing a written protest within the time therein specified.

Contractor Acceptance by

Signature	(Print name and title)	Date
[illegible]	Edmundo A. Ruchi Treasurer	9-28-2010

Attachment 1
Water Pollution Control

10-1.04 WATER POLLUTION CONTROL

GENERAL

Summary

Discharges of storm water from the project must comply with NPDES General Permit for "Storm Water Discharges Associated with Construction and Land Disturbance Activities" (Order No. 2009-0009-DWQ, NPDES No. CAS000002) hereinafter called the "Permit." Manage work activities to reduce the discharge of pollutants to surface waters, groundwater, or municipal separate storm sewer systems including work items shown in the Bid Item List for:

1. Prepare Storm Water Pollution Prevention Plan. SWPPP preparation includes obtaining SWPPP acceptance, amending the SWPPP, preparing a CSMP and a SAP, and monitoring and inspecting WPC practices at the job site.
2. Storm Water Annual Report. Storm Water Annual Report preparation includes certifications, monitoring and inspection results, and obtaining Storm Water Annual Report acceptance.
3. Storm Water Sampling and Analysis Day. Storm Water Sampling and Analysis Day includes reporting of storm water quality per qualifying rain event. If specified for the risk level, the work includes preparation, collection, analysis, and reporting of storm water samples for turbidity, pH, and other constituents.
4. Rain Event Action Plan. If specified for the project risk level, REAP preparation includes preparing and submitting REAP forms and monitoring weather forecasts.

Do not start work until:

1. SWPPP is accepted
2. WDID is issued
3. SWPPP review requirements have been fulfilled. If the RWQCB requires time for SWPPP review, allow 30 days for the RWQCB to review the SWPPP as specified under "Submittals" of these special provisions.

This project is Risk Level 2.

Definitions and Abbreviations

active and inactive areas: (1) Active areas have soil disturbing work activities occurring at least once within 14 days, and (2) Inactive areas are areas that have not been disturbed for at least 15 days.

BMPs: Best Management Practices are water pollution control practices.

construction phase: Construction phases are (1) Highway Construction including work activities for building roads and structures, (2) Plant Establishment including maintenance on vegetation installed for final stabilization, and (3) Suspension where work activities are suspended and areas are inactive.

CSMP: Construction Site Monitoring Program.

NAL: Numeric Action Level.

NEL: Numeric Effluent Limit.

NPDES: National Pollutant Discharge Elimination System.
NOI: Notice of Intent.
normal working hours: The hours you normally work on this project.
Preparation Manual: The Department's "Storm Water Pollution Prevention Plan and Water Pollution Control Program Preparation Manual."
QSD: Qualified SWPPP Developer.
QSP: Qualified SWPPP Practitioner.
qualified rain event: A qualified rain event is a storm that produces at least 0.5 inch of precipitation with a 48 hour or greater period between storms.
REAP: Rain Event Action Plan.
RWQCB: Regional Water Quality Control Board.
SAP: Sampling and Analysis Plan.
SSC: Suspended Sediment Concentration.
SWRCB: State Water Resources Control Board.
SWPPP: Storm Water Pollution Prevention Plan.
WDID: Waste Discharge Identification Number.
WPC: Water Pollution Control.
WPC Manager: Water Pollution Control Manager. The WPC Manager implements water pollution control work described in the SWPPP and oversees revisions and amendments to the SWPPP.

Submittals

Submit SWPPP amendment to comply with these special provisions according to the following schedule:

Submit SWPPP amendment for the Engineer's review	August 23, 2010
Engineer to provide comments	August 27, 2010
Resubmit SWPPP amendment for contractor acceptance	September 1, 2010
Engineer to upload SWPPP to SMARTS	September 15, 2010

Submit:

1. Storm water training records including training dates and subjects for employees and subcontractors. Include dates and subjects for ongoing training, including tailgate meetings.
2. Employee training records:

   2.1. Within 5 days of SWPPP acceptance for existing employees
   2.2. Within 5 days of training for new employees
   2.3. At least 5 days before subcontractors start work for subcontractor's employees

Prepare a Storm Water Annual Report for the reporting period from July 1st to June 30th. For the prior reporting period, submit the report no later than July 15th if construction occurs from July 1st through June 30th or within 15 days after contract acceptance if construction ends before June 30th.

Submit the Storm Water Annual Report as follows:

1. Submit 2 copies of the Storm Water Annual Report and allow 10 days for the Engineer's review. If revisions are required, the Engineer provides comments and specifies the date that the review stopped.
2. Change and resubmit the Storm Water Annual Report within 5 days of receipt of the Engineer's comments. The Engineer's review resumes when the complete Storm Water Annual Report is resubmitted.
3. When the Engineer accepts the Storm Water Annual Report, insert the WPC Manager's signed certification and the Engineer's signed certification.

Submit one electronic copy and 2 printed copies of the accepted Storm Water Annual Report. Submit as required:

1. NAL Exceedance Reports
2. NEL Exceedance Reports
3. Visual Monitoring Reports
4. Inspection Reports
5. BMP Status Report

At least 5 days before operating any construction support facility, submit:

1. A plan showing the location and quantity of WPC practices associated with the construction support facility
2. A copy of the NOI approved by the RWQCB and the SWPPP approved by the RWQCB if you will be operating a batch plant or a crushing plant under the General Industrial Permit

Submit reports according to the following schedule:

Report Type	Due to the Engineer
Annual SWPPP amendments	7/15
Rain Event Action Plan (REAP) (i.e. CASQA Rain Event Action Plan form)	48 hours before a predicted rain event
Rain Event Sampling Data Report (i.e. Sampling Field Log Sheets from CASQA)	48 hours after field analysis sampling 30 days for laboratory analysis
Quarterly Non-stormwater Site Inspection Form (Caltrans Form CEM-2030)	15th day after the last day of the quarter 10/15, 1/15, 4/15, 7/15
Storm Water Annual Report	7/15
Numeric Action Level (NAL) Exceedance Report	48 hours after conclusion of storm event
Numeric Effluent Limit (NEL) Violation Report (For Risk Level 3 only)	6 hours after violation

Quality Control and Assurance

Training

Provide storm water training for:

1. Project managers
2. Supervisory personnel

3. Employees involved with WPC work

Train all employees, including subcontractor's employees, in the following subjects:

1. WPC rules and regulations
2. Implementation and maintenance for:

    2.1. Temporary Soil Stabilization
    2.2. Temporary Sediment Control
    2.3. Tracking Control
    2.4. Wind Erosion Control
    2.5. Material pollution prevention and control
    2.6. Waste management
    2.7. Non-storm water management
    2.8. Identifying and handling hazardous substances
    2.9. Potential dangers to humans and the environment from spills and leaks or exposure to toxic or hazardous substances

Employees must receive initial WPC training before working on the job site.
Conduct weekly training meetings covering:

1. WPC BMP deficiencies and corrective actions
2. BMPs that are required for work activities during the week
3. Spill prevention and control
4. Material delivery, storage, use, and disposal
5. Waste management
6. Non-storm water management procedures

Training for personnel to collect water quality samples must include:

1. SAP review
2. Health and safety review
3. Sampling simulations

A Storm Water Information Handout has been prepared for this contract and is available as described in "Supplemental Project Information" of these special provisions.

If you operate construction support facilities, protect storm water systems or receiving waters from the discharge of potential pollutants by using WPC practices.

Construction support facilities include:

1. Staging areas
2. Storage yards for equipment and materials
3. Mobile operations
4. Batch plants for PCC and HMA
5. Crushing plants for rock and aggregate
6. Other facilities installed for your convenience such as haul roads

If you operate a batch plant to manufacture PCC, HMA, or other material; or a crushing plant to produce rock or aggregate; obtain coverage under the General Industrial General Permit. You must be covered under the General Industrial Permit for batch plants and crushing plants located:

1. Outside of the job site
2. Within the job site that serve one or more contracts

Discharges from manufacturing facilities such as batch plants must comply with the general waste discharge requirements for Order No. 97-03-DWQ, NPDES General Permit No. CAS000001, issued by the SWRCB for "Discharge of Stormwater Associated with Industrial Activities Excluding Construction Activities." For the General Industrial Permit, go to:

http://www.waterboards.ca.gov/

You may obtain copies of the Preparation Manual from the Publication Distribution Unit. The mailing address for the Publication Distribution Unit is:

State of California
Department of Transportation
Publication Distribution Unit
1900 Royal Oaks Drive
Sacramento, California 95815
Telephone: (916) 445-3520

The Preparation Manual and other WPC references are available at the Department's "Construction Storm Water and Water Pollution Control" Web site. For the Web site, go to:

http://www.dot.ca.gov/hq/construc/stormwater/stormwater1.htm

Water Pollution Control Manager

Assign one WPC Manager to implement the SWPPP. The WPC Manager must comply with the Permit qualifications for a QSP and a QSD. You may assign a different QSD to prepare the SWPPP.

The QSD must have the following qualifications:

1. Department approved storm water management training described in the Department's "Construction Storm Water and Water Pollution Control" web site
2. Registration or certification described in the Permit

The QSP must meet the qualifications of the QSD or have the following certifications:

1. Department approved storm water management training described in the Department's "Construction Storm Water and Water Pollution Control" web site
2. Certification described in the Permit

At the job site, the WPC Manager must:

1. Be responsible for WPC work
2. Be the primary contact for WPC work

3. Oversee the maintenance of WPC practices
4. Oversee and enforce hazardous waste management practices
5. Have the authority to mobilize crews to make immediate repairs to WPC practices
6. Ensure that all employees have current water pollution control training
7. Implement the accepted SWPPP and amend the SWPPP when required

WPC Manager must oversee:

1. Inspections of WPC practices identified in the SWPPP
2. Inspections and reports for visual monitoring
3. Preparation and implementation of REAPs
4. Sampling and analysis
5. Preparation and submittal of:

    5.1. NAL exceedance reports
    5.2. NEL exceedance reports
    5.3. SWPPP annual certification
    5.4. Annual reports
    5.5. BMP status reports

STORM WATER POLLUTION PREVENTION PLAN (SWPPP)

General

SWPPP work includes preparing a SWPPP including a CSMP, obtaining SWPPP acceptance, amending the SWPPP, inspecting and reporting on WPC practices at the job site. The SWPPP must comply with the Preparation Manual and the Permit. The SWPPP must be submitted in place of the water pollution control program under Section 7-1.01G, "Water Pollution," of the Standard Specifications.

You may request, or the Engineer may order, changes to the WPC work. Changes may include the addition of new WPC practices. Additional WPC work will be paid for as extra work under Section 4-1.03D, "Extra Work," of the Standard Specifications.

The SWPPP must include sections as specified for the project risk level as follows:

1. For risk level 1:

    1.1. Schedule
    1.2. CSMP

2. For risk level 2:

    2.1. Schedule
    2.2. CSMP
    2.3. Adherence to Effluent Standards for NALs
    2.4. REAP

3. For risk level 3:

    3.1. Schedule
    3.2. CSMP
    3.3. Adherence to Effluent Standards for NALs and NELs

CONTRACT NO. 04-012054
CONTRACT CHANGE ORDER NO. 021
SHEET 8 OF 63

3.4. REAP

The SWPPP must include WPC practices for:

1. Storm water and non-stormwater from areas outside of the job site related to project work activities such as:

    1.1. Staging areas
    1.2. Storage yards
    1.3. Access roads

2. Activities or mobile operations related to contractor obtained NPDES permits
3. Construction support facilities

The SWPPP must include a copy of permits obtained by the Department such as Fish & Game permits, US Army Corps of Engineers permits, RWQCB 401 Certifications, and RWQCB Waste Discharge Requirements for Aerially Deposited Lead Reuse.

Amend the SWPPP annually and resubmit it by July 15th.

Amend the SWPPP if:

1. Changes in work activities could affect the discharge of pollutants
2. WPC practices are added by change order work
3. WPC practices are added at your discretion
4. Changes in the amount of disturbed soil are substantial
5. Objectives for reducing or eliminating pollutants in storm water discharges have not been achieved
6. There is a Permit violation

Whenever you amend the SWPPP, follow the same process specified for SWPPP acceptance. Retain a printed copy of the accepted SWPPP at the job site.

SWPPP Schedule

The SWPPP schedule must:

1. Describe when work activities will be performed that could cause the discharge of pollutants into storm water
2. Describe WPC practices associated with each construction phase
3. Identify soil stabilization and sediment control practices for disturbed soil areas

Construction Site Monitoring Program (CSMP)

General

The QSD must prepare a CSMP as part of the SWPPP. The CSMP must be developed before starting work and be revised to reflect current construction activities as necessary.

The CSMP must include sections for the project risk level as follows:

1. For risk level 1:

    1.1. Visual Monitoring

1.2. SAP for Non-Visible Pollutants

2. For risk level 2:

   2.1. Visual Monitoring
   2.2. SAP for Non-Visible Pollutants
   2.3. SAP for sediment and turbidity
   2.4. SAP for pH

3. For risk level 3:

   3.1. Visual Monitoring
   3.2. SAP for Non-Visible Pollutants
   3.3. SAP for sediment and turbidity
   3.4. SAP for pH
   3.5. SAP for receiving waters
   3.6. SAP for temporary active treatment systems

Visual Monitoring

The WPC Manager must oversee the performance of visual inspections for qualifying rain events.

For each qualifying rain event, perform visual inspections and record observations during normal working hours as follows:

1. Record the time, date, and rain gauge reading
2. Observe:

   2.1. Within 2 days before the storm:

      2.1.1. Drainage areas for spills, leaks, or uncontrolled pollutants
      2.1.2. Proper implementation of WPC practices
      2.1.3. Storm water storage areas for leaks and adequate freeboard

   2.2. Every 24 hours during the storm:

      2.2.1. WPC practices for effective operation
      2.2.2. WPC practices needing maintenance and repair

   2.3. Within 2 days after the storm event:

      2.3.1. Discharge locations
      2.3.2. WPC practices to evaluate the design, implementation, and effectiveness
      2.3.3. To identify where additional WPC practices may be needed

Perform non-stormwater discharge visual inspections as follows:

1. At least once during each of the following periods:

   1.1. January through March

1.2. April through June
1.3. July through September
1.4. October through December

2. Observe flowing and contained storm water for the presence of floating and suspended materials, sheen on the surface, discoloration, turbidity, odors, and sources of observed pollutants
3. Observe the job site for the presence of authorized and unauthorized non-stormwater discharges and their sources

The WPC Manager must prepare visual inspection reports that include the following:

1. Name of personnel performing the inspection, inspection date, and date inspection report completed
2. Storm and weather conditions
3. Locations and observations
4. Corrective actions taken

Maintain visual inspections reports at the job site as part of the SWPPP.

Sampling and Analysis Plan (SAP)

General

Include a SAP in the CSMP to monitor the effectiveness of WPC practices.

The SAP must comply with the Preparation Manual.

Assign trained personnel to collect water quality samples. Document their training in the SAP.

Describe the following water quality sampling procedures in the SAP:

1. Sampling equipment
2. Sample preparation
3. Collection
4. Field measurement methods
5. Analytical methods
6. Quality assurance and quality control
7. Sample preservation and labeling
8. Collection documentation
9. Sample shipping
10. Chain of custody
11. Data management and reporting
12. Precautions from the construction site health and safety plan
13. Laboratory selection and certifications

CONTRACT NO. 04-012054
CONTRACT CHANGE ORDER NO. 021
SHEET 11 OF 63

Whenever assigned field personnel take samples, comply with the equipment manufacturer's recommendation for collection, analysis methods, and equipment calibration.

Samples taken for laboratory analysis must follow water quality sampling procedures and be analyzed by a State-certified laboratory under 40 CFR Part 136, "Guidelines Establishing Test Procedures for the Analysis of Pollutants."

The SAP must identify the State-certified laboratory, sample containers, preservation requirements, holding times, and analysis method. For a list of State-certified laboratories, go to:

http://www.cdph.ca.gov/certlic/labs/Pages/ELAP.aspx

Include procedure for sample collection during precipitation.

Retain water quality sampling documentation and analytical results with the SWPPP at the job site.

Show pollutant sampling locations on SWPPP drawings.

If discharges or sampling locations change because of changed work activities or knowledge of site conditions, amend the SAP.

If the project is risk level 2 or risk level 3, include procedures for collecting and analyzing at least 3 samples for each day of each qualifying rain event. Describe the collection of effluent samples at all locations where the storm water is discharged off-site.

Analytical Results and Evaluation

Submit an electronic copy (in file format .xls, .txt, .csv, .dbs, or .mdb) and a printed copy of water quality analytical results, and quality assurance and quality control within 48 hours of field analysis sampling, and within 30 days for laboratory analysis. Also provide an evaluation of whether the downstream samples show levels of the tested parameter that are higher than the control sample.

Electronic water quality analysis results must have the following information:

1. Sample identification number
2. Contract number
3. Constituent
4. Reported value
5. Analytical method
6. Method detection limit
7. Reported limit

SAP for Non-Visible Pollutants

The SAP must include a description of the sampling and analysis strategy for monitoring non-visible pollutants.

The SAP must identify potential non-visible pollutants present at the job site associated with any of the following:

1. Construction materials and waste
2. Existing contamination due to historical site usage
3. Application of soil amendments, including soil stabilization materials, with the potential to change pH or contribute toxic pollutants to storm water

SWPPP drawings must show the locations planned for storage and use of potential non-visible pollutants.

The SAP must include sampling procedures for the following conditions when observed during a storm water visual inspection. For each of the following, collect at least one sample for each qualifying storm event:

1. Materials or waste containing potential non-visible pollutants that are not stored under watertight conditions

2. Materials or waste containing potential non-visible pollutants that are stored under watertight conditions, but a breach, leakage, malfunction, or spill is observed; the leak or spill has not been cleaned up before precipitation; and material or waste could discharge non-visible pollutants to surface waters or drainage system
3. Chemical applications, including fertilizer, pesticide, herbicide, methyl methacrylate concrete sealant, or non-pigmented curing compound used during precipitation or within 24 hours preceding precipitation, and could discharge pollutants to surface waters or drainage system
4. Applied soil amendments, including soil stabilization materials that could change pH levels or contribute toxic pollutants to storm water runoff and discharge pollutants to surface waters or drainage system, unless available independent test data indicates acceptable concentrations of non-visible pollutants in the soil amendment
5. Storm water runoff from an area contaminated by historical usage of the site that could discharge pollutants to surface waters or drainage systems

The SAP must provide sampling procedures and schedule for:

1. Sample collection during the first 2 hours of each rain event that generate runoff
2. Sample collection during normal working hours
3. Each non-visible pollutant source
4. Uncontaminated control sample

The SAP must identify locations for sampling downstream and control samples, and reasons for selecting those locations. Select control sample locations where the sample will not come in contact with materials, waste, or areas associated with potential non-visible pollutants or disturbed soil areas.

SAP for Sediment and Turbidity

If the project is risk level 2 or risk level 3, sample and analyze for turbidity:

Parameter	Test Method	Detection Limit (Min)	Unit
Turbidity	Field test with calibrated portable instrument	1	NTU

If the project is risk level 3 and the turbidity NEL has been exceeded, sample and analyze for SSC:

Parameter	Test Method	Detection Limit (Min)	Unit
SSC	ASTM Method D3977-97	5	Mg/L

SAP for pH

If the project is risk level 2 or risk level 3, sample and analyze for pH:

Parameter	Test Method	Detection Limit (Min)	Unit
pH	Field test with calibrated portable instrument	0.2	pH units

SAP for Receiving Waters

If the project is risk level 3, describe procedures for obtaining samples from representative and accessible locations:

1. Upstream of the discharge point
2. Downstream of the discharge point

Show receiving water sampling locations on SWPPP drawings.

If there are several discharge points, describe procedures for obtaining samples from a single upstream and a single downstream location.

Rain Event Action Plan (REAP)

REAP work includes preparing and submitting REAP forms and monitoring weather forecasts. The WPC Manager must submit a REAP to protect the job site at least 48 hours before a predicted rain event.

Prepare a REAP when the National Weather Service is predicting at least a 50 percent probability of precipitation within 72 hours.

For the REAP, use approved forms and include:

1. Site location
2. Risk level
3. Contact information including 24-hour emergency phone numbers for:

    3.1. WPC Manager
    3.2. Erosion and sediment control providers or subcontractors
    3.3. Storm water sampling providers or subcontractors

4. Storm Information
5. Construction phase information for:

    5.1. Highway Construction including active and inactive areas for work activities for building roads and structures
    5.2. Plant Establishment including maintenance on vegetation installed for final stabilization where areas are inactive
    5.3. Suspension where work activities are suspended and areas are inactive

6. Construction phase information including:

    6.1. Construction activities
    6.2. Subcontractors and trades on the job site
    6.3. Pre-storm activities including:

        6.3.1. Responsibilities of the WPC Manager
        6.3.2. Responsibilities of the crew and crew size
        6.3.3. Stabilization for active and inactive disturbed soil areas
        6.3.4. Stockpile management
        6.3.5. Corrective actions taken for deficiencies identified during pre-storm visual inspection

CONTRACT NO. 04-012054
CONTRACT CHANGE ORDER NO. 021
SHEET 14 OF 63

6.4. Activities to be performed during storm events including:

6.4.1. Responsibilities of the WPC Manager
6.4.2. Responsibilities of the crew and crew size
6.4.3. BMP maintenance and repair

6.5. Description of flood contingency measures

You must have the REAP onsite at least 24 hours before a predicted rain event. A printed copy of each REAP must be at the job site as part of the SWPPP.

Implement the REAP including mobilizing crews to complete activities no later than 24 hours before precipitation occurs.

IMPLEMENTATION REQUIREMENTS

SWPPP Implementation

Obtain, install, and maintain a rain gauge at the job site. Observe and record daily precipitation.

Monitor the National Weather Service Forecast Office on a daily basis. For forecasts, go to:

http://www.srh.noaa.gov/forecast

Whenever you or the Engineer identifies a deficiency in the implementation of the accepted SWPPP:

1. Correct the deficiency immediately, unless the Engineer agrees to a later date for making the correction
2. Correct the deficiency before precipitation occurs

If you fail to correct the deficiency by the agreed date or before the onset of precipitation, the Department may correct the deficiency and deduct the cost of correcting the deficiency from payment.

Continue SWPPP implementation during any temporary suspension of work activities.

Install WPC practices within 15 days or before predicted precipitation, whichever occurs first.

Numeric Action Levels (NALs)

If the project is risk level 2 or risk level 3, then it is subject to NALs:

Parameter	Test Method	Detection Limit (Min)	Unit	Numeric Action Level
pH	Field test with calibrated portable instrument	0.2	pH units	Lower NAL = 6.5 Upper NAL = 8.5
Turbidity	Field test with calibrated portable instrument	1	NTU	250 NTU

Numeric Effluent Limits (NELs)

If the project is risk level 3, then it is subject to NELs:

Parameter	Test Method	Detection Limit (Min)	Unit	Numeric Effluent Limit
pH	Field test with calibrated portable instrument	0.2	pH units	Lower NEL = 6.0 Upper NEL = 9.0
Turbidity	Field test with calibrated portable instrument	1	NTU	500 NTU

The storm event daily average for storms up to the 5-year, 24-hour storm, must not exceed the NEL for turbidity.

The daily average sampling results must not exceed the NEL for pH.

Storm Water Sampling and Analysis Day

Storm Water Sampling and Analysis Day work includes preparation, collection, analysis, and reporting of storm water samples for turbidity, pH, and other constituents. If the project is risk level 2 or risk level 3, and there is a qualified rain event that produces runoff, comply with the project's SAP for preparation, collection, analysis, and reporting of storm water samples. Collect:

1. Samples for each non-visible pollutant source and a corresponding uncontaminated control sample
2. Samples for turbidity, pH, and other constituents as specified
3. At least 3 samples for each day of each qualifying rain event
4. Samples for all locations where the storm water is discharged off-site

Perform sample collection during:

1. First 2 hours of each qualified rain event that produces runoff
2. Normal working hours

If the project is risk level 3, obtain receiving water samples.

You are not required to physically collect samples during dangerous weather conditions such as flooding or electrical storms.

If downstream samples show increased levels, assess WPC practices, site conditions, and surrounding influences to determine the probable cause for the increase.

Inspection

The WPC Manager must oversee inspections for WPC practices identified in the SWPPP:

1. Before a forecasted storm
2. After precipitation that causes site runoff
3. At 24-hour intervals during extended precipitation
4. On a predetermined schedule, a minimum of once a week

The WPC Manager must oversee daily inspections of:

1. Storage areas for hazardous materials and waste
2. Hazardous waste disposal and transporting activities
3. Hazardous material delivery and storage activities

CONTRACT NO. 04-012054
CONTRACT CHANGE ORDER NO. 021
SHEET 16 OF 63

4. WPC practices specified under "Construction Site Management" of these special provisions

The WPC Manager must use the Storm Water Site Inspection Report provided in the Preparation Manual.

The WPC Manager must prepare BMP status reports that include the following:

1. Location and quantity of installed WPC practices
2. Location and quantity of disturbed soil for the active or inactive areas

Within 24 hours of finishing the weekly inspection, the WPC Manager must submit:

1. Copy of the completed site inspection report
2. Copy of the BMP status report

REPORTING REQUIREMENTS

Rain Event Sampling Data Report

The WPC Manager must prepare a Rain Event Sampling Data Report and submit to the Engineer no later than 48 hours after conclusion of the storm event. These reports must:

1. Use an approved report format
2. Include project information including description and location
3. Include storm water monitoring information including:

    3.1. Summary and evaluation of sampling and analysis results
    3.2. Analytical methods, reporting units, detections limits for analytical parameters
    3.3. Names of individuals performing storm water inspections and sampling
    3.4. Logistical information for inspections and sampling including location, date, time, and precipitation

4. Satisfy the criteria stated in "Sampling and Analysis Plan (SAP)" of these special provisions.

Storm Water Annual Report

Storm Water Annual Report work includes certifications, monitoring and inspection results, and obtaining Storm Water Annual Report acceptance. The WPC Manager must prepare a Storm Water Annual Report. The report must:

1. Use an approved report format
2. Include project information including description and location
3. Include storm water monitoring information including:

    3.1. Summary and evaluation of sampling and analysis results including laboratory reports
    3.2. Analytical methods, reporting units, detections limits for analytical parameters
    3.3. Summary of corrective actions
    3.4. Identification of corrective actions or compliance activities that were not implemented

3.5. Summary of violations
3.6. Names of individuals performing storm water inspections and sampling
3.7. Logistical information for inspections and sampling including location, date, time, and precipitation
3.8. Visual observations and sample collection records

4. Include documentation on training for:

4.1. Individuals responsible for NPDES permit compliance
4.2. Individuals responsible for BMP installation, inspection, maintenance, and repair
4.3. Individuals responsible for preparing, revising, and amending the SWPPP

NAL Exceedance Report

If the project is risk level 2 or risk level 3 and an effluent sample exceeds a NAL, notify the Engineer and submit a NAL Exceedance Report no later than 48 hours after the conclusion of the storm event. The report must:

1. Include the following field sampling results and inspections:

1.1. Analytical methods, reporting units, and detection limits
1.2. Date, location, time of sampling, visual observation and measurements
1.3. Quantity of precipitation of the storm event

2. Description of BMPs and corrective actions taken to manage NAL exceedance

NEL Violation Report

If the project is risk level 3 and an NEL is exceeded, notify the Engineer and submit a NEL Violation Report within 6 hours. The report must:

1. Include the following field sampling results and inspections:

1.1. Analytical methods, reporting units, and detection limits
1.2. Date, location, time of sampling, visual observations and measurements
1.3. Quantity of precipitation of the storm event

2. Description of BMPs and corrective actions taken to manage NEL exceedance

If the project is risk level 2 or risk level 3, submit all sampling results to the Engineer no later than 48 hours after the conclusion of a storm event.

PAYMENT

The contract lump sum price paid for prepare storm water pollution prevention plan includes full compensation for furnishing all labor, materials, tools, equipment, and incidentals and for doing all the work involved in preparing, obtaining acceptance of, and amending the SWPPP and CSMP, inspecting water pollution control practices, as specified in the Standard Specifications and these special provisions, and as directed by the Engineer.

For projects with 60 working days or less, payments for SWPPP are made as follows:

1. After the Engineer accepts the SWPPP, the Department includes up to 75 percent of the bid item price in the monthly progress estimate
2. After contract acceptance, the Department pays for the remaining percentage of the bid item price

For projects with more than 60 working days, payments for SWPPP are made as follows:

1. After the Engineer accepts the SWPPP, the Department includes up to 50 percent of the bid item price in the monthly progress estimate
2. The Department pays 40 percent of the bid item price over the life of the contract
3. After contract acceptance, the Department pays for the remaining 10 percent of the bid item

If risk level 2 or 3, the Department pays $500 for each Rain Event Action Plan submitted. The contract unit price paid for Rain Event Action Plan includes full compensation for furnishing all labor, materials, tools, equipment, and incidentals and for doing all the work involved in preparation and submittal of REAP forms, and monitoring weather forecasts as specified in the Standard Specifications and these special provisions, and as directed by the Engineer.

The Department does not adjust payment for an increase or decrease in the quantity of rain event action plans submitted. Section 4-1.03B, "Increased or Decreased Quantities," of the Standard Specifications does not apply.

The Department pays $2,000 for each Storm Water Annual Report submitted. The contract unit price paid for Storm Water Annual Report includes full compensation for furnishing all labor, materials, tools, equipment, and incidentals and for doing all the work involved in preparation and submittal of Storm Water Annual Report as specified in the Standard Specifications and these special provisions, and as directed by the Engineer.

The Department does not adjust payment for an increase or decrease in the quantity of storm water annual reports submitted. Section 4-1.03B, "Increased or Decreased Quantities," of the Standard Specifications does not apply.

The work to complete the final Storm Water Annual Report contract item is excluded from Section 7-1.17, "Acceptance of Contract," of the Standard Specifications.

If risk level 2 or 3, the contract unit price paid for storm water sampling and analysis day includes full compensation for furnishing all labor, materials, tools, equipment, and incidentals and for doing all the work involved in preparation, collection, analysis, and reporting of storm water samples per qualifying rain event as specified in the Standard Specifications and these special provisions, and as directed by the Engineer.

The Department does not adjust payment for an increase or decrease in the quantity of storm water sampling and analysis day. Section 4-1.03B, "Increased or Decreased Quantities," of the Standard Specifications does not apply.

You may request or the Engineer may order laboratory analysis of storm water samples. Laboratory analysis of storm water samples will be paid for as extra work under Section 4-1.03D, "Extra Work," of the Standard Specifications.

The Department does not pay for the preparation, collection, laboratory analysis, and reporting of storm water samples for non-visible pollutants if WPC practices are not implemented before precipitation or if a failure of a WPC practice is not corrected before precipitation.

The Department does not pay for implementation of WPC practices in areas outside the highway right-of-way not specifically provided for in the drawings or in the special provisions.

The Department does not pay for WPC practices installed at your construction support facilities.

WPC practices for which there are separate bid items of work are measured and paid for as those bid items of work.

For each failure to submit a completed Storm Water Annual Report, the Department withholds $10,000. This withhold is in addition to other withholds under Section 9-1.07E(3) "Performance Failure Withholds," of the Standard Specifications.

Each failure to comply with any part of these special provisions and each failure to implement water pollution control practices are considered separate performance failures.

CONTRACT NO. 04-012054
CONTRACT CHANGE ORDER NO. 021
SHEET 20 OF 63

Attachment 2
Construction Site Management

10-1.05 CONSTRUCTION SITE MANAGEMENT

GENERAL

Summary

This work includes controlling potential sources of water pollution before they come in contact with storm water systems or watercourses.

Control material pollution and manage waste and non-stormwater at the job site by implementing effective handling, storage, use, and disposal practices.

For information on documents specified in these special provisions, refer to the Department's Preparation Manual, Dewatering Guide, and BMP Manual.

Preparation Manual, Dewatering Guide, and BMP Manual are available from the Department's Construction Storm Water and Water Pollution Control web site at:

http://www.dot.ca.gov/hq/construc/stormwater/stormwater1.htm

Definitions and Abbreviations

active and inactive areas: (1) Active areas have soil disturbing work activities occurring at least once within 14 days, and (2) Inactive areas are areas that have not been disturbed for at least 15 days.

BMP Manual: The Department's Construction Site Best Management Practices (BMP) Manual.

CDPH: California Department of Public Health

Dewatering Guide: The Department's Field Guide to Construction Site Dewatering.

ELAP: Environmental Laboratory Accreditation Program

minor spills: Small quantities of oil, gasoline, paint, or other material that are small enough to be controlled by a first responder upon discovery of the spill.

MSDS: Material Safety Data Sheet

Preparation Manual: The Department's Storm Water Pollution Prevention Plan (SWPPP) and Water Pollution Control Program (WPCP) Preparation Manual.

semi-significant spills: Spills that can be controlled by a first responder with help from other personnel.

significant or hazardous spills: Spills that cannot be controlled by construction personnel.

WPC: Water Pollution Control

WPC Manager: Water Pollution Control Manager as defined under "Water Pollution Control" of these special provisions.

Submittals

Submit the following:

1. MSDS at least 5 days before material is used or stored
2. Monthly inventory records for material used or stored
3. Copy of written approval to discharge into a sanitary sewer system at least 5 days before beginning discharge activities

Quality Control and Assurance

Not Used

MATERIALS

Not Used

CONSTRUCTION

Spill Prevention and Control

Implement spill and leak prevention procedures for chemicals and hazardous substances stored at the job site. If you spill or leak chemicals or hazardous substances at the job site, you are responsible for all associated cleanup costs and related liability.

As soon as it is safe, contain and clean up spills of petroleum products, sanitary and septic waste substances listed under CFR Title 40, Parts 110, 117, and 302.

Minor Spills

Clean up minor spills using the following procedures:

1. Contain the spread of the spill
2. Recover the spilled material by absorption
3. Clean the contaminated area
4. Dispose of the contaminated material promptly and properly

Semi-significant Spills

Clean up semi-significant spills immediately by the following procedures:

1. Contain the spread of the spill
2. Recover the spilled material using absorption whenever a spill occurs on a paved surface or an impermeable surface
3. Contain the spill with an earthen dike and dig up the contaminated soil for disposal whenever a spill occurs on soil
4. If the spill occurs during precipitation, cover the spill with plastic or other material to prevent contaminated runoff
5. Dispose of the contaminated material promptly and properly

Significant or Hazardous Spills

Immediately notify qualified personnel of significant or hazardous spills. Do not let construction personnel attempt to clean up the spill until qualified staff have arrived. Do the following:

1. Notify the Engineer and follow up with a written report
2. Obtain the services of a spills contractor or hazardous material team immediately
3. Notify the local emergency response team by dialing 911 and county officials at the emergency phone numbers kept at the job site
4. Notify the Governor's Office of Emergency Services Warning Center at (805) 852-7550
5. Notify the National Response Center at (800) 424-8802 regarding spills of Federal reportable quantities under CFR Title 40, Parts 110, 119, and 302
6. Notify other agencies as appropriate, including:

6.1. Fire Department
6.2. Public Works Department
6.3. Coast Guard
6.4. Highway Patrol
6.5. City Police or County Sheriff Department
6.6. Department of Toxic Substances
6.7. California Division of Oil and Gas
6.8. Cal OSHA
6.9. Regional Water Resources Control Board

Report minor, semi-significant, and significant spills to the WPC Manager. The WPC Manager must notify the Engineer immediately. The WPC Manager must oversee and enforce proper spill prevention and control measures.

Prevent spills from entering storm water runoff before and during cleanup. Do not bury spills or wash spills with water.

Keep material or waste storage areas clean, well organized, and equipped with enough cleanup supplies for the material being stored.

Material Management

General

Material must be delivered, used, and stored for this job in a way that minimizes or eliminates discharge of material into the air, storm drain systems, and watercourses.

Implement the practices described under "Material Management" of these special provisions while taking delivery of, using, or storing any of the following materials:

1. Hazardous chemicals including acids, lime, glues, adhesives, paints, solvents, and curing compounds
2. Soil stabilizers and binders
3. Fertilizers
4. Detergents
5. Plaster
6. Petroleum materials including fuel, oil, and grease
7. Asphalt components and concrete components
8. Pesticides and herbicides

Employees trained in emergency spill cleanup procedures must be present during the unloading of hazardous materials or chemicals.

If practicable, use less hazardous materials.

Material Storage

Use the following material storage procedures:

1. Store liquids, petroleum materials, and substances listed in CFR Title 40, Parts 110, 117, and 302 as specified by the Department, and place them in secondary containment facilities.
2. Secondary containment facilities must be impervious to the materials stored there for a minimum contact time of 72 hours.

3. Cover secondary containment facilities during non-working days and when precipitation is predicted. Secondary containment facilities must be adequately ventilated.
4. Keep secondary containment facility free of accumulated rainwater or spills. After precipitation, or in the event of spills or leaks, collect accumulated liquid and place into drums within 24 hours. Handle these liquids as hazardous waste under "Hazardous Waste" of these special provisions unless testing determines them to be nonhazardous.
5. Do not store incompatible materials, such as chlorine and ammonia, in the same secondary containment facility.
6. Store materials in the original containers with the original material labels maintained in legible condition. Replace damaged or illegible labels immediately.
7. Secondary containment facilities must have the capacity to contain precipitation from a 24-hour-long, 25-year storm, and 10 percent of the aggregate volume of all containers, or entire volume of the largest container within the facility, whichever is greater.
8. Store bagged or boxed material on pallets. Protect bagged or boxed material from wind and rain during non-working days and while precipitation is predicted.
9. Provide sufficient separation between stored containers to allow for spill cleanup or emergency response access. Storage areas must be kept clean, well organized, and equipped with cleanup supplies appropriate for the materials being stored.
10. Repair or replace perimeter controls, containment structures, covers, and liners as necessary. Inspect storage areas before and after precipitation, and at least weekly during other times.

Stockpile Management

Use the following stockpile management procedures:

1. Reduce or eliminate potential water pollution from stockpiled material including soil, paving material, and pressure treated wood.
2. Locate stockpiles:

   2.1. If within the floodplain, at least 30.5 meters from concentrated flows of storm water, drainage courses, and inlets unless approved
   2.2. If outside the floodplain, at least 15.2 meters from concentrated flows of storm water, drainage courses, and inlets unless approved

Install WPC practices within 15 days or before predicted precipitation, whichever occurs first.

Active and inactive soil stockpiles must be:

1. Covered with soil stabilization measures, plastic sheeting, or geosynthetic fabric
2. Surrounded with a linear sediment barrier

Portland cement concrete rubble, AC, HMA, AC and HMA rubble, aggregate base or aggregate sub-base stockpiles must be:

1. Covered with plastic sheeting, or geosynthetic fabric
2. Surrounded with a linear sediment barrier

Pressure treated wood stockpiles must be:

1. Placed on pallets
2. Covered with impermeable material

Cold mix asphalt concrete stockpiles must be:

1. Placed on impervious surface
2. Covered with impermeable material
3. Protected from run-on and runoff

Control wind erosion year round under Section 10, "Dust Control" of the Standard Specifications.

Repair or replace linear sediment barriers and covers as needed to keep them functioning properly. If sediment accumulates to 1/3 of the linear sediment barrier height, remove the sediment.

Waste Management

Solid Waste

Do not allow litter or debris to accumulate anywhere at the job site, including storm drain grates, trash racks, and ditch lines. Pick up and remove trash and debris from the job site at least once a week. The WPC Manager must monitor solid waste storage and disposal procedures at the job site.

If practicable, recycle nonhazardous job site waste and excess material. If recycling is not practicable, disposal must comply with Section 7-1.13, "Disposal of Material Outside the Highway Right of Way" of the Standard Specifications.

Furnish enough closed-lid dumpsters of sufficient size to contain any solid waste generated by work activities. When the refuse reaches the fill line, empty the dumpsters. Dumpsters must be watertight. Do not wash out dumpsters at the job site. Furnish additional containers and pick up dumpsters more frequent during the demolition phase of construction.

Solid waste includes:

1. Brick
2. Mortar
3. Timber
4. Metal scraps
5. Sawdust
6. Pipe
7. Electrical cuttings
8. Non-hazardous equipment parts
9. Styrofoam and other packaging materials
10. Vegetative material and plant containers from highway planting
11. Litter and smoking material, including litter generated randomly by the public
12. Other trash and debris

Furnish and use trash receptacles at the job site yard, field trailers, and locations where workers gather for lunch and breaks.

Hazardous Waste

Use hazardous waste management practices if waste is generated at the job site from the following substances:

1. Petroleum products
2. Asphalt products
3. Concrete curing compound
4. Pesticides
5. Acids
6. Paints
7. Stains
8. Solvents
9. Wood preservatives and treated posts
10. Roofing tar
11. Road flares
12. Lime
13. Glues and adhesives
14. Materials classified as hazardous by California Code of Regulations, Title 22, Division 4.5; or listed in CFR Title 40, Parts 110, 117, 261, or 302

The WPC Manager must oversee and enforce hazardous waste management practices. Minimize the production of hazardous materials and hazardous waste at the job site. If damaged, repair or replace perimeter controls, containment structures, and covers.

If hazardous material levels are unknown, use a laboratory certified by ELAP under CDPH to sample and test waste to determine safe methods for storage and disposal.

Separate potentially hazardous waste from nonhazardous waste at the job site. Hazardous waste must be handled, stored, and disposed of under California Code of Regulations, Title 22, Division 4.5, Section 66262.34; and in CFR Title 49, Parts 261, 262, and 263.

Store hazardous waste in sealed containers constructed and labeled with the contents and date accumulated under California Code of Regulations, Title 22, Division 4.5; and in CFR Title 49, Parts 172, 173, 178, and 179. Keep hazardous waste containers in temporary containment facilities under "Material Storage" of these special provisions.

Furnish containers with adequate storage volume at convenient locations for hazardous waste collection. Do not overfill hazardous waste containers. Do not mix hazardous waste. Do not allow potentially hazardous waste to accumulate on the ground. Store containers of dry waste that are not watertight on pallets. Store hazardous waste away from storm drains, watercourses, moving vehicles, and equipment.

Clean water based or oil based paint from brushes or equipment within a contained area and in a way that does not contaminate soil, watercourses, and storm drain systems. Handle and dispose of the following as hazardous waste: paints, thinners, solvents, residues, and sludges that cannot be recycled or reused. When thoroughly dry, dispose of the following as solid waste: dry, latex paint and paint cans, used brushes, rags, absorbent materials, and drop cloths.

Dispose of hazardous waste within 90 days of being generated. Use a licensed hazardous waste transporter to take hazardous waste to a Class I Disposal Site. Submit a copy of uniform hazardous waste manifest forms within 24 hours of transporting hazardous waste.

The WPC Manager must inspect the following daily:

1. Storage areas for hazardous materials and waste
2. Hazardous waste disposal and transporting activities

3. Hazardous material delivery and storage activities

Contaminated Soil

Identify contaminated soil from spills or leaks by noticing discoloration, odors, or differences in soil properties. Soil with evidence of contamination must be sampled and tested by a laboratory certified by ELAP.

If levels of contamination are found to be hazardous, handle and dispose of the soil as hazardous waste.

Prevent the flow of water, including ground water, from mixing with contaminated soil by using one or a combination of the following measures:

1. Berms
2. Cofferdams
3. Grout curtains
4. Freeze walls
5. Concrete seal course

If water mixes with contaminated soil and becomes contaminated, sample and test the water using a laboratory certified by ELAP. If levels of contamination are found to be hazardous, handle and dispose of the water as hazardous waste.

Concrete Waste

Use practices that will prevent the discharge of portland cement concrete, AC, or HMA waste into storm drain systems or watercourses.

Collect and dispose of portland cement concrete, AC, or HMA waste at locations where:

1. Concrete material, including grout, is used
2. Concrete dust and debris result from demolition
3. Sawcutting, coring, grinding, grooving, or hydro-concrete demolition of portland cement concrete, AC, or HMA creates a residue or slurry
4. Concrete truck or other concrete-coated equipment is cleaned at the job site

Sanitary and Septic Waste

Do not bury or discharge wastewater from sanitary or septic systems within Department right-of-way. The WPC Manager must inspect sanitary or septic waste storage and monitor disposal procedures at least weekly. Sanitary facilities that discharge to the sanitary sewer system must be properly connected and free from leaks. Place sanitary facilities at least 15.2 meters away from storm drains, watercourses, and flow lines.

Obtain written approval from the local health agency, city, county, and sewer district before discharging from a sanitary or septic system directly into a sanitary sewer system, and submit a copy to the Engineer. Comply with local health agency provisions while using an on-site disposal system.

Liquid Waste

Use practices that will prevent job site liquid waste from entering storm drain systems or watercourses. Liquid waste includes the following:

1. Drilling slurries or fluids

2. Grease-free or oil-free wastewater or rinse water
3. Dredgings, including liquid waste from drainage system cleaning
4. Liquid waste running off a surface including wash or rinse water
5. Other non-stormwater liquids not covered by separate permits

Hold liquid waste in structurally sound, leak proof containers such as:

1. Roll-off bins
2. Portable tanks

Liquid waste containers must be of sufficient quantity and volume to prevent overflow, spills and leaks.

Store containers:

1. At least 15.2 meters from moving vehicles and equipment
2. If within the floodplain, at least 30.5 meters from concentrated flows of storm water, drainage courses, watercourses, and storm drain inlets unless approved
3. If outside the floodplain, at least 15.2 meters from concentrated flows of storm water, drainage courses, watercourses, and storm drain inlets unless approved

Remove and dispose of deposited solids from sediment traps under "Solid Waste" of these special provisions unless the Engineer approves another method.

Liquid waste may require testing to determine hazardous material content before disposal.

Drilling fluids and residue must be disposed of outside the highway right-of-way.

If an approved location is available within the job site, fluids and residue exempt under California Code of Regulations, Title 23, Section 2511(g) may be dried by evaporation in a leak proof container. Dispose of remaining solid waste under "Solid Waste" of these special provisions.

Non-Storm Water Management

Water Control and Conservation

Manage water used for work activities to prevent erosion or discharge of pollutants into storm drain systems or watercourses. Obtain approval before washing anything at the job site with water that could discharge into a storm drain system or watercourse. Report discharges immediately.

If water is used at the job site, implement water conservation practices. Inspect irrigation areas. Adjust watering schedules to prevent erosion, excess watering, or runoff. Shut off water source to broken lines, sprinklers, or valves, and repair breaks within 24 hours. If possible, reuse water from waterline flushing for landscape irrigation. Sweep and vacuum paved areas; do not wash them with water.

Direct job site water runoff, including water from water line repair, to areas where it can infiltrate into the ground and not enter storm drain systems or watercourses. Do not allow spilled water to escape water truck filling areas. If possible, direct water from off-site sources around the job site. Minimize the contact of off-site water with job site water.

Illegal Connection and Discharge Detection and Reporting

Inspect the job site and the site perimeter before starting work for evidence of illegal connections, discharges, or dumping. After starting work, inspect the job site and perimeter on a daily schedule.

Whenever illegal connections, discharges, or dumping are discovered, notify the Engineer immediately. Take no further action unless ordered by the Engineer. Assume unlabeled or unidentifiable material is hazardous.

Look for the following evidence of illegal connections, discharges, or dumping:

1. Debris or trash piles
2. Staining or discoloration on pavement or soils
3. Pungent odors coming from drainage systems
4. Discoloration or oily sheen on water
5. Stains or residue in ditches, channels or drain boxes
6. Abnormal water flow during dry weather
7. Excessive sediment deposits
8. Nonstandard drainage junction structures
9. Broken concrete or other disturbances near junction structures

Vehicle and Equipment Cleaning

Limit vehicle and equipment cleaning or washing at the job site except what is necessary to control vehicle tracking or hazardous waste. Notify the Engineer before cleaning vehicles and equipment at the job site with soap, solvents, or steam. Contain and recycle or dispose of resulting waste under "Liquid Waste" or "Hazardous Waste" of these special provisions, whichever is applicable. Do not use diesel to clean vehicles or equipment, and minimize the use of solvents.

Clean or wash vehicles and equipment in a structure equipped with disposal facilities. If using a structure is not possible, clean or wash vehicles and equipment in an outside area. The outside area must be:

1. Paved with AC, HMA, or concrete paving
2. Surrounded by a containment berm
3. Equipped with a sump to collect and dispose of wash water
4. If within the floodplain, located at least 30.5 meters from concentrated flows of storm water, drainage courses, watercourses, and storm drain inlets unless approved
5. If outside the floodplain, located at least 15.2 meters from concentrated flows of storm water, drainage courses, watercourses, and storm drain inlets unless approved

When washing vehicles or equipment with water, use as little water as possible. Hoses must be equipped with a positive shutoff valve.

Discharge liquid from wash racks to a recycle system or to another approved system. Remove liquids and sediment as necessary.

The WPC Manager must inspect vehicle and equipment cleaning facilities:

1. Daily if vehicle and equipment cleaning occurs daily
2. Weekly if vehicle and equipment cleaning does not occur daily

Vehicle and Equipment Fueling and Maintenance

If practicable, perform maintenance on vehicles and equipment off the job site.

If fueling or maintenance must be done at the job site, designate a site, or sites, and obtain approval before using. Minimize mobile fueling or maintenance.

If vehicle and equipment fueling and maintenance must be done at the job site, areas for the following activities must be:

1. On level ground
2. Protected from storm water run-on
3. If within the floodplain, located at least 30.5 meters from concentrated flows of storm water, drainage courses, watercourses, and storm drain inlets unless approved
4. If outside the floodplain, located at least 15.2 meters from concentrated flows of storm water, drainage courses, watercourses, and storm drain inlets unless approved

Use containment berms or dikes around the fueling and maintenance area. Keep adequate quantities of absorbent spill cleanup material and spill kits in the fueling and maintenance area and on fueling trucks. Dispose of spill cleanup material and kits immediately after use. Use drip pans or absorbent pads during fueling or maintenance.

Fueling or maintenance activities must not be left unattended. Fueling nozzles must be equipped with an automatic shutoff control. Vapor recovery fueling nozzles must be used where required by the Air Quality Management District. When not in use, nozzles must be secured upright. Do not top-off fuel tanks.

Recycle or properly dispose of used batteries and tires.

The WPC Manager must inspect vehicle and equipment maintenance and fueling areas:

1. Daily when vehicle and equipment maintenance and fueling occurs daily
2. Weekly when vehicle and equipment maintenance and fueling does not occur daily

The WPC Manager must inspect vehicles and equipment at the job site for leaks and spills on a daily schedule. Operators must inspect vehicles and equipment each day of use.

If leaks cannot be repaired immediately, remove the vehicle or equipment from the job site.

Material and Equipment Used Over Water

Place drip pans and absorbent pads under vehicles or equipment used over water. Keep an adequate supply of spill cleanup material with the vehicle or equipment. If the vehicle or equipment will be idle for more than one hour, place drip pans or plastic sheeting under the vehicle or equipment on docks, barges, or other surfaces over water.

Furnish watertight curbs or toe boards on barges, platforms, docks, or other surfaces over water to contain material, debris, and tools. Secure material to prevent spills or discharge into water due to wind.

Structure Removal Over or Adjacent to Water

Do not allow demolished material to enter storm water systems or watercourses. Use approved covers and platforms to collect debris. Use attachments on equipment to catch debris on small demolition activities. Empty debris catching devices daily and handle debris under "Waste Management" of these special provisions.

The WPC Manager must inspect demolition sites within 15.2 meters of storm water systems or watercourses daily.

Paving, Sealing, Sawcutting, Grooving, and Grinding Activities

Prevent the following materials from entering storm drain systems or water courses:

1. Cementitious material
2. Asphaltic material
3. Aggregate or screenings
4. Grinding grooving, or sawcutting residue
5. Pavement chunks
6. Shoulder backing
7. Methacrylate

Cover drainage inlets and use linear sediment barriers to protect downhill watercourses until paving, sealing, sawcutting, grooving, or grinding activities are completed and excess material has been removed. Cover drainage inlets and manholes during the application of seal coat, tack coat, slurry seal, or fog seal.

If precipitation is predicted, limit paving, sawcutting, and grinding to places where runoff can be captured.

Do not start seal coat, tack coat, slurry seal, or fog seal activities if precipitation is predicted during the application or curing period. Do not excavate material from existing roadways during precipitation.

Use a vacuum to remove slurry immediately after slurry is produced. Do not allow slurry to run onto lanes open to traffic or off the pavement.

Collect residue from portland cement concrete grinding and grooving activities with a vacuum attachment on the grinding machine. Do not leave any residue on the pavement or allow the residue to flow across the pavement.

If approved, material excavated from existing roadways may be stockpiled under "Stockpile Management" of these special provisions.

Do not coat asphalt trucks and equipment with substances that contain soap, foaming agents, or toxic chemicals.

When paving equipment is not in use, park over drip pans or plastic sheeting with absorbent material to catch drips.

Thermoplastic Striping and Pavement Markers

Thermoplastic striping and preheating equipment shutoff valves must work properly at all times. Do not preheat, transfer, or load thermoplastic within 15.2 meters of drainage inlets or watercourses. Do not fill a preheating container above a level that is 150 mm below the top. Truck beds must be cleaned daily of scraps or melted thermoplastic.

Do not unload, transfer, or load bituminous material for pavement markers within 15.2 meters of drainage inlets or watercourses. Release all pressure from a melting tank before removing the lid to fill or service. Do not fill a melting tank above a level that is 150 mm below the top.

Collect bituminous material from the roadway after marker removal.

Pile Driving

Keep spill kits and cleanup material at pile driving locations. Pile driving equipment must be parked over drip pans, absorbent pads, or plastic sheeting with absorbent material. If

precipitation is predicted, protect pile driving equipment by parking on plywood and covering with plastic.

Store pile driving equipment when not in use. Stored pile driving equipment must be:

1. Kept on level ground
2. Protected from storm water run-on
3. If within the floodplain, at least 30.5 meters from concentrated flows of storm water, drainage courses, watercourses, and storm drain inlets unless approved
4. If outside the floodplain, at least 15.2 meters from concentrated flows of storm water, drainage courses, watercourses, and storm drain inlets unless approved

If practicable, use vegetable oil instead of hydraulic fluid.

The WPC Manager must inspect the pile driving area for leaks and spills:

1. Daily when pile driving occurs daily
2. Weekly when pile driving does not occur daily

Concrete Curing

Do not overspray chemical curing compound. Minimize the drift by spraying as close to the concrete as possible. Cover drainage inlets before applying the curing compound.

Minimize the use and discharge of water by using wet blankets or similar methods to maintain moisture while curing concrete.

Concrete Finishing

Collect and dispose of water and solid waste from high-pressure water blasting. Cover drainage inlets within 15.2 meters before sandblasting. Minimize drift of dust and blast material by keeping the nozzle close to the surface of the concrete. The blast residue may contain hazardous material.

Inspect concrete finishing containment structures for damage before each day of use and before predicted precipitation. Remove liquid and solid waste from containment structures after each work shift.

Sweeping

Sweeping must be done using hand or mechanical methods such as vacuuming.

Monitor paved areas and roadways within the job site for sediment and debris generating activities such as:

1. Clearing and grubbing
2. Earthwork
3. Trenching
4. Roadway structural section work
5. Vehicles entering and leaving the job site
6. Soil disturbing work
7. Work that causes offsite tracking of material

CONTRACT NO. 04-012054
CONTRACT CHANGE ORDER NO. 021
SHEET 32 OF 63

If sediment or debris is observed, perform sweeping:

1. Within:

1.1. 8 hours of predicted rain
1.2. 24 hours unless the Engineer approves a longer period

2. On paved roads at job site entrances and exit locations
3. On paved areas within the job site that flow to storm drains or receiving waters

You may stockpile collected material at the job site. Remove collected material including sediment from paved shoulders, drain inlets, curbs and dikes, and other drainage areas. If stockpiled, dispose of collected material at least once per week.

You may dispose of sediment within the job site that you collected during sweeping activities. Protect disposal areas against erosion.

Remove and dispose of trash collected during sweeping under Section 7-1.13, "Disposal of Material Outside the Highway Right of Way" of the Standard Specifications.

Dewatering

Dewatering consists of discharging accumulated storm water, ground water, or surface water from excavations or temporary containment facilities.

If dewatering and discharging activities are specified under a work item such as "Temporary Active Treatment System" or "Dewatering and Discharge," perform dewatering work as specified in the section involved.

If dewatering and discharging activities are not specified under a work item and you will be performing dewatering activities, you must:

1. Submit a Dewatering and Discharge Plan under Section 5-1.02, "Plans and Working Drawings," of the Standard Specifications and "Water Pollution Control" of these special provisions at least 10 days before starting dewatering activities. The Dewatering and Discharge Plan must include:

   1.1. Title sheet and table of contents
   1.2. Description of dewatering and discharge activities detailing locations, quantity of water, equipment, and discharge points
   1.3. Estimated schedule for dewatering and discharge (start and end dates, intermittent or continuous)
   1.4. Discharge alternatives such as dust control or percolation
   1.5. Visual monitoring procedures with inspection log

2. Conduct dewatering activities under the Departments' s "Field Guide for Construction Dewatering."
3. Ensure that any dewatering discharge does not cause erosion, scour, or sedimentary deposits that could impact natural bedding materials.
4. Discharge the water within the project limits. Dispose of the water in the same way as specified for material in Section 7-1.13 "Disposal of Material Outside the Highway Right of Way" of the Standard Specification if it cannot be discharged within project limits due to site constraints.
5. Do not discharge storm water or non-stormwater that has an odor, discoloration other than sediment, an oily sheen, or foam on the surface. Notify the Engineer immediately upon discovering any such condition.

The WPC manager must inspect dewatering activities:

1. Daily when dewatering work occurs daily
2. Weekly when dewatering work does not occur daily

PAYMENT

The contract lump sum price paid for construction site management includes full compensation for furnishing all labor, materials, tools, equipment, and incidentals and for doing all the work involved in spill prevention and control, material management, waste management, non-stormwater management, and dewatering and identifying, sampling, testing, handling, and disposing of hazardous waste resulting from your activities, as specified in the Standard Specifications and these special provisions, and as ordered by the Engineer.

CONTRACT NO. 04-012054
CONTRACT CHANGE ORDER NO. 021
SHEET 34 OF 63

ATTACHMENT 3
TRAINING QUALIFICATIONS AND CERTIFICATION REQUIREMENTS

The discharger shall ensure that all additional amendments and attachments to the SWPPP are certified by a Qualified SWPPP Developer (QSD). A QSD shall have one of the following registrations or certifications, and appropriate experience, as required for:

1. A California registered professional civil engineer;
2. A California registered professional geologist or engineering geologist;
3. A California registered landscape architect;
4. A professional hydrologist registered through the American Institute of Hydrology;
5. A Certified Professional in Erosion and Sediment Control (CPESC) TM registered through Enviro Cert International, Inc.;
6. A Certified Professional in Storm Water Quality (CPSWQ) TM
7. registered through Enviro Cert International, Inc.; or
8. A professional in erosion and sediment control registered through the National Institute for Certification in Engineering Technologies (NICET).

Attachment 4

Rain Event Action Plan (REAP)

Date:		**WDID Number:**	
Date Rain Predicted to Occur:		**Predicted % chance of rain:**	

Site Information:

Site Name, City and Zip Code Project Risk Level: ☐ Risk Level 2 ☐ Risk Level 3

Site Stormwater Manager Information:

Name, Company, Emergency Phone Number (24/7)

Erosion and Sediment Control Contractor – Labor Force contracted for the site:

Name, Company, Emergency Phone Number (24/7)

Stormwater Sampling Agent:

Name, Company, Emergency Phone Number (24/7)

Current Phase of Construction

Check ALL the boxes below that apply to your site.

☐	Grading and Land Development	☐	Vertical Construction	☐	Inactive Site
☐	Streets and Utilities	☐	Final Landscaping and Site Stabilization	☐	Other:

Activities Associated with Current Phase(s)

Check ALL the boxes below that apply to your site (some apply to all Phases).

Grading and Land Development:

☐	Demolition	☐	Vegetation Removal	☐	Vegetation Salvage-Harvest
☐	Rough Grade	☐	Finish Grade	☐	Blasting
☐	Soil Amendment(s):	☐	Excavation (_____ ft)	☐	Soils Testing
☐	Rock Crushing	☐	Erosion and Sediment Control	☐	Surveying
☐	Equip. Maintenance/Fueling	☐	Material Delivery and Storage	☐	Other:

Streets and Utilities:

☐	Finish Grade	☐	Utility Install: water-sewer-gas	☐	Paving Operations
☐	Equip. Maintenance/Fueling	☐	Storm Drain Installation	☐	Material Delivery & Storage
☐	Curb and Gutter/Concrete Pour	☐	Masonry	☐	Other:

Vertical Construction:

☐	Framing	☐	Carpentry	☐	Concrete/Forms/Foundation
☐	Masonry	☐	Electrical	☐	Painting
☐	Drywall/Interior Walls	☐	Plumbing	☐	Stucco
☐	Equip. Maintenance/Fueling	☐	HVAC	☐	Tile
☐	Exterior Siding	☐	Insulation	☐	Landscaping & Irrigation
☐	Flooring	☐	Roofing	☐	Other:

Final Landscaping & Site Stabilization:

☐	Stabilization	☐	Vegetation Establishment	☐	E&S Control BMP Removal
☐	Finish Grade	☐	Storage Yard/ Material Removal	☐	Landscape Installation
☐	Painting and Touch-Up	☐	Irrigation System Testing	☐	Other:
☐	Drainage Inlet Stencils	☐	Inlet Filtration	☐	Perm. Water Quality Ponds
☐	Other:	☐	Other:	☐	Other:

Inactive Construction Site:

☐	E & S Control Device Installation	☐	Routine Site Inspection	☐	Trash Removal
☐	E & S Control Device Maintenance	☐	Street Sweeping	☐	Other:

CONTRACT NO. 04-012054 C-2

CONTRACT CHANGE ORDER NO. 021

SHEET 36 OF 63

Rain Event Action Plan (REAP)

Date:		WDID Number:	

Trades Active on Site during Current Phase(s)
Check ALL the boxes below that apply to your site

☐	Storm Drain Improvement	☐	Grading Contractor	☐	Surveyor- Soil Technician
☐	Street Improvements	☐	Water Pipe Installation	☐	Sanitary Station Provider
☐	Material Delivery	☐	Sewer Pipe Installation	☐	Electrical
☐	Trenching	☐	Gas Pipe Installation	☐	Carpentry
☐	Concrete Pouring	☐	Electrical Installation	☐	Plumbing
☐	Foundation	☐	Communication Installation	☐	Masonry
☐	Demolition	☐	Erosion and Sediment Control	☐	Water, Sewer, Electric Utilities
☐	Material Delivery	☐	Equipment Fueling/Maintenance	☐	Rock Products
☐	Tile Work- Flooring	☐	Utilities, e.g., Sewer, Electric	☐	Painters
☐	Drywall	☐	Roofers	☐	Carpenters
☐	HVAC installers	☐	Stucco	☐	Pest Control: e.g., termite prevention
☐	Exterior Siding	☐	Masons	☐	Water Feature Installation
☐	Insulation	☐	Landscapers	☐	Utility Line Testers
☐	Fireproofing	☐	Riggers	☐	Irrigation System Installation
☐	Steel Systems	☐	Utility Line Testers	☐	Other:

Trade Contractor Information Provided
Check ALL the boxes below that apply to your site.

☐	Educational Material Handout	☐	Tailgate Meetings	☐	Training Workshop
☐	Contractual Language	☐	Fines and Penalties	☐	Signage
☐	Other:	☐	Other:	☐	Other:

Continued on next page.

CONTRACT NO. 04-012054
CONTRACT CHANGE ORDER NO. 021
SHEET 37 OF 63

Rain Event Action Plan (REAP)

Date of REAP		**WDID Number:**	
Date Rain Predicted to Occur:		**Predicted % chance of rain:**	

Predicted Rain Event Triggered Actions

Below is a list of suggested actions and items to review for this project. Each active Trade should check all material storage areas, stockpiles, waste management areas, vehicle and equipment storage and maintenance, areas of active soil disturbance, and areas of active work to ensure the proper implementation of BMPs. Project-wide BMPs should be checked and cross-referenced to the BMP progress map.

Trade or Activity	Suggested action(s) to perform / item(s) to review prior to rain event
☐ Information & Scheduling	☐ Inform trade supervisors of predicted rain ☐ Check scheduled activities and reschedule as needed ☐ Alert erosion/sediment control provider ☐ Alert sample collection contractor (if applicable) ☐ Schedule staff for extended rain inspections (including weekends & holidays) ☐ Check Erosion and Sediment Control (ESC) material stock ☐ Review BMP progress map ☐ Other:_____ ☐ _____ ☐ _____
☐ Material storage areas	☐ Material under cover or in sheds (ex: treated woods and metals) ☐ Perimeter control around stockpiles ☐ Other:_____ ☐ _____ ☐ _____
☐ Waste management areas	☐ Dumpsters closed ☐ Drain holes plugged ☐ Recycling bins covered ☐ Sanitary stations bermed and protected from tipping ☐ Other:_____ ☐ _____ ☐ _____
☐ Trade operations	☐ Exterior operations shut down for event (e.g., no concrete pours or paving) ☐ Soil treatments (e.g.,: fertilizer) ceased within 24 hours of event ☐ Materials and equipment (ex: tools) properly stored and covered ☐ Waste and debris disposed in covered dumpsters or removed from site ☐ Trenches and excavations protected ☐ Perimeter controls around disturbed areas ☐ Fueling and repair areas covered and bermed ☐ Other:_____ ☐ _____ ☐ _____
☐ Site ESC BMPs	☐ Adequate capacity in sediment basins and traps ☐ Site perimeter controls in place ☐ Catch basin and drop inlet protection in place and cleaned ☐ Temporary erosion controls deployed ☐ Temporary perimeter controls deployed around disturbed areas and stockpiles ☐ Roads swept; site ingress and egress points stabilized ☐ Other:_____ ☐ _____ ☐ _____
☐ Concrete rinse out area	☐ Adequate capacity for rain ☐ Wash-out bins covered ☐ Other:_____ ☐ _____ ☐ _____
☐ Spill and drips	☐ All incident spills and drips, including paint, stucco, fuel, and oil cleaned ☐ Drip pans emptied ☐ Other:_____ ☐ _____ ☐ _____

CONTRACT NO. 04-0120S4

CONTRACT CHANGE ORDER NO. 021

SHEET 38 OF 63

Continued on next page.

☐ Other / Discussion / Diagrams	☐ _____ ☐ _____ ☐ _____ ☐ _____ ☐ _____ ☐ _____ ☐ _____ ☐ _____ ☐ _____ ☐ _____ ☐ _____ ☐ _____ ☐ _____

04-012054

021

39 63

Attach a printout of the weather forecast from the NOAA website to the REAP.

I certify under penalty of law that this Rain Event Action Plan (REAP) will be performed in accordance with the General Permit by me or under my direction or supervision in accordance with a system designed to assure that qualified personnel properly gathered and evaluated the information submitted. Based on my inquiry of the persons who manage the system, or those persons directly responsible for gathering the information, the information submitted is, to the best of my knowledge and belief, true, accurate, and complete. I am aware that there are significant penalties for submitting false information, including the possibility of fine and imprisonment for knowing violations.

_____ Date: _____

Qualified SWPPP Practitioner (Use ink please)

Risk Level 2
Effluent Sampling Field Log Sheets

Construction Site Name:	Date:	Time Start:
Sampler:		
Sampling Event Type:	☐ Stormwater	☐ Non-stormwater	☐ Non-visible pollutant

Field Meter Calibration

pH Meter ID No./Desc.: Calibration Date/Time:	Turbidity Meter ID No./Desc.: Calibration Date/Time:

Field pH and Turbidity Measurements

Discharge Location Description	pH	Turbidity	Time

Grab Samples Collected

Discharge Location Description	Sample Type	Time

Additional Sampling Notes:

Time End:

CONTRACT NO. 04-012054
CONTRACT CHANGE ORDER NO. 021
SHEET 40 OF 63

Risk Level 3
Effluent Sampling Field Log Sheets

Construction Site Name:	Date:	Time Start:
Sampler:		

Sampling Event Type:	☐ Stormwater	☐ Non-stormwater	☐ Non-visible pollutant	☐ Post NEL Exceedance

Field Meter Calibration

pH Meter ID No./Desc.: Calibration Date/Time:	Turbidity Meter ID No./Desc.: Calibration Date/Time:

Field pH and Turbidity Measurements

Discharge Location Description	pH	Turbidity	Time

Grab Samples Collected

Discharge Location Description	SSC	Other (specify)	Time

Additional Sampling Notes:

Time End:

CONTRACT NO. 04-012054
CONTRACT CHANGE ORDER NO. 021
SHEET 41 OF 63

Risk Level 3
Receiving Water Sampling Field Log Sheets

Construction Site Name:	Date:	Time Start:
Sampler:		

Receiving Water Description and Observations

Receiving Water Name/ID:

Observations:

Odors	Yes ☐	No ☐
Floating material	Yes ☐	No ☐
Suspended Material	Yes ☐	No ☐
Sheen	Yes ☐	No ☐
Discolorations	Yes ☐	No ☐
Turbidity	Yes ☐	No ☐

Field Meter Calibration

pH Meter ID No./Desc.:	Turbidity Meter ID No./Desc.:
Calibration Date/Time:	Calibration Date/Time:

Field pH and Turbidity Measurements and SSC Grab Sample

Upstream Location

Type	Result	Time	Notes
pH			
Turbidity			
SSC	Collected Yes ☐ No ☐		

Downstream Location

Type	Result	Time	Notes
pH			
Turbidity			
SSC	Collected Yes ☐ No ☐		

Additional Sampling Notes:

Time End:

CONTRACT NO. 04-012054
CONTRACT CHANGE ORDER NO. 021
SHEET 42 OF 63

STATE OF CALIFORNIA • DEPARTMENT OF TRANSPORTATION

STORMWATER SITE INSPECTION REPORT

CEM-2030 (NEW 7/2010)

PROJECT INFORMATION NAME AND SITE ADDRESS	CONTRACT NUMBER/CO/RTE/PM
	PROJECT IDENTIFIER NUMBER
	WDID NUMBER
CONTRACTOR NAME AND ADDRESS	PROJECT SITE RISK LEVEL ☐ Risk Level 1 ☐ Risk Level 2 ☐ Risk Level 3
Submitted by contractor (print and sign name)	Date
Water pollution control manager name and company name	Phone number
	Emergency (24/7) phone number

General Information

Inspector's Name	Date of Inspection

Weather condition	Precipitation condition		Wind Condition
☐ Clear	☐ Misty	☐ Heavy rain	☐ None
☐ Partly cloudy	☐ Light rain	☐ Hail	☐ Less than 5 mph
☐ Cloudy	☐ Rain	☐ Snow	☐ Greater than 5 mph

Construction Phase	Site Information
☐ Highway construction	_____ Acres total project area
☐ Plant establishment	_____ Acres total project disturbed soil area
☐ Suspension of work (inactive site)	_____ Acres current phase disturbed soil area
	_____ Acres current phase inactive disturbed soil

Inspection Type *Check appropriate box*	**Storm Information**	
☐ Weekly ☐ Quarterly non-stormwater	Time elapsed since last storm _____ days	Precipitation amount from last storm _____ inches
☐ Pre-storm	Time storm is expected _____ (*time*) _____ (date)	Expected precipitation amount _____ inches
☐ During storm event	Time elapsed since storm began _____ hours-minutes	Precipitation amount from storm recorded from site rain gauge _____ inches
☐ Post storm	Time elapsed since storm _____ hours-minutes	Precipitation amount from storm recorded from site rain gauge _____ inches

CONTRACT NO. 04-0120S4

CONTRACT CHANGE ORDER NO. 021

SHEET 43 OF 63

ADA Notice For individuals with sensory disabilities, this document is available in alternate formats. For information call (916) 654-6410 or TDD (916) 654-3880 or write Records and Forms Management, 1120 N Street, MS-89, Sacramento, CA 95814.

STATE OF CALIFORNIA • DEPARTMENT OF TRANSPORTATION

STORMWATER SITE INSPECTION REPORT

CEM-2030 (NEW 7/2010)

PROJECT INFORMATION NAME AND SITE ADDRESS	CONTRACT NUMBER/CO/RTE/PM
	PROJECT IDENTIFIER NUMBER
	WDID NUMBER

Site Inspection of Best Management Practices

If the inspection form does not contain enough lines for all locations, attach more pages for the BMP so that all locations are inspected and reported.

Preservation of Existing Vegetation ☐ Yes ☐ No	Right location?		Properly installed?		Maintenance or repair necessary?		Photos?	Comments and required actions	Action No.
	Yes	No	Yes	No	Yes	No	Yes		
Location									
Location									
Location									
Location									
Location									

Temporary Soil Stabilization ☐ Yes ☐ No	Inactive areas covered?		100% coverage of required areas?		Stabilized areas free from visible erosion?		Photos?	Comments and required actions	Action No.
	Yes	No	Yes	No	Yes	No	Yes		
Location									
Location									
Location									
Location									
Location									
Location									
Location									
Location									
Location									
Location									

CONTRACT NO. 04-012054

CONTRACT CHANGE ORDER NO. 021

SHEET 44 OF 63

ADA Notice For individuals with sensory disabilities, this document is available in alternate formats. For information call (916) 654-6410 or TDD (916) 654-3880 or write Records and Forms Management, 1120 N Street, MS-89, Sacramento, CA 95814.

PROJECT INFORMATION NAME AND SITE ADDRESS	CONTRACT NUMBER/CO/RTE/PM
	PROJECT IDENTIFIER NUMBER
	WDID NUMBER

Site Inspection of Best Management Practices, continued

Temporary Linear Sediment Barriers ☐ Yes ☐ No	Right location?		Properly installed or cross barriers installed?		Maintenance performed when 1/3 height or repair needed?		Photos?	Comments and required actions	Action No.
	Yes	No	Yes	No	Yes	No	Yes		
Location									
Location									
Location									
Location									
Location									
Location									
Location									
Location									

Storm Drain Inlet Protection ☐ Yes ☐ No	All inlets protected?		Properly installed?		Maintenance or repair needed?		Photos?	Comments and required actions	Action No.
	Yes	No	Yes	No	Yes	No	Yes		
Location									
Location									
Location									
Location									
Location									
Location									
Location									
Location									
Location									

ADA Notice For individuals with sensory disabilities, this document is available in alternate formats. For information call (916) 654-6410 or TDD (916) 654-3860 or write Records and Forms Management, 1120 N Street, MS-89, Sacramento, CA 95814.

STATE OF CALIFORNIA • DEPARTMENT OF TRANSPORTATION

STORMWATER SITE INSPECTION REPORT

CEM-2030 (NEW 7/2010)

PROJECT INFORMATION NAME AND SITE ADDRESS	CONTRACT NUMBER/CO/RTE/PM
	PROJECT IDENTIFIER NUMBER
	WDID NUMBER

Site Inspection of Best Management Practices, continued

Sediment and Desilting Basins ☐ Yes ☐ No	Basin inlets, outlets,and spillways in working order?		Is water contained in basin?		Maintenance required to provide required retention or detention		Photos?	Comments and required actions	Action No.
	Yes	No	Yes	No	Yes	No	Yes		
Location									
Location									
Location									
Location									
Location									

Stockpile Management ☐ Yes ☐ No	Properly located?		Properly covered and perimeter control installed?		Maintenance or repair needed?		Photos?	Comments and required actions	Action No.
	Yes	No	Yes	No	Yes	No	Yes		
Location									
Location									
Location									
Location									
Location									
Location									
Location									
Location									
Location									
Location									
Location									

ADA Notice For individuals with sensory disabilities, this document is available in alternate formats. For information call (916) 654-6410 or TDD (916) 654-3880 or write Records and Forms Management, 1120 N Street, MS-89, Sacramento, CA 95814.

STATE OF CALIFORNIA • DEPARTMENT OF TRANSPORTATION

STORMWATER SITE INSPECTION REPORT

CEM-2030 (NEW 7/2010)

PROJECT INFORMATION NAME AND SITE ADDRESS	CONTRACT NUMBER/CO/RTE/PM
	PROJECT IDENTIFIER NUMBER
	WDID NUMBER

Site Inspection of Best Management Practices, continued

Tracking Controls ☐ Yes ☐ No	Do all entrances and exits have tracking controls?		Pavement free from visible sediment tacking? Daily sweeping?		Does sediment need to be removed from rock or ribbed plates?		Photos?	Comments and required actions	Action No.
	Yes	No	Yes	No	Yes	No	Yes		
Location									
Location									
Location									
Location									
Location									
Location									
Location									
Location									

Wind Erosion Control ☐ Yes ☐ No	Water trucks onsite?				Visible dust?		Photos?	Comments and required actions	Action No.
	Yes	No	Yes	No	Yes	No	Yes		
Location									
Location									
Location									
Location									
Location									
Location									
Location									

ADA Notice For individuals with sensory disabilities, this document is available in alternate formats. For information call (916) 654-6410 or TDD (916) 654-3880 or write Records and Forms Management, 1120 N Street, MS-89, Sacramento, CA 95814.

STORMWATER SITE INSPECTION REPORT

CEM-2030 (NEW 7/2010)

PROJECT INFORMATION NAME AND SITE ADDRESS	CONTRACT NUMBER/CO/RTE/PM
	PROJECT IDENTIFIER NUMBER
	WDID NUMBER

Site Inspection of Best Management Practices, continued

Dewatering Operations ☐ Yes ☐ No	Dewatering currently currently active?		Dewatering conform with RWQCB permit?		Dewatering discharge within discharge specified limitations?		Photos?	Comments and required actions	Action No.
	Yes	No	Yes	No	Yes	No	Yes		
Location									
Location									
Location									
Location									
Location									
Location									

Temporary Stream Crossing ☐ Yes ☐ No	Constructed as shown on the plane?		Conforms to 404 permit and 1601 permit requirements?		Maintenance or repair required?		Photos?	Comments and required actions	Action No.
	Yes	No	Yes	No	Yes	No	Yes		
Location									
Location									
Location									
Location									
Location									
Location									

CONTRACT NO. 04-012054
CONTRACT CHANGE ORDER NO. 021
SHEET 48 OF 63

ADA Notice For individuals with sensory disabilities, this document is available in alternate formats. For information call (916) 654-6410 or TDD (916) 654-3880 or write Records and Forms Management, 1120 N Street, MS-89, Sacramento, CA 95814.

STATE OF CALIFORNIA • DEPARTMENT OF TRANSPORTATION

STORMWATER SITE INSPECTION REPORT

CEM-2030 (NEW 7/2010)

PROJECT INFORMATION NAME AND SITE ADDRESS	CONTRACT NUMBER/CO/RTE/PM
	PROJECT IDENTIFIER NUMBER
	WDID NUMBER

Site Inspection of Best Management Practices, continued

Vehicle and Equipment Fueling and Maintenance ☐ Yes ☐ No	Located away from drainage courses and water courses?		Areas protected from run on and runoff?		Performed on impermeable surface with berm? If no, drip pans used?		Areas reasonably clean and free of spills. leaks and other material?		Vehicles and equipment inspected daily for leaks? Repair if necessary?		Photos?
	Yes	No	Yes	No	Yes	No	Yes	No	Yes	No	Yes
Location 1											
Location 2											
Location 3											

	Comments and Required Actions	Action No.
Location 1		
Location 2		
Location 3		

Vehicle and Equipment Cleaning ☐ Yes ☐ No	Washing areas located away from drainage courses and water courses?		Washing areas protected from run-on and runoff?		Washing performed on impermeable surface with berm?		Washing areas reasonably clean and free of spills. leaks and other material?		Washing limited to water, no soap? Wash water contained for infiltration and evaporation or disposal		Photos?
	Yes	No	Yes	No	Yes	No	Yes	No	Yes	No	Yes
Location 1											
Location 2											

	Comments and Required Actions	Action No.
Location 1		
Location 2		

ADA Notice For individuals with sensory disabilities, this document is available in alternate formats. For information call (916) 654-6410 or TDD (916) 654-3880 or write Records and Forms Management, 1120 N Street, MS-89, Sacramento, CA 95814.

STATE OF CALIFORNIA • DEPARTMENT OF TRANSPORTATION

STORMWATER SITE INSPECTION REPORT

CEM-2030 (NEW 7/2010)

PROJECT INFORMATION NAME AND SITE ADDRESS	CONTRACT NUMBER/CO/RTE/PM
	PROJECT IDENTIFIER NUMBER
	WDID NUMBER

Site Inspection of Best Management Practices, continued

Material Storage ☐ Yes ☐ No	Located away from drainage courses and water courses?		Areas protected from run on and runoff?		Bagged and boxed materials stored on pallets? Liquid materials in secondary containment?		Areas reasonably clean and free of spills, leaks, and other material?		Is material inventory up to date?		Photos?
	Yes	No	Yes	No	Yes	No	Yes	No	Yes	No	Yes
Location 1											
Location 2											
Location 3											
Location 4											

	Comments and Required Actions	Action No.
Location 1		
Location 2		
Location 3		
Location 4		

Additional Requirements For Hazardous Material Storage ☐ Yes ☐ No	Stored in properly labeled containers?		Liquids have secondary containment?		Secondary containment facilities free from spills and rainwater?		Cleanup and spill reporting procedures posted?		Cleanup supplies available and adequate for minor spills?		Photos?
	Yes	No	Yes	No	Yes	No	Yes	No	Yes	No	Yes
Location 1											
Location 2											

	Comments and Required Actions	Action No.
Location 1		
Location 2		

ADA Notice For individuals with sensory disabilities, this document is available in alternate formats. For information call (916) 654-6410 or TDD (916) 654-3880 or write Records and Forms Management, 1120 N Street, MS-89, Sacramento, CA 95814.

STATE OF CALIFORNIA • DEPARTMENT OF TRANSPORTATION

STORMWATER SITE INSPECTION REPORT

CEM-2030 (NEW 7/2010)

PROJECT INFORMATION NAME AND SITE ADDRESS	CONTRACT NUMBER/CO/RTE/PM
	PROJECT IDENTIFIER NUMBER
	WDID NUMBER

Site Inspection of Best Management Practices, continued

Waste Management ☐ Yes ☐ No	Are watertight litter containers and dumpsters properly located		Are litter and material waste placed in watertight dumpsters?		Do waste management containers have enough capacity for planned operations?		Photos?	Comments and required actions	Action No.
	Yes	No	Yes	No	Yes	No	Yes		
Location									
Location									
Location									
Location									
Location									
Location									
Location									

Concrete Waste Management ☐ Yes ☐ No	Are washout facilities functional and identified?		Are concrete washout liners free from punctures and holes?		Is there enough volume and freeboard for planned operations?		Photos?	Comments and required actions	Action No.
	Yes	No	Yes	No	Yes	No	Yes		
Location									
Location									
Location									
Location									
Location									
Location									
Location									
Location									

ADA Notice For individuals with sensory disabilities, this document is available in alternate formats. For information call (916) 654-6410 or TDD (916) 654-3880 or write Records and Forms Management, 1120 N Street, MS-89, Sacramento, CA 95814.

STATE OF CALIFORNIA • DEPARTMENT OF TRANSPORTATION

STORMWATER SITE INSPECTION REPORT

CEM-2030 (NEW 7/2010)

PROJECT INFORMATION NAME AND SITE ADDRESS	CONTRACT NUMBER/CO/RTE/PM
	PROJECT IDENTIFIER NUMBER
	WDID NUMBER

Site Inspection of Best Management Practices, continued

For project specific BMPs, insert the BMP name and additional inspection requirements below.

Project-specific BMP ☐ Yes ☐ No	Properly located?		Properly installed?		Maintenance or repair needed?		Photos?	Comments and required actions	Action No.
	Yes	No	Yes	No	Yes	No	Yes		
Location									
Location									
Location									
Location									

Project-specific BMP ☐ Yes ☐ No	Properly located?		Properly installed?		Maintenance or repair needed?						Photos?
	Yes	No	Yes	No	Yes	No	Yes	No	Yes	No	Yes
Location 1											
Location 2											
Location 3											
Location 4											

	Comments and Required Actions	Action No.
Location 1		
Location 2		
Location 3		
Location 4		

ADA Notice For individuals with sensory disabilities, this document is available in alternate formats. For information call (916) 654-6410 or TDD (916) 654-3880 or write Records and Forms Management, 1120 N Street, MS-89, Sacramento, CA 95814.

STATE OF CALIFORNIA • DEPARTMENT OF TRANSPORTATION

STORMWATER SITE INSPECTION REPORT

CEM-2030 (NEW 7/2010)

PROJECT INFORMATION NAME AND SITE ADDRESS	CONTRACT NUMBER/CO/RTE/PM
	PROJECT IDENTIFIER NUMBER
	WDID NUMBER

Pre-Storm Visual Inspection Requirements

Inspect the following in addition to visual inspection of BMPs to see if they have been properly implemented in accordance with SWPP and REAP:

Drainage Areas	Leaks or spills?		Any uncontrolled pollutant sources?		Stored materials that should be moved?		Photos?	Comments and required actions	Action No.
	Yes	No	Yes	No	Yes	No	Yes		
Location 1									
Location 2									
Location 3									
Location 4									

Drainage Discharge Locations	Free of erosion or sediment?						Photos?	Comments and required actions	Action No.
	Yes	No	Yes	No	Yes	No	Yes		
Location 1									
Location 2									
Location 3									
Location 4									

Desilting Basins and Other Stormwater Storage ☐ Yes ☐ No	Water retained or stored?		Leaks?		Adequate freeboard for storm event?		Photos?	Comments and required actions	Action No.
	Yes	No	Yes	No	Yes	No	Yes		
Location 1									
Location 2									

Desilting Basins and other Stormwater Storage *If any water is retained or stored, report the following.*	Presence of floating and suspended materials?		Presence of discoloration or turbidity?		Presence of odors?		If yes to observed pollutants, was sample taken?		Identify source of any observed pollutants.
	Yes	No	Yes	No	Yes	No	Yes	No	
Location 1									
Location 2									

ADA Notice For individuals with sensory disabilities, this document is available in alternate formats. For information call (916) 654-6410 or TDD (916) 654-3880 or write Records and Forms Management, 1120 N Street, MS-89, Sacramento, CA 95814.

STATE OF CALIFORNIA • DEPARTMENT OF TRANSPORTATION

STORMWATER SITE INSPECTION REPORT

CEM-2030 (NEW 7/2010)

PROJECT INFORMATION NAME AND SITE ADDRESS	CONTRACT NUMBER/CO/RTE/PM
	PROJECT IDENTIFIER NUMBER
	WDID NUMBER

During Storm Visual Inspection Requirements

In addition to visual inspection of BMPs to determine whether they are performing and are adequate, if additional BMPs are needed, or if BMPs need immediate maintenance, inspect the following

Drainage Discharge Locations	Flowing water?		Free of erosion or sediment?		Discharge sample taken?		Run-on sample taken?		Comments and required actions	Action No.
	Yes	No	Yes	No	Yes	No	Yes	No		
Location 1										
Location 2										
Location 3										
Location 4										
Location 5										

Drainage Discharge Locations *If any water is flowing, report the following.*	Presence of floating and suspended materials?		Presence of discoloration or turbidity?		Presence of odors?		If yes to observed pollutants was sample taken?		Source of observed pollutants
	Yes	No	Yes	No	Yes	No	Yes	No	
Location 1									
Location 2									
Location 3									
Location 4									
Location 5									

Risk Level 3 Drainage Discharge Locations *If any water is flowing, report the following.*	Run-on sample taken?		Upstream or un-gradient receiving water sample taken?		Downstream or downgradient receiving water sample taken?		Comments and required actions
	Yes	No	Yes	No	Yes	No	
Location							
Location							
Location							
Location							

STATE OF CALIFORNIA • DEPARTMENT OF TRANSPORTATION

STORMWATER SITE INSPECTION REPORT

CEM-2030 (NEW 7/2010)

PROJECT INFORMATION NAME AND SITE ADDRESS	CONTRACT NUMBER/CO/RTE/PM
	PROJECT IDENTIFIER NUMBER
	WDID NUMBER

During Storm Visual Inspection Requirements, continued

Desilting Basins and Other Stormwater Storage ☐ Yes ☐ No	Flowing water?		Free of erosion or sediment?		Discharge sample taken?		Comments and required actions	Action No.
	Yes	No	Yes	No	Yes	No		
Location 1								
Location 2								
Location 3								

Desilting Basins and Other Stormwater Storage *If any water is retained or stored, report the following.*	Presence of floating and suspended materials?		Presence of discoloration or turbidity?		Presence of odors?		If yes to observed pollutants was sample taken?		Source of observed pollutants
	Yes	No	Yes	No	Yes	No	Yes	No	
Location 1									
Location 2									
Location 3									

Non-visible Pollutant Locations ☐ Yes ☐ No *Inspect locations where disturbed soil or materials are stored or used on sites that contain non-visible pollutants.*	Breath malfunction leakage or spill?		Run-on?		Flowing discharge?		Comments and required actions	Action No.
	Yes	No	Yes	No	Yes	No		
Location 1								
Location 2								
Location 3								

Desilting Basins and Other Stormwater Storage *If any water is retained or stored, report the following.*	Presence of floating and suspended materials?		Presence of discoloration or turbidity?		Presence of odors?		Discharge sample taken?		Uncontaminated* sample taken?	
	Yes	No	Yes	No	Yes	No	Yes	No	Yes	No
Location 1										
Location 2										
Location 3										

**Sample stormwater that has not come in contact with disturbed soil or stored materials or where materials were used on site for comparison with contaminated sample.*

ADA Notice For individuals with sensory disabilities, this document is available in alternate formats. For information call (916) 654-6410 or TDD (916) 654-3880 or write Records and Forms Management, 1120 N Street, MS-89, Sacramento, CA 95814.

STATE OF CALIFORNIA • DEPARTMENT OF TRANSPORTATION

STORMWATER SITE INSPECTION REPORT

CEM-2030 (NEW 7/2010)

PROJECT INFORMATION NAME AND SITE ADDRESS	CONTRACT NUMBER/CO/RTE/PM
	PROJECT IDENTIFIER NUMBER
	WDID NUMBER

Post Storm Visual Inspection Requirements

Within 48 hours of a qualifying rain event, inspect all BMPs to determine wether BMPs were adequate, implemented and effective and identify any additional BMPs needed. Perform the following visual inspections of the project site

Drainage Discharge Locations	Flowing water?		Free of erosion or sediment?		Discharge sample taken?		Run-on sample taken?		Comments and required actions	Action No.
	Yes	No	Yes	No	Yes	No	Yes	No		
Location 1										
Location 2										
Location 3										
Location 4										
Location 5										

Drainage Discharge Locations *If any water is flowing, report the following.*	Presence of floating and suspended materials?		Presence of discoloration or turbidity?		Presence of odors?		If yes to observed pollutants, was sample taken?		Source of observed pollutants
	Yes	No	Yes	No	Yes	No	Yes	No	
Location 1									
Location 2									
Location 3									
Location 4									
Location 5									

Risk Level 3 Drainage Discharge Locations *If any water is flowing, report the following.*	Run-on sample taken?		Upstream or un-gradient receiving water sample taken?		Downstream or downgradient receiving water sample taken?		Comments
	Yes	No	Yes	No	Yes	No	
Location							
Location							
Location							

ADA Notice For individuals with sensory disabilities, this document is available in alternate formats. For information call (916) 654-6410 or TDD (916) 654-3880 or write Records and Forms Management, 1120 N Street, MS-89, Sacramento, CA 95814.

STATE OF CALIFORNIA • DEPARTMENT OF TRANSPORTATION

STORMWATER SITE INSPECTION REPORT

CEM-2030 (NEW 7/2010)

PROJECT INFORMATION NAME AND SITE ADDRESS	CONTRACT NUMBER/CO/RTE/PM
	PROJECT IDENTIFIER NUMBER
	WDID NUMBER

Post Storm Visual Inspection Requirements, continued

Desilting Basins and Other Stormwater Storage ☐ Yes ☐ No	Water retained or stored?		Leaks?				Photos?	Comments and required actions	Action No.
	Yes	No	Yes	No	Yes	No	Yes		
Location 1									
Location 2									
Location 3									

Desilting Basins and Other Stormwater Storage *If any water is retained or stored, report the following.*	Presence of floating and suspended materials?		Presence of discoloration or turbidity?		Presence of odors?		If yes to observed pollutants, was sample taken?		Source of observed pollutants
	Yes	No	Yes	No	Yes	No	Yes	No	
Location 1									
Location 2									
Location 3									

Non-Visible Pollutant Locations ☐ Yes ☐ No *Inspect all locations where disturbed soil or materials are stored or used on sites that contain non-visible pollutants.*	Breath malfunction, leakage or spill?		Run-on?		flowing discharge?		Photos?	Comments and required actions	Action No.
	Yes	No	Yes	No	Yes	No	Yes		
Location 1									
Location 2									
Location 3									

Non-visible Pollutant Locations *If any water is flowing, report the following.*	Presence of floating and suspended materials?		Presence of discoloration or turbidity?		Presence of odors?		Discharge sample taken?		Uncontaminated* sample taken?	
	Yes	No	Yes	No	Yes	No	Yes	No	Yes	No
Location 1										
Location 2										
Location 3										

**Sample stormwater that has not come in contact with disturbed soil or stored materials or where materials were used onsite for comparison with contaminated sample.*

ADA Notice For individuals with sensory disabilities, this document is available in alternate formats. For information call (916) 654-6410 or TDD (916) 654-3880 or write Records and Forms Management, 1120 N Street, MS-89, Sacramento, CA 95814.

STATE OF CALIFORNIA • DEPARTMENT OF TRANSPORTATION

STORMWATER SITE INSPECTION REPORT

CEM-2030 (NEW 7/2010)

PROJECT INFORMATION NAME AND SITE ADDRESS	CONTRACT NUMBER/CO/RTE/PM
	PROJECT IDENTIFIER NUMBER
	WDID NUMBER

Quarterly Non-Stormwater Discharge Visual Inspection Requirements

Conduct one visual inspection quarterly in each of the following periods January-March, April-June, July-September, and October-December.

Drainage Areas	Presence of a non-stormwater discharge?		Indication of a prior non-stormwater discharge?		Date discharge was observed?		Photos?	Source of non-stormwater discharge and required actions	Action No.
	Yes	No	Yes	No	Yes	No	Yes		
Location 1									
Location 2									
Location 3									
Location 4									
Location 5									

Drainage Areas *If any water is retained or stored, report the following.*	Presence of floating and suspended materials?		Presence of discoloration or turbidity?		Presence of odors?		sample taken?*		Comments and required actions	Action No.
	Yes	No	Yes	No	Yes	No	Yes	No		
Location 1										
Location 2										
Location 3										
Location 4										
Location 5										

**Sample non-stormwater discharge at the location where the discharge leaves the jobsite and record location under drainage discharge locations.*

Drainage Discharge Locations	Presence of a non-stormwater discharge?		Indication of a prior non-stormwater discharge?		Date discharge was observed?	Photos?	Source of non-stormwater discharge and required actions	Action No.
	Yes	No	Yes	No		Yes		
Location 1								
Location 2								
Location 3								
Location 4								
Location 5								

ADA Notice For individuals with sensory disabilities, this document is available in alternate formats. For information call (916) 654-6410 or TDD (916) 654-3880 or write Records and Forms Management, 1120 N Street, MS-89, Sacramento, CA 95814.

STATE OF CALIFORNIA • DEPARTMENT OF TRANSPORTATION

STORMWATER SITE INSPECTION REPORT

CEM-2030 (NEW 7/2010)

PROJECT INFORMATION NAME AND SITE ADDRESS	CONTRACT NUMBER/CO/RTE/PM
	PROJECT IDENTIFIER NUMBER
	WDID NUMBER

Quarterly Non-Stormwater Discharge Visual Inspection Requirements, continued

Drainage Discharge Locations *If any water is flowing, report the following.*	Presence of floating and suspended materials?		Presence of discoloration or turbidity?		Presence of odors?		Discharge sample taken?		Run-on sample taken?		Photos?
	Yes	No	Yes	No	Yes	No	Yes	No	Yes	No	Yes
Location 1											
Location 2											
Location 3											
Location 4											
Location 5											

Risk Level 3 Drainage Discharge Locations *If any water is flowing, report the following.*			Upstream or un-gradient receiving water sample taken?		Downstream or down-gradient receiving water sample taken?		Comments
	Yes	No	Yes	No	Yes	No	
Location							
Location							
Location							
Location							
Location							

Illegal Connection or Discharge Detection *Observe the jobsite and jobsite perimeter for illegal connections and discharges.*	Evidence of illegal connections?		Illegal dumping or discharges onto jobsite?		Engineer notified of illegal connection or discharge?	Photos?	Comments and required actions	Action No.
	Yes	No	Yes	No		Yes		
Location								
Location								
Location								
Location								
Location								

ADA Notice For individuals with sensory disabilities, this document is available in alternate formats. For information call (916) 654-6410 or TDD (916) 654-3880 or write Records and Forms Management, 1120 N Street, MS-89, Sacramento, CA 95814.

STATE OF CALIFORNIA • DEPARTMENT OF TRANSPORTATION

STORMWATER SITE INSPECTION REPORT

CEM-2030 (NEW 7/2010)

PROJECT INFORMATION NAME AND SITE ADDRESS	CONTRACT NUMBER/CO/RTE/PM
	PROJECT IDENTIFIER NUMBER
	WDID NUMBER

Site Inspection Report General Comments

Are the BMPs installed as required by the SWPPP for the phase of construction?

☐ Yes ☐ No

Does the SWPPP need to be amended?

☐ Yes ☐ No

Does the SWPPP currently reflect the current site conditions and contractor operations?

☐ Yes ☐ No

Are there water pollution control concerns on the project site not addressed by the comments / required actions shown above for BMPs based on thefield review of the jobsite?

☐ Yes ☐ No *If yes, provide below details and comments and required actions for each location.*

Location	Water Pollution Control Concern	Water Pollution Control Concern	Action No.

ADA Notice For individuals with sensory disabilities, this document is available in alternate formats. For information call (916) 654-6410 or TDD (916) 654-3880 or write Records and Forms Management, 1120 N Street, MS-89, Sacramento, CA 95814.

CONTRACT NO. 04-012054
CONTRACT CHANGE ORDER NO. 021
SHEET 61 OF 63

STATE OF CALIFORNIA • DEPARTMENT OF TRANSPORTATION

STORMWATER SITE INSPECTION REPORT

CEM-2030 (NEW 7/2010)

PROJECT INFORMATION NAME AND SITE ADDRESS	CONTRACT NUMBER/CO/RTE/PM
	PROJECT IDENTIFIER NUMBER
	WDID NUMBER

Stormwater Inspection Report Cerificalton

I certify under penalty of law that this Stormwater Inspection Report was performed in accordance with the General permit. The information contained in thisinspection report was gathered from a field site inspection. I am aware that Section 309 (c)(4) of the Clean Water Act provides for significant penalties, including fines and imprisonment for knowingly submitting false material statement, representation or certification.

Stormwater Inspector Name	Date Report Completed
Stormwater inspector Signature	

I certify under penalty of law that this Stormwater Inspection Report was performed in accordance with the General Permit by me or under my direction or supervision. The information contained in this inspection report was gathered and evaluated by qualified personnel prior to submittal. Based on my review of the information and inquiry of those who gathered and evaluated the information, the information submitted is, to the best of my knowledge and belief, true accurate, and complete.

I am aware that Section 309 (c)(4) of the Clean Water Act provides for significant penalties, including fines and imprisonment for knowingly submitting false material statement, representation or certification.

Water Pollution Control Manager Name	Date
Water Pollution Control Manager Signature	

Stormwater Inspection Report Acceptance

Accepted by Resident Engineer (Name)	Date
Resident Engineer Signature	

ADA Notice For individuals with sensory disabilities, this document is available in alternate formats. For information call (916) 654-6410 or TDD (916) 654-3880 or write Records and Forms Management, 1120 N Street, MS-89, Sacramento, CA 95814.

General Information

- If the inspection form does not contain enough lines to report all locations on a jobsite, attach additional copies of the form page so that all locations are inspected and reported.
- Obtain forecasted precipitation information from the National Weather Service Forecast Office website, http://www.srh.noaa.gov/forecast.
- Weather information should be the best estimate of beginning of the storm event, duration of the event, and time elapsed since the last storm.
- Rainfall amounts should be recorded from the project site rain gauge.

Storm Visual Inspections

- For non-visible pollutant inspections, report on all locations shown in the SWPPP.

Required Actions

- All requiring actions reported on this form must also be reported on form CEM-2035, "Stormwater Site Inspection Report Corrective Actions Summary."
- Locations identified where BMPs are failing or have other shortcomings require implementation of repairs or design changes within 72 hours of identification, and complete BMP repairs or other changes as soon as possible.

Attachment 5
Relations with California Regional Water Quality Control Board

5-1.26 RELATIONS WITH CALIFORNIA REGIONAL WATER QUALITY CONTROL BOARD

This project lies within the boundaries of the San Francisco Bay Regional Water Quality Control Board (RWQCB).

The State Water Resources Control Board (SWRCB) has issued to the Department a permit that governs storm water and non-storm water discharges from the Department's properties, facilities, and activities. The Department's permit is entitled "Order No. 99 - 06 - DWQ, NPDES No. CAS000003, National Pollutant Discharge Elimination System (NPDES) Permit, Statewide Storm Water Permit and Waste Discharge Requirements (WDRs) for the State of California, Department of Transportation (Caltrans)." Copies of the Department's permit are available for review from the SWRCB, Division of Water Quality, 1001 "I" Street, P.O. Box 100, Sacramento, California 95812-0100, Telephone fax: (916) 341-5463 and may also be obtained at:

http://www.waterboards.ca.gov/water_issues/programs/stormwater/caltrans.shtml

The Department's permit references and incorporates by reference the current statewide general permit issued by the SWRCB entitled "Order No. 2009-0009-DWQ, National Pollutant Discharge Elimination System (NPDES) General Permit No. CAS000002, Waste Discharge Requirements for Discharges of Storm Water Runoff Associated with Construction and Land Disturbance Activities" that regulates discharges of storm water and non-storm water from construction activities disturbing one acre or more of soil in a common plan of development. Copies of the statewide permit and modifications thereto are available for review from the SWRCB, Division of Water Quality, 1001 "I" Street, P.O. Box 100, Sacramento, California 95812-0100, Telephone fax: (916) 341-5463 and may also be obtained at:

http://www.waterboards.ca.gov/water_issues/programs/stormwater/

The NPDES permits that regulate this project, as referenced above, are collectively referred to in this section as the "permits."

This project shall conform to the permits and modifications thereto. The Contractor shall maintain copies of the permits at the project site and shall make them available during construction.

The Contractor shall know and comply with provisions of Federal, State, and local regulations and requirements that govern the Contractor's operations and storm water and non-storm water discharges from the project site and areas of disturbance outside the project limits during construction. Attention is directed to Sections 7-1.01, "Laws to be Observed," 5-1.18, "Property and Facility Preservation," 7-1.12, "Indemnification and Insurance," and 9-1.07E(5), "Penalty Withholds," of the Standard Specifications.

The Contractor shall notify the Engineer immediately upon request from the regulatory agencies to enter, inspect, sample, monitor, or otherwise access the project site or the Contractor's records pertaining to water pollution control work. The Contractor and the Department shall provide copies of correspondence, notices of violation, enforcement actions, or proposed fines by regulatory agencies to the requesting regulatory agency.

STATE OF CALIFORNIA - DEPARTMENT OF TRANSPORTATION

CONTRACT CHANGE ORDER MEMORANDUM

TO: Deanna Vilcheck, ACM /	FILE: E.A. 04 - 0120S4
FROM: Rajesh Oberoi, Senior R.E.	CO-RTE-PM SF-80-12.7/13.2
	FED. NO. NO FED AID
CCO#: 21 SUPPLEMENT#: 0 Category Code: CXSA	CONTINGENCY BALANCE (incl. this change) $29,054,212.00
COST: $0.00 INCREASE ☐ DECREASE ☐	HEADQUARTERS APPROVAL REQUIRED? ☑ YES ☐ NO
SUPPLEMENTAL FUNDS PROVIDED: $0.00	IS THIS REQUEST IN ACCORDANCE WITH ENVIRONMENTAL DOCUMENTS? ☑ YES ☐ NO
CCO DESCRIPTION: New Construction General permit	**PROJECT DESCRIPTION:** YBITS-1 (Yerba Buena Island Transition Structures)

Original Contract Time:	Time Adj. This Change:	Previously Approved CCO Time Adjustments:	Percentage Time Adjusted: (including this change)	Total # of Unreconciled Deferred Time CCO(s): (including this change)
1390 Day(s)	DEF Day(s)	0 Day(s)	0 %	0

THIS CHANGE ORDER PROVIDES FOR:

Incorporating the Department's new National Pollutant Discharge Elimination System (NPDES) General Permit for Storm Water Discharges Associated with Construction and Land Disturbance (Order No. 2009-009-DWQ), Construction General Permit into the contract.

The new National Pollutant Discharge Elimination System (NPDES) General Permit for Storm Water Discharges Associated with Construction and Land Disturbance (Order No. 2009-009-DWQ), Construction General Permit (CGP) was adopted by the State Water Resources Control Board on September 9, 2009, and is effective July 1, 2010. Existing projects that have a Storm Water Pollution Prevention Plan (SWPPP) and have filed a Notice of Construction (NOC) under the existing CGP (Order No. 99-08-DWQ) will be grand-fathered under the new CGP as Risk Level 1. However this project has been specifically designated as Risk Level 2 as agreed between the Department and the San Francisco Regional Water Quality Control Board.

This change order revises the CGP order number, implements year-round soil stabilization and sediment control best management practices in place of current rainy season requirements, increases the reporting and monitoring requirements for storm water discharges and provides changes for existing storm water pollution prevention plans to be in compliance with the new CGP. Several sections of the contract special provisions are modified to reflect these changes.

The new CGP does not contain a defined rainy season and therefore requires installation of soil stabilization and sediment control best management practices year-round. Soil stabilization and sediment controls must be installed on inactive areas of construction if the area is not scheduled to be re-disturbed for more than 14 days. The contractor will be compensated for additional mobilizations of crews and equipment necessary to install soil stabilization and sediment controls during the contract-specified non-rainy season. The contractor will also be compensated for any adjustments because of the need to apply soil stabilization and sediment controls on small areas versus the larger areas allowed when there was a rainy season definition and for providing a dedicated water pollution control manager.

In order to enact the new permit via change order in a timely manner, compensation for these additional costs resulting from this change is deferred and shall be compensated under a forthcoming supplement to this change order.

Adjustment of contract time is deferred as the change may affect the controlling operation.

Maintenance concurrence is not required as this change doesn't affect any permanent roadway features.

This change order was concurred by Sarah Picker of HQ Construction on September 20,2010.

ADA Notice: For individuals with sensory disabilities, this document is available in alternate formats. For information call: (916) 654-6410 or TDD (916) 654-3880 or write Records and Forms Management, 1120 N Street, MS-89, Sacramento, CA 95814.

CONCURRED BY:		
Construction Engineer:	Rajesh Oberoi	Date 9/23/10
Bridge Engineer:	Mehran Ardakanian	Date
Project Engineer:		Date
Project Manager:		Date
FHWA Rep.:		Date
Environmental:		Date
Other (specify):	SARAH PICKER	Date 9-20-10
Other (specify):		Date
District Prior Approval By:		Date
HQ (Issue Approve) By:	LARRY SALHANEY	Date 9-23-10
Resident Engineer's Signature:	Rajesh Oberoi	Date 9/23/10

ESTIMATE OF COST

	THIS REQUEST	TOTAL TO DATE
ITEMS	$0.00	$0.00
FORCE ACCOUNT	$0.00	$0.00
AGREED PRICE	$0.00	$0.00
ADJUSTMENT	$0.00	$0.00
TOTAL	$0.00	$0.00

FEDERAL PARTICIPATION

☐ PARTICIPATING ☐ PARTICIPATING IN PART ☑ NONE
☐ NON-PARTICIPATING (MAINTENANCE) ☐ NON-PARTICIPATING

FEDERAL SEGREGATION (if more than one Funding Source or P.I.P. type)
☐ CCO FUNDED PER CONTRACT ☐ CCO FUNDED AS FOLLOWS

FEDERAL FUNDING SOURCE	PERCENT

ADA Notice: For individuals with sensory disabilities, this document is available in alternate formats. For information call: (916) 654-6410 or TDD (916) 654-3880 or write Records and Forms Management, 1120 N Street, MS-89, Sacramento, CA 95814.

CONTRACT CHANGE ORDER

Change Requested by: Engineer

CCO: 21	Suppl. No. 1	Contract No. 04 - 0120S4	Road SF-80-12.7/13.2	FED. AID LOC.: NO FED AID

To: **M C M CONSTRUCTION INC**

You are directed to make the following changes from the plans and specifications or do the following described work not included in the plans and specifications for this contract. ***NOTE: This change order is not effective until approved by the Engineer.***

Description of work to be done, estimate of quantities and prices to be paid. (Segregate between additional work at contract price, agreed price and force account.) Unless otherwise stated, rates for rental of equipment cover only such time as equipment is actually used and no allowance will be made for idle time. This last percentage shown is the net accumulated increase or decrease from the original quantity in the Engineer's Estimate.

Cost incurred by the Contractor pertaining to compliance to the following sections of the Contract Special Provisions, including the revisions incorporated under the original Change Order No. 21, shall be compensated on a force account basis in lieu of the contract bid item prices associated with this work:

Section 5-1.26 Relations with California Regional Water Quality Control Board
Section 10-1.04 Water Pollution Control
Section 10-1.05 Construction Site management
Section 10-1.06 Temporary Active Treatment System
Section 10-1.07 Sweeping
Section 10-1.08 Turbidity Control
Section 10-1.09 Temporary Hydraulic Mulch (Bonded Fiber Matrix) Section 10-1.10 Temporary Cover
Section 10-1.11 Temporary Concrete Washout
Section 10-1.12 Temporary Check Dam
Section 10-1.13 Temporary Silt Fence
Section 10-1.15 Temporary Gravel Bag Berm
Section 10-1.16 Temporary Construction Entrance
Section 10-1.17 Move In/Move Out (Temporary Erosion Control)
Section 10-1.18 Temporary Drainage Inlet Protection

Estimate of Decrease in Contract Item at Contract Price:

Item No. 8: CONSTRUCTION SITE MANAGEMENT						
-1 LS	(-100.00%)	$15,000.00	/LS	=	-$15,000.00	(-100.00%)
Item No. 10: PREPARE STORM WATER POLLUTION						
-1 LS	(-100.00%)	$10,000.00	/LS	=	-$10,000.00	(-100.00%)
Item No. 11: TEMPORARY SILT FENCE						
-410 M	(-100.00%)	$11.00	/M	=	-$4,510.00	(-100.00%)
Item No. 12: TEMPORARY GRAVEL BAG BERM						
-200 M	(-100.00%)	$7.00	/M	=	-$1,400.00	(-100.00%)
Item No. 13: TEMPORARY CONSTRUCTION ENTRANCE						
-5 EA	(-100.00%)	$5,000.00	/EA	=	-$25,000.00	(-100.00%)
Item No. 14: TEMPORARY COVER						
-1130 M2	(-100.00%)	$6.00	/M2	=	-$6,780.00	(-100.00%)
Item No. 15: TEMPORARY CHECK DAM						
-39 M	(-100.00%)	$50.00	/M	=	-$1,950.00	(-100.00%)
Item No. 16: MOVE-IN/MOVE-OUT						
-4 EA	(-100.00%)	$750.00	/EA	=	-$3,000.00	(-100.00%)
Item No. 17: TEMPORARY DRAINAGE INLET PROTECTION						
-13 EA	(-100.00%)	$200.00	/EA	=	-$2,600.00	(-100.00%)
Item No. 18: TEMPORARY HYDRAULIC MULCH						
-4500 M2	(-100.00%)	$1.00	/M2	=	-$4,500.00	(-100.00%)
Item No. 19: STREET SWEEPING						
-1 LS	(-100.00%)	$25,000.00	/LS	=	-$25,000.00	(-100.00%)
Item No. 20: TEMPORARY CONCRETE WASHOUT BIN						
-200 EA	(-100.00%)	$1.00	/EA	=	-$200.00	(-100.00%)

CONTRACT CHANGE ORDER

Change Requested by: Engineer

CCO: 21	Suppl. No. 1	Contract No. 04 - 0120S4	Road SF-80-12.7/13.2	FED. AID LOC.: NO FED AID

Item No. 21: TEMPORARY ACTIVE TREATMENT SYSTEM
-1 LS (-100.00%) $50,000.00 /LS = -$50,000.00 (-100.00%)

In accordance with Section 4-1.03B(3), "Eliminated Items," of the Standard Specifications, the adjustment due to the elimination of Contract Item No. 8 and Contract Item No. 10 through Contract Item No. 21 is Zero.

Estimated total cost for Decrease in Contract Item.....($149,940.00)

Extra Work at Force Account:

Perform all work necessary in order to comply with the Department's current statewide general permit issued by the State Water Resources Control Board (SWRCB) titled "Order No. 2009-0009-DWQ, National Pollutant Discharge Elimination System (NPDES) General Permit No. CAS000002, Waste Discharge Requirements for Discharges of Storm Water Runoff Associated with Construction and Land Disturbance Activities" as specified under the Special Provision sections listed under this change order, including the revisions incorporated under the original Change Order No. 21, and as determined by the Engineer.

Estimated cost of Extra Work at Force Account $2,700,000.00

Consideration of a time adjustment will be deferred until completion of the work specified herein. Determination of a commensurate time extension will be made in accordance with Section 8-1.07, "Liquidated Damages", of the Standard Specifications and Section 10-1.22 " Progress Schedule (Critical Path Method)" of the Special Provisions.

Estimated Cost: Increase ☑ Decrease ☐ $2,550,060.00

By reason of this order the time of completion will be adjusted as follows: Deferred

Submitted by

Signature	Resident Engineer	Date
Rajesh Oberoi	Rajesh Oberoi, Senior R.E.	10/6/10

Approval Recommended by

Signature	Principal T.E.	Date
Mike Forner	Mike Forner	10/7/10

Engineer Approval by

Signature	Principal T.E.	Date
Mike Forner	Mike Forner	10/14/10

We the undersigned contractor, have given careful consideration to the change proposed and agree, if this proposal is approved, that we will provide all equipment, furnish the materials, except as may otherwise be noted above, and perform all services necessary for the work above specified, and will accept as full payment therefor the prices shown above.

NOTE: If you, the contractor, do not sign acceptance of this order, your attention is directed to the requirements of the specifications as to proceeding with the ordered work and filing a written protest within the time therein specified.

Contractor Acceptance by

Signature	(Print name and title)	Date
	Edmundo A. Rusli - Treasurer	10-13-2010

STATE OF CALIFORNIA - DEPARTMENT OF TRANSPORTATION

CONTRACT CHANGE ORDER

Change Requested by: Engineer

CCO 5	Suppl. No. 3	Contract No. 04 - 0120S4	Road SF-80-12.7/13.2	FED. AID LOC.: NO FED AID

To: **M C M CONSTRUCTION INC**

You are directed to make the following changes from the plans and specifications or do the following described work not included in the plans and specifications for this contract. ***NOTE: This change order is not effective until approved by the Engineer.***

Description of work to be done, estimate of quantities and prices to be paid. (Segregate between additional work at contract price, agreed price and force account.) Unless otherwise stated, rates for rental of equipment cover only such time as equipment is actually used and no allowance will be made for idle time. This last percentage shown is the net accumulated increase or decrease from the original quantity in the Engineer's Estimate.

Furnish the following additional system component for the Department as specified under Section 10-1.25, Document Management System, of the Special Provisions for use by the Department in conjunction with the Department's document management system through the life of the contract:

One Color copier / laser printer / scanner, Ricoh Aficio MP2851SP or equal. Machine shall include 50-Sheet Automatic Reversing Document Feeder; 2 each 500 sheet cassettes; Cabinet; full Toner/Developer; Data Security Kit; Surge Protector; and print or scan data through a Universal Serial Bus (USB) port (non-network) compatable with the latest Microsoft Windows operating system utilized by the Department. Maintenance through the life of the contract is included, assuming a maximum of 120,000 copes are printed.

Adjustment of Compensation at Lump Sum:

Compensate the Contractor for furnishing this additional system component as specified under this change order supplement.

For this change, the Contractor shall be compensated an Agreed Lump sum of $9,425.00, which constitutes full and final compensation, including all markups, for all additional costs incurred.

Adjustment of Compensation at Lump Sum = $9,425.00

Estimated Cost: Increase ☑ **Decrease** ☐ **$9,425.00**

By reason of this order the time of completion will be adjusted as follows: 0 days

Submitted by

Signature	Resident Engineer	Date
William Howe	William Howe, Senior R.E.	05·25·12

Approval Recommended by

Signature	Senior Resident Engineer	Date
William Howe Deanna Vilchez	William Howe ACM Deanna Vilchez 6/4/12	05·25·12

Engineer Approval by

Signature	Senior Resident Engineer	Date
Deanna Vilchez	William Howe ACM Deanna Vilchez	6/8/12

We the undersigned contractor, have given careful consideration to the change proposed and agree, if this proposal is approved, that we will provide all equipment, furnish the materials, except as may otherwise be noted above, and perform all services necessary for the work above specified, and will accept as full payment therefor the prices shown above.

NOTE: If you, the contractor, do not sign acceptance of this order, your attention is directed to the requirements of the specifications as to proceeding with the ordered work and filing a written protest within the time therein specified.

Contractor Acceptance by

Signature	(Print name and title)	Date
	JAMES A. CARTER, PRESIDENT	6/4/12

STATE OF CALIFORNIA - DEPARTMENT OF TRANSPORTATION

CONTRACT CHANGE ORDER

Change Requested by: Engineer

CCO 13	Suppl. No. 1	Contract No. 04 - 0120S4	Road SF-80-12.7/13.2	FED. AID LOC.: NO FED AID

To: **M C M CONSTRUCTION INC**

You are directed to make the following changes from the plans and specifications or do the following described work not included in the plans and specifications for this contract. ***NOTE: This change order is not effective until approved by the Engineer.***

Description of work to be done, estimate of quantities and prices to be paid. (Segregate between additional work at contract price, agreed price and force account.) Unless otherwise stated, rates for rental of equipment cover only such time as equipment is actually used and no allowance will be made for idle time. This last percentage shown is the net accumulated increase or decrease from the original quantity in the Engineer's Estimate.

Revise the project construction limits to encompass the limits between the Sterling Substation east of 2nd St. in the City and County of San Francisco to the San Francisco Oakland Bay Bridge Toll Plaza in Alameda County. The new construction limits shall be revised as listed below:

Revised Construction Limits: 04-SF-80 KP 8.5/KP 14.3, 04-ALA-80 KP 0.0/KP 4.0

Compensation for additional cost or time impacts associated with performing extra work within the extended construction limits will be addressed under separate change orders that will incorporate the additional work into the Contract.

This change order does not change any provisions of Section 5-1.11 "Areas for Contractor's Use" of the Contract Special Provisions.

There is no cost associated with this change order.

Estimated Cost: **Increase** ☐ **Decrease** ☐ **$0.00**

By reason of this order the time of completion will be adjusted as follows: 0 days

Submitted by		
Signature Michael Frame FOR	**Resident Engineer** William Howe, Senior R.E.	**Date** 5/11/12
Approval Recommended by		
Signature	**Region Construction Division Chief** Tony Anziano	**Date** 5/11/12
Engineer Approval by		
Signature	**Region Construction Division Chief** Tony Anziano	**Date** 8/1/12

We the undersigned contractor, have given careful consideration to the change proposed and agree, if this proposal is approved, that we will provide all equipment, furnish the materials, except as may otherwise be noted above, and perform all services necessary for the work above specified, and will accept as full payment therefor the prices shown above.

NOTE: If you, the contractor, do not sign acceptance of this order, your attention is directed to the requirements of the specifications as to proceeding with the ordered work and filing a written protest within the time therein specified.

Contractor Acceptance by		
Signature	**(Print name and title)** JAMES A. CARTER, PRESIDENT	**Date** 5/25/12

STATE OF CALIFORNIA - DEPARTMENT OF TRANSPORTATION

CONTRACT CHANGE ORDER

Change Requested by: Engineer

CCO 21	Suppl. No. 2	Contract No. 04 - 0120S4	Road SF-80-12.7/13.2	FED. AID LOC.: NO FED AID

To: **M C M CONSTRUCTION INC**

You are directed to make the following changes from the plans and specifications or do the following described work not included in the plans and specifications for this contract. ***NOTE: This change order is not effective until approved by the Engineer.***

Description of work to be done, estimate of quantities and prices to be paid. (Segregate between additional work at contract price, agreed price and force account.) Unless otherwise stated, rates for rental of equipment cover only such time as equipment is actually used and no allowance will be made for idle time. This last percentage shown is the net accumulated increase or decrease from the original quantity in the Engineer's Estimate.

Extra Work at Force Account:

Provide additional funds for performing all work necessary in order to comply with the Department's current Statewide General Permit issued by the State Water Resources Control Board (SWRCB) titled "Order No. 2009-0009-DWQ, National Pollutant Discharge Elimination System (NPDES) General Permit No. CAS000002, Waste Discharge Requirements for Discharges of Storm Water Runoff Associated with Construction and Land Disturbance Activities", as specified under the Special Provision sections listed under Change Order No. 21, Supplement No. 1, including the revisions incorporated unde the original Change Order No. 21, Supplement No. 0, and as determined by the Engineer.

Estimated Cost of Extra Work at Force Account = $1,500,000.00

Consideration of a time adjustment will be deferred until completion of the work specified herein. Determination of a commensurate time extension will be made in accordance with Section 8-1.07, "Liquidated Damages", of the Standard Specifications.

Estimated Cost: **Increase** ☑ **Decrease** ☐ **$1,500,000.00**

By reason of this order the time of completion will be adjusted as follows: Deferred

Submitted by		
Signature William Howe	Resident Engineer William Howe, Senior R.E.	Date 05.08.12
Approval Recommended by		
Signature Michael Forner	Principal T.E. Mike Forner	Date 5/8/12
Engineer Approval by		
Signature Michael Forner	Principal T.E. Mike Forner	Date 6/14/12

We the undersigned contractor, have given careful consideration to the change proposed and agree, if this proposal is approved, that we will provide all equipment, furnish the materials, except as may otherwise be noted above, and perform all services necessary for the work above specified, and will accept as full payment therefor the prices shown above.

NOTE: If you, the contractor, do not sign acceptance of this order, your attention is directed to the requirements of the specifications as to proceeding with the ordered work and filing a written protest within the time therein specified.

Contractor Acceptance by		
Signature	(Print name and title) Edmund A. Pucchi, Treasurer	Date 6-12-2012

RECEIVED JUN 13 2012

STATE OF CALIFORNIA - DEPARTMENT OF TRANSPORTATION

CONTRACT CHANGE ORDER MEMORANDUM

TO: Deanna Vilcheck, ACM	FILE: E.A. 04 - 0120S4
	CO-RTE-PM SF-80-12.7/13.2
FROM: Rajesh Oberoi, Senior R.E.	FED. NO. NO FED AID
CCO#: 21 SUPPLEMENT#: 1 Category Code: CXSA	CONTINGENCY BALANCE (incl. this change) $26,204,152.00
COST: $2,550,060.00 INCREASE ☑ DECREASE ☐	HEADQUARTERS APPROVAL REQUIRED? ☑ YES ☐ NO
SUPPLEMENTAL FUNDS PROVIDED: $66,000.00	IS THIS REQUEST IN ACCORDANCE WITH ENVIRONMENTAL DOCUMENTS? ☑ YES ☐ NO
CCO DESCRIPTION: NEW CONSTRUCTION GENERAL PERMIT(CGP)	**PROJECT DESCRIPTION:** YBITS-1 (Yerba Buena Island Transition Structures)

Original Contract Time:	Time Adj. This Change:	Previously Approved CCO Time Adjustments:	Percentage Time Adjusted: (including this change)	Total # of Unreconciled Deferred Time CCO(s): (including this change)
1390 Day(s)	DEF Day(s)	0 Day(s)	0 %	~~1~~ 2

THIS CHANGE ORDER PROVIDES FOR:

Water pollution control work to be performed in order to comply with the Department's new National Pollutant Discharge Elimination System (NPDES) General Permit for Storm Water Discharges Associated with Construction and Land Disturbance.

This project, the Yerba Buena Island Transition Structure (YBITS), provides for the construction of two bridges which will connect eastbound and westbound traffic on the new east span of the San Francisco Oakland Bay Bridge (SFOBB) from the signature Self-Anchored Suspension Bridge to the existing Yerba Buena Island tunnel. The structures are comprised of concrete box girder bridges each approximately 40 meters high and 450 meters in length.

The original Change Order No. 21 incorporated the Department's new National Pollutant Discharge Elimination System (NPDES) General Permit for Storm Water Discharges Associated with Construction and Land Disturbance (Order No. 2009-009-DWQ), Construction General Permit (CGP) effective July 1, 2010. The new permit implements year-round soil stabilization and sediment control best management practices in place of current rainy season requirements, increases the reporting and monitoring requirements for storm water discharges and provides changes for existing storm water pollution prevention plans to be in compliance with the new CGP. Several sections of the contract special provisions were modified under the original change order to reflect these changes.

The new CGP does not contain a defined rainy season and therefore requires installation of soil stabilization and sediment control best management practices year-round. Soil stabilization and sediment controls must be installed on inactive areas of construction if the area is not scheduled to be re-disturbed for more than 14 days. The contractor will need to be compensated for additional mobilizations of crews and equipment necessary to install soil stabilization and sediment controls during the contract-specified non-rainy season. The contractor will also need to be compensated for any adjustments because of the need to apply soil stabilization and sediment controls on small areas versus the larger areas allowed when there was a rainy season definition and for providing a dedicated water pollution control manager.

Compensation for these additional costs were deferred under the original change order.

This change order provides for all work pertaining to compliance with the new NPDES permit to be compensated on a force account basis. The existing contract items for the contractor's as-bid work pertaining to compliance with the old NPDES permit will be deleted. This adjustment of compensation shall be enacted due to the following conditions existing on this project:

1). This contract has been designated as a Risk Level 2 project, as defined under the new permit, which will require extensive pre-storm, active storm and post-storm reporting and testing to be performed. In addition to the already increased requirements for year round soil stabilization and sediment controls, these added measures will be difficult to segregate from the contractor's as-planned contract item operations. Maintenance costs associated with installed storm water pollution prevention (SWPP) measures is paid at 50% of the costs incurred in accordance with the special provisions further complicating the cost segregation. Compensating the work solely on a force account basis will eliminate compensation disputes and prevent double payment on work performed.

2). It is anticipated that additional SWPP measures will be ordered under this contract due to the high profile of the SFOBB east span corridor projects. Being the only active land (island) based contract on the corridor, having the higher risk level

ADA Notice: For individuals with sensory disabilities, this document is available in alternate formats. For information call: (916) 654-6410 or TDD (916) 654-3880 or write Records and Forms Management, 1120 N Street, MS-89, Sacramento, CA 95814.

assignment and having a high risk slope directly adjacent to the San Francisco Bay, the engineer along with corridor SWPPP oversight staff have historically recommended an increased level of protection on Yerba Buena Island. These additional measures will need to be compensated separately from the as-bid work.

3). Field estimates based on the last 4 years on the Yerba Buena Island Detour Project, which occupied the same jobsite as this contract, indicate that the Engineer's estimate of contract item quantities for required SWPP measures is significantly underestimated. This will required an adjustment of these items, based on a force account basis, for the work in excess of 125% of the as-bid quantity of work resulting in the majority of the work being performed at the same force account basis being stipulated under this change order.

4). The Department will be mitigating risk to the opening of the new SFOBB east span by implementing additional SWPP measures and ensuring NPDES compliance. Were the contract found to be non-compliant to the Department's permit, the project could incur significant delay potentially affecting the planned opening of the new east span.

Due to the conditions outlined above, this change order will delete the contract bid item work and compensate all work on a force account basis. This will eliminate the need to adjust all 13 contract bid items and allow the Department to implement SWPP measures as determined necessary as the specific requirements of the new permit become clarified

The change order will eliminate 13 contract items at contract prices for a credit of $149,940.00. All costs associated with implementing the project wide SWPP measures will be paid as extra work at force account at an estimated cost of $2,700,000.00. The net change order cost of $2,550,060.00 shall be financed from the contract's supplemental funds and the contract's contingency balance. Supplemental funding in the amount of $66,000.00 were provided for additional water pollution and erosion control measures and for maintenance sharing costs. A cost analysis is on file.

This change has been approved by TBPOC on October 7th, 2010.

Any adjustment of contract time is deferred as the additional requirements may affect the controlling operation.

Maintenance concurrence is not required as the change doesn't affect any permanent roadway features.

CONCURRED BY:		
Construction Engineer:	Rajesh Oberoi	Date 10/12/10
Bridge Engineer:		Date
Project Engineer:		Date
Project Manager:		Date
FHWA Rep.:		Date
Environmental:		Date
Other (specify):		Date
Other (specify):	TBPOC	Date 10/7/10
District Prior Approval By:		Date
HQ (Issue Approve) By:	LARRY SALHANEY	Date 10/11/10
Resident Engineer's Signature:	Rajesh Oberoi	Date 10/12/10

ESTIMATE OF COST

	THIS REQUEST	TOTAL TO DATE
ITEMS	($149,940.00)	($149,940.00)
FORCE ACCOUNT	$2,700,000.00	$2,700,000.00
AGREED PRICE	$0.00	$0.00
ADJUSTMENT	$0.00	$0.00
TOTAL	$2,550,060.00	$2,550,060.00

FEDERAL PARTICIPATION

☐ PARTICIPATING ☐ PARTICIPATING IN PART ☑ NONE
☐ NON-PARTICIPATING (MAINTENANCE) ☐ NON-PARTICIPATING

FEDERAL SEGREGATION (if more than one Funding Source or P.I.P. type)
☐ CCO FUNDED PER CONTRACT ☐ CCO FUNDED AS FOLLOWS

FEDERAL FUNDING SOURCE	PERCENT

ADA Notice: For individuals with sensory disabilities, this document is available in alternate formats. For information call: (916) 654-6410 or TDD (916) 654-3880 or write Records and Forms Management, 1120 N Street, MS-89, Sacramento, CA 95814.

STATE OF CALIFORNIA - DEPARTMENT OF TRANSPORTATION

CONTRACT CHANGE ORDER MEMORANDUM

DATE: 5/23/2012 Page 1 of 1

TO: Deanna Vilcheck, ACM /	FILE: E.A. 04 - 0120S4
	CO-RTE-PM SF-80-12.7/13.2
FROM: William Howe, Senior R.E.	FED. NO. NO FED AID
CCO#: 5 SUPPLEMENT#: 3 Category Code: CXSA	CONTINGENCY BALANCE (incl. this change) $68,593,820.00
COST: $9,425.00 INCREASE ☑ DECREASE ☐	HEADQUARTERS APPROVAL REQUIRED? ☐ YES ☑ NO
SUPPLEMENTAL FUNDS PROVIDED: $0.00	IS THIS REQUEST IN ACCORDANCE WITH ENVIRONMENTAL DOCUMENTS? ☑ YES ☐ NO
CCO DESCRIPTION: Additional Field Office Scanner	**PROJECT DESCRIPTION:** YBITS-1 (Yerba Buena Island Transition Structures)

Original Contract Time:	Time Adj. This Change:	Previously Approved CCO Time Adjustments:	Percentage Time Adjusted: (including this change)	Total # of Unreconciled Deferred Time CCO(s): (including this change)
1390 Day(s)	0 Day(s)	0 Day(s)	0 %	9

THIS CHANGE ORDER PROVIDES FOR:

This change order provides for compensation to the Contractor for costs incurred to add a scanner / printer to the document management system.

This contract provides for the construction of the Yerba Buena Island Transition Structures for the east span of the new San Francisco Oakland Bay Bridge (SFOBB).

Original Contract Change Order No. 5 S0, along with supplements S1 and S2, eliminated the use of a specific document management software system (PMIV) in favor of a less expensive web based system developed by the Department. The CCO and supplements 1 and 2 provided components such as computer systems and network copier / scanners, which had been eliminated when the PMIV system was eliminated, but are still necessary to run the project's current document management system. As the work has progressed, one limitation of the document management system has been that the Yerba Buena Island site trailer does not have a scanner; at times, this has resulted in delays in processing documents. CCO supplement 3 will add a scanner / printer for the Yerba Buena Island site trailer, which will be used in addition to the equipment provided at the site's Burma Road trailer, to make the overall Document Management System more efficient.

For this work the Contractor will be compensated $9,425.00 as a Lump Sum, which will be financed from the contract's contingency funds. A detailed cost analysis for this change is on file in the project records.

No time adjustment is warranted for this change, as it does not affect the controlling operation.

Deanna Vilcheck, Supervisory Engineer for Construction, requested this change.

Maintenance concurrence is not required as this is an administrative change, which does not affect any permanent roadway features.

CONCURRED BY:		
Construction Engineer:	William Howe	Date 05-25-12
Bridge Engineer:	Mehran Ardakanian	Date
Project Engineer:	Bob Zandipour, Design	Date 5-25-12
Project Manager:	Ken Terpstra	Date 5-26-12
FHWA Rep.:		Date
Environmental:		Date
Other (specify):		Date
Other (specify):		Date
District Prior Approval By:		Date
HQ (Issue Approve) By:	Larry Salhaney	Date 6-8-12
Resident Engineer's Signature:	William Howe	Date 05-25-12

ESTIMATE OF COST

	THIS REQUEST	TOTAL TO DATE
ITEMS	$0.00	($599,610.00)
FORCE ACCOUNT	$0.00	$0.00
AGREED PRICE	$0.00	$0.00
ADJUSTMENT	$9,425.00	$278,102.50
TOTAL	$9,425.00	($321,507.50)

FEDERAL PARTICIPATION

☐ PARTICIPATING ☐ PARTICIPATING IN PART ☑ NONE
☐ NON-PARTICIPATING (MAINTENANCE) ☐ NON-PARTICIPATING

FEDERAL SEGREGATION (if more than one Funding Source or P.I.P. type)
☐ CCO FUNDED PER CONTRACT ☐ CCO FUNDED AS FOLLOWS

FEDERAL FUNDING SOURCE	PERCENT

ADA Notice: For individuals with sensory disabilities, this document is available in alternate formats. For information call [illegible]
Records and Forms Management, 1120 N Street, MS-89, Sacramento, CA 95814.

STATE OF CALIFORNIA - DEPARTMENT OF TRANSPORTATION

CONTRACT CHANGE ORDER MEMORANDUM

TO: Deanna Vilcheck, ACM / Td	FILE: E.A. 04 - 0120S4
	CO-RTE-PM SF-80-12.7/13.2
FROM: William Howe, Senior R.E.	FED. NO. NO FED AID
CCO#: 13 SUPPLEMENT#: 1 Category Code: CXSX	CONTINGENCY BALANCE (incl. this change) $70,685,316.00
COST: $0.00 INCREASE ☐ DECREASE ☐	HEADQUARTERS APPROVAL REQUIRED? ☑ YES ☐ NO
SUPPLEMENTAL FUNDS PROVIDED: $0.00	IS THIS REQUEST IN ACCORDANCE WITH ENVIRONMENTAL DOCUMENTS? ☑ YES ☐ NO
CCO DESCRIPTION: Extend Contract Project Limits to SF	**PROJECT DESCRIPTION:** YBITS-1 (Yerba Buena Island Transition Structures)

Original Contract Time:	Time Adj. This Change:	Previously Approved CCO Time Adjustments:	Percentage Time Adjusted: (including this change)	Total # of Unreconciled Deferred Time CCO(s): (including this change)
1390 Day(s)	0 Day(s)	0 Day(s)	0 %	9

THIS CHANGE ORDER PROVIDES FOR:

This change order provides for revising the projects limits along the Route 80 corridor to encompass the limits between the Sterling Substation east of 2nd St. in the City and County of San Francisco to the San Francisco Oakland Bay Bridge (SFOBB) Toll Plaza in Alameda County.

The original Change Order No. 13 S0 extended the original projects construction limits to the east to allow for required SFOBB east span corridor wide electrical work to be performed up to the SFOBB Toll Plaza. This supplemental change order will extend the construction limits to the west in order to complete electrical work across the entire SFOBB corridor (both east and west span).

The project limits are being revised in order for the Contractor to perform anticipated additional work within the extended limits. The change order work will need to be performed at the Sterling Substation at the west approach of the SFOBB in San Francisco in order to synchronize the relays for the 15 KV power line, which spans the entire SFOBB corridor. This work was not anticipated under the original contract work limits. A separate change order shall be issued to incorporate the actual work into the contract.

This change order has been discussed and concurred with Jon Tapping, Headquarters Construction Coordinator, Toll Bridge, on May 8, 2012, in regard to the need for a Director's Order as addressed in Section 5-302 of the Construction Manual. It has been determined that this change order is within the scope of the project and therefore a Director's Order is not required.

This change order has been discussed and concurred with Mike Forner, Principal Transportation Engineer, on May 9, 2012.

This change order has been discussed, concurred and recommended by Tony Anziano, Region Construction Division Chief, on May 10, 2012.

This revision to the project work limits shall be issued as a no cost change order.

No adjustment of contract time is warranted, as this change will not affect the controlling operation.

Maintenance concurrence is not required, as this is an administrative change and does not affect any permanent roadway features.

ADA Notice: For individuals with sensory disabilities, this document is available in alternate formats. For information call [illegible]
Records and Forms Management, 1120 N Street, MS-89, Sacramento, CA 95814

CONCURRED BY:		
Construction Engineer:	William Howe	Date 05.10.12
Bridge Engineer:	Mehran Ardakanian	Date
Project Engineer:	Bob Zandipour, Design	Date 5-9-12
Project Manager:	Ken Terpstra	Date 5-9-12
FHWA Rep.:		Date
Environmental:		Date
Other (specify):		Date
Other (specify):		Date
District Prior Approval By:		Date
HQ (Issue Approve) By:	Larry Salhaney	Date 5-11-12
Resident Engineer's Signature: William Howe		Date 05-10-12

ESTIMATE OF COST

	THIS REQUEST	TOTAL TO DATE
ITEMS	$0.00	$0.00
FORCE ACCOUNT	$0.00	$0.00
AGREED PRICE	$0.00	$0.00
ADJUSTMENT	$0.00	$0.00
TOTAL	$0.00	$0.00

FEDERAL PARTICIPATION

☐ PARTICIPATING ☐ PARTICIPATING IN PART ☑ NONE
☐ NON-PARTICIPATING (MAINTENANCE) ☐ NON-PARTICIPATING

FEDERAL SEGREGATION (if more than one Funding Source or P.I.P. type)
☐ CCO FUNDED PER CONTRACT ☐ CCO FUNDED AS FOLLOWS

FEDERAL FUNDING SOURCE	PERCENT

ADA Notice For individuals with sensory disabilities, this document is available in alternate formats. For information call (916) 654-6410 or TDD (916) 654-3880 or write Records and Forms Management, 1120 N Street, MS-89, Sacramento, CA 95814.

STATE OF CALIFORNIA - DEPARTMENT OF TRANSPORTATION

CONTRACT CHANGE ORDER MEMORANDUM

TO: Deanna Vilcheck, ACM /	FILE: E.A. 04 - 0120S4
FROM: William Howe, Senior R.E.	CO-RTE-PM SF-80-12.7/13.2
	FED. NO. NO FED AID
CCO#: 21 SUPPLEMENT#: 2 Category Code: CXSA	CONTINGENCY BALANCE (incl. this change) $68,635,316.00
COST: $1,500,000.00 INCREASE ☑ DECREASE ☐	HEADQUARTERS APPROVAL REQUIRED? ☑ YES ☐ NO
SUPPLEMENTAL FUNDS PROVIDED: $0.00	IS THIS REQUEST IN ACCORDANCE WITH ENVIRONMENTAL DOCUMENTS? ☑ YES ☐ NO
CCO DESCRIPTION: Additional SWPP Funding	**PROJECT DESCRIPTION:** YBITS-1 (Yerba Buena Island Transition Structures)

Original Contract Time:	Time Adj. This Change:	Previously Approved CCO Time Adjustments:	Percentage Time Adjusted: (including this change)	Total # of Unreconciled Deferred Time CCO(s): (including this change)
1390 Day(s)	DEF Day(s)	0 Day(s)	0 %	9

THIS CHANGE ORDER PROVIDES FOR:

Additional funding for implementing Storm Water Pollution Prevention (SWPP) measures as specified under Contract Change Order No. 21, Supplements No. 0 and No. 1.

This project, the Yerba Buena Island Transition Structure (YBITS), provides for the construction of two bridges which will connect eastbound and westbound traffic on the new east span of the San Francisco Oakland Bay Bridge (SFOBB) from the signature Self-Anchored Suspension Bridge to the existing Yerba Buena Island tunnel. The structures are comprised of concrete box girder bridges each approximately 40 meters high and 450 meters in length.

The original Contract Change Order No. 21, Supplement No. 0, incorporated the Department's new National Pollutant Discharge Elimination System (NPDES) General Permit for Storm Water Discharges Associated with Construction and Land Disturbance (Order No. 2009-009-DWQ), Construction General Permit (CGP) effective July 1, 2010. The new permit implements year-round soil stabilization and sediment control best management practices in place of current rainy season requirements, increases the reporting and monitoring requirements for storm water discharges and provides changes for existing storm water pollution prevention plans to be in compliance with the new CGP. Several sections of the Contract Special Provisions were modified under the original change order to reflect these changes.

Change Order No. 21, Supplement No. 1, was subsequently issued to eliminate the contract item work associated with SWPP and provide for all SWPP work to be performed on a force account basis. As the work has progressed over the last year and a half, it has become apparent that the cost of the work will exceed the funding provided under Supplement No. 1. This change order will provide additional funding to cover the current estimated cost of the work through the anticipated end of the project in the Summer of 2013. Extensive costs have been incurred in properly controlling the storm water flows from the hills in the east and the west of the project limits. This storm water flows towards the center of the project and then drains to drainage inlets that drain directly to the San Francisco Bay.

The additional funding will be provided as extra work at force account at an estimated additional cost of $1,500,000.00, which shall be financed from the Contract's contingency balance. A cost analysis is on file.

This change was approved by the TBPOC on June 6, 2012, copy attached.

Any adjustment of contract time is deferred as the additional requirements may affect the controlling operation.

Maintenance concurrence is not required as the change doesn't affect any permanent roadway features.

ADA Notice: For individuals with sensory disabilities, this document is available in alternate formats. For information, call (916) 654-6410 or TDD (916) 654-3880 or write to Records and Forms Management, 1120 N Street, MS-89, Sacramento, CA 95814

CONCURRED BY:		
Construction Engineer:	William Howe	Date 05.08.12
Bridge Engineer:	Mehran Ardakanian	Date
Project Engineer:	Bob Zandipour, Design	Date 5-9-12
Project Manager:	Ken Terpstra	Date 6-8-12
FHWA Rep.:		Date
Environmental:		Date
Other (specify):		Date
Other (specify):		Date
District Prior Approval By:		Date
HQ (Issue Approve) By:	Larry Salhaney	Date 6-7-12
Resident Engineer's Signature: William Howe		Date 05.08.12

ESTIMATE OF COST

	THIS REQUEST	TOTAL TO DATE
ITEMS	$0.00	($149,940.00)
FORCE ACCOUNT	$1,500,000.00	$4,200,000.00
AGREED PRICE	$0.00	$0.00
ADJUSTMENT	$0.00	$0.00
TOTAL	$1,500,000.00	$4,050,060.00

FEDERAL PARTICIPATION

☐ PARTICIPATING ☐ PARTICIPATING IN PART ☑ NONE
☐ NON-PARTICIPATING (MAINTENANCE) ☐ NON-PARTICIPATING

FEDERAL SEGREGATION (if more than one Funding Source or P.I.P. type)
☐ CCO FUNDED PER CONTRACT ☐ CCO FUNDED AS FOLLOWS

FEDERAL FUNDING SOURCE	PERCENT

ADA Notice: For individuals with sensory disabilities, this document is available in alternate formats. For information call (916) 654-6410 or TDD (916) 654-3880 or write Records and Forms Management, 1120 N Street, MS-89, Sacramento, CA 95814

CONTRACT CHANGE ORDER

Change Requested by: Engineer

CCO: 22	Suppl. No. 0	Contract No. 04 - 0120S4	Road SF-80-12.7/13.2	FED. AID LOC.: NO FED AID

To: **M C M CONSTRUCTION INC**

You are directed to make the following changes from the plans and specifications or do the following described work not included in the plans and specifications for this contract. ***NOTE: This change order is not effective until approved by the Engineer.***

Description of work to be done, estimate of quantities and prices to be paid. (Segregate between additional work at contract price, agreed price and force account.) Unless otherwise stated, rates for rental of equipment cover only such time as equipment is actually used and no allowance will be made for idle time. This last percentage shown is the net accumulated increase or decrease from the original quantity in the Engineer's Estimate.

Area PRA, as defined by Sheet C-6 (Sheet No. 18) of the Contract Plans, shall be available for the Contractor's use on August 16, 2010 in lieu of the September 1, 2010 date specified under Section 5-1.22 "AREAS FOR CONTRACTOR'S USE" of the Contract Special Provisions.

Any float to the progress schedule resulting from this change order, pertaining to the completion of the Contract work and the completion of Designated Portion of the Work 1, Designated Portion of the Work 2, Designated Portion of the Work 3 and Designated Portion of the Work 4 as defined by Section 4 "BEGINNING OF WORK, TIME OF COMPLETION, AND LIQUIDATED DAMAGES" of the Contract Special Provisions, shall be State owned float. Determination of any float is deferred and shall be established in accordance with Section 10-1.22 "PROGRESS SCHEDULE (CRITICAL PATH METHOD)" of the Contract Special Provisions.

Estimated Cost: increase ☐ Decrease ☐ **$0.00**

By reason of this order the time of completion will be adjusted as follows: 0 days

Submitted by

Signature	Resident Engineer	Date
Rajesh Oberoi	Rajesh Oberoi, Senior R.E.	8/16/10

Approval Recommended by

Signature	Area Construction Manager	Date
Deanna Vilcheck	Deanna Vilcheck	8/17/10

Engineer Approval by

Signature	Area Construction Manager	Date
Deanna Vilcheck	Deanna Vilcheck	9/20/10

We the undersigned contractor, have given careful consideration to the change proposed and agree, if this proposal is approved, that we will provide all equipment, furnish the materials, except as may otherwise be noted above, and perform all services necessary for the work above specified, and will accept as full payment therefor the prices shown above.

NOTE: If you, the contractor, do not sign acceptance of this order, your attention is directed to the requirements of the specifications as to proceeding with the ordered work and filing a written protest within the time therein specified.

Contractor Acceptance by

Signature	(Print name and title)	Date
	EDMUNDO A. PUCHI, TREASURER	8/30/10

STATE OF CALIFORNIA - DEPARTMENT OF TRANSPORTATION

CONTRACT CHANGE ORDER MEMORANDUM

TO: Deanna Vilcheck, ACM / DV	FILE: E.A. 04 - 0120S4
	CO-RTE-PM SF-80-12.7/13.2
FROM: Rajesh Oberoi, Senior R.E.	FED. NO. NO FED AID
CCO#: 22 SUPPLEMENT#: 0 Category Code: CXSA	CONTINGENCY BALANCE (incl. this change) $31,841,772.00
COST: $0.00 INCREASE ☐ DECREASE ☐	HEADQUARTERS APPROVAL REQUIRED? ☑ YES ☐ NO
SUPPLEMENTAL FUNDS PROVIDED: $0.00	IS THIS REQUEST IN ACCORDANCE WITH ENVIRONMENTAL DOCUMENTS? ☑ YES ☐ NO
CCO DESCRIPTION: EARLY RELEASE OF RESTRICTED AREA FOR CONTRACTORS USE.	PROJECT DESCRIPTION: YBITS-1 (Yerba Buena Island Transition Structures)

Original Contract Time:	Time Adj. This Change:	Previously Approved CCO Time Adjustments:	Percentage Time Adjusted: (including this change)	Total # of Unreconciled Deferred Time CCO(s): (including this change)
1390 Day(s)	0 Day(s)	0 Day(s)	0 %	0

THIS CHANGE ORDER PROVIDES FOR:

The early release of restricted area for the contractors use.

This project, the Yerba Buena Island Transition Structure (YBITS), was awarded in February 2010 to construct the tie in of the new east span of the San Francisco Oakland Bay Bridge to Yerba Buena Island.

Access to the worksite is granted in 3 stages under the contract special provisions from west to east as the areas become available from preceding contracts. The first area released, Area PRA, comprises the western third of the worksite. Section 5-1.11 "AREAS FOR CONTRACTOR'S USE" of the Contract Special Provisions restricts access to this area until September 1, 2010. As the preceding contract work has now been completed, this change order provides early access to Area PRA by changing the restriction to August 16, 2010.

Any State owned float resulting from this early release of the PRA area shall be determined in accordance with Section 10-1.22 "PROGRESS SCHEDULE (CRITICAL PATH METHOD)" of the Contract Special Provisions. Determination of this float is deferred as the contractor's baseline schedule is still being finalized. Access to the remaining 2 restricted areas, Area PR and FP, are also anticipated to be adjusted over the coming months. These adjustments shall be made via supplements to this change order.

This is a no cost change order.

No adjustment of contract time is warranted as any float resulting to the critical paths as a result of this change order shall be provided as State owned float as defined by Section 10-1.22 of the Special Provisions.

I & A was issued by Larry Salhaney, HQ on August 13,2010.

Maintenance concurrence is not required as the change shall not affect any permanent roadway features.

ADA Notice: For individuals with sensory disabilities, this document is available in alternate formats. For information call: (916) 654-6410 or TDD (916) 654-3880 or write Records and Forms Management, 1120 N Street, MS-89, Sacramento, CA 95814.

CONCURRED BY:		
Construction Engineer:	Rajesh Oberoi R.O.	Date 8/31/10
Bridge Engineer:		Date
Project Engineer:	BOB ZANDIPOUR	Date 09/21/10
Project Manager:	KEN TERPSTRA	Date 09/20/10
FHWA Rep.:		Date
Environmental:		Date
Other (specify):		Date
Other (specify):		Date
District Prior Approval By:		Date
HQ (Issue Approve) By:	Larry Salhaney	Date 8/13/10
Resident Engineer's Signature:	Rajesh Oberoi	Date

ESTIMATE OF COST

	THIS REQUEST	TOTAL TO DATE
ITEMS	$0.00	$0.00
FORCE ACCOUNT	$0.00	$0.00
AGREED PRICE	$0.00	$0.00
ADJUSTMENT	$0.00	$0.00
TOTAL	$0.00	$0.00

FEDERAL PARTICIPATION

☐ PARTICIPATING ☐ PARTICIPATING IN PART ☑ NONE
☐ NON-PARTICIPATING (MAINTENANCE) ☐ NON-PARTICIPATING

FEDERAL SEGREGATION (if more than one Funding Source or P.I.P. type)
☐ CCO FUNDED PER CONTRACT ☐ CCO FUNDED AS FOLLOWS

FEDERAL FUNDING SOURCE	PERCENT

ADA Notice: For individuals with sensory disabilities, this document is available in alternate formats. For information call: (916) 654-6410 or TDD (916) 654-3880 or write Records and Forms Management, 1120 N Street, MS-89, Sacramento, CA 95814.

CONTRACT CHANGE ORDER

Change Requested by: Engineer

CCO: 22	Suppl. No. 1	Contract No. 04 - 0120S4	Road SF-80-12.7/13.2	FED. AID LOC.: NO FED AID

To: **M C M CONSTRUCTION INC**

You are directed to make the following changes from the plans and specifications or do the following described work not included in the plans and specifications for this contract. ***NOTE: This change order is not effective until approved by the Engineer.***

Description of work to be done, estimate of quantities and prices to be paid. (Segregate between additional work at contract price, agreed price and force account.) Unless otherwise stated, rates for rental of equipment cover only such time as equipment is actually used and no allowance will be made for idle time. This last percentage shown is the net accumulated increase or decrease from the original quantity in the Engineer's Estimate.

Area PR, as defined by Sheet C-6 (Sheet No. 18) of the Contract Plans, shall be available for the Contractor's use on November 1, 2010 in lieu of the December 13, 2010 date specified under Section 5-1.11 "AREAS FOR CONTRACTOR'S USE" of the Contract Special Provisions.

The southwestern portion, as described herein, of Area FP, as defined by Sheet C-6 (Sheet No. 18) of the Contract Plans, shall be available for the Contractor's use on January 1, 2011 in lieu of the October 31, 2012 date specified under Section 5-1.11 "AREAS FOR CONTRACTOR'S USE" of the Contract Special Provisions.

The limits of the southwestern portion of Area FP which shall be available to the Contractor on January 1, 2011 shall be defined as described below:

Westbound Structure – From Area PR to W Line Sta. 55+83.5
Eastbound Structure – From Area PR to E Line Sta. 55+74.7

The early release of the southwestern portion of Area FP as described is meant to allow for the construction and prestressing of the prestressed concrete girders of Frame 2, of both the westbound and eastbound structures, prior to the release of the entire Area FP. Construction of the Hinge K closure cannot be performed until the release of the remaining portion of Area FP as defined by Sheet C-6 (Sheet No. 18) of the Contract Plans and Section 5-1.11 "AREAS FOR CONTRACTOR'S USE" of the Contract Special Provisions.

This change order eliminates the construction joint, shown for the eastbound structure on Contract Plan Sheet No. 627 "Eastbound Typical Section No. 6", located 12 meters from the Hinge K Closure that pertained to the Designated Portion of the Work 1. Accordingly, the designated portions of work, as defined by Section 4 "BEGINNING OF WORK, TIME OF COMPLETION, AND LIQUIDATED DAMAGES" of the Contract Special Provisions, shall be modified as described below:

1)The Designated Portion of the Work 1 (DP1) shall be eliminated from the Contract and liquidated damages shall no longer apply for this portion of the work.

2)The Designated Portion of the Work 2 (DP2) shall be tied to the contract approval in lieu of the completion of DP1. The work of DP2 shall be diligently prosecuted to completion before the expiration of 1,150 working days starting on the 15th day after contract approval.

3)The Designated Portion of the Work 3 (DP3) shall be tied to the contract approval in lieu of the completion of DP1. The work of DP3 shall be diligently prosecuted to completion before the expiration of 1,330 working days starting on the 15th day after contract approval.

4)The Designated Portion of the Work 4 (DP4) shall be tied to the contract approval in lieu of the completion of DP1. The work of DP4 shall be diligently prosecuted to completion before the expiration of 1,390 working days starting on the 15th day after contract approval.

The liquidated damages specified under Section 4 "BEGINNING OF WORK, TIME OF COMPLETION, AND LIQUIDATED DAMAGES" of the Contract Special Provisions, pertaining to DP2, DP3 and DP4 shall remain in affect relevant to the redefined completion dates specified above.

A determination of the State owned float, pertaining to the designated portions of the work, resulting from the changes provided under this change order and the original Change Order No. 22 has been determined in accordance with Section 10-1.22 "PROGRESS SCHEDULE (CRITICAL PATH METHOD)" of the Contract Special Provisions. The Contractor shall include State owned float activities, as defined by Section 10-1.22, within the progress schedule for the durations quantified below:

CONTRACT CHANGE ORDER

Change Requested by: Engineer

CCO: 22	Suppl. No. 1	Contract No. 04 - 0120S4	Road SF-80-12.7/13.2	FED. AID LOC.: NO FED AID

Designated Portion of the Work 2 -0 working days of State owned float
Designated Portion of the Work 3 -36 working days of State owned float
Designated Portion of the Work 4 -30 working days of State owned float

There shall be no cost or credit to the Department by reason of this change.

No adjustment of contract time is warranted, as this change will not affect any controlling operation.

Estimated Cost: Increase ☐ Decrease ☐ $0.00

By reason of this order the time of completion will be adjusted as follows: 0 days

Submitted by

Signature Rajesh Oberoi	Resident Engineer Rajesh Oberoi, Senior R.E.	Date 10/21/10

Approval Recommended by

Signature Deanna Vilcheck	Area Construction Manager Deanna Vilcheck	Date 10/21/10

Engineer Approval by

Signature Deanna Vilcheck	Area Construction Manager Deanna Vilcheck	Date 11/18/10

We the undersigned contractor, have given careful consideration to the change proposed and agree, if this proposal is approved, that we will provide all equipment, furnish the materials, except as may otherwise be noted above, and perform all services necessary for the work above specified, and will accept as full payment therefor the prices shown above.

NOTE: If you, the contractor, do not sign acceptance of this order, your attention is directed to the requirements of the specifications as to proceeding with the ordered work and filing a written protest within the time therein specified.

Contractor Acceptance by

Signature	(Print name and title) EDMUNDO A. PUCHI, TREASURER	Date 11/16/10

STATE OF CALIFORNIA - DEPARTMENT OF TRANSPORTATION

CONTRACT CHANGE ORDER MEMORANDUM

TO: Deanna Vilcheck, ACM /	FILE: E.A. 04 - 0120S4
	CO-RTE-PM SF-80-12.7/13.2
FROM: Rajesh Oberoi, Senior R.E.	FED. NO. NO FED AID
CCO#: 22 SUPPLEMENT#: 1 Category Code: BZZZ	CONTINGENCY BALANCE (incl. this change) $27,993,732.00
COST: $0.00 INCREASE ☐ DECREASE ☐	HEADQUARTERS APPROVAL REQUIRED? ☑ YES ☐ NO
SUPPLEMENTAL FUNDS PROVIDED: $0.00	IS THIS REQUEST IN ACCORDANCE WITH ENVIRONMENTAL DOCUMENTS? ☑ YES ☐ NO
CCO DESCRIPTION: Early Release of Area PR & Portion of FP	**PROJECT DESCRIPTION:** YBITS-1 (Yerba Buena Island Transition Structures)

Original Contract Time:	Time Adj. This Change:	Previously Approved CCO Time Adjustments:	Percentage Time Adjusted: (including this change)	Total # of Unreconciled Deferred Time CCO(s): (including this change)
1390 Day(s)	0 Day(s)	0 Day(s)	0 %	6

THIS CHANGE ORDER PROVIDES FOR:

The early release of restricted areas for the contractors use.

This project, the Yerba Buena Island Transition Structure (YBITS), provides for the construction of two bridges which will connect eastbound and westbound traffic on the new east span of the San Francisco Oakland Bay Bridge (SFOBB) to the existing Yerba Buena Island (YBI) tunnel. The structures are comprised of concrete box girder bridges each approximately 26 meters wide, 40 meters high and 450 meters in length.

Access to the worksite is granted in 3 stages under the contract special provisions from west to east as the areas become available from preceding contracts. The first area released, Area PRA, was released on August 16, 2010 as revised under the original Change Order No. 22. The second area released, Area PR, comprises the main worksite excluding the western third, Area PRA, and the eastern most 30 meters of the worksite, Area FP, which will not scheduled to be released until 2012.

Section 5-1.22 "AREAS FOR CONTRACTOR'S USE" of the Contract Special Provisions restricts access to Area PR until December 13, 2010. As the preceding contract work is now anticipated to be completed by the end of October, this change order provides early access to Area PR by changing the restriction to November 1, 2010.

This change order also provides early access to the southwestern 7 meters of Area FP which allows for the prestressed concrete girder sections of Frame 2 of both the westbound and eastbound structures to be constructed without a construction joint. The contract plans had intended to allow for a construction joint within the portion of the frame that fell within the specified limits of Area PR. However, one of these construction joints was mistakenly omitted from the contract plan sheets. This omission exposes the Department to considerable risk associated with the contractor's interpretation of how the frame could be constructed.

The original construction joint was considered necessary due to anticipated conflicts with the adjacent Self-Anchored Suspension bridge contract. These conflicts have now been eliminated which will allow for the construction of the entire prestressed box girder. This will eliminate the Department's risk pertaining to this issue and provide schedule benefits to the construction of the eastbound structure.

Section 4 "BEGINNING OF WORK, TIME OF COMPLETION, AND LIQUIDATED DAMAGES" of the Contract Special Provisions defines 4 separate designated portions of work to be completed within the duration of the contract. The Designated Portion of the Work 1 (DP1) pertained to the completion of the Frame 2 structures up to the planned construction joint. As this construction joint is eliminated by this change order DP1 is no longer relevant and shall be eliminated from the contract. Designated Portion of the Work 2 (DP2) pertains to the completion of the westbound structure and isn't affected by this change. The Designated Portion of the Work 3 (DP3) and 4 (DP4) pertain to the completion of the eastbound structure and the completion of all contract work respectively. State owned float shall be provided for these portions of the work due to the changes provided.

DP2, DP3 and DP4 completion dates were tied to the completion of DP1. As DP1 is being eliminated, the change order ties the completion of DP2, DP3 and DP4 to the first working day of the contract in lieu of the tie to DP1.

ADA Notice: For individuals with sensory disabilities, this document is available in alternate formats. For information call: (916) 654-6410 or TDD (916) 654-3880 or write Records and Forms Management, 1120 N Street, MS-89, Sacramento, CA 95814.

State owned float resulting from this early release of Area PR and the portion of Area FP along with the early release of Area PRA provided under the original Change order No. 22 has been determined in accordance with Section 10-1.22 "PROGRESS SCHEDULE (CRITICAL PATH METHOD)" of the Contract Special Provisions. The State shall receive 36 working days of float to DP3 and 30 working days of float to DP4.

There shall be no cost or credit to the Department by reason of this change.

No adjustment of contract time is warranted as the float created to the critical paths as a result of this change order shall be provided as State owned float as defined by Section 10-1.22 of the Special Provisions.

Maintenance concurrence is not required as this is an administrative change which shall not affect any permanent roadway features.

CONCURRED BY:		
Construction Engineer:	Rajesh Oberoi	Date 11/24/10
Bridge Engineer:	Mehran Ardakanian	Date 12/06/10
Project Engineer:		Date
Project Manager:		Date
FHWA Rep.:		Date
Environmental:		Date
Other (specify):		Date
Other (specify):		Date
District Prior Approval By:		Date
HQ (Issue Approve) By:	Larry Salhaney	Date 10/25/10
Resident Engineer's Signature:	Rajesh Oberoi 11/24/10	Date

ESTIMATE OF COST

	THIS REQUEST	TOTAL TO DATE
ITEMS	$0.00	$0.00
FORCE ACCOUNT	$0.00	$0.00
AGREED PRICE	$0.00	$0.00
ADJUSTMENT	$0.00	$0.00
TOTAL	$0.00	$0.00

FEDERAL PARTICIPATION

☐ PARTICIPATING ☐ PARTICIPATING IN PART ☑ NONE
☐ NON-PARTICIPATING (MAINTENANCE) ☐ NON-PARTICIPATING

FEDERAL SEGREGATION (if more than one Funding Source or P.I.P. type)
☑ CCO FUNDED PER CONTRACT ☐ CCO FUNDED AS FOLLOWS
FEDERAL FUNDING SOURCE PERCENT

ADA Notice: For individuals with sensory disabilities, this document is available in alternate formats. For information call: (916) 654-6410 or TDD (916) 654-3880 or write Records and Forms Management, 1120 N Street, MS-89, Sacramento, CA 95814.

STATE OF CALIFORNIA - DEPARTMENT OF TRANSPORTATION

CONTRACT CHANGE ORDER

Change Requested by: Engineer

CCO: 23	Suppl. No. 0	Contract No. 04 - 0120S4	Road SF-80-12.7/13.2	FED. AID LOC.: NO FED AID

To: M C M CONSTRUCTION INC

You are directed to make the following changes from the plans and specifications or do the following described work not included in the plans and specifications for this contract. ***NOTE: This change order is not effective until approved by the Engineer.***

Description of work to be done, estimate of quantities and prices to be paid. (Segregate between additional work at contract price, agreed price and force account.) Unless otherwise stated, rates for rental of equipment cover only such time as equipment is actually used and no allowance will be made for idle time. This last percentage shown is the net accumulated increase or decrease from the original quantity in the Engineer's Estimate.

Extra Work at Force Account:

Provide time-lapse video and still photography as directed by the Engineer to document pre-construction conditions, progress and completion of the work, and facilitate public relation activities per Special Provision Section 10-1.21. This work will be paid for as extra work as provided in Section 5-1.17 "Force Account Payment" of the Special Provisions, and Section 4-1.03D of the Standard Specifications, and will not be considered a special service as specified in Section 9-1.03E of the Standard Specifications.

This Change Order does not cover the work required per Special Provision Section 10-1.43, which is covered under Contract Item Number 1.

Estimated cost of Extra Work at Force Account $50,000.00

Estimated Cost: Increase ☑ Decrease ☐ **$50,000.00**

By reason of this order the time of completion will be adjusted as follows: 0 days

Submitted by

Signature	Resident Engineer Rajesh Oberoi, Senior R.E.	Date 8/12/10

Approval Recommended by

Signature	Resident Engineer Rajesh Oberoi	Date 9/15/10

Engineer Approval by

Signature	Area Construction Manager Deanna Vilcheck	Date 9/20/10

We the undersigned contractor, have given careful consideration to the change proposed and agree, if this proposal is approved, that we will provide all equipment, furnish the materials, except as may otherwise be noted above, and perform all services necessary for the work above specified, and will accept as full payment therefor the prices shown above.

NOTE: If you, the contractor, do not sign acceptance of this order, your attention is directed to the requirements of the specifications as to proceeding with the ordered work and filing a written protest within the time therein specified.

Contractor Acceptance by

Signature	(Print name and title) EDMUNDO A. PUCHI, TREASURER	Date 8/30/10

STATE OF CALIFORNIA - DEPARTMENT OF TRANSPORTATION

CONTRACT CHANGE ORDER MEMORANDUM

DATE: 8/12/2010 Page 1 of 1

TO: Deanna Vilcheck, ACM / DV	FILE: E.A. 04 - 0120S4
	CO-RTE-PM SF-80-12.7/13.2
FROM: Rajesh Oberoi, Senior R.E.	FED. NO. NO FED AID
CCO#: 23 SUPPLEMENT#: 0 Category Code: AWZZ	CONTINGENCY BALANCE (incl. this change) $31,841,772.00
COST: $50,000.00 INCREASE ☑ DECREASE ☐	HEADQUARTERS APPROVAL REQUIRED? ☐ YES ☑ NO
SUPPLEMENTAL FUNDS PROVIDED: $50,000 ~~$0.00~~	IS THIS REQUEST IN ACCORDANCE WITH ENVIRONMENTAL DOCUMENTS? ☑ YES ☐ NO
CCO DESCRIPTION: PHOTOGRAPHIC SURVEY, VIDEO SURVEY & PUBLIC RELATIONS	PROJECT DESCRIPTION: YBITS-1 (Yerba Buena Island Transition Structures)

Original Contract Time:	Time Adj. This Change:	Previously Approved CCO Time Adjustments:	Percentage Time Adjusted: (including this change)	Total # of Unreconciled Deferred Time CCO(s): (including this change)
1390 Day(s)	0 Day(s)	0 Day(s)	0 %	0

THIS CHANGE ORDER PROVIDES FOR:

Compensating the Contractor for providing time-lapse video and still photography to document pre-construction conditions, and progress and completion of the work, and facilitate public relation activities as directed by the Engineer. This work will be paid for as extra work as provided in Section 5-1.17 "Force Account Payment" of the Special Provisions, and Section 4-1.03D of the Standard Specifications, and will not be considered a special service as specified in Section 9-1.03B of the Standard Specifications.

This Change order will also provide for ongoing maintenance and operation of previously installed camera equipment that will allow for continued monitoring of the ongoing progress of the Yerba Buena Island construction activities from the Caltrans construction and Public Information offices at Pier 7 in Oakland. The work will also allow monitoring of the regional traffic as an integral part of the Traffic Management Plan.

This work will be performed under Extra Work at Force Account for an estimated cost of 50,000.00. Supplemental funds have been provided for this work in the amount of $50,000.00. A cost analysis is on file.

Design concurrence is not required, as this work was anticipated in the contract documents.

Maintenance concurrence is not required, as this work is temporary and does not affect any permanent features.

No adjustment of contract time is warranted, as this change will not affect any controlling operation.

CONCURRED BY:		
Construction Engineer: Rajesh Oberoi RO	Date 8/12/10	
Bridge Engineer:	Date	
Project Engineer: Bob Zandipour	Date 9/21/10	
Project Manager:	Date	
FHWA Rep.:	Date	
Environmental:	Date	
Other (specify):	Date	
Other (specify):	Date	
District Prior Approval By:	Date	
HQ (Issue Approve) By:	Date	
Resident Engineer's Signature: Rajesh Oberoi	Date 8/12/10	

ESTIMATE OF COST

	THIS REQUEST	TOTAL TO DATE
ITEMS	$0.00	$0.00
FORCE ACCOUNT	$50,000.00	$50,000.00
AGREED PRICE	$0.00	$0.00
ADJUSTMENT	$0.00	$0.00
TOTAL	$50,000.00	$50,000.00

FEDERAL PARTICIPATION

☐ PARTICIPATING ☐ PARTICIPATING IN PART ☒ NONE

☐ NON-PARTICIPATING (MAINTENANCE) ☐ NON-PARTICIPATING

FEDERAL SEGREGATION (if more than one Funding Source or P.I.P. type)

☐ CCO FUNDED PER CONTRACT ☐ CCO FUNDED AS FOLLOWS

FEDERAL FUNDING SOURCE	PERCENT

ADA Notice: For individuals with sensory disabilities, this document is available in alternate formats. For information call: (916) 654-6410 or TDD (916) 654-3880 or write Records and Forms Management, 1120 N Street, MS-89, Sacramento, CA 95814.

CONTRACT CHANGE ORDER

Change Requested by: Engineer

CCO: 24	Suppl. No. 0	Contract No. 04 - 0120S4	Road SF-80-12.7/13.2	FED. AID LOC.: NO FED AID

To: M C M CONSTRUCTION INC

You are directed to make the following changes from the plans and specifications or do the following described work not included in the plans and specifications for this contract. ***NOTE: This change order is not effective until approved by the Engineer.***

Description of work to be done, estimate of quantities and prices to be paid. (Segregate between additional work at contract price, agreed price and force account.) Unless otherwise stated, rates for rental of equipment cover only such time as equipment is actually used and no allowance will be made for idle time. This last percentage shown is the net accumulated increase or decrease from the original quantity in the Engineer's Estimate.

Extra Work at Force Account:

Provide tree trimming or removal, cleaning vegetation and debris from the project site and Macalla Road as directed by the Engineer.

The work items provided under this CCO are in addition to the Clearing and Grubbing as specified in Special Provisions Section 10-1.44, which is paid for under contract line item 53.

Estimated cost of Extra Work at Force Account $20,000.00

No adjustment of contract time is warranted, as this change does not affect any controlling operation.

Estimated Cost: Increase ☑ Decrease ☐ **$20,000.00**

By reason of this order the time of completion will be adjusted as follows: 0 days

Submitted by

Signature	Resident Engineer	Date
Rajesh Oberoi	Rajesh Oberoi, Senior R.E.	8/10/10

Approval Recommended by

Signature	Construction Engineer	Date
Rajesh Oberoi	Rajesh Oberoi	8/27/10

Engineer Approval by

Signature	Area Construction Manager	Date
Deanna Vilcheck	Deanna Vilcheck	8/27/10

We the undersigned contractor, have given careful consideration to the change proposed and agree, if this proposal is approved, that we will provide all equipment, furnish the materials, except as may otherwise be noted above, and perform all services necessary for the work above specified, and will accept as full payment therefor the prices shown above.

NOTE: If you, the contractor, do not sign acceptance of this order, your attention is directed to the requirements of the specifications as to proceeding with the ordered work and filing a written protest within the time therein specified.

Contractor Acceptance by

Signature	(Print name and title)	Date
	EDMUNDO A. PUCHI, TREASURER	8/17/10

STATE OF CALIFORNIA - DEPARTMENT OF TRANSPORTATION

CONTRACT CHANGE ORDER MEMORANDUM

DATE: 8/10/2010 Page 1 of 1

TO: Deanna Vilcheck, ACM / DV	FILE: E.A. 04 - 0120S4
FROM: Rajesh Oberoi, Senior R.E.	CO-RTE-PM SF-80-12.7/13.2
	FED. NO. NO FED AID
CCO#: 24 SUPPLEMENT#: 0 Category Code: CEXX	CONTINGENCY BALANCE (incl. this change) $31,891,772.00
COST: $20,000.00 INCREASE ☑ DECREASE ☐	HEADQUARTERS APPROVAL REQUIRED? ☐ YES ☑ NO
SUPPLEMENTAL FUNDS PROVIDED: $0.00	IS THIS REQUEST IN ACCORDANCE WITH ENVIRONMENTAL DOCUMENTS? ☑ YES ☐ NO
CCO DESCRIPTION:	PROJECT DESCRIPTION: YBITS-1 (Yerba Buena Island Transition Structures)

Original Contract Time:	Time Adj. This Change:	Previously Approved CCO Time Adjustments:	Percentage Time Adjusted: (including this change)	Total # of Unreconciled Deferred Time CCO(s): (including this change)
1390 Day(s)	0 Day(s)	0 Day(s)	0 %	0

THIS CHANGE ORDER PROVIDES FOR:

Compensating the Contractor for tree trimming or removal, cleaning vegetation and debris from the project site and Macalla Road, as authorized by the Engineer.

This contract calls for the construction of a multi span structure connecting the new east span of the San Francisco-Oakland Bay Bridge (SFOBB) to the Yerba Buena Island tunnel .

This change order is necessary to eliminate or reduce potential fire hazards along Macalla Road and elsewhere within the project limits.

The work will be paid for as extra work at force account for an estimated cost of $20,000.00 and will be financed from the contract's contingency funds. A cost analysis is on file.

This Change Order received concurrence from Greg Ressio, Coast Guard Representative, and Deanna Vilcheck, Area Construction Manager.

Design concurrence is not required, as this CCO does not affect any feature of the work.

Maintenance concurrence is not required, as this work is temporary and does not affect any permanent features.

No adjustment of contract time is warranted, as this change does not affect any controlling operation.

CONCURRED BY:		
Construction Engineer: Rajesh Oberoi RO.	Date 8/10/10	
Bridge Engineer:	Date	
Project Engineer:	Date	
Project Manager:	Date	
FHWA Rep.:	Date	
Environmental:	Date	
Other (specify):	Date	
Other (specify):	Date	
District Prior Approval By:	Date	
HQ (Issue Approve) By:	Date	
Resident Engineer's Signature: Rajesh Oberoi	Date 8/10/10	

ESTIMATE OF COST

	THIS REQUEST	TOTAL TO DATE
ITEMS	$0.00	$0.00
FORCE ACCOUNT	$20,000.00	$20,000.00
AGREED PRICE	$0.00	$0.00
ADJUSTMENT	$0.00	$0.00
TOTAL	$20,000.00	$20,000.00

FEDERAL PARTICIPATION

☐ PARTICIPATING ☐ PARTICIPATING IN PART ☑ NONE
☐ NON-PARTICIPATING (MAINTENANCE) ☐ NON-PARTICIPATING

FEDERAL SEGREGATION (if more than one Funding Source or P.I.P. type)
☐ CCO FUNDED PER CONTRACT ☐ CCO FUNDED AS FOLLOWS

FEDERAL FUNDING SOURCE	PERCENT

ADA Notice: For individuals with sensory disabilities, this document is available in alternate formats. For information call: (916) 654-6410 or TDD (916) 654-3880 or write Records and Forms Management, 1120 N Street, MS-89, Sacramento, CA 95814.

STATE OF CALIFORNIA - DEPARTMENT OF TRANSPORTATION

CONTRACT CHANGE ORDER

Change Requested by: Engineer

CCO: 25	Suppl. No. 0	Contract No. 04 - 0120S4	Road SF-80-12.7/13.2	FED. AID LOC.: NO FED AID

To: M C M CONSTRUCTION INC

You are directed to make the following changes from the plans and specifications or do the following described work not included in the plans and specifications for this contract. ***NOTE: This change order is not effective until approved by the Engineer.***

Description of work to be done, estimate of quantities and prices to be paid. (Segregate between additional work at contract price, agreed price and force account.) Unless otherwise stated, rates for rental of equipment cover only such time as equipment is actually used and no allowance will be made for idle time. This last percentage shown is the net accumulated increase or decrease from the original quantity in the Engineer's Estimate.

Extra Work at Force Account:

Provide construction support and assist Department Archaeologist in conducting archaeological work per Section 5-1.24 "ENVIRONMENTALLY SENSITIVE AREAS (GENERAL)", Paragraph B. "AREA TO BE MONITORED (ATM)", subsection "CONSTRUCTION" of the Special Provisions and as directed by the Engineer.

Estimated cost of Extra Work at Force Account $20,000.00

If, in the opinion of the Engineer, the Contractor's operations are delayed or interfered with by reason of such discoveries, the State will compensate the Contractor for the delays to the extent provided in Section 8-1.09, "Right of Way Delays," of the Standard Specifications, and not otherwise, except as provided in Section 8-1.10, "Utility and Non-Highway Facilities," of the Standard Specifications.

Estimated Cost: Increase ☑ Decrease ☐ **$20,000.00**

By reason of this order the time of completion will be adjusted as follows: 0 days

Submitted by

Signature	Resident Engineer	Date
Rajesh Oberoi	Rajesh Oberoi, Senior R.E.	8/17/10

Approval Recommended by

Signature	Senior Resident Engineer	Date
Rajesh Oberoi	Rajesh Oberoi	9/15/10

Engineer Approval by

Signature	Area Construction Manager	Date
Deanna Vilcheck	Deanna Vilcheck	9/20/10

We the undersigned contractor, have given careful consideration to the change proposed and agree, if this proposal is approved, that we will provide all equipment, furnish the materials, except as may otherwise be noted above, and perform all services necessary for the work above specified, and will accept as full payment therefor the prices shown above.

NOTE: If you, the contractor, do not sign acceptance of this order, your attention is directed to the requirements of the specifications as to proceeding with the ordered work and filing a written protest within the time therein specified.

Contractor Acceptance by

Signature	(Print name and title)	Date
	EDMUNDO A. PUCHI, TREASURER	8/30/10

STATE OF CALIFORNIA - DEPARTMENT OF TRANSPORTATION

CONTRACT CHANGE ORDER MEMORANDUM

DATE: 8/16/2010 Page 1 of 1

TO: Deanna Vilcheck, ACM DV	FILE: E.A. 04 - 0120S4
FROM: Rajesh Oberoi, Senior R.E.	CO-RTE-PM SF-80-12.7/13.2
	FED. NO. NO FED AID
CCO#: 25 SUPPLEMENT#: 0 Category Code: AXZZ	CONTINGENCY BALANCE (incl. this change) $31,671,772.00
COST: $20,000.00 INCREASE ☑ DECREASE ☐	HEADQUARTERS APPROVAL REQUIRED? ☐ YES ☑ NO
SUPPLEMENTAL FUNDS PROVIDED: $0.00	IS THIS REQUEST IN ACCORDANCE WITH ENVIRONMENTAL DOCUMENTS? ☑ YES ☐ NO
CCO DESCRIPTION: ASSIST DEPARTMENT ARCHAEOLOGIST	PROJECT DESCRIPTION: YBITS-1 (Yerba Buena Island Transition Structures)

Original Contract Time:	Time Adj. This Change:	Previously Approved CCO Time Adjustments:	Percentage Time Adjusted: (including this change)	Total # of Unreconciled Deferred Time CCO(s): (including this change)
1390 Day(s)	0 Day(s)	0 Day(s)	0 %	0

THIS CHANGE ORDER PROVIDES FOR:

Compensating the Contractor for providing construction support and assisting the Department Archaeologist as authorized by the Engineer.

This project, the Yerba Buena Island Transition Structure (YBITS), was awarded in February 2010 to construct the tie in of the new east span of the San Francisco Oakland Bay Bridge to Yerba Buena Island. There are numerous environmentally sensitive areas (ESAs) within the project limits. The Department Archaeologist has the authority to halt construction operations in the vicinity of an archaeological find, if significant or potentially significant cultural resources are exposed or if the find will be adversely affected by construction operations. When requested, per Special Provisions section 5-1.24 the Contractor shall provide construction support and any assistance to the Department Archaeologist in their conducting the archaeological work.

In addition, If, in the opinion of the Engineer, the Contractor's operations are delayed or interfered with by reason of such discoveries, the State will compensate the Contractor for the delays to the extent provided in Section 8-1.09, "Right of Way Delays," of the Standard Specifications, and not otherwise, except as provided in Section 8-1.10, "Utility and Non-Highway Facilities," of the Standard Specifications.

This will be paid for as extra work as provided in Section 4-1.03D of the Standard Specifications in the amount of $20,000.00. A cost estimate is on file. Funds for this work will be financed from the project's contingency fund.

This Change Order received concurrence from Deanna Vilcheck, Area Construction Manager.

Design concurrence is not required, as this CCO does not affect any feature of the work.

Maintenance concurrence is not required, as this work is temporary and does not affect any permanent features.

CONCURRED BY:		
Construction Engineer: Rajesh Oberoi	Rajesh Oberoi	Date 8/17/10
Bridge Engineer:		Date
Project Engineer: Bob Zandipour		Date 09/21/10
Project Manager: Ken Terpstra		Date 09/20/10
FHWA Rep.:		Date
Environmental:		Date
Other (specify): Janet Pape, Archaeology		Date 09/21/10
Other (specify):		Date
District Prior Approval By:		Date
HQ (Issue Approve) By:		Date
Resident Engineer's Signature:	Rajesh Oberoi	Date 8/17/10

ESTIMATE OF COST

	THIS REQUEST	TOTAL TO DATE
ITEMS	$0.00	$0.00
FORCE ACCOUNT	$20,000.00	$20,000.00
AGREED PRICE	$0.00	$0.00
ADJUSTMENT	$0.00	$0.00
TOTAL	$20,000.00	$20,000.00

FEDERAL PARTICIPATION

☐ PARTICIPATING ☐ PARTICIPATING IN PART ☑ NONE
☐ NON-PARTICIPATING (MAINTENANCE) ☐ NON-PARTICIPATING

FEDERAL SEGREGATION (if more than one Funding Source or P.I.P. type)
☐ CCO FUNDED PER CONTRACT ☐ CCO FUNDED AS FOLLOWS

FEDERAL FUNDING SOURCE	PERCENT

ADA Notice: For individuals with sensory disabilities, this document is available in alternate formats. For information call: (916) 654-6410 or TDD (916) 654-3880 or write Records and Forms Management, 1120 N Street, MS-89, Sacramento, CA 95814.

STATE OF CALIFORNIA - DEPARTMENT OF TRANSPORTATION

CONTRACT CHANGE ORDER

Change Requested by: Engineer

CCO: 26	Suppl. No. 0	Contract No. 04 - 0120S4	Road SF-80-12.7/13.2	FED. AID LOC.: NO FED AID

To: **M C M CONSTRUCTION INC**

You are directed to make the following changes from the plans and specifications or do the following described work not included in the plans and specifications for this contract. ***NOTE: This change order is not effective until approved by the Engineer.***

Description of work to be done, estimate of quantities and prices to be paid. (Segregate between additional work at contract price, agreed price and force account.) Unless otherwise stated, rates for rental of equipment cover only such time as equipment is actually used and no allowance will be made for idle time. This last percentage shown is the net accumulated increase or decrease from the original quantity in the Engineer's Estimate.

Extra Work at Force Account:

Perform the following work in accordance with Section 10-1.26 "Obstructions", and Section 10-1.41 "Existing Highway Facilities", of the Special Provisions, as directed by the Engineer:

1.Preserve, maintain, or relocate utilities deemed necessary by the Engineer when not shown on the Contract Plans or in the Special Provisions.

2.Provide assistance in exposing and identifying existing utilities not shown on the Contract Plans or in the Special Provisions.

3.Remove and dispose of utilities not shown on the Contract Plans or in the Special Provisions, and determined to be abandoned by the Engineer. Disposal shall be in accordance with Section 7-1.13 "Disposal of Material Outside the Highway Right of Way" of the Standard Specifications.

This work will be paid for in accordance with Section 5-1.17 "Force Account Payment" of the Special Provisions and Section 4-1.03D "Extra Work" of the Standard Specifications.

Estimated cost of Extra Work at Force Account $300,000.00

Compensation for delays resulting from this work will be made in accordance with Section 8-1.09 "Right of Way Delays" of the Standard Specifications.

Consideration of a time adjustment will be deferred until completion of work specified herein.

Estimated Cost: Increase ☑ Decrease ☐ **$300,000.00**

By reason of this order the time of completion will be adjusted as follows: Deferred

Submitted by

Signature	Resident Engineer	Date
Rajesh Oberoi	Rajesh Oberoi, Senior R.E.	9/25/10

Approval Recommended by

Signature	Area Construction Manager	Date
Deanna Vilcheck	Deanna Vilcheck	9/30/10

Engineer Approval by

Signature	Principal T.E.	Date
Michael Forner	Mike Forner	9-30-10

We the undersigned contractor, have given careful consideration to the change proposed and agree, if this proposal is approved, that we will provide all equipment, furnish the materials, except as may otherwise be noted above, and perform all services necessary for the work above specified, and will accept as full payment therefor the prices shown above.

NOTE: If you, the contractor, do not sign acceptance of this order, your attention is directed to the requirements of the specifications as to proceeding with the ordered work and filing a written protest within the time therein specified.

Contractor Acceptance by

Signature	(Print name and title)	Date
[illegible]	Edmundo A. Ruchi - Treasurer	9-28-2010

STATE OF CALIFORNIA - DEPARTMENT OF TRANSPORTATION

CONTRACT CHANGE ORDER MEMORANDUM

DATE: 9/15/2010 Page 1 of 1

TO: Deanna Vilcheck, ACM	FILE: E.A. 04 - 0120S4
FROM: Rajesh Oberoi, Senior R.E.	CO-RTE-PM SF-80-12.7/13.2
	FED. NO. NO FED AID
CCO#: 26 SUPPLEMENT#: 0 Category Code: ~~AGZZ~~ AWZZ	CONTINGENCY BALANCE (incl. this change) $28,750,812.00
COST: $300,000.00 INCREASE ☑ DECREASE ☐	HEADQUARTERS APPROVAL REQUIRED? ☐ YES ☑ NO
SUPPLEMENTAL FUNDS PROVIDED: $300,000.00	IS THIS REQUEST IN ACCORDANCE WITH ENVIRONMENTAL DOCUMENTS? ☑ YES ☐ NO
CCO DESCRIPTION: Relocating Utilities not shown on plans	**PROJECT DESCRIPTION:** YBITS-1 (Yerba Buena Island Transition Structures)

Original Contract Time:	Time Adj. This Change:	Previously Approved CCO Time Adjustments:	Percentage Time Adjusted: (including this change)	Total # of Unreconciled Deferred Time CCO(s): (including this change)
1390 Day(s)	DEF Day(s)	0 Day(s)	0 %	0

THIS CHANGE ORDER PROVIDES FOR:

Compensating the Contractor for potholing, preserving, relocating or abandoning utilities that have not been shown on the Contract Plans or Special Provisions, as authorized by the Engineer.

This contract calls for the construction of the Yerba Buena Island Transition structures of the east span of the new San Francisco Oakland Bay Bridge (SFOBB). During the work, there may be numerous utility lines encountered that have not been shown on the plans or specifications. Under this CCO, the Engineer will be able to field direct the exploration and relocation or removal of such utility lines.

This work will be paid for as extra work at force account at an estimated cost of $300,000.00 and will be financed from the project's Supplimental fund. A cost estimate is on file.

This Change Order received concurrence from Deanna Vilcheck, Area Construction Manager.

Design concurrence is not required, as this CCO does not affect any feature of the work.

Maintenance concurrence is not required, as this work does not affect any permanent features.

No adjustment of contract time is warranted, as this change will not affect the controlling operation.

CONCURRED BY:		
Construction Engineer: Rajesh Oberoi	Date 9/23/10	
Bridge Engineer:	Date	
Project Engineer:	Date	
Project Manager:	Date	
FHWA Rep.:	Date	
Environmental:	Date	
Other (specify):	Date	
Other (specify):	Date	
District Prior Approval By:	Date	
HQ (Issue Approve) By:	Date	
Resident Engineer's Signature: Rajesh Oberoi	Date	

ESTIMATE OF COST

	THIS REQUEST	TOTAL TO DATE
ITEMS	$0.00	$0.00
FORCE ACCOUNT	$300,000.00	$300,000.00
AGREED PRICE	$0.00	$0.00
ADJUSTMENT	$0.00	$0.00
TOTAL	$300,000.00	$300,000.00

FEDERAL PARTICIPATION

☐ PARTICIPATING ☐ PARTICIPATING IN PART ☒ NONE
☐ NON-PARTICIPATING (MAINTENANCE) ☐ NON-PARTICIPATING

FEDERAL SEGREGATION (if more than one Funding Source or P.I.P. type)
☐ CCO FUNDED PER CONTRACT ☐ CCO FUNDED AS FOLLOWS

FEDERAL FUNDING SOURCE	PERCENT

ADA Notice: For individuals with sensory disabilities, this document is available in alternate formats. For information call: (916) 654-6410 or TDD (916) 654-3880 or write Records and Forms Management, 1120 N Street, MS-89, Sacramento, CA 95814.

STATE OF CALIFORNIA - DEPARTMENT OF TRANSPORTATION

CONTRACT CHANGE ORDER

Change Requested by: Engineer

CCO 28 Suppl. No. 0 Contract No. 04 - 0120S4 Road SF-80-12.7/13.2 FED. AID LOC.: NO FED AID

To: M C M CONSTRUCTION INC

You are directed to make the following changes from the plans and specifications or do the following described work not included in the plans and specifications for this contract. ***NOTE: This change order is not effective until approved by the Engineer.***

Description of work to be done, estimate of quantities and prices to be paid. (Segregate between additional work at contract price, agreed price and force account.) Unless otherwise stated, rates for rental of equipment cover only such time as equipment is actually used and no allowance will be made for idle time. This last percentage shown is the net accumulated increase or decrease from the original quantity in the Engineer's Estimate.

Adjustment of Compensation at Lump Sum:

Modify the stage construction (Stage 1, Phase 1 & Phase 2) of Macalla Road (MR Line) to reconstruct the roadway during a full 3-day weekend closure of the Macalla Road. Reconstruction work may be performed in preparation for the closure while maintaining traffic on Macalla Road as determined by the Engineer.

For all additional costs resulting from this change, the Contractor shall be compensated an agreed lump sum of $192,440.00 which constitutes full compensation, including all markups, complete in place, for this change. This lump sum shall be paid in addition to the contract item prices paid for the various roadway items associated with this work.

Compensation provided herein includes all costs associated with working extended shifts and weekends in order to mitigate the impacts of the work on the local community.

Cost of Adjustment of Compensation at Lump Sum $195,620.00

Estimated Cost: Increase ✔ Decrease $195,620.00

By reason of this order the time of completion will be adjusted as follows: 0 days

Submitted by

Signature	Resident Engineer	Date
William Howe	William Howe, Senior R.E.	07-21-11

Approval Recommended by

Signature	Area Construction Manager	Date
Deanna Vilcheck	Deanna Vilcheck	7/21/11

Engineer Approval by

Signature	Area Construction Manager	Date
Deanna Vilcheck	Deanna Vilcheck	9/7/11

We the undersigned contractor, have given careful consideration to the change proposed and agree, if this proposal is approved, that we will provide all equipment, furnish the materials, except as may otherwise be noted above, and perform all services necessary for the work above specified, and will accept as full payment therefor the prices shown above.

NOTE: If you, the contractor, do not sign acceptance of this order, your attention is directed to the requirements of the specifications as to proceeding with the ordered work and filing a written protest within the time therein specified.

Contractor Acceptance by

Signature	(Print name and title)	Date
[illegible]	Edmundo A. Ruchi – Treasurer	8-22-2011

STATE OF CALIFORNIA - DEPARTMENT OF TRANSPORTATION

CONTRACT CHANGE ORDER MEMORANDUM

TO Deanna Vilcheck ACM

FROM William Howe, Senior R E

FILE E.A. 04 - 0120S4
CO-RTE-PM SF-80-12 7/13 2
FED. NO. NO FED AID

CCO# 28 SUPPLEMENT# 0 Category Code BZZZ

CONTINGENCY BALANCE (incl this change) $68,235,664.19

COST $195,620.00 INCREASE ✔ DECREASE

HEADQUARTERS APPROVAL REQUIRED? YES ✔ NO

SUPPLEMENTAL FUNDS PROVIDED $0.00

IS THIS REQUEST IN ACCORDANCE WITH ENVIRONMENTAL DOCUMENTS? ✔ YES NO

CCO DESCRIPTION:
Macalla Road Stage Construction Changes

PROJECT DESCRIPTION:
YBITS 1 (Yerba Buena Island Transition Structures)

Original Contract Time	Time Adj This Change	Previously Approved CCO Time Adjustments	Percentage Time Adjusted (including this change)	Total # of Unreconciled Deferred Time CCO(s) (including this change)
1390 Day(s)	0 Day(s)	0 Day(s)	0 %	9

THIS CHANGE ORDER PROVIDES FOR:

Modifying the staged reconstruction of Macalla Road.

This project, the Yerba Buena Island Transition Structure (YBITS), provides for the construction of two bridges which will connect eastbound and westbound traffic on the new east span of the San Francisco Oakland Bay Bridge (SFOBB) to the existing Yerba Buena Island (YBI) tunnel. The structures are comprised of concrete box girder bridges each approximately 26 meters wide, 40 meters high and 450 meters in length.

The contract calls for the reconstruction of Macalla Road which services both the local City of San Francisco communities and the US Coast Guard (USCG) facility located adjacent to the project site. The portion of the roadway being reconstructed is comprised of a sharp and steep hairpin turn which abuts directly against an active work site on the project. The stage construction plans provide for the contractor to reconstruct the inner half of the curve and then the outer half with one-way traffic control being employed throughout the duration of the work. This work is anticipated to take 3 months to complete with the one way traffic control in place this entire period.

In discussions with the USCG and Project Development, it was determined that this one way traffic control could severely impact the bases operations. It has been determined that the entire reconstruction could be completed over a 3 day-weekend with approximately 1 month of work performed in preparation for the closure with limited traffic impacts. This change order will provide for this revised stage construction.

The major costs of the change order are comprised of premium time labor costs for the weekend work and labor inefficiencies associated with the increased labor force required to complete the work within the reduced work period. Plant opening and additional equipment mobilization costs will also be incurred.
Compensation for this work shall be paid as an adjustment of compensation at an agreed lump sum of $192,440.00 which shall be financed from the contract's contingency funds. A cost analysis is on file.

No adjustment of contract time is warranted as the change will not affect the controlling operation.

Maintenance concurrence is not required as the change is a staging construction change which doesn't affect any permanent roadway features.

ADA Notice: For individuals with sensory disabilities, this document is available in alternate formats. For information call (916) 654-6410 or TDD (916) 654-3880 or write Records and Forms Management, 1120 N Street, MS-89, Sacramento, CA 95814

CONCURRED BY:

Construction Engineer	William Howe	Date 07/21/11
Bridge Engineer		Date
Project Engineer	Bob Zandipour Design	Date
Project Manager	Ken Terpstra	Date
FHWA Rep.		Date
Environmental		Date
Other (specify)		Date
Other (specify)		Date
District Prior Approval By		Date
HQ (Issue Approve) By		Date
Resident Engineer's Signature		Date

William Howe 07-21-11

ESTIMATE OF COST

	THIS REQUEST	TOTAL TO DATE
ITEMS	$0.00	$0.00
FORCE ACCOUNT	$0.00	$0.00
AGREED PRICE	$0.00	$0.00
ADJUSTMENT	$195,620.00	$195,620.00
TOTAL	$195,620.00	$195,620.00

FEDERAL PARTICIPATION

PARTICIPATING PARTICIPATING IN PART ✔ NONE
NON-PARTICIPATING (MAINTENANCE) NON-PARTICIPATING

FEDERAL SEGREGATION (if more than one Funding Source or P.I.P. type)
✔ CCO FUNDED PER CONTRACT CCO FUNDED AS FOLLOWS

FEDERAL FUNDING SOURCE PERCENT

ADA Notice For individuals with sensory disabilities this document is available in alternate formats For information call (916) 654-6410 or TDD (916) 654-3880 or write Records and Forms Management 1120 N Street MS-89 Sacramento CA 95814

CONTRACT CHANGE ORDER

Change Requested by: Engineer

CCO: 29	Suppl. No. 0	Contract No. 04 - 0120S4	Road SF-80-12.7/13.2	FED. AID LOC.: NO FED AID

To: **M C M CONSTRUCTION INC**

You are directed to make the following changes from the plans and specifications or do the following described work not included in the plans and specifications for this contract. ***NOTE: This change order is not effective until approved by the Engineer.***

Description of work to be done, estimate of quantities and prices to be paid. (Segregate between additional work at contract price, agreed price and force account.) Unless otherwise stated, rates for rental of equipment cover only such time as equipment is actually used and no allowance will be made for idle time. This last percentage shown is the net accumulated increase or decrease from the original quantity in the Engineer's Estimate.

Extra Work at Force Account:

Perform the following work as described and as determined by the Engineer:

1) Construct the remaining items for two hinge mock-ups in accordance with sheet 3 of 3 of this contract change order .
2) Provide a concrete placement plan for the Engineers approval.
3) Provide trial batches for self-consolidating concrete mix-designs.
4) Provide laboratory testing services for concrete trial batches.
5) Demolish and dispose of mock-ups upon the completion of the Departments review.

This work will be paid for as extra work as provided in Section 5-1.17, "Force Account Payment" of the Special Provisions, and Section 4-1.03D, "Extra Work," of the Standard Specifications.

Estimated cost of Extra Work at Force Account $100,000.00

Adjustment of Compensation at Lump Sum:

Furnish and install bar reinforcing steel for two hinge mock-ups in accordance with sheet 3 of 3 of this change order. Work includes preparing shop drawings and details, provide and install all bars, headed bars, couplers, accessories, and other supplementary appurtenances necessary to complete the reinforcement installation.

Bars shown on the drawings with hooks may be replaced by headed bars as approved by the Engineer.

No testing of headed bars or couplers is required.

For this work, the contractor shall receive and accept the agreed lump sum of $ 51,748.00. This sum constitutes full and complete compensation for providing all labor, material, equipment, tools and incidentals, including all markups by reason of this change.

Cost of Adjustment of Compensation at Lump Sum $51,748.00

CONTRACT CHANGE ORDER

Change Requested by: Engineer

CCO: 29	Suppl. No. 0	Contract No. 04 - 0120S4	Road SF-80-12.7/13.2	FED. AID LOC.: NO FED AID

Estimated Cost: Increase ☑ Decrease ☐ $151,748.00

By reason of this order the time of completion will be adjusted as follows: 0 days

Submitted by

Signature	Resident Engineer for Rajesh Oberoi, Senior R.E.	Date 12/06/10

Approval Recommended by

Signature Deanna Vilcheck	Area Construction Manager Deanna Vilcheck	Date 12/6/10

Engineer Approval by

Signature Deanna Vilcheck	Area Construction Manager Deanna Vilcheck	Date 1/6/11

We the undersigned contractor, have given careful consideration to the change proposed and agree, if this proposal is approved, that we will provide all equipment, furnish the materials, except as may otherwise be noted above, and perform all services necessary for the work above specified, and will accept as full payment therefor the prices shown above.

NOTE: If you, the contractor, do not sign acceptance of this order, your attention is directed to the requirements of the specifications as to proceeding with the ordered work and filing a written protest within the time therein specified.

Contractor Acceptance by

Signature	(Print name and title) Edmundo A. Pucchi Treasurer	Date 12-17-2010

DIST	COUNTY	ROUTE	POST MILES TOTAL PROJECT	SHEET No	TOTAL SHEETS
04	SF	80	12.6/13.2		

M J Cullen 8-23-10
REGISTERED CIVIL ENGINEER DATE

PLANS APPROVAL DATE

The State of California or its officers or agents shall not be responsible for the accuracy or completeness of electronic copies of this plan sheet.

REGISTERED PROFESSIONAL ENGINEER M. J. CULLEN No. C 40620 Exp. 03-31-11 CIVIL STATE OF CALIFORNIA

CONTRACT NO. 04-0120S4
CONTRACT CHANGE ORDER NO. 029
SHEET 3 OF 3

HINGE MOCK-UP CONSTRUCTION PROCEDURE

1. Two 20ft mock up Hinges shall be constructed.
2. Mock-up #1 shall be formed with see thru forms where shown on the "HINGE MOCK-UP #1 SECTION". This will allow inspection of the concrete consolidation during placement of the concrete. Prior to placing the concrete, the Contractor shall submit to the Engineer for approval a concrete placing plan. The concrete placing plan shall include the concrete mix design and a precise procedure for placing the concrete to ensure proper consolidation in the critical bearing area of the Hinge seat. During placement of the concrete any deviation from the placing plan must be approved by the Engineer.
3. Mock-up #2 shall be constructed with approval of the Engineer after Mock-up #1 has been completed, the forms stripped and the completed specimen thoroughly inspected. Mock-up #2 shall be constructed according to the "HINGE MOCK-UP #2 SECTION" detail and any approved revisions. A concrete placing plan (as in item #2) will be required for approval along with the concrete mix design.
4. Secure Bearing Pads and Polystyrene to plywood form. Hard board shall be attached to the underside of the polystyrene. Place end bearing Pads 1 ft clear from the longitudinal edge of the Hinge mock-up.

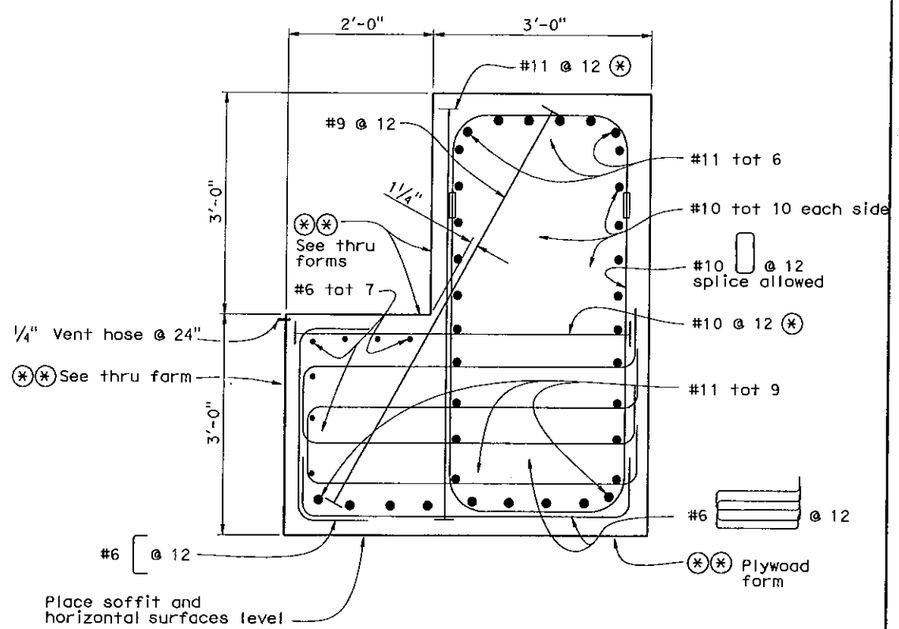

HINGE MOCK-UP #1 SECTION

1" = 1'-0"

⊛ Indicates headed reinforcement

⊛⊛ Forms shall be in place and secure before placing reinforcement.

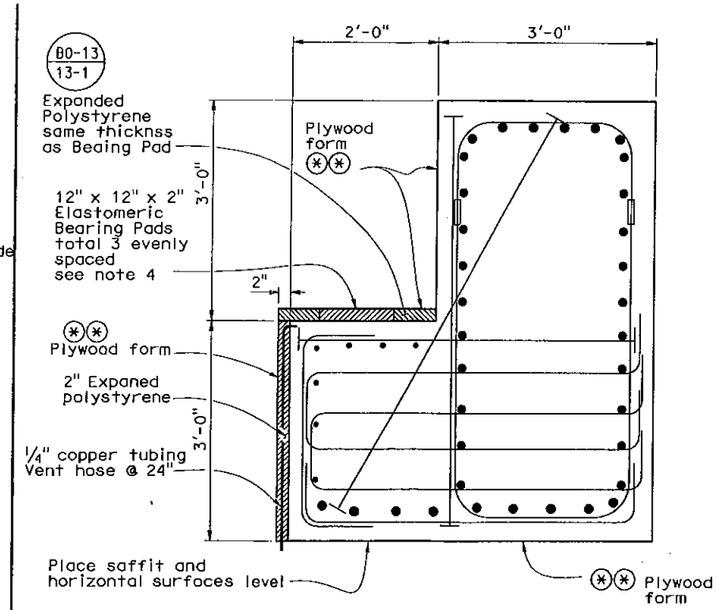

HINGE MOCK-UP #2 SECTION

1" = 1'-0"

⊛ Indicates headed reinforcement

⊛⊛ Plywood forms shall be in place and secure before placing reinforcement.

NOTE:
For details not shown see "HINGE MOCK UP #1 SECTION"

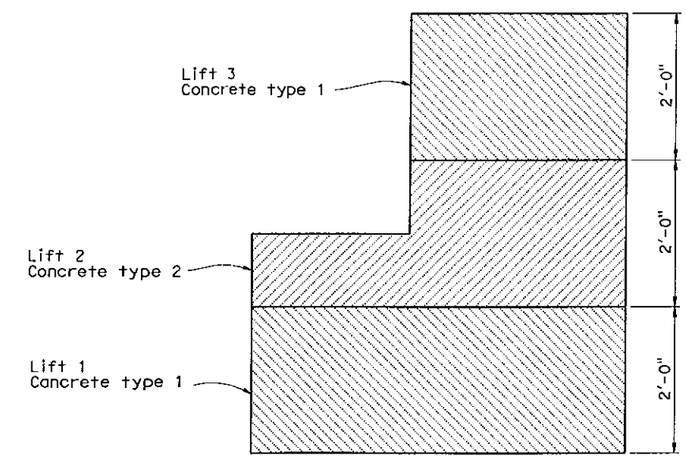

CONCRETE STRENGTH AND TYPE LIMITS AND CONCRETE PLACING SEQUENCE

1" = 1'-0"

NOTE:

Typical, for Mock-up #1 and Mock-up #2.

Concrete shall be placed in three lifts as shown. The Contractor shall be permitted to place only one lift per day.

Concrete type 1 f'c = 6500 psi @ 28 days.

Concrete type 2 shall be a self consolidating concrete with an f'c = 6500 psi @ 28 days and a minimum f'c = 1250 psi @ 4 hours.

	BY	CHECKED
DESIGN	M. Cullen	X
DETAILS	S. Jiang	X
QUANTITIES	X	X

STATE OF CALIFORNIA
DEPARTMENT OF TRANSPORTATION

DIVISION OF ENGINEERING SERVICES
STRUCTURE DESIGN
DESIGN BRANCH 5

BRIDGE NO. 34-0006
POST MILE NA

WEST TIE IN PHASE 3
HINGE MOCK UP DETAILS

STRUCTURES DESIGN DETAIL SHEET (ENGLISH) (REV. 10/25/05)

ORIGINAL SCALE IN INCHES FOR REDUCED PLANS 0 1 2 3

CU 04
EA 0120r1

DISREGARD PRINTS BEARING EARLIER REVISION DATES

REVISION DATES: 3-30-10 4-26-10 4-26-10 7-14-10 8-10-10

SHEET X OF X

FILE => zz0034-0006-n-hmu_dt101.dgn

USERNAME => s132428 DATE PLOTTED => 23-AUG-2010 TIME PLOTTED => 15:36

STRUCTURES DESIGN DETAIL SHEET (ENGLISH) (REV. 10/25/05)

STATE OF CALIFORNIA - DEPARTMENT OF TRANSPORTATION

CONTRACT CHANGE ORDER MEMORANDUM

TO: Deanna Vilcheck, ACM /	FILE: E.A. 04 - 0120S4
FROM: Rajesh Oberoi, Senior R.E.	CO-RTE-PM SF-80-12.7/13.2
	FED. NO. NO FED AID
CCO#: 29 SUPPLEMENT#: 0 Category Code: BZZZ	CONTINGENCY BALANCE (incl. this change) $24,726,515.00
COST: $151,748.00 INCREASE ☑ DECREASE ☐	HEADQUARTERS APPROVAL REQUIRED? ☐ YES ☑ NO
SUPPLEMENTAL FUNDS PROVIDED: $0.00	IS THIS REQUEST IN ACCORDANCE WITH ENVIRONMENTAL DOCUMENTS? ☑ YES ☐ NO
CCO DESCRIPTION: Mock Up Beams for West Tie-in Phase 3	**PROJECT DESCRIPTION:** YBITS-1 (Yerba Buena Island Transition Structures)

Original Contract Time:	Time Adj. This Change:	Previously Approved CCO Time Adjustments:	Percentage Time Adjusted: (including this change)	Total # of Unreconciled Deferred Time CCO(s): (including this change)
1390 Day(s)	0 Day(s)	0 Day(s)	0 %	6

THIS CHANGE ORDER PROVIDES FOR:

Performing the following work as described and as directed by the Engineer:

1) Constructing two hinge mock-ups as per the Change order attachment.
2) Providing a concrete placement plan for the Engineers approval.
3) Providing trial batches for self-consolidating concrete mix-designs.
4) Providing laboratory testing services for concrete trial batches.
5) Demolishing and disposing of mock-ups upon the completion of Departments review.

This contract calls for the construction of the Yerba Buena Island Transition structures of the east span of the new San Francisco Oakland Bay Bridge (SFOBB).

At a future date the Department intends to come out with a West Tie-In Phase 3 contract and would need some information in regards to the construction of a lower hinge element of the future contract.The contractor is hereby directed to develop a procedure and a mix design for a concrete mockup to insure that there is at least one means and method to cast a lower hinge element under an existing upper hinge element within the time constraints anticipated in the future Contract.The mock-ups are intended to replicate construction of a structural element that shall be constructed and completed during a night shift.

This change order is to facilitate the Department's effort to develop:
a) A self-consolidating concrete mix-design that shall provide adequate strengths within the night shift time constraints.
b) A procedure and rate for concrete placement that shall provide concrete that is free of voids and is in full contact with top and side forms which are meant to represent exiting edge beams.

This change requires two mock-ups, one built with plexiglass and one with plywood. Plexiglass mock-up shall allow observation of concrete placement at the areas of interest and facilitate development of a concrete placement plan. The plywood mock-up is intended to prove that the procedure developed in the first mock-up will bring the satisfactory results when replicating the actual field procedures and materials.

This work will be performed as a Lump Sum of $ 51,748.00 for the bar reinforcing work and Extra Work at Force Account for the other work at an estimated cost of $ 100,000.00 which will be financed from the project's contingency fund. A cost analysis is on file.

This change is requested by Mike Whiteside - YBITS-1 Coordination Engineer, Toll Bridge Design.

No adjustment of contract time is warranted, as this change will not affect the controlling operation.

ADA Notice: For individuals with sensory disabilities, this document is available in alternate formats. For information call: (916) 654-6410 or TDD (916) 654-3880 or write Records and Forms Management, 1120 N Street, MS-89, Sacramento, CA 95814.

CONCURRED BY:		
Construction Engineer:	Rajesh Oberoi	Date 11/23/10
Bridge Engineer:	Mehran Ardakanian	Date 12/06/10
Project Engineer:		Date
Project Manager:		Date
FHWA Rep.:		Date
Environmental:		Date
Other (specify):	Mike Whiteside	Date 5/28/10
Other (specify):		Date
District Prior Approval By:		Date
HQ (Issue Approve) By:		Date
Resident Engineer's Signature:	Rajesh Oberoi	Date

ESTIMATE OF COST

	THIS REQUEST	TOTAL TO DATE
ITEMS	$0.00	$0.00
FORCE ACCOUNT	$100,000.00	$100,000.00
AGREED PRICE	$0.00	$0.00
ADJUSTMENT	$51,748.00	$51,748.00
TOTAL	$151,748.00	$151,748.00

FEDERAL PARTICIPATION

☐ PARTICIPATING ☐ PARTICIPATING IN PART ☑ NONE
☐ NON-PARTICIPATING (MAINTENANCE) ☐ NON-PARTICIPATING

FEDERAL SEGREGATION (if more than one Funding Source or P.I.P. type)
☑ CCO FUNDED PER CONTRACT ☐ CCO FUNDED AS FOLLOWS

FEDERAL FUNDING SOURCE	PERCENT

ADA Notice: For individuals with sensory disabilities, this document is available in alternate formats. For information call: (916) 654-6410 or TDD (916) 654-3880 or write Records and Forms Management, 1120 N Street, MS-89, Sacramento, CA 95814.

STATE OF CALIFORNIA - DEPARTMENT OF TRANSPORTATION

CONTRACT CHANGE ORDER

Change Requested by: Engineer

CCO: 30	Suppl. No. 0	Contract No. 04 - 0120S4	Road SF-80-12.7/13.2	FED. AID LOC.: NO FED AID

To: **M C M CONSTRUCTION INC**

You are directed to make the following changes from the plans and specifications or do the following described work not included in the plans and specifications for this contract. ***NOTE: This change order is not effective until approved by the Engineer.***

Description of work to be done, estimate of quantities and prices to be paid. (Segregate between additional work at contract price, agreed price and force account.) Unless otherwise stated, rates for rental of equipment cover only such time as equipment is actually used and no allowance will be made for idle time. This last percentage shown is the net accumulated increase or decrease from the original quantity in the Engineer's Estimate.

Extra Work at Force Account:

Remove and dispose of any buried man made objects encountered in accordance with Section 19-1.04 of the Standard Specifications, as directed by the Engineer:

This work will be paid for in accordance with Section 5-1.17 "Force Account Payment" of the Special Provisions and Section 4-1.03D "Extra Work" of the Standard Specifications.

Consideration of a time adjustment will be deferred until completion of the work specified herein. Determination of a commensurate time extension will be made in accordance with Section 8-1.07, "Liquidated Damages", of the Standard Specifications and Section 10-1.22 " Progress Schedule (Critical Path Method)" of the Special Provisions.

Estimated cost of Extra Work at Force Account $150,000.00

Estimated Cost: Increase ☑ **Decrease** ☐ **$150,000.00**

By reason of this order the time of completion will be adjusted as follows: Deferred

Submitted by

Signature Rajesh Oberoi	Resident Engineer Rajesh Oberoi, Senior R.E.	Date 10/4/10

Approval Recommended by

Signature Deanna Vilcheck	Resident Engineer Rajesh Oberoi	Date 10/14/10

Engineer Approval by

Signature Deanna Vilcheck	Area Construction Manager Deanna Vilcheck	Date 10/14/10

We the undersigned contractor, have given careful consideration to the change proposed and agree, if this proposal is approved, that we will provide all equipment, furnish the materials, except as may otherwise be noted above, and perform all services necessary for the work above specified, and will accept as full payment therefor the prices shown above.

NOTE: If you, the contractor, do not sign acceptance of this order, your attention is directed to the requirements of the specifications as to proceeding with the ordered work and filing a written protest within the time therein specified.

Contractor Acceptance by

Signature	(Print name and title) Edmundo A. Pacchi - Treasurer	Date 10-11-2010

STATE OF CALIFORNIA - DEPARTMENT OF TRANSPORTATION

CONTRACT CHANGE ORDER MEMORANDUM

DATE: 9/7/2010 Page 1 of 1

TO: Deanna Vilcheck, ACM /	FILE: E.A. 04 - 0120S4
FROM: Rajesh Oberoi, Senior R.E.	CO-RTE-PM SF-80-12.7/13.2
	FED. NO. NO FED AID
CCO#: 30 SUPPLEMENT#: 0 Category Code: ALZZ	CONTINGENCY BALANCE (incl. this change) $29,729,772.00
COST: $150,000.00 INCREASE ☑ DECREASE ☐	HEADQUARTERS APPROVAL REQUIRED? ☐ YES ☑ NO
SUPPLEMENTAL FUNDS PROVIDED: $150,000.00	IS THIS REQUEST IN ACCORDANCE WITH ENVIRONMENTAL DOCUMENTS? ☑ YES ☐ NO
CCO DESCRIPTION: Removal & Disposal of Man Made objects	**PROJECT DESCRIPTION:** YBITS-1 (Yerba Buena Island Transition Structures)

Original Contract Time:	Time Adj. This Change:	Previously Approved CCO Time Adjustments:	Percentage Time Adjusted: (including this change)	Total # of Unreconciled Deferred Time CCO(s): (including this change)
1390 Day(s)	0 Day(s)	0 Day(s)	0 %	0

THIS CHANGE ORDER PROVIDES FOR:

Compensating the Contractor for removal of buried man-made objects that have not been shown on the Contract Plans or Special Provisions, as authorized by the Engineer.

This contract calls for the construction of the Yerba Buena Island Transition structure of the east span of the new San Francisco Oakland Bay Bridge (SFOBB). Due to the extensive excavation work pertaining to this contract it is anticipated that there will be numerous hidden objects that have not been shown on the plans or specifications. Under this CCO, the Engineer will be able to field direct the removal of such objects.

This work will be performed as Extra Work at Force Account for an estimated cost of $150,000.00. Supplemental funds have been provided for this work in the amount of $500,000.00. A cost estimate is on file.

This Change Order received concurrence from Deanna Vilcheck, Area Construction Manager.

Design concurrence is not required, as this CCO does not affect any feature of the work.

Maintenance concurrence is not required, as this work does not affect any permanent features.

Consideration of a time adjustment will be deferred until completion of work specified herein.

CONCURRED BY:		
Construction Engineer:	Rajesh Oberoi	Date 9/7/10
Bridge Engineer:	Mehran Ardakanian	Date 10/14/10
Project Engineer:		Date
Project Manager:		Date
FHWA Rep.:		Date
Environmental:		Date
Other (specify):		Date
Other (specify):		Date
District Prior Approval By:		Date
HQ (Issue Approve) By:		Date
Resident Engineer's Signature:	Rajesh Oberoi	Date 9/7/10

ESTIMATE OF COST

	THIS REQUEST	TOTAL TO DATE
ITEMS	$0.00	$0.00
FORCE ACCOUNT	$150,000.00	$150,000.00
AGREED PRICE	$0.00	$0.00
ADJUSTMENT	$0.00	$0.00
TOTAL	$150,000.00	$150,000.00

FEDERAL PARTICIPATION

☐ PARTICIPATING ☐ PARTICIPATING IN PART ☑ NONE
☐ NON-PARTICIPATING (MAINTENANCE) ☐ NON-PARTICIPATING

FEDERAL SEGREGATION (if more than one Funding Source or P.I.P. type)
☐ CCO FUNDED PER CONTRACT ☐ CCO FUNDED AS FOLLOWS

FEDERAL FUNDING SOURCE	PERCENT

ADA Notice: For individuals with sensory disabilities, this document is available in alternate formats. For information call: (916) 654-6410 or TDD (916) 654-3880 or write Records and Forms Management, 1120 N Street, MS-89, Sacramento, CA 95814.

STATE OF CALIFORNIA - DEPARTMENT OF TRANSPORTATION

CONTRACT CHANGE ORDER

Change Requested by: Engineer

CCO 31	Suppl. No. 0	Contract No. 04 - 0120S4	Road SF-80-12.7/13.2	FED. AID LOC.: NO FED AID

To: M C M CONSTRUCTION INC

You are directed to make the following changes from the plans and specifications or do the following described work not included in the plans and specifications for this contract. ***NOTE: This change order is not effective until approved by the Engineer.***

Description of work to be done, estimate of quantities and prices to be paid. (Segregate between additional work at contract price, agreed price and force account.) Unless otherwise stated, rates for rental of equipment cover only such time as equipment is actually used and no allowance will be made for idle time. This last percentage shown is the net accumulated increase or decrease from the original quantity in the Engineer's Estimate.

Adjustment of Compensation at Lump Sum:

Provide compensation to the Contractor for all additional costs incurred due to the conflict between the installation of the temporary shoring for the Bents W8R and W8L footings and the existing soil nails from the Bent W7R and W8L shoring wall that remain from a previous project.

For this work, the Contractor shall be compensated an agreed lump sum of $67,000.00 which constitutes full and final compensation, including all markups, for all additional costs incurred.

Cost of Adjustment of Compensation at Lump Sum $67,000.00

Estimated Cost: Increase ☑ **Decrease** ☐ **$67,000.00**

By reason of this order the time of completion will be adjusted as follows: 0 days

Signature William Howe	Resident Engineer William Howe, Senior R.E.	Date 6-20-11
Signature Deanna Vilcheck	Area Construction Manager Deanna Vilcheck	Date 7/12/11
Signature Deanna Vilcheck	Area Construction Manager Deanna Vilcheck	Date 7/12/11

We the undersigned contractor, have given careful consideration to the change proposed and agree, if this proposal is approved, that we will provide all equipment, furnish the materials, except as may otherwise be noted above, and perform all services necessary for the work above specified, and will accept as full payment therefor the prices shown above.

NOTE: If you, the contractor, do not sign acceptance of this order, your attention is directed to the requirements of the specifications as to proceeding with the ordered work and filing a written protest within the time therein specified.

Signature	(Print name and title) Edmundo A. Ruchi-Treasurer	Date 6-29-2011

STATE OF CALIFORNIA - DEPARTMENT OF TRANSPORTATION

CONTRACT CHANGE ORDER MEMORANDUM

TO: Deanna Vilcheck, ACM / DV	FILE: E.A. 04 - 0120S4
	CO-RTE-PM SF-80-12.7/13.2
FROM: William Howe, Senior R.E.	FED. NO. NO FED AID
CCO#: 31 SUPPLEMENT#: 0 Category Code: CDPA	CONTINGENCY BALANCE (incl. this change) $6,334,068.50
COST: $67,000.00 INCREASE ☑ DECREASE ☐	HEADQUARTERS APPROVAL REQUIRED? ☐ YES ☑ NO
SUPPLEMENTAL FUNDS PROVIDED: $0.00	IS THIS REQUEST IN ACCORDANCE WITH ENVIRONMENTAL DOCUMENTS? ☑ YES ☐ NO
CCO DESCRIPTION: Soil Nail Obstruction at Bent W8	**PROJECT DESCRIPTION:** YBITS-1 (Yerba Buena Island Transition Structures)

Original Contract Time:	Time Adj. This Change:	Previously Approved CCO Time Adjustments:	Percentage Time Adjusted: (including this change)	Total # of Unreconciled Deferred Time CCO(s): (including this change)
1390 Day(s)	0 Day(s)	0 Day(s)	0 %	7

THIS CHANGE ORDER PROVIDES FOR:

Compensation for costs incurred due to existing soil nails that conflict with the installation of temporary shoring at Bents W8R and W8L.

This project, the Yerba Buena Island Transition Structure (YBITS), provides for the construction of two bridges which will connect eastbound and westbound traffic on the new east span of the San Francisco Oakland Bay Bridge (SFOBB) to the existing Yerba Buena Island (YBI) tunnel. The structures are comprised of concrete box girder bridges each approximately 26 meters wide, 40 meters high and 450 meters in length.

As part of this work, the contract calls for the construction of 3 footings at Bent W8 of both the eastbound and westbound structures. These footings are constructed along a steep slope with the high end of the excavation as deep as 10 meters below the original ground. The contractor uses driven sheet piles to shore the excavation for this bent.

Adjacent to Bent W8, a previous contract constructed Bent W7. That contract called for the construction of a soil nail wall to act as temporary shoring for the construction of that bent with these soil nails being left in place. These existing soil nails are now conflicting with the installation of the sheet piles at Bent W8. The presence of these soil nails was not identified within the contract plans.

This change order provides compensation for the costs associated with the soil nail obstruction. The work includes the cost of excavating, cutting and removing each soil nail as they are encountered and delay costs associated with the pile driving crew and equipment.

Compensation for these costs shall be paid as an adjustment of compensation at an agreed lump sum of $67,000.00 which shall be financed from the contract's contingency funds. A cost analysis is on file.

No adjustment of contract time is warranted as the change will not affect the controlling operation.

Maintenance concurrence is not required as the change order shall not affect any permanent roadway features.

ADA Notice: For individuals with sensory disabilities, this document is available in alternate formats. For information call: (916) 654-6410 or TDD (916) 654-3880 or write Records and Forms Management, 1120 N Street, MS-89, Sacramento, CA 95814.

CONCURRED BY:		
Construction Engineer:	William Howe	Date 06/20/11
Bridge Engineer:	Mehran Ardakanian MBA	Date 06/20/11
Project Engineer:	Bob Zandipour, Design	Date 07/14/11
Project Manager:	Ken Terpstra	Date 07/13/11
FHWA Rep.:		Date
Environmental:		Date
Other (specify):		Date
Other (specify):		Date
District Prior Approval By:		Date
HQ (Issue Approve) By:		Date
Resident Engineer's Signature: William Howe		Date 06-20-11

ESTIMATE OF COST

	THIS REQUEST	TOTAL TO DATE
ITEMS	$0.00	$0.00
FORCE ACCOUNT	$0.00	$0.00
AGREED PRICE	$0.00	$0.00
ADJUSTMENT	$67,000.00	$67,000.00
TOTAL	$67,000.00	$67,000.00

FEDERAL PARTICIPATION

☐ PARTICIPATING ☐ PARTICIPATING IN PART ☑ NONE
☐ NON-PARTICIPATING (MAINTENANCE) ☐ NON-PARTICIPATING

FEDERAL SEGREGATION (if more than one Funding Source or P.I.P. type)
☐ CCO FUNDED PER CONTRACT ☐ CCO FUNDED AS FOLLOWS

FEDERAL FUNDING SOURCE	PERCENT

ADA Notice: For individuals with sensory disabilities, this document is available in alternate formats. For information call: (916) 654-6410 or TDD (916) 654-3880 or write Records and Forms Management, 1120 N Street, MS-89, Sacramento, CA 95814.

CONTRACT CHANGE ORDER

Change Requested by: Engineer

CCO: 32	Suppl. No. 0	Contract No. 04 - 0120S4	Road SF-80-12.7/13.2	FED. AID LOC.: NO FED AID

To: **M C M CONSTRUCTION INC**

You are directed to make the following changes from the plans and specifications or do the following described work not included in the plans and specifications for this contract. ***NOTE: This change order is not effective until approved by the Engineer.***

Description of work to be done, estimate of quantities and prices to be paid. (Segregate between additional work at contract price, agreed price and force account.) Unless otherwise stated, rates for rental of equipment cover only such time as equipment is actually used and no allowance will be made for idle time. This last percentage shown is the net accumulated increase or decrease from the original quantity in the Engineer's Estimate.

Adjustment of Compensation at Lump Sum:

Amend Contract Special Provisions to include specifications for "Sign Structures" as shown on sheets 3 to 5 of this contract change order. These specifications apply to all sign structures shown in the original plans.

Furnish and erect Overhead Sign Structure in accordance with "Sign Structures" specifications at revised location as shown on contract plan sheet No. 97R1 of 806 (sheet 2 of 5 this change order).

As there are no additional costs involved in this change, this is a zero cost change order.

Estimated Cost .....$ 0.00

M.A.

Estimated Cost: Increase ☐ **Decrease** ☐ **$0.00**

By reason of this order the time of completion will be adjusted as follows: 0 days

Submitted by		
Signature Rajesh Oberoi	**Resident Engineer** Rajesh Oberoi, Senior R.E.	**Date** 11/6/10
Approval Recommended by		
Signature Deanna Vilcheck	**Area Construction Manager** Deanna Vilcheck	**Date** 11/8/10
Engineer Approval by		
Signature Deanna Vilcheck	**Area Construction Manager** Deanna Vilcheck	**Date** 12/6/11

We the undersigned contractor, have given careful consideration to the change proposed and agree, if this proposal is approved, that we will provide all equipment, furnish the materials, except as may otherwise be noted above, and perform all services necessary for the work above specified, and will accept as full payment therefor the prices shown above.

NOTE: If you, the contractor, do not sign acceptance of this order, your attention is directed to the requirements of the specifications as to proceeding with the ordered work and filing a written protest within the time therein specified.

Contractor Acceptance by		
Signature	**(Print name and title)** Edmund A. Ruchi - Treasurer	**Date** 12-21-2010

FOR COMPLETE RIGHT OF WAY AND ACCURATE ACCESS DATA, SEE RIGHT OF WAY RECORD MAPS AT DISTRICT OFFICE.

Dist	COUNTY	ROUTE	KILOMETER POST TOTAL PROJECT	SHEET No.	TOTAL SHEETS
04	SF	80	12.7/13.2	97R1	806

REGISTERED CIVIL ENGINEER 2/14/08 DATE

6-23-08
PLANS APPROVAL DATE

REGISTERED PROFESSIONAL ENGINEER JOHNNY KUO No. C 60036 Exp. 6/30/08 CIVIL STATE OF CALIFORNIA

THE STATE OF CALIFORNIA OR ITS OFFICERS OR AGENTS SHALL NOT BE RESPONSIBLE FOR THE ACCURACY OR COMPLETENESS OF ELECTRONIC COPIES OF THIS PLAN SHEET.

PB AMERICAS, Inc.
A Parsons Brinckerhoff Company
303 Second St., Suite 700N
San Francisco, CA 94107-1317

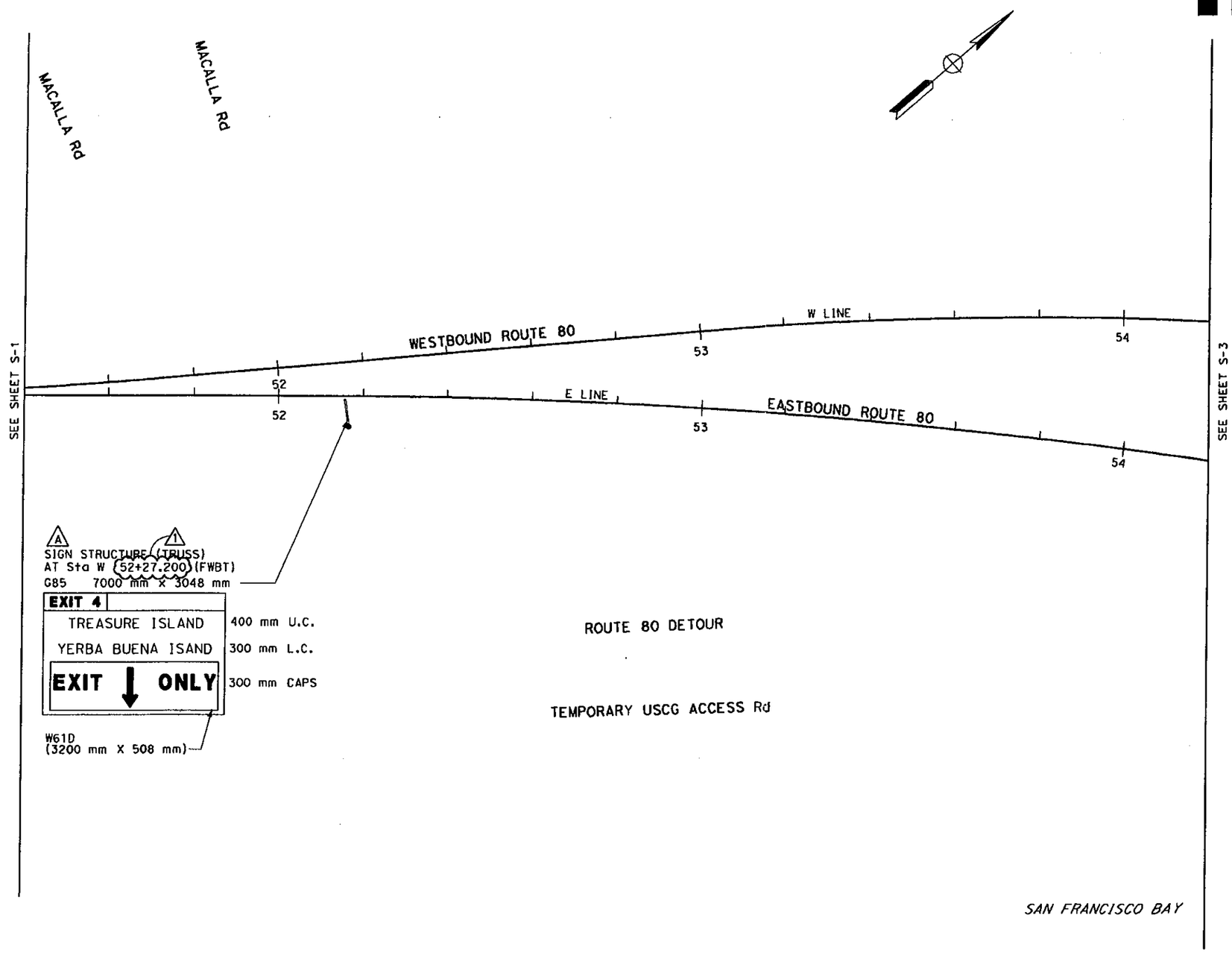

CONTRACT NO. 04-012054
CONTRACT CHANGE ORDER NO. 032
SHEET 2 OF 5

REGISTERED PROFESSIONAL ENGINEER PITHON VITHAYASAI-CHARDON C 74298 Exp. 06/30/2011 CIVIL STATE OF CALIFORNIA

FOR REVISION ONLY
1
09/02/2010

ALL DIMENSIONS ARE IN METERS UNLESS OTHERWISE SHOWN

FOR NOTES, ABBREVIATIONS &/OR LEGEND, SEE SHEET S-1

THIS PLAN ACCURATE FOR SIGN WORK ONLY

SIGN PLAN

SCALE 1:500

S-2

STATE OF CALIFORNIA - DEPARTMENT OF TRANSPORTATION

Caltrans

CONSULTANT FUNCTIONAL SUPERVISOR: BOB ZANDIPOUR

CALCULATED-DESIGNED BY: H. NGUYEN

CHECKED BY: B. NADELL

REVISED BY

DATE REVISED

LAST REVISION DATE PLOTTED 09/02/2010

10-1.__ SIGN STRUCTURES

Sign structures and foundations for overhead signs and CMS signs shall conform to the provisions in Section 56-1, "Overhead Sign Structures," of the Standard Specifications, "Welding", "Steel Structures" and "Clean and Paint (Miscellaneous Facilities)" of these special provisions, and the following requirements.

Before commencing fabrication of sign structures, the Contractor shall submit 2 sets of working drawings to the Engineer in conformance with the provisions in "Working Drawings" of these special provisions. The working drawings shall include sign panel dimensions, span lengths, post heights, anchorage layouts, proposed splice locations, a snugging and tensioning pattern for anchor bolts and high-strength bolted connections, and details for permanent steel anchor bolt templates. The working drawings shall be supplemented with a written quality control program that includes methods, equipment, and personnel necessary to satisfy the requirements specified herein.

Working drawings shall be 559 mm x 864 mm or 279 mm x 432 mm in size and each drawing and calculation sheet shall include the State assigned designations for the sign structure type and reference as shown on the contract plans, District-County-Route-Kilometer Post, and contract number.

The Engineer shall have 30 days to review the sign structure working drawings after a complete submittal has been received. No fabrication or installation of sign structures shall be performed until the working drawings are approved in writing by the Engineer.

Should the Engineer fail to complete the review within the time allowance and if, in the opinion of the Engineer, the Contractor's controlling operation is delayed or interfered with by reason of the delay in reviewing the sign structure working drawings, the delay will be considered a right of way delay in conformance with the provisions in Section 8-1.09, "Right of Way Delays," of the Standard Specifications.

Attention is directed to Section 56-1.02, "Bars, Plates and Shapes," of the Standard Specifications.

Pentagon pole sign structures structural materials shall be in conformance with the following:

Tapered steel post and base plate	ASTM Designation A 709, Grade 50
Hollow structural section	ASTM Designation A 500, Grade B
Materials not otherwise indicated	ASTM Designation A 709, Grade 36

Steel bolts not designated on the plans as high strength (HS) or stainless steel shall be for general applications and shall conform to the requirements in ASTM Designation: A 307.

A permanent steel template shall be used to maintain the proper anchor bolt spacing.

One top nut, one leveling nut, and 2 washers shall be provided for the upper threaded portion of each anchor bolt.

Flatness of surfaces for the following shall conform to the requirements in ASTM Designation: A 6/A 6M:

1. Base plates that are to come in contact with concrete, grout, or washers and leveling nuts
2. Plates in high-strength bolted connections

No holes shall be made in members unless the holes are shown on the plans or are approved in writing by the Engineer.

Longitudinal seam welds shall have 60% minimum penetration, except that within 150 mm of circumferential welds, longitudinal seams welds shall be complete joint penetration (CJP) groove welds. In addition, longitudinal seam welds on structures having telescopic pole segment splices shall be CJP groove welds on the female end for a length on each end equal to the designated slip fit splice length plus 150mm.

Steel members used for overhead sign structures shall receive nondestructive testing (NDT) in conformance with AWS D1.1 and the following:

A.

Weld Location	Weld Type	Minimum Required NDT
Splice welds around the perimeter of tubular sections, pole, and arms.	CJP groove weld with backing ring	100% UT[a] or RT[b]
Longitudinal seam welds	CJP or PJP[c] groove weld	Random 25% MT[d]
Longitudinal seam welds within 150 mm of a circumferential splice.	CJP groove weld	100% UT or RT
Welds attaching base plates, flange plates, or pole or mast arm plates, or arm tubes.	CJP groove weld with backing ring and reinforcing fillet	t> 4.5 mm: 100%UT and MT t< 4.5 mm: 100% MT after root weld pass & final weld pass t = pole or arm thickness
	External (top) fillet weld for socket-type connections	100% MT

[a] ultrasonic testing
[b] radiographic testing
[c] partial joint penetration
[d] magnetic particle testing

A written procedure approved by the Engineer shall be used when performing UT on material less than 8 mm thick. These written procedures shall conform to the requirements in AWS D1.1, Annex K. The acceptance and repair criteria for other welded joints receiving UT shall conform to the requirements in AWS D1.1, Section 6, Table 6.3 for cyclically loaded nontubular connections.

B. The acceptance and repair criteria for radiographic or real time image testing shall conform to the requirements of AWS D1.1 for tensile stress welds.

C. For longitudinal seam welds, the random locations for NDT will be selected by the Engineer. The cover pass shall be ground smooth at the locations to be tested. If repairs are required in a portion of a tested weld, the repaired portion shall receive NDT, and additional NDT shall be performed on untested portions of the weld. The additional NDT shall be performed on 25 percent of that longitudinal seam weld. After this additional NDT is performed and if more repairs are required, then that entire longitudinal seam weld shall receive NDT.

Circumferential welds and base plate to post welds may be repaired only one time without written permission from the Engineer.

Structure mounted signs shall not be installed until the supporting concrete structure has attained the specified compressive strength in conformance with the provisions in Section 90-9, "Compressive Strength," of the Standard Specifications, except that corbels for mounting signs will not be accepted if any test result is less than the specified compressive strength.

After each structure mounted sign post is in place and accepted, mortar shall be placed under the base plate as shown on the plans. The exposed portion of the mortar shall be formed to

present a neat appearance. Mortar shall consist of one part by volume of portland cement and 3 parts of clean sand, shall contain only sufficient moisture to permit packing and shall be cured by keeping it damp for not less than three days.

All ferrous metal parts of tubular sign structures shall be galvanized and painted in conformance with the requirements in "Clean and Paint (Miscellaneous Facilities)" of these special provisions.

Full compensation for furnishing anchor bolt templates and for testing of welds shall be considered as included in the contract price paid per kilogram for furnish sign structure (truss), and no additional compensation will be allowed therefor.

REGISTERED PROFESSIONAL ENGINEER
STEVE MARGARIS
No. 36845
Exp. 6/2012
CIVIL
STATE OF CALIFORNIA

CONTRACT NO. 04-012054
CONTRACT CHANGE ORDER NO. 032
SHEET 5 OF 5

STATE OF CALIFORNIA - DEPARTMENT OF TRANSPORTATION

CONTRACT CHANGE ORDER MEMORANDUM

DATE: 11/4/2010 Page 1 of 1

TO: Deanna Vilcheck, ACM / DV	FILE: E.A. 04 - 0120S4
FROM: Rajesh Oberoi, Senior R.E.	CO-RTE-PM SF-80-12.7/13.2
	FED. NO. NO FED AID
CCO#: 32 SUPPLEMENT#: 0 Category Code: CHSA	CONTINGENCY BALANCE (incl. this change) $24,726,515.00
COST: $0.00 INCREASE ☐ DECREASE ☐	HEADQUARTERS APPROVAL REQUIRED? ☑ YES ☐ NO
SUPPLEMENTAL FUNDS PROVIDED: $0.00	IS THIS REQUEST IN ACCORDANCE WITH ENVIRONMENTAL DOCUMENTS? ☑ YES ☐ NO
CCO DESCRIPTION: Overhead Sign Specs and Location Change	**PROJECT DESCRIPTION:** YBITS-1 (Yerba Buena Island Transition Structures)

Original Contract Time:	Time Adj. This Change:	Previously Approved CCO Time Adjustments:	Percentage Time Adjusted: (including this change)	Total # of Unreconciled Deferred Time CCO(s): (including this change)
1390 Day(s)	0 Day(s)	0 Day(s)	0 %	0

THIS CHANGE ORDER PROVIDES FOR:

Amend Contract Special Provisions to include specifications for "Sign Structures" as shown on sheets 2 to 5 of this contract change order.

Revise the location of Overhead Sign Structure in accordance with revised contract plan sheet No. 97R1 of 806 (sheet 2 of 5 this change order.)

REASONS FOR CHANGE:

Sign Structures specifications were not included in the original contract special provisions and are now being added to the contract by this change. Mr. Mike Whiteside of Toll Bridge Design provided specification for "Sign Structures" and requested this change.

In addition, location of the overhead sign structure "Sign A" as shown on the structure plan sheet and district sign plan sheet did not match. Mr. Bob Zandipour of Toll Bridge Design provided revised signs plan sheet correcting the sign's location to that as shown on the structures plan sheet.

There will be no cost to the state by the way of this change.

Structures Maintenance concurs with this change.

As this change does not affect controlling item, no adjustment of contract time is warranted.

CONCURRED BY:		
Construction Engineer:	Rajesh Oberoi	Date 11/6/10
Bridge Engineer:	Mehran Ardakanian	Date 11/8/10
Project Engineer:		Date
Project Manager:		Date
FHWA Rep.:		Date
Environmental:		Date
Other (specify):		Date
Other (specify):		Date
District Prior Approval By:		Date
HQ (Issue Approve) By:	SEY HOSSNIEH	Date 11/15/10
Resident Engineer's Signature:	Rajesh Oberoi 11/6/10	Date

ESTIMATE OF COST	THIS REQUEST	TOTAL TO DATE
ITEMS	$0.00	$0.00
FORCE ACCOUNT	$0.00	$0.00
AGREED PRICE	$0.00	$0.00
ADJUSTMENT	$0.00	$0.00
TOTAL	$0.00	$0.00

FEDERAL PARTICIPATION

☑ PARTICIPATING ☐ PARTICIPATING IN PART ☑ NONE
☐ NON-PARTICIPATING (MAINTENANCE) ☐ NON-PARTICIPATING

FEDERAL SEGREGATION (if more than one Funding Source or P.I.P. type)
☑ CCO FUNDED PER CONTRACT ☐ CCO FUNDED AS FOLLOWS

FEDERAL FUNDING SOURCE	PERCENT

ADA Notice: For individuals with sensory disabilities, this document is available in alternate formats. For information call: (916) 654-6410 or TDD (916) 654-3880 or write Records and Forms Management, 1120 N Street, MS-89, Sacramento, CA 95814.

CONTRACT CHANGE ORDER

Change Requested by: Engineer

CCO 32	Suppl. No. 1	Contract No. 04 - 0120S4	Road SF-80-12.7/13.2	FED. AID LOC.: NO FED AID

To: **M C M CONSTRUCTION INC**

You are directed to make the following changes from the plans and specifications or do the following described work not included in the plans and specifications for this contract. ***NOTE: This change order is not effective until approved by the Engineer.***

Description of work to be done, estimate of quantities and prices to be paid. (Segregate between additional work at contract price, agreed price and force account.) Unless otherwise stated, rates for rental of equipment cover only such time as equipment is actually used and no allowance will be made for idle time. This last percentage shown is the net accumulated increase or decrease from the original quantity in the Engineer's Estimate.

Revise Overhead Sign Structure locations and add a barrier mounted sign foundation in accordance with revised plans sheets Nos. 97R2, 98R1 and 100R1of 806, sheets 2 through 4 of this contract change order.

Estimate of Increase in Contract Item at Contract Price:

Item No. 137: MISCELLANEOUS METAL
32 KG (+16.00%) $20.00 /KG = +$640.00 (+16.00%)

Estimated total cost for Increase in Contract Item.....$640.00

Adjustment of Compensation at Lump Sum:

For this work, the Contractor shall receive and accept and Adjustment of Compensation at an Agreed Lump Sum of $500.00. This sum constitutes full and complete compensation for providing all labor, material, equipment, tools and incidentals, including all markups by the reason of this change.

Estimated cost of Adjustment of Compensation at Lump Sum $500.00

8.14.12

Estimated Cost: Increase ☑ Decrease ☐ **$1,140.00**

By reason of this order the time of completion will be adjusted as follows: 0 days

Submitted by

Signature	Resident Engineer	Date
William Howe	William Howe, Senior R.E.	06·20·12

Approval Recommended by

Signature	Senior Resident Engineer	Date
William Howe	William Howe	06·20·12

Engineer Approval by

Signature	Senior Resident Engineer	Date
William Howe	William Howe	08-14-12

We the undersigned contractor, have given careful consideration to the change proposed and agree, if this proposal is approved, that we will provide all equipment, furnish the materials, except as may otherwise be noted above, and perform all services necessary for the work above specified, and will accept as full payment therefor the prices shown above.

NOTE: If you, the contractor, do not sign acceptance of this order, your attention is directed to the requirements of the specifications as to proceeding with the ordered work and filing a written protest within the time therein specified.

Contractor Acceptance by

Signature	(Print name and title)	Date
	Edmundo A Pulchi - Treasurer	8-10-2012

FOR COMPLETE RIGHT OF WAY AND ACCURATE ACCESS DATA, SEE RIGHT OF WAY RECORD MAPS AT DISTRICT OFFICE.

Dist	COUNTY	ROUTE	KILOMETER POST TOTAL PROJECT	SHEET No.	TOTAL SHEETS
04	SF	80	12.7/13.2	97R2	806

REGISTERED CIVIL ENGINEER 2/14/08 DATE

6-23-08
PLANS APPROVAL DATE

REGISTERED PROFESSIONAL ENGINEER JOHNNY KUO No. C 60036 Exp. 6/30/08 CIVIL STATE OF CALIFORNIA

THE STATE OF CALIFORNIA OR ITS OFFICERS OR AGENTS SHALL NOT BE RESPONSIBLE FOR THE ACCURACY OR COMPLETENESS OF ELECTRONIC COPIES OF THIS PLAN SHEET.

PB AMERICAS, Inc.
A Parsons Brinckerhoff Company
303 Second St., Suite 700N
San Francisco, CA 94107-1317

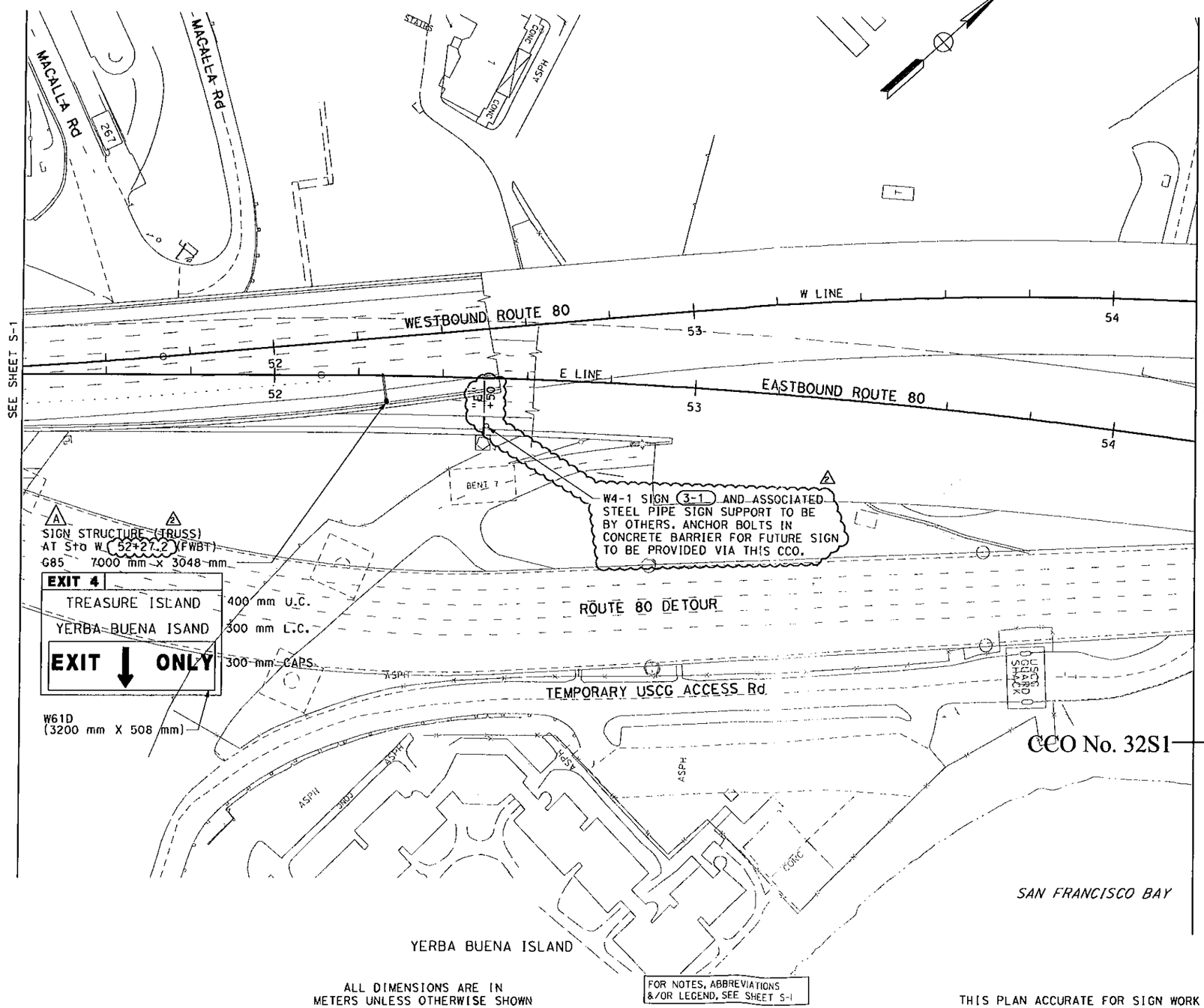

CCO No. 32S1

REGISTERED PROFESSIONAL ENGINEER Mark Grodzki No. 65594 Exp. 09/30/11 CIVIL STATE OF CALIFORNIA

FOR REVISION ONLY

MARK	DATE	DESCRIPTIONS	BY	CH'D	CCO#
2	06/09/11	ADD ANCHOR BOLTS FOR FUTURE SIGN	MG	EM	999
1	03/08/11	RELOCATE SIGN	MG	SYC	53

REVISIONS

CONTRACT CHANGE ORDER NO. 32S1
SHEET 2 OF 4

ALL DIMENSIONS ARE IN METERS UNLESS OTHERWISE SHOWN

FOR NOTES, ABBREVIATIONS &/OR LEGEND, SEE SHEET S-1

THIS PLAN ACCURATE FOR SIGN WORK ONLY

SIGN PLAN

SCALE 1:500

S-2

STATE OF CALIFORNIA - DEPARTMENT OF TRANSPORTATION
Caltrans

CONSULTANT FUNCTIONAL SUPERVISOR: BOB ZANDIPOUR
CALCULATED-DESIGNED BY: H. NGUYEN
CHECKED BY: B. NADELL
REVISED BY
DATE REVISED

LAST REVISION 03-06-08
DATE PLOTTED => 6/16/2011
TIME PLOTTED => 8:15:09 AM

RELATIVE BORDER SCALE IS IN MILLIMETERS 0 20 40 60 80

USERNAME => grodzk
DGN FILE => T:\13103\MS\psa\YBI Struc-Contract 2\civil\XXXX YBI 1 SIGN 34CCO XXXX\WORK\NC_401050002-01.dgn

FOR COMPLETE RIGHT OF WAY AND ACCURATE ACCESS DATA, SEE RIGHT OF WAY RECORD MAPS AT DISTRICT OFFICE.

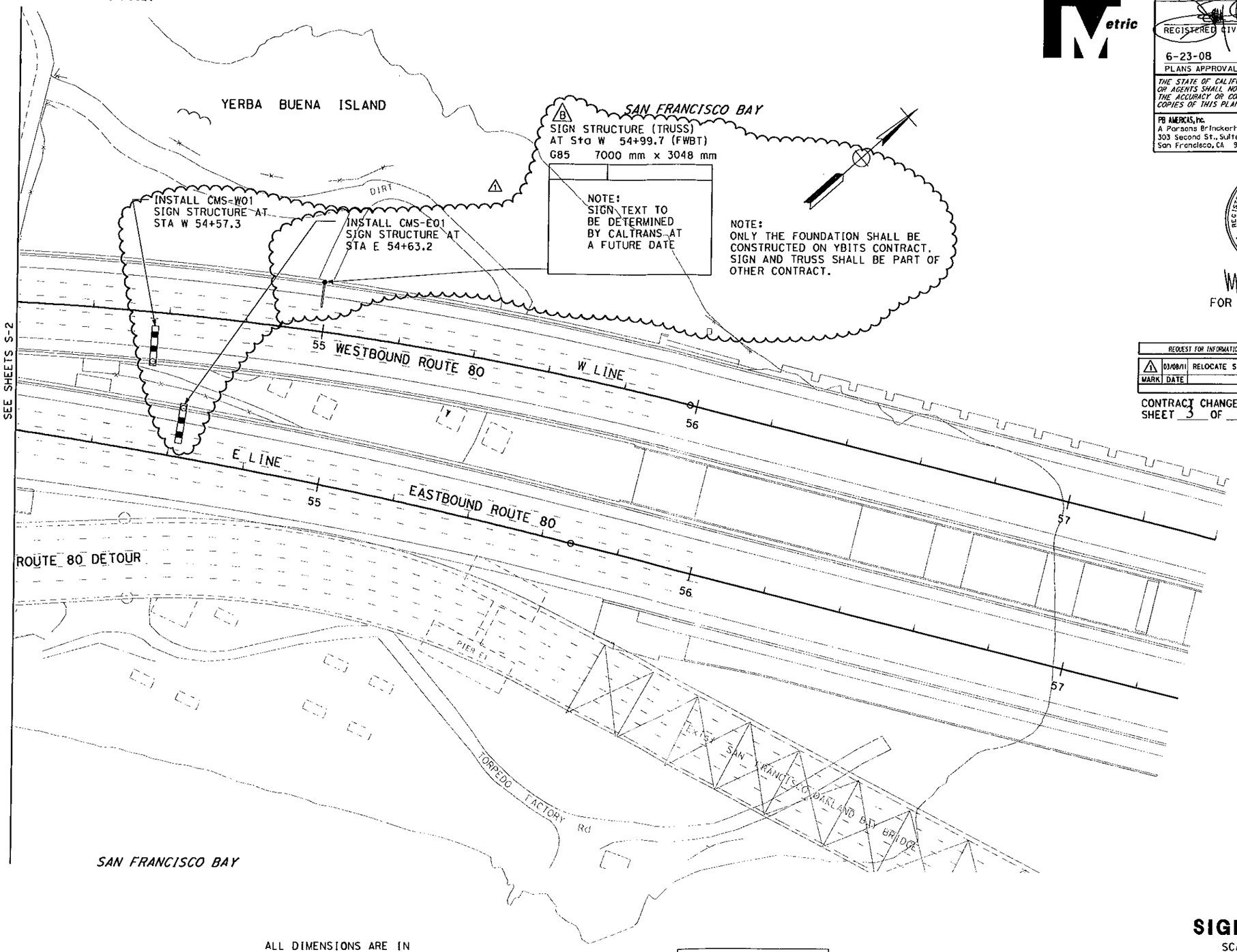

ALL DIMENSIONS ARE IN METERS UNLESS OTHERWISE SHOWN

FOR NOTES, ABBREVIATIONS &/OR LEGEND, SEE SHEET S-1

THIS PLAN ACCURATE FOR SIGN WORK ONLY

SIGN PLAN

SCALE 1:500

S-3

Dist	COUNTY	ROUTE	KILOMETER POST TOTAL PROJECT	SHEET No.	TOTAL SHEETS
04	SF	80	12.7/13.2	98R1	806

REGISTERED CIVIL ENGINEER 2/14/08 DATE

6-23-08
PLANS APPROVAL DATE

REGISTERED PROFESSIONAL ENGINEER JOHNNY KUO No. C 60036 Exp. 6/30/08 CIVIL STATE OF CALIFORNIA

THE STATE OF CALIFORNIA OR ITS OFFICERS OR AGENTS SHALL NOT BE RESPONSIBLE FOR THE ACCURACY OR COMPLETENESS OF ELECTRONIC COPIES OF THIS PLAN SHEET.

PB AMERICAS, Inc.
A Parsons Brinckerhoff Company
303 Second St., Suite 700N
San Francisco, CA 94107-1317

REGISTERED PROFESSIONAL ENGINEER Mark Grodzki No. 65594 Exp. 09/30/11 CIVIL STATE OF CALIFORNIA

FOR REVISION ONLY

1

REQUEST FOR INFORMATION NOT ADDRESSED IN THIS CCO REMAIN IN FORCE

MARK	DATE	DESCRIPTIONS	BY	CH'D	CCO#
1	03/08/11	RELOCATE SIGNS AND ADD SIGN	MG	SYC	53

REVISIONS

CONTRACT CHANGE ORDER NO. 32S1
SHEET 3 OF 4

STATE OF CALIFORNIA - DEPARTMENT OF TRANSPORTATION
Caltrans

CONSULTANT FUNCTIONAL SUPERVISOR: BOB ZANDIPOUR
CALCULATED-DESIGNED BY: H. NGUYEN
CHECKED BY: B. NADELL
REVISED BY
DATE REVISED

LAST REVISION 03-06-08
DATE PLOTTED => 3/15/2011
TIME PLOTTED => 9:54:22 AM

GENERAL STRUCTURAL NOTES:

1. SEE SD, SC AND CS SHEETS, AND "RAIL MOUNTED SIGNS" TABLE FOR SIGN LOCATIONS AND SIGN PANEL DIMENSIONS.
2. THE CONTRACTOR CAN ADJUST LOCATION OF SIGN ON STEEL BARRIER PLUS OR MINUS 1 m ALONG BARRIER LENGTH AS NECESSARY TO ACCOMODATE STEEL PIPE CONNECTOR AT STEEL BARRIER.
3. ANCHOR BOLTS TO BE EMBEDDED IN CONCRETE DURING BARRIER CAST.
4. FOR BARRIER DETAILS REFER TO STRUCTURES PLANS.
5. CAP TOP OF Std STEEL PIPE.
6. ALL STEEL SHALL BE HOT-DIPPED GALVANIZED

LEGEND:

- A / X-X — SECTION NAME / SHEET NUMBER
- 1 / X-X — DETAIL NUMBER / SHEET NUMBER

Caltrans Metric

Dist	COUNTY	ROUTE	KILOMETER POST TOTAL PROJECT	SHEET No.	TOTAL SHEETS
04	SF	80	12.7/13.2	100R1	806

REGISTERED CIVIL ENGINEER 2/14/08 DATE

6-23-08
PLANS APPROVAL DATE

REGISTERED PROFESSIONAL ENGINEER LAWRENCE M. JOHNSON No. C 44006 Exp. 6/30/09 CIVIL STATE OF CALIFORNIA

THE STATE OF CALIFORNIA OR ITS OFFICERS OR AGENTS SHALL NOT BE RESPONSIBLE FOR THE ACCURACY OR COMPLETENESS OF ELECTRONIC COPIES OF THIS PLAN SHEET.

PB AMERICAS, Inc.
A Parsons Brinckerhoff Company
303 Second St., Suite 700N
San Francisco, CA 94107-1317

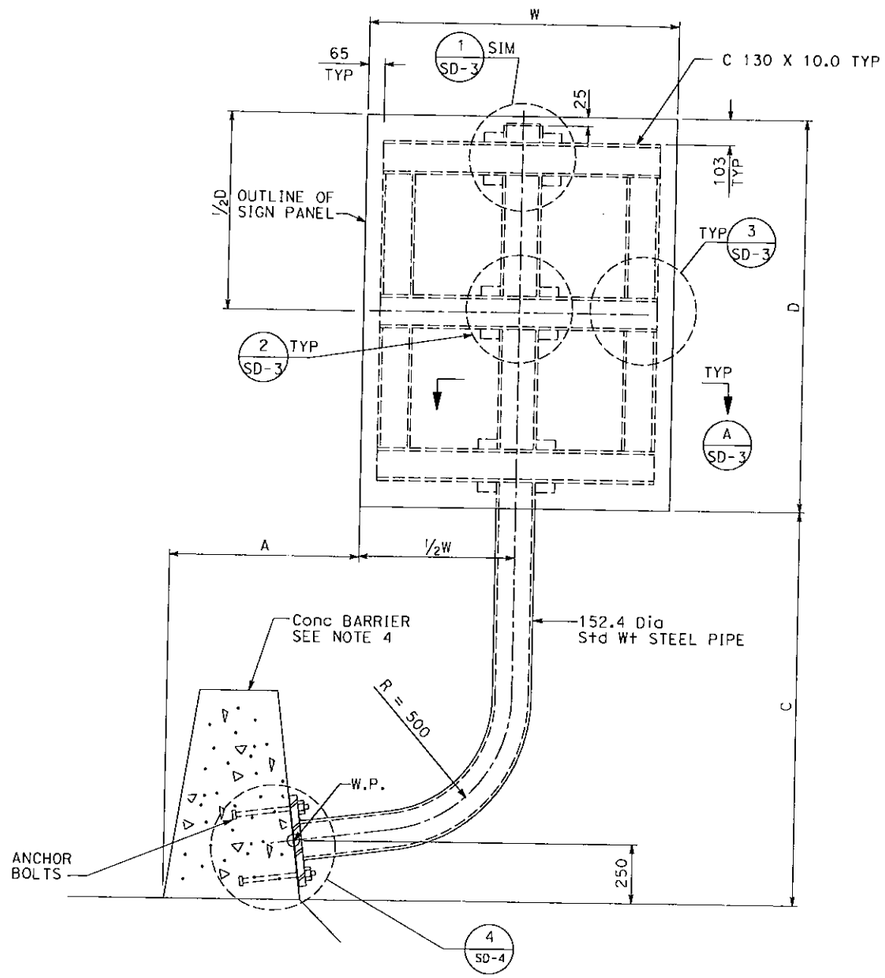

TYPE A
RIGHT SIDE
LEFT SIDE OPPOSITE HAND

METAL (BARRIER MOUNTED SIGNS)

SIGN	STATION	SIDE	BARRIER	TYPE	A	C	D	E	W
					mm				
PERMANENT SIGNS									
1-2	W 50+50	R	CONCRETE	B	754	2100	914	-	762
1-4	W 50+90	R	CONCRETE	C	610	2100	1724	1219	1724
1-9	W 50+32	L	CONCRETE	A	610	2100	1219	-	1374
1-10	W 50+70	L	CONCRETE	A	610	2100	1829	-	1524
1-11	W 51+09	L	CONCRETE	A	610	2100	1219	-	1676
3-1	E 52+50	R	CONCRETE	-	-	-	-	-	-

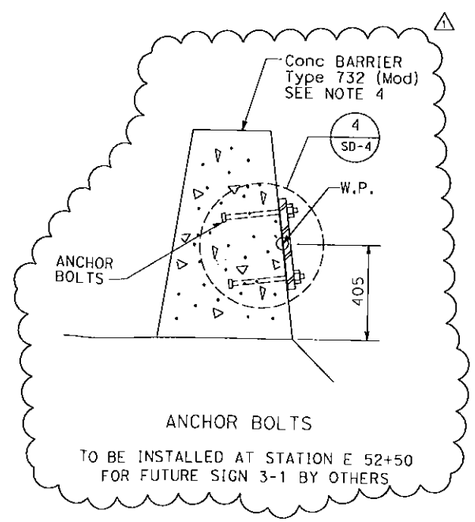

ANCHOR BOLTS
TO BE INSTALLED AT STATION E 52+50 FOR FUTURE SIGN 3-1 BY OTHERS

REGISTERED PROFESSIONAL ENGINEER Mark Grodzki No. 65594 Exp. 09/30/11 CIVIL STATE OF CALIFORNIA

FOR REVISION ONLY

MARK	DATE	DESCRIPTIONS	BY	CH'D	CCO#
1	06/09/11	ADD ANCHOR BOLTS FOR FUTURE SIGN	MG	EM	999

REVISIONS

CONTRACT CHANGE ORDER NO. 32S1
SHEET 4 OF 4

SIGN DETAILS
METAL (BARRIER MOUNTED SIGNS)

NO SCALE

ALL DIMENSIONS ARE IN MILLIMETERS UNLESS OTHERWISE SHOWN

SD-1

STATE OF CALIFORNIA - DEPARTMENT OF TRANSPORTATION
Caltrans

CONSULTANT FUNCTIONAL SUPERVISOR: BOB ZANDIPOUR
CALCULATED-DESIGNED BY: H. NGUYEN
CHECKED BY: B. NADELL
REVISED BY / DATE REVISED

DATE PLOTTED => 5/18/2012
TIME PLOTTED => 10:22:45 AM
REV 06-08

BORDER LAST REVISED 3/1/2001
IS IN MILLIMETERS
DGN FILE => 28 18-11 401 38 00 01 01 1.dgn
CU 04251
EA 0120S1

STATE OF CALIFORNIA - DEPARTMENT OF TRANSPORTATION

CONTRACT CHANGE ORDER

Change Requested by: Engineer

CCO 32	Suppl. No. 2	Contract No. 04 - 0120S4	Road SF-80-12.7/13.2	FED. AID LOC.: NO FED AID

To: **M C M CONSTRUCTION INC**

You are directed to make the following changes from the plans and specifications or do the following described work not included in the plans and specifications for this contract. ***NOTE: This change order is not effective until approved by the Engineer.***

Description of work to be done, estimate of quantities and prices to be paid. (Segregate between additional work at contract price, agreed price and force account.) Unless otherwise stated, rates for rental of equipment cover only such time as equipment is actually used and no allowance will be made for idle time. This last percentage shown is the net accumulated increase or decrease from the original quantity in the Engineer's Estimate.

Cut and couple vertical embedded reinforcement for two (2) Overhead Sign Structure foundations as directed by the Engineer and in accordance with Amended Standard Specifications, Section 52, "Reinforcement", and Standard Specification, Section 52, "Reinforcement".

Adjustment of Compensation at Lump Sum:

For this work, the Contractor shall receive and accept the Agreed Lump Sum of $10,000.00. This sum constitutes full and complete compensation for providing all labor, material, equipment, tools, sampling and testing, rework, and incidentals, including all markups and expedited performance by the reason of this change.

Adjustment of Compensation at Lump Sum = $10,000.00

RECEIVED
JUL 16 2012
MCM MAIN OFFICE

8.14.12

Estimated Cost: Increase ☑ Decrease ☐ **$10,000.00**

By reason of this order the time of completion will be adjusted as follows: 0 days

Submitted by

Signature	Resident Engineer	Date
William Howe	William Howe, Senior R.E.	07.06.12

Approval Recommended by

Signature	Senior Resident Engineer	Date
William Howe	William Howe	07.06.12

Engineer Approval by

Signature	Senior Resident Engineer	Date
William Howe	William Howe	08-14-12

We the undersigned contractor, have given careful consideration to the change proposed and agree, if this proposal is approved, that we will provide all equipment, furnish the materials, except as may otherwise be noted above, and perform all services necessary for the work above specified, and will accept as full payment therefor the prices shown above.

NOTE: If you, the contractor, do not sign acceptance of this order, your attention is directed to the requirements of the specifications as to proceeding with the ordered work and filing a written protest within the time therein specified.

Contractor Acceptance by

Signature	(Print name and title)	Date
	Edmundo A Rubio - Treasurer	8-10-2012

STATE OF CALIFORNIA - DEPARTMENT OF TRANSPORTATION

CONTRACT CHANGE ORDER MEMORANDUM

DATE: 1/11/2012 Page 1 of 1

TO: Deanna Vilcheck, ACM /	FILE: E.A. 04 - 0120S4
FROM: William Howe, Senior R.E.	CO-RTE-PM SF-80-12.7/13.2
	FED. NO. NO FED AID
CCO#: 32 SUPPLEMENT#: 1 Category Code: CHSA	CONTINGENCY BALANCE (incl. this change) $61,473,168.40
COST: $1,140.00 INCREASE ☑ DECREASE ☐	HEADQUARTERS APPROVAL REQUIRED? ☐ YES ☑ NO
SUPPLEMENTAL FUNDS PROVIDED: $0.00	IS THIS REQUEST IN ACCORDANCE WITH ENVIRONMENTAL DOCUMENTS? ☑ YES ☐ NO
CCO DESCRIPTION: OH Sign: Correct CMS Foundation Location	**PROJECT DESCRIPTION:** YBITS-1 (Yerba Buena Island Transition Structures)

Original Contract Time:	Time Adj. This Change:	Previously Approved CCO Time Adjustments:	Percentage Time Adjusted: (including this change)	Total # of Unreconciled Deferred Time CCO(s): (including this change)
1390 Day(s)	0 Day(s)	0 Day(s)	0 %	9

THIS CHANGE ORDER PROVIDES FOR:

Revise the location of Overhead Sign Structures and provide a barrier mounted sign foundation in accordance with revised contract plan sheet Nos. 97R2, 98R1 and 100R1 of 806 (sheets 2 through 4 of this change order).

Overhead sign structure locations as shown on the structure plan sheet and district sign plan sheet do not match. Mr. Bob Zandipour of Toll Bridge Design provided revised sign plan sheets correcting the location of the signs to that as shown on the structures plan sheet.

A foundation for a barrier mounted sign has also been added to this contract. This sign is located on the structure being built on this contract but is intended to serve a highway facility that will be built under a future contract.

Payment for this work will be an increase in contract item at contract unit price as follows:

Item No. 137: Miscellaneous Metal 32 KG (16.0%) @ $20.0 per KG = $640.00

The Contractor has agreed to an Adjustment in Compensation at Agreed Lump Sum of $500.00 for a change in character of work. The total cost of this CCO is $1,140.00, which can be funded from the contract's contingency fund. A cost analysis is on file.

Structure Maintenance concurrence will be required for this change.

No adjustment of contract time is warranted, as this change does not affect the controlling operation.

CONCURRED BY:		
Construction Engineer:	William Howe	Date 06.20.12
Bridge Engineer:	Mehran Ardakanian	Date 8.14.12
Project Engineer:	Bob Zandipour, Design	Date 6-25-12
Project Manager:	Ken Terpstra	Date 6-21-12
FHWA Rep.:		Date
Environmental:		Date
Other (specify):	Lina Ellis, Str. Mtce.	Date 6-26-12
Other (specify):		Date
District Prior Approval By:		Date
HQ (Issue Approve) By:		Date
Resident Engineer's Signature:	William Howe	Date 06.20.12

ESTIMATE OF COST

	THIS REQUEST	TOTAL TO DATE
ITEMS	$640.00	$640.00
FORCE ACCOUNT	$0.00	$0.00
AGREED PRICE	$0.00	$0.00
ADJUSTMENT	$500.00	$500.00
TOTAL	$1,140.00	$1,140.00

FEDERAL PARTICIPATION

☐ PARTICIPATING ☐ PARTICIPATING IN PART ☑ NONE
☐ NON-PARTICIPATING (MAINTENANCE) ☐ NON-PARTICIPATING

FEDERAL SEGREGATION (if more than one Funding Source or P.I.P. type)
☐ CCO FUNDED PER CONTRACT ☐ CCO FUNDED AS FOLLOWS

FEDERAL FUNDING SOURCE	PERCENT

ADA Notice: For individuals with sensory disabilities, this document is available in alternate formats. For information call (916) 654-6410 or TDD (916) 654-3880 or write Records and Forms Management, 1120 N Street, MS-89, Sacramento, CA 95814.

STATE OF CALIFORNIA - DEPARTMENT OF TRANSPORTATION

CONTRACT CHANGE ORDER MEMORANDUM

DATE: 2/21/2012 Page 1 of 1

TO: Deanna Vilcheck, ACM /	FILE: E.A. 04 - 0120S4
FROM: William Howe, Senior R.E.	CO-RTE-PM SF-80-12.7/13.2
	FED. NO. NO FED AID
CCO#: 32 SUPPLEMENT#: 2 Category Code: CHPG	CONTINGENCY BALANCE (incl. this change) $51,288,523.00
COST: $10,000.00 INCREASE ☑ DECREASE ☐	HEADQUARTERS APPROVAL REQUIRED? ☐ YES ☑ NO
SUPPLEMENTAL FUNDS PROVIDED: $0.00	IS THIS REQUEST IN ACCORDANCE WITH ENVIRONMENTAL DOCUMENTS? ☑ YES ☐ NO
CCO DESCRIPTION: OH Sign - Foundation Rebar Coupling	**PROJECT DESCRIPTION:** YBITS-1 (Yerba Buena Island Transition Structures)

Original Contract Time:	Time Adj. This Change:	Previously Approved CCO Time Adjustments:	Percentage Time Adjusted: (including this change)	Total # of Unreconciled Deferred Time CCO(s): (including this change)
1390 Day(s)	0 Day(s)	0 Day(s)	0 %	9

THIS CHANGE ORDER PROVIDES FOR:

This Change Order Provides for cutting and coupling of vertical reinforcement for two (2) Overhead Sign Structure foundations. Sign Structure foundations consist of vertical reinforcement that is embedded into the bridge soffit and a prefabricated anchor bolt cage that is confined inside this vertical reinforcement. The Bidwell machine that is used for concrete placement conflicted with the vertical reinforcement and the anchor bolt cage.

The Engineer directed the Contractor to cut and couple the vertical reinforcement and erect the anchor bolt cage after the placement of the deck concrete in order to provide continuous placement of the concrete with the Bidwell. Continuous placement of concrete with the Bidwell in contrast with hand placement of concrete for the deck section adjacent to the sign structure foundation provides:

1) consistent and clean surface finish;
2) continuous structural section; and
3) expedited the placement of the deck concrete.

The Contractor has agreed to an Adjustment in Compensation at Agreed Lump Sum of $10,000.00 for all labor, material, equipment, tools, sampling and testing, rework and incidentals, including all markups and expedited performance by the reason of this change.

Structures Maintenance concurrence is not required as this doesn't affect any permanent maintenance features.

As this change does not affect controlling item, no adjustment of contract time is warranted.

CONCURRED BY:		
Construction Engineer:	William Howe	Date 07.06.12
Bridge Engineer:	Mehran Ardakanian MA	Date 6.14.12
Project Engineer:	Bob Zandipour, Design	Date 7-9-12
Project Manager:	Ken Terpstra	Date 7-13-12
FHWA Rep.:		Date
Environmental:		Date
Other (specify):		Date
Other (specify):		Date
District Prior Approval By:		Date
HQ (Issue Approve) By:		Date
Resident Engineer's Signature:	William Howe	Date 07.06.12

ESTIMATE OF COST

	THIS REQUEST	TOTAL TO DATE
ITEMS	$0.00	$640.00
FORCE ACCOUNT	$0.00	$0.00
AGREED PRICE	$0.00	$0.00
ADJUSTMENT	$10,000.00	$10,500.00
TOTAL	$10,000.00	$11,140.00

FEDERAL PARTICIPATION

☐ PARTICIPATING ☐ PARTICIPATING IN PART ☑ NONE
☐ NON-PARTICIPATING (MAINTENANCE) ☐ NON-PARTICIPATING

FEDERAL SEGREGATION (if more than one Funding Source or P.I.P. type)
☐ CCO FUNDED PER CONTRACT ☐ CCO FUNDED AS FOLLOWS

FEDERAL FUNDING SOURCE	PERCENT

ADA Notice: For individuals with sensory disabilities, this document is available in alternate formats. For information call: (916) 654-6410 or TDD (916) 654-3880 or write Records and Forms Management, 1120 N Street, MS-89, Sacramento, CA 95814.

CONTRACT CHANGE ORDER

Change Requested by: Engineer

CCO 32	Suppl. No. 1	Contract No. 04 - 0120S4	Road SF-80-12.7/13.2	FED. AID LOC.: NO FED AID

To: **M C M CONSTRUCTION INC**

You are directed to make the following changes from the plans and specifications or do the following described work not included in the plans and specifications for this contract. ***NOTE: This change order is not effective until approved by the Engineer.***

Description of work to be done, estimate of quantities and prices to be paid. (Segregate between additional work at contract price, agreed price and force account.) Unless otherwise stated, rates for rental of equipment cover only such time as equipment is actually used and no allowance will be made for idle time. This last percentage shown is the net accumulated increase or decrease from the original quantity in the Engineer's Estimate.

Revise Overhead Sign Structure locations and add a barrier mounted sign foundation in accordance with revised plans sheets Nos. 97R2, 98R1 and 100R1of 806, sheets 2 through 4 of this contract change order.

Estimate of Increase in Contract Item at Contract Price:

Item No. 137: MISCELLANEOUS METAL
32 KG (+16.00%) $20.00 /KG = +$640.00 (+16.00%)

Estimated total cost for Increase in Contract Item.....$640.00

Adjustment of Compensation at Lump Sum:

For this work, the Contractor shall receive and accept and Adjustment of Compensation at an Agreed Lump Sum of $500.00. This sum constitutes full and complete compensation for providing all labor, material, equipment, tools and incidentals, including all markups by the reason of this change.

Estimated cost of Adjustment of Compensation at Lump Sum $500.00

8.14.12

Estimated Cost: Increase ☑ Decrease ☐ **$1,140.00**

By reason of this order the time of completion will be adjusted as follows: 0 days

Submitted by

Signature	Resident Engineer	Date
William Howe	William Howe, Senior R.E.	06·20·12

Approval Recommended by

Signature	Senior Resident Engineer	Date
William Howe	William Howe	06·20·12

Engineer Approval by

Signature	Senior Resident Engineer	Date
William Howe	William Howe	08-14-12

We the undersigned contractor, have given careful consideration to the change proposed and agree, if this proposal is approved, that we will provide all equipment, furnish the materials, except as may otherwise be noted above, and perform all services necessary for the work above specified, and will accept as full payment therefor the prices shown above.

NOTE: If you, the contractor, do not sign acceptance of this order, your attention is directed to the requirements of the specifications as to proceeding with the ordered work and filing a written protest within the time therein specified.

Contractor Acceptance by

Signature	(Print name and title)	Date
	Edmundo A Pulchi - Treasurer	8-10-2012

FOR COMPLETE RIGHT OF WAY AND ACCURATE ACCESS DATA, SEE RIGHT OF WAY RECORD MAPS AT DISTRICT OFFICE.

Dist	COUNTY	ROUTE	KILOMETER POST TOTAL PROJECT	SHEET No.	TOTAL SHEETS
04	SF	80	12.7/13.2	97R2	806

REGISTERED CIVIL ENGINEER 2/14/08 DATE

6-23-08
PLANS APPROVAL DATE

REGISTERED PROFESSIONAL ENGINEER JOHNNY KUO No. C 60036 Exp. 6/30/08 CIVIL STATE OF CALIFORNIA

THE STATE OF CALIFORNIA OR ITS OFFICERS OR AGENTS SHALL NOT BE RESPONSIBLE FOR THE ACCURACY OR COMPLETENESS OF ELECTRONIC COPIES OF THIS PLAN SHEET.

PB AMERICAS, Inc.
A Parsons Brinckerhoff Company
303 Second St., Suite 700N
San Francisco, CA 94107-1317

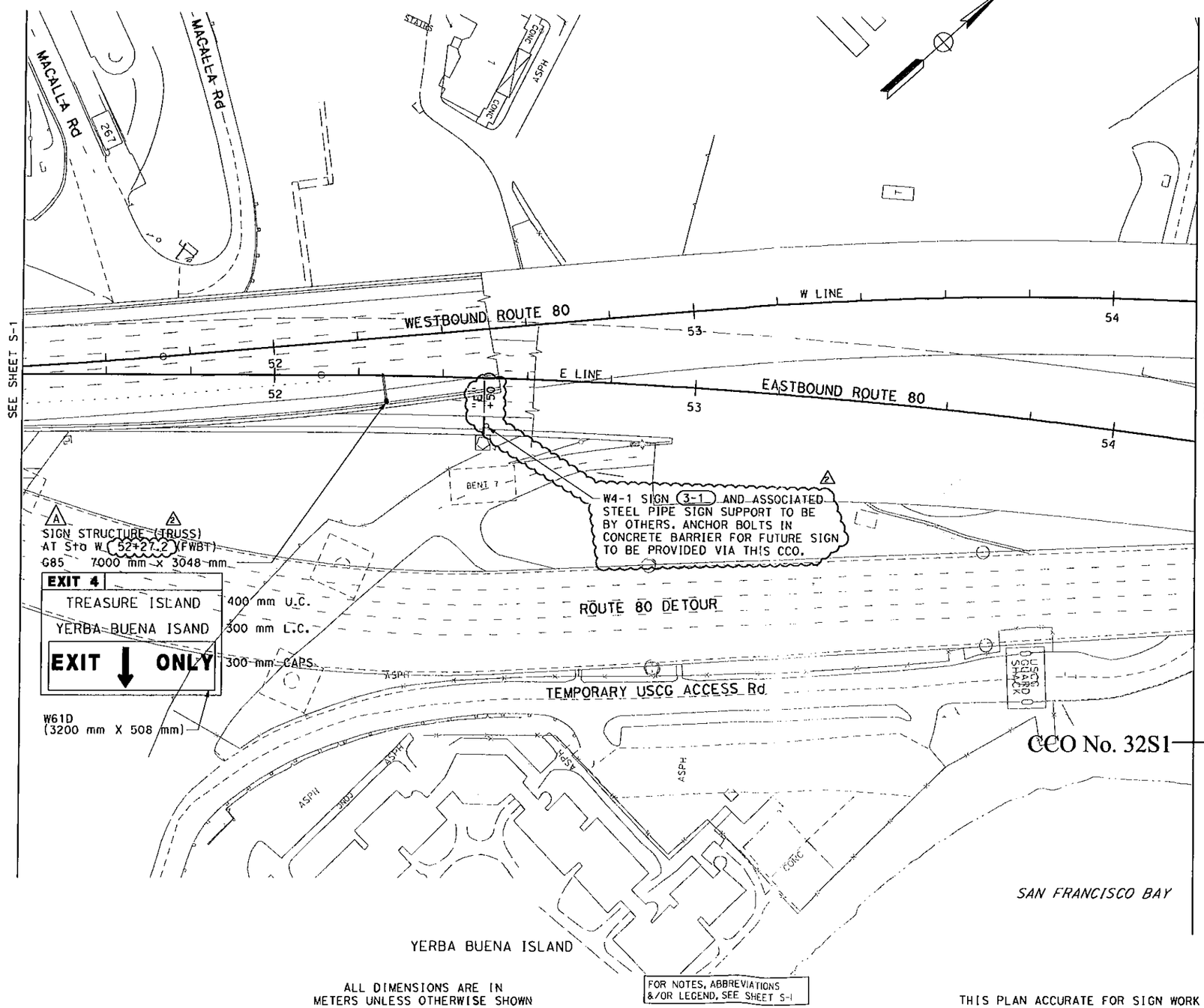

CCO No. 32S1

REGISTERED PROFESSIONAL ENGINEER Mark Grodzki No. 65594 Exp. 09/30/11 CIVIL STATE OF CALIFORNIA

FOR REVISION ONLY

MARK	DATE	DESCRIPTIONS	BY	CH'D	CCO#
2	06/09/11	ADD ANCHOR BOLTS FOR FUTURE SIGN	MG	EM	999
1	03/08/11	RELOCATE SIGN	MG	SYC	53

REVISIONS

CONTRACT CHANGE ORDER NO. 32S1
SHEET 2 OF 4

ALL DIMENSIONS ARE IN METERS UNLESS OTHERWISE SHOWN

FOR NOTES, ABBREVIATIONS &/OR LEGEND, SEE SHEET S-1

THIS PLAN ACCURATE FOR SIGN WORK ONLY

SIGN PLAN

SCALE 1:500

S-2

STATE OF CALIFORNIA - DEPARTMENT OF TRANSPORTATION
Caltrans

CONSULTANT FUNCTIONAL SUPERVISOR: BOB ZANDIPOUR
CALCULATED-DESIGNED BY: H. NGUYEN
CHECKED BY: B. NADELL
REVISED BY
DATE REVISED

LAST REVISION 03-06-08
DATE PLOTTED => 6/16/2011
TIME PLOTTED => 8:15:09 AM

RELATIVE BORDER SCALE IS IN MILLIMETERS 0 20 40 60 80

USERNAME => grodzk
DGN FILE => T:\13103\MS\psa\YBI Struc-Contract 2\civil\XXXX YBI 1 SIGN 34CCO XXXX\WORK\NC_401050002-01.dgn

FOR COMPLETE RIGHT OF WAY AND ACCURATE ACCESS DATA, SEE RIGHT OF WAY RECORD MAPS AT DISTRICT OFFICE.

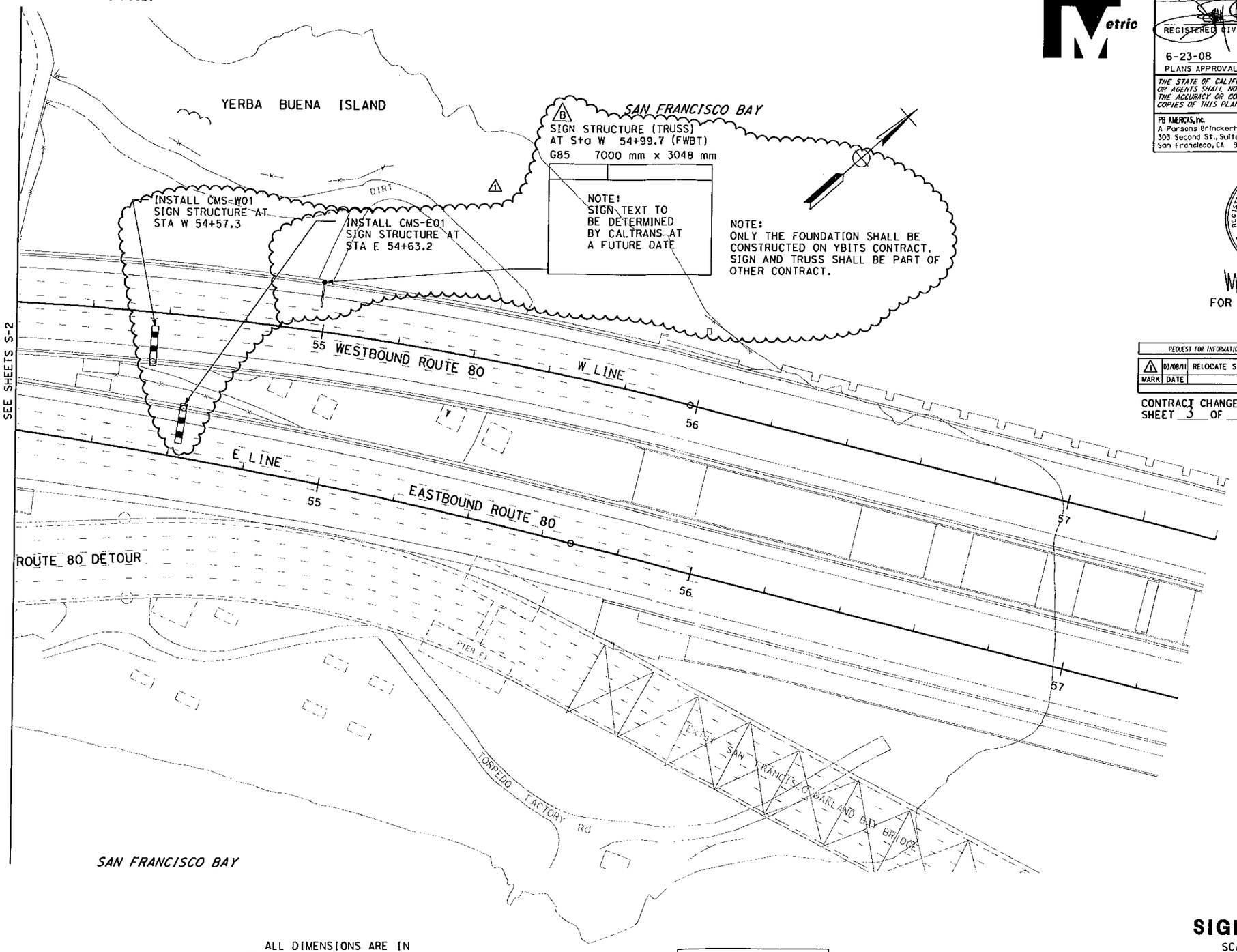

ALL DIMENSIONS ARE IN METERS UNLESS OTHERWISE SHOWN

FOR NOTES, ABBREVIATIONS &/OR LEGEND, SEE SHEET S-1

THIS PLAN ACCURATE FOR SIGN WORK ONLY

SIGN PLAN

SCALE 1:500

S-3

Dist	COUNTY	ROUTE	KILOMETER POST TOTAL PROJECT	SHEET No.	TOTAL SHEETS
04	SF	80	12.7/13.2	98R1	806

REGISTERED CIVIL ENGINEER 2/14/08 DATE

6-23-08
PLANS APPROVAL DATE

REGISTERED PROFESSIONAL ENGINEER JOHNNY KUO No. C 60036 Exp. 6/30/08 CIVIL STATE OF CALIFORNIA

THE STATE OF CALIFORNIA OR ITS OFFICERS OR AGENTS SHALL NOT BE RESPONSIBLE FOR THE ACCURACY OR COMPLETENESS OF ELECTRONIC COPIES OF THIS PLAN SHEET.

PB AMERICAS, Inc.
A Parsons Brinckerhoff Company
303 Second St., Suite 700N
San Francisco, CA 94107-1317

REGISTERED PROFESSIONAL ENGINEER Mark Grodzki No. 65594 Exp. 09/30/11 CIVIL STATE OF CALIFORNIA

FOR REVISION ONLY

1

REQUEST FOR INFORMATION NOT ADDRESSED IN THIS CCO REMAIN IN FORCE

MARK	DATE	DESCRIPTIONS	BY	CH'D	CCO#
1	03/08/11	RELOCATE SIGNS AND ADD SIGN	MG	SYC	53

REVISIONS

CONTRACT CHANGE ORDER NO. 32S1
SHEET 3 OF 4

STATE OF CALIFORNIA - DEPARTMENT OF TRANSPORTATION
Caltrans

CONSULTANT FUNCTIONAL SUPERVISOR: BOB ZANDIPOUR
CALCULATED-DESIGNED BY: H. NGUYEN
CHECKED BY: B. NADELL
REVISED BY
DATE REVISED

LAST REVISION 03-06-08
DATE PLOTTED => 3/15/2011
TIME PLOTTED => 9:54:22 AM

GENERAL STRUCTURAL NOTES:

1. SEE SD, SC AND CS SHEETS, AND "RAIL MOUNTED SIGNS" TABLE FOR SIGN LOCATIONS AND SIGN PANEL DIMENSIONS.
2. THE CONTRACTOR CAN ADJUST LOCATION OF SIGN ON STEEL BARRIER PLUS OR MINUS 1 m ALONG BARRIER LENGTH AS NECESSARY TO ACCOMODATE STEEL PIPE CONNECTOR AT STEEL BARRIER.
3. ANCHOR BOLTS TO BE EMBEDDED IN CONCRETE DURING BARRIER CAST.
4. FOR BARRIER DETAILS REFER TO STRUCTURES PLANS.
5. CAP TOP OF Std STEEL PIPE.
6. ALL STEEL SHALL BE HOT-DIPPED GALVANIZED

LEGEND:

- A / X-X — SECTION NAME / SHEET NUMBER
- 1 / X-X — DETAIL NUMBER / SHEET NUMBER

Caltrans Metric

Dist	COUNTY	ROUTE	KILOMETER POST TOTAL PROJECT	SHEET No.	TOTAL SHEETS
04	SF	80	12.7/13.2	100R1	806

REGISTERED CIVIL ENGINEER 2/14/08 DATE

6-23-08
PLANS APPROVAL DATE

REGISTERED PROFESSIONAL ENGINEER LAWRENCE M. JOHNSON No. C 44006 Exp. 6/30/09 CIVIL STATE OF CALIFORNIA

THE STATE OF CALIFORNIA OR ITS OFFICERS OR AGENTS SHALL NOT BE RESPONSIBLE FOR THE ACCURACY OR COMPLETENESS OF ELECTRONIC COPIES OF THIS PLAN SHEET.

PB AMERICAS, Inc.
A Parsons Brinckerhoff Company
303 Second St., Suite 700N
San Francisco, CA 94107-1317

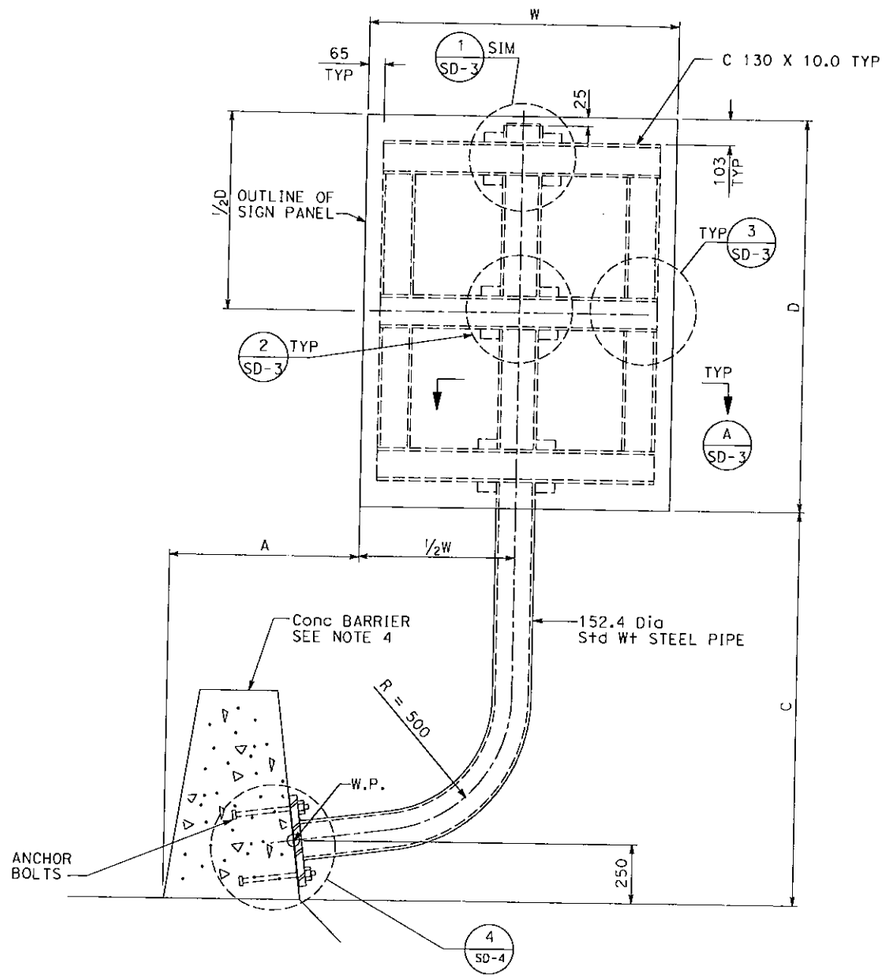

TYPE A
RIGHT SIDE
LEFT SIDE OPPOSITE HAND

METAL (BARRIER MOUNTED SIGNS)

SIGN	STATION	SIDE	BARRIER	TYPE	A	C	D	E	W
					mm				
PERMANENT SIGNS									
1-2	W 50+50	R	CONCRETE	B	754	2100	914	-	762
1-4	W 50+90	R	CONCRETE	C	610	2100	1724	1219	1724
1-9	W 50+32	L	CONCRETE	A	610	2100	1219	-	1374
1-10	W 50+70	L	CONCRETE	A	610	2100	1829	-	1524
1-11	W 51+09	L	CONCRETE	A	610	2100	1219	-	1676
3-1	E 52+50	R	CONCRETE	-	-	-	-	-	-

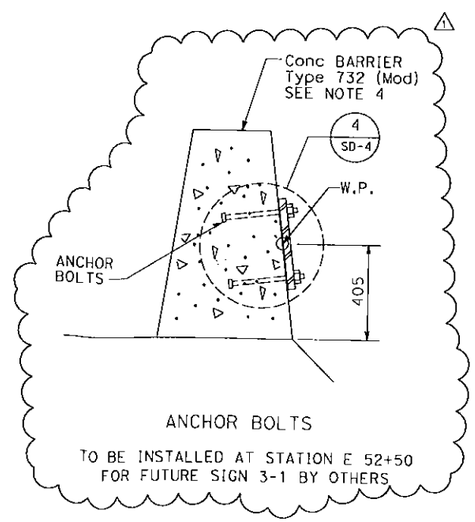

ANCHOR BOLTS
TO BE INSTALLED AT STATION E 52+50 FOR FUTURE SIGN 3-1 BY OTHERS

REGISTERED PROFESSIONAL ENGINEER Mark Grodzki No. 65594 Exp. 09/30/11 CIVIL STATE OF CALIFORNIA

FOR REVISION ONLY

MARK	DATE	DESCRIPTIONS	BY	CH'D	CCO#
1	06/09/11	ADD ANCHOR BOLTS FOR FUTURE SIGN	MG	EM	999

REVISIONS

CONTRACT CHANGE ORDER NO. 32S1
SHEET 4 OF 4

SIGN DETAILS
METAL (BARRIER MOUNTED SIGNS)

NO SCALE

ALL DIMENSIONS ARE IN MILLIMETERS UNLESS OTHERWISE SHOWN

SD-1

STATE OF CALIFORNIA - DEPARTMENT OF TRANSPORTATION
Caltrans

CONSULTANT FUNCTIONAL SUPERVISOR: BOB ZANDIPOUR
CALCULATED-DESIGNED BY: H. NGUYEN
CHECKED BY: B. NADELL
REVISED BY / DATE REVISED

DATE PLOTTED => 5/18/2012
TIME PLOTTED => 10:22:45 AM
REV 06-08

BORDER LAST REVISED 3/1/2001
IS IN MILLIMETERS
DGN FILE => 28 18-11 401 38 00 01 01 1.dgn
CU 04251
EA 0120S1

STATE OF CALIFORNIA - DEPARTMENT OF TRANSPORTATION

CONTRACT CHANGE ORDER

Change Requested by: Engineer

CCO 32	Suppl. No. 2	Contract No. 04 - 0120S4	Road SF-80-12.7/13.2	FED. AID LOC.: NO FED AID

To: **M C M CONSTRUCTION INC**

You are directed to make the following changes from the plans and specifications or do the following described work not included in the plans and specifications for this contract. ***NOTE: This change order is not effective until approved by the Engineer.***

Description of work to be done, estimate of quantities and prices to be paid. (Segregate between additional work at contract price, agreed price and force account.) Unless otherwise stated, rates for rental of equipment cover only such time as equipment is actually used and no allowance will be made for idle time. This last percentage shown is the net accumulated increase or decrease from the original quantity in the Engineer's Estimate.

Cut and couple vertical embedded reinforcement for two (2) Overhead Sign Structure foundations as directed by the Engineer and in accordance with Amended Standard Specifications, Section 52, "Reinforcement", and Standard Specification, Section 52, "Reinforcement".

Adjustment of Compensation at Lump Sum:

For this work, the Contractor shall receive and accept the Agreed Lump Sum of $10,000.00. This sum constitutes full and complete compensation for providing all labor, material, equipment, tools, sampling and testing, rework, and incidentals, including all markups and expedited performance by the reason of this change.

Adjustment of Compensation at Lump Sum = $10,000.00

RECEIVED
JUL 16 2012
MCM MAIN OFFICE

8.14.12

Estimated Cost: Increase ☑ Decrease ☐ **$10,000.00**

By reason of this order the time of completion will be adjusted as follows: 0 days

Submitted by

Signature	Resident Engineer	Date
William Howe	William Howe, Senior R.E.	07.06.12

Approval Recommended by

Signature	Senior Resident Engineer	Date
William Howe	William Howe	07.06.12

Engineer Approval by

Signature	Senior Resident Engineer	Date
William Howe	William Howe	08-14-12

We the undersigned contractor, have given careful consideration to the change proposed and agree, if this proposal is approved, that we will provide all equipment, furnish the materials, except as may otherwise be noted above, and perform all services necessary for the work above specified, and will accept as full payment therefor the prices shown above.

NOTE: If you, the contractor, do not sign acceptance of this order, your attention is directed to the requirements of the specifications as to proceeding with the ordered work and filing a written protest within the time therein specified.

Contractor Acceptance by

Signature	(Print name and title)	Date
	Edmundo A Rubio - Treasurer	8-10-2012

STATE OF CALIFORNIA - DEPARTMENT OF TRANSPORTATION

CONTRACT CHANGE ORDER MEMORANDUM

DATE: 1/11/2012 Page 1 of 1

TO: Deanna Vilcheck, ACM /	FILE: E.A. 04 - 0120S4
FROM: William Howe, Senior R.E.	CO-RTE-PM SF-80-12.7/13.2
	FED. NO. NO FED AID
CCO#: 32 SUPPLEMENT#: 1 Category Code: CHSA	CONTINGENCY BALANCE (incl. this change) $61,473,168.40
COST: $1,140.00 INCREASE ☑ DECREASE ☐	HEADQUARTERS APPROVAL REQUIRED? ☐ YES ☑ NO
SUPPLEMENTAL FUNDS PROVIDED: $0.00	IS THIS REQUEST IN ACCORDANCE WITH ENVIRONMENTAL DOCUMENTS? ☑ YES ☐ NO
CCO DESCRIPTION: OH Sign: Correct CMS Foundation Location	**PROJECT DESCRIPTION:** YBITS-1 (Yerba Buena Island Transition Structures)

Original Contract Time:	Time Adj. This Change:	Previously Approved CCO Time Adjustments:	Percentage Time Adjusted: (including this change)	Total # of Unreconciled Deferred Time CCO(s): (including this change)
1390 Day(s)	0 Day(s)	0 Day(s)	0 %	9

THIS CHANGE ORDER PROVIDES FOR:

Revise the location of Overhead Sign Structures and provide a barrier mounted sign foundation in accordance with revised contract plan sheet Nos. 97R2, 98R1 and 100R1 of 806 (sheets 2 through 4 of this change order).

Overhead sign structure locations as shown on the structure plan sheet and district sign plan sheet do not match. Mr. Bob Zandipour of Toll Bridge Design provided revised sign plan sheets correcting the location of the signs to that as shown on the structures plan sheet.

A foundation for a barrier mounted sign has also been added to this contract. This sign is located on the structure being built on this contract but is intended to serve a highway facility that will be built under a future contract.

Payment for this work will be an increase in contract item at contract unit price as follows:

Item No. 137: Miscellaneous Metal 32 KG (16.0%) @ $20.0 per KG = $640.00

The Contractor has agreed to an Adjustment in Compensation at Agreed Lump Sum of $500.00 for a change in character of work. The total cost of this CCO is $1,140.00, which can be funded from the contract's contingency fund. A cost analysis is on file.

Structure Maintenance concurrence will be required for this change.

No adjustment of contract time is warranted, as this change does not affect the controlling operation.

CONCURRED BY:		
Construction Engineer:	William Howe	Date 06.20.12
Bridge Engineer:	Mehran Ardakanian	Date 8.14.12
Project Engineer:	Bob Zandipour, Design	Date 6-25-12
Project Manager:	Ken Terpstra	Date 6-21-12
FHWA Rep.:		Date
Environmental:		Date
Other (specify):	Lina Ellis, Str. Mtce.	Date 6-26-12
Other (specify):		Date
District Prior Approval By:		Date
HQ (Issue Approve) By:		Date
Resident Engineer's Signature:	William Howe	Date 06.20.12

ESTIMATE OF COST

	THIS REQUEST	TOTAL TO DATE
ITEMS	$640.00	$640.00
FORCE ACCOUNT	$0.00	$0.00
AGREED PRICE	$0.00	$0.00
ADJUSTMENT	$500.00	$500.00
TOTAL	$1,140.00	$1,140.00

FEDERAL PARTICIPATION

☐ PARTICIPATING ☐ PARTICIPATING IN PART ☑ NONE
☐ NON-PARTICIPATING (MAINTENANCE) ☐ NON-PARTICIPATING

FEDERAL SEGREGATION (if more than one Funding Source or P.I.P. type)
☐ CCO FUNDED PER CONTRACT ☐ CCO FUNDED AS FOLLOWS

FEDERAL FUNDING SOURCE	PERCENT

ADA Notice: For individuals with sensory disabilities, this document is available in alternate formats. For information call (916) 654-6410 or TDD (916) 654-3880 or write Records and Forms Management, 1120 N Street, MS-89, Sacramento, CA 95814.

STATE OF CALIFORNIA - DEPARTMENT OF TRANSPORTATION

CONTRACT CHANGE ORDER MEMORANDUM

DATE: 2/21/2012 Page 1 of 1

TO: Deanna Vilcheck, ACM /	FILE: E.A. 04 - 0120S4
FROM: William Howe, Senior R.E.	CO-RTE-PM SF-80-12.7/13.2
	FED. NO. NO FED AID
CCO#: 32 SUPPLEMENT#: 2 Category Code: CHPG	CONTINGENCY BALANCE (incl. this change) $51,288,523.00
COST: $10,000.00 INCREASE ☑ DECREASE ☐	HEADQUARTERS APPROVAL REQUIRED? ☐ YES ☑ NO
SUPPLEMENTAL FUNDS PROVIDED: $0.00	IS THIS REQUEST IN ACCORDANCE WITH ENVIRONMENTAL DOCUMENTS? ☑ YES ☐ NO
CCO DESCRIPTION: OH Sign - Foundation Rebar Coupling	**PROJECT DESCRIPTION:** YBITS-1 (Yerba Buena Island Transition Structures)

Original Contract Time:	Time Adj. This Change:	Previously Approved CCO Time Adjustments:	Percentage Time Adjusted: (including this change)	Total # of Unreconciled Deferred Time CCO(s): (including this change)
1390 Day(s)	0 Day(s)	0 Day(s)	0 %	9

THIS CHANGE ORDER PROVIDES FOR:

This Change Order Provides for cutting and coupling of vertical reinforcement for two (2) Overhead Sign Structure foundations. Sign Structure foundations consist of vertical reinforcement that is embedded into the bridge soffit and a prefabricated anchor bolt cage that is confined inside this vertical reinforcement. The Bidwell machine that is used for concrete placement conflicted with the vertical reinforcement and the anchor bolt cage.

The Engineer directed the Contractor to cut and couple the vertical reinforcement and erect the anchor bolt cage after the placement of the deck concrete in order to provide continuous placement of the concrete with the Bidwell. Continuous placement of concrete with the Bidwell in contrast with hand placement of concrete for the deck section adjacent to the sign structure foundation provides:

1) consistent and clean surface finish;
2) continuous structural section; and
3) expedited the placement of the deck concrete.

The Contractor has agreed to an Adjustment in Compensation at Agreed Lump Sum of $10,000.00 for all labor, material, equipment, tools, sampling and testing, rework and incidentals, including all markups and expedited performance by the reason of this change.

Structures Maintenance concurrence is not required as this doesn't affect any permanent maintenance features.

As this change does not affect controlling item, no adjustment of contract time is warranted.

CONCURRED BY:		
Construction Engineer:	William Howe	Date 07.06.12
Bridge Engineer:	Mehran Ardakanian MA	Date 6.14.12
Project Engineer:	Bob Zandipour, Design	Date 7-9-12
Project Manager:	Ken Terpstra	Date 7-13-12
FHWA Rep.:		Date
Environmental:		Date
Other (specify):		Date
Other (specify):		Date
District Prior Approval By:		Date
HQ (Issue Approve) By:		Date
Resident Engineer's Signature:	William Howe	Date 07.06.12

ESTIMATE OF COST

	THIS REQUEST	TOTAL TO DATE
ITEMS	$0.00	$640.00
FORCE ACCOUNT	$0.00	$0.00
AGREED PRICE	$0.00	$0.00
ADJUSTMENT	$10,000.00	$10,500.00
TOTAL	$10,000.00	$11,140.00

FEDERAL PARTICIPATION

☐ PARTICIPATING ☐ PARTICIPATING IN PART ☑ NONE
☐ NON-PARTICIPATING (MAINTENANCE) ☐ NON-PARTICIPATING

FEDERAL SEGREGATION (if more than one Funding Source or P.I.P. type)
☐ CCO FUNDED PER CONTRACT ☐ CCO FUNDED AS FOLLOWS

FEDERAL FUNDING SOURCE	PERCENT

ADA Notice: For individuals with sensory disabilities, this document is available in alternate formats. For information call: (916) 654-6410 or TDD (916) 654-3880 or write Records and Forms Management, 1120 N Street, MS-89, Sacramento, CA 95814.

CONTRACT CHANGE ORDER

Change Requested by: Engineer

CCO: 33	Suppl. No. 0	Contract No. 04 - 0120S4	Road SF-80-12.7/13.2	FED. AID LOC.: NO FED AID

To: **M C M CONSTRUCTION INC**

You are directed to make the following changes from the plans and specifications or do the following described work not included in the plans and specifications for this contract. ***NOTE: This change order is not effective until approved by the Engineer.***

Description of work to be done, estimate of quantities and prices to be paid. (Segregate between additional work at contract price, agreed price and force account.) Unless otherwise stated, rates for rental of equipment cover only such time as equipment is actually used and no allowance will be made for idle time. This last percentage shown is the net accumulated increase or decrease from the original quantity in the Engineer's Estimate.

Provide for the following changes pertaining to the seismic joints at Hinges W7LA and W6RB of the Yerba Buena Island Transition Structure (Br. No. 34-0006 L/R):

1) Eliminate the planned steel deck plate joints (Seismic Joint (Type II)).

2) Furnish and install modular joints and modify the hinge details accordingly as specified on Sheets No. 3 through 12 of this change order and as shown on Sheets No. 13 through 25 (Revised Contract Plan Sheets No. 551, 552, 587, 660 through 666, 685, 695 and 696 of 806) of this change order.

Seismic Joint (Type II) details, as shown on Contract Plan Sheets No. 697 through 705, shall not apply to the modular joints pertaining to this change order.

Estimate of Decrease in Contract Item at Contract Price:

Item No. 105: SEISMIC JOINT (HINGE W7LA)
-1 LS (-100.00%) @$225,000.00 /LS = -$225,000.00 (-100.00%)

Item No. 108: SEISMIC JOINT (HINGE W6RB)
-1 LS (-100.00%) @$225,000.00 /LS = -$225,000.00 (-100.00%)

Estimated total cost for Decrease in Contract Item.....($450,000.00)

(No adjustment for eliminated bid item clause)

Extra Work at Lump Sum:

Provide compensation to the Contractor for all costs associated with furnishing the modular joints for Hinges W7LA and W6RB as specified under this change order.

For the costs, the Contractor shall be compensated an agreed lump sum of $1,575,040.00 which constitutes full and final compensation, including all markups, for all additional costs incurred in furnishing the modular joints as defined by this change order.

Compensation provided under this change order includes all costs associated with the design and fabrication of the modular joint seal assemblies including submittal of working drawings, proof testing of assemblies (including components of assemblies), inspection and installation consultation by a qualified representative of the manufacturer at the job-site during installation of all assemblies, final inspection by the manufacturer of installed assemblies, quality control for final products and the product warranty as specified under this change order. Compensation also includes the transporting of the joints to the project site.

Except for the inspection and installation consultation required to be provided by the joint manufacturer as specified under this change order, any costs pertaining to the installation and jobsite storage of the modular joints and any costs associated with the modifications to the hinge details provided under this change order shall be deferred and shall be provided under a supplemental change order.

There shall be no reduction in compensation, as defined under Section 55-4.02 "Payment" of the Contract Standard Specifications, for additional shop inspection expenses sustained by the State should any modular joint fabrication shop be located more than 480 air line kilometers or 4,800 air line kilometers from Sacramento and Los Angeles.

CONTRACT CHANGE ORDER

Change Requested by: Engineer

CCO: 33	Suppl. No. 0	Contract No. 04 - 0120S4	Road SF-80-12.7/13.2	FED. AID LOC.: NO FED AID

Estimated cost of Extra Work at Lump Sum $1,575,040.00

Consideration of a time adjustment will be deferred until completion of the work specified in this contract change order. A determination of a time extension will be made in accordance with Section 8-1.07, "Liquidated Damages," of the Standard Specifications.

Estimated Cost: Increase ☑ Decrease ☐ $1,125,040.00

By reason of this order the time of completion will be adjusted as follows: Deferred

Submitted by

Signature	Resident Engineer	Date
Rajesh Oberoi	Rajesh Oberoi, Senior R.E.	12/21/10

Approval Recommended by

Signature	Principal T.E.	Date
Mike Forner	Mike Forner	12/21/2010

Engineer Approval by

Signature	Principal T.E.	Date
Mike Forner	Mike Forner	2/9/11

We the undersigned contractor, have given careful consideration to the change proposed and agree, if this proposal is approved, that we will provide all equipment, furnish the materials, except as may otherwise be noted above, and perform all services necessary for the work above specified, and will accept as full payment therefor the prices shown above.

NOTE: If you, the contractor, do not sign acceptance of this order, your attention is directed to the requirements of the specifications as to proceeding with the ordered work and filing a written protest within the time therein specified.

Contractor Acceptance by

Signature	(Print name and title)	Date
Edmundo	Edmundo A. Pucci - Treasurer	6-1-2011

10-1.33 MODULAR JOINT SEAL ASSEMBLIES

Modular joint seal assemblies shall consist of supporting elements, supports, sealing elements, and anchorage elements and shall be designed, fabricated, inspected, tested, and installed as shown on the plans and approved working drawings and supplement, and as specified in the Standard Specifications and these special provisions.

MANUFACTURER

Modular joint seal assemblies shall be a Maurer Sohne Swivel-Joist Expansion Joint manufactured and supplied by:

THE D.S. BROWN COMPANY
300 E. CHERRY STREET
NORTH BALTIMORE, OHIO 45872
TEL: (419) 257-3561
FAX: (419) 257-2200

Maurer Sohne Swivel-Joist Expansion Joints are the only modular joint seal assemblies known to the State that meet the requirements of this contract. Preliminary working drawings and technical data for each hinge location for the Maurer Sohne Swivel-Joist Expansion Joints by D.S. Brown have been submitted, reviewed, and determined to he satisfactory by the Engineer.

Maurer Sohne Swivel-Joist Expansion Joints consist of supporting elements, supports, sealing elements, and anchorage elements. Supporting elements include edge beams, center beams, and support bars. Supports include sliding plates, sliding springs, and sliding bearings. Anchorage elements include carriageway anchors at the edge beams, anchor studs at the support boxes, and support boxes. Center beams slide on obliquely arranged swiveling support bars, resting on elastic bearings. The arrangement of the support bars and the type of connection between the support bar and the center beams assure equal spacing of the center beams.

Use of the Swivel-Joist Expansion Joints is contingent on approval of the contract specific working drawing submittal and successful performance of the Swivel-Joist Expansion Joints under proof testing.

WORKING DRAWINGS

The Contractor shall submit working drawings in conformance with the provisions in Section "Working Drawings" elsewhere in these special provisions, and these special provisions.

Working drawings shall include complete details, information, and drawings of the modular joint seal assembly and anchorage components and the method, materials, equipment, and procedures of fabrication and installation that the Contractor proposes to use.

Working drawing submittals shall include the following:

A. Fabrication plans including all details, elevations, and sections of the modular joint seal assembly for each hinge location as shown on the plans. All dimensions and design tolerances shall be specified. The plans shall identify the proposed location for cutting of central beams and edge beams to accommodate the removal and replacement of the modular joint seal assembly as specified in Section "General Design Requirements" of these provisions.
B. All ASTM or other material designations.
C. Sections showing all materials composing the modular joint seal assembly with complete details of all individual components including welded splices and connections.
D. PTFE bonding methods and details.
E. Installation plans including methods, materials, equipment, sequence, lifting mecbanisms and locations, details of temporary anchorage during setting, temperature adjustment devices, opening dimensions relative to temperature, installation details at curbs, seal installation details, and other procedures that the Contractor proposes to use for installation of the modular joint seal assemblies.
F. Plan for achieving water tightness including details related to performing the water tightness test as specified in these special provisions.
G. Details and material designations pertinent to the corrosion protection system and list of coating system for modular joint seal assemblies identifying galvanizing, and cleaning and painting for all steel components.
H. Anchorage components including concrete blockout details and any additions or rearrangements of the reinforcing steel from that shown on the plans.
I. Storage plans for manufacture storage, interim storage, and on-site storage details including temporary support for the modular joint seal assemblies.

J. Shipping plans including the handling during the transportation of the modular joint seal assemblies. Each shipment of the modular joint seal assembly materials shall be accompanied by a Certificate of Compliance in conformance with the provisions in Section 6-1.07, "Certificates of Compliance," of the Standard Specifications. The certificate shall state that the materials and fabrication involved comply in all respects to the specifications and data submitted in obtaining approval.

A supplement to the working drawings shall include the following:

A. Complete design and independent design check calculations including the assumptions and methods used in analyses and design of each modular joint seal assembly and its components. The design and independent check calculations shall include the fatigue design and load factor design of all structural elements including all springs and bearings, connections, and splices conforming to the requirements shown on the plans, the Standard Specifications, and these special provisions.
B. The quality control plan (QCP). The QCP of the modular joint seal assembly shall conform to the requirements in "Quality Control" of these special provisions and shall include descriptions, details, and procedures for the fabrication and installation of the modular joint seal assemblies, except that the portion of the QCP for welding shall be submitted separately in conformance with "Welding" in these special provisions.
C. Names and addresses of test facilities, time schedule for various testing, and qualifications of personnel performing the test as specified in these special provisions.
D. Details, procedures, and schedules of proof testing for modular joint seal assemblies conforming to the section, "Proof Testing," of these special provisions. The proof testing plan shall include drafted, annotated illustrations of the test apparatus and equipment included in the testing program. The proof testing plan shall also include certifications that all testing equipment has been calibrated no longer than 12 months prior to testing.
E. Manufacturer's certificate of compliance for all PTFE sheeting, PTFE fabric, elastomer, and modular joint seal assembly sealing elements.
F. Certified test reports confirming that the springs and bearings meet the design load requirements.
G. The manufacturer of the modular joint seal assemblies shall submit 6 bound copies of the inspection, maintenance, and replacement manual to the Engineer for the joint inspection, maintenance, and replacement. This manual shall include:

    1. Recommended frequency for joint inspection and maintenance schedule over the period of design life.
    2. Procedures and details to perform the joint inspection and maintenance.
    3. List of indication of joint or its component defects and the associated method to repair, if any.
    4. Part replacement plan to facilitate replacement of parts subject to wear. This plan shall include a list of parts, instructions for maintenance inspection, acceptable wear tolerances, methods for determining wear, procedures for replacing worn parts, and procedures for replacing seals.
    5. Recommended life expectancy for each component of the modular joint seal assemblies.
    6. Procedures and sequences for modular joint seal assemblies replacement including locations of temporary support, expected number of traffic lane closure, and any other requirements to replace the modular joint seal assemblies.
    7. Contacts, telephone numbers, and email addresses for maintenance and inspection questions.

The working drawings and supplement shall be stamped and signed by an engineer who is registered as a Civil Engineer in the United States. This registered Civil Engineer shall be an employee of the modular joint seal assembly manufacturer.

After complete working drawings and supplement are received by the Engineer, the Contractor shall allow the Engineer 40 working days to review the submittal. No fabrication of the modular joint seal assembly shall begin until complete working drawings and supplement are reviewed and a preliminary approval is given, in writing, by the Engineer.

Within 5 working days after final approval by the Engineer, the Contractor shall submit to the Engineer 7 copies of approved expected friction force calculations and geometry tolerance control plan.

After completion of proof testing, the Contractor shall submit the proof test reports as specified in Section "Proof Testing" of these special provisions.

Upon completion of installation, the Contractor shall submit to the Engineer certification stating that each modular joint seal assembly was installed in accordance with the approved working drawings and supplements installation procedure.

The Contractor shall provide to the State of California as a condition of acceptance of the modular joint seal assembly for incorporation into the work, a manufacturers written warranty addressed to the California Department of Transportation that includes the following provisions. For the five-year period commencing from the date of completion of the contract, the manufacturer shall warranty the performance and durability of each modular joint seal assembly. Conditions constituting unsatisfactory performance and durability include broken welds or bolts (including field splices), cracks in steel members, fatigue damage, loss of precompression in springs or bearings, debonded PTFE, breakdown of corrosion protection, and leakage. The Manufacturer shall provide the components and necessary technical staff to replace or repair any modular joint seal assembly component demonstrating unsatisfactory performance or durability within the five-year period commencing from the date of completion of the contract. All materials and technical staff that are required to satisfactorily perform warranty obligations shall be provided at the manufacturer's sole cost and expense.

MATERIALS

Attention is directed to "Welding" and "Steel Audits" in these special provisions.

Structural steel shall conform to the section "Steel Structures" elsewhere in these special provisions. Structural steel shall conform to the requirements of ASTM Designation: A 572M, Grade 345. Aluminum components shall not be used. Stainless steel shall conform to ASTM Designation: A 240, Type 316L.

Bolts, nuts and washers shall conform to the requirements of ASTM Designation: A 325 or A 325M and Section 75-1.03, "Miscellaneous Bridge Metal," of the Standard Specifications. Bolted splices shall not be permitted in supporting elements and supports.

DU self-lubricating bearing material and Norglide MP bearing material made by Garlock Bearings Inc. and St. Gobain respectively shall conform to the manufacturer's recommendations and material properties.

Polytetrafluoroethylene (PTFE) sheet shall be made from unfilled PTFE resin and shall conform to the following requirements:

Test	Test Method	Requirements
Tensile strength (Minimum)	ASTM D 4894 or D 4895	19.3 MPa
Elongation (Minimum)	ASTM D 4894 or D 4895	200 %

The PTFE resin shall be virgin material (not reprocessed), woven PTFE fabric, or dimpled PTFF conforming to the requirements of ASTM Designation: D 4894 or D 4895. Specific gravity shall be from 2.13 to 2.19. Melting point shall be 327±10°C.

Box-type sealing elements or sealing elements utilizing double webs shall not be permitted. Sealing elements shall he continuous without splices. The neoprene glands, if used for sealing elements, shall conform to the requirements in Table 1 of ASTM Designation: D 2628 and the following, except that no recovery tests or compression-deflection tests will be required:

Property	Requirement	ASTM Test Method
Hardness, Type A Durometer, points	55-70	D 2240 (Modified)
Tensile Strength	14 MPa minimum	D 412
Elongation at break	250%	D 412
Compression set, 70 hours at 100°C, maximum, percent	40%	D 395 Method B (Modified)

QUALITY CONTROL

Quality Control (QC) shall be the responsibility of the Contractor. Quality Control shall be performed by an entity having a line of responsibility distinctly different from that of the manufacturer's fabrication department. As a minimum, the Contractor shall perform inspection and testing prior to fabrication, during fabrication, and after fabrication as specified in this section and additionally as necessary to ensure that materials and workmanship conform to the requirements of the contract documents. Quality Control shall apply to each component of the modular joint seal assembly in addition to the assembly, shipping and installation of the complete modular joint seal assembly.

The QC Inspector shall be the duly designated person who acts for and on behalf of the Contractor for inspection, testing, and quality related matters for all fabrication.

Quality Assurance (QA) is the prerogative of the Engineer. The QA Inspector is the duly designated person who acts for and on behalf of the Engineer.

Each QC Inspector shall be responsible for quality control acceptance or rejection of materials and workmanship.

The Contractor shall provide sufficient number of QC Inspectors to ensure continuous inspection.

The Contractor shall designate in writing a Quality Control Manager (QCM). The QCM shall be responsible directly to the Contractor for the quality of the fabrication, including materials and workmanship, performed by the Contractor and subcontractors.

The QCM shall be the sole individual responsible to the Contractor for submitting and receiving all correspondences, required submittals, and reports to and from the Engineer.

The Contractor shall submit to the Engineer 3 copies of Quality Control Plan (QCP), in conformance with the requirements in "Working Drawings," of these special provisions. As a minimum, each QCP shall include the following:

A. A manual including equipment, testing procedures, and code of safe practices
B. The names, qualifications, and documentation of certifications for the QCM and all QC Inspectors
C. An organizational chart showing all QC personnel and their assigned QC responsibilities
D. The methods and frequencies for performing all required quality control procedures, including QC inspection forms to be used, as required by the specifications including:

    1. All visual inspections
    2. Tests
    3. Calibration procedures and calibration frequency for all equipment
    4. Geometry tolerance control plan as specified in the section "Working Drawings" of these special provisions

E. Forms to be used for Certificates of Compliance, weekly production logs, and weekly reports
F. Mill certificates and material certificates
G. Shipping plan
H. Installation plan

Prior to submitting the QCP, a pre-fabrication meeting between the Engineer, Contractor, and Fabricator, any entity performing modular joint seal assembly component fabrication or subcontractor to the Fabricator, shall be held to discuss the requirements for the QCP. The pre-fabrication meeting shall be held in San Francisco Bay Area.

After a complete QCP is submitted, the Contractor shall allow the Engineer 10 working days to review the submittal. An amended QCP or addendum shall be submitted to, and approved in writing by the Engineer, for proposed revisions to the approved QCP. The Contractor shall allow the Engineer 10 working days to complete the review of the amended QCP or addendum.

After final approval of the QCP, amended QCP, or addendum, the Contractor shall submit 7 copies to the Engineer of each of these approved documents.

It is expressly understood that the Engineer's approval of the Contractor's QCP shall not relieve the Contractor of any responsibility under the contract for the successful completion of the work in conformity with the requirements of the plans and specifications. The Engineer's approval shall not constitute a waiver of any requirement of the plans and specifications nor relieve the Contractor of any obligation thereunder, and defective work, materials, and equipment may be rejected notwithstanding approval of the QCP.

A weekly production log for fabrication shall be kept by the QCM for each day that fabrication if performed. The weekly report from each QC Inspector shall be included in the log.

The Contractor shall submit the reports of all visual inspections, weekly production log, and a complete "As-Built Log of Measurements" to the Engineer within 7 working days following the completion of fabrication of any modular joint seal assembly. The Engineer will review the reports, production log, and the "As-Built Log of Measurements" to determine if the Contractor is in conformance with the QCP. The Contractor shall allow the Engineer 7 working days to review and respond in writing after a complete reports, production log, and the "As-Built Log of Measurements" have been received.

The QCM shall sign and furnish to the Engineer, a Certificate of Compliance in conformance with the provisions in Section 6-1.07, "Certificates of Compliance," of the Standard Specifications for each modular joint seal assembly. The certificate shall state that all of the materials and workmanship incorporated in the work, and all required tests and inspections of this work have been performed in conformance with the details shown on the plans and approved working drawings and the provisions of the Standard Specifications and these special provisions. The

certificate shall state that all of the as-built measurements of essential parts and completed assemblies are within the target tolerances specified in geometry tolerance control plan.

FABRICATION

The modular joint seal assembly shall be fabricated consistent with the details, dimensions, material specifications, and procedures delineated in the approved working drawings and supplement.

All modular joint seal assemblies shall be fabricated by the same manufacturer.

PTFE shall be bonded under controlled conditions and in strict accordance with written instructions provided by the PTFE manufacturer.

PTFE surfaces shall be smooth and free of bubbles after completion of bonding operations.

Stainless steel sliding surfaces in contact with PTFE shall be polished to a Number 8 mirror finish.

If welding of support bars is required, support bars shall be welded prior to attaching stainless steel sheets. Stainless steel sheets shall be welded to the support bars in accordance with AWS D1.6. The stainless steel sheet shall be clamped to provide full contact with the steel backing plate during welding. The welds shall not protrude above the sliding surface of the stainless steel sheet.

Steel surfaces, except those surfaces beneath stainless steel sheet, those to be bonded to PTFE, or those in direct contact with sealing elements, shall be galvanized.

At the Contractor's option, cleaning and painting of all new metal surfaces of the joint seal assembly, except stainless steel and anchorages embedded in concrete, may be substituted for galvanizing. Cleaning and painting shall be in conformance with the provisions in "Clean and Paint Structural Steel (Modular Joint Seal Assembly)" of these special provisions.

Finish coats will not be required on modular joint seal assemblies.

During the fabrication process the Contractor shall maintain "Log of As Built Measurements" of all individual essential parts and the completed assembly. The essential parts shall include center beams, swivel support bars, support boxes, stirrups, sliding bearings, sliding springs, spring holders, bearing holders, swivel plates, and sliding discs. The "Log of As Built Measurements" of the completed assembly shall include out-of-line alignment of pivoting pins, unevenness of welded stirrup heights, unevenness of height of installed sliding bearings, and sliding springs. The measurements shall be recorded with accuracy of 0.1mm. The Contractor shall submit to the Engineer for review and approval the "Log of As Built Measurements" at least 10 working days prior to the start of the proof testing.

GENERAL DESIGN REQUIREMENTS

The Contractor shall design the modular joint seal assemblies including all components and anchorage devices with any reinforcement required in addition to that shown on the plans. The design life of the joint seal assembly shall, whenever possible, comply with the 150 year design life of the bridge.

Each modular joint seal assembly shall extend continuously across the full width of the roadway and up into the traffic barriers as shown on the plans. The modular joint seal assembly shall be designed to allow for cutting the joint seal assembly into segments. Removal of any one segment shall not affect the load carrying capacity of the remaining segments. The segments shall be arranged to accommodate removal and replacement of the joint seal assembly while maintaining a minimum of 4 traffic lanes. Each traffic lane shall be 3.6 meter wide and additional allowance for traffic barrier shall be made for separation from the construction area.

Field splices of any part of the modular joint seal assembly shall not be permitted.

The modular joint seal assembly shall be designed with adequate access to all internal components in order to assure the feasibility of inspection and maintenance activities.

The modular joint seal assembly shall be designed to minimize concrete cracking above the support boxes. Measures taken shall include assuring adequate support box top plate thickness, specifying any additional roadway deck steel reinforcement required, and providing adequate concrete cover.

The modular joint seal assembly and concrete deck steel reinforcement shall be designed to assure that adequate concrete consolidation can be achieved underneath all support boxes.

The sealing elements shall not protrude above the top of the modular joint seal assembly.

The elastomeric or urethane springs, bearings with stainless steel surfaces, and other sliding elements shall be designed to be removable and replaceable. The removal and reinstallation of each sealing element shall be easily accomplished from above the joint with a 32 millimeters minimum gap width. The replacement of such elements shall not require closing more than 3 traffic lanes at any time.

The modular joint seal assembly shall be watertight.

Metallic attachments used to secure elastomeric seals to the center beams, if welded to the center beams and edge beams, shall be welded continuously along both their top and bottom edges.

The longitudinal movement demands in the table shown on the plans consist of movements due to temperature variation (T_{rise} and T_{drop}), creep and shrinkage (CS), functional evaluation earthquake ($FEE_{opening}$), and safety evaluation earthquake ($SEE_{closing}$ and $SEE_{opening}$). The longitudinal movement demands are normal to the transverse axis as shown on the plans.

The number of cells for each modular joint seal assembly shall conform to the following table. A cell is defined as sealing elements supported by adjacent beams.

Hinge Location	No. of Cells
Hinge W6RB	10
Hinge W7LA	10

The sealing elements shall be capable of accommodating 130 mm longitudinal movement without any damage.

When the modular joint seal assembly is subject to combined movements of $SEE_{closing}$, $SEE_{opening}$, and CS, the load carrying capability of the modular joint seal assembly shall not be degraded, and cell width equalizing mechanism shall be fully operational. No unseating of supporting elements shall be permitted. The damage to the modular joint seal assembly shall be limited to the sealing elements only and there shall be no damage to any other parts of the assembly.

The modular joint seal assemblies shall be capable of providing for a transverse displacement (relative to the ends of the joint), horizontal rotation in the plane of the bridge deck (fanning angle), and rotation about transverse and longitudinal axis as shown on the plans.

DESIGN AXLE LOADS AND IMPACT FACTORS

The center beams, edge beams, support bars, bearings, connections, and other structural components shall be designed for the simultaneous application of vertical and horizontal loads from a tandem axle. The tandem axle shall consist of a pair of axles spaced 1.2 meters apart with vertical and horizontal loads as specified elsewhere in these special provisions. The transverse spacing of the wheels shall be 1.8 meters. The distribution of the wheel load among center beams shall conform to the requirements specified elsewhere in these special provisions.

The vertical load range for fatigue design shall be a 145 kN tandem. This tandem shall be taken as two 72.5 kN axles spaced 1.2 meters apart. Only one of these tandem axles shall be considered in the design, unless the joint opening exceeds 1.2 meters. The load range shall be increased by the dynamic load allowance (Impact Factor) of 75%. Load factors shall be applied in accordance with Table 3.4.1-1 of the AASHTO LRFD Bridge Design Specifications - Second Edition.

The vertical load for strength design shall be a 220 kN tandem. This tandem shall be taken as two 110 kN axles spaced 1.2 meters apart. Only one of these tandem axles shall be considered in the design, unless the joint opening exceeds 1.2 meters. This load shall be increased by the dynamic load allowance (Impact Factor) of 75%. Load factors shall be applied in accordance with Table 3.4.1-1 of the AASHTO LRFD Bridge Design Specifications - Second Edition.

The horizontal load range for fatigue design shall be 40% of the amplified vertical load range (LL+IM) for fatigue design specified in these special provisions.

The horizontal load for strength design shall be 20% of the amplified vertical load (LL+IM) for strength design specified in these special provisions.

DISTRIBUTION OF WHEEL LOADS

The following table specifies the center beam distribution factor as a function of center beam top flange width. This factor is the percentage of the design vertical axle load and the design horizontal axle load which shall be applied to an individual center beam for the design of that center beam and its associated support bars. Distribution factors shall be interpolated for center beam top flange widths between those explicitly denoted in the table. In no case shall the distribution factor be taken as less than 50%. The remainder of the load shall be divided equally and applied to the two adjacent center beams or edge beams.

Width of Center beam Top Flange	Distribution Factor
64 millimeters	50%
80 millimeters	60%
100 millimeters	70%
120 millimeters	80%

FATIGUE LIMIT STATE DESIGN REQUIREMENTS

Modular joint seal assembly structural members, bolted and welded splices and connections, and attachments shall be designed to resist the Fatigue Limit State load combination specified in Table 3.4.1-1 of the AASHTO LRFD Bridge Design Specifications - Second Edition. The vertical and horizontal load ranges for fatigue design specified in these special provisions shall be applied simultaneously. These loads shall be distributed as specified in these special provisions.

The nominal stress ranges, Δf, at all fatigue critical details shall be obtained from a structural analysis of the modular joint seal assembly applying the design vertical and horizontal load ranges, and distributed specified in these special provisions. The modular joint seal assembly shall be analyzed with a minimum gap opening corresponding to the operating range configuration (at least 60 millimeters). The design axle load shall be applied as two wheel loads, each having a transverse width of 510 millimeters. For each detail under consideration, the wheel loads shall be positioned transversely on a center beam to achieve the maximum nominal stress range at that detail. The vertical and horizontal wheel loads shall be applied as line loads to the top of the center beams at their centerlines. The design stress range in the center beam-to-support bar connection shall be calculated according to subsections 1 and 2 below. The design nominal stress ranges, Δf, shall be used for fatigue design as specified in these special provisions.

Welded Single-Support-Bar Systems:

A. The nominal stress range, Δf, in the center beam at a welded stirrup shall be the sum of the longitudinal bending stress ranges at the critical section resulting from vertical and horizontal loading. The effects of stresses in any load-bearing attachments such as the stirrup or yoke shall not be considered when calculating the longitudinal stress range in the center beam.
B. The nominal stress range, Δf, in the stirrup or yoke shall be calculated without considering the effects of stresses in the center beam. The stress range shall be calculated by assuming a load range in the stirrup equal to 30% of the total vertical reaction force between the center beam and the support bar. The effects of horizontal loads may be neglected in the design of the stirrup.

To assure an infinite fatigue life, all modular joint seal assembly structural members, connections (bolted and welded), splices, and attachments shall satisfy the following:

$$\Delta f \leq \frac{F_{TH}}{2}$$

where:

Δf = the nominal stress range
F_{TH} = constant amplitude fatigue limit (CAFL)

FATIGUE RESISTANCE OF DETAILS

The fatigue resistance of all details shall be characterized in terms of the fatigue categories specified in Table 6.6.1.2.5-1 of the AASHTO LRFD Bridge Design Specifications - Second Edition. Many details composing modular joint seal assembly may clearly correspond to specific structural details depicted in Figure 6.6.1.2.3-1 of the AASHTO LRFD Bridge Design Specifications - Second Edition. In these cases, the applicable fatigue categories specified in Table 6.6.1.2.3-1 may be used for design.

STRENGTH I LIMIT STATE DESIGN REQUIREMENTS

Modular joint seal assembly structural steel members, connections (bolted and welded), splices, and attachments shall be designed to resist the Strength I Limit State load combination specified in Table 3.4.1-1 of the AASHTO LRFD Bridge Design Specifications - Second Edition. The vertical and horizontal loads specified in Section "Design Axle Loads and Impact Factors" of these special provisions shall be applied simultaneously. These loads shall be distributed as specified in Section "Distribution of Wheel Loads" of these special provisions.

PROOF TESTING

The Contractor shall perform proof testing on each fabricated modular joint seal assembly to be used in production except that the sealing elements shall not be installed for proof testing. All proof tests shall be performed in the United States.

The Contractor shall notify the Engineer, in writing, at least 10 working days prior to the start of each proof testing.

Instrumentation shall be installed on the modular joint seal assembly to be tested and the test fixtures to continuously monitor and record longitudinal joint displacements, actuator force outputs and total travel of each bearing throughout the proof test. All tests shall be recorded on video media. There shall be at least two video cameras recording the picture and sound during the test. One camera shall be positioned at level of the second support bar capturing in detail behavior of the sliding bearings and sliding springs. The second camera shall be positioned on side and above the modular joint seal assembly capturing the spacing of the center beams during the tests.

Prior to each test all stainless steel sliding surfaces shall be cleaned using alcohol. No greasing or lubricating agents shall be applied to the stainless steel sliding surfaces.

The Contractor shall conduct a total of 3 proof tests for each fabricated modular joint seal assembly in the sequence listed in the following table. The tests are defined by the following parameters: initial rotation about vertical, transverse, and longitudinal axis as shown on the plans, displacement amplitude, speed and number of cycles.

Proof Test No.	Initial cell width (mm)	Initial rotation @ axis (radians)			Displacement (millimeter)		Approx. Speed (mm/sec)	No. of cycles
		Vertical	transverse	longitudinal	longitudinal	transverse		
1	0	0	0	0	±n x 75	0	25	5
2	0	0	0	0	+n x 75	0	25	N/A
3	n x 75	0	0	0	-n x 60	0	25	N/A

where
n - number of cells in the test specimen
\+ indicates opening movement
\- indicates closing movement

The Contractor shall provide access and assistance to the Engineer to observe the tests, monitor the process, and take the measurements as necessary. The Contractor shall also provide the space in the testing room to accommodate the Engineer's monitoring equipment.

After completion of each test for Test No. 2 and Test No. 3, the Contractor shall measure and record the size of all cells for at least 4 locations spaced equally along the length of the center beams.

After completion of Test No. 3, the Contractor shall inspect the modular joint seal assembly, in the presence of the Engineer, to identify any damage that may have occurred to the its components.

The acceptance criteria for proof testing of the modular joint seal assemblies shall be as follows:

A. During the tests there shall be no vibrations or excessive noise and the movement shall be smooth. There shall be no excessive shear deformations of the sliding bearings and sliding springs. There shall be no other observations that might indicate mechanical problem.
B. After completion of Test No. 3, the sliding areas of the modular joint seal assembly shall have no visible wear and no signs of uneven wear.
C. The measured friction forces shall comply at least with one of the following criteria:

$$\frac{Fm1}{Fe1} \leq 1.15$$

or

$$\frac{Fm1}{Fe1} + \frac{abs(Fm1-Fm2)}{\frac{1}{2}(Fm1+Fm2)} \leq 1.25$$

or

$$\frac{abs(Fm1-Fm2)}{\frac{1}{2}(Fm1+Fm2)} \leq 0.07$$

where
Fm1 = measured friction force on the unit being proof tested
Fm2 = measured friction force on the unit with identical number of cells as the unit being proof tested

Fe1 = expected friction force on the unit being proof tested

If the proof tests fail to meet any of the acceptance criteria, as determined by the Engineer, the modular joint seal assembly will be rejected. No extension of time or compensation will be made for manufacturing, furnishing, and testing additional modular joint seal assemblies.

At the completion of successful proof testing for each modular joint seal assembly, within 10 working days, the Contractor shall submit to the Engineer 4 copies of the complete test results in conformance with the requirements for the specific test as specified in these special provisions.

Modular joint seal assembly will not be accepted and released for installation until the Engineer has reviewed and approved, in writing, the proof testing.

STORAGE, SHIPPING, AND HANDLING

Lifting mechanisms, temperature adjustment devices, and temporary anchorages shall not be welded to the center beams.

Damage to the modular joint seal assembly during shipping or handling shall be cause for rejection of the modular joint seal assembly.

Damage to the corrosion protection system shall be repaired to the satisfaction of the Engineer prior to installation.

INSTALLATION

No modular joint seal assembly shall be installed until the Engineer has reviewed and approved, in writing, the working drawings, the results of the proof testing, and the inspection of the assemblies to be used.

A qualified installation technician shall be present at the job site to assure proper installation of each modular joint seal assembly. The qualified installation technician shall inspect the blockout prior to installation and shall be present during lowering of the modular joint seal assemblies into the blockout, leveling, adjusting of the cell width and grouting below support boxes. The qualified installation technician shall inspect anchorage reinforcement and the formwork before placing concrete and shall be present during the concrete placement operation. This technician shall be a full time employee of the manufacturer of the modular joint seal assembly. The Contractor shall comply with all recommendations made by the modular joint seal assembly manufacturer's installation technician as approved by the Engineer. Each modular joint seal assembly manufacturer's installation technician shall certify to the Engineer that the approved installation procedures were followed. All certifications to the Engineer shall be in writing and shall be signed and dated by the manufacturer's installation technician.

Each modular joint seal assembly shall be installed in accordance with the approved working drawings and supplement and the recommendations of the manufacturer's installation technician.

Each installed modular joint seal assembly shall match the finished roadway profile and grades.

The Contractor shall protect each modular joint seal assembly from damage. The Contractor shall protect concrete blockouts and support systems from damage and construction traffic prior to installation of the modular joint seal assemblies.

Each modular joint seal assembly shall be set to a gap width corresponding to the ambient temperature at the time of setting. The gap widths shall conform to the values shown on the plans and approved working drawings and supplement. The Contractor shall provide hardware for mechanically opening or closing the modular joint assembly for thermal adjustments. The manufacturer shall provide factory attached lifting devices and brackets to facilitate field handling and grade adjustments.

Each modular joint seal assembly shall be tested for water tightness after installation. The Contractor shall flood each completely installed modular joint seal assembly with water to a minimum depth of 75 millimeters for a duration of at least one hour. If leakage is observed, the modular joint seal assembly shall be repaired to the satisfaction of the Engineer at the Contractor's expense. The repair procedure shall be prepared by the modular joint seal assembly manufacturer and shall be submitted to the Engineer for approval. After repairs are completed, the modular joint seal assembly shall be retest for leakage.

The Contractor shall replace sealing elements not fully bonded to the steel extrusions with fully bonded seals at the expense of the Contractor.

The assembly shall have cast-in-place anchorage components forming a mechanical connection between the joint components and the concrete deck.

The bridge deck surface shall conform to the provisions in Section 51-1.17 "Finishing Bridge Deck," of the Standard Specifications after placing modular joint seal assemblies and anchorage.

The assembly shall be completely assembled and placed in a blocked out recess as shown on the plans.

All reinforcement other than primary reinforcement shall continue through the recess construction joint into the recess and engage the anchorage components of the assembly.

The vertical modular joint seal assembly in barrier shall be available for inspection after placement of the recess concrete around the anchorage components of the assembly.

The assembly shall make a watertight, continuous return 150 mm up into the barrier at the low side of the deck joint. Neoprene glands shall be continuous without field splices or joints, including the return up into barrier.

MODULAR JOINT SEAL ASSEMBLIES STORAGE

Modular joint seal assemblies shall be transported to and stored at the storage facility as designated by the Engineer. Said location will be within 25 km of the San Francisco-Oakland Bay Bridge Toll Plaza. The Contractor shall notify the Engineer at least two months prior to delivery of the modular joint seal assemblies. After the delivery of the modular joint seal assemblies is completed, the Contractor shall jointly with the Engineer inspect the modular joint seal assemblies. Damaged modular joint seal assemblies shall be replaced by the Contractor at the Contractor's expense.

REGISTERED PROFESSIONAL ENGINEER
STEVE MARGARIS
No. 35845
Exp. 6/2012
CIVIL
STATE OF CALIFORNIA

INDEX TO BRIDGE PLANS

SHEET NO.	TITLE
1	GENERAL PLAN
2	INDEX TO BRIDGE PLANS
3	GENERAL NOTES
4	WESTBOUND STRUCTURE PLAN NO. 1
5	WESTBOUND STRUCTURE PLAN NO. 2
6	EASTBOUND STRUCTURE PLAN NO. 1
7	EASTBOUND STRUCTURE PLAN NO. 2
8	WESTBOUND DECK CONTOURS PLAN NO. 1
9	WESTBOUND DECK CONTOURS PLAN NO. 2
10	EASTBOUND DECK CONTOURS PLAN NO. 1
11	EASTBOUND DECK CONTOURS PLAN NO. 2
12	FOUNDATION PLAN NO. 1
13	FOUNDATION PLAN NO. 2
14	PILE DETAILS
15	ABUTMENT W11R DETAILS NO. 1
16	ABUTMENT W11R DETAILS NO. 2
17	ABUTMENT W11R DETAILS NO. 3
18	BENT ELEVATIONS W10AL TO W9
19	BENT ELEVATIONS W8 TO W7
20	BENT ELEVATIONS W6 TO W5
21	BENT ELEVATIONS W4 TO W3
22	BENT W10AL DETAILS NO. 1
23	BENT W10AL DETAILS NO. 2
24	BENT W10AL DETAILS NO. 3
25	BENT W10AL DETAILS NO. 4
25A	BENT W10AL DETAILS NO. 5
26	BENT W10L DETAILS NO. 1
27	BENT W10L DETAILS NO. 2
28	BENT W10L DETAILS NO. 3
29	BENT W9L DETAILS NO. 1
30	BENT W9L DETAILS NO. 2
31	BENT W9L DETAILS NO. 3
32	BENT W9L DETAILS NO. 4
32A	BENT W9L DETAILS NO. 5
33	BENT W8L DETAILS NO. 1
34	BENT W8L DETAILS NO. 2
35	BENT W8L DETAILS NO. 3
36	BENT W8L DETAILS NO. 4
37	BENT W7L DETAILS NO. 1
38	BENT W7L DETAILS NO. 2
39	BENT W7L DETAILS NO. 3
40	PRESTRESS DETAILS - BENTS W10AL TO W9L
41	PRESTRESS DETAILS - BENTS W8L & W7L
42	BENT W6L DETAILS NO. 1
42A	BENT W6L DETAILS NO. 2
43	BENT W5L DETAILS NO. 1
44	BENT W5L DETAILS NO. 2
44A	BENT W5L DETAILS NO. 3
45	BENT W4L DETAILS NO. 1
45A	BENT W4L DETAILS NO. 2
45B	BENT W4L DETAILS NO. 3
46	BENT W3L DETAILS NO. 1
47	BENT W3L DETAILS NO. 2
48	BENT W10R DETAILS NO. 1
49	BENT W10R DETAILS NO. 2
50	BENT W10R DETAILS NO. 3
51	BENT W9R DETAILS NO. 1
52	BENT W9R DETAILS NO. 2
53	BENT W8R DETAILS NO. 1
54	BENT W8R DETAILS NO. 2
55	BENT W7R DETAILS NO. 1
56	BENT W7R DETAILS NO. 2
57	BENT W6R DETAILS NO. 1
58	BENT W6R DETAILS NO. 2
59	BENT W6R DETAILS NO. 3
60	BENT W5R DETAILS NO. 1
61	BENT W5R DETAILS NO. 2
62	BENT W4R DETAILS
63	BENT W3R DETAILS
64	COLUMN ISOLATION SLEEVE DETAILS
65	WESTBOUND TYPICAL SECTION NO. 1
66	WESTBOUND TYPICAL SECTION NO. 2
67	WESTBOUND TYPICAL SECTION NO. 3
68	WESTBOUND TYPICAL SECTION NO. 4
69	WESTBOUND TYPICAL SECTION NO. 5
70	WESTBOUND TYPICAL SECTION NO. 6
71	WESTBOUND TYPICAL SECTION NO. 7
72	WESTBOUND TYPICAL SECTION NO. 8
72A	WESTBOUND TYPICAL SECTION NO. 9
73	EASTBOUND TYPICAL SECTION ND. 1
74	EASTBOUND TYPICAL SECTION NO. 2
75	EASTBOUND TYPICAL SECTION NO. 3
76	EASTBOUND TYPICAL SECTION NO. 4
77	EASTBOUND TYPICAL SECTION NO. 5
78	EASTBOUND TYPICAL SECTION NO. 6
79	EASTBOUND TYPICAL SECTION NO. 7
80	ON-RAMP SPINE EXTENSION DETAILS NO. 1
81	ON-RAMP SPINE EXTENSION DETAILS NO. 2
82	WESTBOUND GIRDER LAYOUT GEOMETRICS
83	WESTBOUND GIRDER LAYOUT NO. 1
84	WESTBOUND GIRDER LAYOUT NO. 2
85	WESTBOUND GIRDER LAYOUT NO. 3
86	WESTBOUND GIRDER LAYOUT NO. 4
87	WESTBOUND GIRDER LAYOUT NO. 5
88	EASTBOUND GIRDER LAYOUT GEOMETRICS
89	EASTBOUND GIRDER LAYOUT NO. 1
90	EASTBOUND GIRDER LAYOUT NO. 2
91	EASTBOUND GIRDER LAYOUT NO. 3
92	EASTBOUND GIRDER LAYOUT NO. 4
93	EASTBOUND GIRDER LAYOUT NO. 5
94	EASTBOUND GIRDER LAYOUT NO. 6
95	GIRDER PRESTRESS DETAILS
96	GIRDER DIAPHRAGM DETAILS NO. 1
97	GIRDER DIAPHRAGM DETAILS NO. 2
97A	GIRDER DIAPHRAGM DETAILS NO. 3
98	MISC SUPERSTRUCTURE DETAILS NO. 1
99	MISC SUPERSTRUCTURE DETAILS NO. 2
100	WESTBOUND GIRDER TOP REINFORCEMENT NO. 1
101	WESTBOUND GIRDER TOP REINFORCEMENT NO. 2
102	WESTBOUND GIRDER TOP REINFORCEMENT NO. 3
103	WESTBOUND GIRDER TOP REINFORCEMENT NO. 4
104	WESTBOUND GIRDER TOP REINFORCEMENT NO. 5
105	WESTBOUND GIRDER BOTTOM REINFORCEMENT NO. 1
106	WESTBOUND GIRDER BOTTOM REINFORCEMENT NO. 2
107	WESTBOUND GIRDER BOTTOM REINFORCEMENT NO. 3
108	EASTBOUND GIRDER TOP REINFORCEMENT NO. 1
109	EASTBOUND GIRDER TOP REINFORCEMENT NO. 2
110	EASTBOUND GIRDER BOTTOM REINFORCEMENT NO. 1
111	HINGE W7LA DETAILS NO. 1
112	HINGE W7LA DETAILS NO. 2
113	HINGE W7LA DETAILS NO. 3
114	HINGE W6RB DETAILS NO. 1
115	HINGE W6RB DETAILS NO. 2
116	HINGE W6RB DETAILS NO. 3
117	HINGE W6RB DETAILS NO. 4
118	HINGE K CLOSURE DETAILS NO. 1
119	HINGE K CLOSURE DETAILS NO. 2
120	HINGE K CLOSURE DETAILS NO. 3
121	HINGE K CLOSURE DETAILS NO. 4
122	HINGE K CLOSURE DETAILS NO. 5
123	HINGE K CLOSURE DETAILS NO. 6
124	HINGE K CLOSURE DETAILS NO. 7
125	HINGE K CLOSURE DETAILS NO. 8
126	HINGE K CLOSURE DETAILS NO. 9
127	HINGE K CLOSURE DETAILS NO. 10
128	HINGE K CLOSURE DETAILS NO. 11
129	HINGE K CLOSURE DETAILS NO. 12
130	HINGE K CLOSURE DETAILS NO. 13
131	HINGE K CLOSURE DETAILS NO. 14
132	HINGE K CLOSURE DETAILS NO. 15
133	CABLE RESTRAINER UNIT - TYPE 2
134	CABLE RESTRAINER UNIT - TYPE 2 DETAILS
135	SPHERICAL BEARING DETAILS
136	DECK JOINT DETAILS
137	SEISMIC JOINT
138	SEISMIC JOINT
139	SEISMIC JOINT
140	SEISMIC JOINT
141	SEISMIC JOINT
142	SEISMIC JOINT
143	SEISMIC JOINT
144	SEISMIC JOINT
145	SEISMIC JOINT
146	MODULAR DECK JOINT DETAILS NO. 1
147	MODULAR DECK JOINT DETAILS NO. 2
148	DELETED
149	DELETED
150	DELETED
151	DELETED
152	DELETED
153	DELETED
154	DELETED
155	DELETED
156	DELETED
157	BIKE PATH DETAILS NO. 1
158	BIKE PATH DETAILS NO. 2
159	FUTURE BIKE PATH DETAILS NO. 1
160	FUTURE BIKE PATH DETAILS NO. 2
161	FUTURE BIKE PATH DETAILS NO. 3
162	BIKE PATH RAILING DETAILS NO. 1
163	BIKE PATH RAILING DETAILS NO. 2
164	BIKE PATH RAILING DETAILS NO. 3
165	BIKE PATH RAILING DETAILS NO. 4
165A	BIKE PATH FENCE DETAILS NO. 1
165B	BIKE PATH FENCE DETAILS NO. 2
166	CONCRETE BARRIER TYPE 732 (MOD)
167	STRUCTURE APPROACH TYPE EQ (3) - MOD
168	STRUCTURE APPROACH DRAINAGE DETAILS
169-189C	LOG OF TEST BORINGS (NO. 1 TO NO. ~~211~~ 24)
190-209	AS-BUILT LOG OF TEST BORINGS (NO. 1 TO NO. 20)

FOR REVISION 1 AND 2 ONLY

DIST.	COUNTY	ROUTE	KILOMETER POST TOTAL PROJECT	SHEET NO.	TOTAL SHEETS
04	SF	80	12.7/13.2	551R2	806

REGISTERED ENGINEER - CIVIL

6-23-08
PLANS APPROVAL DATE

The State of California or its officers or agents shall not be responsible for the accuracy or completeness of electronic copies of this plan sheet.

T.Y. LIN / MOFFATT & NICHOL
TWO HARRISON STREET
SAN FRANCISCO, CA 94105

APPLICABLE STANDARD PLANS (DATED JULY 2004)

A10A	ACRONYMS AND ABBREVIATIONS (A-L)
A10B	ACRONYMS AND ABBREVIATIONS (M-Z)
A10C	SYMBOLS (1 OF 2)
A10D	SYMBOLS (2 OF 2)
A62B	LIMITS OF PAYMENT FOR EXCAVATION AND BACKFILL - BRIDGE SURCHARGE AND WALL
A62C	LIMITS OF PAYMENT FOR EXCAVATION AND BACKFILL - BRIDGE
B0-1	BRIDGE DETAILS
B0-3	BRIDGE DETAILS
B0-5	BRIDGE DETAILS
B0-13	BRIDGE DETAILS
B3-1	RETAINING WALL TYPE 1 H=1200 THROUGH 9100
B3-8	RETAINING WALL DETAILS NO. 1
B7-1	BOX GIRDER DETAILS
B7-5	DECK DRAINS
B7-6	DECK DRAINS TYPES D-1 AND D-2
B7-10	UTILITY OPENING BOX GIRDER
B7-11	UTILITY DETAILS
B8-5	CAST-IN-PLACE PRESTRESSED GIRDER DETAILS
B14-3	COMMUNICATION AND SPRINKLER CONTROL CONDUITS (CONDUIT LESS THAN SIZE 103)
B14-4	WATER SUPPLY LINE (BRIDGE) (PIPE SIZES LESS THAN NPS 4)
B14-5	WATER SUPPLY LINE (DETAILS) (PIPE SIZES LESS THAN NPS 4)

MARK	DATE	DESCRIPTIONS	BY	CH'D
2	10-14-10	Deleted Seismic Jt sheets for Hinges W7LA & W6RB, added Modular Jt sheets		
1	9-1-10	Added Bike Path Fence Sheets	TL	JB

REVISIONS

CONTRACT CHANGE ORDER NO. 33
SHEET 13 OF 25

2 REVISED PER ADDENDUM NO. 2 DATED JANUARY 22, 2009

8 REVISED PER ADDENDUM NO. 8 DATED NOVEMBER 12, 2009

DESIGN OVERSIGHT
JOHN MOOK, BERNARD CHAN, JUAN F. CARPIO, HASAN EC-NATUR
March 3, 2008
SIGN OFF DATE
10/22/10

	BY	CHECKED
DESIGN	Desai	Jain
DETAILS	van Ryn/Zucchi/Wal	Jain
QUANTITIES	Liao	E. Nichol

PREPARED FOR THE STATE OF CALIFORNIA DEPARTMENT OF TRANSPORTATION

Jal Birdy
PROJECT ENGINEER

BRIDGE NO. 34-0006 L/R
KILOMETER POST 12.8

SAN FRANCISCO OAKLAND BAY BRIDGE
EAST SPAN SEISMIC SAFETY PROJECT

YBI TRANSITION STRUCTURES

INDEX TO BRIDGE PLANS

CU 04251
EA 0120S1

Rev. Date: 5-16-98

ORIGINAL SCALE IN MILLIMETERS FOR REDUCED PLANS 0 10 20 30 40 50 60 70 80 90 100

DISREGARD PRINTS BEARING EARLIER REVISION DATES

REVISION DATES (PRELIMINARY STAGE ONLY)

SHEET 2 OF 209

FILE => \\mnlbfs\LB_Projects\4141-06\CADD\TS\Checked Plans\YBITS *1-100% No. 2_03-03-08 (Final Renamed)\101410 Hinge CCO T6\04-0120s1-34-006r1-o-ltp.dgn

October 14, 2010

USERNAME => fsamson DATE PLOTTED => 10/14/2010 TIME PLOTTED => 10:09:15 AM

MARK	DATE	DESCRIPTIONS	BY	CH'D
3	10-14-10	Rev Joints at Hinges W7LA & W6RB to Modular Joints	TL	JB
2	9-1-10	Rev Bike Path Railing	TL	JB
1	6-14-10	Rev Pile lengths at north column W10AL & W10L	TL	JB

REVISIONS

Caltrans Metric

DIST.	COUNTY	ROUTE	KILOMETER POST TOTAL PROJECT	SHEET NO.	TOTAL SHEETS
04	SF	80	12.7/13.2	552R3	806

REGISTERED ENGINEER - CIVIL
6-23-08
PLANS APPROVAL DATE

REGISTERED PROFESSIONAL ENGINEER A.L. ELY No. 18880 Exp. 6-30-09 CIVIL STATE OF CALIFORNIA

The State of California or its officers or agents shall not be responsible for the accuracy or completeness of electronic copies of this plan sheet.

T.Y. LIN / MOFFATT & NICHOL
TWO HARRISON STREET
SAN FRANCISCO, CA 94105

CONTRACT CHANGE ORDER NO. 33
SHEET 14 OF 25

REGISTERED PROFESSIONAL ENGINEER JAL BIRDY No. 41547 Exp. 12-31-11 CIVIL STATE OF CALIFORNIA

FOR REVISION 1, 2 & 3 ONLY

QUANTITIES

PREPARE CONCRETE BRIDGE DECK SURFACE	1022 ~~765~~	m^2	2
BRIDGE REMOVAL (PORTION), LOCATION A	LUMP	SUM	
STRUCTURE EXCAVATION (BRIDGE)	9 105	m^3	
STRUCTURE EXCAVATION (TYPE H)	228	m^3	
STRUCTURE EXCAVATION (RETAINING WALL)	443	m^3	
STRUCTURE BACKFILL (BRIDGE)	2 800	m^3	
STRUCTURE BACKFILL (BRIDGE)(CEMENT MODIFIED)	3 770	m^3	
STRUCTURE BACKFILL (RETAINING WALL)	~~428~~	m^3	
FURNISH STEEL PILING (HP 360 X 132)	7 585	m	1
DRIVE STEEL PILE (HP 360 X 132)	615	EA	
FURNISH STEEL PILING (W 360 X 196)	1 558	m	
DRIVE STEEL PILE (W 360 X 196)	96	EA	
PRESTRESSING CAST-IN-PLACE CONCRETE (LONGITUDINAL)	LUMP	SUM	
PRESTRESSING CAST-IN-PLACE CONCRETE (TRANSVERSE)	LUMP	SUM	
STRUCTURAL CONCRETE, BRIDGE FOOTING	2 460	m^3	
STRUCTURAL CONCRETE, BRIDGE	32 390 ~~32 200~~	m^3	8
STRUCTURAL CONCRETE, RETAINING WALL	45	m^3	
STRUCTURAL CONCRETE, APPROACH SLAB, (TYPE EQ (3) MOD)	27	m^3	
MINOR CONCRETE (CONCRETE BALLAST)	36	m^3	
FURNISH PRECAST CONCRETE SLAB(BIKEPATH)	34	EA	2
ERECT PRECAST CONCRETE SLAB(BIKEPATH)	34	EA	
FURNISH POLYESTER CONCRETE OVERLAY (50MM)	38	m^3	
PLACE POLYESTER CONCRETE OVERLAY (50MM)	765	m^2	
PTFE SPHERICAL BEARING	10	EA	
INSTALL HINGE K BEARING ASSEMBLY	4	EA	
3 ~~SEISMIC JOINT (BENT W10AL)~~	LUMP	SUM	
MODULAR JOINT (HINGE W7LA)	LUMP	SUM	
~~SEISMIC JOINT (HINGE KW)~~	LUMP	SUM	
3 ~~SEISMIC JOINT (ABUT W11R)~~	LUMP	SUM	
MODULAR JOINT (HINGE W6RB)	LUMP	SUM	
~~SEISMIC JOINT (HINGE KE)~~	LUMP	SUM	
BAR REINFORCING STEEL (BRIDGE)	6 230 00 ~~6 110 000~~	kg	8
BAR REINFORCING STEEL (RETAINING WALL)	8 212	kg	
HEADED BAR REINFORCEMENT	224	EA	
CLEAN AND PAINT STRUCTURAL STEEL	LUMP	SUM	
(MISCELLANEOUS FACILITIES)			
COLUMN ISOLATION SLEEVE	18 786	kg	
MISCELLANEOUS METAL (RESTRAINER - CABLE TYPE)	1 647	kg	
MISCELLANEOUS METAL (BRIDGE)	8 600	kg	
BRIDGE DECK ~~DRAINAGE SYSTEM~~ 2	20 070	kg	
BIKEPATH RAILING (ANCHORAGE ONLY)	275	m	
REMOVABLE CONCRETE COUNTERWEIGHT(BIKEPATH)	LUMP	SUM	
~~CONCRETE BARRIER (TYPE 732 MODIFIED)~~	~~545~~	~~m~~	
CHAIN LINK RAILING TYPE 7 (TEMPORARY)	137	m	2

FURNISH POLYESTER CONCRETE OVERLAY (19MM)	5	m^3
PLACE POLYESTER CONCRETE OVERLAY (19MM)	257	m^2

8 REVISED PER ADDENDUM NO. 8 DATED NOVEMBER 12, 2009

2 REVISED PER ADDENDUM NO. 2 DATED JANUARY 22, 2009

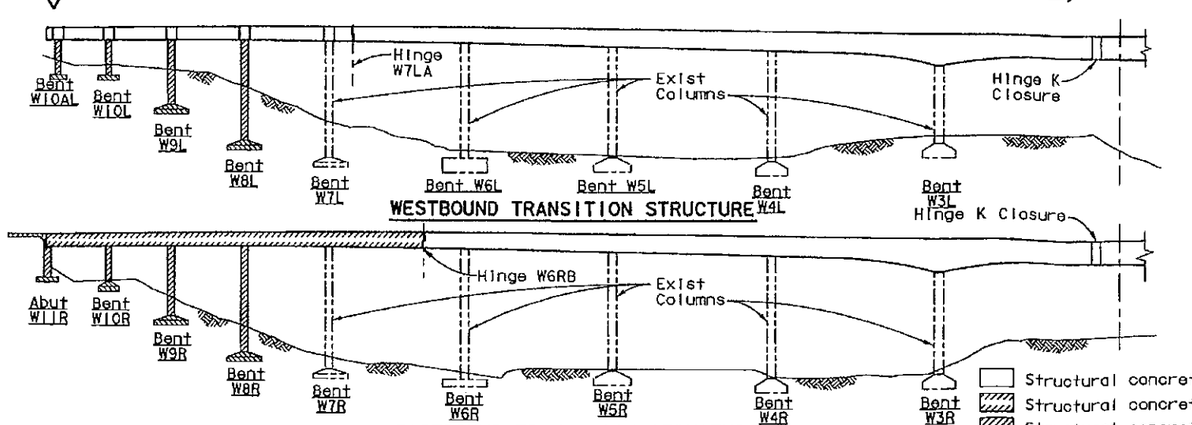

NOTE:
Piles not shown for clarity.

CONCRETE STRENGTH & TYPE LIMITS

- Structural concrete, bridge (46 MPa at 28 days)
- Structural concrete, bridge (41 MPa at 28 days)
- Structural concrete, bridge (25 MPa at 28 days)
- Structural concrete, bridge footing (25 MPa at 28 days)
- Structural concrete, approach slab (25 MPa at 28 days)

GENERAL NOTES

Load Factor Design

Design: Caltrans Design Specifications-April 2000 (LFD)
(1996 AASHTO with Interims and revisions by Caltrans)
Dead Load: Includes 1675 N/m2 for future wearing surface on roadbed
Live Load: HS20-44 and alternative and permit design load
Bike Path Live Load: 4000 N/m2
Future Mass Transit Loading:

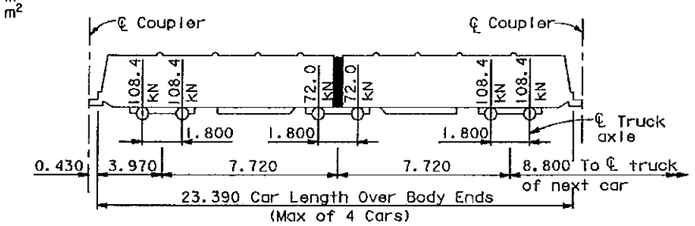

Seismic Loading: Refer to project specific seismic design criteria for San Francisco Oakland Bay Bridge East Span Seismic Safety Project Dated 01-08-00
See 'Site Specific Response Spectra'

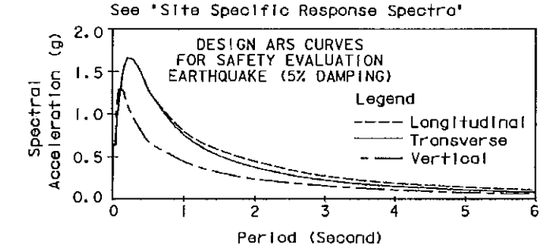

SITE SPECIFIC RESPONSE SPECTRA

Reinforced Concrete: Fy = 420 MPa
F'c = 25 MPa
N = 8

Transverse Deck Slabs
(Working Stress Design)
Fs = 140 MPa
Fc = 8 MPa
N = 10

Prestressed Concrete: See 'Prestressing Notes' on 'Girder Layout' & 'Prestress Details - Bents W8L & W7L' sheets

ALL DIMENSIONS ARE IN METERS UNLESS OTHERWISE SHOWN

DESIGN OVERSIGHT
JOHN MOOK, BERNARD CHAN, JUAN F. CARPIO, HASAN EL-NATAR
March 3, 2008
SIGN OFF DATE
10/22/10

	BY	CHECKED
DESIGN	Desai	Jain
DETAILS	van Ryn/Zucchi/Mal	Jain
QUANTITIES	Liao	E. Nichol

PREPARED FOR THE STATE OF CALIFORNIA DEPARTMENT OF TRANSPORTATION

Jal Birdy
PROJECT ENGINEER

BRIDGE NO. 34-0006 L/R
KILOMETER POST 12.8

SAN FRANCISCO OAKLAND BAY BRIDGE
EAST SPAN SEISMIC SAFETY PROJECT

YBI TRANSITION STRUCTURES
GENERAL NOTES

CU 04251
EA 0120S1

DISREGARD PRINTS BEARING EARLIER REVISION DATES

REVISION DATES (PRELIMINARY STAGE ONLY)

SHEET 3 OF 209

Rev. Date: 5-18-98

ORIGINAL SCALE IN MILLIMETERS FOR REDUCED PLANS 0 10 20 30 40 50 60 70 80 90 100

FILE => P:\4141-06\CADD\TS\Checked Plans\YBITS *1-100% No. 2.03-03-08 (Final Renamed)\101410 Hinge CCO T6\04-0120s1-34-006rf-b-gno

October 21, 2010

USERNAME => fsamson DATE PLOTTED => 10/21/2010 TIME PLOTTED => 4:26:57 PM

DIST.	COUNTY	ROUTE	KILOMETER POST TOTAL PROJECT	SHEET NO.	TOTAL SHEETS
04	SF	80	12.7/13.2	587R1	806

Caltrans Metric

REGISTERED ENGINEER - CIVIL
6-23-08
PLANS APPROVAL DATE
The State of California or its officers or agents shall not be responsible for the accuracy or completeness of electronic copies of this plan sheet.

REGISTERED PROFESSIONAL ENGINEER A.L. ELY No. 18880 Exp. 6-30-09 CIVIL STATE OF CALIFORNIA

T.Y. LIN / MOFFATT & NICHOL
TWO HARRISON STREET
SAN FRANCISCO, CA 94105

7

REGISTERED PROFESSIONAL ENGINEER JAL BIRDY No. 41547 Exp. 12-31-11 CIVIL STATE OF CALIFORNIA

FOR REVISION 1 ONLY

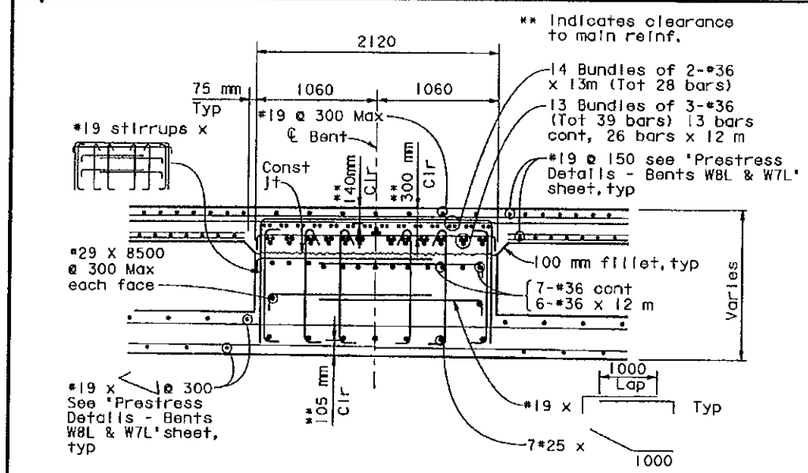

SECTION A-A
1:25

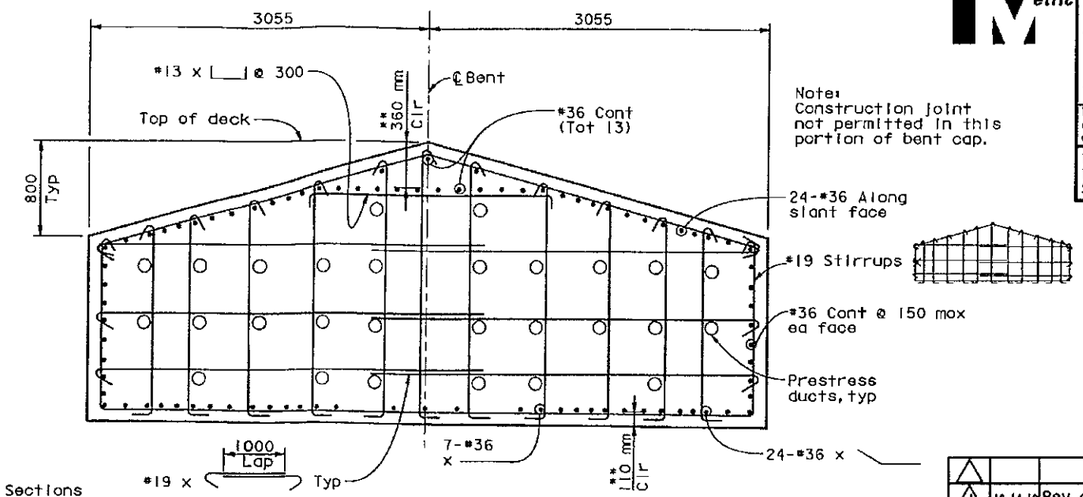

Note:
Construction joint not permitted in this portion of bent cap.

Note:
For location of Sections A-A, B-B, C-C & D-D, see 'Bent W7L Details No. 1' sheet.

SECTION B-B
1:25

MARK	DATE	DESCRIPTIONS	BY	CH'D
1	10-14-10	Rev deck expansion joint blockout	TL	JB

REVISIONS

CONTRACT CHANGE ORDER NO. 33
SHEET 15 OF 25

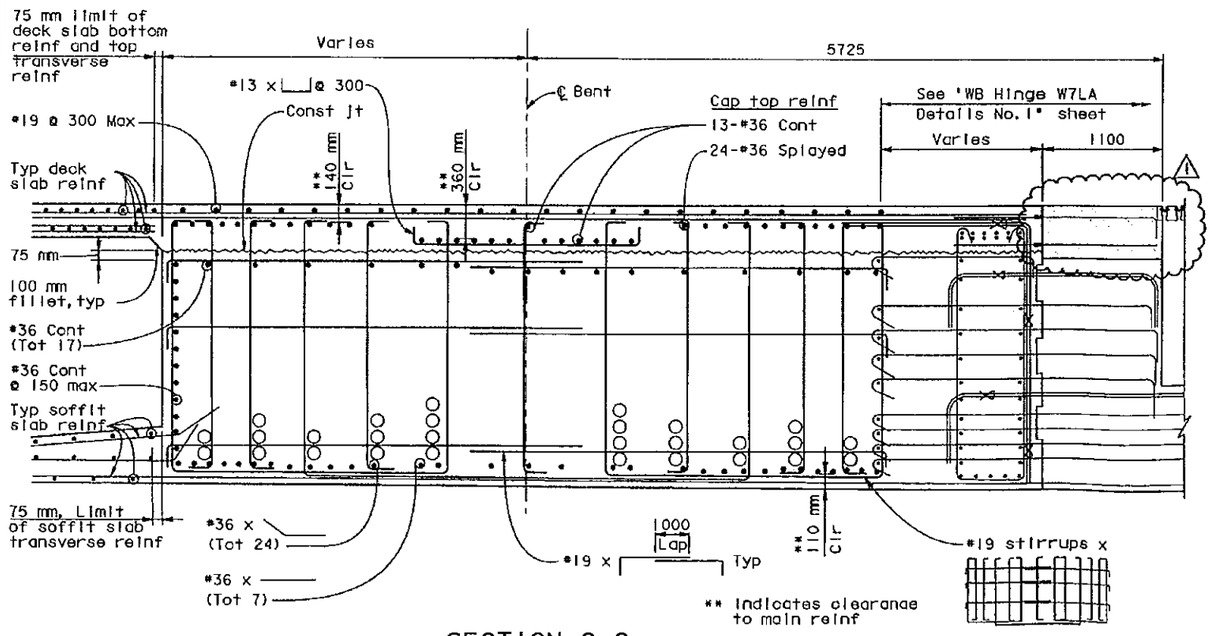

SECTION C-C
1:25

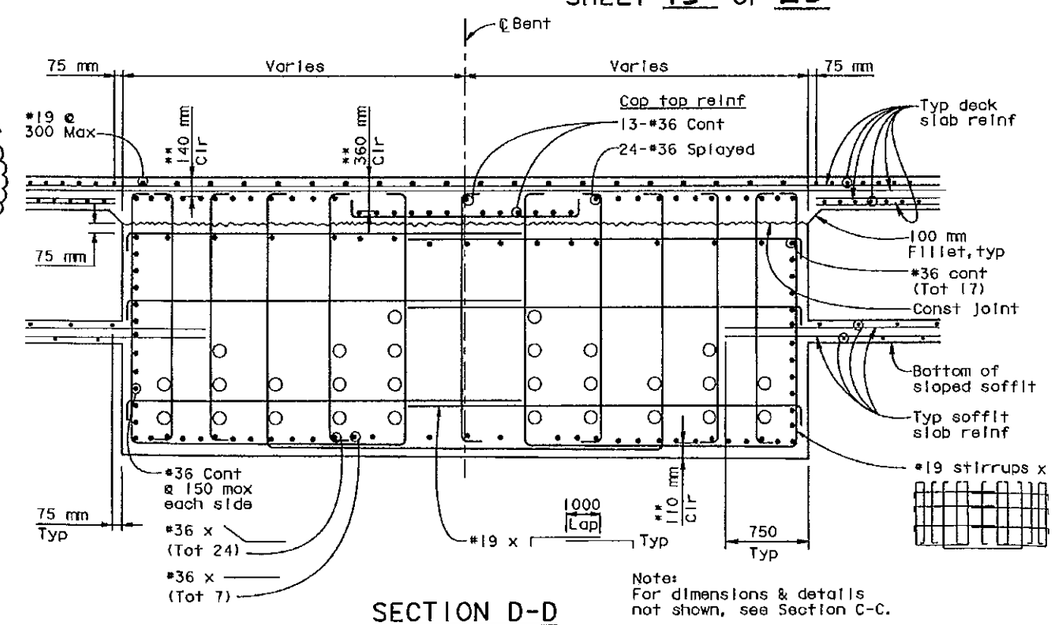

Note:
For dimensions & details not shown, see Section C-C.

SECTION D-D
1:25

7 REVISED PER ADDENDUM NO. 7 DATED OCTOBER 19, 2009

ALL DIMENSIONS ARE IN MILLIMETERS UNLESS OTHERWISE SHOWN

SAN FRANCISCO OAKLAND BAY BRIDGE
EAST SPAN SEISMIC SAFETY PROJECT

YBI TRANSITION STRUCTURES

BENT W7L DETAILS NO. 2

DESIGN OVERSIGHT
JOHN MOOK, BERNARD CHAN, JUAN F. CARPIO HASAN EL-NATOUR
SIGN OFF DATE 10/22/10
Rev. Date: 5-18-98

DESIGN	BY Xie	CHECKED Ann	
DETAILS	BY van Ryn/Zucchi/Mal	CHECKED Jain	
QUANTITIES	BY Liao	CHECKED E. Nichol	

PREPARED FOR THE STATE OF CALIFORNIA DEPARTMENT OF TRANSPORTATION

Jal Birdy
PROJECT ENGINEER

BRIDGE NO. 34-0006 L/R
KILOMETER POST 12.8

CU 04251
EA 0120S1

DISREGARD PRINTS BEARING EARLIER REVISION DATES

REVISION DATES (PRELIMINARY STAGE ONLY)

SHEET 38 OF 209

ORIGINAL SCALE IN MILLIMETERS FOR REDUCED PLANS 0 10 20 30 40 50 60 70 80 90 100

FILE => \\mnlbfs\LB_Projects\4141-06\CADD\TS\Checked Plans\YBITS #1-100X No. 2_03-03-08 (Final Renamed)\101410 Hinge CCO T6\04-012

October 14, 2010

USERNAME => fsomson DATE PLOTTED => 10/14/2010 TIME PLOTTED => 10:09:42 AM

DIST.	COUNTY	ROUTE	KILOMETER POST TOTAL PROJECT	SHEET NO.	TOTAL SHEETS
04	SF	80	12.7/13.2	660R1	806

Caltrans Metric

REGISTERED ENGINEER - CIVIL

6-23-08
PLANS APPROVAL DATE

The State of California or its officers or agents shall not be responsible for the accuracy or completeness of electronic copies of this plan sheet.

REGISTERED PROFESSIONAL ENGINEER A.L. ELY No. 18880 Exp. 6-30-09 CIVIL STATE OF CALIFORNIA

T.Y. LIN / MOFFATT & NICHOL
TWO HARRISON STREET
SAN FRANCISCO, CA 94105

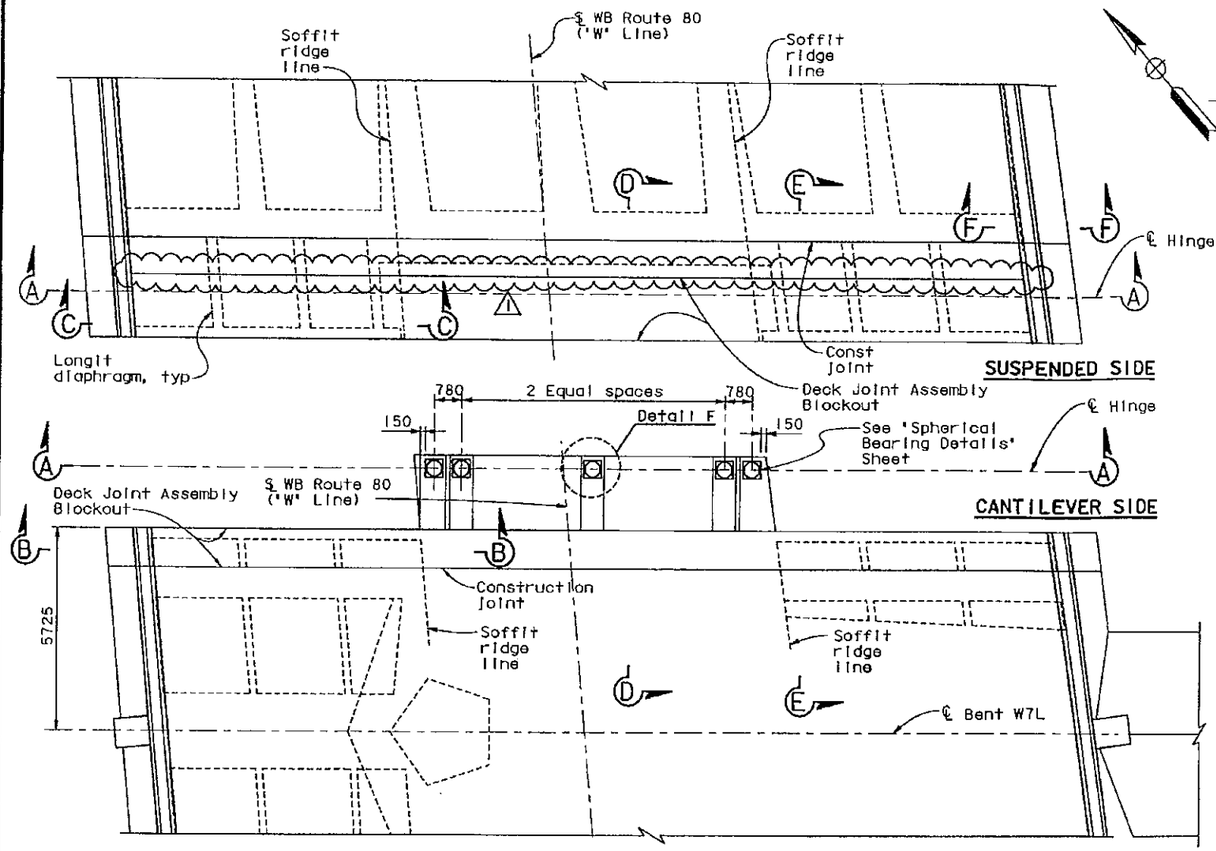

PLAN
1:80

Note: For sections B-B & C-C, see 'Hinge W7LA Details No. 2' sheet, for Sections D-D, E-E, F-F & Detail K, see 'Hinge W7LA Details No. 3' sheet.

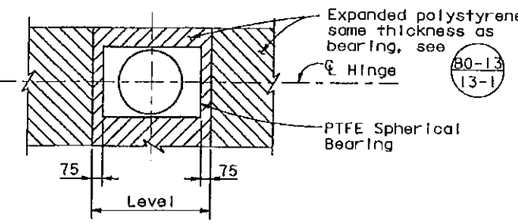

DETAIL F
No scale

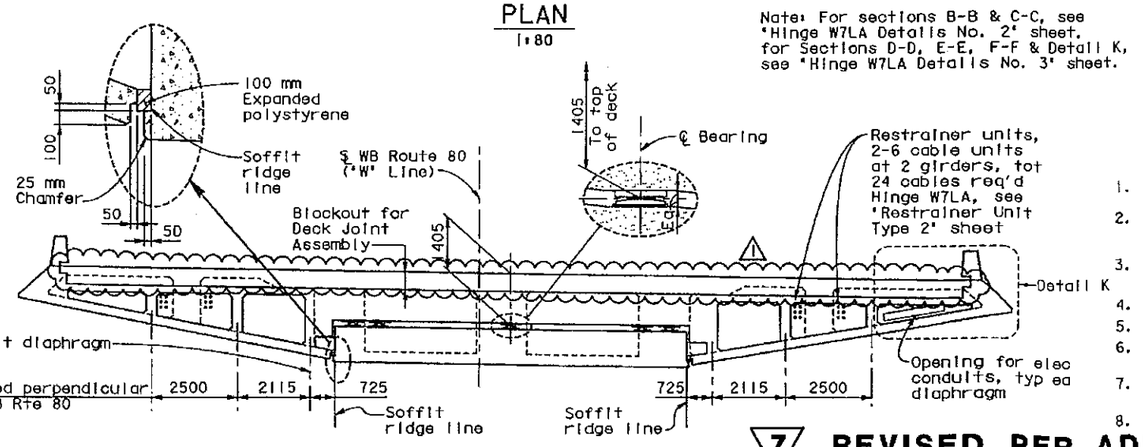

SECTION A-A
1:80

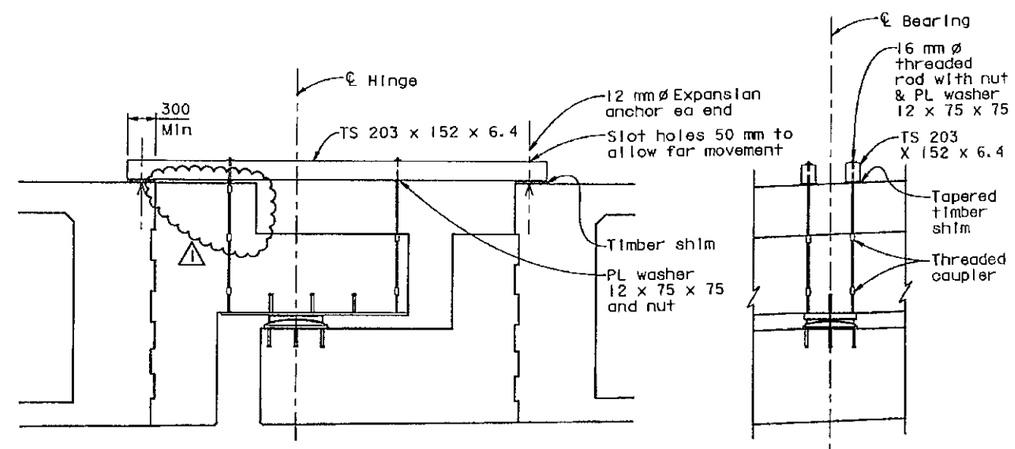

TEMPORARY BEARING SUPPORT
No scale

FOR REVISION 1 ONLY

MARK	DATE	DESCRIPTIONS	BY	CH'D
1	10-14-10	Rev deck expansion joint blockout	TL	JB

REVISIONS

CONTRACT CHANGE ORDER NO. 33
SHEET 16 OF 25

NOTES:

1. For dimension 'a' see 'Deck Joint Details' sheet.
2. To provide for free movement of the completed hinge, concrete is to be excluded from the joint by sealing all openings.
3. For protection of polystyrene see 80-13/13-1 & 80-13/13-2; vertical polystyrene (except above hinge seat) to be removed after construction.
4. Bars may be placed with hooks horizontal if required for clearance.
5. Reinforcement shall be spaced along ℄ of hinge and placed parallel to ℄ structure.
6. Hinge closure pour to be cast-in-place reinforced concrete same strength grade as cast-in-place prestressed concrete.
7. Lower portion (cantilever side) of hinge closure pour shall be cast first; upper portion of hinge closure pour to be placed after cantilever side is constructed and bearing assemblies are properly adjusted.
8. Falsework shall remain in place until closure pour concrete has attained a strength of at least 35 MPa

7 REVISED PER ADDENDUM NO. 7 DATED OCTOBER 19, 2009

ALL DIMENSIONS ARE IN MILLIMETERS UNLESS OTHERWISE SHOWN

DESIGN OVERSIGHT
JOHN MOOK, BERNARD CHAN, JUAN F. CARPIO, HASAN EL-NATUR
SIGN OFF DATE 10/22/10

	BY	CHECKED
DESIGN	Lee	Arguillah
DETAILS	van Ryn/Zucchi/Wal	Jain
QUANTITIES	Liao	E. Nichol

PREPARED FOR THE STATE OF CALIFORNIA DEPARTMENT OF TRANSPORTATION

Jal Birdy
PROJECT ENGINEER

BRIDGE NO. 34-0006 L/R
KILOMETER POST 12.8

SAN FRANCISCO OAKLAND BAY BRIDGE
EAST SPAN SEISMIC SAFETY PROJECT

YBI TRANSITION STRUCTURES

HINGE W7LA DETAILS NO. 1

CU 04251
EA 0120S1

DISREGARD PRINTS BEARING EARLIER REVISION DATES

REVISION DATES (PRELIMINARY STAGE ONLY)

SHEET 111 OF 209

Rev. Date: 5-18-98

ORIGINAL SCALE IN MILLIMETERS FOR REDUCED PLANS 0 10 20 30 40 50 60 70 80 90 100

FILE => P:\4141-06\CADD\TS\Checked Plans\YBITS #1-100% No. 2_03-03-08 (Final Renamed)\101410 Hinge CCO T6\04-0120s1-34-006r1-n-hing

October 21, 2010

USERNAME => fcamson DATE PLOTTED => 10/21/2010 TIME PLOTTED => 4:29:38 PM

MARK	DATE	DESCRIPTIONS	BY	CH'D
1	10-14-10	Rev deck expansion joint blockout	TL	JB

REVISIONS

FOR REVISION 1 ONLY

CONTRACT CHANGE ORDER NO. 33
SHEET 17 OF 25

Note: For locations of Sections B-B & C-C see 'Hinge W7LA Details No. 1' sheet.

** Dimension measured perpendicular to ℄ Hinge.

Indicates polystyrene

Indicates concrete placed when deck joint installed

Note: For details not shown, see Section E-E, 'Hinge W7LA Details No. 3' sheet.

DIST.	COUNTY	ROUTE	KILOMETER POST TOTAL PROJECT	SHEET NO.	TOTAL SHEETS
04	SF	80	12.7/13.2	661R1	806

REGISTERED ENGINEER - CIVIL
6-23-08
PLANS APPROVAL DATE

The State of California or its officers or agents shall not be responsible for the accuracy or completeness of electronic copies of this plan sheet.

T.Y. LIN / MOFFATT & NICHOL
TWO HARRISON STREET
SAN FRANCISCO, CA 94105

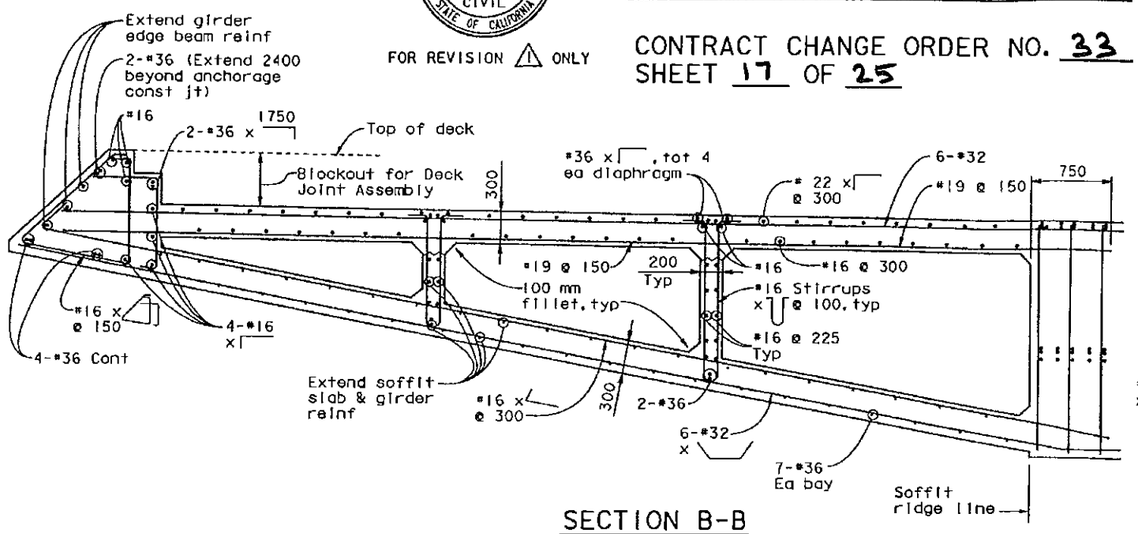

SECTION B-B
1:25

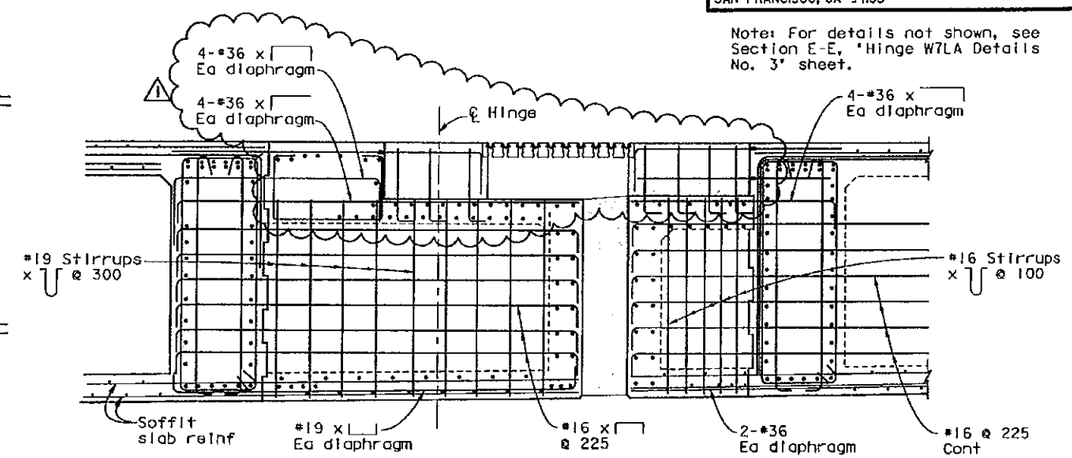

LONGITUDINAL DIAPHRAGM ELEVATION
1:25

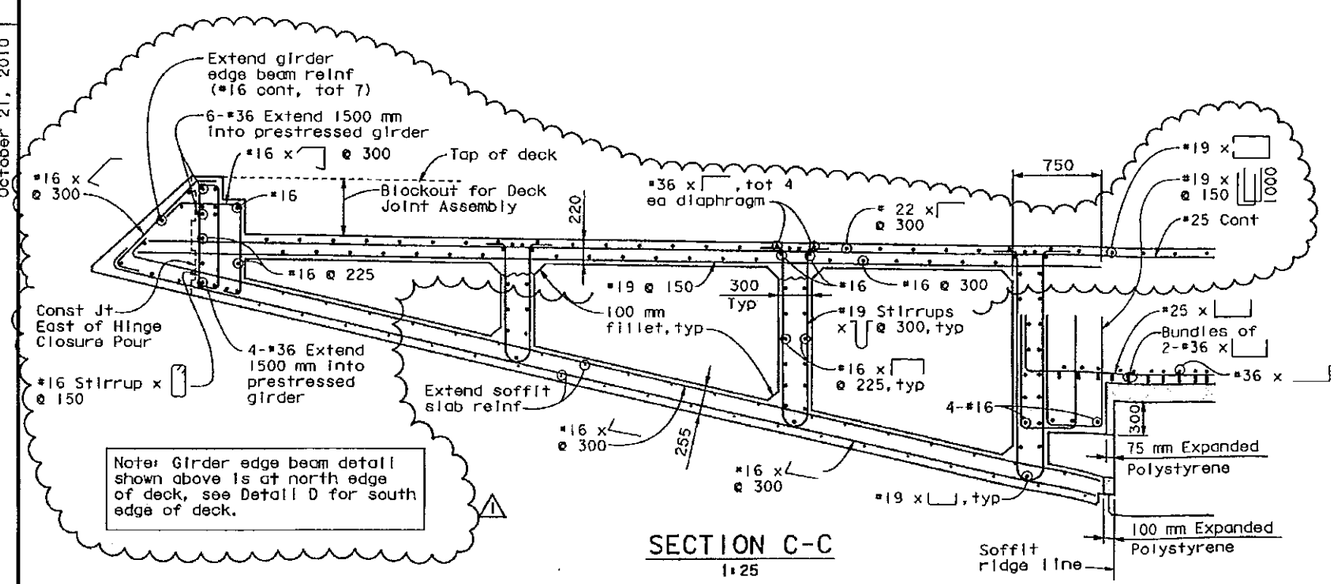

SECTION C-C
1:25

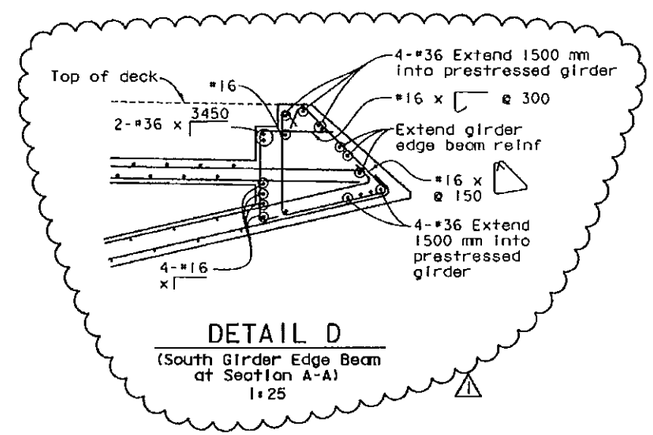

DETAIL D
(South Girder Edge Beam at Section A-A)
1:25

7 REVISED PER ADDENDUM NO. 7 DATED OCTOBER 19, 2009

ALL DIMENSIONS ARE IN MILLIMETERS UNLESS OTHERWISE SHOWN

DESIGN OVERSIGHT: JOHN MOOK, BERNARD CHAN, JUAN F. CARPIO, HASAN EL-NATUR
SIGN OFF DATE: 10/22/10

	BY	CHECKED
DESIGN	Lee	Atiqullah
DETAILS	van Ryn/Zucchi/Wal	Jain
QUANTITIES	Lloo	E. Nichol

PREPARED FOR THE STATE OF CALIFORNIA DEPARTMENT OF TRANSPORTATION

Jal Birdy
PROJECT ENGINEER

BRIDGE NO. 34-0006 L/R
KILOMETER POST 12.8

SAN FRANCISCO OAKLAND BAY BRIDGE
EAST SPAN SEISMIC SAFETY PROJECT

YBI TRANSITION STRUCTURES

HINGE W7LA DETAILS NO. 2

Rev. Date: 5-18-98

ORIGINAL SCALE IN MILLIMETERS FOR REDUCED PLANS 0 10 20 30 40 50 60 70 80 90 100

CU 04251
EA 0120S1

DISREGARD PRINTS BEARING EARLIER REVISION DATES

REVISION DATES (PRELIMINARY STAGE ONLY) 8/31/01 8/30/02 3/3/03 5/23/03 6/26/03 9/29/03 10/14/10 12/4/06 12/20/07 5/22/07

SHEET 112 OF 209

FILE => P:\4141-06\CADD\TS\Checked Plans\YBITS #1-100% No. 2_03-03-08 (Final Renamed)\101410 Hinge CCO T6\04-0120s1-34-006r1-n-hing

October 21, 2010

USERNAME => fagamon DATE PLOTTED => 10/21/2010 TIME PLOTTED => 4:29:49 PM

DIST.	COUNTY	ROUTE	KILOMETER POST TOTAL PROJECT	SHEET NO.	TOTAL SHEETS
04	SF	80	12.7/13.2	662R	806

Caltrans Metric

A. L. Ely
REGISTERED ENGINEER - CIVIL
6-23-08
PLANS APPROVAL DATE

REGISTERED PROFESSIONAL ENGINEER A.L. ELY No. 18880 Exp. 6-30-09 CIVIL STATE OF CALIFORNIA

The State of California or its officers or agents shall not be responsible for the accuracy or completeness of electronic copies of this plan sheet.

T.Y. LIN / MOFFATT & NICHOL
TWO HARRISON STREET
SAN FRANCISCO, CA 94105

Note: For locations of Sections D-D & E-E, see 'Hinge W7LA Details No. 1' sheet.

** Dimension measured perpendicular to ℄ Hinge.

Indicates polystyrene

Indicates concrete placed when deck joint installed

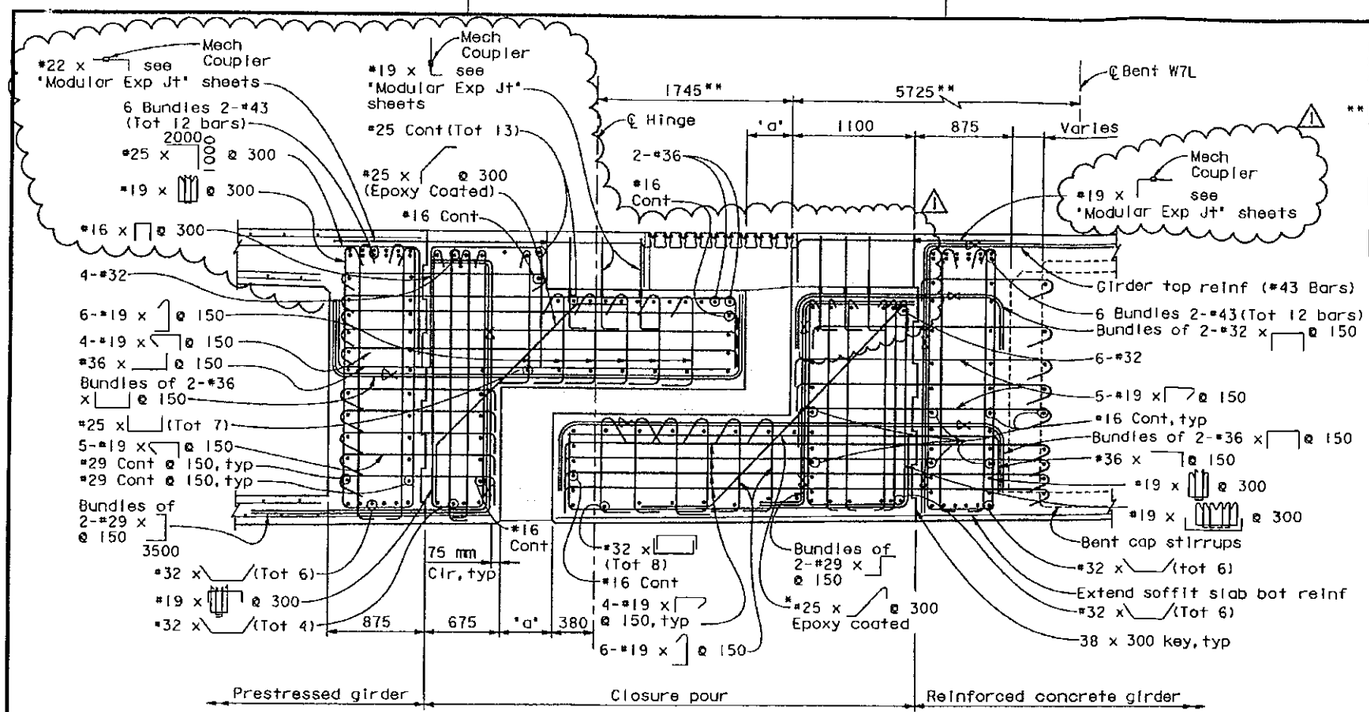

SECTION D-D
1:25

* Min concrete cover for #25 epoxy coated bar to be 25 mm clr from the corner

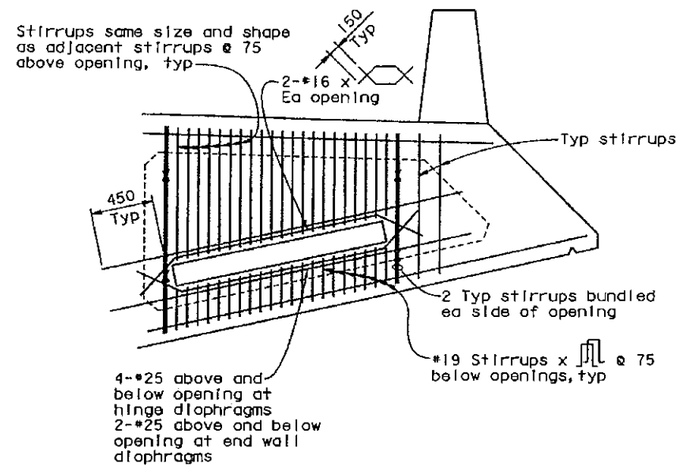

DETAIL K
(Typ reinf at opening for elec conduits)
No Scale

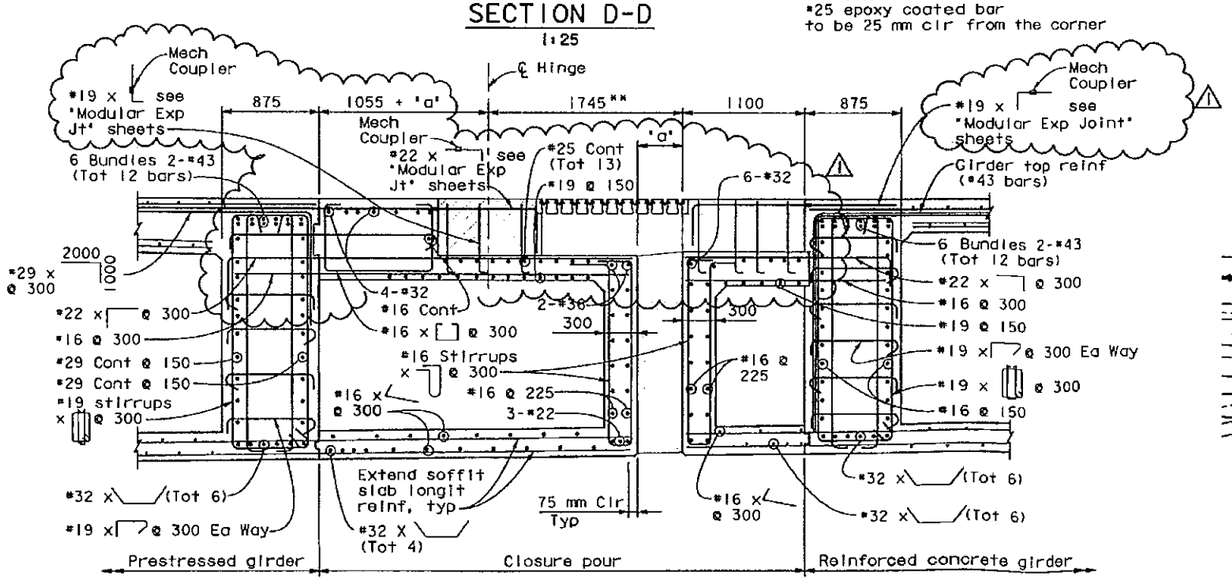

SUSPENDED SIDE

SECTION E-E
1:25

CANTILEVER SIDE

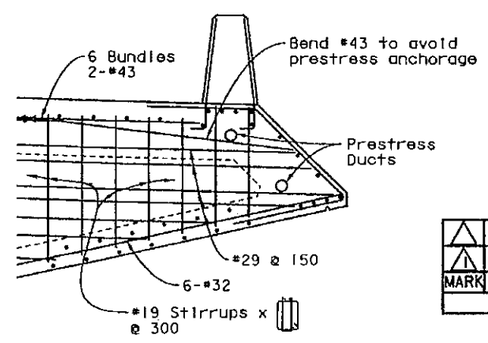

SECTION F-F
1:25

REGISTERED PROFESSIONAL ENGINEER JAL BIRDY No. 41547 Exp. 12-31-11 CIVIL STATE OF CALIFORNIA

FOR REVISION 1 ONLY

MARK	DATE	DESCRIPTIONS	BY	CH'D
1	10-14-10	Rev deck expansion joint blockout	TL	JB

REVISIONS

CONTRACT CHANGE ORDER NO. 33
SHEET 18 OF 25

7 REVISED PER ADDENDUM NO. 7 DATED OCTOBER 19, 2009

ALL DIMENSIONS ARE IN MILLIMETERS UNLESS OTHERWISE SHOWN

SAN FRANCISCO OAKLAND BAY BRIDGE
EAST SPAN SEISMIC SAFETY PROJECT

YBI TRANSITION STRUCTURES

HINGE W7LA DETAILS NO. 3

DESIGN OVERSIGHT: JOHN MOOK, BERNARD CHAN, JUAN F. CARPIO, HASAN SC-HATUR
SIGN OFF DATE: 10/22/10

	BY	CHECKED
DESIGN	Lee	Atiqullah
DETAILS	Van Ryn/Zucchi/Mal	Jain
QUANTITIES	Liao	E. Nichol

PREPARED FOR THE STATE OF CALIFORNIA DEPARTMENT OF TRANSPORTATION

Jal Birdy
PROJECT ENGINEER

BRIDGE NO. 34-0006 L/R
KILOMETER POST 12.8

CU 04251
EA 0120S1

DISREGARD PRINTS BEARING EARLIER REVISION DATES

REVISION DATES (PRELIMINARY STAGE ONLY)

SHEET 113 OF 209

Rev. Date: 5-18-98

ORIGINAL SCALE IN MILLIMETERS FOR REDUCED PLANS 0 10 20 30 40 50 60 70 80 90 100

FILE => P:\4141-06\CADD\TS\Checked Plans\YBITS *1-100% No. 2_03-08 (Final Renamed)\101410 Hinge CCO T6\04-0120s1-34-006r1-n-hing

October 21, 2010

USERNAME => fgamban DATE PLOTTED => 10/21/2010 TIME PLOTTED => 4:30:00 PM

DIST.	COUNTY	ROUTE	KILOMETER POST TOTAL PROJECT	SHEET NO.	TOTAL SHEETS
04	SF	80	12.7/13.2	663R2	806

Caltrans Metric

REGISTERED ENGINEER - CIVIL

6-23-08
PLANS APPROVAL DATE

REGISTERED PROFESSIONAL ENGINEER A.L. ELY No. 18880 Exp. 6-30-09 CIVIL STATE OF CALIFORNIA

The State of California or its officers or agents shall not be responsible for the accuracy or completeness of electronic copies of this plan sheet.

T.Y. LIN / MOFFATT & NICHOL
TWO HARRISON STREET
SAN FRANCISCO, CA 94105

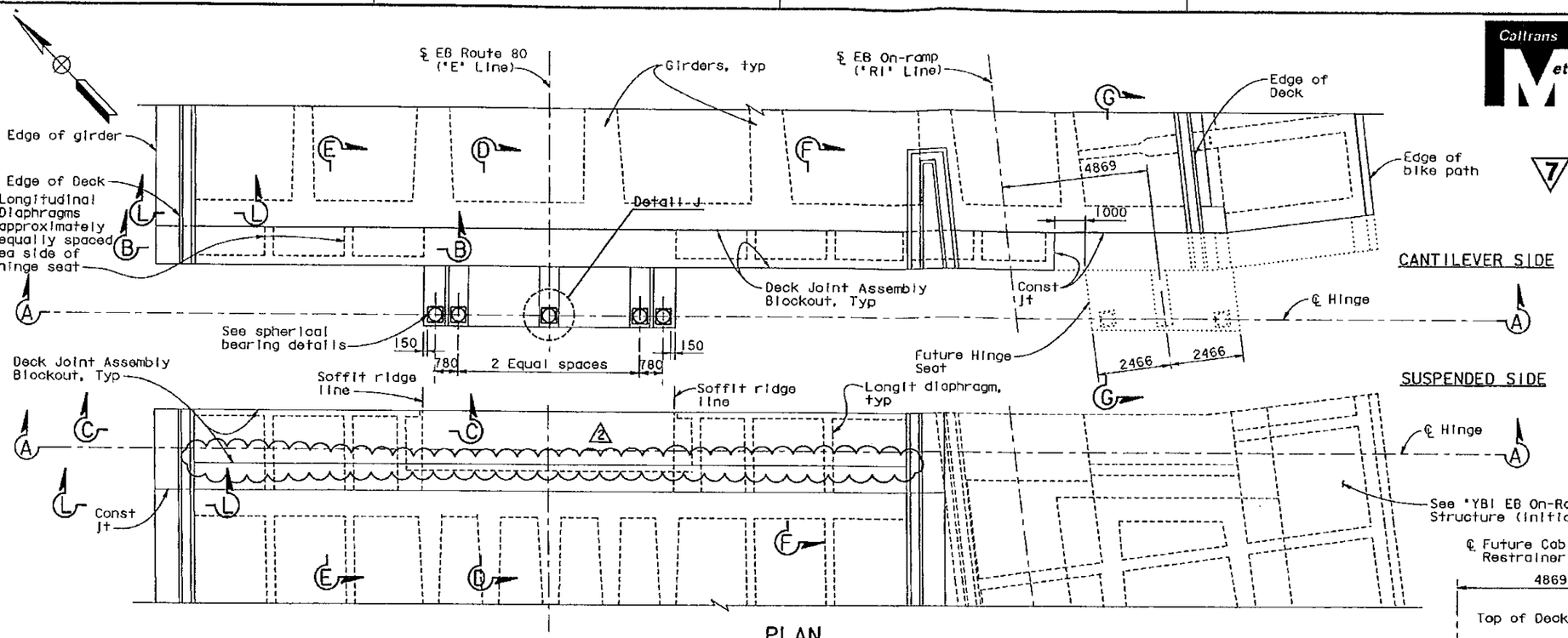

PLAN
1:80

Note: For Sections B-B and C-C, see 'Hinge W6RB Details No. 2' sheet, for sections D-D, E-E, F-F & L-L, see 'Hinge W6RB Details No. 3' sheet, for Section G-G, see 'Hinge W6RB Details No. 4' sheet.

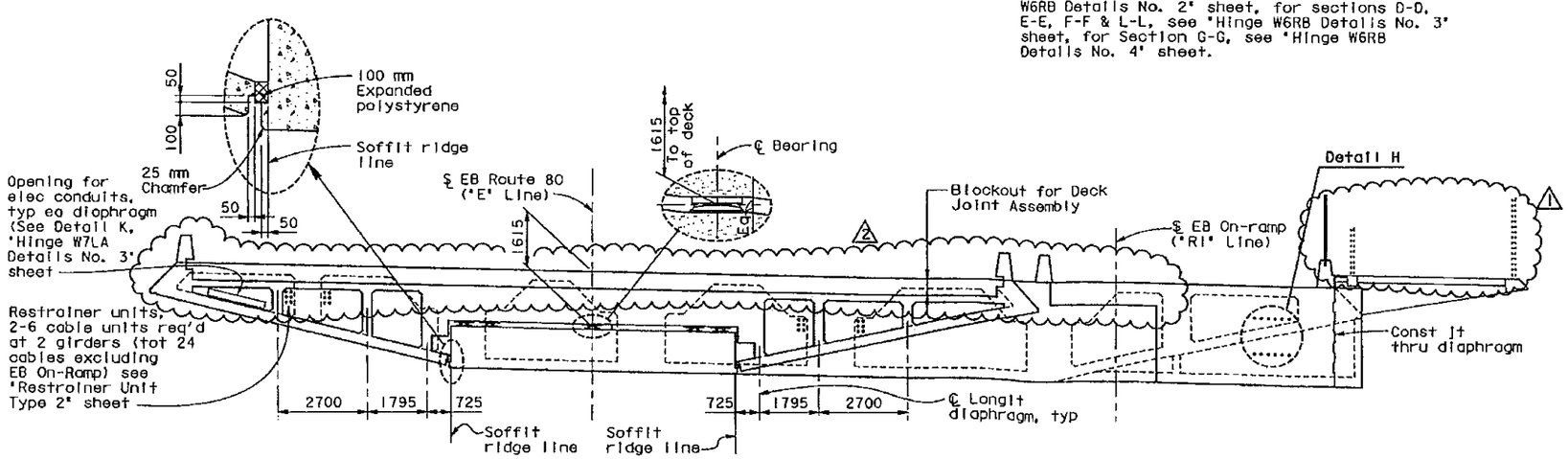

SECTION A-A
1:80

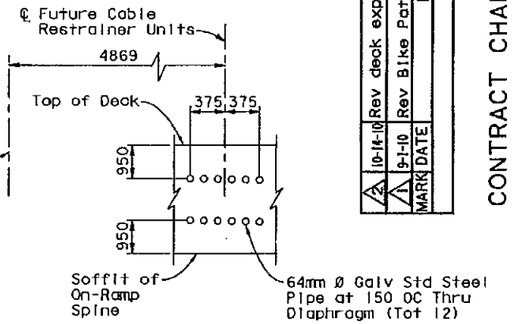

DETAIL H
No Scale

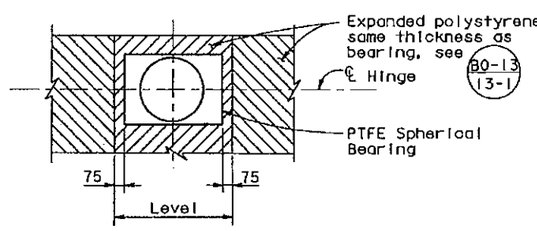

DETAIL J
No scale

ALL DIMENSIONS ARE IN MILLIMETERS UNLESS OTHERWISE SHOWN

7 **REVISED PER ADDENDUM NO. 7 DATED OCTOBER 19, 2009**

MARK	DATE	DESCRIPTIONS	BY	CH'D
2	10-14-10	Rev deck exp jt blockout	TL	JB
1	9-1-10	Rev Bike Path Railing	TL	JB

REVISIONS

FOR REVISION 1 AND 2 ONLY

PROFESSIONAL ENGINEER JAL BIRDY No. 41547 Exp. 12-31-11 CIVIL STATE OF CALIFORNIA

CONTRACT CHANGE ORDER NO. 33
SHEET 19 OF 25

October 21, 2010

DESIGN OVERSIGHT
JOHN HOOK, BERNARD CHAN, JUAN F. CARPIO, HASAN EL-NATUR
March 3, 2008
SIGN OFF DATE

Rev. Octo 5-18-98

DESIGN	BY Lee	CHECKED Alquilah	
DETAILS	BY van Ryn/Zucchi/Wal	CHECKED Jain	
QUANTITIES	BY Liao	CHECKED E. Nichol	

PREPARED FOR THE STATE OF CALIFORNIA DEPARTMENT OF TRANSPORTATION

Jal Birdy
PROJECT ENGINEER

BRIDGE NO. 34-0006 L/R
KILOMETER POST 12.8

CU 04251
EA 0120S1

ORIGINAL SCALE IN MILLIMETERS FOR REDUCED PLANS 0 10 20 30 40 50 60 70 80 90 100

DISREGARD PRINTS BEARING EARLIER REVISION DATES

REVISION DATES (PRELIMINARY STAGE ONLY)

SHEET 114 OF 209

SAN FRANCISCO OAKLAND BAY BRIDGE
EAST SPAN SEISMIC SAFETY PROJECT

YBI TRANSITION STRUCTURES

HINGE W6RB DETAILS NO. 1

USERNAME => fegamson DATE PLOTTED => 10/21/2010 TIME PLOTTED => 4:30:09 PM

FILE => P:\4141-06\CADD\TS\Checked Plans\YBITS *1-100% No. 2_03-03-08 (Final Renamed)\101410 Hinge CCO T6\04-0120s1-34-006rl-n-hing

DIST.	COUNTY	ROUTE	KILOMETER POST TOTAL PROJECT	SHEET NO.	TOTAL SHEETS
04	SF	80	12.7/13.2	664R1	806

REGISTERED ENGINEER - CIVIL

6-23-08

PLANS APPROVAL DATE

The State of California or its officers or agents shall not be responsible for the accuracy or completeness of electronic copies of this plan sheet.

REGISTERED PROFESSIONAL ENGINEER A.L. ELY No. 18880 Exp. 6-30-09 CIVIL STATE OF CALIFORNIA

T.Y. LIN / MOFFATT & NICHOL
TWO HARRISON STREET
SAN FRANCISCO, CA 94105

Note: For locations of Sections B-B and C-C, see 'Hinge W6RB Details No. 1' sheet.

Indicates polystyrene

Indicates concrete placed when deck joint installed

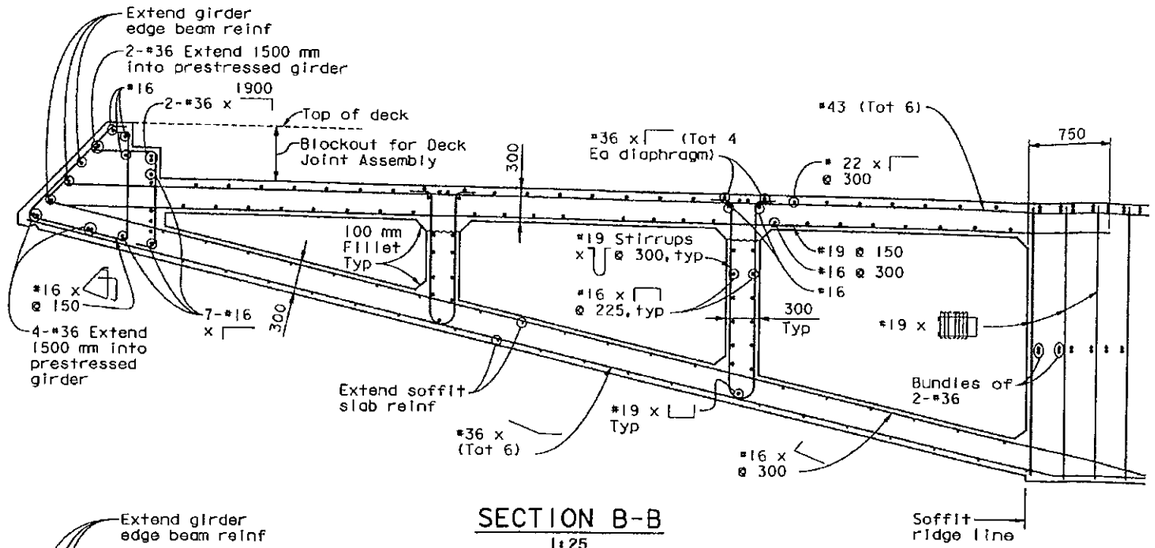

SECTION B-B
1:25

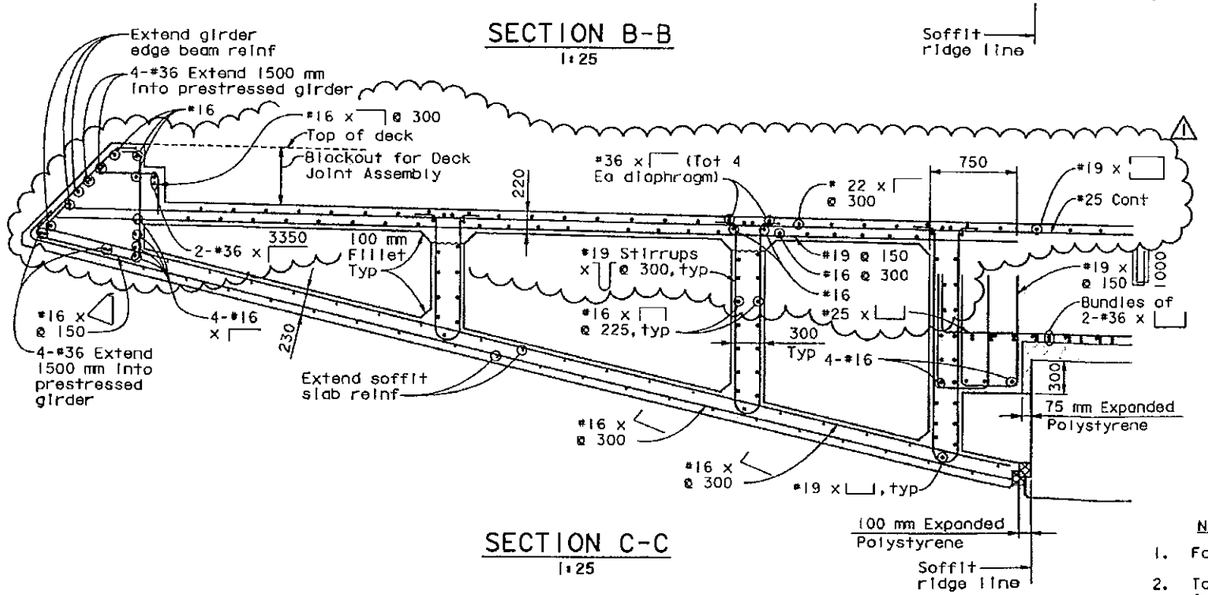

SECTION C-C
1:25

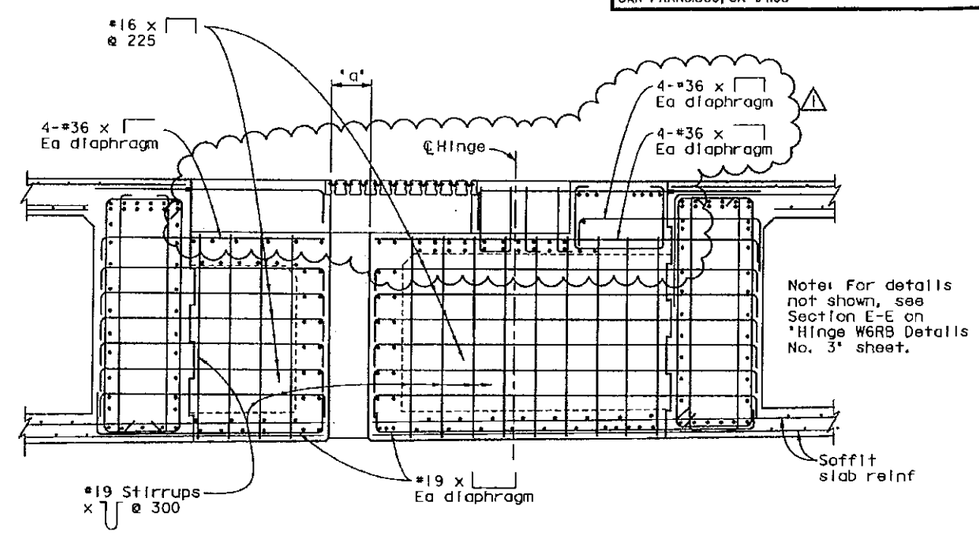

Note: For details not shown, see Section E-E on 'Hinge W6RB Details No. 3' sheet.

LONGITUDINAL DIAPHRAGM ELEVATION
1:25

NOTES:

1. For dimension 'a' see 'Deck Joint Details' sheet.
2. To provide for free movement of the completed hinge, concrete is to be excluded from the joint by sealing all openings.
3. For protection of polystyrene see (BO-13 / 13-1) & (BO-13 / 13-2), vertical polystyrene (except above hinge seat) to be removed after construction.
4. Bars may be placed with hooks horizontal if required for clearance.
5. Reinforcement shall be spaced along ℄ of hinge and placed parallel to ℄ structure.
6. Hinge closure pour to be cast-in-place reinforced concrete same strength grade as cast-in-place prestressed concrete.
7. Lower portion (cantilever side) of hinge closure pour shall be cast first; upper portion of hinge closure pour to be placed after cantilever side is constructed and bearing assemblies are properly adjusted.
8. Falsework shall remain in place until closure pour concrete has attained a strength of at least 35 MPa.
9. For temporary bearing support see 'Hinge W7LA Details No. 1' sheet.

REGISTERED PROFESSIONAL ENGINEER JAL BIRDY No. 41547 Exp. 12-31-11 CIVIL STATE OF CALIFORNIA

FOR REVISION 1 ONLY

MARK	DATE	DESCRIPTIONS	BY	CH'D
1	10-14-10	Rev deck expansion joint blockout	TL	JB

REVISIONS

CONTRACT CHANGE ORDER NO. 33
SHEET 20 OF 25

7 REVISED PER ADDENDUM NO. 7 DATED OCTOBER 19, 2009

ALL DIMENSIONS ARE IN MILLIMETERS UNLESS OTHERWISE SHOWN

DESIGN OVERSIGHT: JOHN MOOK, BERNARD CHAN, JUAN F. CARPIO, HASAN EL-NATUR
SIGN OFF DATE 10/22/10

	BY	CHECKED
DESIGN	Lee	Atiquilah
DETAILS	van Ryn/Zucchi/Wal	Jain
QUANTITIES	Liao	E. Nichol

PREPARED FOR THE STATE OF CALIFORNIA DEPARTMENT OF TRANSPORTATION

Jal Birdy, PROJECT ENGINEER

BRIDGE NO. 34-0006 L/R
KILOMETER POST 12.8

SAN FRANCISCO OAKLAND BAY BRIDGE
EAST SPAN SEISMIC SAFETY PROJECT

YBI TRANSITION STRUCTURES

HINGE W6RB DETAILS NO. 2

CU 04251
EA 0120S1

DISREGARD PRINTS BEARING EARLIER REVISION DATES

REVISION DATES (PRELIMINARY STAGE ONLY) 1/21/10 2/12/10 3/1/10 4/26/10 5/28/10 10/14/10 11/1/10 12/1/10 12/20/10 1/21/11

SHEET 115 OF 209

Rev. Date: 5-18-98

ORIGINAL SCALE IN MILLIMETERS FOR REDUCED PLANS 0 10 20 30 40 50 60 70 80 90 100

FILE => P:\4141-06\CADD\TS\Checked Plans\YBITS #1-100% No. 2_03-03-08 (Final Renamed)\101410 Hinge CCO T6\04-0120s1-34-0006r1-n-hinge

October 21, 2010

USERNAME => fsemson DATE PLOTTED => 10/21/2010 TIME PLOTTED => 4:30:18 PM

DIST.	COUNTY	ROUTE	KILOMETER POST TOTAL PROJECT	SHEET NO.	TOTAL SHEETS
04	SF	80	12.7/13.2	665R1	806

Caltrans Metric

REGISTERED ENGINEER - CIVIL
6-23-08
PLANS APPROVAL DATE

REGISTERED PROFESSIONAL ENGINEER A.L. ELY No. 18880 Exp. 6-30-09 CIVIL STATE OF CALIFORNIA

The State of California or its officers or agents shall not be responsible for the accuracy or completeness of electronic copies of this plan sheet.

T.Y. LIN / MOFFATT & NICHOL
TWO HARRISON STREET
SAN FRANCISCO, CA 94105

Note: For locations of Sections D-D, E-E & F-F see 'Hinge W6RB Details No. 1' sheet.

Indicates polystyrene

Indicates concrete placed when deck joint installed

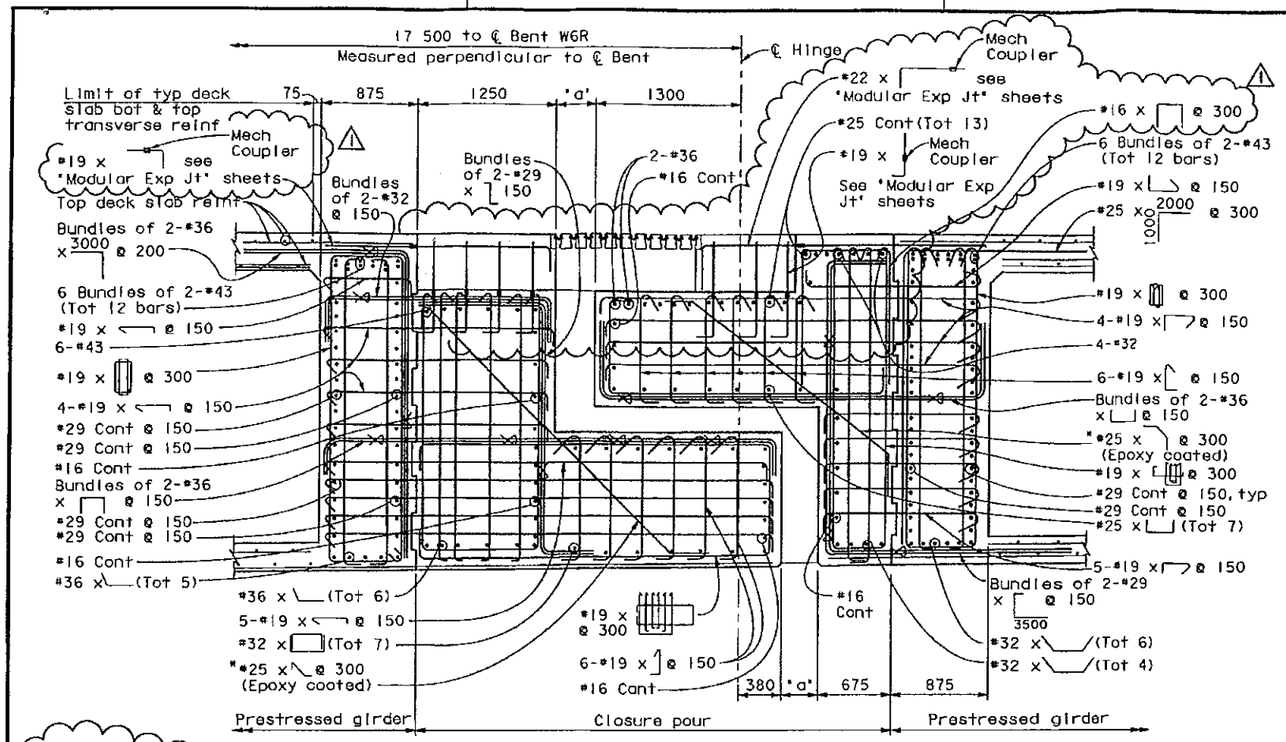

SECTION D-D
1:25

*Min concrete cover for #25 epoxy coated bar to be 25 mm clr from the corner

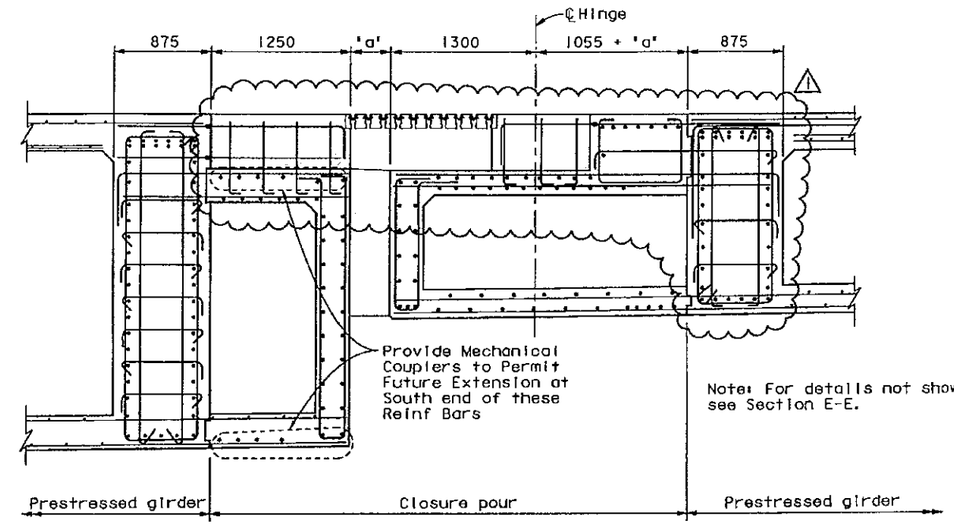

Note: For details not shown see Section E-E.

CANTILEVER SIDE — SUSPENDED SIDE

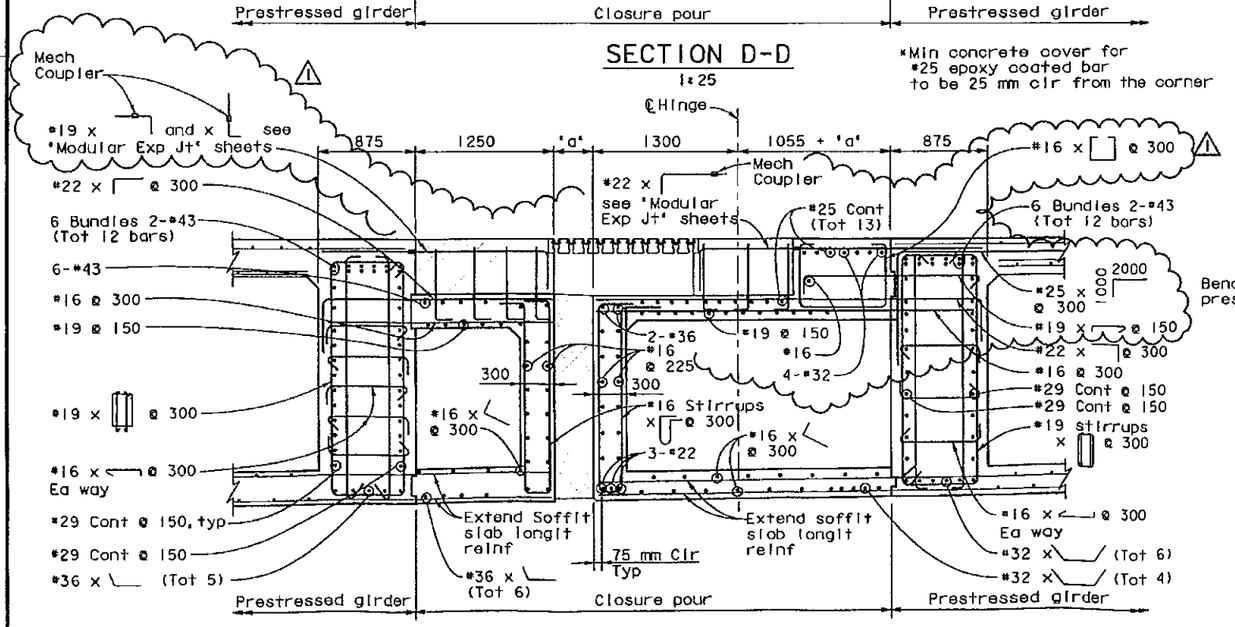

CANTILEVER SIDE — SUSPENDED SIDE

SECTION E-E
1:25

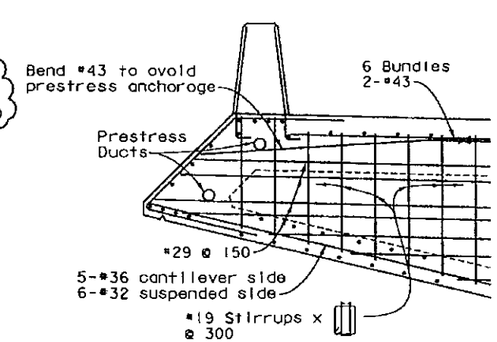

SECTION L-L
1:25

SECTION F-F
1:25

REGISTERED PROFESSIONAL ENGINEER JAL BIRDY No. 41547 Exp. 12-31-11 CIVIL STATE OF CALIFORNIA

FOR REVISION ⚠ ONLY

MARK	DATE	DESCRIPTIONS	BY	CH'D
⚠	10-14-10	Rev deck expansion joint blockout	TL	JB

REVISIONS

CONTRACT CHANGE ORDER NO. 33
SHEET 21 OF 25

ALL DIMENSIONS ARE IN MILLIMETERS UNLESS OTHERWISE SHOWN

DESIGN OVERSIGHT — JOHN MOOK, BERNARD CHAN, JUAN F. CARPIO — HASAN EL-NATUR — March 3, 2008 — 10/22/10 — SIGN OFF DATE

	BY	CHECKED
DESIGN	Lee	Atiqullah
DETAILS	Van Ryn/Zucchi/Mal	Jain
QUANTITIES	Lido	E. Nichol

PREPARED FOR THE STATE OF CALIFORNIA DEPARTMENT OF TRANSPORTATION

Jal Birdy, PROJECT ENGINEER

CU 04251
EA 0120S1

BRIDGE NO. 34-0006 L/R
KILOMETER POST 12.8

SAN FRANCISCO OAKLAND BAY BRIDGE
EAST SPAN SEISMIC SAFETY PROJECT

YBI TRANSITION STRUCTURES
HINGE W6RB DETAILS NO. 3

DISREGARD PRINTS BEARING EARLIER REVISION DATES — REVISION DATES (PRELIMINARY STAGE ONLY)

SHEET 116 OF 209

Rev. Date: 5-18-98

ORIGINAL SCALE IN MILLIMETERS FOR REDUCED PLANS 0 10 20 30 40 50 60 70 80 90 100

FILE => P:\4141-06\CADD\TS\Checked Plans\YBITS #1-100% No. 2_03-03-08 (Final Renamed)\101410 Hinge CCO T6\04-012051-34-0006R1-n-hinge

October 21, 2010

USERNAME => fgomson DATE PLOTTED => 10/21/2010 TIME PLOTTED => 4:30:31 PM

DIST.	COUNTY	ROUTE	KILOMETER POST TOTAL PROJECT	SHEET NO.	TOTAL SHEETS
04	SF	80	12.7/13.2	566R2	806

Caltrans Metric

REGISTERED ENGINEER - CIVIL

6-23-08
PLANS APPROVAL DATE

REGISTERED PROFESSIONAL ENGINEER A.L. ELY No. 18880 Exp. 6-30-09 CIVIL STATE OF CALIFORNIA

The State of California or its officers or agents shall not be responsible for the accuracy or completeness of electronic copies of this plan sheet.

T.Y. LIN / MOFFATT & NICHOL
TWO HARRISON STREET
SAN FRANCISCO, CA 94105

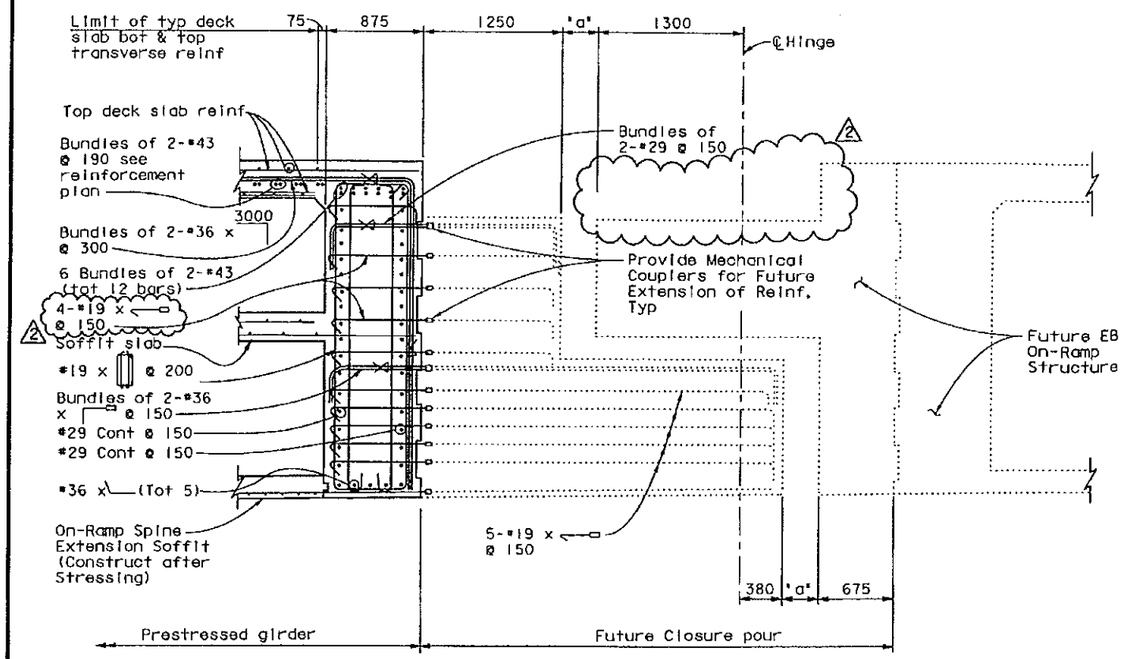

SECTION G-G

1:25

Note: For location of section G-G, see 'Hinge W6RB Details No. 1' sheet

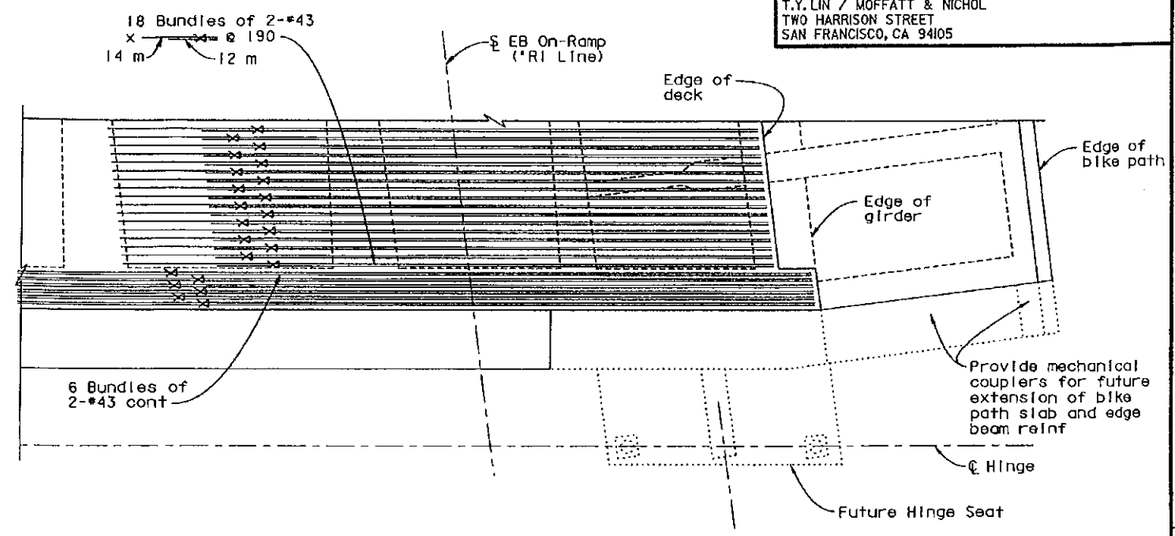

PARTIAL TOP REINFORCEMENT PLAN

No Scale

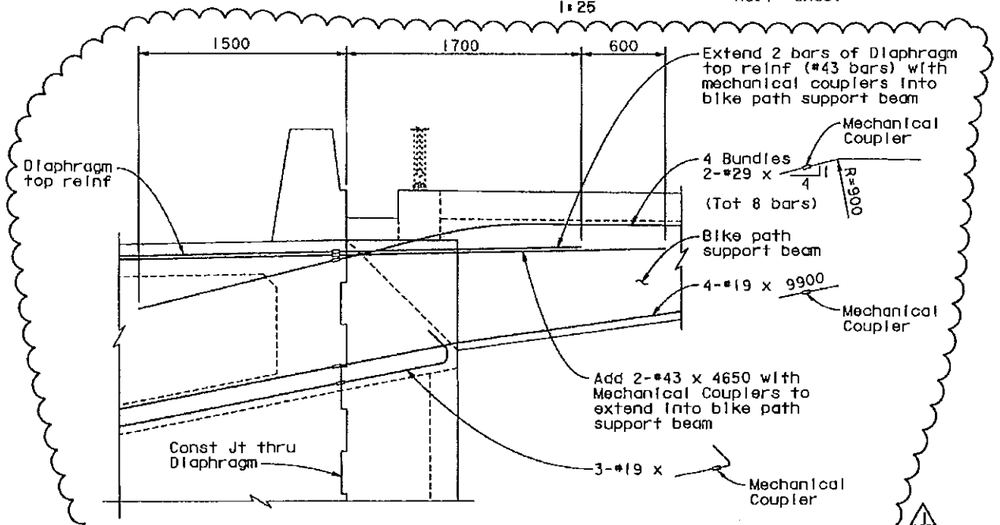

ANCHORAGE OF BIKEPATH SUPPORT BEAM

(Shown at Hinge W6RB Diaphragm
for details not shown see 'Bike Path Details No. 1' sheet)

1:20

PROFESSIONAL ENGINEER JAL BIRDY No. 41547 Exp. 12-31-11 CIVIL STATE OF CALIFORNIA

FOR REVISION 1 AND 2 ONLY

MARK	DATE	DESCRIPTIONS	BY	CH'D
2	10-14-10	Rev deck exp jt blockout	TL	JB
1	3-29-10	ISD REVISIONS	AE	JB

REVISIONS

CONTRACT CHANGE ORDER NO. 33
SHEET 22 OF 25

ALL DIMENSIONS ARE IN MILLIMETERS UNLESS OTHERWISE SHOWN

SAN FRANCISCO OAKLAND BAY BRIDGE
EAST SPAN SEISMIC SAFETY PROJECT

YBI TRANSITION STRUCTURES

HINGE W6RB DETAILS NO. 4

DESIGN OVERSIGHT
JOHN MOOK, BERNARD CHAN, JUAN F. CARPIO, HASAN EL-NATUR
SIGN OFF DATE 10/22/10

	BY	CHECKED
DESIGN	Lee	Afzullah
DETAILS	van Ryn/Zuochi/Wai	Jain
QUANTITIES	Liao	E. Nichol

PREPARED FOR THE STATE OF CALIFORNIA DEPARTMENT OF TRANSPORTATION

Jal Birdy
PROJECT ENGINEER

BRIDGE NO. 34-0006 L/R
KILOMETER POST 12.8

CU 04251
EA 0120S1

DISREGARD PRINTS BEARING EARLIER REVISION DATES

REVISION DATES (PRELIMINARY STAGE ONLY)

SHEET 117 OF 209

Rev. Date: 5-18-98

ORIGINAL SCALE IN MILLIMETERS FOR REDUCED PLANS 0 10 20 30 40 50 60 70 80 90 100

FILE => P:\4141-06\CADD\TS\Checked Plans\YBITS *1-100% No. 2_03-03-08 (Final Renamed)\101410 Hinge CCO T6\04-0120S1-34-0006R1-n-hing

October 21, 2010

USERNAME => fsamson DATE PLOTTED => 10/21/2010 TIME PLOTTED => 4:30:40 PM

DIST.	COUNTY	ROUTE	KILOMETER POST TOTAL PROJECT	SHEET NO.	TOTAL SHEETS
04	SF	80	12.7/13.2	685R1	806

Caltrans Metric

A.L. Ely
REGISTERED ENGINEER - CIVIL
6-23-08
PLANS APPROVAL DATE
The State of California or its officers or agents shall not be responsible for the accuracy or completeness of electronic copies of this plan sheet.

REGISTERED PROFESSIONAL ENGINEER A.L. ELY No. 18880 Exp. 6-30-09 CIVIL STATE OF CALIFORNIA

T.Y. LIN / MOFFATT & NICHOL
TWO HARRISON STREET
SAN FRANCISCO, CA 94105

MARK	DATE	DESCRIPTIONS	BY	CH'D
1	10-14-10	Changed Joints at Hinges W7LA & W6RB to Modular Jts	TL	JB

REVISIONS

CONTRACT CHANGE ORDER NO. 33
SHEET 23 OF 25

REGISTERED PROFESSIONAL ENGINEER JAL BIRDY No. 41547 Exp. 12-31-11 CIVIL STATE OF CALIFORNIA

FOR REVISION 1 ONLY

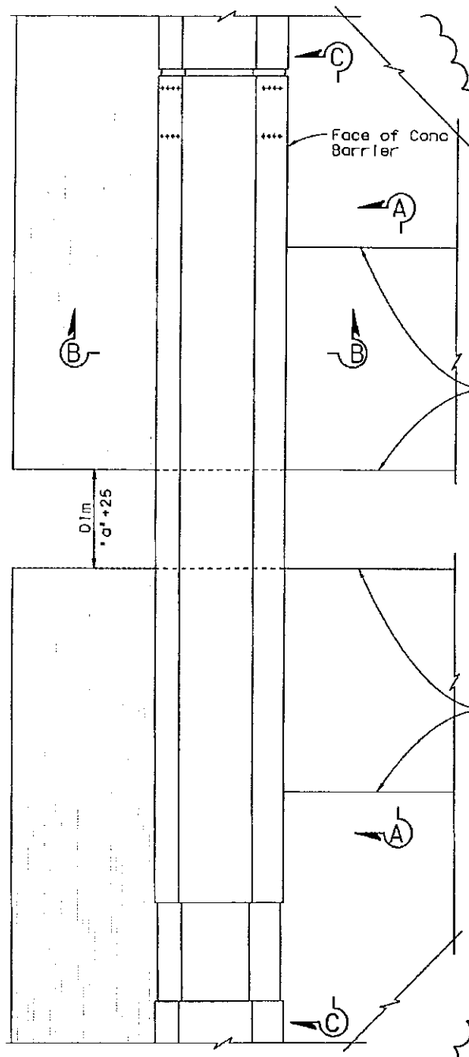

PARTIAL PLAN
No Scale

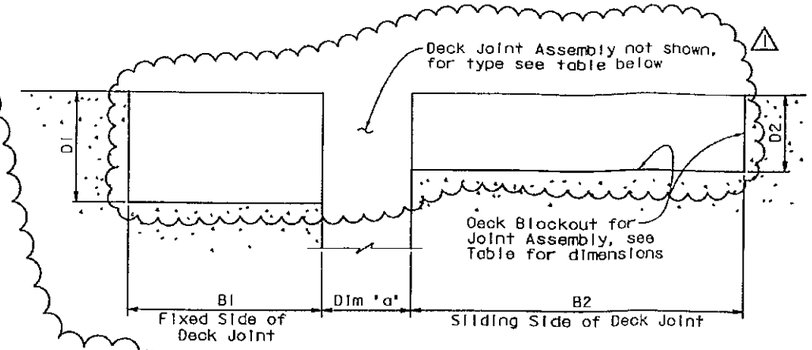

SECTION A-A
No Scale

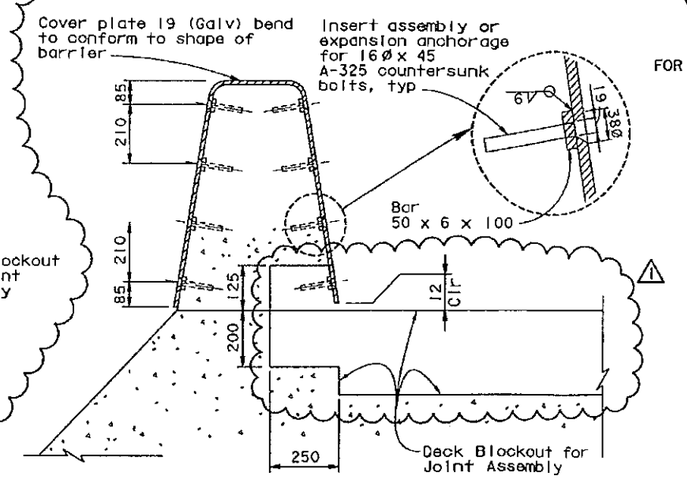

SECTION B-B
(Shown at typ concrete barrier, similar at concrete barrier adjacent to bike path)
No Scale

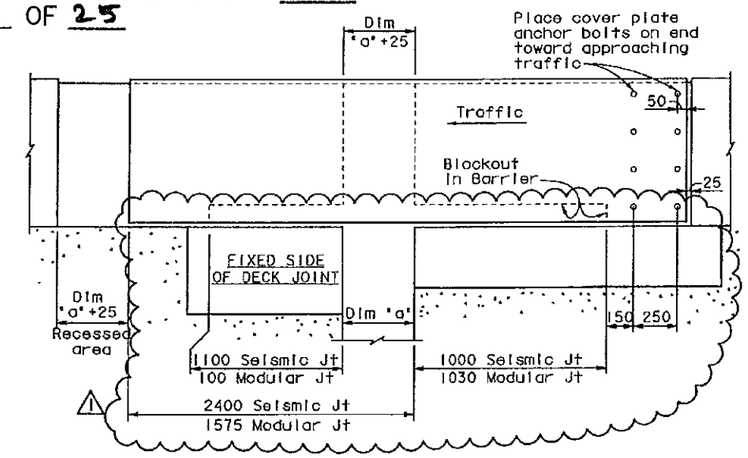

SECTION C-C, TRAFFIC FROM RIGHT
No Scale

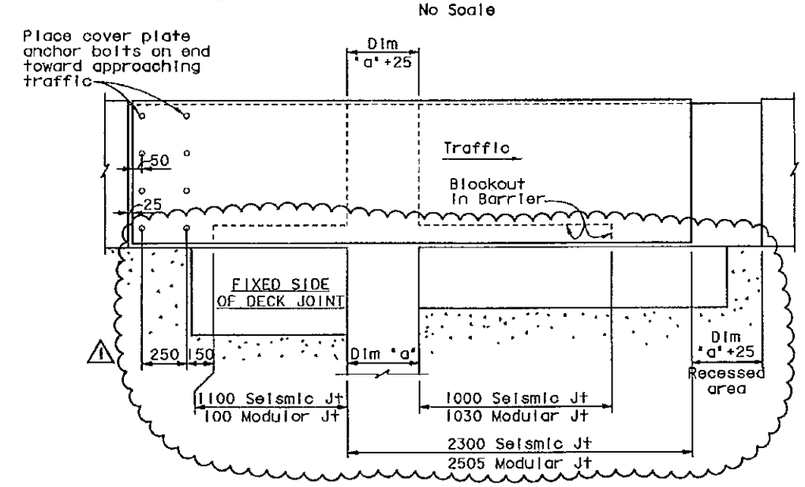

SECTION C-C, TRAFFIC FROM LEFT
No Scale

Deck Joint Information									'a' Dimension *		
Location		Joint Type	Deck Blockout Dimensions (mm) D1	B1	D2	B2	Movement Rating (MR)	Skew	Winter	Summer	Spring & Fall
Westbound	Bent W10AL	Seismic	470	1100	**	**	1000	02°41'32"	356	344	350
	Hinge W7LA	Modular	470	1100	505	1790	1175	05°03'00"	430	380	405
Eastbound	Abut W11R	Seismic	470	1270	300	820	915	0	388	372	380
	Hinge W6RB	Modular	470	1250	505	1790	1140	00°40'47"	381	339	360

NOTE:
For Deck Joint Details at Hinge K, see 'Hinge K Closure Details No. 13' sheet.

* Under SEE Seismic conditions, the maximum 'a' dimension is expected to be the same as the Movement Rating (MR).

** Varies, see 'Seismic Joint' sheets.

ALL DIMENSIONS ARE IN MILLIMETERS UNLESS OTHERWISE SHOWN

DESIGN OVERSIGHT
JOHN MOOK, BERNARD CHAN, JUAN F. CARPIO HASAN EC-NATUR
SIGN OFF DATE 10/22/10

	BY	CHECKED
DESIGN	Dadd	Ahn
DETAILS	van Ryn/Zucchi/Mal	Jain
QUANTITIES	Liao	E. Nichol

PREPARED FOR THE STATE OF CALIFORNIA DEPARTMENT OF TRANSPORTATION

Jal Birdy
PROJECT ENGINEER

BRIDGE NO. 34-0006 L/R
KILOMETER POST 12.8

SAN FRANCISCO OAKLAND BAY BRIDGE
EAST SPAN SEISMIC SAFETY PROJECT

YBI TRANSITION STRUCTURES
DECK JOINT DETAILS

CU 04251
EA 0120S1

DISREGARD PRINTS BEARING EARLIER REVISION DATES

REVISION DATES (PRELIMINARY STAGE ONLY)

SHEET 136 OF 209

Rev. Date: 5-12-98

ORIGINAL SCALE IN MILLIMETERS FOR REDUCED PLANS 0 10 20 30 40 50 60 70 80 90 100

FILE => P:\4141-06\CADD\TS\Checked Plans\YBITS *1-100% No. 2_03-03-08 (Final Renamed)\101410 Hinge CCO T6\04-0120S1-34-006R1-q-dck.

October 21, 2010

USERNAME => f.samson DATE PLOTTED => 10/21/2010 TIME PLOTTED => 4:30:50 PM

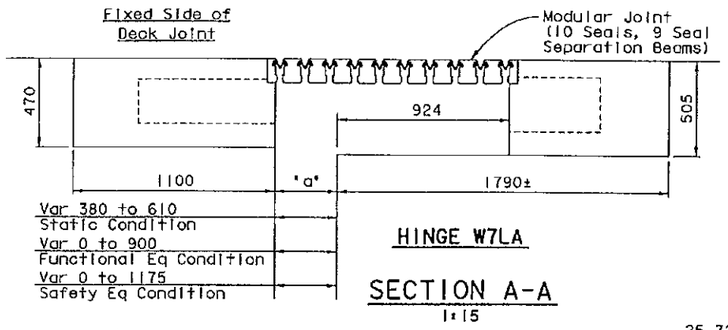

HINGE W7LA

SECTION A-A
1:15

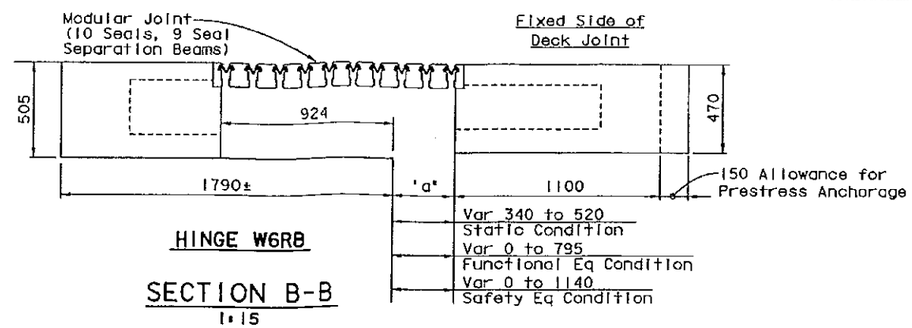

HINGE W6RB

SECTION B-B
1:15

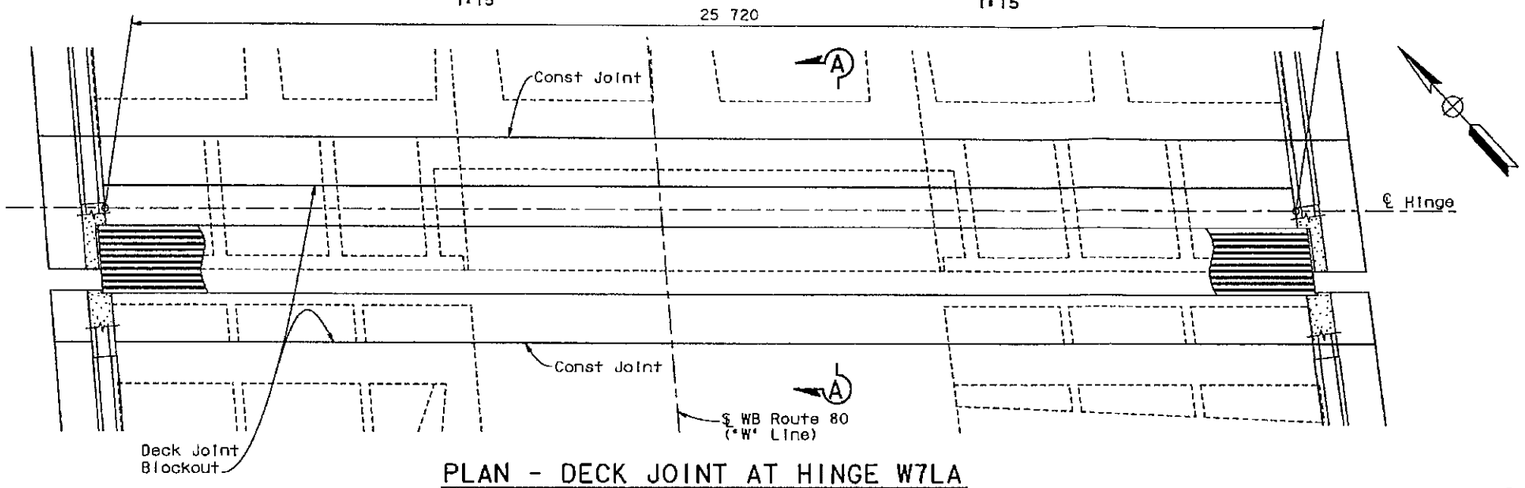

PLAN - DECK JOINT AT HINGE W7LA
1:60

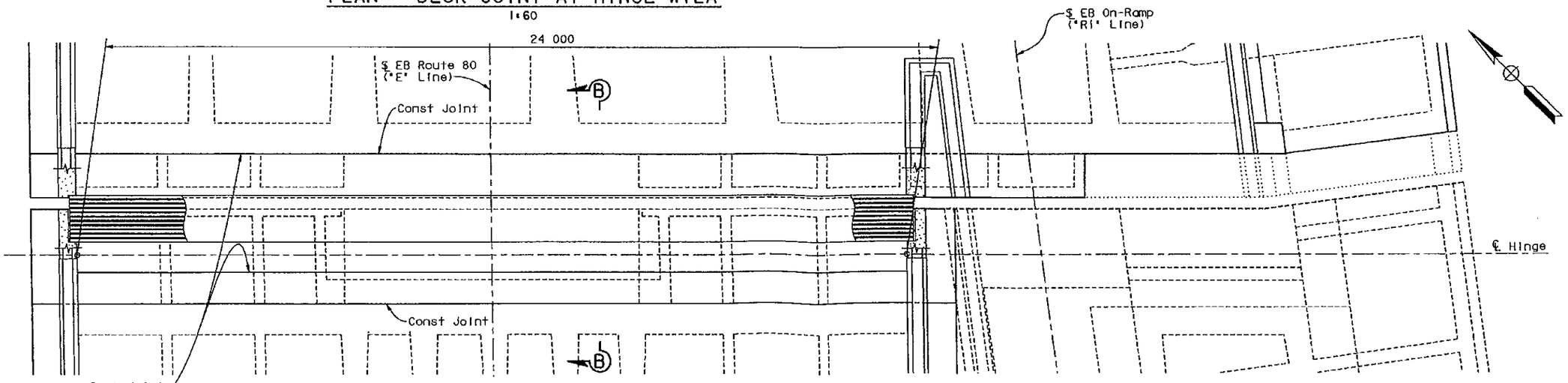

PLAN - DECK JOINT AT HINGE W6RB
1:60

DIST.	COUNTY	ROUTE	KILOMETER POST TOTAL PROJECT	SHEET NO.	TOTAL SHEETS
04	SF	80	12.7/13.2	695R1	

REGISTERED ENGINEER - CIVIL

10-14-10
PLANS APPROVAL DATE

A.L. ELY No. 18880 Exp. 6-30-11 CIVIL STATE OF CALIFORNIA REGISTERED PROFESSIONAL ENGINEER

The State of California or its officers or agents shall not be responsible for the accuracy or completeness of electronic copies of this plan sheet.

T.Y.LIN / MOFFATT & NICHOL
TWO HARRISON STREET
SAN FRANCISCO, CA 94105

THIS SHEET REPLACES SHEET NO 695 OF 806 OF PLAN APPROVED 6-23-08

CONTRACT CHANGE ORDER NO. 33
SHEET 24 OF 25

Note: At installation the closure capacity of the Joint Seal Assembly shall be set 10 mm greater than dim 'a' such that at full closure contact is between the concrete surfaces rather than the separation beams.

ALL DIMENSIONS ARE IN MILLIMETERS UNLESS OTHERWISE SHOWN

DESIGN OVERSIGHT: HASAN EL-NATUR
SIGN OFF DATE: 10/22/10

	BY	CHECKED
DESIGN	Lee	Birdy
DETAILS	Samson	Birdy
QUANTITIES	NA	NA

Rev. Dates 5-18-98

PREPARED FOR THE STATE OF CALIFORNIA DEPARTMENT OF TRANSPORTATION

Jal Birdy
PROJECT ENGINEER

BRIDGE NO. 34-0006 L/R
KILOMETER POST 12.8

CU 04251
EA 0120S1

DISREGARD PRINTS BEARING EARLIER REVISION DATES → 10/14/10

REVISION DATES (PRELIMINARY STAGE ONLY)

SHEET 146 OF 209

SAN FRANCISCO OAKLAND BAY BRIDGE
EAST SPAN SEISMIC SAFETY PROJECT

YBI TRANSITION STRUCTURES

MODULAR DECK JOINT DETAILS NO. 1

ORIGINAL SCALE IN MILLIMETERS FOR REDUCED PLANS 0 10 20 30 40 50 60 70 80 90 100

FILE => P:\4141-06\CAD9\TS\Checked Plans\YBITS #1-100% No. 2_03-03-08 (Final Renamed)\101410 Hinge CCO T6\04-0120S1-34-0006R1-q-dck.

October 21, 2010

USERNAME => t.samson DATE PLOTTED => 10/21/2010 TIME PLOTTED => 4:31:00 PM

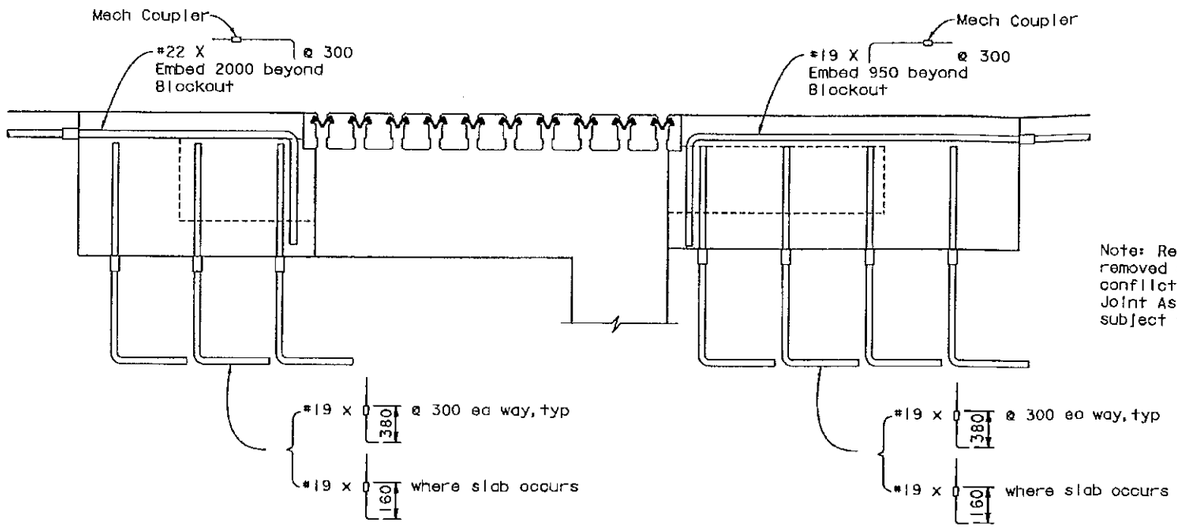

Note: Reinf bars may be cut and removed at locations where they conflict with installation of Joint Assembly support boxes, subject to approval of Engineer.

TYPICAL REINFORCEMENT AT MODULAR JOINT BLOCKOUTS

1:10

DIST	COUNTY	ROUTE	KILOMETER POST TOTAL PROJECT	SHEET NO.	TOTAL SHEETS
04	SF	80	12.7/13.2	696R1	

REGISTERED ENGINEER - CIVIL

10-14-10

PLANS APPROVAL DATE

REGISTERED PROFESSIONAL ENGINEER A.L. ELY No. 18880 Exp. 6-30-11 CIVIL STATE OF CALIFORNIA

The State of California or its officers or agents shall not be responsible for the accuracy or completeness of electronic copies of this plan sheet.

T.Y. LIN / MOFFATT & NICHOL
TWO HARRISON STREET
SAN FRANCISCO, CA 94105

THIS SHEET REPLACES SHEET NO 696 OF 806
OF PLAN APPROVED 6-23-08

CONTRACT CHANGE ORDER NO. 33
SHEET 25 OF 25

October 21, 2010

ALL DIMENSIONS ARE IN MILLIMETERS UNLESS OTHERWISE SHOWN

SAN FRANCISCO OAKLAND BAY BRIDGE
EAST SPAN SEISMIC SAFETY PROJECT

YBI TRANSITION STRUCTURES

MODULAR DECK JOINT DETAILS NO. 2

DESIGN OVERSIGHT
HASAN EL-SHATUR
10/22/10
SIGN OFF DATE

	BY	CHECKED
DESIGN	Lee	Birdy
DETAILS	Samson	Birdy
QUANTITIES	NA	NA

PREPARED FOR THE STATE OF CALIFORNIA DEPARTMENT OF TRANSPORTATION

Jal Birdy
PROJECT ENGINEER

BRIDGE NO. 34-0006 L/R
KILOMETER POST 12.8

Rev. Date: 5-18-98

ORIGINAL SCALE IN MILLIMETERS FOR REDUCED PLANS 0 10 20 30 40 50 60 70 80 90 100

CU 04251
EA 0120S1

DISREGARD PRINTS BEARING EARLIER REVISION DATES 10/14/10

REVISION DATES (PRELIMINARY STAGE ONLY)

SHEET 147 OF 209

FILE => P:\4141-06\CADD\TS\Checked Plans\YBITS *1-100% No. 2_03-03-08 (Final Renamed)\101410 Hinge CCO T6\04-0120s1-34-006r1-q-dak.

USERNAME => tsamson DATE PLOTTED => 10/21/2010 TIME PLOTTED => 4:31:11 PM

STATE OF CALIFORNIA - DEPARTMENT OF TRANSPORTATION

CONTRACT CHANGE ORDER MEMORANDUM

TO: Deanna Vilcheck, ACM /	FILE: E.A. 04 - 0120S4
	CO-RTE-PM SF-80-12.7/13.2
FROM: Rajesh Oberoi, Senior R.E.	FED. NO. NO FED AID
CCO#: 33 SUPPLEMENT#: 0 Category Code: CHPT	CONTINGENCY BALANCE (incl. this change) $23,606,475.00
COST: $1,125,040.00 INCREASE ☑ DECREASE ☐	HEADQUARTERS APPROVAL REQUIRED? ☑ YES ☐ NO
SUPPLEMENTAL FUNDS PROVIDED: $0.00	IS THIS REQUEST IN ACCORDANCE WITH ENVIRONMENTAL DOCUMENTS? ☑ YES ☐ NO
CCO DESCRIPTION: W7LA & W6RB Seismic Joints	**PROJECT DESCRIPTION:** YBITS-1 (Yerba Buena Island Transition Structures)

Original Contract Time:	Time Adj. This Change:	Previously Approved CCO Time Adjustments:	Percentage Time Adjusted: (including this change)	Total # of Unreconciled Deferred Time CCO(s): (including this change)
1390 Day(s)	DEF Day(s)	0 Day(s)	0 %	7

THIS CHANGE ORDER PROVIDES FOR:

The substitution of modular deck joints in lieu of the planned steel plate deck joints at two hinges of the mainline structure.

This project, the Yerba Buena Island Transition Structure (YBITS), provides for the construction of two bridges which will connect eastbound and westbound traffic on the new east span of the San Francisco Oakland Bay Bridge (SFOBB) to the existing Yerba Buena Island (YBI) tunnel. The structures are comprised of concrete box girder bridges each approximately 26 meters wide, 40 meters high and 450 meters in length.

Both the eastbound and westbound structures consist of 2 frames. The contract plans call for the steel deck plates with channel assemblies to function as seismic joints at the hinges between these frames. These deck plates consist of a cover plate attached to one end of the hinge, a deck plate attached adjacent to the cover plate that spans the hinge and a support plate with is attached to the other side of the hinge which supports the free end of the deck plate.

Mike Whiteside the YBI Coordination Engineer has issued a request to substitute modular deck joints for the planned deck plate joints This change order provides for the requested substitution.

The modular deck joints will consist of 11 steal separation beams each spanning the 26 meter width of the bridge with the gaps between these beams sealed with a continuous advanced neoprene or similar material. Fabrication costs associated with these joints are considerably higher than the as-planned plate joints. Fabrication costs include the design of the joint which will be based off of the plans and specification provided and approved by the engineer through the shop drawing process.

Installation of the joints shall also be considerably higher than the as-planned plate joint. The plate joints were considerably lighter and called for two plates to be installed separately along each traffic lane. The modular joints, much heavier per meter in length, will be installed as one continuous unit across the 26 meter width of the bridge. Additional modifications to the hinges are also required to provide for the revised seismic joint being installed.

The as-planned plate deck joints shall be accounted for by eliminating the 2 lump sum contract bid items providing for furnishing and installing these joints resulting in a credit of $450,000.00. Compensation for furnishing the 2 modular deck joints will be paid as extra work at an agreed lump sum of $1,575,040.00. The net change order cost of $1,125,040.00 shall be financed from the contract's contingency funds. A detailed cost analysis is on file.

Any costs pertaining to the installation and jobsite storage of the modular joints and any costs associated with the modifications to the hinge details provided under this change order shall be deferred and shall be provided under a supplement to this change order. These costs are anticipated not to exceed $600,000.

This change order was approved by the Toll Bridge Program Oversight Committee at their December 9, 2010 meeting.

Adjustment of contract time is deferred as the work may affect the controlling operation.

ADA Notice: For individuals with sensory disabilities, this document is available in alternate formats. For information call: (916) 654-6410 or TDD (916) 654-3880 or write Records and Forms Management, 1120 N Street, MS-89, Sacramento, CA 95814.

State of California
DEPARTMENT OF TRANSPORTATION

Business, Transportation and Housing Agency

Memorandum

Flex your power!
Be energy efficient!

To: RAJESH OBEROI
Resident Engineer
SFOBB East Spans Seismic Safety Project

Date: February 15, 2011

File: EA: 04-0120S4
04-SF-80-12.7/13.2
SFOBB/YBI Transition
Structure

From: MIKE WHITESIDE FOR:
YBI Coordination Engineer
SFOBB East Spans Seismic Safety Project

Subject: Contract Change Order Request – Specification Change for DS Brown Joint Seal Assembly

Please incorporate into the above referenced contract the revised specification for the DS Brown Joint Seal Assembly transmitted to your office November 10, 2010.

If you have any questions, please contact me at (916) 227-8496 or Matt Hunter at (916) 227-8470.

c: SHulsebus
DVilcheck
MArdakanian
DJohnson
AAkinsanya
SMargaris
BZandipour
CTraina
JUozumi
MHunter
DAJohnson
GKlebanov
TMcCarthy
RMaggenti
CSihra
file

mrh

STATE OF CALIFORNIA - DEPARTMENT OF TRANSPORTATION

CONTRACT CHANGE ORDER

Change Requested by: Engineer

CCO 9	Suppl. No. 1	Contract No. 04 - 0120S4	Road SF-80-12.7/13.2	FED. AID LOC.: NO FED AID

To: **M C M CONSTRUCTION INC**

You are directed to make the following changes from the plans and specifications or do the following described work not included in the plans and specifications for this contract. ***NOTE: This change order is not effective until approved by the Engineer.***

Description of work to be done, estimate of quantities and prices to be paid. (Segregate between additional work at contract price, agreed price and force account.) Unless otherwise stated, rates for rental of equipment cover only such time as equipment is actually used and no allowance will be made for idle time. This last percentage shown is the net accumulated increase or decrease from the original quantity in the Engineer's Estimate.

Adjustment of Compensation at Lump Sum:

Furnish and install headed bar reinforcement, bar reinforcing steel and accessories, and perform rework at Bent W5L as directed by the Engineer during the Integrated Shop Drawing (ISD) process.

For this work the Contractor will be paid an Adjustment in Compensation at Agreed Lump Sum of $133,166.00. This sum constitutes full and complete compensation for detailing, furnishing, testing and erecting reinforcement bars and also includes all markups, for this change.

No adjustment to contact time is warranted, as this change does not affect the controlling operations.

Adjustment of Compensation at Agreed Lump Sum: $133,166.00

Estimated Cost: Increase ☑ **Decrease** ☐ **$133,166.00**

By reason of this order the time of completion will be adjusted as follows: 0 days

Submitted by

Signature William Howe	Resident Engineer William Howe, Senior R.E.	Date 01-18-12

Approval Recommended by

Signature Mike Frame FOR	Area Construction Manager Deanna Vilcheck	Date 1-19-12

Engineer Approval by

Signature Deanna Vilcheck	Area Construction Manager Deanna Vilcheck	Date 4/23/12

4-23-12

We the undersigned contractor, have given careful consideration to the change proposed and agree, if this proposal is approved, that we will provide all equipment, furnish the materials, except as may otherwise be noted above, and perform all services necessary for the work above specified, and will accept as full payment therefor the prices shown above.

NOTE: If you, the contractor, do not sign acceptance of this order, your attention is directed to the requirements of the specifications as to proceeding with the ordered work and filing a written protest within the time therein specified.

Contractor Acceptance by

Signature	(Print name and title) JAMES A. CARTER, PRESIDENT	Date 4/16/12

STATE OF CALIFORNIA - DEPARTMENT OF TRANSPORTATION

CONTRACT CHANGE ORDER MEMORANDUM

TO: Deanna Vilcheck, ACM / DV	FILE: E.A. 04 - 0120S4
	CO-RTE-PM SF-80-12.7/13.2
FROM: William Howe, Senior R.E.	FED. NO. NO FED AID
CCO#: 9 SUPPLEMENT#: 1 Category Code: CHPT	CONTINGENCY BALANCE (incl. this change) $61,976,068.00
COST: $133,166.00 INCREASE ☑ DECREASE ☐	HEADQUARTERS APPROVAL REQUIRED? ☑ YES ☐ NO
SUPPLEMENTAL FUNDS PROVIDED: $0.00	IS THIS REQUEST IN ACCORDANCE WITH ENVIRONMENTAL DOCUMENTS? ☑ YES ☐ NO
CCO DESCRIPTION: ISD Revisions:Rebar Changes Bent W5L	**PROJECT DESCRIPTION:** YBITS-1 (Yerba Buena Island Transition Structures)

Original Contract Time:	Time Adj. This Change:	Previously Approved CCO Time Adjustments:	Percentage Time Adjusted: (including this change)	Total # of Unreconciled Deferred Time CCO(s): (including this change)
1390 Day(s)	0 Day(s)	0 Day(s)	0 %	9

THIS CHANGE ORDER PROVIDES FOR:

This change provides for furnishing and installing headed bar reinforcement, bar reinforcing steel and accessories, and performing rework at Bent W5L as directed by the Engineer during the Integrated Shop Drawing (ISD) process and formalized during the shop drawing submittal review process.

Reinforcing bars placement at Bent W5L was revised by the Engineer to resolve the ISD generated placement conflict issues. The changes include switching from seismic hook reinforcing bars to headed reinforcing bars and providing supporting bars and accessories for the precise placement of the reinforcing bars. These changes were accepted and formalized by the Department with the approval of reinforcing bar shop drawings.

Rework was also necessary to resolve placement conflicts encountered during erection.

Payment for this work will be an Adjustment in Compensation at Agreed Lump Sum of $133,166.00, which can be financed from the contract contingency fund.

Design concurrence for this change is on file.

Structure Maintenance concurrence is not required as this change does not affect any controlling items.

No adjustment to contract time is required due to these changes as they do not affect controlling operations.
A detailed cost analysis is on file.

CONCURRED BY:		
Construction Engineer:	William Howe	Date 04-20-12
Bridge Engineer:	Mehran Ardakanian	Date 4-23-12
Project Engineer:	Bob Zandipour, Design	Date 12-27-11
Project Manager:	Ken Terpstra	Date 12-27-11
FHWA Rep.:		Date
Environmental:		Date
Other (specify):		Date
Other (specify):		Date
District Prior Approval By:		Date
HQ (Issue Approve) By:	Larry Salhaney	Date 4-23-12
Resident Engineer's Signature:	William Howe	Date 04-20-12

4-23-12

ESTIMATE OF COST	THIS REQUEST	TOTAL TO DATE
ITEMS	$0.00	$0.00
FORCE ACCOUNT	$0.00	$0.00
AGREED PRICE	$0.00	$0.00
ADJUSTMENT	$133,166.00	$133,166.00
TOTAL	$133,166.00	$133,166.00

FEDERAL PARTICIPATION

☐ PARTICIPATING ☐ PARTICIPATING IN PART ☑ NONE
☐ NON-PARTICIPATING (MAINTENANCE) ☐ NON-PARTICIPATING

FEDERAL SEGREGATION (if more than one Funding Source or P.I.P. type)
☐ CCO FUNDED PER CONTRACT ☐ CCO FUNDED AS FOLLOWS

FEDERAL FUNDING SOURCE	PERCENT

ADA Notice: For individuals with sensory disabilities, this document is available in alternate formats. For information call (916) 654-6410 or TDD (916) 654-3880 or write Records and Forms Management, 1120 N Street, MS-89, Sacramento, CA 95814.

STATE OF CALIFORNIA - DEPARTMENT OF TRANSPORTATION

CONTRACT CHANGE ORDER

Change Requested by: Engineer

CCO: 34	Suppl. No. 0	Contract No. 04 - 0120S4	Road SF-80-12.7/13.2	FED. AID LOC.: NO FED AID

To: **M C M CONSTRUCTION INC**

You are directed to make the following changes from the plans and specifications or do the following described work not included in the plans and specifications for this contract. ***NOTE: This change order is not effective until approved by the Engineer.***

Description of work to be done, estimate of quantities and prices to be paid. (Segregate between additional work at contract price, agreed price and force account.) Unless otherwise stated, rates for rental of equipment cover only such time as equipment is actually used and no allowance will be made for idle time. This last percentage shown is the net accumulated increase or decrease from the original quantity in the Engineer's Estimate.

Adjustment of Compensation at Unit Price:

Adjust the contract unit prices for the contract item listed below in accordance with Section 5-1.06, "Compensation Adjustments for Price Index Fluctuations", of the Special Provisions.

Item 79, Hot Mix Asphalt (Type A)

This Contract Change Order authorizes upto the following maximum amount:

Estimated cost of Adjustment of Compensation at Agreed Unit Price $6,000.00

In the event that the adjustment is negative, that adjustment will be addressed in a supplemental Change Order.

Estimated Cost: Increase ☑ **Decrease** ☐ **$6,000.00**

By reason of this order the time of completion will be adjusted as follows: 0 days

Submitted by

Signature	Resident Engineer	Date
Rajesh Oberoi	Rajesh Oberoi, Senior R.E.	1/4/11

Approval Recommended by

Signature	Senior Resident Engineer	Date
Rajesh Oberoi	Rajesh Oberoi	1/4/11

Engineer Approval by

Signature	Senior Resident Engineer	Date
Rajesh Oberoi	Rajesh Oberoi	1/24/11

We the undersigned contractor, have given careful consideration to the change proposed and agree, if this proposal is approved, that we will provide all equipment, furnish the materials, except as may otherwise be noted above, and perform all services necessary for the work above specified, and will accept as full payment therefor the prices shown above.

NOTE: If you, the contractor, do not sign acceptance of this order, your attention is directed to the requirements of the specifications as to proceeding with the ordered work and filing a written protest within the time therein specified.

Contractor Acceptance by

Signature	(Print name and title)	Date
	EDMUNDO A. PUCHI, TREASURER	1/18/11

STATE OF CALIFORNIA - DEPARTMENT OF TRANSPORTATION

CONTRACT CHANGE ORDER MEMORANDUM

DATE: 9/1/2010 Page 1 of 1

TO: Deanna Vilcheck, ACM / DV	FILE: E.A. 04 - 0120S4
FROM: Rajesh Oberoi, Senior R.E.	CO-RTE-PM SF-80-12.7/13.2
	FED. NO. NO FED AID
CCO#: 34 SUPPLEMENT#: 0 Category Code: AQZZ	CONTINGENCY BALANCE (incl. this change) $30,679,772.00
COST: $6,000.00 INCREASE ☑ DECREASE ☐	HEADQUARTERS APPROVAL REQUIRED? ☐ YES ☑ NO
SUPPLEMENTAL FUNDS PROVIDED: $6,000.00	IS THIS REQUEST IN ACCORDANCE WITH ENVIRONMENTAL DOCUMENTS? ☑ YES ☐ NO
CCO DESCRIPTION: Compensation Adjustments for Price Index	PROJECT DESCRIPTION: YBITS-1 (Yerba Buena Island Transition Structures)

Original Contract Time:	Time Adj. This Change:	Previously Approved CCO Time Adjustments:	Percentage Time Adjusted: (including this change)	Total # of Unreconciled Deferred Time CCO(s): (including this change)
1390 Day(s)	0 Day(s)	0 Day(s)	0 %	0

THIS CHANGE ORDER PROVIDES FOR:

Compensating the Contractor for fluctuations in price of paving asphalt, as measured by the California Statewide Paving Asphalt Price Index.

This change is made in accordance with Section 5-1.06, "Compensation Adjustments for Price Index Fluctuations", of the Special Provisions. Contract item 79, Hot Mix Asphalt (Type A), is subject to adjustment.

The work will be paid for as an Adjustment of Compensation at Unit Price of $6,000 , which will be financed from the projects supplemental funds of $6,000 allotted for this work .

This Change Order received concurrence from Deanna Vilcheck, Area Construction Manager.

No adjustment of contract time is warranted, as this change will not affect the controlling operation.

Design concurrence is not required, as this CCO does not affect any feature of the work.

Maintenance concurrence is not required, as this work does not affect any permanent features.

CONCURRED BY:		
Construction Engineer: Rajesh Oberoi RO	Date 1/24/11	
Bridge Engineer:	Date	
Project Engineer:	Date	
Project Manager:	Date	
FHWA Rep.:	Date	
Environmental:	Date	
Other (specify):	Date	
Other (specify):	Date	
District Prior Approval By:	Date	
HQ (Issue Approve) By:	Date	
Resident Engineer's Signature: Rajesh Oberoi	Date 1/24/11	

ESTIMATE OF COST

	THIS REQUEST	TOTAL TO DATE
ITEMS	$0.00	$0.00
FORCE ACCOUNT	$0.00	$0.00
AGREED PRICE	$0.00	$0.00
ADJUSTMENT	$6,000.00	$6,000.00
TOTAL	$6,000.00	$6,000.00

FEDERAL PARTICIPATION

☐ PARTICIPATING ☐ PARTICIPATING IN PART ☑ NONE
☐ NON-PARTICIPATING (MAINTENANCE) ☐ NON-PARTICIPATING

FEDERAL SEGREGATION (if more than one Funding Source or P.I.P. type)
☑ CCO FUNDED PER CONTRACT ☐ CCO FUNDED AS FOLLOWS

FEDERAL FUNDING SOURCE	PERCENT

ADA Notice: For individuals with sensory disabilities, this document is available in alternate formats. For information call: (916) 654-6410 or TDD (916) 654-3880 or write Records and Forms Management, 1120 N Street, MS-89, Sacramento, CA 95814.

CONTRACT CHANGE ORDER

Change Requested by: Engineer

CCO: 35	Suppl. No. 0	Contract No. 04 - 0120S4	Road SF-80-12.7/13.2	FED. AID LOC.: NO FED AID

To: **M C M CONSTRUCTION INC**

You are directed to make the following changes from the plans and specifications or do the following described work not included in the plans and specifications for this contract. ***NOTE: This change order is not effective until approved by the Engineer.***

Description of work to be done, estimate of quantities and prices to be paid. (Segregate between additional work at contract price, agreed price and force account.) Unless otherwise stated, rates for rental of equipment cover only such time as equipment is actually used and no allowance will be made for idle time. This last percentage shown is the net accumulated increase or decrease from the original quantity in the Engineer's Estimate.

Adjustment of Compensation at Lump Sum:

The Contractor shall furnish the following specialized column forms, required for the construction of Bents W8L, W8R, W9L, W9R, W10L , W10AL and W10R of the YBI Transition Structure (Br. No. 34-0006 L/R) and Bents W8 and W9 of the YBI East Bound On-Ramp Structure (Br. No. 34-172S) , as detailed herein.

Column forms to be furnished :

11 each C71C3 8-foot long corner forms
11 each C71C2 8-foot long corner forms
30 each 44.41-inch by 8-foot long panel forms

For furnishing these forms, the Contractor shall be compensated an agreed lump sum of $25,560.00 which constitutes full and final compensation, including all markups, for all additional costs incurred.

In addition to the column forms being furnished above, the Department shall also furnish the following specialized column forms for use by the Contractor during the construction of the columns specified above:

40 each C4C1A 8-foot long corner forms
20 each C4C1B-C 8-foot long corner forms
40 each C4RZ 8-foot long corner forms
11 each C71C3 8-foot long corner forms
11 each C71C2 8-foot long corner forms
80 each 21.21-inch by 8-foot long panel forms
15 each 44.41-inch by 8-foot long panel forms

These Department furnished forms shall be made available to the Contractor at the project site.

The compensation provided under this change order includes a credit to the Department for the use of all column forms furnished by the Department for use by the Contractor.

Any other use of all forms furnished by the Department shall require the written approval of the Engineer.

All forms furnished under this change order shall be the property of the Department.

Estimated cost of Adjustment of Compensation at Lump Sum $25,560.00

CONTRACT CHANGE ORDER

Change Requested by: Engineer

CCO: 35	Suppl. No. 0	Contract No. 04 - 0120S4	Road SF-80-12.7/13.2	FED. AID LOC.: NO FED AID

Estimated Cost: Increase ☑ Decrease ☐ **$25,560.00**

By reason of this order the time of completion will be adjusted as follows: 0 days

Submitted by

Signature	Resident Engineer	Date
Rajesh Oberoi	Rajesh Oberoi, Senior R.E.	9/15/10

Approval Recommended by

Signature	Resident Engineer	Date
Rajesh Oberoi	Rajesh Oberoi	9/15/10

Engineer Approval by

Signature	Area Construction Manager	Date
Michael Fromm	Deanna Vilcheck	11/12/10

We the undersigned contractor, have given careful consideration to the change proposed and agree, if this proposal is approved, that we will provide all equipment, furnish the materials, except as may otherwise be noted above, and perform all services necessary for the work above specified, and will accept as full payment therefor the prices shown above.

NOTE: If you, the contractor, do not sign acceptance of this order, your attention is directed to the requirements of the specifications as to proceeding with the ordered work and filing a written protest within the time therein specified.

Contractor Acceptance by

Signature	(Print name and title)	Date
[signature]	EDMUNDO A. PUCHI, TREASURER	10/25/10

STATE OF CALIFORNIA - DEPARTMENT OF TRANSPORTATION

CONTRACT CHANGE ORDER MEMORANDUM

TO: Deanna Vilcheck, ACM /	FILE: E.A. 04 - 0120S4
FROM: Rajesh Oberoi, Senior R.E.	CO-RTE-PM SF-80-12.7/13.2
	FED. NO. NO FED AID
CCO#: 35 SUPPLEMENT#: 0 Category Code: BZZZ	CONTINGENCY BALANCE (incl. this change) $29,054,212.00
COST: $25,560.00 INCREASE ☑ DECREASE ☐	HEADQUARTERS APPROVAL REQUIRED? ☐ YES ☑ NO
SUPPLEMENTAL FUNDS PROVIDED: $0.00	IS THIS REQUEST IN ACCORDANCE WITH ENVIRONMENTAL DOCUMENTS? ☑ YES ☐ NO
CCO DESCRIPTION: Column Form procurement and Rental	**PROJECT DESCRIPTION:** YBITS-1 (Yerba Buena Island Transition Structures)

Original Contract Time:	Time Adj. This Change:	Previously Approved CCO Time Adjustments:	Percentage Time Adjusted: (including this change)	Total # of Unreconciled Deferred Time CCO(s): (including this change)
1390 Day(s)	0 Day(s)	0 Day(s)	0 %	0

THIS CHANGE ORDER PROVIDES FOR:

The procurement of specialized column forms for use on this and subsequent Department contracts.

This project, the Yerba Buena Island Transition Structure (YBITS 1), was awarded in February 2010 to construct the tie in of the new east span of the San Francisco Oakland Bay Bridge (SFOBB) to Yerba Buena Island. The work includes the construction of 2 separate box girder bridges each approximately 450 meters in length along with the construction of the 2 foundations and columns for the future YBI East Bound On-Ramp.

As part of this work, the contract provides for the construction of 9 columns for the transition structure and 2 additional columns for the future on-ramp. The average height of the columns are approximately 30 meters and are comprised of distinct pentagonal shapes of various sizes with some of the columns adjoined to adjacent columns by concrete cross beams. The metal forms required to construct these columns are unique and need to be specially fabricated for the YBITS and YBI on-ramp structures. The cost to furnish these columns is prohibitive and requires a long lead time.

These same specialized forms will be required for the construction of the remaining YBI East Bound On-Ramp Structure which will be performed on the YBITS 2 contract subsequent to this contract. The forms will also be used for the construction of the new Yerba Buena Island westbound on-ramp and off-ramp for the SFOBB which are currently being designed.

This change order provides for the contractor to furnish the specialized forms to the Department. The contractor will provide a credit to the Department for their use during the contract and the forms will become the property of the Department for future use on the upcoming eastbound and westbound ramp structures.

The procured forms shall be made available to YBITS 2 contract and for the construction of the planned Yerba Buena Island westbound on-ramp and off-ramp from the SFOBB. It is anticipated that subsequent to the use of the forms on these two future contracts along with the potential salvage value after all columns are constructed that the net cost to the Department shall be negligible. Additional specialized forms were procured under the YBI Detour contract (04-0120R4) and shall also be made available to this and the future contracts.

Procurement of the forms will also act to mitigate potential delays to the YBITS 1 contract by allowing the contractor to form and pour longer lifts with the additional forms provides. Delays to this contract could directly impact the planned 2013 opening of the new east span of the San Francisco Oakland Bay Bridge.

Compensation for these costs shall be paid as an adjustment of compensation at an agreed lump sum of $25,560.00 which shall be financed from the contract's contingency funds. A cost analysis is on file.

No adjustment of contract time is warranted as the change will not affect the controlling operation.

Maintenance concurrence is not required as the change shall not affect any permanent roadway features.

ADA Notice: For individuals with sensory disabilities, this document is available in alternate formats. For information call: (916) 654-6410 or TDD (916) 654-3880 or write Records and Forms Management, 1120 N Street, MS-89, Sacramento, CA 95814.

CONCURRED BY:		
Construction Engineer:	Rajesh Oberoi	Date 9/15/10
Bridge Engineer:	Mehran Ardakanian	Date 9/15/10
Project Engineer:		Date
Project Manager:		Date
FHWA Rep.:		Date
Environmental:		Date
Other (specify):		Date
Other (specify):		Date
District Prior Approval By:		Date
HQ (Issue Approve) By:		Date
Resident Engineer's Signature:	Rajesh Oberoi	Date 9/15/10

ESTIMATE OF COST

	THIS REQUEST	TOTAL TO DATE
ITEMS	$0.00	$0.00
FORCE ACCOUNT	$0.00	$0.00
AGREED PRICE	$0.00	$0.00
ADJUSTMENT	$25,560.00	$25,560.00
TOTAL	$25,560.00	$25,560.00

FEDERAL PARTICIPATION

☐ PARTICIPATING ☐ PARTICIPATING IN PART ☑ NONE
☐ NON-PARTICIPATING (MAINTENANCE) ☐ NON-PARTICIPATING

FEDERAL SEGREGATION (if more than one Funding Source or P.I.P. type)
☐ CCO FUNDED PER CONTRACT ☐ CCO FUNDED AS FOLLOWS

FEDERAL FUNDING SOURCE	PERCENT

ADA Notice: For individuals with sensory disabilities, this document is available in alternate formats. For information call: (916) 654-6410 or TDD (916) 854-3880 or write Records and Forms Management, 1120 N Street, MS-89, Sacramento, CA 95814.

STATE OF CALIFORNIA - DEPARTMENT OF TRANSPORTATION

CONTRACT CHANGE ORDER

Change Requested by: Engineer

CCO: 35	Suppl. No. 1	Contract No. 04 - 0120S4	Road SF-80-12.7/13.2	FED. AID LOC.: NO FED AID

To: **M C M CONSTRUCTION INC**

You are directed to make the following changes from the plans and specifications or do the following described work not included in the plans and specifications for this contract. ***NOTE: This change order is not effective until approved by the Engineer.***

Description of work to be done, estimate of quantities and prices to be paid. (Segregate between additional work at contract price, agreed price and force account.) Unless otherwise stated, rates for rental of equipment cover only such time as equipment is actually used and no allowance will be made for idle time. This last percentage shown is the net accumulated increase or decrease from the original quantity in the Engineer's Estimate.

Adjustment of Compensation at Lump Sum:

The Contractor shall furnish the following specialized column forms, required for the construction of Bents W8L, W8R, W9L, W9R, W10L, W10AL and W10R of the YBI Transition Structure (Br. No. 34-0006 L/R) and Bents W8 and W9 of the YBI East Bound On-Ramp Structure (Br. No. 34-172S) , as detailed herein.

Column forms to be furnished :

7 each C4RZ 8-foot long corner forms

For furnishing these forms, the Contractor shall be compensated an agreed lump sum of $19,240.00 which constitutes full and final compensation, including all markups, for all additional costs incurred.

The Department shall furnish 33 each additional C4RZ 8-foot long corner forms to the Contractor in lieu of the 40 each C4RZ forms specified to be furnished under the original Change Order No. 35.

Any other use of all forms furnished by the Department shall require the written approval of the Engineer.

All forms furnished under this change order shall be the property of the Department.

Estimated cost of Adjustment of Compensation at Lump Sum $19,240.00

No adjustment of contract time is warranted as the change will not affect the controlling operation.

Estimated Cost: Increase ☑ **Decrease** ☐ **$19,240.00**

By reason of this order the time of completion will be adjusted as follows: 0 days

Submitted by		
Signature Rajesh Oberoi	Resident Engineer Rajesh Oberoi, Senior R.E.	Date 10/12/10
Approval Recommended by		
Signature Rajesh Oberoi	Resident Engineer Rajesh Oberoi	Date 10/12/10
Engineer Approval by		
Signature Rajesh Oberoi	Resident Engineer Rajesh Oberoi	Date 11/12/10

We the undersigned contractor, have given careful consideration to the change proposed and agree, if this proposal is approved, that we will provide all equipment, furnish the materials, except as may otherwise be noted above, and perform all services necessary for the work above specified, and will accept as full payment therefor the prices shown above.

NOTE: If you, the contractor, do not sign acceptance of this order, your attention is directed to the requirements of the specifications as to proceeding with the ordered work and filing a written protest within the time therein specified.

Contractor Acceptance by		
Signature	(Print name and title) EDMUNDO A. PUCHI, TREASURER	Date 10/25/10

STATE OF CALIFORNIA - DEPARTMENT OF TRANSPORTATION

CONTRACT CHANGE ORDER MEMORANDUM

TO: Deanna Vilcheck, ACM /	FILE: **E.A.** 04 - 0120S4
FROM: Rajesh Oberoi, Senior R.E.	**CO-RTE-PM** SF-80-12.7/13.2
	FED. NO. NO FED AID
CCO#: **35** SUPPLEMENT#: **1** Category Code: **BZZZ**	CONTINGENCY BALANCE (incl. this change) **$28,143,732.00**
COST: **$19,240.00** INCREASE ☑ DECREASE ☐	HEADQUARTERS APPROVAL REQUIRED? ☐ YES ☑ NO
SUPPLEMENTAL FUNDS PROVIDED: **$0.00**	IS THIS REQUEST IN ACCORDANCE WITH ENVIRONMENTAL DOCUMENTS? ☑ YES ☐ NO
CCO DESCRIPTION: Column Form procurement	**PROJECT DESCRIPTION:** YBITS-1 (Yerba Buena Island Transition Structures)

Original Contract Time:	Time Adj. This Change:	Previously Approved CCO Time Adjustments:	Percentage Time Adjusted: (including this change)	Total # of Unreconciled Deferred Time CCO(s): (including this change)
1390 Day(s)	**0** Day(s)	**0** Day(s)	**0** %	**0**

THIS CHANGE ORDER PROVIDES FOR:

The procurement of specialized column forms for use on this and subsequent Department contracts.

This project, the Yerba Buena Island Transition Structure (YBITS 1), was awarded in February 2010 to construct the tie in of the new east span of the San Francisco Oakland Bay Bridge (SFOBB) to Yerba Buena Island. The work includes the construction of 2 separate box girder bridges each approximately 450 meters in length along with the construction of the 2 foundations and columns for the future YBI East Bound On-Ramp.

As part of this work, the contract provides for the construction of 9 columns for the transition structure and 2 additional columns for the future on-ramp. The average height of the columns are approximately 30 meters and are comprised of distinct pentagonal shapes of various sizes with some of the columns adjoined to adjacent columns by concrete cross beams. The metal forms required to construct these columns are unique and need to be specially fabricated for the YBITS and YBI on-ramp structures. The cost to furnish these columns is prohibitive and requires a long lead time.

These same specialized forms will be required for the construction of the remaining YBI East Bound On-Ramp Structure which will be performed on the YBITS 2 contract subsequent to this contract. The forms will also be used for the construction of the new Yerba Buena Island westbound on-ramp and off-ramp for the SFOBB which are currently being designed.

The original Change Order No. 35 provided for the contractor to furnish the specialized forms to the Department. The contractor provided a credit to the Department for their use during the contract and the forms will become the property of the Department for future use on the upcoming eastbound and westbound ramp structures. Additional specialized forms were procured under the YBI Detour contract (04-0120R4) and were specified to be made available to this contract. After taking inventory of the forms provided under the YBI Detour contract, it was discovered that 7 ea corner forms were missing. This change order provides for the contractor to directly furnish these 7 missing corner forms.

The procured forms shall be made available to YBITS 2 contract and for the construction of the planned Yerba Buena Island westbound on-ramp and off-ramp from the SFOBB. It is anticipated that subsequent to the use of the forms on these two future contracts along with the potential salvage value after all columns are constructed the net cost to the Department shall be negligible.

Procurement of the forms will also act to mitigate potential delays to the YBITS 1 contract by allowing the contractor to form and pour longer lifts with the additional forms provides. Delays to this contract could directly impact the planned 2013 opening of the new east span of the San Francisco Oakland Bay Bridge.

Compensation for these costs shall be paid as an adjustment of compensation at an agreed lump sum of $19,240.00 which shall be financed from the contract's contingency funds. A cost analysis is on file.

No adjustment of contract time is warranted as the change will not affect the controlling operation.

Maintenance concurrence is not required as the change shall not affect any permanent roadway features.

ADA Notice: For individuals with sensory disabilities, this document is available in alternate formats. For information call: (916) 654-6410 or TDD (916) 654-3880 or write Records and Forms Management, 1120 N Street, MS-89, Sacramento, CA 95814.

CONCURRED BY:		
Construction Engineer:	Rajesh Oberoi	Date 10/12/10
Bridge Engineer:	Mehran Ardakanian	Date 10/12/10
Project Engineer:		Date
Project Manager:		Date
FHWA Rep.:		Date
Environmental:		Date
Other (specify):		Date
Other (specify):		Date
District Prior Approval By:		Date
HQ (Issue Approve) By:		Date
Resident Engineer's Signature:	Rajesh Oberoi 10/12/10	Date

ESTIMATE OF COST

	THIS REQUEST	TOTAL TO DATE
ITEMS	$0.00	$0.00
FORCE ACCOUNT	$0.00	$0.00
AGREED PRICE	$0.00	$0.00
ADJUSTMENT	$19,240.00	$44,800.00
TOTAL	$19,240.00	$44,800.00

FEDERAL PARTICIPATION

☐ PARTICIPATING ☐ PARTICIPATING IN PART ☑ NONE
☐ NON-PARTICIPATING (MAINTENANCE) ☐ NON-PARTICIPATING

FEDERAL SEGREGATION (if more than one Funding Source or P.I.P. type)
☑ CCO FUNDED PER CONTRACT ☐ CCO FUNDED AS FOLLOWS

FEDERAL FUNDING SOURCE	PERCENT

ADA Notice: For individuals with sensory disabilities, this document is available in alternate formats. For information call: (916) 654-6410 or TDD (916) 654-3880 or write Records and Forms Management, 1120 N Street, MS-89, Sacramento, CA 95814.

STATE OF CALIFORNIA - DEPARTMENT OF TRANSPORTATION

CONTRACT CHANGE ORDER

Change Requested by: Engineer

CCO 35	Suppl. No. 2	Contract No. 04 - 0120S4	Road SF-80-12.7/13.2	FED. AID LOC.: NO FED AID

To: **M C M CONSTRUCTION INC**

You are directed to make the following changes from the plans and specifications or do the following described work not included in the plans and specifications for this contract. ***NOTE: This change order is not effective until approved by the Engineer.***

Description of work to be done, estimate of quantities and prices to be paid. (Segregate between additional work at contract price, agreed price and force account.) Unless otherwise stated, rates for rental of equipment cover only such time as equipment is actually used and no allowance will be made for idle time. This last percentage shown is the net accumulated increase or decrease from the original quantity in the Engineer's Estimate.

Extra Work at Force Account:

Prior to use, clean the forms that were provided by the Department for use by the Contractor under CCO No. 35 S0, and repair damaged areas as directed by the Engineer.

Labor, equipment and material approved by the Engineer, as necessary, will be paid in accordance with the provisions of Section 4-1.03D, "Extra Work", of the Standard Specifications, and Section 5-1.17, "Force Account Payment", of the Special Provisions.

Estimated Extra Work at Force Account = $22,000.00

After completion of related contract work utilizing the newly cleaned and repaired column forms and prior to the return of the column forms to the Department, they shall be cleaned and any damages repaired at Contractor's own expense.

8/16/12

Estimated Cost: Increase ☑ **Decrease** ☐ **$22,000.00**

By reason of this order the time of completion will be adjusted as follows: 0 days

Submitted by

Signature	Resident Engineer	Date
William Howe	William Howe, Senior R.E.	08.15.12

Approval Recommended by

Signature	Area Construction Manager	Date
Deanna Vilcheck	Deanna Vilcheck	8/16/12

Engineer Approval by

Signature	Area Construction Manager	Date
[signature]	for Deanna Vilcheck	8-31-12

We the undersigned contractor, have given careful consideration to the change proposed and agree, if this proposal is approved, that we will provide all equipment, furnish the materials, except as may otherwise be noted above, and perform all services necessary for the work above specified, and will accept as full payment therefor the prices shown above.

NOTE: If you, the contractor, do not sign acceptance of this order, your attention is directed to the requirements of the specifications as to proceeding with the ordered work and filing a written protest within the time therein specified.

Contractor Acceptance by

Signature	(Print name and title)	Date
[signature]	JAMES A. CARTER, PRESIDENT	8/29/12

STATE OF CALIFORNIA - DEPARTMENT OF TRANSPORTATION

CONTRACT CHANGE ORDER

Change Requested by: Engineer

CCO: 36	Suppl. No. 0	Contract No. 04 - 0120S4	Road SF-80-12.7/13.2	FED. AID LOC.: NO FED AID

To: **M C M CONSTRUCTION INC**

You are directed to make the following changes from the plans and specifications or do the following described work not included in the plans and specifications for this contract. ***NOTE: This change order is not effective until approved by the Engineer.***

Description of work to be done, estimate of quantities and prices to be paid. (Segregate between additional work at contract price, agreed price and force account.) Unless otherwise stated, rates for rental of equipment cover only such time as equipment is actually used and no allowance will be made for idle time. This last percentage shown is the net accumulated increase or decrease from the original quantity in the Engineer's Estimate.

Extra Work at Force Account:

Implement temporary soil stabilization measures pertaining to the slope under the Frame 1 structure as determined by the Engineer.

Estimated cost of Extra Work at Force Account $180,000.00

No adjustment of contract time is warranted, as this change will not affect the controlling operation.

Estimated Cost: Increase ☑ Decrease ☐ **$180,000.00**

By reason of this order the time of completion will be adjusted as follows: 0 days

Submitted by		
Signature Rajesh Oberoi	Resident Engineer Rajesh Oberoi, Senior R.E.	Date 10/21/10
Approval Recommended by		
Signature Deanna Vilcheck	Area Construction Manager Deanna Vilcheck	Date 10/21/10
Engineer Approval by		
Signature Deanna Vilcheck	Area Construction Manager Deanna Vilcheck	Date 11/10/10

We the undersigned contractor, have given careful consideration to the change proposed and agree, if this proposal is approved, that we will provide all equipment, furnish the materials, except as may otherwise be noted above, and perform all services necessary for the work above specified, and will accept as full payment therefor the prices shown above.

NOTE: If you, the contractor, do not sign acceptance of this order, your attention is directed to the requirements of the specifications as to proceeding with the ordered work and filing a written protest within the time therein specified.

Contractor Accepted by		
Signature	(Print name and title) EDMUNDO A. PUCHI, TREASURER	Date 11/9/10

STATE OF CALIFORNIA - DEPARTMENT OF TRANSPORTATION

CONTRACT CHANGE ORDER MEMORANDUM

DATE: 9/9/2010 Page 1 of 1

TO: Deanna Vilcheck, ACM DV	FILE: E.A. 04 - 0120S4
FROM: Rajesh Oberoi, Senior R.E. CDTE	CO-RTE-PM SF-80-12.7/13.2
	FED. NO. NO FED AID
CCO#: 36 SUPPLEMENT#: 0 Category Code: ~~CDXX~~	CONTINGENCY BALANCE (incl. this change) $29,615,362.00
COST: $180,000.00 INCREASE ☑ DECREASE ☐	HEADQUARTERS APPROVAL REQUIRED? ☐ YES ☑ NO
SUPPLEMENTAL FUNDS PROVIDED: $0.00	IS THIS REQUEST IN ACCORDANCE WITH ENVIRONMENTAL DOCUMENTS? ☑ YES ☐ NO
CCO DESCRIPTION: Temporary Slope Stabilization Measures	**PROJECT DESCRIPTION:** YBITS-1 (Yerba Buena Island Transition Structures)

Original Contract Time:	Time Adj. This Change:	Previously Approved CCO Time Adjustments:	Percentage Time Adjusted: (including this change)	Total # of Unreconciled Deferred Time CCO(s): (including this change)
1390 Day(s)	0 Day(s)	0 Day(s)	0 %	0

THIS CHANGE ORDER PROVIDES FOR:

Implementing temporary soil stabilization measures to a steep slope within the project work area.

This project, the Yerba Buena Island Transition Structure (YBITS), provides for the construction of two bridges which will connect eastbound and westbound traffic on the new east span of the San Francisco Oakland Bay Bridge (SFOBB) to the existing Yerba Buena Island (YBI) tunnel. The structures are comprised of concrete box girder bridges each approximately 40 meters high and 450 meters in length.

Frame 1 of both the westbound and eastbound structures provide for the construction of a 2 concrete box girders, each approximately 140 meters long and 26 meters wide, which will be constructed along a steep hill approximately 40 meters in height. The slope of this hill exceeds 1 to 1 in many locations and is comprised of loose sand.

The contract provides for permanent slope stabilization measures including the use of wire mesh and erosion control netting reinforced with wire staples and slope anchors to be installed at the end of the contract. These measures, however, cannot be installed until the construction of Frame 1 is completed which is approximately 2 years away. This change order will provide temporary stabilization measures to be put in place until the permanent measures can be placed. This work will be a combination of applying hydraulic fiber mulch, installing fiber rolls and potentially installing stabilization netting. Several applications are anticipated to be required prior to the installation of the permanent stabilization measures.

Compensation shall be paid as extra work at force account at an estimated cost of $180,000.00. A cost analysis is on file.

No adjustment of contract time is warranted as this work will not affect the controlling operation.

Maintenance concurrence is not required as the work is temporary and will not affect any permanent roadway features.

CONCURRED BY:

Construction Engineer:	Rajesh Oberoi RO	Date 10/21/10
Bridge Engineer:		Date
Project Engineer:		Date
Project Manager:		Date
FHWA Rep.:		Date
Environmental:		Date
Other (specify):		Date
Other (specify):		Date
District Prior Approval By:		Date
HQ (Issue Approve) By:		Date
Resident Engineer's Signature:	Rajesh Oberoi	Date 10/21/10

ESTIMATE OF COST

	THIS REQUEST	TOTAL TO DATE
ITEMS	$0.00	$0.00
FORCE ACCOUNT	$180,000.00	$180,000.00
AGREED PRICE	$0.00	$0.00
ADJUSTMENT	$0.00	$0.00
TOTAL	$180,000.00	$180,000.00

FEDERAL PARTICIPATION

☐ PARTICIPATING ☐ PARTICIPATING IN PART ☑ NONE
☐ NON-PARTICIPATING (MAINTENANCE) ☐ NON-PARTICIPATING

FEDERAL SEGREGATION (if more than one Funding Source or P.I.P. type)
☑ CCO FUNDED PER CONTRACT ☐ CCO FUNDED AS FOLLOWS

FEDERAL FUNDING SOURCE	PERCENT

ADA Notice: For individuals with sensory disabilities, this document is available in alternate formats. For information call: (916) 654-6410 or TDD (916) 654-3880 or write Records and Forms Management, 1120 N Street, MS-89, Sacramento, CA 95814.

STATE OF CALIFORNIA - DEPARTMENT OF TRANSPORTATION

CONTRACT CHANGE ORDER

Change Requested by: Engineer

CCO: 37	Suppl. No. 0	Contract No. 04 - 0120S4	Road SF-80-12.7/13.2	FED. AID LOC.: NO FED AID

To: **M C M CONSTRUCTION INC**

You are directed to make the following changes from the plans and specifications or do the following described work not included in the plans and specifications for this contract. ***NOTE: This change order is not effective until approved by the Engineer.***

Description of work to be done, estimate of quantities and prices to be paid. (Segregate between additional work at contract price, agreed price and force account.) Unless otherwise stated, rates for rental of equipment cover only such time as equipment is actually used and no allowance will be made for idle time. This last percentage shown is the net accumulated increase or decrease from the original quantity in the Engineer's Estimate.

Extra Work at Force Account:

Compensate the Contractor for costs incurred as directed by the Engineer in the field to support the United States Coast Guard base operations.

Work will include maintain access walkways; maintain temporary parking lots that have been constructed for Coast Guard usage; provide temporary storage containers for Coast Guard materials displaced by the work; and other items as determined by the engineer.

Estimated cost of Extra Work at Force Account $150,000.00

No adjustment of contract time is warranted, as this change will not affect the controlling operation.

Estimated Cost: **Increase** ☑ **Decrease** ☐ **$150,000.00**

By reason of this order the time of completion will be adjusted as follows: 0 days

Submitted by

Signature Rajesh Oberoi	Resident Engineer Rajesh Oberoi, Senior R.E.	Date 9/27/10

Approval Recommended by

Signature Deanna Vilcheck	Area Construction Manager Deanna Vilcheck	Date 9/30/10

Engineer Approval by

Signature Deanna Vilcheck	Area Construction Manager Deanna Vilcheck	Date 9/30/10

We the undersigned contractor, have given careful consideration to the change proposed and agree, if this proposal is approved, that we will provide all equipment, furnish the materials, except as may otherwise be noted above, and perform all services necessary for the work above specified, and will accept as full payment therefor the prices shown above.

NOTE: If you, the contractor, do not sign acceptance of this order, your attention is directed to the requirements of the specifications as to proceeding with the ordered work and filing a written protest within the time therein specified.

Contractor Acceptance by

Signature	(Print name and title) Edmundo A. Ruchi - Treasurer	Date 9-28-2010

STATE OF CALIFORNIA - DEPARTMENT OF TRANSPORTATION

CONTRACT CHANGE ORDER MEMORANDUM

DATE: 9/24/2010 Page 1 of 1

TO: Deanna Vilcheck, ACM / DV	FILE: E.A. 04 - 0120S4
	CO-RTE-PM SF-80-12.7/13.2
FROM: Rajesh Oberoi, Senior R.E. AXZZ	FED. NO. NO FED AID
CCO#: 37 SUPPLEMENT#: 0 Category Code: ~~BZZZ~~	CONTINGENCY BALANCE (incl. this change) **$28,600,812.00**
COST: **$150,000.00** INCREASE ☑ DECREASE ☐	HEADQUARTERS APPROVAL REQUIRED? ☐ YES ☑ NO
SUPPLEMENTAL FUNDS PROVIDED: **$0.00**	IS THIS REQUEST IN ACCORDANCE WITH ENVIRONMENTAL DOCUMENTS? ☑ YES ☐ NO
CCO DESCRIPTION: Mitigate Impacts of Construction on USCG	**PROJECT DESCRIPTION:** YBITS-1 (Yerba Buena Island Transition Structures)

Original Contract Time:	Time Adj. This Change:	Previously Approved CCO Time Adjustments:	Percentage Time Adjusted: (including this change)	Total # of Unreconciled Deferred Time CCO(s): (including this change)
1390 Day(s)	0 Day(s)	0 Day(s)	0 %	0

THIS CHANGE ORDER PROVIDES FOR:

Provide compensation to the contractor for costs incurred due to Coast Guard impacts.

This contract calls for the construction of bridge structures that tie in the east span of the new San Francisco Oakland Bay Bridge (SFOBB) to Yerba Buena Island. As part of the work, the Temporary Bypass Structure has been constructed on Coast Guard land, and the work involves significant additional impacts on the adjacent US Coast Guard facility adjacent to the site.

The Department will request the contractor to provide various support items, such as maintaining access walkways that have been built under the South South Detour contract; maintain temporary parking lots that have been constructed for Coast Guard usage; provide temporary storage containers for Coast Guard materials displaced by the work; and other items as determined by the engineer.

This work will be performed as Extra Work at Force Account at an estimated cost of $150,000.00 which will be financed from the project's contingency fund. A cost analysis is on file.

No adjustment of contract time is warranted, as this change will not affect the controlling operation.

Maintenance concurrence is not required as this is an administrative change order and doesn't affect any permanent roadway features.

CONCURRED BY:		
Construction Engineer:	Rajesh Oberoi RO	Date 9/27/10
Bridge Engineer:		Date
Project Engineer:		Date
Project Manager:		Date
FHWA Rep.:		Date
Environmental:		Date
Other (specify):		Date
Other (specify):		Date
District Prior Approval By:		Date
HQ (Issue Approve) By:		Date
Resident Engineer's Signature:	Rajesh Oberoi 9/27/10	Date

ESTIMATE OF COST

	THIS REQUEST	TOTAL TO DATE
ITEMS	$0.00	$0.00
FORCE ACCOUNT	$150,000.00	$150,000.00
AGREED PRICE	$0.00	$0.00
ADJUSTMENT	$0.00	$0.00
TOTAL	$150,000.00	$150,000.00

FEDERAL PARTICIPATION

☐ PARTICIPATING ☐ PARTICIPATING IN PART ☑ NONE
☐ NON-PARTICIPATING (MAINTENANCE) ☐ NON-PARTICIPATING

FEDERAL SEGREGATION (if more than one Funding Source or P.I.P. type)
☐ CCO FUNDED PER CONTRACT ☐ CCO FUNDED AS FOLLOWS

FEDERAL FUNDING SOURCE	PERCENT

ADA Notice: For individuals with sensory disabilities, this document is available in alternate formats. For information call: (916) 654-6410 or TDD (916) 654-3880 or write Records and Forms Management, 1120 N Street, MS-89, Sacramento, CA 95814.

STATE OF CALIFORNIA - DEPARTMENT OF TRANSPORTATION

CONTRACT CHANGE ORDER

Change Requested by: Contractor

CCO: 38	Suppl. No. 0	Contract No. 04 - 0120S4	Road SF-80-12.7/13.2	FED. AID LOC.: NO FED AID

To: M C M CONSTRUCTION INC

You are directed to make the following changes from the plans and specifications or do the following described work not included in the plans and specifications for this contract. ***NOTE: This change order is not effective until approved by the Engineer.***

Description of work to be done, estimate of quantities and prices to be paid. (Segregate between additional work at contract price, agreed price and force account.) Unless otherwise stated, rates for rental of equipment cover only such time as equipment is actually used and no allowance will be made for idle time. This last percentage shown is the net accumulated increase or decrease from the original quantity in the Engineer's Estimate.

Adjustment of Compensation at Lump Sum:

Pile anchor bar reinforcements to be coated with epoxy will be in compliance with ASTM A775/ A775M in lieu of ASTM A934/ A934M as called out in Sec 10-1.73 " REINFORCEMENT" of the Special provisions.

Estimated cost of Adjustment of Compensation at Lump Sum .....($4,047.00)

No adjustment to contact time is warranted, as this change does not affect the controlling operations.

Estimated Cost: Increase ☐ Decrease ☑ **($4,047.00)**

By reason of this order the time of completion will be adjusted as follows: 0 days

Submitted by:		
Signature Rajesh Oberoi	Resident Engineer Rajesh Oberoi, Senior R.E.	Date 1/25/11
Approval Recommended by:		
Signature Nilanta Vuelliera	Resident Engineer Rajesh Oberoi	Date 1/25/11
Engineer Approval by:		
Signature Rajesh Oberoi	Resident Engineer Rajesh Oberoi	Date 2/8/11

We the undersigned contractor, have given careful consideration to the change proposed and agree, if this proposal is approved, that we will provide all equipment, furnish the materials, except as may otherwise be noted above, and perform all services necessary for the work above specified, and will accept as full payment therefor the prices shown above.

NOTE: If you, the contractor, do not sign acceptance of this order, your attention is directed to the requirements of the specifications as to proceeding with the ordered work and filing a written protest within the time therein specified.

Contractor Acceptance by:		
Signature	(Print name and title) EDMUNDO A. PUCHI, TREASURER	Date 2/1/11

STATE OF CALIFORNIA - DEPARTMENT OF TRANSPORTATION

CONTRACT CHANGE ORDER MEMORANDUM

DATE: 1/24/2011 Page 1 of 1

TO: Deanna Vilcheck, ACM	FILE: E.A. 04 - 0120S4
	CO-RTE-PM SF-80-12.7/13.2
FROM: Rajesh Oberoi, Senior R.E.	FED. NO. NO FED AID
CCO#: 38 SUPPLEMENT#: 0 Category Code: CHSA	CONTINGENCY BALANCE (incl. this change) $22,139,146.00
COST: ($4,047.00) INCREASE ☐ DECREASE ☑	HEADQUARTERS APPROVAL REQUIRED? ☑ YES ☐ NO
SUPPLEMENTAL FUNDS PROVIDED: $0.00	IS THIS REQUEST IN ACCORDANCE WITH ENVIRONMENTAL DOCUMENTS? ☑ YES ☐ NO
CCO DESCRIPTION: Epoxy coating for pile anchor bars	**PROJECT DESCRIPTION:** YBITS-1 (Yerba Buena Island Transition Structures)

Original Contract Time:	Time Adj. This Change:	Previously Approved CCO Time Adjustments:	Percentage Time Adjusted: (including this change)	Total # of Unreconciled Deferred Time CCO(s): (including this change)
1390 Day(s)	0 Day(s)	0 Day(s)	0 %	0

THIS CHANGE ORDER PROVIDES FOR:

Pile anchor bar reinforcements to be coated with epoxy will be in compliance with ASTM A775/ A775M in lieu of ASTM A934/ A934M as called out in Sec 10-1.73 " REINFORCEMENT" of the Special provisions.

Contract Special provisions require pile anchor bar reinforcements to conform to ASTM A934 / A934M (purple or gray) epoxy coating. ASTM A934 / A934M epoxy coating requirements do not allow for any bending of reinforcement bars after the epoxy coating has been applied. Pile anchor bars embed upto 1.22-meter into the footing, penetrating many layers of footing reinforcement ,which may require bending in order to avoid conflicts between pile anchor bars and footing reinforcement. Specification for ASTM A775 / A775M epoxy coating allows the reinforcement to be bent after the coating has been applied, which in this case will allow the contractor to resolve any conflicts.

This change has been requested by the Contractor . For this change the Department shall receive a credit in the amount of $4047.00.

Mike Whiteside YBI Coordination Engineer has concurred with this change.

Maintenance concurrence for this change is not required.

A detailed cost analysis is on file.

No adjustment to contact time is warranted, as this change does not affect the controlling operations.

CONCURRED BY:		
Construction Engineer:	Rajesh Oberoi	Date 2/8/11
Bridge Engineer:	Mehran Ardakanian	Date 01/24/11
Project Engineer:		Date
Project Manager:	KEN TERPSTRA	Date 02/14/11
FHWA Rep.:		Date
Environmental:		Date
Other (specity):	Mike Whiteside	Date 1/13/11
Other (specify):		Date
District Prior Approval By:		Date
HQ (Issue Approve) By:	Larry Salhaney	Date 1/25/11
Resident Engineer's Signature:	Rajesh Oberoi	Date 2/8/11

ESTIMATE OF COST

	THIS REQUEST	TOTAL TO DATE
ITEMS	$0.00	$0.00
FORCE ACCOUNT	$0.00	$0.00
AGREED PRICE	$0.00	$0.00
ADJUSTMENT	($4,047.00)	($4,047.00)
TOTAL	($4,047.00)	($4,047.00)

FEDERAL PARTICIPATION

☐ PARTICIPATING ☐ PARTICIPATING IN PART ☑ NONE
☐ NON-PARTICIPATING (MAINTENANCE) ☐ NON-PARTICIPATING

FEDERAL SEGREGATION (if more than one Funding Source or P.I.P. type)
☑ CCO FUNDED PER CONTRACT ☐ CCO FUNDED AS FOLLOWS

FEDERAL FUNDING SOURCE	PERCENT

ADA Notice: For individuals with sensory disabilities, this document is available in alternate formats. For information call: (916) 654-6410 or TDD (916) 654-3880 or write Records and Forms Management, 1120 N Street, MS-89, Sacramento, CA 95814.

CONTRACT CHANGE ORDER

Change Requested by: Engineer

CCO: 39	Suppl. No. 0	Contract No. 04 - 0120S4	Road SF-80-12.7/13.2	FED. AID LOC.: NO FED AID

To: **M C M CONSTRUCTION INC**

You are directed to make the following changes from the plans and specifications or do the following described work not included in the plans and specifications for this contract. ***NOTE: This change order is not effective until approved by the Engineer.***

Description of work to be done, estimate of quantities and prices to be paid. (Segregate between additional work at contract price, agreed price and force account.) Unless otherwise stated, rates for rental of equipment cover only such time as equipment is actually used and no allowance will be made for idle time. This last percentage shown is the net accumulated increase or decrease from the original quantity in the Engineer's Estimate.

Extra Work at Force Account:

Provide labor, equipment, materials and monitoring services for Department instruments as directed by the Engineer. Work will include wind-monitoring instruments, slope monitoring systems, traffic monitoring systems, and other systems indicated by the Engineer.

This work will be paid for as extra work as provided in Section 5-1.17 "Force Account Payment" of the Special Provisions, and Section 4-1.03D of the Standard Specifications, and will not be considered a special service as specified in Section 9-1.03B of the Standard Specifications.

Estimated cost of Extra Work at Force Account $35,000.00

No adjustment of contract time is warranted, as this change will not affect the controlling operation.

Estimated Cost: **Increase** ☑ **Decrease** ☐ **$35,000.00**

By reason of this order the time of completion will be adjusted as follows: 0 days

Submitted by

Signature	Resident Engineer	Date
Rajesh Oberoi	Rajesh Oberoi, Senior R.E.	9/27/10

Approval Recommended by

Signature	Construction Engineer	Date
Rajesh Oberoi	Rajesh Oberoi	9/30/10

Engineer Approval by

Signature	Construction Engineer	Date
Rajesh Oberoi	Rajesh Oberoi	9/30/10

We the undersigned contractor, have given careful consideration to the change proposed and agree, if this proposal is approved, that we will provide all equipment, furnish the materials, except as may otherwise be noted above, and perform all services necessary for the work above specified, and will accept as full payment therefor the prices shown above.

NOTE: If you, the contractor, do not sign acceptance of this order, your attention is directed to the requirements of the specifications as to proceeding with the ordered work and filing a written protest within the time therein specified.

Contractor Acceptance by

Signature	(Print name and title)	Date
[signature]	Edmundo A. Puchi - Treasurer	9-28-2010

STATE OF CALIFORNIA - DEPARTMENT OF TRANSPORTATION

CONTRACT CHANGE ORDER MEMORANDUM

TO: Deanna Vilcheck, ACM / DV	FILE: E.A. 04 - 0120S4
	CO-RTE-PM SF-80-12.7/13.2
FROM: Rajesh Oberoi, Senior R.E. AXZZ	FED. NO. NO FED AID
CCO#: 39 SUPPLEMENT#: 0 Category Code: ~~BZZZ~~	CONTINGENCY BALANCE (incl. this change) $28,565,812.00
COST: $35,000.00 INCREASE ☑ DECREASE ☐	HEADQUARTERS APPROVAL REQUIRED? ☐ YES ☑ NO
SUPPLEMENTAL FUNDS PROVIDED: $0.00	IS THIS REQUEST IN ACCORDANCE WITH ENVIRONMENTAL DOCUMENTS? ☑ YES ☐ NO
CCO DESCRIPTION: Instruments and Monitoring	**PROJECT DESCRIPTION:** YBITS-1 (Yerba Buena Island Transition Structures)

Original Contract Time:	Time Adj. This Change:	Previously Approved CCO Time Adjustments:	Percentage Time Adjusted: (including this change)	Total # of Unreconciled Deferred Time CCO(s): (including this change)
1390 Day(s)	0 Day(s)	0 Day(s)	0 %	0

THIS CHANGE ORDER PROVIDES FOR:

This change order provides funds to compensate the Contractor for providing monitoring services for Department instruments as directed by the Engineer. Work will include wind-monitoring instruments, slope monitoring systems, traffic monitoring systems, and other systems indicated by the Engineer.

This work will be paid for as extra work as provided in Section 5-1.17 "Force Account Payment" of the Special Provisions, and Section 4-1.03D of the Standard Specifications, and will not be considered a special service as specified in Section 9-1.03B of the Standard Specifications.

Several instruments and monitoring systems were installed as part of the work during the construction of the Yerba Buena Island Temporary Bypass Structure (TBS), the systems are currently active, and will require ongoing maintenance to keep operational after the close-out of the TBS contract. A wind-monitoring instrument was installed on the existing I-80 bridge structure, the Engineer tracks the wind data via a cellular phone modem. The ongoing cost for the cellular phone service will be covered by this CCO. The steep slope beneath span 51 of the TBS had several PVC pipe lined drill holes installed prior to this slope being protected by a shotcrete surface, the drill holes are periodically monitored by down-hole instruments to detect any slope movement. The cost for the down-hole monitoring service and associated report will be covered by this CCO. A traffic speed monitoring system (the vendor service is "iCone") was installed near the YBI tunnel on existing I-80 (upper and lower decks), the ongoing costs for this service will be covered by this CCO. Any additional monitoring will also be covered by this CCO.

This work will be performed as Extra Work at Force Account at an estimated cost of $35,000.00 which will be financed from the project's contingency fund. A cost analysis is on file.

No adjustment of contract time is warranted, as this change will not affect the controlling operation.

Maintenance concurrence is not required as the change shall not affect any permanent roadway features.

ADA Notice: For individuals with sensory disabilities, this document is available in alternate formats. For information call: (916) 654-6410 or TDD (916) 654-3880 or write Records and Forms Management, 1120 N Street, MS-89, Sacramento, CA 95814.

CONCURRED BY:		
Construction Engineer: Rajesh Oberoi RO	Date 9/27/10	
Bridge Engineer:	Date	
Project Engineer:	Date	
Project Manager:	Date	
FHWA Rep.:	Date	
Environmental:	Date	
Other (specify):	Date	
Other (specify):	Date	
District Prior Approval By:	Date	
HQ (Issue Approve) By:	Date	
Resident Engineer's Signature: Rajesh Oberoi	Date 9/27/10	

ESTIMATE OF COST

	THIS REQUEST	TOTAL TO DATE
ITEMS	$0.00	$0.00
FORCE ACCOUNT	$35,000.00	$35,000.00
AGREED PRICE	$0.00	$0.00
ADJUSTMENT	$0.00	$0.00
TOTAL	$35,000.00	$35,000.00

FEDERAL PARTICIPATION

☐ PARTICIPATING ☐ PARTICIPATING IN PART ☑ NONE
☐ NON-PARTICIPATING (MAINTENANCE) ☐ NON-PARTICIPATING

FEDERAL SEGREGATION (if more than one Funding Source or P.I.P. type)
☐ CCO FUNDED PER CONTRACT ☐ CCO FUNDED AS FOLLOWS

FEDERAL FUNDING SOURCE	PERCENT

ADA Notice: For individuals with sensory disabilities, this document is available in alternate formats. For information call: (916) 654-6410 or TDD (916) 654-3880 or write Records and Forms Management, 1120 N Street, MS-89, Sacramento, CA 95814.

STATE OF CALIFORNIA - DEPARTMENT OF TRANSPORTATION

CONTRACT CHANGE ORDER

Change Requested by: Engineer

CCO: 39	Suppl. No. 1	Contract No. 04 - 0120S4	Road SF-80-12.7/13.2	FED. AID LOC.: NO FED AID

To: **M C M CONSTRUCTION INC**

You are directed to make the following changes from the plans and specifications or do the following described work not included in the plans and specifications for this contract. ***NOTE: This change order is not effective until approved by the Engineer.***

Description of work to be done, estimate of quantities and prices to be paid. (Segregate between additional work at contract price, agreed price and force account.) Unless otherwise stated, rates for rental of equipment cover only such time as equipment is actually used and no allowance will be made for idle time. This last percentage shown is the net accumulated increase or decrease from the original quantity in the Engineer's Estimate.

Extra Work at Force Account:

Provide additional funds to perform extra work as specified in Contract Change Order No. 039-S0.

Estimated cost of Extra Work at Force Account $150,000.00

No adjustment of contract time is warranted, as this change will not affect the controlling operation.

Estimated Cost: **Increase** ☑ **Decrease** ☐ **$150,000.00**

By reason of this order the time of completion will be adjusted as follows: 0 days

Submitted by		
Signature Rajesh Oberoi	**Resident Engineer** Rajesh Oberoi, Senior R.E.	**Date** 03/02/11
Approval recommended by		
Signature Deanna Vilcheck	**Area Construction Manager** Deanna Vilcheck	**Date** 4/12/11
Executive approval by		
Signature Deanna Vilcheck	**Area Construction Manager** Deanna Vilcheck	**Date** 4/12/11

We the undersigned contractor, have given careful consideration to the change proposed and agree, if this proposal is approved, that we will provide all equipment, furnish the materials, except as may otherwise be noted above, and perform all services necessary for the work above specified, and will accept as full payment therefor the prices shown above.

NOTE: If you, the contractor, do not sign acceptance of this order, your attention is directed to the requirements of the specifications as to proceeding with the ordered work and filing a written protest within the time therein specified.

Contractor Acceptance by		
Signature N/A	**(Print name and title)**	**Date**

STATE OF CALIFORNIA - DEPARTMENT OF TRANSPORTATION

CONTRACT CHANGE ORDER MEMORANDUM

TO: Deanna Vilcheck, ACM / DV	FILE: E.A. 04 - 0120S4
FROM: Rajesh Oberoi, Senior R.E.	CO-RTE-PM SF-80-12.7/13.2
	FED. NO. NO FED AID
CCO#: 39 SUPPLEMENT#: 1 Category Code: AXZZ	CONTINGENCY BALANCE (incl. this change) $6,528,778.50
COST: $150,000.00 INCREASE ☑ DECREASE ☐	HEADQUARTERS APPROVAL REQUIRED? ☐ YES ☑ NO
SUPPLEMENTAL FUNDS PROVIDED: $0.00	IS THIS REQUEST IN ACCORDANCE WITH ENVIRONMENTAL DOCUMENTS? ☑ YES ☐ NO
CCO DESCRIPTION: Instruments and Monitoring	**PROJECT DESCRIPTION:** YBITS-1 (Yerba Buena Island Transition Structures)

Original Contract Time:	Time Adj. This Change:	Previously Approved CCO Time Adjustments:	Percentage Time Adjusted: (including this change)	Total # of Unreconciled Deferred Time CCO(s): (including this change)
1390 Day(s)	0 Day(s)	0 Day(s)	0 %	7

THIS CHANGE ORDER PROVIDES FOR:

Additional funding for wind monitoring, slope monitoring and traffic monitoring specified under the original Change Order No. 39.

This project, the Yerba Buena Island Transition Structure (YBITS), provides for the construction of two bridges which will connect eastbound and westbound traffic on the new east span of the San Francisco Oakland Bay Bridge (SFOBB) to the existing Yerba Buena Island tunnel. The structures are comprised of concrete box girder bridges each approximately 40 meters high and 450 meters in length.

The original Change Order 39 provided for wind monitoring, slope monitoring and taffic monitoring to be performed by the contractor. This monitoring is being maintained from a prior contract on Yerba Buena Island. Slope monitoring provided data as to the stability of the 40 meter high steep sandy slope that part of structure is being constructed on. Traffic monitoring provides data concerning the mainline detour now in use. Wind monitoring provides data as to what conditions can be expected across the entire SFOBB corridor.

The cost of the work to be performed over 3-year period was considerably underestimated under the original change order. This change order provides additional funds based in a revised cost estimate.

Compensation for this work shall be paid as extra work at force account at an estimated cost of $150,000, which shall be financed from the contract's contingency balance. A cost analysis is on file.

No adjustment of contract time is warranted, as this change does not affect the controlling operations.

Maintenance concurrence is not required as the change doesn't affect any permanent roadway features.

ADA Notice: For individuals with sensory disabilities, this document is available in alternate formats. For information call: (916) 654-6410 or TDD (916) 654-3880 or write Records and Forms Management, 1120 N Street, MS-89, Sacramento, CA 95814.

CONCURRED BY:		
Construction Engineer: Rajesh Oberoi	Date 04/8/11	
Bridge Engineer:	Date	
Project Engineer:	Date	
Project Manager:	Date	
FHWA Rep.:	Date	
Environmental:	Date	
Other (specify):	Date	
Other (specify):	Date	
District Prior Approval By:	Date	
HQ (Issue Approve) By:	Date	
Resident Engineer's Signature: Rajesh Oberoi 4/8/11	Date	

ESTIMATE OF COST

	THIS REQUEST	TOTAL TO DATE
ITEMS	$0.00	$0.00
FORCE ACCOUNT	$150,000.00	$185,000.00
AGREED PRICE	$0.00	$0.00
ADJUSTMENT	$0.00	$0.00
TOTAL	$150,000.00	$185,000.00

FEDERAL PARTICIPATION

☐ PARTICIPATING ☐ PARTICIPATING IN PART ☑ NONE
☐ NON-PARTICIPATING (MAINTENANCE) ☐ NON-PARTICIPATING

FEDERAL SEGREGATION (if more than one Funding Source or P.I.P. type)
☑ CCO FUNDED PER CONTRACT ☐ CCO FUNDED AS FOLLOWS

FEDERAL FUNDING SOURCE	PERCENT

ADA Notice: For individuals with sensory disabilities, this document is available in alternate formats. For information call: (916) 654-6410 or TDD (916) 654-3880 or write Records and Forms Management, 1120 N Street, MS-89, Sacramento, CA 95814.

STATE OF CALIFORNIA - DEPARTMENT OF TRANSPORTATION

CONTRACT CHANGE ORDER

Change Requested by: Engineer

CCO 39	Suppl. No. 2	Contract No. 04 - 0120S4	Road SF-80-12.7/13.2	FED. AID LOC.: NO FED AID

To: **M C M CONSTRUCTION INC**

You are directed to make the following changes from the plans and specifications or do the following described work not included in the plans and specifications for this contract. ***NOTE: This change order is not effective until approved by the Engineer.***

Description of work to be done, estimate of quantities and prices to be paid. (Segregate between additional work at contract price, agreed price and force account.) Unless otherwise stated, rates for rental of equipment cover only such time as equipment is actually used and no allowance will be made for idle time. This last percentage shown is the net accumulated increase or decrease from the original quantity in the Engineer's Estimate.

Extra Work at Force Account:

Provide additional funds to perform extra work as specified in Contract Change Order No. 039-S0.

Estimated cost of Extra Work at Force Account = $150,000.00

Estimated Cost: **Increase** ☑ **Decrease** ☐ **$150,000.00**

By reason of this order the time of completion will be adjusted as follows: 0 days

Submitted by

Signature	Resident Engineer	Date
William Howe	William Howe, Senior R.E.	10.03.12

Approval Recommended by

Signature	Area Construction Manager	Date
Deanna Vilcheck	Deanna Vilcheck	10/3/12

Engineer Approval by

Signature	Area Construction Manager	Date
Deanna Vilcheck	Deanna Vilcheck	10/4/12

We the undersigned contractor, have given careful consideration to the change proposed and agree, if this proposal is approved, that we will provide all equipment, furnish the materials, except as may otherwise be noted above, and perform all services necessary for the work above specified, and will accept as full payment therefor the prices shown above.

NOTE: If you, the contractor, do not sign acceptance of this order, your attention is directed to the requirements of the specifications as to proceeding with the ordered work and filing a written protest within the time therein specified.

Contractor Acceptance by

Signature	(Print name and title)	Date
Not Required		

STATE OF CALIFORNIA - DEPARTMENT OF TRANSPORTATION

CONTRACT CHANGE ORDER MEMORANDUM

DATE: 10/3/2012 Page 1 of 1

TO: Deanna Vilcheck, ACM / DV	FILE: E.A. 04 - 0120S4
	CO-RTE-PM SF-80-12.7/13.2
FROM: William Howe, Senior R.E.	FED. NO. NO FED AID
CCO#: 39 SUPPLEMENT#: 2 Category Code: AXZZ	CONTINGENCY BALANCE (incl. this change) $42,284,138.15
COST: $150,000.00 INCREASE ☑ DECREASE ☐	HEADQUARTERS APPROVAL REQUIRED? ☑ YES ☐ NO
SUPPLEMENTAL FUNDS PROVIDED: $0.00	IS THIS REQUEST IN ACCORDANCE WITH ENVIRONMENTAL DOCUMENTS? ☑ YES ☐ NO
CCO DESCRIPTION: Additional Funds	**PROJECT DESCRIPTION:** YBITS-1 (Yerba Buena Island Transition Structures)

Original Contract Time:	Time Adj. This Change:	Previously Approved CCO Time Adjustments:	Percentage Time Adjusted: (including this change)	Total # of Unreconciled Deferred Time CCO(s): (including this change)
1390 Day(s)	0 Day(s)	0 Day(s)	0 %	9

THIS CHANGE ORDER PROVIDES FOR:

Additional funding for wind monitoring, slope monitoring and traffic monitoring specified under the original Change Order No. 39.

This project, the Yerba Buena Island Transition Structure (YBITS), provides for the construction of two bridges which will connect eastbound and westbound traffic on the new east span of the San Francisco Oakland Bay Bridge (SFOBB) to the existing Yerba Buena Island tunnel. The structures are comprised of concrete box girder bridges each approximately 40 meters high and 450 meters in length.

The original Change Order 39 provided for wind monitoring, slope monitoring and taffic monitoring to be performed by the Contractor. This monitoring is being maintained from a prior contract on Yerba Buena Island. Slope monitoring provided data as to the stability of the 40 meter high steep sandy slope that part of structure is being constructed on. Traffic monitoring provides data concerning the mainline detour now in use. Wind monitoring provides data as to what conditions can be expected across the entire SFOBB corridor.

The cost of the work to be performed over 3-year period was considerably underestimated under the original change order. This change order provides additional funds based in a revised cost estimate.

Compensation for this work shall be paid as Extra Work at Force Account at an estimated cost of $150,000, which shall be financed from the Contract's contingency fund. A cost analysis is on file.

No adjustment of contract time is warranted, as this change does not affect the controlling operations.

Maintenance concurrence is not required as the change does not affect any permanent roadway features.

CONCURRED BY:		
Construction Engineer:	William Howe	Date 10-03-12
Bridge Enginaer:	Mehran Ardakanian	Date
Project Engineer:	Bob Zandipour, Design	Date 10-4-12
Project Manager:	Ken Terpstra KT	Date 10-5-12
FHWA Rep.:		Date
Environmental:		Date
Other (specify):		Date
Other (specify):		Date
District Prior Approval By:		Date
HQ (Issue Approve) By:	Sey Hossnieh	Date 10-4-12
Resident Engineer's Signature:	William Howe	Date 10.03.12

ESTIMATE OF COST	THIS REQUEST	TOTAL TO DATE
ITEMS	$0.00	$0.00
FORCE ACCOUNT	$150,000.00	$335,000.00
AGREED PRICE	$0.00	$0.00
ADJUSTMENT	$0.00	$0.00
TOTAL	$150,000.00	$335,000.00

FEDERAL PARTICIPATION

☐ PARTICIPATING ☐ PARTICIPATING IN PART ☑ NONE
☐ NON-PARTICIPATING (MAINTENANCE) ☐ NON-PARTICIPATING

FEDERAL SEGREGATION (if more than one Funding Source or P.I.P. type)
☐ CCO FUNDED PER CONTRACT ☐ CCO FUNDED AS FOLLOWS

FEDERAL FUNDING SOURCE	PERCENT

ADA Notice: For individuals with sensory disabilities, this document is available in alternate formats. For information call (916) 654-6410 or TDD (916) 654-3880 or write Records and Forms Management, 1120 N Street, MS-89, Sacramento, CA 95814.

STATE OF CALIFORNIA - DEPARTMENT OF TRANSPORTATION

CONTRACT CHANGE ORDER

Change Requested by: Engineer

CCO 41	Suppl. No. 0	Contract No. 04 - 0120S4	Road SF-80-12.7/13.2	FED. AID LOC.: NO FED AID

To: M C M CONSTRUCTION INC

You are directed to make the following changes from the plans and specifications or do the following described work not included in the plans and specifications for this contract. ***NOTE: This change order is not effective until approved by the Engineer.***

Description of work to be done, estimate of quantities and prices to be paid. (Segregate between additional work at contract price, agreed price and force account.) Unless otherwise stated, rates for rental of equipment cover only such time as equipment is actually used and no allowance will be made for idle time. This last percentage shown is the net accumulated increase or decrease from the original quantity in the Engineer's Estimate.

Extra Work at Lump Sum:

Provide compensation to the Contractor for all costs incurred for fixing the broken irrigation line running underneath Macalla Rd.

Work includes saw cutting the road, excavation, repair the irrigation pipe, backfilling and repaving Macalla Rd.

For this work, the Contractor shall be compensated an agreed lump sum of $15,425.61 which constitutes full and final compensation, including all markups, for all costs incurred.

Estimated cost of Extra Work at Lump Sum $15,425.61

Estimated Cost: Increase ☑ Decrease ☐ **$15,425.61**

By reason of this order the time of completion will be adjusted as follows: 0 days

Prepared by		
Signature William Howe	**Resident Engineer** William Howe, Senior R.E.	**Date** 07-07-11
Approved by		
Signature William Howe	**Construction Engineer** William Howe	**Date** 07-07-11
Concurrence by		
Signature William Howe	**Construction Engineer** William Howe	**Date** 08-18-11

We the undersigned contractor, have given careful consideration to the change proposed and agree, if this proposal is approved, that we will provide all equipment, furnish the materials, except as may otherwise be noted above, and perform all services necessary for the work above specified, and will accept as full payment therefor the prices shown above.

NOTE: If you, the contractor, do not sign acceptance of this order, your attention is directed to the requirements of the specifications as to proceeding with the ordered work and filing a written protest within the time therein specified.

Contractor Acceptance by		
Signature	**(Print name and title)** EDMUNDO A. PUCHI, TREASURER	**Date** 8/4/11

STATE OF CALIFORNIA - DEPARTMENT OF TRANSPORTATION

CONTRACT CHANGE ORDER MEMORANDUM

DATE: 7/7/2011 Page 1 of 1

TO: Deanna Vilcheck, ACM / DV	FILE: E.A. 04 - 0120S4
FROM: William Howe, Senior R.E.	CO-RTE-PM SF-80-12.7/13.2
	FED. NO. NO FED AID
CCO#: 41 SUPPLEMENT#: 0 Category Code: BZZZ	CONTINGENCY BALANCE (incl. this change) $69,311,456.89
COST: $15,425.61 INCREASE ☑ DECREASE ☐	HEADQUARTERS APPROVAL REQUIRED? ☐ YES ☑ NO
SUPPLEMENTAL FUNDS PROVIDED: $0.00	IS THIS REQUEST IN ACCORDANCE WITH ENVIRONMENTAL DOCUMENTS? ☑ YES ☐ NO
CCO DESCRIPTION: Macalla Rd. Emergency repairs	**PROJECT DESCRIPTION:** YBITS-1 (Yerba Buena Island Transition Structures)

Original Contract Time:	Time Adj. This Change:	Previously Approved CCO Time Adjustments:	Percentage Time Adjusted: (including this change)	Total # of Unreconciled Deferred Time CCO(s): (including this change)
1390 Day(s)	0 Day(s)	0 Day(s)	0 %	8

THIS CHANGE ORDER PROVIDES FOR:

Compensation for all costs incurred in fixing the broken irrigation line running underneath Macalla Rd.

This project, the Yerba Buena Island Transition Structure (YBITS), provides for the construction of two bridges, which will connect eastbound and westbound traffic on the new east span of the San Francisco Oakland Bay Bridge (SFOBB) to the existing Yerba Buena Island (YBI) tunnel.

Within the project limits at Macalla Rd. hairpin, the existing City and County of San Francisco irrigation water line leaked and undermined the pavement resulting in undue delays to traffic on Macalla Rd and the projects progress. In order to mitigate delays to the project the Engineer directed the contractor to repair the pipe and repave Macalla Rd.

This change order compensates the contractor for all the costs associated with saw cutting the road, excavation, repairing the pipe, backfilling and repaving Macalla Rd.

Payment for this work will be a Lump Sum of $15,425.61, which will be financed from the contract's contingency funds. A detailed cost analysis is on file.

No adjustment of contract time is warranted, as the change will not affect the controlling operation.

Maintenance concurrence is not required, as the change order shall not affect any permanent roadway features.

CONCURRED BY:	
Construction Engineer: William Howe	Date 07.07.11
Bridge Engineer:	Date
Project Engineer: BOB ZANDIPOUR	Date 08/17/11
Project Manager: KEN TERPSTRA	Date 8/18/11
FHWA Rep.:	Date
Environmental:	Date
Other (specify):	Date
Other (specify):	Date
District Prior Approval By:	Date
HQ (Issue Approve) By:	Date
Resident Engineer's Signature: William Howe	Date 07.07.11

ESTIMATE OF COST

	THIS REQUEST	TOTAL TO DATE
ITEMS	$0.00	$0.00
FORCE ACCOUNT	$0.00	$0.00
AGREED PRICE	$15,425.61	$15,425.61
ADJUSTMENT	$0.00	$0.00
TOTAL	$15,425.61	$15,425.61

FEDERAL PARTICIPATION

☐ PARTICIPATING ☐ PARTICIPATING IN PART ☑ NONE
☐ NON-PARTICIPATING (MAINTENANCE) ☐ NON-PARTICIPATING

FEDERAL SEGREGATION (if more than one Funding Source or P.I.P. type)
☐ CCO FUNDED PER CONTRACT ☐ CCO FUNDED AS FOLLOWS

FEDERAL FUNDING SOURCE PERCENT

ADA Notice: For individuals with sensory disabilities, this document is available in alternate formats. For information call: (916) 654-6410 or TDD (916) 654-3880 or write Records and Forms Management, 1120 N Street, MS-89, Sacramento, CA 95814.

STATE OF CALIFORNIA - DEPARTMENT OF TRANSPORTATION

CONTRACT CHANGE ORDER

Change Requested by: Engineer

CCO: 42	Suppl. No. 0	Contract No. 04 - 0120S4	Road SF-80-12.7/13.2	FED. AID LOC.: NO FED AID

To: **M C M CONSTRUCTION INC**

You are directed to make the following changes from the plans and specifications or do the following described work not included in the plans and specifications for this contract. ***NOTE: This change order is not effective until approved by the Engineer.***

Description of work to be done, estimate of quantities and prices to be paid. (Segregate between additional work at contract price, agreed price and force account.) Unless otherwise stated, rates for rental of equipment cover only such time as equipment is actually used and no allowance will be made for idle time. This last percentage shown is the net accumulated increase or decrease from the original quantity in the Engineer's Estimate.

The Contractor shall provide one-way traffic control on the lower portion of Macalla Road between Southgate Road and the bottom of the Macalla Road incline (approximately 120 meters left of W Line Sta. 54+40). This traffic control shall be required between the hours of 6:30 A.M and 3:30 P.M from Monday through Friday during all hours of the Contractor's operations on the project site and when necessary to provide truck access to the jobsite in accordance with the Department's license agreement with the United States Coast Guard (License No. HSCG-Z7111-09-RP-060L).

This change order supersedes the Monday through Friday, 8:30 A.M to 1:30 P.M. one-way traffic control specified for Macalla Road under Section 10-1.31 "Maintaining Traffic" of the Contract Special Provisions.

All traffic control required under this change order performed on or after December 13, 2010 through December 28,2013 shall be compensated in accordance with Section 12-2 "Flagging" of the Standard Specifications. All traffic control performed before December 13, 2010 and traffic control performed outside of 6:30 A.M to 3:30 P.M from Monday through Friday time period as specified under this change order shall be compensated in full by the Department. Compensation for this work shall be paid under Change Order No. 1.

Adjustment of Compensation at Lump Sum:

Compensate the Contractor for all additional costs incurred beyond the compensation provided under Change Order No. 1, as specified herein, due to the revised traffic control requirements provided under this change order. For these costs, the Contractor shall be compensated an agreed lump sum of $171,830.00 which constitutes full and final compensation, including all markups, for all additional costs incurred.

Estimated cost of Adjustment of Compensation at Lump Sum $171,830.00

Estimated Cost: Increase ☑ Decrease ☐ **$171,830.00**

By reason of this order the time of completion will be adjusted as follows: 0 days

Submitted by

Signature	Resident Engineer	Date
Rajesh Oberoi	Rajesh Oberoi, Senior R.E.	9/27/10

Approval Recommended by

Signature	Area Construction Manager	Date
Deanna Vilcheck	Deanna Vilcheck	10/14/10

Engineer Approval by

Signature	Area Construction Manager	Date
Deanna Vilcheck	Deanna Vilcheck	10/14/10

We the undersigned contractor, have given careful consideration to the change proposed and agree, if this proposal is approved, that we will provide all equipment, furnish the materials, except as may otherwise be noted above, and perform all services necessary for the work above specified, and will accept as full payment therefor the prices shown above.

NOTE: If you, the contractor, do not sign acceptance of this order, your attention is directed to the requirements of the specifications as to proceeding with the ordered work and filing a written protest within the time therein specified.

Contractor Acceptance by

Signature	(Print name and title)	Date
[illegible]	Edmundo Arpachi - Treasurer	10-11-2010

STATE OF CALIFORNIA - DEPARTMENT OF TRANSPORTATION

CONTRACT CHANGE ORDER MEMORANDUM

TO: Deanna Vilcheck, ACM / DV	FILE: E.A. 04 - 0120S4
FROM: Rajesh Oberoi, Senior R.E.	CO-RTE-PM SF-80-12.7/13.2
	FED. NO. NO FED AID
CCO#: 42 SUPPLEMENT#: 0 Category Code: AJZZ	CONTINGENCY BALANCE (incl. this change) $28,393,982.00
COST: $171,830.00 INCREASE ☑ DECREASE ☐	HEADQUARTERS APPROVAL REQUIRED? ☐ YES ☑ NO
SUPPLEMENTAL FUNDS PROVIDED: $171,830.00	IS THIS REQUEST IN ACCORDANCE WITH ENVIRONMENTAL DOCUMENTS? ☑ YES ☐ NO
CCO DESCRIPTION: Macalla Road Falgging for US Coast Guard	**PROJECT DESCRIPTION:** YBITS-1 (Yerba Buena Island Transition Structures)

Original Contract Time:	Time Adj. This Change:	Previously Approved CCO Time Adjustments:	Percentage Time Adjusted: (including this change)	Total # of Unreconciled Deferred Time CCO(s): (including this change)
1390 Day(s)	0 Day(s)	0 Day(s)	0 %	0

THIS CHANGE ORDER PROVIDES FOR:

Revised traffic control requirements for Macalla Road.

This project, the Yerba Buena Island Transition Structure (YBITS), provides for the construction of two bridges which will connect eastbound and westbound traffic on the new east span of the San Francisco Oakland Bay Bridge (SFOBB) to the existing Yerba Buena Island tunnel. The structures are comprised of concrete box girder bridges each approximately 40 meters high and 450 meters in length.

The project takes place directly adjacent to a U.S. Coast Guard (USCG) facility which has provided construction easements to the Department for this project. The only access to the USCG facility flows directly through the project site on Macalla Road. This road drops 40 meters into the jobsite through 3 hairpin turns which restrict traffic flow.

Under the license agreement between the Department and the USCG (License No. HSCG-Z7111-09-RP-060L), the Department is required to provide one-way traffic control along the restricted area of Macalla Road during all hours of the contractor's operations. While the contract references the license agreement, Section 10-1.31 "Maintaining Traffic" of the Contract Special Provisions specifies that traffic control is only required Monday through Friday between 8:30 A.M to 1:30 P.M. This change order modifies the traffic control requirements to meet the USCG license agreement.

Traffic control performed on Macalla Road shall be compensated in accordance with Section 12-2 "Flagging" of the Standard Specifications. This compensation shall be paid under Change Order No. 1 that provides for flagging costs. This traffic control will be performed over a 3 year period.

In addition, the area of Macalla Road pertaining to the traffic control requirements is not specified to be released to the contractor until December 13, 2010. Therefore any traffic control required under this change order performed before December 13, 2010 shall be compensated in full by the Department under Change Order No. 1.

Additional cost will be incurred by the contractor within their portion of flagging costs being borne equally due to the extended hours of traffic control required. Compensation for these additional costs shall be paid as an adjustment of compensation at an agreed lump sum of $171,830.00 which shall be financed from the contract's Supplimental funds. A cost analysis is on file.

No adjustment of contract time is warranted as the change will not affect the controlling operation.

Maintenance concurrence is not required as the change shall not affect any permanent roadway features.

ADA Notice: For individuals with sensory disabilities, this document is available in alternate formats. For information call: (916) 654-6410 or TDD (916) 654-3680 or write Records and Forms Management, 1120 N Street, MS-89, Sacramento, CA 95814.

CONCURRED BY:		
Construction Engineer: Rajesh Oberoi RO	Date 9/27/10	
Bridge Engineer:	Date	
Project Engineer:	Date	
Project Manager:	Date	
FHWA Rep.:	Date	
Environmental:	Date	
Other (specify):	Date	
Other (specify):	Date	
District Prior Approval By:	Date	
HQ (Issue Approve) By:	Date	
Resident Engineer's Signature: Rajesh Oberoi 9/27/10	Date	

ESTIMATE OF COST

	THIS REQUEST	TOTAL TO DATE
ITEMS	$0.00	$0.00
FORCE ACCOUNT	$0.00	$0.00
AGREED PRICE	$0.00	$0.00
ADJUSTMENT	$171,830.00	$171,830.00
TOTAL	$171,830.00	$171,830.00

FEDERAL PARTICIPATION

☐ PARTICIPATING ☐ PARTICIPATING IN PART ☑ NONE
☐ NON-PARTICIPATING (MAINTENANCE) ☐ NON-PARTICIPATING

FEDERAL SEGREGATION (if more than one Funding Source or P.I.P. type)
☐ CCO FUNDED PER CONTRACT ☐ CCO FUNDED AS FOLLOWS

FEDERAL FUNDING SOURCE	PERCENT

ADA Notice: For individuals with sensory disabilities, this document is available in alternate formats. For information call: (916) 654-6410 or TDD (916) 654-3880 or write Records and Forms Management, 1120 N Street, MS-89, Sacramento, CA 95814.

STATE OF CALIFORNIA - DEPARTMENT OF TRANSPORTATION

CONTRACT CHANGE ORDER

Change Requested by: Engineer

CCO: 43	Suppl. No. 0	Contract No. 04 - 0120S4	Road SF-80-12.7/13.2	FED. AID LOC.: NO FED AID

To: **M C M CONSTRUCTION INC**

You are directed to make the following changes from the plans and specifications or do the following described work not included in the plans and specifications for this contract. ***NOTE: This change order is not effective until approved by the Engineer.***

Description of work to be done, estimate of quantities and prices to be paid. (Segregate between additional work at contract price, agreed price and force account.) Unless otherwise stated, rates for rental of equipment cover only such time as equipment is actually used and no allowance will be made for idle time. This last percentage shown is the net accumulated increase or decrease from the original quantity in the Engineer's Estimate.

Extra Work at Force Account:

Compensate the Contractor for costs incurred as directed by the Engineer in the field to maintain existing Macalla Road for access to the United States Coast Guard base.

Work will include pavement and shoulder maintenance and repairs; maintaining drainage systems; maintaining or replacing striping and traffic markers, and other items as directed by the engineer.

Estimated cost of Extra Work at Force Account $150,000.00

No adjustment of contract time is warranted, as this change will not affect the controlling operation.

Estimated Cost: Increase ☑ **Decrease** ☐ **$150,000.00**

By reason of this order the time of completion will be adjusted as follows: 0 days

Submitted by

Signature Rajesh Oberoi	Resident Engineer Rajesh Oberoi, Senior R.E.	Date 9/28/10

Approval Recommended by

Signature Deanna Vilcheck	Area Construction Manager Deanna Vilcheck	Date 9/28/10

Engineer Approval by

Signature Deanna Vilcheck	Area Construction Manager Deanna Vilcheck	Date 10/21/10

We the undersigned contractor, have given careful consideration to the change proposed and agree, if this proposal is approved, that we will provide all equipment, furnish the materials, except as may otherwise be noted above, and perform all services necessary for the work above specified, and will accept as full payment therefor the prices shown above.

NOTE: If you, the contractor, do not sign acceptance of this order, your attention is directed to the requirements of the specifications as to proceeding with the ordered work and filing a written protest within the time therein specified.

Contractor Acceptance by

Signature	(Print name and title) EDMUNDO A. PUCHI, TREASURER	Date 10/5/10

STATE OF CALIFORNIA - DEPARTMENT OF TRANSPORTATION

CONTRACT CHANGE ORDER MEMORANDUM

DATE: 9/27/2010 Page 1 of 1

TO: Deanna Vilcheck, ACM / DV	FILE: E.A. 04 - 0120S4
FROM: Rajesh Oberoi, Senior R.E. AEZZ	CO-RTE-PM SF-80-12.7/13.2
	FED. NO. NO FED AID
CCO#: 43 SUPPLEMENT#: 0 Category Code: ~~AP77~~	CONTINGENCY BALANCE (incl. this change) $28,243,982.00
COST: $150,000.00 INCREASE ☑ DECREASE ☐	HEADQUARTERS APPROVAL REQUIRED? ☐ YES ☑ NO
SUPPLEMENTAL FUNDS PROVIDED: $150,000.00	IS THIS REQUEST IN ACCORDANCE WITH ENVIRONMENTAL DOCUMENTS? ☑ YES ☐ NO
CCO DESCRIPTION: Macalla Rd Maintenance for USCG	**PROJECT DESCRIPTION:** YBITS-1 (Yerba Buena Island Transition Structures)

Original Contract Time:	Time Adj. This Change:	Previously Approved CCO Time Adjustments:	Percentage Time Adjusted: (including this change)	Total # of Unreconciled Deferred Time CCO(s): (including this change)
1390 Day(s)	0 Day(s)	0 Day(s)	0 %	0

THIS CHANGE ORDER PROVIDES FOR:

Compensating the contractor for costs incurred due to Coast Guard impacts.

This project, the Yerba Buena Island Transition Structure (YBITS), provides for the construction of two bridges which will connect eastbound and westbound traffic on the new east span of the San Francisco Oakland Bay Bridge (SFOBB) to the existing Yerba Buena Island tunnel.The project is being built directly adjacent to a U.S. Coast Guard (USCG) facility which has provided construction easements to the Department for this project. The only access to the USCG facility flows directly through the project site is on Macalla Road. This road drops 40 meters into the jobsite through 3 hairpin turns which restricts traffic flow.In order to maintain the road, the Department will request the contractor to provide various maintenance measures, such as pavement and shoulder maintenance and repairs; maintain drainage systems; maintain or replace striping and traffic markers; and other items as determined by the engineer.

Compensation for this work shall be paid as extra work at force account which can be financed from the project's Supplimental funds at an estimated cost of $150,000. A cost analysis is on file.

No adjustment of contract time is warranted, as this change will not affect the controlling operation.

Maintenance concurrence is not required as this is an administrative change order and doesn't affect any permanent roadway features.

CONCURRED BY:

Construction Engineer:	Rajesh Oberoi RO	Date 9/28/10
Bridge Engineer:		Date
Project Engineer:		Date
Project Manager:		Date
FHWA Rep.:		Date
Environmental:		Date
Other (specify):		Date
Other (specify):		Date
District Prior Approval By:		Date
HQ (Issue Approve) By:		Date
Resident Engineer's Signature:	Rajesh Oberoi	Date 9/28/10

ESTIMATE OF COST

	THIS REQUEST	TOTAL TO DATE
ITEMS	$0.00	$0.00
FORCE ACCOUNT	$150,000.00	$150,000.00
AGREED PRICE	$0.00	$0.00
ADJUSTMENT	$0.00	$0.00
TOTAL	$150,000.00	$150,000.00

FEDERAL PARTICIPATION

☐ PARTICIPATING ☐ PARTICIPATING IN PART ☒ NONE
☐ NON-PARTICIPATING (MAINTENANCE) ☐ NON-PARTICIPATING

FEDERAL SEGREGATION (if more than one Funding Source or P.I.P. type)
☐ CCO FUNDED PER CONTRACT ☐ CCO FUNDED AS FOLLOWS

FEDERAL FUNDING SOURCE	PERCENT

ADA Notice: For individuals with sensory disabilities, this document is available in alternate formats. For information call: (916) 654-6410 or TDD (916) 654-3880 or write Records and Forms Management, 1120 N Street, MS-89, Sacramento, CA 95814.

STATE OF CALIFORNIA - DEPARTMENT OF TRANSPORTATION

CONTRACT CHANGE ORDER

Change Requested by: Engineer

CCO: 43	Suppl. No. 1	Contract No. 04 - 0120S4	Road SF-80-12.7/13.2	FED. AID LOC.: NO FED AID

To: **M C M CONSTRUCTION INC**

You are directed to make the following changes from the plans and specifications or do the following described work not included in the plans and specifications for this contract. ***NOTE: This change order is not effective until approved by the Engineer.***

Description of work to be done, estimate of quantities and prices to be paid. (Segregate between additional work at contract price, agreed price and force account.) Unless otherwise stated, rates for rental of equipment cover only such time as equipment is actually used and no allowance will be made for idle time. This last percentage shown is the net accumulated increase or decrease from the original quantity in the Engineer's Estimate.

Extra Work at Force Account:

Increase the amount approved on Change Order No. 43 to maintain Macalla Road.

Estimated cost of Extra Work at Force Account $150,000.00

Estimated Cost: Increase ☑ **Decrease** ☐ **$150,000.00**

By reason of this order the time of completion will be adjusted as follows: 0 days

Submitted by		
Signature William Howe	**Resident Engineer** William Howe, Senior R.E.	**Date** 11.14.11
Approval Recommended by		
Signature Deanna Vilcheck	**Area Construction Manager** Deanna Vilcheck	**Date** 11/14/11
Engineer Approval by		
Signature Deanna Vilcheck	**Area Construction Manager** Deanna Vilcheck	**Date** 11/14/11

We the undersigned contractor, have given careful consideration to the change proposed and agree, if this proposal is approved, that we will provide all equipment, furnish the materials, except as may otherwise be noted above, and perform all services necessary for the work above specified, and will accept as full payment therefor the prices shown above.

NOTE: If you, the contractor, do not sign acceptance of this order, your attention is directed to the requirements of the specifications as to proceeding with the ordered work and filing a written protest within the time therein specified.

Contractor Acceptance by		
Signature NOT REQUIRED	**(Print name and title)**	**Date**

STATE OF CALIFORNIA - DEPARTMENT OF TRANSPORTATION

CONTRACT CHANGE ORDER

Change Requested by: Engineer

CCO 108	Suppl. No. 0	Contract No. 04 - 0120S4	Road SF-80-12.7/13.2	FED. AID LOC.: NO FED AID

To: **M C M CONSTRUCTION INC**

You are directed to make the following changes from the plans and specifications or do the following described work not included in the plans and specifications for this contract. ***NOTE: This change order is not effective until approved by the Engineer.***

Description of work to be done, estimate of quantities and prices to be paid. (Segregate between additional work at contract price, agreed price and force account.) Unless otherwise stated, rates for rental of equipment cover only such time as equipment is actually used and no allowance will be made for idle time. This last percentage shown is the net accumulated increase or decrease from the original quantity in the Engineer's Estimate.

Extra Work at Force Account:

Clean and paint structural steel on existing I-80 bridge structure at locations as directed by the engineer.

Cleaning shall be in accordance with Contract Change Order No. 533 sheets 6 through 13, which includes specifications for cleaning and debris containment, debris handing, and disposal.

Painting shall include the application of 90 micrometers to 150 micrometers of inorganic zinc primer in two or more applications to the surfaces of the existing structural steel after lead or other coating has been abated per the direction of the engineer.

This work shall include but is not limited to
1) Preparing amendments to existing debris handling plan to address the work of this change order.
2) Preparing updates or amendments to the contractor's (or any subcontractor's) existing Project Health and Safety plan to include the work of this change order.
3) Providing access platform or platforms as required (such as manlifts) for the work.
4) Making provisions for containment of dust and debris.
5) Accomplishing all cleaning and painting as directed by the engineer and providing clean and safe access for the engineer to conduct examinations on the existing bridge at the cleaned and painted areas.
6) Providing all required health and safety measures, including air monitoring as detailed in the specifications. Air monitoring lab test results shall be provided to the Engineer at an expedited turnaround times as directed by the Engineer.
7) Providing any required testing and legal disposal of rinse water and blasting debris materials generated during the work.

Any traffic control or lane closure operations required for this change will be covered under Contract Change Order No. 001, Maintain Traffic. For this work, the State will pay the entire cost of furnishing all flaggers, including transporting flaggers, in lieu of the division of costs as described in Section 12-2.02 of the Standard Specifications.

This work will be paid for in accordance with Section 5-1.17 "Force Account Payment" of the Special Provisions and Section 4-1.03D "Extra Work" of the Standard Specifications.

Estimated cost of Extra Work at Force Account $100,000.00

RECEIVED OCT 2 5 2011

STATE OF CALIFORNIA - DEPARTMENT OF TRANSPORTATION

CONTRACT CHANGE ORDER

Change Requested by: Engineer

CCO 108	Suppl. No. 0	Contract No. 04 - 0120S4	Road SF-80-12.7/13.2	FED. AID LOC.: NO FED AID

Estimated Cost: Increase ☑ Decrease ☐ $100,000.00

By reason of this order the time of completion will be adjusted as follows: 0 days

Submitted by

Signature William Howe	Resident Engineer William Howe, Senior R.E.	Date 10-11-11

Approval Recommended by

Signature Deanna Vilcheck	Area Construction Manager Deanna Vilcheck	Date 10/12/11

Engineer Approval by

Signature Deanna Vilcheck	Area Construction Manager Deanna Vilcheck	Date 10/26/11

We the undersigned contractor, have given careful consideration to the change proposed and agree, if this proposal is approved, that we will provide all equipment, furnish the materials, except as may otherwise be noted above, and perform all services necessary for the work above specified, and will accept as full payment therefor the prices shown above.

NOTE: If you, the contractor, do not sign acceptance of this order, your attention is directed to the requirements of the specifications as to proceeding with the ordered work and filing a written protest within the time therein specified.

Contractor Acceptance by

Signature	Print name and title Edmundo A. Pucchi - Treasurer	Date 10-21-2011

10-11-2011

STATE OF CALIFORNIA - DEPARTMENT OF TRANSPORTATION

CONTRACT CHANGE ORDER

Change Requested by: Engineer

CCO: 47	Suppl. No. 0	Contract No. 04 - 0120S4	Road SF-80-12.7/13.2	FED. AID LOC.: NO FED AID

To: **M C M CONSTRUCTION INC**

You are directed to make the following changes from the plans and specifications or do the following described work not included in the plans and specifications for this contract. ***NOTE: This change order is not effective until approved by the Engineer.***

Description of work to be done, estimate of quantities and prices to be paid. (Segregate between additional work at contract price, agreed price and force account.) Unless otherwise stated, rates for rental of equipment cover only such time as equipment is actually used and no allowance will be made for idle time. This last percentage shown is the net accumulated increase or decrease from the original quantity in the Engineer's Estimate.

The Contractor shall provide enhanced lateral support and pile embedment pertaining to the Contractor's Frame 1 falsework for the Westbound and Eastbound Structures (Br. No. 34-0006 L and Br. No. 34-0006 R) as determined and approved by the Engineer.

Any additional costs resulting from this change order are deferred and shall be compensated under a supplement to this change order.

Consideration of a time adjustment will be deferred until completion of the work specified herein. Determination of a commensurate time extension will be made in accordance with Section 8-1.07, "Liquidated Damages", of the Standard Specifications and Section 10-1.22 " Progress Schedule (Critical Path Method)" of the Special Provisions.

Estimated Cost: Increase ☐ **Decrease** ☐ **$0.00**

By reason of this order the time of completion will be adjusted as follows: Deferred

Submitted by		
Signature Rajesh Oberoi	Resident Engineer Rajesh Oberoi, Senior R.E.	Date 10/7/10
Approval Recommended by		
Signature Deanna Vilcheck	Area Construction Manager Deanna Vilcheck	Date 10/7/10
Engineer Approval by		
Signature Deanna Vilcheck	Principal T.E. Mike Forner	Date 10/14/10

We the undersigned contractor, have given careful consideration to the change proposed and agree, if this proposal is approved, that we will provide all equipment, furnish the materials, except as may otherwise be noted above, and perform all services necessary for the work above specified, and will accept as full payment therefor the prices shown above.

NOTE: **If you, the contractor, do not sign acceptance of this order, your attention is directed to the requirements of the specifications as to proceeding with the ordered work and filing a written protest within the time therein specified.**

Contractor Acceptance by		
Signature	(Print name and title) Edmundo A. Ruchi - Treasurer	Date 10-13-2010

STATE OF CALIFORNIA - DEPARTMENT OF TRANSPORTATION

CONTRACT CHANGE ORDER MEMORANDUM

TO: Deanna Vilcheck, ACM / DV	FILE: E.A. 04 - 0120S4
FROM: Rajesh Oberoi, Senior R.E. CHTX	CO-RTE-PM SF-80-12.7/13.2
	FED. NO. NO FED AID
CCO#: 47 SUPPLEMENT#: 0 Category Code: ~~BZZZ~~	CONTINGENCY BALANCE (incl. this change) **$28,243,982.00**
COST: **$0.00** INCREASE ☐ DECREASE ☐	HEADQUARTERS APPROVAL REQUIRED? ☑ YES ☐ NO
SUPPLEMENTAL FUNDS PROVIDED: **$0.00**	IS THIS REQUEST IN ACCORDANCE WITH ENVIRONMENTAL DOCUMENTS? ☑ YES ☐ NO
CCO DESCRIPTION: Temporary Trestle Enhancements	**PROJECT DESCRIPTION:** YBITS-1 (Yerba Buena Island Transition Structures)

Original Contract Time:	Time Adj. This Change:	Previously Approved CCO Time Adjustments:	Percentage Time Adjusted: (including this change)	Total # of Unreconciled Deferred Time CCO(s): (including this change)
1390 Day(s)	**DEF** Day(s)	**0** Day(s)	**0** %	3

THIS CHANGE ORDER PROVIDES FOR:

Additional design criteria to provide for an increased design standard for the contractor's Frame No. 1 falsework piles.

This project, the Yerba Buena Island Transition Structure (YBITS), provides for the construction of two bridges which will connect eastbound and westbound traffic on the new east span of the San Francisco Oakland Bay Bridge (SFOBB) to the existing Yerba Buena Island (YBI) tunnel. The structures are comprised of concrete box girder bridges each approximately 40 meters high and 450 meters in length.

Frame 1 of both the westbound and eastbound structures provide for the construction of a 2 concrete box girders, each approximately 140 meters long and 26 meters wide, which will be constructed along a steep hill approximately 40 meters in height. The slope of this hill exceeds 1 to 1 in many locations and is comprised of loose sand. The contractor has submitted a falsework design for the westbound frame which incorporates a temporary work trestle within the falsework to provide access along the slope. The submitted falsework foundation design consists of over 200 pipe piles to support the trestle and falsework.

Mike Whiteside the YBI Coordination Engineer has issued a request to increase the design standard pertaining to the falsework pipe pile embedment depth and the lateral support of the structure.This change order provides for this design revision which will be applied to both westbound and eastbound structures. The increased design standard will mitigate Department risk associated with constructing the falsework under the severe slope and geotechnical conditions present. A failure of the falsework would have a severe impact on the completion of the project and in turn potentially delay the opening of the new east span of the SFOBB.

This change order provides for the contractor to incorporate an increased pipe pile embedment and lateral support into their falsework design. Compensation for the additional costs resulting from this change is deferred and shall be compensated under a forthcoming supplement to this change order. Costs associated with this change will include furnishing and driving addition pile length and furnishing and installing additional bracing and battered piles to provide increased lateral support. Compensation may also include premium time labor costs to mitigate potential Department delays associated with this change order.

This change is being issued with deferred compensation in order to proceed with the temporary shoring design in a timely manner and mitigate potential delay to the contract completion. The cost of this change is not anticipated to exceed $950,000.

Adjustment of contract time is deferred as the change may affect the controlling operation.

Maintenance concurrence is not required as this change affects a temporary structure and doesn't affect any permanent roadway features.

ADA Notice: For individuals with sensory disabilities, this document is available in alternate formats. For information call: (916) 654-6410 or TDD (916) 654-3880 or write Records and Forms Management, 1120 N Street, MS-89, Sacramento, CA 95814.

CONCURRED BY:		
Construction Engineer:	Rajesh Oberoi	Date 10/12/10
Bridge Engineer:	Mehran Ardakanian	Date 10/12/10
Project Engineer:		Date
Project Manager:		Date
FHWA Rep.:		Date
Environmental:		Date
Other (specify):		Date
Other (specify):		Date
District Prior Approval By:		Date
HQ (Issue Approve) By:	~~FOR I&A~~ Larry Salhaney	Date 10/11/10
Resident Engineer's Signature:	Rajesh Oberoi	Date 10/12/10

ESTIMATE OF COST

	THIS REQUEST	TOTAL TO DATE
ITEMS	$0.00	$0.00
FORCE ACCOUNT	$0.00	$0.00
AGREED PRICE	$0.00	$0.00
ADJUSTMENT	$0.00	$0.00
TOTAL	$0.00	$0.00

FEDERAL PARTICIPATION

☐ PARTICIPATING ☐ PARTICIPATING IN PART ☑ NONE
☐ NON-PARTICIPATING (MAINTENANCE) ☐ NON-PARTICIPATING

FEDERAL SEGREGATION (if more than one Funding Source or P.I.P. type)
☐ CCO FUNDED PER CONTRACT ☐ CCO FUNDED AS FOLLOWS

FEDERAL FUNDING SOURCE	PERCENT

ADA Notice: For individuals with sensory disabilities, this document is available in alternate formats. For information call: (916) 654-6410 or TDD (916) 654-3880 or write Records and Forms Management, 1120 N Street, MS-89, Sacramento, CA 95814.

STATE OF CALIFORNIA - DEPARTMENT OF TRANSPORTATION

CONTRACT CHANGE ORDER

Change Requested by: Engineer

CCO 47	Suppl. No. 1	Contract No. 04 - 0120S4	Road SF-80-12.7/13.2	FED. AID LOC.: NO FED AID

To: **M C M CONSTRUCTION INC**

You are directed to make the following changes from the plans and specifications or do the following described work not included in the plans and specifications for this contract. ***NOTE: This change order is not effective until approved by the Engineer.***

Description of work to be done, estimate of quantities and prices to be paid. (Segregate between additional work at contract price, agreed price and force account.) Unless otherwise stated, rates for rental of equipment cover only such time as equipment is actually used and no allowance will be made for idle time. This last percentage shown is the net accumulated increase or decrease from the original quantity in the Engineer's Estimate.

Adjustment of Compensation at Lump Sum:

Compensate the Contractor for all additional costs in the construction and design of the Frame 1 falsework for the Westbound and Eastbound Structures (Br. No. 34-0006 L) due to the enhanced lateral support and pile embedment incorporated into the approved design as provided for under the original Change Order No. 47. Compensation includes but is not limited to all costs associated with furnishing and installing the battered A-frame piles, furnishing and installing additional lengths of piles for extended embedment depth and furnishing and installing additional bracing.

For these costs, the Contractor shall be compensation an agreed lump sum $2,434,980.00. This lump sum constitutes full and final compensation for all additional costs incurred, including all markups, for all enhancements incorporated into the Frame 1 falsework.

This change order provides full compensation for all costs deferred under the original Change Order No. 47.

Cost of Adjustment of Compensation at Lump Sum $2,434,980.00

A determination of the delay in the completion of the Contract due to this change order and the original Change Order No. 47 has been made in accordance with the provisions of Change Order No. 72. There shall be no time extension as a result of these change orders.

Estimated Cost: Increase ☑ **Decrease** ☐ **$2,434,980.00**

By reason of this order the time of completion will be adjusted as follows: 0 days

Signature William Howe	Resident Engineer William Howe , Senior R.E.	Date 05·18·11
Signature Mike Fromm	Principal T.E. Mike Forner	Date 5/18/2011
Signature Mike Fromm	Principal T.E. Mike Forner	Date 6/6/11

We the undersigned contractor, have given careful consideration to the change proposed and agree, if this proposal is approved, that we will provide all equipment, furnish the materials, except as may otherwise be noted above, and perform all services necessary for the work above specified, and will accept as full payment therefor the prices shown above.

NOTE: If you, the contractor, do not sign acceptance of this order, your attention is directed to the requirements of the specifications as to proceeding with the ordered work and filing a written protest within the time therein specified.

Signature	(Print name and title) Edmundo A. Puchi - Treasurer	Date 5-23-2011

STATE OF CALIFORNIA - DEPARTMENT OF TRANSPORTATION

CONTRACT CHANGE ORDER MEMORANDUM

TO: Deanna Vilcheck, ACM / DV	FILE: E.A. 04 - 0120S4
FROM: William Howe, Senior R.E.	CO-RTE-PM SF-80-12.7/13.2
	FED. NO. NO FED AID
CCO#: 47 SUPPLEMENT#: 1 Category Code: CHTX	CONTINGENCY BALANCE (incl. this change) $19,592,387.00
COST: $2,434,980.00 INCREASE ☑ DECREASE ☐	HEADQUARTERS APPROVAL REQUIRED? ☑ YES ☐ NO
SUPPLEMENTAL FUNDS PROVIDED: $0.00	IS THIS REQUEST IN ACCORDANCE WITH ENVIRONMENTAL DOCUMENTS? ☑ YES ☐ NO
CCO DESCRIPTION: Temporary Trestle Construction	**PROJECT DESCRIPTION:** YBITS-1 (Yerba Buena Island Transition Structures)

Original Contract Time:	Time Adj. This Change:	Previously Approved CCO Time Adjustments:	Percentage Time Adjusted: (including this change)	Total # of Unreconciled Deferred Time CCO(s): (including this change)
1390 Day(s)	0 Day(s)	0 Day(s)	0 %	7

THIS CHANGE ORDER PROVIDES FOR:

Compensation to the contractor for additional costs associated with enhancements to the Frame 1 falsework.

This project, the Yerba Buena Island Transition Structure (YBITS), provides for the construction of two bridges which will connect eastbound and westbound traffic on the new east span of the San Francisco Oakland Bay Bridge (SFOBB) to the existing Yerba Buena Island (YBI) tunnel. The structures are comprised of concrete box girder bridges each approximately 40 meters high and 450 meters in length.

Frame 1 of both the westbound and eastbound structures provide for the construction of a 2 concrete box girders, each approximately 140 meters long and 26 meters wide, which will be constructed along a steep hill approximately 40 meters in height. The slope of this hill exceeds 1 to 1 in many locations and is comprised of loose sand. The contractor has submitted a falsework design for the westbound frame which incorporates a temporary work trestle within the falsework to provide access along the slope. The submitted falsework foundation design consists of over 200 pipe piles to support the trestle and falsework.

Based on a request from Mike Whiteside the YBI Coordination Engineer, the original Change Order No. 47 provided for enhancements to the design of the Frame 1 falsework. The increased design standard will mitigate Department risk associated with constructing the falsework under the severe slope and geotechnical conditions present. A failure of the falsework would have a severe impact to the completion of the project and in turn potentially delay the seismic safety opening of the new east span of the SFOBB.

The design of the Frame 1 falsework has now been approved with the design enhancements incorporated. The major costs associated with the design enhancements include furnishing and installing approximately 50 battered pipe piles that are 550-millimeters in diameter and up to 35 meters in length, increased pipe pile embedment and approximately 200 meters of lateral support angel bracing being incorporated into the structure. Labor inefficiencies on the as-planned work resulting from this added work will also be compensated.

Compensation shall be paid as an adjustment of compensation at an agreed lump sum $2,434,980.00 which shall be funded from the contract's contingency funds. A cost analysis is on file.

This change order was approved by the TBPOC on February 24, 2011 for a cost not to exceed $2,500,000.

Authorization to proceed with this work was issued by Headquarters Construction on March 30, 2011 at a cost not to exceed $2,500,000.

No adjustment of contract time shall be granted as specified under Change Order No. 72 which acted to mitigate any delay associated with this change.

Maintenance concurrence is not required as this change affects a temporary structure and doesn't affect any permanent roadway features.

ADA Notice: For individuals with sensory disabilities, this document is available in alternate formats. For information call: (916) 654-6410 or TDD (916) 654-3880 or write Records and Forms Management, 1120 N Street, MS-89, Sacramento, CA 95814.

CONTRACT CHANGE ORDER

Change Requested by: Engineer

CCO: 49	Suppl. No. 0	Contract No. 04 - 0120S4	Road SF-80-12.7/13.2	FED. AID LOC.: NO FED AID

To: **M C M CONSTRUCTION INC**

You are directed to make the following changes from the plans and specifications or do the following described work not included in the plans and specifications for this contract. ***NOTE: This change order is not effective until approved by the Engineer.***

Description of work to be done, estimate of quantities and prices to be paid. (Segregate between additional work at contract price, agreed price and force account.) Unless otherwise stated, rates for rental of equipment cover only such time as equipment is actually used and no allowance will be made for idle time. This last percentage shown is the net accumulated increase or decrease from the original quantity in the Engineer's Estimate.

Extra Work at Force Account:

Perform the following work as determined necessary by the Engineer:

Relocate or remove stored materials and equipment, where required to access the work sites for this change order.

Perform adjustments to falsework (including piles or other foundations) as necessary to protect the elements that are being installed under this change order from falsework loads or interferences.

Replace signs, striping and pavement markers as required to complete the work under this change order.

Remove or adjust poles or other utilities as directed.

Estimated cost of Extra Work at Force Account $50,000.00

Adjustment of Compensation at Lump Sum:

Furnish and install added Water Lines, Gas Line and Comcast duct (including pull rope, but not TV cable) at Bent W6 to Bent W2 Area, as shown on attached drawings 46R2 of 806, 47R3 of 806, 49R1 of 806, 67R3 of 806 and 66A of 806 (sheets 3 through 7 of this change order).

The added work includes trenching; provide and install underground piping, fittings, valves, hydrant, ducts, utility boxes; pressure testing; backfill; completion of utility tie-ins; removal and disposal of existing water lines as shown on the drawings; all required sawcutting, removal and disposal of existing pavement; and replacement of asphaltic concrete surfacing and base rock with 150 mm AC pavement over 300 mm Class 3 aggregate base. Pricing assumes that trench spoils (not imported soil) will be used for backfill material above the sand in the pipe zone. Pricing assumes that any excess earth spoils will be placed onsite (no offsite disposal of this material). The price includes any necessary coordination with San Francisco Water Department (water line); PG and E (Gas line); and Comcast Cable Company (duct and TV cable).

Water line construction shall be in accordance with Special Provision section 10-1.104 WATER MAINS, except that the trench for a portion of the Water line, gas line, and TV cable shall be a common trench where shown on section B-B of Sheet 66A (UD-13A).

Gas line construction shall be in accordance with Special Provision section 10-1.108 GAS PIPE, except that this gas line is under the jurisdiction of the P G & E.

The 100 mm Steel pipe construction shall be in accordance with Special Provision section 10-3. SIGNALS, LIGHTING AND ELECTRICAL SYSTEMS. The pipe shall be rigid galvanized steel (RGS) conduit, threaded couplings, and elbows conforming to Section 86-2.05, "Conduit," of the Standard Specifications. The contractor shall install a pull rope in the duct, instead of the 19 mm TV cable shown (the cable installation is not included in this CCO).

This CCO does not include any of the changes shown on drawing 46R2 in the vicinity of Macalla Road (to the west of Station 52+50 on the E Line), these changes will be covered under CCO 20.

CONTRACT CHANGE ORDER

Change Requested by: Engineer

CCO: 49	Suppl. No. 0	Contract No. 04 - 0120S4	Road SF-80-12.7/13.2	FED. AID LOC.: NO FED AID

This CCO does not include any of the changes to the duct bank and airline near W2, shown on drawings 47R2 and 49R1, these changes will be covered under CCO 46.

For the changes specified under this change order, the Contractor shall be paid an agreed lump sum of $273,601.00 which constitutes full and final compensation, including all markups, for all costs associated with this work.

Cost of Adjustment of Compensation at Lump Sum $273,601.00

Estimated Cost: Increase ☑ Decrease ☐ $323,601.00

By reason of this order the time of completion will be adjusted as follows: 0 days

Submitted by		
Signature Rajesh Oberoi	Resident Engineer Rajesh Oberoi, Senior R.E.	Date 3/4/11
Approval Recommended by		
Signature Deanna Vilcheck	Area Construction Manager Deanna Vilcheck	Date 3/4/11
Engineer Approval by		
Signature Deanna Vilcheck	Area Construction Manager Deanna Vilcheck	Date 3/30/11

We the undersigned contractor, have given careful consideration to the change proposed and agree, if this proposal is approved, that we will provide all equipment, furnish the materials, except as may otherwise be noted above, and perform all services necessary for the work above specified, and will accept as full payment therefor the prices shown above.

NOTE: If you, the contractor, do not sign acceptance of this order, your attention is directed to the requirements of the specifications as to proceeding with the ordered work and filing a written protest within the time therein specified.

Contractor Acceptance by		
Signature	(Print name and title) EDMUNDO A. PUCHI, TREASURER	Date 3/14/11

Dist	COUNTY	ROUTE	KILOMETER POST TOTAL PROJECT	SHEET No.	TOTAL SHEETS
04	SF	80	12.7/13.2	46R2	806

REGISTERED CIVIL ENGINEER 9-15-10 DATE

PLANS APPROVAL DATE

Ahmad Sayadi No. 74962 Exp. 12-31-11 CIVIL STATE OF CALIFORNIA

THE STATE OF CALIFORNIA OR ITS OFFICERS OR AGENTS SHALL NOT BE RESPONSIBLE FOR THE ACCURACY OR COMPLETENESS OF ELECTRONIC COPIES OF THIS PLAN SHEET.

Caltrans Metric

FOR COMPLETE RIGHT OF WAY AND ACCURATE ACCESS DATA, SEE RIGHT OF WAY RECORD MAPS AT DISTRICT OFFICE.

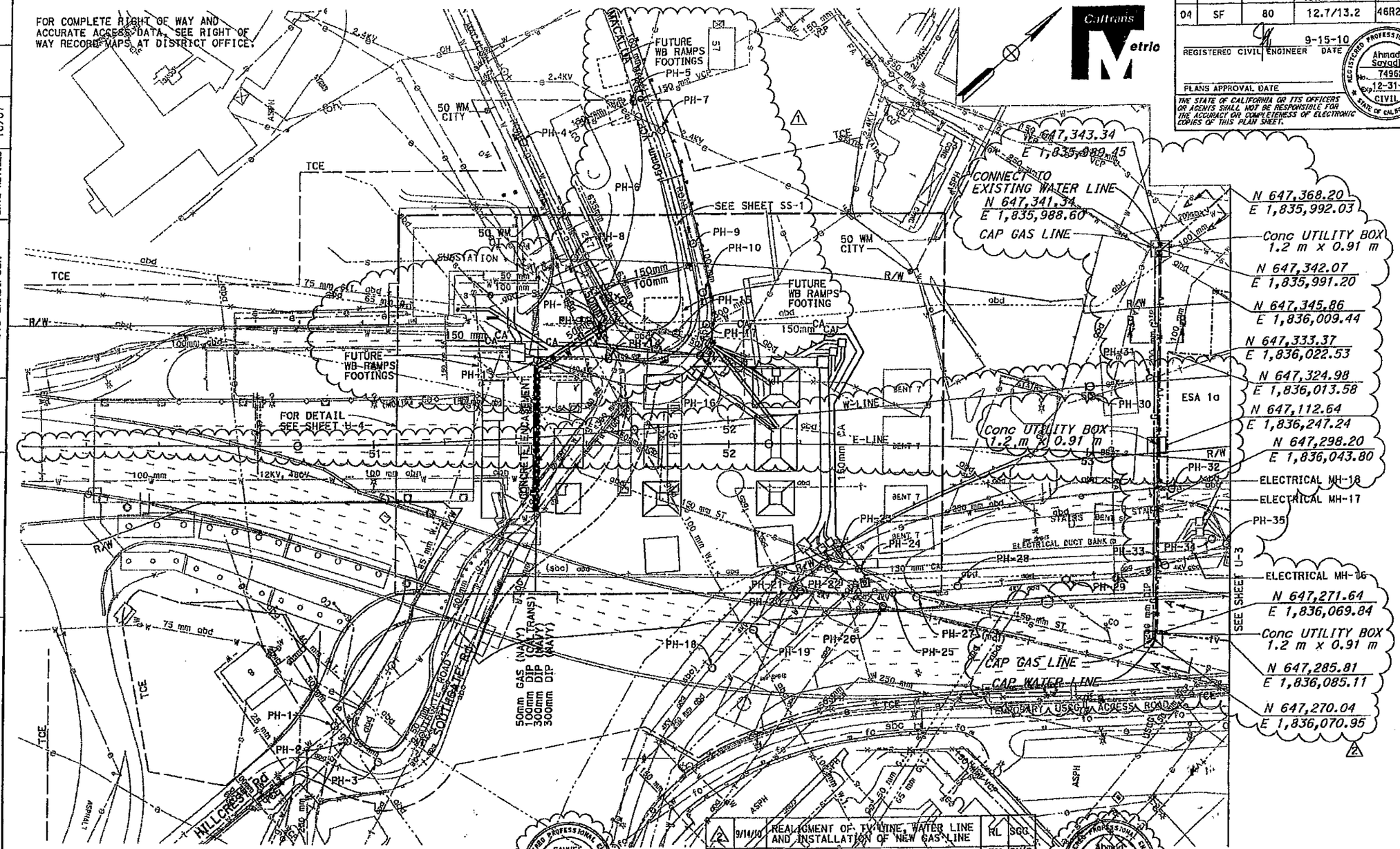

MARK	DATE	DESCRIPTIONS	BY	CH'D
1	8/19/10	RELOCATED GAS AND CA LINE	RL	SGC
		REVISIONS		

CONTRACT CHANGE ORDER NO. _____
SHEET ____ OF ____

SAMUEL GRANT CHUI No. 70966 Exp. 6/30/11 CIVIL STATE OF CALIFORNIA 8/19/10

MARK	DATE	DESCRIPTIONS	BY	CH'D
2	9/14/10	REALIGNMENT OF TV LINE, WATER LINE AND INSTALLATION OF NEW GAS LINE	RL	SGC
		REVISIONS		

04-012054
CONTRACT CHANGE ORDER NO. 049-50
SHEET 3 OF 7

Ahmad Sayadi No. 74962 Exp. 12-31-11 CIVIL STATE OF CALIFORNIA 9/29/10

FOR NOTES, ABBREVIATIONS &/OR LEGEND, SEE SHEET U-1

THIS PLAN ACCURATE FOR UTILITY WORK ONLY

ALL DIMENSIONS ARE IN METERS UNLESS OTHERWISE SHOWN

UTILITY PLAN

SCALE 1:500

U-2

STATE OF CALIFORNIA - DEPARTMENT OF TRANSPORTATION
DESIGN
Caltrans

FUNCTIONAL SUPERVISOR: BOB ZANDIPOUR
CALCULATED-DESIGNED BY: TRINH LAI
CHECKED BY: BOB ZANDIPOUR
REVISED BY: TL
DATE REVISED: 10/07

LAST REVISION 03-17-08
DATE PLOTTED => 29-SEP-2010
TIME PLOTTED => 11:05

BORDER LAST REVISED 3/1/2007

RELATIVE BORDER SCALE IS IN MILLIMETERS 0 20 40 60 80

USERNAME => s119915
DGN FILE => 40120sk0002.cco

CU 04251

EA 0120S1

RESIDENT ENGINEER OBEROI, RAJESH

PHONE NUMBER 510 385-7626

C O N T R A C T C H A N G E O R D E R 0 4 9 - 0 0 S

CONTRACT NO. 04-0120S4

FILING DATE 04/15/11

DESCRIPTION UTILITY LINES & DUCT @ BENT W6 TO W2 CCO CATEGORY CLPV

APPROVAL DATE 03/30/11

TIME EXTENSION DAY NONE

ITEM NO.	DESCRIPTION OF CHANGE	APPROVED CHANGE QUANTITY	APPROVED CHANGE AMOUNT	CHANGES TO DATE CCO	CHANGES TO DATE QB	AUTHORIZED QUANTITY	QUANTITY PAID TO DATE	EST NO.
	EXTRA WORK -- FORCE ACCOUNT (+)		$50,000.00					
	ADJUSTMENT OF COMPENSATION -- LUMP SUM (+)		$273,601.00					
	NET CHANGE THIS C.C.O.		$323,601.00					
	AMOUNT OF 'BRIDGEWORK'		$0.00					

*** C.C.O. ACCEPTED AND FILED. ***

F E D E R A L DISP	TYPE	P A R T I C I P A T I O N COST	TYPE	COST	F E D E R A L S E G R E G A T I O N TYPE	FUNDING SOURCE	PCT	FUNDING SOURCE	PCT
NEW	N	323,601.00		.00					

STATE OF CALIFORNIA - DEPARTMENT OF TRANSPORTATION

CONTRACT CHANGE ORDER MEMORANDUM

DATE: 11/30/2010 Page 1 of 1

TO: Deanna Vilcheck, ACM /

FROM: Rajesh Oberoi, Senior R.E.

FILE: E.A. 04 - 0120S4
CO-RTE-PM SF-80-12.7/13.2
FED. NO. NO FED AID

CCO#: 49 | SUPPLEMENT#: 0 | Category Code: ~~CLXX~~ CLPV

CONTINGENCY BALANCE (incl. this change) $23,332,874.00

COST: $323,601.00 INCREASE ☑ DECREASE ☐

HEADQUARTERS APPROVAL REQUIRED? ☑ YES ☐ NO

SUPPLEMENTAL FUNDS PROVIDED: $0.00

IS THIS REQUEST IN ACCORDANCE WITH ENVIRONMENTAL DOCUMENTS? ☑ YES ☐ NO

CCO DESCRIPTION:
Utility Lines & Duct @ Bent W6 to W2

PROJECT DESCRIPTION:
YBITS-1 (Yerba Buena Island Transition Structures)

Original Contract Time:	Time Adj. This Change:	Previously Approved CCO Time Adjustments:	Percentage Time Adjusted: (including this change)	Total # of Unreconciled Deferred Time CCO(s): (including this change)
1390 Day(s)	0 Day(s)	0 Day(s)	0 %	7

THIS CHANGE ORDER PROVIDES FOR:

Add the installation of Water Line, Gas Line and Comcast duct with TV cable at Bent W6 to W2 Area to the contract.

Under the previous South South Detour contract, the contract provided for the installation of a water line, gas line and Comcast duct with TV cable at Bents W6 to W2 Area. These provide future utility service to the new SFOBB east span structure and to the U. S. Coast Guard Base. Project Development previously requested that the installation of these portions of work be eliminated from that earlier contract in order to avoid potential conflicts with an adjacent contract. The eliminated items from the previous contract have been revised, and are now being added to this contract.

For this work, the contractor shall receive adjustment of compensation at an agreed lump sum price of $273,601.00. The change order will also include an item for Estimated Cost of Extra Work at Force Account for $50,000 for other work as authorized by the Engineer, including relocate stored materials, replace signs, stripes, poles and other utilities, and adjust any falsework in the area that interferes with the new elements that are being installed under this CCO.
The total estimated cost increase for this change is $323,601,which will be financed from the contingency fund.
A cost analysis is on file.

This work was requested by Bob Zandipour, Sr. Transportation Engineer, in a memo to Rajesh Oberoi dated 9-30-2010.

No adjustment of contract time is warranted, as the work will not affect the controlling operation.

Maintenance concurrence is not required as this change doesn't affect any permanent roadway features.

CONCURRED BY:

Construction Engineer:	Rajesh Oberoi	Date 3/29/11
Bridge Engineer:		Date
Project Engineer:		Date
Project Manager:		Date
FHWA Rep.:		Date
Environmental:		Date
Other (specify):	Bob Zandipour, Sr. Toll Bridge	Date 9/30/10
Other (specify):		Date
District Prior Approval By:		Date
HQ (Issue Approve) By:	Larry Salhaney	Date 1/6/11
Resident Engineer's Signature:	Rajesh Oberoi	Date 3/29/11

ESTIMATE OF COST

	THIS REQUEST	TOTAL TO DATE
ITEMS	$0.00	$0.00
FORCE ACCOUNT	$50,000.00	$50,000.00
AGREED PRICE	$0.00	$0.00
ADJUSTMENT	$273,601.00	$273,601.00
TOTAL	$323,601.00	$323,601.00

FEDERAL PARTICIPATION

☐ PARTICIPATING ☐ PARTICIPATING IN PART ☑ NONE
☐ NON-PARTICIPATING (MAINTENANCE) ☐ NON-PARTICIPATING

FEDERAL SEGREGATION (if more than one Funding Source or P.I.P. type)
☑ CCO FUNDED PER CONTRACT ☐ CCO FUNDED AS FOLLOWS

FEDERAL FUNDING SOURCE	PERCENT

ADA Notice: For individuals with sensory disabilities, this document is available in alternate formats. For information call: (916) 654-6410 or TDD (916) 654-3880 or write Records and Forms Management, 1120 N Street, MS-89, Sacramento, CA 95814.

STATE OF CALIFORNIA - DEPARTMENT OF TRANSPORTATION

CONTRACT CHANGE ORDER

Change Requested by: Engineer

CCO: 50	Suppl. No. 0	Contract No. 04 - 0120S4	Road SF-80-12.7/13.2	FED. AID LOC.: NO FED AID

To: **M C M CONSTRUCTION INC**

You are directed to make the following changes from the plans and specifications or do the following described work not included in the plans and specifications for this contract. ***NOTE: This change order is not effective until approved by the Engineer.***

Description of work to be done, estimate of quantities and prices to be paid. (Segregate between additional work at contract price, agreed price and force account.) Unless otherwise stated, rates for rental of equipment cover only such time as equipment is actually used and no allowance will be made for idle time. This last percentage shown is the net accumulated increase or decrease from the original quantity in the Engineer's Estimate.

Adjustment of Compensation at Force Account:

Compensate the Contractor for all costs associated with providing additional resources towards the construction of the Frame 1 falsework in order to mitigate potential Department delays to this work as determined by the Engineer.

Compensation shall be paid in accordance with Section 9-1.03 FORCE ACCOUNT PAYMENT of the Standard Specifications and Section 5-1.17 FORCE ACCOUNT PAYMENT of the Contract Special Provisions.

Consideration of a time adjustment will be deferred until completion of the work specified herein. Determination of a commensurate time extension will be made in accordance with Section 8-1.07, "Liquidated Damages", of the Standard Specifications and Section 10-1.22 " Progress Schedule (Critical Path Method)" of the Special Provisions.

Estimated cost of Adjustment of Compensation at Force Account $150,000.00

Estimated Cost: Increase ☑ Decrease ☐ **$150,000.00**

By reason of this order the time of completion will be adjusted as follows: Deferred

Submitted by

Signature	Resident Engineer	Date
Rajesh Oberoi	Rajesh Oberoi, Senior R.E.	10/20/10

Approval Recommended by

Signature	Resident Engineer	Date
Deanna Vilcheck	Rajesh Oberoi	10/21/10

Engineer Approval by

Signature	Area Construction Manager	Date
Deanna Vilcheck	Deanna Vilcheck	11/10/10

We the undersigned contractor, have given careful consideration to the change proposed and agree, if this proposal is approved, that we will provide all equipment, furnish the materials, except as may otherwise be noted above, and perform all services necessary for the work above specified, and will accept as full payment therefor the prices shown above.

NOTE: If you, the contractor, do not sign acceptance of this order, your attention is directed to the requirements of the specifications as to proceeding with the ordered work and filing a written protest within the time therein specified.

Contractor Acceptance by

Signature	(Print name and title)	Date
	EDMUNDO A. PUCHI, TREASURER	11/9/10

STATE OF CALIFORNIA - DEPARTMENT OF TRANSPORTATION

CONTRACT CHANGE ORDER MEMORANDUM

TO: Deanna Vilcheck, ACM /	FILE: E.A. 04 - 0120S4
	CO-RTE-PM SF-80-12.7/13.2
FROM: Rajesh Oberoi, Senior R.E.	FED. NO. NO FED AID
CCO#: 50 SUPPLEMENT#: 0 Category Code: BZZZ	CONTINGENCY BALANCE (incl. this change) $27,993,732.00
COST: $150,000.00 INCREASE ☑ DECREASE ☐	HEADQUARTERS APPROVAL REQUIRED? ☐ YES ☑ NO
SUPPLEMENTAL FUNDS PROVIDED: $0.00	IS THIS REQUEST IN ACCORDANCE WITH ENVIRONMENTAL DOCUMENTS? ☑ YES ☐ NO
CCO DESCRIPTION: Frame 1 Delay Mitigation	**PROJECT DESCRIPTION:** YBITS-1 (Yerba Buena Island Transition Structures)

Original Contract Time:	Time Adj. This Change:	Previously Approved CCO Time Adjustments:	Percentage Time Adjusted: (including this change)	Total # of Unreconciled Deferred Time CCO(s): (including this change)
1390 Day(s)	DEF Day(s)	0 Day(s)	0 %	3

THIS CHANGE ORDER PROVIDES FOR:

Compensating the contractor for providing additional resources to mitigate potential Department's delays.

This project, the Yerba Buena Island Transition Structure (YBITS), provides for the construction of two bridges which will connect eastbound and westbound traffic on the new east span of the San Francisco Oakland Bay Bridge (SFOBB) to the existing Yerba Buena Island (YBI) tunnel. The structures are comprised of concrete box girder bridges each approximately 40 meters high and 450 meters in length.

Currently, the construction of Frame 1 of the westbound structure is the controlling operation to the contract completion. The Department, in order to mitigate risk associated with the opening on the new east span, has issued several requests pertaining to the design enhancements to the temporary shoring and falsework related to the frame. These design requests are being implemented under Change Orders No. 10 and No. 47 due to severe slope and geotechnical conditions that the frame is to be constructed on.

These requested enhancements, while mitigating long term risks, have extended the approval process of the contractor's design and will require additional time to construct both the falsework and the shoring. This will result in potential Department caused delay to the contract. This change order will provide additional resources to these items of work in order to mitigate this delay. This work will be comprised mainly of extended labor shifts resulting in premium time labor costs. Additional equipment resources may also be provided but is not anticipated at this time.

Compensation shall be paid as an adjustment of compensation at force account at an estimated cost of $150,000.00. A cost analysis is on file.

Adjustment of contract time is deferred as this work may affect the controlling operation by mitigating Department delays.

Maintenance concurrence is not required as this is an administrative change which doesn't affect any permanent roadway features.

ADA Notice: For individuals with sensory disabilities, this document is available in alternate formats. For information call: (916) 654-6410 or TDD (916) 654-3880 or write Records and Forms Management, 1120 N Street, MS-89, Sacramento, CA 95814.

CONTRACT CHANGE ORDER MEMORANDUM

CONCURRED BY:		
Construction Engineer:	Rajesh Oberoi	Date 10/20/10
Bridge Engineer:	Mehran Ardakanian	Date 10/21/10
Project Engineer:		Date
Project Manager:		Date
FHWA Rep.:		Date
Environmental:		Date
Other (specify):		Date
Other (specify):		Date
District Prior Approval By:		Date
HQ (Issue Approve) By:		Date
Resident Engineer's Signature:	Rajesh Oberoi	Date 10/20/10

ESTIMATE OF COST

	THIS REQUEST	TOTAL TO DATE
ITEMS	$0.00	$0.00
FORCE ACCOUNT	$0.00	$0.00
AGREED PRICE	$0.00	$0.00
ADJUSTMENT	$150,000.00	$150,000.00
TOTAL	$150,000.00	$150,000.00

FEDERAL PARTICIPATION

☐ PARTICIPATING ☐ PARTICIPATING IN PART ☑ NONE
☐ NON-PARTICIPATING (MAINTENANCE) ☐ NON-PARTICIPATING

FEDERAL SEGREGATION (if more than one Funding Source or P.I.P. type)
☑ CCO FUNDED PER CONTRACT ☐ CCO FUNDED AS FOLLOWS

FEDERAL FUNDING SOURCE	PERCENT

ADA Notice: For individuals with sensory disabilities, this document is available in alternate formats. For information call: (916) 654-6410 or TDD (916) 654-3880 or write Records and Forms Management, 1120 N Street, MS-89, Sacramento, CA 95814.

STATE OF CALIFORNIA - DEPARTMENT OF TRANSPORTATION

CONTRACT CHANGE ORDER

Change Requested by: Engineer

CCO 51	Suppl. No. 0	Contract No. 04 - 0120S4	Road SF-80-12.7/13.2	FED. AID LOC.: NO FED AID

To: **M C M CONSTRUCTION INC**

You are directed to make the following changes from the plans and specifications or do the following described work not included in the plans and specifications for this contract. ***NOTE: This change order is not effective until approved by the Engineer.***

Description of work to be done, estimate of quantities and prices to be paid. (Segregate between additional work at contract price, agreed price and force account.) Unless otherwise stated, rates for rental of equipment cover only such time as equipment is actually used and no allowance will be made for idle time. This last percentage shown is the net accumulated increase or decrease from the original quantity in the Engineer's Estimate.

Extra Work at Lump Sum:

Provide compensation to the Contractor for repairing the broken SFPUC "San Francisco Public Utilities Commission" water line on S Gate Rd. and also for all the costs associated with down time of labor and equipment due to the broken water line.

Work includes pumping out water at 10L, excavation, repairing the broken water line.

For this work, the Contractor shall be compensated an agreed lump sum of $14,105.80 which constitutes full and final compensation, including all markups, for all costs incurred.

Estimated cost of Extra Work at Lump Sum $14,105.80

Estimated Cost: Increase ☑ Decrease ☐ **$14,105.80**

By reason of this order the time of completion will be adjusted as follows: 0 days

Submitted by		
Signature William Howe	Resident Engineer William Howe, Senior R.E.	Date 07-08-11
Approved/Recommended by		
Signature William Howe	Construction Engineer William Howe	Date 07-08-11
Engineer Approved by		
Signature William Howe	Construction Engineer William Howe	Date 08-18-11

We the undersigned contractor, have given careful consideration to the change proposed and agree, if this proposal is approved, that we will provide all equipment, furnish the materials, except as may otherwise be noted above, and perform all services necessary for the work above specified, and will accept as full payment therefor the prices shown above.

NOTE: If you, the contractor, do not sign acceptance of this order, your attention is directed to the requirements of the specifications as to proceeding with the ordered work and filing a written protest within the time therein specified.

Contractor Acceptance by		
Signature	(Print name and title) EDMUNDO A. PUCHI, TREASURER	Date 8/4/11

STATE OF CALIFORNIA - DEPARTMENT OF TRANSPORTATION

CONTRACT CHANGE ORDER MEMORANDUM

DATE: 7/7/2011

TO: Deanna Vilcheck, ACM /

FROM: William Howe, Senior R.E.

FILE: E.A. 04 - 0120S4
CO-RTE-PM SF-80-12.7/13.2
FED. NO. NO FED AID

CCO#: 51 | SUPPLEMENT#: 0 | Category Code: BZZZ

CONTINGENCY BALANCE (incl. this change) $69,297,351.09

COST: $14,105.80 INCREASE ☑ DECREASE ☐

HEADQUARTERS APPROVAL REQUIRED? ☐ YES ☑ NO

SUPPLEMENTAL FUNDS PROVIDED: $0.00

IS THIS REQUEST IN ACCORDANCE WITH ENVIRONMENTAL DOCUMENTS? ☑ YES ☐ NO

CCO DESCRIPTION:
Impacts from broken SFPUC water line

PROJECT DESCRIPTION:
YBITS-1 (Yerba Buena Island Transition Structures)

Original Contract Time:	Time Adj. This Change:	Previously Approved CCO Time Adjustments:	Percentage Time Adjusted: (including this change)	Total # of Unreconciled Deferred Time CCO(s): (including this change)
1390 Day(s)	0 Day(s)	0 Day(s)	0 %	0

THIS CHANGE ORDER PROVIDES FOR:

Repairing the broken SFPUC "San Francisco Public Utilities Commission" water line on S Gate Rd.

This project, the Yerba Buena Island Transition Structure (YBITS), provides for the construction of two bridges, which will connect eastbound and westbound traffic on the new east span of the San Francisco Oakland Bay Bridge (SFOBB) to the existing Yerba Buena Island (YBI) tunnel.

Bent 10L south foundation, which is right next to the S gate Rd. was flooded with water due to SFPUC water line breakage. The contractor was in the act of driving piles at this bent.The Engineer directed the contractor to cease all his operations at bent 10L south and help SFPUC to repair the broken water line so as to mitigate any potential damage to the foundation and also to mitigate any delays to the project.

This change order compensates the contractor for all the costs associated with repairing the broken waterline and also all the down time for the contractor's crew and his equipment.

Payment for this work will be a Lump Sum of $14,105.80, which will be financed from the contract's contingency funds. A detailed cost analysis is on file.

No adjustment of contract time is warranted, as the change will not affect the controlling operation.

Maintenance concurrence is not required, as the change order shall not affect any permanent roadway features.

CONCURRED BY:

Construction Engineer:	William Howe	Date 07-08-11
Bridge Engineer:		Date
Project Engineer:	BOB ZANDIPOUR	Date 08/17/11
Project Manager:	KEN TERPSTRA	Date 8/18/11
FHWA Rep.:		Date
Environmental:		Date
Other (specify):		Date
Other (specify):		Date
District Prior Approval By:		Date
HQ (Issue Approve) By:		Date
Resident Engineer's Signature:	William Howe	Date 07-08-11

ESTIMATE OF COST

	THIS REQUEST	TOTAL TO DATE
ITEMS	$0.00	$0.00
FORCE ACCOUNT	$0.00	$0.00
AGREED PRICE	$14,105.80	$14,105.80
ADJUSTMENT	$0.00	$0.00
TOTAL	$14,105.80	$14,105.80

FEDERAL PARTICIPATION

☐ PARTICIPATING ☐ PARTICIPATING IN PART ☑ NONE
☐ NON-PARTICIPATING (MAINTENANCE) ☐ NON-PARTICIPATING

FEDERAL SEGREGATION (if more than one Funding Source or P.I.P. type)
☐ CCO FUNDED PER CONTRACT ☐ CCO FUNDED AS FOLLOWS

FEDERAL FUNDING SOURCE PERCENT

ADA Notice: For individuals with sensory disabilities, this document is available in alternate formats. For information call: (916) 654-6410 or TDD (916) 654-3880 or write Records and Forms Management, 1120 N Street, MS-89, Sacramento, CA 95814.

STATE OF CALIFORNIA - DEPARTMENT OF TRANSPORTATION

CONTRACT CHANGE ORDER

Change Requested by: Engineer

CCO 53	Suppl. No. 0	Contract No. 04 - 0120S4	Road SF-80-12.7/13.2	FED. AID LOC.: NO FED AID

To: **M C M CONSTRUCTION INC**

You are directed to make the following changes from the plans and specifications or do the following described work not included in the plans and specifications for this contract. ***NOTE: This change order is not effective until approved by the Engineer.***

Description of work to be done, estimate of quantities and prices to be paid. (Segregate between additional work at contract price, agreed price and force account.) Unless otherwise stated, rates for rental of equipment cover only such time as equipment is actually used and no allowance will be made for idle time. This last percentage shown is the net accumulated increase or decrease from the original quantity in the Engineer's Estimate.

Incorporate into the Contract the revisions to the westbound structure of the Yerba Beuna Island Transition Structure (Bridge No. 34-0006 L/R) in order to provide for the future widening of the structure for the planned westbound on and off ramps as shown on Sheets No. 3 through 51 of this change order (Contract Plan Sheets Nos. 551R3, 552R4, 553R1, 554R1, 557R1, 558R1, 567R1, 569R3, 570R2, 571R1, 572R1, 573R1, 574R1, 574AR1, 575R1, 576R1, 578R1, 579R1, 581AR1, 589R1, 592R3, 593R3, 593AR1, 594R3, 594AR1, 594BR3, 614R1, 615R1, 616R1, 617R1, 618R1, 619R2, 620R2, 621AR1, 630AS1, 630BS, 630CS, 632R1, 633R1, 635R1, 645R2, 646AR2, 646BSR1, 649R1, 650R1, 652R1, 653R1, 654R1, and 655R1).

Estimate of Increase in Contract Item at Contract Price:

Item No. 90: STRUCTURAL CONCRETE BRIDGE
122 M3 (+0.37%) $855.00 /M3 = +$104,310.00 (+0.37%)

Item No. 110: BAR REINFORCING STEEL (BRIDGE)
35000 KG (+0.55%) $1.70 /KG = +$59,500.00 (+0.55%)

Item No. 138: MISCELLANEOUS METAL (BRIDGE)
7300 KG (+84.88%) $20.00 /KG = +$146,000.00 (+84.88%)

Item No. 144: CONCRETE BARRIER (TYPE K)
189 M (+37.06%) $20.00 /M = +$3,780.00 (+37.06%)

Estimated Total Cost for Increase in Contract Item.....$313,590.00

Estimate of Decrease in Contract Item at Contract Price:

Item No. 139: BRIDGE DECK DRAINAGE SYSTEM
-1320 KG (–6.32%) $20.00 /KG = –$26,400.00 (–6.32%)

Item No. 149: CONCRETE BARRIER (TYPE 732 MODIFIED)
-190 M (–10.45%) $400.00 /M = –$76,000.00 (–10.45%)

Estimated total cost for Decrease in Contract Item.....($102,400.00)

There shall be no adjustment pertaining to Section 4-1.03B of the Standard Specifications, for any increased or decreased item quantities provided under this change order.

The quantity shown herein for Item Nos. 90, 110, 138, 139 and 149, when combined with the quantities specified in the Engineer's Estimate, and as modified by any previous change orders, shall be the final quantity for which payment will be made.

Adjustment of Compensation at Lump Sum:

In addition to the Contract item prices paid for the work associated with this change, the Contractor shall be compensated an agreed lump sum of $703,570.00. This lump sum, along with the item prices paid, constitutes full and final compensation, including all markups, for all additional costs associated with this change.

Cost of Adjustment of Compensation at Lump Sum $703,570.00

CONTRACT CHANGE ORDER

Change Requested by: Engineer

CCO 53	Suppl. No. 0	Contract No. 04 - 0120S4	Road SF-80-12.7/13.2	FED. AID LOC.: NO FED AID

Any adjustment in compensation associated with Contract Bid Item No. 178 concerning the elimination of the installation of the light poles and fixtures shall be deferred. Compensation has been adjusted under this change for the elimination of the light pole concrete foundations and for the additional foundation and anchor bolts for the added overhead structure.

Consideration of a time adjustment pertaining to any delays to the prestressing milestone established under Change Order No. 72 is deferred. Determination of a commensurate time extension will be made in accordance with Section 8-1.07, "Liquidated Damages", of the Standard Specifications and Section 10-1.22 " Progress Schedule (Critical Path Method)" of the Special Provisions. There shall be no time extension to the completion of the Contract as a result of this change.

10.12.2011

Estimated Cost: Increase ☑ Decrease ☐ **$914,760.00**

By reason of this order the time of completion will be adjusted as follows: 0 days

Submitted by

Signature	Resident Engineer	Date
William Howe	William Howe, Senior R.E.	10-12-11

Approval Recommended by

Signature	Area Construction Manager	Date
Mike Frame FOR	Deanna Vilcheck	10/13/11

Engineer Approval by

Signature	Area Construction Manager	Date
Mike Frame FOR	Deanna Vilcheck	2-8-12

We the undersigned contractor, have given careful consideration to the change proposed and agree, if this proposal is approved, that we will provide all equipment, furnish the materials, except as may otherwise be noted above, and perform all services necessary for the work above specified, and will accept as full payment therefor the prices shown above.

NOTE: If you, the contractor, do not sign acceptance of this order, your attention is directed to the requirements of the specifications as to proceeding with the ordered work and filing a written protest within the time therein specified.

Contractor Acceptance by

Signature	(Print name and title)	Date
	Edmundo Ortiz - Treasurer	2-7-2012

INDEX TO BRIDGE PLANS

SHEET NO.	TITLE
1	GENERAL PLAN
2	INDEX TO BRIDGE PLANS
3	GENERAL NOTES
4	WESTBOUND STRUCTURE PLAN NO. 1
5	WESTBOUND STRUCTURE PLAN NO. 2
6	EASTBOUND STRUCTURE PLAN NO. 1
7	EASTBOUND STRUCTURE PLAN NO. 2
8	WESTBOUND DECK CONTOURS PLAN NO. 1
9	WESTBOUND DECK CONTOURS PLAN NO. 2
10	EASTBOUND DECK CONTOURS PLAN NO. 1
11	EASTBOUND DECK CONTOURS PLAN NO. 2
12	FOUNDATION PLAN NO. 1
13	FOUNDATION PLAN NO. 2
14	PILE DETAILS
15	ABUTMENT W11R DETAILS NO. 1
16	ABUTMENT W11R DETAILS NO. 2
17	ABUTMENT W11R DETAILS NO. 3
18	BENT ELEVATIONS W10AL TO W9
19	BENT ELEVATIONS W8 TO W7
20	BENT ELEVATIONS W6 TO W5
21	BENT ELEVATIONS W4 TO W3
22	BENT W10AL DETAILS NO. 1
23	BENT W10AL DETAILS NO. 2
24	BENT W10AL DETAILS NO. 3
25	BENT W10AL DETAILS NO. 4
25A	BENT W10AL DETAILS NO. 5
26	BENT W10L DETAILS NO. 1
27	BENT W10L DETAILS NO. 2
28	BENT W10L DETAILS NO. 3
29	BENT W9L DETAILS NO. 1
30	BENT W9L DETAILS NO. 2
31	BENT W9L DETAILS NO. 3
32	BENT W9L DETAILS NO. 4
32A	BENT W9L DETAILS NO. 5
33	BENT W8L DETAILS NO. 1
34	BENT W8L DETAILS NO. 2
35	BENT W8L DETAILS NO. 3
36	BENT W8L DETAILS NO. 4
37	BENT W7L DETAILS NO. 1
38	BENT W7L DETAILS NO. 2
39	BENT W7L DETAILS NO. 3
40	PRESTRESS DETAILS - BENTS W10AL TO W9L
41	PRESTRESS DETAILS - BENTS W8L & W7L
42	BENT W6L DETAILS NO. 1
42A	BENT W6L DETAILS NO. 2
43	BENT W5L DETAILS NO. 1
44	BENT W5L DETAILS NO. 2
44A	BENT W5L DETAILS NO. 3
45	BENT W4L DETAILS NO. 1
45A	BENT W4L DETAILS NO. 2
45B	BENT W4L DETAILS NO. 3
46	BENT W3L DETAILS NO. 1
47	~~BENT W3L DETAILS NO. 2~~
48	BENT W1OR DETAILS NO. 1
49	BENT W1OR DETAILS NO. 2
50	BENT W1OR DETAILS NO. 3
51	BENT W9R DETAILS NO. 1
52	BENT W9R DETAILS NO. 2
53	BENT W8R DETAILS NO. 1
54	BENT W8R DETAILS NO. 2
55	BENT W7R DETAILS NO. 1
56	BENT W7R DETAILS NO. 2
57	BENT W6R DETAILS NO. 1
58	BENT W6R DETAILS NO. 2
59	BENT W6R DETAILS NO. 3
60	BENT W5R DETAILS NO. 1
61	BENT W5R DETAILS NO. 2
62	BENT W4R DETAILS
63	BENT W3R DETAILS
64	COLUMN ISOLATION SLEEVE DETAILS
65	WESTBOUND TYPICAL SECTION NO. 1
66	WESTBOUND TYPICAL SECTION NO. 2
67	WESTBOUND TYPICAL SECTION NO. 3
68	WESTBOUND TYPICAL SECTION NO. 4
69	WESTBOUND TYPICAL SECTION NO. 5
70	WESTBOUND TYPICAL SECTION NO. 6
71	WESTBOUND TYPICAL SECTION NO. 7
72	WESTBOUND TYPICAL SECTION NO. 8
72A	WESTBOUND TYPICAL SECTION NO. 9
73	EASTBOUND TYPICAL SECTION NO. 1
74	EASTBOUND TYPICAL SECTION NO. 2
75	EASTBOUND TYPICAL SECTION NO. 3
76	EASTBOUND TYPICAL SECTION NO. 4
77	EASTBOUND TYPICAL SECTION NO. 5
78	EASTBOUND TYPICAL SECTION NO. 6
79	EASTBOUND TYPICAL SECTION NO. 7
80	ON-RAMP SPINE EXTENSION DETAILS NO. 1
81	~~ON-RAMP SPINE EXTENSION DETAILS NO. 2~~
81A	FRAME WB2 SOFFIT PROJECTIONS NO. 1
81B	FRAME WB2 SOFFIT PROJECTIONS NO. 2
81C	FRAME WB2 SOFFIT PROJECTIONS NO. 3
82	WESTBOUND GIRDER LAYOUT GEOMETRICS
83	WESTBOUND GIRDER LAYOUT NO. 1
84	WESTBOUND GIRDER LAYOUT NO. 2
85	WESTBOUND GIRDER LAYOUT NO. 3
86	WESTBOUND GIRDER LAYOUT NO. 4
87	WESTBOUND GIRDER LAYOUT NO. 5
88	EASTBOUND GIRDER LAYOUT GEOMETRICS
89	EASTBOUND GIRDER LAYOUT NO. 1
90	EASTBOUND GIRDER LAYOUT NO. 2
91	EASTBOUND GIRDER LAYOUT NO. 3
92	EASTBOUND GIRDER LAYOUT NO. 4
93	EASTBOUND GIRDER LAYOUT NO. 5
94	EASTBOUND GIRDER LAYOUT NO. 6
95	GIRDER PRESTRESS DETAILS
96	GIRDER DIAPHRAGM DETAILS NO. 1
97	GIRDER DIAPHRAGM DETAILS NO. 2
97A	~~GIRDER DIAPHRAGM DETAILS NO. 3~~
97B	GIRDER DIAPHRAGM DETAILS NO. 4
98	MISC SUPERSTRUCTURE DETAILS NO. 1
99	MISC SUPERSTRUCTURE DETAILS NO. 2
100	WESTBOUND GIRDER TOP REINFORCEMENT NO. 1
101	WESTBOUND GIRDER TOP REINFORCEMENT NO. 2
102	WESTBOUND GIRDER TOP REINFORCEMENT NO. 3
103	WESTBOUND GIRDER TOP REINFORCEMENT NO. 4
104	WESTBOUND GIRDER TOP REINFORCEMENT NO. 5
105	~~WESTBOUND GIRDER BOTTOM REINFORCEMENT NO. 1~~
106	WESTBOUND GIRDER BOTTOM REINFORCEMENT NO. 2
107	WESTBOUND GIRDER BOTTOM REINFORCEMENT NO. 3
108	EASTBOUND GIRDER TOP REINFORCEMENT NO. 1
109	EASTBOUND GIRDER TOP REINFORCEMENT NO. 2
110	EASTBOUND GIRDER BOTTOM REINFORCEMENT NO. 1
111	HINGE W7LA DETAILS NO. 1
112	HINGE W7LA DETAILS NO. 2
113	HINGE W7LA DETAILS NO. 3
114	HINGE W6RB DETAILS NO. 1
115	HINGE W6RB DETAILS NO. 2
116	HINGE W6RB DETAILS NO. 3
117	HINGE W6RB DETAILS NO. 4
118	HINGE K CLOSURE DETAILS NO. 1
119	HINGE K CLOSURE DETAILS NO. 2
120	HINGE K CLOSURE DETAILS NO. 3
121	HINGE K CLOSURE DETAILS NO. 4
122	HINGE K CLOSURE DETAILS NO. 5
123	HINGE K CLOSURE DETAILS NO. 6
124	HINGE K CLOSURE DETAILS NO. 7
125	HINGE K CLOSURE DETAILS NO. 8
126	HINGE K CLOSURE DETAILS NO. 9
127	HINGE K CLOSURE DETAILS NO. 10
128	HINGE K CLOSURE DETAILS NO. 11
129	HINGE K CLOSURE DETAILS NO. 12
130	HINGE K CLOSURE DETAILS NO. 13
131	HINGE K CLOSURE DETAILS NO. 14
132	HINGE K CLOSURE DETAILS NO. 15
133	CABLE RESTRAINER UNIT - TYPE 2
134	CABLE RESTRAINER UNIT - TYPE 2 DETAILS
135	SPHERICAL BEARING DETAILS
136	DECK JOINT DETAILS
137	SEISMIC JOINT
138	SEISMIC JOINT
139	SEISMIC JOINT
140	SEISMIC JOINT
141	SEISMIC JOINT
142	SEISMIC JOINT
143	SEISMIC JOINT
144	SEISMIC JOINT
145	SEISMIC JOINT
146	MODULAR DECK JOINT DETAILS NO. 1
147	MODULAR DECK JOINT DETAILS NO. 2
148	DELETED
149	DELETED
150	DELETED
151	DELETED
152	DELETED
153	DELETED
154	DELETED
155	DELETED
156	DELETED
157	BIKE PATH DETAILS NO. 1
158	BIKE PATH DETAILS NO. 2
159	FUTURE BIKE PATH DETAILS NO. 1
160	FUTURE BIKE PATH DETAILS NO. 2
161	FUTURE BIKE PATH DETAILS NO. 3
162	BIKE PATH RAILING DETAILS NO. 1
163	BIKE PATH RAILING DETAILS NO. 2
164	BIKE PATH RAILING DETAILS NO. 3
165	~~BIKE PATH RAILING DETAILS NO. 4~~
165A	BIKE PATH FENCE DETAILS NO. 1
165B	BIKE PATH FENCE DETAILS NO. 2
166	CONCRETE BARRIER TYPE 732 (MOD)
167	~~STRUCTURE APPROACH TYPE EQ (3) - MOD~~
168	STRUCTURE APPROACH DRAINAGE DETAILS
169-189C	LOG OF TEST BORINGS (NO. 1 TO NO. ~~211~~ 24)
190-209	AS-BUILT LOG OF TEST BORINGS (NO. 1 TO NO. 20)

FOR REVISION 1 AND 2 ONLY

FOR REVISION 3 ONLY

DIST.	COUNTY	ROUTE	KILOMETER POST TOTAL PROJECT	SHEET NO.	TOTAL SHEETS
04	SF	80	12.7/13.2	551R3	806

REGISTERED ENGINEER - CIVIL

6-23-08
PLANS APPROVAL DATE

The State of California or its officers or agents shall not be responsible for the accuracy or completeness of electronic copies of this plan sheet.

T.Y. LIN / MOFFATT & NICHOL
TWO HARRISON STREET
SAN FRANCISCO, CA 94105

APPLICABLE STANDARD PLANS (DATED JULY 2004)

A10A	ACRONYMS AND ABBREVIATIONS (A-L)
A10B	ACRONYMS AND ABBREVIATIONS (M-Z)
A10C	SYMBOLS (1 OF 2)
A10D	SYMBOLS (2 OF 2)
A62B	LIMITS OF PAYMENT FOR EXCAVATION AND BACKFILL - BRIDGE SURCHARGE AND WALL
A62C	LIMITS OF PAYMENT FOR EXCAVATION AND BACKFILL - BRIDGE
B0-1	BRIDGE DETAILS
B0-3	BRIDGE DETAILS
B0-5	BRIDGE DETAILS
B0-13	BRIDGE DETAILS
B3-1	RETAINING WALL TYPE 1 H=1200 THROUGH 9100
B3-8	RETAINING WALL DETAILS NO. 1
B7-1	BOX GIRDER DETAILS
B7-5	DECK DRAINS
B7-6	DECK DRAINS TYPES D-1 AND D-2
B7-10	UTILITY OPENING BOX GIRDER
B7-11	UTILITY DETAILS
B8-5	CAST-IN-PLACE PRESTRESSED GIRDER DETAILS
B14-3	COMMUNICATION AND SPRINKLER CONTROL CONDUITS (CONDUIT LESS THAN SIZE 103)
B14-4	WATER SUPPLY LINE (BRIDGE) (PIPE SIZES LESS THAN NPS 4)
B14-5	WATER SUPPLY LINE (DETAILS) (PIPE SIZES LESS THAN NPS 4)

MARK	DATE	DESCRIPTIONS	BY	CH'D
3	10-15-10	WB Ramp Revisions	TL	AE
2	10-14-10	Deleted Seismic Jt sheets for Hinges W7LA & W6RB, added Modular Jt sheets		
1	9-1-10	Added Bike Path Fence Sheets	TL	JB

REVISIONS

CONTRACT CHANGE ORDER NO. 53
SHEET 3 OF 51

REVISED PER ADDENDUM NO. 2 DATED JANUARY 22, 2009

REVISED PER ADDENDUM NO. 8 DATED NOVEMBER 12, 2009

DESIGN OVERSIGHT: JOHN MOOK, BERNARD CHAN, JUAN F. CARPIO, HASAN EL-NATUR
March 3, 2008 — 10/20/10
SIGN OFF DATE

DESIGN	BY Desai	CHECKED Jain
DETAILS	BY van Ryn/Zucchi/Mal	CHECKED Jain
QUANTITIES	BY Lido	CHECKED E. Nichol

PREPARED FOR THE STATE OF CALIFORNIA DEPARTMENT OF TRANSPORTATION

Jal Birdy
PROJECT ENGINEER

CU 0425
EA 0120S1

BRIDGE NO. 34-0006 L/R
KILOMETER POST 12.8

SAN FRANCISCO OAKLAND BAY BRIDGE
EAST SPAN SEISMIC SAFETY PROJECT

YBI TRANSITION STRUCTURES

INDEX TO BRIDGE PLANS

DISREGARD PRINTS BEARING EARLIER REVISION DATES

REVISION DATES (PRELIMINARY STAGE ONLY)

SHEET 2 OF 209

ORIGINAL SCALE IN MILLIMETERS FOR REDUCED PLANS 0 10 20 30 40 50 60 70 80 90 100

FILE => \\mnlfs\IS Projects\6674 - Yerba Buena Island (YBI) Bridges\7 Design Information\CADD\Sheets\Addendum Include shts from TS\101510\04-0120s1-34-0006r1-s-1tp.dgn

WB RAMP CCO

October 15, 2010

USERNAME => FADMSON DATE PLOTTED => 10/15/2010 TIME PLOTTED => 2:28:52 PM

REV. Dates 5-18-98

DIST.	COUNTY	ROUTE	KILOMETER POST TOTAL PROJECT	SHEET NO.	TOTAL SHEETS
04	SF	80	12.7/13.2	552R4	806

REGISTERED ENGINEER - CIVIL
6-23-08
PLANS APPROVAL DATE

REGISTERED PROFESSIONAL ENGINEER A.L. ELY No. 18880 Exp. 6-30-09 CIVIL STATE OF CALIFORNIA

The State of California or its officers or agents shall not be responsible for the accuracy or completeness of electronic copies of this plan sheet.

T.Y. LIN / MOFFATT & NICHOL
TWO HARRISON STREET
SAN FRANCISCO, CA 94105

MARK	DATE	DESCRIPTIONS	BY	CH'D
4	10-15-10	WB Ramp Revisions	TL	AE
3	10-14-10	Rev Joints at Hinges W7LA & W6RB to Modular Joints	TL	JB
2	9-1-10	Rev Bike Path Railing	TL	JB
1	6-14-10	Rev Pile lengths at north column W10AL & W10L	TL	JB

REVISIONS

CONTRACT CHANGE ORDER NO. 53
SHEET 4 OF 51

Metric

QUANTITIES

PREPARE CONCRETE BRIDGE DECK SURFACE	1022 ~~765~~	m^2
BRIDGE REMOVAL (PORTION), LOCATION A	LUMP	SUM
STRUCTURE EXCAVATION (BRIDGE)	9 105	m^3
STRUCTURE EXCAVATION (TYPE H)	228	m^3
STRUCTURE EXCAVATION (RETAINING WALL)	443	m^3
STRUCTURE BACKFILL (BRIDGE)	2 800	m^3
STRUCTURE BACKFILL (BRIDGE)(CEMENT MODIFIED)	3 770	m^3
STRUCTURE BACKFILL (RETAINING WALL)	428	m^3
FURNISH STEEL PILING (HP 360 X 132)	7 585	m
DRIVE STEEL PILE (HP 360 X 132)	615	EA
FURNISH STEEL PILING (W 360 X 196)	1 558	m
DRIVE STEEL PILE (W 360 X 196)	96	EA
PRESTRESSING CAST-IN-PLACE CONCRETE (LONGITUDINAL)	LUMP	SUM
PRESTRESSING CAST-IN-PLACE CONCRETE (TRANSVERSE)	LUMP	SUM
STRUCTURAL CONCRETE, BRIDGE FOOTING	2 460	m^3
STRUCTURAL CONCRETE, BRIDGE	32 495	m^3
STRUCTURAL CONCRETE, RETAINING WALL	45	m^3
STRUCTURAL CONCRETE, APPROACH SLAB, (TYPE EQ (3) MOD)	27	m^3
MINOR CONCRETE (CONCRETE BALLAST)	36	m^3
FURNISH PRECAST CONCRETE SLAB(BIKEPATH)	34	EA
ERECT PRECAST CONCRETE SLAB(BIKEPATH)	34	EA
FURNISH POLYESTER CONCRETE OVERLAY (50MM)	38	m^3
PLACE POLYESTER CONCRETE OVERLAY (50MM)	765	m^2
PTFE SPHERICAL BEARING	10	EA
INSTALL HINGE K BEARING ASSEMBLY	4	EA
~~SEISMIC JOINT (BENT W10AL)~~	LUMP	SUM
MODULAR JOINT (HINGE W7LA)	LUMP	SUM
~~SEISMIC JOINT (HINGE K1W)~~	LUMP	SUM
~~SEISMIC JOINT (ABUT W11R)~~	LUMP	SUM
MODULAR JOINT (HINGE W6RB)	LUMP	SUM
~~SEISMIC JOINT (HINGE K1E)~~	LUMP	SUM
BAR REINFORCING STEEL (BRIDGE)	6 265 000	kg
BAR REINFORCING STEEL (RETAINING WALL)	8 212	kg
HEADED BAR REINFORCEMENT	224	EA
CLEAN AND PAINT STRUCTURAL STEEL (MISCELLANEOUS FACILITIES)	LUMP	SUM
COLUMN ISOLATION SLEEVE	18 786	kg
MISCELLANEOUS METAL (RESTRAINER - CABLE TYPE)	1 647	kg
MISCELLANEOUS METAL (BRIDGE)	15 900	kg
BRIDGE DECK DRAINAGE SYSTEM	18 750	kg
BIKEPATH RAILING (ANCHORAGE ONLY)	275	m
REMOVABLE CONCRETE COUNTERWEIGHT (BIKEPATH)	LUMP	SUM
CONCRETE BARRIER (TYPE 732 MODIFIED)	1 355	m
CHAIN LINK RAILING TYPE 7 (TEMPORARY)	137	m

FURNISH POLYESTER CONCRETE OVERLAY (19MM)	5	m^3
PLACE POLYESTER CONCRETE OVERLAY (19MM)	257	m^2

FOR REVISION 1 2 & 3 ONLY

FOR REVISION 4 ONLY

8 REVISED PER ADDENDUM NO. 8 DATED NOVEMBER 12, 2009

2 REVISED PER ADDENDUM NO. 2 DATED JANUARY 22, 2009

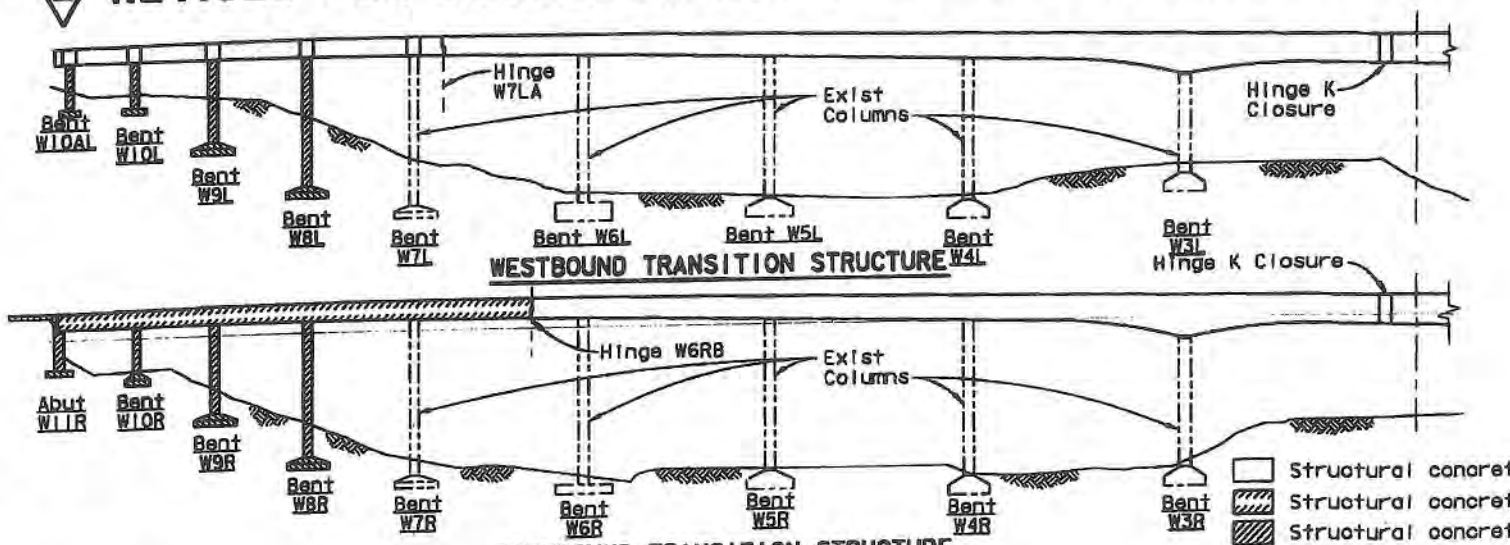

WESTBOUND TRANSITION STRUCTURE

EASTBOUND TRANSITION STRUCTURE

NOTE:
Piles not shown for clarity.

CONCRETE STRENGTH & TYPE LIMITS

- Structural concrete, bridge (46 MPa at 28 days)
- Structural concrete, bridge (41 MPa at 28 days)
- Structural concrete, bridge (25 MPa at 28 days)
- Structural concrete, bridge footing (25 MPa at 28 days)
- Structural concrete, approach slab (25 MPa at 28 days)

GENERAL NOTES

Load Factor Design

Design: Caltrans Design Specifications-April 2000 (LFD)
(1996 AASHTO with Interims and revisions by Caltrans)
Dead Load: Includes 1675 N/m2 for future wearing surface on roadbed
Live Load: HS20-44 and alternative and permit design load
Bike Path Live Load: 4000 N/m2
Future Mass Transit Loading:

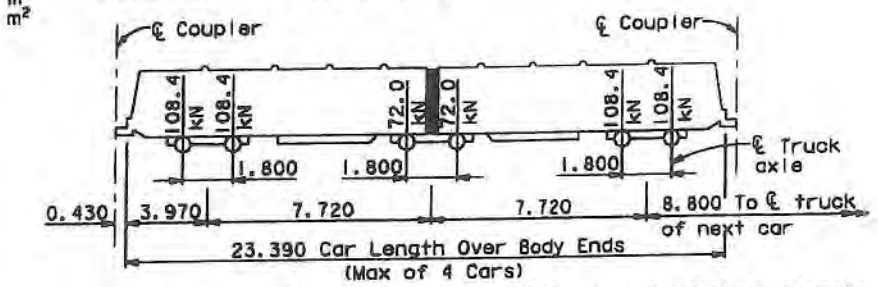

Seismic Loading: Refer to project specific seismic design criteria for San Francisco Oakland Bay Bridge East Span Seismic Safety Project Dated 01-08-00
See 'Site Specific Response Spectra'

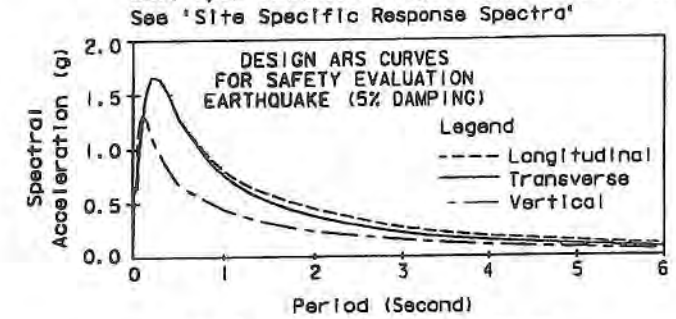

SITE SPECIFIC RESPONSE SPECTRA

Reinforced Concrete: Fy = 420 MPa
F'c = 25 MPa
N = 8

Transverse Deck Slabs
(Working Stress Design)
Fs = 140 MPa
Fc = 8 MPa
N = 10

Prestressed Concrete: See 'Prestressing Notes' on 'Girder Layout' & 'Prestress Details - Bents W8L & W7L' sheets

ALL DIMENSIONS ARE IN METERS UNLESS OTHERWISE SHOWN

DESIGN OVERSIGHT
JOHN SOOK, BERNARD CHAN, JUAN F. CARPIO, HASAN EL-NATUR
March 3, 2008
SIGN OFF DATE
Rev. Date: 5-18-98

	BY	CHECKED
DESIGN	Desai	Jain
DETAILS	van Ryn/Zucchi/Mai	Jain
QUANTITIES	Liao	E. Nichol

ORIGINAL SCALE IN MILLIMETERS FOR REDUCED PLANS 0 10 20 30 40 50 60 70 80 90 100

PREPARED FOR THE STATE OF CALIFORNIA DEPARTMENT OF TRANSPORTATION

Jal Birdy
PROJECT ENGINEER

CU 04251
EA 0120S1

BRIDGE NO. 34-0006 L/R
KILOMETER POST 12.8

DISREGARD PRINTS BEARING EARLIER REVISION DATES

SAN FRANCISCO OAKLAND BAY BRIDGE
EAST SPAN SEISMIC SAFETY PROJECT

YBI TRANSITION STRUCTURES

GENERAL NOTES

REVISION DATES (PRELIMINARY STAGE ONLY) 1/14/08 1/15/08 1/15/08 1/15/08 1/15/08 1/15/08 1/15/08 1/15/08 12/12/08 12/12/08

SHEET 3 OF 209

October 15, 2010

WB RAMP CCO

USERNAME => fcamson DATE PLOTTED => 10/15/2010 TIME PLOTTED => 2:29:06 PM

553R1

DIST.	COUNTY	ROUTE	KILOMETER POST TOTAL PROJECT	SHEET NO.	TOTAL SHEETS
04	SF	80	12.7/13.2	553	806

REGISTERED ENGINEER - CIVIL

6-23-08
PLANS APPROVAL DATE

REGISTERED PROFESSIONAL ENGINEER A.L. ELY No. 18880 Exp. 6-30-09 CIVIL STATE OF CALIFORNIA

The State of California or its officers or agents shall not be responsible for the accuracy or completeness of electronic copies of this plan sheet.

T.Y. LIN / MOFFATT & NICHOL
TWO HARRISON STREET
SAN FRANCISCO, CA 94105

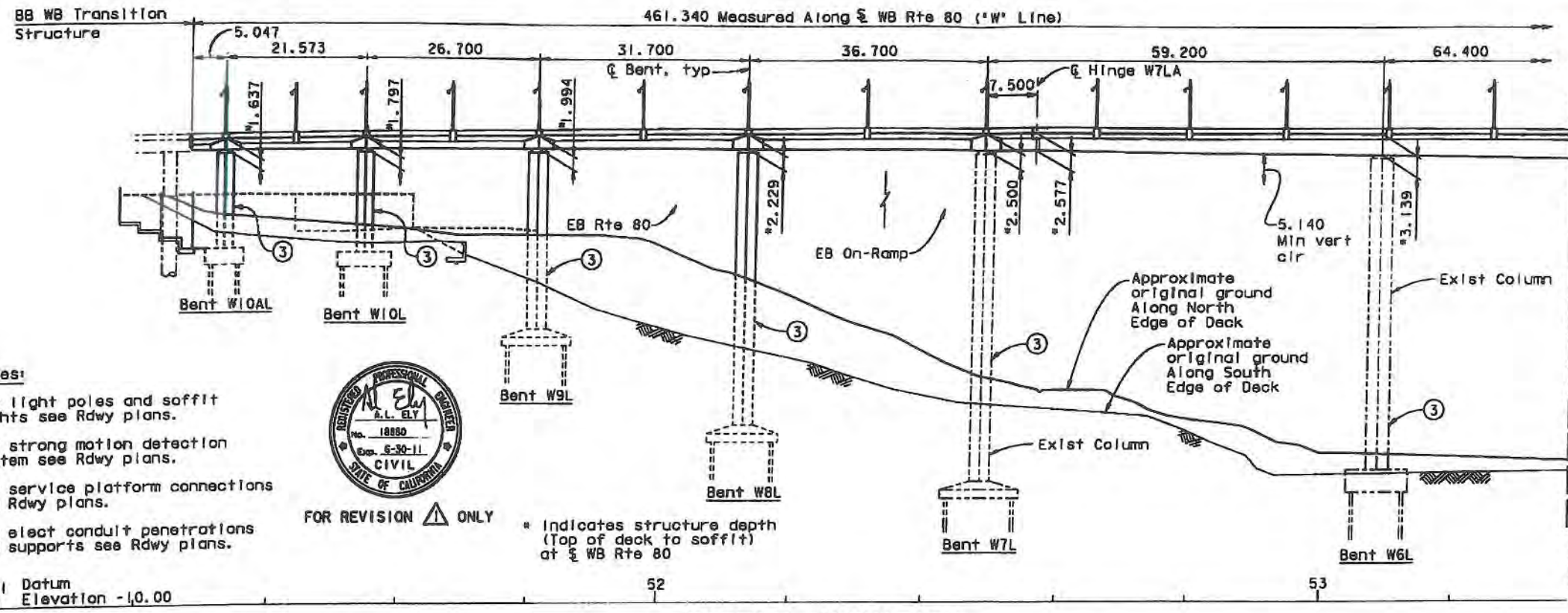

Notes:

For light poles and soffit lights see Rdwy plans.

For strong motion detection system see Rdwy plans.

For service platform connections see Rdwy plans.

For elect conduit penetrations and supports see Rdwy plans.

REGISTERED PROFESSIONAL ENGINEER A.L. ELY No. 18880 Exp. 6-30-11 CIVIL STATE OF CALIFORNIA

FOR REVISION 1 ONLY

* Indicates structure depth (Top of deck to soffit) at ℄ WB Rte 80

PARTIAL ELEVATION
1:400

2 REVISED PER ADDENDUM NO. 8 DATED NOVEMBER 12, 2009

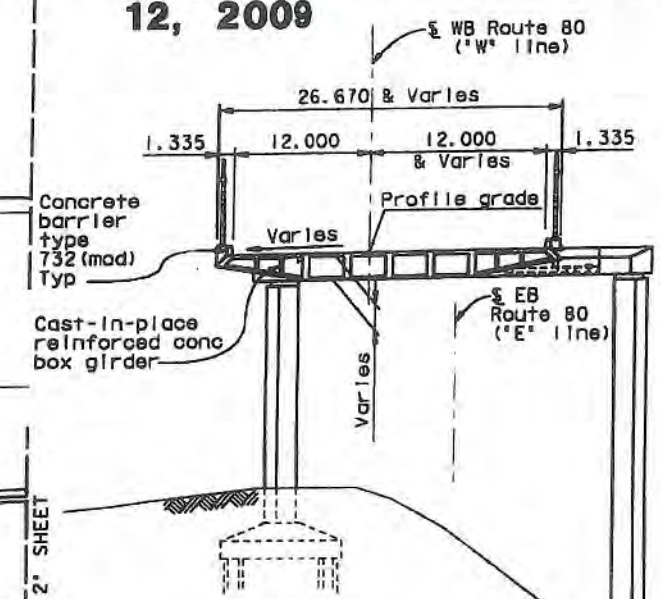

TYPICAL SECTION
(Bent W8L shown)
1:300

NOTES:

1. Paint "YBI WB TRANSITION STRUCTURE"
2. Paint "Bridge number 34-0006 L"
3. Paint bent number (NS & FS)
4. Paint hinge number
5. Indicates point of minimum vertical clearance

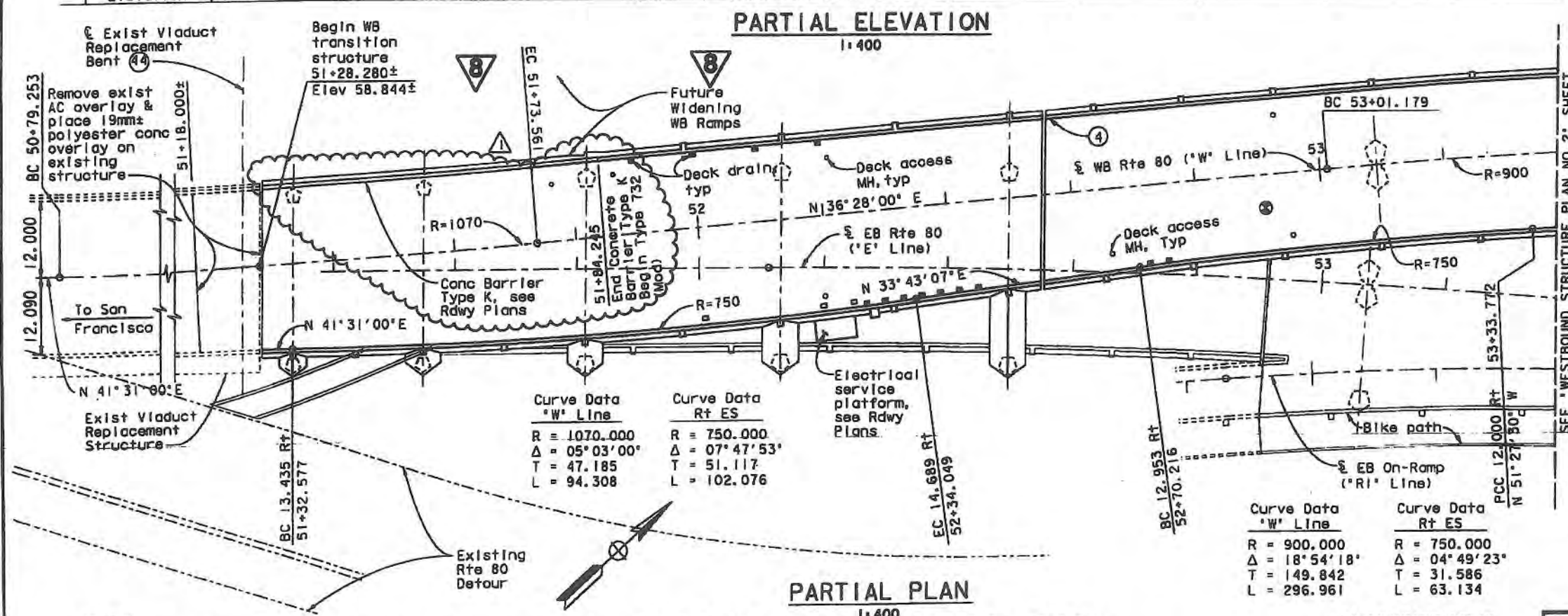

Curve Data "W" Line	Curve Data Rt ES
R = 1070.000	R = 750.000
Δ = 05°03'00"	Δ = 07°47'53"
T = 47.185	T = 51.117
L = 94.308	L = 102.076

Curve Data "W" Line	Curve Data Rt ES
R = 900.000	R = 750.000
Δ = 18°54'18"	Δ = 04°49'23"
T = 149.842	T = 31.586
L = 296.961	L = 63.134

PARTIAL PLAN
1:400

2 REVISED PER ADDENDUM NO. 2 DATED JANUARY 22, 2009

ALL DIMENSIONS ARE IN METERS UNLESS OTHERWISE SHOWN

MARK	DATE	DESCRIPTIONS	BY	CH'D
2				
1	3-24-10	WB Ramp Revisions	TL	AE

REVISIONS

CONTRACT CHANGE ORDER NO. 53
SHEET 5 OF 51

DESIGN OVERSIGHT
JOHN MOCK, BERNARD CHAN, JUAN F. CARPIO, HASAN EL-NATUR
March 3, 2008
SIGN OFF DATE

DESIGN	BY Desai	CHECKED Jain	
DETAILS	BY van Ryn/Zucchi/Wai	CHECKED Jain	
QUANTITIES	BY Liao	CHECKED E. Nichol	

Rev. Date: 5-8-98

ORIGINAL SCALE IN MILLIMETERS FOR REDUCED PLANS 0 10 20 30 40 50 60 70 80 90 100

PREPARED FOR THE STATE OF CALIFORNIA DEPARTMENT OF TRANSPORTATION

Jal Birdy
PROJECT ENGINEER

CU 04251
EA 012051

BRIDGE NO. 34-0006 L/R
KILOMETER POST 12.8

DISREGARD PRINTS BEARING EARLIER REVISION DATES

SAN FRANCISCO OAKLAND BAY BRIDGE
EAST SPAN SEISMIC SAFETY PROJECT

YBI TRANSITION STRUCTURES

WESTBOUND STRUCTURE PLAN NO. 1

REVISION DATES (PRELIMINARY STAGE ONLY) SHEET 4 OF 209

WB RAMP CCO

October 15, 2010

USERNAME => fasmaan DATE PLOTTED => 10/15/2010 TIME PLOTTED => 1:43:08 PM

DIST.	COUNTY	ROUTE	KILOMETER POST TOTAL PROJECT	SHEET NO.	TOTAL SHEETS
04	SF	80	12.7/13.2	554R1	806

REGISTERED ENGINEER - CIVIL

6-23-08

PLANS APPROVAL DATE

REGISTERED PROFESSIONAL ENGINEER A.L. ELY No. 18880 Exp. 6-30-09 CIVIL STATE OF CALIFORNIA

The State of California or its officers or agents shall not be responsible for the accuracy or completeness of electronic copies of this plan sheet.

T.Y. LIN / MOFFATT & NICHOL
TWO HARRISON STREET
SAN FRANCISCO, CA 94105

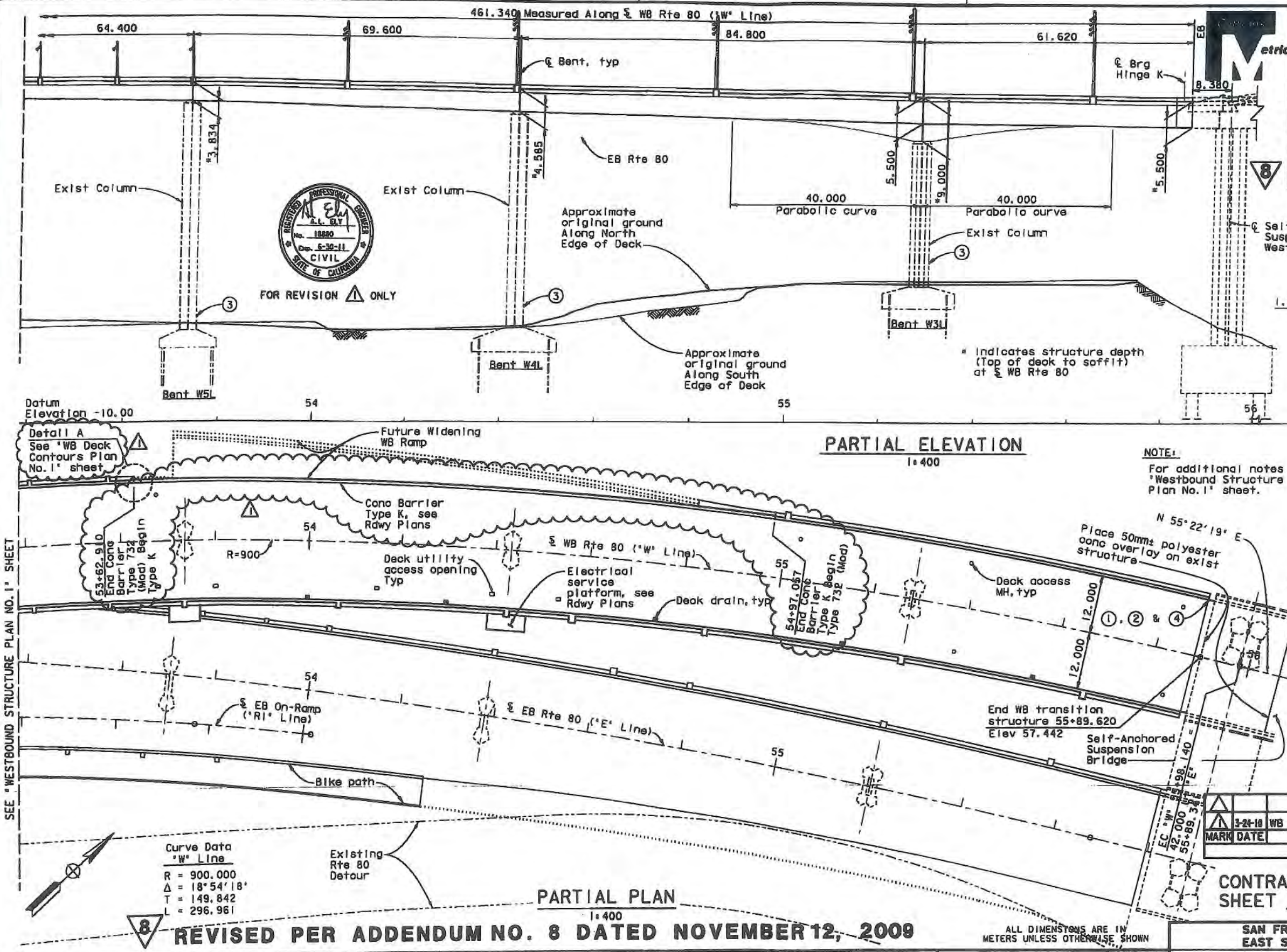

PARTIAL ELEVATION
1:400

NOTE:
For additional notes see "Westbound Structure Plan No. 1" sheet.

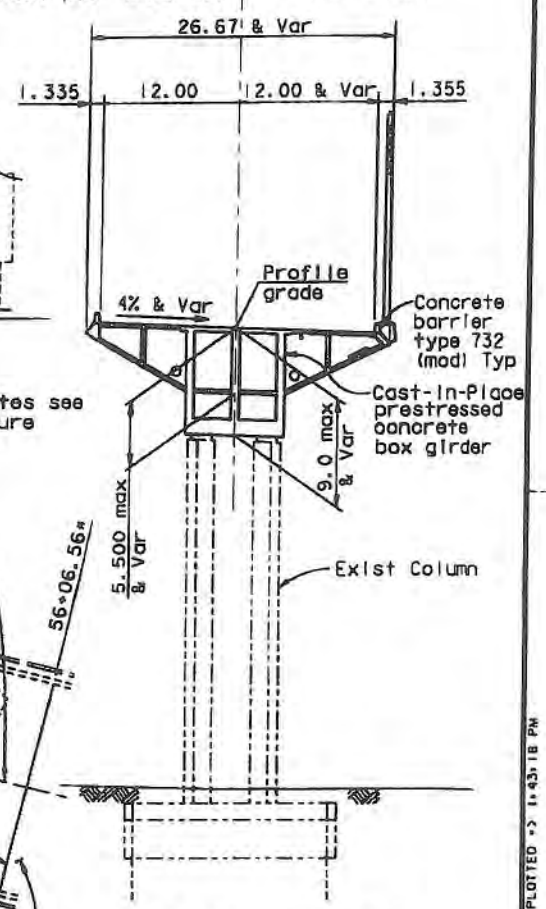

TYPICAL SECTION
(Bent W3L shown)
1:300

MARK	DATE	DESCRIPTIONS	BY	CH'D
1	3-24-10	WB Ramp Revisions	TL	AE

REVISIONS

CONTRACT CHANGE ORDER NO. 53
SHEET 6 OF 51

REVISED PER ADDENDUM NO. 8 DATED NOVEMBER 12, 2009

ALL DIMENSIONS ARE IN METERS UNLESS OTHERWISE SHOWN

SAN FRANCISCO OAKLAND BAY BRIDGE
EAST SPAN SEISMIC SAFETY PROJECT

YBI TRANSITION STRUCTURES

WESTBOUND STRUCTURE PLAN NO. 2

DESIGN OVERSIGHT: CHIN WOOK, BERNARD CHAN, JUAN F. CARPIO, HASAN EL-NATUR
March 3, 2008 — 10/26/16
SIGN OFF DATE

	BY	CHECKED
DESIGN	Desai	Jain
DETAILS	van Ryn/Zucchi/Nal	Jain
QUANTITIES	Liao	E. Nichol

PREPARED FOR THE STATE OF CALIFORNIA DEPARTMENT OF TRANSPORTATION

Jal Birdy
PROJECT ENGINEER

BRIDGE NO. 34-0006 L/R
KILOMETER POST 12.8

CU 04251
EA 0120S1

DISREGARD PRINTS BEARING EARLIER REVISION DATES

REVISION DATES (PRELIMINARY STAGE ONLY)

SHEET 5 OF 209

ORIGINAL SCALE IN MILLIMETERS FOR REDUCED PLANS 0 10 20 30 40 50 60 70 80 90 100

Rev. Date: 5-18-98

WB RAMP CCO

October 15, 2010

DATE PLOTTED => 10/15/2010 TIME PLOTTED => 1:43:18 PM

DIST.	COUNTY	ROUTE	KILOMETER POST TOTAL PROJECT	SHEET NO.	TOTAL SHEETS
04	SF	80	12.7/13.2	557R1	806

REGISTERED ENGINEER - CIVIL

6-23-08

PLANS APPROVAL DATE

REGISTERED PROFESSIONAL ENGINEER A.L. ELY No. 18880 Exp. 6-30-09 CIVIL STATE OF CALIFORNIA

The State of California or its officers or agents shall not be responsible for the accuracy or completeness of electronic copies of this plan sheet.

T.Y. LIN / MOFFATT & NICHOL
TWO HARRISON STREET
SAN FRANCISCO, CA 94105

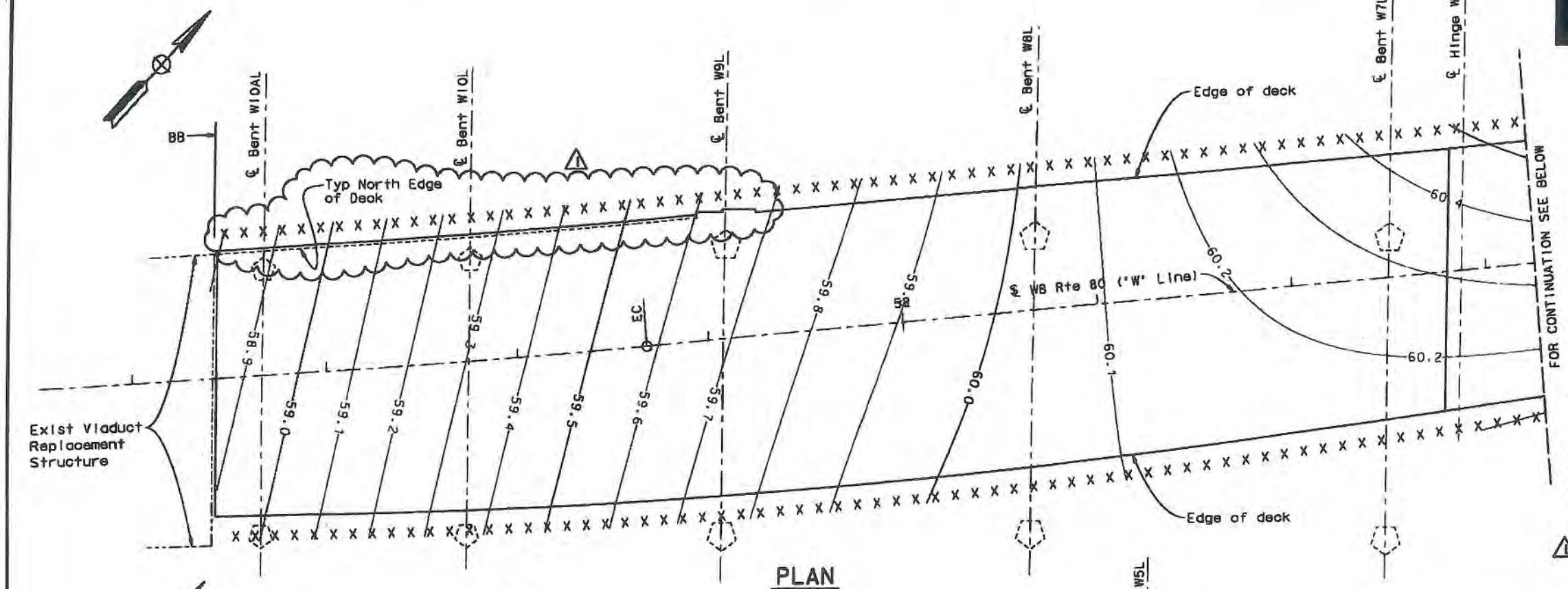

PLAN
1:250

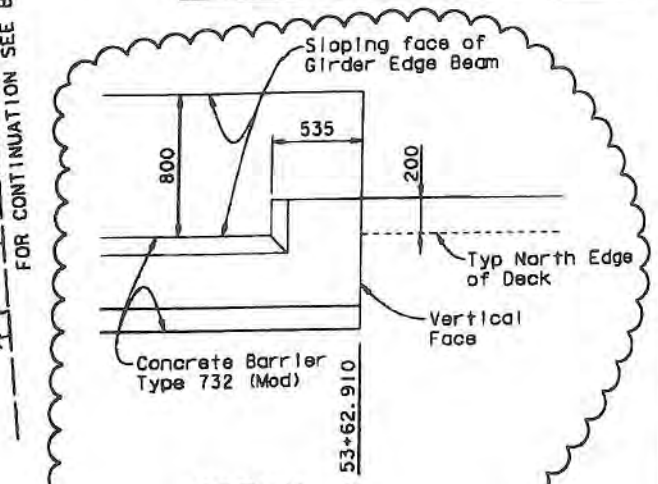

DETAIL A
For location see "WB Structure Plan No.2" sheet
1:20

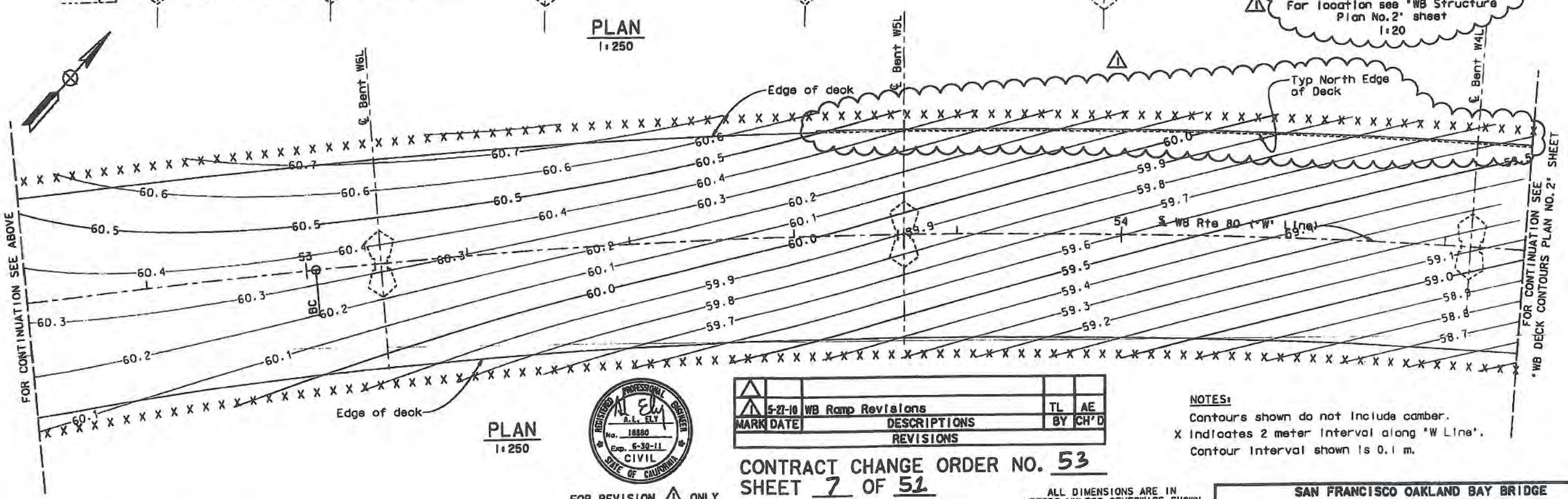

PLAN
1:250

FOR REVISION ⚠1 ONLY

MARK	DATE	DESCRIPTIONS	BY	CH'D
⚠2				
⚠1	5-27-10	WB Ramp Revisions	TL	AE

REVISIONS

NOTES:
Contours shown do not include camber.
X indicates 2 meter interval along "W Line".
Contour interval shown is 0.1 m.

CONTRACT CHANGE ORDER NO. 53
SHEET 7 OF 51

ALL DIMENSIONS ARE IN METERS UNLESS OTHERWISE SHOWN

SAN FRANCISCO OAKLAND BAY BRIDGE
EAST SPAN SEISMIC SAFETY PROJECT

YBI TRANSITION STRUCTURES

WESTBOUND DECK CONTOURS PLAN NO. 1

DESIGN OVERSIGHT: JOHN MOOK, BERNARD CHAN, JUAN F. CARPIO, HASAN EL-NATUR
March 3, 2008
SIGN OFF DATE

DESIGN	BY Alcaraz	CHECKED Desai	
DETAILS	BY van Ryn/Zucchi/Mai	CHECKED Jain	
QUANTITIES	BY Liao	CHECKED E. Nichol	

PREPARED FOR THE STATE OF CALIFORNIA DEPARTMENT OF TRANSPORTATION

Jal Birdy
PROJECT ENGINEER

BRIDGE NO. 34-0006 L/R
KILOMETER POST 12.8

CU 04251
EA 0120S1

DISREGARD PRINTS BEARING EARLIER REVISION DATES

REVISION DATES (PRELIMINARY STAGE ONLY)

SHEET 8 OF 209

ORIGINAL SCALE IN MILLIMETERS FOR REDUCED PLANS 0 10 20 30 40 50 60 70 80 90 100

Rev. Date: 5-13-25

FILE -> \\mnlbfs\LS_Projects\6674 - Yerba Buena Island (YBI) Bridge\7 Design Information\CADD\Sheets\addendum include bits from

WB RAMP CCO

October 15, 2010

USERNAME -> fsamson DATE PLOTTED -> 10/15/2010 TIME PLOTTED -> 11:48:12 PM

DIST.	COUNTY	ROUTE	KILOMETER POST TOTAL PROJECT	SHEET NO.	TOTAL SHEETS
04	SF	80	12.7/13.2	558R1	806

REGISTERED ENGINEER - CIVIL
6-23-08
PLANS APPROVAL DATE

REGISTERED PROFESSIONAL ENGINEER A.L. ELY No. 18880 Exp. 6-30-09 CIVIL STATE OF CALIFORNIA

The State of California or its officers or agents shall not be responsible for the accuracy or completeness of electronic copies of this plan sheet.

T.Y. LIN / MOFFATT & NICHOL
TWO HARRISON STREET
SAN FRANCISCO, CA 94105

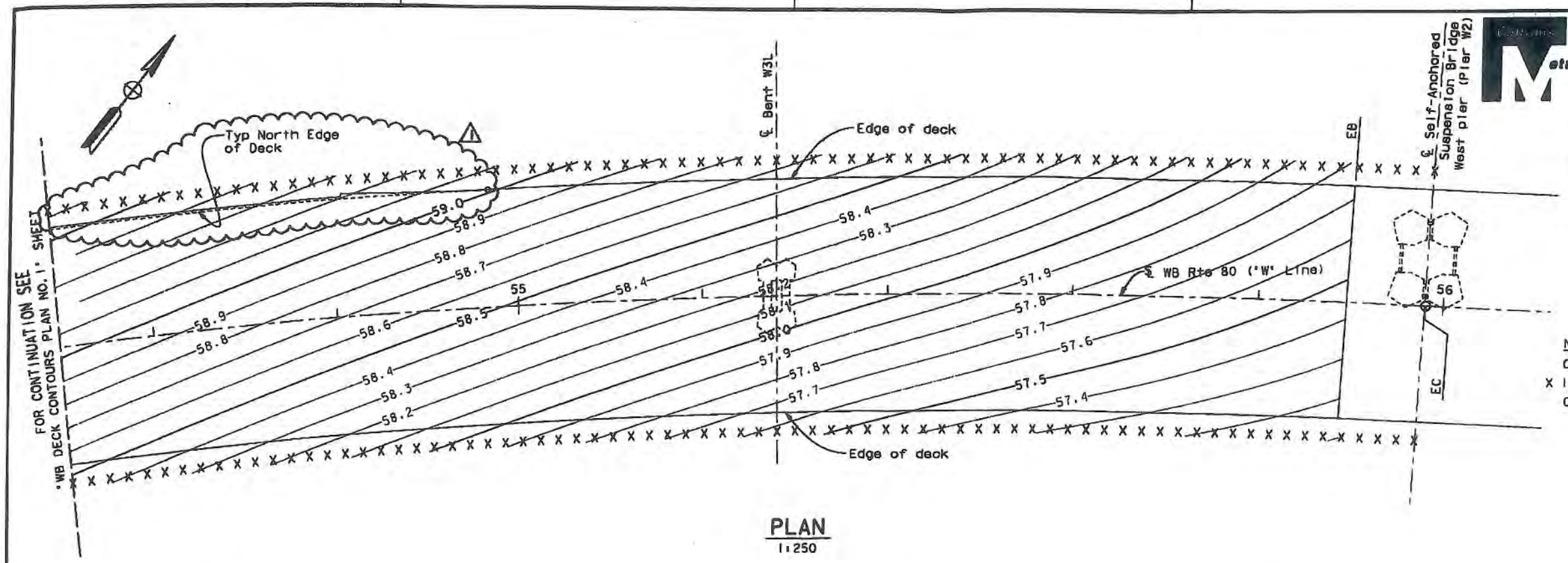

PLAN
1:250

NOTES:
Contours shown do not include camber.
X Indicates 2 meter interval along 'W Line'
Contour interval shown is 0.1 m.

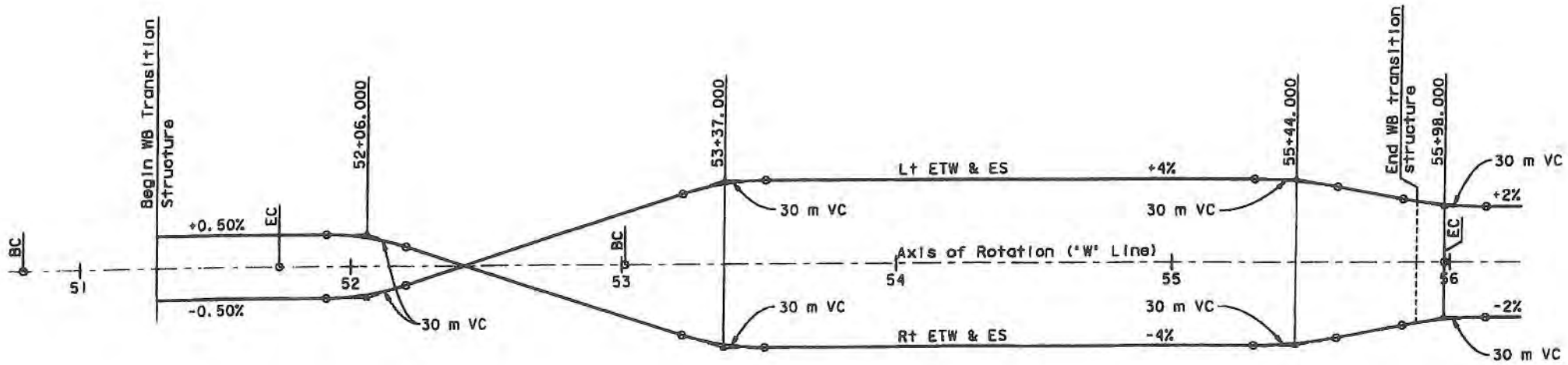

WESTBOUND SUPERELEVATION DIAGRAM
No Scale

REGISTERED PROFESSIONAL ENGINEER A.L. ELY No. 18880 Exp. 6-30-11 CIVIL STATE OF CALIFORNIA

FOR REVISION △1 ONLY

MARK	DATE	DESCRIPTIONS	BY	CH'D
△1	12-23-08	WB Ramp Revisions	TL	AE
△				
△				
△				
△				

REVISIONS

CONTRACT CHANGE ORDER NO. 53
SHEET 8 OF 51

ALL DIMENSIONS ARE IN METERS UNLESS OTHERWISE SHOWN

SAN FRANCISCO OAKLAND BAY BRIDGE
EAST SPAN SEISMIC SAFETY PROJECT

YBI TRANSITION STRUCTURES

WESTBOUND DECK CONTOURS PLAN NO. 2

DESIGN OVERSIGHT: JOHN MOOK, BERNARD CHIAN, JUAN F. CARPIO — HASAN EL-NATUR
March 3, 2008 — 10/26/10
SIGN OFF DATE
Rev. Date: 5-16-08

	BY	CHECKED
DESIGN	Alcaraz	Desai
DETAILS	van Ryn/Zucchi/Mai	Jain
QUANTITIES	Liao	E. Nichol

PREPARED FOR THE STATE OF CALIFORNIA DEPARTMENT OF TRANSPORTATION

Jai Birdy
PROJECT ENGINEER

BRIDGE NO. 34-0006 L/R
KILOMETER POST 12.8

CU 04251
EA 0120S1

DISREGARD PRINTS BEARING EARLIER REVISION DATES

REVISION DATES (PRELIMINARY STAGE ONLY)

SHEET 9 OF 209

ORIGINAL SCALE IN MILLIMETERS FOR REDUCED PLANS 0 10 20 30 40 50 60 70 80 90 100

FILE => \\mpbfs\LB_Projects\6674 - Yerba Buena Island (YBI) Bridge\7 Design Information\CADD\sheets\Addendum Include

WB RAMP CCO

October 15, 2010

USERNAME => feamson DATE PLOTTED => 10/15/2010 TIME PLOTTED => 11:48:26 PM

DIST.	COUNTY	ROUTE	KILOMETER POST TOTAL PROJECT	SHEET NO.	TOTAL SHEETS
04	SF	80	12.7/13.2	567R1	806

REGISTERED ENGINEER - CIVIL
6-23-08
PLANS APPROVAL DATE

REGISTERED PROFESSIONAL ENGINEER A.L. ELY No. 18880 Exp. 6-30-09 CIVIL STATE OF CALIFORNIA

The State of California or its officers or agents shall not be responsible for the accuracy or completeness of electronic copies of this plan sheet.

T.Y. LIN / MOFFATT & NICHOL
TWO HARRISON STREET
SAN FRANCISCO, CA 94105

MARK	DATE	DESCRIPTIONS	BY	CH'D
1	10-15-10	WB Ramp Revisions & deleted footing beneath column facade	TL	AE

REVISIONS

FOR REVISION 1 ONLY

CONTRACT CHANGE ORDER NO. 53
SHEET 9 OF 51

8

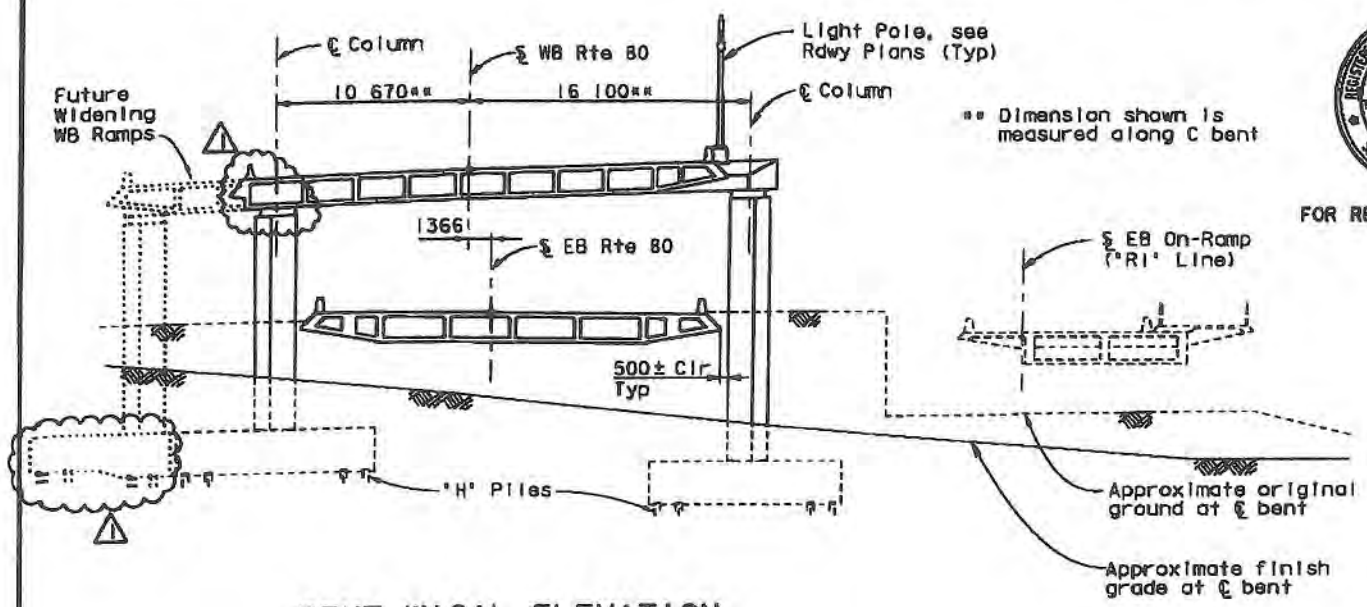

BENT W10AL ELEVATION
1:200

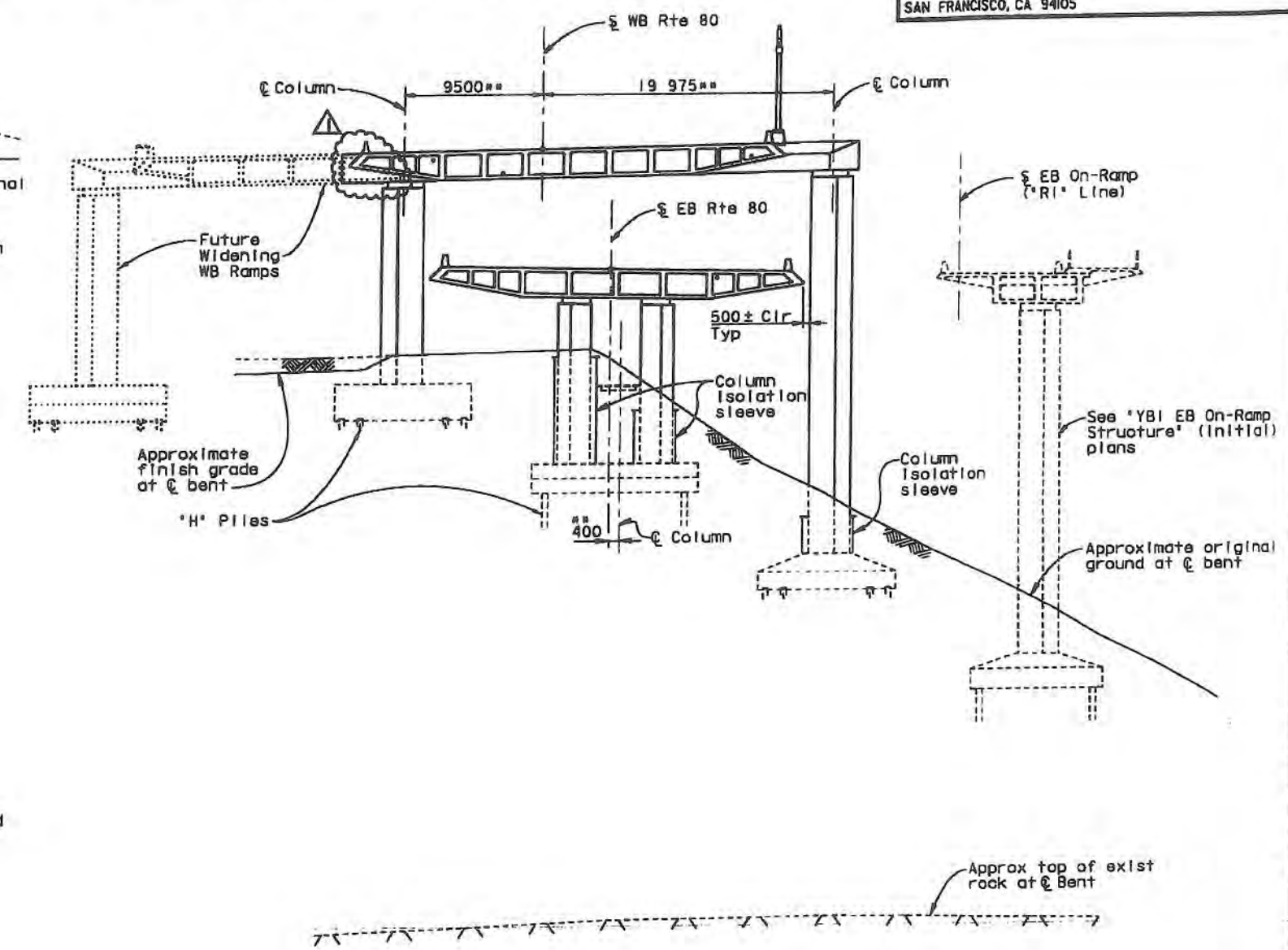

BENT W9 ELEVATION
1:200

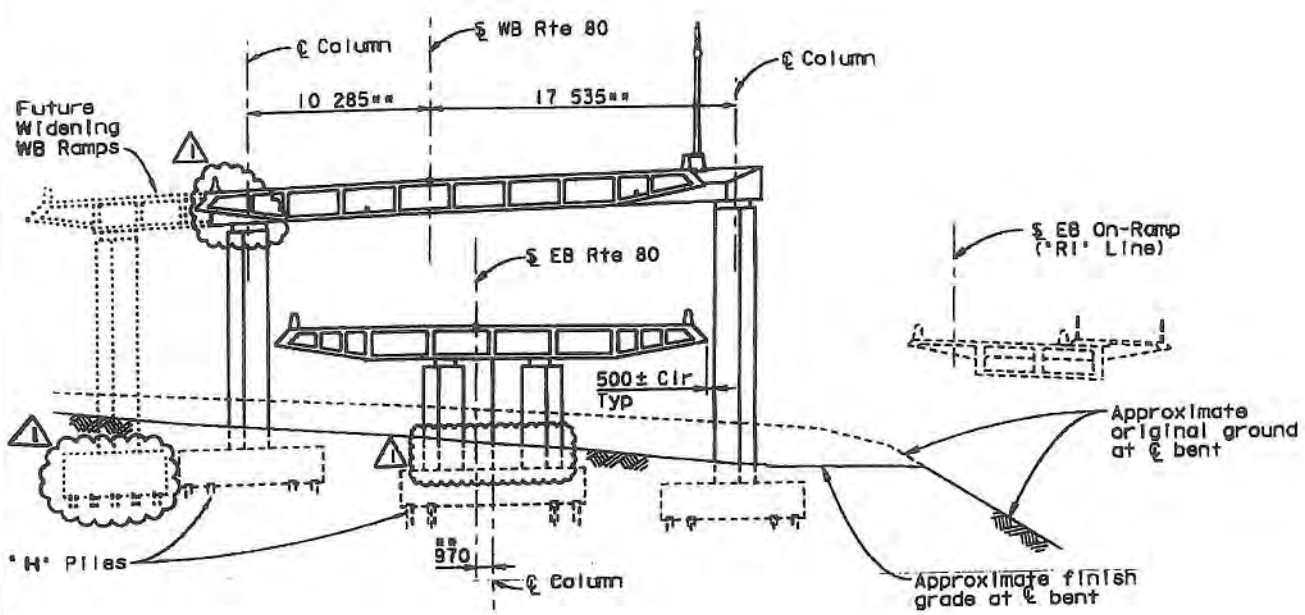

BENT W10 ELEVATION
1:200

8 REVISED PER ADDENDUM NO. 8 DATED NOVEMBER 12, 2009

ALL DIMENSIONS ARE IN MILLIMETERS UNLESS OTHERWISE SHOWN

DESIGN OVERSIGHT
JOHN MOOK, BERNARD CHAN, JUAN F. CARPIO
March 3, 2008
SIGN OFF DATE

HASAN EL-NATUR
10/26/10

	BY	CHECKED
DESIGN	Desai	Jain
DETAILS	van Ryn/Zucchi/Mal	Jain
QUANTITIES	Liao	E. Nichol

PREPARED FOR THE STATE OF CALIFORNIA DEPARTMENT OF TRANSPORTATION

Jai Birdy
PROJECT ENGINEER

CU 04251
EA 012051

BRIDGE NO. 34-0006 L/R
KILOMETER POST 12.8

SAN FRANCISCO OAKLAND BAY BRIDGE
EAST SPAN SEISMIC SAFETY PROJECT

YB1 TRANSITION STRUCTURES
BENT ELEVATIONS W10AL TO W9

DISREGARD PRINTS BEARING EARLIER REVISION DATES

REVISION DATES (PRELIMINARY STAGE ONLY)

SHEET 18 OF 209

ORIGINAL SCALE IN MILLIMETERS FOR REDUCED PLANS 0 10 20 30 40 50 60 70 80 90 100

Rev. Date: 5-8-99

WB RAMP CCO

October 15, 2010

USERNAME => fadmson DATE PLOTTED => 10/15/2010 TIME PLOTTED => 21:29:30 PM

8 REVISED PER ADDENDUM NO. 8 DATED NOVEMBER 12, 2009

** Dimension shown is measured along ℄ bent

DIST.	COUNTY	ROUTE	KILOMETER POST TOTAL PROJECT	SHEET NO.	TOTAL SHEETS
04	SF	80	12.7/13.2	569R3	806

REGISTERED ENGINEER - CIVIL
6-23-08
PLANS APPROVAL DATE
REGISTERED PROFESSIONAL ENGINEER A.L. ELY No. 18880 Exp. 6-30-09 CIVIL STATE OF CALIFORNIA
The State of California or its officers or agents shall not be responsible for the accuracy or completeness of electronic copies of this plan sheet.

T.Y. LIN / MOFFATT & NICHOL
TWO HARRISON STREET
SAN FRANCISCO, CA 94105

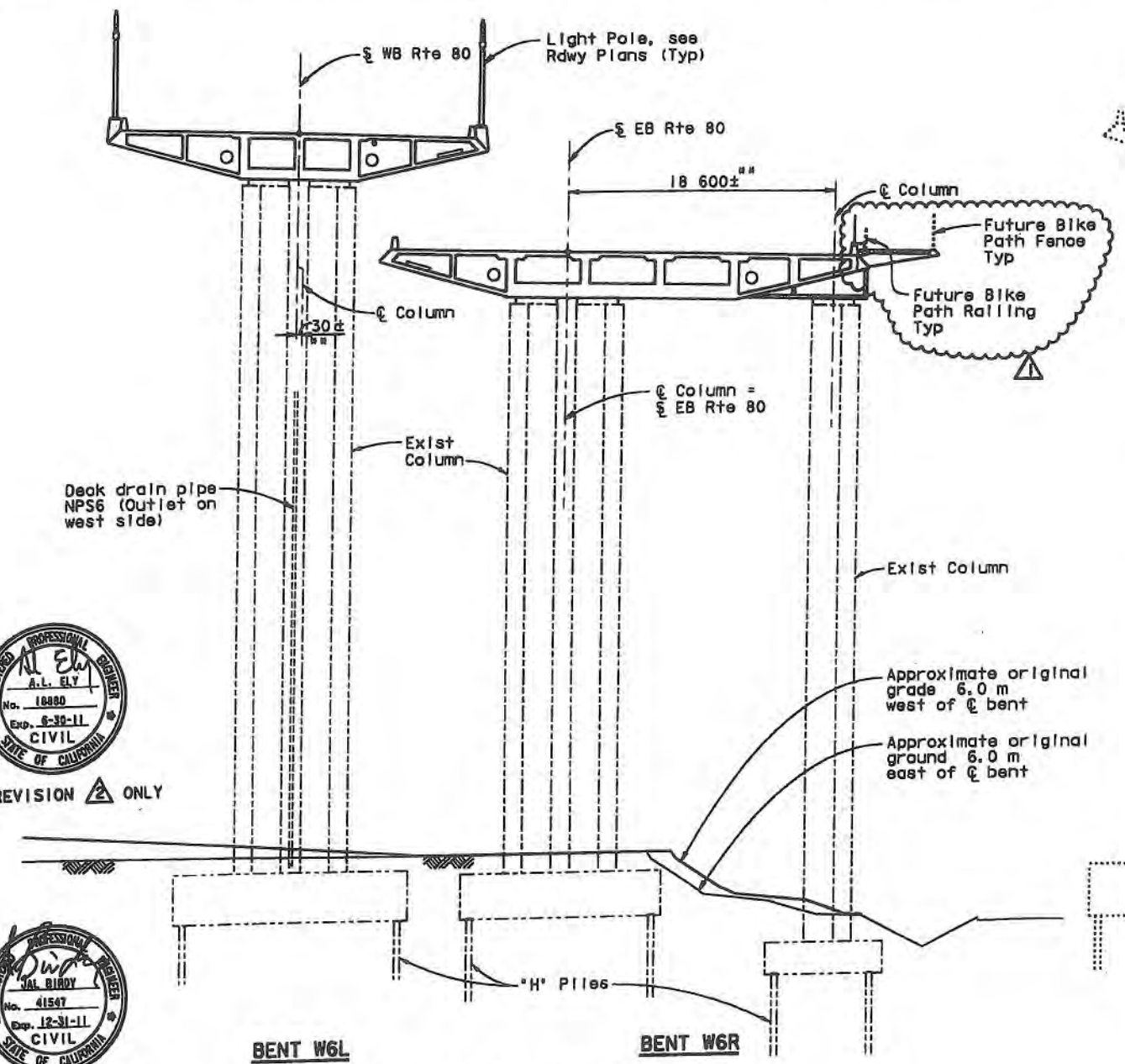

BENT W6 ELEVATION
1:200

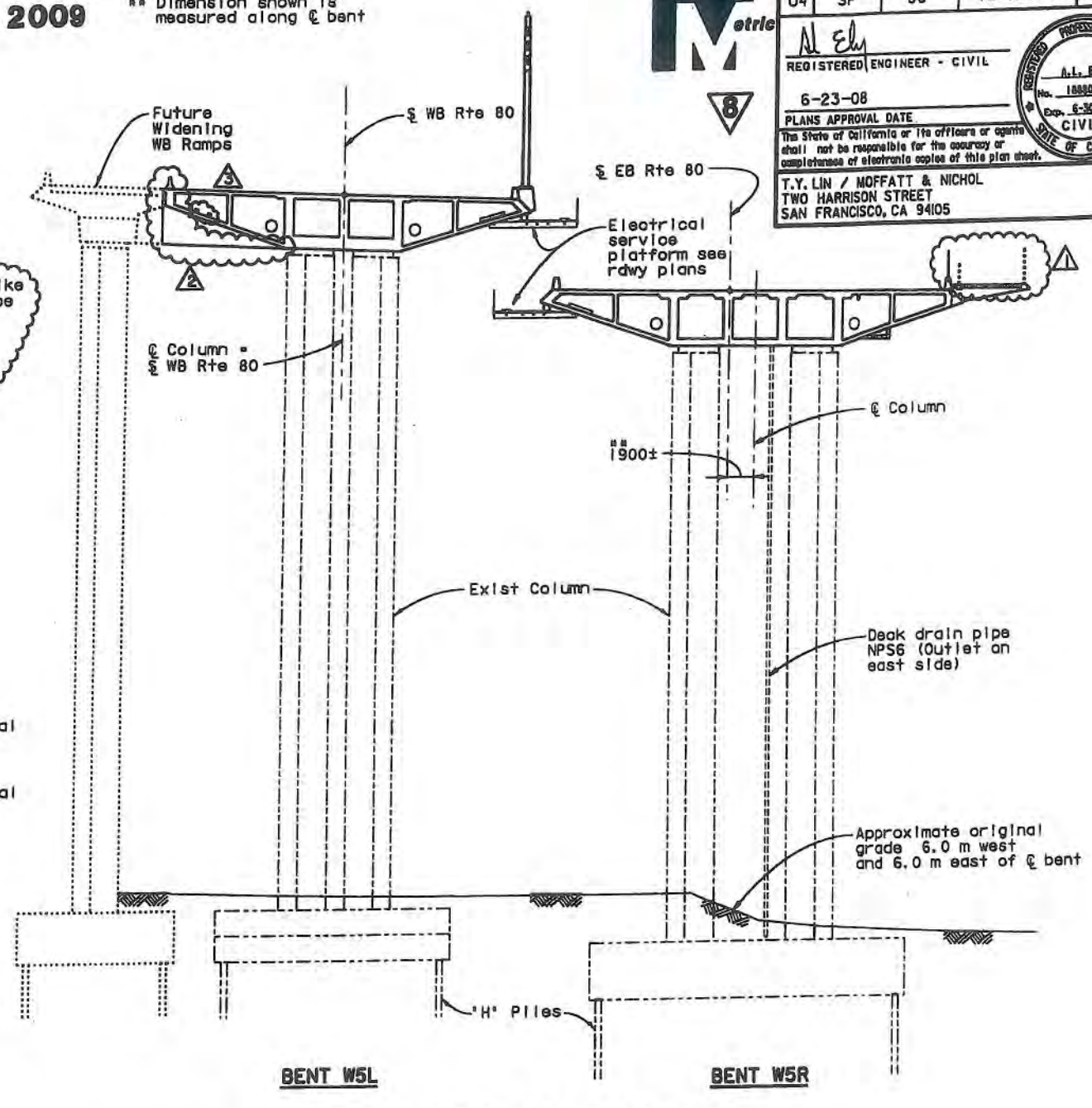

BENT W5 ELEVATION
1:200

Approx top of exist rock at ℄ Bent

Approx top of exist rock at ℄ Bent

FOR REVISION 2 ONLY

FOR REVISION 1 & 3 ONLY

MARK	DATE	DESCRIPTIONS	BY	CH'D
3	3-30-11	Rev Bent Cap Opening	TL	JB
2	10-15-10	WB Ramp Revisions	TL	AE
1	9-1-10	Rev Bike Path Railing	TL	JB

REVISIONS

CONTRACT CHANGE ORDER NO. 53
SHEET 10 OF 51

ALL DIMENSIONS ARE IN MILLIMETERS UNLESS OTHERWISE SHOWN

DESIGN OVERSIGHT
JOHN MOOK, BERNARD CHAN, JUAN F. CARPIO
March 3, 2008
SIGN OFF DATE

HASAN EL-NATUR
4/25/11

	BY	CHECKED
DESIGN	Desai	Jain
DETAILS	van Ryn/Zucchi/Mal	Jain
QUANTITIES	Liao	E. Nichol

PREPARED FOR THE STATE OF CALIFORNIA DEPARTMENT OF TRANSPORTATION

Jai Birdy
PROJECT ENGINEER

CU 04251
EA 0120S1

BRIDGE NO. 34-0006 L/R
KILOMETER POST 12.8

SAN FRANCISCO OAKLAND BAY BRIDGE
EAST SPAN SEISMIC SAFETY PROJECT

YBI TRANSITION STRUCTURES

BENT ELEVATIONS W6 TO W5

DISREGARD PRINTS BEARING EARLIER REVISION DATES
REVISION DATES (PRELIMINARY STAGE ONLY)
SHEET 20 OF 209

ORIGINAL SCALE IN MILLIMETERS FOR REDUCED PLANS 0 10 20 30 40 50 60 70 80 90 100

Rev. Date: 5-22-08

FILE => \\mlbfs\LB_Projects\4141-06\CADD\TS\Checked Plans\YBITS =1:100% No. 2_03-03-08 (Final Renamed)\033011 Openings T9 CCO\04-0120s1-34-006r1-h-bdet03.dgn

March 30, 2011

USERNAME => fsamson DATE PLOTTED => 3/29/2011 TIME PLOTTED => 11:02:28 AM

DIST.	COUNTY	ROUTE	KILOMETER POST TOTAL PROJECT	SHEET NO.	TOTAL SHEETS
04	SF	80	12.7/13.2	570R2	806

REGISTERED ENGINEER - CIVIL
6-23-08
PLANS APPROVAL DATE
The State of California or its officers or agents shall not be responsible for the accuracy or completeness of electronic copies of this plan sheet.

T.Y. LIN / MOFFATT & NICHOL
TWO HARRISON STREET
SAN FRANCISCO, CA 94105

REGISTERED PROFESSIONAL ENGINEER A.L. ELY No. 18880 Exp. 6-30-11 CIVIL STATE OF CALIFORNIA

FOR REVISION 1 & 2 ONLY

MARK	DATE	DESCRIPTIONS	BY	CH'D
2	3-30-11	Rev Bent Cap Opening	TL	AE
1	12-23-08	WB Ramp Revisions	TL	AE

REVISIONS

CONTRACT CHANGE ORDER NO. 53
SHEET 11 OF 51

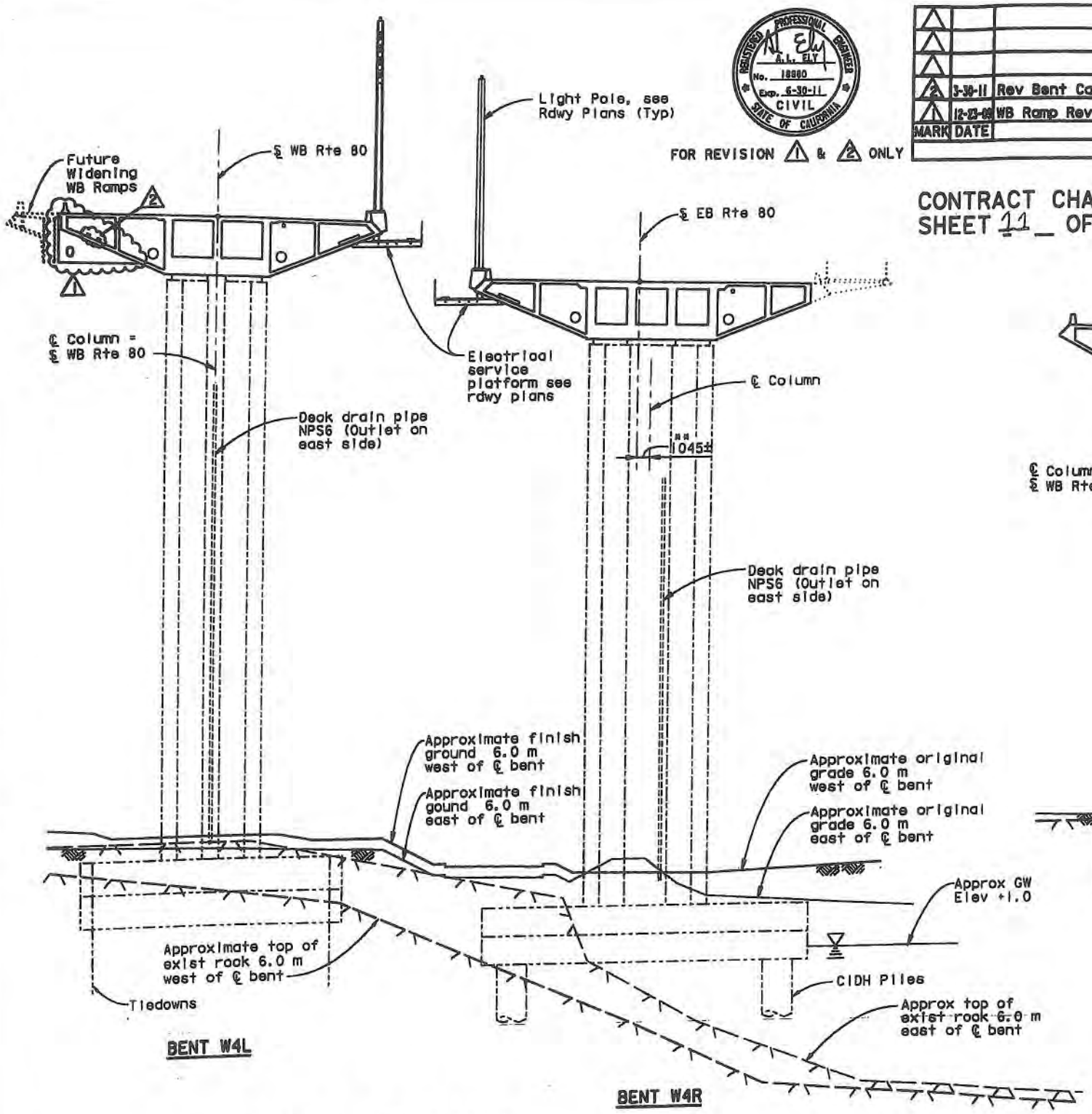

BENT W4 ELEVATION
1:200

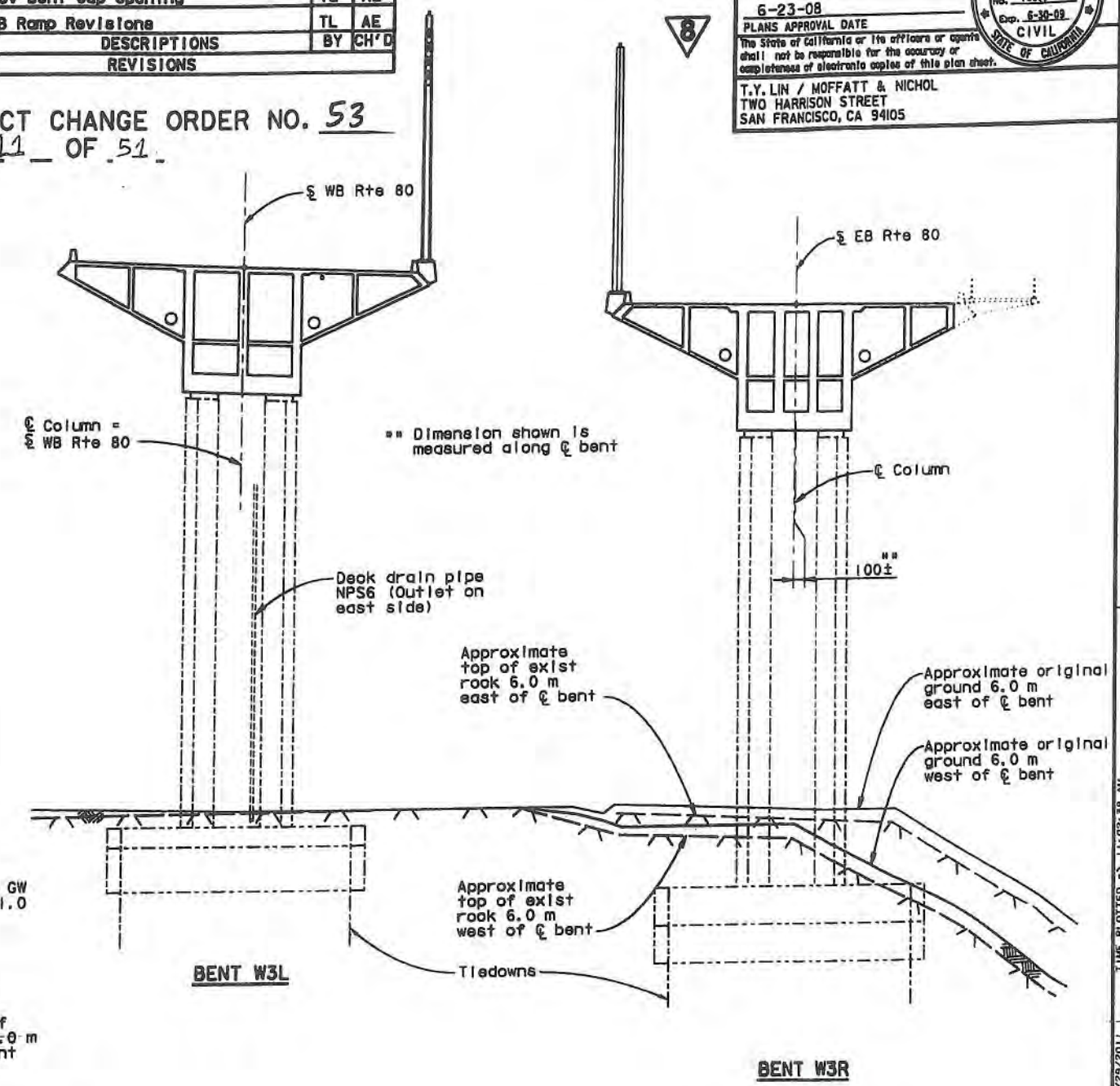

BENT W3 ELEVATION
1:200

8 REVISED PER ADDENDUM NO. 8 DATED NOVEMBER 12, 2009

ALL DIMENSIONS ARE IN MILLIMETERS UNLESS OTHERWISE SHOWN

DESIGN OVERSIGHT
JOHN MOOK, BERNARD CHAN, JUAN F. CARPIO, HASAN EL-NATUR
March 3, 2008
SIGN OFF DATE
4/25/11
Rev. Dates 5-18-98

	BY	CHECKED
DESIGN	Desai	Jain
DETAILS	van Ryn/Zucchi/Mal	Jain
QUANTITIES	Liao	E. Nichol

PREPARED FOR THE STATE OF CALIFORNIA DEPARTMENT OF TRANSPORTATION

Jai Birdy
PROJECT ENGINEER

BRIDGE NO. 34-0006 L/R
KILOMETER POST 12.8

CU 04251
EA 0120S1

SAN FRANCISCO OAKLAND BAY BRIDGE
EAST SPAN SEISMIC SAFETY PROJECT

YBI TRANSITION STRUCTURES

BENT ELEVATIONS W4 TO W3

DISREGARD PRINTS BEARING EARLIER REVISION DATES
REVISION DATES (PRELIMINARY STAGE ONLY)

SHEET 21 OF 209

ORIGINAL SCALE IN MILLIMETERS FOR REDUCED PLANS 0 10 20 30 40 50 60 70 80 90 100

FILE => \\mnlbfs\LB_Projects\4141-06\CADD\TS\Checked Plans\YBITS #1 100% No. 2_03-03-08 (Final Renamed)\033011 Openings T9 CCO\04-0120s1-34-0006r1-h-bdet04.dgn

USERNAME => fasmson DATE PLOTTED => 3/29/2011 TIME PLOTTED => 11:02:38 AM

March 30, 2011

DIST.	COUNTY	ROUTE	KILOMETER POST TOTAL PROJECT	SHEET NO.	TOTAL SHEETS
04	SF	80	12.7/13.2	571R1	806

REGISTERED ENGINEER - CIVIL
6-23-08
PLANS APPROVAL DATE
The State of California or its officers or agents shall not be responsible for the accuracy or completeness of electronic copies of this plan sheet.

REGISTERED PROFESSIONAL ENGINEER A.L. ELY No. 18880 Exp. 6-30-09 CIVIL STATE OF CALIFORNIA

T.Y. LIN / MOFFATT & NICHOL
TWO HARRISON STREET
SAN FRANCISCO, CA 94105

MARK	DATE	DESCRIPTIONS	BY	CH'D
1	5-27-10	WB Ramp Revisions	TL	AE

REVISIONS

CONTRACT CHANGE ORDER NO. 53
SHEET 12 OF 51

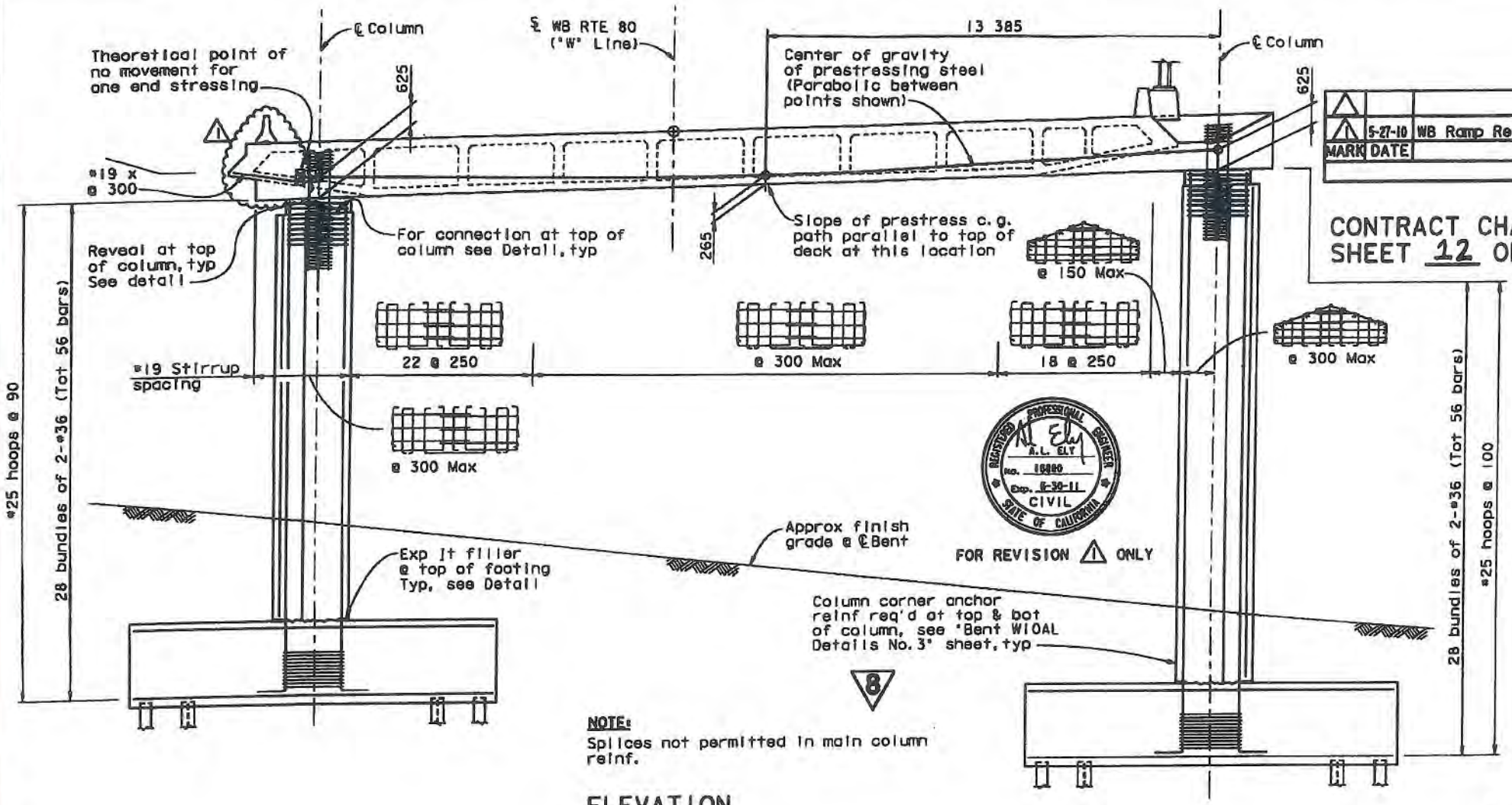

NOTE:
Splices not permitted in main column reinf.

ELEVATION
1:80

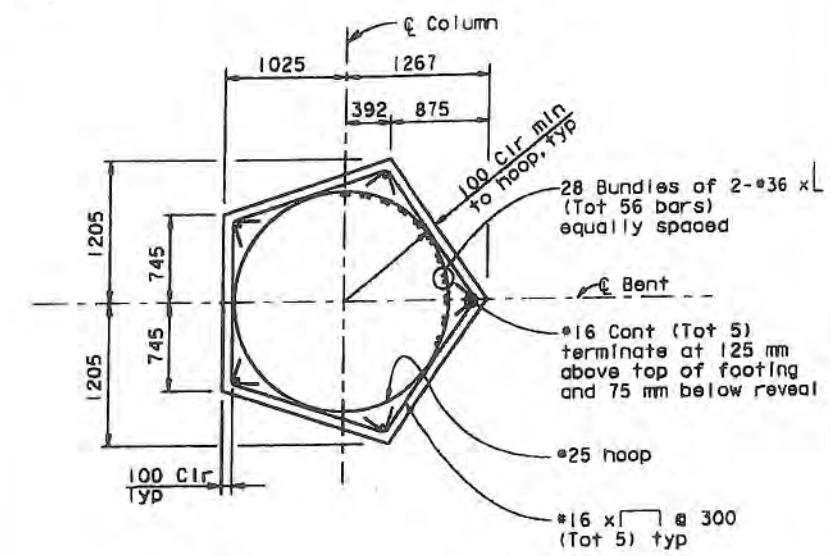

TYPICAL COLUMN SECTION
(South column shown, North column opposite hand)
1:30

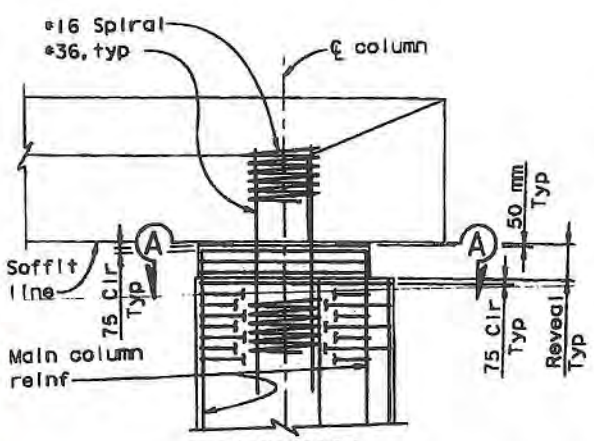

ELEVATION

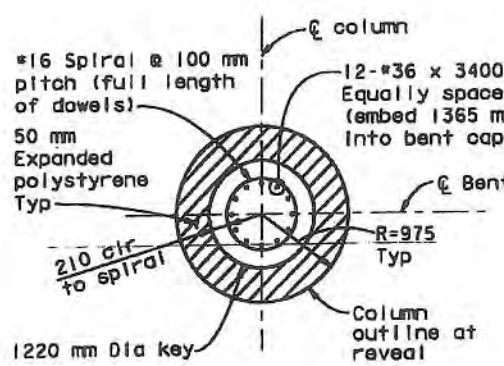

SECTION A-A

CONNECTION DETAIL AT TOP OF COLUMNS
(Typical Bents W10AL & W10L)
No Scale

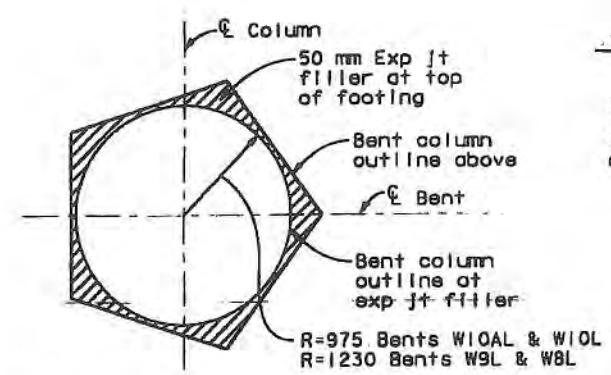

EXP JT FILLER AT TOP OF FOOTING
(Typical Bents W10AL to W8L)
No Scale

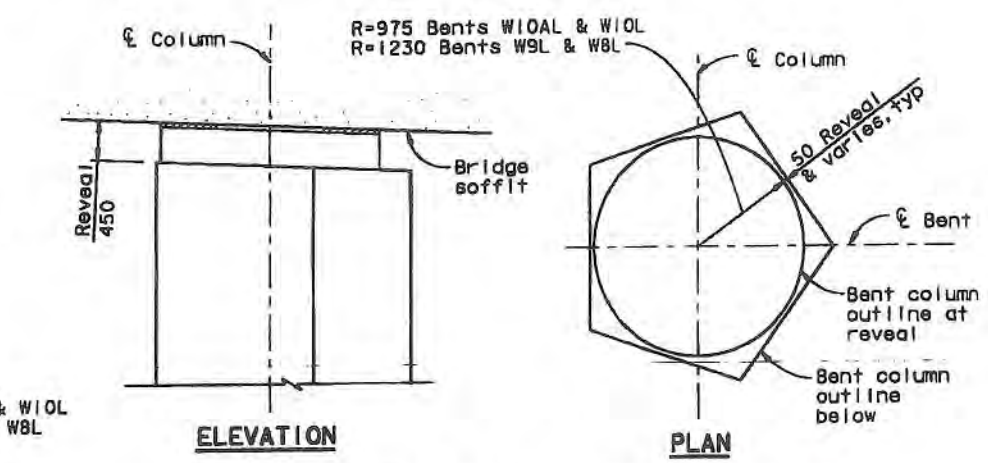

ELEVATION PLAN

REVEAL DETAIL AT TOP OF COLUMN
(Typical Bents W10AL to W8L)
No Scale

8 REVISED PER ADDENDUM NO. 8 DATED NOVEMBER 12, 2009

ALL DIMENSIONS ARE IN MILLIMETERS UNLESS OTHERWISE SHOWN

SAN FRANCISCO OAKLAND BAY BRIDGE
EAST SPAN SEISMIC SAFETY PROJECT

YBI TRANSITION STRUCTURES

BENT W10AL DETAILS NO. 1

DESIGN OVERSIGHT: JOHN MOOK, BERNARD CHAN, JUAN F. CARPIO, HASAN EL-NATUR
March 3, 2008
SIGN OFF DATE
Rev. Date: 5-02-08

	BY	CHECKED
DESIGN	Xie/Shangkuan	Ahn
DETAILS	van Ryn/Zucchi/Mal	Jain
QUANTITIES	Liao	E. Nichol

PREPARED FOR THE STATE OF CALIFORNIA DEPARTMENT OF TRANSPORTATION

Jal Birdy
PROJECT ENGINEER

BRIDGE NO. 34-0006 L/R
KILOMETER POST 12.8

ORIGINAL SCALE IN MILLIMETERS FOR REDUCED PLANS 0 10 20 30 40 50 60 70 80 90 100

CU 04251
EA 0120S1

DISREGARD PRINTS BEARING EARLIER REVISION DATES

REVISION DATES (PRELIMINARY STAGE ONLY)

SHEET 22 OF 209

October 15, 2010
WB RAMP CCO
USERNAME -> fsamson DATE PLOTTED -> 10/15/2010 TIME PLOTTED -> 14:43:39 PM

DIST.	COUNTY	ROUTE	KILOMETER POST TOTAL PROJECT	SHEET NO.	TOTAL SHEETS
04	SF	80	12.7/13.2	572R1	806

REGISTERED ENGINEER - CIVIL
6-23-08
PLANS APPROVAL DATE
The State of California or its officers or agents shall not be responsible for the accuracy or completeness of electronic copies of this plan sheet.

REGISTERED PROFESSIONAL ENGINEER A.L. ELY No. 18880 Exp. 6-30-09 CIVIL STATE OF CALIFORNIA

T.Y. LIN / MOFFATT & NICHOL
TWO HARRISON STREET
SAN FRANCISCO, CA 94105

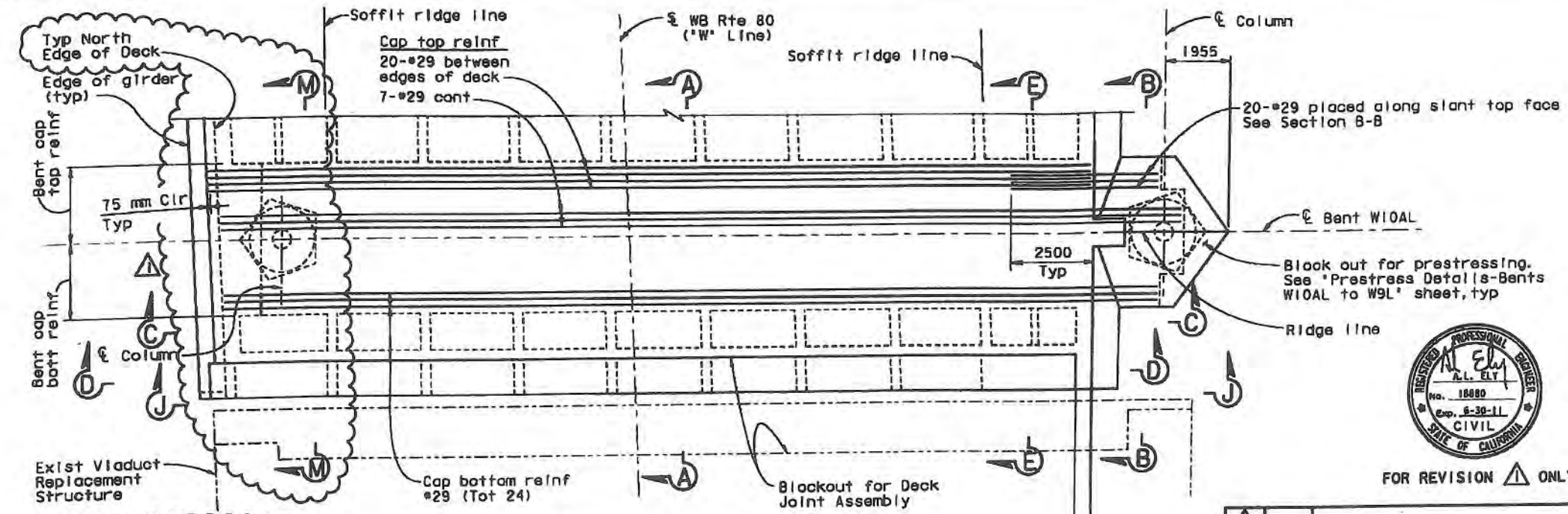

BENT CAP PLAN
1:80

FOR REVISION △1 ONLY

MARK	DATE	DESCRIPTIONS	BY	CH'D
△1	3-24-10	WB Ramp Revisions	TL	AE

REVISIONS

CONTRACT CHANGE ORDER NO. 53
SHEET 13 OF 51

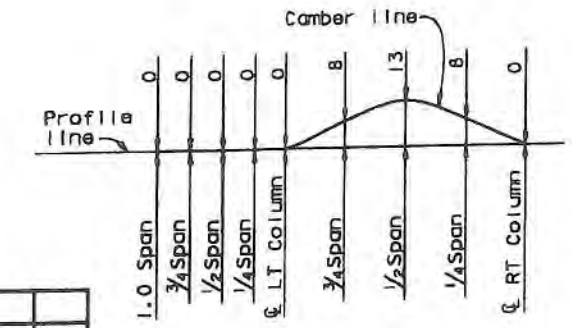

BENT CAP CAMBER DIAGRAM
No scale

Note:
Camber values shown do not include allowance for falsework settlement.

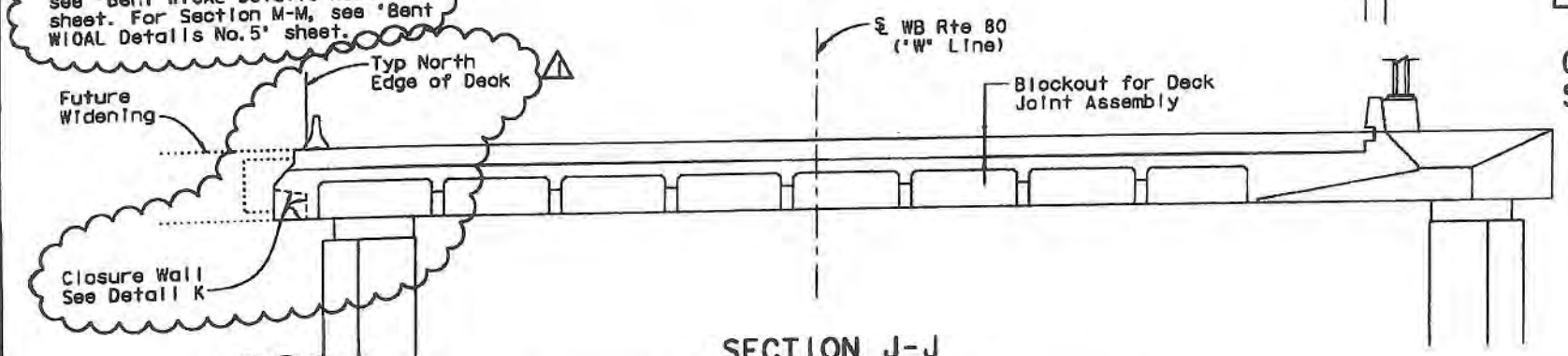

SECTION J-J
1:80

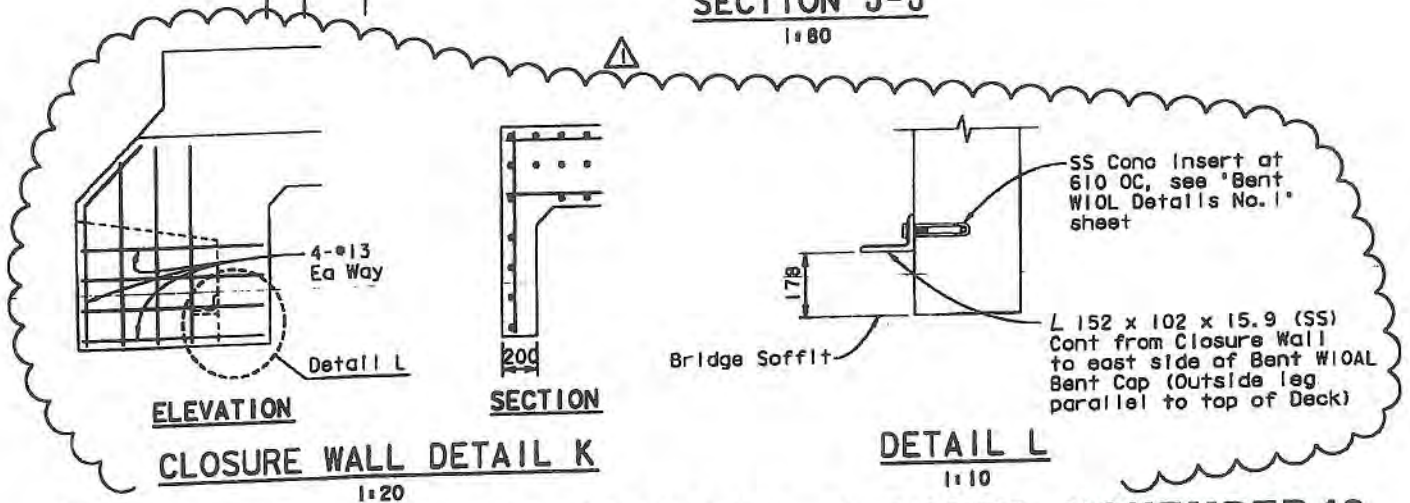

CLOSURE WALL DETAIL K
1:20

DETAIL L
1:10

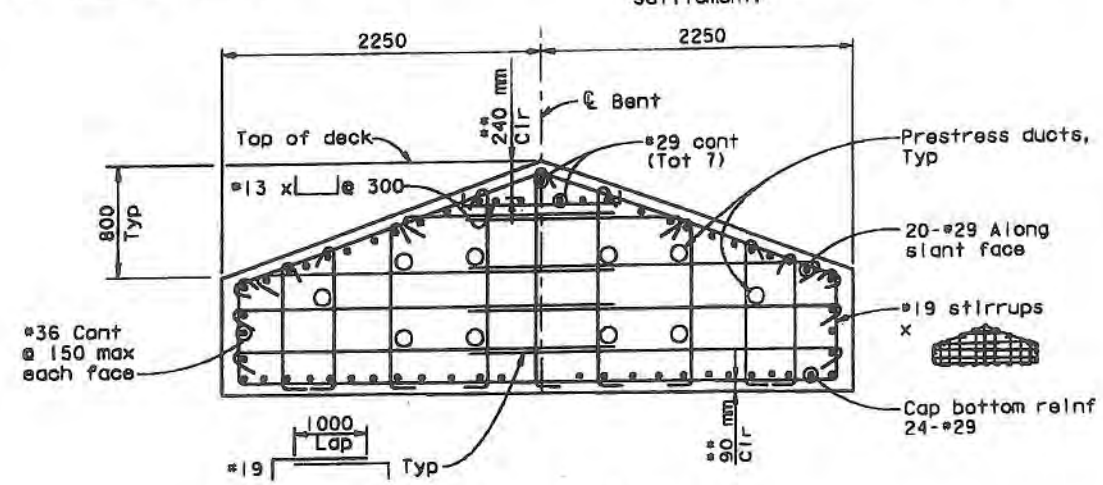

NOTE: Construction joint not permitted in this portion of bent cap.

SECTION B-B
1:25

** indicates clearance to main cap reinf.

△8 REVISED PER ADDENDUM NO. 8 DATED NOVEMBER 12, 2009

△2 REVISED PER ADDENDUM NO. 2 DATED JANUARY 22, 2009

SAN FRANCISCO OAKLAND BAY BRIDGE
EAST SPAN SEISMIC SAFETY PROJECT

YBI TRANSITION STRUCTURES

BENT W10AL DETAILS NO. 2

DESIGN OVERSIGHT: JOSEPH WOOK, BERNARD CHAN, JUAN F. CARPIO, HASAN EL-NATUR
March 3, 2008
SIGN OFF DATE
10/20/10

DESIGN	BY Xie	CHECKED Ahn
DETAILS	BY van Ryn/Zucchi/Wai	CHECKED Jain
QUANTITIES	BY Liao	CHECKED E. Nichol

PREPARED FOR THE STATE OF CALIFORNIA DEPARTMENT OF TRANSPORTATION

Jal Birdy
PROJECT ENGINEER

CU 04251
EA 012051

BRIDGE NO. 34-0006 L/R
KILOMETER POST 12.8

DISREGARD PRINTS BEARING EARLIER REVISION DATES

REVISION DATES (PRELIMINARY STAGE ONLY)

SHEET 23 OF 209

ORIGINAL SCALE IN MILLIMETERS FOR REDUCED PLANS

Rev. Date 5-8-98

WB RAMP CCO

October 15, 2010

USERNAME => fagmson DATE PLOTTED => 10/15/2010 TIME PLOTTED => 11:43:50 PM

DIST.	COUNTY	ROUTE	KILOMETER POST TOTAL PROJECT	SHEET NO.	TOTAL SHEETS
04	SF	80	12.7/13.2	573R1	806

REGISTERED ENGINEER - CIVIL
6-23-08
PLANS APPROVAL DATE

REGISTERED PROFESSIONAL ENGINEER A.L. ELY No. 18880 Exp. 6-30-09 CIVIL STATE OF CALIFORNIA

The State of California or its officers or agents shall not be responsible for the accuracy or completeness of electronic copies of this plan sheet.

T.Y. LIN / MOFFATT & NICHOL
TWO HARRISON STREET
SAN FRANCISCO, CA 94105

Note: For location of Sections C-C and E-E, see "Bent W10AL Details No. 2" sheet.

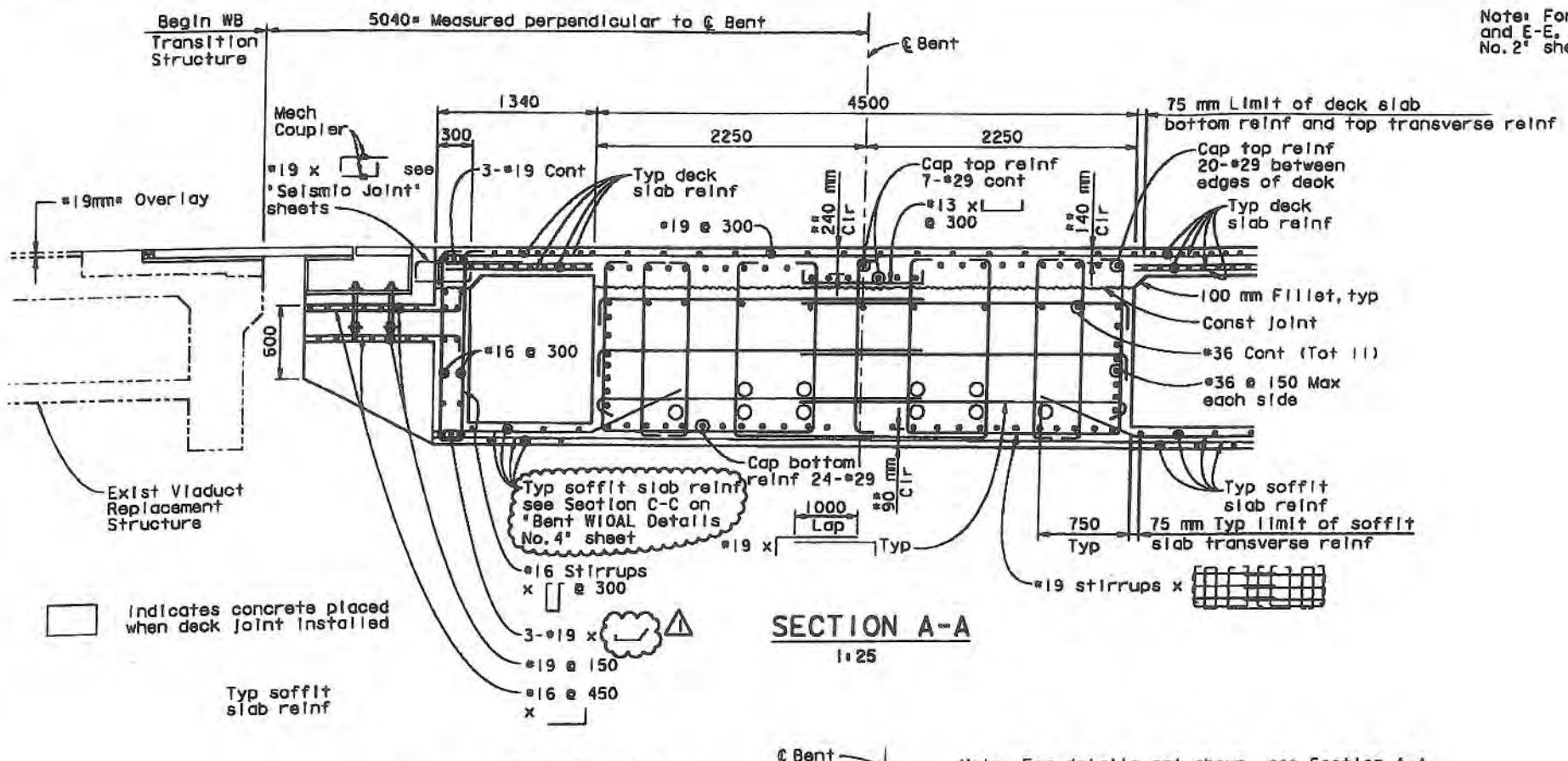

SECTION A-A
1:25

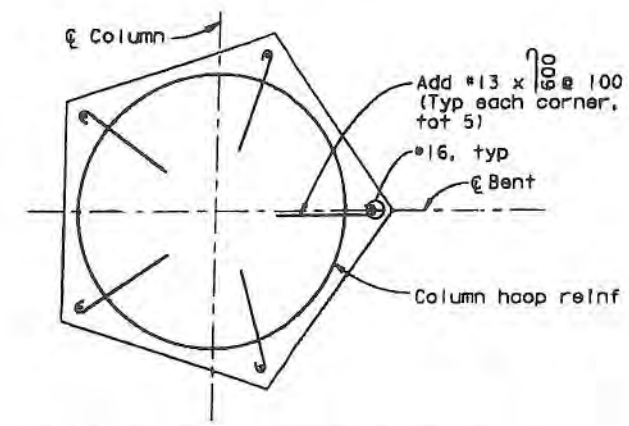

DETAIL D - COLUMN CORNER ANCHOR REINFORCEMENT
(Column corner anchor reinf to be provided in regions within 3000 mm of bridge soffit or top of footing)
No Scale

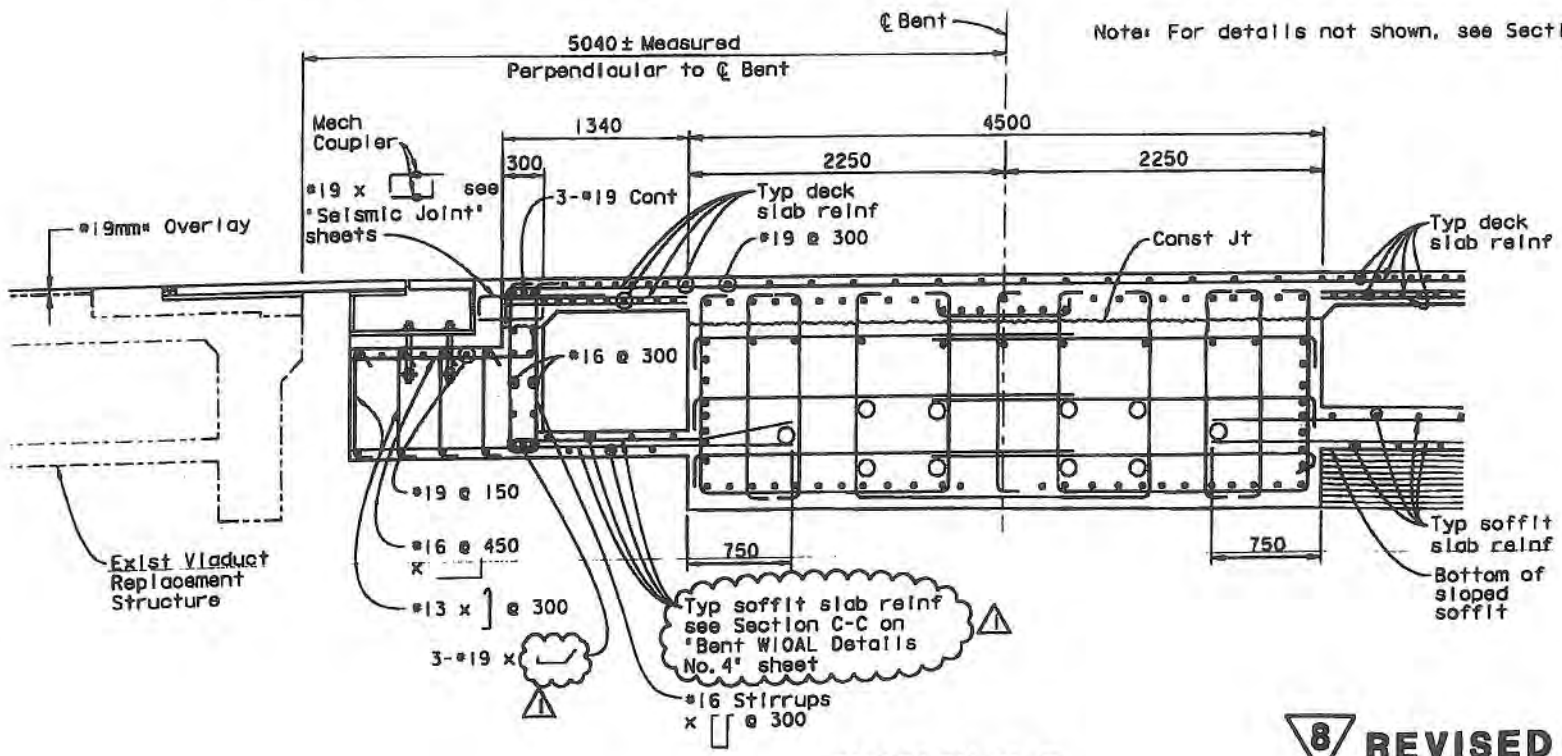

Note: For details not shown, see Section A-A.

SECTION E-E
1:25

FOR REVISION ⚠1 ONLY

MARK	DATE	DESCRIPTIONS	BY	CH'D
⚠1	5-27-10	WB Ramp Revisions	TL	AE
		REVISIONS		

CONTRACT CHANGE ORDER NO. 53
SHEET 14 OF 51

⑧ REVISED PER ADDENDUM NO. 8 DATED NOVEMBER 12, 2009

ALL DIMENSIONS ARE IN MILLIMETERS UNLESS OTHERWISE SHOWN

DESIGN OVERSIGHT
JOHN UBOK, BERNARD CHAN, JUAN F. CARPIO, HASAN EL-NATUR
March 3, 2008
SIGN OFF DATE
Rev. Date: 5-18-98

	BY	CHECKED
DESIGN	Dodd	Desai
DETAILS	van Ryn/Zucchi/Mal	Jain
QUANTITIES	Liao	E. Nichol

ORIGINAL SCALE IN MILLIMETERS FOR REDUCED PLANS 0 10 20 30 40 50 60 70 80 90 100

PREPARED FOR THE STATE OF CALIFORNIA DEPARTMENT OF TRANSPORTATION

Jal Birdy
PROJECT ENGINEER

BRIDGE NO. 34-0006 L/R
KILOMETER POST 12.8

CU 04251
EA 012051

DISREGARD PRINTS BEARING EARLIER REVISION DATES

SAN FRANCISCO OAKLAND BAY BRIDGE
EAST SPAN SEISMIC SAFETY PROJECT

YBI TRANSITION STRUCTURES

BENT W10AL DETAILS NO. 3

REVISION DATES (PRELIMINARY STAGE ONLY)

SHEET 24 OF 209

WB RAMP CCO
October 15, 2010
USERNAME => fsamson DATE PLOTTED => 10/15/2010 TIME PLOTTED => 11:44:00 PM

DIST.	COUNTY	ROUTE	KILOMETER POST TOTAL PROJECT	SHEET NO.	TOTAL SHEETS
04	SF	80	12.7/13.2	574R1	806

REGISTERED ENGINEER - CIVIL

6-23-08

PLANS APPROVAL DATE

The State of California or its officers or agents shall not be responsible for the accuracy or completeness of electronic copies of this plan sheet.

REGISTERED PROFESSIONAL ENGINEER A.L. ELY No. 18880 Exp. 6-30-09 CIVIL STATE OF CALIFORNIA

T.Y. LIN / MOFFATT & NICHOL
TWO HARRISON STREET
SAN FRANCISCO, CA 94105

MARK	DATE	DESCRIPTIONS	BY	CH'D
1	12-23-09	WB Ramp Revisions	TL	AE

REVISIONS

CONTRACT CHANGE ORDER NO. 53
SHEET 15 OF 51

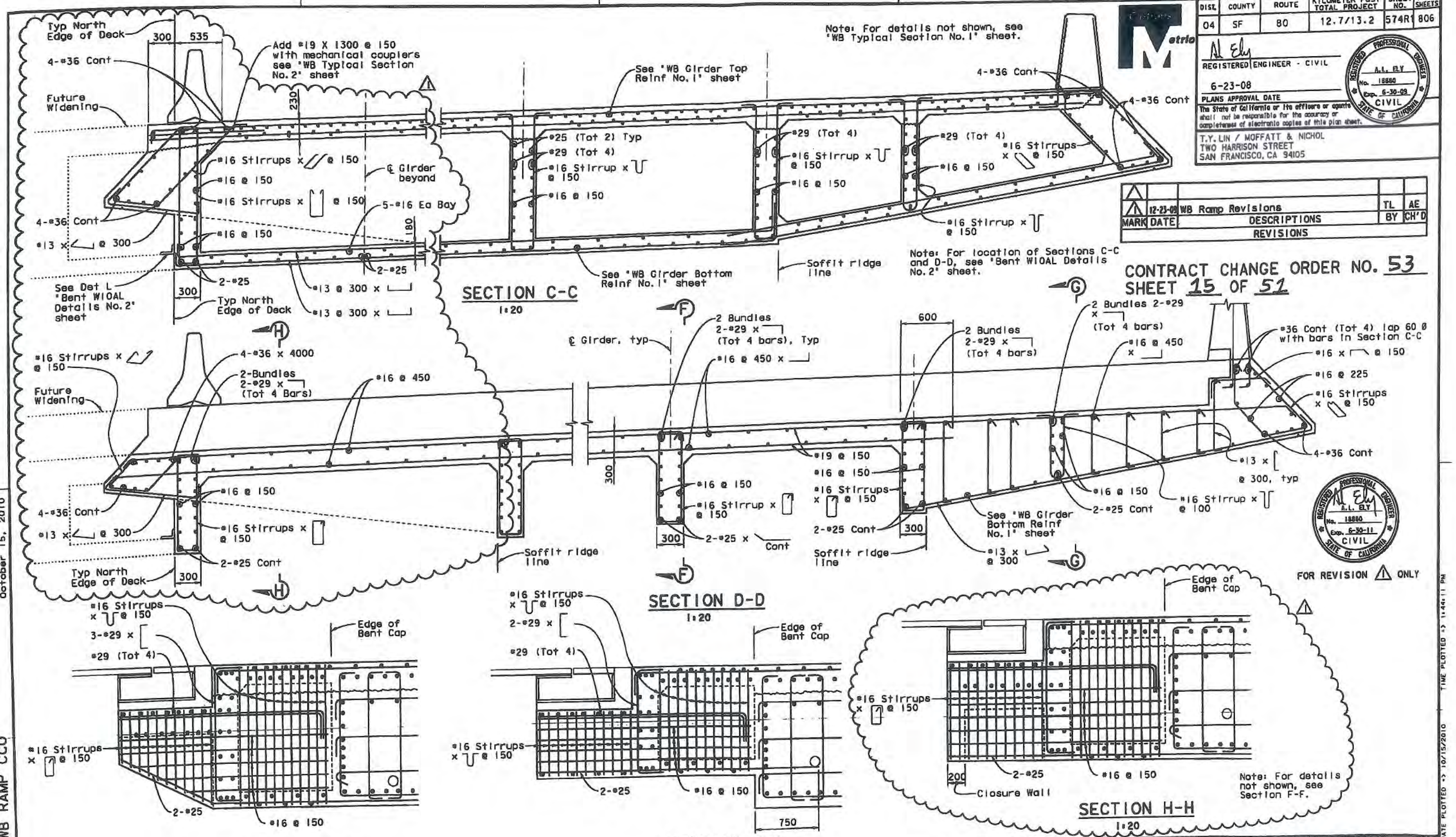

FOR REVISION 1 ONLY

REGISTERED PROFESSIONAL ENGINEER A.L. ELY No. 18880 Exp. 6-30-11 CIVIL STATE OF CALIFORNIA

ALL DIMENSIONS ARE IN MILLIMETERS UNLESS OTHERWISE SHOWN

SAN FRANCISCO OAKLAND BAY BRIDGE
EAST SPAN SEISMIC SAFETY PROJECT

YBI TRANSITION STRUCTURES

BENT W10AL DETAILS NO. 4

DESIGN OVERSIGHT: JOHN MOOK, BERNARD CHAN, JUAN F. CARPIO, HASAN EL-NATUR — March 3, 2008 — SIGN OFF DATE

	BY	CHECKED
DESIGN	Dodd	Desai
DETAILS	Van Ryn/Zucchi/Mal	Jain
QUANTITIES	Liao	E. Nichol

PREPARED FOR THE STATE OF CALIFORNIA DEPARTMENT OF TRANSPORTATION

Jal Birdy, PROJECT ENGINEER

BRIDGE NO. 34-0006 L/R

KILOMETER POST 12.8

CU 04251
EA 0120S1

DISREGARD PRINTS BEARING EARLIER REVISION DATES

REVISION DATES (PRELIMINARY STAGE ONLY)

SHEET 25 OF 209

ORIGINAL SCALE IN MILLIMETERS FOR REDUCED PLANS

Rev. Date 5-5-98

WB RAMP CCO

October 15, 2010

USERNAME => FAGUNDES DATE PLOTTED => 10/15/2010 TIME PLOTTED => 11:44:11 PM

DIST.	COUNTY	ROUTE	KILOMETER POST TOTAL PROJECT	SHEET NO.	TOTAL SHEETS
04	SF	80	12.7/13.2	S74AR1	806

REGISTERED ENGINEER - CIVIL
6-23-08
PLANS APPROVAL DATE
A.L. ELY No. 18880 Exp. 6-30-09 CIVIL STATE OF CALIFORNIA
The State of California or its officers or agents shall not be responsible for the accuracy or completeness of electronic copies of this plan sheet.

T.Y. LIN / MOFFATT & NICHOL
TWO HARRISON STREET
SAN FRANCISCO, CA 94105

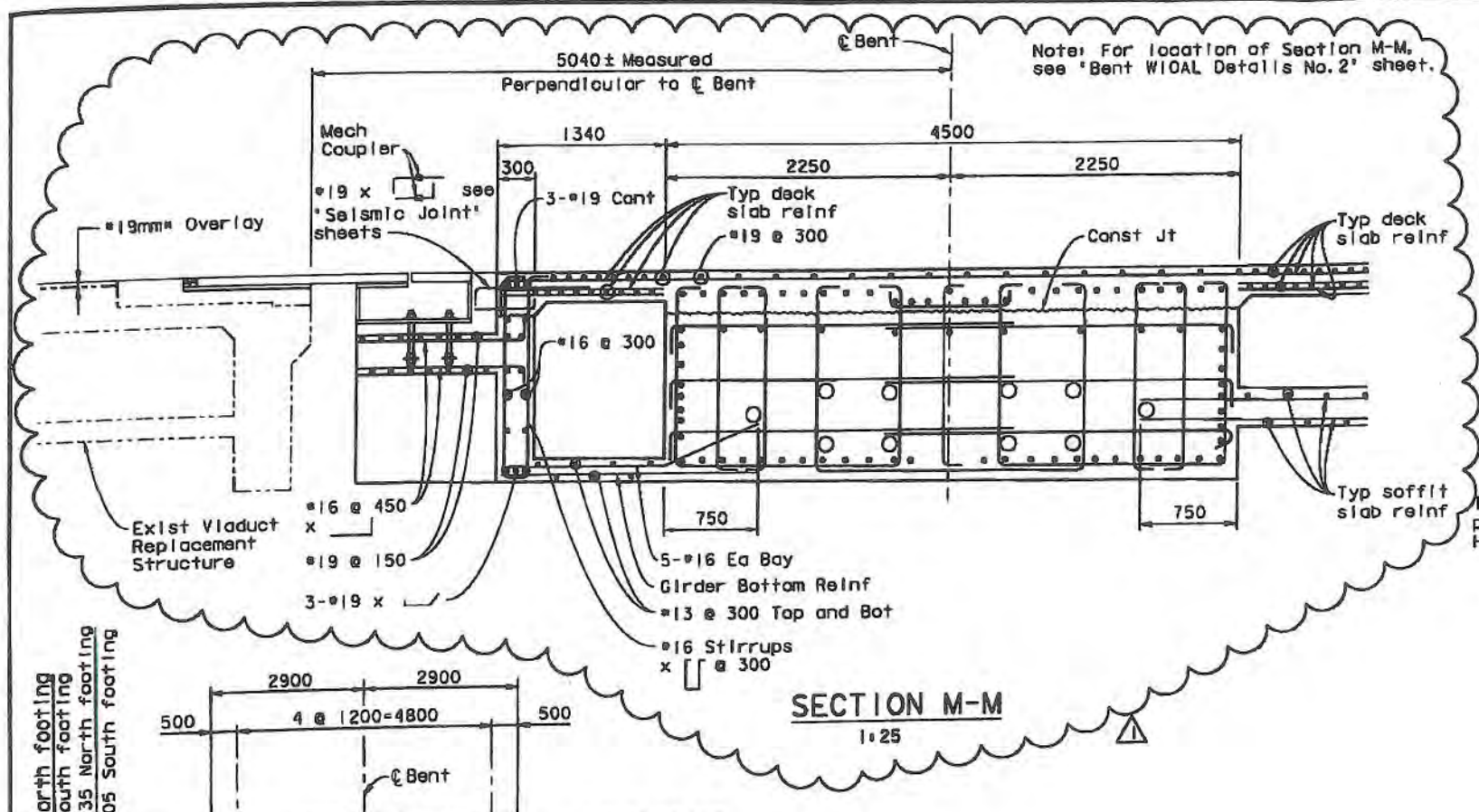

SECTION M-M
1:25

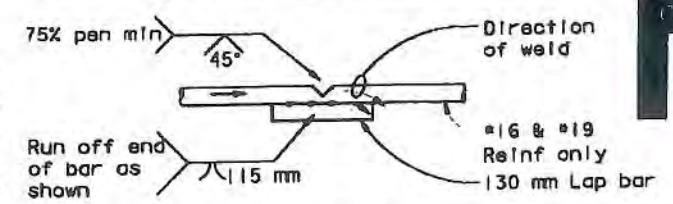

1. Butt weld to be made first
2. Butt weld to be made in flat or horizontal position
3. Lap bar to be centered on splice
4. Flare weld to be made in direction shown
5. Lap bar equal size to spiral bar

VEE GROOVE WELDED SPLICE

Individual hoops, made continuous with 100% penetration welds, may be substituted for spirals. Hoops shall be same size, spacing, and material as spiral

BUTT WELDED CONTINUOUS HOOP OR SPIRAL

Note: All column spiral and hoop splices shall be ultimate butt splices.

COLUMN SPIRAL AND HOOP SPLICE DETAILS
No Scale

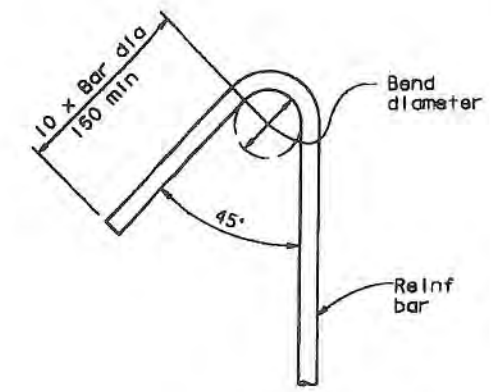

SEISMIC HOOK
No Scale

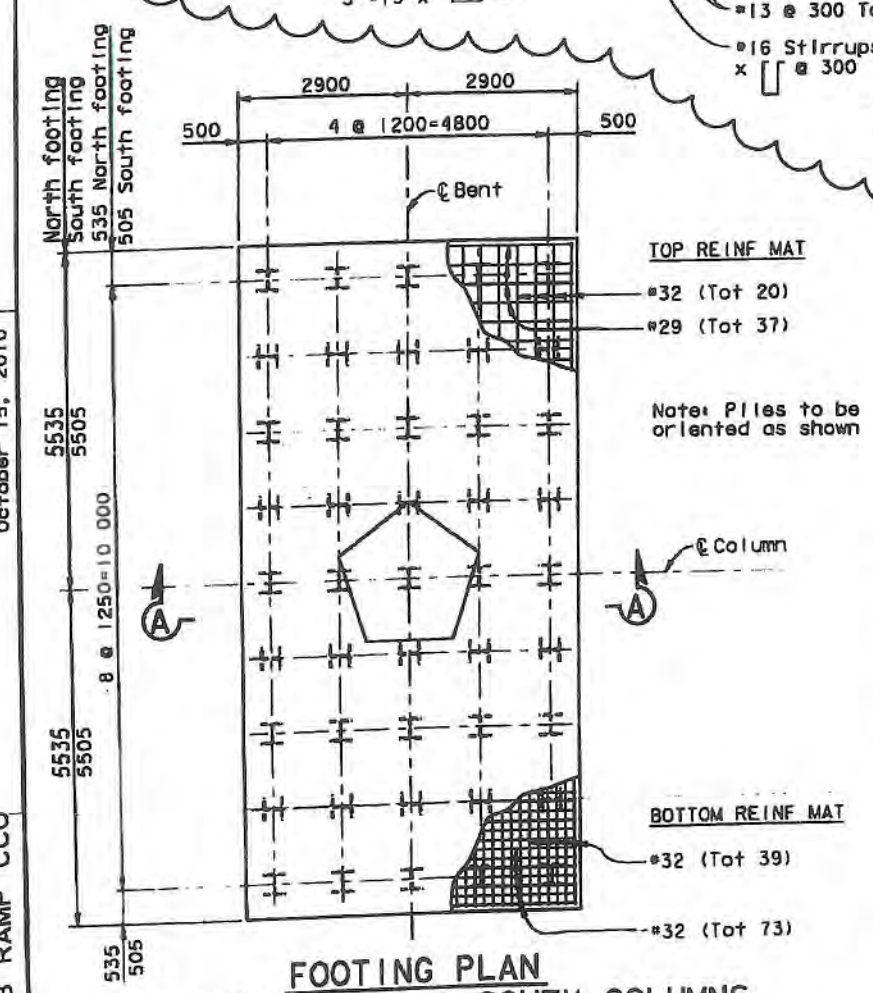

FOOTING PLAN
BENT W1OAL NORTH & SOUTH COLUMNS
(North footing shown, south footing similar)
(Tot 45 piles ea footing)
1:60

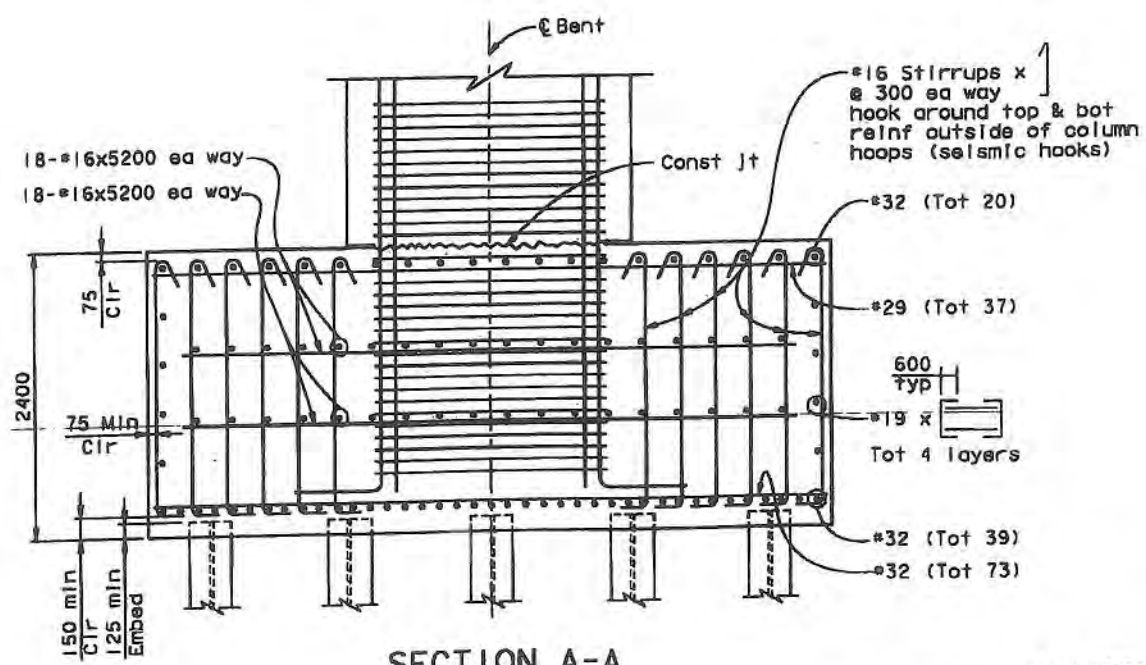

SECTION A-A
1:30

FOR REVISION ⚠ ONLY

MARK	DATE	DESCRIPTIONS	BY	CH'D
⚠	12-23-09	WB Ramp Revisions	TL	AE

REVISIONS

CONTRACT CHANGE ORDER NO. 53
SHEET 16 OF 51

8 ADDED PER ADDENDUM NO. 8 DATED NOVEMBER 12, 2009

ALL DIMENSIONS ARE IN MILLIMETERS UNLESS OTHERWISE SHOWN

SAN FRANCISCO OAKLAND BAY BRIDGE
EAST SPAN SEISMIC SAFETY PROJECT

YBI TRANSITION STRUCTURES

BENT W1OAL DETAILS NO. 5

DESIGN OVERSIGHT: JOHN SOAK, BERNARD CHAN, JUAN F. CARPIO, HASAN EL-NATUR
March 3, 2008
SIGN OFF DATE

	BY	CHECKED
DESIGN	Dodd	Desai
DETAILS	van Ryn/Zucchi/Mai	Jain
QUANTITIES	Liao	E. Nichol

PREPARED FOR THE STATE OF CALIFORNIA DEPARTMENT OF TRANSPORTATION

Jai Birdy
PROJECT ENGINEER

BRIDGE NO. 34-0006 L/R
KILOMETER POST 12.8

CU 04251
EA 0120S1

DISREGARD PRINTS BEARING EARLIER REVISION DATES

REVISION DATES (PRELIMINARY STAGE ONLY)

SHEET 25A OF 209

ORIGINAL SCALE IN MILLIMETERS FOR REDUCED PLANS

Rev. Date 5-8-98

WB RAMP CCO
October 15, 2010
USERNAME -> fsamson DATE PLOTTED -> 10/15/2010 TIME PLOTTED -> 11:44:22 PM

DIST.	COUNTY	ROUTE	KILOMETER POST TOTAL PROJECT	SHEET NO.	TOTAL SHEETS
04	SF	80	12.7/13.2	575R1	806

REGISTERED ENGINEER - CIVIL
6-23-08
PLANS APPROVAL DATE
The State of California or its officers or agents shall not be responsible for the accuracy or completeness of electronic copies of this plan sheet.

REGISTERED PROFESSIONAL ENGINEER A.L. ELY No. 18880 Exp. 6-30-09 CIVIL STATE OF CALIFORNIA

T.Y. LIN / MOFFATT & NICHOL
TWO HARRISON STREET
SAN FRANCISCO, CA 94105

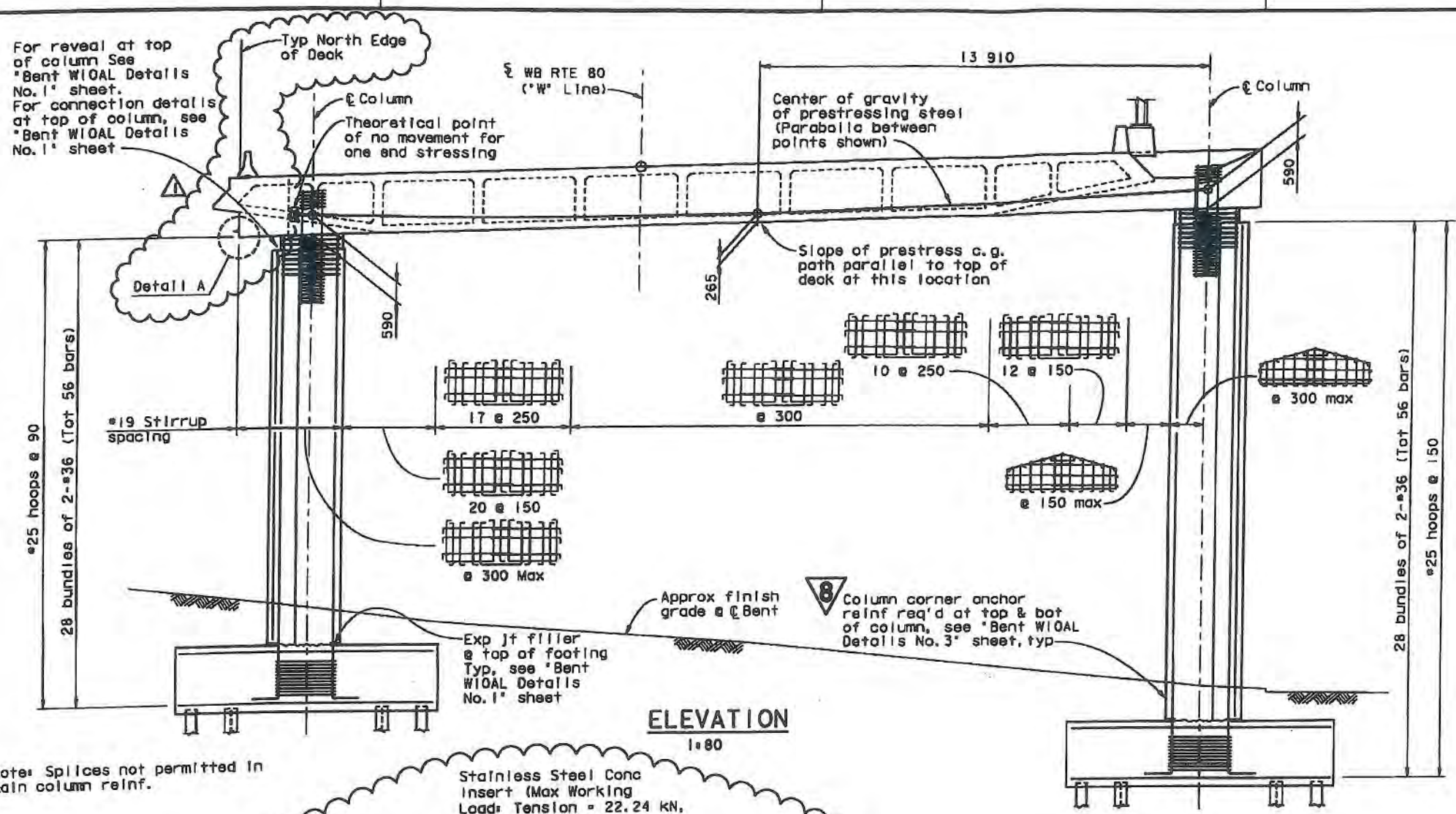

ELEVATION
1:80

Note: Splices not permitted in main column reinf.

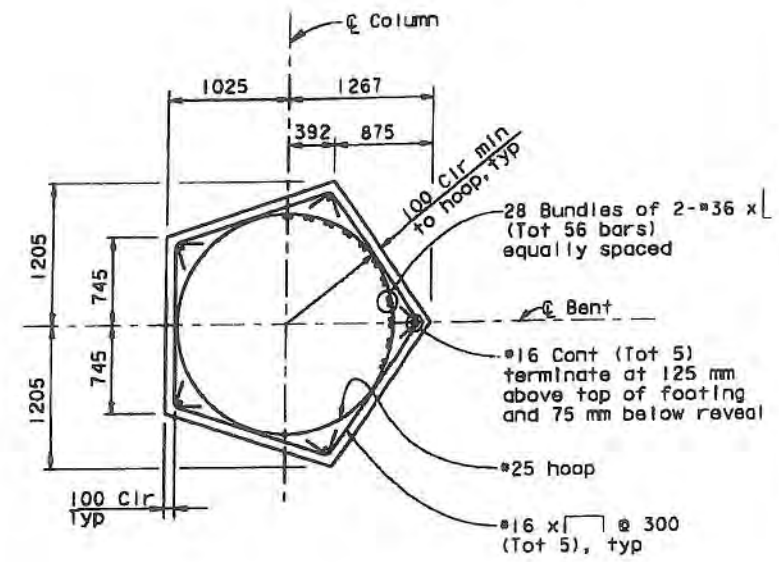

TYPICAL COLUMN SECTION
(South column shown, North column opposite hand)
1:80

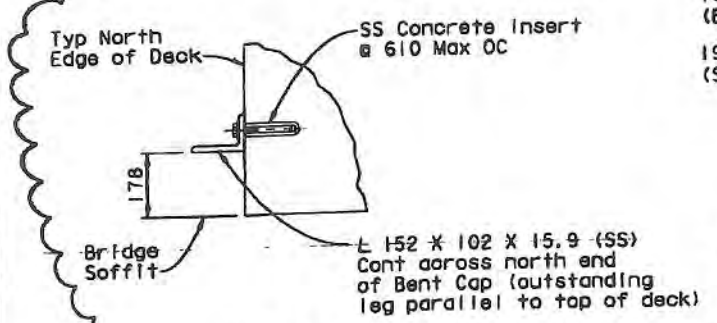

DETAIL A
1:10

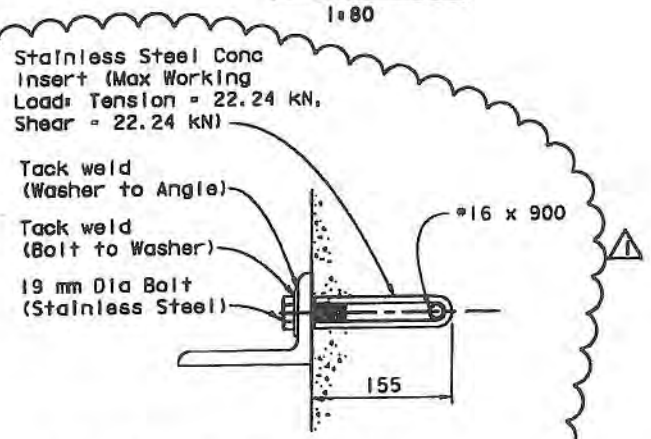

Note: Concrete Inserts shall not be located more than 150 mm from ends of support angles.

SS CONCRETE INSERT
1:4

REGISTERED PROFESSIONAL ENGINEER A.L. ELY No. 18880 Exp. 6-30-11 CIVIL STATE OF CALIFORNIA

FOR REVISION 1 ONLY

MARK	DATE	DESCRIPTIONS	BY	CH'D
1	3-24-10	WB Ramp Revisions	TL	AE

REVISIONS

CONTRACT CHANGE ORDER NO. 53
SHEET 17 OF 51

8 REVISED PER ADDENDUM NO. 8 DATED NOVEMBER 12, 2009

ALL DIMENSIONS ARE IN MILLIMETERS UNLESS OTHERWISE SHOWN

DESIGN OVERSIGHT
JOHN MOOK, BERNARD CHAN, JUAN F. CARPIO, HASAN EL-NATUR
10/20/10
SIGN OFF DATE
Rev. Date: 5-18-98

	BY	CHECKED
DESIGN	Xie/Shangkuan	Ahn
DETAILS	van Ryn/Zuoohl/Mal	Jain
QUANTITIES	Liao	E. Nichol

ORIGINAL SCALE IN MILLIMETERS FOR REDUCED PLANS 0 10 20 30 40 50 60 70 80 90 100

PREPARED FOR THE STATE OF CALIFORNIA DEPARTMENT OF TRANSPORTATION

Jai Birdy
PROJECT ENGINEER

CU 04251
EA 0120S1

BRIDGE NO. 34-0006 L/R
KILOMETER POST 12.8

DISREGARD PRINTS BEARING EARLIER REVISION DATES

REVISION DATES (PRELIMINARY STAGE ONLY)

SHEET 26 OF 209

SAN FRANCISCO OAKLAND BAY BRIDGE
EAST SPAN SEISMIC SAFETY PROJECT

YBI TRANSITION STRUCTURES

BENT W10L DETAILS NO. 1

October 15, 2010
WB RAMP CCO
USERNAME => fadmson DATE PLOTTED => 10/15/2010 TIME PLOTTED => 11:44:33 PM

DIST.	COUNTY	ROUTE	KILOMETER POST TOTAL PROJECT	SHEET NO.	TOTAL SHEETS
04	SF	80	12.7/13.2	576R1	806

REGISTERED ENGINEER - CIVIL
6-23-08
PLANS APPROVAL DATE

The State of California or its officers or agents shall not be responsible for the accuracy or completeness of electronic copies of this plan sheet.

T.Y. LIN / MOFFATT & NICHOL
TWO HARRISON STREET
SAN FRANCISCO, CA 94105

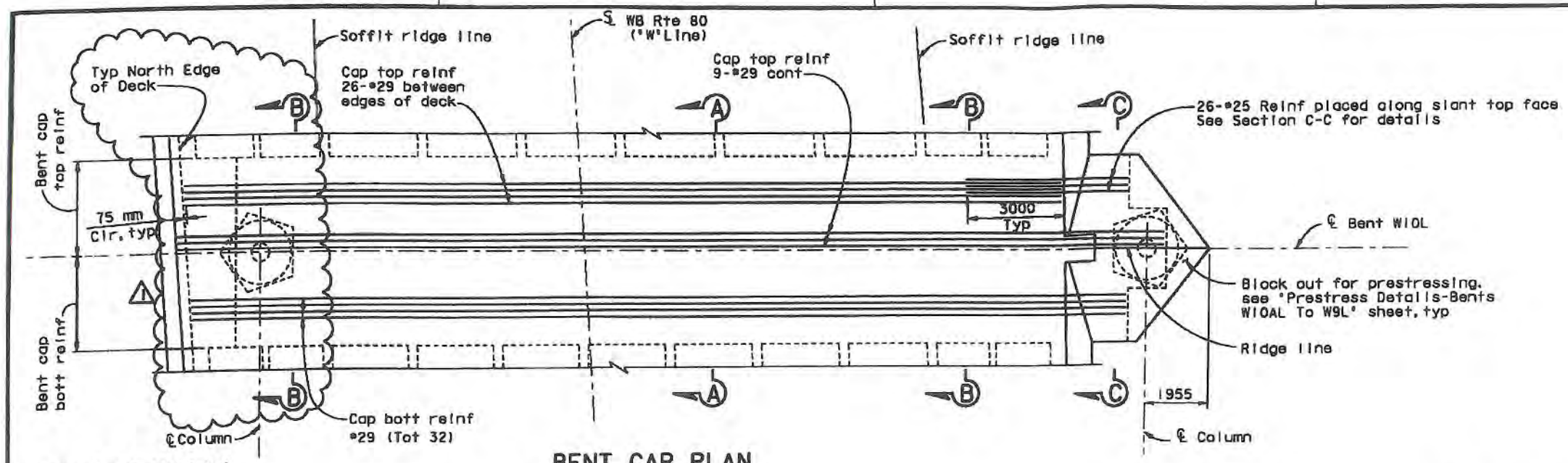

Note: For Section C-C see 'Bent W10L Details No. 3' sheet.

BENT CAP PLAN
1:80

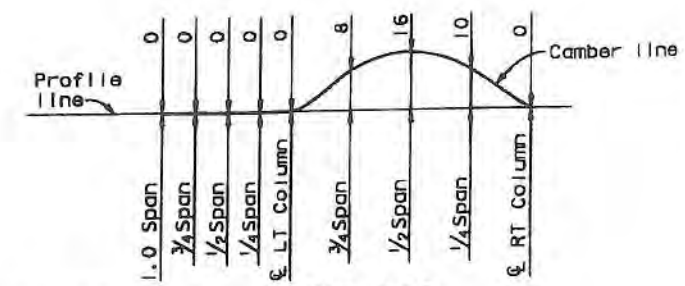

Note:
Camber values shown do not include allowance for falsework settlement.

BENT CAP CAMBER DIAGRAM
No scale

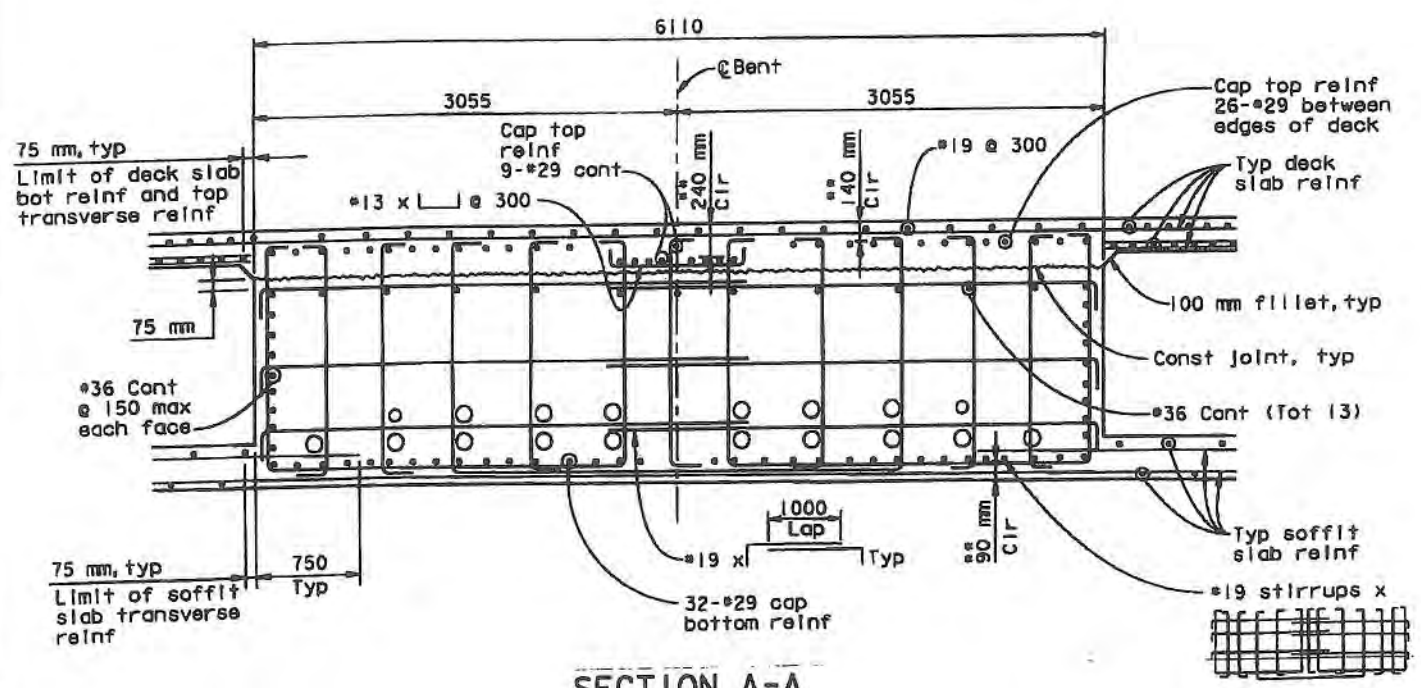

SECTION A-A
1:25

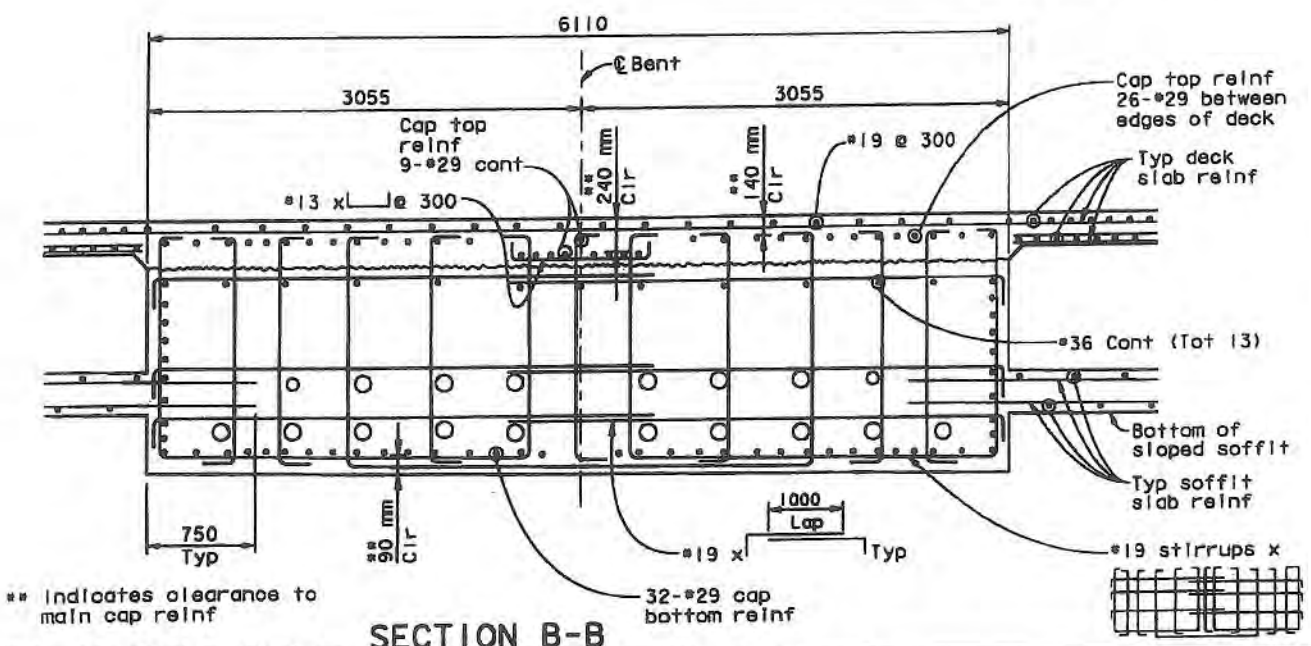

** Indicates clearance to main cap reinf

~~Note: For details not shown~~ see Section A-A

SECTION B-B
1:25

MARK	DATE	DESCRIPTIONS	BY	CH'D
1	12-23-08	WB Ramp Revisions	TL	AE

REVISIONS

FOR REVISION 1 ONLY

CONTRACT CHANGE ORDER NO. 53
SHEET 18 OF 51

ALL DIMENSIONS ARE IN MILLIMETERS UNLESS OTHERWISE SHOWN

SAN FRANCISCO OAKLAND BAY BRIDGE
EAST SPAN SEISMIC SAFETY PROJECT

YBI TRANSITION STRUCTURES

BENT W10L DETAILS NO. 2

DESIGN OVERSIGHT
JOHN MOOK, BERNARD CHAN, JUAN F. CARPIO — March 3, 2008 — SIGN OFF DATE
HASAN EL-HATUR — 10/26/10

DESIGN	BY Xie	CHECKED Ahn
DETAILS	BY van Ryn/Zucchi/Mal	CHECKED Jain
QUANTITIES	BY Liao	CHECKED E. Nichol

PREPARED FOR THE STATE OF CALIFORNIA DEPARTMENT OF TRANSPORTATION

Jal Birdy
PROJECT ENGINEER

BRIDGE NO. 34-0006 L/R
KILOMETER POST 12.8

CU 04251
EA 012051

DISREGARD PRINTS BEARING EARLIER REVISION DATES

REVISION DATES (PRELIMINARY STAGE ONLY)

SHEET 27 OF 209

ORIGINAL SCALE IN MILLIMETERS FOR REDUCED PLANS 0 10 20 30 40 50 60 70 80 90 100

Rev Date: 5-18-98

WB RAMP CCO

October 15, 2010

USERNAME => fadamson DATE PLOTTED => 10/15/2010 TIME PLOTTED => 11:44:44 PM

DIST.	COUNTY	ROUTE	KILOMETER POST TOTAL PROJECT	SHEET NO.	TOTAL SHEETS
04	SF	80	12.7/13.2	578R1	806

REGISTERED ENGINEER - CIVIL

6-23-08
PLANS APPROVAL DATE

REGISTERED PROFESSIONAL ENGINEER A.L. ELY No. 18880 Exp. 6-30-09 CIVIL STATE OF CALIFORNIA

The State of California or its officers or agents shall not be responsible for the accuracy or completeness of electronic copies of this plan sheet.

T.Y. LIN / MOFFATT & NICHOL
TWO HARRISON STREET
SAN FRANCISCO, CA 94105

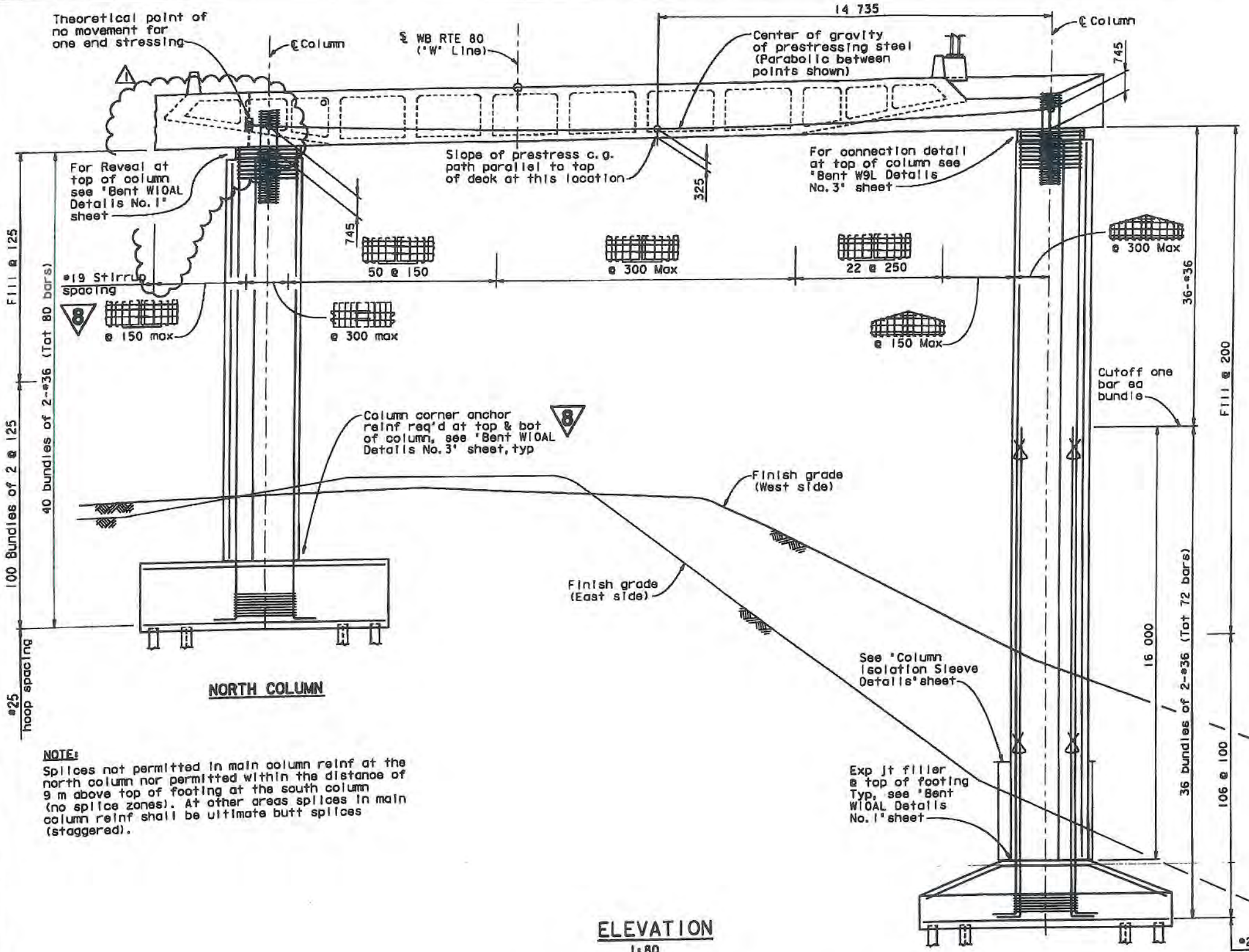

NOTE:
Splices not permitted in main column reinf at the north column nor permitted within the distance of 9 m above top of footing at the south column (no splice zones). At other areas splices in main column reinf shall be ultimate butt splices (staggered).

ELEVATION
1:80

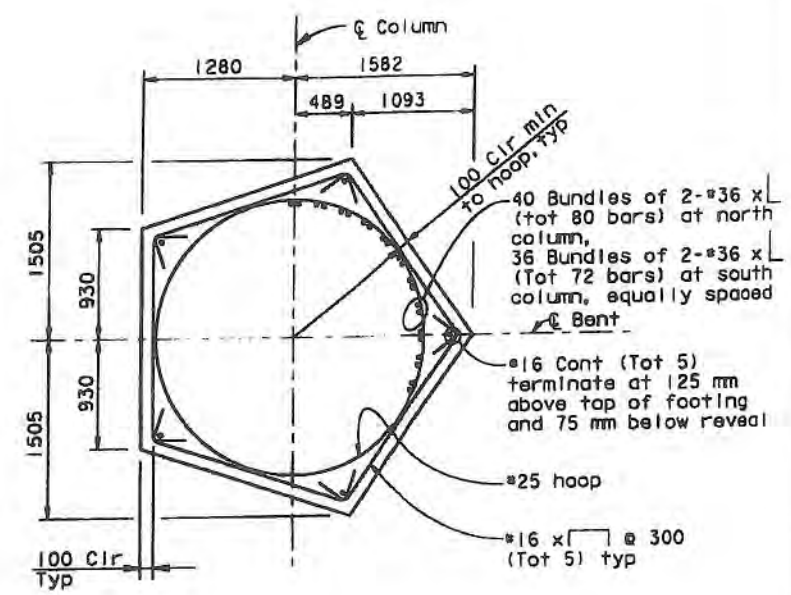

TYPICAL COLUMN SECTION
(South column shown, North column opposite hand)
1:30

REGISTERED PROFESSIONAL ENGINEER A.L. ELY No. 18880 Exp. 6-30-11 CIVIL STATE OF CALIFORNIA

FOR REVISION 1 ONLY

MARK	DATE	DESCRIPTIONS	BY	CH'D
1	12-23-09	WB Ramp Revisions	TL	AE

REVISIONS

CONTRACT CHANGE ORDER NO. 53
SHEET 19 OF 51

8 REVISED PER ADDENDUM NO. 8 DATED NOVEMBER 12, 2009

ALL DIMENSIONS ARE IN MILLIMETERS UNLESS OTHERWISE SHOWN

DESIGN OVERSIGHT
March 3, 2008
SIGN OFF DATE

	BY	CHECKED
DESIGN	Xie/Shangkuan	Ahn
DETAILS	van Ryn/Zucchi/Mal	Jain
QUANTITIES	Ligo	E. Nichol

PREPARED FOR THE STATE OF CALIFORNIA DEPARTMENT OF TRANSPORTATION

Jal Birdy
PROJECT ENGINEER

BRIDGE NO. 34-0006 L/R
KILOMETER POST 12.8

CU 04251
EA 0120S1

SAN FRANCISCO OAKLAND BAY BRIDGE
EAST SPAN SEISMIC SAFETY PROJECT

YBI TRANSITION STRUCTURES

BENT W9L DETAILS NO. 1

DISREGARD PRINTS BEARING EARLIER REVISION DATES

REVISION DATES (PRELIMINARY STAGE ONLY)

SHEET 29 OF 209

ORIGINAL SCALE IN MILLIMETERS FOR REDUCED PLANS

WB RAMP CCO

October 15, 2010

USERNAME => fsumson DATE PLOTTED => 10/15/2010 TIME PLOTTED => 11:48:59 PM

DIST.	COUNTY	ROUTE	KILOMETER POST TOTAL PROJECT	SHEET NO.	TOTAL SHEETS
04	SF	80	12.7/13.2	579R1	806

REGISTERED ENGINEER - CIVIL
6-23-08
PLANS APPROVAL DATE
The State of California or its officers or agents shall not be responsible for the accuracy or completeness of electronic copies of this plan sheet.
REGISTERED PROFESSIONAL ENGINEER A.L. ELY No. 18880 Exp. 6-30-09 CIVIL STATE OF CALIFORNIA

T.Y. LIN / MOFFATT & NICHOL
TWO HARRISON STREET
SAN FRANCISCO, CA 94105

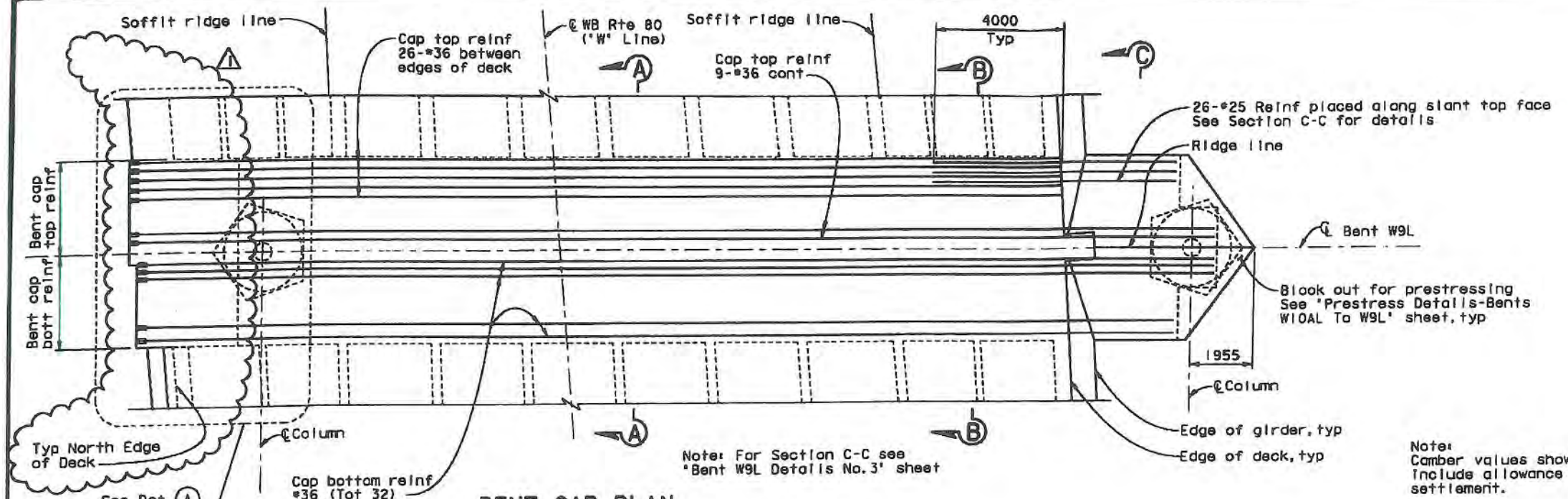

BENT CAP PLAN
1:80

Note: Camber values shown do not include allowance for falsework settlement.

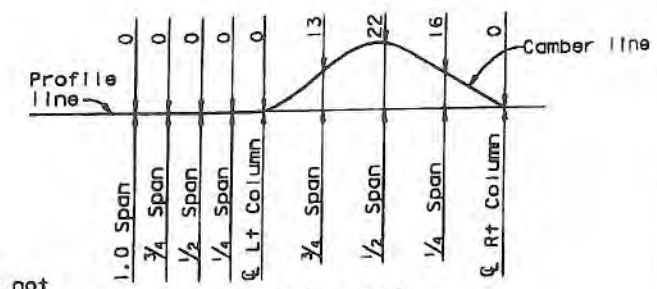

BENT CAP CAMBER DIAGRAM
No scale

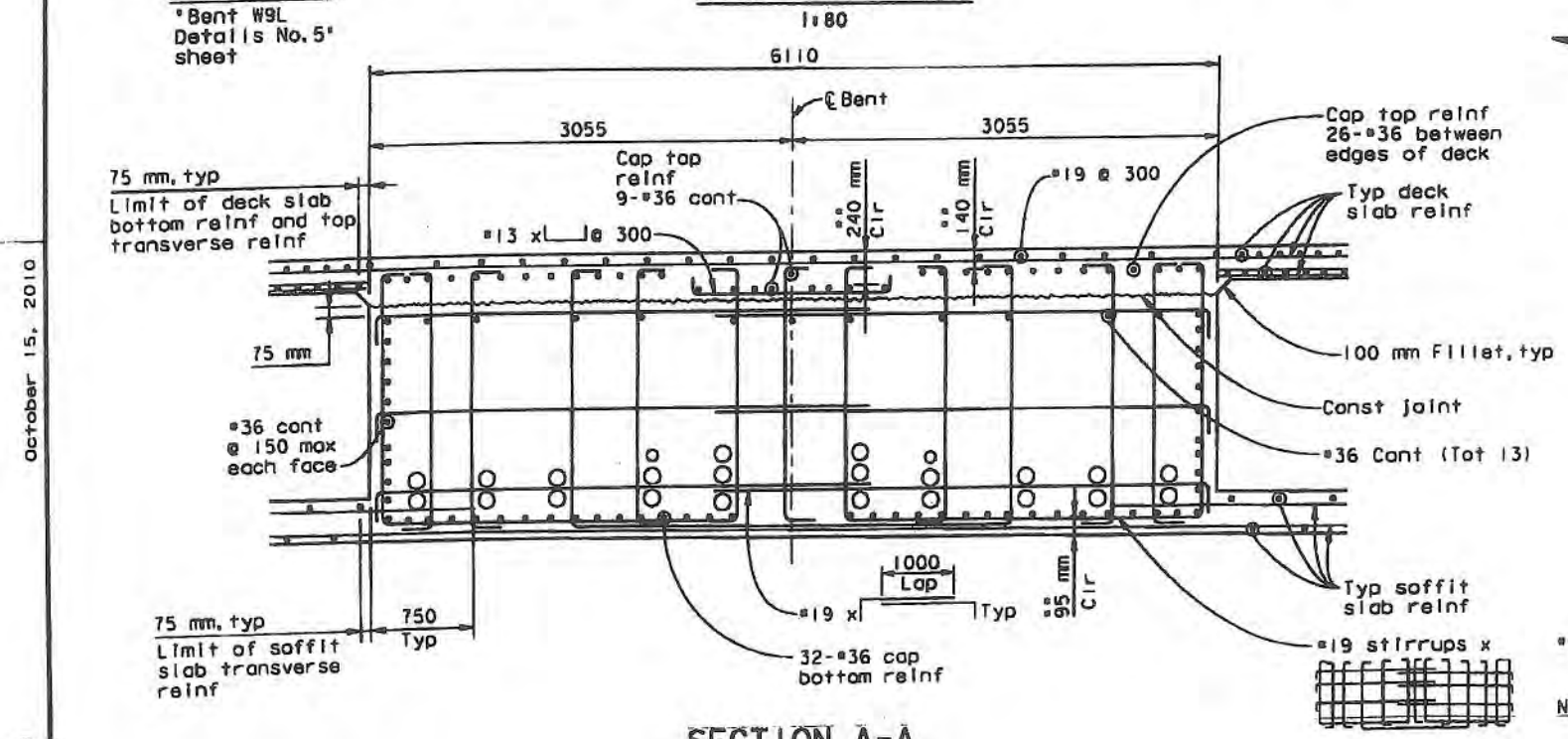

SECTION A-A
1:25

** indicates clearance to main cap reinf

Note: For details not shown see Section A-A

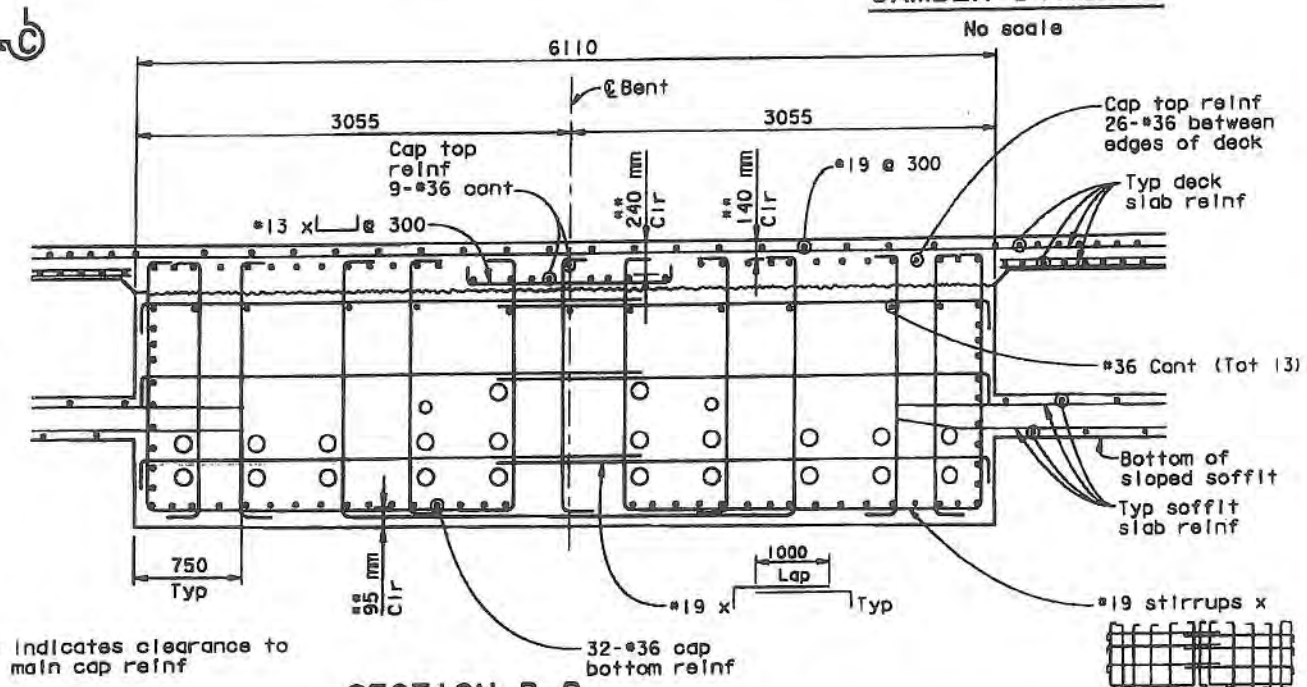

SECTION B-B
1:25

REGISTERED PROFESSIONAL ENGINEER A.L. ELY No. 18880 Exp. 6-30-11 CIVIL STATE OF CALIFORNIA

FOR REVISION 1 ONLY

MARK	DATE	DESCRIPTIONS	BY	CH'D
1	12-23-09	WB Ramp Revisions	TL	AE

REVISIONS

CONTRACT CHANGE ORDER NO. 53
SHEET 20 OF 51

8 REVISED PER ADDENDUM NO. 8 DATED NOVEMBER 12, 2009

ALL DIMENSIONS ARE IN MILLIMETERS UNLESS OTHERWISE SHOWN

DESIGN OVERSIGHT
JOHN MOOK, BERNARD CHAN, JUAN F. CARPIO HASAN EL-NATUR
March 3, 2008
SIGN OFF DATE
10/26/10

	BY	CHECKED
DESIGN	Xia	Ahn
DETAILS	van Ryn/Zucchi/Wal	Jain
QUANTITIES	Lido	E. Nichol

PREPARED FOR THE STATE OF CALIFORNIA DEPARTMENT OF TRANSPORTATION

Jal Birdy
PROJECT ENGINEER

BRIDGE NO. 34-0006 L/R
KILOMETER POST 12.8

CU 04251
EA 0120S1

SAN FRANCISCO OAKLAND BAY BRIDGE
EAST SPAN SEISMIC SAFETY PROJECT

YBI TRANSITION STRUCTURES

BENT W9L DETAILS NO. 2

DISREGARD PRINTS BEARING EARLIER REVISION DATES 9/14/07 9/14/08 1/1/09 1/14/09 1/14/09 1/14/09 1/14/09 1/14/09 1/14/09 1/14/09
REVISION DATES (PRELIMINARY STAGE ONLY)

SHEET 30 OF 209

ORIGINAL SCALE IN MILLIMETERS FOR REDUCED PLANS 0 10 20 30 40 50 60 70 80 90 100

Rev Date 5-15-99

WB RAMP CCO

October 15, 2010

ISERNAME: -> fecmson DATE PLOTTED -> 10/15/2010 TIME PLOTTED -> 1:49:09 PM

DIST.	COUNTY	ROUTE	KILOMETER POST TOTAL PROJECT	SHEET NO.	TOTAL SHEETS
04	SF	80	12.7/13.2	581AR	806

REGISTERED ENGINEER - CIVIL

PLANS APPROVAL DATE

REGISTERED PROFESSIONAL ENGINEER A.L. ELY No. 18880 Exp. 6-30-09 CIVIL STATE OF CALIFORNIA

The State of California or its officers or agents shall not be responsible for the accuracy or completeness of electronic copies of this plan sheet.

T.Y. LIN / MOFFATT & NICHOL
TWO HARRISON STREET
SAN FRANCISCO, CA 94105

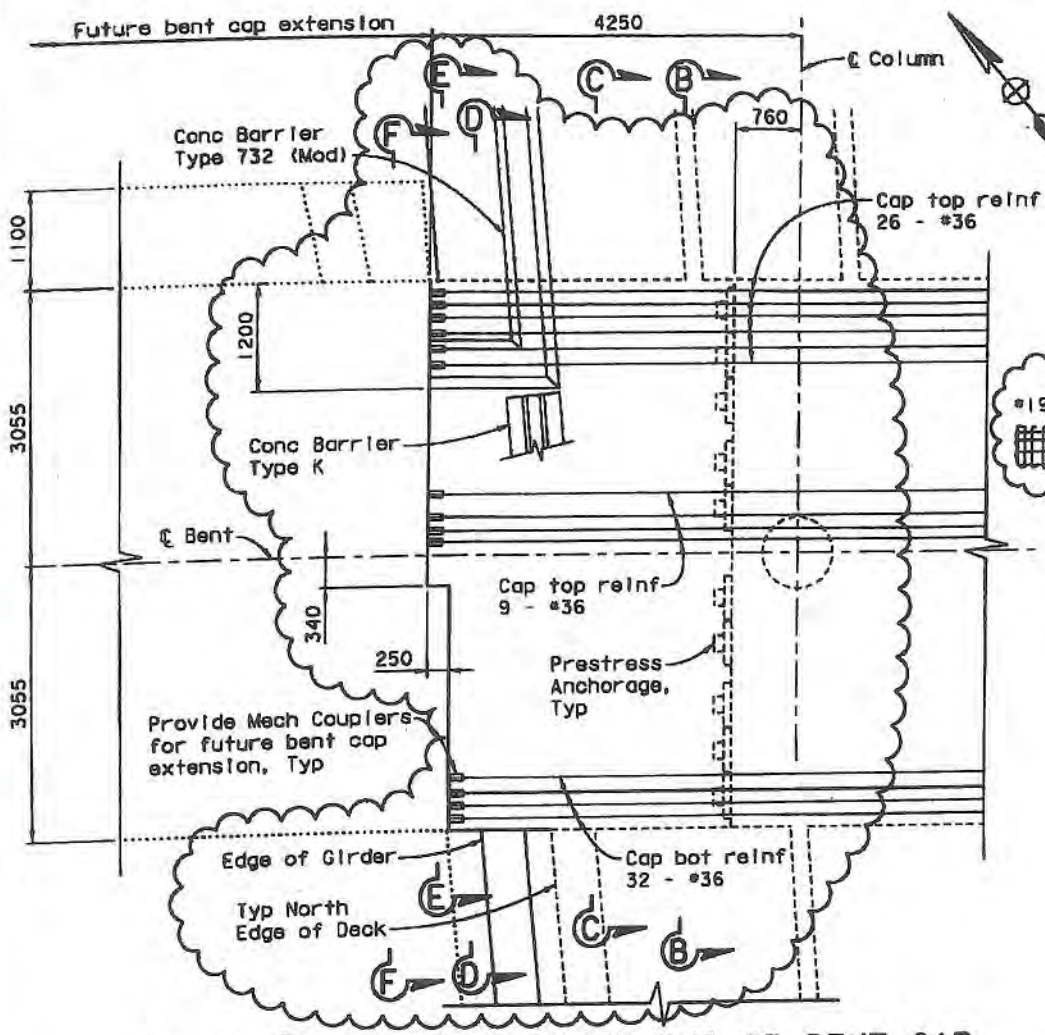

DETAIL (A) - PLAN AT NORTH END OF BENT CAP
1:40

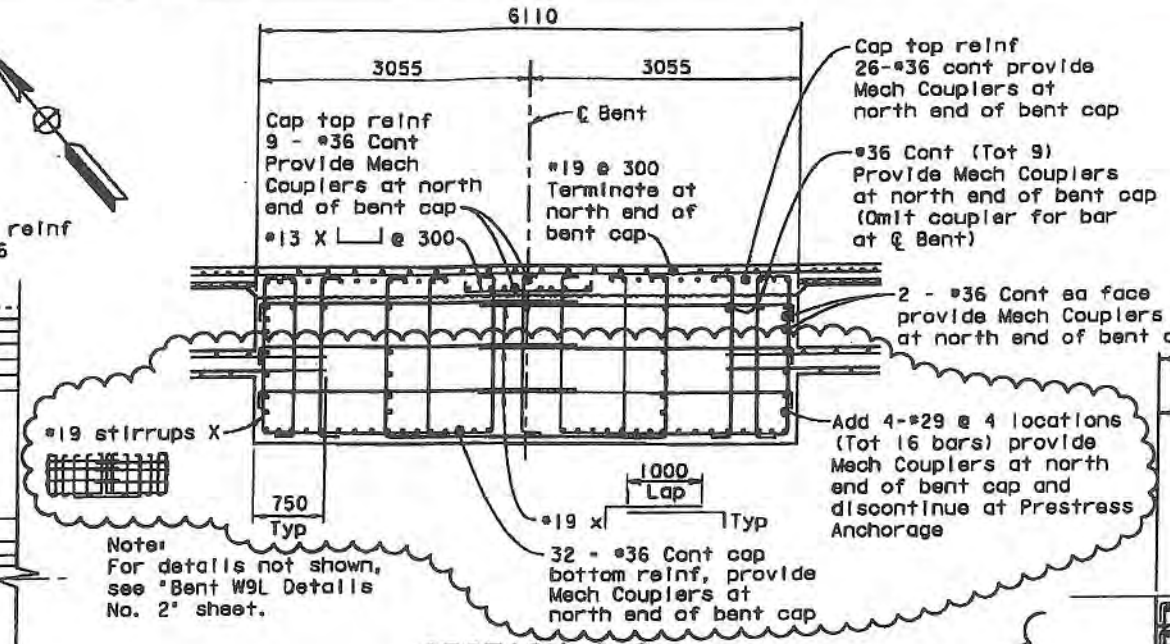

Note:
For details not shown, see 'Bent W9L Details No. 2' sheet.

SECTION C-C
1:40

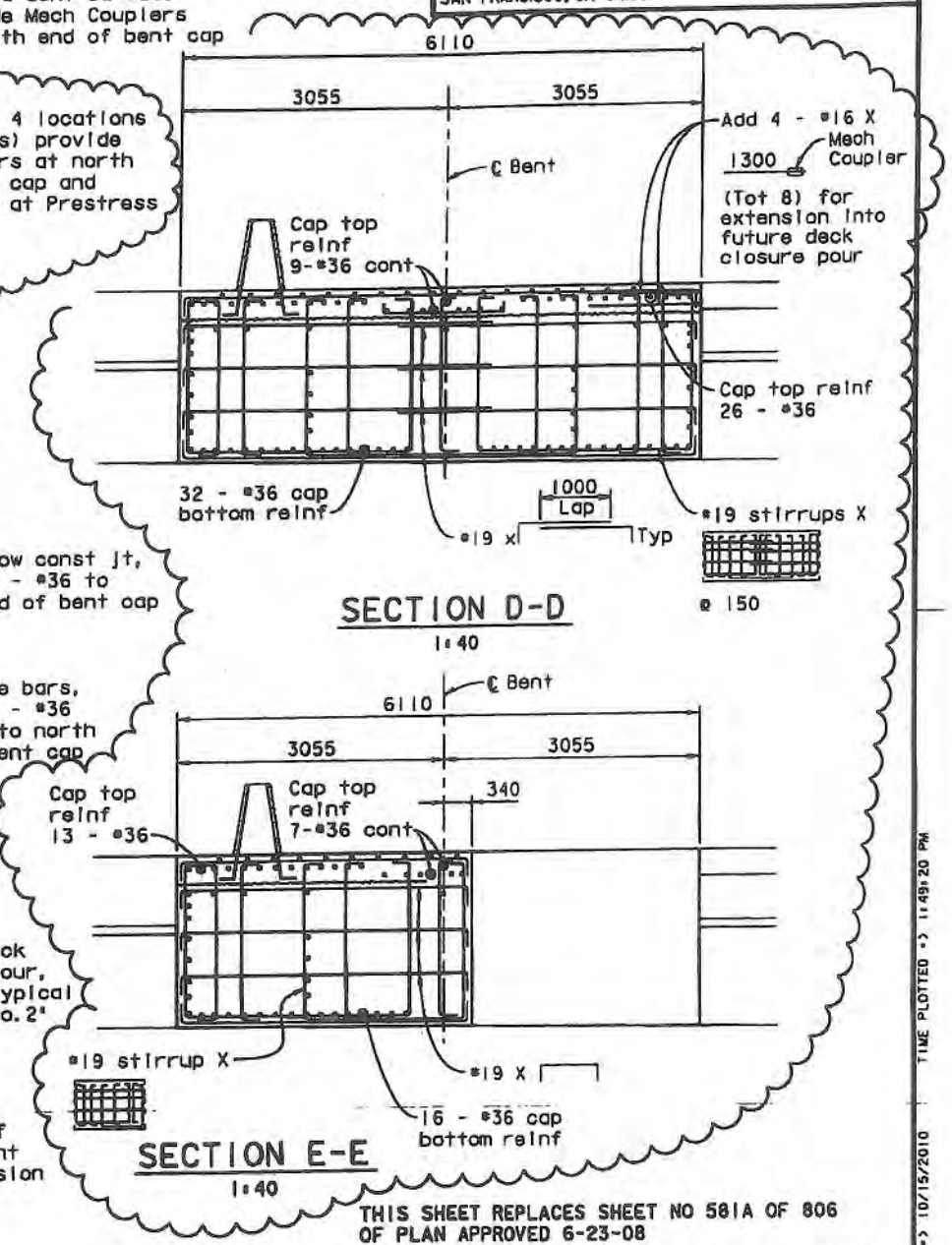

SECTION D-D
1:40

SECTION E-E
1:40

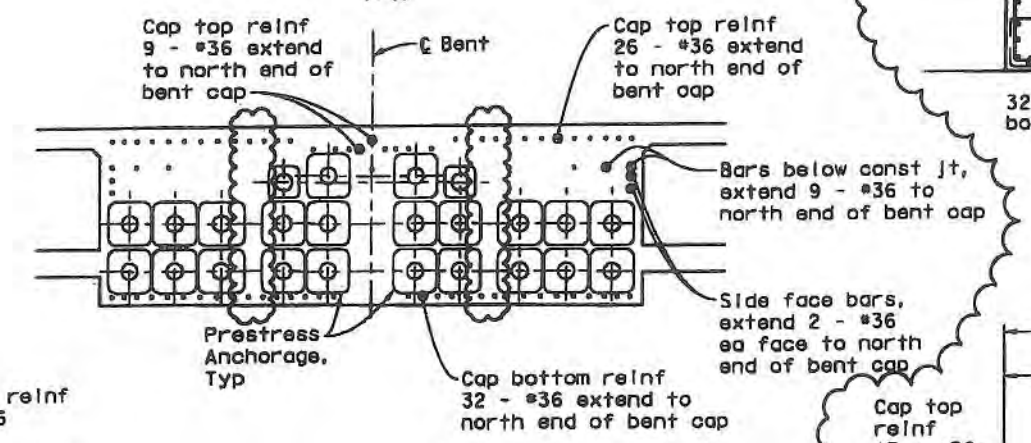

SECTION B-B
1:40

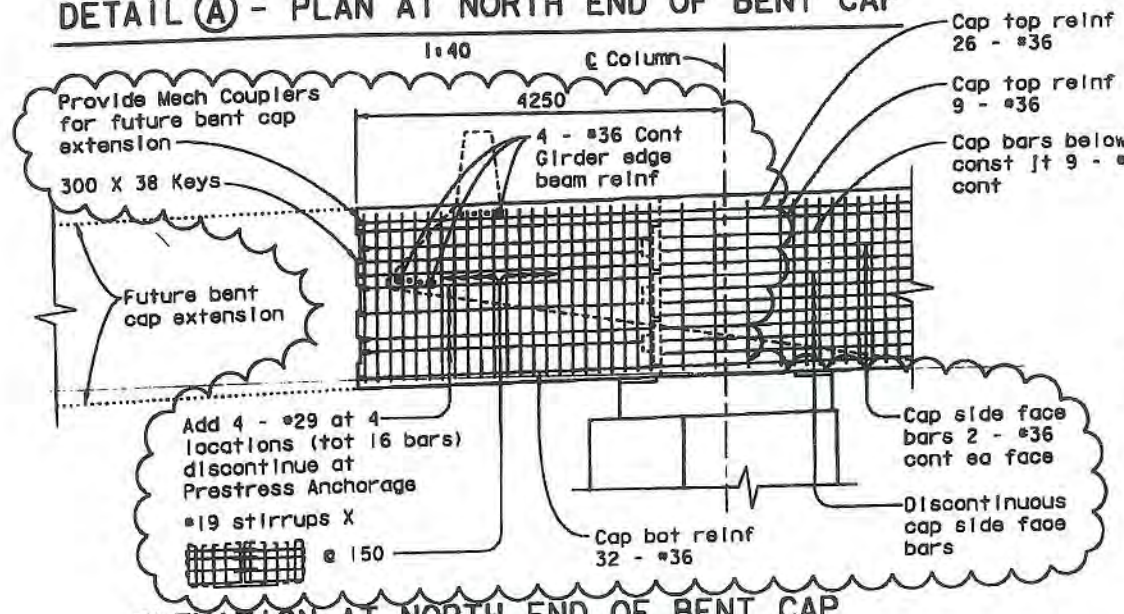

ELEVATION AT NORTH END OF BENT CAP
1:40

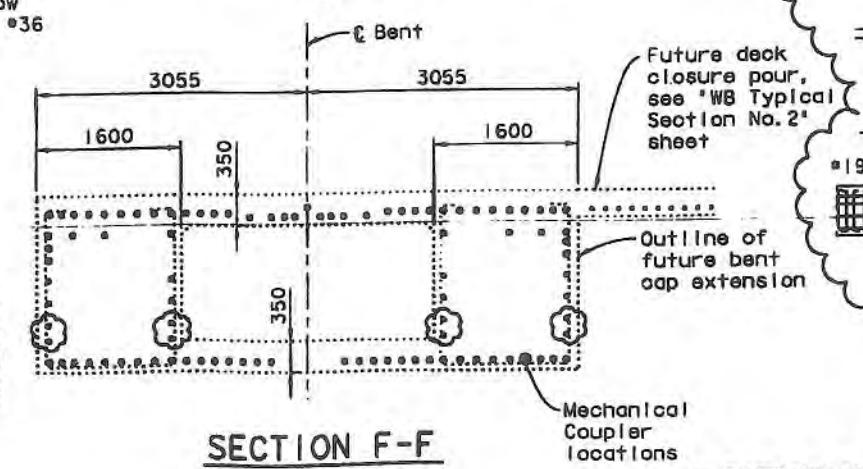

SECTION F-F
1:40

ALL DIMENSIONS ARE IN MILLIMETERS UNLESS OTHERWISE SHOWN

THIS SHEET REPLACES SHEET NO 581A OF 806 OF PLAN APPROVED 6-23-08

CONTRACT CHANGE ORDER NO. 53
SHEET 21 OF 51

SAN FRANCISCO OAKLAND BAY BRIDGE
EAST SPAN SEISMIC SAFETY PROJECT

YBI TRANSITION STRUCTURES

BENT W9L DETAILS NO. 5

DESIGN OVERSIGHT Hasan El-Natur 10/21/10	DESIGN BY Xie	CHECKED Lee	PREPARED FOR THE STATE OF CALIFORNIA DEPARTMENT OF TRANSPORTATION
	DETAILS BY Samson	CHECKED Jain	
	QUANTITIES BY Jain	CHECKED Birdy	

Jai Birdy
PROJECT ENGINEER

CU 04251
EA 0120S1

BRIDGE NO. 34-006 L/R
KILOMETER POST 12.8

DISREGARD PRINTS BEARING EARLIER REVISION DATES — 1/15/08 1/15/09

REVISION DATES (PRELIMINARY STAGE ONLY)

SHEET 32A OF 209

SIGN OFF DATE

Rev. Date: 5-8-25

ORIGINAL SCALE IN MILLIMETERS FOR REDUCED PLANS 0 10 20 30 40 50 60 70 80 90 100

FILE => \\mnlbfs\LB Projects\5674 - Yerba Buena Island (YBI) Bridge\T Design Information\Contract Addendum - Include ones from 25\10151\04 Bridge 34-006R - Bent W9L.dgn

USERNAME => fsamson DATE PLOTTED => 10/15/2010 TIME PLOTTED => 11:49:20 PM

WB RAMP CCO

October 15, 2010

DIST.	COUNTY	ROUTE	KILOMETER POST TOTAL PROJECT	SHEET NO.	TOTAL SHEETS
04	SF	80	12.7/13.2	589R1	806

REGISTERED ENGINEER - CIVIL
6-23-08
PLANS APPROVAL DATE
REGISTERED PROFESSIONAL ENGINEER A.L. ELY No. 18880 Exp. 6-30-09 CIVIL STATE OF CALIFORNIA

The State of California or its officers or agents shall not be responsible for the accuracy or completeness of electronic copies of this plan sheet.

T.Y. LIN / MOFFATT & NICHOL
TWO HARRISON STREET
SAN FRANCISCO, CA 94105

Metric

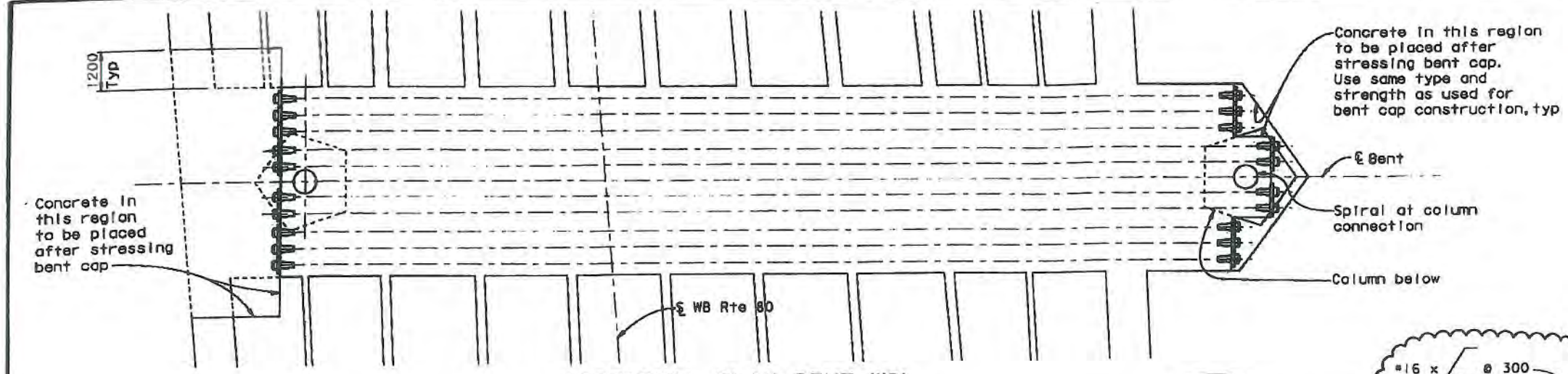

SECTIONAL PLAN BENT W9L

(Similar at Bents W10AL & W10L)
1:80

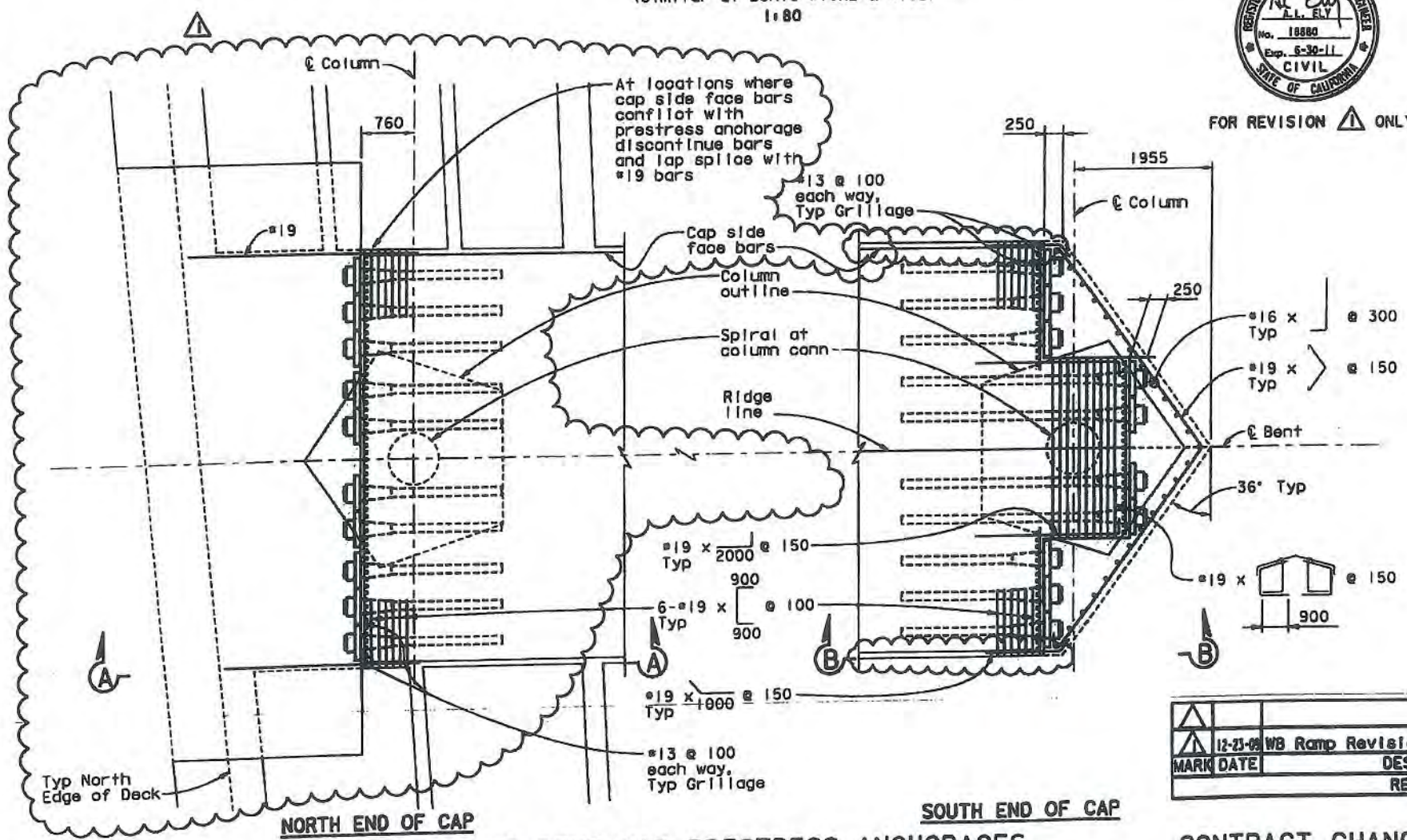

PLAN AT BENT CAP PRESTRESS ANCHORAGES

(Bent W9L shown, Bents W10AL & W10L similar)
1:40

FOR REVISION 1 ONLY

LEGEND

Concrete to be placed after stressing

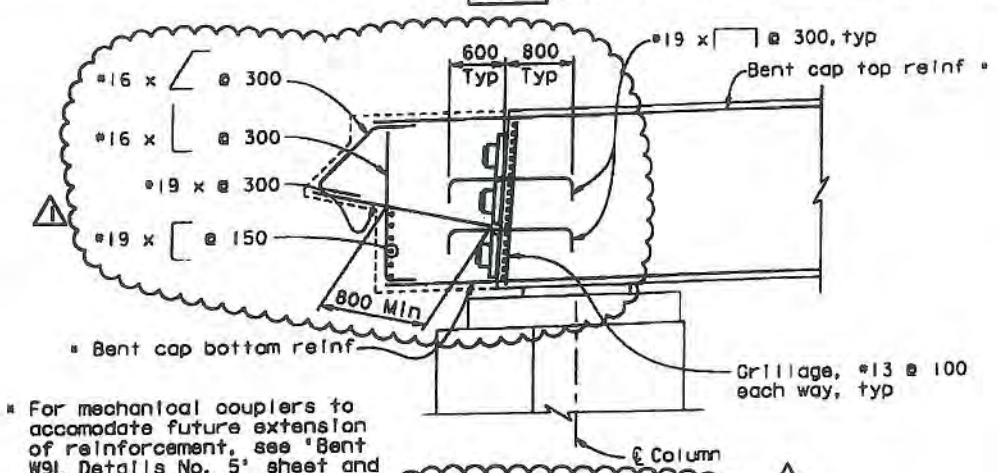

* For mechanical couplers to accomodate future extension of reinforcement, see 'Bent W9L Details No. 5' sheet and 'WB Typical Section No. 2' sheet.

SECTION A-A

(Shown for Bents W10AL and W10L, Similar at Bent W9L)
1:40

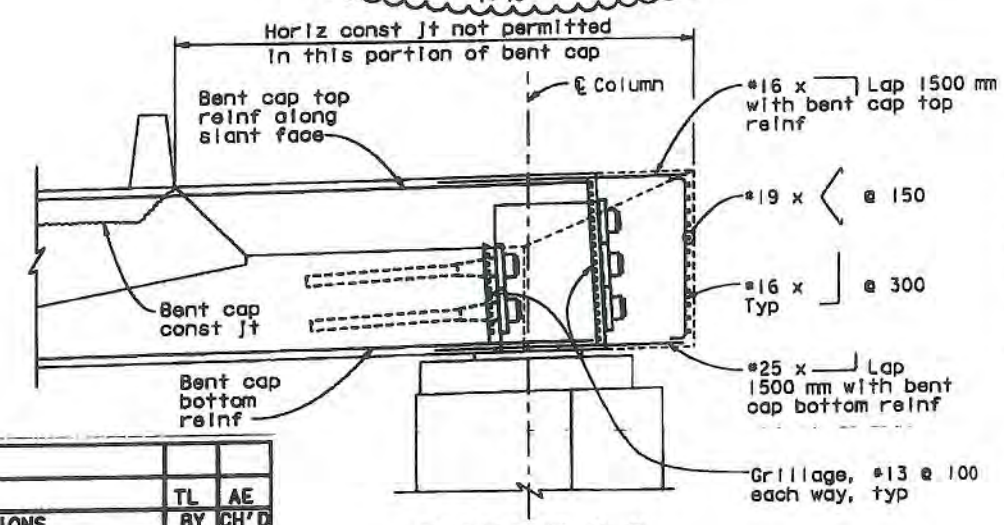

SECTION B-B

1:40

Note: For prestressing notes see 'Prestress Details - Bents W8L & W7L' sheet.

MARK	DATE	DESCRIPTIONS	BY	CH'D
1	12-23-08	WB Ramp Revisions	TL	AE
		REVISIONS		

CONTRACT CHANGE ORDER NO. 53
SHEET 22 OF 51

ALL DIMENSIONS ARE IN MILLIMETERS UNLESS OTHERWISE SHOWN

8 REVISED PER ADDENDUM NO. 8 DATED NOVEMBER 12, 2009

DESIGN OVERSIGHT
JOHN LOOK, BERNARD CHAN, JUAN F. CARPIO, HASAN EL-NATUR
March 3, 2008
SIGN OFF DATE
10/21/10

	BY	CHECKED
DESIGN	Xie	Ahn
DETAILS	van Ryn/Zucchi/Wal	Jain
QUANTITIES	Liao	E. Nichol

PREPARED FOR THE STATE OF CALIFORNIA DEPARTMENT OF TRANSPORTATION

Jal Birdy
PROJECT ENGINEER

CU 04251
EA 012051

BRIDGE NO. 34-0006 L/R
KILOMETER POST 12.8

DISREGARD PRINTS BEARING EARLIER REVISION DATES

SAN FRANCISCO OAKLAND BAY BRIDGE
EAST SPAN SEISMIC SAFETY PROJECT

YBI TRANSITION STRUCTURES

PRESTRESS DETAILS - BENTS W10AL TO W9L

REVISION DATES (PRELIMINARY STAGE ONLY)

SHEET 40 OF 209

ORIGINAL SCALE IN MILLIMETERS FOR REDUCED PLANS

Rev. Date 5-15-08

WB RAMP CCO

October 15, 2010

USERNAME => facmson DATE PLOTTED => 10/15/2010 TIME PLOTTED => 11:49:30 PM

DIST.	COUNTY	ROUTE	KILOMETER POST TOTAL PROJECT	SHEET NO.	TOTAL SHEETS
04	SF	80	12.7/13.2	592R3	806

REGISTERED ENGINEER - CIVIL
6-23-08
PLANS APPROVAL DATE
A.L. ELY No. 18880 Exp. 6-30-09 CIVIL STATE OF CALIFORNIA
The State of California or its officers or agents shall not be responsible for the accuracy or completeness of electronic copies of this plan sheet.

T.Y. LIN / MOFFATT & NICHOL
TWO HARRISON STREET
SAN FRANCISCO, CA 94105

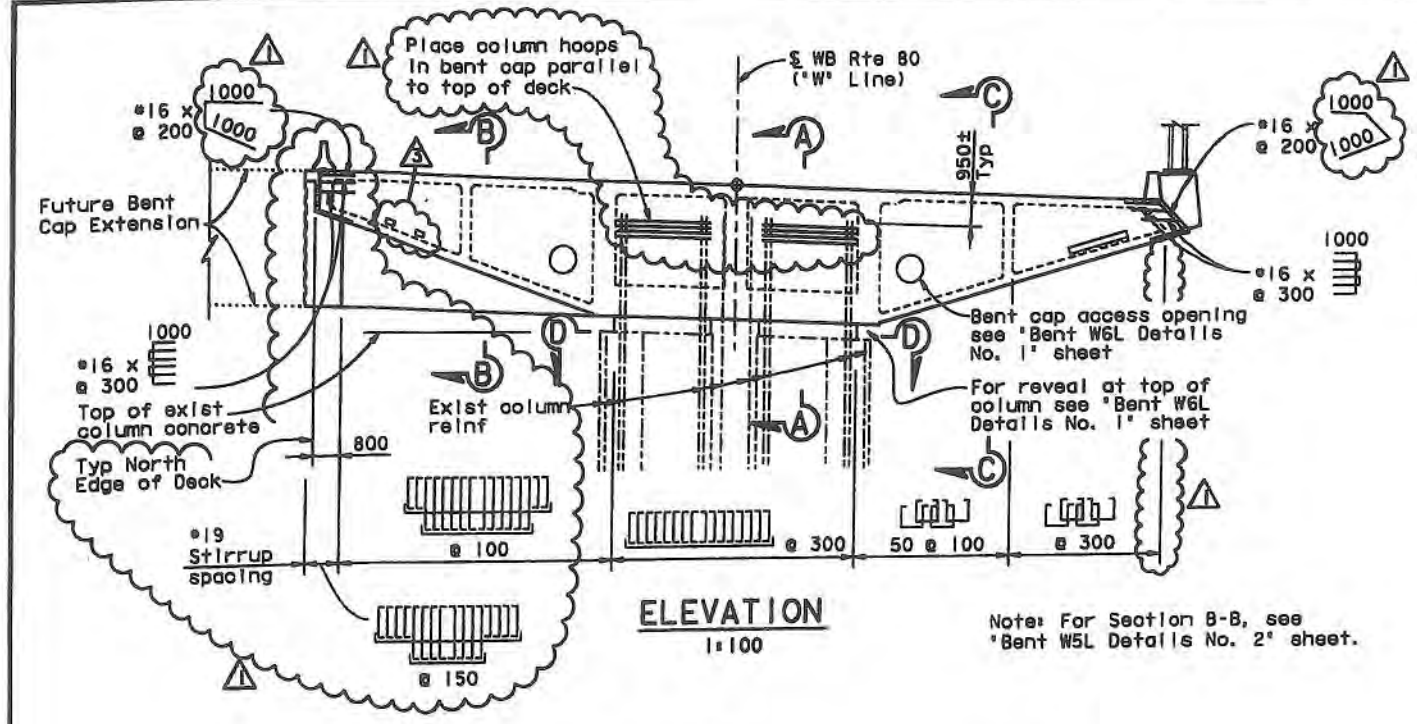

ELEVATION
1:100

Note: For Section B-B, see "Bent W5L Details No. 2" sheet.

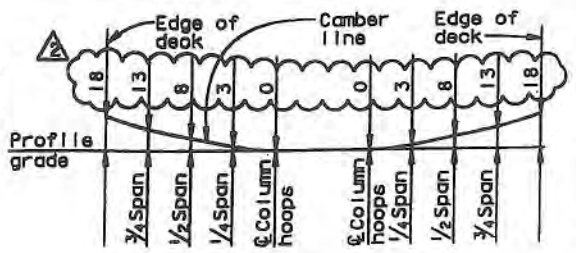

Note: Camber diagram does not include allowance for falsework settlement

BENT CAP
CAMBER DIAGRAM
NO SCALE

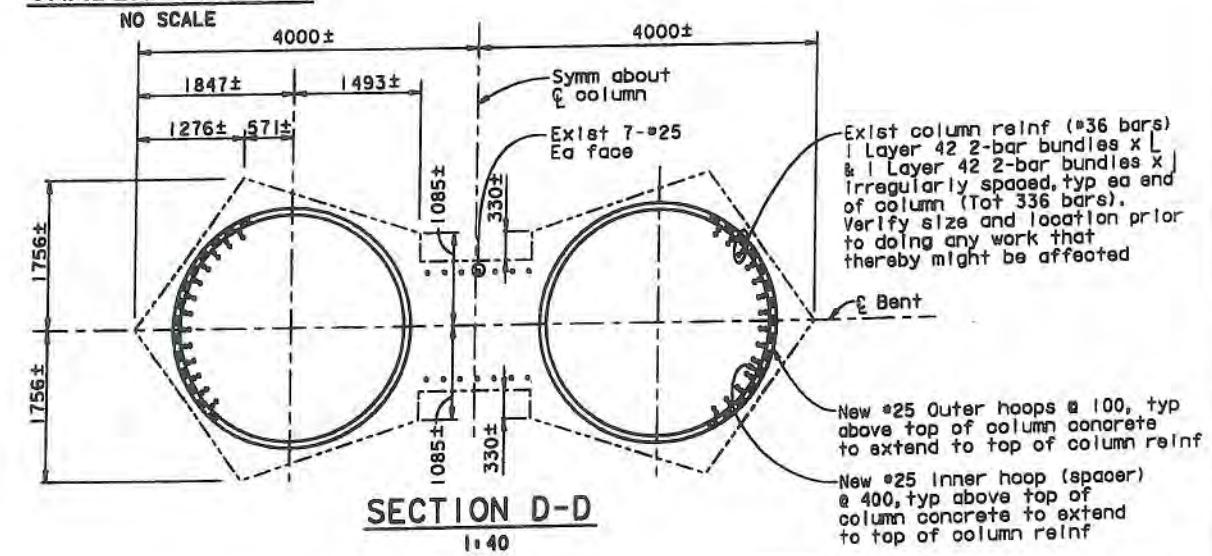

SECTION D-D
1:40

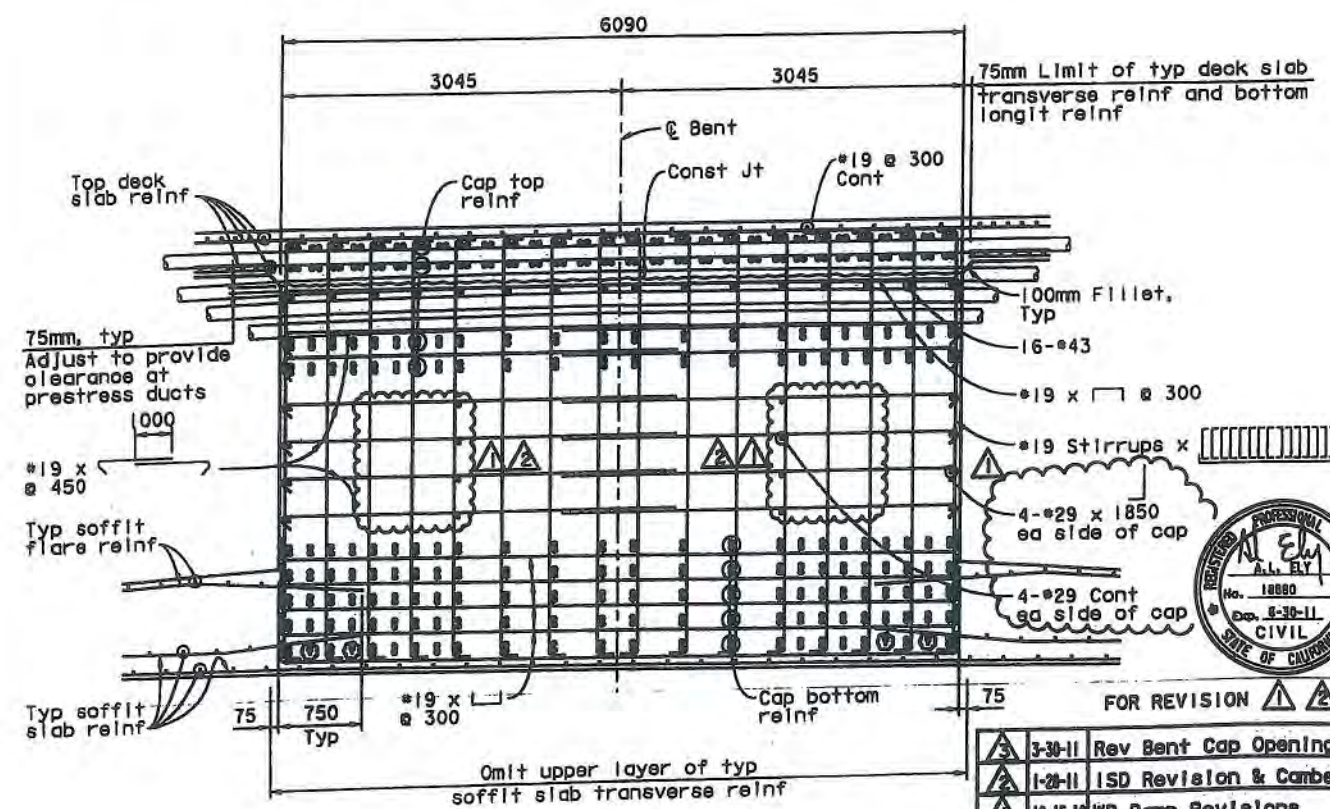

SECTION A-A
1:30

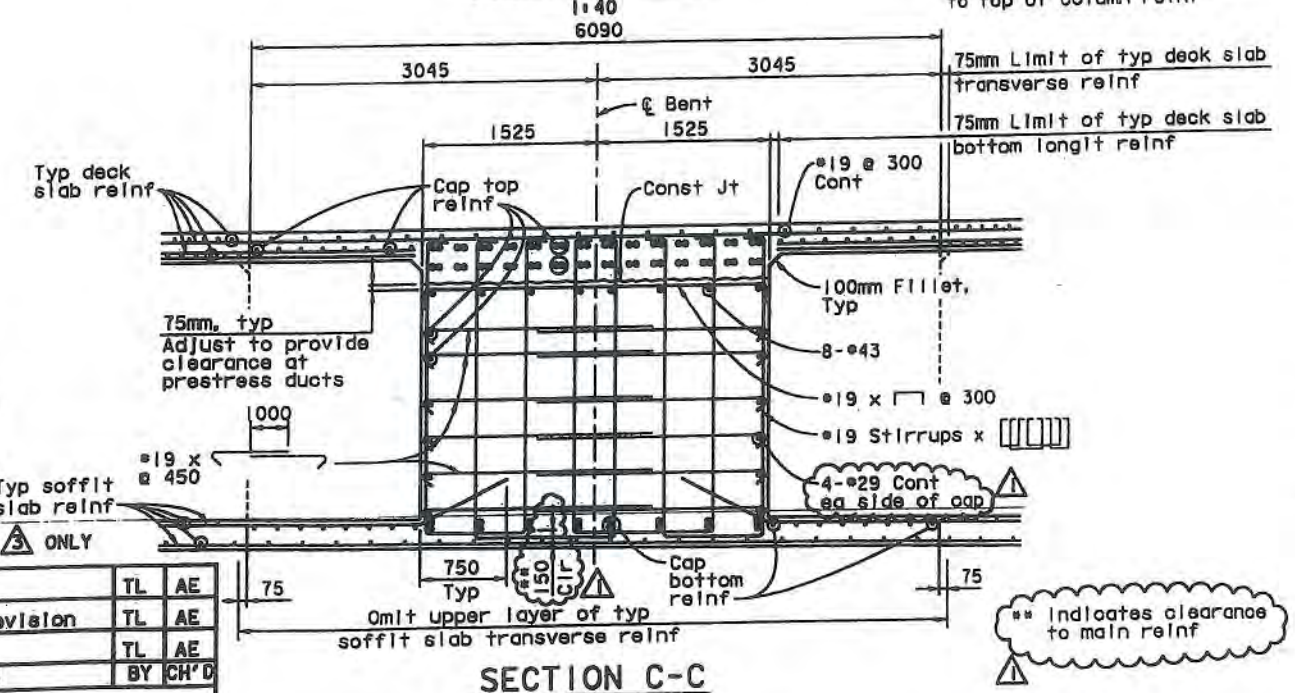

SECTION C-C
1:30

FOR REVISION 1 2 & 3 ONLY

MARK	DATE	DESCRIPTIONS	BY	CH'D
3	3-30-11	Rev Bent Cap Opening	TL	AE
2	1-28-11	ISD Revision & Camber Revision	TL	AE
1	10-15-10	WB Ramp Revisions	TL	AE

REVISIONS

CONTRACT CHANGE ORDER NO. 53
SHEET 23 OF 51

ALL DIMENSIONS ARE IN MILLIMETERS UNLESS OTHERWISE SHOWN

8 REVISED PER ADDENDUM NO. 8
DATED NOVEMBER 12, 2009

DESIGN OVERSIGHT
JOHN MOOK, BERNARD CHAN, JUAN F. CARPIO, HASAN EL-NATUR
March 3, 2008
SIGN OFF DATE
4/25/11
Rev. Date: 5-12-08

DESIGN	BY Darrah/Shankuan	CHECKED Ahn
DETAILS	BY van Ryn/Zuoshi/Wai	CHECKED Jain
QUANTITIES	BY Liao	CHECKED E. Nichol

PREPARED FOR THE STATE OF CALIFORNIA DEPARTMENT OF TRANSPORTATION

Jai Birdy
PROJECT ENGINEER

BRIDGE NO. 34-0006 L/R
KILOMETER POST 12.8

CU 04251
EA 0120S1

SAN FRANCISCO OAKLAND BAY BRIDGE
EAST SPAN SEISMIC SAFETY PROJECT

YBI TRANSITION STRUCTURES

BENT W5L DETAILS NO. 1

DISREGARD PRINTS BEARING EARLIER REVISION DATES
REVISION DATES (PRELIMINARY STAGE ONLY)
SHEET 43 OF 209

ORIGINAL SCALE IN MILLIMETERS FOR REDUCED PLANS 0 10 20 30 40 50 60 70 80 90 100

FILE => \\mnlbfs\LB_Projects\4141-06\CADD\TS\Checked Plans\YBITS #1|100% No. 2_03-03-08 (Final Renamed)\033011 Openings T9 CCO\04-0120s1-34-0006r1-h-bdet26.dgn

USERNAME => fazandan DATE PLOTTED => 3/28/2011 TIME PLOTTED => 11:08:59 AM

March 30, 2011

DIST.	COUNTY	ROUTE	KILOMETER POST TOTAL PROJECT	SHEET NO.	TOTAL SHEETS
04	SF	80	12.7/13.2	593R3	806

REGISTERED ENGINEER - CIVIL

PLANS APPROVAL DATE

The State of California or its officers or agents shall not be responsible for the accuracy or completeness of electronic copies of this plan sheet.

A.L. ELY No. 18880 Exp. 6-30-09 CIVIL STATE OF CALIFORNIA

T.Y. LIN / MOFFATT & NICHOL
TWO HARRISON STREET
SAN FRANCISCO, CA 94105

MARK	DATE	DESCRIPTIONS	BY	CH'D
3	3-30-11	Rev Bent Cap Opening	TL	AE
2	2-9-11	ISD Revision	TL	AE
1	10-15-10	WB Ramp Revisions	TL	AE

REVISIONS

CONTRACT CHANGE ORDER NO. 53
SHEET 24 OF 51

A.L. ELY No. 18880 Exp. 6-30-11 CIVIL STATE OF CALIFORNIA

FOR REVISION 1 2 & 3 ONLY

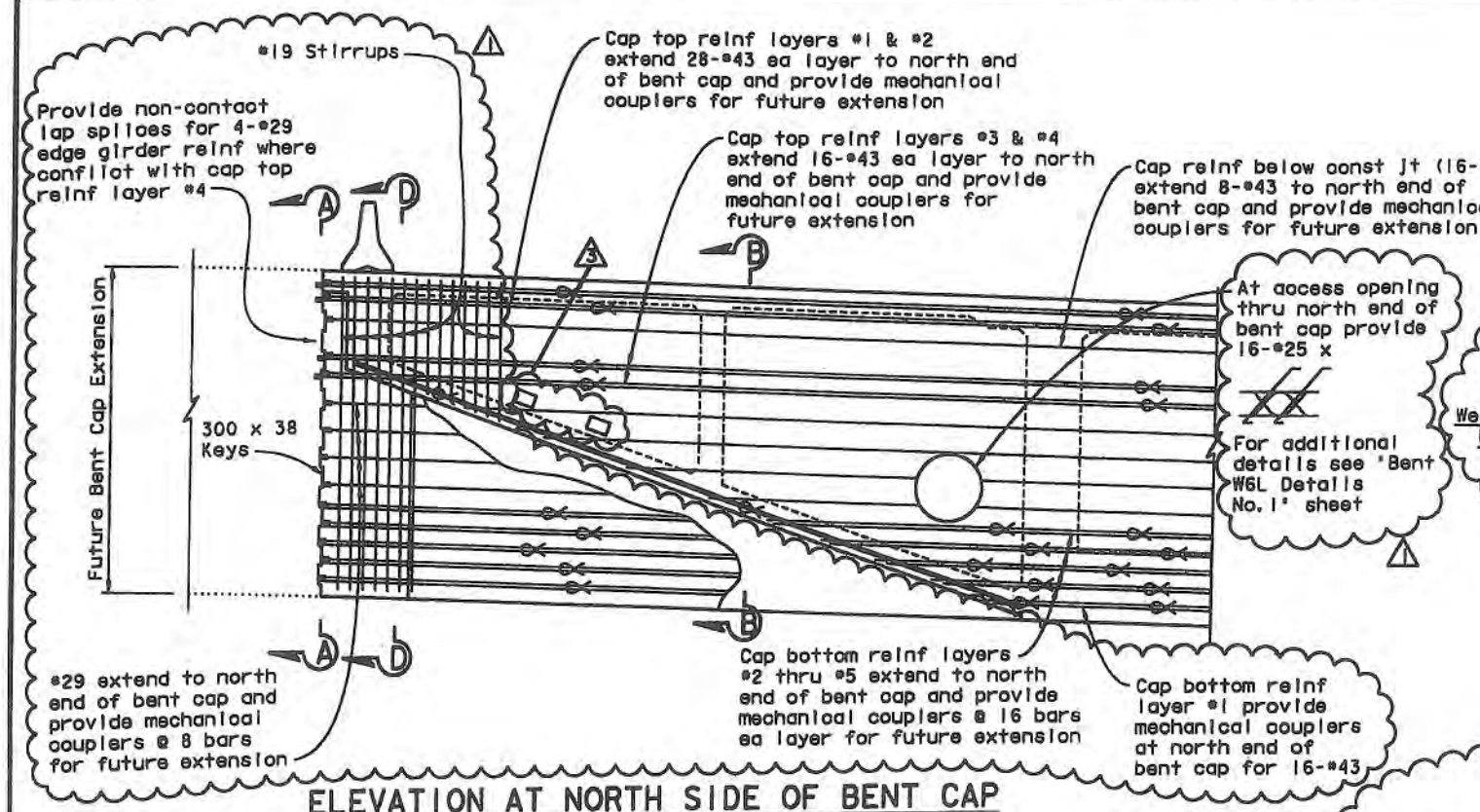

ELEVATION AT NORTH SIDE OF BENT CAP
1:40

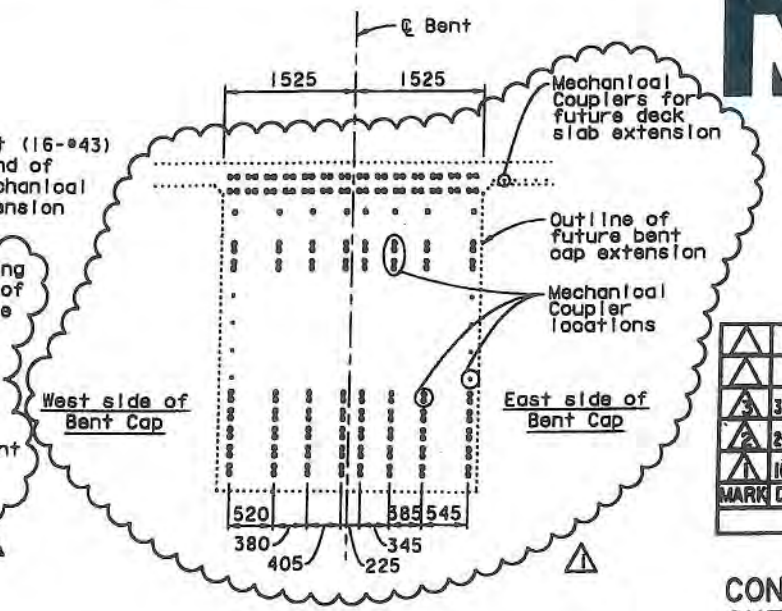

SECTION A-A
1:40

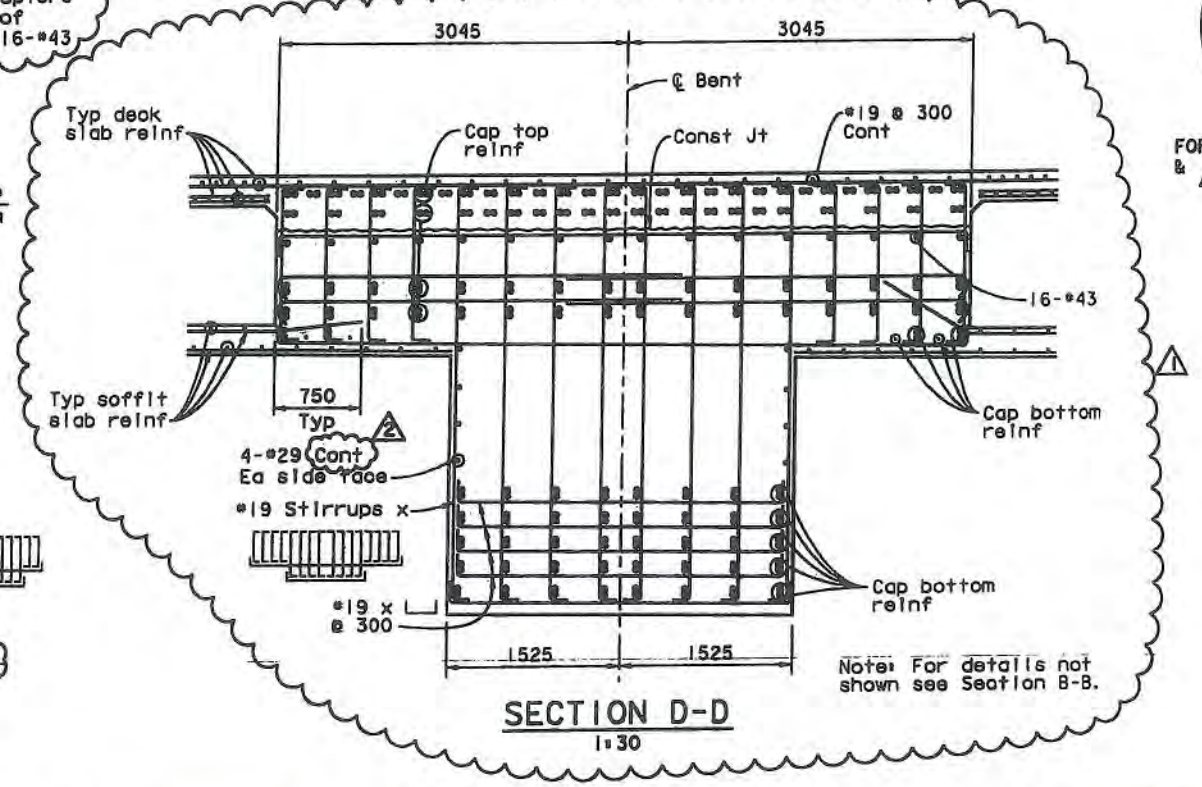

SECTION D-D
1:30

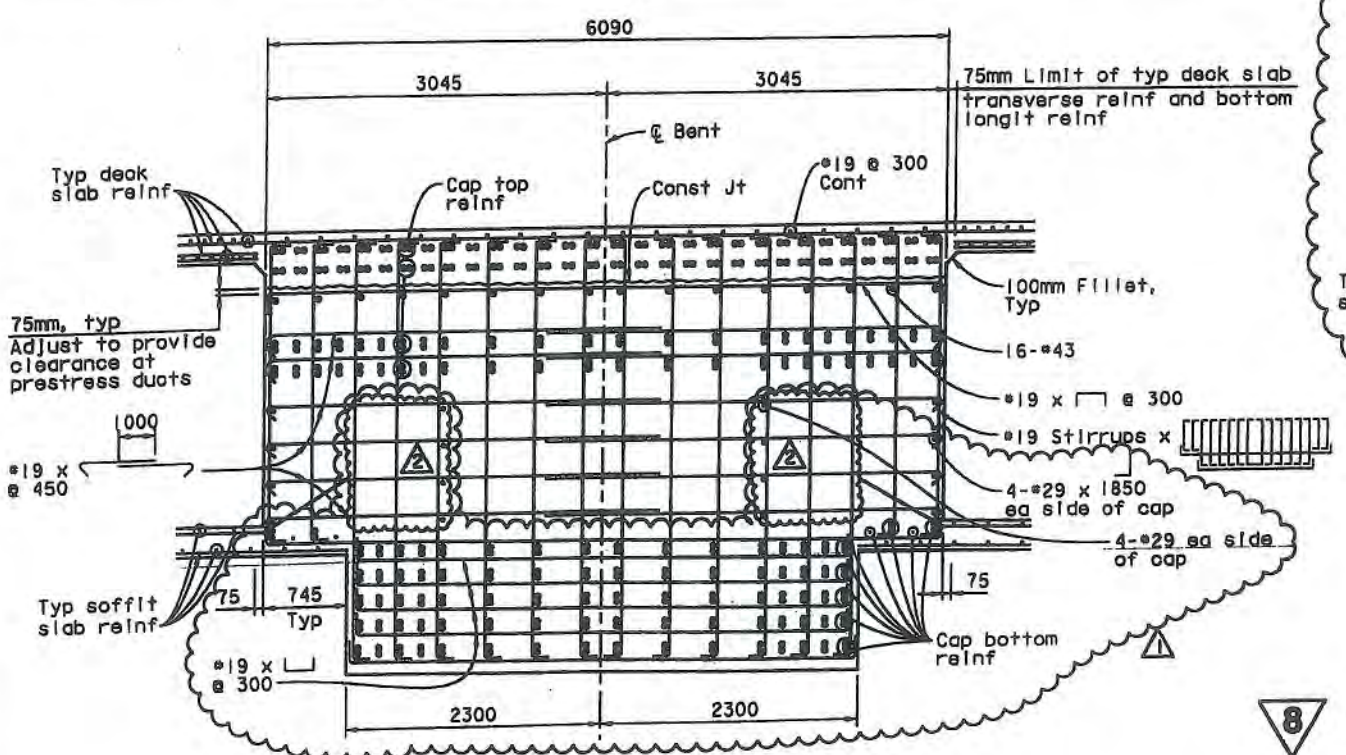

SECTION B-B
1:30

8 REVISED PER ADDENDUM NO. 8 DATED NOVEMBER 12, 2009

ALL DIMENSIONS ARE IN MILLIMETERS UNLESS OTHERWISE SHOWN

SAN FRANCISCO OAKLAND BAY BRIDGE
EAST SPAN SEISMIC SAFETY PROJECT

YBI TRANSITION STRUCTURES

BENT W5L DETAILS NO. 2

DESIGN OVERSIGHT Jaime Arias	HASAN EL-NATUR 4/25/11		
DESIGN	BY Wang	CHECKED Lee	
DETAILS	BY Samson	CHECKED Jain	
QUANTITIES	BY Jain	CHECKED Birdy	

SIGN OFF DATE

Rev. Date: 5-13-99

PREPARED FOR THE STATE OF CALIFORNIA DEPARTMENT OF TRANSPORTATION

Jai Birdy
PROJECT ENGINEER

BRIDGE NO. 34-006 L/R
KILOMETER POST 12.8

CU 04251
EA 0120S1

DISREGARD PRINTS BEARING EARLIER REVISION DATES

REVISION DATES (PRELIMINARY STAGE ONLY)

SHEET 44 OF 209

ORIGINAL SCALE IN MILLIMETERS FOR REDUCED PLANS 0 10 20 30 40 50 60 70 80 90 100

FILE => \\mnlbfs\LB_Projects\4141-06\CADD\TS\Checked Plans\YBITS #1 100% No. 2_03-03-08 (Final Renamed)\033011 Openings T9 CCO\04-0120s1-34-006r1-h-bdet27.dgn

March 30, 2011

USERNAME => fsamson DATE PLOTTED => 3/29/2011 TIME PLOTTED => 11:01:08 AM

MARK	DATE	DESCRIPTIONS	BY	CH'D
1	5-27-10	WB Ramp Revisions	TL	AE

REVISIONS

CONTRACT CHANGE ORDER NO. 53
SHEET 25 OF 51
ADDED PER ADDENDUM NO. 8
DATED NOVEMBER 12, 2009

DIST.	COUNTY	ROUTE	KILOMETER POST TOTAL PROJECT	SHEET NO.	TOTAL SHEETS
04	SF	80	12.7/13.2	593AR1	806

REGISTERED ENGINEER - CIVIL
6-23-08
PLANS APPROVAL DATE
The State of California or its officers or agents shall not be responsible for the accuracy or completeness of electronic copies of this plan sheet.

A.L. ELY No. 18880 Exp. 6-30-09 CIVIL STATE OF CALIFORNIA

T.Y. LIN / MOFFATT & NICHOL
TWO HARRISON STREET
SAN FRANCISCO, CA 94105

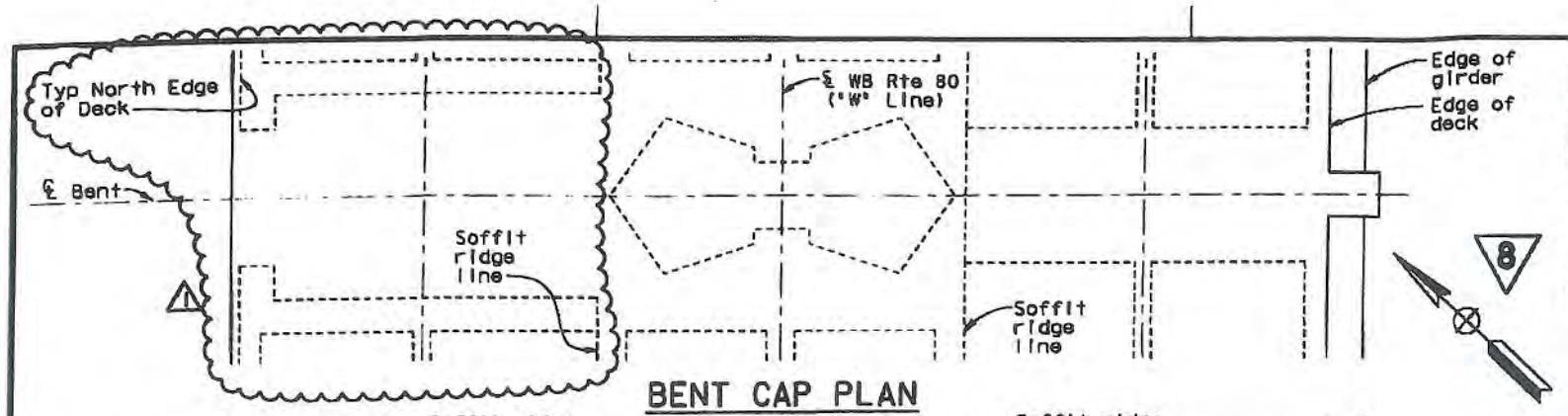

BENT CAP PLAN
1:80

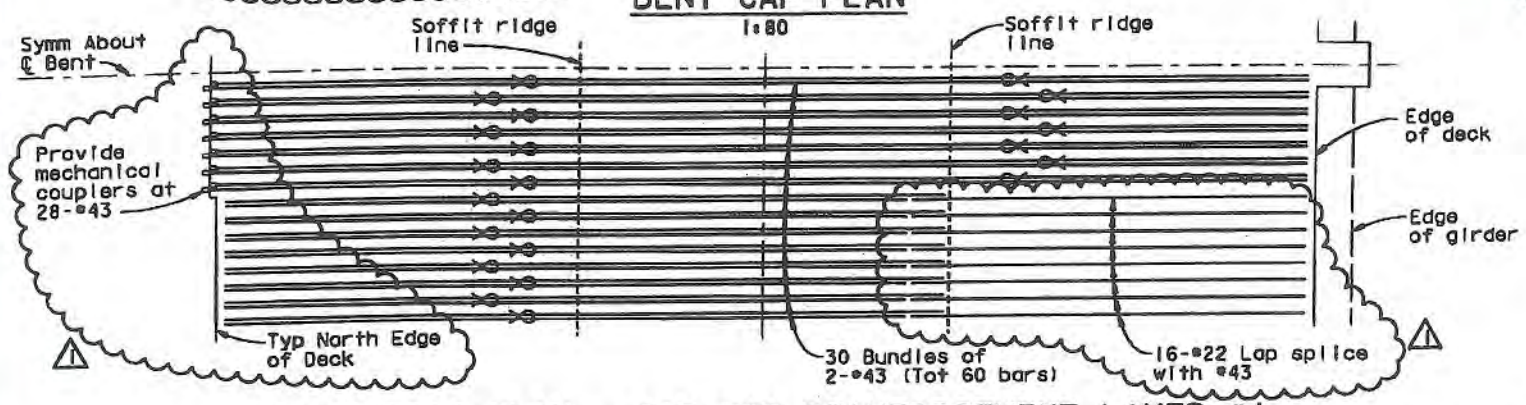

SCHEMATIC PLAN - CAP TOP REINFORCEMENT LAYER #1
No scale

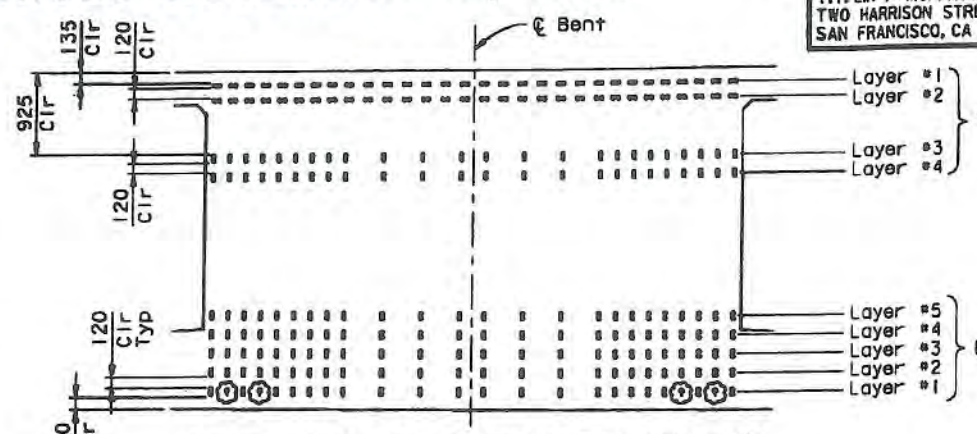

BENT CAP MAIN REINFORCEMENT
1:40

FOR REVISION 1 ONLY

indicates bundled bars

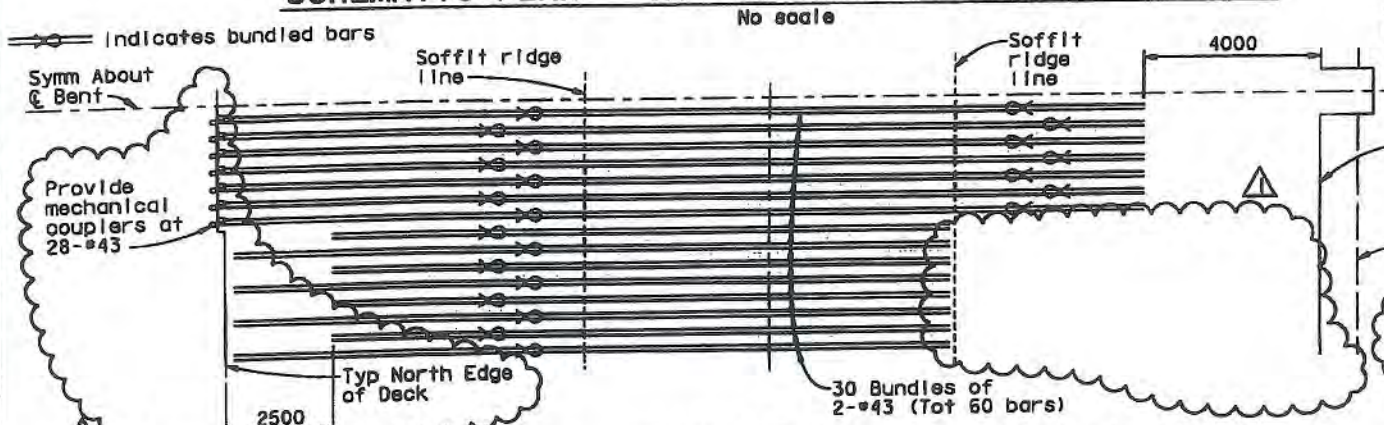

SCHEMATIC PLAN - CAP TOP REINFORCEMENT LAYER #2
No scale

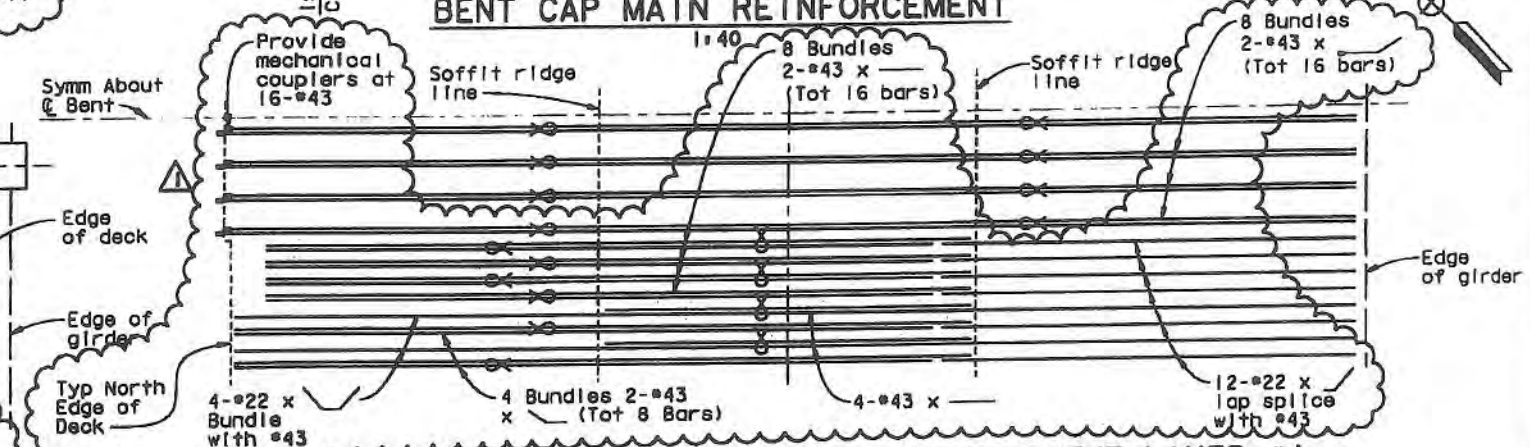

SCHEMATIC PLAN - CAP BOTTOM REINFORCEMENT LAYER #1
No scale

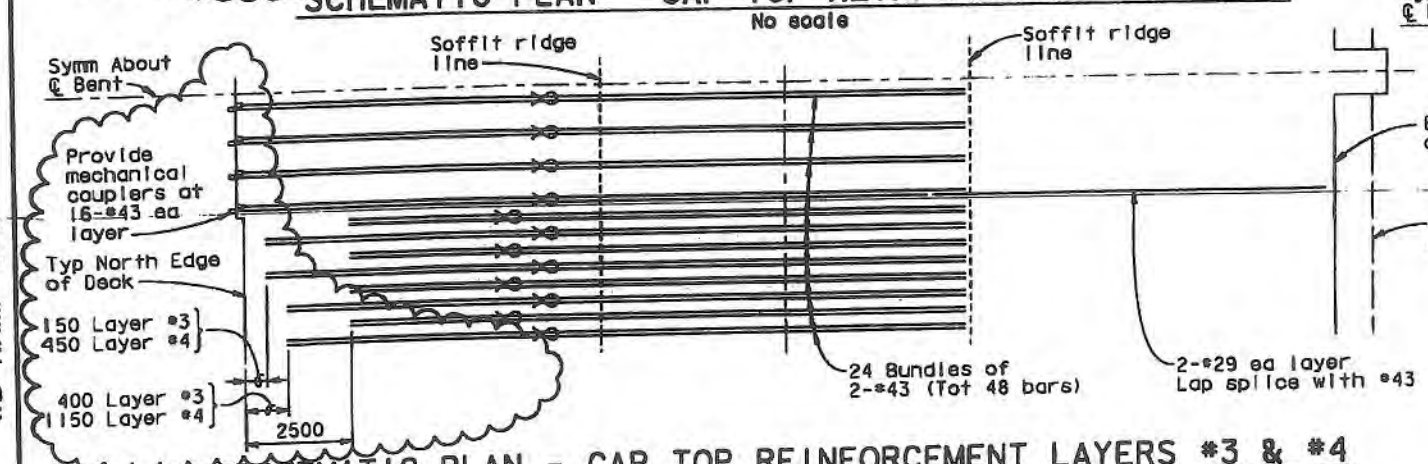

SCHEMATIC PLAN - CAP TOP REINFORCEMENT LAYERS #3 & #4
No scale

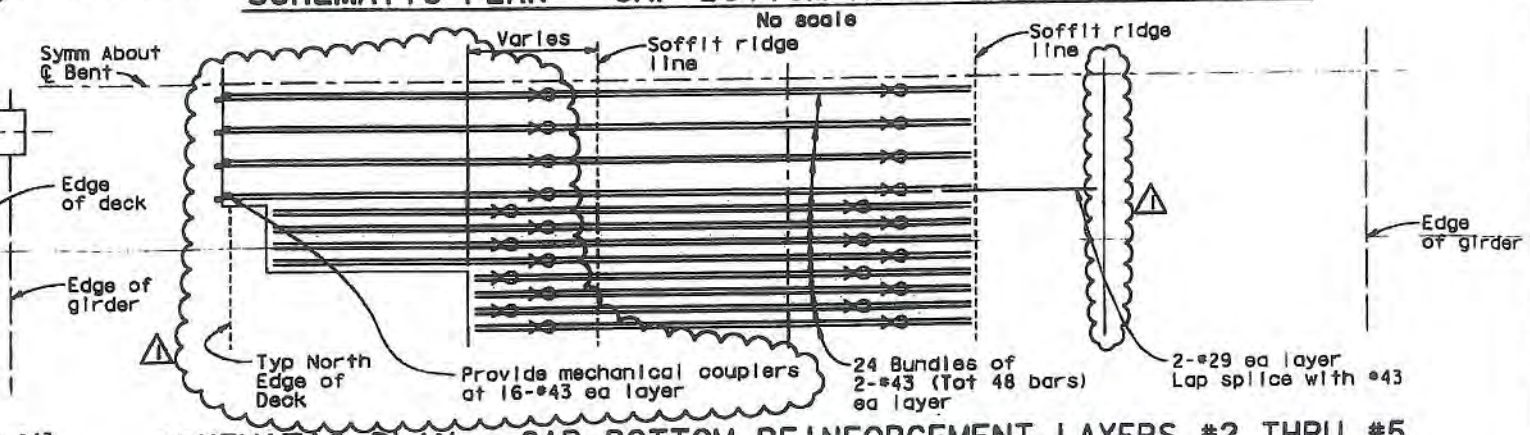

SCHEMATIC PLAN - CAP BOTTOM REINFORCEMENT LAYERS #2 THRU #5
No scale

ALL DIMENSIONS ARE IN MILLIMETERS UNLESS OTHERWISE SHOWN

DESIGN OVERSIGHT: JOHN MOOK, BERNARD CHAN, JUAN F. CARPIO, HASAN EL-NATUR
March 3, 2008 — 10/20/10
SIGN OFF DATE

DESIGN	BY Wang/Lee	CHECKED Greer	
DETAILS	BY van Ryn/Zucchi/Mal	CHECKED Jain	
QUANTITIES	BY Liao	CHECKED E. Nichol	

PREPARED FOR THE STATE OF CALIFORNIA DEPARTMENT OF TRANSPORTATION

Jal Birdy
PROJECT ENGINEER

CU 04251
EA 0120S1

BRIDGE NO. 34-0006 L/R
KILOMETER POST 12.8

DISREGARD PRINTS BEARING EARLIER REVISION DATES

REVISION DATES (PRELIMINARY STAGE ONLY)

SHEET 44A OF 209

SAN FRANCISCO OAKLAND BAY BRIDGE
EAST SPAN SEISMIC SAFETY PROJECT

YBI TRANSITION STRUCTURES

BENT W5L DETAILS NO. 3

Rev. Date: 5-19-98

ORIGINAL SCALE IN MILLIMETERS FOR REDUCED PLANS 0 10 20 30 40 50 60 70 80 90 100

WB RAMP CCO

October 15, 2010

USERNAME => fsamson DATE PLOTTED => 10/15/2010 TIME PLOTTED => 11:50:01 PM

(FILE => \\mnlbfs\LD_Projects\6674 - Yerba Buena Island (YBI) Bridge\3 Dea gn Information on 0120\Sheets\Addendum Include sets from TS\10\510\04-0120S1-34-0006r\b-bde27a.dgn)

DIST.	COUNTY	ROUTE	KILOMETER POST TOTAL PROJECT	SHEET NO.	TOTAL SHEETS
04	SF	80	12.7/13.2	594R3	806

REGISTERED ENGINEER - CIVIL

6-23-08
PLANS APPROVAL DATE

The State of California or its officers or agents shall not be responsible for the accuracy or completeness of electronic copies of this plan sheet.

REGISTERED PROFESSIONAL ENGINEER A.L. ELY No. 18880 Exp. 6-30-09 CIVIL STATE OF CALIFORNIA

T.Y. LIN / MOFFATT & NICHOL
TWO HARRISON STREET
SAN FRANCISCO, CA 94105

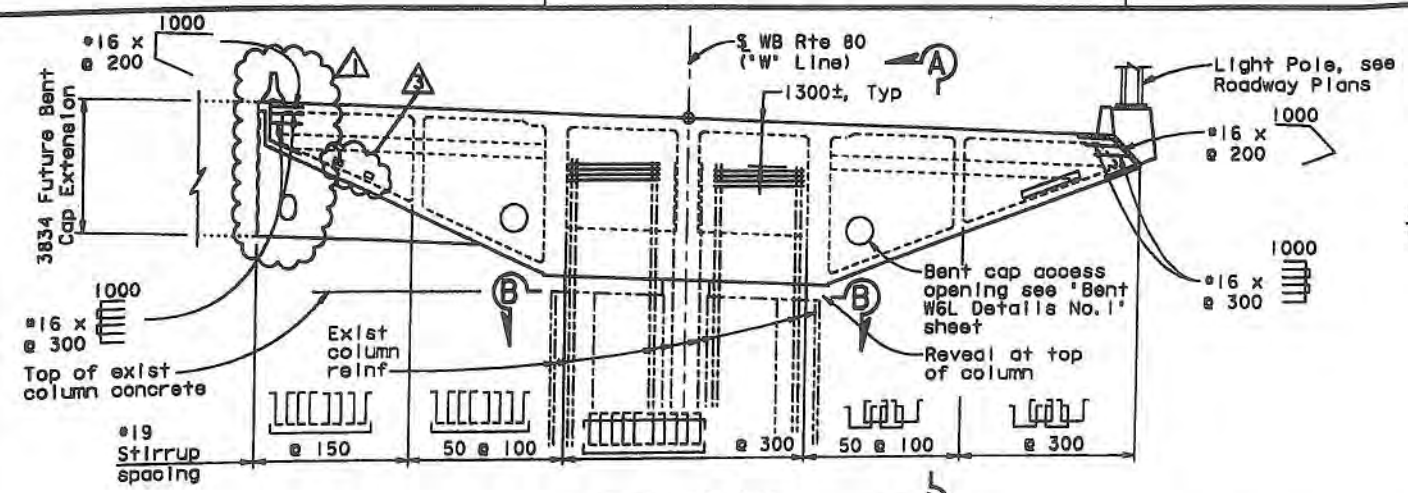

ELEVATION
1:100

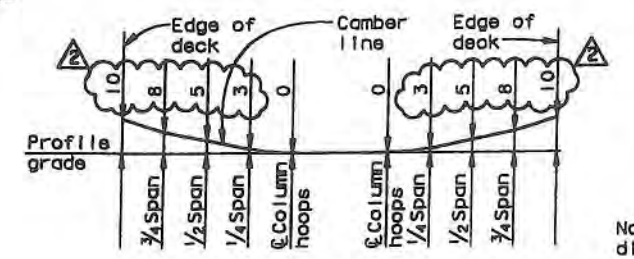

BENT CAP
CAMBER DIAGRAM
NO SCALE

Note: Camber diagram does not include allowance for falsework settlement

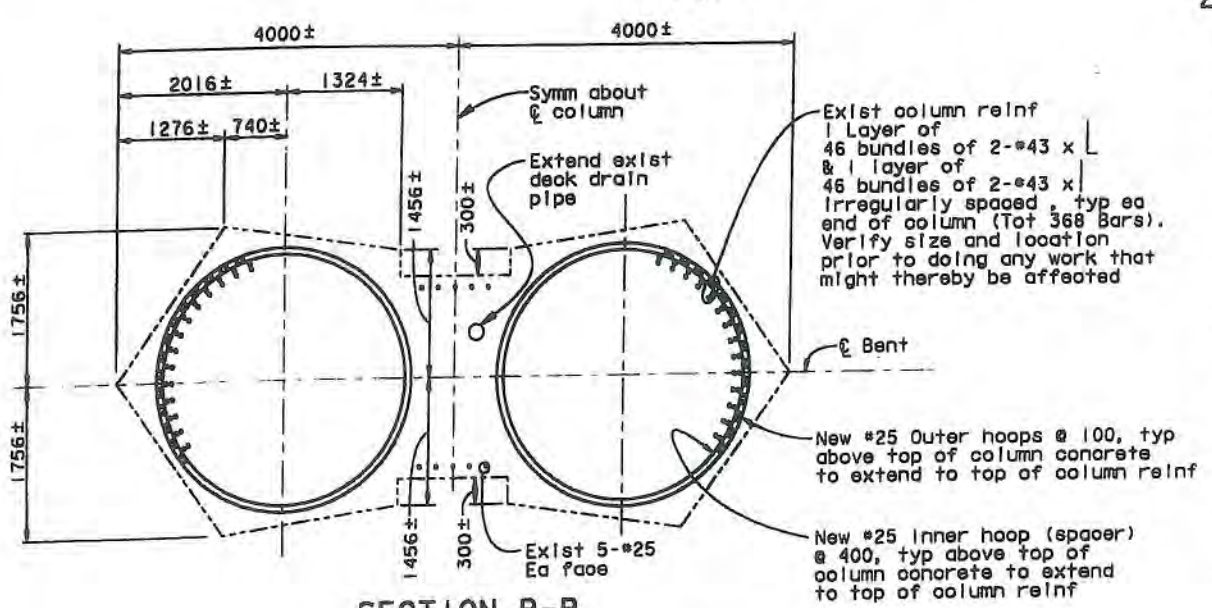

SECTION B-B
1:40

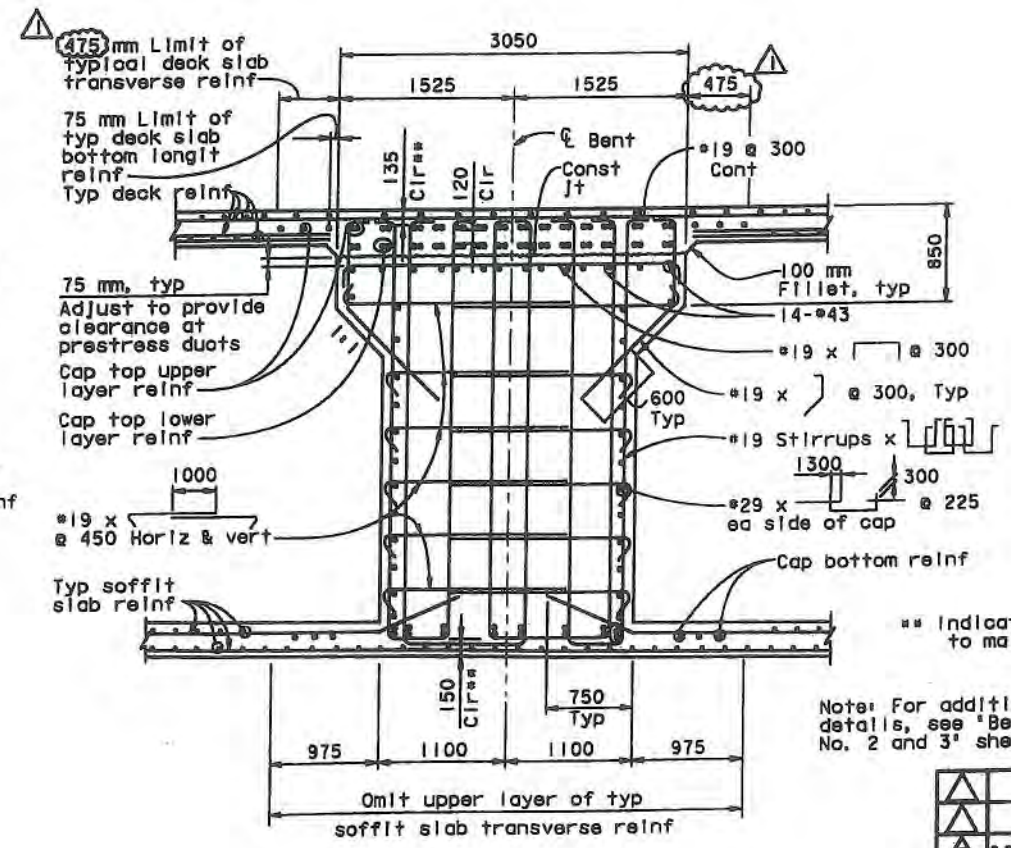

SECTION A-A
1:30

Note: For additional bent cap details, see 'Bent W4L Details No. 2 and 3' sheets.

REGISTERED PROFESSIONAL ENGINEER A.L. ELY No. 18880 Exp. 6-30-11 CIVIL STATE OF CALIFORNIA

FOR REVISION 1 2 & 3 ONLY

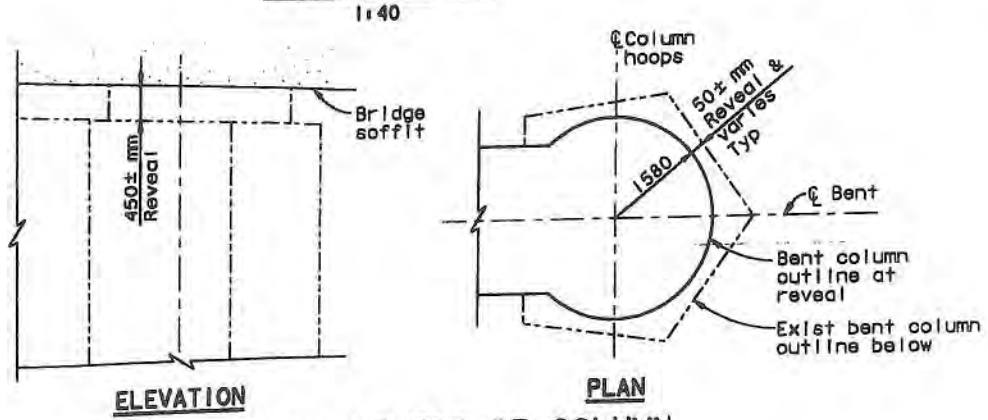

ELEVATION PLAN

REVEAL DETAIL AT TOP OF COLUMN
NO SCALE

MARK	DATE	DESCRIPTIONS	BY	CH'D
3	3-30-11	Rev Bent Cap Opening	TL	AE
2	1-28-11	Rev Camber	TL	AE
1	5-27-10	WB Ramp Revisions	TL	AE

REVISIONS

8 REVISED PER ADDENDUM NO. 8
DATED NOVEMBER 12, 2009

CONTRACT CHANGE ORDER NO. 53
SHEET 26 OF 51

ALL DIMENSIONS ARE IN MILLIMETERS UNLESS OTHERWISE SHOWN

SAN FRANCISCO OAKLAND BAY BRIDGE
EAST SPAN SEISMIC SAFETY PROJECT

YBI TRANSITION STRUCTURES

BENT W4L DETAILS NO. 1

DESIGN OVERSIGHT
JOHN HOOK, BERNARD CHAN, JUAN F. CARPIO HASAN EL-NATUR
March 3, 2008
SIGN OFF DATE
Rev. Date: 5-18-98

	BY	CHECKED
DESIGN	Darrah/Shangkuan	Ahn
DETAILS	van Ryn/Zucchi/Wai	Jain
QUANTITIES	Liao	E. Nichol

PREPARED FOR THE STATE OF CALIFORNIA DEPARTMENT OF TRANSPORTATION

Jai Birdy
PROJECT ENGINEER

BRIDGE NO. 34-0006 L/R
KILOMETER POST 12.8

CU 04251
EA 0120S1

DISREGARD PRINTS BEARING EARLIER REVISION DATES

REVISION DATES (PRELIMINARY STAGE ONLY)

SHEET 45 OF 209

ORIGINAL SCALE IN MILLIMETERS FOR REDUCED PLANS 0 10 20 30 40 50 60 70 80 90 100

FILE => \\mnbfs\LB_Projects\4141-06\CADD\TS\Checked Plans\YBITS #1(100% No. 2_03-03-08 (Final Renamed)\033011 Openings T9 CCO\04-0120s1-34-006r1-h-bdet28.dgn

USERNAME => fsamson DATE PLOTTED => 3/29/2011 TIME PLOTTED => 11:01:19 AM

March 30, 2011

DIST.	COUNTY	ROUTE	KILOMETER POST TOTAL PROJECT	SHEET NO.	TOTAL SHEETS
04	SF	80	12.7/13.2	594AR	806

REGISTERED ENGINEER - CIVIL

PLANS APPROVAL DATE

The State of California or its officers or agents shall not be responsible for the accuracy or completeness of electronic copies of this plan sheet.

REGISTERED PROFESSIONAL ENGINEER A.L. ELY No. 18880 Exp. 6-30-09 CIVIL STATE OF CALIFORNIA

T.Y. LIN / MOFFATT & NICHOL
TWO HARRISON STREET
SAN FRANCISCO, CA 94105

Note: For Section A-A, see 'Bent W4L Details No. 1' sheet. For Section C-C, see 'Bent W4L Details No. 3' sheet.

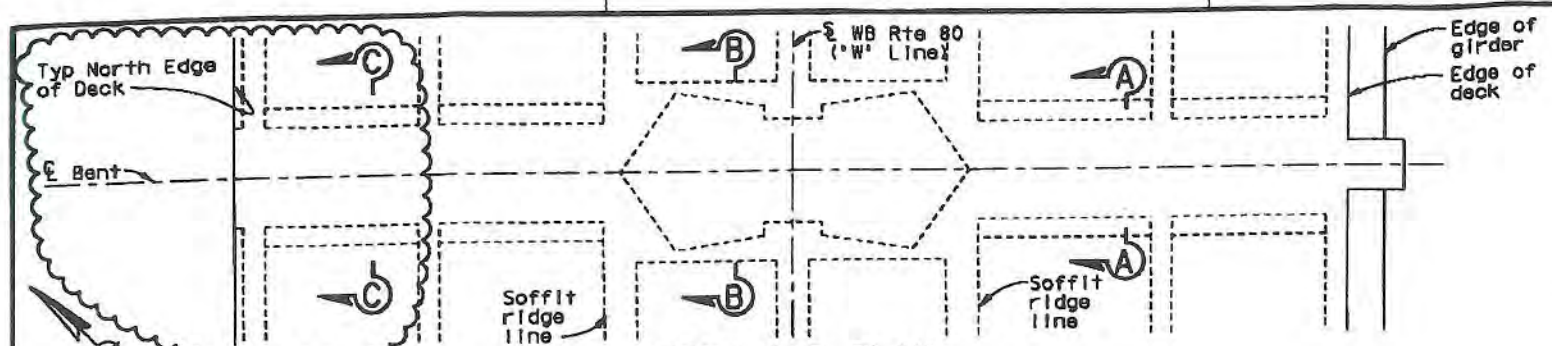

BENT CAP PLAN
1:80

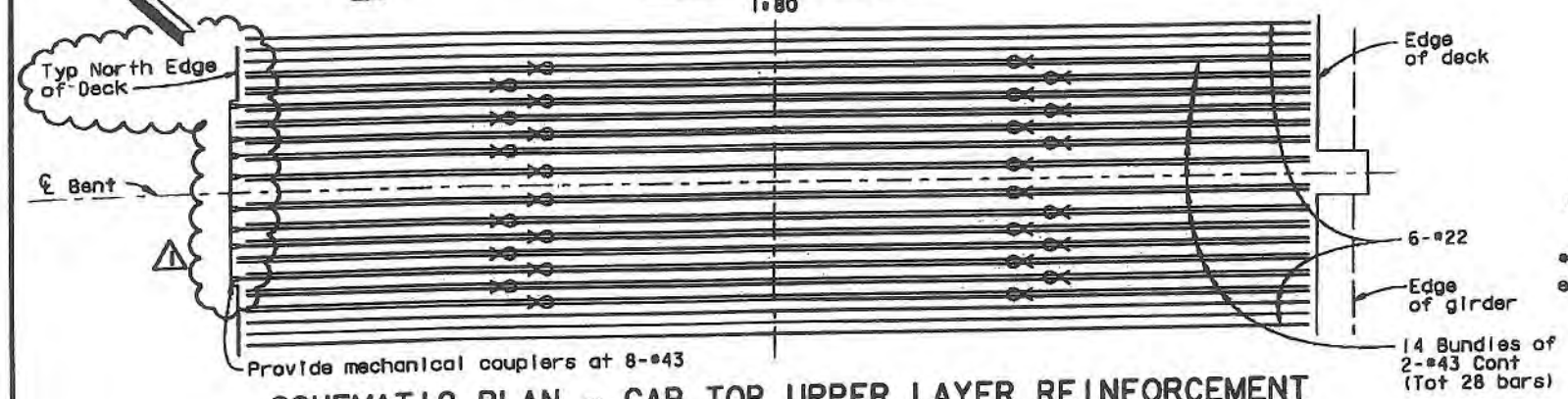

SCHEMATIC PLAN - CAP TOP UPPER LAYER REINFORCEMENT
No scale

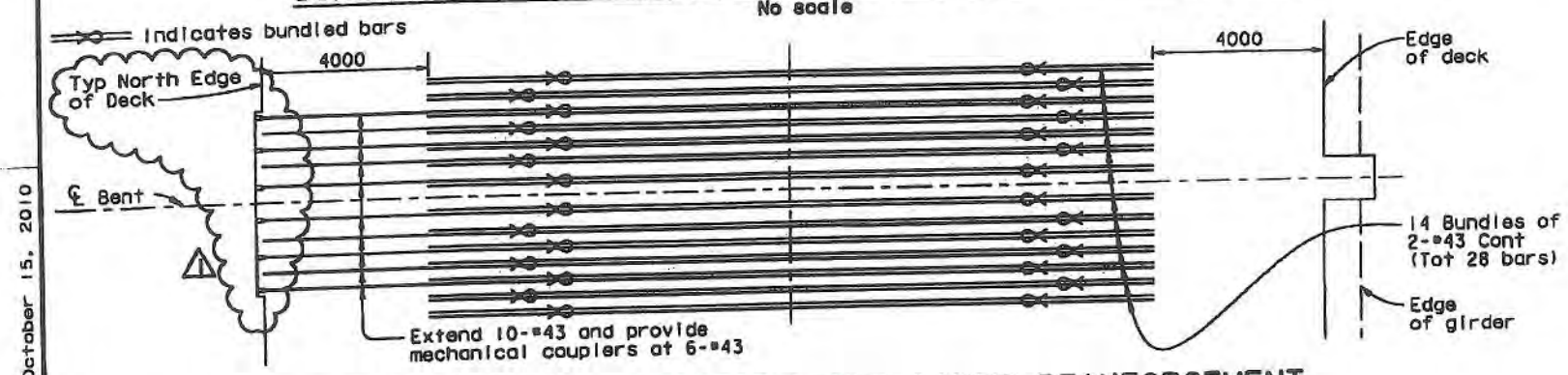

SCHEMATIC PLAN - CAP TOP LOWER LAYER REINFORCEMENT
No scale

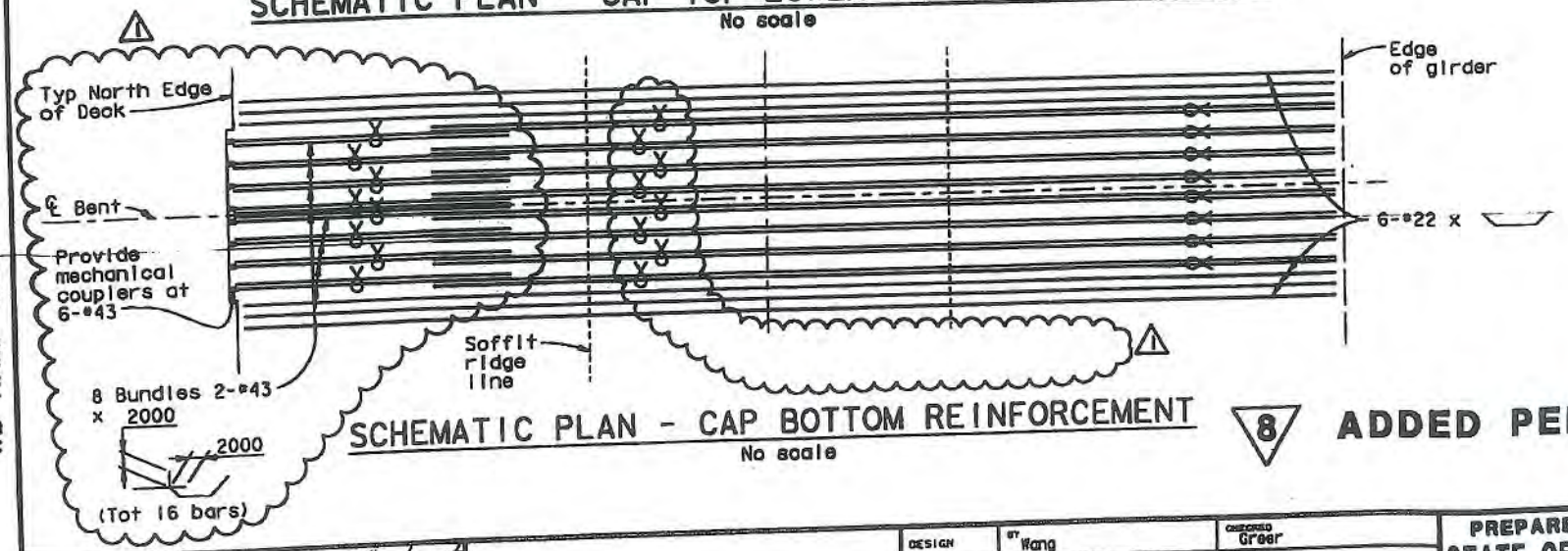

SCHEMATIC PLAN - CAP BOTTOM REINFORCEMENT
No scale

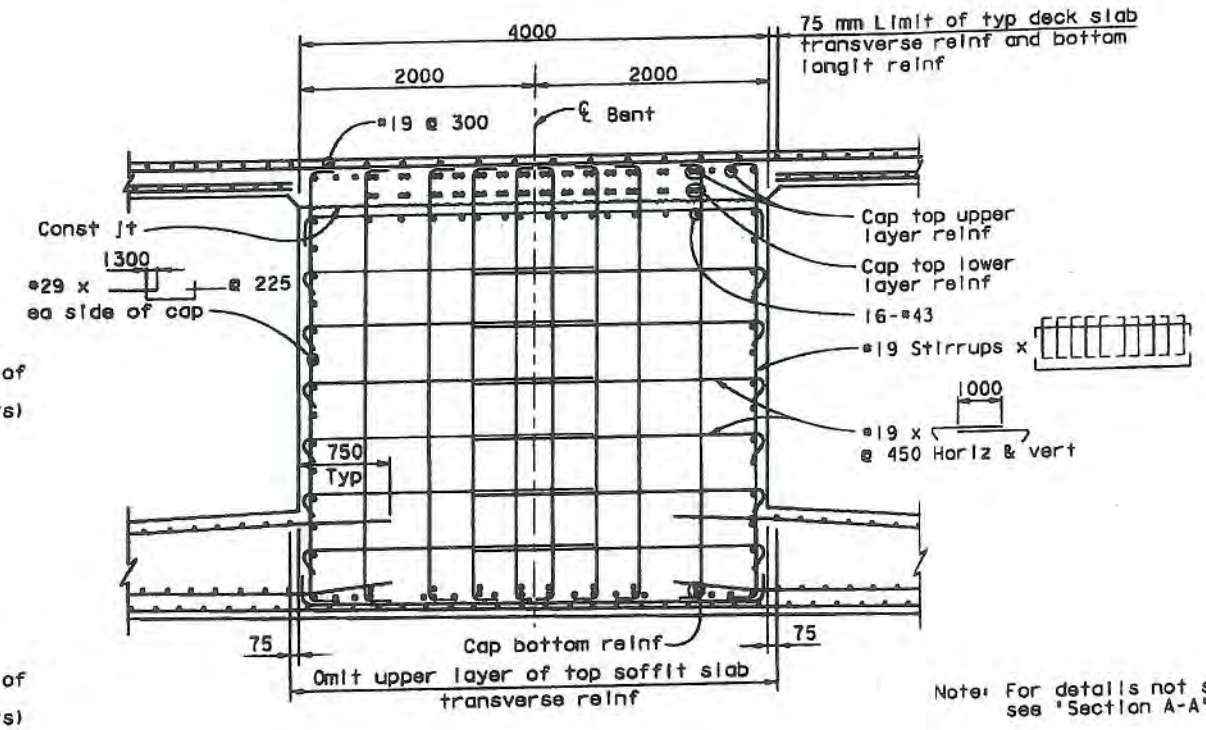

Note: For details not shown, see 'Section A-A'

SECTION B-B
1:30

REGISTERED PROFESSIONAL ENGINEER A.L. ELY No. 18880 Exp. 6-30-11 CIVIL STATE OF CALIFORNIA

FOR REVISION 1 ONLY

MARK	DATE	DESCRIPTIONS	BY	CH'D
1	5-27-10	WB Ramp Revisions	TL	AE

REVISIONS

CONTRACT CHANGE ORDER NO. 53
SHEET 27 OF 51

8 ADDED PER ADDENDUM NO. 8 DATED NOVEMBER 12, 2009

ALL DIMENSIONS ARE IN MILLIMETERS UNLESS OTHERWISE SHOWN

SAN FRANCISCO OAKLAND BAY BRIDGE
EAST SPAN SEISMIC SAFETY PROJECT

YBI TRANSITION STRUCTURES

BENT W4L DETAILS NO. 2

DESIGN OVERSIGHT: JUAN F. CARPIO — HASAN EL-NATUR — 10/20/10

SIGN OFF DATE

Rev. Date 5-15-98

DESIGN	BY Wang	CHECKED Greer	
DETAILS	BY van Ryn/Zuochi/Wai	CHECKED Jain	
QUANTITIES	BY Liao	CHECKED E. Nichol	

PREPARED FOR THE STATE OF CALIFORNIA DEPARTMENT OF TRANSPORTATION

Jai Birdy
PROJECT ENGINEER

CU 04251
EA 0120S1

BRIDGE NO. 34-006 L/R
KILOMETER POST 12.8

DISREGARD PRINTS BEARING EARLIER REVISION DATES

REVISION DATES (PRELIMINARY GRADE ONLY) 8/15/09

SHEET 45A OF 209

ORIGINAL SCALE IN MILLIMETERS FOR REDUCED PLANS 0 10 20 30 40 50 60 70 80 90 100

FILE: J:\Projects\Projects\5677 - Yerba Buena Island (YBI) Bridge\7 Design Information\CADD\sheets\Addendum include shts from TS\101510\04-0120s1-34-006rl-h-bdet28a.dgn

October 15, 2010

WB RAMP CCO

USERNAME => fasmson DATE PLOTTED => 10/15/2010 TIME PLOTTED => 11:50:22 PM

DIST.	COUNTY	ROUTE	KILOMETER POST TOTAL PROJECT	SHEET NO.	TOTAL SHEETS
04	SF	80	12.7/13.2	594BR3	806

REGISTERED ENGINEER - CIVIL

PLANS APPROVAL DATE

The State of California or its officers or agents shall not be responsible for the accuracy or completeness of electronic copies of this plan sheet.

REGISTERED PROFESSIONAL ENGINEER A.L. ELY No. 18880 Exp. 6-30-09 CIVIL STATE OF CALIFORNIA

T.Y. LIN / MOFFATT & NICHOL
TWO HARRISON STREET
SAN FRANCISCO, CA 94105

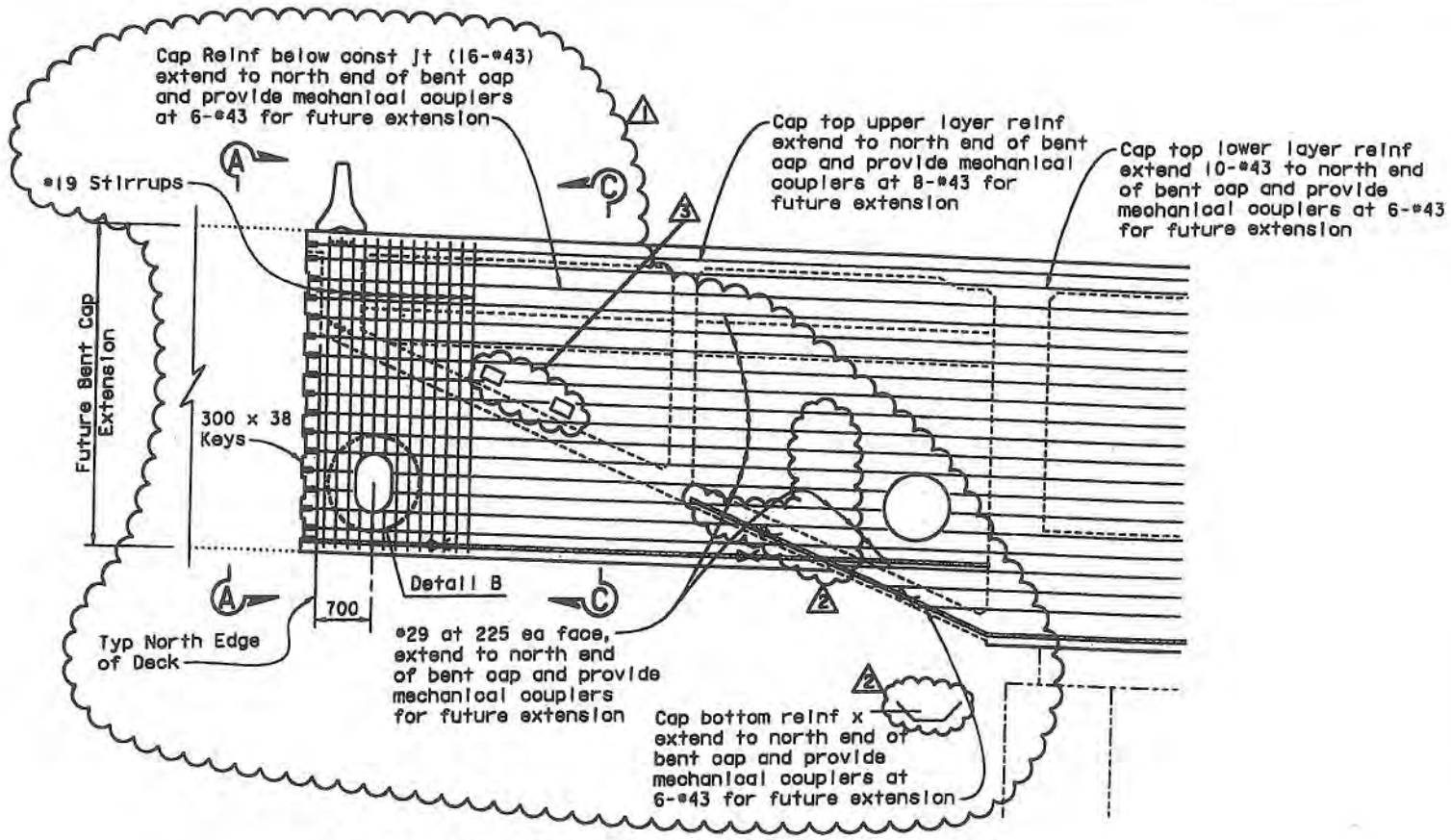

ELEVATION AT NORTH SIDE OF BENT CAP
1:40

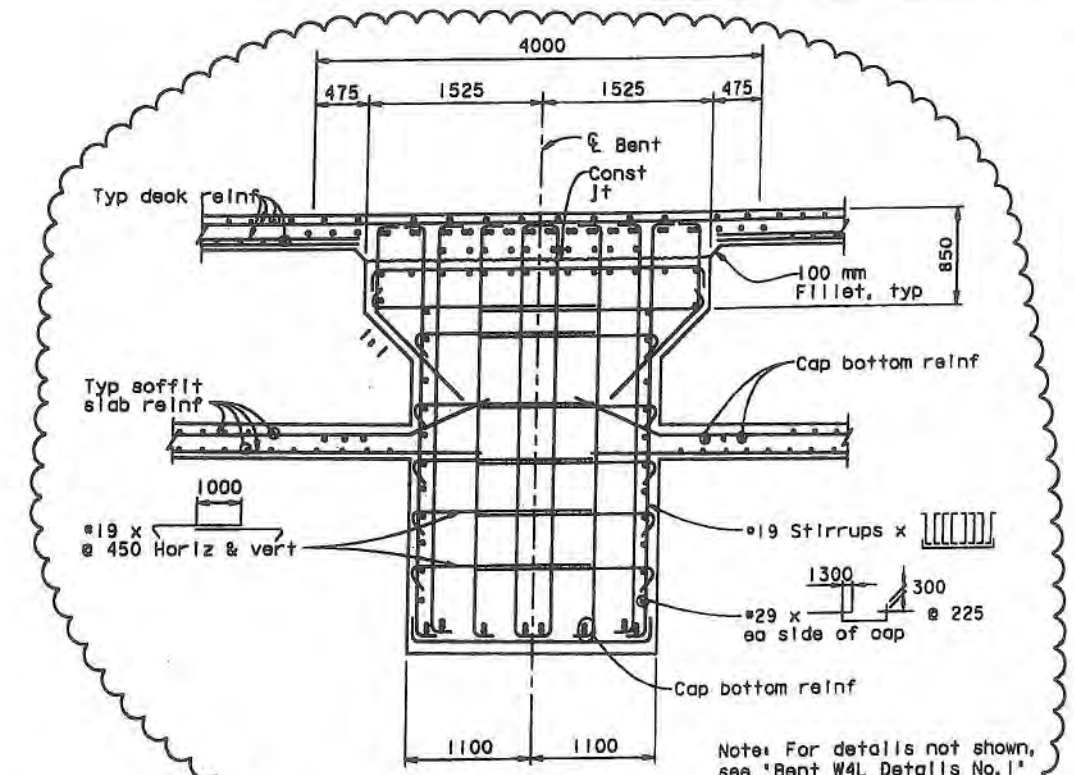

Note: For details not shown, see 'Bent W4L Details No.1' sheet, Section A-A.

SECTION C-C
1:30

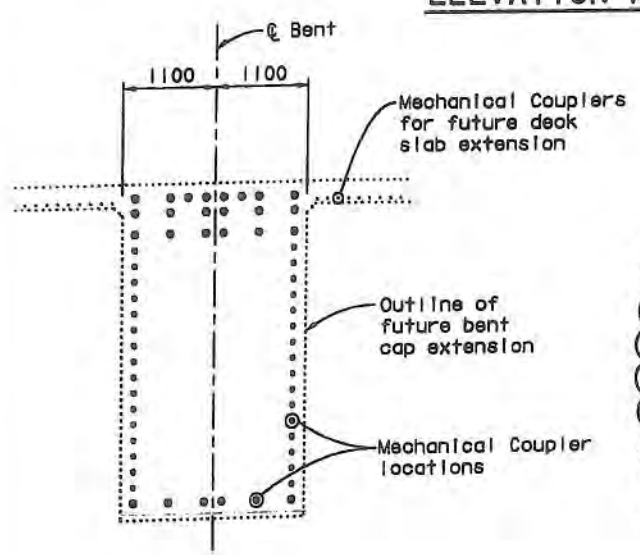

SECTION A-A
1:40

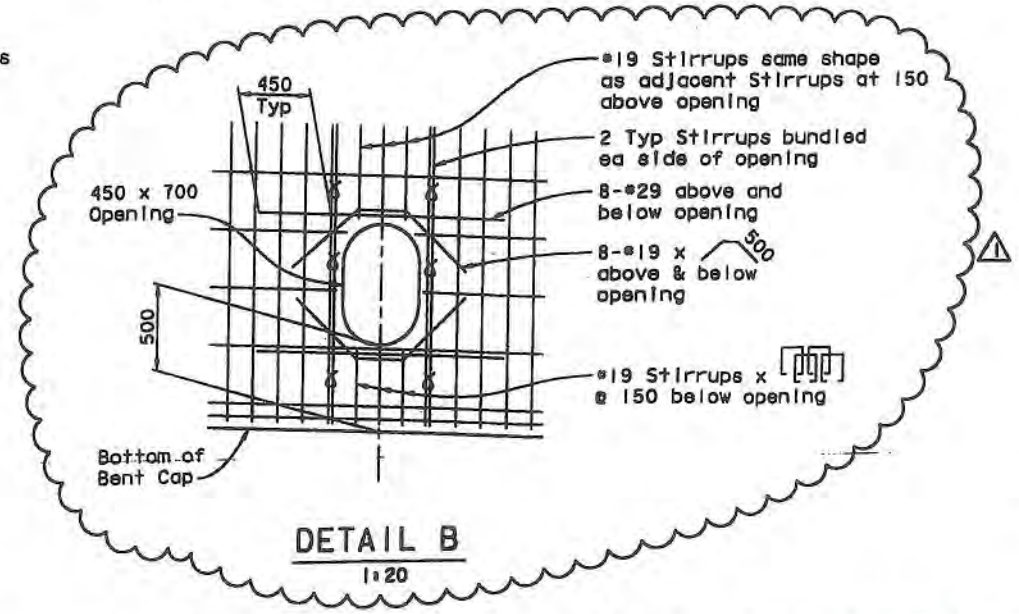

DETAIL B
1:20

REGISTERED PROFESSIONAL ENGINEER A.L. ELY No. 18880 Exp. 6-30-11 CIVIL STATE OF CALIFORNIA

FOR REVISION 1 2 & 3 ONLY

MARK	DATE	DESCRIPTIONS	BY	CH'D
3	3-30-11	Rev Bent Cap Opening	TL	AE
2	2-8-11	ISD Revisions	TL	AE
1	5-27-10	WB Ramp Revisions	TL	AE

REVISIONS

CONTRACT CHANGE ORDER NO. 53
SHEET 28 OF 51

8 ADDED PER ADDENDUM NO. 8 DATED NOVEMBER 12, 2009

ALL DIMENSIONS ARE IN MILLIMETERS UNLESS OTHERWISE SHOWN

DESIGN OVERSIGHT JUAN F. CARPIO JOSAN EL-NAHR 4/25/11

SIGN OFF DATE

Rev. Date: 5-15-08

	BY	CHECKED
DESIGN	Wang	Lee
DETAILS	Sanson	Jain
QUANTITIES	Jain	Birdy

PREPARED FOR THE STATE OF CALIFORNIA DEPARTMENT OF TRANSPORTATION

Jai Birdy
PROJECT ENGINEER

CU 04251
EA 0120S1

BRIDGE NO. 34-006 L/R
KILOMETER POST 12.8

SAN FRANCISCO OAKLAND BAY BRIDGE
EAST SPAN SEISMIC SAFETY PROJECT

YBI TRANSITION STRUCTURES

BENT W4L DETAILS NO.3

ORIGINAL SCALE IN MILLIMETERS FOR REDUCED PLANS 0 10 20 30 40 50 60 70 80 90 100

DISREGARD PRINTS BEARING EARLIER REVISION DATES

REVISION DATES (PRELIMINARY STAGE ONLY)

SHEET 45B OF 209

FILE => \\mnlbfs\LS_Projects\4141-06\CADD\TS\Checked Plans\YBITS #1-100% No. 2_03-03-08 (Final Renamed)\033011 Openings T9 CCO\04-0120s1-34-006r1-h-bdet28b.dgn

March 30, 2011

USERNAME => fsanson DATE PLOTTED => 3/29/2011 TIME PLOTTED => 11:30:52 AM

MARK	DATE	DESCRIPTIONS	BY	CH'D
1	12-23-09	WB Ramp Revisions	TL	AE

REVISIONS

FOR REVISION 1 ONLY

CONTRACT CHANGE ORDER NO. 53
SHEET 29 OF 51

DIST.	COUNTY	ROUTE	KILOMETER POST TOTAL PROJECT	SHEET NO.	TOTAL SHEETS
04	SF	80	12.7/13.2	614R1	806

REGISTERED ENGINEER - CIVIL
6-23-08
PLANS APPROVAL DATE
The State of California or its officers or agents shall not be responsible for the accuracy or completeness of electronic copies of this plan sheet.

T.Y. LIN / MOFFATT & NICHOL
TWO HARRISON STREET
SAN FRANCISCO, CA 94105

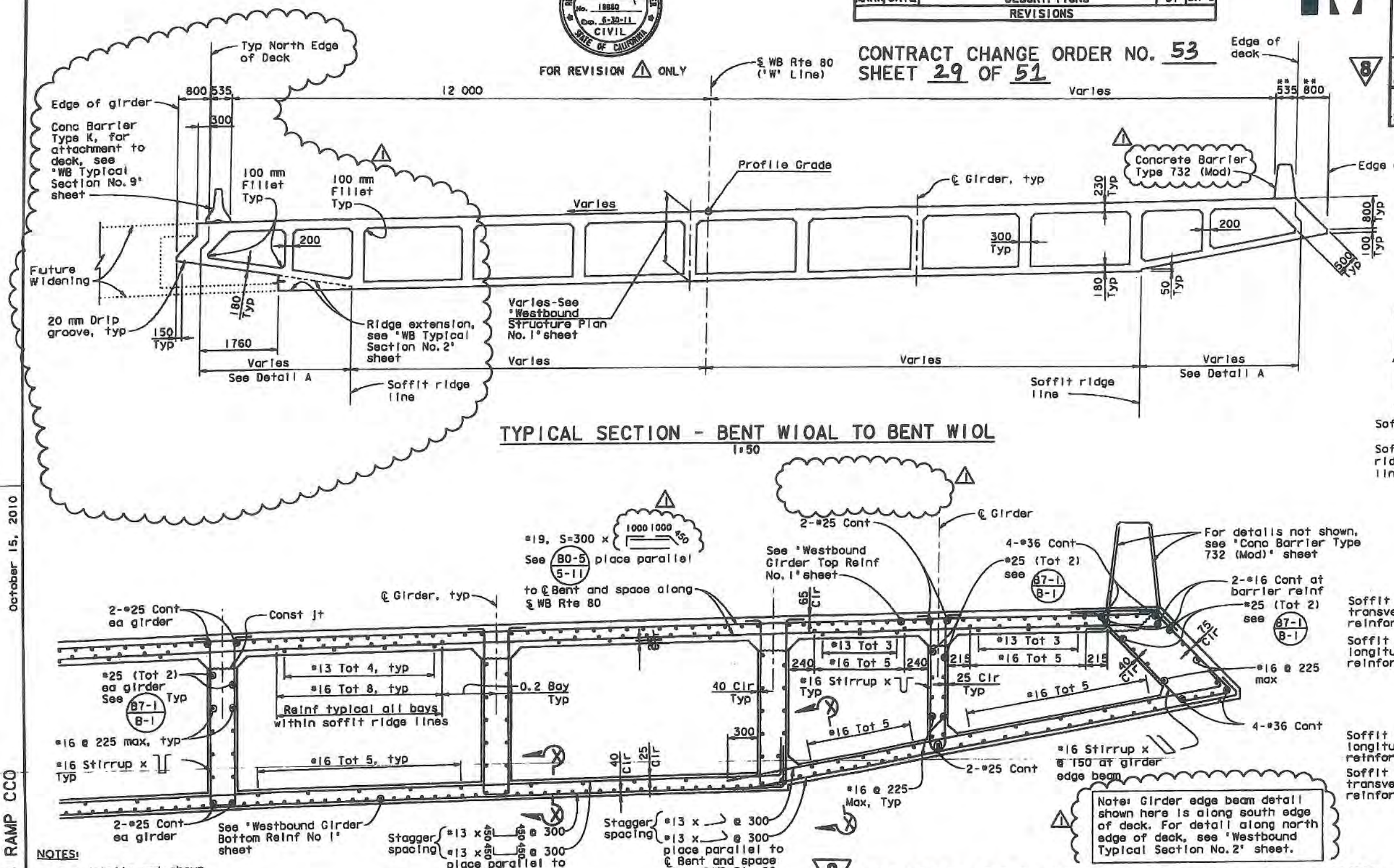

TYPICAL SECTION - BENT W1OAL TO BENT W1OL
1:50

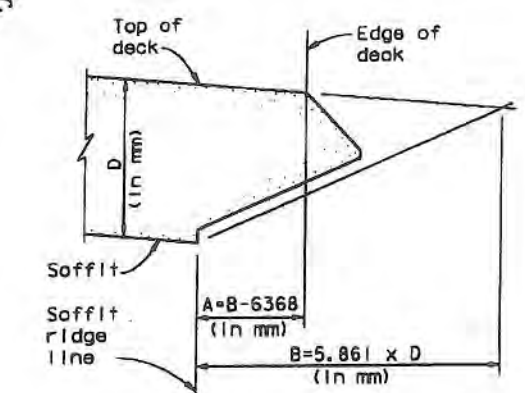

Note: Dimensions A & B are measured perpendicular to edge of deck

DETAIL A
(Typ bent W1OAL to W7L)
NO SCALE

Note: Girder edge beam detail shown here is along south edge of deck. For detail along north edge of deck, see 'Westbound Typical Section No. 2' sheet.

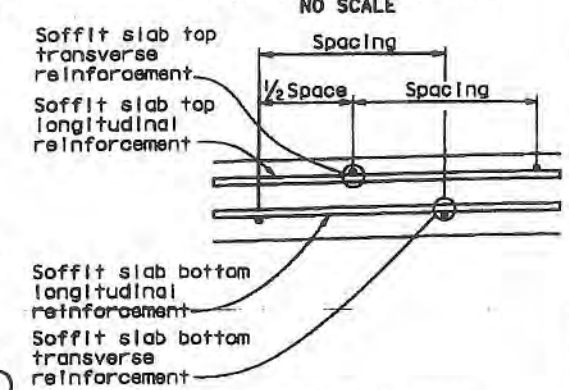

SECTION X-X
NO SCALE

NOTES:
For details not shown see B0-5 and B7-1

8 REVISED PER ADDENDUM NO. 8 DATED NOVEMBER 12, 2009

PARTIAL TYPICAL SECTION
1:20

ALL DIMENSIONS ARE IN MILLIMETERS UNLESS OTHERWISE SHOWN

SAN FRANCISCO OAKLAND BAY BRIDGE
EAST SPAN SEISMIC SAFETY PROJECT

YBI TRANSITION STRUCTURES

WESTBOUND TYPICAL SECTION NO. 1

DESIGN OVERSIGHT: Mike Gilchrist, Francisco Ono, Hasan El-Natur
DESIGN BOOK: BERNARD CHAN, JUAN F. CARPIO
March 3, 2008 — 10/26/10
SIGN OFF DATE

	BY	CHECKED
DESIGN	Jain	Desai
DETAILS	van Ryn/Zucchi/Mal	Jain
QUANTITIES	Liao	E. Nichol

PREPARED FOR THE STATE OF CALIFORNIA DEPARTMENT OF TRANSPORTATION

Jai Birdy
PROJECT ENGINEER

BRIDGE NO. 34-0006 L/R
KILOMETER POST 12.8

CU 04251
EA 0120S1

ORIGINAL SCALE IN MILLIMETERS FOR REDUCED PLANS: 0 10 20 30 40 50 60 70 80 90 100

DISREGARD PRINTS BEARING EARLIER REVISION DATES

REVISION DATES (PRELIMINARY STAGE ONLY)

SHEET 65 OF 209

Rev. Date: 5-18-98

WB RAMP CCO

October 15, 2010

USERNAME => fadmin DATE PLOTTED => 10/15/2010 TIME PLOTTED => 11:50:46 PM

DIST	COUNTY	ROUTE	KILOMETER POST TOTAL PROJECT	SHEET NO.	TOTAL SHEETS
04	SF	80	12.7/13.2	615R1	806

REGISTERED ENGINEER - CIVIL
6-23-08
PLANS APPROVAL DATE

The State of California or its officers or agents shall not be responsible for the accuracy or completeness of electronic copies of this plan sheet.

T.Y. LIN / MOFFATT & NICHOL
TWO HARRISON STREET
SAN FRANCISCO, CA 94105

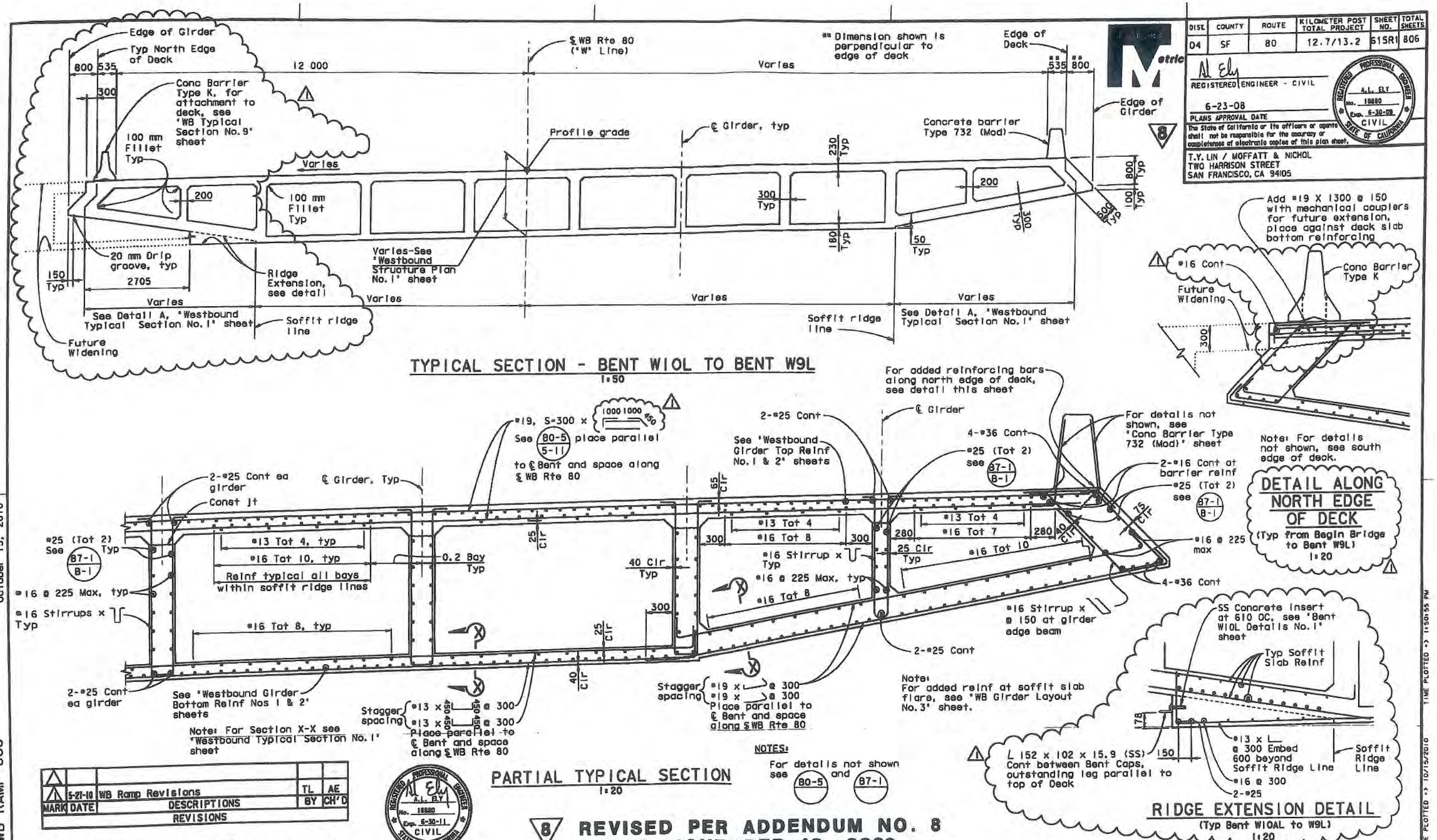

TYPICAL SECTION - BENT W10L TO BENT W9L
1:50

DETAIL ALONG NORTH EDGE OF DECK
(Typ from Begin Bridge to Bent W9L)
1:20

PARTIAL TYPICAL SECTION
1:20

RIDGE EXTENSION DETAIL
(Typ Bent W10AL to W9L)
1:20

MARK	DATE	DESCRIPTIONS	BY	CH'D
8	5-21-10	WB Ramp Revisions	TL	AE
		REVISIONS		

FOR REVISION ⚠ ONLY

8 REVISED PER ADDENDUM NO. 8 DATED NOVEMBER 12, 2009

NOTES:
For details not shown see 80-5 and 87-1

ALL DIMENSIONS ARE IN MILLIMETERS UNLESS OTHERWISE SHOWN

CONTRACT CHANGE ORDER NO. 53
SHEET 30 OF 51

DESIGN OVERSIGHT
JOHN MOCK, BERNARD CHAN, JUAN F. CARPIO — HASAN EL-NATUR
March 3, 2008 — 10/20/10
SIGN OFF DATE

	BY	CHECKED
DESIGN	Jain	Desai
DETAILS	van Ryn/Zucchi/Mal	Jain
QUANTITIES	Liao	E. Nichol

PREPARED FOR THE STATE OF CALIFORNIA DEPARTMENT OF TRANSPORTATION

Jal Birdy
PROJECT ENGINEER

CU 04251
EA 0120S1

BRIDGE NO. 34-0006 L/R
KILOMETER POST 12.8

SAN FRANCISCO OAKLAND BAY BRIDGE
EAST SPAN SEISMIC SAFETY PROJECT

YBI TRANSITION STRUCTURES

WESTBOUND TYPICAL SECTION NO. 2

DISREGARD PRINTS BEARING EARLIER REVISION DATES
REVISION DATES (PRELIMINARY STAGE ONLY)

SHEET 66 OF 209

ORIGINAL SCALE IN MILLIMETERS FOR REDUCED PLANS 0 10 20 30 40 50 60 70 80 90 100

Rev. Date: 5-19-98

October 15, 2010
WB RAMP CCO
USERNAME => fcamson DATE PLOTTED => 10/15/2010 TIME PLOTTED => 11:50:55 PM

DIST.	COUNTY	ROUTE	KILOMETER POST TOTAL PROJECT	SHEET NO.	TOTAL SHEETS
04	SF	80	12.7/13.2	516R1	806

REGISTERED ENGINEER - CIVIL

6-23-08

PLANS APPROVAL DATE

The State of California or its officers or agents shall not be responsible for the accuracy or completeness of electronic copies of this plan sheet.

REGISTERED PROFESSIONAL ENGINEER A.L. ELY No. 18880 Exp. 6-30-09 CIVIL STATE OF CALIFORNIA

T.Y. LIN / MOFFATT & NICHOL
TWO HARRISON STREET
SAN FRANCISCO, CA 94105

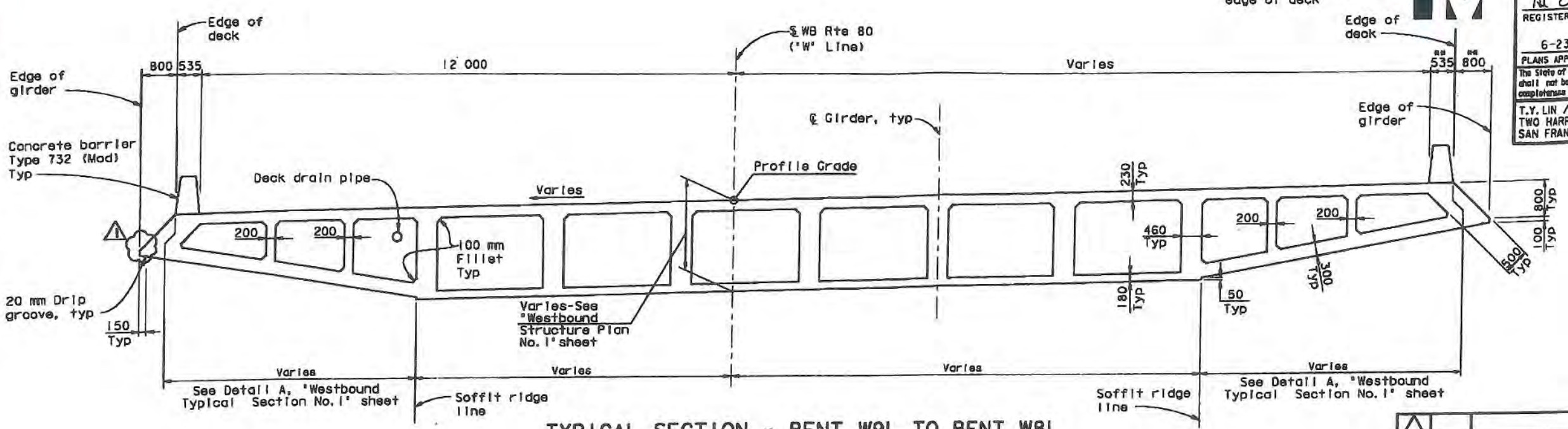

TYPICAL SECTION - BENT W9L TO BENT W8L

1:50

REGISTERED PROFESSIONAL ENGINEER A.L. ELY No. 18880 Exp. 6-30-11 CIVIL STATE OF CALIFORNIA

FOR REVISION ⚠1 ONLY

MARK	DATE	DESCRIPTIONS	BY	CH'D
⚠1	12-23-08	WB Ramp Revisions	TL	AE

REVISIONS

CONTRACT CHANGE ORDER NO. 53
SHEET 31 OF 51

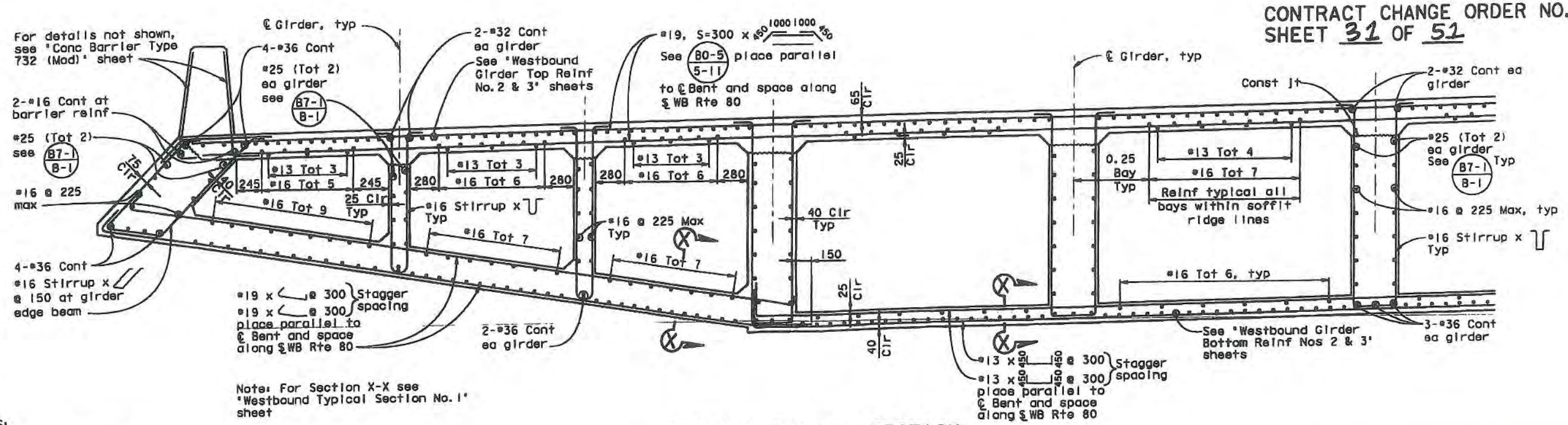

Note: For Section X-X see 'Westbound Typical Section No. 1' sheet

NOTES:

For details not shown see B0-5 and B7-1

PARTIAL TYPICAL SECTION

1:20

ALL DIMENSIONS ARE IN MILLIMETERS UNLESS OTHERWISE SHOWN

SAN FRANCISCO OAKLAND BAY BRIDGE
EAST SPAN SEISMIC SAFETY PROJECT

YBI TRANSITION STRUCTURES

WESTBOUND TYPICAL SECTION NO. 3

DESIGN OVERSIGHT: JOSEPH NOOR, BERNARD CHAN, JUAN F. CARPIO, HASAN EL-NATUR
SIGN OFF DATE: March 3, 2008

	BY	CHECKED
DESIGN	Jain	Desai
DETAILS	van Ryn/Zucchi/Mal	Jain
QUANTITIES	Liao	E. Nichol

PREPARED FOR THE STATE OF CALIFORNIA DEPARTMENT OF TRANSPORTATION

Jai Birdy, PROJECT ENGINEER

BRIDGE NO. 34-0006 L/R
KILOMETER POST 12.8

CU 04251
EA 0120S1

DISREGARD PRINTS BEARING EARLIER REVISION DATES

REVISION DATES (PRELIMINARY STAGE ONLY): 1/24/07 01/25/08 1/24 1/24/08 1/24/08 1/24/08 1/24/08 1/24/08 1/24/08 1/24/08

SHEET 67 OF 209

ORIGINAL SCALE IN MILLIMETERS FOR REDUCED PLANS 0 10 20 30 40 50 60 70 80 90 100

Rev. Date: 5-8-08

(FILE => \\mnlsfs\LB Projects\6674 - Yerba Buena Island (YBI) Bridge\7 Design Information\0400\sheets\Addendum Include chg ...)

USERNAME => fsamson DATE PLOTTED => 10/15/2010 TIME PLOTTED => 11:45:24 PM

October 15, 2010

WB RAMP CCO

7 REVISED PER ADDENDUM NO. 7 DATED OCTOBER 19, 2009

** Dimension shown is perpendicular to edge of deck

* See 'WB Typical Section No. 5' sheet for dimensions @ Bent W7L

DIST.	COUNTY	ROUTE	KILOMETER POST TOTAL PROJECT	SHEET NO.	TOTAL SHEETS
04	SF	80	12.7/13.2	617R1	806

REGISTERED ENGINEER - CIVIL

6-23-08

PLANS APPROVAL DATE

The State of California or its officers or agents shall not be responsible for the accuracy or completeness of electronic copies of this plan sheet.

REGISTERED PROFESSIONAL ENGINEER A.L. ELY No. 18880 Exp. 6-30-09 CIVIL STATE OF CALIFORNIA

T.Y. LIN / MOFFATT & NICHOL
TWO HARRISON STREET
SAN FRANCISCO, CA 94105

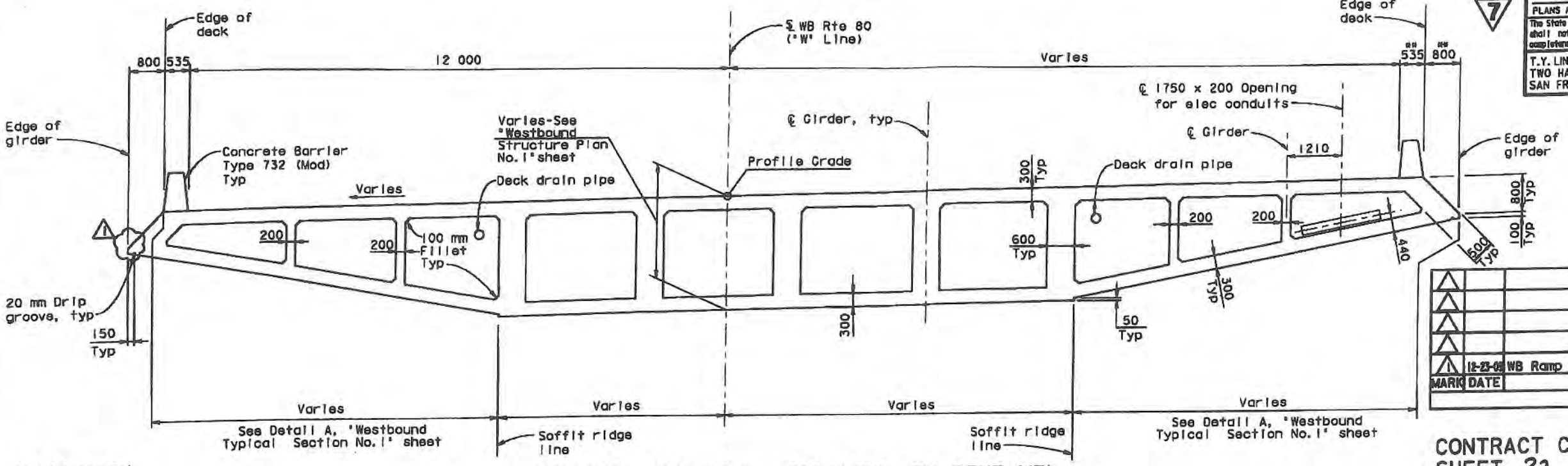

TYPICAL SECTION - BENT W8L TO BENT W7L
1:50

FOR REVISION 1 ONLY

MARK	DATE	DESCRIPTIONS	BY	CH'D
1	12-23-08	WB Ramp Revisions	TL	AE

REVISIONS

CONTRACT CHANGE ORDER NO. 53
SHEET 32 OF 51

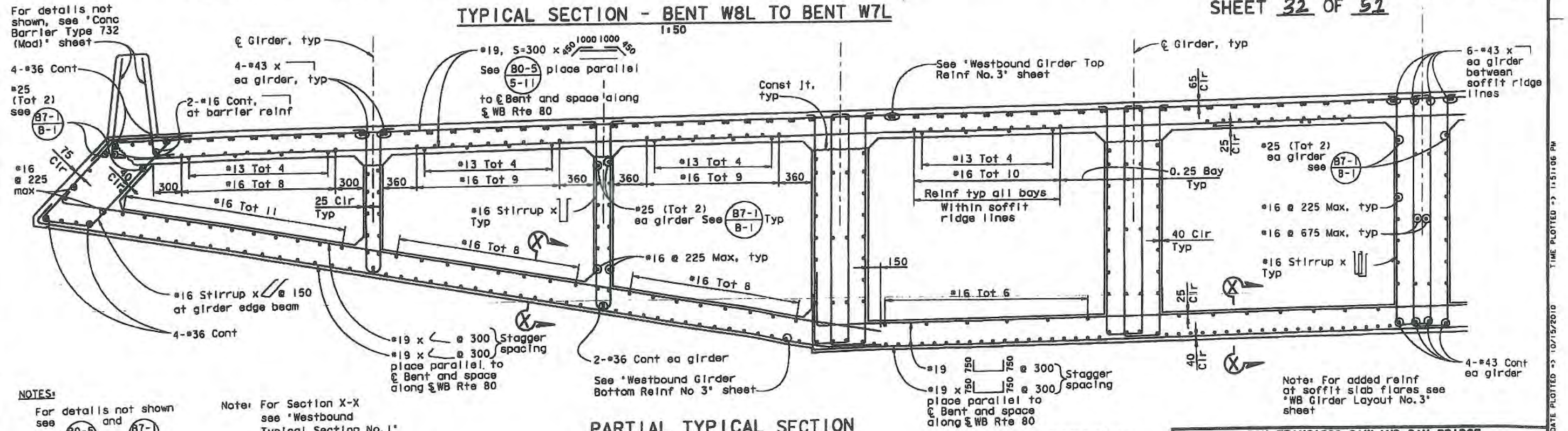

NOTES:

For details not shown see 80-5 and B7-1

Note: For Section X-X see 'Westbound Typical Section No. 1' sheet

PARTIAL TYPICAL SECTION
1:20

ALL DIMENSIONS ARE IN MILLIMETERS UNLESS OTHERWISE SHOWN

SAN FRANCISCO OAKLAND BAY BRIDGE
EAST SPAN SEISMIC SAFETY PROJECT

YBI TRANSITION STRUCTURES

WESTBOUND TYPICAL SECTION NO. 4

DESIGN OVERSIGHT: JOHN MOOR, BERNARD CHIAN, JUAN F. CARPIO, HASAN EL-HATUR
March 3, 2008
SIGN OFF DATE

	BY	CHECKED
DESIGN	Jain	Dasal
DETAILS	van Ryn/Zucchi/Mal	Jain
QUANTITIES	Liao	E. Nichol

PREPARED FOR THE STATE OF CALIFORNIA DEPARTMENT OF TRANSPORTATION

Jai Birdy
PROJECT ENGINEER

BRIDGE NO. 34-0006 L/R
KILOMETER POST 12.8

CU 04251
EA 0120S1

DISREGARD PRINTS BEARING EARLIER REVISION DATES

REVISION DATES (PRELIMINARY STAGE ONLY)

SHEET 68 OF 209

ORIGINAL SCALE IN MILLIMETERS FOR REDUCED PLANS

Rev. Date: 5-2-98

WB RAMP CCO

October 15, 2010

USERNAME => fagaman DATE PLOTTED => 10/15/2010 TIME PLOTTED => 15:11:06 PM

7 REVISED PER ADDENDUM NO. 7 DATED OCTOBER 19, 2009

DIST.	COUNTY	ROUTE	KILOMETER POST TOTAL PROJECT	SHEET NO.	TOTAL SHEETS
04	SF	80	12.7/13.2	618R1	806

REGISTERED ENGINEER - CIVIL
6-23-08
PLANS APPROVAL DATE
The State of California or its officers or agents shall not be responsible for the accuracy or completeness of electronic copies of this plan sheet.

REGISTERED PROFESSIONAL ENGINEER A.L. ELY No. 18880 Exp. 6-30-09 CIVIL STATE OF CALIFORNIA

T.Y. LIN / MOFFATT & NICHOL
TWO HARRISON STREET
SAN FRANCISCO, CA 94105

REGISTERED PROFESSIONAL ENGINEER A.L. ELY No. 18880 Exp. 6-30-11 CIVIL STATE OF CALIFORNIA

FOR REVISION 1 ONLY

MARK	DATE	DESCRIPTIONS	BY	CH'D
1	12-23-09	WB Ramp Revisions	TL	AE

REVISIONS

CONTRACT CHANGE ORDER NO. 53
SHEET 33 OF 51

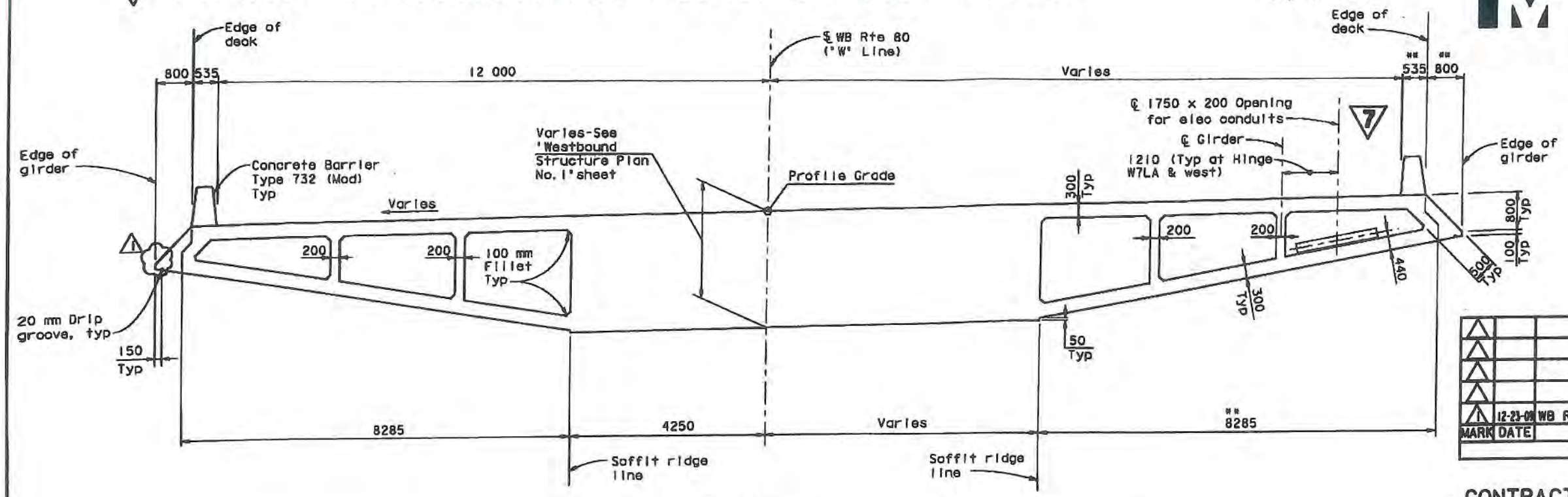

TYPICAL SECTION - BENT W7L TO HINGE W7LA
1:50

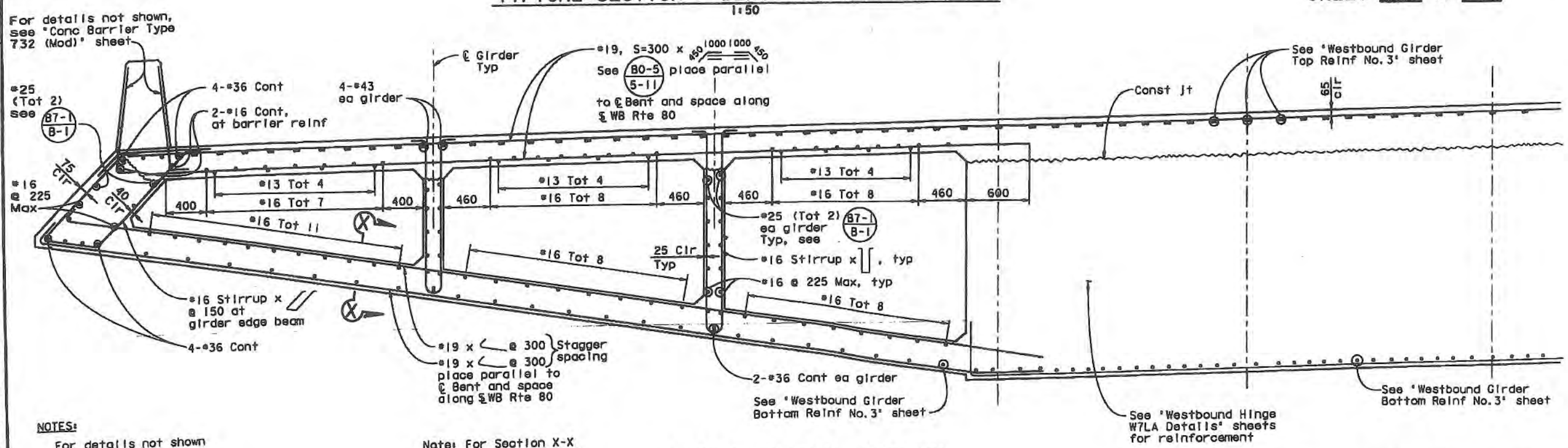

NOTES:
For details not shown see B0-5 and B7-1

Note: For Section X-X see 'Westbound Typical Section No. 1' sheet

PARTIAL TYPICAL SECTION
1:20

ALL DIMENSIONS ARE IN MILLIMETERS UNLESS OTHERWISE SHOWN

DESIGN OVERSIGHT
JOHN HOOK, BERNARD CHAN, JUAN F. CARPIO, HASAN EL-NATUR
March 3, 2008
SIGN OFF DATE

	BY	CHECKED
DESIGN	Jain	Desai
DETAILS	van Ryn/Zucchi/Mai	Jain
QUANTITIES	Liao	E. Nichol

PREPARED FOR THE STATE OF CALIFORNIA DEPARTMENT OF TRANSPORTATION

Jai Birdy
PROJECT ENGINEER

BRIDGE NO. 34-0006 L/R
KILOMETER POST 12.8

CU 04251
EA 0120S1

DISREGARD PRINTS BEARING EARLIER REVISION DATES

SAN FRANCISCO OAKLAND BAY BRIDGE
EAST SPAN SEISMIC SAFETY PROJECT

YBI TRANSITION STRUCTURES

WESTBOUND TYPICAL SECTION NO. 5

REVISION DATES (PRELIMINARY STAGE ONLY) 1/1/01 1/1/02 1/1/03 1/1/04 1/1/05 1/1/06 1/1/07 1/1/08 1/1/09 1/1/10

SHEET 69 OF 209

 original scale in millimeters for reduced plans 0 10 20 30 40 50 60 70 80 90 100

FILE => \\mnlbfs\LB Projects\6674 - Yerba Buena Island (YBI) Bridge\7 Design Information\CADD\sheets\Addendum Include shts from

Rev. Date 3-12-98

WB RAMP CCO

October 15, 2010

USERNAME => tsamson DATE PLOTTED => 10/15/2010 TIME PLOTTED => 14:51:16 PM

DIST.	COUNTY	ROUTE	KILOMETER POST TOTAL PROJECT	SHEET NO.	TOTAL SHEETS
04	SF	80	12.7/13.2	619R2	806

REGISTERED ENGINEER - CIVIL

6-23-08
PLANS APPROVAL DATE

The State of California or its officers or agents shall not be responsible for the accuracy or completeness of electronic copies of this plan sheet.

T.Y. LIN / MOFFATT & NICHOL
TWO HARRISON STREET
SAN FRANCISCO, CA 94105

MARK	DATE	DESCRIPTIONS	BY	CH'D
2	3-30-11	Added Elec Openings	TL	AE
1	10-15-10	WB Ramp Revisions & Rev Girder Conc Cover	TL	AE

REVISIONS

CONTRACT CHANGE ORDER NO. 53
SHEET 34 OF 51

FOR REVISION 1 & 2 ONLY

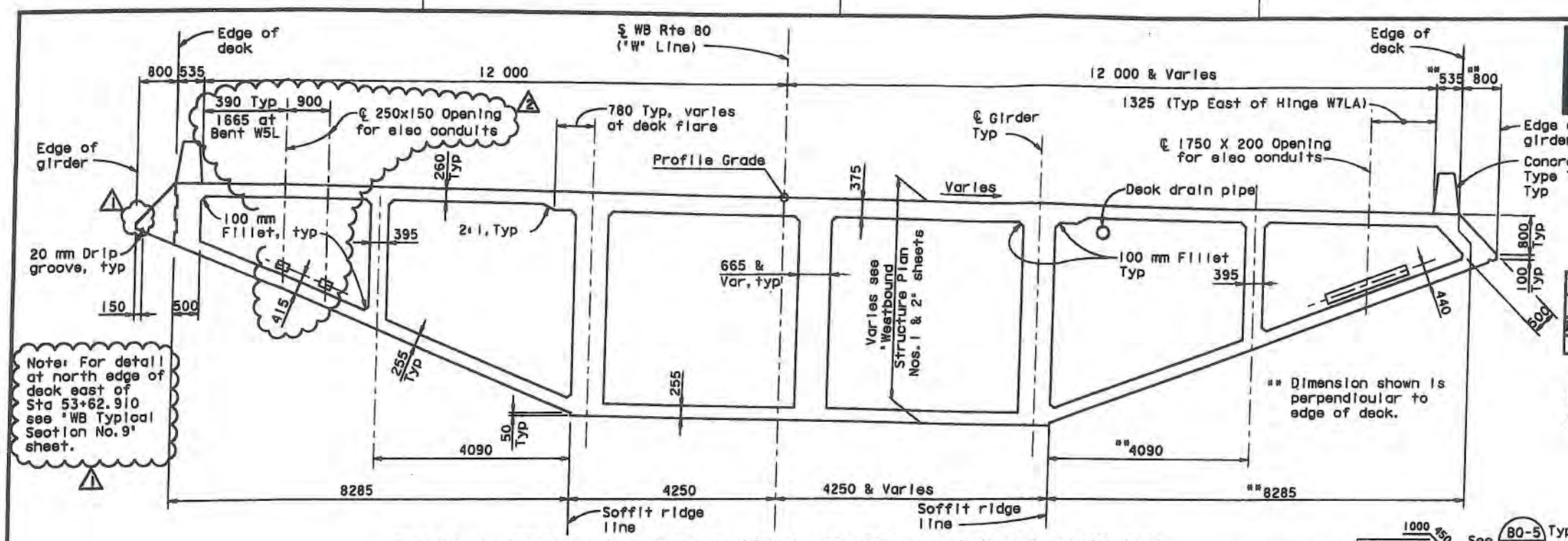

TYPICAL SECTION - HINGE W7LA TO 25 m WEST OF BENT W4L
1:50

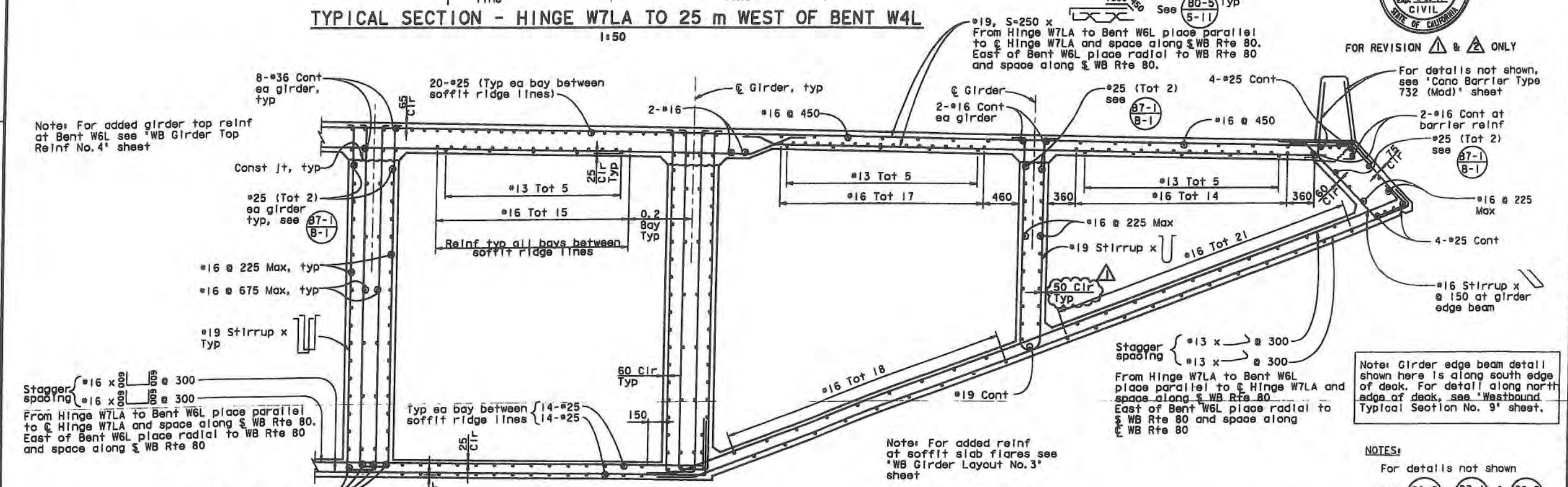

PARTIAL TYPICAL SECTION
1:25

NOTES:
For details not shown see B0-5, B7-1 & B8-5

8 REVISED PER ADDENDUM NO. 8 DATED NOVEMBER 12, 2009

ALL DIMENSIONS ARE IN MILLIMETERS UNLESS OTHERWISE SHOWN

DESIGN OVERSIGHT
JOHN LOOK, BERNARD CHAN, JUAN F. CARPIO, HASAN EL-NATUR
March 3, 2008
SIGN OFF DATE
4/28/11

	BY	CHECKED
DESIGN	Dodd	Jain
DETAILS	van Ryn/Zucchi/Wal	Jain
QUANTITIES	Liao	E. Nichol

PREPARED FOR THE STATE OF CALIFORNIA DEPARTMENT OF TRANSPORTATION

Jal Birdy
PROJECT ENGINEER

BRIDGE NO. 34-0006 L/R
KILOMETER POST 12.8

CU 04251
EA 0120S1

SAN FRANCISCO OAKLAND BAY BRIDGE
EAST SPAN SEISMIC SAFETY PROJECT

YBI TRANSITION STRUCTURES

WESTBOUND TYPICAL SECTION NO. 6

DISREGARD PRINTS BEARING EARLIER REVISION DATES

REVISION DATES (PRELIMINARY STAGE ONLY)

SHEET 70 OF 209

ORIGINAL SCALE IN MILLIMETERS FOR REDUCED PLANS 0 10 20 30 40 50 60 70 80 90 100

Rev. Date 5-10-99

March 30, 2011

USERNAME => fecmson DATE PLOTTED => 3/29/2011 TIME PLOTTED => 11:02:58 AM

DIST.	COUNTY	ROUTE	KILOMETER POST TOTAL PROJECT	SHEET NO.	TOTAL SHEETS
04	SF	80	12.7/13.2	620R2	806

REGISTERED ENGINEER - CIVIL
6-23-08
PLANS APPROVAL DATE
The State of California or its officers or agents shall not be responsible for the accuracy or completeness of electronic copies of this plan sheet.
A.L. ELY No. 18880 Exp. 6-30-09 CIVIL STATE OF CALIFORNIA

T.Y. LIN / MOFFATT & NICHOL
TWO HARRISON STREET
SAN FRANCISCO, CA 94105

8 REVISED PER ADDENDUM NO. 8 DATED NOVEMBER 12, 2009

2 REVISED PER ADDENDUM NO. 2 DATED JANUARY 22, 2009

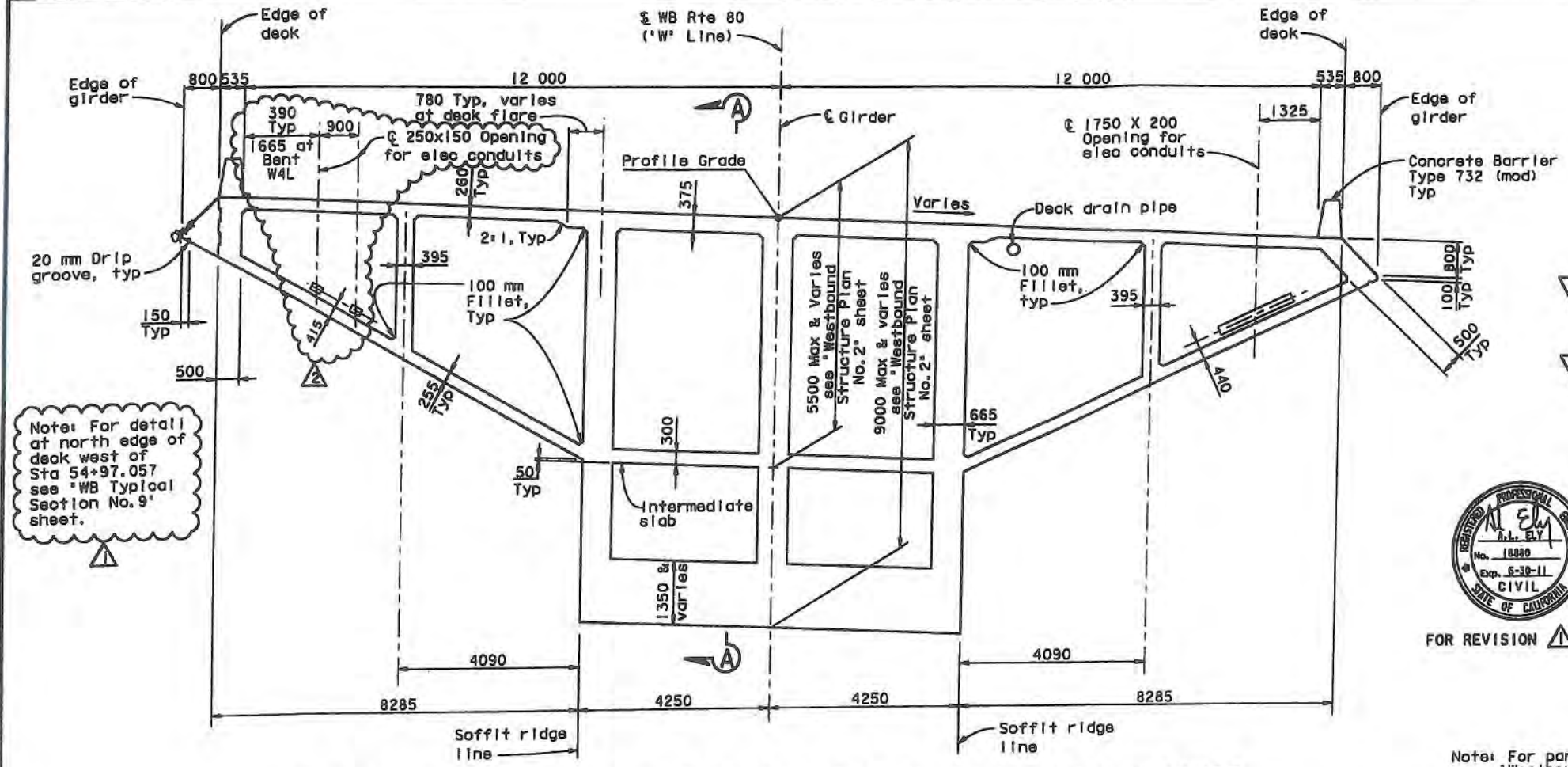

TYPICAL SECTION - 25 m WEST OF BENT W4L TO HINGE K CLOSURE

1:60

Note: For partial typical section see 'Westbound Typical Section No. 8' sheet

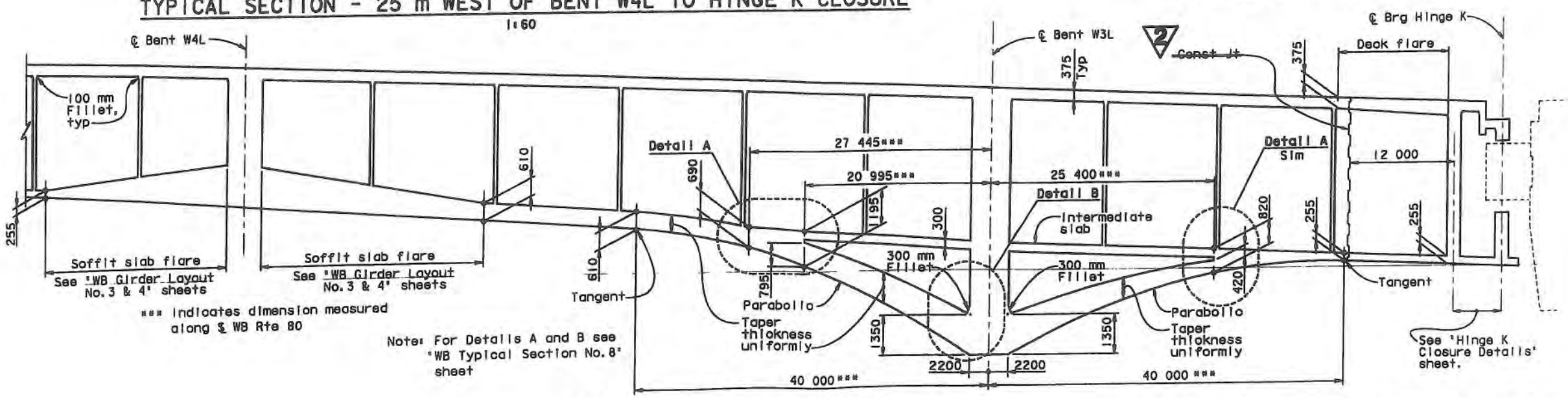

LONGITUDINAL SECTION A-A

No Scale

ALL DIMENSIONS ARE IN MILLIMETERS UNLESS OTHERWISE SHOWN

FOR REVISION 1 & 2 ONLY

MARK	DATE	DESCRIPTIONS	BY	CH'D
2	3-30-11	Added Elec Openings	TL	AE
1	12-23-09	WB Ramp Revisions	TL	AE

REVISIONS

CONTRACT CHANGE ORDER NO. 53
SHEET 35 OF 51

SAN FRANCISCO OAKLAND BAY BRIDGE
EAST SPAN SEISMIC SAFETY PROJECT

YBI TRANSITION STRUCTURES

WESTBOUND TYPICAL SECTION NO. 7

DESIGN OVERSIGHT: JOHN LOOK, BERNARD CHAN, JUAN F. CARPIO, HASAN EL-NATUR
March 3, 2008
SIGN OFF DATE
4/25/11

	BY	CHECKED
DESIGN	Dodd	Jain
DETAILS	van Ryn/Zucchi/Mal	Jain
QUANTITIES	Liao	E. Nichol

PREPARED FOR THE STATE OF CALIFORNIA DEPARTMENT OF TRANSPORTATION

Jal Birdy
PROJECT ENGINEER

BRIDGE NO. 34-0006 L/R
KILOMETER POST 12.8

CU 04251
EA 0120S1

DISREGARD PRINTS BEARING EARLIER REVISION DATES

REVISION DATES (PRELIMINARY STAGE ONLY)

SHEET 71 OF 209

ORIGINAL SCALE IN MILLIMETERS FOR REDUCED PLANS

Rev. Date: 5-02-98

FILE => \\mphfs\LB_Projects\4141-06\CADD\TS\Checked Plans\YBITS #1100% No. 2.03-03-08 (Final Renamed)\033011 Openings T9 CCO\04-0120s1-34-006r1-k-ts07.dgn

March 30, 2011

TIME PLOTTED => 11:03:07 AM
DATE PLOTTED => 3/29/2011
USERNAME => Tecmson

DIST.	COUNTY	ROUTE	KILOMETER POST TOTAL PROJECT	SHEET NO.	TOTAL SHEETS
04	SF	80	12.7/13.2	621A R1	806

REGISTERED ENGINEER - CIVIL

PLANS APPROVAL DATE

REGISTERED PROFESSIONAL ENGINEER A.L. ELY No. 18880 Exp. 6-30-09 CIVIL STATE OF CALIFORNIA

The State of California or its officers or agents shall not be responsible for the accuracy or completeness of electronic copies of this plan sheet.

T.Y. LIN / MOFFATT & NICHOL
TWO HARRISON STREET
SAN FRANCISCO, CA 94105

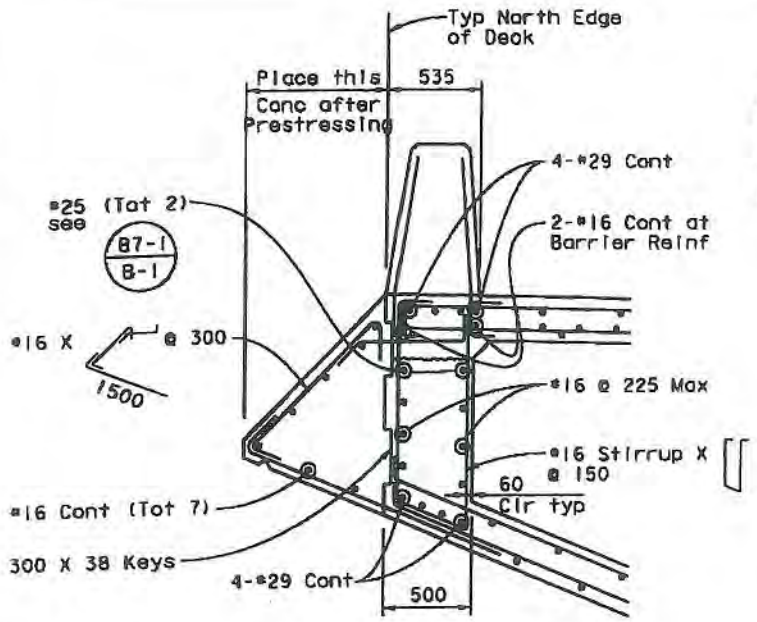

GIRDER EDGE BEAM DETAIL
ALONG NORTH EDGE OF DECK,
HINGE W7LA TO STA 53+62.910

DETAIL A
1:20

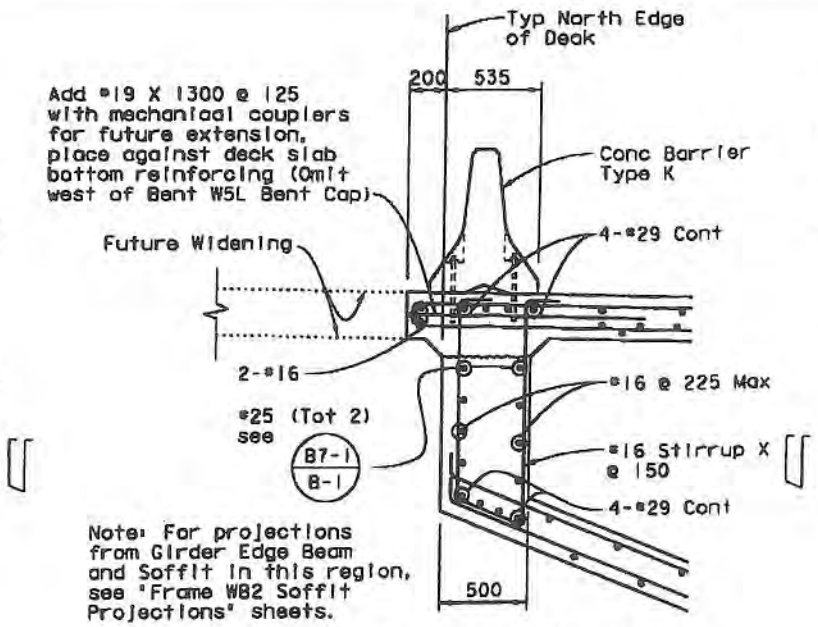

GIRDER EDGE BEAM DETAIL
ALONG NORTH EDGE OF DECK,
STA 53+62.910 TO STA 54+71.467

DETAIL B
1:20

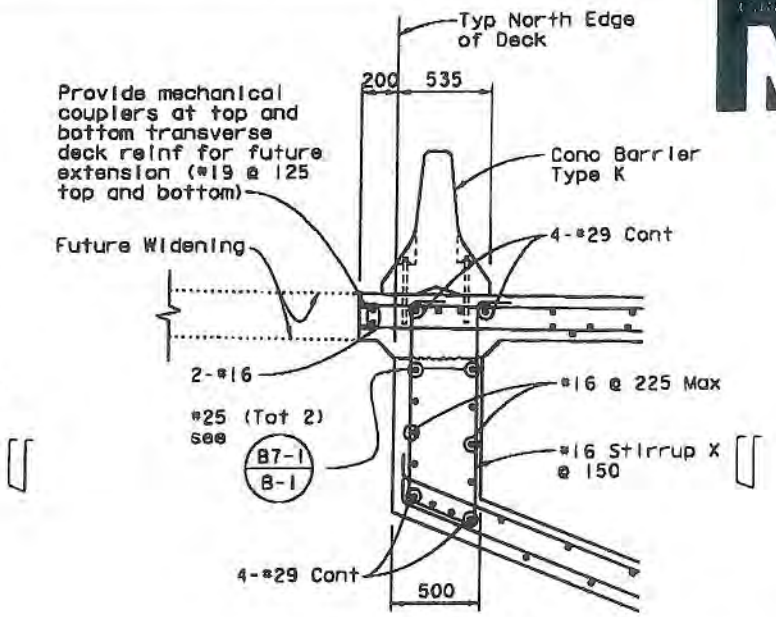

GIRDER EDGE BEAM DETAIL
ALONG NORTH EDGE OF DECK,
STA 54+71.467 TO STA 54+81.032

DETAIL C
1:20

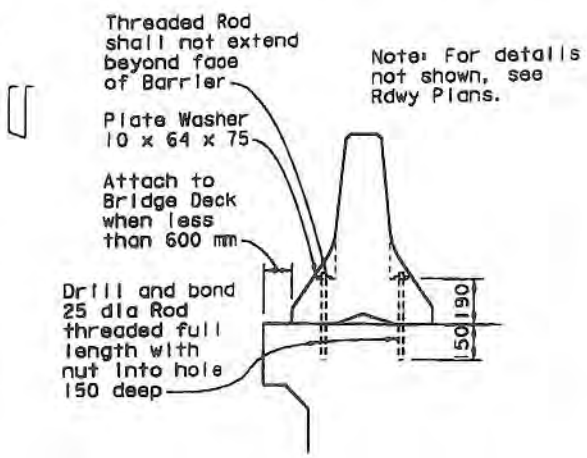

CONCRETE BARRIER TYPE K
ATTACHMENT TO BRIDGE DECK
1:15

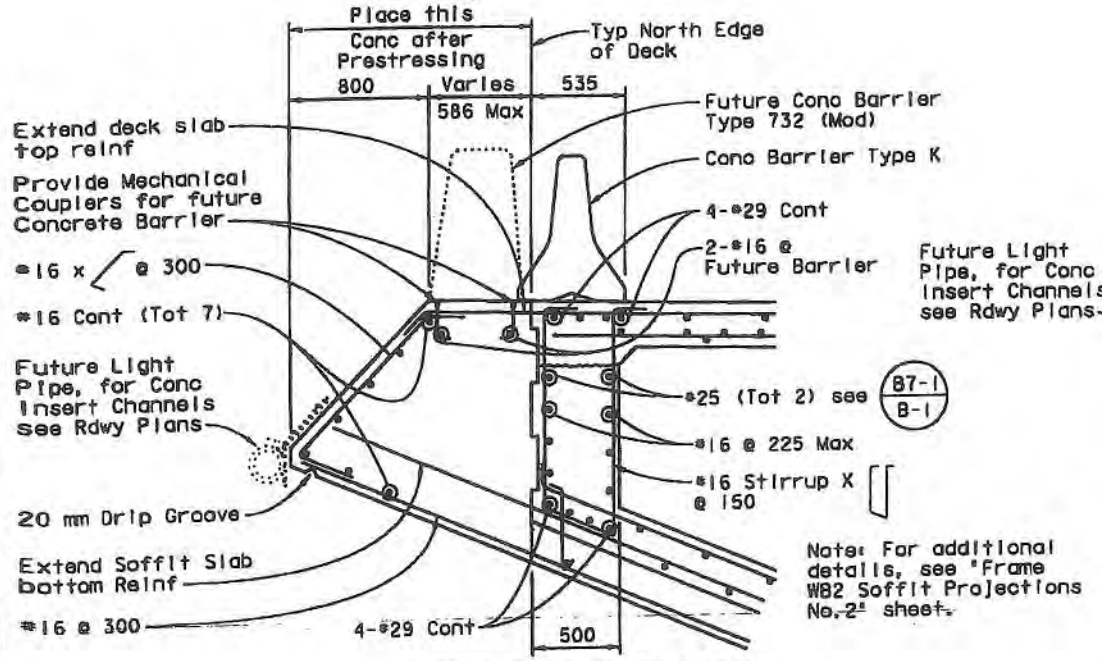

GIRDER EDGE BEAM DETAIL
ALONG NORTH EDGE OF DECK,
STA 54+81.032 TO STA 54+97.057

DETAIL D
1:20

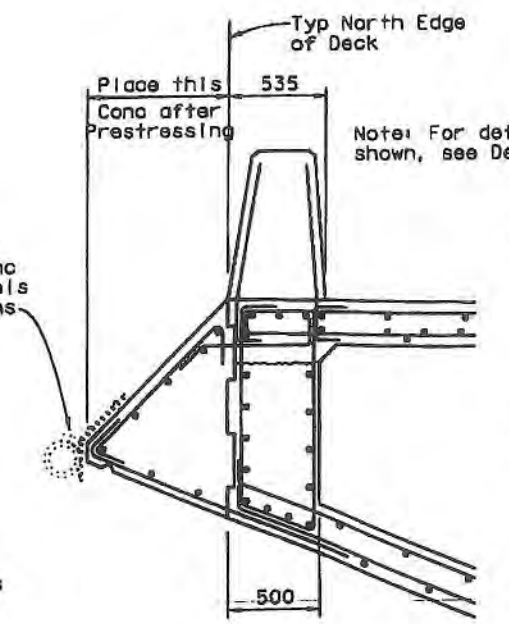

GIRDER EDGE BEAM DETAIL
ALONG NORTH EDGE OF DECK,
STA 54+97.057 TO HINGE K CLOSURE

DETAIL E
1:20

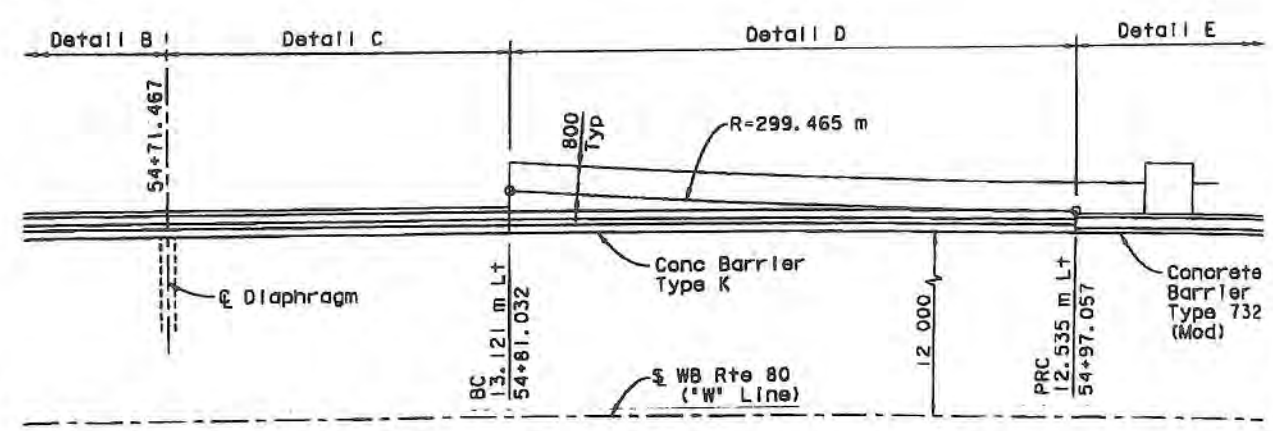

PARTIAL PLAN ALONG
NORTH EDGE OF DECK
1:100

THIS SHEET REPLACES SHEET NO. 621A OF 806
OF PLAN APPROVED 6-23-08

CONTRACT CHANGE ORDER NO. 53
SHEET 36 OF 51

ALL DIMENSIONS ARE IN MILLIMETERS UNLESS OTHERWISE SHOWN

8 ADDED PER ADDENDUM NO. 8 DATED NOVEMBER 12, 2009

SAN FRANCISCO OAKLAND BAY BRIDGE
EAST SPAN SEISMIC SAFETY PROJECT

YBI TRANSITION STRUCTURES

WESTBOUND TYPICAL SECTION NO. 9

DESIGN	BY Dodd	CHECKED Lee	
DETAILS	BY Samson	CHECKED Jain	
QUANTITIES	BY Jain	CHECKED Birdy	

DESIGN OVERSIGHT Susan El-Natur 10/20/10
SIGN OFF DATE

PREPARED FOR THE STATE OF CALIFORNIA DEPARTMENT OF TRANSPORTATION

Jal Birdy
PROJECT ENGINEER

BRIDGE NO. 34-0006 L/R
KILOMETER POST 12.8

CU 04251
EA 01205!

DISREGARD PRINTS BEARING EARLIER REVISION DATES

REVISION DATES (PRELIMINARY STAGE ONLY)

SHEET 72A OF 209

ORIGINAL SCALE IN MILLIMETERS FOR REDUCED PLANS

Rev. Date: 5-8-98

WB RAMP CCO

October 15, 2010

USERNAME => f4cmason DATE PLOTTED => 10/15/2010 TIME PLOTTED => 11:51:48 PM

FILE => M:\Projects\6672 - Yerba Buena Island (YBI) Bridge\7 Design Information\CADD\sheets\Addendum Include shts from TS\101510\04-01205!-34-006r-k t508c.dgn

DIST.	COUNTY	ROUTE	KILOMETER POST TOTAL PROJECT	SHEET NO.	TOTAL SHEETS
04	SF	80	12.7/13.2	630AS	806

REGISTERED ENGINEER - CIVIL

PLANS APPROVAL DATE

The State of California or its officers or agents shall not be responsible for the accuracy or completeness of electronic copies of this plan sheet.

T.Y. LIN / MOFFATT & NICHOL
TWO HARRISON STREET
SAN FRANCISCO, CA 94105

To get to the Caltrans web site, go to: http://www.dot.ca.gov

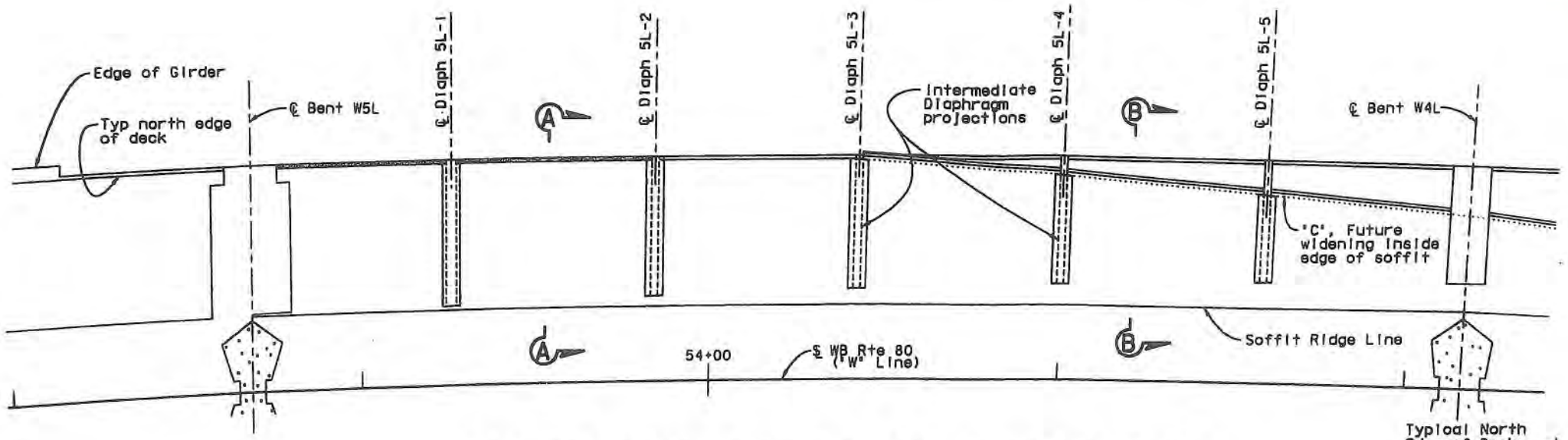

PARTIAL REFLECTED SOFFIT PLAN - BENT W5L TO W4L

1:150

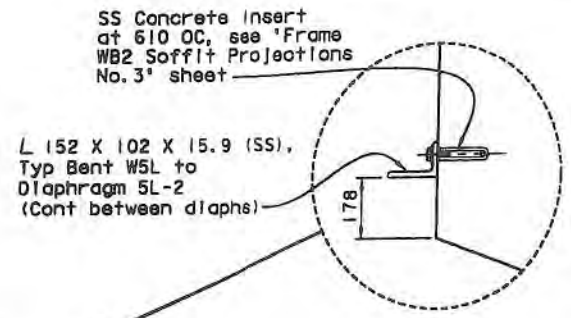

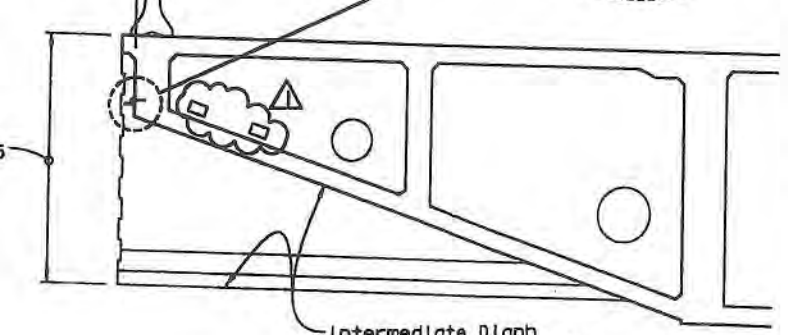

SECTION A-A

1:50

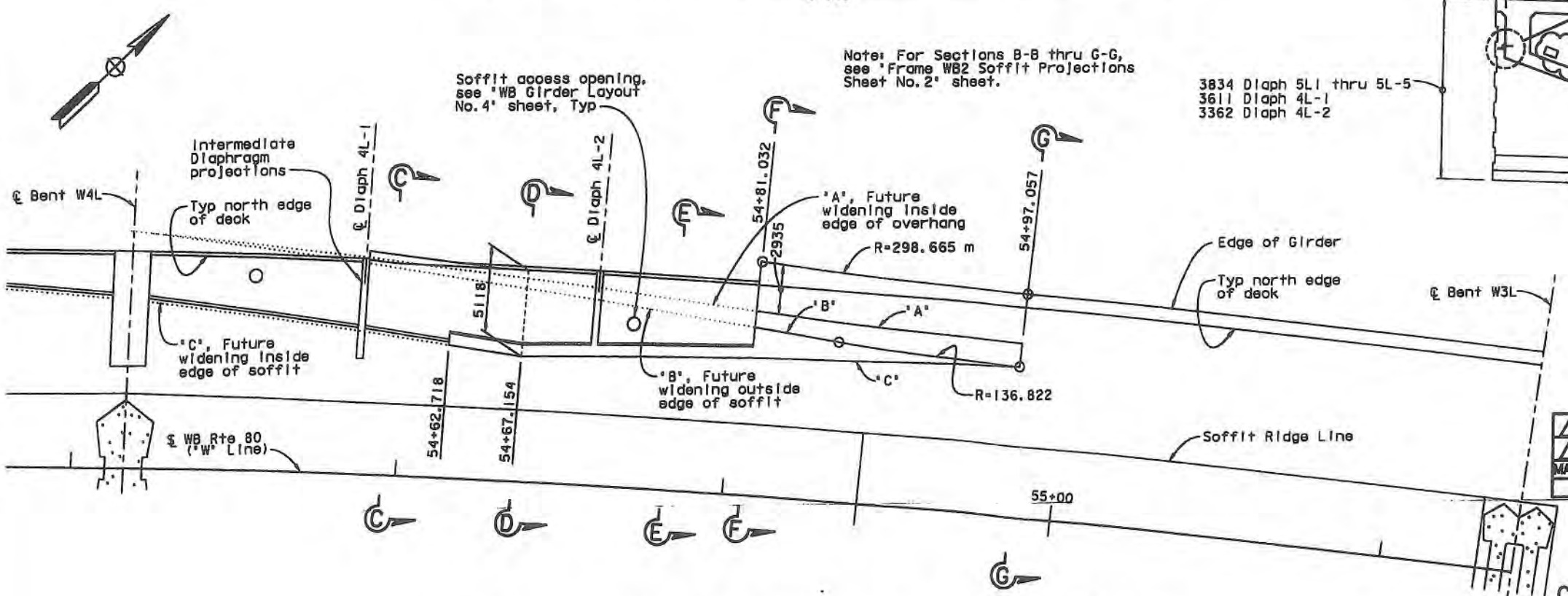

PARTIAL REFLECTED SOFFIT PLAN - BENT W4L TO W3L

1:150

FOR REVISION ⚠1 ONLY

MARK	DATE	DESCRIPTIONS	BY	CH'D
⚠1	3-30-11	Added Elec Openings	TL	AE

REVISIONS

SUPPLEMENTAL SHEET

CONTRACT CHANGE ORDER NO. 53
SHEET 37 OF 51

ALL DIMENSIONS ARE IN MILLIMETERS UNLESS OTHERWISE SHOWN

DESIGN OVERSIGHT: HASAN EL-NATHR 4/25/11 — SIGN OFF DATE

	BY	CHECKED BY
DESIGN	Jain	Birdy
DETAILS	Samson	Jain
QUANTITIES	Jain	Birdy

PREPARED FOR THE STATE OF CALIFORNIA DEPARTMENT OF TRANSPORTATION

Jai Birdy, PROJECT ENGINEER

BRIDGE NO. 34-0006 L/R
KILOMETER POST 12.8
CU 04251
EA 0120S1

SAN FRANCISCO OAKLAND BAY BRIDGE
EAST SPAN SEISMIC SAFETY PROJECT

YBI TRANSITION STRUCTURES

FRAME WB2 SOFFIT PROJECTIONS NO. 1

SHEET 81A OF 209

DISREGARD PRINTS BEARING EARLIER REVISION DATES — (REVISION DATES (PRELIMINARY STAGE ONLY))

ORIGINAL SCALE IN MILLIMETERS FOR REDUCED PLANS 0 10 20 30 40 50 60 70 80 90 100

Rev. Date: 5-13-98

March 30, 2011

USERNAME => fsamson DATE PLOTTED => 3/29/2011 TIME PLOTTED => 11:01:37 AM

DIST.	COUNTY	ROUTE	KILOMETER POST TOTAL PROJECT	SHEET NO.	TOTAL SHEETS
04	SF	80.	12.7/13.2	6308S	806

REGISTERED ENGINEER - CIVIL

PLANS APPROVAL DATE

The State of California or its officers or agents shall not be responsible for the accuracy or completeness of electronic copies of this plan sheet.

REGISTERED PROFESSIONAL ENGINEER A.L. ELY No. 18860 Exp. 6-30-11 CIVIL STATE OF CALIFORNIA

T.Y. LIN / MOFFATT & NICHOL
TWO HARRISON STREET
SAN FRANCISCO, CA 94105

To get to the Caltrans web site, go to: http://www.dot.ca.gov

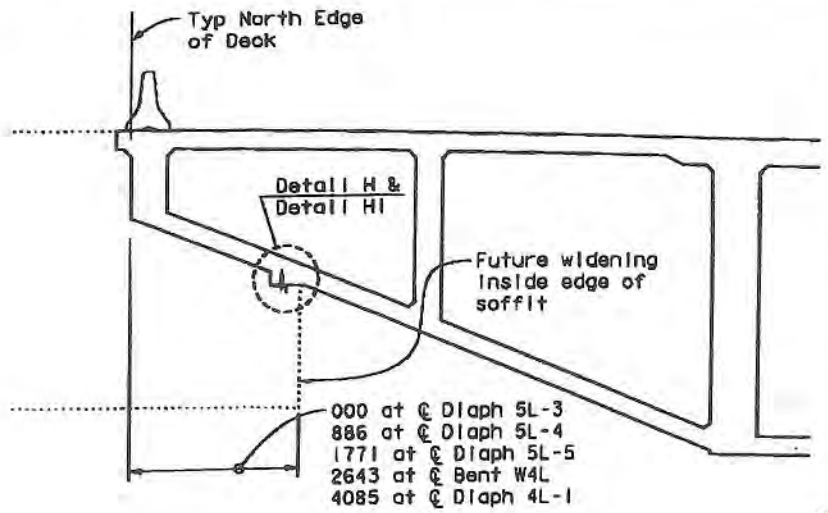

SECTION B-B
1:50

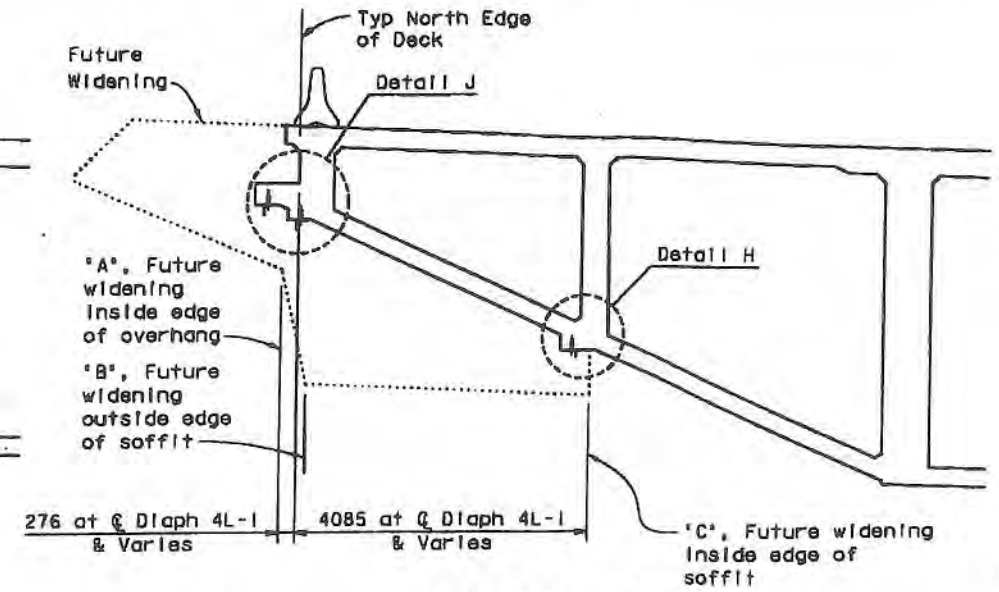

SECTION C-C
1:50

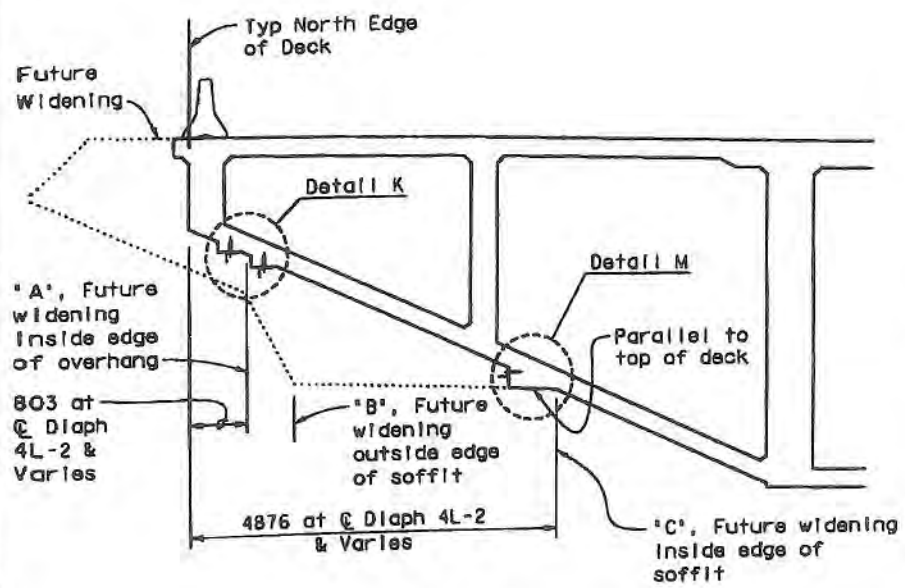

SECTION D-D
1:50

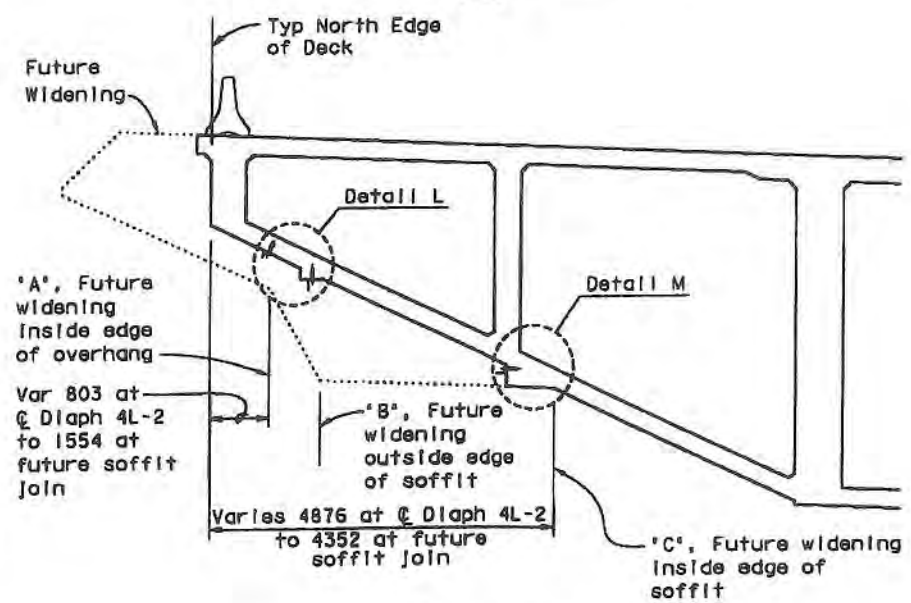

SECTION E-E
1:50

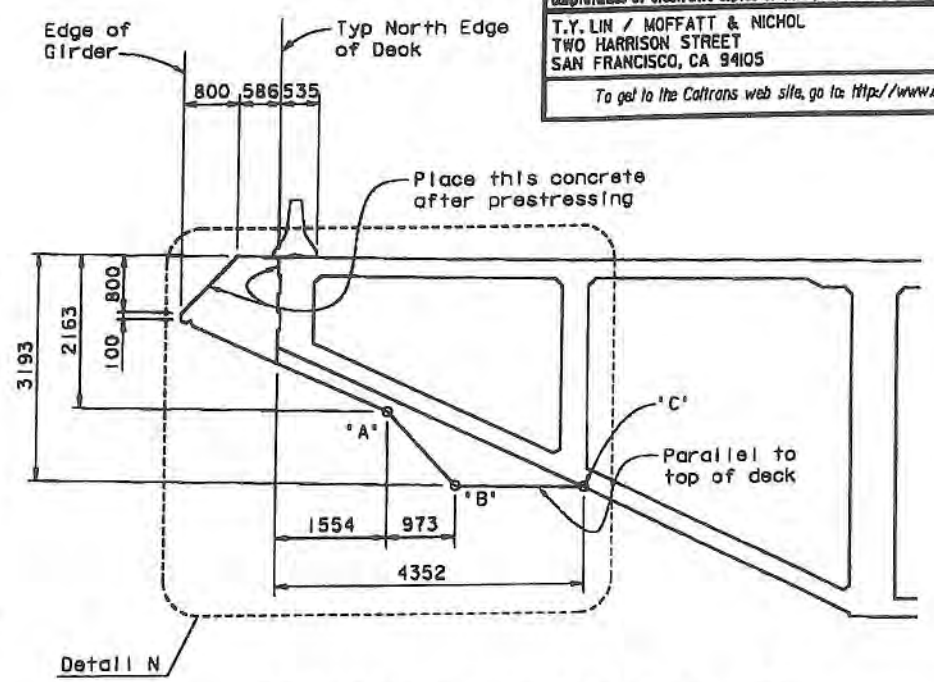

SECTION F-F STA 54+81.032
(Future Soffit Join)
1:50

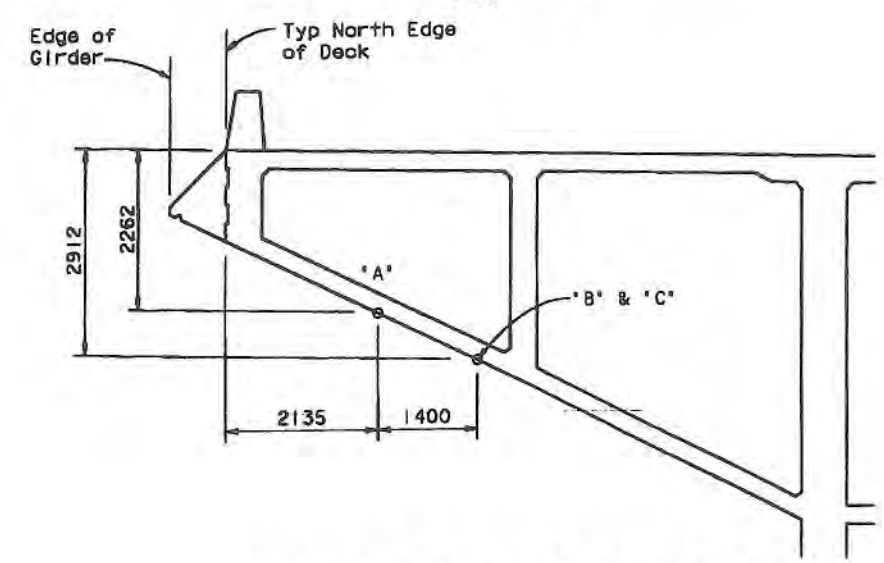

SECTION G-G STA 54+97.057
1:50

Notes:

1. For location of Sections B-B thru G-G, see 'Frame WB2 Soffit Projections No. 1' sheet.
2. For Details H thru N, see 'Frame WB2 Soffit Projections No. 3' sheet.

SUPPLEMENTAL SHEET

CONTRACT CHANGE ORDER NO. 53
SHEET 38 OF 51

ALL DIMENSIONS ARE IN MILLIMETERS UNLESS OTHERWISE SHOWN

SAN FRANCISCO OAKLAND BAY BRIDGE
EAST SPAN SEISMIC SAFETY PROJECT

YBI TRANSITION STRUCTURES

FRAME WB2 SOFFIT PROJECTIONS NO. 2

	BY	CHECKED BY
DESIGN	Jain	Birdy
DETAILS	Samson	Jain
QUANTITIES	Jain	Birdy

PREPARED FOR THE STATE OF CALIFORNIA DEPARTMENT OF TRANSPORTATION

Jai Birdy
PROJECT ENGINEER

BRIDGE NO. 34-0006 L/R
KILOMETER POST 12.8

CU 04251
EA 012051

DESIGN OVERSIGHT
HASAN EL-NATUR
10/20/10
SIGN OFF DATE

ORIGINAL SCALE IN MILLIMETERS FOR REDUCED PLANS 0 10 20 30 40 50 60 70 80 90 100

DISREGARD PRINTS BEARING EARLIER REVISION DATES 10/15/10

REVISION DATES (PRELIMINARY STAGE ONLY)

SHEET 818 OF 209

FILE => \\mgbfs\LB_Projects\6674 - Yerba Buena Island (YBI) Bridge\7 Design Information\CADD\sheets\Addendum Include shts from TS\101510\04-0120g1-34-0006r1-h-soffprojo2.dgn

WB RAMP CCO

October 15, 2010

ISERNAME => faoman DATE PLOTTED => 10/15/2010 TIME PLOTTED => 11:45:03 PM

DIST.	COUNTY	ROUTE	KILOMETER POST TOTAL PROJECT	SHEET NO.	TOTAL SHEETS
04	SF	80	12.7/13.2	630CS	806

REGISTERED ENGINEER - CIVIL

PLANS APPROVAL DATE

REGISTERED PROFESSIONAL ENGINEER A.L. ELY No. 18880 Exp. 6-30-11 CIVIL STATE OF CALIFORNIA

The State of California or its officers or agents shall not be responsible for the accuracy or completeness of electronic copies of this plan sheet.

T.Y. LIN / MOFFATT & NICHOL
TWO HARRISON STREET
SAN FRANCISCO, CA 94105

To get to the Caltrans web site, go to: http://www.dot.ca.gov

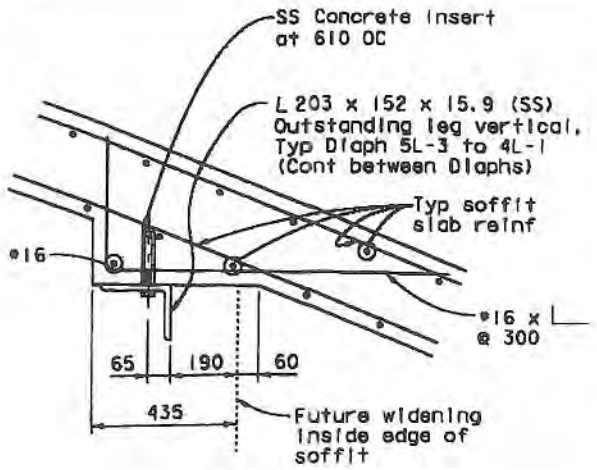

DETAIL H
1:10

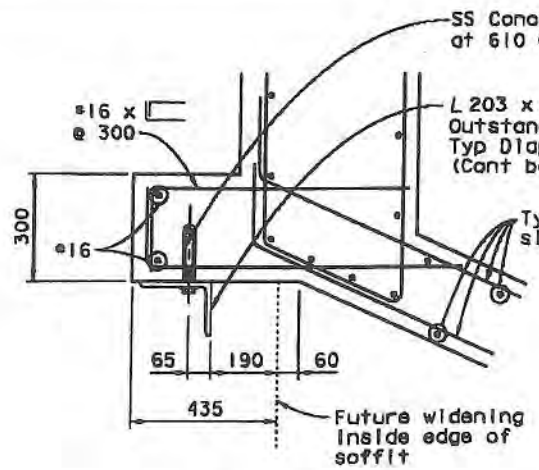

DETAIL HI
(Adjacent to Diaphragm 5L-3)
1:10

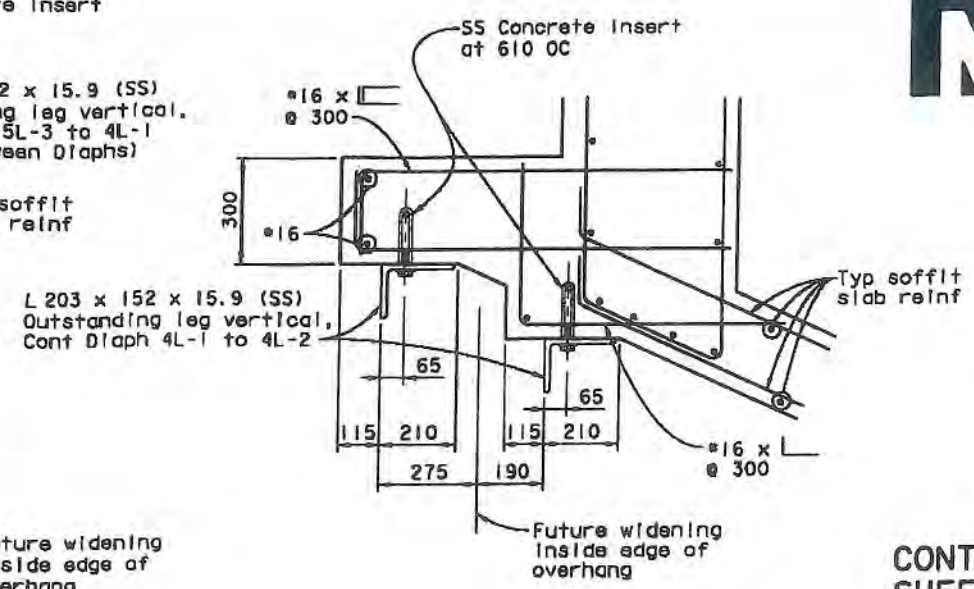

DETAIL J
1:10

Note: For location of Details H thru N, see 'Frame WB2 Soffit Projections No. 2' sheet.

SUPPLEMENTAL SHEET

CONTRACT CHANGE ORDER NO. 53
SHEET 39 OF 51

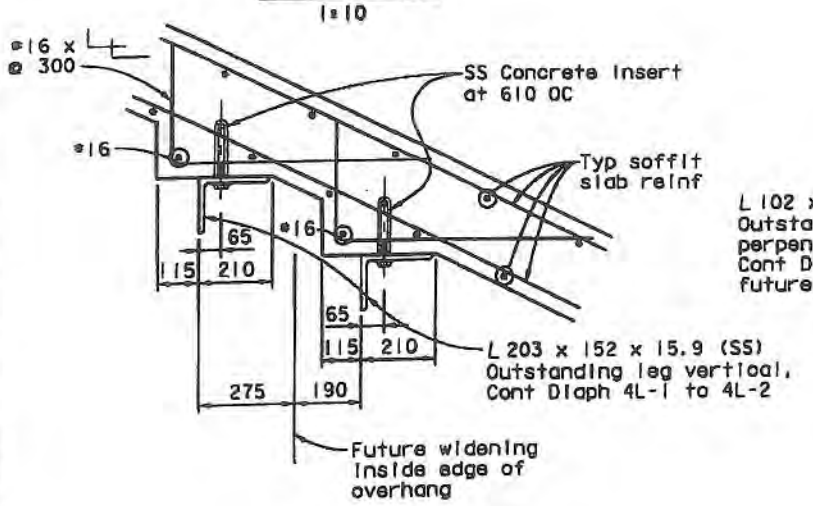

DETAIL K
1:10

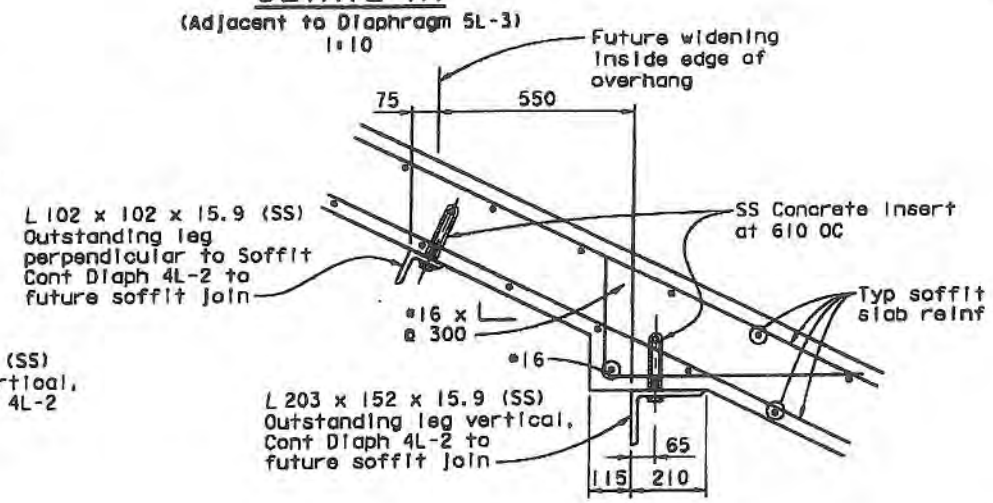

DETAIL L
1:10

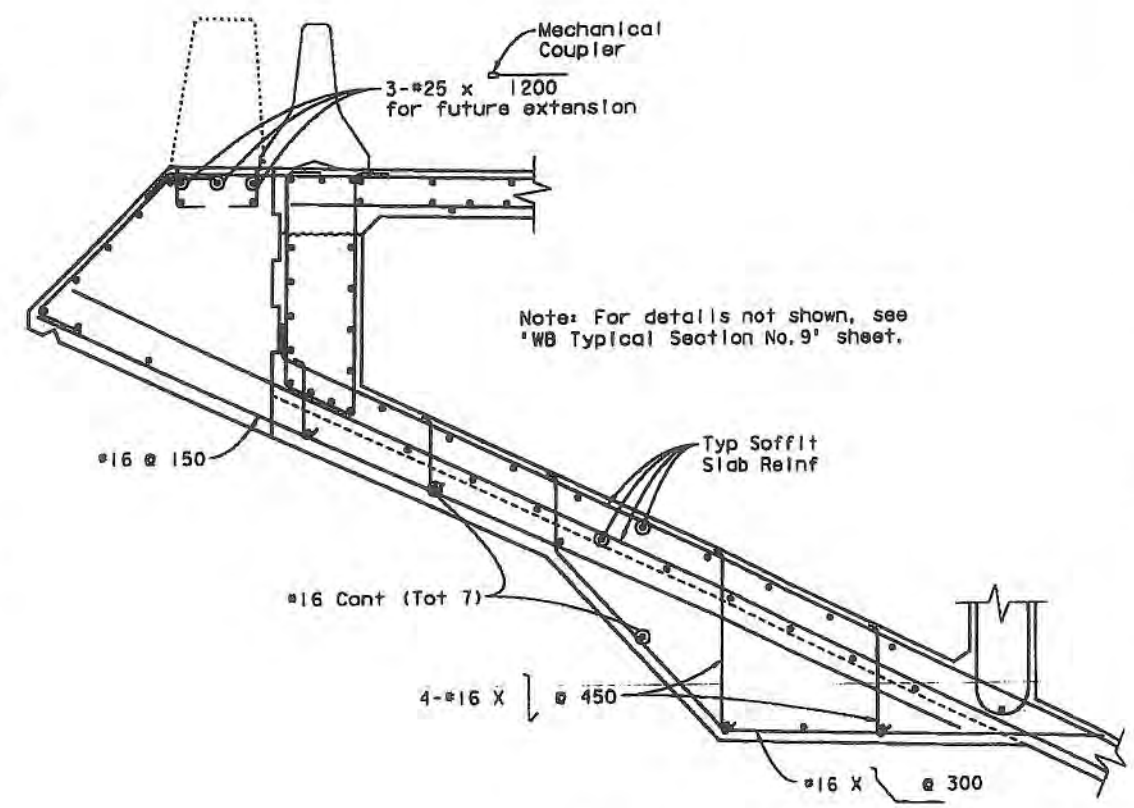

DETAIL N
1:20

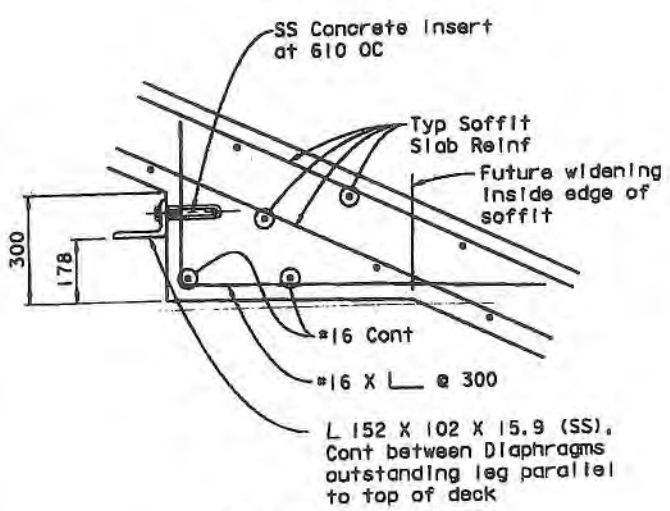

DETAIL M
1:10

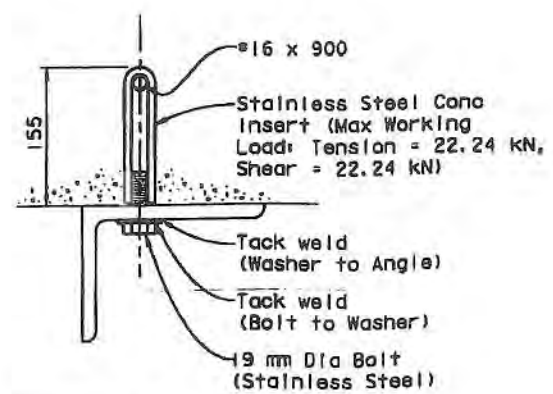

Note: Max distance from Concrete Insert to end of angle shall not exceed 150 mm.

SS CONCRETE INSERT
1:4

ALL DIMENSIONS ARE IN MILLIMETERS UNLESS OTHERWISE SHOWN

SAN FRANCISCO OAKLAND BAY BRIDGE
EAST SPAN SEISMIC SAFETY PROJECT

YBI TRANSITION STRUCTURES

FRAME WB2 SOFFIT PROJECTIONS NO. 3

DESIGN OVERSIGHT			
HASAN EL-NATUR	10/26/10		
SIGN OFF DATE			
Rev. Date: 5-12-98			

DESIGN	BY Jain	CHECKED Birdy	
DETAILS	BY Samson	CHECKED Jain	
QUANTITIES	BY Jain	CHECKED Birdy	

ORIGINAL SCALE IN MILLIMETERS FOR REDUCED PLANS

PREPARED FOR THE STATE OF CALIFORNIA DEPARTMENT OF TRANSPORTATION

Jai Birdy
PROJECT ENGINEER

CU 04251
EA 0120S1

BRIDGE NO. 34-0006 L/R
KILOMETER POST 12.8

DISREGARD PRINTS BEARING EARLIER REVISION DATES → 10/15/10

REVISION DATES (PRELIMINARY STAGE ONLY)

SHEET 810 OF 209

WB RAMP CCO

October 15, 2010

DATE PLOTTED => 10/15/2010 TIME PLOTTED => 11:45:13 PM

DIST.	COUNTY	ROUTE	KILOMETER POST TOTAL PROJECT	SHEET NO.	TOTAL SHEETS
04	SF	80	12.7/13.2	632R1	806

REGISTERED ENGINEER - CIVIL
6-23-08
PLANS APPROVAL DATE
A.L. ELY No. 18880 Exp. 6-30-09 CIVIL STATE OF CALIFORNIA
The State of California or its officers or agents shall not be responsible for the accuracy or completeness of electronic copies of this plan sheet.

T.Y. LIN / MOFFATT & NICHOL
TWO HARRISON STREET
SAN FRANCISCO, CA 94105

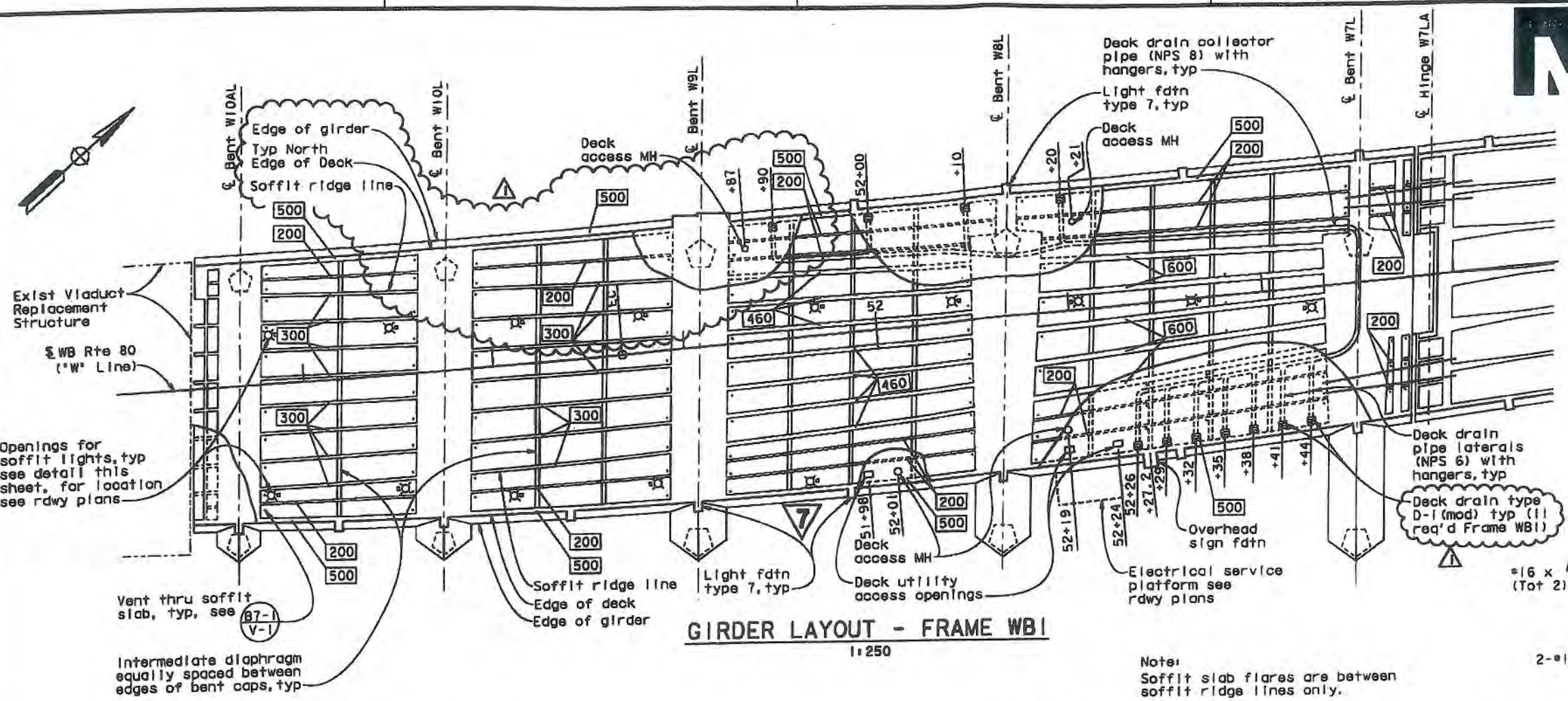

GIRDER LAYOUT - FRAME WB1
1:250

Note:
Soffit slab flares are between soffit ridge lines only.

LEGEND

500 indicates girder stem width in mm

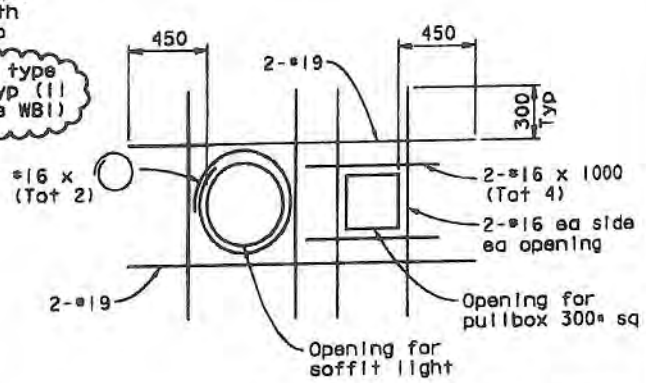

PLAN AT SOFFIT LIGHT OPENING
For details not shown, see B7-1
No Scale

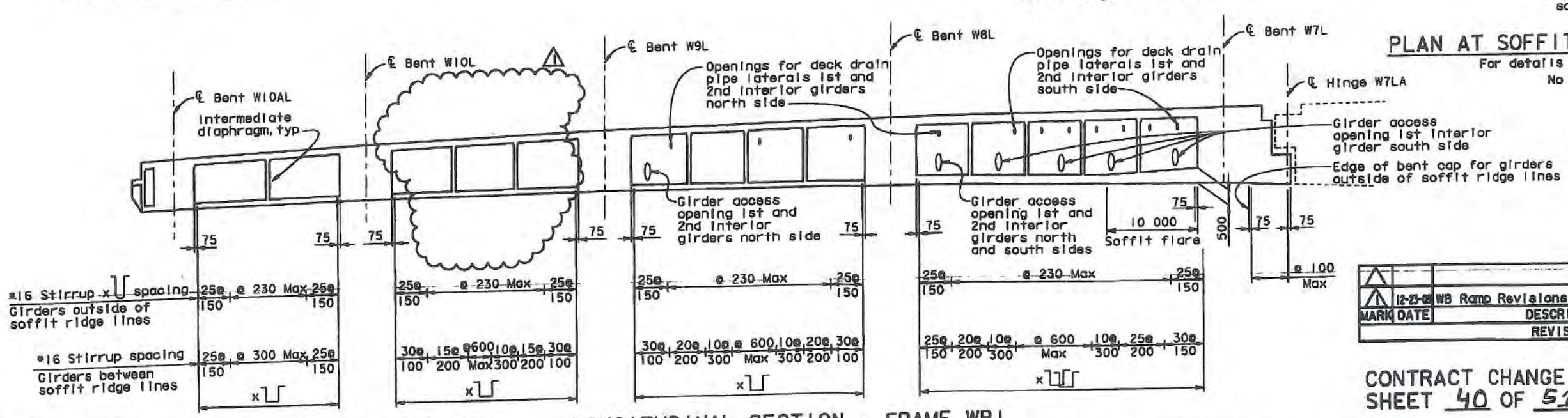

LONGITUDINAL SECTION - FRAME WB1
No Scale

FOR REVISION ⚠1 ONLY

MARK	DATE	DESCRIPTIONS	BY	CH'D
⚠1	12-23-08	WB Ramp Revisions	TL	AE

REVISIONS

CONTRACT CHANGE ORDER NO. 53
SHEET 40 OF 51

7 REVISED PER ADDENDUM NO. 7 DATED OCTOBER 19, 2009

ALL DIMENSIONS ARE IN MILLIMETERS UNLESS OTHERWISE SHOWN

DESIGN OVERSIGHT
JOHN MOOK, BERNARD CHAN, JUAN F. CARPIO
March 3, 2008
SIGN OFF DATE
HASAN DE-NATUR
10/20/10
Rev. Date: 5-13-13

DESIGN	BY Cavafian	CHECKED Shangkuan	
DETAILS	BY van Ryn/Zucchi/Mal	CHECKED Jain	
QUANTITIES	BY Lido	CHECKED E. Nichol	

ORIGINAL SCALE IN MILLIMETERS FOR REDUCED PLANS 0 10 20 30 40 50 60 70 80 90 100

PREPARED FOR THE STATE OF CALIFORNIA DEPARTMENT OF TRANSPORTATION

Jal Birdy
PROJECT ENGINEER

CU 04251
EA 012051

BRIDGE NO. 34-0006 L/R
KILOMETER POST 12.8

DISREGARD PRINTS BEARING EARLIER REVISION DATES

SAN FRANCISCO OAKLAND BAY BRIDGE
EAST SPAN SEISMIC SAFETY PROJECT

YBI TRANSITION STRUCTURES

WESTBOUND GIRDER LAYOUT NO. 1

REVISION DATES (PRELIMINARY STAGE ONLY)

SHEET 83 OF 209

WB RAMP CCO October 15, 2010

USERNAME => tsamson DATE PLOTTED => 10/15/2010 TIME PLOTTED => 11:51:58 PM

DIST.	COUNTY	ROUTE	KILOMETER POST TOTAL PROJECT	SHEET NO.	TOTAL SHEETS
04	SF	80	12.7/13.2	633R1	806

REGISTERED ENGINEER - CIVIL
6-23-08
PLANS APPROVAL DATE
The State of California or its officers or agents shall not be responsible for the accuracy or completeness of electronic copies of this plan sheet.

T.Y. LIN / MOFFATT & NICHOL
TWO HARRISON STREET
SAN FRANCISCO, CA 94105

MARK	DATE	DESCRIPTIONS	BY	CH'D
1	12-23-09	WB Ramp Revisions	TL	AE

REVISIONS

CONTRACT CHANGE ORDER NO. 53
SHEET 41 OF 51

FOR REVISION 1 ONLY

LEGEND

500 Indicates girder stem width in mm

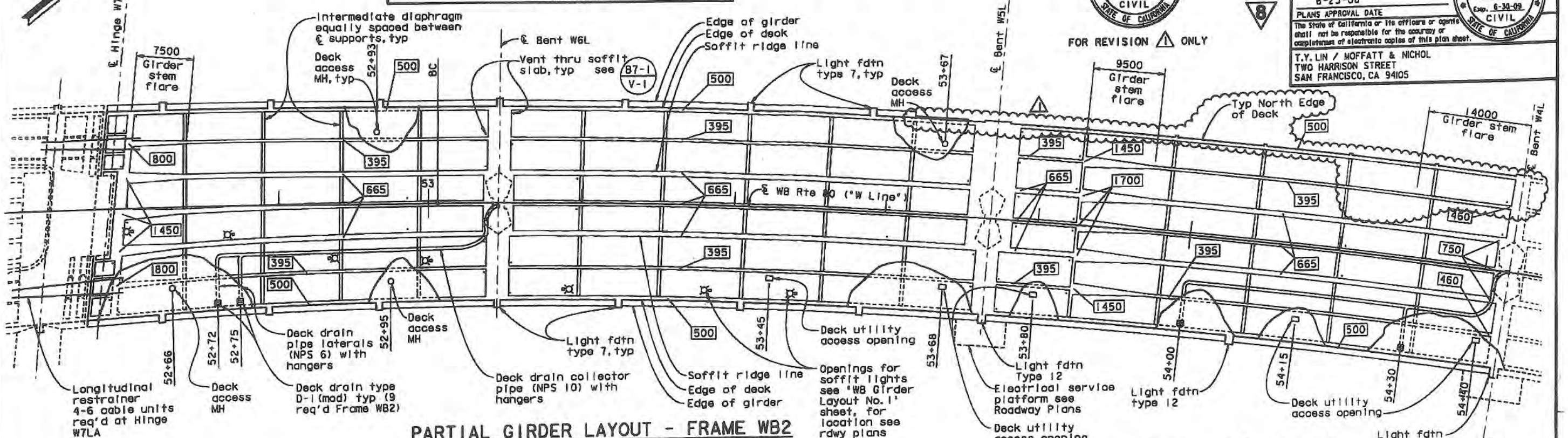

PARTIAL GIRDER LAYOUT - FRAME WB2
1:250

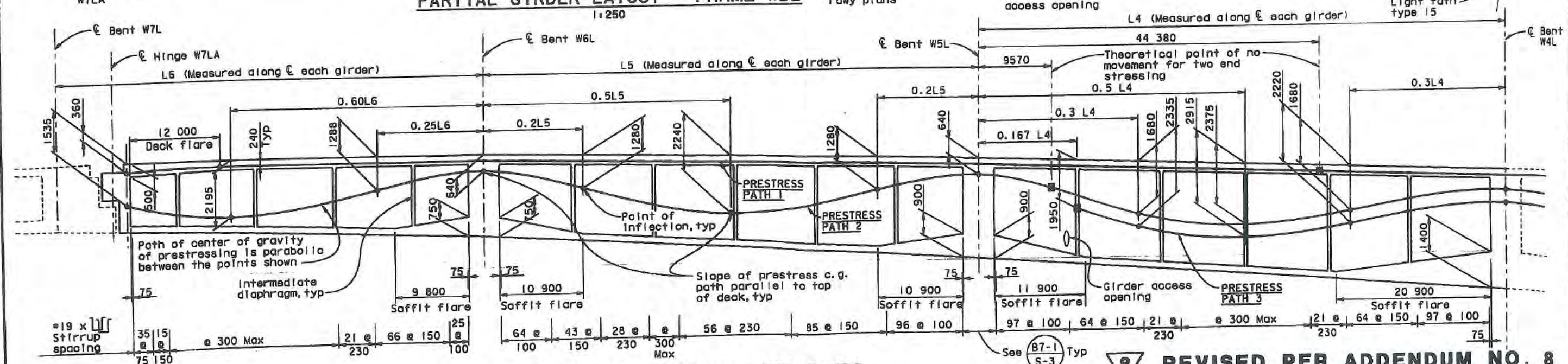

PARTIAL LONGITUDINAL SECTION - FRAME WB2
GIRDERS BETWEEN SOFFIT RIDGE LINES
No Scale

Note:
Soffit slab flares are between soffit ridge lines only.

ALL DIMENSIONS ARE IN MILLIMETERS UNLESS OTHERWISE SHOWN

8 REVISED PER ADDENDUM NO. 8 DATED NOVEMBER 12, 2009

DESIGN OVERSIGHT
JOHN MOOK, BERNARD CHAN, JUAN F. CARPIO — HASAN EL-NATUR
March 3, 2008
SIGN OFF DATE

DESIGN	BY Cavafian	CHECKED Shangkuan
DETAILS	BY van Ryn/Zucchi/Mal	CHECKED Jain
QUANTITIES	BY Liao	CHECKED E. Nichol

PREPARED FOR THE STATE OF CALIFORNIA DEPARTMENT OF TRANSPORTATION

Jal Birdy
PROJECT ENGINEER

BRIDGE NO. 34-0006 L/R
KILOMETER POST 12.8

CU 04251
EA 0120S1

DISREGARD PRINTS BEARING EARLIER REVISION DATES

SAN FRANCISCO OAKLAND BAY BRIDGE
EAST SPAN SEISMIC SAFETY PROJECT

YBI TRANSITION STRUCTURES

WESTBOUND GIRDER LAYOUT NO. 2

REVISION DATES (PRELIMINARY STAGE ONLY)

SHEET 84 OF 209

ORIGINAL SCALE IN MILLIMETERS FOR REDUCED PLANS

Rev. Date 5-18-98

WB RAMP CCO

October 15, 2010

DATE PLOTTED => 10/15/2010 TIME PLOTTED => 1:52:08 PM

USERNAME => fsamson

MARK	DATE	DESCRIPTIONS	BY	CH'D
1	12-23-09	WB Ramp Revisions	TL	AE

REVISIONS

DIST.	COUNTY	ROUTE	KILOMETER POST TOTAL PROJECT	SHEET NO.	TOTAL SHEETS
04	SF	80	12.7/13.2	635R1	806

REGISTERED ENGINEER - CIVIL

6-23-08

PLANS APPROVAL DATE

REGISTERED PROFESSIONAL ENGINEER A.L. ELY No. 19880 Exp. 6-30-09 CIVIL STATE OF CALIFORNIA

The State of California or its officers or agents shall not be responsible for the accuracy or completeness of electronic copies of this plan sheet.

T.Y. LIN / MOFFATT & NICHOL
TWO HARRISON STREET
SAN FRANCISCO, CA 94105

CONTRACT CHANGE ORDER NO. 53
SHEET 42 OF 51

REGISTERED PROFESSIONAL ENGINEER A.L. ELY No. 19880 Exp. 6-30-11 CIVIL STATE OF CALIFORNIA

FOR REVISION 1 ONLY

LEGEND

500 Indicates girder stem width in mm

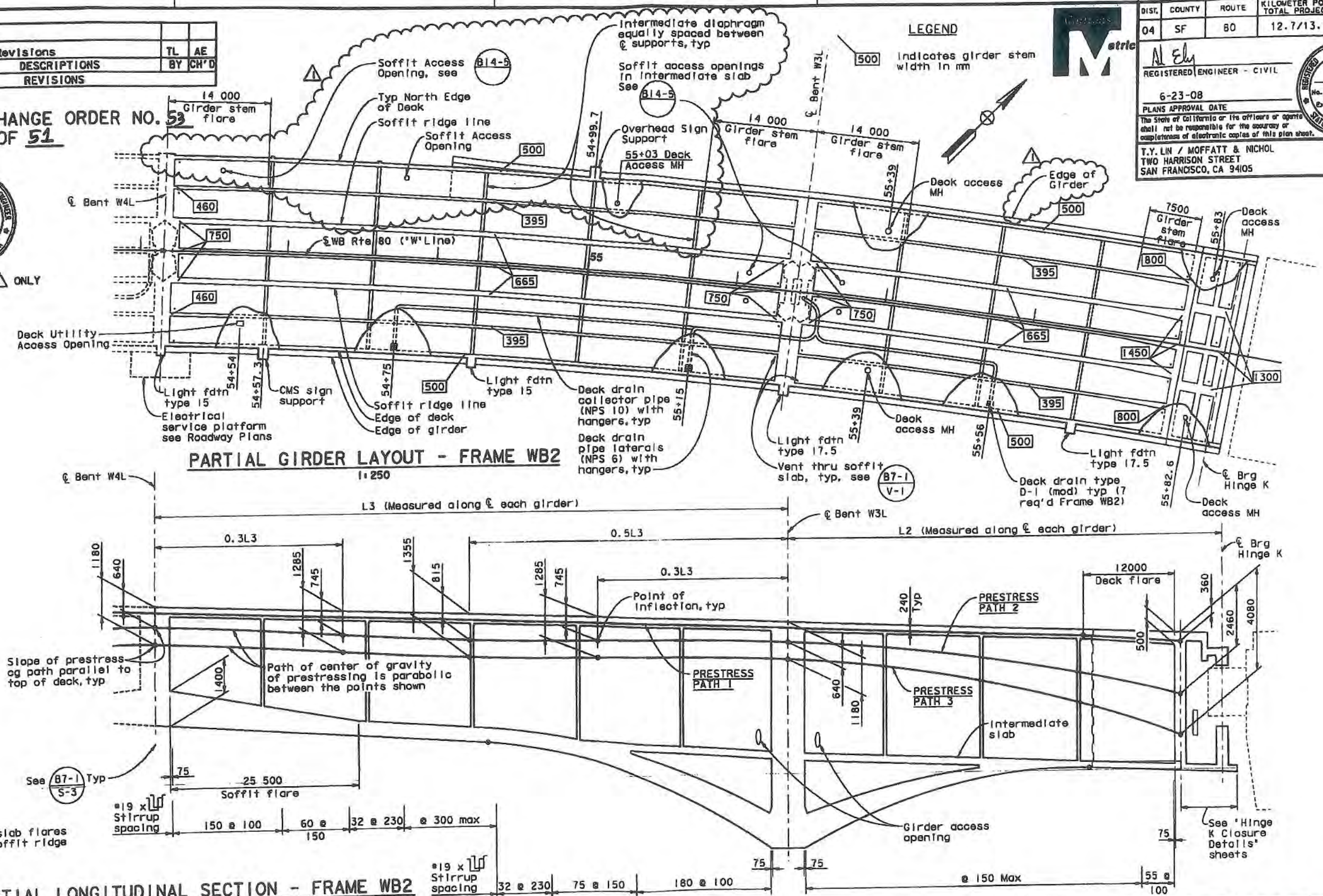

PARTIAL GIRDER LAYOUT - FRAME WB2
1:250

Note: Soffit slab flares are between soffit ridge lines only.

PARTIAL LONGITUDINAL SECTION - FRAME WB2
GIRDERS BETWEEN SOFFIT RIDGE LINES
No Scale

ALL DIMENSIONS ARE IN MILLIMETERS UNLESS OTHERWISE SHOWN

SAN FRANCISCO OAKLAND BAY BRIDGE
EAST SPAN SEISMIC SAFETY PROJECT

YBI TRANSITION STRUCTURES

WESTBOUND GIRDER LAYOUT NO. 4

DESIGN OVERSIGHT: CHIN MOOK, BERNARD CHAN, JUAN F. CARPIO, HASAN EL-NATUR
March 3, 2008
SIGN OFF DATE

	BY	CHECKED
DESIGN	Cavafian	Shangkuan
DETAILS	van Ryn/Zuochi/Mal	Jain
QUANTITIES	Ligo	E. Nichol

PREPARED FOR THE STATE OF CALIFORNIA DEPARTMENT OF TRANSPORTATION

Jal Birdy
PROJECT ENGINEER

BRIDGE NO. 34-0006 L/R
KILOMETER POST 12.8

CU 04251
EA 0120S1

DISREGARD PRINTS BEARING EARLIER REVISION DATES

REVISION DATES (PRELIMINARY STAGE ONLY)

SHEET 86 OF 209

ORIGINAL SCALE IN MILLIMETERS FOR REDUCED PLANS

Rev. Date: 5-15-26

WB RAMP CCO

October 15, 2010

USERNAME => fsamson DATE PLOTTED => 10/15/2010 TIME PLOTTED => 11:45:35 PM

FILE => \\mnl5fs\L9_Projects\6674 - Yerba Buena Island (YBI) Bridge\7 Design Information\C400\sheets\Addendum Include chg Eng

MARK	DATE	DESCRIPTIONS	BY	CH'D
2	3-30-11	Rev Diaphragm Openings	TL	AE
1	10-15-10	WB Ramp Revisions	TL	AE

REVISIONS

DIST.	COUNTY	ROUTE	KILOMETER POST TOTAL PROJECT	SHEET NO.	TOTAL SHEETS
04	SF	80	12.7/13.2	S45R2	806

REGISTERED ENGINEER - CIVIL

6-23-08

PLANS APPROVAL DATE

The State of California or its officers or agents shall not be responsible for the accuracy or completeness of electronic copies of this plan sheet.

REGISTERED PROFESSIONAL ENGINEER A.L. ELY No. 18880 Exp. 6-30-09 CIVIL STATE OF CALIFORNIA

T.Y. LIN / MOFFATT & NICHOL
TWO HARRISON STREET
SAN FRANCISCO, CA 94105

CONTRACT CHANGE ORDER NO. 53.
SHEET 43. OF 51.

REGISTERED PROFESSIONAL ENGINEER A.L. ELY No. 18880 Exp. 6-30-11 CIVIL STATE OF CALIFORNIA

FOR REVISION 1 & 2 ONLY

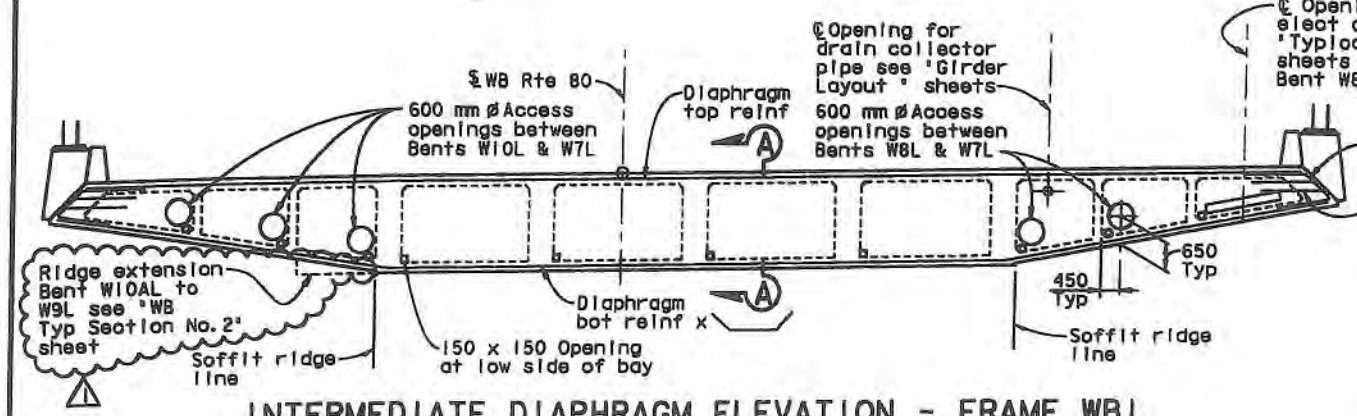

INTERMEDIATE DIAPHRAGM ELEVATION - FRAME WB1
1:80

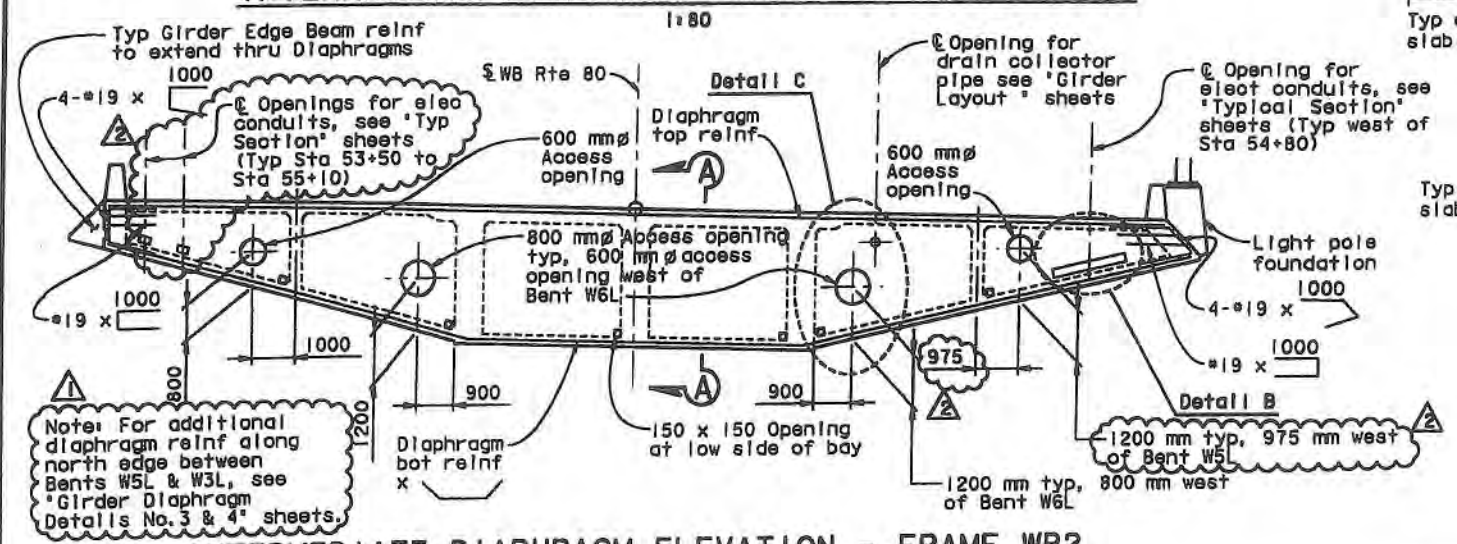

INTERMEDIATE DIAPHRAGM ELEVATION - FRAME WB2
1:80

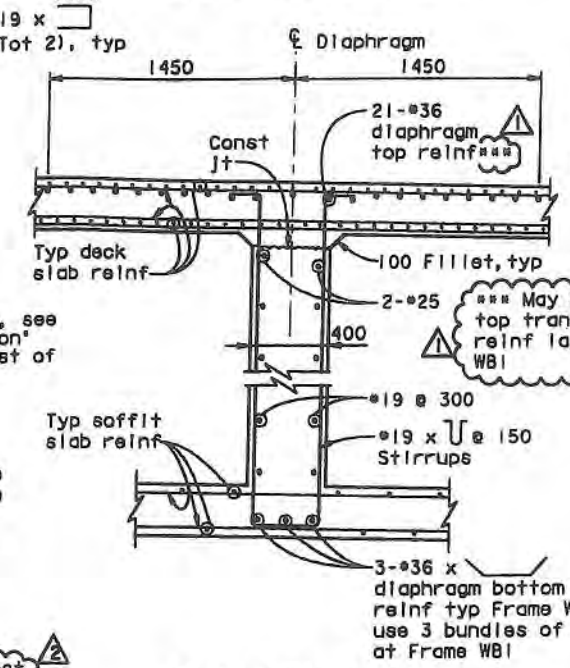

SECTION A-A
1:20

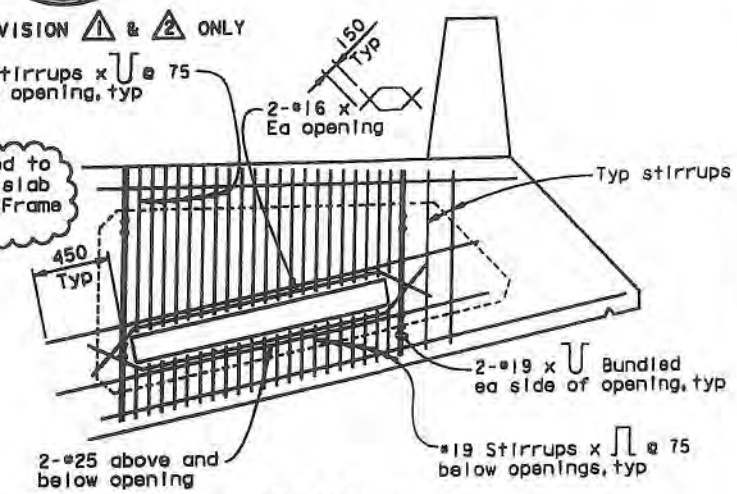

DETAIL B
(Typ reinf at openings for conduits)
1:20

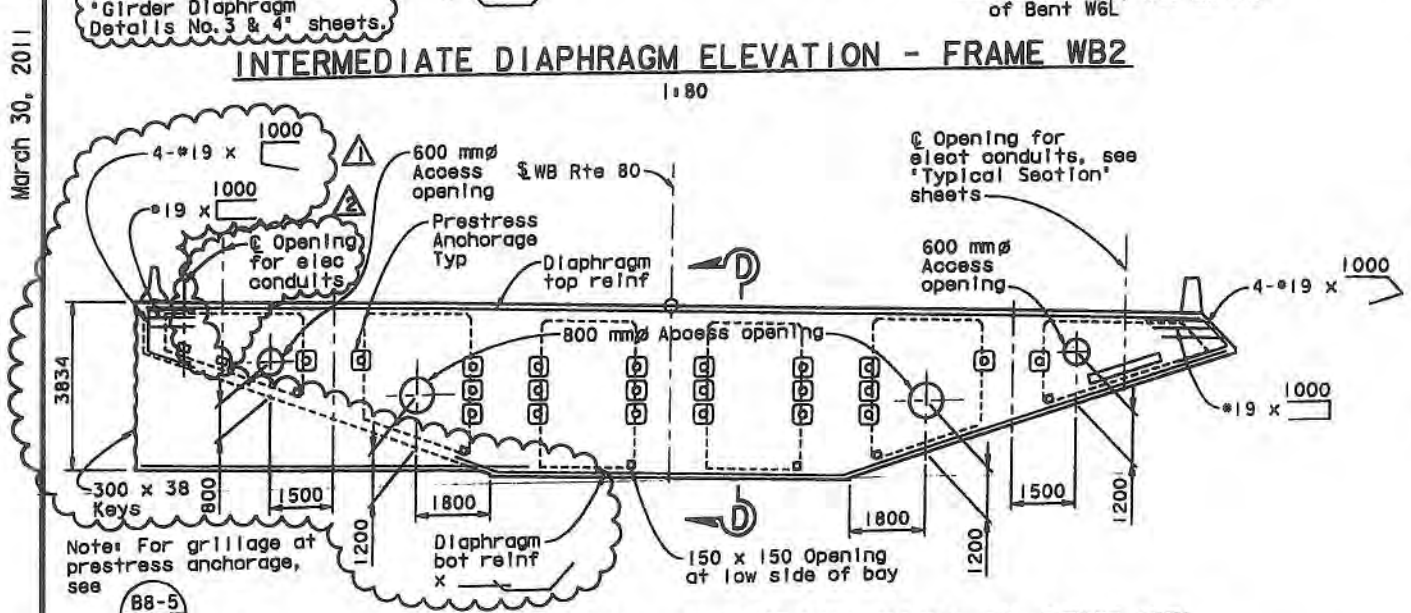

ELEVATION - ANCHORAGE DIAPHRAGM EAST OF BENT W5L
1:80

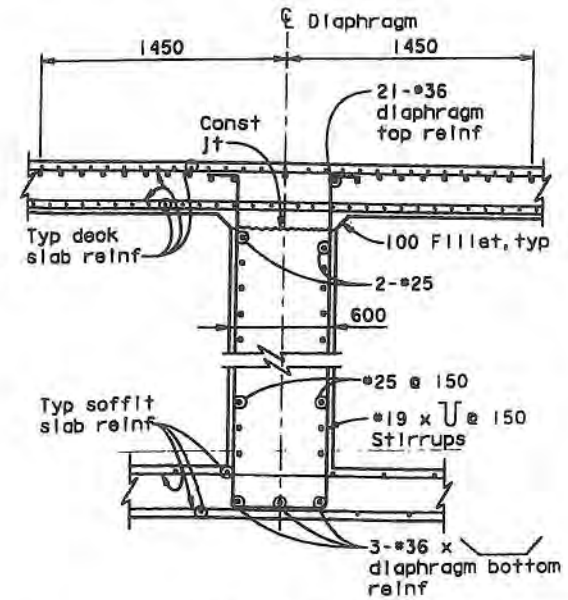

SECTION D-D
1:20

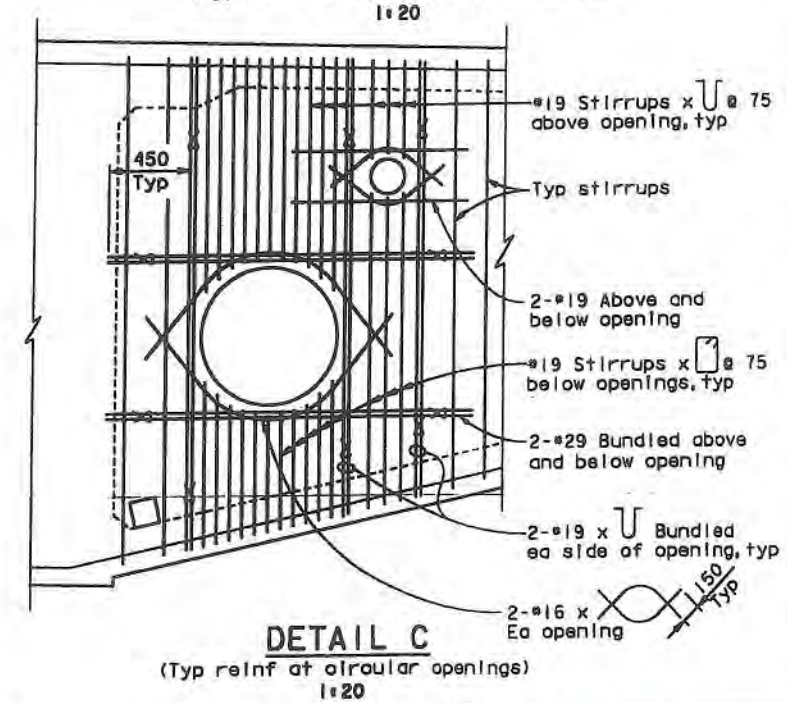

DETAIL C
(Typ reinf at circular openings)
1:20

ALL DIMENSIONS ARE IN MILLIMETERS UNLESS OTHERWISE SHOWN

8 REVISED PER ADDENDUM NO. 8 DATED NOVEMBER 12, 2009

DESIGN OVERSIGHT: JOHN MOOK, BERNARD CHAN, JUAN F. CARPIO, HASAN EL-NATUR
March 3, 2008
SIGN OFF DATE
Rev. Date: 5-19-98

DESIGN	BY Wang	CHECKED Greer
DETAILS	BY van Ryn/Zucchi/Wai	CHECKED Jain
QUANTITIES	BY Liao	CHECKED E. Nichol

PREPARED FOR THE STATE OF CALIFORNIA DEPARTMENT OF TRANSPORTATION

Jai Birdy
PROJECT ENGINEER

CU 04251
EA 0120S1

BRIDGE NO. 34-0006 L/R
KILOMETER POST 12.8

DISREGARD PRINTS BEARING EARLIER REVISION DATES

SAN FRANCISCO OAKLAND BAY BRIDGE
EAST SPAN SEISMIC SAFETY PROJECT

YBI TRANSITION STRUCTURES

GIRDER DIAPHRAGM DETAILS NO. 1

REVISION DATES (PRELIMINARY STAGE ONLY)

SHEET 96 OF 209

ORIGINAL SCALE IN MILLIMETERS FOR REDUCED PLANS 0 10 20 30 40 50 60 70 80 90 100

FILE => \\mpl5fs\LB_Projects\4141-05\CADD\TS\Checked Plans\YBITS #1100% No. 2_03-03-08 (Final Renamed)\033011 Openings T9 CCO\04-0120s1-34-006rl-1-gdt02.dgn

March 30, 2011

USERNAME => fasmoon DATE PLOTTED => 3/30/2011 TIME PLOTTED => 11:56:52 PM

DIST.	COUNTY	ROUTE	KILOMETER POST TOTAL PROJECT	SHEET NO.	TOTAL SHEETS
04	SF	80	12.7/13.2	546AR2	806

REGISTERED ENGINEER - CIVIL
6-23-08
PLANS APPROVAL DATE
REGISTERED PROFESSIONAL ENGINEER A.L. ELY No. 18880 Exp. 6-30-09 CIVIL STATE OF CALIFORNIA

The State of California or its officers or agents shall not be responsible for the accuracy or completeness of electronic copies of this plan sheet.

T.Y. LIN / MOFFATT & NICHOL
TWO HARRISON STREET
SAN FRANCISCO, CA 94105

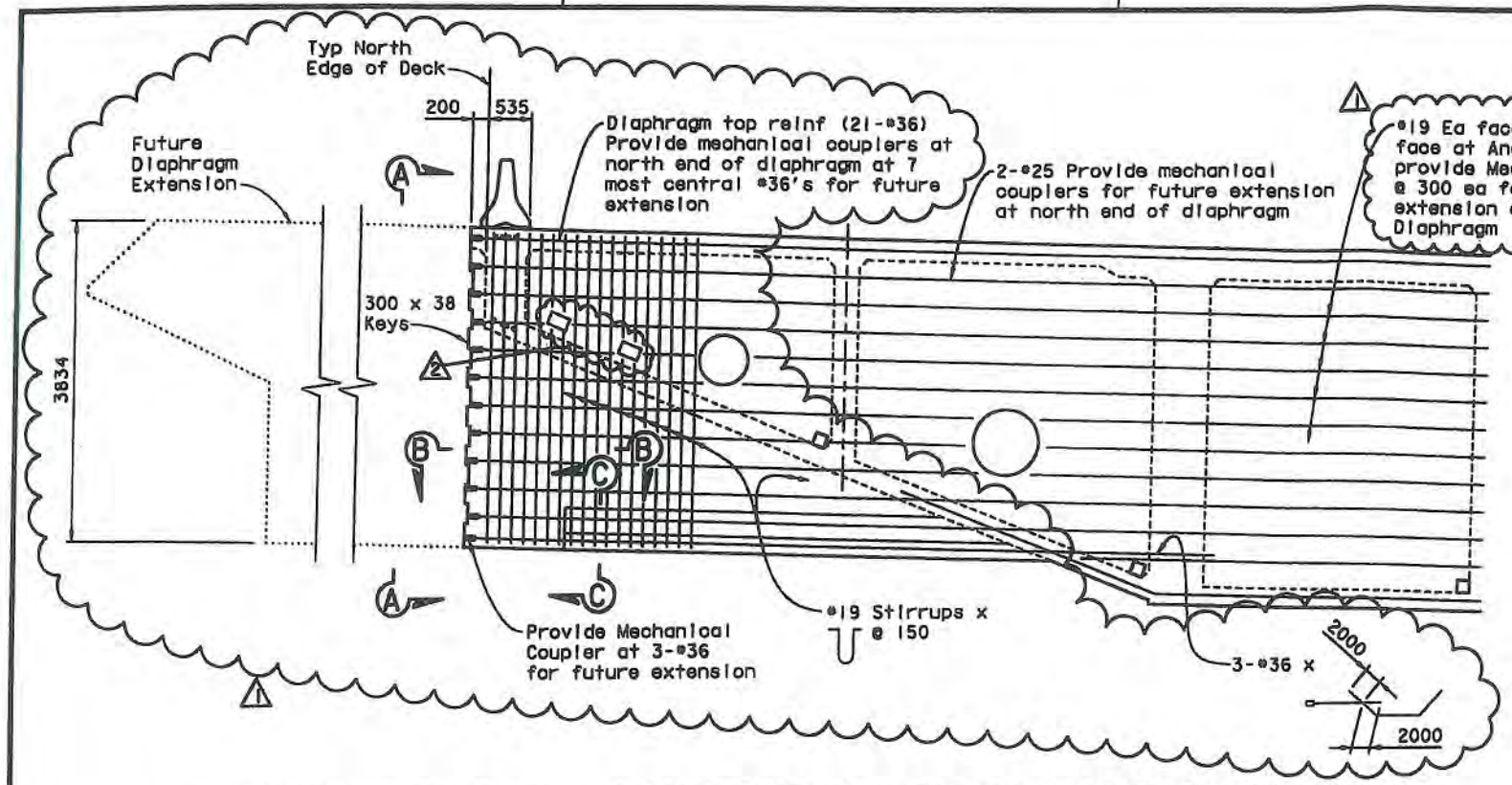

DIAPHRAGM ELEVATION - PROVISIONS FOR FUTURE DIAPHRAGM EXTENSIONS AT NORTH SIDE FRAME WB2 DIAPHRAGMS 5L-1 THRU 5L-5

1:40

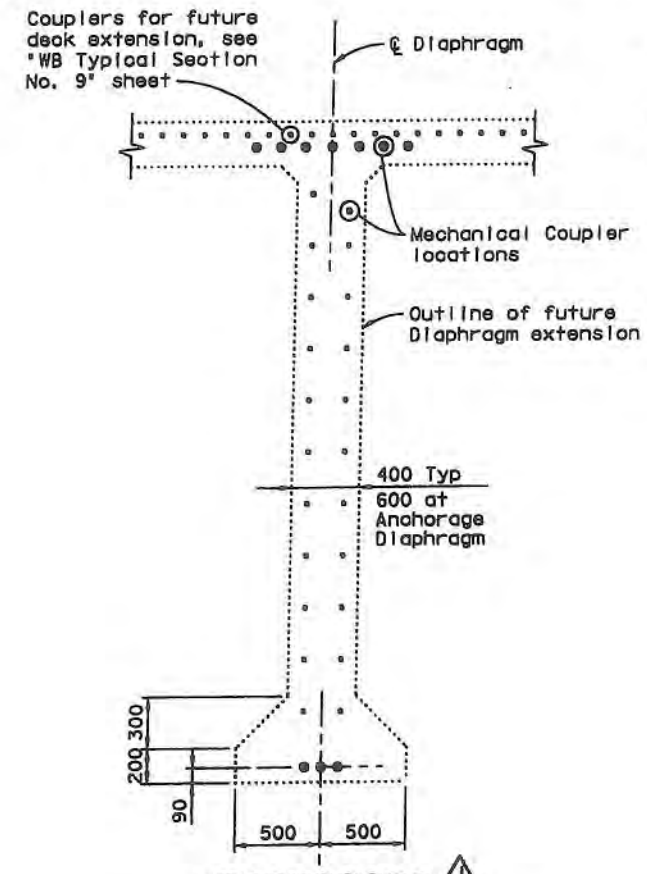

SECTION A-A

(Typ at 5 Diaphragm locations)

1:20

Note: For details not shown, see "Girder Diaphragm Details No. 1" sheet.

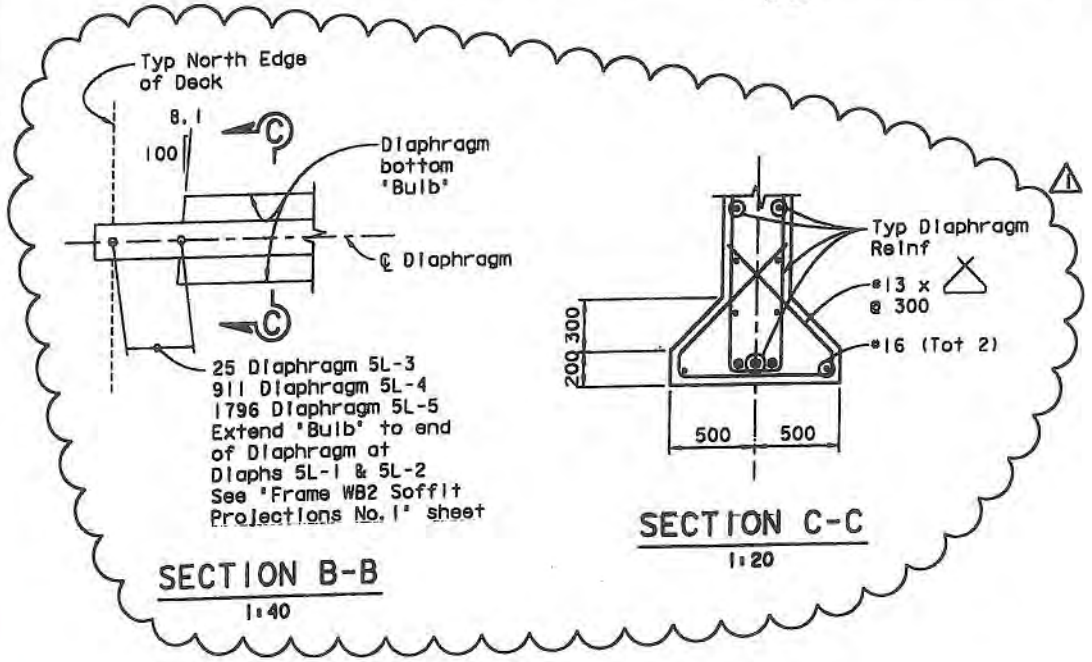

SECTION B-B

1:40

SECTION C-C

1:20

FOR REVISION 1 & 2 ONLY

MARK	DATE	DESCRIPTIONS	BY	CH'D
2	3-30-11	Rev Diaphragm Opening	TL	AE
1	12-23-08	WB Ramp Revisions	TL	AE

REVISIONS

CONTRACT CHANGE ORDER NO. 53
SHEET 44 OF 51

8 ADDED PER ADDENDUM NO. 8 DATED NOVEMBER 12, 2009

ALL DIMENSIONS ARE IN MILLIMETERS UNLESS OTHERWISE SHOWN

DESIGN OVERSIGHT
JUAN F. CARPIO
HASAN EL-NATOR
4/25/11
SIGN OFF DATE
Rev. Date 5-12-99

	BY	CHECKED
DESIGN	Wang	Lee
DETAILS	Samson	Jain
QUANTITIES	Jain	Birdy

PREPARED FOR THE STATE OF CALIFORNIA DEPARTMENT OF TRANSPORTATION

Jai Birdy
PROJECT ENGINEER

BRIDGE NO. 34-006 L/R
KILOMETER POST 12.8

CU 04251
EA 0120S1

SAN FRANCISCO OAKLAND BAY BRIDGE
EAST SPAN SEISMIC SAFETY PROJECT

YBI TRANSITION STRUCTURES

GIRDER DIAPHRAGM DETAILS NO. 3

DISREGARD PRINTS BEARING EARLIER REVISION DATES

REVISION DATES (PRELIMINARY STAGE ONLY)

SHEET 97A OF 209

ORIGINAL SCALE IN MILLIMETERS FOR REDUCED PLANS 0 10 20 30 40 50 60 70 80 90 100

FILE => \\mnlbfs\LB Projects\eis-05\2400\TS\Checked Plans\YBITS #1100% No. 2.03-03-08 (Final Renamed)\033011 Openings T9 CCO\04-0120s1-34-006r1-1-gdt04.dgn

USERNAME => fsamson DATE PLOTTED => 3/29/2011 TIME PLOTTED => 11:03:45 AM

March 30, 2011

646BSR1

DIST.	COUNTY	ROUTE	KILOMETER POST TOTAL PROJECT	SHEET NO.	TOTAL SHEETS
04	SF	80	12.7/13.2	648BS	806

REGISTERED ENGINEER - CIVIL

PLANS APPROVAL DATE

The State of California or its officers or agents shall not be responsible for the accuracy or completeness of electronic copies of this plan sheet.

REGISTERED PROFESSIONAL ENGINEER A.L. ELY No. 18880 Exp. 6-30-09 CIVIL STATE OF CALIFORNIA

T.Y. LIN / MOFFATT & NICHOL
TWO HARRISON STREET
SAN FRANCISCO, CA 94105

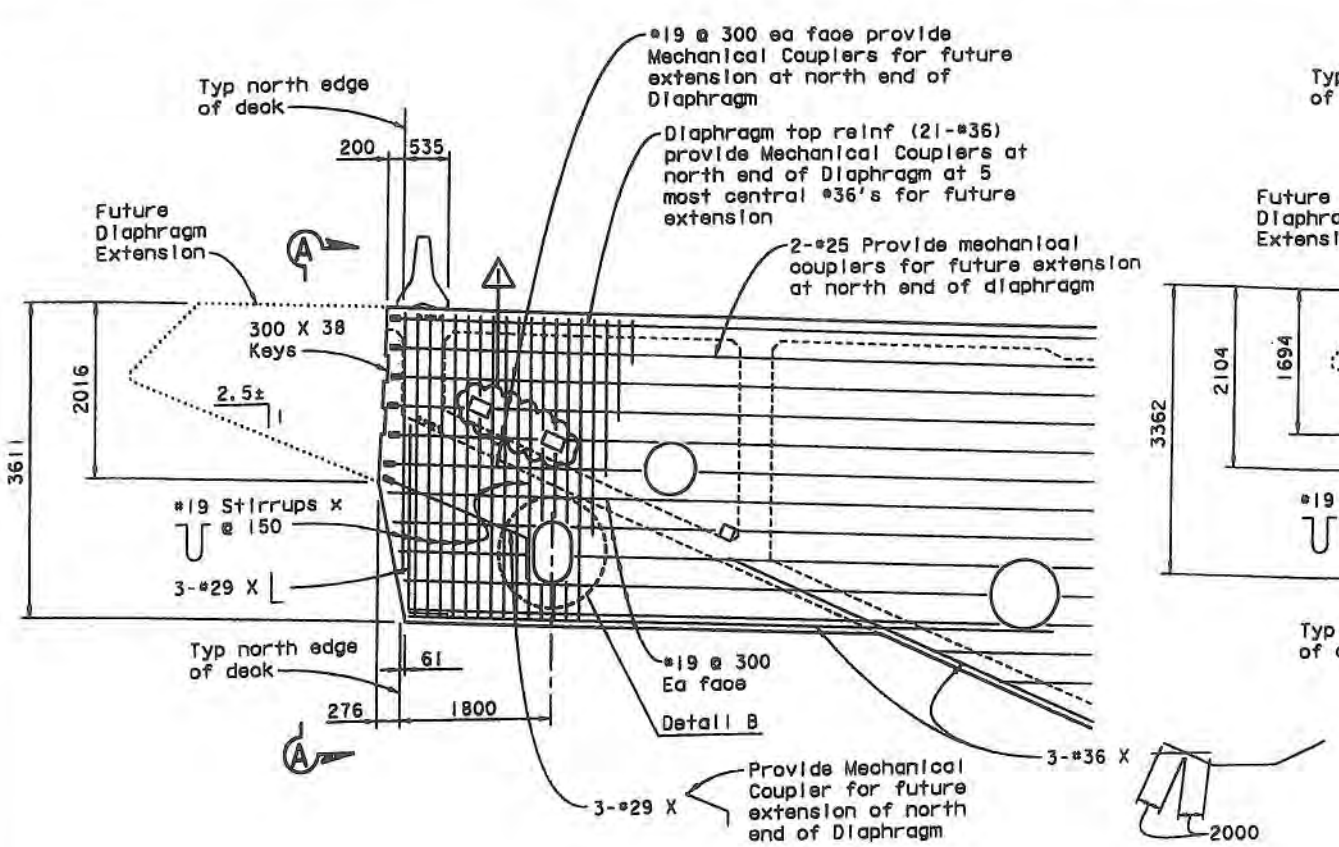

DIAPHRAGM 4L-1

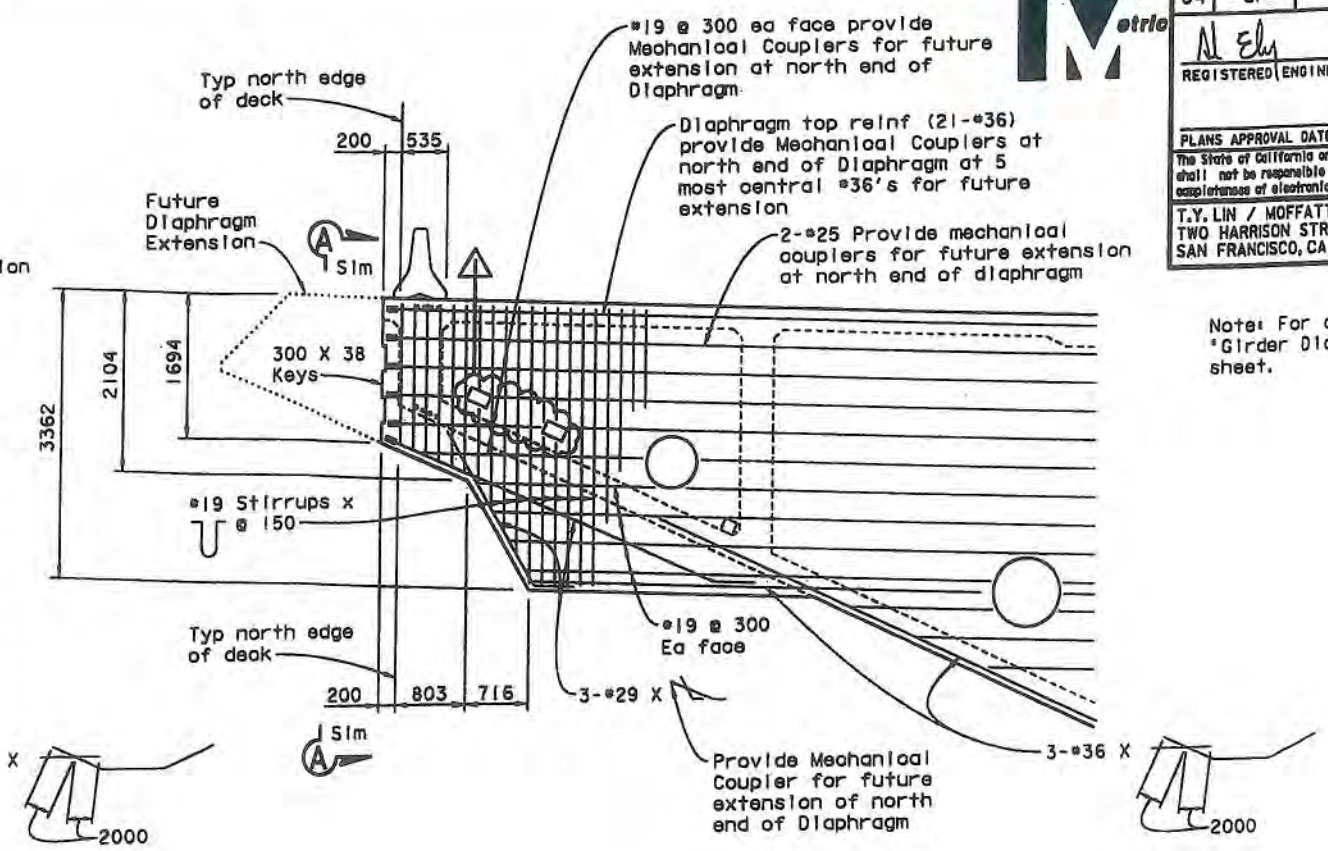

DIAPHRAGM 4L-2

Note: For details not shown, see 'Girder Diaphragm Details No. 1' sheet.

DIAPHRAGM ELEVATION - PROVISIONS FOR FUTURE EXTENSIONS AT NORTH SIDE FRAME WB2

1:40

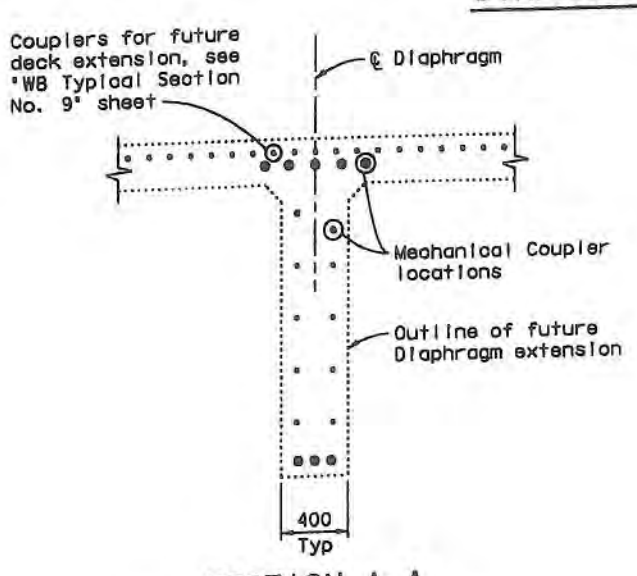

SECTION A-A
(Typ at 2 Diaphragm locations)
1:20

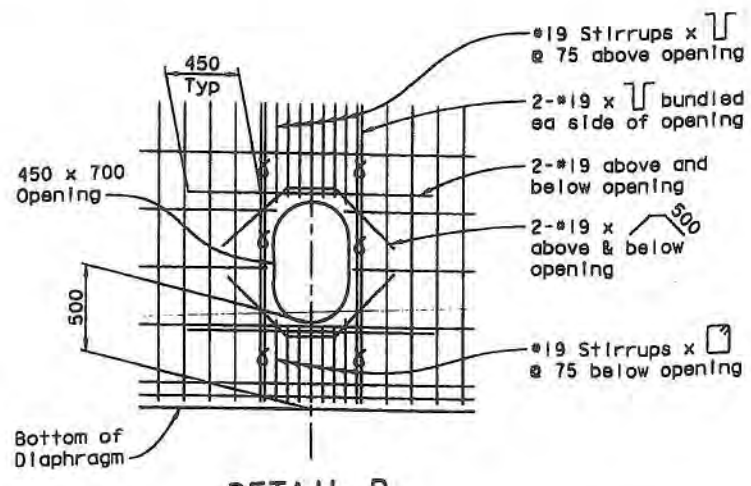

DETAIL B
1:20

FOR REVISION ⚠ ONLY

MARK	DATE	DESCRIPTIONS	BY	CH'D
1	3-30-11	Rev Diaphragm Opening	TL	AE

REVISIONS

SUPPLEMENTAL SHEET

CONTRACT CHANGE ORDER NO. 53
SHEET 45 OF 51

ALL DIMENSIONS ARE IN MILLIMETERS UNLESS OTHERWISE SHOWN

SAN FRANCISCO OAKLAND BAY BRIDGE
EAST SPAN SEISMIC SAFETY PROJECT

YBI TRANSITION STRUCTURES

GIRDER DIAPHRAGM DETAILS NO. 4

DESIGN OVERSIGHT HASAN EL-NATUR 4/25/11
SIGN OFF DATE
Rev. Date: 5-18-98

	BY	CHECKED
DESIGN	Jain	Lee
DETAILS	Samson	Jain
QUANTITIES	Jain	Birdy

PREPARED FOR THE STATE OF CALIFORNIA DEPARTMENT OF TRANSPORTATION

Jai Birdy
PROJECT ENGINEER

BRIDGE NO. 34-006 L/R
KILOMETER POST 12.8

CU 04251
EA 0120S1

DISREGARD PRINTS BEARING EARLIER REVISION DATES

REVISION DATES (PRELIMINARY STAGE ONLY) 10/15/10

SHEET 978 OF 209

ORIGINAL SCALE IN MILLIMETERS FOR REDUCED PLANS 0 10 20 30 40 50 60 70 80 90 100

FILE => \\mnlbfs\LB_Projects\4141-06\CADD\TS\Checked Plans\YBITS #1-100% No. 2_03-03-08 (Final Renamed)\033011 Openings T9 CCO\04-0120s1-34-006r1-1-gd105.dgn

March 30, 2011

USERNAME => fsamson DATE PLOTTED => 3/29/2011 TIME PLOTTED => 11:02:05 AM

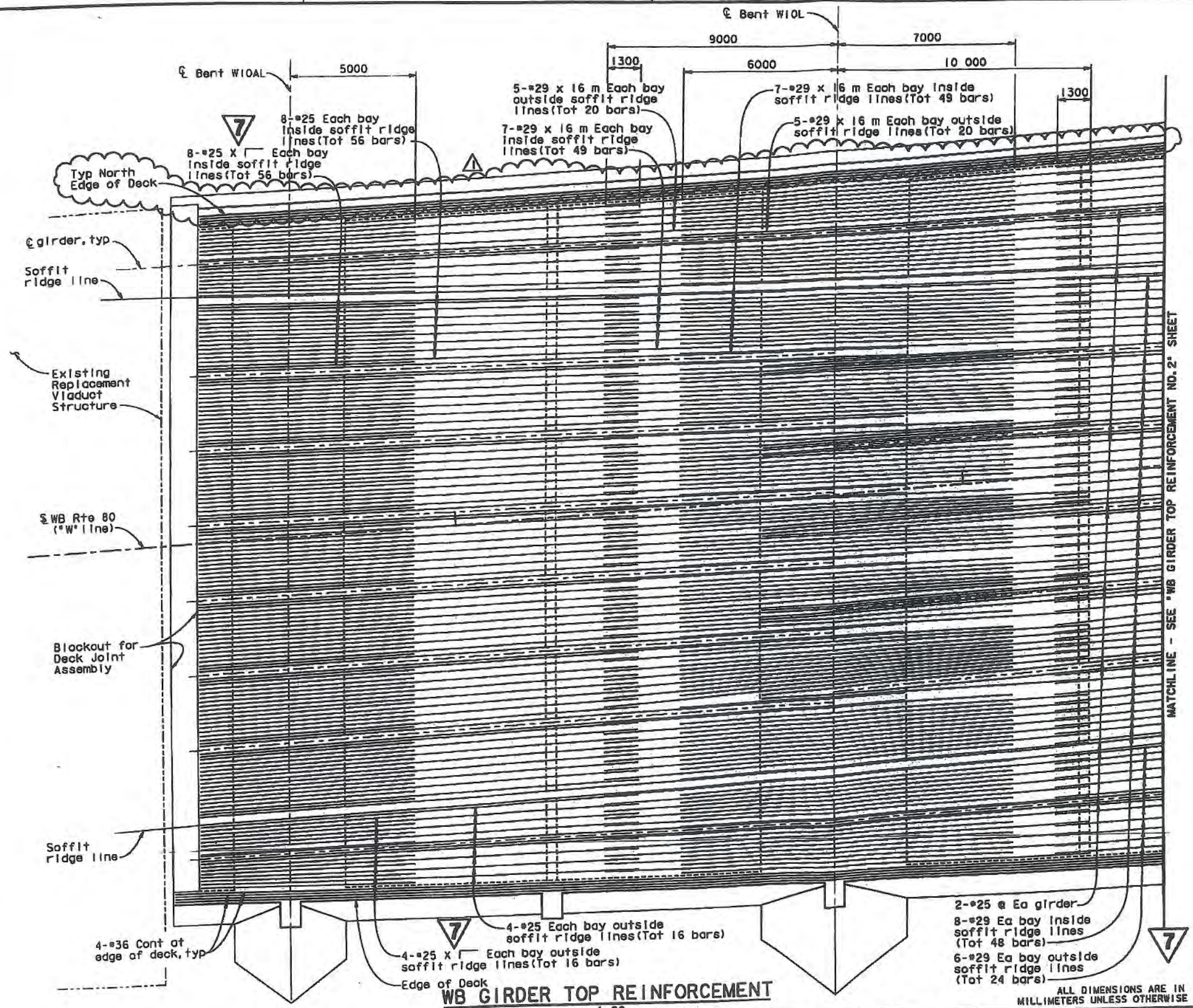

WB GIRDER TOP REINFORCEMENT

1:80

ALL DIMENSIONS ARE IN MILLIMETERS UNLESS OTHERWISE SHOWN

DIST.	COUNTY	ROUTE	KILOMETER POST TOTAL PROJECT	SHEET NO.	TOTAL SHEETS
04	SF	80	12.7/13.2	649R1	806

REGISTERED ENGINEER - CIVIL

6-23-08

PLANS APPROVAL DATE

REGISTERED PROFESSIONAL ENGINEER A.L. ELY No. 18880 Exp. 6-30-09 CIVIL STATE OF CALIFORNIA

The State of California or its officers or agents shall not be responsible for the accuracy or completeness of electronic copies of this plan sheet.

T.Y. LIN / MOFFATT & NICHOL
TWO HARRISON STREET
SAN FRANCISCO, CA 94105

REGISTERED PROFESSIONAL ENGINEER A.L. ELY No. 18880 Exp. 6-30-11 CIVIL STATE OF CALIFORNIA

FOR REVISION ⚠ ONLY

MARK	DATE	DESCRIPTIONS	BY	CH'D
1	12-23-09	WB Ramp Revisions	TL	AE

REVISIONS

CONTRACT CHANGE ORDER NO. 53
SHEET 46 OF 51

REVISED PER ADDENDUM NO. 7 DATED OCTOBER 19, 2009

SAN FRANCISCO OAKLAND BAY BRIDGE
EAST SPAN SEISMIC SAFETY PROJECT

YBI TRANSITION STRUCTURES

WB GIRDER TOP REINFORCEMENT NO. 1

DESIGN OVERSIGHT
JOHN MOOK, BERNARD CHAN, JUAN F. CARPIO
March 3, 2008
SIGN OFF DATE

HASAN EL-NATUR
10/28/10

DESIGN	BY Jain	CHECKED Desai
DETAILS	BY van Ryn/Zucchi/Mal	CHECKED Jain
QUANTITIES	BY Liao	CHECKED E. Nichol

PREPARED FOR THE STATE OF CALIFORNIA DEPARTMENT OF TRANSPORTATION

Jai Birdy
PROJECT ENGINEER

BRIDGE NO. 34-0006 L/R
KILOMETER POST 12.8

CU 04251
EA 0120S1

DISREGARD PRINTS BEARING EARLIER REVISION DATES

REVISION DATES (PRELIMINARY STAGE ONLY)

SHEET 100 OF 209

ORIGINAL SCALE IN MILLIMETERS FOR REDUCED PLANS 0 10 20 30 40 50 60 70 80 90 100

Rev. Date: 5-13-98

October 15, 2010

WB RAMP CCO

DATE PLOTTED => 10/15/2010 TIME PLOTTED => 11:52:40 PM

USERNAME => rasmson

DIST.	COUNTY	ROUTE	KILOMETER POST TOTAL PROJECT	SHEET NO.	TOTAL SHEETS
04	SF	80	12.7/13.2	650R1	806

REGISTERED ENGINEER - CIVIL
6-23-08
PLANS APPROVAL DATE

REGISTERED PROFESSIONAL ENGINEER A.L. ELY No. 18880 Exp. 6-30-09 CIVIL STATE OF CALIFORNIA

The State of California or its officers or agents shall not be responsible for the accuracy or completeness of electronic copies of this plan sheet.

T.Y. LIN / MOFFATT & NICHOL
TWO HARRISON STREET
SAN FRANCISCO, CA 94105

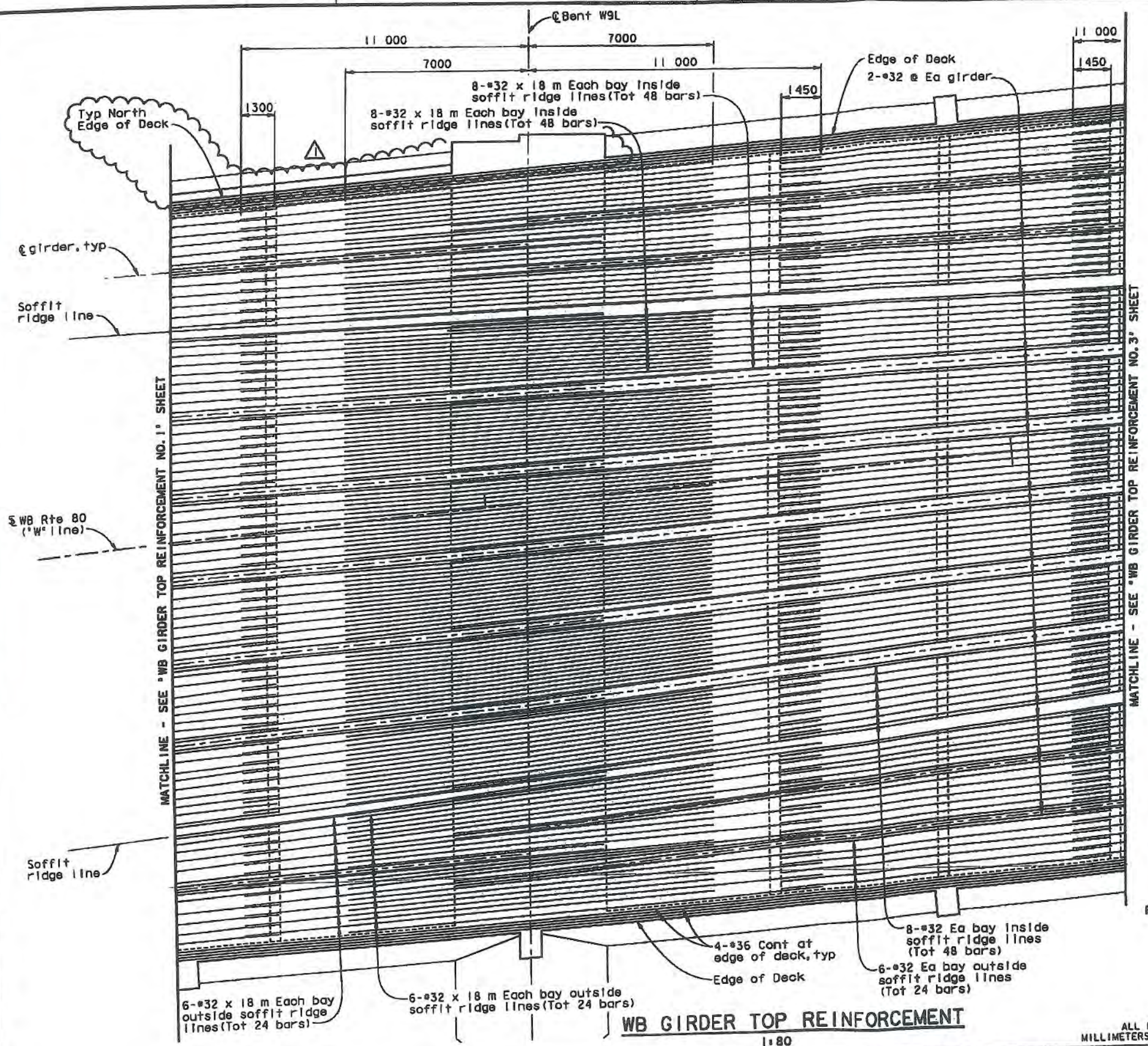

WB GIRDER TOP REINFORCEMENT

1:80

REGISTERED PROFESSIONAL ENGINEER A.L. ELY No. 18880 Exp. 6-30-11 CIVIL STATE OF CALIFORNIA

FOR REVISION ⚠ ONLY

MARK	DATE	DESCRIPTIONS	BY	CH'D
1	12-23-08	WB Ramp Revisions	TL	AE

REVISIONS

CONTRACT CHANGE ORDER NO. 53
SHEET 47 OF 51

ALL DIMENSIONS ARE IN MILLIMETERS UNLESS OTHERWISE SHOWN

SAN FRANCISCO OAKLAND BAY BRIDGE
EAST SPAN SEISMIC SAFETY PROJECT

YBI TRANSITION STRUCTURES

WB GIRDER TOP REINFORCEMENT NO. 2

DESIGN OVERSIGHT
JOHN MOOK, BERNARD CHAN, JUAN F. CARPIO
March 3, 2008
SIGN OFF DATE

HASAN SC-NATUR
10/20/10

	BY	CHECKED
DESIGN	Jain	Desai
DETAILS	van Ryn/Zucchi/Wal	Jain
QUANTITIES	Lido	E. Nichol

PREPARED FOR THE STATE OF CALIFORNIA DEPARTMENT OF TRANSPORTATION

Jal Birdy
PROJECT ENGINEER

BRIDGE NO. 34-0006 L/R
KILOMETER POST 12.8

CU 04251
EA 012051

DISREGARD PRINTS BEARING EARLIER REVISION DATES

REVISION DATES (PRELIMINARY STAGE ONLY)

SHEET 101 OF 209

ORIGINAL SCALE IN MILLIMETERS FOR REDUCED PLANS

Rev. Date: 5-13-98

WB RAMP CCO

October 15, 2010

USERNAME => fadmsor DATE PLOTTED => 10/15/2010 TIME PLOTTED => 11:42:25 PM

DIST.	COUNTY	ROUTE	KILOMETER POST TOTAL PROJECT	SHEET NO.	TOTAL SHEETS
04	SF	80	12.7/13.2	652R1	806

REGISTERED ENGINEER - CIVIL

6-23-08
PLANS APPROVAL DATE

The State of California or its officers or agents shall not be responsible for the accuracy or completeness of electronic copies of this plan sheet.

REGISTERED PROFESSIONAL ENGINEER A.L. ELY No. 16880 Exp. 6-30-09 CIVIL STATE OF CALIFORNIA

T.Y. LIN / MOFFATT & NICHOL
TWO HARRISON STREET
SAN FRANCISCO, CA 94105

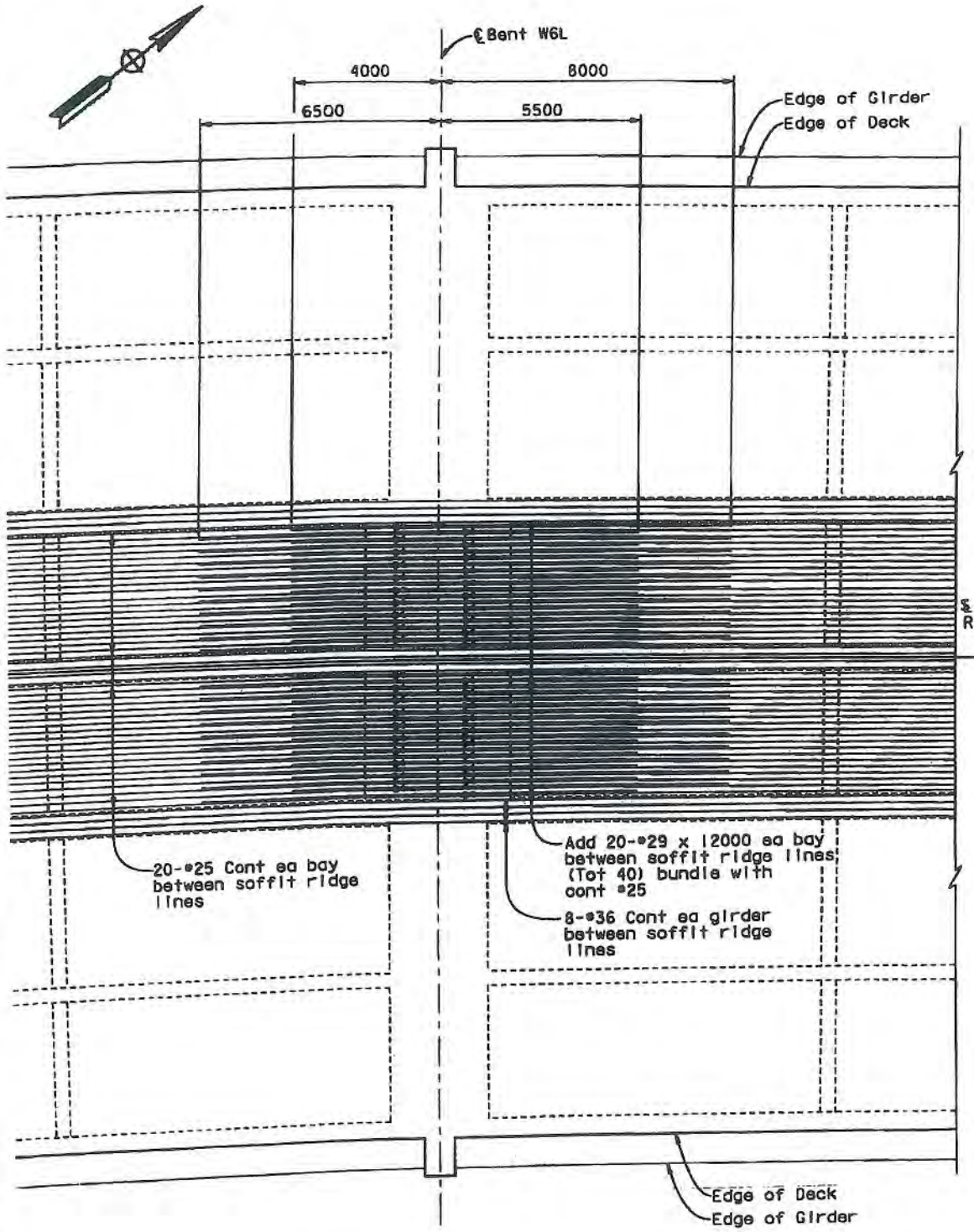

PLAN - WB GIRDER TOP REINFORCEMENT
AT BENT W6L
1:80

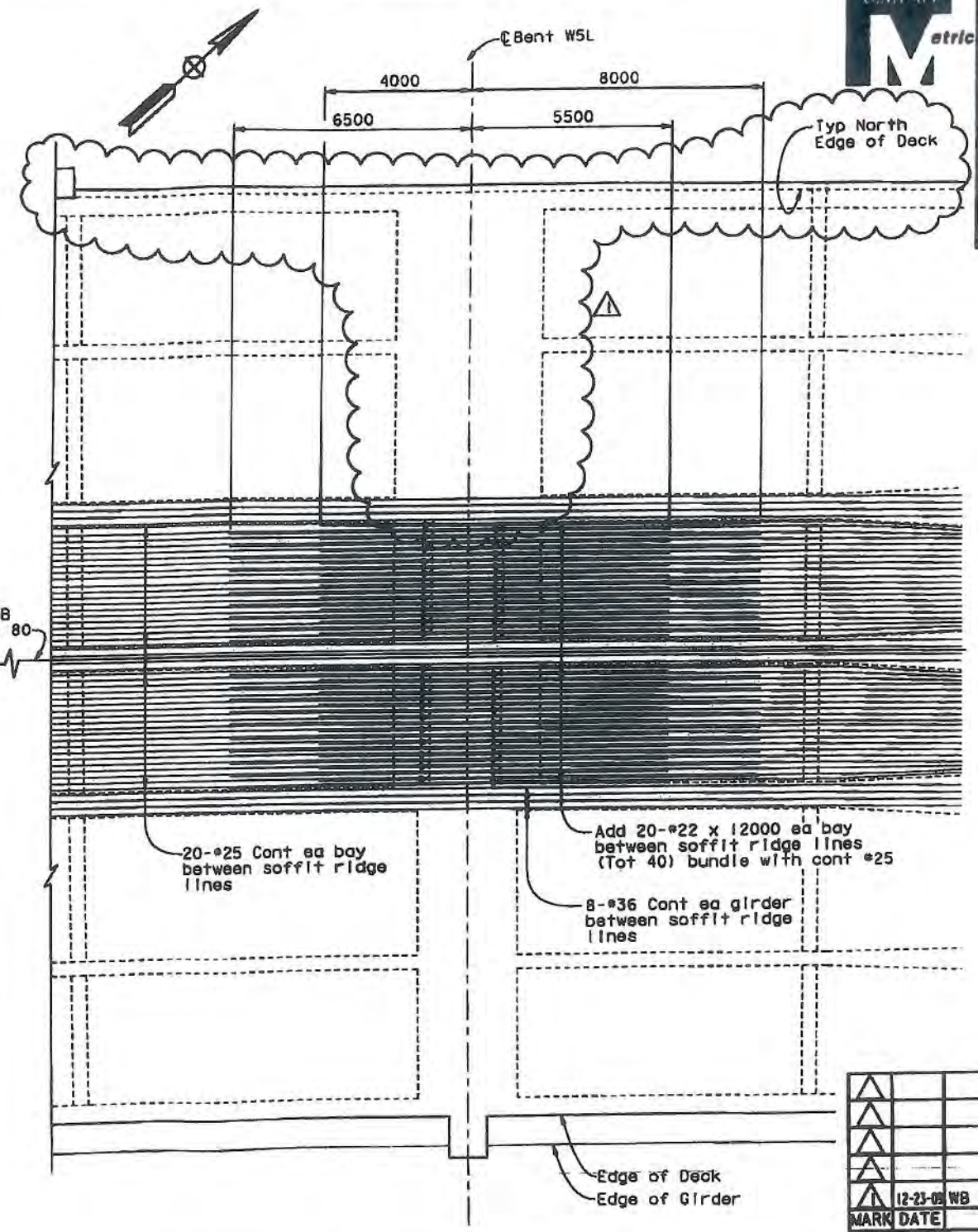

PLAN - WB GIRDER TOP REINFORCEMENT
AT BENT W5L
1:80

REGISTERED PROFESSIONAL ENGINEER A.L. ELY No. 16880 Exp. 6-30-11 CIVIL STATE OF CALIFORNIA

FOR REVISION ⚠1 ONLY

MARK	DATE	DESCRIPTIONS	BY	CH'D
1	12-23-08	WB Ramp Revisions	TL	AE

REVISIONS

CONTRACT CHANGE ORDER NO. 53
SHEET 48 OF 51

ALL DIMENSIONS ARE IN MILLIMETERS UNLESS OTHERWISE SHOWN

SAN FRANCISCO OAKLAND BAY BRIDGE
EAST SPAN SEISMIC SAFETY PROJECT

YBI TRANSITION STRUCTURES

WB GIRDER TOP REINFORCEMENT NO. 4

DESIGN OVERSIGHT
JOHN MOOR, BERNARD CHAN, JUAN F. CARPIO, HASAN EL-NATUR
March 3, 2008
SIGN OFF DATE

	BY	CHECKED
DESIGN		
DETAILS	van Ryn/Zucchi/Wal	Jain
QUANTITIES	Liao	E. Nichol

PREPARED FOR THE STATE OF CALIFORNIA DEPARTMENT OF TRANSPORTATION

Jal Birdy
PROJECT ENGINEER

BRIDGE NO. 34-0006 L/R
KILOMETER POST 12.8

CU 04251
EA 012051

DISREGARD PRINTS BEARING EARLIER REVISION DATES

REVISION DATES (PRELIMINARY STAGE ONLY)

SHEET 103 OF 209

ORIGINAL SCALE IN MILLIMETERS FOR REDUCED PLANS

Rev. Date: 5-12-98

WB RAMP CCO

October 15, 2010

USERNAME => fsamson DATE PLOTTED => 10/15/2010 TIME PLOTTED => 11:42:35 PM

DIST.	COUNTY	ROUTE	KILOMETER POST TOTAL PROJECT	SHEET NO.	TOTAL SHEETS
04	SF	80	12.7/13.2	653R1	806

REGISTERED ENGINEER - CIVIL

6-23-08
PLANS APPROVAL DATE

The State of California or its officers or agents shall not be responsible for the accuracy or completeness of electronic copies of this plan sheet.

REGISTERED PROFESSIONAL ENGINEER A.L. ELY No. 18880 Exp. 6-30-09 CIVIL STATE OF CALIFORNIA

T.Y. LIN / MOFFATT & NICHOL
TWO HARRISON STREET
SAN FRANCISCO, CA 94105

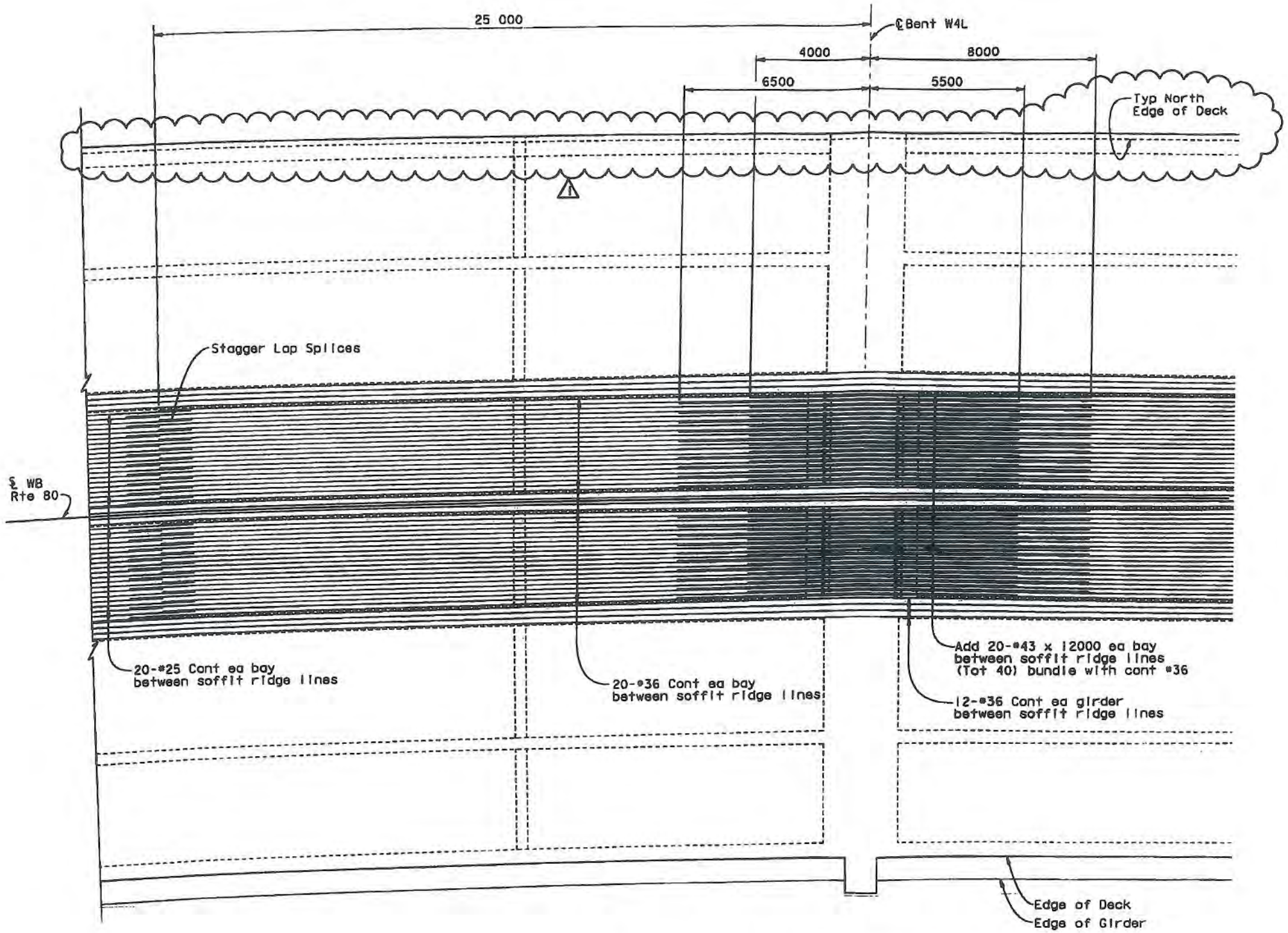

PLAN - WB GIRDER TOP REINFORCEMENT
AT BENT W4L
1:80

REGISTERED PROFESSIONAL ENGINEER A.L. ELY No. 18880 Exp. 6-30-11 CIVIL STATE OF CALIFORNIA

FOR REVISION 1 ONLY

MARK	DATE	DESCRIPTIONS	BY	CH'D
1	12-23-09	WB Ramp Revisions	TL	AE
		REVISIONS		

CONTRACT CHANGE ORDER NO. 53
SHEET 49 OF 51

ALL DIMENSIONS ARE IN MILLIMETERS UNLESS OTHERWISE SHOWN

SAN FRANCISCO OAKLAND BAY BRIDGE
EAST SPAN SEISMIC SAFETY PROJECT

YBI TRANSITION STRUCTURES

WB GIRDER TOP REINFORCEMENT NO. 5

DESIGN OVERSIGHT
JOHN MOOK, BERNARD CHAN, JUAN F. CARPIO HASAN EL-NATUR
March 3, 2008 10/20/10
SIGN OFF DATE

	BY	CHECKED
DESIGN		
DETAILS	van Ryn/Zucchi/Mal	Jain
QUANTITIES	Lico	E. Nichol

PREPARED FOR THE STATE OF CALIFORNIA DEPARTMENT OF TRANSPORTATION

Jal Birdy
PROJECT ENGINEER

BRIDGE NO. 34-0006 L/R
KILOMETER POST 12.8

CU 04251
EA 012051

DISREGARD PRINTS BEARING EARLIER REVISION DATES

REVISION DATES (PRELIMINARY STAGE ONLY) SHEET 104 OF 203

ORIGINAL SCALE IN MILLIMETERS FOR REDUCED PLANS 0 10 20 30 40 50 60 70 80 90 100

Rev. Date 5-12-98

WB RAMP CCO

October 15, 2010

FILENAME => fsamson DATE PLOTTED => 10/15/2010 TIME PLOTTED => 1:42:45 PM

DIST.	COUNTY	ROUTE	KILOMETER POST TOTAL PROJECT	SHEET NO.	TOTAL SHEETS
04	SF	80	12.7/13.2	654R1	806

REGISTERED ENGINEER - CIVIL

6-23-08
PLANS APPROVAL DATE

REGISTERED PROFESSIONAL ENGINEER A.L. ELY No. 18880 Exp. 6-30-09 CIVIL STATE OF CALIFORNIA

The State of California or its officers or agents shall not be responsible for the accuracy or completeness of electronic copies of this plan sheet.

T.Y. LIN / MOFFATT & NICHOL
TWO HARRISON STREET
SAN FRANCISCO, CA 94105

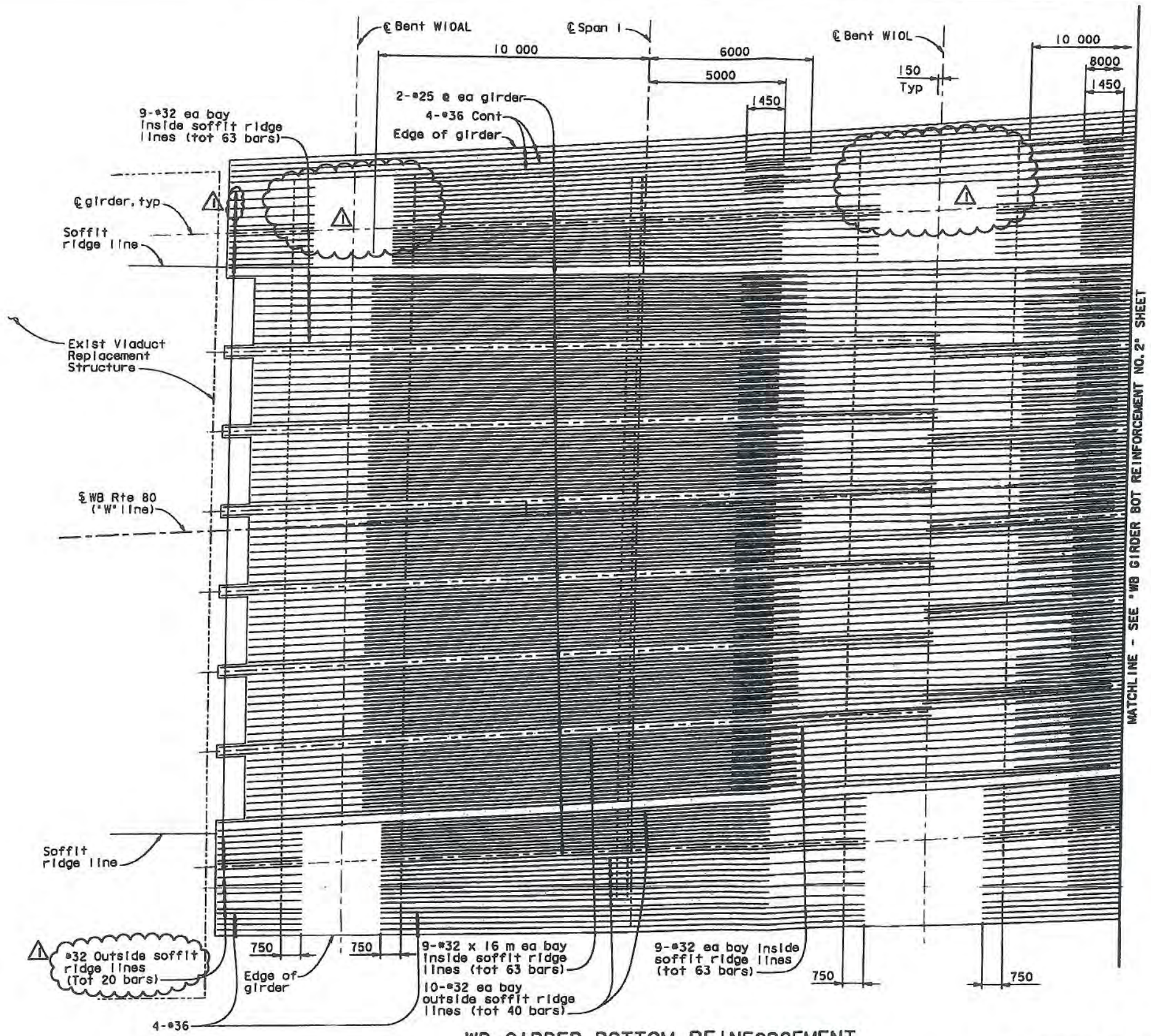

WB GIRDER BOTTOM REINFORCEMENT

1:80

ALL DIMENSIONS ARE IN MILLIMETERS UNLESS OTHERWISE SHOWN

FOR REVISION ⚠ ONLY

REGISTERED PROFESSIONAL ENGINEER A.L. ELY No. 18880 Exp. 6-30-11 CIVIL STATE OF CALIFORNIA

MARK	DATE	DESCRIPTIONS	BY	CH'D
⚠	5-27-10	WB Ramp Revisions	TL	AE
		REVISIONS		

CONTRACT CHANGE ORDER NO. 53
SHEET 50 OF 51

DESIGN OVERSIGHT
JOHN MOOS, BERNARD CHAN, JUAN F. CARPIO, HASAN EL-NATUR
March 3, 2008
SIGN OFF DATE
Rev. Date 5-8-08

	BY	CHECKED
DESIGN	Jain	Desai
DETAILS	van Ryn/Zuachi/Mal	Jain
QUANTITIES	Liao	E. Nichol

PREPARED FOR THE STATE OF CALIFORNIA DEPARTMENT OF TRANSPORTATION

Jai Birdy
PROJECT ENGINEER

BRIDGE NO. 34-0006 L/R
KILOMETER POST 12.8

CU 04251
EA 0120S1

DISREGARD PRINTS BEARING EARLIER REVISION DATES

SAN FRANCISCO OAKLAND BAY BRIDGE
EAST SPAN SEISMIC SAFETY PROJECT

YBI TRANSITION STRUCTURES

WB GIRDER BOTTOM REINF NO. 1

REVISION DATES (PRELIMINARY STAGE ONLY)

SHEET 105 OF 209

ORIGINAL SCALE IN MILLIMETERS FOR REDUCED PLANS 0 10 20 30 40 50 60 70 80 90 100

WB RAMP CCO

October 15, 2010

TIME PLOTTED -> 11:42:04 PM
DATE PLOTTED -> 10/15/2010
USERNAME -> fsamson

DIST.	COUNTY	ROUTE	KILOMETER POST TOTAL PROJECT	SHEET NO.	TOTAL SHEETS
04	SF	80	12.7/13.2	655R1	806

REGISTERED ENGINEER - CIVIL

6-23-08
PLANS APPROVAL DATE

The State of California or its officers or agents shall not be responsible for the accuracy or completeness of electronic copies of this plan sheet.

T.Y. LIN / MOFFATT & NICHOL
TWO HARRISON STREET
SAN FRANCISCO, CA 94105

REGISTERED PROFESSIONAL ENGINEER A.L. ELY No. 18880 Exp. 6-30-09 CIVIL STATE OF CALIFORNIA

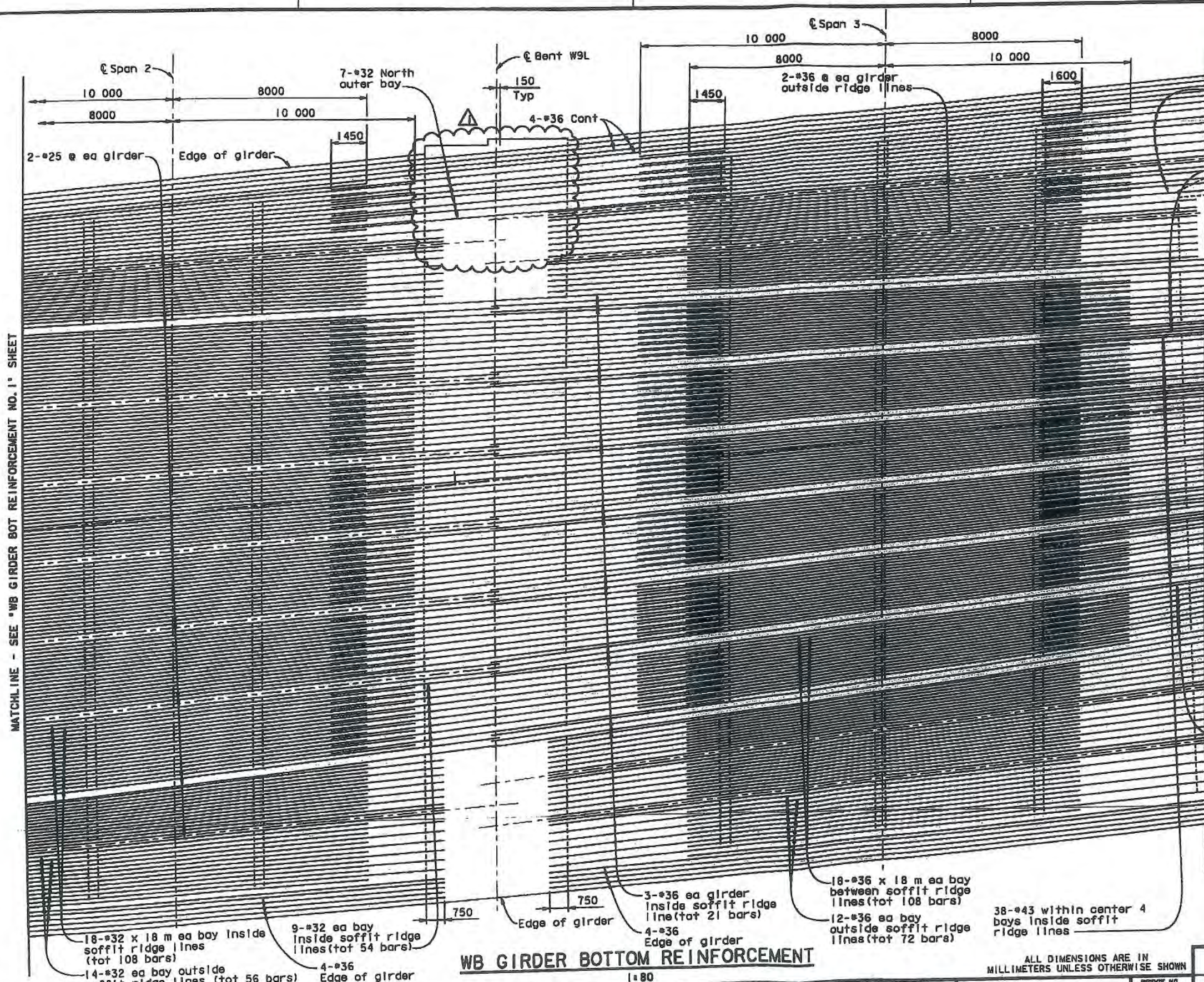

WB GIRDER BOTTOM REINFORCEMENT

1:80

ALL DIMENSIONS ARE IN MILLIMETERS UNLESS OTHERWISE SHOWN

FOR REVISION ⚠1 ONLY

REGISTERED PROFESSIONAL ENGINEER A.L. ELY No. 18880 Exp. 6-30-11 CIVIL STATE OF CALIFORNIA

MARK	DATE	DESCRIPTIONS	BY	CH'D
⚠1	12-23-09	WB Ramp Revisions	TL	AE
⚠2				
⚠3				
⚠4				
⚠5				

REVISIONS

CONTRACT CHANGE ORDER NO. 53
SHEET 51 OF 51

SAN FRANCISCO OAKLAND BAY BRIDGE
EAST SPAN SEISMIC SAFETY PROJECT

YBI TRANSITION STRUCTURES

WB GIRDER BOTTOM REINF NO. 2

	BY	CHECKED
DESIGN	Jain	Dabal
DETAILS	van Ryn/Zucchi/Mai	Jain
QUANTITIES	Liao	E. Nichol

PREPARED FOR THE STATE OF CALIFORNIA DEPARTMENT OF TRANSPORTATION

Jai Birdy
PROJECT ENGINEER

BRIDGE NO. 34-0006 L/R
KILOMETER POST 12.8

CU 04251
EA 0120S1

DISREGARD PRINTS BEARING EARLIER REVISION DATES

REVISION DATES (PRELIMINARY STAGE ONLY) 1/1/08 1/1/08 1/1/08 1/1/08 1/1/08 1/1/08 1/1/08 1/1/08 1/1/08 1/1/08

SHEET 106 OF 209

DESIGN OVERSIGHT
JOHN HOOK, BERNARD CHAN, JUAN F. CARPIO — HASAN EL-NATUR
March 3, 2008
SIGN OFF DATE
10/20/10

ORIGINAL SCALE IN MILLIMETERS FOR REDUCED PLANS 0 10 20 30 40 50 60 70 80 90 100

Rev. Date: 5-18-98

WB RAMP CCO

October 15, 2010

USERNAME => rasmson DATE PLOTTED => 10/15/2010 TIME PLOTTED => 14:42:14 PM

FILE => \\mnlbfs\LB_Projects\6674 - Yerba Buena Island (YBI) Bridge\7 Design Information\CADD\Sheets\Addendum Include Into Prgm

STATE OF CALIFORNIA - DEPARTMENT OF TRANSPORTATION

CONTRACT CHANGE ORDER

Change Requested by: Engineer

CCO: 54	Suppl. No. 0	Contract No. 04 - 0120S4	Road SF-80-12.7/13.2	FED. AID LOC.: NO FED AID

To: **M C M CONSTRUCTION INC**

You are directed to make the following changes from the plans and specifications or do the following described work not included in the plans and specifications for this contract. ***NOTE: This change order is not effective until approved by the Engineer.***

Description of work to be done, estimate of quantities and prices to be paid. (Segregate between additional work at contract price, agreed price and force account.) Unless otherwise stated, rates for rental of equipment cover only such time as equipment is actually used and no allowance will be made for idle time. This last percentage shown is the net accumulated increase or decrease from the original quantity in the Engineer's Estimate.

Extra Work at Force Account:

Salvage historical artifacts pertaining to the existing San Francisco Oakland Bay Bridge as determined by the Engineer.

Compensation shall be paid in accordance with Section 9-1.03 FORCE ACCOUNT PAYMENT of the Standard Specifications and Section 5-1.17 FORCE ACCOUNT PAYMENT of the Contract Special Provisions.

Estimated cost of Extra Work at Force Account $150,000.00

No adjustment of contract time is warranted as this work will not affect the controlling operation.

Estimated Cost: Increase ☑ Decrease ☐ **$150,000.00**

By reason of this order the time of completion will be adjusted as follows: 0 days

Submitted by

Signature Rajesh Oberoi	Resident Engineer Rajesh Oberoi, Senior R.E.	Date 10/22/10

Approval Recommended by

Signature Deanna Vilcheck	Area Construction Manager Deanna Vilcheck	Date 10/26/10

Engineer Approval by

Signature Deanna Vilcheck	Area Construction Manager Deanna Vilcheck	Date 11/10/10

We the undersigned contractor, have given careful consideration to the change proposed and agree, if this proposal is approved, that we will provide all equipment, furnish the materials, except as may otherwise be noted above, and perform all services necessary for the work above specified, and will accept as full payment therefor the prices shown above.

NOTE: If you, the contractor, do not sign acceptance of this order, your attention is directed to the requirements of the specifications as to proceeding with the ordered work and filing a written protest within the time therein specified.

Contractor Acceptance by

Signature	(Print name and title) EDMUNDO A. PUCHI, TREASURER	Date 11/9/10

STATE OF CALIFORNIA - DEPARTMENT OF TRANSPORTATION

CONTRACT CHANGE ORDER MEMORANDUM

DATE: 10/21/2010 Page 1 of 1

TO: Deanna Vilcheck, ACM /	FILE: E.A. 04 - 0120S4
FROM: Rajesh Oberoi, Senior R.E.	CO-RTE-PM SF-80-12.7/13.2
	FED. NO. NO FED AID
CCO#: 54 SUPPLEMENT#: 0 Category Code: ~~BZZZ~~ CXXX	CONTINGENCY BALANCE (incl. this change) $28,313,732.00
COST: $150,000.00 INCREASE ☑ DECREASE ☐	HEADQUARTERS APPROVAL REQUIRED? ☐ YES ☑ NO
SUPPLEMENTAL FUNDS PROVIDED: $0.00	IS THIS REQUEST IN ACCORDANCE WITH ENVIRONMENTAL DOCUMENTS? ☑ YES ☐ NO
CCO DESCRIPTION: Preservation of Historical Artifacts	**PROJECT DESCRIPTION:** YBITS-1 (Yerba Buena Island Transition Structures)

Original Contract Time:	Time Adj. This Change:	Previously Approved CCO Time Adjustments:	Percentage Time Adjusted: (including this change)	Total # of Unreconciled Deferred Time CCO(s): (including this change)
1390 Day(s)	0 Day(s)	0 Day(s)	0 %	0

THIS CHANGE ORDER PROVIDES FOR:

Salvaging artifacts pertaining to the existing San Francisco Bay Bridge.

This project, the Yerba Buena Island Transition Structure (YBITS), provides for the construction of two bridges which will connect eastbound and westbound traffic on the new east span of the San Francisco Oakland Bay Bridge (SFOBB) to the existing Yerba Buena Island (YBI) tunnel. The structures are comprised of concrete box girder bridges each approximately 26 meters wide, 40 meters high and 450 meters in length.

Once traffic is placed on the new east span, the existing span constructed in the 1930's, will be removed. Construction Field Facilities has requested that numerous items related to the existing structure be salvaged through this contract for future display in the planned SFOBB museum. This change order will provide for the salvage of these items as requested.

This change order was concurred by the Project's Management Team at their October 7, 2010 meeting.

This work shall be paid as extra work at force account at an estimated cost of $150,000.00. A cost analysis is on file.

No adjustment of contract time is warranted as this work will not affect the controlling operation.

Maintenance concurrence is not required as this change doesn't affect any permanent roadway features.

CONCURRED BY:	
Construction Engineer: Rajesh Oberoi	Date 10/22/10
Bridge Engineer:	Date
Project Engineer:	Date
Project Manager:	Date
FHWA Rep.:	Date
Environmental:	Date
Other (specify):	Date
Other (specify):	Date
District Prior Approval By:	Date
HQ (Issue Approve) By:	Date
Resident Engineer's Signature: Rajesh Oberoi 10/22/10	Date

ESTIMATE OF COST

	THIS REQUEST	TOTAL TO DATE
ITEMS	$0.00	$0.00
FORCE ACCOUNT	$150,000.00	$150,000.00
AGREED PRICE	$0.00	$0.00
ADJUSTMENT	$0.00	$0.00
TOTAL	$150,000.00	$150,000.00

FEDERAL PARTICIPATION

☐ PARTICIPATING ☐ PARTICIPATING IN PART ☑ NONE
☐ NON-PARTICIPATING (MAINTENANCE) ☐ NON-PARTICIPATING

FEDERAL SEGREGATION (if more than one Funding Source or P.I.P. type)
☑ CCO FUNDED PER CONTRACT ☐ CCO FUNDED AS FOLLOWS

FEDERAL FUNDING SOURCE	PERCENT

ADA Notice: For individuals with sensory disabilities, this document is available in alternate formats. For information call: (916) 654-6410 or TDD (916) 654-3880 or write Records and Forms Management, 1120 N Street, MS-89, Sacramento, CA 95814.

STATE OF CALIFORNIA - DEPARTMENT OF TRANSPORTATION

CONTRACT CHANGE ORDER

Change Requested by: Engineer

CCO 54	Suppl. No. 1	Contract No. 04 - 0120S4	Road SF-80-12.7/13.2	FED. AID LOC.: NO FED AID

To: M C M CONSTRUCTION INC

You are directed to make the following changes from the plans and specifications or do the following described work not included in the plans and specifications for this contract. ***NOTE: This change order is not effective until approved by the Engineer.***

Description of work to be done, estimate of quantities and prices to be paid. (Segregate between additional work at contract price, agreed price and force account.) Unless otherwise stated, rates for rental of equipment cover only such time as equipment is actually used and no allowance will be made for idle time. This last percentage shown is the net accumulated increase or decrease from the original quantity in the Engineer's Estimate.

Extra Work at Force Account:

Provide additional funds to perform extra work as specified in Contract Change Order No. 054-S0.

Estimated cost of Extra Work at Force Account $150,000.00

Estimated Cost: Increase ☑ **Decrease** ☐ **$150,000.00**

By reason of this order the time of completion will be adjusted as follows: 0 days

Submitted by		
Signature William Howe	Resident Engineer William Howe, Senior R.E.	Date 07-14-11
Approval Recommended by		
Signature Michael Frame	Area Construction Manager Deanna Vilcheck	Date 7-15-11
Engineer Approval by		
Signature Michael Frame	Area Construction Manager Deanna Vilcheck	Date 7-15-11

We the undersigned contractor, have given careful consideration to the change proposed and agree, if this proposal is approved, that we will provide all equipment, furnish the materials, except as may otherwise be noted above, and perform all services necessary for the work above specified, and will accept as full payment therefor the prices shown above.

NOTE: If you, the contractor, do not sign acceptance of this order, your attention is directed to the requirements of the specifications as to proceeding with the ordered work and filing a written protest within the time therein specified.

Contractor Acceptance by		
Signature	(Print name and title)	Date

STATE OF CALIFORNIA - DEPARTMENT OF TRANSPORTATION

CONTRACT CHANGE ORDER MEMORANDUM

TO: Deanna Vilcheck, ACM / DV

FROM: William Howe, Senior R.E.

FILE: E.A. 04 - 0120S4
CO-RTE-PM SF-80-12.7/13.2
FED. NO. NO FED AID

CCO#: 54 SUPPLEMENT#: 1 Category Code: CXXX

CONTINGENCY BALANCE (incl. this change) $68,431,284.19

COST: $150,000.00 INCREASE ☑ DECREASE ☐

HEADQUARTERS APPROVAL REQUIRED? ☑ YES ☐ NO

SUPPLEMENTAL FUNDS PROVIDED: $0.00

IS THIS REQUEST IN ACCORDANCE WITH ENVIRONMENTAL DOCUMENTS? ☑ YES ☐ NO

CCO DESCRIPTION:
Preservation of Historical Artifacts

PROJECT DESCRIPTION:
YBITS-1 (Yerba Buena Island Transition Structures)

Original Contract Time:	Time Adj. This Change:	Previously Approved CCO Time Adjustments:	Percentage Time Adjusted: (including this change)	Total # of Unreconciled Deferred Time CCO(s): (including this change)
1390 Day(s)	0 Day(s)	0 Day(s)	0 %	9

THIS CHANGE ORDER PROVIDES FOR:

Additional funds to Salvage historical artifacts pertaining to the existing San Francisco Oakland Bay Bridge as determined by the Engineer.

This project, the Yerba Buena Island Transition Structure (YBITS), provides for the construction of two bridges which will connect eastbound and westbound traffic on the new east span of the San Francisco Oakland Bay Bridge (SFOBB) to the existing Yerba Buena Island (YBI) tunnel. The structures are comprised of concrete box girder bridges each approximately 26 meters wide, 40 meters high and 450 meters in length.

Once traffic is placed on the new east span, the existing span constructed in the 1930's, will be dismantled. Construction Field Facilities has requested that numerous items related to the existing structure be salvaged through this contract for future display in the planned SFOBB museum. This change order provides for salvaging of these items as requested.

This change order was concurred by the Project's Management Team at their October 7, 2010 meeting.

The original Change Order 54 S0 provided $150,000 to Salvage historical artifacts pertaining to the Bridge. The scope and time of work to be performed has considerably increased from the original change order. This change order provides additional funds based on a revised scope and time of work to be done.

Compensation for this work shall be paid as extra work at force account at an estimated cost of $150,000, which shall be financed from the contract's contingency balance. A cost analysis is on file.

No adjustment of contract time is warranted as this work will not affect the controlling operation.

Maintenance concurrence is not required as this change doesn't affect any permanent roadway features.

CONCURRED BY:

Construction Engineer:	William Howe	Date 07.14.11
Bridge Engineer:		Date
Project Engineer:	Bob Zandipour, Design	Date 07/15/11
Project Manager:	Ken Terpstra	Date 07/21/11
FHWA Rep.:		Date
Environmental:		Date
Other (specify):		Date
Other (specify):		Date
District Prior Approval By:		Date
HQ (Issue Approve) By:		Date
Resident Engineer's Signature:	William Howe	Date 07.14.11

ESTIMATE OF COST

	THIS REQUEST	TOTAL TO DATE
ITEMS	$0.00	$0.00
FORCE ACCOUNT	$150,000.00	$300,000.00
AGREED PRICE	$0.00	$0.00
ADJUSTMENT	$0.00	$0.00
TOTAL	$150,000.00	$300,000.00

FEDERAL PARTICIPATION

☐ PARTICIPATING ☐ PARTICIPATING IN PART ☑ NONE
☐ NON-PARTICIPATING (MAINTENANCE) ☐ NON-PARTICIPATING

FEDERAL SEGREGATION (if more than one Funding Source or P.I.P. type)
☐ CCO FUNDED PER CONTRACT ☐ CCO FUNDED AS FOLLOWS

FEDERAL FUNDING SOURCE	PERCENT

ADA Notice: For individuals with sensory disabilities, this document is available in alternate formats. For information call: (916) 654-6410 or TDD (916) 654-3880 or write Records and Forms Management, 1120 N Street, MS-89, Sacramento, CA 95814.

STATE OF CALIFORNIA - DEPARTMENT OF TRANSPORTATION

CONTRACT CHANGE ORDER

Change Requested by: Engineer

CCO 54	Suppl. No. 2	Contract No. 04 - 0120S4	Road SF-80-12.7/13.2	FED. AID LOC.: NO FED AID

To: **M C M CONSTRUCTION INC**

You are directed to make the following changes from the plans and specifications or do the following described work not included in the plans and specifications for this contract. ***NOTE: This change order is not effective until approved by the Engineer.***

Description of work to be done, estimate of quantities and prices to be paid. (Segregate between additional work at contract price, agreed price and force account.) Unless otherwise stated, rates for rental of equipment cover only such time as equipment is actually used and no allowance will be made for idle time. This last percentage shown is the net accumulated increase or decrease from the original quantity in the Engineer's Estimate.

Extra Work at Force Account:

Provide additional funds.

Estimate of Extra Work at Force Account = $150,000.00

Estimated Cost: Increase ☑ **Decrease** ☐ **$150,000.00**

By reason of this order the time of completion will be adjusted as follows: 0 days

Submitted by

Signature	Resident Engineer	Date
William Howe	William Howe, Senior R.E.	02.07.13

Approval Recommended by

Signature	Area Construction Manager	Date
Deanna Vilcheck	Deanna Vilcheck	2/7/13

Engineer Approval by

Signature	Area Construction Manager	Date
Deanna Vilcheck	Deanna Vilcheck	2/8/13

We the undersigned contractor, have given careful consideration to the change proposed and agree, if this proposal is approved, that we will provide all equipment, furnish the materials, except as may otherwise be noted above, and perform all services necessary for the work above specified, and will accept as full payment therefor the prices shown above.

NOTE: If you, the contractor, do not sign acceptance of this order, your attention is directed to the requirements of the specifications as to proceeding with the ordered work and filing a written protest within the time therein specified.

Contractor Acceptance by

Signature	(Print name and title)	Date
Not Required		

STATE OF CALIFORNIA - DEPARTMENT OF TRANSPORTATION

CONTRACT CHANGE ORDER MEMORANDUM

DATE: 1/24/2013 Page 1 of 1

TO: Deanna Vilcheck, ACM /	FILE: E.A. 04 - 0120S4
FROM: William Howe, Senior R.E.	CO-RTE-PM SF-80-12.7/13.2
	FED. NO. NO FED AID
CCO#: 54 SUPPLEMENT#: 2 Category Code: CXXX	CONTINGENCY BALANCE (incl. this change) $30,034,898.15
COST: $150,000.00 INCREASE ☑ DECREASE ☐	HEADQUARTERS APPROVAL REQUIRED? ☑ YES ☐ NO
SUPPLEMENTAL FUNDS PROVIDED: $0.00	IS THIS REQUEST IN ACCORDANCE WITH ENVIRONMENTAL DOCUMENTS? ☑ YES ☐ NO
CCO DESCRIPTION: additional funds	**PROJECT DESCRIPTION:** YBITS-1 (Yerba Buena Island Transition Structures)

Original Contract Time:	Time Adj. This Change:	Previously Approved CCO Time Adjustments:	Percentage Time Adjusted: (including this change)	Total # of Unreconciled Deferred Time CCO(s): (including this change)
1390 Day(s)	0 Day(s)	0 Day(s)	0 %	9

THIS CHANGE ORDER PROVIDES FOR:

Additional funds to salvage historical artifacts pertaining to the existing San Francisco Oakland Bay Bridge as determined by the Engineer.

This project, the Yerba Buena Island Transition Structure (YBITS), provides for the construction of two bridges, which will connect eastbound and westbound traffic on the new east span of the San Francisco Oakland Bay Bridge (SFOBB) to the existing Yerba Buena Island (YBI) tunnel. The structures are comprised of concrete box girder bridges each approximately 26 meters wide, 40 meters high and 450 meters in length.

Once traffic is placed on the new east span, the existing span constructed in the 1930's, will be dismantled. Construction Field Facilities has requested that numerous items related to the existing structure be salvaged through this contract for future display in the planned SFOBB museum. This change order provides for salvaging of these items as requested.

This change order was concurred by the Project's Management Team at their October 7, 2010, meeting.

Contract Change Order 54 S0 for $150,000.00 and Contract Change Order No. 54 S1 for $150,000.00 provided to salvage historical artifacts pertaining to the Bridge. The scope and time of work to be performed has considerably increased from the original change order. This change order provides additional funds based on a revised scope and time of work to be done.

Compensation for this work shall be paid as Extra Work at Force Account at an estimated cost of $150,000.00, which shall be financed from the contract's contingency balance. A cost analysis is on file.

No adjustment of contract time is warranted as this work will not affect the controlling operation.

Maintenance concurrence is not required as this change doesn't affect any permanent roadway features.

CONCURRED BY:		
Construction Engineer:	William Howe	Date 02.07.13
Bridge Engineer:	Mehran Ardakanian	Date
Project Engineer:	Bob Zandipour / Design	Date 2-7-13
Project Manager:	Ken Terpstra	Date 2/8/13
FHWA Rep.:		Date
Environmental:		Date
Other (specify):		Date
Other (specify):		Date
District Prior Approval By:		Date
HQ (Issue Approve) By:	Larry Salhaney	Date 2-8-13
Resident Engineer's Signature: William Howe		Date 02.07.13

ESTIMATE OF COST

	THIS REQUEST	TOTAL TO DATE
ITEMS	$0.00	$0.00
FORCE ACCOUNT	$150,000.00	$450,000.00
AGREED PRICE	$0.00	$0.00
ADJUSTMENT	$0.00	$0.00
TOTAL	$150,000.00	$450,000.00

FEDERAL PARTICIPATION

☐ PARTICIPATING ☐ PARTICIPATING IN PART ☑ NONE
☐ NON-PARTICIPATING (MAINTENANCE) ☐ NON-PARTICIPATING

FEDERAL SEGREGATION (if more than one Funding Source or P.I.P. type)
☐ CCO FUNDED PER CONTRACT ☐ CCO FUNDED AS FOLLOWS

FEDERAL FUNDING SOURCE	PERCENT

ADA Notice: For individuals with sensory disabilities, this document is available in alternate formats. For information call: (916) 654-6410 or TDD (916) 654-3880 or write Records and Forms Management, 1120 N Street, MS-89, Sacramento, CA 95814.

STATE OF CALIFORNIA - DEPARTMENT OF TRANSPORTATION

CONTRACT CHANGE ORDER

Change Requested by: Engineer

CCO: 55	Suppl. No. 0	Contract No. 04 - 0120S4	Road SF-80-12.7/13.2	FED. AID LOC.: NO FED AID

To: **M C M CONSTRUCTION INC**

You are directed to make the following changes from the plans and specifications or do the following described work not included in the plans and specifications for this contract. ***NOTE: This change order is not effective until approved by the Engineer.***

Description of work to be done, estimate of quantities and prices to be paid. (Segregate between additional work at contract price, agreed price and force account.) Unless otherwise stated, rates for rental of equipment cover only such time as equipment is actually used and no allowance will be made for idle time. This last percentage shown is the net accumulated increase or decrease from the original quantity in the Engineer's Estimate.

Extra Work at Force Account:

Establish parking access and emergency access as directed by the Engineer in the field. This work will include grading, placing aggregate base, drain rock, Asphalt Concrete , temporary drainage system and other items as directed by the Engineer.

Compensation shall be paid in accordance with Section 9-1.03 FORCE ACCOUNT PAYMENT of the Standard Specifications and Section 5-1.17 FORCE ACCOUNT PAYMENT of the Contract Special Provisions.

Estimated cost of Extra Work at Force Account $150,000.00

No adjustment of contract time is warranted, as this change will not affect the controlling operation.

Estimated Cost: Increase ☑ **Decrease** ☐ **$150,000.00**

By reason of this order the time of completion will be adjusted as follows: 0 days

Submitted by		
Signature Rajesh Oberoi	Resident Engineer Rajesh Oberoi, Senior R.E.	Date 10/28/10
Approval Recommended by		
Signature Deanna Vilcheck	Area Construction Manager Deanna Vilcheck	Date 10/28/10
Engineer Approval by		
Signature Deanna Vilcheck	Area Construction Manager Deanna Vilcheck	Date 11/10/10

We the undersigned contractor, have given careful consideration to the change proposed and agree, if this proposal is approved, that we will provide all equipment, furnish the materials, except as may otherwise be noted above, and perform all services necessary for the work above specified, and will accept as full payment therefor the prices shown above.

NOTE: If you, the contractor, do not sign acceptance of this order, your attention is directed to the requirements of the specifications as to proceeding with the ordered work and filing a written protest within the time therein specified.

Contractor Accepted by		
Signature	(Print name and title) EDMUNDO A. PUCHI, TREASURER	Date 11/9/10

STATE OF CALIFORNIA - DEPARTMENT OF TRANSPORTATION

CONTRACT CHANGE ORDER MEMORANDUM

DATE: 10/28/2010 Page 1 of 1

TO: Deanna Vilcheck, ACM / DV	FILE: E.A. 04 - 0120S4
	CO-RTE-PM SF-80-12.7/13.2
FROM: Rajesh Oberoi, Senior R.E. CJTX	FED. NO. NO FED AID
CCO#: 55 SUPPLEMENT#: 0 Category Code: ~~BZZZ~~	CONTINGENCY BALANCE (incl. this change) **$28,230,782.00**
COST: **$150,000.00** INCREASE ☑ DECREASE ☐	HEADQUARTERS APPROVAL REQUIRED? ☐ YES ☑ NO
SUPPLEMENTAL FUNDS PROVIDED: **$0.00**	IS THIS REQUEST IN ACCORDANCE WITH ENVIRONMENTAL DOCUMENTS? ☑ YES ☐ NO
CCO DESCRIPTION: Parking Access and Emergency Access	**PROJECT DESCRIPTION:** YBITS-1 (Yerba Buena Island Transition Structures)

Original Contract Time:	Time Adj. This Change:	Previously Approved CCO Time Adjustments:	Percentage Time Adjusted: (including this change)	Total # of Unreconciled Deferred Time CCO(s): (including this change)
1390 Day(s)	0 Day(s)	0 Day(s)	0 %	0

THIS CHANGE ORDER PROVIDES FOR:

Establishing parking access and emergency access as directed by engineer.

This contract calls for the construction of bridge structures that tie in the east span of the new San Francisco Oakland Bay Bridge (SFOBB) to Yerba Buena Island. As part of the work, the construction parking and storage areas for this project and other Caltrans projects (such as the Self Anchored Suspension bridge construction) are severely constricted due to the high concentration of construction activities in the limited space available on Yerba Buena Island.

In order to provide parking access and emergency access, the Department will request the contractor to grade out and rock additional parking areas, place AC pavement, install temporary drainage systems to drain water from the parking lots and do all other work associated with parking and emergency access areas as directed by the engineer.

Compensation for this work shall be paid as extra work at force account at an estimated cost of $150,000 which can be financed from the project's contingency fund. A cost analysis is on file.

No adjustment of contract time is warranted, as this change will not affect the controlling operation.

Maintenance concurrence is not required as this is an administrative change order and doesn't affect any permanent roadway features.

CONCURRED BY:		
Construction Engineer: Rajesh Oberoi RO	Date 10/26/10	
Bridge Engineer:	Date	
Project Engineer:	Date	
Project Manager:	Date	
FHWA Rep.:	Date	
Environmental:	Date	
Other (specify):	Date	
Other (specify):	Date	
District Prior Approval By:	Date	
HO (Issue Approve) By:	Date	
Resident Engineer's Signature: Rajesh Oberoi 10/26/10	Date	

ESTIMATE OF COST

	THIS REQUEST	TOTAL TO DATE
ITEMS	$0.00	$0.00
FORCE ACCOUNT	$150,000.00	$150,000.00
AGREED PRICE	$0.00	$0.00
ADJUSTMENT	$0.00	$0.00
TOTAL	$150,000.00	$150,000.00

FEDERAL PARTICIPATION

☐ PARTICIPATING ☐ PARTICIPATING IN PART ☑ NONE
☐ NON-PARTICIPATING (MAINTENANCE) ☐ NON-PARTICIPATING

FEDERAL SEGREGATION (if more than one Funding Source or P.I.P. type)
☑ CCO FUNDED PER CONTRACT ☐ CCO FUNDED AS FOLLOWS

FEDERAL FUNDING SOURCE	PERCENT

ADA Notice: For individuals with sensory disabilities, this document is available in alternate formats. For information call: (916) 654-6410 or TDD (916) 654-3880 or write Records and Forms Management, 1120 N Street, MS-89, Sacramento, CA 95814.

STATE OF CALIFORNIA - DEPARTMENT OF TRANSPORTATION

CONTRACT CHANGE ORDER

Change Requested by: Engineer

CCO 55	Suppl. No. 1	Contract No. 04 - 0120S4	Road SF-80-12.7/13.2	FED. AID LOC.: NO FED AID

To: **M C M CONSTRUCTION INC**

You are directed to make the following changes from the plans and specifications or do the following described work not included in the plans and specifications for this contract. ***NOTE: This change order is not effective until approved by the Engineer.***

Description of work to be done, estimate of quantities and prices to be paid. (Segregate between additional work at contract price, agreed price and force account.) Unless otherwise stated, rates for rental of equipment cover only such time as equipment is actually used and no allowance will be made for idle time. This last percentage shown is the net accumulated increase or decrease from the original quantity in the Engineer's Estimate.

Extra Work at Force Account:

Provide additional funds to perform extra work as specified in Contract Change Order No. 055-S0.

Estimated cost of Extra Work at Force Account $150,000.00

No adjustment of contract time is warranted, as this change will not affect the controlling operation.

Estimated Cost: Increase ☑ Decrease ☐ **$150,000.00**

By reason of this order the time of completion will be adjusted as follows: 0 days

Submitted by

Signature Rajesh Oberoi	Resident Engineer Rajesh Oberoi, Senior R.E.	Date 05/4/11

Approval Recommended by

Signature Deanna Vilcheck	Area Construction Manager Deanna Vilcheck	Date 5/4/11

Engineer Approval by

Signature Deanna Vilcheck	Area Construction Manager Deanna Vilcheck	Date 5/4/11

We the undersigned contractor, have given careful consideration to the change proposed and agree, if this proposal is approved, that we will provide all equipment, furnish the materials, except as may otherwise be noted above, and perform all services necessary for the work above specified, and will accept as full payment therefor the prices shown above.

NOTE: If you, the contractor, do not sign acceptance of this order, your attention is directed to the requirements of the specifications as to proceeding with the ordered work and filing a written protest within the time therein specified.

Contractor Acceptance by

Signature N/A	(Print name and title)	Date

STATE OF CALIFORNIA - DEPARTMENT OF TRANSPORTATION

CONTRACT CHANGE ORDER MEMORANDUM

DATE: 5/4/2011 Page 1 of 1

TO: Deanna Vilcheck, ACM / DV	FILE: E.A. 04 - 0120S4
FROM: Rajesh Oberoi, Senior R.E.	CO-RTE-PM SF-80-12.7/13.2
	FED. NO. NO FED AID
CCO#: 55 SUPPLEMENT#: 1 Category Code: CJTX	CONTINGENCY BALANCE (incl. this change) $83,369,978.50
COST: $150,000.00 INCREASE ☑ DECREASE ☐	HEADQUARTERS APPROVAL REQUIRED? ☑ YES ☐ NO
SUPPLEMENTAL FUNDS PROVIDED: $0.00	IS THIS REQUEST IN ACCORDANCE WITH ENVIRONMENTAL DOCUMENTS? ☑ YES ☐ NO
CCO DESCRIPTION: Parking Access and Emergency Access	**PROJECT DESCRIPTION:** YBITS-1 (Yerba Buena Island Transition Structures)

Original Contract Time:	Time Adj. This Change:	Previously Approved CCO Time Adjustments:	Percentage Time Adjusted: (including this change)	Total # of Unreconciled Deferred Time CCO(s): (including this change)
1390 Day(s)	0 Day(s)	0 Day(s)	0 %	8

THIS CHANGE ORDER PROVIDES FOR:

Additional funding for establishing parking access and emergency access as directed by engineer.

This project, the Yerba Buena Island Transition Structure (YBITS), provides for the construction of two bridges which will connect eastbound and westbound traffic on the new east span of the San Francisco Oakland Bay Bridge (SFOBB) to the existing Yerba Buena Island tunnel. The structures are comprised of concrete box girder bridges each approximately 40 meters high and 450 meters in length.

The original Change Order 55 provides for parking access and emergency access, the Department will request the contractor to grade out and rock additional parking areas, place AC pavement, install temporary drainage systems to drain water from the parking lots and do all other work associated with parking and emergency access areas as directed by the engineer.

Compensation for this work shall be paid as extra work at force account at an estimated cost of $150,000, which shall be financed from the contract's contingency balance. A cost analysis is on file.

No adjustment of contract time is warranted, as this change does not affect the controlling operation.

Maintenance concurrence is not required as this is an administrative change order and doesn't affect any permanent roadway features.

CONCURRED BY:		
Construction Engineer:	Rajesh Oberoi RO	Date 5/4/11
Bridge Engineer:	Mehran Ardakanian MA	Date 5/5/11
Project Engineer:		Date
Project Manager:		Date
FHWA Rep.:		Date
Environmental:		Date
Other (specify):		Date
Other (specify):		Date
District Prior Approval By:		Date
HQ (Issue Approve) By:	LARRY SALHANET	Date 05/5/11
Resident Engineer's Signature:	Rajesh Oberoi	Date 05/4/11

ESTIMATE OF COST	THIS REQUEST	TOTAL TO DATE
ITEMS	$0.00	$0.00
FORCE ACCOUNT	$150,000.00	$300,000.00
AGREED PRICE	$0.00	$0.00
ADJUSTMENT	$0.00	$0.00
TOTAL	$150,000.00	$300,000.00

FEDERAL PARTICIPATION

☐ PARTICIPATING ☐ PARTICIPATING IN PART ☑ NONE
☐ NON-PARTICIPATING (MAINTENANCE) ☐ NON-PARTICIPATING

FEDERAL SEGREGATION (if more than one Funding Source or P.I.P. type)
☑ CCO FUNDED PER CONTRACT ☐ CCO FUNDED AS FOLLOWS

FEDERAL FUNDING SOURCE	PERCENT

ADA Notice: For individuals with sensory disabilities, this document is available in alternate formats. For information call: (916) 654-6410 or TDD (916) 654-3880 or write Records and Forms Management, 1120 N Street, MS-89, Sacramento, CA 95814.

STATE OF CALIFORNIA - DEPARTMENT OF TRANSPORTATION

CONTRACT CHANGE ORDER

Change Requested by: Engineer

CCO: 56	Suppl. No. 0	Contract No. 04 - 0120S4	Road SF-80-12.7/13.2	FED. AID LOC.: NO FED AID

To: **M C M CONSTRUCTION INC**

You are directed to make the following changes from the plans and specifications or do the following described work not included in the plans and specifications for this contract. ***NOTE: This change order is not effective until approved by the Engineer.***

Description of work to be done, estimate of quantities and prices to be paid. (Segregate between additional work at contract price, agreed price and force account.) Unless otherwise stated, rates for rental of equipment cover only such time as equipment is actually used and no allowance will be made for idle time. This last percentage shown is the net accumulated increase or decrease from the original quantity in the Engineer's Estimate.

Extra Work at Lump Sum:

Furnish and install an underground conduit and communication cable from the Department's Bay View Trailer located at 355 Burma Road to service the Contractor's working drawing campus.

For this work, the Contractor shall be compensated an agreed lump sum of $26,360.00 which constitutes full and final compensation, including all markups, for all additional costs incurred.

Estimated cost of Extra Work at Lump Sum $26,360.00

No adjustment of contract time is warranted as the change will not affect the controlling operation.

Estimated Cost: Increase ☑ **Decrease** ☐ **$26,360.00**

By reason of this order the time of completion will be adjusted as follows: 0 days

Submitted by		
Signature Rajesh Oberoi	**Resident Engineer** Rajesh Oberoi, Senior R.E.	**Date** 10/28/10
Approval Recommended by		
Signature Deepna Vlechech	**Resident Engineer** Rajesh Oberoi	**Date** 10/28/10
Engineer Approval by		
Signature Rajesh Oberoi	**Resident Engineer** Rajesh Oberoi	**Date** 11/10/10

We the undersigned contractor, have given careful consideration to the change proposed and agree, if this proposal is approved, that we will provide all equipment, furnish the materials, except as may otherwise be noted above, and perform all services necessary for the work above specified, and will accept as full payment therefor the prices shown above.

NOTE: If you, the contractor, do not sign acceptance of this order, your attention is directed to the requirements of the specifications as to proceeding with the ordered work and filing a written protest within the time therein specified.

Contractor Accepted by		
Signature	**(Print name and title)** EDMUNDO A. PUCHI, TREASURER	**Date** 11/9/10

STATE OF CALIFORNIA - DEPARTMENT OF TRANSPORTATION

CONTRACT CHANGE ORDER MEMORANDUM

DATE: 10/27/2010 Page 1 of 1

TO: Deanna Vilcheck, ACM / DV	FILE: E.A. 04 - 0120S4
FROM: Rajesh Oberoi, Senior R.E.	CO-RTE-PM SF-80-12.7/13.2
	FED. NO. NO FED AID
CCO#: 56 SUPPLEMENT#: 0 Category Code: ~~B777~~ CBTD	CONTINGENCY BALANCE (incl. this change) $28,380,782.00
COST: $26,360.00 INCREASE ☑ DECREASE ☐	HEADQUARTERS APPROVAL REQUIRED? ☐ YES ☑ NO
SUPPLEMENTAL FUNDS PROVIDED: $0.00	IS THIS REQUEST IN ACCORDANCE WITH ENVIRONMENTAL DOCUMENTS? ☑ YES ☐ NO
CCO DESCRIPTION: Working Drawing Campus communication tre	**PROJECT DESCRIPTION:** YBITS-1 (Yerba Buena Island Transition Structures)

Original Contract Time:	Time Adj. This Change:	Previously Approved CCO Time Adjustments:	Percentage Time Adjusted: (including this change)	Total # of Unreconciled Deferred Time CCO(s): (including this change)
1390 Day(s)	0 Day(s)	0 Day(s)	0 %	0

THIS CHANGE ORDER PROVIDES FOR:

The installation of an underground communication line to service the contractor's working drawing campus.

This project, the Yerba Buena Island Transition Structure (YBITS), provides for the construction of two bridges which will connect eastbound and westbound traffic on the new east span of the San Francisco Oakland Bay Bridge (SFOBB) to the existing Yerba Buena Island (YBI) tunnel. The structures are comprised of concrete box girder bridges each approximately 26 meters wide, 40 meters high and 450 meters in length.

As part of this work, the contract special provisions provides for the contractor to establish a working drawing campus to facilitate the preparation, submittal review and the processing of working drawings. The contract requires the contractor to provide local phone service and internet access to the campus from communication lines provided by the Department to the exterior of the facility.

Due to time constraints and in order to mitigation potential Department delays, the contractor was ordered to install the communication line to the facility with the use of their own forces. This change order provides for this work which includes excavating an approximately 400 foot long trench through paved parking lots and roadway, furnishing and installing conduit and communication line and backfilling and repairing the trench line.

Compensation for these costs shall be paid as extra work at an agreed lump sum of $25,560.00 which shall be financed from the contract's contingency funds. A cost analysis is on file.

No adjustment of contract time is warranted as the change will not affect the controlling operation.

Maintenance concurrence is not required as the installed trench is outside of the permanent right of way and shall not affect any permanent roadway features.

CONCURRED BY:		
Construction Engineer: Rajesh Oberoi	Date 10/28/10	
Bridge Engineer:	Date	
Project Engineer:	Date	
Project Manager:	Date	
FHWA Rep.:	Date	
Environmental:	Date	
Other (specify):	Date	
Other (specify):	Date	
District Prior Approval By:	Date	
HQ (Issue Approve) By:	Date	
Resident Engineer's Signature: Rajesh Oberoi 10/28/10	Date	

ESTIMATE OF COST

	THIS REQUEST	TOTAL TO DATE
ITEMS	$0.00	$0.00
FORCE ACCOUNT	$0.00	$0.00
AGREED PRICE	$26,360.00	$26,360.00
ADJUSTMENT	$0.00	$0.00
TOTAL	$26,360.00	$26,360.00

FEDERAL PARTICIPATION

☐ PARTICIPATING ☐ PARTICIPATING IN PART ☑ NONE
☐ NON-PARTICIPATING (MAINTENANCE) ☐ NON-PARTICIPATING

FEDERAL SEGREGATION (if more than one Funding Source or P.I.P. type)
☑ CCO FUNDED PER CONTRACT ☐ CCO FUNDED AS FOLLOWS

FEDERAL FUNDING SOURCE	PERCENT

ADA Notice: For individuals with sensory disabilities, this document is available in alternate formats. For information call: (916) 654-6410 or TDD (916) 654-3880 or write Records and Forms Management, 1120 N Street, MS-89, Sacramento, CA 95814.

STATE OF CALIFORNIA - DEPARTMENT OF TRANSPORTATION

CONTRACT CHANGE ORDER

Change Requested by: Engineer

CCO: 57	Suppl. No. 0	Contract No. 04 - 0120S4	Road SF-80-12.7/13.2	FED. AID LOC.: NO FED AID

To: **M C M CONSTRUCTION INC**

You are directed to make the following changes from the plans and specifications or do the following described work not included in the plans and specifications for this contract. ***NOTE: This change order is not effective until approved by the Engineer.***

Description of work to be done, estimate of quantities and prices to be paid. (Segregate between additional work at contract price, agreed price and force account.) Unless otherwise stated, rates for rental of equipment cover only such time as equipment is actually used and no allowance will be made for idle time. This last percentage shown is the net accumulated increase or decrease from the original quantity in the Engineer's Estimate.

In addition to the Safety requirements of the contract, the Contractor shall ensure that employees of the Contractor and subcontractors of all tiers attend a new project orientation and that new hires and personnel transferred to the project receive this orientation prior to starting work. This orientation shall be designed and conducted by the Contractor to communicate all project-specific safety policies, procedures, and expectations of the Department in regard to the construction of the project. The orientation shall be documented and a serialized hardhat sticker or identification badge issued to identify that personnel have received the orientation.

Adjustment of Compensation at Lump Sum:

Compensate the Contractor for all additional costs associated with providing the new project orientation required under this change order.

For these costs, the Contractor shall be compensated an agreed lump sum of $135,000.00 which constitutes full and final compensation, including all markups, for all additional costs incurred.

Cost of Adjustment of Compensation at Lump Sum $135,000.00

MB

Estimated Cost: Increase ☑ Decrease ☐ **$135,000.00**

By reason of this order the time of completion will be adjusted as follows: 0 days

Submitted by

Signature	Resident Engineer	Date
	Rajesh Oberoi, Senior R.E.	12/06/10

Approval Recommended by

Signature	Area Construction Manager	Date
Deanna Vilcheck	Deanna Vilcheck	12/6/10

Engineer Approval by

Signature	Area Construction Manager	Date
Michael Fromm	Deanna Vilcheck	12/22/10

We the undersigned contractor, have given careful consideration to the change proposed and agree, if this proposal is approved, that we will provide all equipment, furnish the materials, except as may otherwise be noted above, and perform all services necessary for the work above specified, and will accept as full payment therefor the prices shown above.

NOTE: If you, the contractor, do not sign acceptance of this order, your attention is directed to the requirements of the specifications as to proceeding with the ordered work and filing a written protest within the time therein specified.

Contractor Acceptance by

Signature	(Print name and title)	Date
	Edmundo Mi Rubio Treasurer	12-16-2010

STATE OF CALIFORNIA - DEPARTMENT OF TRANSPORTATION

CONTRACT CHANGE ORDER MEMORANDUM

TO: Deanna Vilcheck, ACM /	FILE: E.A. 04 - 0120S4
FROM: Rajesh Oberoi, Senior R.E.	CO-RTE-PM SF-80-12.7/13.2
	FED. NO. NO FED AID
CCO#: 57 SUPPLEMENT#: 0 Category Code: CXSA	CONTINGENCY BALANCE (incl. this change) $24,731,515.00
COST: $135,000.00 INCREASE ☑ DECREASE ☐	HEADQUARTERS APPROVAL REQUIRED? ☒ YES ☑ NO
SUPPLEMENTAL FUNDS PROVIDED: $0.00	IS THIS REQUEST IN ACCORDANCE WITH ENVIRONMENTAL DOCUMENTS? ☑ YES ☐ NO
CCO DESCRIPTION: OCIP Project Orientation Training	**PROJECT DESCRIPTION:** YBITS-1 (Yerba Buena Island Transition Structures)

Original Contract Time:	Time Adj. This Change:	Previously Approved CCO Time Adjustments:	Percentage Time Adjusted: (including this change)	Total # of Unreconciled Deferred Time CCO(s): (including this change)
1390 Day(s)	0 Day(s)	0 Day(s)	0 %	3

THIS CHANGE ORDER PROVIDES FOR:

Project orientation training for all contractor employees on this project.

This project, the Yerba Buena Island Transition Structure (YBITS), provides for the construction of two bridges which will connect eastbound and westbound traffic on the new east span of the San Francisco Oakland Bay Bridge (SFOBB) to the existing Yerba Buena Island (YBI) tunnel. The structures are comprised of concrete box girder bridges each approximately 26 meters wide, 40 meters high and 450 meters in length.

Section 5-11.33 "OWNER CONTROLLED INSURANCE PROGRAM (OCIP)" of the contract special provisions implements an OCIP program on this contract which entails the Department providing a series of insurance policies through one or more insurance companies for the contractor and eligible subcontractors of all tiers. The coverage includes workers' compensation, general liability and excess liability.

The contract special provisions omitted a requirement of the OCIP that the contractor provide new project orientation training to communicate all project-specific safety policies, procedures, and expectations of the Department in regard to the construction of the project. This change order provides for this safety requirement. The work will entail providing the training class to all tiers of the contractor and subcontractor employees who work on the project.

This change order has been requested by Victor Salazar of Headquarters Construction.

It is estimated that this will include approximately 600 to 1,000 employees from project management to trade labor over the 4 year duration of the project. Compensation will be provided to pay for the labor costs incurred for the estimated hours the employees will be paid while receiving this training.

Compensation for the additional cost shall be paid as an adjustment of compensation at an agreed lump sum of $135,000.00 which shall be financed from the contract's contingency funds. A cost analysis is on file.

No adjustment of contract time is warranted as the change will not affect the controlling operation.

Maintenance concurrence is not required as this is an administrative change and shall not affect any permanent roadway features.

ADA Notice: For individuals with sensory disabilities, this document is available in alternate formats. For information call: (916) 654-6410 or TDD (916) 654-3880 or write Records and Forms Management, 1120 N Street, MS-89, Sacramento, CA 95814.

CONCURRED BY:		
Construction Engineer:	Rajesh Oberoi RO	Date 11/22/10
Bridge Engineer:		Date
Project Engineer:		Date
Project Manager:		Date
FHWA Rep.:		Date
Environmental:		Date
Other (specify):	Victor Salazar, Office of Risk Mgmt	Date 01/03/11
Other (specify):		Date
District Prior Approval By:		Date
HQ (Issue Approve) By:		Date
Resident Engineer's Signature:	Rajesh Oberoi	Date 11/22/10

ESTIMATE OF COST

	THIS REQUEST	TOTAL TO DATE
ITEMS	$0.00	$0.00
FORCE ACCOUNT	$0.00	$0.00
AGREED PRICE	$0.00	$0.00
ADJUSTMENT	$135,000.00	$135,000.00
TOTAL	$135,000.00	$135,000.00

FEDERAL PARTICIPATION

☐ PARTICIPATING ☐ PARTICIPATING IN PART ☑ NONE
☐ NON-PARTICIPATING (MAINTENANCE) ☐ NON-PARTICIPATING

FEDERAL SEGREGATION (if more than one Funding Source or P.I.P. type)
☑ CCO FUNDED PER CONTRACT ☐ CCO FUNDED AS FOLLOWS

FEDERAL FUNDING SOURCE	PERCENT

ADA Notice: For individuals with sensory disabilities, this document is available in alternate formats. For information call: (916) 654-6410 or TDD (916) 654-3880 or write Records and Forms Management, 1120 N Street, MS-89, Sacramento, CA 95814.

STATE OF CALIFORNIA - DEPARTMENT OF TRANSPORTATION

CONTRACT CHANGE ORDER

Change Requested by: Engineer

CCO: 58	Suppl. No. 0	Contract No. 04 - 0120S4	Road SF-80-12.7/13.2	FED. AID LOC.: NO FED AID

To: M C M CONSTRUCTION INC

You are directed to make the following changes from the plans and specifications or do the following described work not included in the plans and specifications for this contract. ***NOTE: This change order is not effective until approved by the Engineer.***

Description of work to be done, estimate of quantities and prices to be paid. (Segregate between additional work at contract price, agreed price and force account.) Unless otherwise stated, rates for rental of equipment cover only such time as equipment is actually used and no allowance will be made for idle time. This last percentage shown is the net accumulated increase or decrease from the original quantity in the Engineer's Estimate.

The Contractor and its subcontractors of all tiers shall adhere to a 100 percent drug and alcohol-free program. At a minimum pre-employment, probable cause, and post-accident testing is required.

Pre-employment testing requires all employees being tested prior to performing work on the project. Any test performed within one year from the date the employee starts work on the project shall qualify as pre-employment testing.

Third party drug testing is not required under this change order.

Adjustment of Compensation at Lump Sum:

Compensate the Contractor for all additional costs associated with adhering to the 100 percent drug and alcohol-free program required under this change order. For these costs, the Contractor shall be compensated an agreed lump sum of $25,310.00 which constitutes full and final compensation, including all markups, for all additional costs incurred.

Estimated cost of Adjustment of Compensation at Lump Sum $25,310.00

No adjustment of contract time is warranted as the change will not affect the controlling operation.

Estimated Cost: Increase ☑ Decrease ☐ **$25,310.00**

By reason of this order the time of completion will be adjusted as follows: 0 days

Submitted by:		
Signature: Deanna Villchek	Resident Engineer for Rajesh Oberoi, Senior R.E.	Date 1/24/11
Approval Recommended by:		
Signature Rajesh Oberoi	Resident Engineer Rajesh Oberoi	Date 2/8/11
Engineer Approval by:		
Signature Rajesh Oberoi	Resident Engineer Rajesh Oberoi	Date 2/8/11

We the undersigned contractor, have given careful consideration to the change proposed and agree, if this proposal is approved, that we will provide all equipment, furnish the materials, except as may otherwise be noted above, and perform all services necessary for the work above specified, and will accept as full payment therefor the prices shown above.

NOTE: If you, the contractor, do not sign acceptance of this order, your attention is directed to the requirements of the specifications as to proceeding with the ordered work and filing a written protest within the time therein specified.

Contractor Acceptance by:		
Signature	(Print name and title) EDMUNDO A. PUCHI, TREASURER	Date 2/1/11

STATE OF CALIFORNIA - DEPARTMENT OF TRANSPORTATION

CONTRACT CHANGE ORDER MEMORANDUM

TO: Deanna Vilcheck, ACM /	FILE: E.A. 04 - 0120S4
FROM: Rajesh Oberoi, Senior R.E.	CO-RTE-PM SF-80-12.7/13.2
	FED. NO. NO FED AID
CCO#: 58 SUPPLEMENT#: 0 Category Code: CXSA	CONTINGENCY BALANCE (incl. this change) $22,113,836.00
COST: $25,310.00 INCREASE ☑ DECREASE ☐	HEADQUARTERS APPROVAL REQUIRED? ☐ YES ☑ NO
SUPPLEMENTAL FUNDS PROVIDED: $0.00	IS THIS REQUEST IN ACCORDANCE WITH ENVIRONMENTAL DOCUMENTS? ☑ YES ☐ NO
CCO DESCRIPTION: OCIP drug testing requirement	**PROJECT DESCRIPTION:** YBITS-1 (Yerba Buena Island Transition Structures)

Original Contract Time:	Time Adj. This Change:	Previously Approved CCO Time Adjustments:	Percentage Time Adjusted: (including this change)	Total # of Unreconciled Deferred Time CCO(s): (including this change)
1390 Day(s)	0 Day(s)	0 Day(s)	0 %	0

THIS CHANGE ORDER PROVIDES FOR:

The implementation a 100 percent drug and alcohol-free program for all contractor employees on this project.

This project, the Yerba Buena Island Transition Structure (YBITS), provides for the construction of two bridges which will connect eastbound and westbound traffic on the new east span of the San Francisco Oakland Bay Bridge (SFOBB) to the existing Yerba Buena Island (YBI) tunnel. The structures are comprised of concrete box girder bridges each approximately 26 meters wide, 40 meters high and 450 meters in length.

Section 5-11.33 "OWNER CONTROLLED INSURANCE PROGRAM (OCIP)" of the contract special provisions implements an OCIP program on this contract which entails the Department providing a series of insurance policies through one or more insurance companies for the contractor and eligible subcontractors of all tiers. The coverage includes workers' compensation, general liability and excess liability.

The contract special provisions omitted a requirement of the OCIP that the contractor provide adhere to a 100 percent drug and alcohol-free program. This change order provides for this program requirement. The work will entail providing a minimum pre-employment, probable cause, and post-accident testing drug testing program to all tiers of the contractor and subcontractor employees who work on the project.

This change order has been requested by Victor Salazar, Chief , Office of Risk Management.

It is estimated that the project will include approximately 600 to 1,000 employees from project management to trade labor over the 4 year duration of the project. Compensation will be provided to pay for the costs incurred in performing the required drug testing. As the prime contractor and some subcontractors already adhere to a testing program, compensation includes the estimated costs for a fraction of the estimated 600 to 1,000 project employees.

Compensation for the additional cost shall be paid as an adjustment of compensation at an agreed lump sum of $25,310.00 which shall be financed from the contract's contingency funds. A cost analysis is on file.

No adjustment of contract time is warranted as the change will not affect the controlling operation.

Maintenance concurrence is not required as this is an administrative change and shall not affect any permanent roadway features.

ADA Notice: For individuals with sensory disabilities, this document is available in alternate formats. For information call: (916) 654-6410 or TDD (916) 654-3880 or write Records and Forms Management, 1120 N Street, MS-89, Sacramento, CA 95814.

CONCURRED BY:		
Construction Engineer:	Rajesh Oberoi	Date 1/28/11
Bridge Engineer:		Date
Project Engineer:	BOB ZANDIPOUR	Date 02/10/11
Project Manager:	KEN TERPSTRA	Date 02/14/11
FHWA Rep.:		Date
Environmental:		Date
Other (specify):	Victor Salazar, Office of Risk Mgmt	Date 01/27/11
Other (specify):		Date
District Prior Approval By:		Date
HQ (Issue Approve) By:		Date
Resident Engineer's Signature:	Rajesh Oberoi	Date 1/28/11

ESTIMATE OF COST

	THIS REQUEST	TOTAL TO DATE
ITEMS	$0.00	$0.00
FORCE ACCOUNT	$0.00	$0.00
AGREED PRICE	$0.00	$0.00
ADJUSTMENT	$25,310.00	$25,310.00
TOTAL	$25,310.00	$25,310.00

FEDERAL PARTICIPATION

☑ PARTICIPATING ☐ PARTICIPATING IN PART ☑ NONE
☐ NON-PARTICIPATING (MAINTENANCE) ☐ NON-PARTICIPATING

FEDERAL SEGREGATION (if more than one Funding Source or P.I.P. type)
☑ CCO FUNDED PER CONTRACT ☐ CCO FUNDED AS FOLLOWS

FEDERAL FUNDING SOURCE	PERCENT

ADA Notice: For individuals with sensory disabilities, this document is available in alternate formats. For information call: (916) 654-6410 or TDD (916) 654-3880 or write Records and Forms Management, 1120 N Street, MS-89, Sacramento, CA 95814.

STATE OF CALIFORNIA - DEPARTMENT OF TRANSPORTATION

CONTRACT CHANGE ORDER

Change Requested by: Engineer

CCO: 59	Suppl. No. 0	Contract No. 04 - 0120S4	Road SF-80-12.7/13.2	FED. AID LOC.: NO FED AID

To: **M C M CONSTRUCTION INC**

You are directed to make the following changes from the plans and specifications or do the following described work not included in the plans and specifications for this contract. ***NOTE: This change order is not effective until approved by the Engineer.***

Description of work to be done, estimate of quantities and prices to be paid. (Segregate between additional work at contract price, agreed price and force account.) Unless otherwise stated, rates for rental of equipment cover only such time as equipment is actually used and no allowance will be made for idle time. This last percentage shown is the net accumulated increase or decrease from the original quantity in the Engineer's Estimate.

Extra Work at Force Account:

Maintain traffic delineation, advisory and radar signing, overhead signing, flashing beacons, lighting, chain link railing, rumble strips and vehicle detection system and perform other miscellaneous maintenance, including all traffic control required for this work, on the existing San Francisco Oakland Bay Bridge mainline detour as determined by the Engineer.

Estimated cost of Extra Work at Force Account $600,000.00

No adjustment of contract time is warranted as the work will not affect the controlling operation.

Estimated Cost: Increase ☑ Decrease ☐ **$600,000.00**

By reason of this order the time of completion will be adjusted as follows: 0 days

Submitted by

Signature Rajesh Oberoi	Resident Engineer Rajesh Oberoi, Senior R.E.	Date 10/29/10

Approval Recommended by

Signature Michael Forner	Area Construction Manager Deanna Vilcheck	Date 10/29/10

Engineer Approval by

Signature Michael Forner	Principal T.E. Mike Forner	Date 11/10/10

We the undersigned contractor, have given careful consideration to the change proposed and agree, if this proposal is approved, that we will provide all equipment, furnish the materials, except as may otherwise be noted above, and perform all services necessary for the work above specified, and will accept as full payment therefor the prices shown above.

NOTE: If you, the contractor, do not sign acceptance of this order, your attention is directed to the requirements of the specifications as to proceeding with the ordered work and filing a written protest within the time therein specified.

Contractor Acceptance by

Signature	(Print name and title) EDMUNDO A. PUCHI, TREASURER	Date 11/9/10

STATE OF CALIFORNIA - DEPARTMENT OF TRANSPORTATION

CONTRACT CHANGE ORDER MEMORANDUM

DATE: 11/12/2010 Page 1 of 1

TO: Deanna Vilcheck, ACM /	FILE: E.A. 04 - 0120S4
	CO-RTE-PM SF-80-12.7/13.2
FROM: Rajesh Oberoi, Senior R.E. CKTJ	FED. NO. NO FED AID
CCO#: 59 SUPPLEMENT#: 0 Category Code: ~~BZZZ~~	CONTINGENCY BALANCE (incl. this change) $27,452,782.00
COST: $600,000.00 INCREASE ☑ DECREASE ☐	HEADQUARTERS APPROVAL REQUIRED? ☑ YES ☐ NO
SUPPLEMENTAL FUNDS PROVIDED: $0.00	IS THIS REQUEST IN ACCORDANCE WITH ENVIRONMENTAL DOCUMENTS? ☑ YES ☐ NO
CCO DESCRIPTION: Maintenance Mainline Detour	**PROJECT DESCRIPTION:** YBITS-1 (Yerba Buena Island Transition Structures)

Original Contract Time:	Time Adj. This Change:	Previously Approved CCO Time Adjustments:	Percentage Time Adjusted: (including this change)	Total # of Unreconciled Deferred Time CCO(s): (including this change)
1390 Day(s)	0 Day(s)	0 Day(s)	0 %	0

THIS CHANGE ORDER PROVIDES FOR:

Providing for the maintenance of numerous traffic enhancements on the San Francisco Oakland Bay Bridge mainline detour.

This project, the Yerba Buena Island Transition Structure (YBITS), provides for the construction of two bridges which will connect eastbound and westbound traffic on the new east span of the San Francisco Oakland Bay Bridge (SFOBB) to the existing Yerba Buena Island (YBI) tunnel. In order to allow for the construction of this new structure, the preceding contract, the Yerba Buena Island Detour (YBID), constructed a 650 meter long detour of the SFOBB mainline.

The detour from this previous contract opened to traffic on September 8, 2009 and Project Development issued numerous changes through the YBID contract to enhance the safety of the detour to public traffic. These changes included additional traffic delineation, advisory and radar signing, overhead signing, flashing beacons, lighting, chain link railing, rumble strips and a vehicle detection system. Approximately $2,500,000 was expended in providing for and maintaining these enhancements on the YBID contract. That contract has now been accepted.

This change order provides for the continued maintenance of these traffic enhancements through this YBITS contract. The detour is located directly adjacent to the YBITS work and falls within the project limits. Maintenance will be provided over the 3 ½ year duration of this contract after which time traffic will be placed on the new east span and the detour will be abandoned.

The cost associated with this work shall be compensated as extra work at force account at an estimated cost of $600,000.00 which shall be financed from the contract's contingency funds.

No adjustment of contract time is warranted as the work will not affect the controlling operation.

Maintenance concurrence is not required as the maintenance of the existing detour shall be provided under this contract and doesn't affect any permanent roadway features.

CONCURRED BY:

Construction Engineer:	Rajesh Oberoi RO.	Date 11/11/10
Bridge Engineer:		Date
Project Engineer:		Date
Project Manager:		Date
FHWA Rep.:		Date
Environmental:		Date
Other (specify):		Date
Other (specify):		Date
District Prior Approval By:		Date
HQ (Issue Approve) By:	Larry Salhaney	Date 11/1/10
Resident Engineer's Signature:	Rajesh Oberoi	Date 11/11/10

ESTIMATE OF COST

	THIS REQUEST	TOTAL TO DATE
ITEMS	$0.00	$0.00
FORCE ACCOUNT	$600,000.00	$600,000.00
AGREED PRICE	$0.00	$0.00
ADJUSTMENT	$0.00	$0.00
TOTAL	$600,000.00	$600,000.00

FEDERAL PARTICIPATION

☐ PARTICIPATING ☐ PARTICIPATING IN PART ☑ NONE
☐ NON-PARTICIPATING (MAINTENANCE) ☐ NON-PARTICIPATING

FEDERAL SEGREGATION (if more than one Funding Source or P.I.P. type)
☑ CCO FUNDED PER CONTRACT ☐ CCO FUNDED AS FOLLOWS

FEDERAL FUNDING SOURCE	PERCENT

ADA Notice: For individuals with sensory disabilities, this document is available in alternate formats. For information call: (916) 654-6410 or TDD (916) 654-3880 or write Records and Forms Management, 1120 N Street, MS-89, Sacramento, CA 95814.

STATE OF CALIFORNIA - DEPARTMENT OF TRANSPORTATION

CONTRACT CHANGE ORDER

Change Requested by: Engineer

CCO: 60	Suppl. No. 0	Contract No. 04 - 0120S4	Road SF-80-12.7/13.2	FED. AID LOC.: NO FED AID

To: **M C M CONSTRUCTION INC**

You are directed to make the following changes from the plans and specifications or do the following described work not included in the plans and specifications for this contract. ***NOTE: This change order is not effective until approved by the Engineer.***

Description of work to be done, estimate of quantities and prices to be paid. (Segregate between additional work at contract price, agreed price and force account.) Unless otherwise stated, rates for rental of equipment cover only such time as equipment is actually used and no allowance will be made for idle time. This last percentage shown is the net accumulated increase or decrease from the original quantity in the Engineer's Estimate.

Extra Work at Lump Sum:

Construct five 4-ft by 4-ft by 4ft concrete mock-up sections depicting various locations of construction of the YBI Transition Structure. This work will include furnishing and placing concrete, drilling concrete core samples, and disposing of all materials after investigation is completed.

For the Department's portion of the shared costs of this work, the Contractor shall be compensated an agreed lump sum of $5,140.00 which constitutes full and final compensation, including all markups, for all additional costs incurred as a result of this change order.

Estimated cost of Extra Work at Lump Sum $5,140.00

Estimated Cost: Increase ☑ Decrease ☐ **$5,140.00**

By reason of this order the time of completion will be adjusted as follows: 0 days

Submitted by

Signature	Resident Engineer Rajesh Oberoi, Senior R.E.	Date 11/6/10

Approval Recommended by

Signature	Construction Engineer Rajesh Oberoi	Date 12/8/10

Engineer Approval by

Signature	Construction Engineer Rajesh Oberoi	Date 12/8/10

We the undersigned contractor, have given careful consideration to the change proposed and agree, if this proposal is approved, that we will provide all equipment, furnish the materials, except as may otherwise be noted above, and perform all services necessary for the work above specified, and will accept as full payment therefor the prices shown above.

NOTE: If you, the contractor, do not sign acceptance of this order, your attention is directed to the requirements of the specifications as to proceeding with the ordered work and filing a written protest within the time therein specified.

Contractor Acceptance by

Signature	(Print name and title) Edmundo A. Ruchi - Treasurer	Date 11-29-2010

STATE OF CALIFORNIA - DEPARTMENT OF TRANSPORTATION

CONTRACT CHANGE ORDER MEMORANDUM

TO: Deanna Vilcheck, ACM /	FILE: E.A. 04 - 0120S4
FROM: Rajesh Oberoi, Senior R.E.	CO-RTE-PM SF-80-12.7/13.2
	FED. NO. NO FED AID
CCO#: 60 SUPPLEMENT#: 0 Category Code: BZZZ	CONTINGENCY BALANCE (incl. this change) $24,726,515.00
COST: $5,140.00 INCREASE ☑ DECREASE ☐	HEADQUARTERS APPROVAL REQUIRED? ☐ YES ☑ NO
SUPPLEMENTAL FUNDS PROVIDED: $0.00	IS THIS REQUEST IN ACCORDANCE WITH ENVIRONMENTAL DOCUMENTS? ☑ YES ☐ NO
CCO DESCRIPTION: Construction Mockup Reinf Concrete Beams	PROJECT DESCRIPTION: YBITS-1 (Yerba Buena Island Transition Structures)

Original Contract Time:	Time Adj. This Change:	Previously Approved CCO Time Adjustments:	Percentage Time Adjusted: (including this change)	Total # of Unreconciled Deferred Time CCO(s): (including this change)
1390 Day(s)	0 Day(s)	0 Day(s)	0 %	0

THIS CHANGE ORDER PROVIDES FOR:
Compensating the contractor for the Department's shared cost of constructing five 4-ft X 4-ft X 4ft concrete mock-up sections depicting various locations of construction of the YBI Transition Structure.

REASONS FOR CHANGE:

This project, the Yerba Buena Island Transition Structure (YBITS), provides for the construction of two bridges, which will connect eastbound and westbound traffic on the new east span of the San Francisco Oakland Bay Bridge (SFOBB) to the existing Yerba Buena Island (YBI) tunnel. The structures are comprised of concrete box girder bridges each approximately 26 meters wide, 40 meters high and 450 meters in length.

The contract specifies maximum 12.5-mm aggregate for concrete being used for the construction of the structure's footings, columns and bent caps. The contract also requires stringent creep and shrinkage characteristics for the concrete. The contractor has proposed a modified maximum 25-mm aggregate gradation concrete mix designs aimed at improving the creep and shrinkage characteristics of the concrete. As part of this revised aggregate request, the contractor proposed 3 mock-ups be constructed to evaluate constructability with the larger aggregate concrete. Concurrent with the construction of these 3 mock-ups, the Department, via the Office of Structures Construction, requested 2 additional mock-ups to test fly ash and admixture combinations. Based on this request, it was agreed to share the cost of all 5 mock-ups with the contractor.

This change order provides compensation for these shared costs.

Payment for this work will be an extra work at an agreed lump sum of $5,140.00, which can be financed from the contingency fund. A detailed cost analysis is on file.

Maintenance concurrence is not required, as the construction of the mock-ups will not affect any permanent roadway features.

No adjustment of contract time is warranted, as the work will not affect the controlling operations.

ADA Notice: For individuals with sensory disabilities, this document is available in alternate formats. For information call: (916) 654-6410 or TDD (916) 654-3880 or write Records and Forms Management, 1120 N Street, MS-89, Sacramento, CA 95814.

CONCURRED BY:		
Construction Engineer:	Rajesh Oberoi	Date 11/6/10
Bridge Engineer:	Mehran Ardakanian	Date 12/13/10
Project Engineer:		Date
Project Manager:		Date
FHWA Rep.:		Date
Environmental:		Date
Other (specify):		Date
Other (specify):		Date
District Prior Approval By:		Date
HQ (Issue Approve) By:		Date
Resident Engineer's Signature:	Rajesh Oberoi	Date 11/6/10

ESTIMATE OF COST

	THIS REQUEST	TOTAL TO DATE
ITEMS	$0.00	$0.00
FORCE ACCOUNT	$0.00	$0.00
AGREED PRICE	$5,140.00	$5,140.00
ADJUSTMENT	$0.00	$0.00
TOTAL	$5,140.00	$5,140.00

FEDERAL PARTICIPATION

☐ PARTICIPATING ☐ PARTICIPATING IN PART ☑ NONE
☑ NON-PARTICIPATING (MAINTENANCE) ☐ NON-PARTICIPATING

FEDERAL SEGREGATION (if more than one Funding Source or P.I.P. type)
☑ CCO FUNDED PER CONTRACT ☐ CCO FUNDED AS FOLLOWS

FEDERAL FUNDING SOURCE	PERCENT

ADA Notice: For individuals with sensory disabilities, this document is available in alternate formats. For information call: (916) 654-6410 or TDD (916) 654-3880 or write Records and Forms Management, 1120 N Street, MS-89, Sacramento, CA 95814.

CONTRACT CHANGE ORDER

Change Requested by: Engineer

CCO 61	Suppl. No. 0	Contract No. 04 - 0120S4	Road SF-80-12.7/13.2	FED. AID LOC.: NO FED AID

To: **M C M CONSTRUCTION INC**

You are directed to make the following changes from the plans and specifications or do the following described work not included in the plans and specifications for this contract. ***NOTE: This change order is not effective until approved by the Engineer.***

Description of work to be done, estimate of quantities and prices to be paid. (Segregate between additional work at contract price, agreed price and force account.) Unless otherwise stated, rates for rental of equipment cover only such time as equipment is actually used and no allowance will be made for idle time. This last percentage shown is the net accumulated increase or decrease from the original quantity in the Engineer's Estimate.

REVISION 2: dated 10/18/12

Adjustment of Compensation at Lump Sum:

Incorporate revisions to the deck drainage system as shown on revised plan Sheet Nos. 568R2, 584R1, 632R2, 638R3, 640R1and 776R1, Sheet Nos. 2 through 7 of this contract change order. Erect deck drainage system as directed by the Engineer during the ISD process and in the field.

For this work the Contractor shall receive and accept the Agreed Lump Sum of $16,249.00. This sum constitutes full and complete compensation for providing all labor, material, equipment, tools and incidentals, including all markups by the reason of this change.

Adjustment Compensation at Agreed Lump Sum = $16,249.00

12/04/12

Estimated Cost: Increase ☑ Decrease ☐ **$16,249.00**

By reason of this order the time of completion will be adjusted as follows: 0 days

Submitted by

Signature	Resident Engineer	Date
William Howe	William Howe, Senior R.E.	10.18.12

Approval Recommended by

Signature	Senior Resident Engineer	Date
William Howe	William Howe	10.18.12

Engineer Approval by

Signature	Senior Resident Engineer	Date
William Howe	William Howe	12-04-12

We the undersigned contractor, have given careful consideration to the change proposed and agree, if this proposal is approved, that we will provide all equipment, furnish the materials, except as may otherwise be noted above, and perform all services necessary for the work above specified, and will accept as full payment therefor the prices shown above.

NOTE: If you, the contractor, do not sign acceptance of this order, your attention is directed to the requirements of the specifications as to proceeding with the ordered work and filing a written protest within the time therein specified.

Contractor Acceptance by

Signature	(Print name and title)	Date
	EDMUNDO A. IUCHI, TREASURER	11/30/12

MARK	DATE	DESCRIPTIONS	BY	CH'D
7	9-1-11	Added deck drain pipe	TL	JB
1	9-1-10	Deleted isolation sleeve at north column Bent W8	TL	JB

REVISIONS

**Dimension shown is measured along ℄ bent

DIST.	COUNTY	ROUTE	KILOMETER POST TOTAL PROJECT	SHEET NO.	TOTAL SHEETS
04	SF	80	12.7/13.2	568R2	806

REGISTERED ENGINEER - CIVIL

6-23-08

PLANS APPROVAL DATE

A.L. ELY No. 18880 Exp. 6-30-09 CIVIL STATE OF CALIFORNIA REGISTERED PROFESSIONAL ENGINEER

The State of California or its officers or agents shall not be responsible for the accuracy or completeness of electronic copies of this plan sheet.

T.Y. LIN / MOFFATT & NICHOL
TWO HARRISON STREET
SAN FRANCISCO, CA 94105

CONTRACT CHANGE ORDER NO. 61
SHEET 2 OF 7

J.D. BIRDY No. 41847 Exp. 12-31-11 CIVIL STATE OF CALIFORNIA REGISTERED PROFESSIONAL ENGINEER

FOR REVISION 1 & 2 ONLY

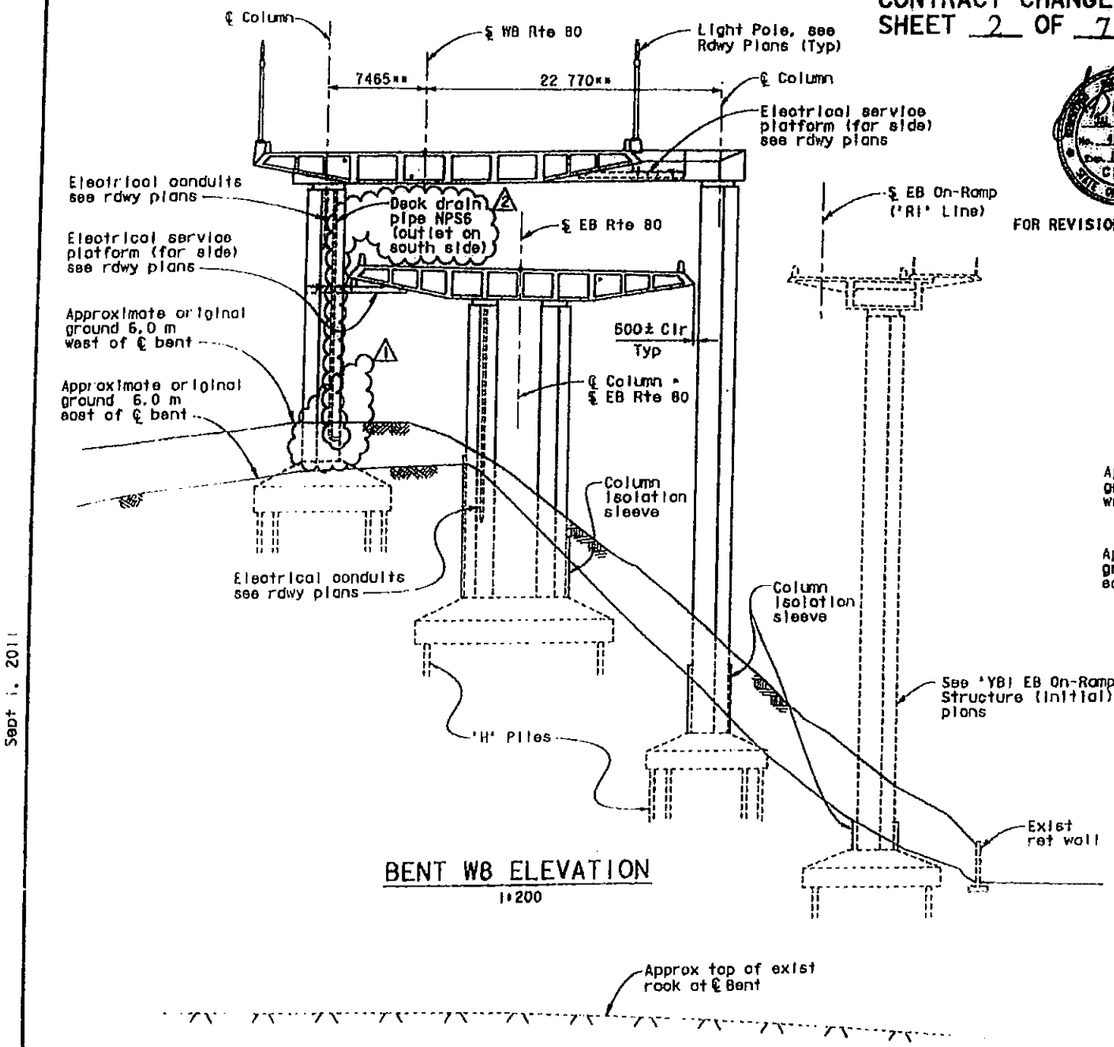

BENT W8 ELEVATION
1:200

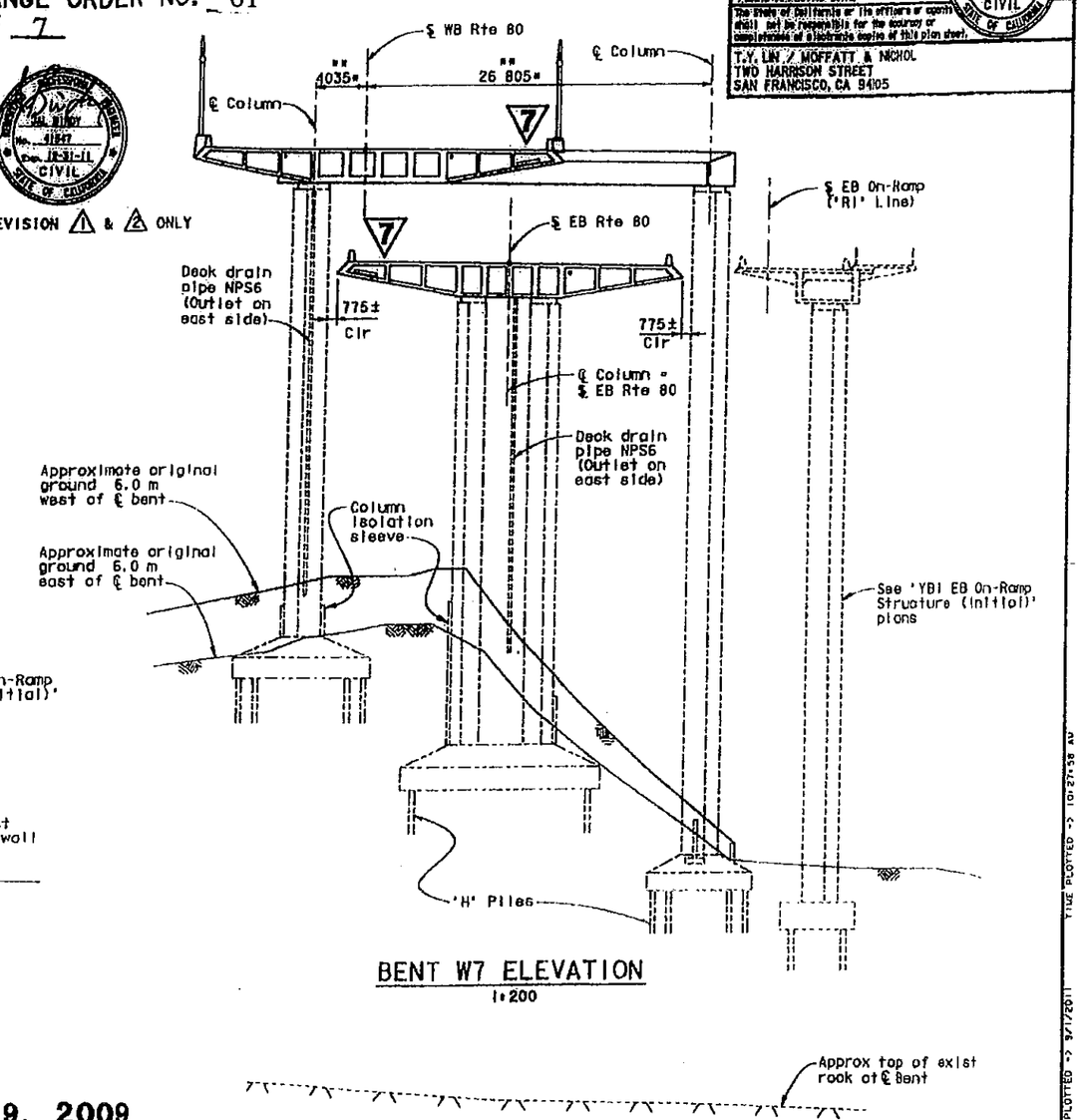

BENT W7 ELEVATION
1:200

7 REVISED PER ADDENDUM NO. 7 DATED OCTOBER 19, 2009

DESIGN OVERSIGHT
JOHN MOCK, GERHARD CHAN, JUAN F. CARPIO
HASAN AL-NATUR
9/9/2011
SIGN OFF DATE

DESIGN	BY Dogol	CHECKED Jain	
DETAILS	BY van Ryn/Zuschl/Kol	CHECKED Jain	
QUANTITIES	BY Liao	CHECKED E. Nichol	

PREPARED FOR THE STATE OF CALIFORNIA DEPARTMENT OF TRANSPORTATION

Jol Birdy
PROJECT ENGINEER

BRIDGE NO. 34-0006 L/R
KILOMETER POST 12.8

CU 04251
EA 0120S1

SAN FRANCISCO OAKLAND BAY BRIDGE
EAST SPAN SEISMIC SAFETY PROJECT

YBI TRANSITION STRUCTURES

BENT ELEVATIONS W8 TO W7

CHANGE REVISION DATES — REVISION DATES (PRELIMINARY PLANS ONLY)

SHEET 19 OF 209

ORIGINAL SCALE IN MILLIMETERS FOR REDUCED PLANS 0 10 20 30 40 50 60 70 80 90 100

FILE => P:\4141-06\CADD\TS\Checked Plans\YBI TS 7-11.dgn

Sept 1, 2011

TIME PLOTTED => 10:27:58 AM

DATE PLOTTED => 9/7/2011

SCENARIO => PLOT01

DIST.	COUNTY	ROUTE	KILOMETER POST TOTAL PROJECT	SHEET NO.	TOTAL SHEETS
04	SF	80	12.7/13.2	584R1	806

REGISTERED ENGINEER - CIVIL
6-23-08
PLANS APPROVAL DATE
The State of California or its officers or agents shall not be responsible for the accuracy or completeness of electronic copies of this plan sheet.
T.Y. LIN / MOFFATT & NICHOL
TWO HARRISON STREET
SAN FRANCISCO, CA 94105

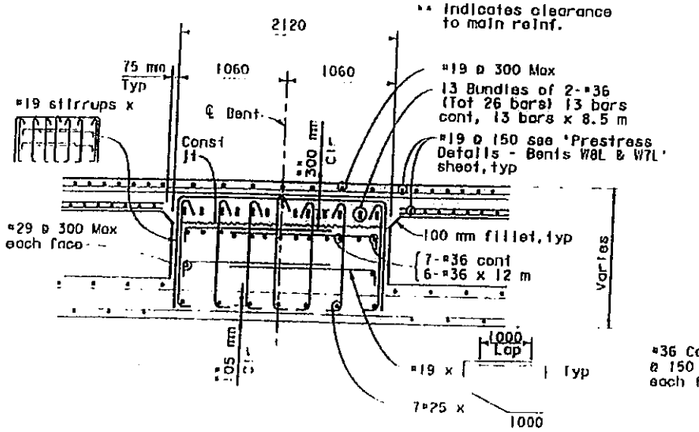

SECTION C-C
1:25

Note:
For location of Sections C-C & D-D see 'Bent W8L Details No. 2' sheet

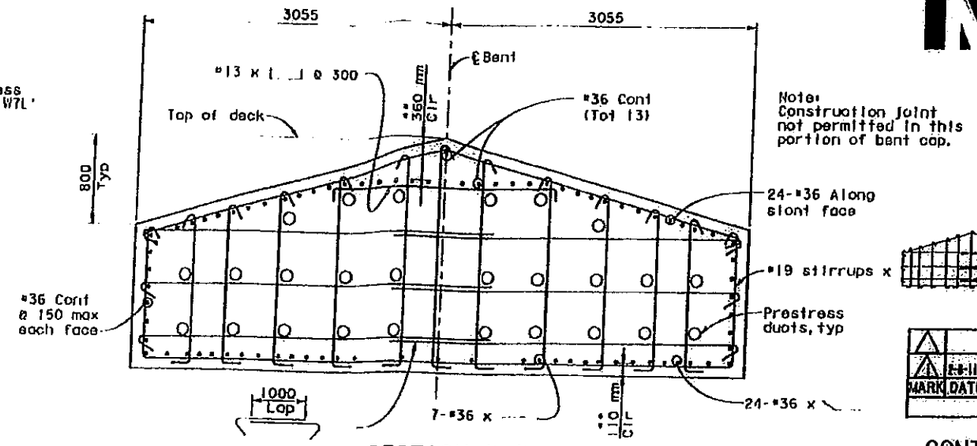

SECTION D-D
1:25

Note:
Construction joint not permitted in this portion of bent cap.

MARK	DATE	DESCRIPTIONS	BY	CH'D
1	2-8-11	Rev elec conduits, added deck drain pipe	TL	JB

REVISIONS

CONTRACT CHANGE ORDER NO. 61
SHEET 3 OF 7

FOR REVISION 1 ONLY

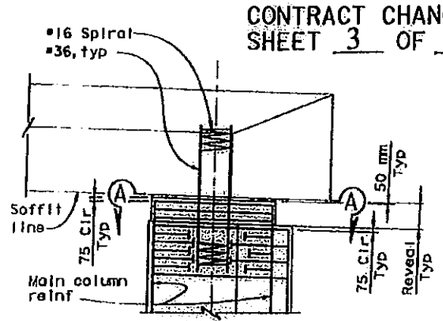

ELEVATION

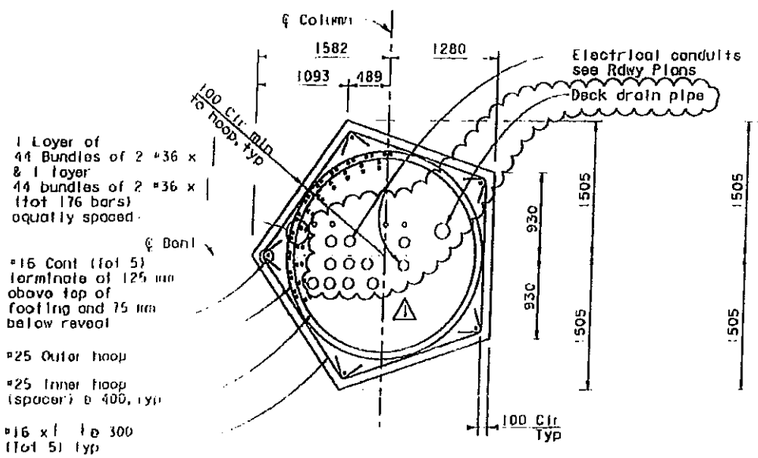

NORTH COLUMN
TYPICAL SECTION
1:30

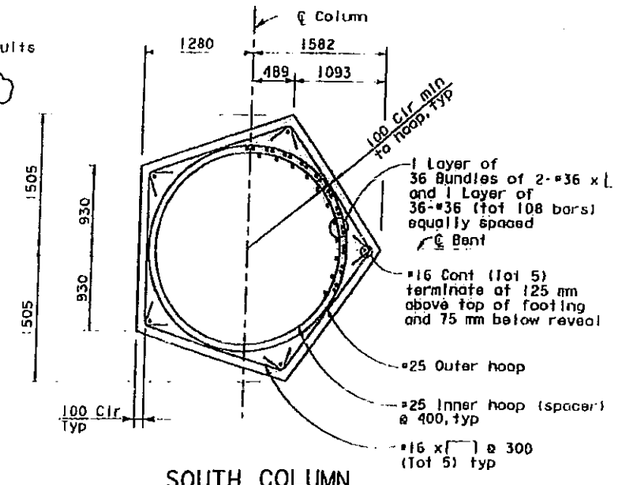

SOUTH COLUMN
TYPICAL SECTION
1:30

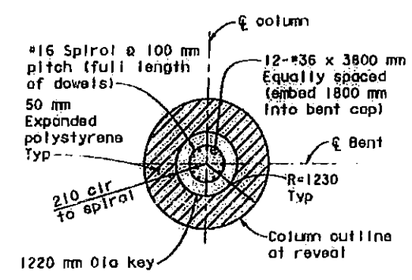

SECTION A-A

CONNECTION DETAIL AT
TOP OF SOUTH COLUMN
1:50

ALL DIMENSIONS ARE IN MILLIMETERS UNLESS OTHERWISE SHOWN

SAN FRANCISCO OAKLAND BAY BRIDGE
EAST SPAN SEISMIC SAFETY PROJECT

YBI TRANSITION STRUCTURES

BENT W8L DETAILS NO. 3

DESIGN OVERSIGHT: Mike Sook, Bernard Chen, John F. Caspio, Hasan El-Hatua
March 3, 2008
SIGN OFF DATE

DESIGN	BY Xia	CHECKED Ahi
DETAILS	BY van Ryn/Zucchi/Wal	CHECKED Jain
QUANTITIES	BY Lida	CHECKED E. Nichol

PREPARED FOR THE STATE OF CALIFORNIA DEPARTMENT OF TRANSPORTATION

Jal Birdy
PROJECT ENGINEER

BRIDGE NO. 34-0006 L/R
KILOMETER POST 12.8

CU 04251
EA 012051

DISREGARD PRINTS DATED EARLIER REVISION DATES

SHEET 35 OF 209

ORIGINAL SCALE IN MILLIMETERS FOR REDUCED PLANS 0 10 20 30 40 50 60 70 80 90 100

Rev. Dates 5-15-95

FILE => \\mobfs\10 Projects\4141-06\CADD\TS\Checked Plans\YBITS #1-100% No. 2.03-03-08 (Final Removal)\020811 (Hajj) 1) FROM

DIST.	COUNTY	ROUTE	KILOMETER POST TOTAL PROJECT	SHEET No.	TOTAL SHEETS
04	SF	80	12.7/13.2	632R2	806

REGISTERED ENGINEER - CIVIL

6-23-08

PLANS APPROVAL DATE

The State of California or its officers or agents shall not be responsible for the accuracy or completeness of Microfilm copies of this plan sheet.

T.Y.LIN / MOFFATT & NICHOL
TWO HARRISON STREET
SAN FRANCISCO, CA 94105

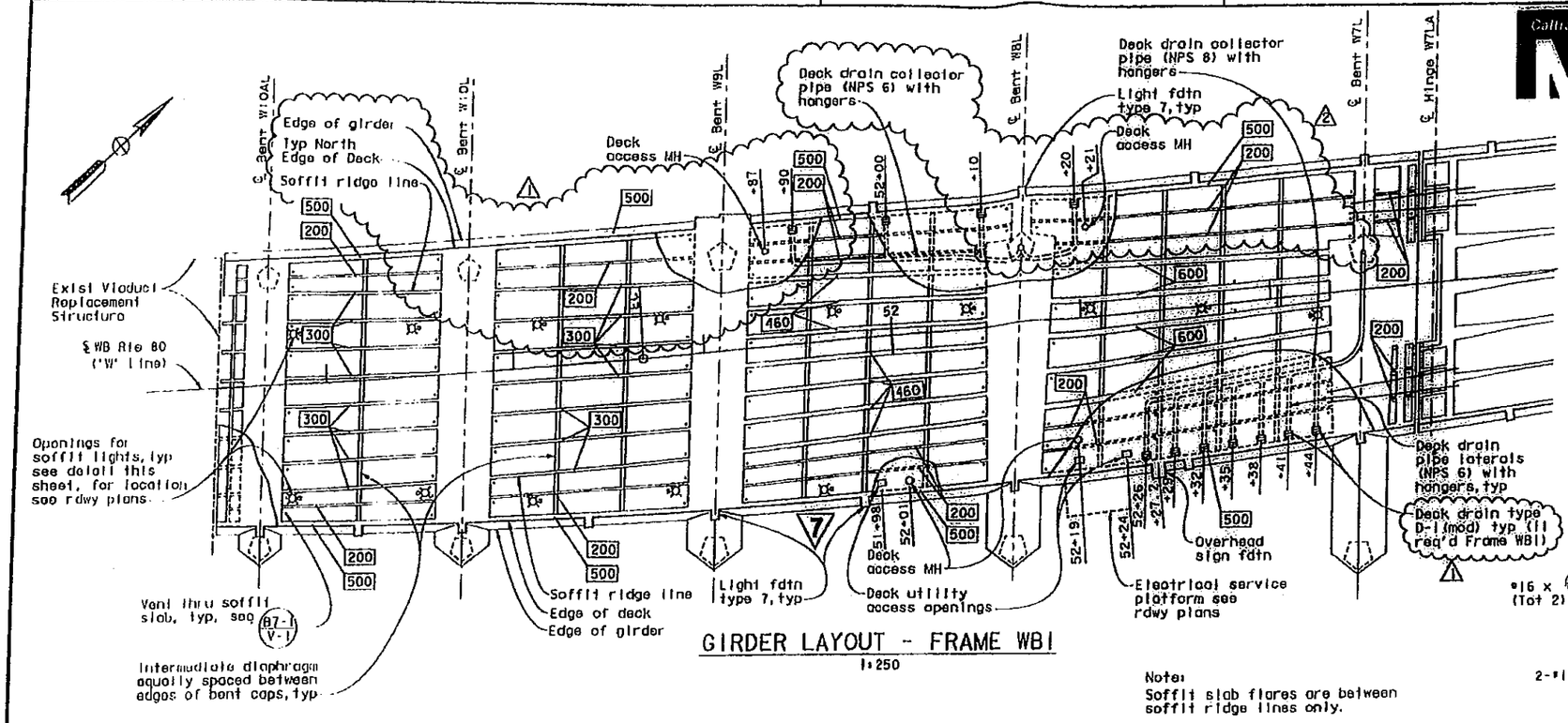

GIRDER LAYOUT - FRAME WB1

1:250

LEGEND

500 Indicates girder stem width in mm

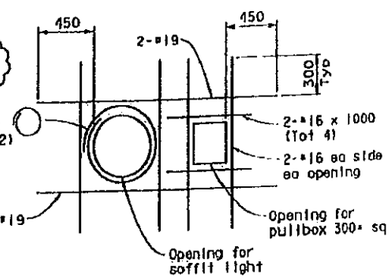

PLAN AT SOFFIT LIGHT OPENING

For details not shown, see B7-1

No Scale

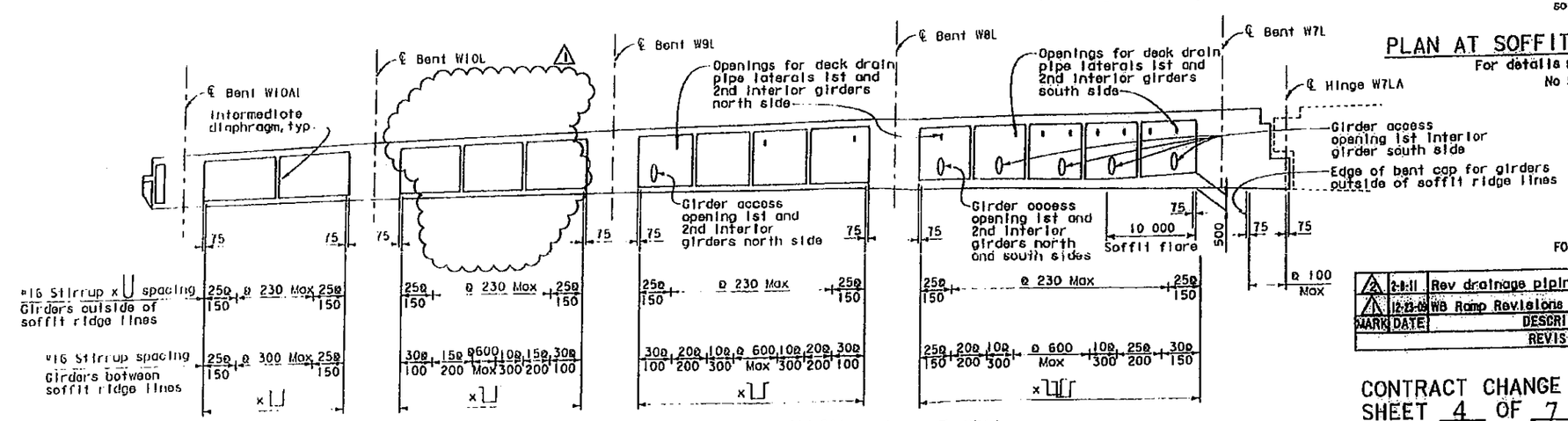

LONGITUDINAL SECTION - FRAME WB1

No Scale

FOR REVISION 1 & 2 ONLY

MARK	DATE	DESCRIPTIONS	BY	CH'D
2	2-8-11	Rev drainage piping	TL	AE
1	12-23-09	WB Ramp Revisions	TL	AE

REVISIONS

CONTRACT CHANGE ORDER NO. 61
SHEET 4 OF 7

7 REVISED PER ADDENDUM NO. 7
DATED OCTOBER 19, 2009

ALL DIMENSIONS ARE IN MILLIMETERS UNLESS OTHERWISE SHOWN

DESIGN OVERSIGHT: DIDI MOK, BERNARD CHAN, JOHN F. CARPIO, HASSAN EL-HAYEK
March 3, 2008 — 2/24/11
SIGN OFF DATE

DESIGN: Cavatian; DETAILS: van Ryn/Zucchi/Mal; QUANTITIES: Liao; CHECKED: Shongkuan; CHECKED: Jain; CHECKED: E. Nichol

PREPARED FOR THE STATE OF CALIFORNIA DEPARTMENT OF TRANSPORTATION

Jal Birdy
PROJECT ENGINEER

CU 04251
EA 012051

BRIDGE NO. 34-0006 L/R
KILOMETER POST 12.8

SAN FRANCISCO OAKLAND BAY BRIDGE
EAST SPAN SEISMIC SAFETY PROJECT

YBI TRANSITION STRUCTURES

WESTBOUND GIRDER LAYOUT NO. 1

SHEET B3 OF 209

Rev. Date: 5-12-98

ORIGINAL SCALE IN MILLIMETERS FOR REDUCED PLANS

FILE => \\mathfs\LD Projects\4141-06\CADD\TS\Checked Plans\YBITS *1-100% No. 7 03-03-08 (Final Returned)\020B11 Hinge x 77 (FONT)

February 8, 2011

TIME PLOTTED => 11:21:01 AM
DATE PLOTTED => 2/8/2011
USERNAME => fgemsor

MARK	DATE	DESCRIPTIONS	BY	CH'D
3	6-29-11	Rev deck drain locations	TL	JB
1	10-13-10	Rev deck drain locations and added soffit lights.	TL	JB

REVISIONS

DIST.	COUNTY	ROUTE	KILOMETER POST TOTAL PROJECT	SHEET NO.	TOTAL SHEETS
04	SF	80	12.7/13.2	638R3	806

REGISTERED ENGINEER - CIVIL

6-23-08

PLANS APPROVAL DATE

The State of California or its officers or agents shall not be responsible for the accuracy or completeness of electronic copies of this plan sheet.

T.Y. LIN / MOFFATT & NICHOL
TWO HARRISON STREET
SAN FRANCISCO, CA 94105

CONTRACT CHANGE ORDER NO. 61
SHEET 5 OF 7

LEGEND

500 Indicates girder stem width in mm

FOR REVISION 1 & 3 ONLY

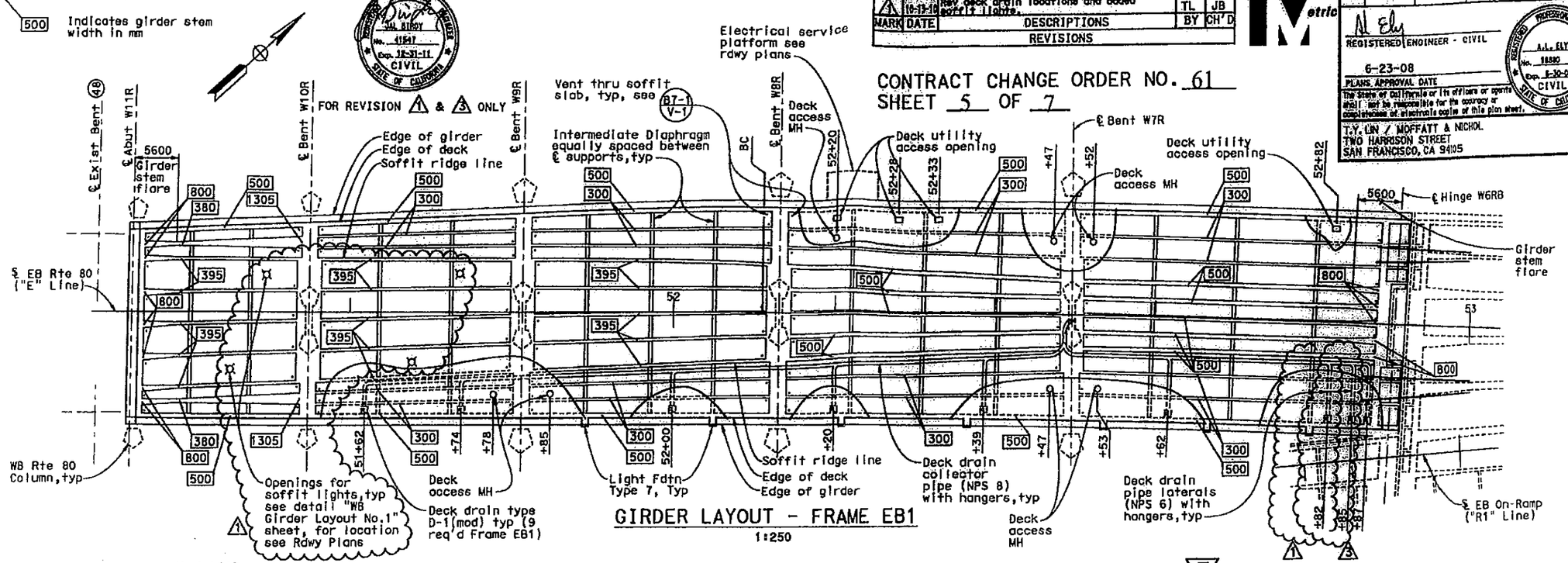

GIRDER LAYOUT - FRAME EB1
1:250

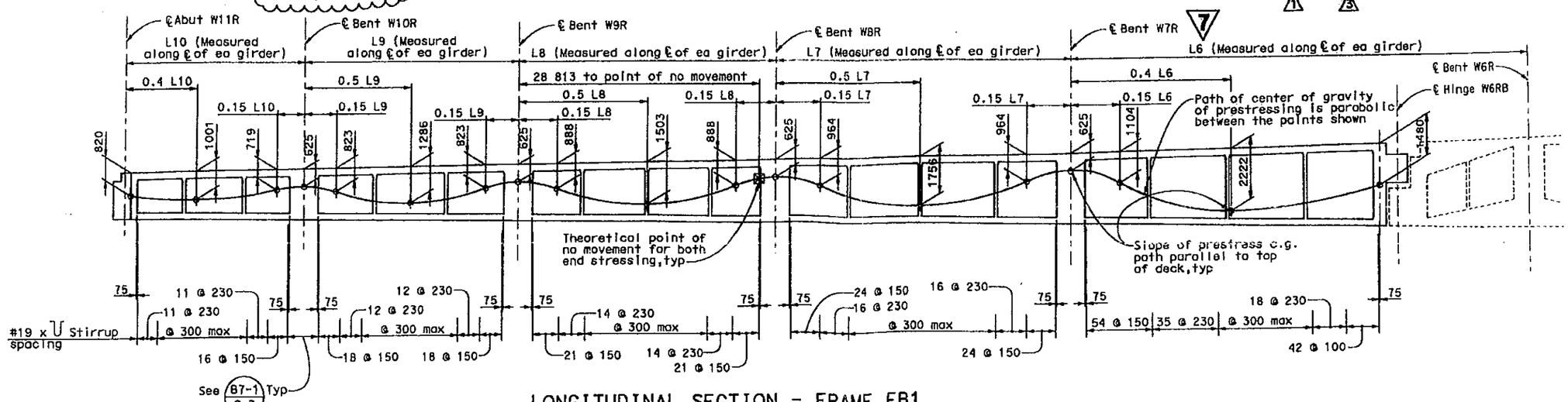

LONGITUDINAL SECTION - FRAME EB1
GIRDERS BETWEEN SOFFIT RIDGE LINES
No Scale

7 REVISED PER ADDENDUM No. 7
DATED OCTOBER 19, 2009

ALL DIMENSIONS ARE IN MILLIMETERS UNLESS OTHERWISE SHOWN

DESIGN OVERSIGHT: JOHN WOOK, BERNARD CHAN, JUAN F. CARPIO, HASAN EL-NATUR
SIGN OFF DATE 7/1/2011

	BY	CHECKED
DESIGN	Cavaflan	Shangkuan
DETAILS	van Ryn/Zucchi/Wal	Jain
QUANTITIES	Liao	E. Nichol

PREPARED FOR THE STATE OF CALIFORNIA DEPARTMENT OF TRANSPORTATION

Jal Birdy
PROJECT ENGINEER

BRIDGE NO. 34-0006 L/R
KILOMETER POST 12.8

SAN FRANCISCO OAKLAND BAY BRIDGE
EAST SPAN SEISMIC SAFETY PROJECT

YBI TRANSITION STRUCTURES

EASTBOUND GIRDER LAYOUT NO.1

CU 04251
EA 0120S1

DISREGARD PRINTS DATED EARLIER REVISION DATES

REVISION DATES (PRELIMINARY STAGE ONLY)

SHEET 89 OF 209

Rev. Dates 5-14-98

ORIGINAL SCALE IN MILLIMETERS FOR REDUCED PLANS 0 10 20 30 40 50 60 70 80 90 100

FILE => p:\4141-06\cadd\TS\Checked Plans\YBITS #1-100% No. 2_03-03-06 (Final Renumbering 6/29/11 713 CCO\04-0120S1-34-0006-1-1-g_1008.dgn

USERNAME => fasmodon DATE PLOTTED => 6/29/2011 TIME PLOTTED => 2:12:40 PM

June 29, 2011

DIST.	COUNTY	ROUTE	KILOMETER POST TOTAL PROJECT	SHEET NO.	TOTAL SHEETS
04	SF	80	12.7/13.2	640R1	806

REGISTERED ENGINEER - CIVIL
6-23-08
PLANS APPROVAL DATE
A.L. ELY No. 11880 Exp. 6-30-09 CIVIL STATE OF CALIFORNIA
The State of California or its officers or agents shall not be responsible for the accuracy or completeness of electronic copies of this plan sheet.

T.Y. LIN / MOFFATT & NICHOL
TWO HARRISON STREET
SAN FRANCISCO, CA 94105

7 **REVISED PER ADDENDUM No. 7 DATED OCTOBER 19, 2009**

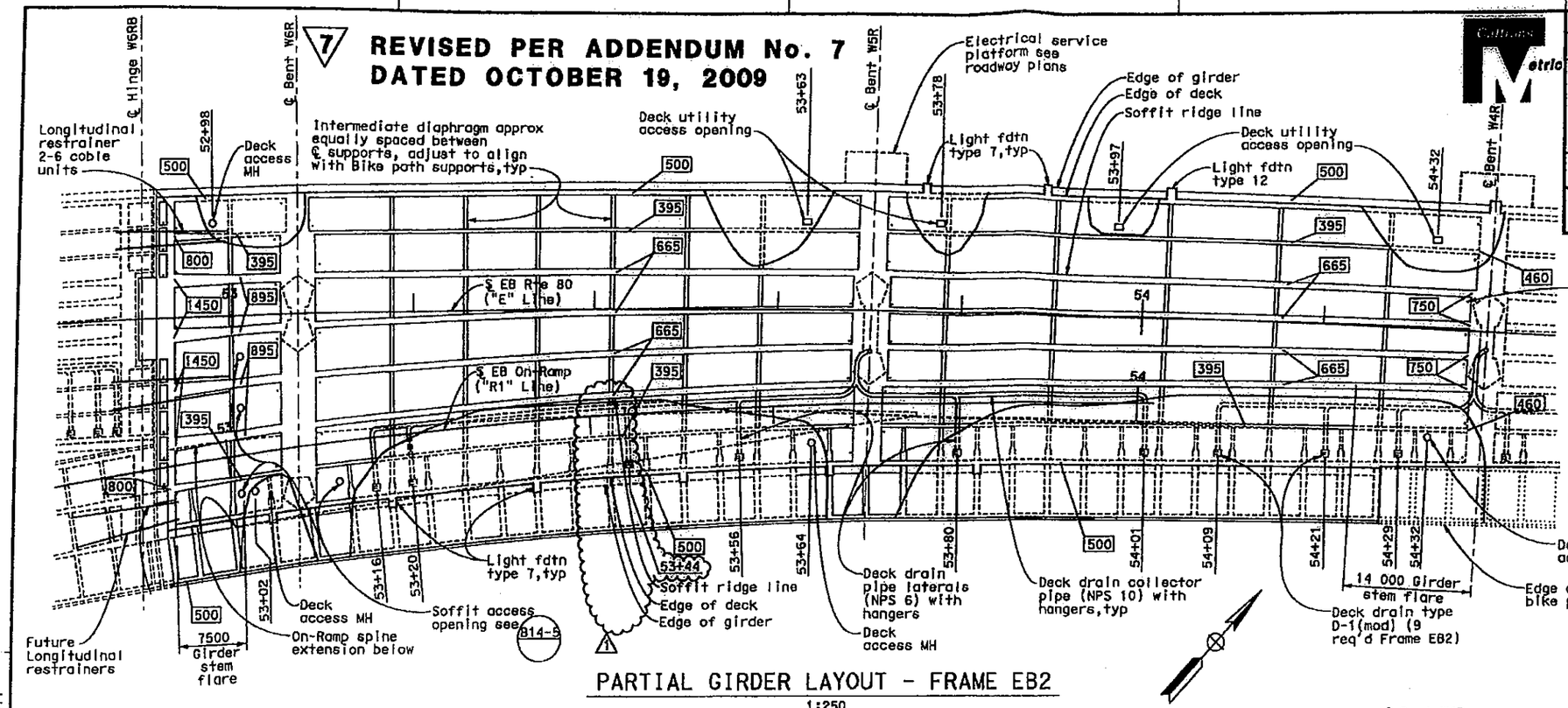

PARTIAL GIRDER LAYOUT - FRAME EB2

1:250

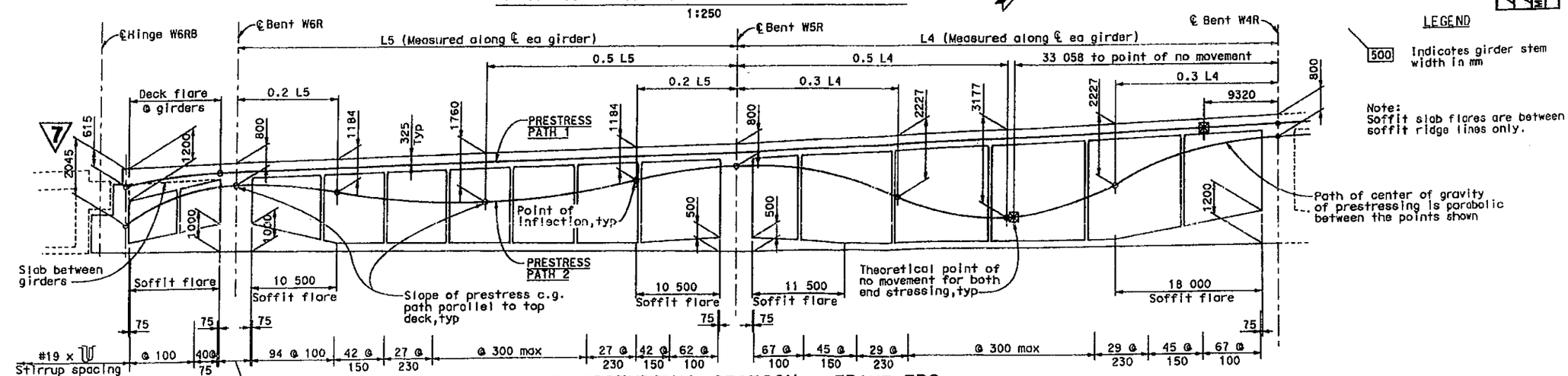

PARTIAL LONGITUDINAL SECTION - FRAME EB2
GIRDERS BETWEEN SOFFIT RIDGE LINES

No Scale

LEGEND

500 Indicates girder stem width in mm

Note: Soffit slab flares are between soffit ridge lines only.

ALL DIMENSIONS ARE IN MILLIMETERS UNLESS OTHERWISE SHOWN

FOR REVISION 1 ONLY

MARK	DATE	DESCRIPTIONS	BY	CH'D
1	6-29-11	Rev deck drain location	TL	JB

CONTRACT CHANGE ORDER NO. 61
SHEET 6 OF 7

DESIGN OVERSIGHT
JOHN MOOK, BERNARD CHAN, JUAN F. CARPIO
HASAN EL-NATUR 7/1/2011
SIGN OFF DATE
Rev. Dates 9-18-98

DESIGN	BY Cavalan	CHECKED Shangkuan
DETAILS	BY van Ryn/Zucchi/Wal	CHECKED Jain
QUANTITIES	BY Liao	CHECKED E. Nichol

PREPARED FOR THE STATE OF CALIFORNIA DEPARTMENT OF TRANSPORTATION

Jal Birdy
PROJECT ENGINEER

BRIDGE NO. 34-0006 L/R
KILOMETER POST 12.8

CU 04251
EA 012051

SAN FRANCISCO OAKLAND BAY BRIDGE
EAST SPAN SEISMIC SAFETY PROJECT

YBI TRANSITION STRUCTURES

EASTBOUND GIRDER LAYOUT NO.3

DISREGARD PRINTS BEARING EARLIER REVISION DATES
REVISION DATES (PRELIMINARY STAGE ONLY)
SHEET 91 OF 209

ORIGINAL SCALE IN MILLIMETERS FOR REDUCED PLANS 0 10 20 30 40 50 60 70 80 90 100

FILE => p:\4141-06\cadd\TS\Checked Plans\YBITS W1-100% No. 2_03-03-08 (Final Remarked)\062911 T13 CCO\04-012051-34-0006R1-1-g_tot0.dgn

USERNAME => tadamson DATE PLOTTED => 6/29/2011 TIME PLOTTED => 2:12:54 PM

June 29, 2011

DIST.	COUNTY	ROUTE	KILOMETER POST TOTAL PROJECT	SHEET NO.	TOTAL SHEETS
04	SF	80	12.7/13.2	776R2	806

REGISTERED ENGINEER - CIVIL
6-23-08
PLANS APPROVAL DATE
A.L. ELY No. 18189 Exp. 1-30-09 CIVIL STATE OF CALIFORNIA REGISTERED PROFESSIONAL ENGINEER
The State of California or its officers or agents shall not be responsible for the accuracy or completeness of electronic copies of this plan sheet.
T.Y. LIN / MOFFATT & NICHOL
TWO HARRISON STREET
SAN FRANCISCO, CA 94105

MARK	DATE	DESCRIPTIONS	BY	CH'D
2	9-1-11	Corrected drain pipe location	TL	JB
1	2-24-11	Rev column hoop spacing & drain pipe location.	TL	JB

REVISIONS

CONTRACT CHANGE ORDER NO. 61
SHEET 7 OF 7

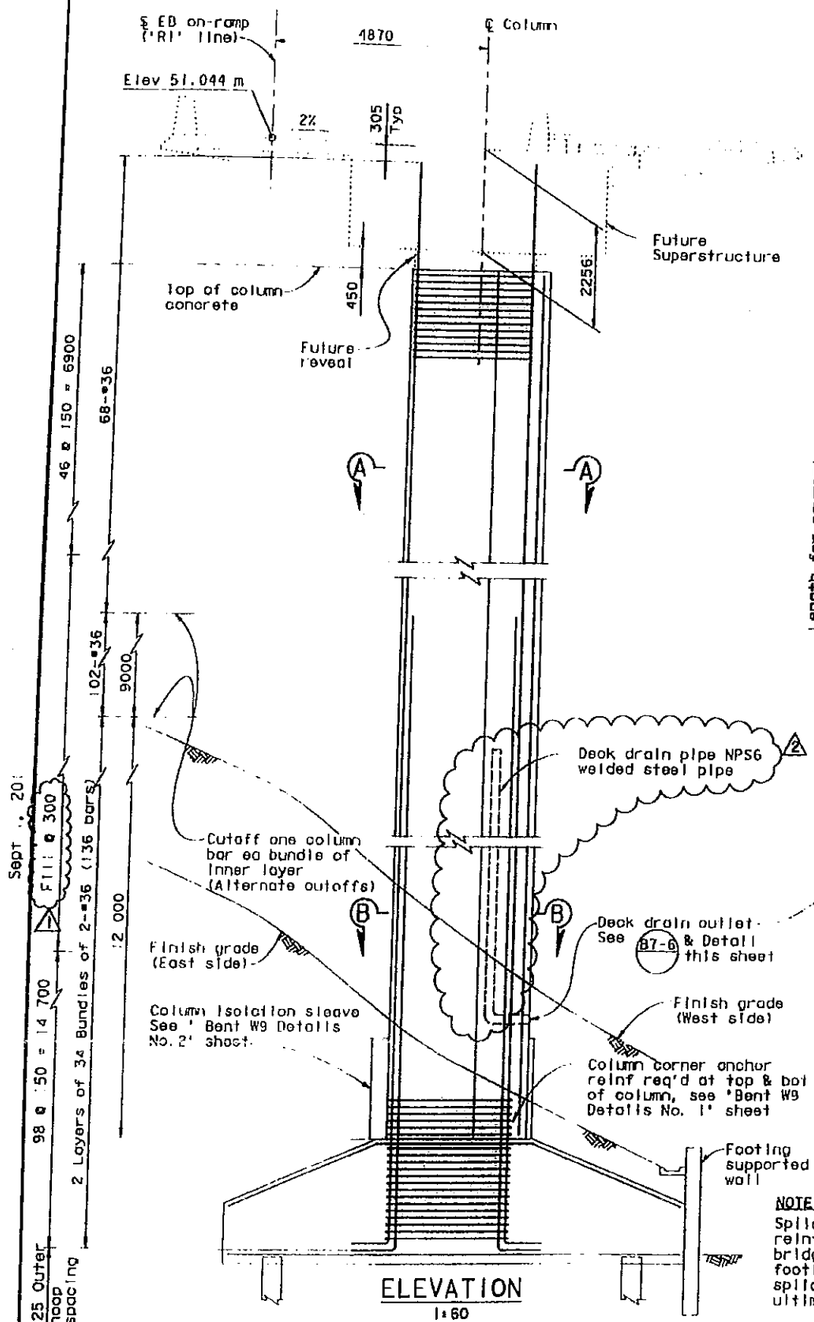

ELEVATION
1:60

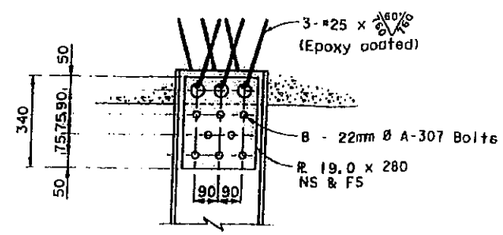

OPTIONAL PILE ANCHORAGE

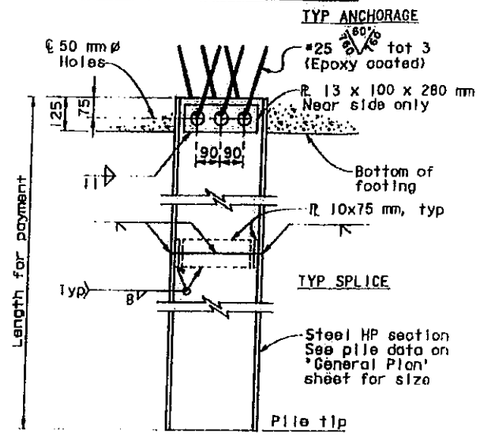

TYPICAL PILE DETAIL
(Typical Bents W8 and W9)
1:10

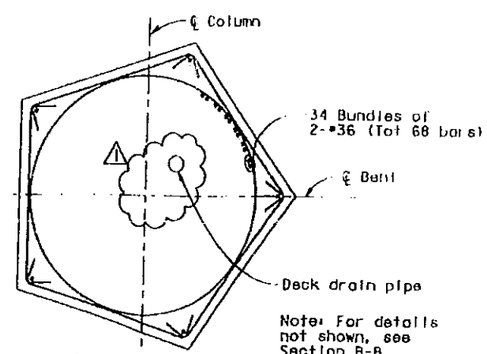

SECTION A-A
1:30

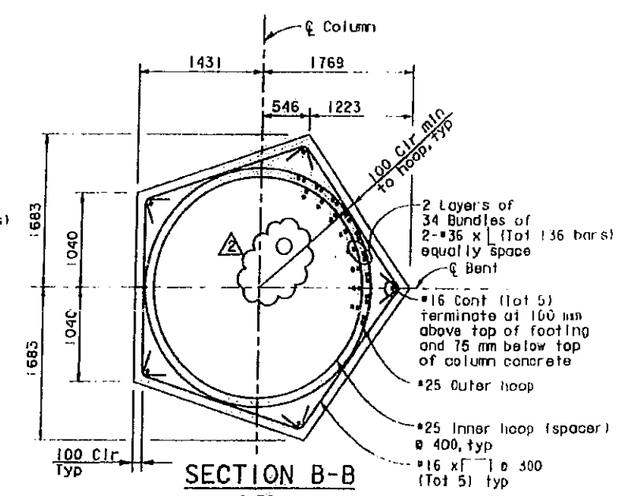

SECTION B-B
1:30

NOTE:
Splices not permitted in main column reinf within the distance of 5 m below bridge soffit nor 12 m above top of footing (no splice zones). At other areas splices in main column reinf shall be ultimate butt splices (staggered)

FOR REVISION 1 & 2 ONLY

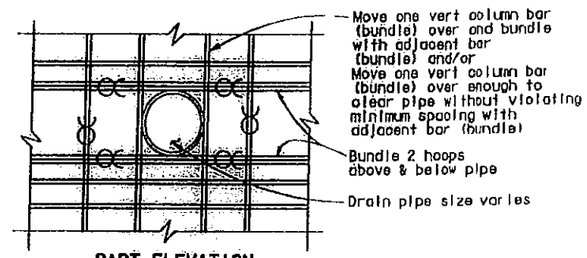

PART ELEVATION

DECK DRAIN PIPE OUTLET AT COLUMNS
(For details not shown see B7-6)
No Scale

ALL DIMENSIONS ARE IN MILLIMETERS UNLESS OTHERWISE SHOWN

DESIGN OVERSIGHT
JOHN BOOK, BERNARD CHAN, JOHN F. CARPIO, HASAN EL-HATAB
SIGN OFF DATE 9/9/2011

	BY	CHECKED
DESIGN	Chou	Atiqullah
DETAILS	von Ryn/Zucchi/Wal	Chou
QUANTITIES	Chou	Liao

PREPARED FOR THE STATE OF CALIFORNIA DEPARTMENT OF TRANSPORTATION

Joi Birdy
PROJECT ENGINEER

BRIDGE No. 34-172S
KILOMETER POST 12.8

SAN FRANCISCO OAKLAND BAY BRIDGE
EAST SPAN SEISMIC SAFETY PROJECT

YBI EB ON-RAMP STRUCTURE (INITIAL)

BENT W8 DETAILS NO. 1

CU 04251
EA 01205!

DIRECTIONAL BEARING BEARING EARLIER REVISION DATES

REVISION DATES (PRELIMINARY STAGE ONLY)

SHEET 5 OF 17

Rev. Date: 5-19-98

ORIGINAL SCALE IN MILLIMETERS FOR REDUCED PLANS 0 10 20 30 40 50 60 70 80 90 100

SEE NAME → PLOTTED → DATE PLOTTED → TIME PLOTTED →

STATE OF CALIFORNIA - DEPARTMENT OF TRANSPORTATION

CONTRACT CHANGE ORDER MEMORANDUM

DATE: 6/26/2012 Page 1 of 1

TO: Doug Coe, ACM /	FILE: E.A. 04 - 0120S4
FROM: William Howe, Senior R.E.	CO-RTE-PM SF-80-12.7/13.2
	FED. NO. NO FED AID
CCO#: 61 SUPPLEMENT#: 0 Category Code: CHPT	CONTINGENCY BALANCE (incl. this change) $41,536,576.15
COST: $16,249.00 INCREASE ☑ DECREASE ☐	HEADQUARTERS APPROVAL REQUIRED? ☐ YES ☑ NO
SUPPLEMENTAL FUNDS PROVIDED: $0.00	IS THIS REQUEST IN ACCORDANCE WITH ENVIRONMENTAL DOCUMENTS? ☑ YES ☐ NO
CCO DESCRIPTION: Modify Deck Drainage	**PROJECT DESCRIPTION:** YBITS-1 (Yerba Buena Island Transition Structures)

Original Contract Time:	Time Adj. This Change:	Previously Approved CCO Time Adjustments:	Percentage Time Adjusted: (including this change)	Total # of Unreconciled Deferred Time CCO(s): (including this change)
1390 Day(s)	0 Day(s)	0 Day(s)	0 %	9

THIS CHANGE ORDER PROVIDES FOR:

Revisions to the deck drainage system as shown on the revised plan Sheets Nos. 568R2, 584R1, 632R2, 638R3, 640R1 and 776R1, Sheet Nos. 2 through 7 of this contract change order, and erect the deck drainage system as directed by the Engineer during the ISD process and in the field.

These changes are initiated by the Engineer due to several reasons. The original configuration of deck drainage system did not provide an adequate slope necessary for proper drainage. Changes to the westbound structure to accommodate future City ramps, Contract Change Order No. 52, allowed the Engineer to reconfigure the deck drainage system by providing a new drain outlet through Bent W8L north column for the drains located on the north side to the westbound structure. This allowed necessary slope for proper drainage.

The Engineer also implemented an internal guying system for some new columns being built on this contract on CCO No. 71. Drains located on the eastbound on-ramp column W8 were reconfigured during the ISD process to accommodate the internal guying system. During the ISD process, the Engineer customized the location and the shape of the drainage system to avoid conflicts with the post-tensioning system and reinforcement bars, whose placement had previously interfered with the drainage system.

The Contractor has agreed to an Adjustment in Compensation at Agreed Lump Sum of $16,249.00 for this work, which will be financed from the contract's contingency fund. A cost analysis is on file.

Structure Maintenance concurrence will be obtained from Lina Ellis.

As this change does not affect a controlling item, no adjustment of contract time is warranted.

CONCURRED BY:		
Construction Engineer:	William Howe	Date 10-18-12
Bridge Engineer:	Mehran Ardakanian	Date 12.04.12
Project Engineer:	Bob Zandipour, Design	Date 10-18-12
Project Manager:	Ken Terpstra	Date 11-1-12
FHWA Rep.:		Date
Environmental:		Date
Other (specify):	Lina Ellis, Str. Maintenance	Date 10-18-12
Other (specify):		Date
District Prior Approval By:		Date
HO (Issue Approve) By:		Date
Resident Engineer's Signature: William Howe		Date 10-18-12

ESTIMATE OF COST

	THIS REQUEST	TOTAL TO DATE
ITEMS	$0.00	$0.00
FORCE ACCOUNT	$0.00	$0.00
AGREED PRICE	$0.00	$0.00
ADJUSTMENT	$16,249.00	$16,249.00
TOTAL	$16,249.00	$16,249.00

FEDERAL PARTICIPATION

☐ PARTICIPATING ☐ PARTICIPATING IN PART ☑ NONE
☐ NON-PARTICIPATING (MAINTENANCE) ☐ NON-PARTICIPATING

FEDERAL SEGREGATION (if more than one Funding Source or P.I.P. type)
☐ CCO FUNDED PER CONTRACT ☐ CCO FUNDED AS FOLLOWS

FEDERAL FUNDING SOURCE	PERCENT

ADA Notice: For individuals with sensory disabilities this document is available in alternate formats. For information call (916) 654-6410 or TDD (916) 654-3880 or write Records and Forms Management, 1120 N Street, MS-89, Sacramento, CA 95814.

STATE OF CALIFORNIA - DEPARTMENT OF TRANSPORTATION

CONTRACT CHANGE ORDER

Change Requested by: Engineer

CCO 62	Suppl. No. 0	Contract No. 04 - 0120S4	Road SF-80-12.7/13.2	FED. AID LOC.: NO FED AID

To: **M C M CONSTRUCTION INC**

You are directed to make the following changes from the plans and specifications or do the following described work not included in the plans and specifications for this contract. ***NOTE: This change order is not effective until approved by the Engineer.***

Description of work to be done, estimate of quantities and prices to be paid. (Segregate between additional work at contract price, agreed price and force account.) Unless otherwise stated, rates for rental of equipment cover only such time as equipment is actually used and no allowance will be made for idle time. This last percentage shown is the net accumulated increase or decrease from the original quantity in the Engineer's Estimate.

Adjustment of Compensation at Lump Sum:

Provide compensation to the Contractor for all additional costs incurred in the installation and removal of the temporary shoring for the Bent W9L North footing due to the Macalla Road stage construction changes ordered by the Department.

For this work, the Contractor shall be compensated an agreed lump sum of $29,065.00 which constitutes full and final compensation, including all markups, for all additional costs incurred.

Estimated cost of Adjustment of Compensation at Lump Sum $29,065.00

Estimated Cost: Increase ☑ **Decrease** ☐ **$29,065.00**

By reason of this order the time of completion will be adjusted as follows: 0 days

Signature William Howe	**Resident Engineer** William Howe, Senior R.E.	**Date** 06.03.11
Signature William Howe	**Senior Resident Engineer** William Howe	**Date** 07.19.11
Signature William Howe	**Senior Resident Engineer** William Howe	**Date** 07.19.11

We the undersigned contractor, have given careful consideration to the change proposed and agree, if this proposal is approved, that we will provide all equipment, furnish the materials, except as may otherwise be noted above, and perform all services necessary for the work above specified, and will accept as full payment therefor the prices shown above.

NOTE: If you, the contractor, do not sign acceptance of this order, your attention is directed to the requirements of the specifications as to proceeding with the ordered work and filing a written protest within the time therein specified.

Signature	**(Print name and title)** Edmund A Ruchi - Treasurer	**Date** 6-30-2011

STATE OF CALIFORNIA - DEPARTMENT OF TRANSPORTATION

CONTRACT CHANGE ORDER MEMORANDUM

TO: Deanna Vilcheck, ACM /	FILE: E.A. 04 - 0120S4
	CO-RTE-PM SF-80-12.7/13.2
FROM: William Howe, Senior R.E.	FED. NO. NO FED AID
CCO#: 62 SUPPLEMENT#: 0 Category Code: CDPG	CONTINGENCY BALANCE (incl. this change) $68,950,755.50
COST: $29,065.00 INCREASE ☑ DECREASE ☐	HEADQUARTERS APPROVAL REQUIRED? ☐ YES ☑ NO
SUPPLEMENTAL FUNDS PROVIDED: $0.00	IS THIS REQUEST IN ACCORDANCE WITH ENVIRONMENTAL DOCUMENTS? ☑ YES ☐ NO
CCO DESCRIPTION: Bent W9L North Temporary Shoring	**PROJECT DESCRIPTION:** YBITS-1 (Yerba Buena Island Transition Structures)

Original Contract Time:	Time Adj. This Change:	Previously Approved CCO Time Adjustments:	Percentage Time Adjusted: (including this change)	Total # of Unreconciled Deferred Time CCO(s): (including this change)
1390 Day(s)	0 Day(s)	0 Day(s)	0 %	8

THIS CHANGE ORDER PROVIDES FOR:

Compensation for additional costs incurred in the installation and removal of the temporary shoring for the Bent W9L North footing due to stage construction changes to Macalla Road.

This project, the Yerba Buena Island Transition Structure (YBITS), provides for the construction of two bridges which will connect eastbound and westbound traffic on the new east span of the San Francisco Oakland Bay Bridge (SFOBB) to the existing Yerba Buena Island (YBI) tunnel. The structures are comprised of concrete box girder bridges each approximately 26 meters wide, 40 meters high and 450 meters in length.

As part of this work, the contractor is to construct footing at Bent W9L. The footing is located adjacent to Macalla Road which provides access to the U.S. Coast Guard Base and an adjacent project for the SFOBB. Macalla Road was planned to be reconstructed in 2 stages with the first stage pushing traffic to the north to allow for the construction of the new southern side of the roadway.

In order to mitigate disruptions to the U.S. Coast Guard and the adjacent project, the reconstruction of Macalla Road was changed to be performed in one stage with the bulk of the work performed over a long weekend closure. This change eliminated the contractor's opportunity to build the W9L North footing with the road pushed away from the footing. The contractor will now have to place temporary shoring on the northern end of the footing in order to construct the footing with Macalla Road immediately adjacent to it. This change order compensates the contractor for the added costs associated with placing and removing the shoring.

Compensation for these costs shall be paid as an adjustment of compensation at an agreed lump sum of $29,065.00 which shall be financed from the contract's contingency funds. A cost analysis is on file.

No adjustment of contract time is warranted as the change will not affect the controlling operation.

Maintenance concurrence is not required as the change order shall not affect any permanent roadway features.

ADA Notice: For individuals with sensory disabilities, this document is available in alternate formats. For information call: (916) 654-6410 or TDD (916) 654-3880 or write Records and Forms Management, 1120 N Street, MS-89, Sacramento, CA 95814.

CONCURRED BY:		
Construction Engineer:	William Howe	Date 06.03.11
Bridge Engineer:	Mehran Ardakanian	Date 07.06.11
Project Engineer:	BOB ZANDIPOUR	Date 07/19/11
Project Manager:	KEN TERPSTRA	Date 07/25/11
FHWA Rep.:		Date
Environmental:		Date
Other (specify):		Date
Other (specify):		Date
District Prior Approval By:		Date
HQ (Issue Approve) By:		Date
Resident Engineer's Signature: William Howe		Date 06.03.11

ESTIMATE OF COST

	THIS REQUEST	TOTAL TO DATE
ITEMS	$0.00	$0.00
FORCE ACCOUNT	$0.00	$0.00
AGREED PRICE	$0.00	$0.00
ADJUSTMENT	$29,065.00	$29,065.00
TOTAL	$29,065.00	$29,065.00

FEDERAL PARTICIPATION

☐ PARTICIPATING ☐ PARTICIPATING IN PART ☑ NONE
☐ NON-PARTICIPATING (MAINTENANCE) ☐ NON-PARTICIPATING

FEDERAL SEGREGATION (if more than one Funding Source or P.I.P. type)
☐ CCO FUNDED PER CONTRACT ☐ CCO FUNDED AS FOLLOWS

FEDERAL FUNDING SOURCE	PERCENT

ADA Notice: For individuals with sensory disabilities, this document is available in alternate formats. For information call: (916) 654-6410 or TDD (916) 654-3880 or write Records and Forms Management, 1120 N Street, MS-89, Sacramento, CA 95814.

STATE OF CALIFORNIA - DEPARTMENT OF TRANSPORTATION

CONTRACT CHANGE ORDER

Change Requested by: Engineer

CCO: 63	Suppl. No. 0	Contract No. 04 - 0120S4	Road SF-80-12.7/13.2	FED. AID LOC.: NO FED AID

To: **M C M CONSTRUCTION INC**

You are directed to make the following changes from the plans and specifications or do the following described work not included in the plans and specifications for this contract. ***NOTE: This change order is not effective until approved by the Engineer.***

Description of work to be done, estimate of quantities and prices to be paid. (Segregate between additional work at contract price, agreed price and force account.) Unless otherwise stated, rates for rental of equipment cover only such time as equipment is actually used and no allowance will be made for idle time. This last percentage shown is the net accumulated increase or decrease from the original quantity in the Engineer's Estimate.

Extra Work at Force Account:

As directed by the Engineer, clean and coat exposed reinforcing bars and exposed reinforcement couplers at the Oakland Touchdown 1 Structure (Bridge No. 34-0006 R).

Cleaning shall be by wire brushing or abrasive blast cleaning to remove all dirt, loose rust, salt contamination and residue on the metal surfaces or as directed by the engineer. Immediately after cleaning, the surfaces shall be covered with one application of unthinned zinc-rich primer (organic vehicle type) conforming to the provisions in Section 91, "Paint", of the Standard Specifications, except that 2 applications shall be applied where directed by the engineer. Aerosol cans shall not be used. The paint shall be thoroughly mixed at the time of application.

This work will be paid for in accordance with Section 5-1.17 "Force Account Payment" of the Special Provisions, and Section 4-1.03D "Extra Work" of the Standard Specifications.

Estimated cost of Extra Work at Force Account $50,000.00

Estimated Cost: Increase ☑ **Decrease** ☐ **$50,000.00**

By reason of this order the time of completion will be adjusted as follows: 0 days

Submitted by

Signature	Resident Engineer	Date
	for Rajesh Oberoi, Senior R.E.	12/06/10

Approval Recommended by

Signature	Construction Engineer	Date
	for Rajesh Oberoi	12/06/10

Engineer Approval by

Signature	Construction Engineer	Date
	Rajesh Oberoi	12/22/10

We the undersigned contractor, have given careful consideration to the change proposed and agree, if this proposal is approved, that we will provide all equipment, furnish the materials, except as may otherwise be noted above, and perform all services necessary for the work above specified, and will accept as full payment therefor the prices shown above.

NOTE: If you, the contractor, do not sign acceptance of this order, your attention is directed to the requirements of the specifications as to proceeding with the ordered work and filing a written protest within the time therein specified.

Contractor Acceptance by

Signature	(Print name and title)	Date
	Edmund A. Ruchi - Treasurer	12-15-2010

STATE OF CALIFORNIA - DEPARTMENT OF TRANSPORTATION

CONTRACT CHANGE ORDER MEMORANDUM

DATE: 12/1/2010 Page 1 of 1

TO: Deanna Vilcheck, ACM /	FILE: E.A. 04 - 0120S4
	CO-RTE-PM SF-80-12.7/13.2
FROM: Rajesh Oberoi, Senior R.E.	FED. NO. NO FED AID
CCO#: 63 SUPPLEMENT#: 0 Category Code: CHXX	CONTINGENCY BALANCE (incl. this change) $23,182,874.00
COST: $50,000.00 INCREASE ☑ DECREASE ☐	HEADQUARTERS APPROVAL REQUIRED? ☐ YES ☑ NO
SUPPLEMENTAL FUNDS PROVIDED: $0.00	IS THIS REQUEST IN ACCORDANCE WITH ENVIRONMENTAL DOCUMENTS? ☑ YES ☐ NO
CCO DESCRIPTION: Clean & Coat Rebars and Couplers @ OTD 1	**PROJECT DESCRIPTION:** YBITS-1 (Yerba Buena Island Transition Structures)

Original Contract Time:	Time Adj. This Change:	Previously Approved CCO Time Adjustments:	Percentage Time Adjusted: (including this change)	Total # of Unreconciled Deferred Time CCO(s): (including this change)
1390 Day(s)	0 Day(s)	0 Day(s)	0 %	7

THIS CHANGE ORDER PROVIDES FOR:

Clean and coat exposed reinforcing bars and exposed reinforcement couplers at the Oakland Touchdown 1 Structures (Bridge No. 34-0006 R)

This contract calls for the construction of the Yerba Buena Island Transition Structures (YBITS) of the east span of the new San Francisco Oakland Bay Bridge (SFOBB).

In a memo dated October 3, 2010, Brian Maroney, Deputy Toll Bridge Program Manager recommended to the Toll Bridge Program Oversight Committee (TBPOC) that investigation for the Temporary Oakland Touchdown Detour (TOTDD) work will be by Contract Change Order. This recommendation was approved by the TBPOC in their October 7, 2010 meeting. Subsequent Department change orders have added investigation work for the TOTDD to the current project. During this investigation phase, it was noted that numerous protruding rebar dowels and couplers (primarily for bikepath beams, and at the end of Eastbound Frame 1) are left exposed to the elements, until the subsequent OTD2 contract completes the associated superstructure work. In order to provide protection for these rebar elements against corrosion, the Department will direct the contractor to clean the elements and provide a protective coating.

Compensation for this work shall be paid as extra work at force account, with a CCO amount of $50,000.00, which shall be funded by the contract's contingency funds. A cost estimate is on file.

No adjustment of contract time is warranted, as this change will not affect the controlling operation.

This change was requested by Brian Maroney, Deputy Toll Bridge Program Manager.
This CCO was concurred by Deanna Vilcheck, Construction Manager for the SFOBB YBITS and OTD projects.

Maintenance concurrence is not required as this doesn't affect any permanent roadway maintenance features.

CONCURRED BY:		
Construction Engineer: for Rajesh Oberoi	Date 12/06/10	
Bridge Engineer:	Date 12/06/10	
Project Engineer:	Date	
Project Manager:	Date	
FHWA Rep.:	Date	
Environmental:	Date	
Other (specify): Brian Maroney, Chief, Toll Design	Date 10/3/10	
Other (specify):	Date	
District Prior Approval By:	Date	
HQ (Issue Approval) By:	Date	
Resident Engineer's Signature:	Date 12/22/10	

ESTIMATE OF COST

	THIS REQUEST	TOTAL TO DATE
ITEMS	$0.00	$0.00
FORCE ACCOUNT	$50,000.00	$50,000.00
AGREED PRICE	$0.00	$0.00
ADJUSTMENT	$0.00	$0.00
TOTAL	$50,000.00	$50,000.00

FEDERAL PARTICIPATION

☐ PARTICIPATING ☐ PARTICIPATING IN PART ☑ NONE
☐ NON-PARTICIPATING (MAINTENANCE) ☐ NON-PARTICIPATING

FEDERAL SEGREGATION (if more than one Funding Source or P.I.P. type)
☑ CCO FUNDED PER CONTRACT ☐ CCO FUNDED AS FOLLOWS

FEDERAL FUNDING SOURCE	PERCENT

ADA Notice: For individuals with sensory disabilities, this document is available in alternate formats. For information call: (916) 654-6410 or TOD (916) 654-3880 or write Records and Forms Management, 1120 N Street, MS-89, Sacramento, CA 95814.

CONTRACT CHANGE ORDER

Change Requested by: Engineer

CCO: 64	Suppl. No. 0	Contract No. 04 - 0120S4	Road SF-80-12.7/13.2	FED. AID LOC.: NO FED AID

To: M C M CONSTRUCTION INC

You are directed to make the following changes from the plans and specifications or do the following described work not included in the plans and specifications for this contract. ***NOTE: This change order is not effective until approved by the Engineer.***

Description of work to be done, estimate of quantities and prices to be paid. (Segregate between additional work at contract price, agreed price and force account.) Unless otherwise stated, rates for rental of equipment cover only such time as equipment is actually used and no allowance will be made for idle time. This last percentage shown is the net accumulated increase or decrease from the original quantity in the Engineer's Estimate.

Revise cross section dimensions as shown on revised contract plan sheet no. 2R1 of 806 (sheet 2 of 2 of this change order).

Estimate of Increase in Contract Item at Contract Price:

Item No. 40: REMOVE EPOXY ASPHALT CONCRETE SURFACING
12.15 M2 (+6.08%) @ $40.00 /M2 = +$486.00 (+6.08%)

Item No. 97: FURNISH POLYESTER CONCRETE OVERLAY
0.24 M3 (+4.00%) @ $3,000.00 /M3 = +$720.00 (+4.00%)

Item No. 98: PLACE POLYESTER CONCRETE OVERLAY
12.15 M2 (+4.34%) @ $20.00 /M2 = +$243.00 (+4.34%)

Estimated total cost for Increase in Contract Item.....$1,449.00

The above sums constitute full compensation, including all markups, for all costs associated with this change.

No adjustment of contract time is warranted as the work will not affect the controlling operation.

Estimated Cost: Increase ☑ Decrease ☐ **$1,449.00**

By reason of this order the time of completion will be adjusted as follows: 0 days

Submitted by

Signature	Resident Engineer	Date
Rajesh Oberoi	Rajesh Oberoi, Senior R.E.	1/25/11

Approval Recommended by

Signature	Resident Engineer	Date
Rajesh Oberoi	Rajesh Oberoi	3/29/11

Engineer Approval by

Signature	Resident Engineer	Date
Rajesh Oberoi	Rajesh Oberoi	3/29/11

We the undersigned contractor, have given careful consideration to the change proposed and agree, if this proposal is approved, that we will provide all equipment, furnish the materials, except as may otherwise be noted above, and perform all services necessary for the work above specified, and will accept as full payment therefor the prices shown above.

NOTE: If you, the contractor, do not sign acceptance of this order, your attention is directed to the requirements of the specifications as to proceeding with the ordered work and filing a written protest within the time therein specified.

Contractor Acceptance by

Signature	(Print name and title)	Date
	EDMUNDO A. PUCHI, TREASURER	3/14/11

Dist	COUNTY	ROUTE	KILOMETER POST TOTAL PROJECT	SHEET No.	TOTAL SHEETS
04	SF	80	12.7/13.2	2R1	806

REGISTERED CIVIL ENGINEER DATE

6-23-08
PLANS APPROVAL DATE

REGISTERED PROFESSIONAL ENGINEER T.T. Loi No. 63630 Exp. 9-30-08 CIVIL STATE OF CALIFORNIA

THE STATE OF CALIFORNIA OR ITS OFFICERS OR AGENTS SHALL NOT BE RESPONSIBLE FOR THE ACCURACY OR COMPLETENESS OF ELECTRONIC COPIES OF THIS PLAN SHEET.

REGISTERED PROFESSIONAL ENGINEER Brian M. Wood No. 76969 Exp. 12-31-10 CIVIL STATE OF CALIFORNIA

Brian M Wood
FOR REVISIONS ONLY
12/07/10 1

MARK	DATE	REVISIONS	BY	CH'D
1	12/07/10	REVISED E-LINE TYPICAL SECTION	IP	

CONTRACT CHANGE ORDER NO. ____
SHEET ____ OF ____

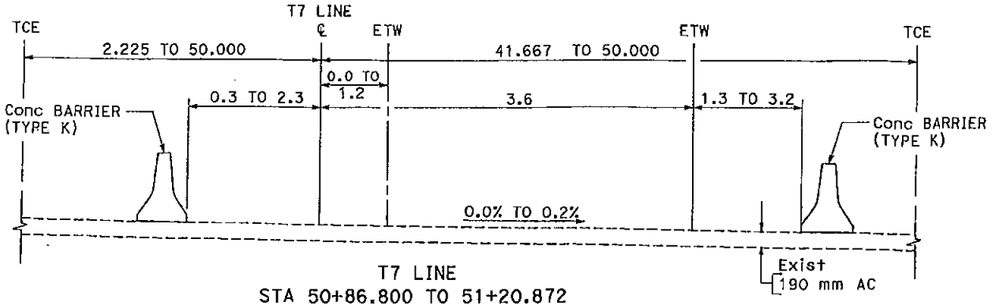

T7 LINE
STA 50+86.800 TO 51+20.872

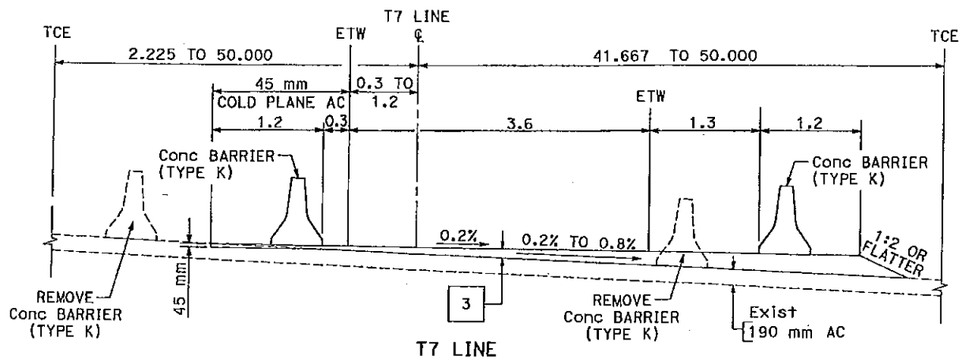

T7 LINE
STA 50+58.000 TO 50+86.800

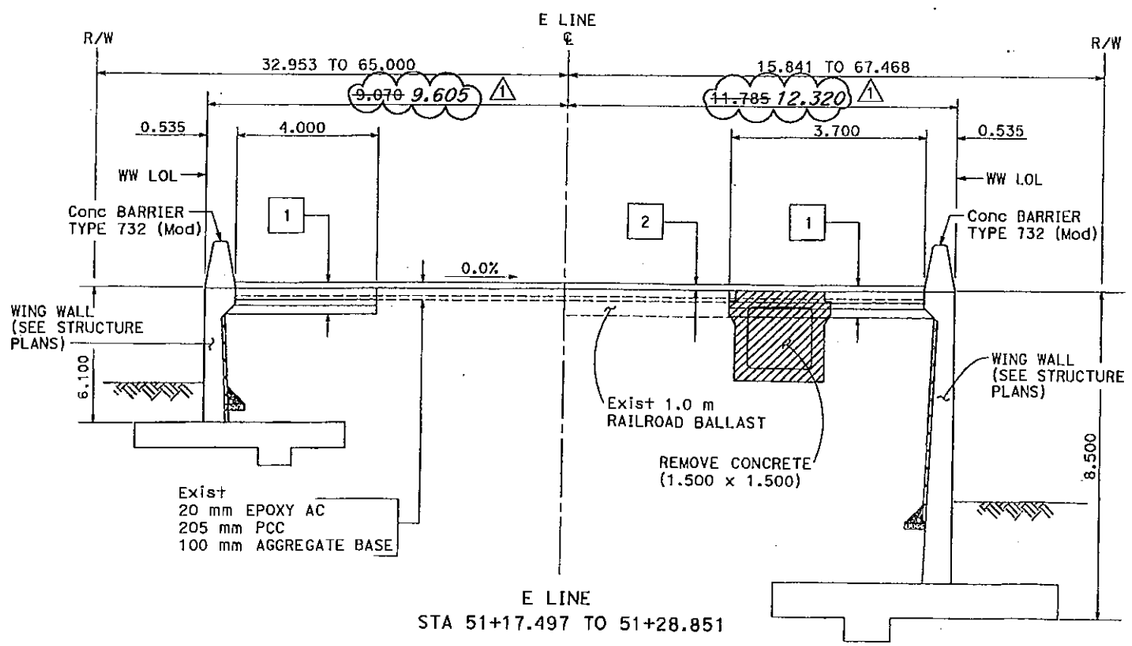

E LINE
STA 51+17.497 TO 51+28.851

TYPICAL STRUCTURAL SECTIONS

1
- 20 mm POLYESTER CONCRETE
- 290 mm PCC
- BOND BREAKER (POLYETHYLENE FILM)
- 150 mm PCC
- 215 mm Cl 3 AB

2
- 20 mm REMOVE EPOXY AC SURFACING
- 20 mm POLYESTER CONCRETE

3
- 45 TO 300 mm HMA SURFACING (TYPE A)

4
- 135 mm HMA (TYPE A)
- 235 mm Cl 3 AB

ABBREVIATIONS:

TCE TEMPORARY CONSTRUCTION EASEMENT

LEGEND:

REMOVE CONCRETE

CONTRACT NO. 04-012054
CONTRACT CHANGE ORDER NO. 064 SO
SHEET 2 OF 2

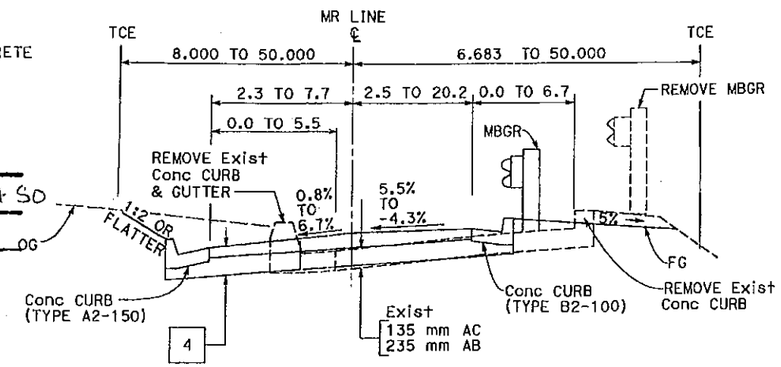

MR LINE
STA 0+92.53 TO 1+74.945

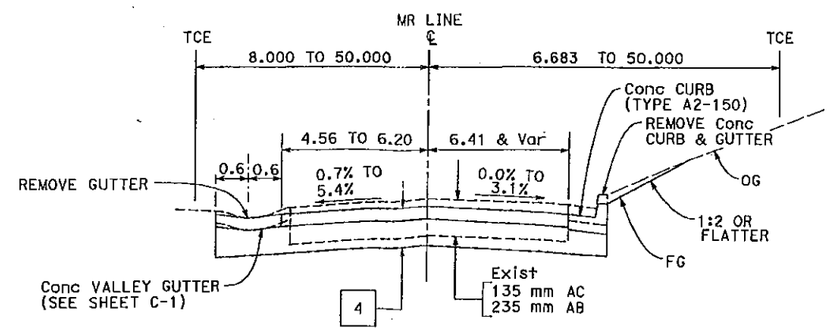

MR LINE
STA 0+80.00 TO 0+92.53

TYPICAL CROSS SECTIONS

NO SCALE

ALL DIMENSIONS ARE IN METERS UNLESS OTHERWISE SHOWN

X-1

STATE OF CALIFORNIA - DEPARTMENT OF TRANSPORTATION
Caltrans DESIGN

FUNCTIONAL SUPERVISOR: BOB ZANDIPOUR
CALCULATED-DESIGNED BY: TRINH LAI
CHECKED BY: BOB ZANDIPOUR
REVISED BY: TL
DATE REVISED: 10/07

LAST REVISION 03-14-08
DATE PLOTTED => 07-DEC-2010
TIME PLOTTED => 11:03

STATE OF CALIFORNIA - DEPARTMENT OF TRANSPORTATION

CONTRACT CHANGE ORDER MEMORANDUM

DATE: 1/24/2011 Page 1 of 1

TO: Deanna Vilcheck, ACM /	FILE: E.A. 04 - 0120S4
FROM: Rajesh Oberoi, Senior R.E.	CO-RTE-PM SF-80-12.7/13.2
	FED. NO. NO FED AID
CCO#: 64 SUPPLEMENT#: 0 Category Code: ~~CJPH~~ CJPU	CONTINGENCY BALANCE (incl. this change) $22,092,387.00
COST: $1,449.00 INCREASE ☑ DECREASE ☐	HEADQUARTERS APPROVAL REQUIRED? ☐ YES ☑ NO
SUPPLEMENTAL FUNDS PROVIDED: $0.00	IS THIS REQUEST IN ACCORDANCE WITH ENVIRONMENTAL DOCUMENTS? ☑ YES ☐ NO
CCO DESCRIPTION: E Line Roadway Cross Section Revision	**PROJECT DESCRIPTION:** YBITS-1 (Yerba Buena Island Transition Structures)

Original Contract Time:	Time Adj. This Change:	Previously Approved CCO Time Adjustments:	Percentage Time Adjusted: (including this change)	Total # of Unreconciled Deferred Time CCO(s): (including this change)
1390 Day(s)	0 Day(s)	0 Day(s)	0 %	0

THIS CHANGE ORDER PROVIDES FOR:

Provide funds to compensate the Contractor for changes due to a revised cross section. The cross section was revised to match the structural drawings. Work will include additional epoxy removal, furnishing and installing additional polyester concrete overlay.

This work will be paid for as increase in Contract Items at Contract Unit Prices for items 40, 97 and 98, with a total estimated cost of $1,449. This will be funded from the project's contingency fund. A cost analysis is on file.

This Change Order was requested by Bob Zandipour, Senior Transportation Engineer, Toll Bridge Design.

No adjustment of contract time is warranted, as this change will not affect the controlling operation.

CONCURRED BY:

Construction Engineer:	Rajesh Oberoi	Date 3/29/11
Bridge Engineer:		Date
Project Engineer:		Date
Project Manager:		Date
FHWA Rep.:		Date
Environmental:		Date
Other (specify):		Date
Other (specify):		Date
District Prior Approval By:		Date
HQ (Issue Approve) By:		Date
Resident Engineer's Signature:	Rajesh Oberoi	Date 3/29/11

ESTIMATE OF COST

	THIS REQUEST	TOTAL TO DATE
ITEMS	$1,449.00	$1,449.00
FORCE ACCOUNT	$0.00	$0.00
AGREED PRICE	$0.00	$0.00
ADJUSTMENT	$0.00	$0.00
TOTAL	$1,449.00	$1,449.00

FEDERAL PARTICIPATION

☐ PARTICIPATING ☐ PARTICIPATING IN PART ☑ NONE
☐ NON-PARTICIPATING (MAINTENANCE) ☐ NON-PARTICIPATING

FEDERAL SEGREGATION (if more than one Funding Source or P.I.P. type)
☑ CCO FUNDED PER CONTRACT ☐ CCO FUNDED AS FOLLOWS

FEDERAL FUNDING SOURCE	PERCENT

ADA Notice: For individuals with sensory disabilities, this document is available in alternate formats. For information call: (916) 654-6410 or TDD (916) 654-3880 or write Records and Forms Management, 1120 N Street, MS-89, Sacramento, CA 95814.

STATE OF CALIFORNIA - DEPARTMENT OF TRANSPORTATION

CONTRACT CHANGE ORDER

Change Requested by: Engineer

CCO 67	Suppl. No. 0	Contract No. 04 - 0120S4	Road SF-80-12.7/13.2	FED. AID LOC.: NO FED AID

To: **M C M CONSTRUCTION INC**

You are directed to make the following changes from the plans and specifications or do the following described work not included in the plans and specifications for this contract. ***NOTE: This change order is not effective until approved by the Engineer.***

Description of work to be done, estimate of quantities and prices to be paid. (Segregate between additional work at contract price, agreed price and force account.) Unless otherwise stated, rates for rental of equipment cover only such time as equipment is actually used and no allowance will be made for idle time. This last percentage shown is the net accumulated increase or decrease from the original quantity in the Engineer's Estimate.

Adjustment of Compensation at Lump Sum:

Provide all labor, equipment and materials necessary to make changes to existing pier E1 RTU-8 platform railings per plan sheets AS-20 through AS-26 (Sheet Nos. 2 through 8 of this change order).

Work includes preparation of shop drawings, fabrication and installation, including welding inspection. The connection of the closure angle to the existing post will be welded in the field, in lieu of bolted connection. For this work, the Contractor shall be compensated an Agreed Lump Sum of $28,561.00, that constitutes full and final compensation, including all markups, for all additional costs incurred as a result of this work.

Adjustment of Compensation @ Agreed Lump Sum = $28,561.00

The rails associated with the Pier E1 RTU-8 under this CCO are designated as Miscellaneous Metal and shall be fabricated in accordance with AWS D1.1. The fabricator is not required to submit a Welding Quality Control Plan (WQCP). The previously approved Field WQCP covers the field welding required for this CCO.

This lump sum price excludes the cost of traffic control, which will be paid for under a separate change order.

Estimated Cost: Increase ☑ **Decrease** ☐ **$28,561.00**

By reason of this order the time of completion will be adjusted as follows: 0 days

Submitted by

Signature	Resident Engineer	Date
William Howe	William Howe, Senior R.E.	05·03·12

Approval Recommended by

Signature	Senior Resident Engineer	Date
William Howe	William Howe	05·03·12

Engineer Approval by

Signature	Senior Resident Engineer	Date
William Howe	William Howe	08-14-12

We the undersigned contractor, have given careful consideration to the change proposed and agree, if this proposal is approved, that we will provide all equipment, furnish the materials, except as may otherwise be noted above, and perform all services necessary for the work above specified, and will accept as full payment therefor the prices shown above.

NOTE: If you, the contractor, do not sign acceptance of this order, your attention is directed to the requirements of the specifications as to proceeding with the ordered work and filing a written protest within the time therein specified.

Contractor Acceptance by

Signature	(Print name and title)	Date
	Armando A. Rueda - Treasurer	8-10-2012

DWG NO.	DRAWING TITLE
AS-20	INDEX OF DRAWINGS GENERAL STRUCTURAL NOTES
AS-21	GENERAL PLAN AND REMOVAL DETAILS
AS-22	GUARDRAIL PLAN
AS-23	BASE PLATE AND ANCHOR BOLTS LAYOUT
AS-24	SECTIONS AND DETAILS
AS-25	SECTIONS
AS-26	DETAILS

GENERAL NOTES *

A. STRUCTURAL STEEL

A1. All structural steel shall be AASHTO M270M Grade 36.

A2. Steel pipe shall be ASTM A-53 grade B.

A3. All bolts shall be conforming to ASTM A325 and shall be 19.05 mm diameter unless noted otherwise on plans.

A4. All structural steel shall be Hot-dipped galvanized.

B. GROUT

B1. Grout under railing base plates shall be sand cement non-shrink grout conforming to ASTM C1107 with ultimate compressive strength of 35 MPa at 28 days.

C. DESIGN LOADS

C1. Railing Load
The design loading for railing shall W=0.73 kN per linear meter (50 lb per linear foot), transversely and vertically, acting simultaneously on each longitudinal member.

C2. Wind Load
The platform is designed for uniformly distributed wind load on vertical surfaces of 2.4 kPa (50psf)

D. CODES AND STANDARDS

D.1 The structure has been designed in accordance with the following applicable codes and industry standards:

1. CBC California Building Code, 2001 Edition.
2. ACI American Concrete Institute "Building Code Requirements for Reinforced Concrete (ACI 318R-05)"
3. AISC American Institute of Steel Construction "Specification for structural steel buildings" (ANSI/AISC 360-05)
4. Section 8-3 "Welding of Special Provisions for Welding Requirements"

* These notes apply to drawings AS-20 through AS-26 only.

ABBREVIATIONS

AB	Anchor Bolt
&	And
@	At
∠	Angle
Add'l	Additional
Bm	Beam
Bgr	Bearing
Bott	Bottom
B.O.	Bottom of
C	Channel(Structural)
Col	Column
Conc	Concrete
Const	Construction
Const Jt	Construction Joint
Cont	Continuous
Contr	Contraction
Comp	Composite
℄	Center Line
Clr	Clear
DL	Dead Load
Deg or °	Degree
Det	Detail
Diag	Diagonal
Dia or ø	Diameter
Dim	Dimension
Dbl	Double
DN	Down
Dwg	Drawing
Do.	Ditto
Ea	Each
EF	Each Face
EW	Each way
EL	Elevation
EQ or =	Equal
Exp	Expansion
F to F	Face to Face
Fin	Finish
F.S.	Far Side
Ga	Gage
Galv	Galvanized
Gr	Grade
HR	Hand Rail
Ht	Height
HP	High Point
Horiz	Horizontal
ID	Inside Diameter
IF	Inside Face
Inv	Invert
Jt	Joint
kg	Kilogram
kN	Kilonewton
kNa	Kilopascal
LS	Left side
L	Length
Lin	Linear, Lineal
LL	Live Load
Lg	Long
LP	Low Point
MB	Machine Bolt
Mtl	Material
Max	Maximum
MPa	Megapascal
m²	Meter
mm²	Millimeter
Min	Minimum
Misc	Miscellaneous
NF	Near Face
Neg	Negative
Noml	Nominal
NIC	Not in Contract
No.	Number
N.S.	Near Side
OC	On Center
Opng	Opening
Opp H	Opposite Hand
OD	Outside Diameter
O.F.	Outside Face
PL	Plate
R	Radius
Ref	Reference
Reinf	Reinforcing
RC	Reinforced Concrete
Rev	Revision or Revise
RS	Right Side
Sch	Schedule
Sect	Section
Sht	Sheet
Sim	Similar
Spec	Specification
Sq	Square
m	Square Meter
mm	Square Millimeter
Std	Standard
Stl	Steel
Stiff	Stiffener
Sym	Symmetrical
T & B	Top and Bottom
T.O.	Top of
T.O.C	Top of Concrete
T.O.P	Top of Plate
T.O.S	Top of Steel
Typ	Typical
UNO	Unless Noted Otherwise
Vert	Vertical
WP	Work Point
Wt	Weight
WL	Wind Load
W/	With

SYMBOLS

A / AS-4 — Elevation identification; Sheet number on which elevation is drawn or taken

A / AS-4 — Section identifies; Sheet number on which section is drawn or taken

2 / AS-4 — Detail number; Sheet number on which detail is drawn or taken

2 / - — Detail or section number; Detail or section drawn on same sheet where detail taken or section cut

Caltrans Metric

DIST	COUNTY	ROUTE	KILOMETER POST TOTAL PROJECT	SHEET No	TOTAL SHEETS
04	SF, ALA	80	12.2/14.3 0.0/4.0		806

Gregory Benkovich 8/25/11
REGISTERED CIVIL ENGINEER

PLANS APPROVAL DATE

REGISTERED PROFESSIONAL ENGINEER — Gregory Benkovich — No. C40518 — Exp. 3/31/13 — CIVIL — STATE OF CALIFORNIA

The State of California or its officers or agents shall not be responsible for the accuracy or completeness of electronic copies of this plan sheet.

Parsons Brinckerhoff Quade & Douglas, Inc.
303 Second Street, Suite 700N
San Francisco, CA 94107

Caltrans now has a web site! To get to the web site, go to: http://www.dot.ca.gov

MARK	DATE	DESCRIPTIONS	BY	CH'D
0	09/07/11	Railing Modification	GB	MSO

REVISIONS

CONTRACT CHANGE ORDER NO. 67
SHEET 2 OF 8

ALL DIMENSIONS ARE IN MILLIMETERS UNLESS OTHERWISE SHOWN

DESIGN OVERSIGHT
SIGN OFF DATE

	BY	CHECKED
DESIGN	G. Benkovich	W.S. Owyang
DETAILS	O. Kurnovskaya	G. Benkovich
QUANTITIES	G. Benkovich	W.S. Owyang

PREPARED FOR THE STATE OF CALIFORNIA DEPARTMENT OF TRANSPORTATION

Trinh Loi
PROJECT ENGINEER

BRIDGE NO. 34-0006
KILOMETER POST 12.2/14.3 0.0/4.0

RTU-8 UTILITY PLATFORM
SERVICE PLATFORMS GENERAL STRUCTURAL NOTES

AS-20

DESIGN DETAIL SHEET (METRIC) (REV. 3/1/98)

ORIGINAL SCALE IN MILLIMETERS FOR REDUCED PLANS 0 10 20 30 40 50 60 70 80 90 100

CU 04251

DISREGARD PRINTS BEARING EARLIER REVISION DATES

REVISION DATES (PRELIMINARY STAGE ONLY)

SHEET OF

FILE => rtu-as020.dgn

USERNAME => FJSCO DATE PLOTTED => 9/6/2011 TIME PLOTTED => 3:54:44 PM

*REQUEST

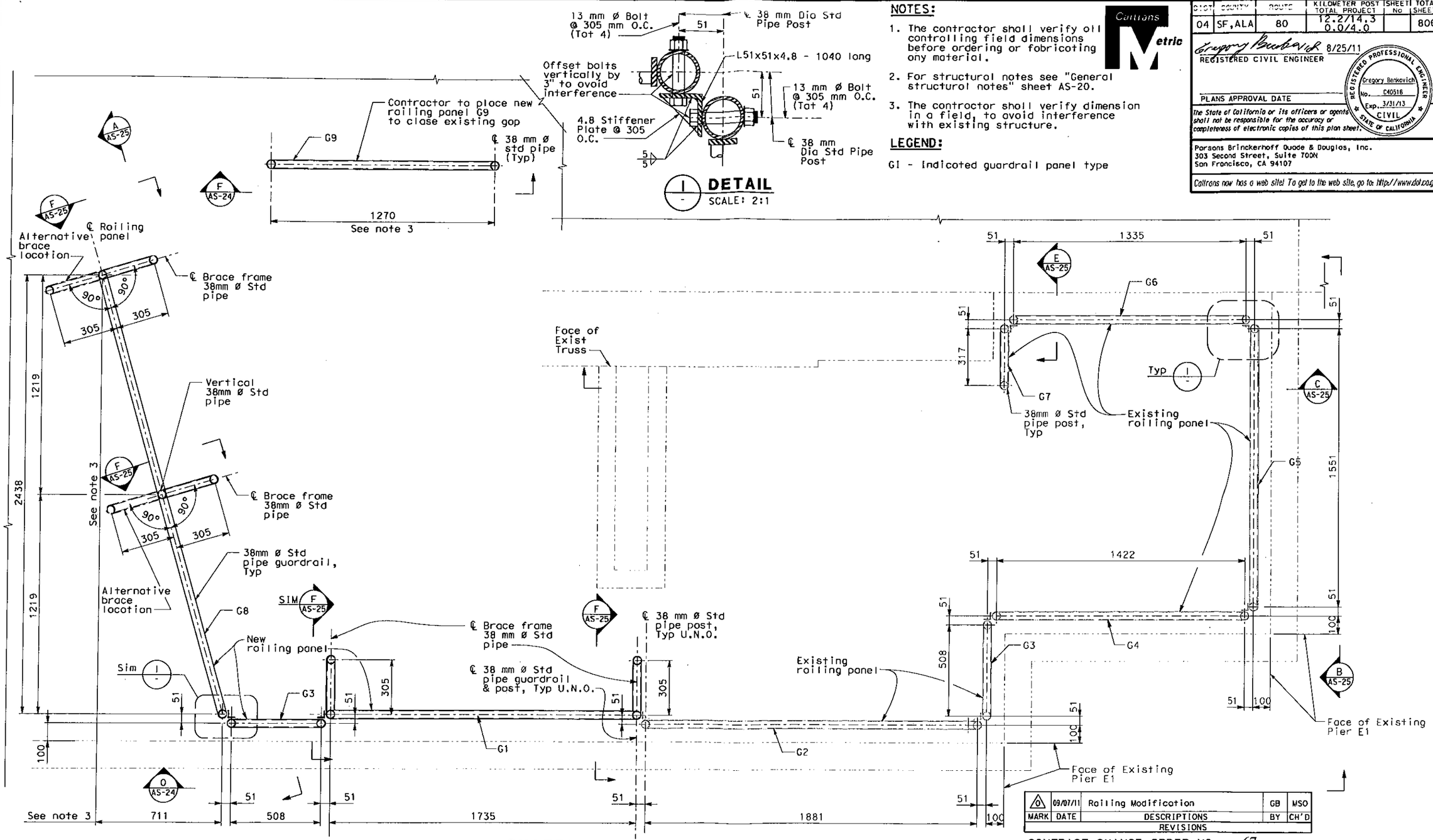

GUARDRAIL PLAN

SCALE: 1:10

NOTES:

1. The contractor shall verify all controlling field dimensions before ordering or fabricating any material.
2. For structural notes see "General structural notes" sheet AS-20.
3. The contractor shall verify dimension in a field, to avoid interference with existing structure.

LEGEND:

G1 - Indicated guardrail panel type

Caltrans Metric

DIST	COUNTY	ROUTE	KILOMETER POST TOTAL PROJECT	SHEET NO	TOTAL SHEETS
04	SF,ALA	80	12.2/14.3 0.0/4.0		806

Gregory Benkovich 8/25/11
REGISTERED CIVIL ENGINEER

PLANS APPROVAL DATE

REGISTERED PROFESSIONAL ENGINEER Gregory Benkovich No. C40516 Exp. 3/31/13 CIVIL STATE OF CALIFORNIA

The State of California or its officers or agents shall not be responsible for the accuracy or completeness of electronic copies of this plan sheet.

Parsons Brinckerhoff Quade & Douglas, Inc.
303 Second Street, Suite 700N
San Francisco, CA 94107

Caltrans now has a web site! To get to the web site, go to: http://www.dot.ca.gov

MARK	DATE	DESCRIPTIONS	BY	CH'D
0	09/07/11	Railing Modification	GB	MSO

REVISIONS

CONTRACT CHANGE ORDER NO. 67
SHEET 4 OF 8

ALL DIMENSIONS ARE IN MILLIMETERS UNLESS OTHERWISE SHOWN

DESIGN	BY G. Benkovich	CHECKED M.S. Owyang	
DETAILS	BY O. Kurnavskaya	CHECKED G. Benkovich	
QUANTITIES	BY G. Benkovich	CHECKED M.S. Owyang	

DESIGN OVERSIGHT

SIGN OFF DATE

DESIGN DETAIL SHEET (METRIC) (REV. 3/1/98)

PREPARED FOR THE STATE OF CALIFORNIA DEPARTMENT OF TRANSPORTATION

Trinh Lai
PROJECT ENGINEER

CU 04251

BRIDGE NO. 34-0006
KILOMETER POST 12.2/14.3 0.0/4.0

RTU-8 UTILITY PLATFORM

GUARDRAIL PLAN

AS-22

SHEET OF -

DISREGARD PRINTS BEARING EARLIER REVISION DATES

REVISION DATES (PRELIMINARY STAGE ONLY)

ORIGINAL SCALE IN MILLIMETERS FOR REDUCED PLANS 0 10 20 30 40 50 60 70 80 90 100

FILE => rtu-as022.dgn

USERNAME => fusco DATE PLOTTED => 9/7/2011 TIME PLOTTED => 11:41:41 AM

$FREQUEST

DIST	COUNTY	ROUTE	KILOMETER POST TOTAL PROJECT	SHEET NO	TOTAL SHEETS
04	SF, ALA	80	12.2/14.3 0.0/4.0		806

Caltrans Metric

Gregory Benkovich 8/25/11
REGISTERED CIVIL ENGINEER

PLANS APPROVAL DATE

REGISTERED PROFESSIONAL ENGINEER — Gregory Benkovich — No. C40518 — Exp. 3/31/13 — CIVIL — STATE OF CALIFORNIA

The State of California or its officers or agents shall not be responsible for the accuracy or completeness of electronic copies of this plan sheet.

Parsons Brinckerhoff Quade & Douglas, Inc.
303 Second Street, Suite 700N
San Francisco, CA 94107

Caltrans now has a web site! To get to the web site, go to: http://www.dot.ca.gov

NOTES:

1. The contractor shall verify all controlling field dimensions before ordering or fabricating any material.
2. For structural notes see "General structural notes" sheet AS-20.
3. All base plate types are type 1 U.N.O.

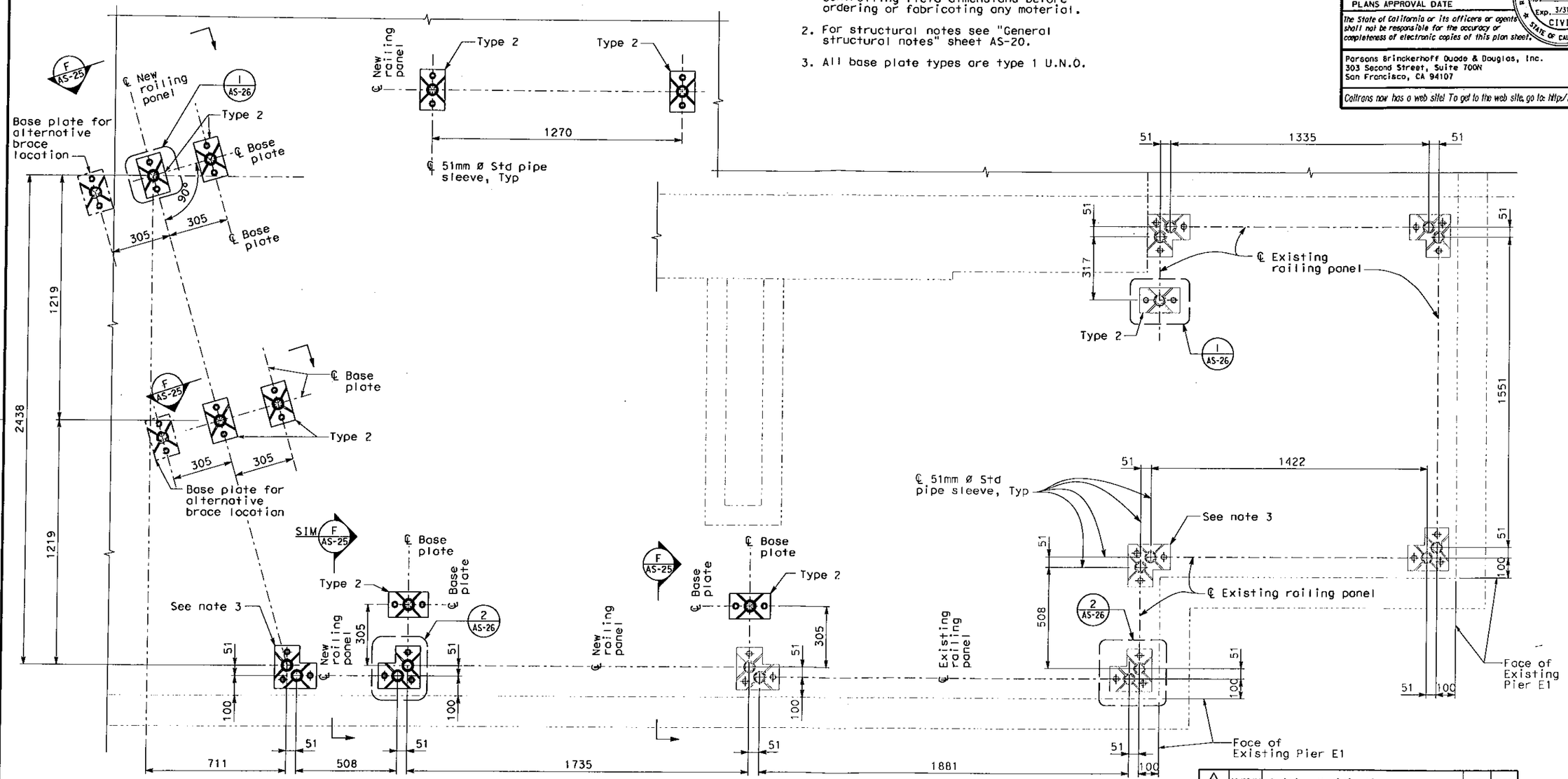

BASE PLATE AND ANCHOR BOLTS LAYOUT

SCALE: 1:10

MARK	DATE	DESCRIPTIONS	BY	CH'D
0	09/07/11	Railing Modification	GB	MSO

REVISIONS

CONTRACT CHANGE ORDER NO. 67
SHEET 5 OF 8

ALL DIMENSIONS ARE IN MILLIMETERS UNLESS OTHERWISE SHOWN

DESIGN OVERSIGHT
SIGN OFF DATE

	BY	CHECKED
DESIGN	G. Benkovich	M.S. Owyong
DETAILS	O. Kurnavskaya	G. Benkovich
QUANTITIES	G. Benkovich	M.S. Owyong

PREPARED FOR THE STATE OF CALIFORNIA DEPARTMENT OF TRANSPORTATION

Trinh Loi
PROJECT ENGINEER

BRIDGE NO. 34-0006
KILOMETER POST 12.2/14.3 0.0/4.0

RTU-8 UTILITY PLATFORM

BASE PLATE AND ANCHOR BOLTS LAYOUT

AS-23

DESIGN DETAIL SHEET (METRIC) (REV. 3/1/98)

ORIGINAL SCALE IN MILLIMETERS FOR REDUCED PLANS 0 10 20 30 40 50 60 70 80 90 100

CU 04251

DISREGARD PRINTS BEARING EARLIER REVISION DATES

REVISION DATES (PRELIMINARY STAGE ONLY) SHEET OF

FILE => rtu-as023.dgn

USERNAME => FUSCO DATE PLOTTED => 9/7/2011 TIME PLOTTED => 9:14:25 AM

SF REQUEST

DIST	COUNTY	ROUTE	KILOMETER POST TOTAL PROJECT	SHEET No	TOTAL SHEETS
04	SF, ALA	80	12.2/14.3 0.0/4.0		806

Caltrans Metric

Gregory Benkovich 8/25/11
REGISTERED CIVIL ENGINEER

PLANS APPROVAL DATE

REGISTERED PROFESSIONAL ENGINEER Gregory Benkovich No. C40518 Exp. 3/31/13 CIVIL STATE OF CALIFORNIA

The State of California or its officers or agents shall not be responsible for the accuracy or completeness of electronic copies of this plan sheet.

Parsons Brinckerhoff Quade & Douglas, Inc.
303 Second Street, Suite 700N
San Francisco, CA 94107

Caltrans now has a web site! To get to the web site, go to: http://www.dot.ca.gov

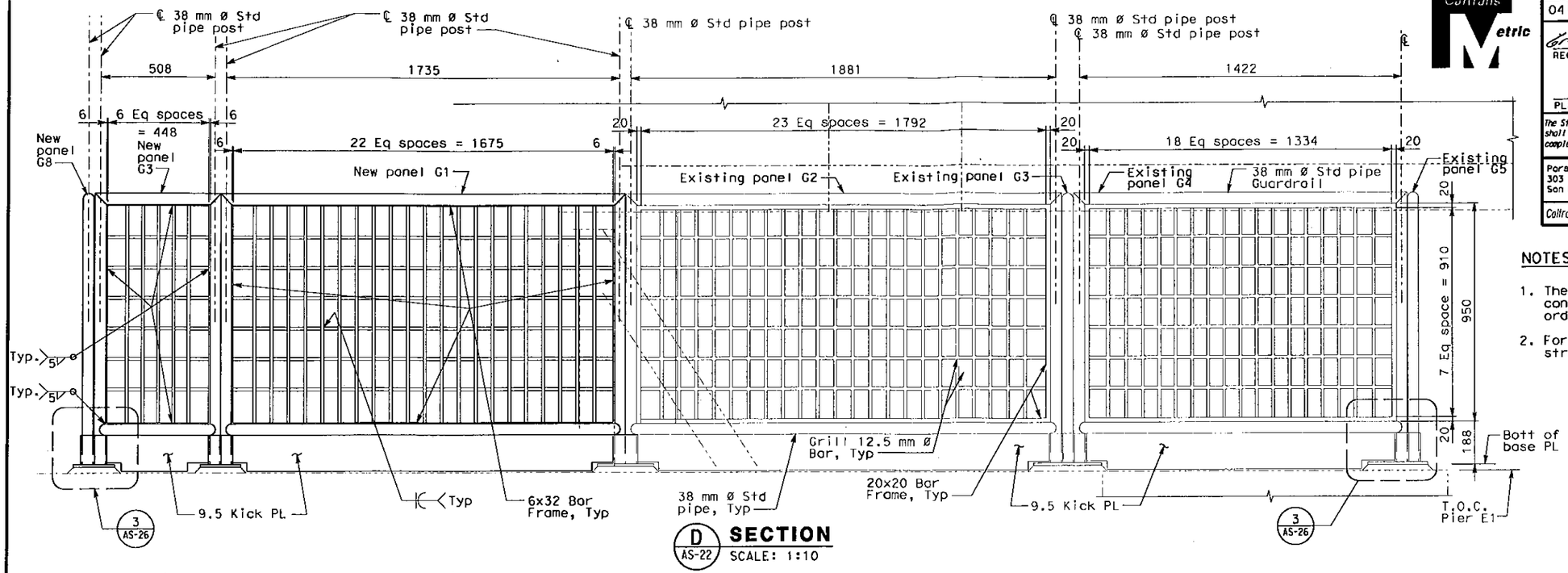

D AS-22 **SECTION**
SCALE: 1:10

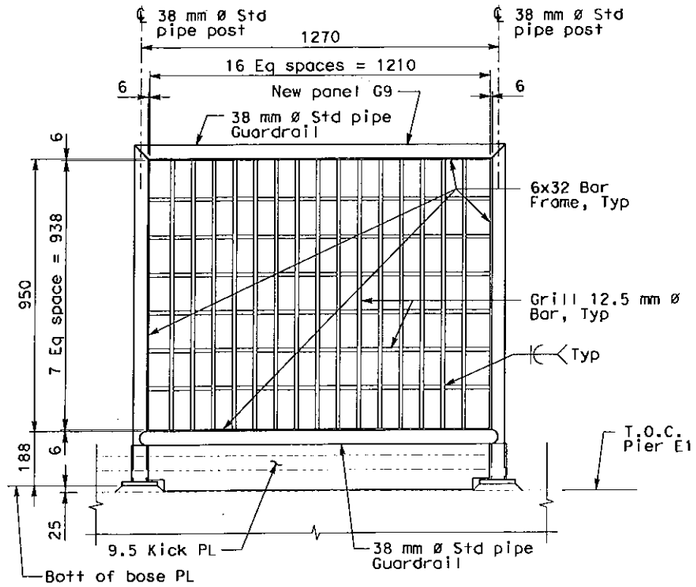

F AS-22 **SECTION**
SCALE: 1:10

NOTES:

1. The contractor shall verify all controlling field dimensions before ordering or fabricating any material.
2. For structural notes see "General structural notes" sheet AS-20.

MARK	DATE	DESCRIPTIONS	BY	CH'D
0	09/07/11	Railing Modification	GB	MSO

REVISIONS

CONTRACT CHANGE ORDER NO. 67
SHEET 6 OF 8

ALL DIMENSIONS ARE IN MILLIMETERS UNLESS OTHERWISE SHOWN

DESIGN	BY G. Benkovich	CHECKED W.S. Owyong	
DETAILS	BY O. Kurnavskaya	CHECKED G. Benkovich	
QUANTITIES	BY G. Benkovich	CHECKED W.S. Owyong	

PREPARED FOR THE STATE OF CALIFORNIA DEPARTMENT OF TRANSPORTATION

Trinh Lai
PROJECT ENGINEER

BRIDGE NO. 34-0006
KILOMETER POST 12.2/14.3 0.0/4.0

RTU-8 UTILITY PLATFORM

SECTIONS AND DETAIL

AS-24

DESIGN OVERSIGHT
SIGN OFF DATE
DESIGN DETAIL SHEET (METRIC) (REV. 3/1/98)

ORIGINAL SCALE IN MILLIMETERS FOR REDUCED PLANS 0 10 20 30 40 50 60 70 80 90 100

CU 04251

DISREGARD PRINTS BEARING EARLIER REVISION DATES

REVISION DATES (PRELIMINARY STAGE ONLY) SHEET OF

FILE => rtu-as024.dgn

USERNAME => fusco DATE PLOTTED => 9/7/2011 TIME PLOTTED => 11:42:16 AM

$FREQUEST

DIST	COUNTY	ROUTE	KILOMETER POST TOTAL PROJECT	SHEET NO	TOTAL SHEETS
04	SF,ALA	80	12.2/14.3 0.0/4.0		806

Gregory Benkovich 8/25/11
REGISTERED CIVIL ENGINEER

PLANS APPROVAL DATE

REGISTERED PROFESSIONAL ENGINEER Gregory Benkovich No. C40518 Exp. 3/31/13 CIVIL STATE OF CALIFORNIA

The State of California or its officers or agents shall not be responsible for the accuracy or completeness of electronic copies of this plan sheet.

Parsons Brinckerhoff Quade & Douglas, Inc.
303 Second Street, Suite 700N
San Francisco, CA 94107

Caltrans now has a web site! To get to the web site, go to: http://www.dot.ca.gov

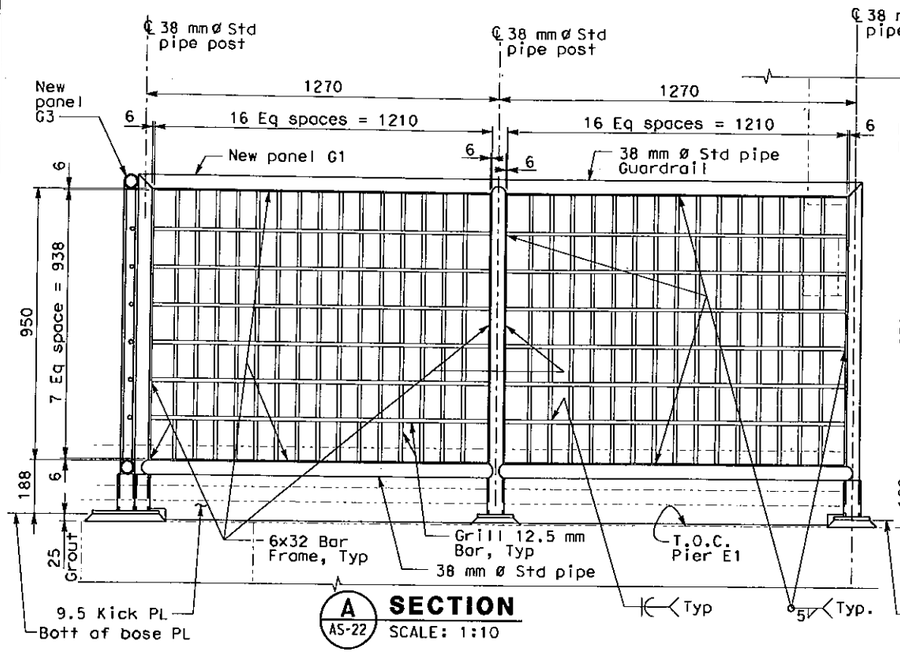

A AS-22 **SECTION** SCALE: 1:10

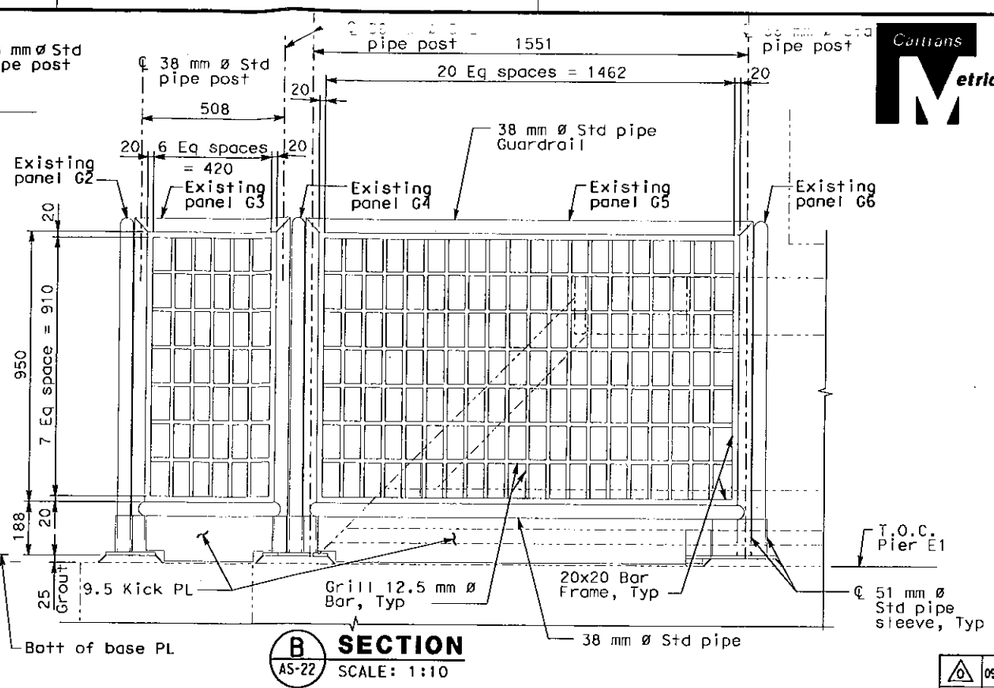

B AS-22 **SECTION** SCALE: 1:10

NOTES:

1. The contractor shall verify all controlling field dimensions before ordering or fabricating any material.
2. For structural notes see "General structural notes" sheet AS-20.

MARK	DATE	DESCRIPTIONS	BY	CH'D
0	09/07/11	Railing Modification	GB	MSO

REVISIONS

CONTRACT CHANGE ORDER NO. 67
SHEET 7 OF 8

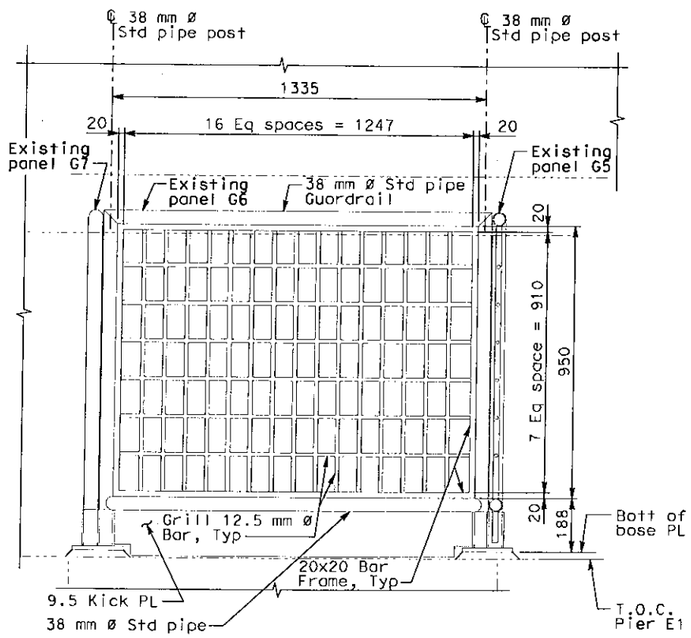

C AS-22 **SECTION** SCALE: 1:10

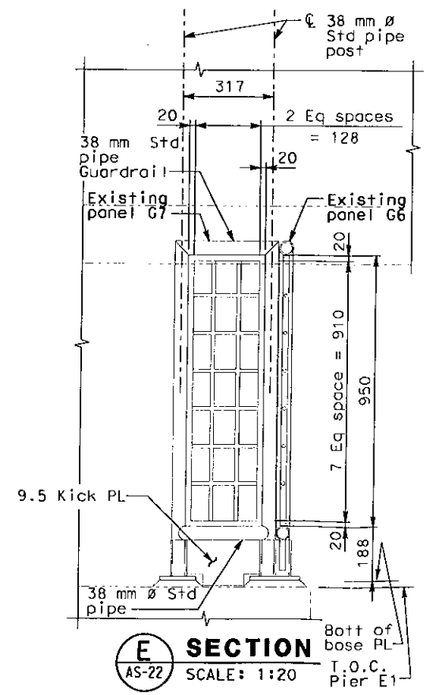

E AS-22 **SECTION** SCALE: 1:20

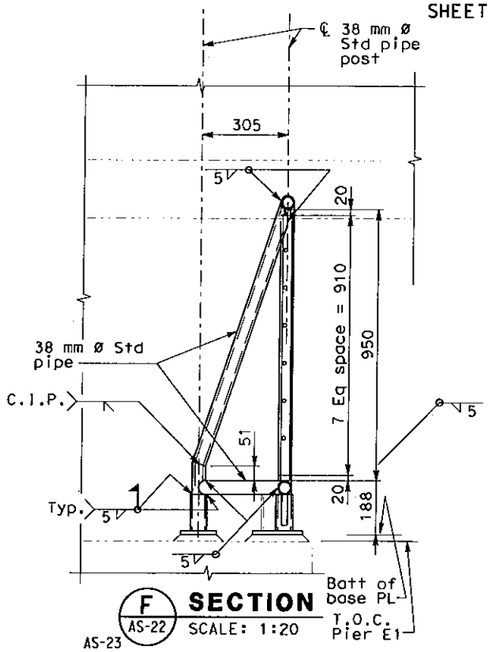

F AS-22 **SECTION** SCALE: 1:20

AS-23

ALL DIMENSIONS ARE IN MILLIMETERS UNLESS OTHERWISE SHOWN

DESIGN OVERSIGHT	DESIGN	BY G. Benkovich	CHECKED M.S. Owyang
SIGN OFF DATE	DETAILS	BY O. Kurnovskaya	CHECKED G. Benkovich
	QUANTITIES	BY G. Benkovich	CHECKED M.S. Owyang

PREPARED FOR THE STATE OF CALIFORNIA DEPARTMENT OF TRANSPORTATION

Trinh Lai
PROJECT ENGINEER

BRIDGE NO. 34-0006
KILOMETER POST 12.2/14.3 0.0/4.0

RTU-8 UTILITY PLATFORM

SECTIONS

AS-25

SHEET OF

CU 04251

DISREGARD PRINTS BEARING EARLIER REVISION DATES

REVISION DATES (PRELIMINARY STAGE ONLY)

DESIGN DETAIL SHEET (METRIC) (REV. 3/1/98)

ORIGINAL SCALE IN MILLIMETERS FOR REDUCED PLANS 0 10 20 30 40 50 60 70 80 90 100

FILE => rtu-as025.dgn

USERNAME => FUSCO DATE PLOTTED => 9/7/2011 TIME PLOTTED => 9:27:36 AM

$FREQUEST

DIST	COUNTY	ROUTE	KILOMETER POST TOTAL PROJECT	SHEET NO	TOTAL SHEETS
04	SF, ALA	80	12.2/14.3 0.0/4.0		806

Caltrans Metric

Gregory Benkovich 8/25/11
REGISTERED CIVIL ENGINEER

PLANS APPROVAL DATE

REGISTERED PROFESSIONAL ENGINEER Gregory Benkovich No. C40518 Exp. 3/31/13 CIVIL STATE OF CALIFORNIA

The State of California or its officers or agents shall not be responsible for the accuracy or completeness of electronic copies of this plan sheet.

Parsons Brinckerhoff Quade & Douglas, Inc.
303 Second Street, Suite 700N
San Francisco, CA 94107

Caltrans now has a web site! To get to the web site, go to: http://www.dot.ca.gov

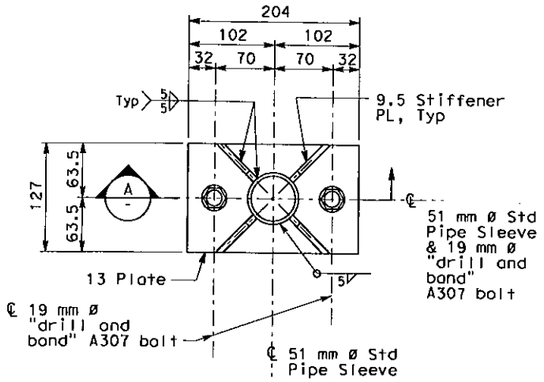

TYPE 2

1 / AS-23 **DETAIL**
SCALE: NTS

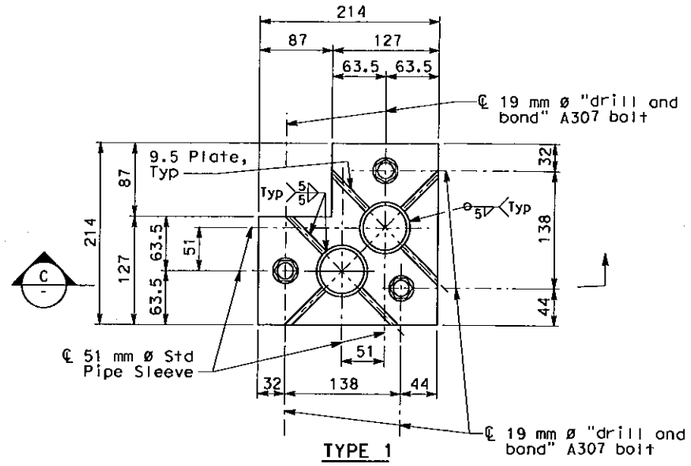

TYPE 1

2 / AS-23 **DETAIL**
SCALE: NTS

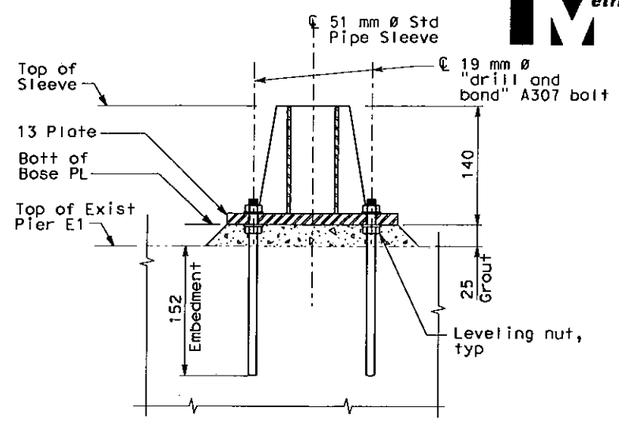

A / - **SECTION**
SCALE: NTS

NOTES:

1. The contractor shall verify all controlling field dimensions before ordering or fabricating any material.
2. For structural notes see "General structural notes" sheet AS-20.

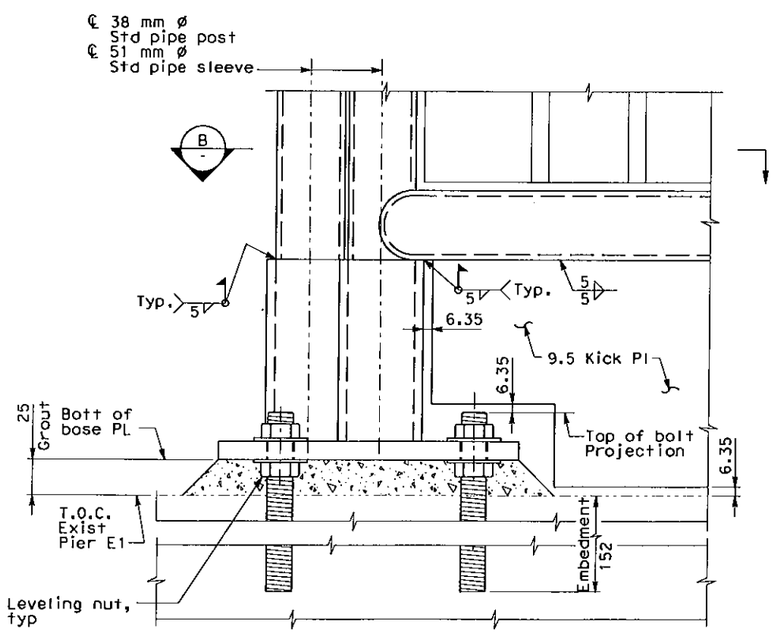

3 / AS-24 **DETAIL**
SCALE: 1:2

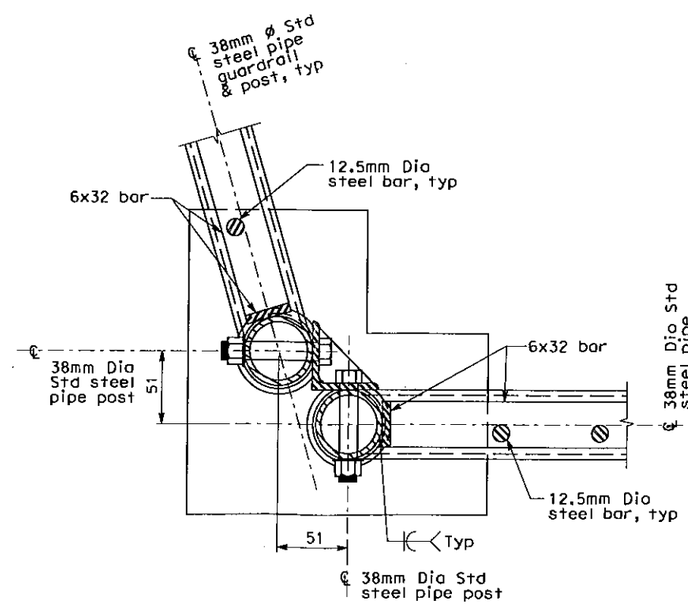

B / - **SECTION**
SCALE: 1:2

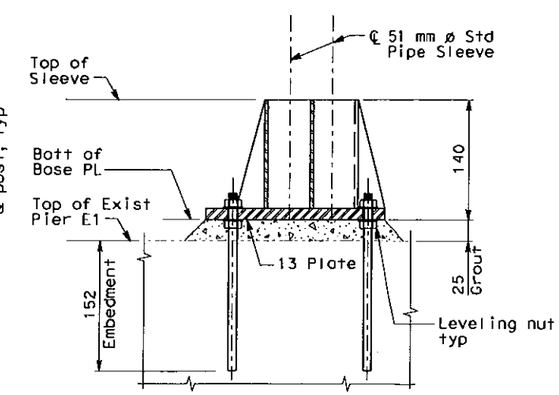

C / - **SECTION**
SCALE: NTS

MARK	DATE	DESCRIPTIONS	BY	CH'D
0	09/07/11	Railing Modification	GB	MSO

REVISIONS

CONTRACT CHANGE ORDER NO. 67
SHEET 8 OF 8

ALL DIMENSIONS ARE IN MILLIMETERS UNLESS OTHERWISE SHOWN

DESIGN	BY G. Benkovich	CHECKED M.S. Owyong	
DETAILS	BY O. Kurnovskaya	CHECKED G. Benkovich	
QUANTITIES	BY G. Benkovich	CHECKED M.S. Owyong	

DESIGN OVERSIGHT

SIGN OFF DATE

DESIGN DETAIL SHEET (METRIC) (REV. 3/1/98)

PREPARED FOR THE STATE OF CALIFORNIA DEPARTMENT OF TRANSPORTATION

Trinh Loi
PROJECT ENGINEER

BRIDGE NO. 34-0006
KILOMETER POST 12.2/14.3 0.0/4.0

CU 04251

RTU-8 UTILITY PLATFORM

DETAILS

AS-26

SHEET - OF -

DISREGARD PRINTS BEARING EARLIER REVISION DATES

REVISION DATES (PRELIMINARY STAGE ONLY)

ORIGINAL SCALE IN MILLIMETERS FOR REDUCED PLANS 0 10 20 30 40 50 60 70 80 90 100

FILE => rtu-as026.dgn

USERNAME => fusco DATE PLOTTED => 9/7/2011 TIME PLOTTED => 9:15:31 AM

$REQUEST

STATE OF CALIFORNIA - DEPARTMENT OF TRANSPORTATION

CONTRACT CHANGE ORDER

Change Requested by: Engineer

CCO 135	Suppl. No. 0	Contract No. 04 - 0120S4	Road SF-80-12.7/13.2	FED. AID LOC.: NO FED AID

To: **M C M CONSTRUCTION INC**

You are directed to make the following changes from the plans and specifications or do the following described work not included in the plans and specifications for this contract. ***NOTE: This change order is not effective until approved by the Engineer.***

Description of work to be done, estimate of quantities and prices to be paid. (Segregate between additional work at contract price, agreed price and force account.) Unless otherwise stated, rates for rental of equipment cover only such time as equipment is actually used and no allowance will be made for idle time. This last percentage shown is the net accumulated increase or decrease from the original quantity in the Engineer's Estimate.

Extra Work at Lump Sum:

Provide all labor, equipment and materials necessary to clean and paint three each overhead sign structures located at Sta. "W" 66+16, Sta. "W" 69+36, and Sta. "E" 69+63 for the Skyway portion of the new Bay Bridge East Span, as shown on Sheet Nos. 2 and 3 of this change order, in accordance with contract Special Provision Section 10-1.82 , Clean and Paint (Miscellaneous Facilities). The structures have previously been galvanized.

Extra Work at Agreed Lump Sum = $31,698.00

8/14/12

Estimated Cost: Increase ☑ Decrease ☐ **$31,698.00**

By reason of this order the time of completion will be adjusted as follows: 0 days

Submitted by

Signature	Resident Engineer	Date
William Howe	William Howe, Senior R.E.	06-21-12

Approval Recommended by

Signature	Senior Resident Engineer	Date
William Howe	William Howe	06-21-12

Engineer Approval by

Signature	Senior Resident Engineer	Date
William Howe	William Howe	08-14-12

We the undersigned contractor, have given careful consideration to the change proposed and agree, if this proposal is approved, that we will provide all equipment, furnish the materials, except as may otherwise be noted above, and perform all services necessary for the work above specified, and will accept as full payment therefor the prices shown above.

NOTE: If you, the contractor, do not sign acceptance of this order, your attention is directed to the requirements of the specifications as to proceeding with the ordered work and filing a written protest within the time therein specified.

Contractor Acceptance by

Signature	(Print name and title)	Date
	Edmund A. Pucki - Treasurer	8-10-2012

DIST	COUNTY	ROUTE	KILOMETER POST TOTAL PROJECT	SHEET No	TOTAL SHEETS
04	SF, Ala	80	13.9/14.3, 0.0/1.6	~~30~~	~~978~~

Chyi Kang Lu 3-19-01
REGISTERED CIVIL ENGINEER DATE

6-4-01
PLANS APPROVAL DATE

REGISTERED PROFESSIONAL ENG. Chyi Kang Lu No. 18697 Exp. 6/30/01 STATE OF CALIFORNIA

PARSONS BRINCKERHOFF QUADE & DOUGLAS, INC.
1000 BROADWAY, SUITE 250
OAKLAND, CA 94607-4040

The State of California or its officers or agents shall not be responsible for the accuracy or completeness of electronic copies of this plan sheet.

Caltrans now has a web site! To get to the web site, go to: http://www.dot.ca.gov

Caltrans Metric

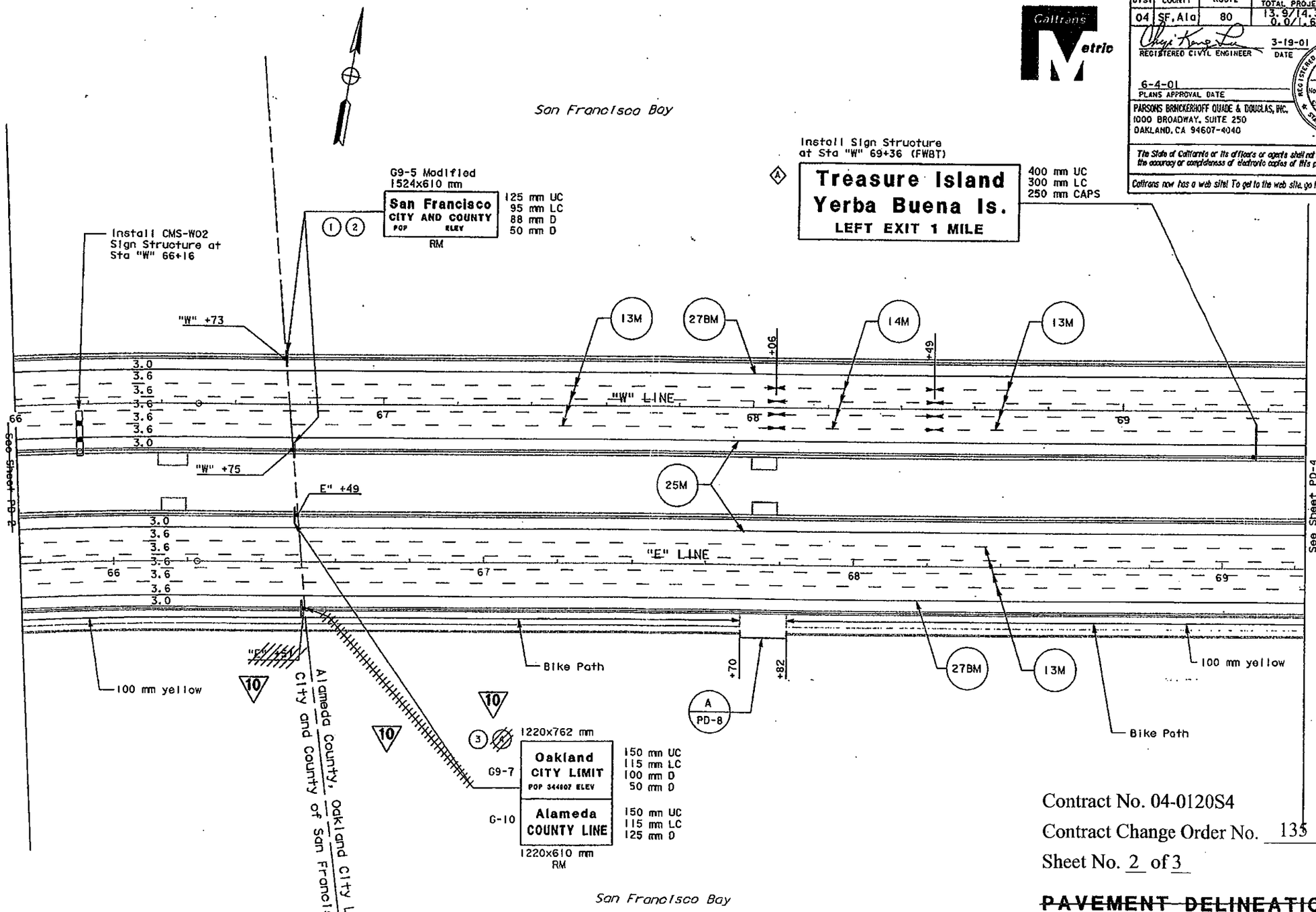

Contract No. 04-0120S4

Contract Change Order No. 135

Sheet No. 2 of 3

~~PAVEMENT DELINEATION AND~~ SIGN PLAN

SCALE: 1:500

~~For Notes, Legend and Abbreviation See Sheet PD-1~~

10 REVISED PER ADDENDUM NO. 10 DATED DECEMBER 5, 2001

This plan is accurate for pavement delineation and signing only.

ALL DIMENSIONS ARE IN METERS UNLESS OTHERWISE SHOWN

S-3A
~~PD-3~~

STATE OF CALIFORNIA - DEPARTMENT OF TRANSPORTATION
Caltrans

DESIGN OVERSIGHT: Bob Zandipour

CALCULATED/DESIGNED BY: RRM
CHECKED BY: CKL

DATE	REVISED BY	DATE	REVISED
1/00		1/00	

PLOTTED => 03-DEC-2001
LAST REVISION 00-00-00

FOR REDUCED PLANS ORIGINAL SCALE IS IN MILLIMETERS 0 20 40 60 80

USERNAME => frkathy
DGN FILE => 0120S4N3.dgn

CO 04251 EA 072021

98B 806

DIST	COUNTY	ROUTE	KILOMETER POST TOTAL PROJECT	SHEET No	TOTAL SHEETS
04	SF, Ala	80	13.9/14.3, 0.0/1.6	~~31~~	~~978~~

REGISTERED CIVIL ENGINEER — DATE 3-19-01

6-4-01
PLANS APPROVAL DATE

REGISTERED PROFESSIONAL ENGINEER — Chyi Kang Lu — No. 18697 — Exp. 6/30/01 — STATE OF CALIFORNIA

PARSONS BRINCKERHOFF QUADE & DOUGLAS, INC.
1000 BROADWAY, SUITE 250
OAKLAND, CA 94607-4040

The State of California or its officers or agents shall not be responsible for the accuracy or completeness of electronic copies of this plan sheet.

Caltrans now has a web site! To get to the web site, go to: http://www.dot.ca.gov

Caltrans Metric

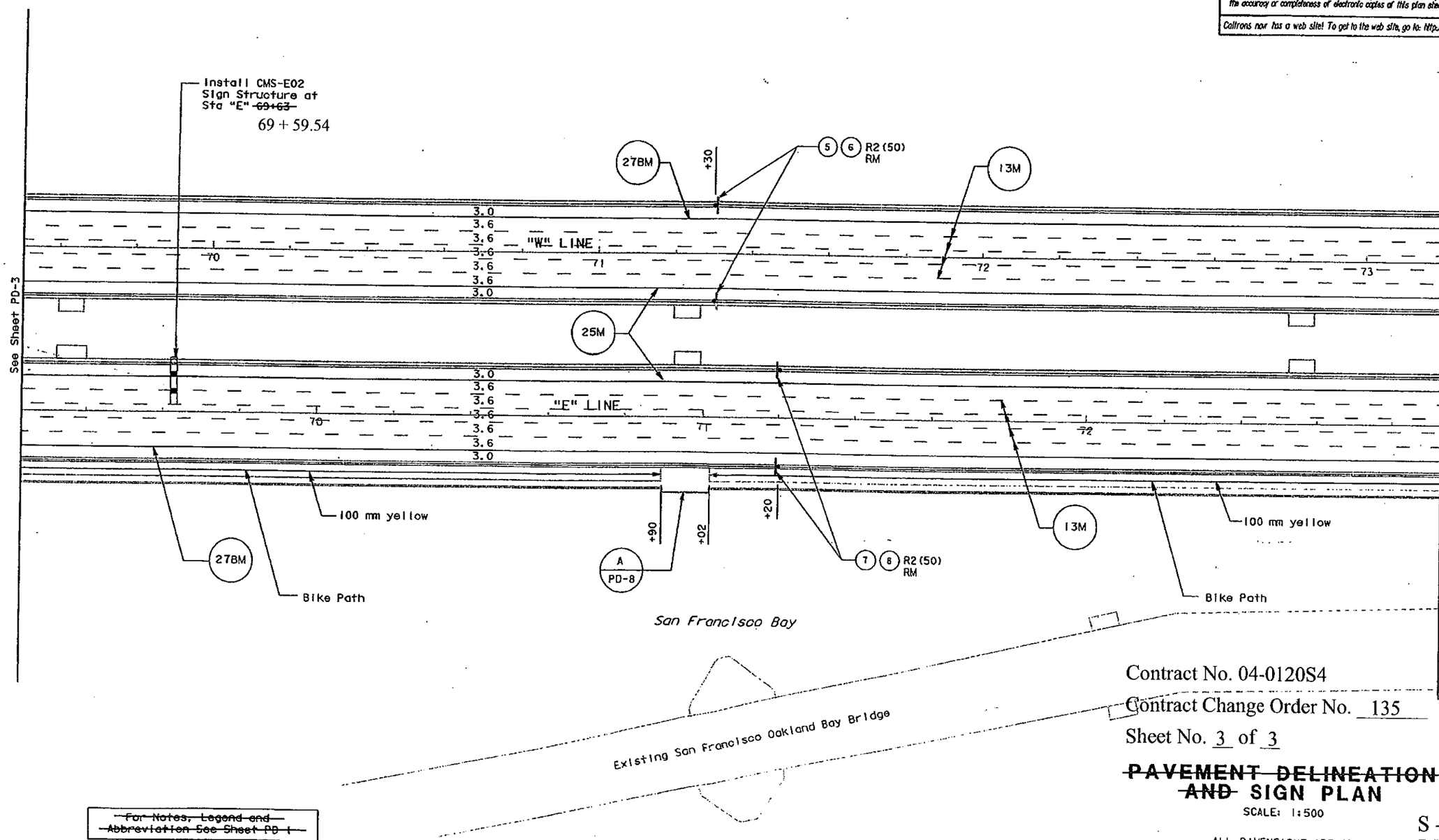

Contract No. 04-0120S4

Contract Change Order No. 135

Sheet No. 3 of 3

~~PAVEMENT DELINEATION AND~~ SIGN PLAN

SCALE: 1:500

~~For Notes, Legend and Abbreviation See Sheet PD 1~~

This plan is accurate for pavement delineation and signing only.

ALL DIMENSIONS ARE IN METERS UNLESS OTHERWISE SHOWN

S - 3B ~~PD 4~~

FOR REDUCED PLANS ORIGINAL SCALE IS IN MILLIMETERS 0 20 40 60 80

USERNAME => trrens

STATE OF CALIFORNIA - DEPARTMENT OF TRANSPORTATION — Caltrans

DESIGN OV Bob Zandipour

CALCULATED/DESIGNED BY | RRM | DATE 1/00 | REVISED BY
CHECKED BY | CKL | DATE 1/00 | DATE REVISED

LAST REVISION 00-00-00 | DATE PLOTTED => 09-JUN-2001 | TIME PLOTTED => 10:34

STATE OF CALIFORNIA - DEPARTMENT OF TRANSPORTATION

CONTRACT CHANGE ORDER MEMORANDUM

DATE: 6/8/2011 Page 1 of 1

TO: Deanna Vilcheck, ACM /	FILE: E.A. 04 - 0120S4
FROM: William Howe, Senior R.E.	CO-RTE-PM SF-80-12.7/13.2
	FED. NO. NO FED AID
CCO#: 67 SUPPLEMENT#: 0 Category Code: CHPT	CONTINGENCY BALANCE (incl. this change) $70,750,557.00
COST: $28,561.00 INCREASE ☑ DECREASE ☐	HEADQUARTERS APPROVAL REQUIRED? ☐ YES ☑ NO
SUPPLEMENTAL FUNDS PROVIDED: $0.00	IS THIS REQUEST IN ACCORDANCE WITH ENVIRONMENTAL DOCUMENTS? ☑ YES ☐ NO
CCO DESCRIPTION: Existing Pier E1 RTU-8 Platform Rail	**PROJECT DESCRIPTION:** YBITS-1 (Yerba Buena Island Transition Structures)

Original Contract Time:	Time Adj. This Change:	Previously Approved CCO Time Adjustments:	Percentage Time Adjusted: (including this change)	Total # of Unreconciled Deferred Time CCO(s): (including this change)
1390 Day(s)	0 Day(s)	0 Day(s)	0 %	9

THIS CHANGE ORDER PROVIDES FOR:

Provide compensation to the Contractor for costs related to fabricating and installing a set of handrails for the existing Pier E1 RTU-8 platform, including the welding inspection.

This Contract calls for the construction of bridge structures that tie in the east span of the new San Francisco Oakland Bay Bridge (SFOBB) to Yerba Buena Island. There is an existing electrical Remote Terminal Unit (RTU) at the top of nearby existing Pier E1. In order to meet current OSHA mandated standards for fall protection, Caltrans' Maintenance has requested that this location be provided with a safety handrail. Caltrans' Design has provided drawings to implement the fall protection railing system, which will be constructed under this CCO.

Compensation for this work shall be paid as Adjustment of Compensation at Agreed Lump Sum of $28,561.00, which will be funded from the project's contingency fund. A cost analysis is on file in the project records.

No adjustment of contract time is warranted, as this change will not affect the controlling operation.

This change order has been requested by Maintenance field personnel.

Maintenance concurrence will be obtained for this change order.

CONCURRED BY:		
Construction Engineer:	William Howe	Date 05-03-12
Bridge Engineer:	Mehran Ardakanian	Date 8/14/12
Project Engineer:	Bob Zandipour, Design	Date 5-2-12
Project Manager:	Ken Terpstra	Date 5/3/12
FHWA Rep.:		Date
Environmental:		Date
Other (specify):	Lina Ellis, Mtce.	Date 5-2-12
Other (specify):		Date
District Prior Approval By:		Date
HQ (Issue Approve) By:		Date
Resident Engineer's Signature:	William Howe	Date 05-03-12

ESTIMATE OF COST

	THIS REQUEST	TOTAL TO DATE
ITEMS	$0.00	$0.00
FORCE ACCOUNT	$0.00	$0.00
AGREED PRICE	$0.00	$0.00
ADJUSTMENT	$28,561.00	$28,561.00
TOTAL	$28,561.00	$28,561.00

FEDERAL PARTICIPATION

☐ PARTICIPATING ☐ PARTICIPATING IN PART ☑ NONE
☐ NON-PARTICIPATING (MAINTENANCE) ☐ NON-PARTICIPATING

FEDERAL SEGREGATION (if more than one Funding Source or P.I.P. type)
☐ CCO FUNDED PER CONTRACT ☐ CCO FUNDED AS FOLLOWS

FEDERAL FUNDING SOURCE PERCENT

ADA Notice. For individuals with sensory disabilities, this document is available in alternate formats. For information call (916) 654-6410 or TDD (916) 654-3880 or 711 Records and Forms Management, 1120 N Street, MS-89, Sacramento, CA 95814.

STATE OF CALIFORNIA - DEPARTMENT OF TRANSPORTATION

CONTRACT CHANGE ORDER MEMORANDUM

DATE: 6/12/2012 Page 1 of 1

TO: Deanna Vilcheck, ACM /	FILE: E.A. 04 - 0120S4
FROM: William Howe, Senior R.E.	CO-RTE-PM SF-80-12.7/13.2
	FED. NO. NO FED AID
CCO#: 135 SUPPLEMENT#: 0 Category Code: CHPP	CONTINGENCY BALANCE (incl. this change) $63,046,388.00
COST: $31,698.00 INCREASE ☑ DECREASE ☐	HEADQUARTERS APPROVAL REQUIRED? ☐ YES ☑ NO
SUPPLEMENTAL FUNDS PROVIDED: $0.00	IS THIS REQUEST IN ACCORDANCE WITH ENVIRONMENTAL DOCUMENTS? ☑ YES ☐ NO
CCO DESCRIPTION: Paint Skyway Overhead Sign Structures	**PROJECT DESCRIPTION:** YBITS-1 (Yerba Buena Island Transition Structures)

Original Contract Time:	Time Adj. This Change:	Previously Approved CCO Time Adjustments:	Percentage Time Adjusted: (including this change)	Total # of Unreconciled Deferred Time CCO(s): (including this change)
1390 Day(s)	0 Day(s)	0 Day(s)	0 %	9

THIS CHANGE ORDER PROVIDES FOR:

This change order will provide to clean and paint three each overhead sign structures for the Skyway portion of the new Bay Bridge East Span. During construction of the Skyway portion of the Bay Bridge East Span (Contract 04-012024, from 2002 through 2008), 3 overhead sign structures were erected using galvanized steel, but were not painted. Subsequently, the architect has determined that these should be painted as well, in order to match the other structural steel on the new bridge span.

Compensation for this additional work shall be paid as Extra Work at Agreed Lump Sum of $31,698.00, which can be financed from the project's contingency fund. The detailed cost analysis for this change order s is on file in the project records.

No adjustment in contract time of completion is warranted as this change does not affect the controlling operation.

This change was requested by Bob Zandipour, Toll Bridge Design, on May 8, 2012.

Maintenance concurrence from Lina Ellis will be obtained.

CONCURRED BY:		
Construction Engineer:	William Howe	Date 06·21·12
Bridge Engineer:	Mehran Ardakanian MA	Date 6·14·12
Project Engineer:	Bob Zandipour, Design	Date 6/25/12
Project Manager:	Ken Terpstra	Date 6/21/12
FHWA Rep.:		Date
Environmental:		Date
Other (specify):	Lina Ellis, Str. Mtce.	Date 6-26-12
Other (specify):		Date
District Prior Approval By:		Date
HQ (Issue Approve) By:		Date
Resident Engineer's Signature:	William Howe	Date 06·21·12

ESTIMATE OF COST

	THIS REQUEST	TOTAL TO DATE
ITEMS	$0.00	$0.00
FORCE ACCOUNT	$0.00	$0.00
AGREED PRICE	$31,698.00	$31,698.00
ADJUSTMENT	$0.00	$0.00
TOTAL	$31,698.00	$31,698.00

FEDERAL PARTICIPATION

☐ PARTICIPATING ☐ PARTICIPATING IN PART ☑ NONE
☐ NON-PARTICIPATING (MAINTENANCE) ☐ NON-PARTICIPATING

FEDERAL SEGREGATION (if more than one Funding Source or P.I.P. type)
☐ CCO FUNDED PER CONTRACT ☐ CCO FUNDED AS FOLLOWS

FEDERAL FUNDING SOURCE PERCENT

ADA Notice: For individuals with sensory disabilities, this document is available in alternate formats. For information call: (916) 654-6410 or TDD (916) 654-3880 or write Records and Forms Management, 1120 N Street, MS-89, Sacramento, CA 95814.

STATE OF CALIFORNIA - DEPARTMENT OF TRANSPORTATION

CONTRACT CHANGE ORDER

Change Requested by: Engineer

CCO 68	Suppl. No. 1	Contract No. 04 - 0120S4	Road SF-80-12.7/13.2	FED. AID LOC.: NO FED AID

To: **M C M CONSTRUCTION INC**

You are directed to make the following changes from the plans and specifications or do the following described work not included in the plans and specifications for this contract. ***NOTE: This change order is not effective until approved by the Engineer.***

Description of work to be done, estimate of quantities and prices to be paid. (Segregate between additional work at contract price, agreed price and force account.) Unless otherwise stated, rates for rental of equipment cover only such time as equipment is actually used and no allowance will be made for idle time. This last percentage shown is the net accumulated increase or decrease from the original quantity in the Engineer's Estimate.

Extra Work at Force Account:

Provide additional funding for the operation and maintenance costs associated with the temporary elevator that was furnished and installed under Change Order No. 68, Supplement No. 0, as determined by the Engineer. Compensation will include the labor cost associated with providing an elevator operator and the cost of maintaining the elevator during its time in use.

Estimated Cost of Extra Work at Force Account = $550,000.00

Estimated Cost: Increase ☑ **Decrease** ☐ **$550,000.00**

By reason of this order the time of completion will be adjusted as follows: 0 days

Submitted by		
Signature William Howe	**Resident Engineer** William Howe, Senior R.E.	**Date** 05-10-12
Approval Recommended by		
Signature Michael Forner	**Principal T.E.** Mike Forner	**Date** 6-8-12
Engineer Approval by		
Signature Mike Forner	**Principal T.E.** Mike Forner	**Date** 6-8-12

We the undersigned contractor, have given careful consideration to the change proposed and agree, if this proposal is approved, that we will provide all equipment, furnish the materials, except as may otherwise be noted above, and perform all services necessary for the work above specified, and will accept as full payment therefor the prices shown above.

NOTE: If you, the contractor, do not sign acceptance of this order, your attention is directed to the requirements of the specifications as to proceeding with the ordered work and filing a written protest within the time therein specified.

Contractor Acceptance by		
Signature Not Required	**(Print name and title)**	**Date**

STATE OF CALIFORNIA - DEPARTMENT OF TRANSPORTATION

CONTRACT CHANGE ORDER MEMORANDUM

TO: Deanna Vilcheck, ACM /	FILE: **E.A.** 04 - 0120S4
FROM: William Howe, Senior R.E.	**CO-RTE-PM** SF-80-12.7/13.2
	FED. NO. NO FED AID
CCO#: **68** SUPPLEMENT#: **1** Category Code: **BZZZ**	CONTINGENCY BALANCE (incl. this change) **$70,135,316.00**
COST: **$550,000.00** INCREASE ☑ DECREASE ☐	HEADQUARTERS APPROVAL REQUIRED? ☑ YES ☐ NO
SUPPLEMENTAL FUNDS PROVIDED: **$0.00**	IS THIS REQUEST IN ACCORDANCE WITH ENVIRONMENTAL DOCUMENTS? ☑ YES ☐ NO
CCO DESCRIPTION: Additional Funds for Elevator Operation	**PROJECT DESCRIPTION:** YBITS-1 (Yerba Buena Island Transition Structures)

Original Contract Time:	Time Adj. This Change:	Previously Approved CCO Time Adjustments:	Percentage Time Adjusted: (including this change)	Total # of Unreconciled Deferred Time CCO(s): (including this change)
1390 Day(s)	**0** Day(s)	**0** Day(s)	**0** %	**9**

THIS CHANGE ORDER PROVIDES FOR:

Additional funds to operate the temporary elevator that provides access to the Frame 2 superstructure.

This project, the Yerba Buena Island Transition Structure (YBITS), provides for the construction of two bridges which will connect eastbound and westbound traffic on the new east span of the San Francisco Oakland Bay Bridge (SFOBB) to the existing Yerba Buena Island (YBI) tunnel. The structures are comprised of concrete box girder bridges each approximately 50 meters high and 450 meters in length.

The original Change Order No. 68 S0 provided a temporary elevator to access the Frame 2 superstructure that could be used as emergency egress from the structure during any weather event and eliminate the Department's risk pertaining to weather delays affecting the Seismic Safety Opening date that has been established via the TBPOC for the new SFOBB east span. The original Change Order No. 68 S0 provided a lump sum payment to furnish and install the elevator with the operational costs paid as extra work at force account.

Subsequent to Change Order No. 68 S0 being issued, Change Order 72, Supplement No. 1, was approved to establish milestones to release areas of the project to the adjacent SAS project and to mitigate delays incurred to the YBITS contract. Supplement No. 1 required the Contractor to work double shifts and additional weekends to meet the milestone dates. These additional work shifts will require increased operation of the elevator, which is paid on a force account basis as defined under the original Change Order No. 68 S0. This change order will provide additional funding for operating the elevator based on the revised estimate of the costs to be incurred.

Compensation for these additional costs shall be paid as extra work at force account at an estimated cost of $550,000.00, which shall be funded from the Contract's contingency fund. A detailed cost estimate is on file.

This change order was approved by the TBPOC on June 6, 2012, copy attached.

No adjustment of contract time shall be granted as the change will not affect the controlling operation.

Maintenance concurrence is not required as this change affects a temporary structure and doesn't affect any permanent roadway features.

ADA Notice: For individuals with sensory disabilities, this document is available in alternate formats. For [illegible]
Records and Forms Management, 1120 N Street, MS-89, Sacramento, CA 95814

CONCURRED BY:		
Construction Engineer:	William Howe	Date 05-10-12
Bridge Engineer:	Mehran Ardakanian	Date
Project Engineer:	Bob Zandipour, Design	Date 6-8-12
Project Manager:	Ken Terpstra	Date 6-8-12
FHWA Rep.:		Date
Environmental:		Date
Other (specify):		Date
Other (specify):		Date
District Prior Approval By:		Date
HQ (Issue Approve) By:	Larry Salhaney	Date 6-8-12
Resident Engineer's Signature: William Howe		Date 05-10-12

ESTIMATE OF COST

	THIS REQUEST	TOTAL TO DATE
ITEMS	$0.00	$0.00
FORCE ACCOUNT	$550,000.00	$920,000.00
AGREED PRICE	$0.00	$564,770.00
ADJUSTMENT	$0.00	$0.00
TOTAL	$550,000.00	$1,484,770.00

FEDERAL PARTICIPATION

☐ PARTICIPATING ☐ PARTICIPATING IN PART ☑ NONE
☐ NON-PARTICIPATING (MAINTENANCE) ☐ NON-PARTICIPATING

FEDERAL SEGREGATION (if more than one Funding Source or P.I.P. type)
☐ CCO FUNDED PER CONTRACT ☐ CCO FUNDED AS FOLLOWS

FEDERAL FUNDING SOURCE	PERCENT

ADA Notice: For individuals with sensory disabilities, this document is available in alternate formats. For information call (916) 654-6410 or TDD (916) 654-3880 or write Records and Forms Management, 1120 N Street, MS-89, Sacramento, CA 95814

STATE OF CALIFORNIA - DEPARTMENT OF TRANSPORTATION

CONTRACT CHANGE ORDER MEMORANDUM

TO: Deanna Vilcheck, ACM / DV	FILE: E.A. 04 - 0120S4 CO-RTE-PM SF-80-12.7/13.2 FED. NO. NO FED AID
FROM: William Howe, Senior R.E.	
CCO#: 72 SUPPLEMENT#: 2 Category Code: BZZZ	CONTINGENCY BALANCE (incl. this change) $50,612,466.04
COST: $300,000.00 INCREASE ☑ DECREASE ☐	HEADQUARTERS APPROVAL REQUIRED? ☑ YES ☐ NO
SUPPLEMENTAL FUNDS PROVIDED: $0.00	IS THIS REQUEST IN ACCORDANCE WITH ENVIRONMENTAL DOCUMENTS? ☑ YES ☐ NO
CCO DESCRIPTION: suspension days/25 day time ext/MS 1pymt	**PROJECT DESCRIPTION:** YBITS-1 (Yerba Buena Island Transition Structures)

Original Contract Time:	Time Adj. This Change:	Previously Approved CCO Time Adjustments:	Percentage Time Adjusted: (including this change)	Total # of Unreconciled Deferred Time CCO(s): (including this change)
1390 Day(s)	0 Day(s)	0 Day(s)	0 %	9

THIS CHANGE ORDER PROVIDES FOR:

The intermittent temporary suspension of the contract work for four (4) weekends, (8 days), over the next five (5) months, a twenty-five (25) day time extension to Milestones 2 and 3 and the prestressing milestone established under Contract Change Order No. 72, Supplement No. 0 and Supplemental No. 1, of this change order and the payment of an incentive achieved for the completion of Milestone 1.

This project, the Yerba Buena Island Transition Structure (YBITS), provides for the construction of two bridges which will connect eastbound and westbound traffic on the new east span of the San Francisco Oakland Bay Bridge (SFOBB) to the existing Yerba Buena Island (YBI) tunnel. The structures are comprised of concrete box girder bridges each approximately 26 meters wide, 40 meters high and 450 meters in length.

Contract Change Order No. 72, Supplement No. 0, established a milestone to complete the prestressing of both the westbound and eastbound frames of the structure. Contract Change Order No. 72, Supplement No. 1, established additional milestones to complete the remaining work at the eastern most portion of the bridge and vacate the area to allow the area to be used by the adjacent Self-Anchored Suspension (SAS) Bridge Contract (04-0120F4). These contract change orders included incentive payments totaling $9,300,000.00 to complete the work prior to the established milestone dates.

These contract change orders have resulted in the Contractor working extended shifts, double shifts and weekends in order to achieve the milestone incentive payments with this work taking place since February of 2011. Work will continue through the end of this year, 2012, before all milestones have been met. As the work has progressed for over a year, it has become a concern that fatigue could become a factor on the jobsite which could result in unsafe work conditions. In order to proactively address this concern, it has been agreed that the contract work shall be suspended over four (4) intermittent weekends over the next five (5) months in order to provide extended periods of rest for the trade laborers and Department field staff. A total of eight (8) days shall be suspended over the four (4) weekends.

This change order also provides a twenty-five (25) day time extension to the prestressing milestone and Milestones 2 and 3 established under Contract Change Order No. 72, Supplement No. 0 and Supplement No. 1, of this change order and the Designated Portion of Work 3 established under the original contract. Of the twenty-five (25) days being granted, four (4) days are associated with the eight (8) temporary suspension days ordered under this change order. The remaining twenty-one (21) days of delay pertain to modifications ordered to the eastbound Frame 2 falsework and the ordered removal of westbound Frame 2 falsework, which were each required to coordinate construction activities concerning the construction of the hinge and closure pour between the YBITS1 and SAS contracts.

The twenty-five (25) day time extension to the milestones and designated portions of work shall resolve both the delay associated with the temporary suspension days and all Department delays through February 29, 2012. A time impact analysis is on file. Any direct costs associated with the ordered work shall be addressed under separate contract change orders.

This change order also provides compensation to the Contractor for achieving the full incentive for the early completion of Milestone 1 as established under Contract Change Order No. 72, Supplement No. 1. This change order provides a $30,000.00 per day incentive for the early completion of the milestone at a maximum cost of $300,000.00. Compensation shall be paid as an Adjustment of Compensation at an Agreed Lump Sum of $300,000.00, which shall be funded from the contract's contingency funds.

This change order was approved by the Toll Bridge Program Oversight Committee at their April 5, 2012, meeting.

ADA Notice: For individuals with sensory disabilities, this document is available in alternate formats. For information call (916) 654-6410 or TDD (916) 654-3880 or write
Records and Forms Management, 1120 N Street, MS-89, Sacramento, CA 95814

No adjustment to the contract time of completion is warranted as the delay will be absorbed by the Department owned float created under Contract Change Order No. 72, Supplement No. 0.

Maintenance concurrence is not required as the change does nott affect any permanent roadway features.

CONCURRED BY:		
Construction Engineer:	William Howe	Date 4/16/12
Bridge Engineer:	Mehran Ardakanian	Date
Project Engineer:	Bob Zandipour, Design	Date 4-24-12
Project Manager:	Ken Terpstra	Date 5/2/12
FHWA Rep.:		Date
Environmental:		Date
Other (specify):		Date
Other (specify):		Date
District Prior Approval By:		Date
HQ (Issue Approve) By:	Larry Salhaney	Date 5-2-12
Resident Engineer's Signature:		Date 4/16/12

ESTIMATE OF COST

	THIS REQUEST	TOTAL TO DATE
ITEMS	$0.00	($1,021,520.00)
FORCE ACCOUNT	$0.00	$0.00
AGREED PRICE	$0.00	$0.00
ADJUSTMENT	$300,000.00	$22,951,065.00
TOTAL	$300,000.00	$21,929,545.00

FEDERAL PARTICIPATION

☐ PARTICIPATING ☐ PARTICIPATING IN PART ☑ NONE
☐ NON-PARTICIPATING (MAINTENANCE) ☐ NON-PARTICIPATING

FEDERAL SEGREGATION (if more than one Funding Source or P.I.P. type)
☐ CCO FUNDED PER CONTRACT ☐ CCO FUNDED AS FOLLOWS

FEDERAL FUNDING SOURCE	PERCENT

ADA Notice: For individuals with sensory disabilities, this document is available in alternate formats. For information call (916) 654-6410 or TDD (916) 654-3880 or write Records and Forms Management, 1120 N Street, MS-89, Sacramento, CA 95814

STATE OF CALIFORNIA - DEPARTMENT OF TRANSPORTATION

CONTRACT CHANGE ORDER MEMORANDUM

DATE: 6/5/2012 Page 1 of 1

TO: Deanna Vilcheck, ACM / DV	FILE: E.A. 04 - 0120S4
	CO-RTE-PM SF-80-12.7/13.2
FROM: William Howe, Senior R.E.	FED. NO. NO FED AID
CCO#: 98 SUPPLEMENT#: 1 Category Code: BZZZ	CONTINGENCY BALANCE (incl. this change) $67,760,964.00
COST: $600,000.00 INCREASE ☑ DECREASE ☐	HEADQUARTERS APPROVAL REQUIRED? ☑ YES ☐ NO
SUPPLEMENTAL FUNDS PROVIDED: $0.00	IS THIS REQUEST IN ACCORDANCE WITH ENVIRONMENTAL DOCUMENTS? ☑ YES ☐ NO
CCO DESCRIPTION: Shotcrete Slope W7-W8-W9 Area SupplFunds	**PROJECT DESCRIPTION:** YBITS-1 (Yerba Buena Island Transition Structures)

Original Contract Time:	Time Adj. This Change:	Previously Approved CCO Time Adjustments:	Percentage Time Adjusted: (including this change)	Total # of Unreconciled Deferred Time CCO(s): (including this change)
1390 Day(s)	0 Day(s)	0 Day(s)	0 %	9

THIS CHANGE ORDER PROVIDES FOR:

Additional force account funding for the work defined under the original Contract Change Order No. 98 S0, constructing shotcrete "goat" slope protection beneath the area between Bent No. 6 through 10, as directed by the Engineer.

Contract Change Order No. 98 S0 provided temporary slope protection in the steep slope areas of Yerba Buena Island, which are very susceptible to erosion. Since Contract Change Order No. 98 S0 was issued in January 2012, significant areas have been shotcreted. This treatment has been very successful at minimizing any erosion in these historically erodible slopes. The success of the shotcrete has managed to eliminate turbid runoff and significantly reduce Notices of Discharge (NOD's) in numerous areas. The success of this shotcrete treatment has allowed the work to continue through the stormy season with very little disruption. The treatment will be extended to other areas to help maintain the current success of the SWPP measures on the site.

Compensation for this additional work shall be paid as Extra Work at Force Account, which can be financed from the project's contingency funds at an estimated cost of $600,000.00. The detailed cost analysis for this change order is on file.

The Contractor's signature is not required for additional funds for Extra Work at Force Account change orders.

This change was requested by Deanna Vilcheck, Supervising Engineer, Toll Bridge Construction, and concurrence will be obtained from Bob Zandipour, Design, and Ken Terpstra, Project Manager.

Maintenance concurrence is not required because this measure is temporary and will not affect the permanent structure.

No adjustment in contract time of completion is warranted as this change does not affect the controlling operation.

CONCURRED BY:

Construction Engineer:	William Howe	Date 06-05-12
Bridge Engineer:	Mehran Ardakanian	Date
Project Engineer:	Bob Zandipour, Design	Date 6-5-12
Project Manager:	Ken Terpstra	Date 6-8-12
FHWA Rep.:		Date
Environmental:		Date
Other (specify):		Date
Other (specify):		Date
District Prior Approval By:		Date
HQ (Issue Approve) By:	Sey Hossnieh	Date 6-5-12
Resident Engineer's Signature: William Howe		Date 06.05.12

ESTIMATE OF COST

	THIS REQUEST	TOTAL TO DATE
ITEMS	$0.00	$0.00
FORCE ACCOUNT	$600,000.00	$950,000.00
AGREED PRICE	$0.00	$0.00
ADJUSTMENT	$0.00	$0.00
TOTAL	$600,000.00	$950,000.00

FEDERAL PARTICIPATION

☐ PARTICIPATING ☐ PARTICIPATING IN PART ☑ NONE
☐ NON-PARTICIPATING (MAINTENANCE) ☐ NON-PARTICIPATING

FEDERAL SEGREGATION (if more than one Funding Source or P.I.P. type)
☐ CCO FUNDED PER CONTRACT ☐ CCO FUNDED AS FOLLOWS

FEDERAL FUNDING SOURCE	PERCENT

ADA Notice: For individuals with sensory disabilities, this document is available in alternate formats. For information call: (916) 654-6410 or TDD (916) 654-3880 or write Records and Forms Management, 1120 N Street, MS-89, Sacramento, CA 95814.

STATE OF CALIFORNIA - DEPARTMENT OF TRANSPORTATION

CONTRACT CHANGE ORDER

Change Requested by: Engineer

CCO: 69	Suppl. No. 0	Contract No. 04 - 0120S4	Road SF-80-12.7/13.2	FED. AID LOC.: NO FED AID

To: **M C M CONSTRUCTION INC**

You are directed to make the following changes from the plans and specifications or do the following described work not included in the plans and specifications for this contract. ***NOTE: This change order is not effective until approved by the Engineer.***

Description of work to be done, estimate of quantities and prices to be paid. (Segregate between additional work at contract price, agreed price and force account.) Unless otherwise stated, rates for rental of equipment cover only such time as equipment is actually used and no allowance will be made for idle time. This last percentage shown is the net accumulated increase or decrease from the original quantity in the Engineer's Estimate.

The Contractor shall provide enhanced lateral support pertaining to the Contractor's Frame 2 falsework for the Westbound and Eastbound Structures (Br. No. 34-0006 L) as determined and approved by the Engineer.

Any additional costs resulting from this change order are deferred and shall be compensated under a supplement to this change order.

Consideration of a time adjustment will be deferred until completion of the work specified herein. Determination of a commensurate time extension will be made in accordance with Section 8-1.07, "Liquidated Damages", of the Standard Specifications and Section 10-1.22 " Progress Schedule (Critical Path Method)" of the Special Provisions.

Estimated Cost: **Increase** ☐ **Decrease** ☐ **$0.00**

By reason of this order the time of completion will be adjusted as follows: Deferred

Signature Rajesh Oberoi	**Resident Engineer** Rajesh Oberoi, Senior R.E.	**Date** 3/10/11
Signature Mike Fomer	**Principal T.E.** Mike Fomer	**Date** 3/10/11
Signature Mike Fomer	**Principal T.E.** Mike Fomer	**Date** 4/19/11

We the undersigned contractor, have given careful consideration to the change proposed and agree, if this proposal is approved, that we will provide all equipment, furnish the materials, except as may otherwise be noted above, and perform all services necessary for the work above specified, and will accept as full payment therefor the prices shown above.

NOTE: If you, the contractor, do not sign acceptance of this order, your attention is directed to the requirements of the specifications as to proceeding with the ordered work and filing a written protest within the time therein specified.

Signature	**(Print name and title)** Edmund B. Ruchi – Treasurer	**Date** 4-13-2011

STATE OF CALIFORNIA - DEPARTMENT OF TRANSPORTATION

CONTRACT CHANGE ORDER MEMORANDUM

TO: Deanna Vilcheck, ACM /	FILE: E.A. 04 - 0120S4
	CO-RTE-PM SF-80-12.7/13.2
FROM: Rajesh Oberoi, Senior R.E. CHTX	FED. NO. NO FED AID
CCO#: 69 SUPPLEMENT#: 0 Category Code: [redacted]	CONTINGENCY BALANCE (incl. this change) $6,728,778.00
COST: $0.00 INCREASE ☐ DECREASE ☐	HEADQUARTERS APPROVAL REQUIRED? ☑ YES ☐ NO
SUPPLEMENTAL FUNDS PROVIDED: $0.00	IS THIS REQUEST IN ACCORDANCE WITH ENVIRONMENTAL DOCUMENTS? ☑ YES ☐ NO
CCO DESCRIPTION: Enhancement Frame 2 Westbound Falsework	**PROJECT DESCRIPTION:** YBITS-1 (Yerba Buena Island Transition Structures)

Original Contract Time:	Time Adj. This Change:	Previously Approved CCO Time Adjustments:	Percentage Time Adjusted: (including this change)	Total # of Unreconciled Deferred Time CCO(s): (including this change)
1390 Day(s)	DEF Day(s)	0 Day(s)	0 %	8

THIS CHANGE ORDER PROVIDES FOR:

Additional design criteria to provide for an increased design standard for the contractor's Frame 2 falsework.

This project, the Yerba Buena Island Transition Structure (YBITS), provides for the construction of two bridges which will connect eastbound and westbound traffic on the new east span of the San Francisco Oakland Bay Bridge (SFOBB) to the existing Yerba Buena Island (YBI) tunnel. The structures are comprised of concrete box girder bridges each approximately 50 meters high and 450 meters in length.

Frame 2 of both the westbound and eastbound structures provide for the construction of 2 concrete box girders, each approximately 320 meters long and 26 meters wide. The structures will be constructed approximately 50 meters above ground. The contractor has submitted a falsework design for the westbound frame which consists of over 80 falsework bents with each bent comprised of up to 10 steel pipes 24-inch in diameter which span the full height of the structure. These pipes will be supported by steel caps on each end and by lateral and longitudinal bracing.

Mike Whiteside the YBI Coordination Engineer has issued a request to increase the design standard pertaining to the lateral support of the falsework. This change order provides for this design revision which will be applied to both westbound and eastbound structures. The increased design standard will mitigate Department risk associated with constructing this falsework due to its height and the length of the frame. A failure of the falsework would have a severe impact the completion of the project and in turn potentially delay the opening of the new east span of the SFOBB.

Supplemental funding of $600,000 was provided under the contract for anticipated enhancements or special requirements associated with the Frame 2 falsework.
This change order provides for the contractor to incorporate enhanced lateral supports along each falsework bent by increasing the size of the supports and improving their connections to the 24-inch steel pipes which provide the major strength of the structure.

Compensation for the additional costs resulting from this change is deferred and shall be compensated under a forthcoming supplement to this change order. Costs associated with this change will include furnishing and installing additional steel bracing and additional welding to provide enhanced strength at the bracing and steel pipe interface.
This change is being issued with deferred compensation in order to proceed with the temporary falsework design in a timely manner and mitigate potential delay to the contract completion. The cost of this change is not anticipated to exceed $950,000. Funding shall be provided by both the $600,000 in supplemental funds provided for this work and the contract's contingency funds.

Adjustment of contract time is deferred as the change may affect the controlling operation.

Maintenance concurrence is not required as this change affects a temporary structure and doesn't affect any permanent roadway features.

ADA Notice: For individuals with sensory disabilities, this document is available in alternate formats. For information call: (916) 654-6410 or TDD (916) 654-3880 or write Records and Forms Management, 1120 N Street, MS-89, Sacramento, CA 95814.

CONCURRED BY:	
Construction Engineer: Rajesh Oberoi RO	Date 03/10/11
Bridge Engineer:	Date
Project Engineer:	Date
Project Manager: KEN TERPSTRA	Date 04/26/11
FHWA Rep.:	Date
Environmental:	Date
Other (specify): HASAN EL-NATUR (DESIGN OVERSIGHT)	Date 04/19/11
Other (specify):	Date
District Prior Approval By:	Date
HQ (Issue Approve) By: LARRY SALMANEN	Date 3/11/11
Resident Engineer's Signature: Rajesh Oberoi	Date 03/10/11

ESTIMATE OF COST

	THIS REQUEST	TOTAL TO DATE
ITEMS	$0.00	$0.00
FORCE ACCOUNT	$0.00	$0.00
AGREED PRICE	$0.00	$0.00
ADJUSTMENT	$0.00	$0.00
TOTAL	$0.00	$0.00

FEDERAL PARTICIPATION

☐ PARTICIPATING ☐ PARTICIPATING IN PART ☑ NONE
☐ NON-PARTICIPATING (MAINTENANCE) ☐ NON-PARTICIPATING

FEDERAL SEGREGATION (if more than one Funding Source or P.I.P. type)
☑ CCO FUNDED PER CONTRACT ☐ CCO FUNDED AS FOLLOWS

FEDERAL FUNDING SOURCE	PERCENT

ADA Notice: For individuals with sensory disabilities, this document is available in alternate formats. For information call: (916) 654-6410 or TDD (916) 654-3880 or write Records and Forms Management, 1120 N Street, MS-89, Sacramento, CA 95814

STATE OF CALIFORNIA - DEPARTMENT OF TRANSPORTATION

CONTRACT CHANGE ORDER

Change Requested by: Engineer

CCO 69	Suppl. No. 1	Contract No. 04 - 0120S4	Road SF-80-12.7/13.2	FED. AID LOC.: NO FED AID

To: **M C M CONSTRUCTION INC**

You are directed to make the following changes from the plans and specifications or do the following described work not included in the plans and specifications for this contract. ***NOTE: This change order is not effective until approved by the Engineer.***

Description of work to be done, estimate of quantities and prices to be paid. (Segregate between additional work at contract price, agreed price and force account.) Unless otherwise stated, rates for rental of equipment cover only such time as equipment is actually used and no allowance will be made for idle time. This last percentage shown is the net accumulated increase or decrease from the original quantity in the Engineer's Estimate.

Adjustment of Compensation at Lump Sum:

Compensate the Contractor for all additional costs pertaining to the construction and design of the Frame 2 falsework for the Westbound and Eastbound Structures (Br. No. 34-0006 L/R) due to the enhanced lateral support incorporated into the approved design as provided for under the original Change Order No. 69. Compensation includes but is not limited to all costs associated with furnishing and installing additional lateral bracing and bracing connections for the falsework bents and column trusses.

For these costs, the Contractor shall be compensation an agreed lump sum $824,030.00. This lump sum constitutes full and final compensation for all additional costs, including all markups, for all enhancements incorporated into the Frame 2 falsework.

This change order provides full compensation for all costs deferred under the original Change Order No. 69.

Adjustment of Compensation at Lump Sum $824,030.00

A determination of the delay in the completion of the Contract due to this change order and the original Change Order No. 69 has been made in accordance with the provisions of Change Order No. 72. There shall be no time extension as a result of these change orders.

Estimated Cost: **Increase** ☑ **Decrease** ☐ **$824,030.00**

By reason of this order the time of completion will be adjusted as follows: 0 days

Signature William Howe	**Resident Engineer** William Howe, Senior R.E.	**Date** 5-25-11
Signature Deanna Vilcheck	**Area Construction Manager** Deanna Vilcheck	**Date** 5/25/11
Signature Deanna Vilcheck	**Area Construction Manager** Deanna Vilcheck	**Date** 5/25/11

We the undersigned contractor, have given careful consideration to the change proposed and agree, if this proposal is approved, that we will provide all equipment, furnish the materials, except as may otherwise be noted above, and perform all services necessary for the work above specified, and will accept as full payment therefor the prices shown above.

NOTE: If you, the contractor, do not sign acceptance of this order, your attention is directed to the requirements of the specifications as to proceeding with the ordered work and filing a written protest within the time therein specified.

Signature	**(Print name and title)** Edmundo A Pucio - Treasurer	**Date** 5-25-2011

STATE OF CALIFORNIA - DEPARTMENT OF TRANSPORTATION

CONTRACT CHANGE ORDER MEMORANDUM

DATE: 5/2/2011

TO: Deanna Vilcheck, ACM / DV	FILE: E.A. 04 - 0120S4
	CO-RTE-PM SF-80-12.7/13.2
FROM: Rajesh Oberoi, Senior R.E.	FED. NO. NO FED AID
CCO#: 69 SUPPLEMENT#: 1 Category Code: ~~BZZZ~~ CHTX	CONTINGENCY BALANCE (incl. this change) $83,519,978.50
COST: $824,030.00 INCREASE ☑ DECREASE ☐	HEADQUARTERS APPROVAL REQUIRED? ☑ YES ☐ NO
SUPPLEMENTAL FUNDS PROVIDED: $600,000.00	IS THIS REQUEST IN ACCORDANCE WITH ENVIRONMENTAL DOCUMENTS? ☑ YES ☐ NO
CCO DESCRIPTION: Enhancement Frame 2 Falsework	**PROJECT DESCRIPTION:** YBITS-1 (Yerba Buena Island Transition Structures)

Original Contract Time:	Time Adj. This Change:	Previously Approved CCO Time Adjustments:	Percentage Time Adjusted: (including this change)	Total # of Unreconciled Deferred Time CCO(s): (including this change)
1390 Day(s)	0 Day(s)	0 Day(s)	0 %	8

THIS CHANGE ORDER PROVIDES FOR:

Additional design criteria to provide for an increased design standard for the contractor's Frame 2 falsework.

This project, the Yerba Buena Island Transition Structure (YBITS), provides for the construction of two bridges which will connect eastbound and westbound traffic on the new east span of the San Francisco Oakland Bay Bridge (SFOBB) to the existing Yerba Buena Island (YBI) tunnel. The structures are comprised of concrete box girder bridges each approximately 50 meters high and 450 meters in length.

Frame 2 of both the westbound and eastbound structures provide for the construction of 2 concrete box girders, each approximately 320 meters long and 26 meters wide. The structures will be constructed approximately 50 meters above ground. The contractor has submitted a falsework design for the westbound frame which consists of over 80 falsework bents with each bent comprised of up to 10 steel pipes 24-inch in diameter which span the full height of the structure. These pipes will be supported by steel caps on each end and by transverse and longitudinal lateral bracing.

The Office of Structures Construction has requested to increase the design standard pertaining to the lateral support of the falsework. The original Change Order No. 69 provided for this design revision which has been applied to both westbound and eastbound structures. The increased design standard will mitigate Department risk associated with constructing this falsework due to its height and the length of the frame. A failure of the falsework would have a severe impact to the completion of the project and in turn would potentially delay the opening of the new east span of the SFOBB.

Supplemental funding of $600,000 was provided under the contract for anticipated enhancements or special requirements associated with the Frame 2 falsework.

The enhancements provide for the contractor to incorporate additional lateral supports along each falsework bent by increasing the size of the supports and improving their connections to the 24-inch steel pipes which provide the major strength of the structure. The enhancements will be incorporated to both the transverse and longitudinal bracings of the 80 falsework bents along with the falsework column trusses at the permanent bridge columns.

Compensation for the additional costs resulting from the falsework enhancements was deferred under the original Change Order No. 69 pending the completion of the design. The design of the westbound falsework has now been approved with the eastbound falsework anticipated to be similar. This change order shall provide compensation for furnishing and installing all additional lateral supports for both structures. Costs associated with this change will include furnishing and installing additional steel bracing and additional welded steel connections to provide enhanced strength at the bracing and steel pipe interface.

Compensation shall be paid as an adjustment of compensation at an agreed lump sum of ~~$824,003.00~~ $824030.00. Funding shall be provided by both the $600,000 in supplemental funds provided for this work and the contract's contingency funds. A detailed cost analysis is on file.

Headquarters Construction authorized the original Change Order No. 69 to be issued and approved on March 11, 2011 with a deferred cost anticipated not to exceed $950,000.

No adjustment of contract time shall be granted as specified under Change Order No. 72 which acted to mitigate any delay associated with this change.

ADA Notice: For individuals with sensory disabilities, this document is available in alternate formats. For information call: (916) 654-6410 or TDD (916) 654-3880 or write Records and Forms Management, 1120 N Street, MS-89, Sacramento, CA 95814.

Maintenance concurrence is not required as this change affects a temporary structure and doesn't affect any permanent roadway features.

CONCURRED BY:		
Construction Engineer:	William Howe	Date 5-25-11
Bridge Engineer:	Mehran Ardakanian	Date
Project Engineer:		Date
Project Manager:	KEN TERPSTRA	Date 5-31-11
FHWA Rep.:		Date
Environmental:		Date
Other (specify):	HASAN EL-NATUR (DESIGN OVERSIGHT)	Date 04/19/11
Other (specify):		Date
District Prior Approval By:		Date
HQ (Issue Approve) By:		Date
Resident Engineer's Signature: William Howe		Date 5-25-11

ESTIMATE OF COST

	THIS REQUEST	TOTAL TO DATE
ITEMS	$0.00	$0.00
FORCE ACCOUNT	$0.00	$0.00
AGREED PRICE	$0.00	$0.00
ADJUSTMENT	$824,030.00	$824,030.00
TOTAL	$824,030.00	$824,030.00

FEDERAL PARTICIPATION

☐ PARTICIPATING ☐ PARTICIPATING IN PART ☑ NONE
☐ NON-PARTICIPATING (MAINTENANCE) ☐ NON-PARTICIPATING

FEDERAL SEGREGATION (if more than one Funding Source or P.I.P. type)
☑ CCO FUNDED PER CONTRACT ☐ CCO FUNDED AS FOLLOWS

FEDERAL FUNDING SOURCE	PERCENT

ADA Notice: For individuals with sensory disabilities, this document is available in alternate formats. For information call: (916) 654-6410 or TDD (916) 654-3880 or write Records and Forms Management, 1120 N Street, MS-89, Sacramento, CA 95814.

STATE OF CALIFORNIA - DEPARTMENT OF TRANSPORTATION

CONTRACT CHANGE ORDER

Change Requested by: Engineer

CCO: 71	Suppl. No. 0	Contract No. 04 - 0120S4	Road SF-80-12.7/13.2	FED. AID LOC.: NO FED AID

To: **M C M CONSTRUCTION INC**

You are directed to make the following changes from the plans and specifications or do the following described work not included in the plans and specifications for this contract. ***NOTE: This change order is not effective until approved by the Engineer.***

Description of work to be done, estimate of quantities and prices to be paid. (Segregate between additional work at contract price, agreed price and force account.) Unless otherwise stated, rates for rental of equipment cover only such time as equipment is actually used and no allowance will be made for idle time. This last percentage shown is the net accumulated increase or decrease from the original quantity in the Engineer's Estimate.

Extra Work at Lump Sum:

Furnish and install two 20-inch and two 24-inch diameter steel pipes to support and stabilize the steel reinforcing column cages for the construction of the columns at Bent W8R of the YBI Transition Structure and Bents W8 and W9 of the YBI East Bound On-Ramp Structure.

For the cost of this work, the Contractor shall be compensated an agreed lump sum of $329,720.00 which constitutes full and final compensation for all costs, including all markups, for this change.

Cost of Extra Work at Lump Sum $329,720.00

Estimated Cost: **Increase** ☑ **Decrease** ☐ **$329,720.00**

By reason of this order the time of completion will be adjusted as follows: 0 days

Submitted by

Signature Deanna Vilcheck	Resident Engineer William Howe, Senior R.E.	Date 9/14/11

Approval Recommended by

Signature Deanna Vilcheck	Area Construction Manager Deanna Vilcheck	Date 9/14/11

Engineer Approval by

Signature Deanna Vilcheck	Area Construction Manager Deanna Vilcheck	Date 9/26/11

We the undersigned contractor, have given careful consideration to the change proposed and agree, if this proposal is approved, that we will provide all equipment, furnish the materials, except as may otherwise be noted above, and perform all services necessary for the work above specified, and will accept as full payment therefor the prices shown above.

NOTE: If you, the contractor, do not sign acceptance of this order, your attention is directed to the requirements of the specifications as to proceeding with the ordered work and filing a written protest within the time therein specified.

Contractor Acceptance by

Signature	(Print name and title) Edmundo A. Pulchi - Treasurer	Date 9-21-2011

09/14/2011

STATE OF CALIFORNIA - DEPARTMENT OF TRANSPORTATION

CONTRACT CHANGE ORDER MEMORANDUM

DATE: 3/15/2011 Page 1 of 2

TO: Deanna Vilcheck, ACM /	FILE: E.A. 04 - 0120S4
FROM: William Howe, Senior R.E.	CO-RTE-PM SF-80-12.7/13.2
	FED. NO. NO FED AID
CCO#: 71 SUPPLEMENT#: 0 Category Code: CHXX	CONTINGENCY BALANCE (incl. this change) $95,710,523.19
COST: $329,720.00 INCREASE ☑ DECREASE ☐	HEADQUARTERS APPROVAL REQUIRED? ☑ YES ☐ NO
SUPPLEMENTAL FUNDS PROVIDED: $0.00	IS THIS REQUEST IN ACCORDANCE WITH ENVIRONMENTAL DOCUMENTS? ☑ YES ☐ NO
CCO DESCRIPTION: Internal Guying Support System	**PROJECT DESCRIPTION:** YBITS-1 (Yerba Buena Island Transition Structures)

Original Contract Time:	Time Adj. This Change:	Previously Approved CCO Time Adjustments:	Percentage Time Adjusted: (including this change)	Total # of Unreconciled Deferred Time CCO(s): (including this change)
1390 Day(s)	0 Day(s)	0 Day(s)	0 %	9

THIS CHANGE ORDER PROVIDES FOR:

Furnishing and installing two 20-inch and two 24-inch diameter steel pipes in order to support and stabilize the reinforcing steel column cages for the construction of the columns at Bent W8R of the YBI Transition Structure and Bents W8 and W9 of the YBI East Bound On-Ramp Structure.

This project, the Yerba Buena Island Transition Structure (YBITS), provides for the construction of two bridges which will connect eastbound and westbound traffic on the new east span of the San Francisco Oakland Bay Bridge (SFOBB) to the existing Yerba Buena Island (YBI) tunnel. The structures are comprised of concrete box girder bridges each approximately 50 meters high and 450 meters in length.

The project includes the construction of 12 reinforced concrete columns, as large as 2.5 meters in diameter and 40 meters high, that will be constructed along a steep hill approximately 40 meters in height. The slope of this hill exceeds 1 to 1 in many locations and is comprised of loose sand.

This change order provides for furnishing and installing 20-inch and 24-inch diameter steel pipes within the center of 4 of the highest columns that will support and stabilize the steel reinforcing cages prior to and while the concrete for the columns is being placed. The bent cap reinforcing steel for these columns requires precise alignment in order to avoid obstructions when the bent cap steel is placed through the column cage. The placement of this bent cap reinforcing steel is unusually complex and has required detailed integrated shop drawings to be performed in order to ensure the steel can be placed without conflicts with the column steel, stressing ducts and the various utilities within the bent cap.

The steel support pipes will mitigate risk of delaying the project associated with constructing the columns in the proper locations while under the severe slope and geotechnical conditions present. A delay to the project could jeopardize the Seismic Safety Opening goal set by the Toll Bridge Program Oversight Committee for the new SFOBB east span.

The cost of this change includes furnishing and installing 4 each 20-inch or 24-inch diameter and 1-inch thick steel pipes up to 40 meters in length with the majority of the cost incurred in the fabrication of the pipe.

Compensation for furnishing and installing the 4 steel support pipes shall be paid as extra work at an agreed lump sum of $329,720.00 which shall be funded from the contract's contingency fund. A cost analysis is on file.

Brian Maroney Toll Bridge Project Manager concurs with this change order.

Authorization to issue and approve this change order was received on June 3, 2011 as extra work at force account at an estimated cost of $800,000. Prior to the change order being issued, a lump sum price of $329,720 has been agreed to with the contractor.

No adjustment of contract time shall be granted as the change will not affect the controlling operation.

Maintenance concurrence is not required as the change doesn't affect any permanent roadway features.

ADA Notice: For individuals with sensory disabilities, this document is available in alternate formats. For information call: (916) 654-6410 or TDD (916) 654-3880 or write Records and Forms Management, 1120 N Street, MS-89, Sacramento, CA 95814.

CONCURRED BY:		
Construction Engineer:	William Howe	Date 09-26-11
Bridge Engineer:	Mehran Ardakanian	Date 9/7/11
Project Engineer:	BOB ZANDIPOUR	Date 09/27/11
Project Manager:	KEN TERPSTRA	Date 9/28/11
FHWA Rep.:		Date
Environmental:		Date
Other (specify):		Date
Other (specify):		Date
District Prior Approval By:		Date
HQ (Issue Approve) By:		Date
Resident Engineer's Signature: William Howe		Date 09-26-11

ESTIMATE OF COST

	THIS REQUEST	TOTAL TO DATE
ITEMS	$0.00	$0.00
FORCE ACCOUNT	$0.00	$0.00
AGREED PRICE	$329,720.00	$329,720.00
ADJUSTMENT	$0.00	$0.00
TOTAL	$329,720.00	$329,720.00

FEDERAL PARTICIPATION

☐ PARTICIPATING ☐ PARTICIPATING IN PART ☑ NONE
☐ NON-PARTICIPATING (MAINTENANCE) ☐ NON-PARTICIPATING

FEDERAL SEGREGATION (if more than one Funding Source or P.I.P. type)
☑ CCO FUNDED PER CONTRACT ☐ CCO FUNDED AS FOLLOWS

FEDERAL FUNDING SOURCE	PERCENT

ADA Notice: For individuals with sensory disabilities, this document is available in alternate formats. For information call: (916) 654-6410 or TDD (916) 654-3880 or write Records and Forms Management, 1120 N Street, MS-89, Sacramento, CA 95814.

CONTRACT CHANGE ORDER

Change Requested by: Engineer

CCO: 72	Suppl. No. 0	Contract No. 04 - 0120S4	Road SF-80-12.7/13.2	FED. AID LOC.: NO FED AID

To: **M C M CONSTRUCTION INC**

You are directed to make the following changes from the plans and specifications or do the following described work not included in the plans and specifications for this contract. ***NOTE: This change order is not effective until approved by the Engineer.***

Description of work to be done, estimate of quantities and prices to be paid. (Segregate between additional work at contract price, agreed price and force account.) Unless otherwise stated, rates for rental of equipment cover only such time as equipment is actually used and no allowance will be made for idle time. This last percentage shown is the net accumulated increase or decrease from the original quantity in the Engineer's Estimate.

The Contractor shall plan and execute the work of the Contract with the intent to complete the prestressing of all 4 frames of the YBI Transition Structure (Bridge 34-0006L/R) by October 31, 2012.

The following provisions shall be incorporated into the Contract pertaining to the completion of the prestressing of the 4 frames:

1) The Contractor shall provide an October 31, 2012 milestone within the Contract's progress schedule that establishes the completion of the prestressing of the 4 frames as identified under this change order.

2) The Contractor will plan for up to 20 days on which they are prevented by inclement weather from working on the controlling operations required to achieve the milestone of the completion of the prestressing of all 4 frames. In the event the Contractor realizes more than 20 days of inclement weather effecting the controlling operations, the October 31, 2012 prestressing milestone shall be extended 1 day for each day over 20 days of inclement weather that is incurred. A day of inclement weather shall be defined as specified in Section 8-1.06 "TIME OF COMPLETION" of the Contract Standard Specifications.

3) The Contractor will plan for the cement modified structure backfill specified at Bents W8R, W8L, W9R and W9L to be substituted by either placing a geogrid reinforced backfill or by placing a slurry concrete backfill. In the event a slurry concrete backfill is required, the Contractor shall be compensated for their additional cost above the cost of a geogrid reinforced backfill.

This intent to complete the prestressing of all 4 frames by October 31, 2012 is undertaken with the full comprehension of all Department delays and schedule impacts to the Contract prior to February 16, 2011 and no time extension shall be granted to the October 31, 2012 prestressing milestone as a result of these delays and impacts. Any direct costs associated with these delays and impacts incurred prior to February 16, 2011 shall remain compensable and shall be compensated under separate change orders.

As a result of this change order no Contract time extension shall be granted for any Department delays or impacts incurred prior to February 16, 2011.

Adjustment of Compensation at Lump Sum:

The Contractor shall plan and execute the work of the Contract with the intent to complete the prestressing of all 4 frames of the YBI Transition Structure (Bridge 34-0006L/R) by October 31, 2012.

The Contractor shall be compensated an agreed lump sum of $12,181,065.00 for the completion of the prestressing of all 4 frames of the YBI Transition Structure (Bridge 34-0006L/R) by December 31, 2012. Said compensation shall be paid in monthly progress payments to the Contractor.

The Contractor shall be paid an incentive of $50,000.00 for each calendar day prior to December 31, 2012 that the Contractor achieves the completion of the prestressing of all 4 frames as defined under this change order. This incentive payment shall not exceed $7,500,000.00.

Any incentive payment achieved shall be compensated under a supplement to this change order.

This lump sum compensation and any incentive earned, as provided herein, constitutes full and complete compensation, including all markups, for all costs associated with the compression of the Contractor's schedule to achieve the milestone c

CONTRACT CHANGE ORDER

Change Requested by: Engineer

CCO: 72	Suppl. No. 0	Contract No. 04 - 0120S4	Road SF-80-12.7/13.2	FED. AID LOC.: NO FED AID

completing the prestressing of the 4 frames as defined.

In the event the October 31, 2012 prestressing milestone is extended due to inclement weather as defined herein, the December 31, 2012 date for this incentive will be extended commensurate with the prestressing milestone date.

Cost of Adjustment of Compensation at Lump Sum $12,181,065.00

In addition to the prestressing milestone for the 4 frames established under this change order, the completion of and liquidated damages pertaining to the Designated Portion of the Work 3, as defined by Section 4 "BEGINNING OF WORK, TIME OF COMPLETION, AND LIQUIDATED DAMAGES" shall be revised as follows:

1) The Designated Portion of the Work 3 shall be completed by August 30, 2013. This completion date supersedes the revised completion date for this work established under Change Order No. 22, Supplement No. 1.

2) In the event the completion of the milestone for the prestressing of the 4 frames is completed prior to December 31, 2012, the Designated Portion of the Work 3 shall be completed 1 day earlier for each day prior to December 31, 2012 that the prestressing milestone is achieved except that the work will not be completed earlier than July 5, 2013.

3) Liquidated damages shall be revised to $50,000 per day with these damages starting on the 31st day after the completion date for the Designated Portion of the Work 3 as defined under this change order.

The revised completion date for the Designated Portion of the Work 3 as defined above shall be contingent upon the following 2 conditions:

1) The Hinge K closure pours shall be allowed within 60 days after the prestressing of the adjacent frames.

2) The Contractor shall receive access to the westbound structure's portion of Area FP, as defined by Section 5-1.11 "AREAS FOR CONTRACTOR'S USE" of the Contract Special Provisions, by September 30, 2012. The remaining portion of Area FP shall be released to the Contractor no later than October 31, 2012 as specified under Section 5-1.11 of the Contract Special Provisions.

In the event that either of the 2 above conditions is not met, the completion date for the Designated Portion of the Work 3 shall be granted a time extension commensurate with the impact incurred.

Estimated Cost: **Increase** ☑ **Decrease** ☐ **$12,181,065.00**

By reason of this order the time of completion will be adjusted as follows: 0 days

Submitted by		
Signature Rajesh Oberoi	Resident Engineer Rajesh Oberoi, Senior R.E.	Date 2/25/11
Approval Recommended by		
Signature Mike Forner	Principal T.E. Mike Forner	Date 2/25/2011
Engineer Approval by		
Signature Mike Forner	Principal T.E. Mike Forner	Date 3/15/2011

We the undersigned contractor, have given careful consideration to the change proposed and agree, if this proposal is approved, that we will provide all equipment, furnish the materials, except as may otherwise be noted above, and perform all services necessary for the work above specified, and will accept as full payment therefor the prices shown above.

NOTE: If you, the contractor, do not sign acceptance of this order, your attention is directed to the requirements of the specifications as to proceeding with the ordered work and filing a written protest within the time therein specified.

Contractor Acceptance by		
Signature	(Print name and title) Edmundo A. Ruchi - Treasurer	Date 3-7-2011

STATE OF CALIFORNIA - DEPARTMENT OF TRANSPORTATION

CONTRACT CHANGE ORDER MEMORANDUM

TO: Deanna Vilcheck, ACM /	FILE: E.A. 04 - 0120S4
FROM: Rajesh Oberoi, Senior R.E.	CO-RTE-PM SF-80-12.7/13.2
	FED. NO. NO FED AID
CCO#: 72 SUPPLEMENT#: 0 Category Code: BZZZ	CONTINGENCY BALANCE (incl. this change) $6,728,778.50
COST: $12,181,065.00 INCREASE ☑ DECREASE ☐	HEADQUARTERS APPROVAL REQUIRED? ☑ YES ☐ NO
SUPPLEMENTAL FUNDS PROVIDED: $0.00	IS THIS REQUEST IN ACCORDANCE WITH ENVIRONMENTAL DOCUMENTS? ☑ YES ☐ NO
CCO DESCRIPTION: Prestressing Milestone for TBPOC	**PROJECT DESCRIPTION:** YBITS-1 (Yerba Buena Island Transition Structures)

Original Contract Time:	Time Adj. This Change:	Previously Approved CCO Time Adjustments:	Percentage Time Adjusted: (including this change)	Total # of Unreconciled Deferred Time CCO(s): (including this change)
1390 Day(s)	0 Day(s)	0 Day(s)	0 %	7

THIS CHANGE ORDER PROVIDES FOR:

The mitigation of all Department delays through February 16, 2011, the establishment of a milestone to complete the construction of the 4 frames of the YBI Transition Structure and a revised completion date for the traffic ready completion of the entire structure that meets the Seismic Safety Opening date that has been established for the new east span of the San Francisco Oakland Bay Bridge.

This project, the Yerba Buena Island Transition Structure (YBITS), provides for the construction of two bridges which will connect eastbound and westbound traffic on the new east span of the San Francisco Oakland Bay Bridge (SFOBB) to the existing Yerba Buena Island (YBI) tunnel. The structures are comprised of concrete box girder bridges each approximately 26 meters wide, 40 meters high and 450 meters in length. Each structure is comprised of 2 frames, Frame 1 on the western portion of the structures and Frame 2 on the eastern portion.

Section 4 "Beginning of Work, Time of Completion, and Liquidated Damages" of the contract Standard Specifications along with Change Order No. 22, Supplement No. 1 established "ready for traffic" milestones for both the westbound and eastbound structures. The contractual "ready for traffic" dates are May 3, 2013 for the westbound structure and October 30, 2013 for the eastbound structure. Pertaining to these dates, the Department is responsible for approximately 2 months of contract delays due to ordered enhancements to the Frame 1 temporary trestle, falsework and shoring which have been implemented under Change Orders No. 10 and No. 47. This 2-month delay would extend the westbound and eastbound "ready for traffic" milestones to early July 2013 and the end of December 2013 respectively.

The adjacent Self-Anchored Suspension (SAS) bridge contract, via the Toll Bridge Program Oversight Committee (TBPOC), has established a Seismic Safety Opening date for the SFOBB east span of August 28, 2013. The current YBITS schedule, with the outstanding Department delays, falls 4 months later than this established SSO date. This change will act to establish a "ready for traffic" date for the YBITS contract that is consistent with the SFOBB east span SSO date. This will concurrently mitigate the 2-month Department delay to the contract completion.

To meet the SSO date, this change order will establish a milestone to complete the prestressing of the structures 4 frames by October 31, 2012 or approximately 4 months ahead of the current schedule. This date and scope of work is consistent with the contractual release of the area covering the western most 20 meters of the structure which will allow for the construction of the 2 hinges and the installation of the seismic joints at the YBITS / SAS interface. The "ready for traffic" date for the eastbound structure shall be revised to August 30, 2013 with the westbound structure date held at May 3, 2013. The change order provides an incentive for the contractor to pull the "ready for traffic" date back to July 5, 2013 including 3-months of Department owned float to mitigate Department delays which may be incurred over the next 20-months of construction.

In order to meet the prestressing milestone and "ready for traffic" dates established under the change order, the contractor will compress their schedule from the current 24 months to complete prestressing to 17 to 20 months. This will be accomplished by providing addition labor crews, working extended hours, furnishing additional falsework materials and mobilizing additional equipment onto the jobsite. The change order will provide compensation for the direct premium time labor, material purchases and equipment rental costs. Compensation will also provide for labor inefficiencies that inherent to extended shift hours and increased workforce.

The change order provides for the substitution of a geogrid or cement slurry backfill in lieu of the specified cement treated backfill that will help mitigate the costs of compressing the schedule. This change shall be implemented under a separate

ADA Notice: For individuals with sensory disabilities, this document is available in alternate formats. For information call: (916) 654-6410 or TDD (916) 654-3880 or write Records and Forms Management, 1120 N Street, MS-89, Sacramento, CA 95814.

change order. In the case slurry backfill is required, the additional costs associated with this will be paid under that change order.

The change order provides for weather days and reduced liquidated damages in order to mitigate the contractor's risk and associated costs of this change order. Any weather days incurred beyond 20 days established under the change order will extend the milestone date. Liquidated damages for the eastbound structure "ready for traffic" date are reduced from $100,000 to $50,000 per day.

Compensation for this change shall be paid as an adjustment of compensation at an agreed lump sum of $12,181,065.00 which shall be financed from the contract contingency fund. The change order also provides an incentive of $50,000 per day for each day the contractor completes the prestressing milestone prior to December 31, 2012. This incentive is capped at a maximum of $7,500,000. Any incentive achieved shall be paid under a supplemental change order.

The Toll Bridge Program Oversight Committee approved this Change Order on February 24,2011.

No adjustment of contract time is warranted as the change order acts to mitigate all Department delays to date. The change order will mitigate all Department delays incurred prior to February 16, 2011.

Maintenance concurrence is not required as this is an administrative change order and doesn't affect any permanent roadway features.

CONCURRED BY:		
Construction Engineer: Rajesh Oberoi	Date 2/25/11	
Bridge Engineer:	Date	
Project Engineer: BOB ZANDIPOUR	Date 3/10/11	
Project Manager: KEN TERPSTRA	Date 3/16/11	
FHWA Rep.:	Date	
Environmental:	Date	
Other (specify):	Date	
Other (specify):	Date	
District Prior Approval By:	Date	
HQ (Issue Approve) By:	Date	
Resident Engineer's Signature: Rajesh Oberoi 2/25/11	Date	

ESTIMATE OF COST

	THIS REQUEST	TOTAL TO DATE
ITEMS	$0.00	$0.00
FORCE ACCOUNT	$0.00	$0.00
AGREED PRICE	$0.00	$0.00
ADJUSTMENT	$12,181,065.00	$12,181,065.00
TOTAL	$12,181,065.00	$12,181,065.00

FEDERAL PARTICIPATION

☐ PARTICIPATING ☐ PARTICIPATING IN PART ☑ NONE
☐ NON-PARTICIPATING (MAINTENANCE) ☐ NON-PARTICIPATING

FEDERAL SEGREGATION (if more than one Funding Source or P.I.P. type)
☑ CCO FUNDED PER CONTRACT ☐ CCO FUNDED AS FOLLOWS

FEDERAL FUNDING SOURCE	PERCENT

ADA Notice: For individuals with sensory disabilities, this document is available in alternate formats. For information call: (916) 654-6410 or TDD (916) 654-3880 or write Records and Forms Management, 1120 N Street, MS-89, Sacramento, CA 95814.

CONTRACT CHANGE ORDER

Change Requested by: Engineer

CCO: 72	Suppl. No. 1	Contract No. 04 - 0120S4	Road SF-80-12.7/13.2	FED. AID LOC.: NO FED AID

To: **M C M CONSTRUCTION INC**

You are directed to make the following changes from the plans and specifications or do the following described work not included in the plans and specifications for this contract. ***NOTE: This change order is not effective until approved by the Engineer.***

Description of work to be done, estimate of quantities and prices to be paid. (Segregate between additional work at contract price, agreed price and force account.) Unless otherwise stated, rates for rental of equipment cover only such time as equipment is actually used and no allowance will be made for idle time. This last percentage shown is the net accumulated increase or decrease from the original quantity in the Engineer's Estimate.

The following 3 modifications shall be made to Change Order No. 72:

1) Due to all Department delays and impacts, incurred prior to November 1, 2011, to the work concerning the completion of the prestressing milestone established under Change Order No. 72, this change order shall grant a 78 working day extension to all dates in that change order. As such the $50,000.00 calendar day incentive shall be paid for each calendar day prior to March 19, 2013 that the Contractor achieves the completion of the prestressing of all frames as defined with this March 19, 2013 date superseding the December 31, 2012 incentive date established under Change Order No. 72. This incentive payment shall not exceed $7,500,000.00.

2) The Designated Portion of the Work 3 shall be completed by November 16, 2013 in lieu of the August 30, 2013 date established under Change Order No. 72. In the event the completion of the milestone for the prestressing of all frames is completed prior to March 19, 2013, the Designated Portion of the Work 3 shall be completed 1 day earlier for each day prior to March 19, 2013 that the prestressing milestone is achieved except that the work will not be completed earlier than July 5, 2013. The liquidated damages, as established under Change Order No. 72 shall continue to apply at $50,000.00 per day with these damages starting on the 62nd day after the specified completion date for the Designated Portion of the Work 3 as defined under this change order.

3) The 20 days of inclement weather established under Change Order No. 72 shall be reset to 10 days from November 1, 2011 through the completion of the milestone work. The Contractor will plan for up to 10 days on which they are prevented by inclement weather from working on the controlling operations required to achieve the milestone of the completion of the prestressing of all frames. In the event the Contractor realizes more than 10 days of inclement weather effecting the controlling operations, the prestressing milestone shall be extended 1 day for each day over 10 days of inclement weather that is incurred. A day of inclement weather shall be defined as specified in Section 8-1.06 "TIME OF COMPLETION" of the Contract Standard Specifications.

In addition to the modifications made to Change Order No. 72, this change order shall establish 3 additional milestones related to the completion of the westbound and eastbound structures and eliminates the construction of the Hinge K Closure from the Contract as defined herein.

The 3 milestones being established under this change order shall be defined as follows:

Milestone 1 - The Contractor shall complete all prestressing work of Frame 2 of the Westbound structure and remove all, equipment and other materials up station from the centerline of Bent W3L (W Line Sta. 55+28.000) from the structure itself, the area directly under the structure and the area under the structure to the left of the W Line. The Contractor shall vacate this area as described in order to achieve Milestone 1. As part of this work, the Contractor shall leave in place all falsework from Bent W3L through Bent W2L except that all formwork and form bracing above the falsework soffit deck shall be removed. The Contractor shall be allowed access into this vacated area during concrete pours between Bents W3R and W2R of the eastbound structure. Any additional access into this vacated area shall be allowed to the extent that permission is granted by the Self Anchored Suspension Bridge Contract (04-0120F4).

Milestone 2 - The Contractor shall complete all prestressing work of Frame 2 of the Eastbound structure and remove all equipment and other materials up station from the centerline of Bent W3R (E Line Sta. 55+20.546) from the structure itself, the area directly under the structure and the area under the structure to the left of the E Line. The Contractor shall vacate this area as described in order to achieve Milestone 2. As part of this work, the Contractor shall leave in place all falsework from Bent W3R through Bent W2R except that all formwork and form bracing above the falsework soffit deck shall be removed. Any access into this vacated area shall be allowed to the extent that permission is granted by the Self Anchored Suspension Bridge Contract (04-0120F4).

Milestone 3 - The Contractor shall vacate the area up station from the centerline of Bent W4L (W Line Sta. 54+43.200) and from the centerline of Bent W4R (E Line Sta. 54+38.032) from the structures themselves, the area directly under the structures and the area under the structure to the left of the E Line. The Contractor shall be allowed access into this

CCO: 72	Suppl. No. 1	Contract No. 04 - 0120S4	Road SF-80-12.7/13.2	FED. AID LOC.: NO FED AID

vacated area in order to construct the concrete barrier (Type 732 Modified and Type K) and to install the removable concrete counterweight (bikepath) between Bent W4R and Hinge K. Any additional access into this vacated area shall be allowed to the extent that permission is granted by the Self Anchored Suspension Bridge Contract (04-0120F4).

The completion dates associated with the above defined milestones are listed below:

Milestone 1 -May 1, 2012
Milestone 2 -November 1, 2012
Milestone 3 -December 31, 2012

The following provisions shall pertain to the completion of the milestones established under this change order:

1) The Contractor shall provide milestones within the Contract's progress schedule that establishes the completion of the 3 milestones as identified under this change order.

2) The Contractor will plan for up to 10 days from November 1, 2011 through the completion of the work on which they are prevented by inclement weather from working on the controlling operations required to achieve the 3 milestones established under this change order. In the event the Contractor realizes more than 10 days of inclement weather effecting the controlling operations, the milestone dates shall be extended 1 day for each day over 10 days of inclement weather that is incurred. A day of inclement weather shall be defined as specified in Section 8-1.06 "TIME OF COMPLETION" of the Contract Standard Specifications.

This intent to complete the milestones established under this change order and Change Order No. 72 is undertaken with the full comprehension of all Department changes to the Contract that have been transmitted to the Contractor prior to November 1, 2011 and no time extension shall be granted to the milestone dates as a result of these changes. Any outstanding direct costs, including markup, associated with these changes shall remain compensable and shall be compensated under separate change orders with no time extensions granted to the work.

As a result of this change order, no Contract time extension shall be granted for any Department delays or impacts incurred prior to November 1, 2011.

The construction of the Hinge K Closure shall be eliminated from the Contract as defined by the 7 items of work below:

1) The Contractor shall furnish to the project site the Hinge KW and KE seismic joints along with all interior and exterior bent plates for the steel barrier at Hinge KW and Hinge KE as specified under the Contract and as modified under Change Order No. 100. The installation of the seismic joints and steel barrier shall be eliminated from the Contract.

2) The construction of all structural concrete and bar reinforcing steel for the Hinge K Closure shall be eliminated from the Contract.

3) The placement of the minor concrete (concrete ballast) at Hinge K shall be eliminated from the Contract.

4) The concrete barrier (Type 732 Modified) shall be installed up to the centerline of Bents W3L and W3R on the eastbound and westbound structures. The concrete barrier up station from these bents (including all electrical conduit, pull boxes and appurtenances inside the barrier) shall be eliminated from the Contract.

5) The placement of the counter weights prior to the placement of the Hinge K Closure concrete shall be eliminated from the Contract.

6) Furnishing and placing the polyester concrete overlay (50MM) shall be eliminated from the Contract.

7) Installation of the Hinge K bearing assembly shall be eliminated from the Contract.

Estimate of Decrease in Contract Item at Contract Price:

Item No. 90: STRUCTURAL CONCRETE BRIDGE
-502 M3 (-1.53%) @ $855.00 /M3 = -$429,210.00 (-1.16%)

CONTRACT CHANGE ORDER

Change Requested by: Engineer

CCO: 72	Suppl. No. 1	Contract No. 04 - 0120S4	Road SF-80-12.7/13.2	FED. AID LOC.: NO FED AID

Item No. 94: MINOR CONCRETE (CONCRETE BALLAST)
-36 M3 (-100.00%) @ $600.00 /M3 = -$21,600.00 (-100.00%)

Item No. 99: FURNISH POLYESTER CONCRETE OVERLAY
-38 M3 (-100.00%) @ $3,000.00 /M3 = -$114,000.00 (-100.00%)

Item No. 100: PLACE POLYESTER CONCRETE OVERLAY
-765 M2 (-100.00%) @ $20.00 /M2 = -$15,300.00 (-100.00%)

Item No. 102: INSTALL HINGE K BEARING ASSEMBLY
-4 EA (-100.00%) @ $15,000.00 /EA = -$60,000.00 (-100.00%)

Item No. 110: BAR REINFORCING STEEL (BRIDGE)
-181300 KG (-2.85%) @ $1.70 /KG = -$308,210.00 (-2.30%)

Item No. 149: CONCRETE BARRIER (TYPE 732 MODIFIED)
-183 M (-10.07%) @ $400.00 /M = -$73,200.00 (-20.52%)

Estimated Total Cost for Decrease in Contract Item.....($1,021,520.00)

There shall be no adjustment pertaining to Section 4-1.03B of the Standard Specifications, for any decreased or eliminated item quantities resulting from this change.

The description of Designated Portion of Work 3 is modified to exclude any requirement relative to the traffic worthiness in the areas of the Eastbound structure for which work is eliminated by this change order.

The quantity shown herein for Items No. 90, 94, 99, 100, 102, 110 and 149, when combined with the quantities specified in the Engineer's estimate, and as modified by any previous change orders, shall be the final quantity for which payment will be made.

Adjustment of Compensation at Lump Sum:

The Contractor shall plan and execute the work of the Contract with the intent to complete the 3 milestones by the dates established under this change order.

In addition to the lump sum of $12,181,065.00 provided for under Change Order No. 72, the Contractor shall be compensated an additional agreed lump sum of $10,470,000.00 for their efforts to complete Milestones 1 through 3 by the dates established under this change order. Said compensation shall be paid in monthly progress payments to the Contractor.

In addition to the lump sum compensation paid under this change order, the Contractor shall be paid incentive payments pertaining to Milestone 1 through 3 as defined below:

1) The Contractor shall be paid an incentive of $30,000.00 for each calendar day prior to May 1, 2012 that the Contractor achieves the completion of Milestone 1 as defined under this change order. This incentive payment shall not exceed $300,000.00.

2) The Contractor shall be paid an incentive of $30,000.00 for each calendar day prior to November 1, 2012 that the Contractor achieves the completion of Milestone 2 as defined under this change order. This incentive payment shall not exceed $1,200,000.00.

3) The Contractor shall be paid an incentive of $30,000.00 for each calendar day prior to December 31, 2012 that the Contractor achieves the completion of Milestone 3 as defined under this change order. This incentive payment shall not exceed $300,000.00.

Any incentive payments achieved shall be compensated under a supplement to this change order.

Except for items of work specifically excluded herein, the lump sum compensation provided under this change order and Change Order No. 72 along with any incentive earned, as provided herein and under Change Order No. 72, constitutes full

CONTRACT CHANGE ORDER

Change Requested by: Engineer

CCO: 72	Suppl. No. 1	Contract No. 04 - 0120S4	Road SF-80-12.7/13.2	FED. AID LOC.: NO FED AID

and complete compensation, including all markups, for all costs associated with the compression of the Contractor's schedule to achieve the milestones and any costs associated with the elimination of the Hinge K Closure and no additional compensation shall be paid.

Adjustment of Compensation at Lump Sum $10,470,000.00

The following 5 work activities are excluded from this change order:

1) The Contractor shall provide formed block outs within the eastbound and westbound structures between Bents W3 and W2 to provide for the installation of tie downs for Hinge K. Plan details for the block outs along with compensation for the work shall be provided under a separate change order. The installation of the tie downs shall be performed by the adjacent contract (Contract 04-0120F4). No time extensions shall be granted for the milestone dates established under this change order for this work.

2) Any adjustment of compensation for eliminated electrical items due to the eliminated Hinge K Closure and concrete barrier items of work is deferred and shall be provided under a separate change order.

3) Anticipated changes to mitigate potential delays to the prestressing work at Frames 1 and 2 shall be addressed under a separate change order. No time adjustments will be made to the milestone dates established under this change order for this work.

4) All materials associated with the falsework left in place between Bents W3 and W2 as defined under Milestones 1 and 2 of this change order shall be paid at the cost to replace the falsework in kind including the application of a 15 percent markup.

5) Any adjustment of compensation for the eliminated work of stripping the falsework that is defined to be left in place under Milestone 1 and 2 is deferred and shall be provided under a separate change order.

It is hereby agreed that the Department shall provide a release of liability for the falsework left in place between Bents W3 and W2 as defined under Milestone 1 and 2 of this change order once the Contractor vacates the area as defined. This falsework shall become the property of the Department.

It is hereby agreed that the Department shall provide relief of maintenance and responsibility for each of the areas to be vacated as defined under Milestone 1, 2 and 3 of this change order. Relief shall be granted in accordance with Section 7-1.15 "Relief From Maintenance and responsibility" of the Contract Standard Specifications upon a request from the Contractor once each area is vacated as defined.

Estimated Cost: Increase ☑ Decrease ☐ **$9,448,480.00**

By reason of this order the time of completion will be adjusted as follows: 0 days

Submitted by

Signature William Howe	Resident Engineer William Howe, Senior R.E.	Date 12-6-11

Approval Recommended by

Signature Mike Forner	Construction Manager Mike Forner	Date 12-7-11

Engineer Approval by

Signature Mike Forner	Construction Manager Mike Forner	Date 12-14-11

We the undersigned contractor, have given careful consideration to the change proposed and agree, if this proposal is approved, that we will provide all equipment, furnish the materials, except as may otherwise be noted above, and perform all services necessary for the work above specified, and will accept as full payment therefor the prices shown above.

NOTE: If you, the contractor, do not sign acceptance of this order, your attention is directed to the requirements of the specifications as to proceeding with the ordered work and filing a written protest within the time therein specified.

Contractor Acceptance by

Signature	(Print name and title) Edmund A. Puchi, Treasurer	Date 12-13-2011

STATE OF CALIFORNIA - DEPARTMENT OF TRANSPORTATION

CONTRACT CHANGE ORDER MEMORANDUM

TO: Deanna Vilcheck, ACM /	FILE: E.A. 04 - 0120S4
FROM: William Howe, Senior R.E.	CO-RTE-PM SF-80-12.7/13.2
	FED. NO. NO FED AID
CCO#: 72 SUPPLEMENT#: 1 Category Code: BZZZ	CONTINGENCY BALANCE (incl. this change) $72,478,078.80
COST: $9,448,480.00 INCREASE ☑ DECREASE ☐	HEADQUARTERS APPROVAL REQUIRED? ☑ YES ☐ NO
SUPPLEMENTAL FUNDS PROVIDED: $0.00	IS THIS REQUEST IN ACCORDANCE WITH ENVIRONMENTAL DOCUMENTS? ☑ YES ☐ NO
CCO DESCRIPTION: Establish Milestones & Eliminate Hinge K	**PROJECT DESCRIPTION:** YBITS-1 (Yerba Buena Island Transition Structures)

Original Contract Time:	Time Adj. This Change:	Previously Approved CCO Time Adjustments:	Percentage Time Adjusted: (including this change)	Total # of Unreconciled Deferred Time CCO(s): (including this change)
1390 Day(s)	0 Day(s)	0 Day(s)	0 %	9

THIS CHANGE ORDER PROVIDES FOR:

The mitigation of all Department delays through November 1, 2011, the elimination of the Hinge K Closure construction and the establishment of milestones to release the Hinge K Closure area to the adjacent SAS contract.

This project, the Yerba Buena Island Transition Structure (YBITS), provides for the construction of two bridges which will connect eastbound and westbound traffic on the new east span of the San Francisco Oakland Bay Bridge (SFOBB) to the existing Yerba Buena Island (YBI) tunnel. The structures are comprised of concrete box girder bridges each approximately 26 meters wide, 40 meters high and 450 meters in length. Each structure is comprised of 2 frames, Frame 1 on the western portion of the structures and Frame 2 on the eastern portion.

The original Change Order No. 72 established a milestone to complete the prestressing of all frames on the structure by October 2012. This date corresponded with the anticipated turnover of the Hinge K Closure area from the adjacent SAS contract to this contract. This closure ties in the YBITS and SAS structures. Over the past 9 months, the Department has impacted the contractor's schedule due to access constraints with the SAS contract and added work associated with extensive modifications to the westbound structure required to accommodate the planned future construction of on and off ramps. Numerous other plan changes affecting the structures have also been issued. Together these changes have resulted in approximately 2 ½ months of delay to the work. This change order will act to mitigate all Department delays through November 1, 2012 by compensating the contractor to provide additional labor and equipment resources.

It was provided under this contract that after the Hinge K area is released by the SAS contract, the YBITS contract would construct the Hinge K Closure for both the westbound and eastbound structures. The SAS Risk Management team has now determined that significant risk would be mitigated by eliminating the Hinge K Closure construction from the YBITS contract and added it to the SAS contract. This transfer will eliminate the complex coordination that would be required for the YBITS contract to construct the closure while the SAS contract completes the load transfer on the SAS structure. This change order provides for the elimination of the Hinge K Closure from this contract.

In eliminating the Hinge K work from the contract, this change order provides 3 additional milestones. The first milestone will release the Hinge K area at the westbound structure by May 1, 2012, the second will release the eastbound structure Hinge K area by November 1, 2012, and the third will release a larger area of the project to the SAS contract by December 31, 2012. These releases will limit conflicts between the projects. The compensation being paid under this change order for providing additional labor and equipment resources will also allow the contractor to release these areas as specified under the 3 milestones established by this change order.

In order to mitigate past delays and achieve the milestones established under this change order, the contractor will need to compress their current schedule. This will be accomplished by providing addition labor crews to provide a 2nd work shift, working extended hours and mobilizing additional equipment onto the jobsite. The change order will provide compensation for the direct premium time labor and equipment rental costs of this work. Compensation will also provide for labor inefficiencies that are inherent to 2nd shift work, extended shift hours and an increased workforce.

Compensation for providing additional labor and equipment resources shall be paid as an adjustment of compensation at an agreed lump sum of $10,470,000.00. The elimination of the Hinge K Closure work shall be credited to the Department by decreasing the appropriate contract items at contract prices for a total cost savings of $1,021,520.00. The net change order cost of $9,448,480.00 shall be financed from the contract contingency fund. The change order also provides incentives of $30,000 per day for each day the contractor completes the 3 milestone prior to the dates specified. These incentives are

ADA Notice: For individuals with sensory disabilities, this document is available in alternate formats. For information call: (916) 654-6410 or TDD (916) 654-3880 or write Records and Forms Management, 1120 N Street, MS-89, Sacramento, CA 95814.

capped at a maximum of $1,800,000. Any incentive achieved shall be paid under a supplemental change order.

This Change Order is consistent with the Toll Bridge Program Oversight Committee's (TBPOC's) goal of achieving the seismic safety opening of the new SFOBB by 2013 and has been approved by the Committee at their December 1,2011 meeting.

No adjustment of contract time is warranted as the change order acts to mitigate all Department delays to date. The change order will mitigate all Department delays incurred prior to November 1, 2011.

Maintenance concurrence is not required as this is an administrative change order and doesn't affect any permanent roadway features.

CONCURRED BY:		
Construction Engineer:	William Howe	Date 12-02-11
Bridge Engineer:	Mehran Ardakanian	Date
Project Engineer:	Bob Zandipour, Design	Date 12-9-11
Project Manager:	Ken Terpstra	Date 12-20-11
FHWA Rep.:		Date
Environmental:		Date
Other (specify):		Date
Other (specify):		Date
District Prior Approval By:		Date
HQ (Issue Approve) By:	Larry Salhaney	Date 12-2-11
Resident Engineer's Signature: William Howe		Date 12-02-11

ESTIMATE OF COST

	THIS REQUEST	TOTAL TO DATE
ITEMS	($1,021,520.00)	($1,021,520.00)
FORCE ACCOUNT	$0.00	$0.00
AGREED PRICE	$0.00	$0.00
ADJUSTMENT	$10,470,000.00	$22,651,065.00
TOTAL	$9,448,480.00	$21,629,545.00

FEDERAL PARTICIPATION

☐ PARTICIPATING ☐ PARTICIPATING IN PART ☑ NONE

☐ NON-PARTICIPATING (MAINTENANCE) ☐ NON-PARTICIPATING

FEDERAL SEGREGATION (if more than one Funding Source or P.I.P. type)

☐ CCO FUNDED PER CONTRACT ☐ CCO FUNDED AS FOLLOWS

FEDERAL FUNDING SOURCE	PERCENT

ADA Notice: For individuals with sensory disabilities, this document is available in alternate formats. For information call: (916) 654-6410 or TDD (916) 654-3880 or write Records and Forms Management, 1120 N Street, MS-89, Sacramento, CA 95814.

STATE OF CALIFORNIA - DEPARTMENT OF TRANSPORTATION

CONTRACT CHANGE ORDER

Change Requested by: Engineer

CCO 68	Suppl. No. 1	Contract No. 04 - 0120S4	Road SF-80-12.7/13.2	FED. AID LOC.: NO FED AID

To: **M C M CONSTRUCTION INC**

You are directed to make the following changes from the plans and specifications or do the following described work not included in the plans and specifications for this contract. ***NOTE: This change order is not effective until approved by the Engineer.***

Description of work to be done, estimate of quantities and prices to be paid. (Segregate between additional work at contract price, agreed price and force account.) Unless otherwise stated, rates for rental of equipment cover only such time as equipment is actually used and no allowance will be made for idle time. This last percentage shown is the net accumulated increase or decrease from the original quantity in the Engineer's Estimate.

Extra Work at Force Account:

Provide additional funding for the operation and maintenance costs associated with the temporary elevator that was furnished and installed under Change Order No. 68, Supplement No. 0, as determined by the Engineer. Compensation will include the labor cost associated with providing an elevator operator and the cost of maintaining the elevator during its time in use.

Estimated Cost of Extra Work at Force Account = $550,000.00

Estimated Cost: Increase ☑ **Decrease** ☐ **$550,000.00**

By reason of this order the time of completion will be adjusted as follows: 0 days

Submitted by		
Signature William Howe	**Resident Engineer** William Howe, Senior R.E.	**Date** 05-10-12
Approval Recommended by		
Signature Michael Forner	**Principal T.E.** Mike Forner	**Date** 6-8-12
Engineer Approval by		
Signature Mike Forner	**Principal T.E.** Mike Forner	**Date** 6-8-12

We the undersigned contractor, have given careful consideration to the change proposed and agree, if this proposal is approved, that we will provide all equipment, furnish the materials, except as may otherwise be noted above, and perform all services necessary for the work above specified, and will accept as full payment therefor the prices shown above.

NOTE: If you, the contractor, do not sign acceptance of this order, your attention is directed to the requirements of the specifications as to proceeding with the ordered work and filing a written protest within the time therein specified.

Contractor Acceptance by		
Signature Not Required	**(Print name and title)**	**Date**

CONTRACT CHANGE ORDER

Change Requested by: Engineer

CCO 72	Suppl. No. 2	Contract No. 04 - 0120S4	Road SF-80-12.7/13.2	FED. AID LOC.: NO FED AID

To: **M C M CONSTRUCTION INC**

You are directed to make the following changes from the plans and specifications or do the following described work not included in the plans and specifications for this contract. ***NOTE: This change order is not effective until approved by the Engineer.***

Description of work to be done, estimate of quantities and prices to be paid. (Segregate between additional work at contract price, agreed price and force account.) Unless otherwise stated, rates for rental of equipment cover only such time as equipment is actually used and no allowance will be made for idle time. This last percentage shown is the net accumulated increase or decrease from the original quantity in the Engineer's Estimate.

In accordance with Section 8-1.05, "Temporary Suspension of Work", of the Standard Specifications, the Contract work shall be suspended on the eight (8) days listed below:

March 3, 2012	May 19, 2012
March 4, 2012	May 20, 2012
April 21, 2012	July 28, 2012
April 22, 2012	July 29, 2012

During these days, all construction activities shall be suspended with no work taking place except for any activities specifically required to remain in compliance with any safety regulations or the Contract's Storm Water Pollution Prevention Plan (SWPPP). Any other work performed shall be specifically approved by the Engineer.

A determination of a commensurate time extension due to this change order and all Department delays incurred through February 29, 2012, as it pertains to the prestressing milestone established under Contract Change Order No. 72, Supplement No. 0, Milestones 2 and 3 established under Contract Change Order No. 72, Supplement No. 1, and to the Designated Portion of the Work 3 as defined under Section 4, "Beginning of Work, Time of Completion, and Liquidated Damages", of the Contract Special Provisions has been made in accordance with Section 8-1.07, "Liquidated Damages", of the Standard Specifications and Section 10-1.22, "Progress Schedule (Critical Path Method)", of the Special Provisions. There shall be a twenty-five (25) day time extension to the completion of the milestones and designated portion of work as a result of this change.

Based on the twenty-five (25) day time extension provided under this change order and the time extensions granted under Contract Change Orders No. 72, Supplement No. 1, the $50,000.00 calendar day incentive based on the Contractor achieving the completion of the prestressing of all frames as defined under Change Order No. 72, Supplement No. 0, shall be paid for each calendar day prior to April 13, 2013, that the prestressing is completed. The maximum incentive shall not exceed $7,500,000.00.

Based on the twenty-five (25) day time extension provided under this change order, the completion dates associated with Milestone 2 and Milestone 3 as defined under Contract Change Order No. 72, Supplement No. 1, shall be adjusted as listed below:

Milestone 2 - November 26, 2012
Milestone 3 - January 25, 2013

The incentive payments for completion of the milestone work prior to the established milestone dates shall be based off of these adjusted dates. The maximum incentive for Milestone 2 and Milestone 3 shall not exceed $1,200,000.00 and $300,000.00 respectively.

Based on the twenty-five (25) day time extension provided under this change order, the Designated Portion of the Work 3 shall be completed by December 11, 2013, in lieu of the November 16, 2013, date established in Contract Change Order No. 72, Supplement No. 1. In the event the completion of the milestone for the prestressing of all frames is completed prior to April 13, 2013, the Designated Portion of Work 3 shall be completed one (1) day earlier for each day prior to April 13, 2013, that the prestressing milestone is achieved. The liquidated damages pertaining to the Designated Portion of Work 3 shall continue to apply at $50,000.00 per day with these damages starting on the 62nd day after the specified completion date as defined under this change order and Contract Change Order No. 72, Supplements No. 0 and No. 1.

In addition to the time impacts, both past and future, resulting from the eight (8) days of temporary suspension of work identified under this change order, the twenty-five (25) day time extension being granted resolves all Department delays incurred to the work through February 29, 2012, and no additional time extensions shall be granted through this time period.

The twenty-five (25) day time extension provided under this change order applies only to the milestone dates and

CONTRACT CHANGE ORDER

Change Requested by: Engineer

CCO 72	Suppl. No. 2	Contract No. 04 - 0120S4	Road SF-80-12.7/13.2	FED. AID LOC.: NO FED AID

Designated Portion of Work 3 as defined herein. There shall be no time extension to the completion of the Contract or to the Designated Portion of Work 2 as a result of this change.

Any outstanding direct costs, including markups, pertaining to the Department delays incurred to the work through February 29, 2012, shall remain compensable and shall be addressed under separate contract change orders.

There shall be no cost to the Department as a result of the eight (8) days of temporary suspension of work identified under this change order.

Adjustment of Compensation at Lump Sum:

The Contractor shall be compensated an Agreed Lump Sum of $300,000.00 for achieving Milestone 1, as defined under Contract Change Order No. 72, Supplement No. 1, more than ten (10) calendar days prior to the May 1, 2012, milestone date established under Contract Change Order No. 72, Supplement No. 1. This lump sum constitutes full compensation, including all markups, for achieving the full incentive payment established for the early completion of Milestone 1 and no additional compensation shall be paid.

Adjustment of Compensation at Agreed Lump Sum = $300,000.00

Estimated Cost: Increase ☑ Decrease ☐ **$300,000.00**

By reason of this order the time of completion will be adjusted as follows: 0 days

Submitted by		
Signature	Resident Engineer for William Howe, Senior R.E.	Date 4/16/12
Approval Recommended by		
Signature	Principal T.E. Mike Forner	Date 4/23/12
Engineer Approval by		
Signature	Principal T.E. Mike Forner	Date 6/1/12

We the undersigned contractor, have given careful consideration to the change proposed and agree, if this proposal is approved, that we will provide all equipment, furnish the materials, except as may otherwise be noted above, and perform all services necessary for the work above specified, and will accept as full payment therefor the prices shown above.

NOTE: If you, the contractor, do not sign acceptance of this order, your attention is directed to the requirements of the specifications as to proceeding with the ordered work and filing a written protest within the time therein specified.

Contractor Acceptance by		
Signature	(Print name and title) JAMES A. CARTER, PRESIDENT	Date 5/29/12

STATE OF CALIFORNIA - DEPARTMENT OF TRANSPORTATION

CONTRACT CHANGE ORDER

Change Requested by: Engineer

CCO 98	Suppl. No. 1	Contract No. 04 - 0120S4	Road SF-80-12.7/13.2	FED. AID LOC.: NO FED AID

To: **M C M CONSTRUCTION INC**

You are directed to make the following changes from the plans and specifications or do the following described work not included in the plans and specifications for this contract. ***NOTE: This change order is not effective until approved by the Engineer.***

Description of work to be done, estimate of quantities and prices to be paid. (Segregate between additional work at contract price, agreed price and force account.) Unless otherwise stated, rates for rental of equipment cover only such time as equipment is actually used and no allowance will be made for idle time. This last percentage shown is the net accumulated increase or decrease from the original quantity in the Engineer's Estimate.

Extra Work at Force Account:

Provide additional funds for the work specified under the original Change Order No. 098 S0.

Estimated Cost of Extra Work at Force Account = $600,000.00

Estimated Cost: Increase ☑ **Decrease** ☐ **$600,000.00**

By reason of this order the time of completion will be adjusted as follows: 0 days

Submitted by

Signature William Howe	Resident Engineer William Howe, Senior R.E.	Date 06-05-12

Approval Recommended by

Signature Deanna Vilcheck	Area Construction Manager Deanna Vilcheck	Date 6/5/12

Engineer Approval by

Signature Deanna Vilcheck	Area Construction Manager Deanna Vilcheck	Date 6/6/12

We the undersigned contractor, have given careful consideration to the change proposed and agree, if this proposal is approved, that we will provide all equipment, furnish the materials, except as may otherwise be noted above, and perform all services necessary for the work above specified, and will accept as full payment therefor the prices shown above.

NOTE: If you, the contractor, do not sign acceptance of this order, your attention is directed to the requirements of the specifications as to proceeding with the ordered work and filing a written protest within the time therein specified.

Contractor Acceptance by

Signature Not Required	(Print name and title)	Date

STATE OF CALIFORNIA - DEPARTMENT OF TRANSPORTATION

CONTRACT CHANGE ORDER MEMORANDUM

TO: Deanna Vilcheck, ACM /	FILE: **E.A.** 04 - 0120S4
FROM: William Howe, Senior R.E.	**CO-RTE-PM** SF-80-12.7/13.2
	FED. NO. NO FED AID
CCO#: **68** SUPPLEMENT#: **1** Category Code: **BZZZ**	CONTINGENCY BALANCE (incl. this change) **$70,135,316.00**
COST: **$550,000.00** INCREASE ☑ DECREASE ☐	HEADQUARTERS APPROVAL REQUIRED? ☑ YES ☐ NO
SUPPLEMENTAL FUNDS PROVIDED: **$0.00**	IS THIS REQUEST IN ACCORDANCE WITH ENVIRONMENTAL DOCUMENTS? ☑ YES ☐ NO
CCO DESCRIPTION: Additional Funds for Elevator Operation	**PROJECT DESCRIPTION:** YBITS-1 (Yerba Buena Island Transition Structures)

Original Contract Time:	Time Adj. This Change:	Previously Approved CCO Time Adjustments:	Percentage Time Adjusted: (including this change)	Total # of Unreconciled Deferred Time CCO(s): (including this change)
1390 Day(s)	**0** Day(s)	**0** Day(s)	**0** %	**9**

THIS CHANGE ORDER PROVIDES FOR:

Additional funds to operate the temporary elevator that provides access to the Frame 2 superstructure.

This project, the Yerba Buena Island Transition Structure (YBITS), provides for the construction of two bridges which will connect eastbound and westbound traffic on the new east span of the San Francisco Oakland Bay Bridge (SFOBB) to the existing Yerba Buena Island (YBI) tunnel. The structures are comprised of concrete box girder bridges each approximately 50 meters high and 450 meters in length.

The original Change Order No. 68 S0 provided a temporary elevator to access the Frame 2 superstructure that could be used as emergency egress from the structure during any weather event and eliminate the Department's risk pertaining to weather delays affecting the Seismic Safety Opening date that has been established via the TBPOC for the new SFOBB east span. The original Change Order No. 68 S0 provided a lump sum payment to furnish and install the elevator with the operational costs paid as extra work at force account.

Subsequent to Change Order No. 68 S0 being issued, Change Order 72, Supplement No. 1, was approved to establish milestones to release areas of the project to the adjacent SAS project and to mitigate delays incurred to the YBITS contract. Supplement No. 1 required the Contractor to work double shifts and additional weekends to meet the milestone dates. These additional work shifts will require increased operation of the elevator, which is paid on a force account basis as defined under the original Change Order No. 68 S0. This change order will provide additional funding for operating the elevator based on the revised estimate of the costs to be incurred.

Compensation for these additional costs shall be paid as extra work at force account at an estimated cost of $550,000.00, which shall be funded from the Contract's contingency fund. A detailed cost estimate is on file.

This change order was approved by the TBPOC on June 6, 2012, copy attached.

No adjustment of contract time shall be granted as the change will not affect the controlling operation.

Maintenance concurrence is not required as this change affects a temporary structure and doesn't affect any permanent roadway features.

ADA Notice: For individuals with sensory disabilities, this document is available in alternate formats. For [illegible]
Records and Forms Management, 1120 N Street, MS-89, Sacramento, CA 95814

CONCURRED BY:		
Construction Engineer:	William Howe	Date 05-10-12
Bridge Engineer:	Mehran Ardakanian	Date
Project Engineer:	Bob Zandipour, Design	Date 6-8-12
Project Manager:	Ken Terpstra	Date 6-8-12
FHWA Rep.:		Date
Environmental:		Date
Other (specify):		Date
Other (specify):		Date
District Prior Approval By:		Date
HQ (Issue Approve) By:	Larry Salhaney	Date 6-8-12
Resident Engineer's Signature: William Howe		Date 05-10-12

ESTIMATE OF COST

	THIS REQUEST	TOTAL TO DATE
ITEMS	$0.00	$0.00
FORCE ACCOUNT	$550,000.00	$920,000.00
AGREED PRICE	$0.00	$564,770.00
ADJUSTMENT	$0.00	$0.00
TOTAL	$550,000.00	$1,484,770.00

FEDERAL PARTICIPATION

☐ PARTICIPATING ☐ PARTICIPATING IN PART ☑ NONE
☐ NON-PARTICIPATING (MAINTENANCE) ☐ NON-PARTICIPATING

FEDERAL SEGREGATION (if more than one Funding Source or P.I.P. type)
☐ CCO FUNDED PER CONTRACT ☐ CCO FUNDED AS FOLLOWS

FEDERAL FUNDING SOURCE	PERCENT

ADA Notice: For individuals with sensory disabilities, this document is available in alternate formats. For information call (916) 654-6410 or TDD (916) 654-3880 or write Records and Forms Management, 1120 N Street, MS-89, Sacramento, CA 95814

STATE OF CALIFORNIA - DEPARTMENT OF TRANSPORTATION

CONTRACT CHANGE ORDER MEMORANDUM

TO: Deanna Vilcheck, ACM / DV	FILE: E.A. 04 - 0120S4 CO-RTE-PM SF-80-12.7/13.2 FED. NO. NO FED AID
FROM: William Howe, Senior R.E.	
CCO#: 72 SUPPLEMENT#: 2 Category Code: BZZZ	CONTINGENCY BALANCE (incl. this change) $50,612,466.04
COST: $300,000.00 INCREASE ☑ DECREASE ☐	HEADQUARTERS APPROVAL REQUIRED? ☑ YES ☐ NO
SUPPLEMENTAL FUNDS PROVIDED: $0.00	IS THIS REQUEST IN ACCORDANCE WITH ENVIRONMENTAL DOCUMENTS? ☑ YES ☐ NO
CCO DESCRIPTION: suspension days/25 day time ext/MS 1pymt	**PROJECT DESCRIPTION:** YBITS-1 (Yerba Buena Island Transition Structures)

Original Contract Time:	Time Adj. This Change:	Previously Approved CCO Time Adjustments:	Percentage Time Adjusted: (including this change)	Total # of Unreconciled Deferred Time CCO(s): (including this change)
1390 Day(s)	0 Day(s)	0 Day(s)	0 %	9

THIS CHANGE ORDER PROVIDES FOR:

The intermittent temporary suspension of the contract work for four (4) weekends, (8 days), over the next five (5) months, a twenty-five (25) day time extension to Milestones 2 and 3 and the prestressing milestone established under Contract Change Order No. 72, Supplement No. 0 and Supplemental No. 1, of this change order and the payment of an incentive achieved for the completion of Milestone 1.

This project, the Yerba Buena Island Transition Structure (YBITS), provides for the construction of two bridges which will connect eastbound and westbound traffic on the new east span of the San Francisco Oakland Bay Bridge (SFOBB) to the existing Yerba Buena Island (YBI) tunnel. The structures are comprised of concrete box girder bridges each approximately 26 meters wide, 40 meters high and 450 meters in length.

Contract Change Order No. 72, Supplement No. 0, established a milestone to complete the prestressing of both the westbound and eastbound frames of the structure. Contract Change Order No. 72, Supplement No. 1, established additional milestones to complete the remaining work at the eastern most portion of the bridge and vacate the area to allow the area to be used by the adjacent Self-Anchored Suspension (SAS) Bridge Contract (04-0120F4). These contract change orders included incentive payments totaling $9,300,000.00 to complete the work prior to the established milestone dates.

These contract change orders have resulted in the Contractor working extended shifts, double shifts and weekends in order to achieve the milestone incentive payments with this work taking place since February of 2011. Work will continue through the end of this year, 2012, before all milestones have been met. As the work has progressed for over a year, it has become a concern that fatigue could become a factor on the jobsite which could result in unsafe work conditions. In order to proactively address this concern, it has been agreed that the contract work shall be suspended over four (4) intermittent weekends over the next five (5) months in order to provide extended periods of rest for the trade laborers and Department field staff. A total of eight (8) days shall be suspended over the four (4) weekends.

This change order also provides a twenty-five (25) day time extension to the prestressing milestone and Milestones 2 and 3 established under Contract Change Order No. 72, Supplement No. 0 and Supplement No. 1, of this change order and the Designated Portion of Work 3 established under the original contract. Of the twenty-five (25) days being granted, four (4) days are associated with the eight (8) temporary suspension days ordered under this change order. The remaining twenty-one (21) days of delay pertain to modifications ordered to the eastbound Frame 2 falsework and the ordered removal of westbound Frame 2 falsework, which were each required to coordinate construction activities concerning the construction of the hinge and closure pour between the YBITS1 and SAS contracts.

The twenty-five (25) day time extension to the milestones and designated portions of work shall resolve both the delay associated with the temporary suspension days and all Department delays through February 29, 2012. A time impact analysis is on file. Any direct costs associated with the ordered work shall be addressed under separate contract change orders.

This change order also provides compensation to the Contractor for achieving the full incentive for the early completion of Milestone 1 as established under Contract Change Order No. 72, Supplement No. 1. This change order provides a $30,000.00 per day incentive for the early completion of the milestone at a maximum cost of $300,000.00. Compensation shall be paid as an Adjustment of Compensation at an Agreed Lump Sum of $300,000.00, which shall be funded from the contract's contingency funds.

This change order was approved by the Toll Bridge Program Oversight Committee at their April 5, 2012, meeting.

ADA Notice: For individuals with sensory disabilities, this document is available in alternate formats. For information call (916) 654-6410 or TDD (916) 654-3880 or write
Records and Forms Management, 1120 N Street, MS-89, Sacramento, CA 95814

No adjustment to the contract time of completion is warranted as the delay will be absorbed by the Department owned float created under Contract Change Order No. 72, Supplement No. 0.

Maintenance concurrence is not required as the change does nott affect any permanent roadway features.

CONCURRED BY:		
Construction Engineer:	William Howe	Date 4/16/12
Bridge Engineer:	Mehran Ardakanian	Date
Project Engineer:	Bob Zandipour, Design	Date 4-24-12
Project Manager:	Ken Terpstra	Date 5/2/12
FHWA Rep.:		Date
Environmental:		Date
Other (specify):		Date
Other (specify):		Date
District Prior Approval By:		Date
HQ (Issue Approve) By:	Larry Salhaney	Date 5-2-12
Resident Engineer's Signature:		Date 4/16/12

ESTIMATE OF COST

	THIS REQUEST	TOTAL TO DATE
ITEMS	$0.00	($1,021,520.00)
FORCE ACCOUNT	$0.00	$0.00
AGREED PRICE	$0.00	$0.00
ADJUSTMENT	$300,000.00	$22,951,065.00
TOTAL	$300,000.00	$21,929,545.00

FEDERAL PARTICIPATION

☐ PARTICIPATING ☐ PARTICIPATING IN PART ☑ NONE
☐ NON-PARTICIPATING (MAINTENANCE) ☐ NON-PARTICIPATING

FEDERAL SEGREGATION (if more than one Funding Source or P.I.P. type)
☐ CCO FUNDED PER CONTRACT ☐ CCO FUNDED AS FOLLOWS

FEDERAL FUNDING SOURCE	PERCENT

ADA Notice: For individuals with sensory disabilities, this document is available in alternate formats. For information call (916) 654-6410 or TDD (916) 654-3880 or write Records and Forms Management, 1120 N Street, MS-89, Sacramento, CA 95814

STATE OF CALIFORNIA - DEPARTMENT OF TRANSPORTATION

CONTRACT CHANGE ORDER MEMORANDUM

DATE: 6/5/2012 Page 1 of 1

TO: Deanna Vilcheck, ACM / DV	FILE: E.A. 04 - 0120S4
	CO-RTE-PM SF-80-12.7/13.2
FROM: William Howe, Senior R.E.	FED. NO. NO FED AID
CCO#: 98 SUPPLEMENT#: 1 Category Code: BZZZ	CONTINGENCY BALANCE (incl. this change) $67,760,964.00
COST: $600,000.00 INCREASE ☑ DECREASE ☐	HEADQUARTERS APPROVAL REQUIRED? ☑ YES ☐ NO
SUPPLEMENTAL FUNDS PROVIDED: $0.00	IS THIS REQUEST IN ACCORDANCE WITH ENVIRONMENTAL DOCUMENTS? ☑ YES ☐ NO
CCO DESCRIPTION: Shotcrete Slope W7-W8-W9 Area SupplFunds	**PROJECT DESCRIPTION:** YBITS-1 (Yerba Buena Island Transition Structures)

Original Contract Time:	Time Adj. This Change:	Previously Approved CCO Time Adjustments:	Percentage Time Adjusted: (including this change)	Total # of Unreconciled Deferred Time CCO(s): (including this change)
1390 Day(s)	0 Day(s)	0 Day(s)	0 %	9

THIS CHANGE ORDER PROVIDES FOR:

Additional force account funding for the work defined under the original Contract Change Order No. 98 S0, constructing shotcrete "goat" slope protection beneath the area between Bent No. 6 through 10, as directed by the Engineer.

Contract Change Order No. 98 S0 provided temporary slope protection in the steep slope areas of Yerba Buena Island, which are very susceptible to erosion. Since Contract Change Order No. 98 S0 was issued in January 2012, significant areas have been shotcreted. This treatment has been very successful at minimizing any erosion in these historically erodible slopes. The success of the shotcrete has managed to eliminate turbid runoff and significantly reduce Notices of Discharge (NOD's) in numerous areas. The success of this shotcrete treatment has allowed the work to continue through the stormy season with very little disruption. The treatment will be extended to other areas to help maintain the current success of the SWPP measures on the site.

Compensation for this additional work shall be paid as Extra Work at Force Account, which can be financed from the project's contingency funds at an estimated cost of $600,000.00. The detailed cost analysis for this change order is on file.

The Contractor's signature is not required for additional funds for Extra Work at Force Account change orders.

This change was requested by Deanna Vilcheck, Supervising Engineer, Toll Bridge Construction, and concurrence will be obtained from Bob Zandipour, Design, and Ken Terpstra, Project Manager.

Maintenance concurrence is not required because this measure is temporary and will not affect the permanent structure.

No adjustment in contract time of completion is warranted as this change does not affect the controlling operation.

CONCURRED BY:

Construction Engineer:	William Howe	Date 06-05-12
Bridge Engineer:	Mehran Ardakanian	Date
Project Engineer:	Bob Zandipour, Design	Date 6-5-12
Project Manager:	Ken Terpstra	Date 6-8-12
FHWA Rep.:		Date
Environmental:		Date
Other (specify):		Date
Other (specify):		Date
District Prior Approval By:		Date
HQ (Issue Approve) By:	Sey Hossnieh	Date 6-5-12
Resident Engineer's Signature: William Howe		Date 06.05.12

ESTIMATE OF COST

	THIS REQUEST	TOTAL TO DATE
ITEMS	$0.00	$0.00
FORCE ACCOUNT	$600,000.00	$950,000.00
AGREED PRICE	$0.00	$0.00
ADJUSTMENT	$0.00	$0.00
TOTAL	$600,000.00	$950,000.00

FEDERAL PARTICIPATION

☐ PARTICIPATING ☐ PARTICIPATING IN PART ☑ NONE
☐ NON-PARTICIPATING (MAINTENANCE) ☐ NON-PARTICIPATING

FEDERAL SEGREGATION (if more than one Funding Source or P.I.P. type)
☐ CCO FUNDED PER CONTRACT ☐ CCO FUNDED AS FOLLOWS

FEDERAL FUNDING SOURCE	PERCENT

ADA Notice: For individuals with sensory disabilities, this document is available in alternate formats. For information call: (916) 654-6410 or TDD (916) 654-3880 or write Records and Forms Management, 1120 N Street, MS-89, Sacramento, CA 95814.

CONTRACT CHANGE ORDER

Change Requested by: Engineer

CCO 72	Suppl. No. 3	Contract No. 04 - 0120S4	Road SF-80-12.7/13.2	FED. AID LOC.: NO FED AID

To: **M C M CONSTRUCTION INC**

You are directed to make the following changes from the plans and specifications or do the following described work not included in the plans and specifications for this contract. ***NOTE: This change order is not effective until approved by the Engineer.***

Description of work to be done, estimate of quantities and prices to be paid. (Segregate between additional work at contract price, agreed price and force account.) Unless otherwise stated, rates for rental of equipment cover only such time as equipment is actually used and no allowance will be made for idle time. This last percentage shown is the net accumulated increase or decrease from the original quantity in the Engineer's Estimate.

Adjustment of Compensation at Lump Sum:

The Contractor shall be compensated an Agreed Lump Sum of $7,500,000.00 for achieving the Prestressing Milestone, as defined under Contract Change Order No. 72, Supplement No. 0, more than 150 calendar days prior to the April 13, 2013, milestone date as revised under Contract Change Order No. 72, Supplement No. 2. This lump sum constitutes full compensation, including all markups, for achieving the full incentive payment established for the early completion of the Prestressing Milestone and no additional compensation shall be paid.

Adjustment of Compensation at Agreed Lump Sum = $7,500,000.00

Estimated Cost: Increase ☑ Decrease ☐ **$7,500,000.00**

By reason of this order the time of completion will be adjusted as follows: 0 days

Submitted by

Signature	Resident Engineer	Date
Deanna Velchen	for William Howe, Senior R.E.	9/17/12

Approval Recommended by

Signature	Region Construction Division Chief	Date
Tony Anziano	Tony Anziano	9/12/12

Engineer Approval by

Signature	Region Construction Division Chief	Date
Tony Anziano	Tony Anziano	9/21/12

9/21/12

We the undersigned contractor, have given careful consideration to the change proposed and agree, if this proposal is approved, that we will provide all equipment, furnish the materials, except as may otherwise be noted above, and perform all services necessary for the work above specified, and will accept as full payment therefor the prices shown above.

NOTE: If you, the contractor, do not sign acceptance of this order, your attention is directed to the requirements of the specifications as to proceeding with the ordered work and filing a written protest within the time therein specified.

Contractor Acceptance by

Signature	(Print name and title)	Date
Matt Carter	JAMES A. CARTER, PRESIDENT	9/19/12

STATE OF CALIFORNIA - DEPARTMENT OF TRANSPORTATION

CONTRACT CHANGE ORDER MEMORANDUM

DATE: 9/14/2012 Page 1 of 1

TO: Deanna Vilcheck, ACM	FILE: E.A. 04 - 0120S4
FROM: William Howe, Senior R.E.	CO-RTE-PM SF-80-12.7/13.2
	FED. NO. NO FED AID
CCO#: 72 SUPPLEMENT#: 3 Category Code: BZZZ	CONTINGENCY BALANCE (incl. this change) $36,852,056.15
COST: $7,500,000.00 INCREASE ☑ DECREASE ☐	HEADQUARTERS APPROVAL REQUIRED? ☑ YES ☐ NO
SUPPLEMENTAL FUNDS PROVIDED: $0.00	IS THIS REQUEST IN ACCORDANCE WITH ENVIRONMENTAL DOCUMENTS? ☑ YES ☐ NO
CCO DESCRIPTION: Prestressing Milestone Incentive Payment	**PROJECT DESCRIPTION:** YBITS-1 (Yerba Buena Island Transition Structures)

Original Contract Time:	Time Adj. This Change:	Previously Approved CCO Time Adjustments:	Percentage Time Adjusted: (including this change)	Total # of Unreconciled Deferred Time CCO(s): (including this change)
1390 Day(s)	0 Day(s)	0 Day(s)	0 %	9

THIS CHANGE ORDER PROVIDES FOR:

payment of an incentive achieved for the completion of the prestressing milestone established under the original Contract Change Order No. 72, Supplement No. 0.

Contract Change Order No. 72, Supplement No. 0, established a milestone to complete the prestressing of both the westbound and eastbound frames of the structure. The change orders included incentive payments totaling to $7,500,000.00 to complete the work prior up to 150 calendar days prior to the established milestone date. Contract Change Order No. 72, Supplement No. 2, revised the prestressing milestone date to April 13, 2013, with the 150 day incentive having the work completed by November 14, 2012. The prestressing work was completed on September 17, 2012, thus achieving the full 150 day incentive.

The change order provided a $50,000.00 per day incentive for the early completion of the milestone at a maximum cost of $7,500,000. Compensation shall be paid as an Adjustment of Compensation at an Agreed Lump Sum of $7,500,000.00, which shall be funded from the contract's contingency funds.

The Toll Bridge Program Oversight Committee approved the $7,500,000.00 incentive payment with their approval of Contract Change Order No. 72, Supplement No. 0, on February 24, 2011.

No adjustment to the contract time of completion is warranted as this is an administrative change which did not affect the controlling operation.

Maintenance concurrence is not required as the change does not affect any permanent roadway features.

CONCURRED BY:

Construction Engineer:	William Howe	Date 9/17/12
Bridge Engineer:	Mehran Ardakanian	Date 9/21/12
Project Engineer:	Bob Zandipour, Desig	Date 9/18/12
Project Manager:	Ken Terpstra	Date 9/17/12
FHWA Rep.:		Date
Environmental:		Date
Other (specify):		Date
Other (specify):		Date
District Prior Approval By:		Date
HQ (Issue Approve) By:	Larry Salhaney	Date 9-18-12
Resident Engineer's Signature:	Deanna Vilcheck for Bill Howe	Date 9/17/12

ESTIMATE OF COST

	THIS REQUEST	TOTAL TO DATE
ITEMS	$0.00	($1,021,520.00)
FORCE ACCOUNT	$0.00	$0.00
AGREED PRICE	$0.00	$0.00
ADJUSTMENT	$7,500,000.00	$30,451,065.00
TOTAL	$7,500,000.00	$29,429,545.00

FEDERAL PARTICIPATION

☐ PARTICIPATING ☐ PARTICIPATING IN PART ☑ NONE

☐ NON-PARTICIPATING (MAINTENANCE) ☐ NON-PARTICIPATING

FEDERAL SEGREGATION (if more than one Funding Source or P.I.P. type)

☐ CCO FUNDED PER CONTRACT ☐ CCO FUNDED AS FOLLOWS

FEDERAL FUNDING SOURCE	PERCENT

ADA Notice: For individuals with sensory disabilities, this document is available in alternate formats. For information call: (916) 654-6410 or TDD (916) 654-3880 or write Records and Forms Management, 1120 N Street, MS-89, Sacramento, CA 95814.

STATE OF CALIFORNIA - DEPARTMENT OF TRANSPORTATION

CONTRACT CHANGE ORDER

Change Requested by: Engineer

CCO 72	Suppl. No. 4	Contract No. 04 - 0120S4	Road SF-80-12.7/13.2	FED. AID LOC.: NO FED AID

To: **M C M CONSTRUCTION INC**

You are directed to make the following changes from the plans and specifications or do the following described work not included in the plans and specifications for this contract. ***NOTE: This change order is not effective until approved by the Engineer.***

Description of work to be done, estimate of quantities and prices to be paid. (Segregate between additional work at contract price, agreed price and force account.) Unless otherwise stated, rates for rental of equipment cover only such time as equipment is actually used and no allowance will be made for idle time. This last percentage shown is the net accumulated increase or decrease from the original quantity in the Engineer's Estimate.

Adjustment of Compensation at Lump Sum:

The Contractor shall be compensated an Agreed Lump Sum of $1,200,000.00 for achieving Milestone 2, as defined under Contract Change Order No. 72, Supplement No. 1, more than 40 calendar days prior to the November 26, 2012, milestone date established under Contract Change Order No. 72, Supplement No. 2. This lump sum constitutes full compensation, including all markups, for achieving the full incentive payment established for the early completion of Milestone 2 and no additional compensation shall be paid.

Adjustment of Compensation at Agreed Lump Sum = $ 1,200,000.00

Estimated Cost: Increase ☑ **Decrease** ☐ **$1,200,000.00**

By reason of this order the time of completion will be adjusted as follows: 0 days

Submitted by

Signature	Resident Engineer	Date
William Howe	William Howe, Senior R.E.	09-25-12

Approval Recommended by

Signature	Region Construction Division Chief	Date
	for Tony Anziano	9/26/2012

Engineer Approval by

Signature	Region Construction Division Chief	Date
	Tony Anziano	9/28/12

We the undersigned contractor, have given careful consideration to the change proposed and agree, if this proposal is approved, that we will provide all equipment, furnish the materials, except as may otherwise be noted above, and perform all services necessary for the work above specified, and will accept as full payment therefor the prices shown above.

NOTE: If you, the contractor, do not sign acceptance of this order, your attention is directed to the requirements of the specifications as to proceeding with the ordered work and filing a written protest within the time therein specified.

Contractor Acceptance by

Signature	(Print name and title)	Date
	James A. Carter, PRES	9/26/12

STATE OF CALIFORNIA - DEPARTMENT OF TRANSPORTATION

CONTRACT CHANGE ORDER MEMORANDUM

DATE: 9/24/2012 Page 1 of 1

TO: Deanna Vilcheck, ACM / DV	FILE: E.A. 04 - 0120S4
	CO-RTE-PM SF-80-12.7/13.2
FROM: William Howe, Senior R.E.	FED. NO. NO FED AID
CCO#: 72 SUPPLEMENT#: 4 Category Code: BZZZ	CONTINGENCY BALANCE (incl. this change) $35,571,875.15
COST: $1,200,000.00 INCREASE ☑ DECREASE ☐	HEADQUARTERS APPROVAL REQUIRED? ☑ YES ☐ NO
SUPPLEMENTAL FUNDS PROVIDED: $0.00	IS THIS REQUEST IN ACCORDANCE WITH ENVIRONMENTAL DOCUMENTS? ☑ YES ☐ NO
CCO DESCRIPTION: Milestone 2 Payment	**PROJECT DESCRIPTION:** YBITS-1 (Yerba Buena Island Transition Structures)

Original Contract Time:	Time Adj. This Change:	Previously Approved CCO Time Adjustments:	Percentage Time Adjusted: (including this change)	Total # of Unreconciled Deferred Time CCO(s): (including this change)
1390 Day(s)	0 Day(s)	0 Day(s)	0 %	9

THIS CHANGE ORDER PROVIDES FOR:

Payment of an incentive achieved for the completion of Milestone 2 established under Contract Change Order No. 72, Supplement No. 1.

Contract Change Order No. 72, Supplement No. 1, established a milestone to complete the eastbound frames of the structure and vacate the eastern portion of the structure to allow the area to be used by the adjacent Self-Anchored Suspension (SAS) Bridge Contract (04-0120F4). The change order included incentive payments totaling $1,200,000.00 to complete the work up to 40 calendar days prior to the established Milestone 3 date. Contract Change Order No. 72, Supplement No. 2, revised the Milestone 2 date to November 26, 2013, with the 40 day incentive having the work completed by October 17, 2012. The Milestone 2 work was completed on September 24, 2012, thus achieving the full 40 day incentive.

This change order provided a $30,000.00 per day incentive for the early completion of the milestone at a maximum cost of $1,200,000.00. Compensation shall be paid as an Adjustment of Compensation at an Agreed Lump Sum of $1,200,000.00, which shall be funded from the contract's contingency funds.

The Toll Bridge Program Oversight Committee (TBPOC) approved the $1,200,000.00 incentive payment with their approval of Change Order No. 72, Supplement No. 1, on December 1, 2011, copy attached.

No adjustment to the contract time of completion is warranted as this is an administrative change, which did not affect the controlling operation.

Maintenance concurrence is not required as the change does not affect any permanent roadway features.

CONCURRED BY:

Construction Engineer:	William Howe	Date 09-25-12
Bridge Engineer:	Mehran Ardakanian	Date
Project Engineer:	Bob Zandipour, Design	Date 9-27-12
Project Manager:	Ken Terpstra KT	Date 9/25/12
FHWA Rep.:		Date
Environmental:		Date
Other (specify):		Date
Other (specify):		Date
District Prior Approval By:		Date
HQ (Issue Approve) By:	Larry Salhaney	Date 9-26-12
Resident Engineer's Signature:	William Howe	Date 09-25-12

ESTIMATE OF COST

	THIS REQUEST	TOTAL TO DATE
ITEMS	$0.00	($1,021,520.00)
FORCE ACCOUNT	$0.00	$0.00
AGREED PRICE	$0.00	$0.00
ADJUSTMENT	$1,200,000.00	$31,651,065.00
TOTAL	$1,200,000.00	$30,629,545.00

FEDERAL PARTICIPATION

☐ PARTICIPATING ☐ PARTICIPATING IN PART ☑ NONE
☐ NON-PARTICIPATING (MAINTENANCE) ☐ NON-PARTICIPATING

FEDERAL SEGREGATION (if more than one Funding Source or P.I.P. type)
☐ CCO FUNDED PER CONTRACT ☐ CCO FUNDED AS FOLLOWS

FEDERAL FUNDING SOURCE	PERCENT

ADA Notice: For individuals with sensory disabilities, this document is available in alternate formats. For information call (916) 654-6410 or TDD (916) 654-3880 or write Records and Forms Management, 1120 N Street, MS-89, Sacramento, CA 95814.

STATE OF CALIFORNIA - DEPARTMENT OF TRANSPORTATION

CONTRACT CHANGE ORDER

Change Requested by: Engineer

CCO 72	Suppl. No. 5	Contract No. 04 - 0120S4	Road SF-80-12.7/13.2	FED. AID LOC.: NO FED AID

To: **M C M CONSTRUCTION INC**

You are directed to make the following changes from the plans and specifications or do the following described work not included in the plans and specifications for this contract. ***NOTE: This change order is not effective until approved by the Engineer.***

Description of work to be done, estimate of quantities and prices to be paid. (Segregate between additional work at contract price, agreed price and force account.) Unless otherwise stated, rates for rental of equipment cover only such time as equipment is actually used and no allowance will be made for idle time. This last percentage shown is the net accumulated increase or decrease from the original quantity in the Engineer's Estimate.

Adjustment of Compensation at Lump Sum:

The Contractor shall be compensated an Agreed Lump Sum of $300,000.00 for achieving Milestone 3, as defined under Contract Change Order No. 72, Supplement No. 1, more than 10 calendar days prior to the January 25, 2013, milestone date established under Contract Change Order No. 72, Supplement No. 2. This lump sum constitutes full compensation, including all markups, for achieving the full incentive payment established for the early completion of Milestone 3 and no additional compensation shall be paid.

Adjustment of Compensation at Agreed Lump Sum = $300,000.00

Estimated Cost: **Increase** ☑ **Decrease** ☐ **$300,000.00**

By reason of this order the time of completion will be adjusted as follows: 0 days

Submitted by

Signature	Resident Engineer	Date
William Howe	William Howe, Senior R.E.	10·05·12

Approval Recommended by

Signature	Region Construction Division Chief	Date
Tony Anziano	Tony Anziano	10/5/12

Engineer Approval by

Signature	Region Construction Division Chief	Date
Tony Anziano	Tony Anziano	10/23/12

We the undersigned contractor, have given careful consideration to the change proposed and agree, if this proposal is approved, that we will provide all equipment, furnish the materials, except as may otherwise be noted above, and perform all services necessary for the work above specified, and will accept as full payment therefor the prices shown above.

NOTE: If you, the contractor, do not sign acceptance of this order, your attention is directed to the requirements of the specifications as to proceeding with the ordered work and filing a written protest within the time therein specified.

Contractor Acceptance by

Signature	(Print name and title)	Date
	Edmundo A. Pulchi Treasurer	10/18/2012

RECEIVED OCT 2 3 2012

CONTRACT CHANGE ORDER

Change Requested by: Engineer

CCO 72	Suppl. No. 6	Contract No. 04 - 0120S4	Road SF-80-12.7/13.2	FED. AID LOC.: NO FED AID

To: **M C M CONSTRUCTION INC**

You are directed to make the following changes from the plans and specifications or do the following described work not included in the plans and specifications for this contract. ***NOTE: This change order is not effective until approved by the Engineer.***

Description of work to be done, estimate of quantities and prices to be paid. (Segregate between additional work at contract price, agreed price and force account.) Unless otherwise stated, rates for rental of equipment cover only such time as equipment is actually used and no allowance will be made for idle time. This last percentage shown is the net accumulated increase or decrease from the original quantity in the Engineer's Estimate.

The completion dates for Designated Portion of the Work 2 and Designated Portion of the Work 3, as defined under Section 4, "Beginning of Work, Time of Completion and Liquidated Damages", of the Contract Special Provisions will be revised as listed below:

Designated Portion of the Work 2, July 14, 2013.
Designated Portion of the Work 3, July 14, 2013.

These adjusted dates consider all Department delays incurred through October 31, 2012. The above designated portions of work will be completed as dated with the full comprehension of all Department changes to the Contract that have been transmitted to the Contractor prior to October 31, 2012, and no time extension shall be granted to the above listed dates as a result of these changes. Any outstanding direct costs associated with these changes shall remain compensable and shall be compensated under separate change orders with no time extensions granted to the work.

This change order considers all adjustments to the completion of the Designated Portion of the Work 3 as a result of the Contractor completing the prestressing milestone more than 150 days prior to the revised prestressing milestone completion date as specified under Contract Change Order No. 72, Supplemental No. 0.

This change order considers all impacts incurred as a result of Contract Change Order No. 85 and Contract Change Order No. 153 and acts to resolve all deferred time items issued under those two change orders.

The liquidated damages pertaining to the Designated Portion of Work 3 shall continue to apply at $50,000.00 per day with these damages starting on the 62nd day after the specified completion date as defined under this contract change order and Contract Change Order No. 72, Supplements No. 0 and No. 1. The liquidated damages pertaining to the Designated Portion of Work 2 shall continue to apply as specified under Section 4, "Beginning of Work, Time of Completion and Liquidated Damages", of the Contract Special Provisions.

No extension of Contract time shall be granted for any Department delays or impacts incurred prior to October 31, 2012.

CONTRACT CHANGE ORDER

Change Requested by: Engineer

CCO 72	Suppl. No. 6	Contract No. 04 - 0120S4	Road SF-80-12.7/13.2	FED. AID LOC.: NO FED AID

Estimated Cost: Increase ☐ Decrease ☐ $0.00

By reason of this order the time of completion will be adjusted as follows: 0 days

Submitted by

Signature	Resident Engineer	Date
William Howe	William Howe, Senior R.E.	10.31.12

Approval Recommended by

Signature	Region Construction Division Chief	Date
Tony Anziano	Tony Anziano	11/30/12

Engineer Approval by

Signature	Region Construction Division Chief	Date
Tony Anziano	Tony Anziano	2/15/13

We the undersigned contractor, have given careful consideration to the change proposed and agree if this proposal is approved, that we will provide all equipment, furnish the materials, except as may otherwise be noted above, and perform all services necessary for the work above specified, and will accept as full payment therefor the prices shown above.

NOTE: If you, the contractor, do not sign acceptance of this order, your attention is directed to the requirements of the specifications as to proceeding with the ordered work and filing a written protest within the time therein specified.

Contractor Acceptance by

Signature	(Print name and title)	Date
	EDMUNDO A. PUCHI, TREASURER	2/13/13

STATE OF CALIFORNIA - DEPARTMENT OF TRANSPORTATION

CONTRACT CHANGE ORDER MEMORANDUM

TO: Deanna Vilcheck, ACM	FILE: E.A. 04 - 0120S4
FROM: William Howe, Senior R.E.	CO-RTE-PM SF-80-12.7/13.2
	FED. NO. NO FED AID
CCO#: 72 SUPPLEMENT#: 6 Category Code: BZZZ	CONTINGENCY BALANCE (incl. this change) $41,431,260.15
COST: $0.00 INCREASE ☐ DECREASE ☐	HEADQUARTERS APPROVAL REQUIRED? ☑ YES ☐ NO
SUPPLEMENTAL FUNDS PROVIDED: $0.00	IS THIS REQUEST IN ACCORDANCE WITH ENVIRONMENTAL DOCUMENTS? ☑ YES ☐ NO
CCO DESCRIPTION: DP2 & DP3 Time Adjustments	**PROJECT DESCRIPTION:** YBITS-1 (Yerba Buena Island Transition Structures)

Original Contract Time:	Time Adj. This Change:	Previously Approved CCO Time Adjustments:	Percentage Time Adjusted: (including this change)	Total # of Unreconciled Deferred Time CCO(s): (including this change)
1390 Day(s)	0 Day(s)	0 Day(s)	0 %	9

THIS CHANGE ORDER PROVIDES FOR:

Established revised completion dates for the Designated Portion of the Work 2 (DP2) and Designated Portion of the Work 3 (DP3).

This project, the Yerba Buena Island Transition Structure (YBITS), provides for the construction of two bridges which will connect eastbound and westbound traffic on the new east span of the San Francisco Oakland Bay Bridge (SFOBB) to the existing Yerba Buena Island tunnel. The structures are comprised of concrete box girder bridges each approximately 26 meters wide, 40 meters high and 450 meters in length.

Under Section 4, "Beginning of Work, Time of Completion, and Liquidated Damages", of the Contract Special Provisions, DP2 and DP3 are defined as having the westbound and eastbound structures ready for traffic respectively. Contract Change Order Nos. 72 Supplements No. 0 and No. 1, added milestones to complete other portions of work in order to be consistent with the planned seismic safety opening of the new SFOBB east span as established by the Toll Bridge Program Oversight Committee (TBPOC). These supplements also adjusted the completion dates for DP2 and DP3 as appropriate. Contract Change Order No. 72, Supplement No. 2, further adjusted the DP2 and DP3 completion dates based on Department delays incurred and Supplement Nos. 3, 4 and 5 paid incentive payments for the early completion of the milestones as established under the earlier supplements.

Contract Change Order 72, Supplement No. 0, provided for the DP3 completion date to be moved forward for each day the milestone established under that change order was completed prior to the milestone date. Based on the early completion of that milestone, the DP3 completion date of July 14, 2013, will be established. This change order provides for that revised completion date.

In addition, this change order revises the completion date of DP2 to match the DP3 completion date. At the time the original contract was awarded, it was intended to have a staged opening of the new SFOBB east span with the westbound structure opening 6 months prior to the opening of the eastbound structure. This staged opening has now been replaced with the plan to open the entire structure at one time. In order to match this revised plan to open both structures simultaneously, the DP2 date for the westbound opening is being pushed back approximately 10 weeks to match the DP3 date for the eastbound opening.

This change order shall be issued as a no cost change.

This change order is consistant with the terms of Contract Change Order No. 72, Supplement No. 0, which was approved by the Toll Bridge Program Oversight Committee (TBPOC), on February 24, 2011, copy attached.

No adjustment of contract time is warranted as the revised DP2 and DP3 dates will not affect the contract completion date.

Maintenance concurrence is not required as this is an administrative change, which does not affect any permanent roadway features.

ADA Notice: For individuals with sensory disabilities, this document is available in alternate formats. For information call (916) 654-6410 or TDD (916) 654-3880 or write Records and Forms Management, 1120 N Street, MS-89, Sacramento, CA 95814.

CONCURRED BY:		
Construction Engineer:	William Howe	Date 10.31.12
Bridge Engineer:	Mehran Ardakanian	Date
Project Engineer:	Bob Zandipour, Design	Date 12-3-12
Project Manager:	Ken Terpstra	Date 11-1-12
FHWA Rep.:		Date
Environmental:		Date
Other (specify):		Date
Other (specify):		Date
District Prior Approval By:		Date
HQ (Issue Approve) By:	Larry Salhaney	Date 12-3-12
Resident Engineer's Signature:		Date
William Howe		10.31.12

ESTIMATE OF COST

	THIS REQUEST	TOTAL TO DATE
ITEMS	$0.00	($1,021,520.00)
FORCE ACCOUNT	$0.00	$0.00
AGREED PRICE	$0.00	$0.00
ADJUSTMENT	$0.00	$31,951,065.00
TOTAL	$0.00	$30,929,545.00

FEDERAL PARTICIPATION

☐ PARTICIPATING ☐ PARTICIPATING IN PART ☑ NONE
☐ NON-PARTICIPATING (MAINTENANCE) ☐ NON-PARTICIPATING

FEDERAL SEGREGATION (if more than one Funding Source or P.I.P. type)
☐ CCO FUNDED PER CONTRACT ☐ CCO FUNDED AS FOLLOWS

FEDERAL FUNDING SOURCE	PERCENT

ADA Notice: For individuals with sensory disabilities, this document is available in alternate formats. For information call: (916) 654-6410 or TDD (916) 654-3880 or write Records and Forms Management, 1120 N Street, MS-89, Sacramento, CA 95814.

STATE OF CALIFORNIA - DEPARTMENT OF TRANSPORTATION

CONTRACT CHANGE ORDER

Change Requested by: Engineer

CCO 73	Suppl. No. 0	Contract No. 04 - 0120S4	Road SF-80-12.7/13.2	FED. AID LOC.: NO FED AID

To: **M C M CONSTRUCTION INC**

You are directed to make the following changes from the plans and specifications or do the following described work not included in the plans and specifications for this contract. ***NOTE: This change order is not effective until approved by the Engineer.***

Description of work to be done, estimate of quantities and prices to be paid. (Segregate between additional work at contract price, agreed price and force account.) Unless otherwise stated, rates for rental of equipment cover only such time as equipment is actually used and no allowance will be made for idle time. This last percentage shown is the net accumulated increase or decrease from the original quantity in the Engineer's Estimate.

Replace contract plan Sheet Nos. 591, 592R1, 594R1, 595 and 634R1 with Sheet Nos. 591R1, 592R2, 594R2, 595R1, and 634R2 (Pages 2 through 6), respectively, of this contract change order.

All work shall be performed in accordance with the applicable sections of the Special Provisions and Standard Specifications.

There shall be no cost or credit by reason of this change.

No adjustment to contact time is warranted, as this change does not affect any controlling operations.

5/10/11

Estimated Cost: Increase ☐ Decrease ☐ **$0.00**

By reason of this order the time of completion will be adjusted as follows: 0 days

Submitted by		
Signature William Howe	**Resident Engineer** William Howe, Senior R.E.	**Date** 08-03-11
Approval Recommended by		
Signature William Howe	**Construction Engineer** William Howe	**Date** 08-03-11
Engineer Approval by		
Signature William Howe	**Senior Resident Engineer** William Howe	**Date** 08-23-11

We the undersigned contractor, have given careful consideration to the change proposed and agree, if this proposal is approved, that we will provide all equipment, furnish the materials, except as may otherwise be noted above, and perform all services necessary for the work above specified, and will accept as full payment therefor the prices shown above.

NOTE: If you, the contractor, do not sign acceptance of this order, your attention is directed to the requirements of the specifications as to proceeding with the ordered work and filing a written protest within the time therein specified.

Contractor Accepted by		
Signature	**(Print name and title)** EDMUNDO A. PUCHI, TREASURER	**Date** 8/15/11

DIST.	COUNTY	ROUTE	KILOMETER POST TOTAL PROJECT	SHEET NO.	TOTAL SHEETS
04	SF	80	12.7/13.2	G91R1	806

REGISTERED ENGINEER - CIVIL

6-23-08

PLANS APPROVAL DATE

The State of California or its officers or agents shall not be responsible for the accuracy or completeness of electronic copies of this plan sheet.

T.Y. LIN / MOFFATT & NICHOL
TWO HARRISON STREET
SAN FRANCISCO, CA 94105

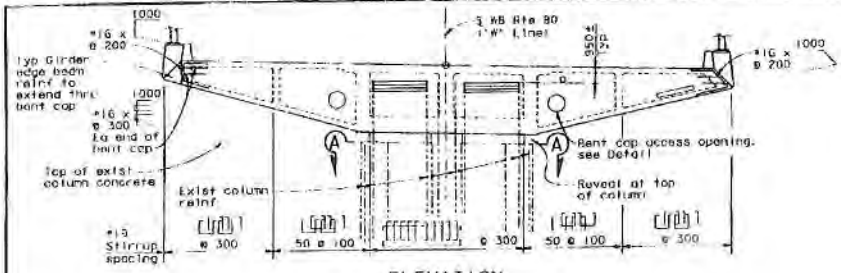

ELEVATION
1:100

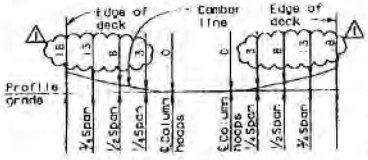

BENT CAP
CAMBER DIAGRAM
NO SCALE

Note: Camber diagram does not include allowance for falsework settlement

MARK	DATE	DESCRIPTIONS	BY	CH'D
8	11-28-11	Rev Camber	TL	JB

REVISIONS

FOR REVISION 8 ONLY

CONTRACT CHANGE ORDER NO. 073-S6
SHEET 2 OF 6

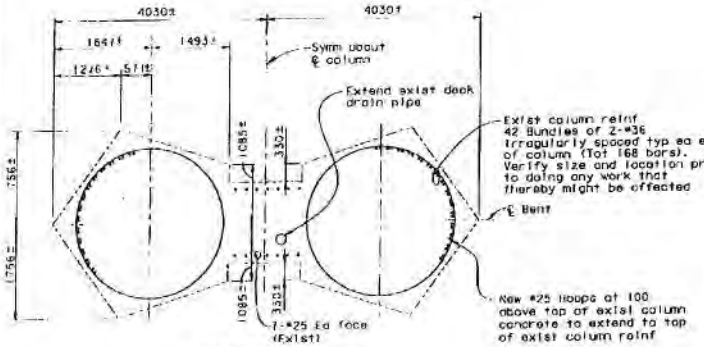

SECTION A-A
1:40

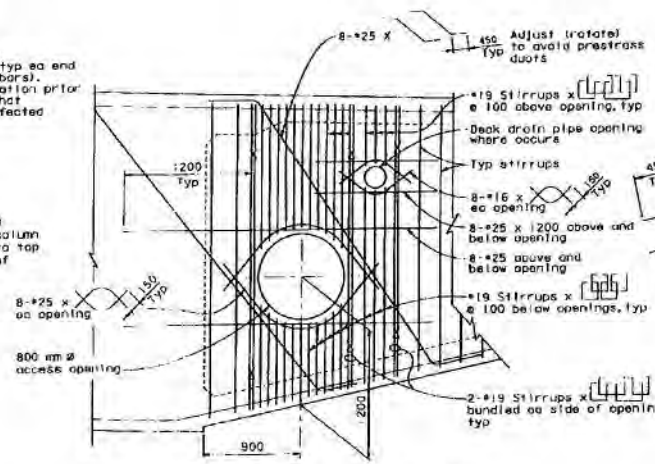

BENT CAP ACCESS OPENING
1:20

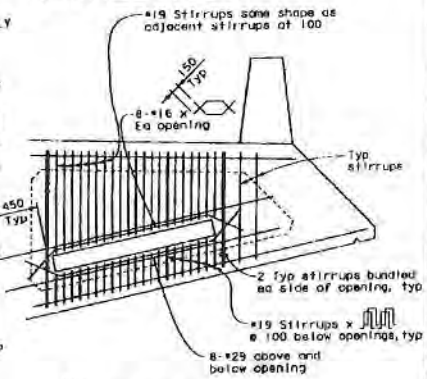

Note:
Where top layer of longit soffit reinf conflicts with opening, bend x to clear opening.

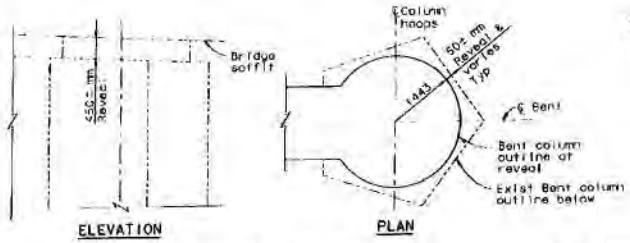

REVEAL DETAIL AT TOP OF COLUMN
(Typical Bents W6L & W5L)
NO SCALE

8 REVISED PER ADDENDUM NO. 8 DATED NOVEMBER 12, 2008

ALL DIMENSIONS ARE IN MILLIMETERS UNLESS OTHERWISE SHOWN

SAN FRANCISCO OAKLAND BAY BRIDGE
EAST SPAN SEISMIC SAFETY PROJECT

YBI TRANSITION STRUCTURES

BENT W6L DETAILS NO. 1

DESIGN OVERSIGHT: March 3, 2008

DESIGN: Shangkuan
DETAILS: von Ryn/Zuechi/Wol
QUANTITIES: Lico
CHECKED: Jain
CHECKED: E. Nichol

PREPARED FOR THE STATE OF CALIFORNIA DEPARTMENT OF TRANSPORTATION

Jol Birdy
PROJECT ENGINEER

BRIDGE NO. 34-0006 L/R
KILOMETER POST 12.8

CU 04251
EA 012051

SHEET 42 OF 209

FILE: (1)\Sanjib\SLB_Prof's Fa\91\Ybi\CREDITS\Checked Plans\YB1's #1 1000 No. 2 03-03-08 Initial Bent Cap\012051 Corbor 7B CCO\04-012051 34-0006L-7b b0025.dgn

January 28, 2011

DIST.	COUNTY	ROUTE	KILOMETER POST TOTAL PROJECT	SHEET NO.	TOTAL SHEETS
04	SF	80	12.1/13.2	55282	806

REGISTERED ENGINEER - CIVIL
6-23-08
PLANS APPROVAL DATE
The State of California or its officers or agents shall not be responsible for the accuracy or completeness of electronic copies of this plan sheet.
1.Y. LIN / MOFFATT & NICHOL
TWO HARRISON STREET
SAN FRANCISCO, CA 94105

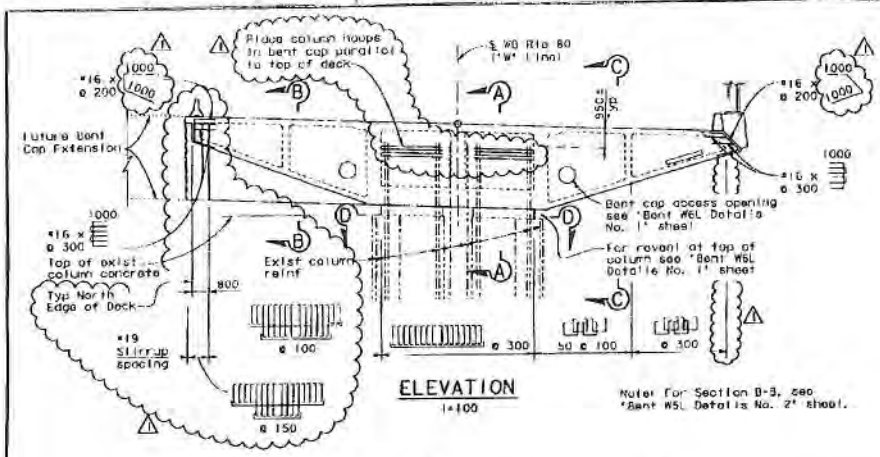

ELEVATION
1:100

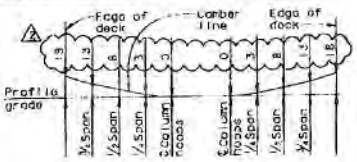

Note: Camber diagram does not include allowance for falsework settlement

BENT CAP
CAMBER DIAGRAM
NO SCALE

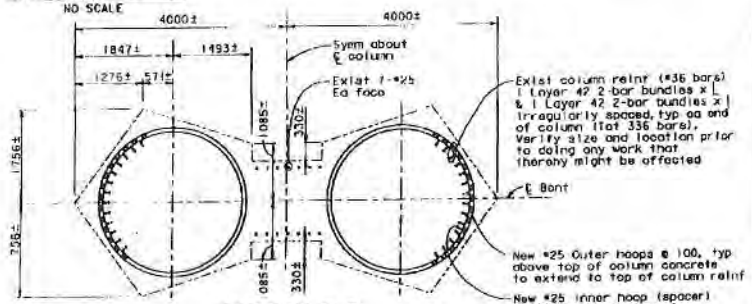

SECTION D-D
1:40

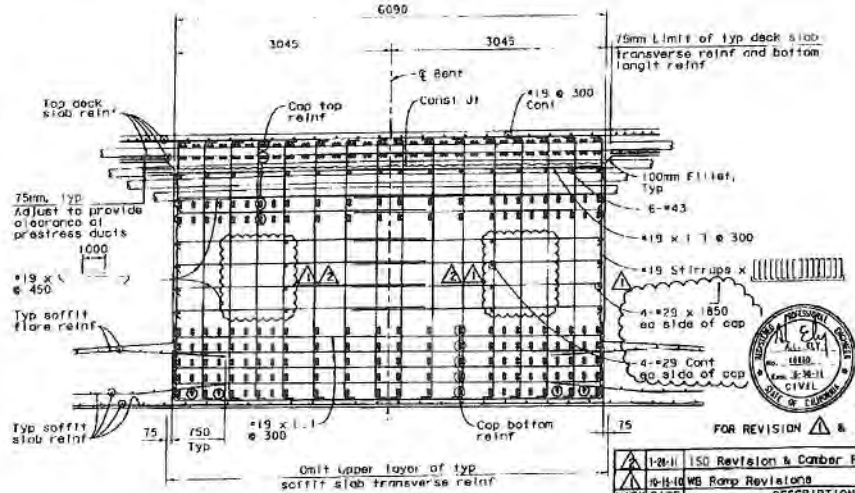

SECTION A-A
1:30

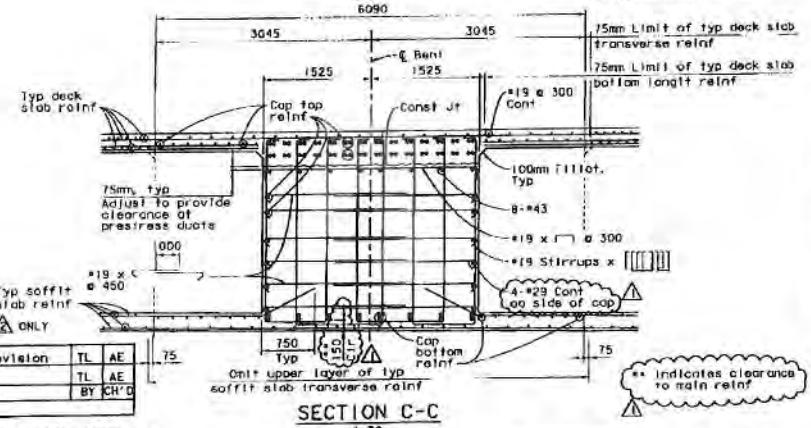

SECTION C-C
1:30

FOR REVISION 1 & 2 ONLY

MARK	DATE	DESCRIPTIONS	BY	CH'D
2	1-21-11	ISO Revision & Camber Revision	TL	AE
1	10-15-10	WB Ramp Revisions	TL	AE

REVISIONS

CONTRACT CHANGE ORDER NO. 073-50
SHEET 3 OF 6

ALL DIMENSIONS ARE IN MILLIMETERS UNLESS OTHERWISE SHOWN

8 REVISED PER ADDENDUM NO. 8 DATED NOVEMBER 12, 2009

DESIGN OVERSIGHT
JOHN MOOS, BERNARD CHIM, JOHN C. CARPIO — MARK ELLIOTT
March 3, 2008
SIGN OFF DATE
Rev. Date: 3-18-99

DESIGN: Dorran/Shanbaum
DETAILS: van Ryn/Zucchi/Wal
QUANTITIES: Liao
CHECKED: John
E. Nichol

PREPARED FOR THE STATE OF CALIFORNIA DEPARTMENT OF TRANSPORTATION

Jai Birdy
PROJECT ENGINEER

BRIDGE NO. 34-0006 L/R
KILOMETER POST 12.8
CU 04251
EA 012051

SAN FRANCISCO OAKLAND BAY BRIDGE
EAST SPAN SEISMIC SAFETY PROJECT

YBI TRANSITION STRUCTURES

BENT W5L DETAILS NO. 1

SHEET 43 OF 209

ORIGINAL SCALE IN MILLIMETERS FOR REDUCED PLANS

DIMENSIONS, DRIVES BEARING AFTER REVISION DATES

January 28, 2011

DIST.	COUNTY	ROUTE	KILOMETER POST TOTAL PROJECT	SHEET NO.	TOTAL SHEETS
04	SF	80	12.7/13.2	53492	806

REGISTERED ENGINEER - CIVIL
6-23-08
PLANS APPROVAL DATE
The State of California or its officers or agents shall not be responsible for the accuracy or completeness of electronic copies of this plan sheet.

T.Y. LIN / MOFFATT & NICHOL
TWO HARRISON STREET
SAN FRANCISCO, CA 94105

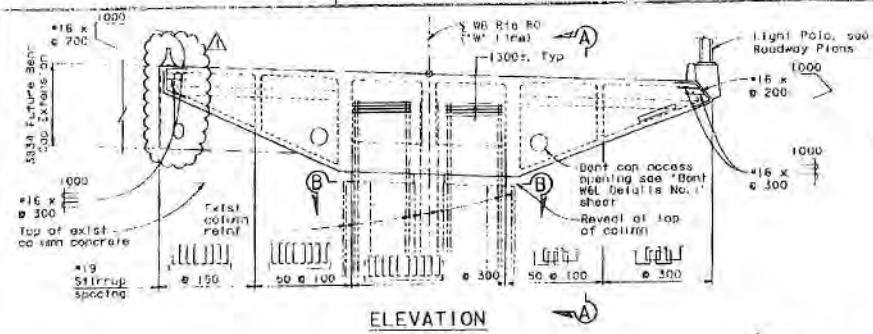

ELEVATION
1:100

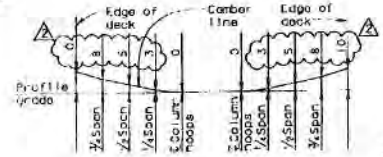

BENT CAP
CAMBER DIAGRAM
NO SCALE

Note: Camber diagram does not include allowance for falsework settlement

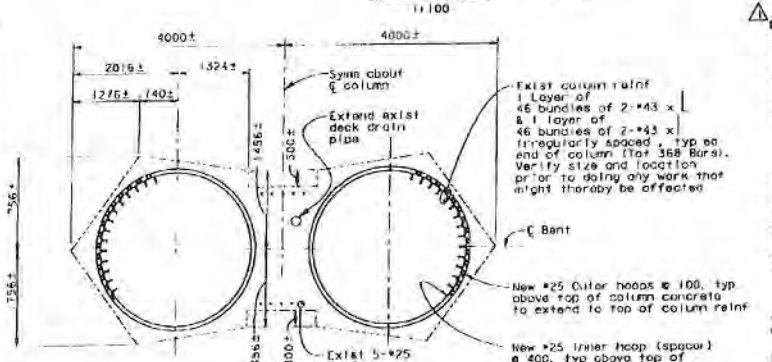

SECTION B-B
1:40

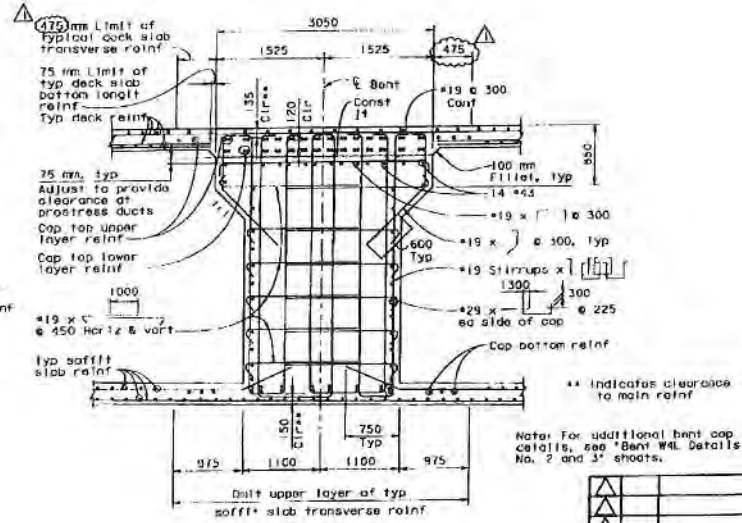

SECTION A-A
1:30

Note: For additional bent cap details, see "Bent W4L Details No. 2 and 3" sheets.

FOR REVISION 1 & 2 ONLY

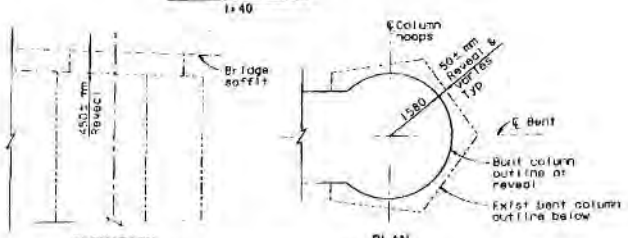

ELEVATION PLAN
REVEAL DETAIL AT TOP OF COLUMN
NO SCALE

MARK	DATE	DESCRIPTIONS	BY	CH'D
2	1-28-11	Rev Camber	TL	AE
1	5-27-10	WB Ramp Revisions	TL	AE

REVISIONS

8 REVISED PER ADDENDUM NO. 8
DATED NOVEMBER 12, 2009

CONTRACT CHANGE ORDER NO. 075-50
SHEET 4 OF 6

ALL DIMENSIONS ARE IN MILLIMETERS UNLESS OTHERWISE SHOWN

SAN FRANCISCO OAKLAND BAY BRIDGE
EAST SPAN SEISMIC SAFETY PROJECT

YBI TRANSITION STRUCTURES
BENT W4L DETAILS NO. 1

BRIDGE DIVISION
March 5, 2008

DESIGN: Darroh/Shanghuan
DETAILS: von Ryn/Zuccht/Wol
QUANTITIES: Liao
DRAWN: Ahn
CHECKED: Jain
CHECKED: C. Nichol

PREPARED FOR THE STATE OF CALIFORNIA DEPARTMENT OF TRANSPORTATION

Jal Birdy
PROJECT ENGINEER

BRIDGE NO. 34-0006 L/R
KILOMETER POST 12.6

CU 04251
EA 012051

SHEET 45 OF 209

January 28, 2011

MARK	DATE	DESCRIPTIONS	BY	CH'D
2	1-26-11	Rev Camber	TL	JB
1	9-1-10	Rev reaction at Hinge W7LA	TL	JB

REVISIONS

DIST.	COUNTY	ROUTE	KILOMETER POST TOTAL PROJECT	SHEET NO.	TOTAL SHEETS
04	SF	80	12.7/13.2	534R2	806

REGISTERED ENGINEER - CIVIL

6-23-08

PLANS APPROVAL DATE

The State of California or its officers or agents shall not be responsible for the accuracy or completeness of electronic copies of this plan sheet.

T.Y. LIN / MOFFATT & NICHOL
TWO HARRISON STREET
SAN FRANCISCO, CA 94105

CONTRACT CHANGE ORDER NO. 073-50
SHEET 6 OF 6

FOR REVISION 1 & 2 ONLY

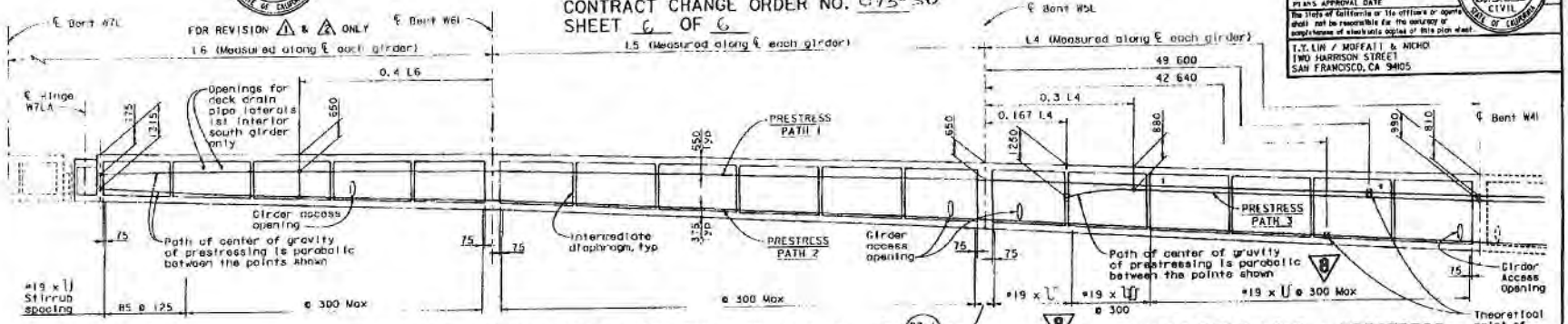

PARTIAL LONGITUDINAL SECTION - FRAME WB2
GIRDERS OUTSIDE SOFFIT RIDGE LINES
No Scale

Bent W/L - Add 6-#16 ea bay (Tot 24)
Bent W6L - Add 13-#19 ea bay (Tot 26)
Bent W5L - Add 13-#22 ea bay (Tot 26)
Bent W4L - Add 14-#29 ea bay (Tot 28)

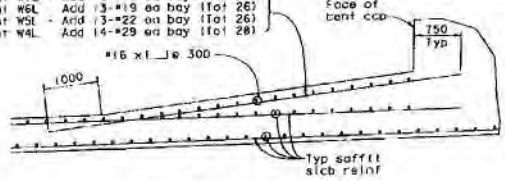

SOFFIT SLAB FLARE DETAIL
No Scale

TIME DEPENDENT CAMBER VALUES ("C")
AT HINGE K CLOSURE

Time Between Casting & Stressing, Days	Time Between Stressing & Counterweight, Days				
25					12 110 mm

HINGE DEAD LOAD + PRESTRESS REACTIONS

Hinge W7LA	Hinge K
16200 KN	1105 KN **

** Target value just after closure and counterweight removal

NOTES:

1. Time Dependent Camber 'C' values shown represent amount that top of deck is to be above profile grade at time of concrete placement. Values shown do not include allowance for falsework settlement.
2. Time Dependent Camber "C" values shown are to be adjusted after Contractor submits concrete modulus, creep and shrinkage test results.

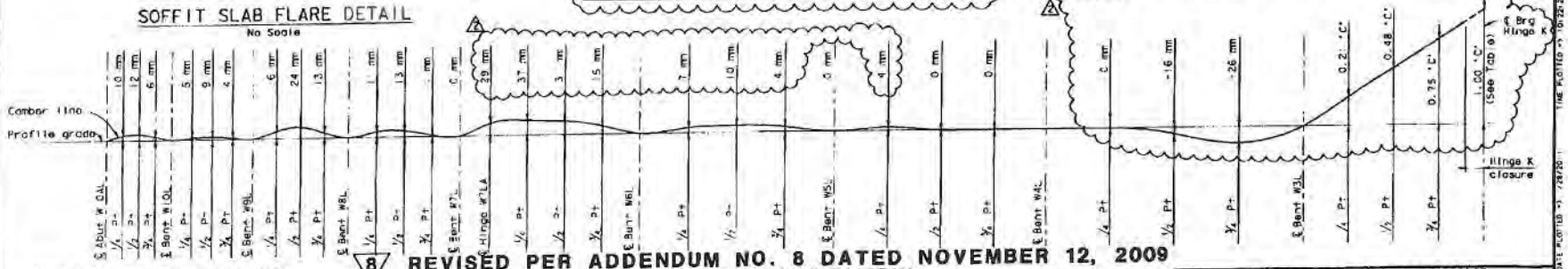

REVISED PER ADDENDUM NO. 8 DATED NOVEMBER 12, 2009

Note: Camber diagram does not include allowance for falsework settlement

WB GIRDER CAMBER DIAGRAM
No Scale

ALL DIMENSIONS ARE IN MILLIMETERS UNLESS OTHERWISE SHOWN

SAN FRANCISCO OAKLAND BAY BRIDGE
EAST SPAN SEISMIC SAFETY PROJECT

YBI TRANSITION STRUCTURES

WESTBOUND GIRDER LAYOUT NO. 3

PREPARED FOR THE STATE OF CALIFORNIA DEPARTMENT OF TRANSPORTATION

Joel Birdy, PROJECT ENGINEER

March 5, 2008

CU 04251
EA 012051

BRIDGE NO. 34-0006 L/R
KILOMETER POST 12.8

SHEET 85 OF 209

DESIGN: Cavalton
DETAILS: von Ryn/Zuccotti/Wat
QUANTITIES: Liao
CHECKED: Shanghuan, John, E. Nichol

ORIGINAL SCALE IN MILLIMETERS FOR REDUCED PLANS

DATE PLOTTED => 10/22/2011 TIME PLOTTED => 10:22:24 AM

DESIGNAM: -> PAGEMODIFY

January 28, 2011

STATE OF CALIFORNIA - DEPARTMENT OF TRANSPORTATION

CONTRACT CHANGE ORDER MEMORANDUM

DATE: 4/18/2011 Page 1 of 1

TO: Deanna Vilcheck, ACM /

FROM: William Howe, Senior R.E.

FILE: E.A. 04 - 0120S4
CO-RTE-PM SF-80-12.7/13.2
FED. NO. NO FED AID

CCO#: 73 | SUPPLEMENT#: 0 | Category Code: CHPB

CONTINGENCY BALANCE (incl. this change) $88,778,778.50

COST: $0.00 INCREASE ☐ DECREASE ☐

HEADQUARTERS APPROVAL REQUIRED? ☐ YES ☑ NO

SUPPLEMENTAL FUNDS PROVIDED: $0.00

IS THIS REQUEST IN ACCORDANCE WITH ENVIRONMENTAL DOCUMENTS? ☑ YES ☐ NO

CCO DESCRIPTION:
Revised camber values

PROJECT DESCRIPTION:
YBITS-1 (Yerba Buena Island Transition Structures)

Original Contract Time:	Time Adj. This Change:	Previously Approved CCO Time Adjustments:	Percentage Time Adjusted: (including this change)	Total # of Unreconciled Deferred Time CCO(s): (including this change)
1390 Day(s)	0 Day(s)	0 Day(s)	0 %	0

THIS CHANGE ORDER PROVIDES FOR:

Revisions to camber values as shown on revised plans sheet Nos. 591R1, 592R2, 594R2, 595R1, and 634R2

This contract calls for the construction of the Yerba Buena Island Transition Structures (YBITS) of the east span of the new San Francisco Oakland Bay Bridge (SFOBB).The original contract plans showed camber values for bents W3L, W4L, W5L, W6L, and westbound girders to be used on this contract. Since bridge camber is dependent on shrinkage and creep properties of the concrete, the design engineer has adjusted the camber calculations to reflect the properties of the concrete to be used for the structure through the revised plan sheets mentioned above.

Design concurrence for these changes are on file.

Maintenance concurrence is not required for this change.

There is no cost or credit by reason of this change.

CONCURRED BY:

Construction Engineer:	William Howe	Date 5/11/11
Bridge Engineer:	Mehran Ardakanian	Date 5/10/11
Project Engineer:		Date
Project Manager:	KEN TERPSTRA	Date 8/24/11
FHWA Rep.:		Date
Environmental:		Date
Other (specify):	MATTHEW HUNTER (Senior Bridge Eng.)	Date 09/27/11
Other (specify):		Date
District Prior Approval By:		Date
HQ (Issue Approve) By:		Date
Resident Engineer's Signature:	William Howe	Date 5-11-11

ESTIMATE OF COST

	THIS REQUEST	TOTAL TO DATE
ITEMS	$0.00	$0.00
FORCE ACCOUNT	$0.00	$0.00
AGREED PRICE	$0.00	$0.00
ADJUSTMENT	$0.00	$0.00
TOTAL	$0.00	$0.00

FEDERAL PARTICIPATION

☐ PARTICIPATING ☐ PARTICIPATING IN PART ☑ NONE
☐ NON-PARTICIPATING (MAINTENANCE) ☐ NON-PARTICIPATING

FEDERAL SEGREGATION (if more than one Funding Source or P.I.P. type)
__CCO FUNDED PER CONTRACT ☐ CCO FUNDED AS FOLLOWS

FEDERAL FUNDING SOURCE	PERCENT

ADA Notice: For individuals with sensory disabilities, this document is available in alternate formats. For information call: (916) 654-6410 or TDD (916) 654-3880 or write Records and Forms Management, 1120 N Street, MS-89, Sacramento, CA 95814.

STATE OF CALIFORNIA - DEPARTMENT OF TRANSPORTATION

CONTRACT CHANGE ORDER

Change Requested by: Engineer

CCO 73	Suppl. No. 1	Contract No. 04 - 0120S4	Road SF-80-12.7/13.2	FED. AID LOC.: NO FED AID

To: **M C M CONSTRUCTION INC**

You are directed to make the following changes from the plans and specifications or do the following described work not included in the plans and specifications for this contract. ***NOTE: This change order is not effective until approved by the Engineer.***

Description of work to be done, estimate of quantities and prices to be paid. (Segregate between additional work at contract price, agreed price and force account.) Unless otherwise stated, rates for rental of equipment cover only such time as equipment is actually used and no allowance will be made for idle time. This last percentage shown is the net accumulated increase or decrease from the original quantity in the Engineer's Estimate.

Modify Camber values (Bridge No. 34-0006R) based on approved concrete modulus of elasticity, creep, shrinkage and density test results for Eastbound Frame 2 Girder (Abutment W11R to Hinge K), Bents W6R, W5R, W4R and W3R.

Replace contract plan sheet nos. 606R1, 609R2, 611, 612R1 and 641R2 with attached plan sheets nos. 606R2, 609R3, 611R1, 612R2 and 641R3 (sheets 2 through 6) of this contract change order.

All work shall be performed in accordance with the applicable sections of the Special Provisions and Standard Specifications.

There shall be no cost or credit to the state by reason of this change.

Estimated Cost: Increase ☐ Decrease ☐ **$0.00**

By reason of this order the time of completion will be adjusted as follows: 0 days

Submitted by		
Signature William Howe	**Resident Engineer** William Howe, Senior R.E.	**Date** 07-29-11
Approval Recommended by		
Signature William Howe	**Senior Resident Engineer** William Howe	**Date** 07-29-11
Engineer Approval by		
Signature William Howe	**Senior Resident Engineer** William Howe	**Date** 08-25-11

We the undersigned contractor, have given careful consideration to the change proposed and agree, if this proposal is approved, that we will provide all equipment, furnish the materials, except as may otherwise be noted above, and perform all services necessary for the work above specified, and will accept as full payment therefor the prices shown above.

NOTE: If you, the contractor, do not sign acceptance of this order, your attention is directed to the requirements of the specifications as to proceeding with the ordered work and filing a written protest within the time therein specified.

Contractor Acceptance by		
Signature	**(Print name and title)** Edmundo A. Ruchi - Treasurer	**Date** 8-16-2011

Nancy DeSalvatore 07-29-11

DIST.	COUNTY	ROUTE	KILOMETER POST TOTAL PROJECT	SHEET NO.	TOTAL SHEETS
04	SF	80	12.7/13.2	606R2	806

REGISTERED ENGINEER - CIVIL

6-23-08

PLANS APPROVAL DATE

The State of California or its officers or agents shall not be responsible for the accuracy or completeness of electronic copies of this plan sheet.

T.Y. LIN / MOFFATT & NICHOL
TWO HARRISON STREET
SAN FRANCISCO, CA 94105

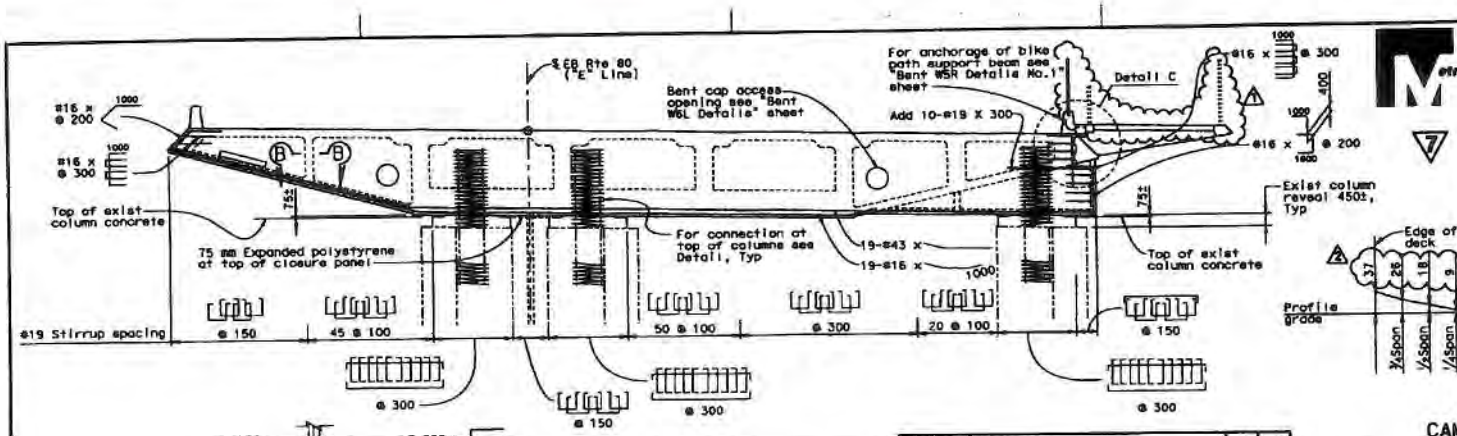

ELEVATION
1:80

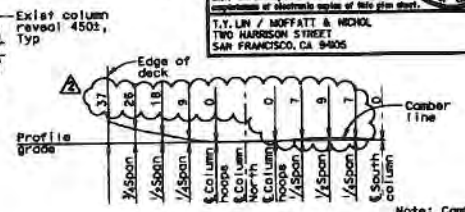

BENT CAP
CAMBER DIAGRAM
NO SCALE

Note: Camber diagram does not include allowance for falsework settlement

MARK	DATE	DESCRIPTIONS	BY	CH'D
2	6-23-11	Rev Camber	TL	JB
1	9-1-10	Rev Bike Path Railing	TL	JB

REVISIONS

CONTRACT CHANGE ORDER NO. 7351
SHEET 2 OF 6

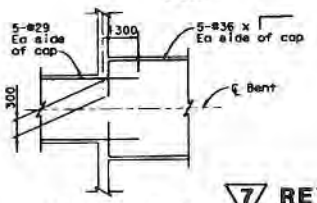

SECTION B-B
1:80

7 REVISED PER ADDENDUM No. 7
DATED OCTOBER 19, 2009

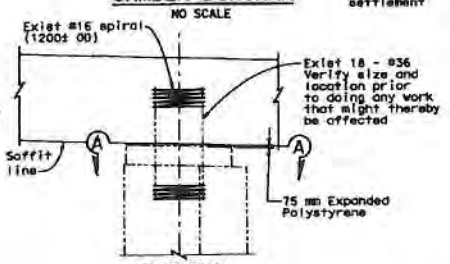

ELEVATION

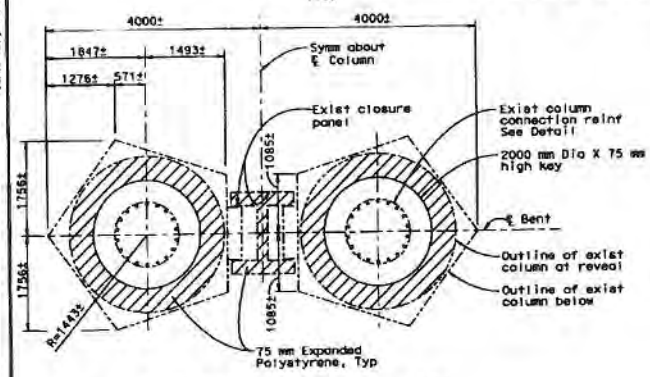

PLAN AT TOP OF NORTH COLUMN
1:40

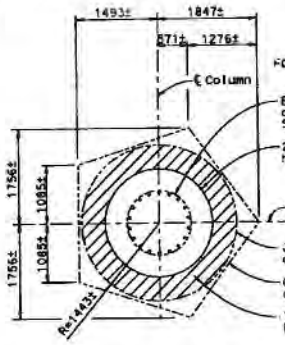

PLAN AT TOP OF SOUTH COLUMN
1:40

FOR REVISION 1 & 2 ONLY

For reinf, see "EB Typical Section No.4" sheet

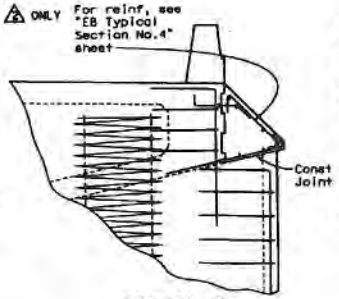

DETAIL C
1:30

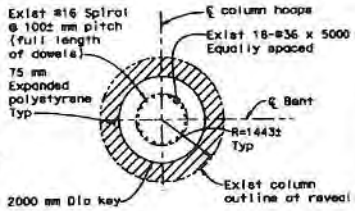

SECTION A-A
CONNECTION DETAIL AT TOP OF COLUMNS
(South column shown, north column similar)
1:50

ALL DIMENSIONS ARE IN MILLIMETERS UNLESS OTHERWISE SHOWN

March 3, 2008
7/1/2001

DESIGN: Darrah/Shangkuan
DETAILS: van Ryn/Zucchi/Abd
QUANTITIES: Liao
CHECKED: Ahn, Jain, E. Nichol

PREPARED FOR THE STATE OF CALIFORNIA DEPARTMENT OF TRANSPORTATION

Jai Birdy
PROJECT ENGINEER

34-0006 L/R
12.8

CU 04251
EA 012051

SAN FRANCISCO OAKLAND BAY BRIDGE
EAST SPAN SEISMIC SAFETY PROJECT

YB1 TRANSITION STRUCTURES

BENT W6R DETAILS NO.1

SHEET 57 OF 209

June 29, 2011

DIST.	COUNTY	ROUTE	KILOMETER POST TOTAL PROJECT	SHEET NO.	TOTAL SHEETS
04	SF	80	12.7/13.2	509R3	806

REGISTERED ENGINEER - CIVIL
6-23-08
PLANS APPROVAL DATE
The State of California or its officers or agents shall not be responsible for the accuracy or completeness of electronic copies of this plan sheet.

T.Y. LIN / MOFFATT & NICHOL
TWO HARRISON STREET
SAN FRANCISCO, CA 94105

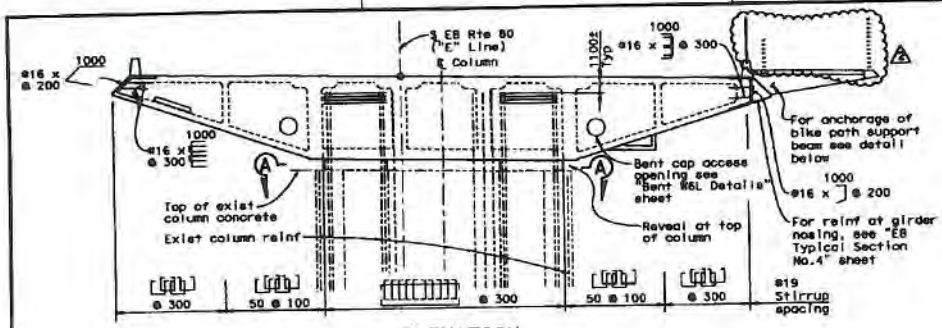

ELEVATION
1:100

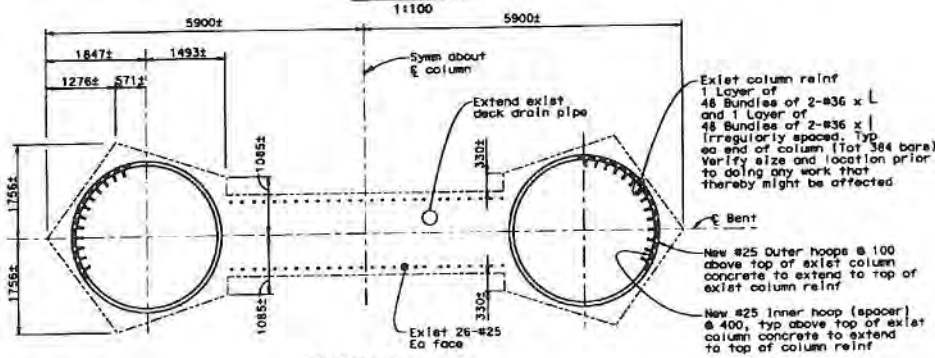

SECTION A-A
1:40

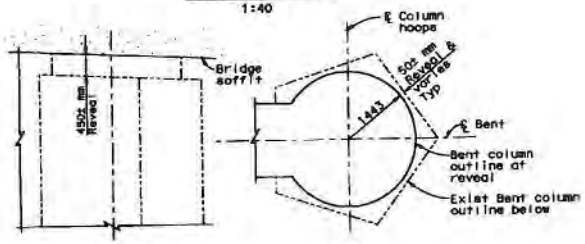

ELEVATION PLAN

REVEAL DETAIL AT TOP OF COLUMN
(Typical Bents W5R & W4R)
NO SCALE

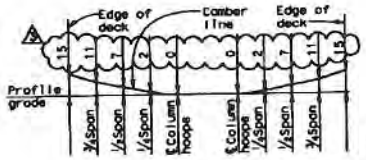

BENT CAP
CAMBER DIAGRAM
NO SCALE

Note: Camber diagram does not include allowance for falsework settlement

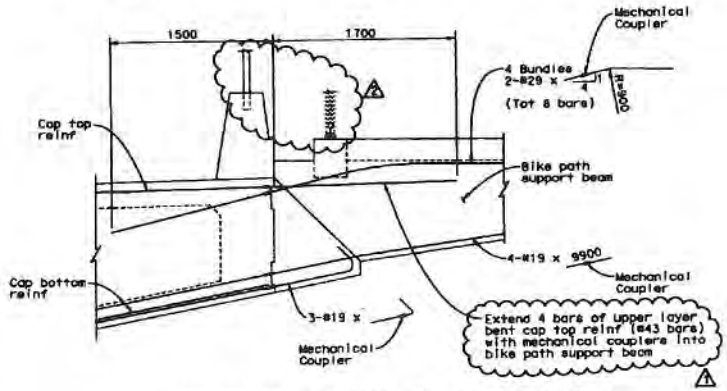

ANCHORAGE OF BIKEPATH SUPPORT BEAM
(Shown at Bent W5R, similar at Bent W6R, for details not shown see "Bike Path Details No.1" sheet)
1:20

FOR REVISION 1, 2 & 3 ONLY

MARK	DATE	DESCRIPTIONS	BY	CH'D
3	6-23-11	Rev Camber	TL	JB
2	10-13-10	Rev Bike Path Railing	TL	JB
1	3-29-10	ISD REVISIONS	AE	JB

REVISIONS

CONTRACT CHANGE ORDER NO. 73S1
SHEET 3 OF 6

ALL DIMENSIONS ARE IN MILLIMETERS UNLESS OTHERWISE SHOWN

SAN FRANCISCO OAKLAND BAY BRIDGE
EAST SPAN SEISMIC SAFETY PROJECT

YBI TRANSITION STRUCTURES
BENT W5R DETAILS NO.1

DESIGN OVERSIGHT: JOHN MOOK, RICHARD CHAN, JOHN F. SAMPO
DESIGN EL-NATUR: 7/1/2011
SIGN OFF DATE

DESIGN: Darrah/Shengkuan
DETAILS: van Ryn/Zuechi/Mai
CHECK/FIXES: Liao
ENGINEER: Ahn
CHECKED: Jain
ENGINEER: E. Nichol

PREPARED FOR THE STATE OF CALIFORNIA DEPARTMENT OF TRANSPORTATION

Jai Birdy
PROJECT ENGINEER

REVISION NO. 34-0006 L/R
KILOMETER POST 12.8

CU 04251
EA 012051

ELECTRONIC CONTRACT RECORD — ELECTRONIC SIGNATURE

SHEET 60 OF 209

FILE =3 p:\4141-06\oakb\TS\Checked Plans\YBITS #1-100X No. 2_03-03-06 (Final Renumbered)\062911 113 CO01\04-0120e1-34-0006r1-h-bde143.dgn

June 29, 2011

DATE PLOTTED => 6/29/2011
TIME PLOTTED => 2:11:58 PM

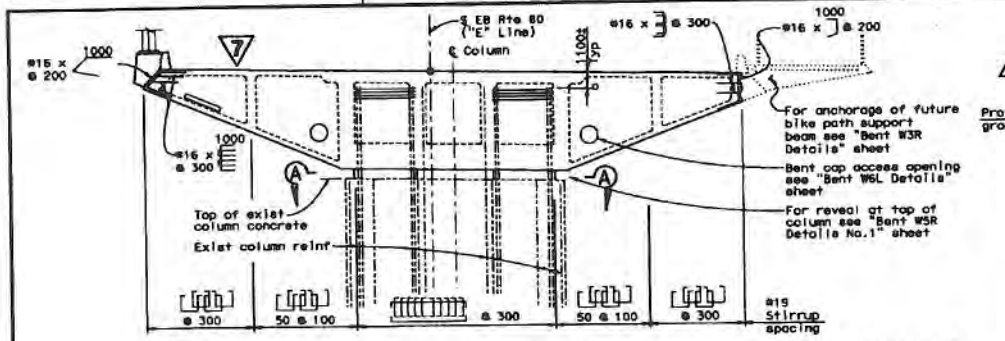

Note: For bent cap details see "Bent W5R Details No.2" sheet

ELEVATION
1:100

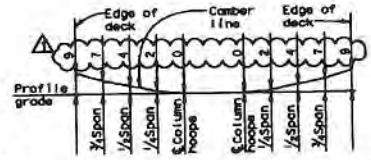

BENT CAP
CAMBER DIAGRAM
NO SCALE

Note: Camber diagram does not include allowance for falsework settlement

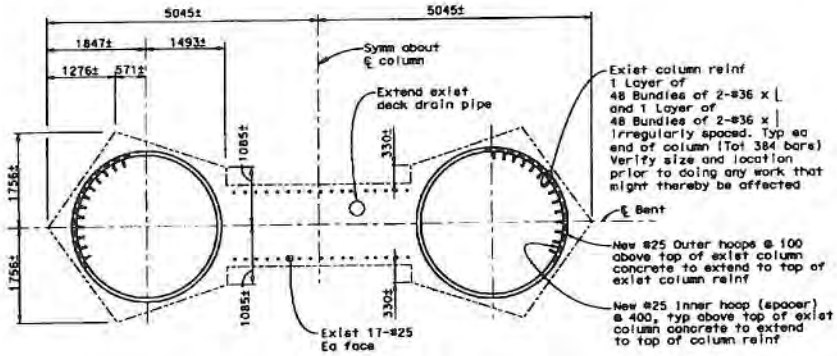

SECTION A-A
1:40

DIST.	COUNTY	ROUTE	KILOMETER POST TOTAL PROJECT	SHEET NO.	TOTAL SHEETS
04	SF	80	12.7/13.2	611R1	806

REGISTERED ENGINEER - CIVIL
6-23-08
PLANS APPROVAL DATE
The State of California or its officers or agents shall not be responsible for the accuracy or completeness of electronic copies of this plan sheet.
T.Y. LIN / MOFFATT & NICHOL
TWO HARRISON STREET
SAN FRANCISCO, CA 94105

MARK	DATE	DESCRIPTIONS	BY	CH'D
1	6-23-11	Rev Camber	TL	JB
		REVISIONS		

FOR REVISION 1 ONLY

CONTRACT CHANGE ORDER NO. 7351
SHEET 4 OF 6

7 REVISED PER ADDENDUM No. 7 DATED OCTOBER 19, 2009

ALL DIMENSIONS ARE IN MILLIMETERS UNLESS OTHERWISE SHOWN

SAN FRANCISCO OAKLAND BAY BRIDGE
EAST SPAN SEISMIC SAFETY PROJECT

YBI TRANSITION STRUCTURES
BENT W4R DETAILS

March 3, 2008
7/1/2011

DESIGN Barrah/Shangkuan
DETAILS van Ryn/Zucchi/Aial
QUANTITIES Liao
CHECKED Jain
E. Nichol

PREPARED FOR THE STATE OF CALIFORNIA DEPARTMENT OF TRANSPORTATION

Jai Birdy
PROJECT ENGINEER

BRIDGE NO. 34-0006 L/R
KILOMETER POST 12.8

CU 04251
EA 012051

SHEET 62 OF 209

FILE => p:\4141-06\cadd\TS\Checked Plans\YBITS 61-1005 No. 2_03-03-08 (Final Renewed)\062811 TTS CCO\04-012051-34-0006r1-h-bent48.dgn

June 29, 2011

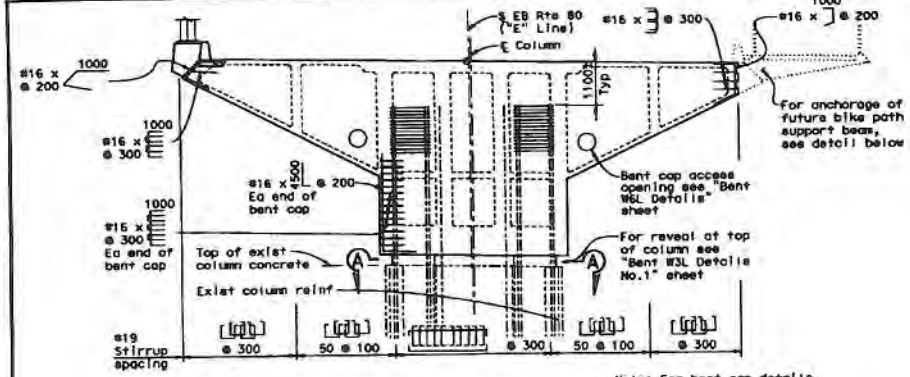

ELEVATION
1:100

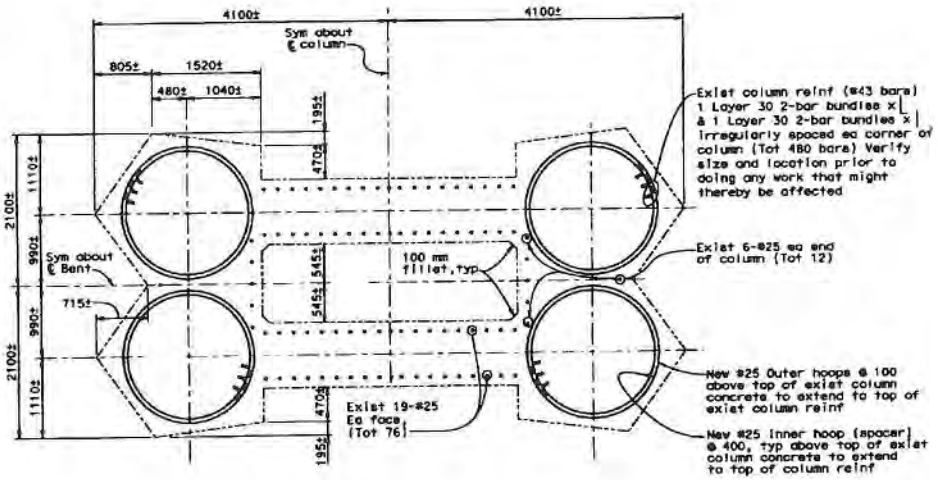

SECTION A-A
1:30

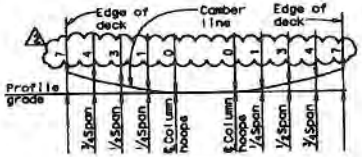

BENT CAP
CAMBER DIAGRAM
NO SCALE

Note: Camber diagram does not include allowance for falsework settlement

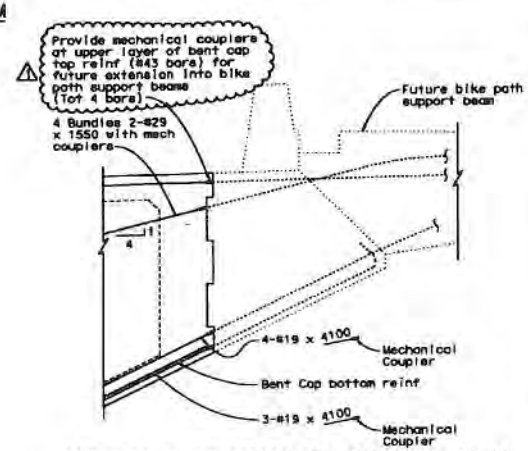

ANCHORAGE OF BIKEPATH SUPPORT BEAM
(Shown at Bent W3R, similar at Bent W4R, for details not shown see "Future Bike Path Details No.1" sheet)
1:20

DIST.	COUNTY	ROUTE	KILOMETER POST TOTAL PROJECT	SHEET NO.	TOTAL SHEETS
04	SF	80	12.7/13.2	512R2	606

REGISTERED ENGINEER - CIVIL
6-23-08
PLANS APPROVAL DATE
The state of California or its officers or agents shall not be responsible for the accuracy or completeness of electronic copies of this plan sheet.
T.Y. LIN / MOFFATT & NICHOL
TWO HARRISON STREET
SAN FRANCISCO, CA 94105

MARK	DATE	DESCRIPTIONS	BY	CH'D
2	6-23-11	Rev Camber	TL	JB
1	3-23-10	ISD REVISIONS	AE	JB

REVISIONS

FOR REVISION 1 & 2 ONLY

CONTRACT CHANGE ORDER NO. 73S1
SHEET 5 OF 6

ALL DIMENSIONS ARE IN MILLIMETERS UNLESS OTHERWISE SHOWN

SAN FRANCISCO OAKLAND BAY BRIDGE
EAST SPAN SEISMIC SAFETY PROJECT

YBI TRANSITION STRUCTURES
BENT W3R DETAILS

DESIGN: Darrah/Shangkuan
DETAILS: von Ryn/Zuoshi/Atal
QUANTITIES: Liao
CHECKED: Ahl, Jain, E. Nichol

PREPARED FOR THE STATE OF CALIFORNIA DEPARTMENT OF TRANSPORTATION

Joi Birdy
PROJECT ENGINEER

BRIDGE NO. 34-0006 L/R
KILOMETER POST 12.6

CU 04251
EA 012051

SHEET 63 OF 209

REGISTERED PROFESSIONAL ENGINEER
JOI BIRDY
61947
Exp. 12-31-11
CIVIL
STATE OF CALIFORNIA

REGISTERED PROFESSIONAL ENGINEER
A.L. ELY
16000
Exp. 6-30-08
CIVIL
STATE OF CALIFORNIA

REVIEWED BY: Joi Birdy, Shangkuan Chan, Juan F. Carpio
DATE: 7/1/2011

BIDDY DATE

FILE => p:\4141-06\cadd\TS\Checked Plans\YBITS 41-1002 No. Z 03-03-08 (Final Renamed)\062911 T13 CCO\04-0120u1-34-0006l-h-bae146.dgn

TIME PLOTTED => 2:18:28 PM
DATE PLOTTED => 6/29/2011
FILENAME => T.Carpio

June 29, 2011

DIST.	COUNTY	ROUTE	KILOMETER POST TOTAL PROJECT	SHEET NO.	TOTAL SHEETS
04	SF	80	12.7/13.2	641R3	806

REGISTERED ENGINEER - CIVIL

6-23-08

PLANS APPROVAL DATE

The State of California or its officers or agents shall not be responsible for the accuracy or completeness of electronic copies of this plan sheet.

T.Y. LIN / MOFFATT & NICHOL
TWO HARRISON STREET
SAN FRANCISCO, CA 94105

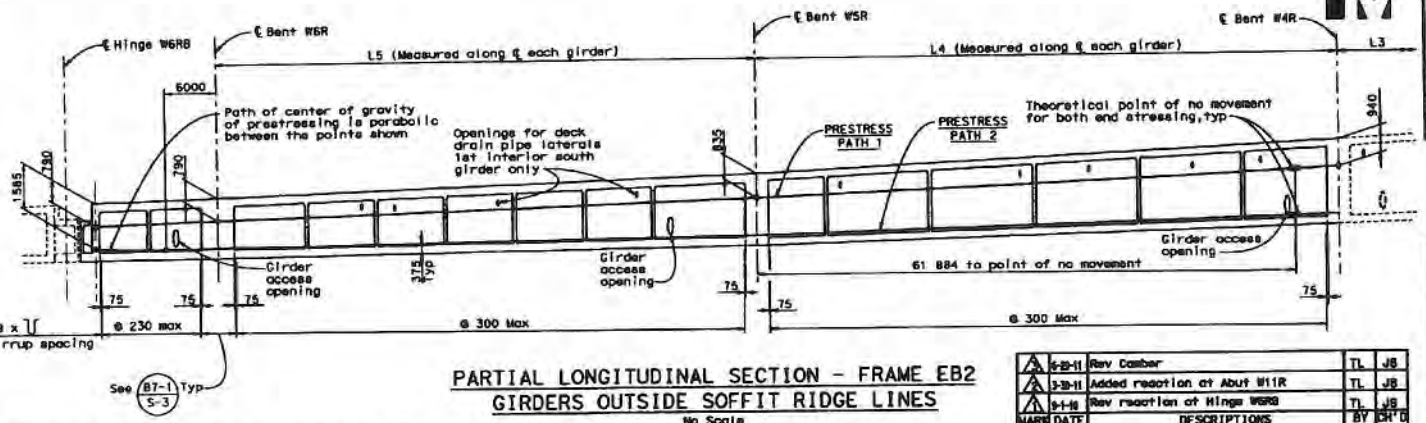

PARTIAL LONGITUDINAL SECTION - FRAME EB2
GIRDERS OUTSIDE SOFFIT RIDGE LINES

No Scale

MARK	DATE	DESCRIPTIONS	BY	CH'D
3	6-20-11	Rev Camber	TL	JS
2	3-30-11	Added reaction at Abut W11R	TL	JS
1	9-1-10	Rev reaction at Hinge W6RB	TL	JS
		REVISIONS		

TIME DEPENDENT CAMBER VALUES AT HINGE W6RB

# Elapsed time in days	Hinge W6RB Camber "A"	Hinge W6RB Camber "B"	
30 Days	104 mm	6 mm	3
60 Days	108 mm	6 mm	
90 Days	110 mm	6 mm	
120 Days	112 mm	6 mm	
180 Days	115 mm	6 mm	
240 Days	116 mm	6 mm	
360 Days	118 mm	5 mm	
720 Days	120 mm	4 mm	

# Indicates elapsed time in days from prestressing short (Cantilever) hinge side until closure and load transfer.

CONTRACT CHANGE ORDER NO. 7351
SHEET 6 OF 6

FOR REVISION 1, 2 & 3 ONLY

NOTES:

1. Camber "A" = Anticipated camber of short hinge side at time of load transfer. Construct long hinge side to match.
2. Camber "B" = Camber value for construction short hinge side.
3. Time Dependent Camber "C" values shown represent amount that top of deck is to be below profile grade at time of concrete placement. Values shown do not include allowance for falsework settlement.
4. Time Dependent Camber "C" value is to be determined after Contractor submits concrete modulus, creep and shrinkage test results.

HINGE DEAD LOAD + PRESTRESS REACTIONS

Abut W11R	Hinge W6RB	Hinge K
5120 KN	15650 KN	1335 KN ##

Target value just after closure and removal of hinge counterweight

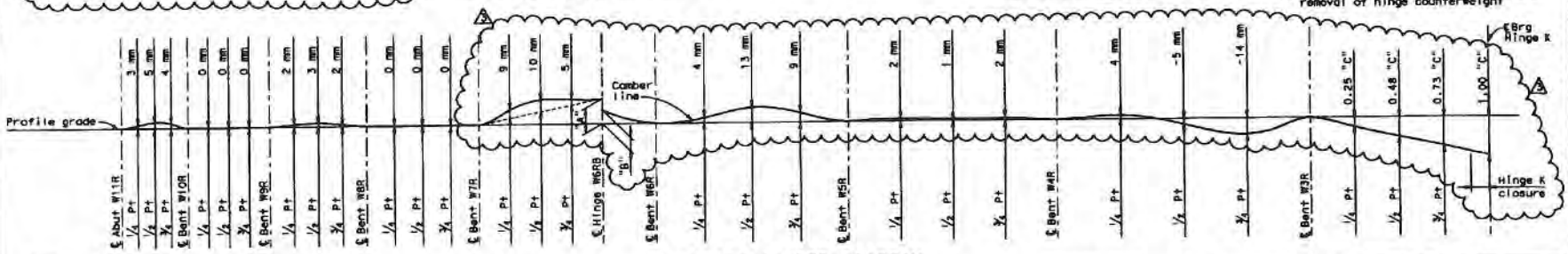

Note: Camber diagram does not include allowance for falsework settlement

EB GIRDER CAMBER DIAGRAM

NO SCALE

ALL DIMENSIONS ARE IN MILLIMETERS UNLESS OTHERWISE SHOWN

SAN FRANCISCO OAKLAND BAY BRIDGE
EAST SPAN SEISMIC SAFETY PROJECT

YBI TRANSITION STRUCTURES

EASTBOUND GIRDER LAYOUT NO.4

PREPARED FOR THE STATE OF CALIFORNIA DEPARTMENT OF TRANSPORTATION

Jai Birdy
PROJECT ENGINEER

DESIGN: Cavaflen — Shangtuan
DETAILS: van Ryn/Zucchi/Mol — Jain
QUANTITIES: Liao — E. Nichol

7/1/2011

BRIDGE NO. 34-0006 L/R
KILOMETER POST 12.8

CU 04251
EA 012051

SHEET 92 OF 209

FILE => p:\41-06\cad\15\Checked Plans\YBI15 B1-100X No. 2_03-03-06 (Final Renamed)\062911 T13 CD\04-0120a1-34-006r1-1-g_1011.dg

June 29, 2011

STATE OF CALIFORNIA - DEPARTMENT OF TRANSPORTATION

CONTRACT CHANGE ORDER MEMORANDUM

DATE: 7/28/2011 Page 1 of 1

TO: Deanna Vilcheck, ACM / DV	FILE: E.A. 04 - 0120S4
	CO-RTE-PM SF-80-12.7/13.2
FROM: William Howe, Senior R.E.	FED. NO. NO FED AID
CCO#: 73 SUPPLEMENT#: 1 Category Code: CHPB	CONTINGENCY BALANCE (incl. this change) $68,035,664.19
COST: $0.00 INCREASE ☐ DECREASE ☐	HEADQUARTERS APPROVAL REQUIRED? ☐ YES ☑ NO
SUPPLEMENTAL FUNDS PROVIDED: $0.00	IS THIS REQUEST IN ACCORDANCE WITH ENVIRONMENTAL DOCUMENTS? ☑ YES ☐ NO
CCO DESCRIPTION: Revision to camber values	**PROJECT DESCRIPTION:** YBITS-1 (Yerba Buena Island Transition Structures)

Original Contract Time:	Time Adj. This Change:	Previously Approved CCO Time Adjustments:	Percentage Time Adjusted: (including this change)	Total # of Unreconciled Deferred Time CCO(s): (including this change)
1390 Day(s)	0 Day(s)	0 Day(s)	0 %	9

THIS CHANGE ORDER PROVIDES FOR:

Adjusted camber values as shown on revised plan sheet nos. 606R2, 609R3, 611R1, 612R2 and 641R3.

This contract calls for the construction of the Yerba Buena Island Transition Structures (YBITS) of the east span of the new San Francisco Oakland Bay Bridge (SFOBB). The original contract plans camber values were based on an estimated modulus of elasticity and time dependent creep and shrinkage values together with an assumed construction schedule. Since bridge camber is dependent on shrinkage and creep properties of concrete, the design engineer has adjusted the camber values to reflect the actual lab test results of the concrete to be used for the structure.

Design concurrence for these changes are on file.

Maintenance concurrence is not required for this change.

No adjustment of contract time is provided, as this change will not affect the controlling operation.

CONCURRED BY:		
Construction Engineer:	William Howe	Date 7-29-11
Bridge Engineer:	Mehran Ardakanian	Date 7.29.11
Project Engineer:	Bob Zandipour, Design	Date 09/27/11
Project Manager:	Ken Terpstra	Date 08/24/11
FHWA Rep.:		Date
Environmental:		Date
Other (specify):	MATTHEW HUNTER (Senior Bridge Eng.)	Date 09/27/11
Other (specify):		Date
District Prior Approval By:		Date
HQ (Issue Approve) By:		Date
Resident Engineer's Signature:	William Howe	Date 7-29-11

ESTIMATE OF COST

	THIS REQUEST	TOTAL TO DATE
ITEMS	$0.00	$0.00
FORCE ACCOUNT	$0.00	$0.00
AGREED PRICE	$0.00	$0.00
ADJUSTMENT	$0.00	$0.00
TOTAL	$0.00	$0.00

FEDERAL PARTICIPATION

☐ PARTICIPATING ☐ PARTICIPATING IN PART ☑ NONE
☐ NON-PARTICIPATING (MAINTENANCE) ☐ NON-PARTICIPATING

FEDERAL SEGREGATION (if more than one Funding Source or P.I.P. type)
__ CCO FUNDED PER CONTRACT ☐ CCO FUNDED AS FOLLOWS

FEDERAL FUNDING SOURCE	PERCENT

ADA Notice: For individuals with sensory disabilities, this document is available in alternate formats. For information call: (916) 654-6410 or TDD (916) 654-3880 or write Records and Forms Management, 1120 N Street, MS-89, Sacramento, CA 95814.

STATE OF CALIFORNIA - DEPARTMENT OF TRANSPORTATION

CONTRACT CHANGE ORDER

Change Requested by: Engineer

CCO: 74	Suppl. No. 0	Contract No. 04- 0120S4	Road SF-80-12.7/13.2	FED. AID LOC.: NO FED AID

To: **M C M CONSTRUCTION INC**

You are directed to make the following changes from the plans and specifications or do the following described work not included in the plans and specifications for this contract. ***NOTE: This change order is not effective until approved by the Engineer.***

Description of work to be done, estimate of quantities and prices to be paid. (Segregate between additional work at contract price, agreed price and force account.) Unless otherwise stated, rates for rental of equipment cover only such time as equipment is actually used and no allowance will be made for idle time. This last percentage shown is the net accumulated increase or decrease from the original quantity in the Engineer's Estimate.

Adjustment of Compensation at Unit Price:

Provide direct dispatch and door to door pickup and drop off service for the Yerba Buena Island residents using the temporary shuttle service specified to be provided under Section 10-1.19 of the Contract Special Provisions.

For all additional costs associated with provided these enhancements to the temporary shuttle service, the Contractor shall be compensated an agreed unit price of $240.00 for each day the dispatch and door to door services are provided. This unit price constitutes full compensation, including all markups, for this change.

Estimated Cost: 1,010 days @ $240.00 / day = $242,400.00

Estimated cost of Adjustment of Compensation at Agreed Unit Price $242,400.00

Estimated Cost: Increase ☑ Decrease ☐ $242,400.00

By reason of this order the time of completion will be adjusted as follows: 0 days

Submitted by

Signature	Resident Engineer	Date
Rajesh Oberoi	Rajesh Oberoi, Senior R.E.	03/18/11

Approval Recommended by

Signature	Principal T.E.	Date
Deanna Vilchez	Mike Forner	3/21/11

Engineer Approval by

Signature	Principal T.E.	Date
Deanna Vilchez	Mike Forner	3/30/11

We the undersigned contractor, have given careful consideration to the change proposed and agree, if this proposal is approved, that we will provide all equipment, furnish the materials, except as may otherwise be noted above, and perform all services necessary for the work above specified, and will accept as full payment therefor the prices shown above.

NOTE: If you, the contractor, do not sign acceptance of this order, your attention is directed to the requirements of the specifications as to proceeding with the ordered work and filing a written protest within the time therein specified.

Contractor Acceptance by

Signature	(Print name and title)	Date
	Edmundo A. Puchi - Treasurer	3-23-2011

STATE OF CALIFORNIA - DEPARTMENT OF TRANSPORTATION

CONTRACT CHANGE ORDER MEMORANDUM

TO: Deanna Vilcheck, ACM / DV	FILE: E.A. 04 - 0120S4
	CO-RTE-PM SF-80-12.7/13.2
FROM: Rajesh Oberoi, Senior R.E.	FED. NO. NO FED AID
CCO#: 74 SUPPLEMENT#: 0 Category Code: ~~AXZZ~~ AWZZ	CONTINGENCY BALANCE (incl. this change) **$6,323,577.00**
COST: **$242,400.00** INCREASE ☑ DECREASE ☐	HEADQUARTERS APPROVAL REQUIRED? ☐ YES ☑ NO
SUPPLEMENTAL FUNDS PROVIDED: **$242,400.00**	IS THIS REQUEST IN ACCORDANCE WITH ENVIRONMENTAL DOCUMENTS? ☑ YES ☐ NO
CCO DESCRIPTION: MUNI Shuttle Enhancements	**PROJECT DESCRIPTION:** YBITS-1 (Yerba Buena Island Transition Structures)

Original Contract Time:	Time Adj. This Change:	Previously Approved CCO Time Adjustments:	Percentage Time Adjusted: (including this change)	Total # of Unreconciled Deferred Time CCO(s): (including this change)
1390 Day(s)	**0** Day(s)	**0** Day(s)	**0** %	**7**

THIS CHANGE ORDER PROVIDES FOR:
Dispatch and door to door service for the temporary shuttle service being provided under the contract..

This project, the Yerba Buena Island Transition Structure (YBITS), provides for the construction of two bridges which will connect eastbound and westbound traffic on the new east span of the San Francisco Oakland Bay Bridge (SFOBB) to the existing Yerba Buena Island (YBI) tunnel. The structures are comprised of concrete box girder bridges each approximately 26 meters wide, 40 meters high and 450 meters in length.

The contract provides for the existing westbound on-ramp from Macalla Road to the SFOBB to be closed for the duration of the project. The closure of this ramp adversely affects the San Francisco Municipal Railway (MUNI) Route 108 bus service which is required to use another on-ramp several miles to the west. The use of this other on ramp results in the elimination of the usual bus stops along Macalla Road on Yerba Buena Island. In order to mitigate disruptions to the residents on Yerba Buena Island, the contract requires that the contractor provides a temporary shuttle service which services the residents on Yerba Buena Island and takes them to an active MUNI bus stop at the adjacent Treasure Island. The cost of providing this shuttle service is compensated under a lump sum contract bid item.

The shuttle service being provided has resulted in numerous complaints from the residents of Yerba Buena Island due to the considerable inconvenience that the service creates. These residents are now forced to wait at the old MUNI bus stops for the shuttle to arrive, complete the full shuttle route, get dropped off at the MUNI bus stop on Treasure Island and then have to wait for the actual MUNI bus to arrive at that bus stop before proceeding to their destination. In conjunction with these complaints, the Department's SFOBB Public Information Office (PIO) has requested that these disruptions be mitigated and that a more efficient shuttle service be implemented.

In order to address the disruptions to the residents and the requests from the SFOBB PIO, the contractor shall be ordered to provide a direct dispatch service along with door to door pick up and drop off service for the temporary shuttle. This will allow residents to phone the shuttle directly for requested pickups and drop offs and allow for the shuttle to transport these residents directly to the MUNI bus stop on Treasure Island. These measures will actively mitigate the disruptions currently being realized by these residents. The measures will be put in place for the remaining duration of the contract or until the Macalla Road on ramp is reopened.

The contract provides $2,250,000 in supplement funding to provide for additional shuttle services for MUNI and the US Coast Guard within the contract. Including this change order, $842,400 of this funding has been allocated to change orders to date.

The cost of providing the dispatch service and associated communications equipment shall be compensated as an adjustment of compensation at an agreed unit price of $240.00 per day. The total estimated cost of this change is $242,400 which shall be funded by a portion of the supplemental funds provided for shuttle services. A cost estimate is on file.

No adjustment of contract time is warranted as the change doesn't affect the controlling operation.

Maintenance concurrence is not required as the change doesn't affect any permanent roadway features.

ADA Notice: For individuals with sensory disabilities, this document is available in alternate formats. For information call: (916) 654-6410 or TDD (916) 654-3880 or write Records and Forms Management, 1120 N Street, MS-89, Sacramento, CA 95814.

CONCURRED BY:		
Construction Engineer:	Rajesh Oberoi RO	Date 03/18/11
Bridge Engineer:		Date
Project Engineer:		Date
Project Manager:		Date
FHWA Rep.:		Date
Environmental:		Date
Other (specify):		Date
Other (specify):		Date
District Prior Approval By:		Date
HQ (Issue Approve) By:		Date
Resident Engineer's Signature:	Rajesh Oberoi	Date 03/18/11

ESTIMATE OF COST

	THIS REQUEST	TOTAL TO DATE
ITEMS	$0.00	$0.00
FORCE ACCOUNT	$0.00	$0.00
AGREED PRICE	$0.00	$0.00
ADJUSTMENT	$242,400.00	$242,400.00
TOTAL	$242,400.00	$242,400.00

FEDERAL PARTICIPATION

☐ PARTICIPATING ☐ PARTICIPATING IN PART ☒ NONE
☐ NON-PARTICIPATING (MAINTENANCE) ☐ NON-PARTICIPATING

FEDERAL SEGREGATION (if more than one Funding Source or P.I.P. type)
☐ CCO FUNDED PER CONTRACT ☐ CCO FUNDED AS FOLLOWS

FEDERAL FUNDING SOURCE	PERCENT

ADA Notice: For individuals with sensory disabilities, this document is available in alternate formats. For information call: (916) 654-6410 or TDD (916) 654-3880 or write Records and Forms Management, 1120 N Street, MS-89, Sacramento, CA 95814.

STATE OF CALIFORNIA - DEPARTMENT OF TRANSPORTATION

CONTRACT CHANGE ORDER

Change Requested by: Engineer

CCO: 75	Suppl. No. 0	Contract No. 04 - 0120S4	Road SF-80-12.7/13.2	FED. AID LOC.: NO FED AID

To: **M C M CONSTRUCTION INC**

You are directed to make the following changes from the plans and specifications or do the following described work not included in the plans and specifications for this contract. ***NOTE: This change order is not effective until approved by the Engineer.***

Description of work to be done, estimate of quantities and prices to be paid. (Segregate between additional work at contract price, agreed price and force account.) Unless otherwise stated, rates for rental of equipment cover only such time as equipment is actually used and no allowance will be made for idle time. This last percentage shown is the net accumulated increase or decrease from the original quantity in the Engineer's Estimate.

Extra Work at Lump Sum:

Perform temporary slope grading and excavation between E Line Sta. 51+40 to 52+20 in order to relieve the overburden of the top of this slope as shown on Page No. 2 of this change order and as determined by the Engineer. All excavated material shall be placed within the project limits as determined by the Engineer.

For this work, the Contractor shall be compensated an agreed lump sum of $147,710.00 which constitutes full and final compensation, including all markups, for all additional costs incurred.

Cost of Extra Work at Lump Sum $147,710.00

Estimated Cost: **Increase** ☑ **Decrease** ☐ **$147,710.00**

By reason of this order the time of completion will be adjusted as follows: 0 days

Submitted by		
Signature Rajesh Oberoi	**Resident Engineer** Rajesh Oberoi, Senior R.E.	**Date** 03/29/11
Recommended for Approval		
Signature Deanna Vilcheck	**Area Construction Manager** Deanna Vilcheck	**Date** 3/30/11
Approved by		
Signature Deanna Vilcheck	**Area Construction Manager** Deanna Vilcheck	**Date** 4/20/11

We the undersigned contractor, have given careful consideration to the change proposed and agree, if this proposal is approved, that we will provide all equipment, furnish the materials, except as may otherwise be noted above, and perform all services necessary for the work above specified, and will accept as full payment therefor the prices shown above.

NOTE: If you, the contractor, do not sign acceptance of this order, your attention is directed to the requirements of the specifications as to proceeding with the ordered work and filing a written protest within the time therein specified.

Contractor Accepted by		
Signature	**(Print name and title)** Edmundo A. Ricki - Treasurer	**Date** 4-13-2011

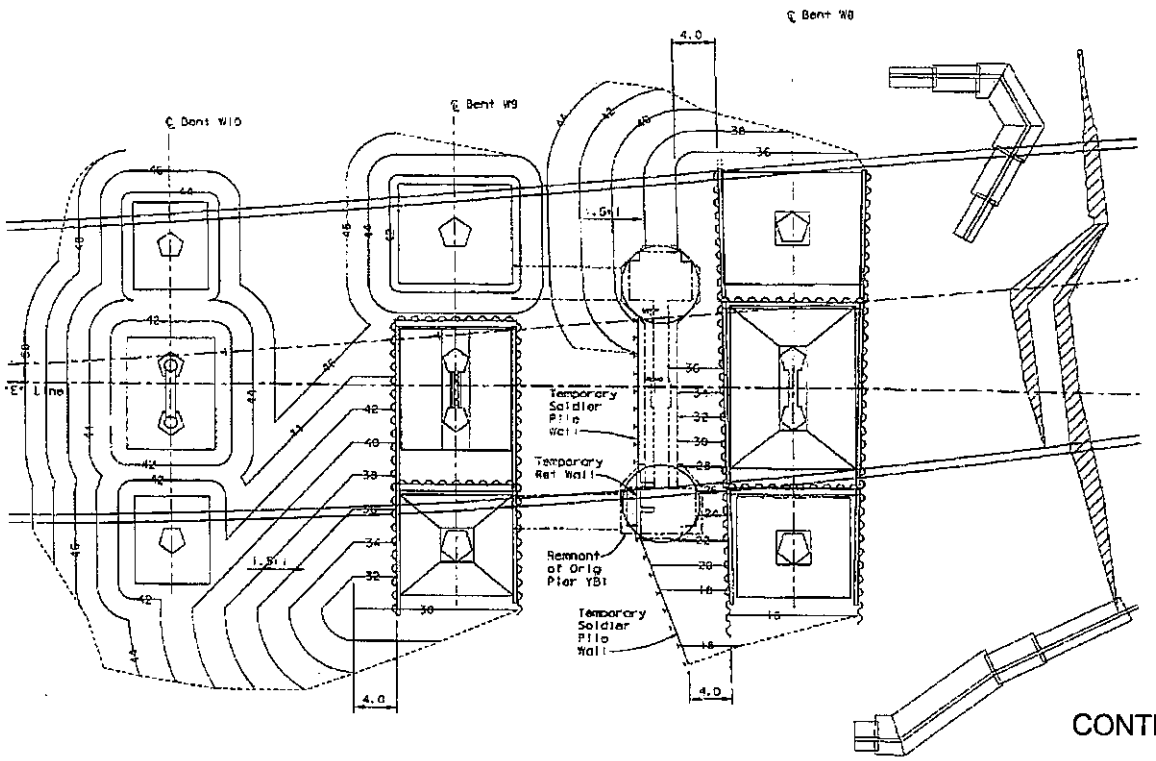

PLAN
1":20'

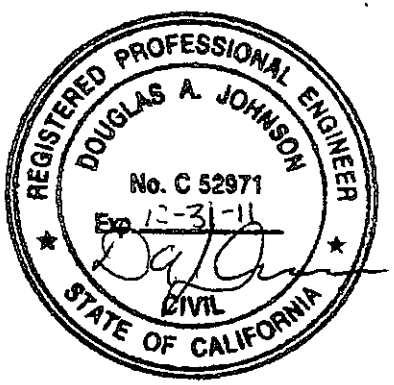

Temporary Grading Plan

CONTRACT NO. 04-0120S4

CONTRACT CHANGE ORDER NO 075

SHEET 2 OF 2

STATE OF CALIFORNIA - DEPARTMENT OF TRANSPORTATION

CONTRACT CHANGE ORDER MEMORANDUM

DATE: 3/29/2011 Page 1 of 1

TO: Deanna Vilcheck, ACM /	FILE: E.A. 04 - 0120S4
	CO-RTE-PM SF-80-12.7/13.2
FROM: Rajesh Oberoi, Senior R.E.	FED. NO. NO FED AID
CCO#: 75 SUPPLEMENT#: 0 Category Code: CDPB	CONTINGENCY BALANCE (incl. this change) $6,401,068.50
COST: $147,710.00 INCREASE ☑ DECREASE ☐	HEADQUARTERS APPROVAL REQUIRED? ☐ YES ☑ NO
SUPPLEMENTAL FUNDS PROVIDED: $0.00	IS THIS REQUEST IN ACCORDANCE WITH ENVIRONMENTAL DOCUMENTS? ☑ YES ☐ NO
CCO DESCRIPTION: Slope Grading/Overburden Removal	**PROJECT DESCRIPTION:** YBITS-1 (Yerba Buena Island Transition Structures)

Original Contract Time:	Time Adj. This Change:	Previously Approved CCO Time Adjustments:	Percentage Time Adjusted: (including this change)	Total # of Unreconciled Deferred Time CCO(s): (including this change)
1390 Day(s)	0 Day(s)	0 Day(s)	0 %	7

THIS CHANGE ORDER PROVIDES FOR:
Slope grading at the top of an existing slope.

This project, the Yerba Buena Island Transition Structure (YBITS), provides for the construction of two bridges which will connect eastbound and westbound traffic on the new east span of the San Francisco Oakland Bay Bridge (SFOBB) to the existing Yerba Buena Island (YBI) tunnel. The structures are comprised of concrete box girder bridges each approximately 26 meters wide, 40 meters high and 450 meters in length.

At the western end of the bridge both the eastbound and westbound structures will be constructed along a steep hill approximately 40 meters in height. The slope of this hill exceeds 1 to 1 in many locations and is comprised of loose sand. The Department of Engineering Services has requested that the top of this slope be graded in order to relieve the overburden of the slope on the substructure during its construction.

The work includes removing several hundred cubic meters of soil from the slope, trucking and placing this material within the projects limits and then grading the slope as shown or as ordered by the engineer.

Compensation for these costs shall be paid as extra work at an agreed lump sum of $147,710.00 which shall be financed from the contract's contingency funds. A cost analysis is on file.

No adjustment of contract time is warranted as the change will not affect the controlling operation.

Maintenance concurrence is not required as the grading is only required for the construction of the bridge substructure and shall not affect the slope's final grade or any permanent roadway features.

CONCURRED BY:

Construction Engineer:	Rajesh Oberoi	Date 3/29/11
Bridge Engineer:		Date
Project Engineer:	BOB ZANDIPOUR	Date 04/26/11
Project Manager:	KEN TERPSTRA	Date 04/26/11
FHWA Rep.:		Date
Environmental:		Date
Other (specify):		Date
Other (specify):		Date
District Prior Approval By:		Date
HQ (Issue Approve) By:		Date
Resident Engineer's Signature:	Rajesh Oberoi 3/29/11	Date

ESTIMATE OF COST

	THIS REQUEST	TOTAL TO DATE
ITEMS	$0.00	$0.00
FORCE ACCOUNT	$0.00	$0.00
AGREED PRICE	$147,710.00	$147,710.00
ADJUSTMENT	$0.00	$0.00
TOTAL	$147,710.00	$147,710.00

FEDERAL PARTICIPATION

☐ PARTICIPATING ☐ PARTICIPATING IN PART ☑ NONE
☐ NON-PARTICIPATING (MAINTENANCE) ☐ NON-PARTICIPATING

FEDERAL SEGREGATION (if more than one Funding Source or P.I.P. type)
☐ CCO FUNDED PER CONTRACT ☐ CCO FUNDED AS FOLLOWS

FEDERAL FUNDING SOURCE	PERCENT

ADA Notice: For individuals with sensory disabilities, this document is available in alternate formats. For information call: (916) 654-6410 or TDD (916) 654-3880 or write Records and Forms Management, 1120 N Street, MS-89, Sacramento, CA 95814.

STATE OF CALIFORNIA - DEPARTMENT OF TRANSPORTATION

CONTRACT CHANGE ORDER

Change Requested by: Engineer

CCO 76	Suppl. No. 0	Contract No. 04 - 0120S4	Road SF-80-12.7/13.2	FED. AID LOC.: NO FED AID

To: **M C M CONSTRUCTION INC**

You are directed to make the following changes from the plans and specifications or do the following described work not included in the plans and specifications for this contract. ***NOTE: This change order is not effective until approved by the Engineer.***

Description of work to be done, estimate of quantities and prices to be paid. (Segregate between additional work at contract price, agreed price and force account.) Unless otherwise stated, rates for rental of equipment cover only such time as equipment is actually used and no allowance will be made for idle time. This last percentage shown is the net accumulated increase or decrease from the original quantity in the Engineer's Estimate.

Extra Work at Force Account:

Compensate the Contractor for costs incurred to investigate the condition of existing seismic joints EE, EW, FE, FW and Abutment 23L of the existing Skyway and Oakland Touchdown structures and as directed by the Engineer .

Work will include conducting surveys and tests for any improvements of existing joints, fabricating and testing mock-up seismic joints, removing existing temporary pavement, steel plates and slabs. Work will also include maintaining, repairing or replacing portions of the existing bridge structures, traffic markers, barriers and barricades, temporary pavement, steel plates, slabs and other items as directed by the engineer.

Estimated cost of Extra Work at Force Account $180,000.00

Estimated Cost: **Increase** ☑ **Decrease** ☐ **$180,000.00**

By reason of this order the time of completion will be adjusted as follows: 0 days

Signature	**Resident Engineer** William Howe, Senior R.E.	**Date** 06/13/2011
Signature Deanna Vilcheck	**Area Construction Manager** Deanna Vilcheck	**Date** 7/5/11
Signature Deanna Vilcheck	**Area Construction Manager** Deanna Vilcheck	**Date** 7/5/11

We the undersigned contractor, have given careful consideration to the change proposed and agree, if this proposal is approved, that we will provide all equipment, furnish the materials, except as may otherwise be noted above, and perform all services necessary for the work above specified, and will accept as full payment therefor the prices shown above.

NOTE: If you, the contractor, do not sign acceptance of this order, your attention is directed to the requirements of the specifications as to proceeding with the ordered work and filing a written protest within the time therein specified.

Signature	**(Print name and title)** Edmund A Pecchi - TREASURER	**Date** 6-21-2011

STATE OF CALIFORNIA - DEPARTMENT OF TRANSPORTATION

CONTRACT CHANGE ORDER MEMORANDUM

DATE: 6/8/2011 Page 1 of 1

TO: Deanna Vilcheck, ACM / DV	FILE: E.A. 04 - 0120S4
FROM: William Howe, Senior R.E.	CO-RTE-PM SF-80-12.7/13.2
	FED. NO. NO FED AID
CCO#: 76 SUPPLEMENT#: 0 Category Code: CHXX	CONTINGENCY BALANCE (incl. this change) $68,770,755.50
COST: $180,000.00 INCREASE ☑ DECREASE ☐	HEADQUARTERS APPROVAL REQUIRED? ☐ YES ☑ NO
SUPPLEMENTAL FUNDS PROVIDED: $0.00	IS THIS REQUEST IN ACCORDANCE WITH ENVIRONMENTAL DOCUMENTS? ☑ YES ☐ NO
CCO DESCRIPTION: Investigation Work for seismic joints	**PROJECT DESCRIPTION:** YBITS-1 (Yerba Buena Island Transition Structures)

Original Contract Time:	Time Adj. This Change:	Previously Approved CCO Time Adjustments:	Percentage Time Adjusted: (including this change)	Total # of Unreconciled Deferred Time CCO(s): (including this change)
1390 Day(s)	0 Day(s)	0 Day(s)	0 %	8

THIS CHANGE ORDER PROVIDES FOR:

Costs incurred to investigate the condition of existing seismic joint EE, EW, FE, FW and Abutment 23L of the existing Skyway and Oakland Touchdown structures and as directed by the Engineer.

This project, the Yerba Buena Island Transition Structure (YBITS), provides for the construction of two bridges, which will connect eastbound and westbound traffic on the new east span of the San Francisco Oakland Bay Bridge (SFOBB) to the existing Yerba Buena Island (YBI) tunnel.

As part of YBITS-1 contract CCO 013 S0 was issued to the contractor revising the projects limits to encompass the limits between the yerba buena Island (YBI) tunnel to the San Francisco Oakland Bay Bridge (SFOBB) toll Plaza along the Route 80 corridor in Sanfrancisco and Alameda counties.The project limits were revised in order for the Contractor to perform anticipated additional work within the extended limits.

This change is requested by Mike Whiteside, Toll Bridge Design , As part of this change the department directs the contractor to conduct surveys and tests for any improvements of existing joints on the Skyway and Oaklalnd Touchdown structures. This work includes fabrication and test mock-up of seismic joints, removal of existing temporary pavement, steel plates and slabs and also maintaining existing bridge structure which includes maintaining or replacing traffic markers, barriers and barricades, temporary pavement and other items as directed by the engineer.

Compensation for this work shall be paid as extra work at force account. This CCO provides funding for an estimated cost of $180,000. This will be funded from the project's contingency fund. A cost analysis is on file.

No adjustment of contract time is warranted, as this change will not affect the controlling operation.

Maintenance concurrence is not required, as this doesn't affect any permanent roadway features.

CONCURRED BY:		
Construction Engineer:	For William Howe	Date 6/13/11
Bridge Engineer:	Mehran Ardakanian	Date 6/13/11
Project Engineer:	JOHN VOZUMI For BOB ZANDIPOUR	Date 07/06/11
Project Manager:	KEN TERPSTRA	Date 07/05/11
FHWA Rep.:		Date
Environmental:		Date
Other (specify):		Date
Other (specify):		Date
District Prior Approval By:		Date
HQ (Issue Approve) By:		Date
Resident Engineer's Signature:		Date 06/13/11

ESTIMATE OF COST

	THIS REQUEST	TOTAL TO DATE
ITEMS	$0.00	$0.00
FORCE ACCOUNT	$180,000.00	$180,000.00
AGREED PRICE	$0.00	$0.00
ADJUSTMENT	$0.00	$0.00
TOTAL	$180,000.00	$180,000.00

FEDERAL PARTICIPATION

☐ PARTICIPATING ☐ PARTICIPATING IN PART ☑ NONE
☐ NON-PARTICIPATING (MAINTENANCE) ☐ NON-PARTICIPATING

FEDERAL SEGREGATION (if more than one Funding Source or P.I.P. type)
☑ CCO FUNDED PER CONTRACT ☐ CCO FUNDED AS FOLLOWS

FEDERAL FUNDING SOURCE	PERCENT

ADA Notice: For individuals with sensory disabilities, this document is available in alternate formats. For information call: (916) 654-6410 or TDD (916) 654-3880 or write Records and Forms Management, 1120 N Street, MS-89, Sacramento, CA 95814.

CONTRACT CHANGE ORDER

Change Requested by: Engineer

CCO 76	Suppl. No. 1	Contract No. 04 - 0120S4	Road SF-80-12.7/13.2	FED. AID LOC.: NO FED AID

To: **M C M CONSTRUCTION INC**

You are directed to make the following changes from the plans and specifications or do the following described work not included in the plans and specifications for this contract. ***NOTE: This change order is not effective until approved by the Engineer.***

Description of work to be done, estimate of quantities and prices to be paid. (Segregate between additional work at contract price, agreed price and force account.) Unless otherwise stated, rates for rental of equipment cover only such time as equipment is actually used and no allowance will be made for idle time. This last percentage shown is the net accumulated increase or decrease from the original quantity in the Engineer's Estimate.

Furnish the modular seismic joints at Hinges EE, EF, FE and FW of the Oakland Touchdown Structure (Br. No. 34-0006 L/R) as specified on Sheets No. 2 through 11 of this change order and as shown on Sheets No. 12 through 21 (Contract Plan Sheets No. 790DS through 790MS of 806) of this change order.

Extra Work at Lump Sum:

Provide compensation to the Contractor for all costs associated with furnishing the modular joints for Hinges EE, EF, FE and FW as specified under this change order.

For these costs, the Contractor shall be compensated an agreed lump sum of $1,942,203.00 which constitutes full and final compensation, including all markups, for all additional costs incurred in furnishing the modular joints as defined by this change order.

Compensation provided under this change order includes all costs associated with the design and fabrication of the modular joint seal assemblies including submittal of working drawings, quality control plan and inspection and proof testing as specified under this change order. Compensation also includes the transporting of the joints to the project site.

Any costs pertaining to the installation and jobsite storage of the modular joints, including inspection and installation consultation by a qualified representative of the manufacturer at the job-site, shall be deferred and shall be provided under a supplemental change order.

There shall be no reduction in compensation, as defined under Section 55-4.02 "Payment" of the Contract Standard Specifications, for additional shop inspection expenses sustained by the State should any modular joint fabrication shop be located more than 480 air line kilometers or 4,800 air line kilometers from Sacramento and Los Angeles.

Cost of Extra Work at Lump Sum $1,942,203.00

Estimated Cost: Increase ☑ Decrease ☐ $1,942,203.00

By reason of this order the time of completion will be adjusted as follows: 0 days

Submitted by

Signature	Resident Engineer	Date
William Howe	William Howe, Senior R.E.	10-12-11

Approval Recommended by

Signature	Principal T.E.	Date
Mike Forner	Mike Forner	10-12-11

Engineer Approval by

Signature	Principal T.E.	Date
Mike Forner	Mike Forner	10/30/11

We the undersigned contractor, have given careful consideration to the change proposed and agree, if this proposal is approved, that we will provide all equipment, furnish the materials, except as may otherwise be noted above, and perform all services necessary for the work above specified, and will accept as full payment therefor the prices shown above.

NOTE: If you, the contractor, do not sign acceptance of this order, your attention is directed to the requirements of the specifications as to proceeding with the ordered work and filing a written protest within the time therein specified.

Contractor Acceptance by

Signature	(Print name and title)	Date
	Edmundo A Ruchi - Treasurer	11-21-2011

10-1.33 MODULAR JOINT SEAL ASSEMBLIES

Modular joint seal assemblies shall consist of supporting elements, supports, sealing elements, and anchorage elements and shall be designed, fabricated, inspected, tested, and installed as shown on the plans and approved working drawings and supplement, and as specified in the Standard Specifications and these special provisions.

MANUFACTURER

Modular joint seal assemblies shall be a Maurer Sohne Swivel-Joist Expansion Joint manufactured and supplied by:

THE D.S. BROWN COMPANY
300 E. CHERRY STREET
NORTH BALTIMORE, OHIO 45872
TEL: (419) 257-3561
FAX: (419) 257-2200

Maurer Sohne Swivel-Joist Expansion Joints are the only modular joint seal assemblies known to the State that meet the requirements of this contract. Preliminary working drawings and technical data for each hinge location for the Maurer Sohne Swivel-Joist Expansion Joints by D.S. Brown have been submitted, reviewed, and determined to be satisfactory by the Engineer.

Maurer Sohne Swivel-Joist Expansion Joints consist of supporting elements, supports, sealing elements, and anchorage elements. Supporting elements include edge beams, center beams, and support bars. Supports include sliding plates, sliding springs, and sliding bearings. Anchorage elements include carriageway anchors at the edge beams, anchor studs at the support boxes, and support boxes. Center beams slide on obliquely arranged swiveling support bars, resting on elastic bearings. The arrangement of the support bars and the type of connection between the support bar and the center beams assure equal spacing of the center beams.

Use of the Swivel-Joist Expansion Joints is contingent on approval of the contract specific working drawing submittal and successful performance of the Swivel-Joist Expansion Joints under proof testing.

WORKING DRAWINGS

The Contractor shall submit working drawings in conformance with the provisions in Section "Working Drawings" elsewhere in these special provisions, and these special provisions.

Working drawings shall include complete details, information, and drawings of the modular joint seal assembly and anchorage components and the method, materials, equipment, and procedures of fabrication and installation that the Contractor proposes to use.

Working drawing submittals shall include the following:

A. Fabrication plans including all details, elevations, and sections of the modular joint seal assembly for each hinge location as shown on the plans. All dimensions and design tolerances shall be specified. The plans shall identify the proposed location for cutting of central beams and edge beams to accommodate the removal and replacement of the modular joint seal assembly as specified in Section "General Design Requirements" of these provisions.
B. All ASTM or other material designations.
C. Sections showing all materials composing the modular joint seal assembly with complete details of all individual components including welded splices and connections.
D. PTFE bonding methods and details.
E. Installation plans including methods, materials, equipment, sequence, lifting mechanisms and locations, details of temporary anchorage during setting, temperature adjustment devices, opening dimensions relative to temperature, installation details at curbs, seal installation details, and other procedures that the Contractor proposes to use for installation of the modular joint seal assemblies.
F. Plan for achieving water tightness including details related to performing the water tightness test as specified in these special provisions.
G. Details and material designations pertinent to the corrosion protection system and list of coating system for modular joint seal assemblies identifying galvanizing, and cleaning and painting for all steel components.
H. Anchorage components including concrete blockout details and any additions or rearrangements of the reinforcing steel from that shown on the plans.
I. Storage plans for manufacture storage, interim storage, and on-site storage details including temporary support for the modular joint seal assemblies.

J. Shipping plans including the handling during the transportation of the modular joint seal assemblies. Each shipment of the modular joint seal assembly materials shall be accompanied by a Certificate of Compliance in conformance with the provisions in Section 6-1.07, "Certificates of Compliance," of the Standard Specifications. The certificate shall state that the materials and fabrication involved comply in all respects to the specifications and data submitted in obtaining approval.

A supplement to the working drawings shall include the following:

A. Complete design and independent design check calculations including the assumptions and methods used in analyses and design of each modular joint seal assembly and its components. The design and independent check calculations shall include the fatigue design and load factor design of all structural elements including all springs and bearings, connections, and splices conforming to the requirements shown on the plans, the Standard Specifications, and these special provisions.
B. The quality control plan (QCP). The QCP of the modular joint seal assembly shall conform to the requirements in "Quality Control" of these special provisions and shall include descriptions, details, and procedures for the fabrication and installation of the modular joint seal assemblies, except that the portion of the QCP for welding shall be submitted separately in conformance with "Welding" in these special provisions.
C. Names and addresses of test facilities, time schedule for various testing, and qualifications of personnel performing the test as specified in these special provisions.
D. Details, procedures, and schedules of proof testing for modular joint seal assemblies conforming to the section, "Proof Testing," of these special provisions. The proof testing plan shall include drafted, annotated illustrations of the test apparatus and equipment included in the testing program. The proof testing plan shall also include certifications that all testing equipment has been calibrated no longer than 12 months prior to testing.
E. Manufacturer's certificate of compliance for all PTFE sheeting, PTFE fabric, elastomer, and modular joint seal assembly sealing elements.
F. Certified test reports confirming that the springs and bearings meet the design load requirements.
G. The manufacturer of the modular joint seal assemblies shall submit 6 bound copies of the inspection, maintenance, and replacement manual to the Engineer for the joint inspection, maintenance, and replacement. This manual shall include:

1. Recommended frequency for joint inspection and maintenance schedule over the period of design life.
2. Procedures and details to perform the joint inspection and maintenance.
3. List of indication of joint or its component defects and the associated method to repair, if any.
4. Part replacement plan to facilitate replacement of parts subject to wear. This plan shall include a list of parts, instructions for maintenance inspection, acceptable wear tolerances, methods for determining wear, procedures for replacing worn parts, and procedures for replacing seals.
5. Recommended life expectancy for each component of the modular joint seal assemblies.
6. Procedures and sequences for modular joint seal assemblies replacement including locations of temporary support, expected number of traffic lane closure, and any other requirements to replace the modular joint seal assemblies.
7. Contacts, telephone numbers, and email addresses for maintenance and inspection questions.

The working drawings and supplement shall be stamped and signed by an engineer who is registered as a Civil Engineer in the United States. This registered Civil Engineer shall be an employee of the modular joint seal assembly manufacturer.

After complete working drawings and supplement are received by the Engineer, the Contractor shall allow the Engineer 40 working days to review the submittal. No fabrication of the modular joint seal assembly shall begin until complete working drawings and supplement are reviewed and a preliminary approval is given, in writing, by the Engineer.

Within 5 working days after final approval by the Engineer, the Contractor shall submit to the Engineer 7 copies of approved expected friction force calculations and geometry tolerance control plan.

After completion of proof testing, the Contractor shall submit the proof test reports as specified in Section "Proof Testing" of these special provisions.

Upon completion of installation, the Contractor shall submit to the Engineer certification stating that each modular joint seal assembly was installed in accordance with the approved working drawings and supplements installation procedure.

The Contractor shall provide to the State of California as a condition of acceptance of the modular joint seal assembly for incorporation into the work, a manufacturers written warranty addressed to the California Department of Transportation that includes the following provisions. For the five-year period commencing from the date of completion of the contract, the manufacturer shall warranty the performance and durability of each modular joint seal assembly. Conditions constituting unsatisfactory performance and durability include broken welds or bolts (including field splices), cracks in steel members, fatigue damage, loss of precompression in springs or bearings, debonded PTFE, breakdown of corrosion protection, and leakage. The Manufacturer shall provide the components and necessary technical staff to replace or repair any modular joint seal assembly component demonstrating unsatisfactory performance or durability within the five-year period commencing from the date of completion of the contract. All materials and technical staff that are required to satisfactorily perform warranty obligations shall be provided at the manufacturer's sole cost and expense.

MATERIALS

Attention is directed to "Welding" and "Steel Audits" in these special provisions.

Structural steel shall conform to the section "Steel Structures" elsewhere in these special provisions. Structural steel shall conform to the requirements of ASTM Designation: A 572M, Grade 345. Aluminum components shall not be used. Stainless steel shall conform to ASTM Designation: A 240, Type 316L.

Bolts, nuts and washers shall conform to the requirements of ASTM Designation: A 325 or A 325M and Section 75-1.03, "Miscellaneous Bridge Metal," of the Standard Specifications. Bolted splices shall not be permitted in supporting elements and supports.

DU self-lubricating bearing material and Norglide MP bearing material made by Garlock Bearings Inc. and St. Gobain respectively shall conform to the manufacturer's recommendations and material properties.

Polytetrafluoroethylene (PTFE) sheet shall be made from unfilled PTFE resin and shall conform to the following requirements:

Test	Test Method	Requirements
Tensile strength (Minimum)	ASTM D 4894 or D 4895	19.3 MPa
Elongation (Minimum)	ASTM D 4894 or D 4895	200 %

The PTFE resin shall be virgin material (not reprocessed), woven PTFE fabric, or dimpled PTFF conforming to the requirements of ASTM Designation: D 4894 or D 4895. Specific gravity shall be from 2.13 to 2.19. Melting point shall be 327±10°C.

Box-type sealing elements or sealing elements utilizing double webs shall not be permitted. Sealing elements shall be continuous without splices. The neoprene glands, if used for sealing elements, shall conform to the requirements in Table 1 of ASTM Designation: D 2628 and the following, except that no recovery tests or compression-deflection tests will be required:

Property	Requirement	ASTM Test Method
Hardness, Type A Durometer, points	55-70	D 2240 (Modified)
Tensile Strength	14 MPa minimum	D 412
Elongation at break	250%	D 412
Compression set, 70 hours at 100°C, maximum, percent	40%	D 395 Method B (Modified)

QUALITY CONTROL

Quality Control (QC) shall be the responsibility of the Contractor. Quality Control shall be performed by an entity having a line of responsibility distinctly different from that of the manufacturer's fabrication department. As a minimum, the Contractor shall perform inspection and testing prior to fabrication, during fabrication, and after fabrication as specified in this section and additionally as necessary to ensure that materials and workmanship conform to the requirements of the contract documents. Quality Control shall apply to each component of the modular joint seal assembly in addition to the assembly, shipping and installation of the complete modular joint seal assembly.

The QC Inspector shall be the duly designated person who acts for and on behalf of the Contractor for inspection, testing, and quality related matters for all fabrication.

Quality Assurance (QA) is the prerogative of the Engineer. The QA Inspector is the duly designated person who acts for and on behalf of the Engineer.

Each QC Inspector shall be responsible for quality control acceptance or rejection of materials and workmanship.

The Contractor shall provide sufficient number of QC Inspectors to ensure continuous inspection.

The Contractor sball designate in writing a Quality Control Manager (QCM). The QCM shall be responsible directly to the Contractor for the quality of the fabrication, including materials and workmanship, performed by the Contractor and subcontractors.

The QCM shall be the sole individual responsible to the Contractor for submitting and receiving all correspondences, required submittals, and reports to and from the Engineer.

The Contractor shall submit to the Engineer 3 copies of Quality Control Plan (QCP), in conformance with the requirements in "Working Drawings," of these special provisions. As a minimum, each QCP shall include the following:

A. A manual including equipment, testing procedures, and code of safe practices
B. The names, qualifications, and documentation of certifications for the QCM and all QC Inspectors
C. An organizational chart showing all QC personnel and their assigned QC responsibilities
D. The methods and frequencies for performing all required quality control procedures, including QC inspection forms to be used, as required by the specifications including:

   1. All visual inspections
   2. Tests
   3. Calibration procedures and calibration frequency for all equipment
   4. Geometry tolerance control plan as specified in the section "Working Drawings" of these special provisions

E. Forms to be used for Certificates of Compliance, weekly production logs, and weekly reports
F. Mill certificates and material certificates
G. Shipping plan
H. Installation plan

Prior to submitting the QCP, a pre-fabrication meeting between the Engineer, Contractor, and Fabricator, any entity performing modular joint seal assembly component fabrication or subcontractor to the Fabricator, shall be held to discuss the requirements for the QCP. The pre-fabrication meeting shall be held in San Francisco Bay Area.

After a complete QCP is submitted, the Contractor shall allow the Engineer 10 working days to review the submittal. An amended QCP or addendum shall be submitted to, and approved in writing by the Engineer, for proposed revisions to the approved QCP. The Contractor shall allow the Engineer 10 working days to complete the review of the amended QCP or addendum.

After final approval of the QCP, amended QCP, or addendum, the Contractor shall submit 7 copies to the Engineer of each of these approved documents.

It is expressly understood that the Engineer's approval of the Contractor's QCP shall not relieve the Contractor of any responsibility under the contract for the successful completion of the work in conformity with the requirements of the plans and specifications. The Engineer's approval shall not constitute a waiver of any requirement of the plans and specifications nor relieve the Contractor of any obligation thereunder, and defective work, materials, and equipment may be rejected notwithstanding approval of the QCP.

A weekly production log for fabrication shall be kept by the QCM for each day that fabrication if performed. The weekly report from each QC Inspector shall be included in the log.

The Contractor shall submit the reports of all visual inspections, weekly production log, and a complete "As-Built Log of Measurements" to the Engineer within 7 working days following the completion of fabrication of any modular joint seal assembly. The Engineer will review the reports, production log, and the "As-Built Log of Measurements" to determine if the Contractor is in conformance with the QCP. The Contractor shall allow the Engineer 7 working days to review and respond in writing after a complete reports, production log, and the "As-Built Log of Measurements" have been received.

The QCM shall sign and furnish to the Engineer, a Certificate of Compliance in conformance with the provisions in Section 6-1.07, "Certificates of Compliance," of the Standard Specifications for each modular joint seal assembly. The certificate shall state that all of the materials and workmanship incorporated in the work, and all required tests and inspections of this work have been performed in conformance with the details shown on the plans and approved working drawings and the provisions of the Standard Specifications and these special provisions. The

certificate shall state that all of the as-built measurements of essential parts and completed assemblies are within the target tolerances specified in geometry tolerance control plan.

FABRICATION

The modular joint seal assembly shall be fabricated consistent with the details, dimensions, material specifications, and procedures delineated in the approved working drawings and supplement.

All modular joint seal assemblies shall be fabricated by the same manufacturer.

PTFE shall be bonded under controlled conditions and in strict accordance with written instructions provided by the PTFE manufacturer.

PTFE surfaces shall be smooth and free of bubbles after completion of bonding operations.

Stainless steel sliding surfaces in contact with PTFE shall be polished to a Number 8 mirror finish.

If welding of support bars is required, support bars shall be welded prior to attaching stainless steel sheets. Stainless steel sheets shall be welded to the support bars in accordance with AWS D1.6. The stainless steel sheet shall be clamped to provide full contact with the steel backing plate during welding. The welds shall not protrude above the sliding surface of the stainless steel sheet.

Steel surfaces, except those surfaces beneath stainless steel sheet, those to be bonded to PTFE, or those in direct contact with sealing elements, shall be galvanized.

At the Contractor's option, cleaning and painting of all new metal surfaces of the joint seal assembly, except stainless steel and anchorages embedded in concrete, may be substituted for galvanizing. Cleaning and painting shall be in conformance with the provisions in "Clean and Paint Structural Steel (Modular Joint Seal Assembly)" of these special provisions.

Finish coats will not be required on modular joint seal assemblies.

During the fabrication process the Contractor shall maintain "Log of As Built Measurements" of all individual essential parts and the completed assembly. The essential parts shall include center beams, swivel support bars, support boxes, stirrups, sliding bearings, sliding springs, spring holders, bearing holders, swivel plates, and sliding discs. The "Log of As Built Measurements" of the completed assembly shall include out-of-line alignment of pivoting pins, unevenness of welded stirrup heights, unevenness of height of installed sliding bearings, and sliding springs. The measurements shall be recorded with accuracy of 0.1mm. The Contractor shall submit to the Engineer for review and approval the "Log of As Built Measurements" at least 10 working days prior to the start of the proof testing.

GENERAL DESIGN REQUIREMENTS

The Contractor shall design the modular joint seal assemblies including all components and anchorage devices with any reinforcement required in addition to that shown on the plans. The design life of the joint seal assembly shall, whenever possible, comply with the 150 year design life of the bridge.

Each modular joint seal assembly shall extend continuously across the full width of the roadway and up into the traffic barriers as shown on the plans. The modular joint seal assembly shall be designed to allow for cutting the joint seal assembly into segments. Removal of any one segment shall not affect the load carrying capacity of the remaining segments. The segments shall be arranged to accommodate removal and replacement of the joint seal assembly while maintaining a minimum of 4 traffic lanes. Each traffic lane shall be 3.6 meter wide and additional allowance for traffic barrier shall be made for separation from the construction area.

Field splices of any part of the modular joint seal assembly shall not be permitted.

The modular joint seal assembly shall be designed with adequate access to all internal components in order to assure the feasibility of inspection and maintenance activities.

The modular joint seal assembly shall be designed to minimize concrete cracking above the support boxes. Measures taken shall include assuring adequate support box top plate thickness, specifying any additional roadway deck steel reinforcement required, and providing adequate concrete cover.

The modular joint seal assembly and concrete deck steel reinforcement shall be designed to assure that adequate concrete consolidation can be achieved underneath all support boxes.

The sealing elements shall not protrude above the top of the modular joint seal assembly.

The elastomeric or urethane springs, bearings with stainless steel surfaces, and other sliding elements shall be designed to be removable and replaceable. The removal and reinstallation of each sealing element shall be easily accomplished from above the joint with a 32 millimeters minimum gap width. The replacement of such elements shall not require closing more than 3 traffic lanes at any time.

The modular joint seal assembly shall be watertight.

Metallic attachments used to secure elastomeric seals to the center beams, if welded to the center beams and edge beams, shall be welded continuously along both their top and bottom edges.

The longitudinal movement demands in the table shown on the plans consist of movements due to temperature variation (T_{rise} and T_{drop}), creep and shrinkage (CS), functional evaluation earthquake ($FEE_{opening}$), and safety evaluation earthquake ($SEE_{closing}$ and $SEE_{opening}$). The longitudinal movement demands are normal to the transverse axis as shown on the plans.

The number of cells for each modular joint seal assembly shall conform to the following table. A cell is defined as sealing elements supported by adjacent beams.

Hinge Location	No. of Cells
Hinge W6RB	10
Hinge W7LA	10

The sealing elements shall be capable of accommodating 130 mm longitudinal movement without any damage.

When the modular joint seal assembly is subject to combined movements of $SEE_{closing}$, $SEE_{opening}$, and CS, the load carrying capability of the modular joint seal assembly shall not be degraded, and cell width equalizing mechanism shall be fully operational. No unseating of supporting elements shall be permitted. The damage to the modular joint seal assembly shall be limited to the sealing elements only and there shall be no damage to any other parts of the assembly.

The modular joint seal assemblies shall be capable of providing for a transverse displacement (relative to the ends of the joint), horizontal rotation in the plane of the bridge deck (fanning angle), and rotation about transverse and longitudinal axis as shown on the plans.

DESIGN AXLE LOADS AND IMPACT FACTORS

The center beams, edge beams, support bars, bearings, connections, and other structural components shall be designed for the simultaneous application of vertical and horizontal loads from a tandem axle. The tandem axle shall consist of a pair of axles spaced 1.2 meters apart with vertical and horizontal loads as specified elsewhere in these special provisions. The transverse spacing of the wheels shall be 1.8 meters. The distribution of the wheel load among center beams shall conform to the requirements specified elsewhere in these special provisions.

The vertical load range for fatigue design shall be a 145 kN tandem. This tandem shall be taken as two 72.5 kN axles spaced 1.2 meters apart. Only one of these tandem axles shall be considered in the design, unless the joint opening exceeds 1.2 meters. The load range shall be increased by the dynamic load allowance (Impact Factor) of 75%. Load factors shall be applied in accordance with Table 3.4.1-1 of the AASHTO LRFD Bridge Design Specifications - Second Edition.

The vertical load for strength design shall be a 220 kN tandem. This tandem shall be taken as two 110 kN axles spaced 1.2 meters apart. Only one of these tandem axles shall be considered in the design, unless the joint opening exceeds 1.2 meters. This load shall be increased by the dynamic load allowance (Impact Factor) of 75%. Load factors shall be applied in accordance with Table 3.4.1-1 of the AASHTO LRFD Bridge Design Specifications - Second Edition.

The horizontal load range for fatigue design shall be 40% of the amplified vertical load range (LL+IM) for fatigue design specified in these special provisions.

The horizontal load for strength design shall be 20% of the amplified vertical load (LL+IM) for strength design specified in these special provisions.

DISTRIBUTION OF WHEEL LOADS

The following table specifies the center beam distribution factor as a function of center beam top flange width. This factor is the percentage of the design vertical axle load and the design horizontal axle load which shall be applied to an individual center beam for the design of that center beam and its associated support bars. Distribution factors shall be interpolated for center beam top flange widths between those explicitly denoted in the table. In no case shall the distribution factor be taken as less than 50%. The remainder of the load shall be divided equally and applied to the two adjacent center beams or edge beams.

Width of Center beam Top Flange	Distribution Factor
64 millimeters	50%
80 millimeters	60%
100 millimeters	70%
120 millimeters	80%

FATIGUE LIMIT STATE DESIGN REQUIREMENTS

Modular joint seal assembly structural members, bolted and welded splices and connections, and attachments shall be designed to resist the Fatigue Limit State load combination specified in Table 3.4.1-1 of the AASHTO LRFD Bridge Design Specifications - Second Edition. The vertical and horizontal load ranges for fatigue design specified in these special provisions shall be applied simultaneously. These loads shall be distributed as specified in these special provisions.

The nominal stress ranges, Δf, at all fatigue critical details shall be obtained from a structural analysis of the modular joint seal assembly applying the design vertical and horizontal load ranges, and distributed specified in these special provisions. The modular joint seal assembly shall be analyzed with a minimum gap opening corresponding to the operating range configuration (at least 60 millimeters). The design axle load shall be applied as two wheel loads, each having a transverse width of 510 millimeters. For each detail under consideration, the wheel loads shall be positioned transversely on a center beam to achieve the maximum nominal stress range at that detail. The vertical and horizontal wheel loads shall be applied as line loads to the top of the center beams at their centerlines. The design stress range in the center beam-to-support bar connection shall be calculated according to subsections 1 and 2 below. The design nominal stress ranges, Δf, shall be used for fatigue design as specified in these special provisions.

Welded Single-Support-Bar Systems:

A. The nominal stress range, Δf, in the center beam at a welded stirrup shall be the sum of the longitudinal bending stress ranges at the critical section resulting from vertical and horizontal loading. The effects of stresses in any load-bearing attachments such as the stirrup or yoke shall not be considered when calculating the longitudinal stress range in the center beam.

B. The nominal stress range, Δf, in the stirrup or yoke shall be calculated without considering the effects of stresses in the center beam. The stress range shall be calculated by assuming a load range in the stirrup equal to 30% of the total vertical reaction force between the center beam and the support bar. The effects of horizontal loads may be neglected in the design of the stirrup.

To assure an infinite fatigue life, all modular joint seal assembly structural members, connections (bolted and welded), splices, and attachments shall satisfy the following:

$$\Delta f \leq \frac{F_{TH}}{2}$$

where:

Δf = the nominal stress range
F_{TH} = constant amplitude fatigue limit (CAFL)

FATIGUE RESISTANCE OF DETAILS

The fatigue resistance of all details shall be characterized in terms of the fatigue categories specified in Table 6.6.1.2.5-1 of the AASHTO LRFD Bridge Design Specifications - Second Edition. Many details composing modular joint seal assembly may clearly correspond to specific structural details depicted in Figure 6.6.1.2.3-1 of the AASHTO LRFD Bridge Design Specifications - Second Edition. In these cases, the applicable fatigue categories specified in Table 6.6.1.2.3-1 may be used for design.

STRENGTH I LIMIT STATE DESIGN REQUIREMENTS

Modular joint seal assembly structural steel members, connections (bolted and welded), splices, and attachments shall be designed to resist the Strength I Limit State load combination specified in Table 3.4.1-1 of the AASHTO LRFD Bridge Design Specifications - Second Edition. The vertical and horizontal loads specified in Section "Design Axle Loads and Impact Factors" of these special provisions shall be applied simultaneously. These loads shall be distributed as specified in Section "Distribution of Wheel Loads" of these special provisions.

PROOF TESTING

The Contractor shall perform proof testing on each fabricated modular joint seal assembly to be used in production except that the sealing elements shall not be installed for proof testing. All proof tests shall be performed in the United States.

The Contractor shall notify the Engineer, in writing, at least 10 working days prior to the start of each proof testing.

Instrumentation shall be installed on the modular joint seal assembly to be tested and the test fixtures to continuously monitor and record longitudinal joint displacements, actuator force outputs and total travel of each bearing throughout the proof test. All tests shall be recorded on video media. There shall be at least two video cameras recording the picture and sound during the test. One camera shall be positioned at level of the second support bar capturing in detail behavior of the sliding bearings and sliding springs. The second camera shall be positioned on side and above the modular joint seal assembly capturing the spacing of the center beams during the tests.

Prior to each test all stainless steel sliding surfaces shall be cleaned using alcohol. No greasing or lubricating agents shall be applied to the stainless steel sliding surfaces.

The Contractor shall conduct a total of 3 proof tests for each fabricated modular joint seal assembly in the sequence listed in the following table. The tests are defined by the following parameters: initial rotation about vertical, transverse, and longitudinal axis as shown on the plans, displacement amplitude, speed and number of cycles.

Proof Test No.	Initial cell width (mm)	Initial rotation @ axis (radians)			Displacement (millimeter)		Approx. Speed (mm/sec)	No. of cycles
		Vertical	transverse	longitudinal	longitudinal	transverse		
1	0	0	0	0	±n x 75	0	25	5
2	0	0	0	0	+n x 75	0	25	N/A
3	n x 75	0	0	0	-n x 60	0	25	N/A

where
n - number of cells in the test specimen
\+ indicates opening movement
\- indicates closing movement

The Contractor shall provide access and assistance to the Engineer to observe the tests, monitor the process, and take the measurements as necessary. The Contractor shall also provide the space in the testing room to accommodate the Engineer's monitoring equipment.

After completion of each test for Test No. 2 and Test No. 3, the Contractor shall measure and record the size of all cells for at least 4 locations spaced equally along the length of the center beams.

After completion of Test No. 3, the Contractor shall inspect the modular joint seal assembly, in the presence of the Engineer, to identify any damage that may have occurred to the its components.

The acceptance criteria for proof testing of the modular joint seal assemblies shall be as follows:

A. During the tests there shall be no vibrations or excessive noise and the movement shall be smooth. There shall be no excessive shear deformations of the sliding bearings and sliding springs. There shall be no other observations that might indicate mechanical problem.
B. After completion of Test No. 3, the sliding areas of the modular joint seal assembly shall have no visible wear and no signs of uneven wear.
C. The measured friction forces shall comply at least with one of the following criteria:

$$\frac{Fm1}{Fe1} \leq 1.15$$

or

$$\frac{Fm1}{Fe1} + \frac{abs(Fm1-Fm2)}{\frac{1}{2}(Fm1+Fm2)} \leq 1.25$$

or

$$\frac{abs(Fm1-Fm2)}{\frac{1}{2}(Fm1+Fm2)} \leq 0.07$$

where
Fm1 = measured friction force on the unit being proof tested
Fm2 = measured friction force on the unit with identical number of cells as the unit being proof tested

Fel = expected friction force on the unit being proof tested

If the proof tests fail to meet any of the acceptance criteria, as determined by the Engineer, the modular joint seal assembly will be rejected. No extension of time or compensation will be made for manufacturing, furnishing, and testing additional modular joint seal assemblies.

At the completion of successful proof testing for each modular joint seal assembly, within 10 working days, the Contractor shall submit to the Engineer 4 copies of the complete test results in conformance with the requirements for the specific test as specified in these special provisions.

Modular joint seal assembly will not be accepted and released for installation until the Engineer has reviewed and approved, in writing, the proof testing.

STORAGE, SHIPPING, AND HANDLING

Lifting mechanisms, temperature adjustment devices, and temporary anchorages shall not be welded to the center beams.

Damage to the modular joint seal assembly during shipping or handling shall be cause for rejection of the modular joint seal assembly.

Damage to the corrosion protection system shall be repaired to the satisfaction of the Engineer prior to installation.

INSTALLATION

No modular joint seal assembly shall be installed until the Engineer has reviewed and approved, in writing, the working drawings, the results of the proof testing, and the inspection of the assemblies to be used.

A qualified installation technician shall be present at the job site to assure proper installation of each modular joint seal assembly. The qualified installation technician shall inspect the blockout prior to installation and shall be present during lowering of the modular joint seal assemblies into the blockout, leveling, adjusting of the cell width and grouting below support boxes. The qualified installation technician shall inspect anchorage reinforcement and the formwork before placing concrete and shall be present during the concrete placement operation. This technician shall be a full time employee of the manufacturer of the modular joint seal assembly. The Contractor shall comply with all recommendations made by the modular joint seal assembly manufacturer's installation technician as approved by the Engineer. Each modular joint seal assembly manufacturer's installation technician shall certify to the Engineer that the approved installation procedures were followed. All certifications to the Engineer shall be in writing and shall be signed and dated by the manufacturer's installation technician.

Each modular joint seal assembly shall be installed in accordance with the approved working drawings and supplement and the recommendations of the manufacturer's installation technician.

Each installed modular joint seal assembly shall match the finished roadway profile and grades.

The Contractor shall protect each modular joint seal assembly from damage. The Contractor shall protect concrete blockouts and support systems from damage and construction traffic prior to installation of the modular joint seal assemblies.

Each modular joint seal assembly shall be set to a gap width corresponding to the ambient temperature at the time of setting. The gap widths shall conform to the values shown on the plans and approved working drawings and supplement. The Contractor shall provide hardware for mechanically opening or closing the modular joint assembly for thermal adjustments. The manufacturer shall provide factory attached lifting devices and brackets to facilitate field handling and grade adjustments.

Each modular joint seal assembly shall be tested for water tightness after installation. The Contractor shall flood each completely installed modular joint seal assembly with water to a minimum depth of 75 millimeters for a duration of at least one hour. If leakage is observed, the modular joint seal assembly shall be repaired to the satisfaction of the Engineer at the Contractor's expense. The repair procedure shall be prepared by the modular joint seal assembly manufacturer and shall be submitted to the Engineer for approval. After repairs are completed, the modular joint seal assembly shall be retest for leakage.

The Contractor shall replace sealing elements not fully bonded to the steel extrusions with fully bonded seals at the expense of the Contractor.

The assembly shall have cast-in-place anchorage components forming a mechanical connection between the joint components and the concrete deck.

The bridge deck surface shall conform to the provisions in Section 51-1.17 "Finishing Bridge Deck," of the Standard Specifications after placing modular joint seal assemblies and anchorage.

The assembly shall be completely assembled and placed in a blocked out recess as shown on the plans.

All reinforcement other than primary reinforcement shall continue through the recess construction joint into the recess and engage the anchorage components of the assembly.

The vertical modular joint seal assembly in barrier shall be available for inspection after placement of the recess concrete around the anchorage components of the assembly.

The assembly shall make a watertight, continuous return 150 mm up into the barrier at the low side of the deck joint. Neoprene glands shall be continuous without field splices or joints, including the return up into barrier.

MODULAR JOINT SEAL ASSEMBLIES STORAGE

Modular joint seal assemblies shall be transported to and stored at the storage facility as designated by the Engineer. Said location will be within 25 km of the San Francisco-Oakland Bay Bridge Toll Plaza. The Contractor shall notify the Engineer at least two months prior to delivery of the modular joint seal assemblies. After the delivery of the modular joint seal assemblies is completed, the Contractor shall jointly with the Engineer inspect the modular joint seal assemblies. Damaged modular joint seal assemblies shall be replaced by the Contractor at the Contractor's expense.

REGISTERED PROFESSIONAL ENGINEER
STEVE MARGARIS
No. 35945
Exp. 6/2012
CIVIL
STATE OF CALIFORNIA

CONTRACT NO. 04-012054

CONTRACT CHANGE ORDER NO 2651

SHEET 11 OF 21

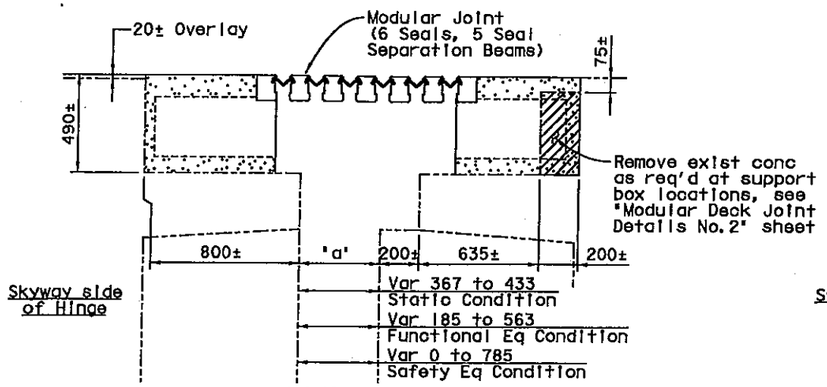

HINGE E

SECTION A-A

(Hinge EW shown, Hinge EE similar)
1:15

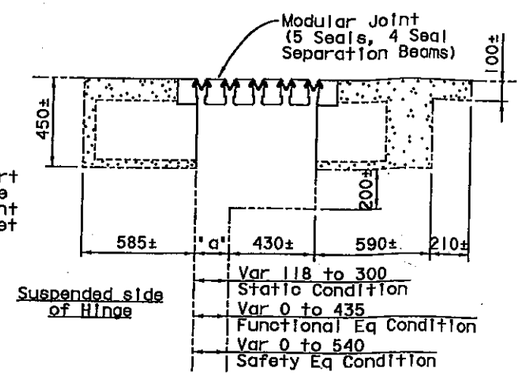

HINGE FW

SECTION B-B

1:15

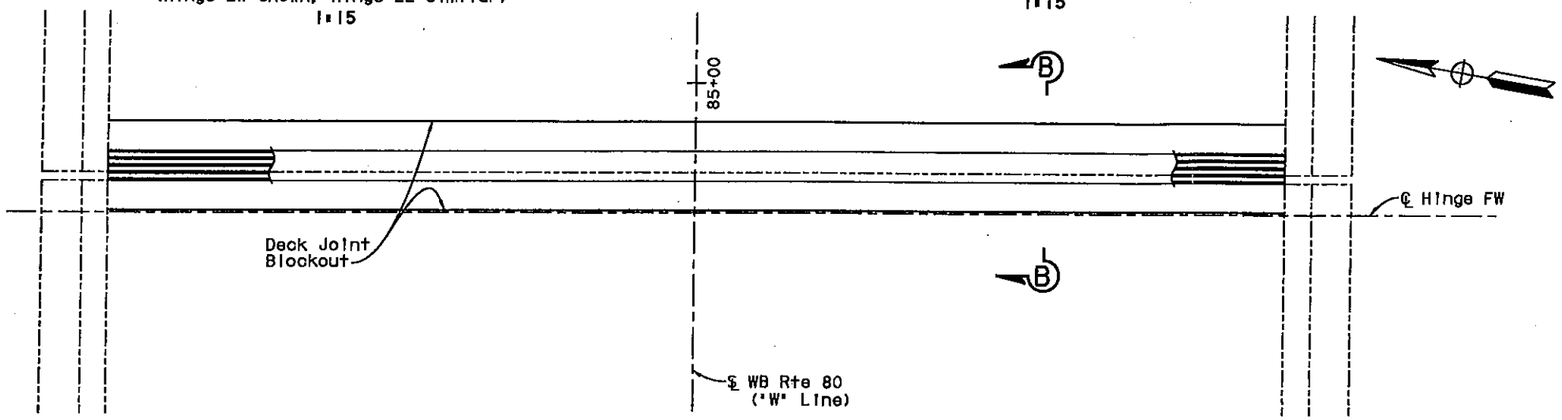

PLAN - DECK JOINT AT HINGE FW

1:60

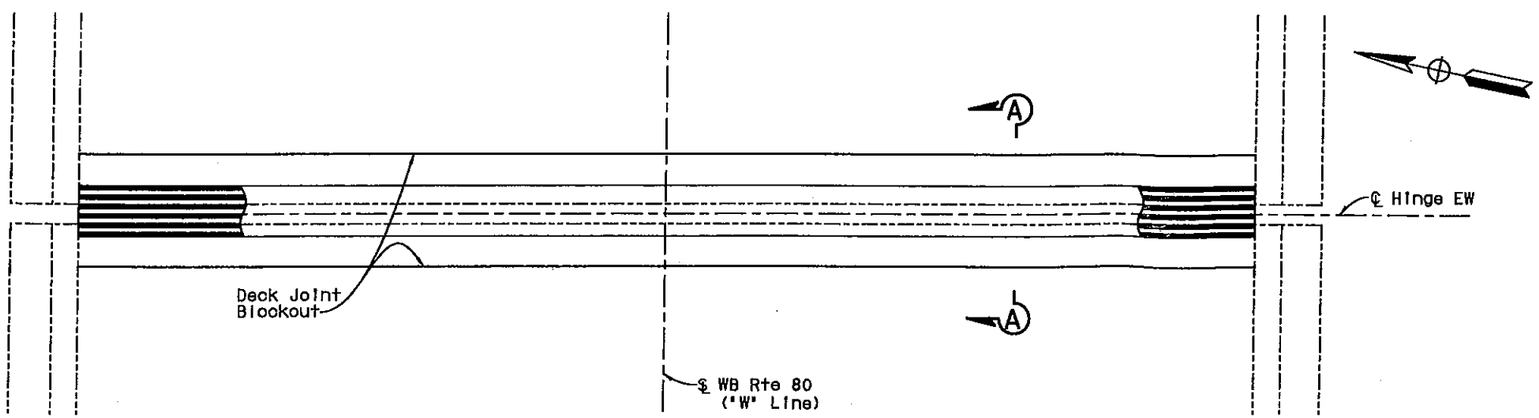

PLAN - DECK JOINT AT HINGE E

(Hinge EW shown, Hinge EE similar)
1:60

DIST.	COUNTY	ROUTE	KILOMETER POST TOTAL PROJECT	SHEET NO.	TOTAL SHEETS
04	SF	80	12.7/13.2	790DS	806

Caltrans Metric

REGISTERED ENGINEER - CIVIL

PLANS APPROVAL DATE

REGISTERED PROFESSIONAL ENGINEER A.L. ELY No. 18880 Exp. 6-30-13 CIVIL STATE OF CALIFORNIA

The State of California or its officers or agents shall not be responsible for the accuracy or completeness of electronic copies of this plan sheet.

T.Y. LIN / MOFFATT & NICHOL
TWO HARRISON STREET, SUITE 500
SAN FRANCISCO, CA 94105

Notes:

1. Contractor to verify existing dimensions and fit of Modular Deck Joint Assembly prior to fabrication of Modular Joint Assembly.
2. At installation the closure capacity of the Joint Seal Assembly at Hinge E shall be set 10 mm greater than the min 'a' dim and at Hinge FW it shall be set 75 mm greater than the min 'a' dim such that at full closure contact is between the concrete surfaces rather than the separation beams.

INDEX TO PLANS

1 MODULAR DECK JOINT DETAILS NO. 1
2 MODULAR DECK JOINT DETAILS NO. 2
3 MODULAR DECK JOINT DETAILS NO. 3
4 SEISMIC JOINT (TYPE 1) CROSS SECTION
5 SEISMIC JOINT (TYPE 1) DECK PLATE DETAILS NO. 1
6 SEISMIC JOINT (TYPE 1) DECK PLATE DETAILS NO. 2
7 SEISMIC JOINT (TYPE 1) CHANNEL ASSEMBLY DETAILS NO. 1
8 SEISMIC JOINT (TYPE 1) CHANNEL ASSEMBLY DETAILS NO. 2
9 SEISMIC JOINT (TYPE 1) SUPPORT PLATE DETAILS
10 SEISMIC JOINT (TYPE 1) REINFORCEMENT DETAILS

SUPPLEMENTAL SHEET

CONTRACT CHANGE ORDER NO. 76 S1
SHEET 12 OF 21

ALL DIMENSIONS ARE IN MILLIMETERS UNLESS OTHERWISE SHOWN

DESIGN OVERSIGHT
HASAN EL-NATUR
SIGN OFF DATE
Rev. Date: 5-19-98

DESIGN	BY Birdy	CHECKED Ely	
DETAILS	BY Samson	CHECKED Ely	
QUANTITIES	BY	CHECKED	

PREPARED FOR THE STATE OF CALIFORNIA DEPARTMENT OF TRANSPORTATION

Jal Birdy
PROJECT ENGINEER

BRIDGE NO. 34-0006 L/R
KILOMETER POST 1.6

SAN FRANCISCO OAKLAND BAY BRIDGE
EAST SPAN SEISMIC SAFETY PROJECT
OAKLAND APPROACH STRUCTURES
HINGES EW, EE, FW, FE AND ABUT 23 L&R
MODULAR DECK JOINT DETAILS NO. 1

ORIGINAL SCALE IN MILLIMETERS FOR REDUCED PLANS 0 10 20 30 40 50 60 70 80 90 100

CU 04251
EA 0120S1

DISREGARD PRINTS BEARING EARLIER REVISION DATES

REVISION DATES (PRELIMINARY STAGE ONLY)

SHEET 1 OF 10

YBITS 1 CONTRACT

Sept 20, 2011

USERNAME => PZucchi DATE PLOTTED => 9/20/2011 TIME PLOTTED => 21:48:00 PM

DIST.	COUNTY	ROUTE	KILOMETER POST TOTAL PROJECT	SHEET NO.	TOTAL SHEETS
04	SF	80	12.7/13.2	790ES	806

REGISTERED ENGINEER - CIVIL

PLANS APPROVAL DATE

The State of California or its officers or agents shall not be responsible for the accuracy or completeness of electronic copies of this plan sheet.

REGISTERED PROFESSIONAL ENGINEER A.L. ELY No. 18880 Exp. 6-30-13 CIVIL STATE OF CALIFORNIA

T.Y. LIN / MOFFATT & NICHOL
TWO HARRISON STREET, SUITE 500
SAN FRANCISCO, CA 94105

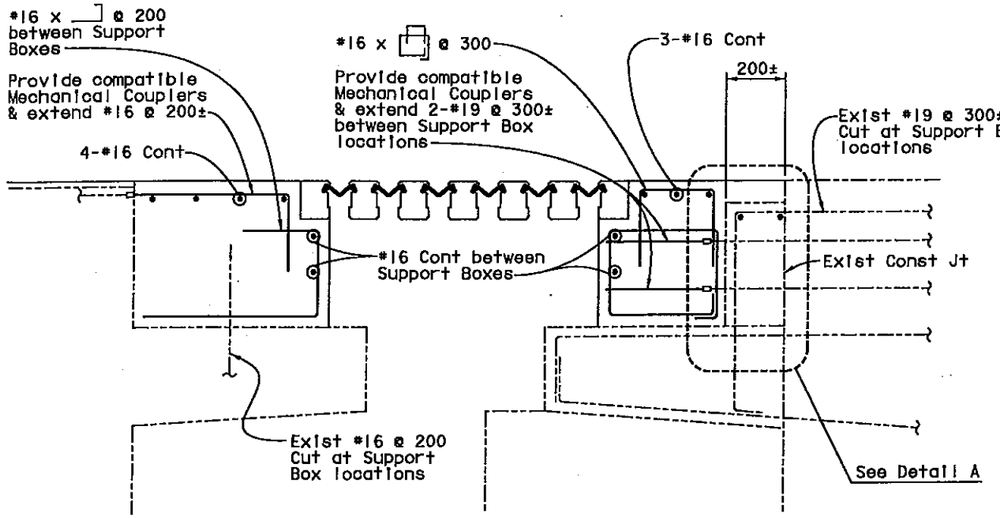

TYPICAL REINFORCING SECTION AT HINGE E
1:10

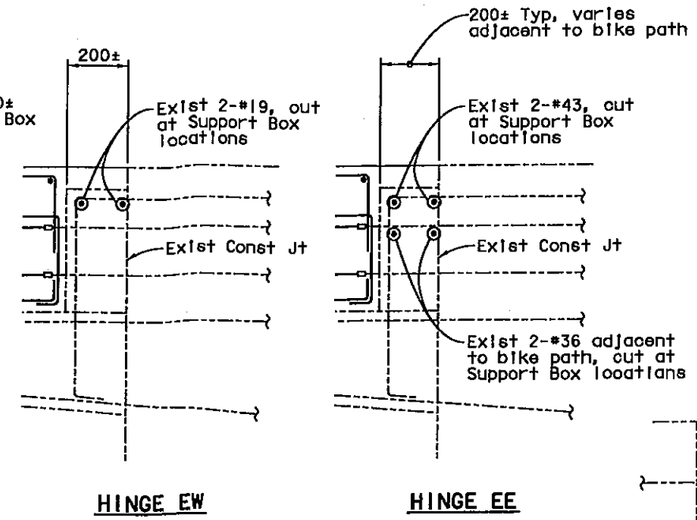

DETAIL A
1:10

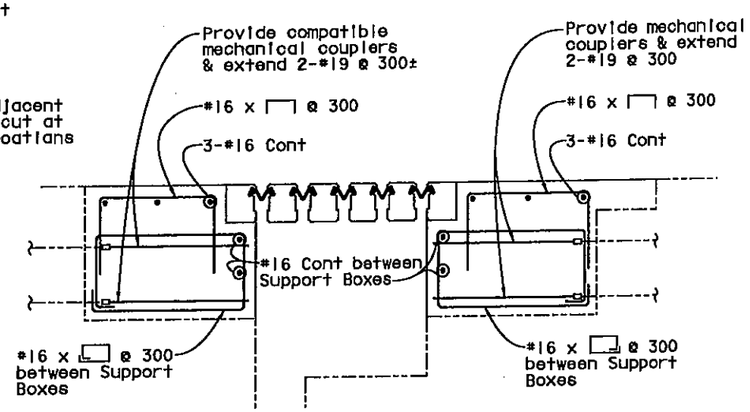

TYPICAL REINFORCING SECTION AT HINGE FW
1:10

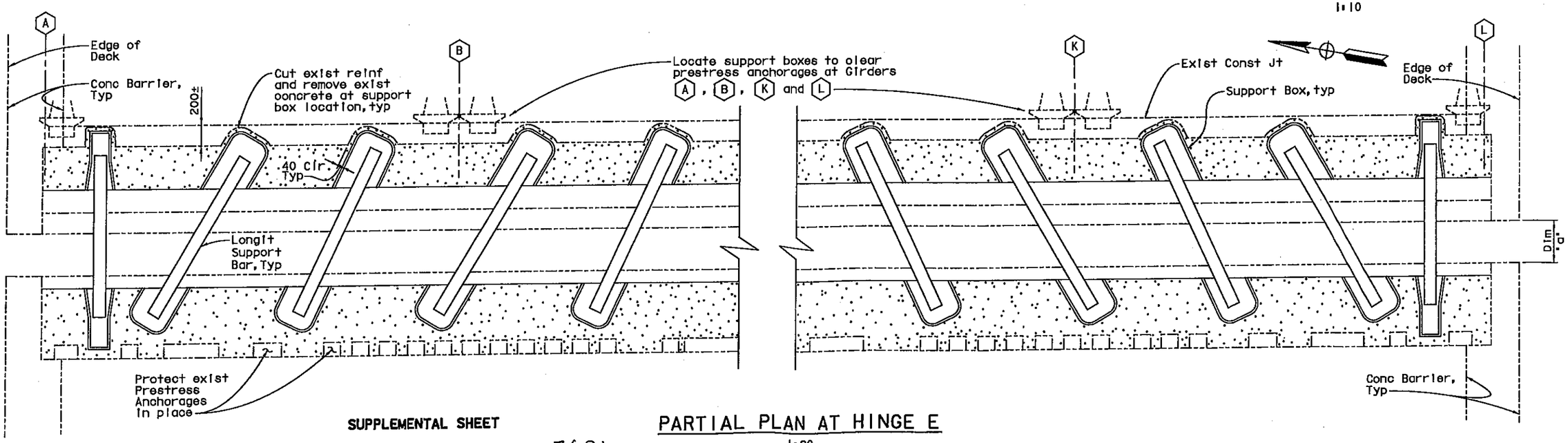

PARTIAL PLAN AT HINGE E
1:20

SUPPLEMENTAL SHEET

CONTRACT CHANGE ORDER NO. 76S1
SHEET 13 OF 21

ALL DIMENSIONS ARE IN MILLIMETERS UNLESS OTHERWISE SHOWN

DESIGN OVERSIGHT			
HASAN EL-NATUR			
SIGN OFF DATE			
Rev. Date 5-16-88			

	BY	CHECKED
DESIGN	Birdy	Ely
DETAILS	Samson	Ely
QUANTITIES		

ORIGINAL SCALE IN MILLIMETERS FOR REDUCED PLANS 0 10 20 30 40 50 60 70 80 90 100

PREPARED FOR THE STATE OF CALIFORNIA DEPARTMENT OF TRANSPORTATION

Jai Birdy
PROJECT ENGINEER

CU 04251
EA 0120S1

BRIDGE NO. 34-0006 L/R
KILOMETER POST 1.6

DISREGARD PRINTS BEARING EARLIER REVISION DATES

REVISION DATES (PRELIMINARY STAGE ONLY)

SHEET 2 OF 10

SAN FRANCISCO OAKLAND BAY BRIDGE
EAST SPAN SEISMIC SAFETY PROJECT
OAKLAND APPROACH STRUCTURES
HINGES EW, EE, FW, FE AND ABUT 23 L&R
MODULAR DECK JOINT DETAILS NO. 2

YBITS 1 CONTRACT

Sept 20, 2011

USERNAME => PZucchi DATE PLOTTED => 9/20/2011 TIME PLOTTED => 24:48:13 PM

DIST.	COUNTY	ROUTE	KILOMETER POST TOTAL PROJECT	SHEET NO.	TOTAL SHEETS
04	SF	80	12.7/13.2	790FS	806

REGISTERED ENGINEER - CIVIL

PLANS APPROVAL DATE

REGISTERED PROFESSIONAL ENGINEER A.L. ELY No. 18880 Exp. 6-30-13 CIVIL STATE OF CALIFORNIA

The State of California or its officers or agents shall not be responsible for the accuracy or completeness of electronic copies of this plan sheet.

T.Y. LIN / MOFFATT & NICHOL
TWO HARRISON STREET, SUITE 500
SAN FRANCISCO, CA 94105

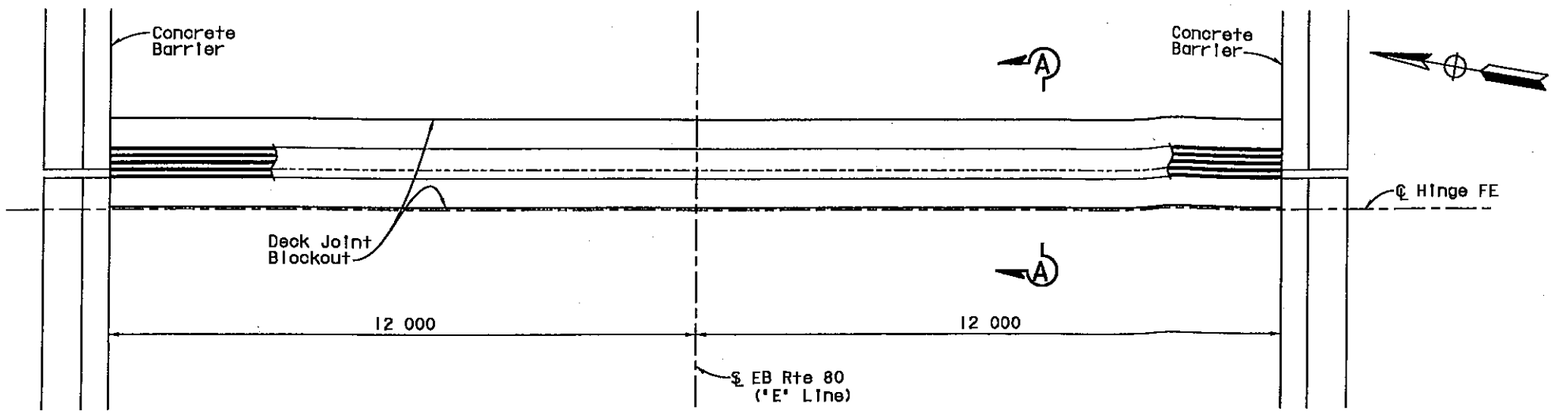

PLAN - DECK JOINT AT HINGE FE

1:60

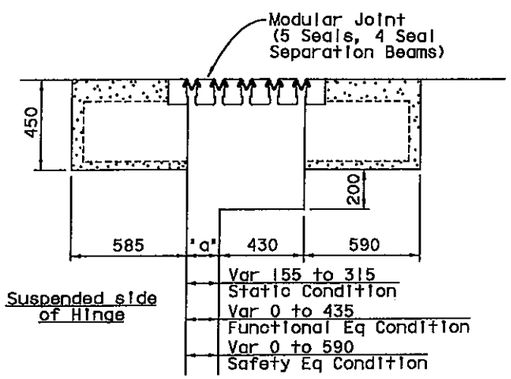

HINGE FE

SECTION A-A

1:15

Notes:

1. Modular deck joint assembly at Hinge FE to be furnished by Contractor and installed by others.
2. At installation the closure capacity of the Joint Seal Assembly at Hinge FE shall be set 24 mm greater than dim 'a' such that a full closure contact is between the concrete surfaces rather than the separation beams.

SUPPLEMENTAL SHEET

CONTRACT CHANGE ORDER NO. 76S1
SHEET 14 OF 21

ALL DIMENSIONS ARE IN MILLIMETERS UNLESS OTHERWISE SHOWN

SAN FRANCISCO OAKLAND BAY BRIDGE
EAST SPAN SEISMIC SAFETY PROJECT
OAKLAND APPROACH STRUCTURES
HINGES EW, EE, FW, FE AND ABUT 23 L&R
MODULAR DECK JOINT DETAILS NO. 3

DESIGN OVERSIGHT	DESIGN	BY Birdy	CHECKED Ely
HASAN EL-NATUR	DETAILS	BY Samson	CHECKED Ely
SIGN OFF DATE	QUANTITIES	BY	CHECKED

PREPARED FOR THE STATE OF CALIFORNIA DEPARTMENT OF TRANSPORTATION

Jal Birdy
PROJECT ENGINEER

BRIDGE NO. 34-0006 L/R
KILOMETER POST 1.6

CU 04251
EA 0120S1

DISREGARD PRINTS BEARING EARLIER REVISION DATES

REVISION DATES (PRELIMINARY STAGE ONLY)

SHEET 3 OF 10

Rev. Date: 5-18-98

ORIGINAL SCALE IN MILLIMETERS FOR REDUCED PLANS 0 10 20 30 40 50 60 70 80 90 100

YBITS 1 CONTRACT

Sept 20, 2011

USERNAME => PZucchi DATE PLOTTED => 9/20/2011 TIME PLOTTED => 2:48:22 PM

DIST	COUNTY	ROUTE	KILOMETER POST TOTAL PROJECT	SHEET No	TOTAL SHEETS
04	SF	80	12.7/13.2	T90GS	806

REGISTERED CIVIL ENGINEER DATE

PLANS APPROVAL DATE

The State of California or its officers or agents shall not be responsible for the accuracy or completeness of electronic copies of this plan sheet.

REGISTERED PROFESSIONAL ENGINEER EVANGELOS G. MAGGENTIS No. 46920 Exp. 6/30/11 CIVIL STATE OF CALIFORNIA

REGISTERED PROFESSIONAL ENGINEER EFTHYMIOS DELIS No. 51434 Exp. 6-30-12 CIVIL STATE OF CALIFORNIA

FOR REVISION ◇1 ONLY

To get to the Caltrans web site, go to: http://www.dot.ca.gov

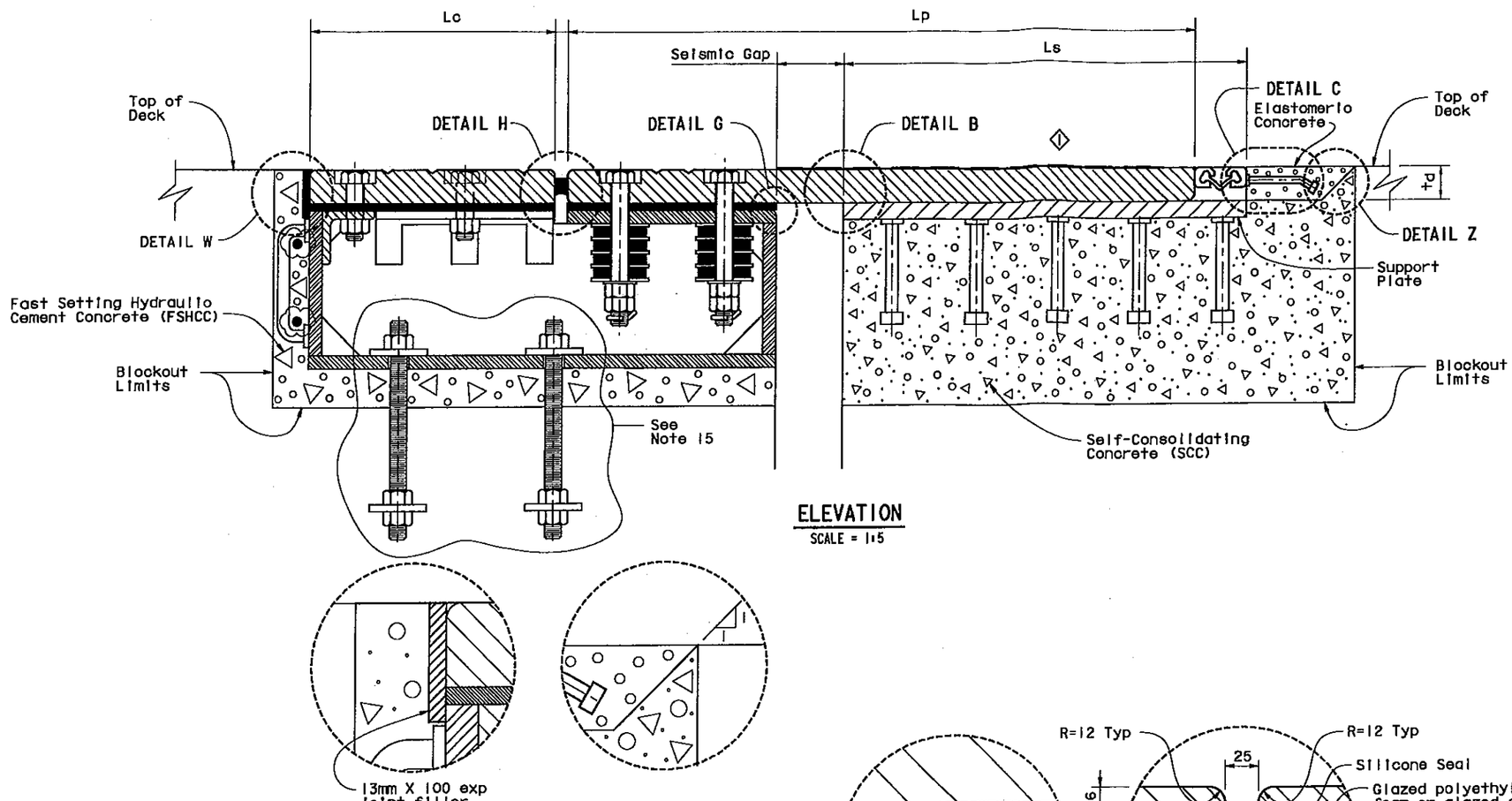

ELEVATION
SCALE = 1:5

DETAIL W
SCALE = 1:2

DETAIL Z
SCALE = 1:2

DETAIL G
SCALE = 1:1

DETAIL H
SCALE = 1:2

DETAIL B
SCALE = 1:2

DETAIL C
SCALE = 1:1

JOINT INFORMATION			
LOCATION		ABUT E23L	ABUT E23R
SKEW (°)		0	0
DECK PLATE	Thickness td (mm)	64	64
	Length Lp (mm)	1210	1210
SUPPORT PLATE	Thickness ts (mm)	32	32
	Length Ls (mm)	780	780
COVER PLATE	Thickness to (mm)	64	64
	Length Lc (mm)	475	475
SEISMIC GAP @ 20°	(mm)	130	130

NOTES:

1. Install Seismic Joint after erecting bike path, placing deck overlay up to the limit of the blockout if needed, utilities and barrier.
2. Top of deck plate, elastomeric and FSHCC concrete shall match top of deck profile.
3. For deck plate details see 'DECK PLATE DETAILS NO. 1' and 'DECK PLATE DETAILS NO. 2' sheets for TYPE I joint.
4. For mild reinforcement in blockout areas, see 'REINFORCMENT DETAILS' sheet for TYPE I joint Not all mild reinforcement is shown for clarity.
5. For channel assembly details, see 'CHANNEL ASSEMBLY DETAILS NO 1' and 'CHANNEL ASSEMBLY DETAILS NO 2' for TYPE I joint.
6. Place deck plate, support plate and channel assembly so that full bearing is achieved between 1) deck, support plates and 11)deck plate and channel assembly.
7. Self-consolidating concrete shall be used in support plate blockout.
8. Fast setting hydraulic cement concrete shall be used in channel assembly blockout.
9. Maximum depth of edge beam in strip steel shall be 40 mm.
10. Strip seal shall be one continuous piece. No field splice shall be permitted.
11. Strip seal shall have a movement rating of 100mm, manufactured specifically for highway bridges.
12. The V-Grooves of the deck plates shall receive a nonskid surface consisting of epoxy mixed with grit.
13. For support plate details see 'SUPPORT PLATE DETAILS' sheet for TYPE I joint.
14. Deck plate and elastomeric concrete have the same thickness (td = to).
15. For ABUT E23L, anchor bolts installed field verify location before fabrication.

Note:
Seismic joint at Abut 23L to be furnished and installed by Contractor (anchor bolts exist at this location), seismic joint at Abut 23R to be furnished by Contractor (incl anchor bolts) and installed by others.

SUPPLEMENTAL SHEET

CONTRACT CHANGE ORDER NO. 7681
SHEET 15 OF 21

THE CONTRACTOR SHALL VERIFY ALL CONTROLLING FIELD DIMENSIONS BEFORE ORDERING OR FABRICATING ANY MATERIAL.

SAN FRANCISCO OAKLAND BAY BRIDGE
EAST SPAN SEISMIC SAFETY PROJECT

OAKLAND APPROACH STRUCTURES
HINGES EW, EE, FW, FE AND ABUT 23 L&R

SEISMIC JOINT (TYPE I)

CROSS SECTION

◇1 Revised some V-Grooves to traction ribs - 3/4/11

	BY	CHECKED
DESIGN	E DELIS	A KARTOUM
DETAILS	A R DUDSAK	A KARTOUM
QUANTITIES	E DELIS	A KARTOUM

STATE OF CALIFORNIA
DEPARTMENT OF TRANSPORTATION

DIVISION OF ENGINEERING SERVICES
STRUCTURE DESIGN
SPECIAL DESIGNS BRANCH

BRIDGE NO. 34-0006 L/R
KILOMETER POST 1.6

CU 04251
EA 0120S1

ALL DIMENSIONS ARE IN MILLIMETERS UNLESS OTHERWISE SHOWN

ORIGINAL SCALE IN MILLIMETERS FOR REDUCED PLANS 0 10 20 30 40 50 60 70 80 90 100

DISREGARD PRINTS BEARING EARLIER REVISION DATES

REVISION DATES

SHEET 4 OF 10

Sept 20, 2011

YBITS 1 CONTRACT

DIST	COUNTY	ROUTE	KILOMETER POST TOTAL PROJECT	SHEET No	TOTAL SHEETS
04	SF	80	12.7/13.2	790HS	806

REGISTERED CIVIL ENGINEER DATE

PLANS APPROVAL DATE

REGISTERED PROFESSIONAL ENGINEER EFTHYMIOS DELIS No. 51434 Exp. 6-30-12 CIVIL STATE OF CALIFORNIA

REGISTERED PROFESSIONAL ENGINEER ENRICO G. MAGGENTI No. 46920 Exp. 6/30/11 CIVIL STATE OF CALIFORNIA

The State of California or its officers or agents shall not be responsible for the accuracy or completeness of electronic copies of this plan sheet.

To get to the Caltrans web site, go to: http://www.dot.ca.gov

FOR REVISION ⟨1⟩ ONLY

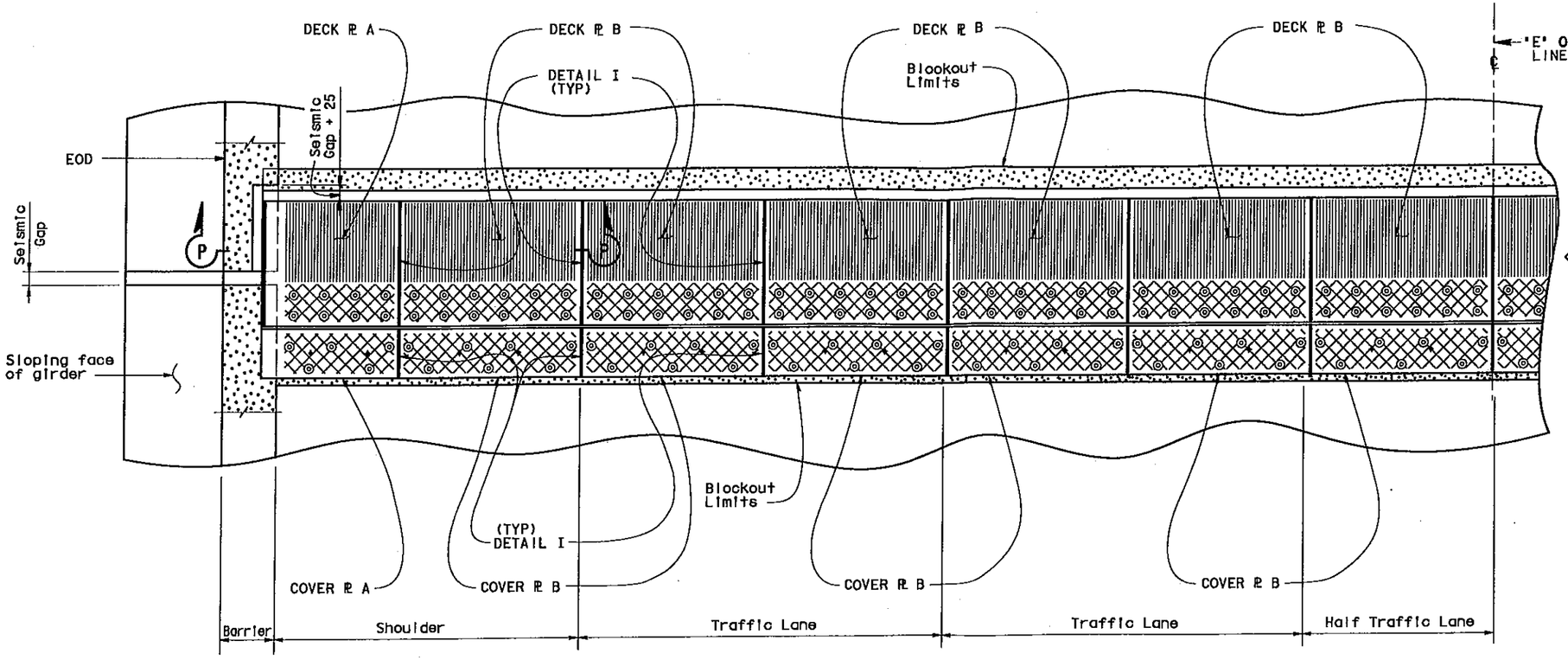

EASTBOUND/WESTBOUND EXPANSION JOINT (HALF) PLAN

SCALE 1:25

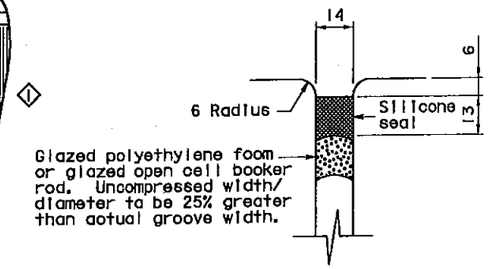

DETAIL I

SCALE = 1:1

NOTES:

1. For Plates A and B see 'DECK PLATE DETAILS NO 2' sheet.
2. Denotes deck Steel Plate with V-grooves at 45°.

   ⟨1⟩ Denotes traction ribs.
3. Deck Plate A matches with Support Plate A and the Channel Assembly A (Module A) Likewise for Module B. Channel assemblies are 14 mm wider than their corresponding deck plates.
4. One Module B is placed per half traffic lane.
5. Portions of barriers are not shown for clarity.
6. For SECTION P-P see 'DECK PLATE DETAILS NO 2' sheet for TYPE I joint.

Note:
Seismic joint at Abut 23L to be furnished and installed by Contractor (anchor bolts exist at this location), seismic joint at Abut 23R to be furnished by Contractor (incl anchor bolts) and installed by others.

SUPPLEMENTAL SHEET

CONTRACT CHANGE ORDER NO. 76 S1

SHEET 16 OF 21

THE CONTRACTOR SHALL VERIFY ALL CONTROLLING FIELD DIMENSIONS BEFORE ORDERING OR FABRICATING ANY MATERIAL.

⟨1⟩ Revised some V-Grooves to traction ribs - 3/4/11

	BY	CHECKED
DESIGN	E DELIS	A KARTOUM
DETAILS	A R DUDSAK	A KARTOUM
QUANTITIES	E DELIS	A KARTOUM

STATE OF CALIFORNIA DEPARTMENT OF TRANSPORTATION

DIVISION OF ENGINEERING SERVICES STRUCTURE DESIGN

SPECIAL DESIGNS BRANCH

BRIDGE NO. 34-0006 L/R

KILOMETER POST 1.6

CU 0425I

EA 0425I

DISREGARD PRINTS BEARING EARLIER REVISION DATES

REVISION DATES

SHEET 5 OF 10

SAN FRANCISCO OAKLAND BAY BRIDGE
EAST SPAN SEISMIC SAFETY PROJECT

OAKLAND APPROACH STRUCTURES
HINGES EW, EE, FW, FE AND ABUT 23 L&R

SEISMIC JOINT (TYPE I)

DECK PLATE DETAILS NO 1

ORIGINAL SCALE IN MILLIMETERS

Caltrans Metric

Sept 20, 2011

YBITS 1 CONTRACT

DIST	COUNTY	ROUTE	KILOMETER POST TOTAL PROJECT	SHEET No	TOTAL SHEETS
04	SF	80	12.7/13.2	790IS	806

REGISTERED CIVIL ENGINEER DATE

PLANS APPROVAL DATE

The State of California or its officers or agents shall not be responsible for the accuracy or completeness of electronic copies of this plan sheet.

REGISTERED PROFESSIONAL ENGINEER EFTHYMIOS DELIS No. 51434 Exp. 6-30-12 CIVIL STATE OF CALIFORNIA

REGISTERED PROFESSIONAL ENGINEER ENRICO G. MAGENTI No. 46920 Exp. 6/30/11 CIVIL STATE OF CALIFORNIA

FOR REVISION ◇1 ONLY

To get to the Caltrans web site, go to: http://www.dot.ca.gov

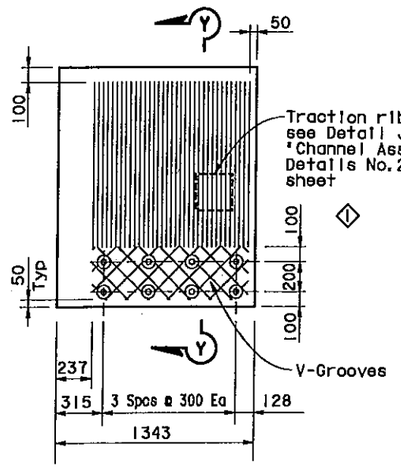

DECK PLATE A

SCALE = 1:20

Note: Barrier not shown for clarity

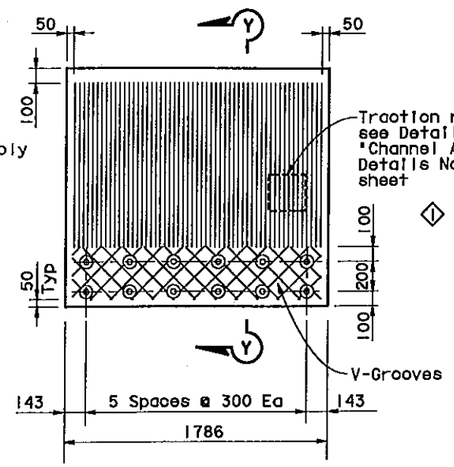

DECK PLATE B

SCALE = 1:20

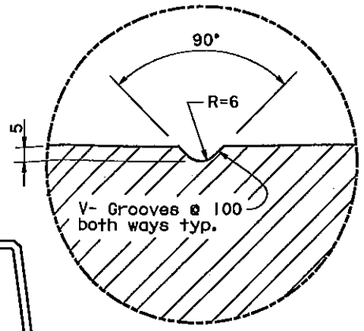

DETAIL K

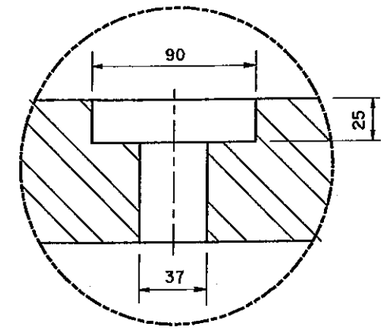

DETAIL L

NOTES:

1. V-Groove pattern is similar for all Plates
2. For deck plate plan see 'DECK PLATE DETAILS NO 1' sheet for TYPE II joint.
3. In Section P-P, Y may vary from 10 mm (min) to 20 mm (max) at the thickest end of the deck ℞ (td). ◇1
4. Traction ribs to be machined.
5. For td, Lp, Lc, tc and Ls values see 'CROSS SECTION' sheet for TYPE I joint.
6. Eye bolts can be used at set screw locations for lifting of cover plates.

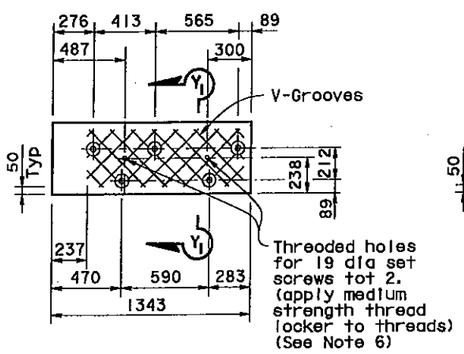

COVER PLATE A

SCALE = 1:20

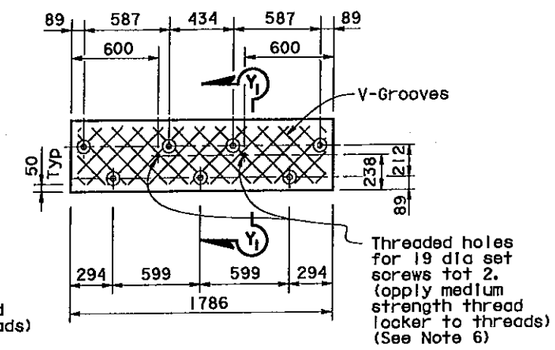

COVER PLATE B

SCALE = 1:20

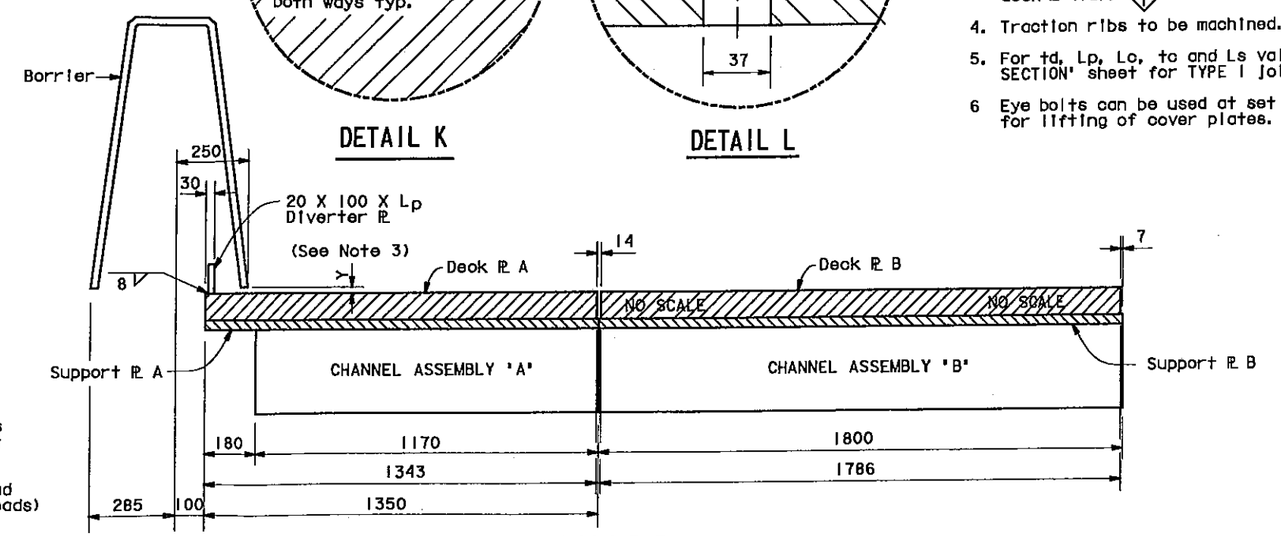

SECTION P-P

SCALE = 1:10

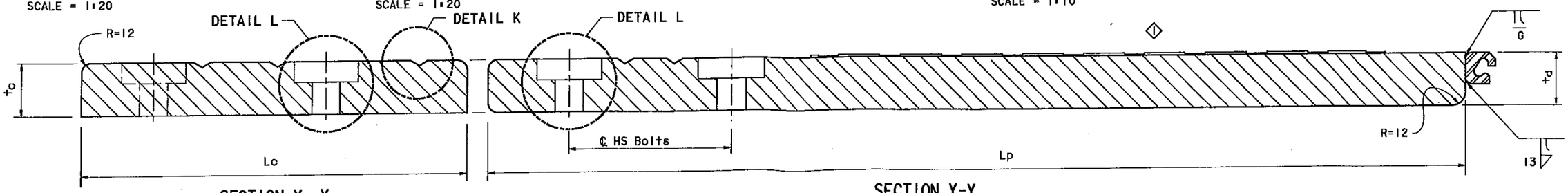

SECTION Y1-Y1

SCALE = 1:2.5

SECTION Y-Y

SCALE = 1:2.5

Note:
Seismic joint at Abut 23L to be furnished and installed by Contractor (anchor bolts exist at this location), seismic joint at Abut 23R to be furnished by Contractor (incl anchor bolts) and installed by others.

SUPPLEMENTAL SHEET

CONTRACT CHANGE ORDER NO. 7651

SHEET 17 OF 21

THE CONTRACTOR SHALL VERIFY ALL CONTROLLING FIELD DIMENSIONS BEFORE ORDERING OR FABRICATING ANY MATERIAL.

◇1 Revised some V-Grooves to traction ribs - 3/4/11

	BY	CHECKED
DESIGN	E DEUS	A KARTOUM
DETAILS	A R DUDSAK	A KARTOUM
QUANTITIES	E DEUS	A KARTOUM

STATE OF CALIFORNIA
DEPARTMENT OF TRANSPORTATION

DIVISION OF ENGINEERING SERVICES
STRUCTURE DESIGN
SPECIAL DESIGNS BRANCH

BRIDGE NO. 34-0006 L/R
KILOMETER POST 1.6

SAN FRANCISCO OAKLAND BAY BRIDGE
EAST SPAN SEISMIC SAFETY PROJECT

OAKLAND APPROACH STRUCTURES
HINGES EW, EE, FW, FE AND ABUT 23 L&R

SEISMIC JOINT (TYPE I)

DECK PLATE DETAILS NO 2

Caltrans Metric

ORIGINAL SCALE IN MILLIMETERS

CU 04251

DISREGARD PRINTS BEARING EARLIER REVISION DATES

REVISION DATES

SHEET 6 OF 10

YBITS 1 CONTRACT

Sept 20, 2011

DIST	COUNTY	ROUTE	KILOMETER POST TOTAL PROJECT	SHEET No	TOTAL SHEETS
04	SF	80	12.7/13.2	790JS	806

REGISTERED CIVIL ENGINEER DATE

PLANS APPROVAL DATE

REGISTERED PROFESSIONAL ENGINEER EFTHYMIOS DELIS No. 51434 Exp. 6-30-12 CIVIL STATE OF CALIFORNIA

The State of California or its officers or agents shall not be responsible for the accuracy or completeness of electronic copies of this plan sheet.

To get to the Caltrans web site, go to: http://www.dot.ca.gov

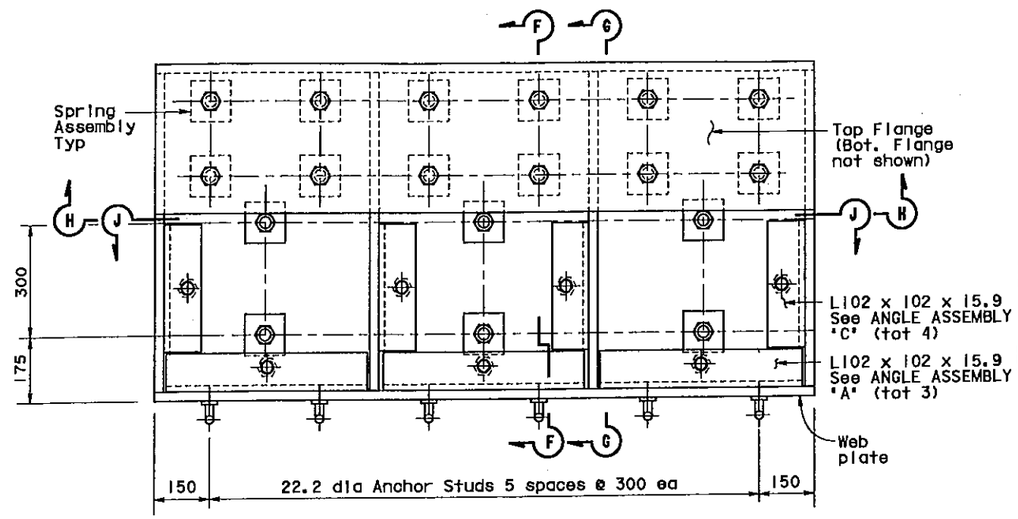

PLAN - BUILT UP CHANNEL ASSEMBLY 'B' (TYP)

NO SCALE

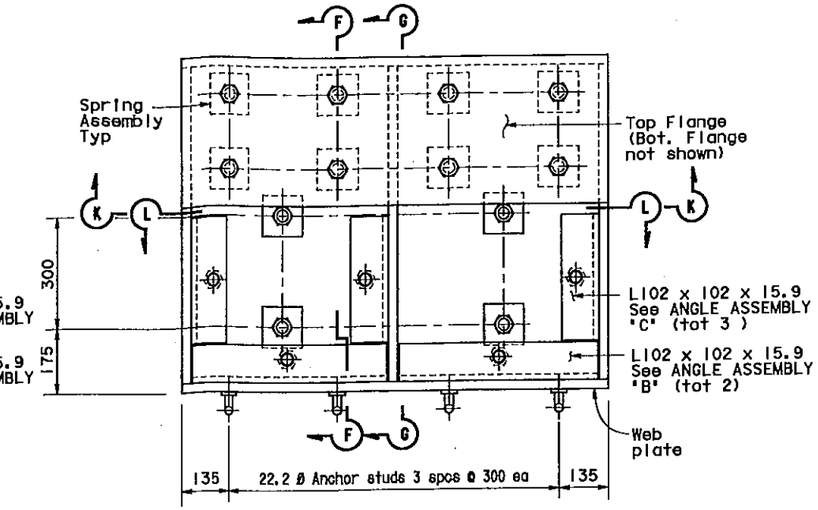

PLAN - BUILT UP CHANNEL ASSEMBLY 'A' (TYP)

NO SCALE

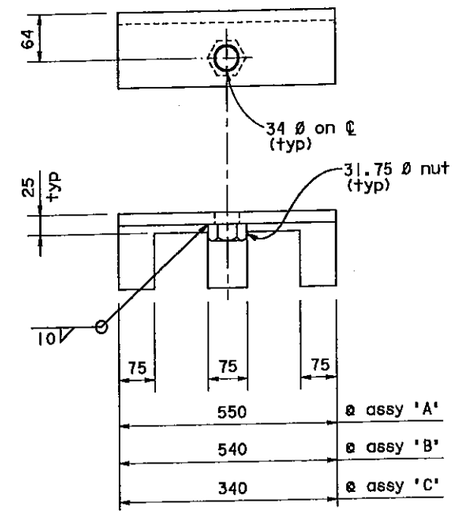

ANGLE ASSEMBLY (TYP)

NO SCALE

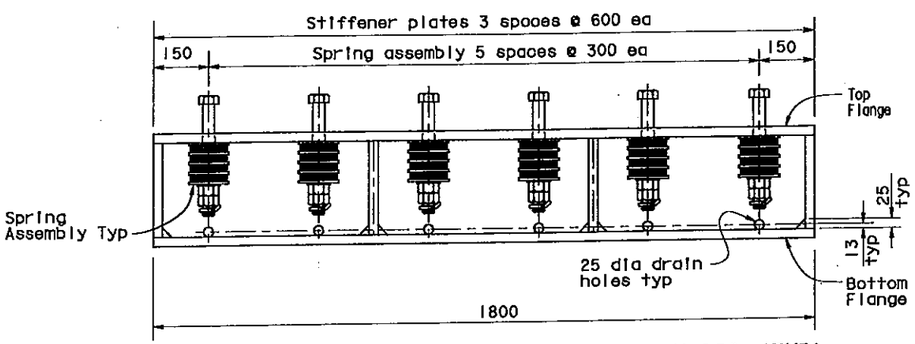

SECTION H-H - BUILT UP CHANNEL ASSEMBLY 'B' (TYP)

NO SCALE

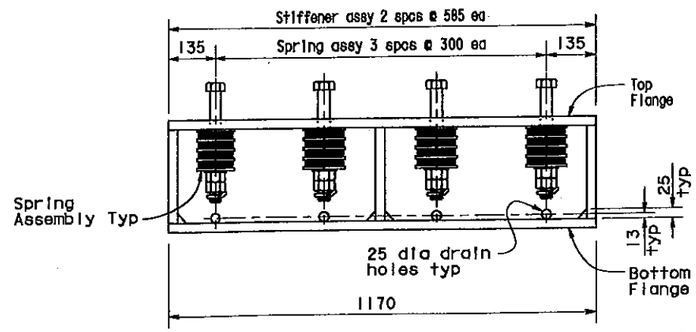

SECTION K-K - BUILT UP CHANNEL ASSEMBLY 'A' (TYP)

NO SCALE

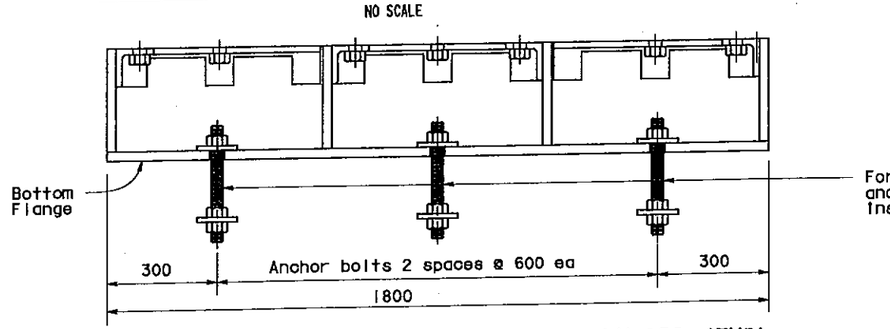

SECTION J-J - BUILT UP CHANNEL ASSEMBLY 'B' (TYP)

NO SCALE

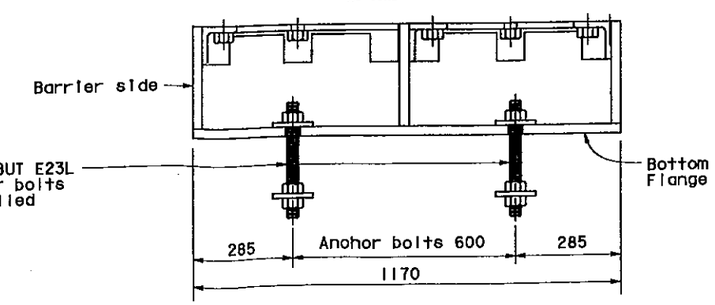

SECTION L-L - BUILT UP CHANNEL ASSEMBLY 'A' (TYP)

NO SCALE

NOTES:

1. For SECTIONS F-F and G-G See 'CHANNEL ASSEMBLY DETAILS NO. 2' sheet for TYPE I Joint.
2. Top surfaces of L 102 X 102 X 15.9 angles and 25mm steel PLs shall be on same level.

Note:
Seismic joint at Abut 23L to be furnished and installed by Contractor (anchor bolts exist at this location), seismic joint at Abut 23R to be furnished by Contractor (incl anchor bolts) and installed by others.

SUPPLEMENTAL SHEET

CONTRACT CHANGE ORDER NO. 7651
SHEET 18 OF 21

THE CONTRACTOR SHALL VERIFY ALL CONTROLLING FIELD DIMENSIONS BEFORE ORDERING OR FABRICATING ANY MATERIAL.

	BY	CHECKED
DESIGN	E DELIS	A KARTOUM
DETAILS	A R DUDSAK	A KARTOUM
QUANTITIES	E DELIS	A KARTOUM

STATE OF CALIFORNIA
DEPARTMENT OF TRANSPORTATION

DIVISION OF ENGINEERING SERVICES
STRUCTURE DESIGN
SPECIAL DESIGNS BRANCH

CU 04251

BRIDGE NO. 34-0006 L/R
KILOMETER POST 1.6

SAN FRANCISCO OAKLAND BAY BRIDGE
EAST SPAN SEISMIC SAFETY PROJECT

OAKLAND APPROACH STRUCTURES
HINGES EW, EE, FW, FE AND ABUT 23 L&R

SEISMIC JOINT (TYPE I)

CHANNEL ASSEMBLY DETAILS NO 1

DISREGARD PRINTS BEARING EARLIER REVISION DATES

REVISION DATES

SHEET 7 OF 10

Sept 20, 2011

YBITS 1 CONTRACT

DIST	COUNTY	ROUTE	KILOMETER POST TOTAL PROJECT	SHEET NO	TOTAL SHEETS
04	SF	80	12.7/13.2	790KS	806

REGISTERED CIVIL ENGINEER DATE

PLANS APPROVAL DATE

REGISTERED PROFESSIONAL ENGINEER EFTHYMIOS DELIS No. 51434 Exp. 6-30-12 CIVIL STATE OF CALIFORNIA

REGISTERED PROFESSIONAL ENGINEER ENRICO C. MAGGENTI No. 46920 Exp. 6/30/11 CIVIL STATE OF CALIFORNIA

The State of California or its officers or agents shall not be responsible for the accuracy or completeness of electronic copies of this plan sheet.

To get to the Caltrans web site, go to: http://www.dot.ca.gov

FOR REVISION ⟨1⟩ ONLY

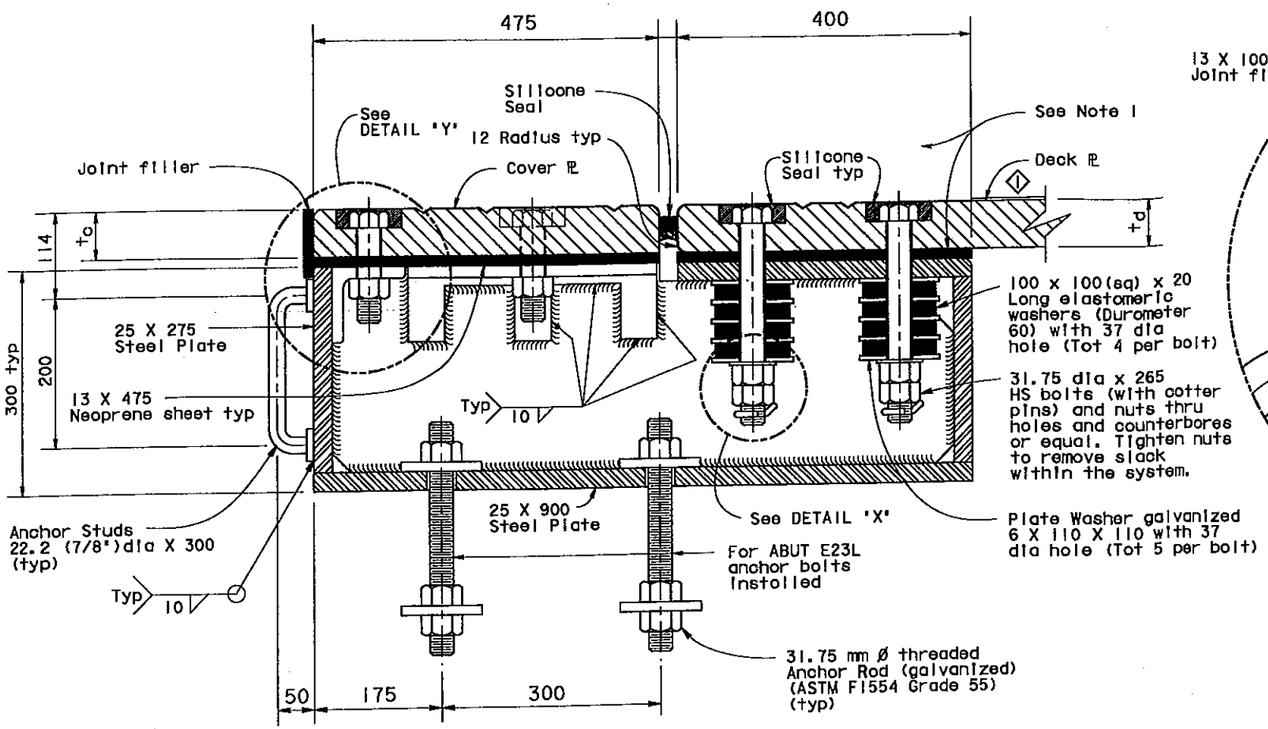

SECTION F-F

NO SCALE

See DETAIL 'X'

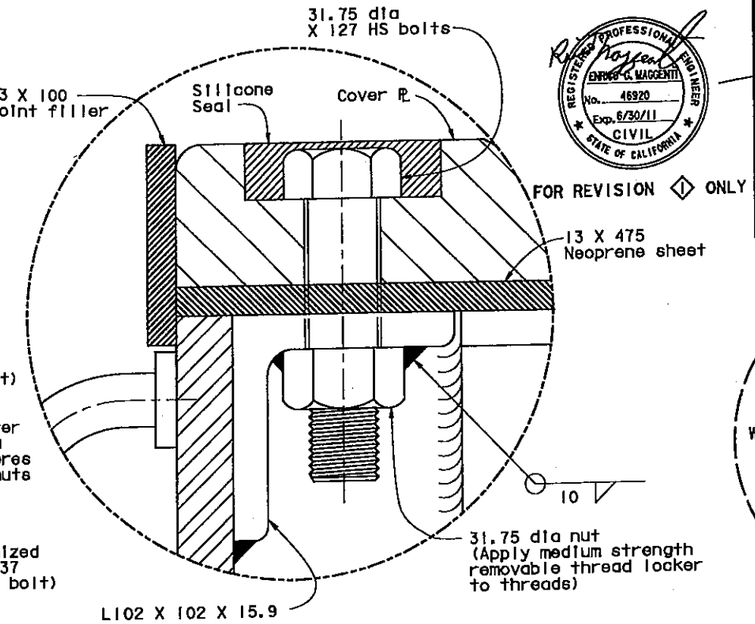

DETAIL Y

NO SCALE

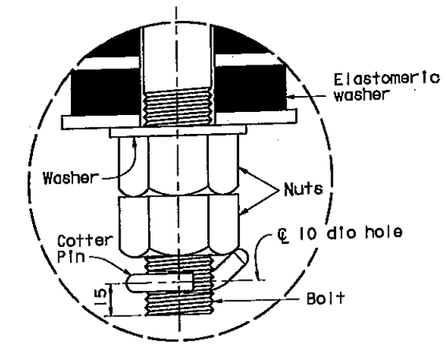

DETAIL X

NO SCALE

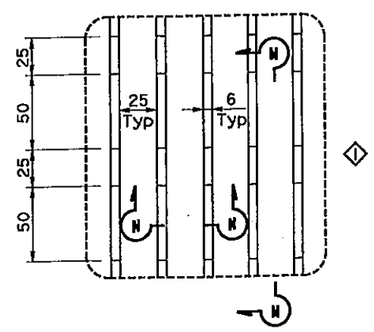

DETAIL J

TRACTION RIBS

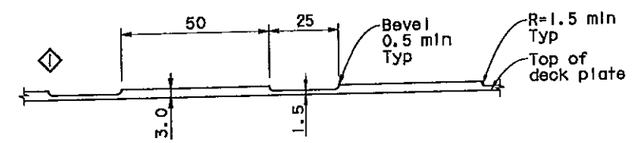

SECTION M-M

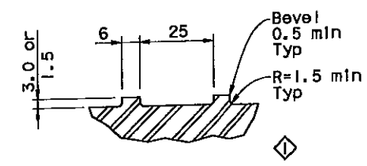

SECTION N-N

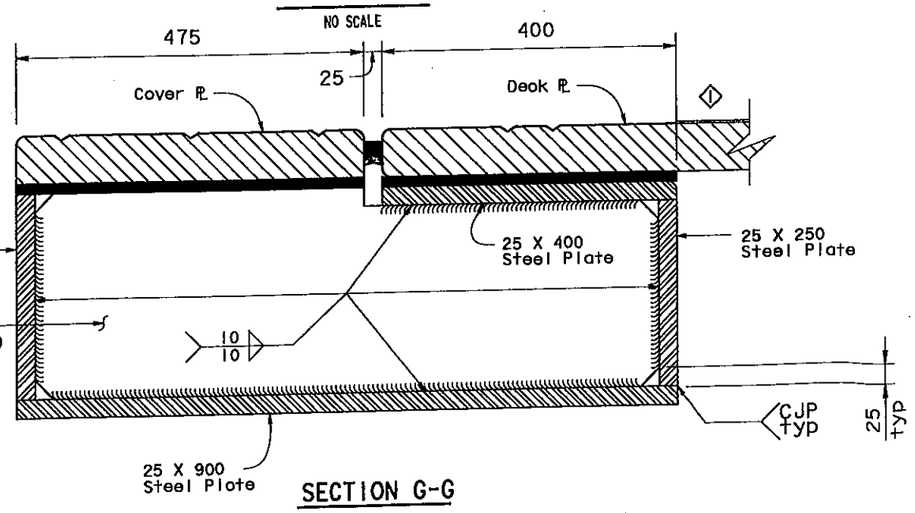

SECTION G-G

NO SCALE

NOTES:

1. Thirty-seven mm holes in neoprene sheets shall be drilled or punched so that the neoprene is not distorted at the time of installation.
2. For to and td values see 'CROSS SECTION' sheet for TYPE I joint.

Note:
Seismic joint at Abut 23L to be furnished and installed by Contractor (anchor bolts exist at this location), seismic joint at Abut 23R to be furnished by Contractor (incl anchor bolts) and installed by others.

SUPPLEMENTAL SHEET

CONTRACT CHANGE ORDER NO. 7651

SHEET 19 OF 21

THE CONTRACTOR SHALL VERIFY ALL CONTROLLING FIELD DIMENSIONS BEFORE ORDERING OR FABRICATING ANY MATERIAL.

⟨1⟩ Revised some V-Grooves to traction ribs - 3/4/11

DESIGN	BY E DEUS	CHECKED A KARTOUM	
DETAILS	BY A R DUDSAK	CHECKED A KARTOUM	
QUANTITIES	BY E DEUS	CHECKED A KARTOUM	

STATE OF CALIFORNIA
DEPARTMENT OF TRANSPORTATION

DIVISION OF ENGINEERING SERVICES
STRUCTURE DESIGN
SPECIAL DESIGNS BRANCH

CU 04251
EA 0120S1

BRIDGE NO. 34-0006 L/R
KILOMETER POST 1.6

DISREGARD PRINTS BEARING EARLIER REVISION DATES

REVISION DATES

SHEET 8 OF 10

SAN FRANCISCO OAKLAND BAY BRIDGE
EAST SPAN SEISMIC SAFETY PROJECT

OAKLAND APPROACH STRUCTURES
HINGES EW, EE, FW, FE AND ABUT 23 L&R

SEISMIC JOINT (TYPE I)

CHANNEL ASSEMBLY DETAILS NO 2

ORIGINAL SCALE IN MILLIMETERS

Sept 20, 2011

YBITS 1 CONTRACT

DIST	COUNTY	ROUTE	KILOMETER POST TOTAL PROJECT	SHEET No	TOTAL SHEETS
04	SF	80	12.7/13.2	790LS	806

REGISTERED CIVIL ENGINEER DATE

PLANS APPROVAL DATE

REGISTERED PROFESSIONAL ENGINEER EFTHYMIOS DELIS No. 51434 Exp. 6-30-12 CIVIL STATE OF CALIFORNIA

The State of California or its officers or agents shall not be responsible for the accuracy or completeness of electronic copies of this plan sheet.

To get to the Caltrans web site, go to: http://www.dot.ca.gov

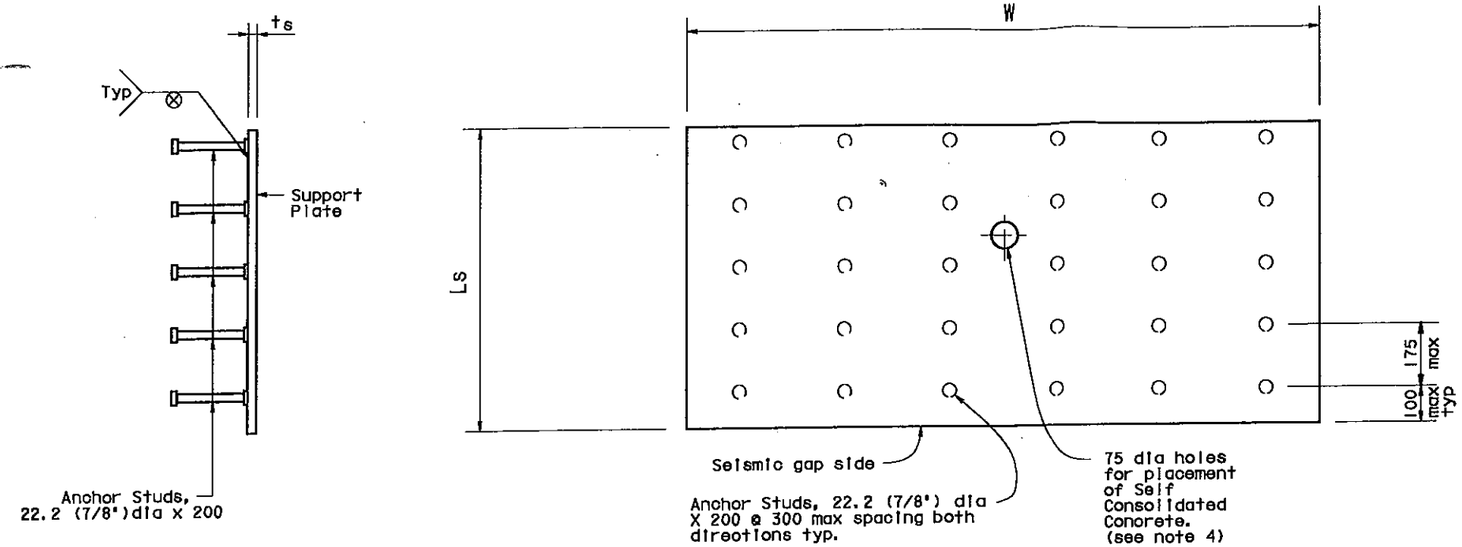

SIDE VIEW

PLAN VIEW

SUPPORT PLATE DETAIL

NO SCALE

SUPPORT PLATE WIDTH
MODULE A; W = 1350
MODULE B; W = 1800

NOTES:

1. For Ls and ts values see 'CROSS SECTION' sheet for TYPE I joint.
2. Support Plate A shown, Support Plate B similar.
3. For V-Groove details see 'DECK PLATE DETAILS NO 2' sheet for TYPE I joint.
4. Exact location of 75 dia holes to be determined prior to support plate fabrication.

Note:
Seismic joint at Abut 23L to be furnished and installed by Contractor (anchor bolts exist at this location), seismic joint at Abut 23R to be furnished by Contractor (incl anchor bolts) and installed by others.

SUPPLEMENTAL SHEET

CONTRACT CHANGE ORDER NO. 76 S1

SHEET 20 OF 21

THE CONTRACTOR SHALL VERIFY ALL CONTROLLING FIELD DIMENSIONS BEFORE ORDERING OR FABRICATING ANY MATERIAL.

	BY	CHECKED
DESIGN	E DELIS	A KARTOUM
DETAILS	A R DUDSAK	A KARTOUM
QUANTITIES	E DELIS	A KARTOUM

STATE OF CALIFORNIA
DEPARTMENT OF TRANSPORTATION

DIVISION OF ENGINEERING SERVICES
STRUCTURE DESIGN
SPECIAL DESIGNS BRANCH

CU 04251

BRIDGE NO. 34-0006 L/R
KILOMETER POST 1.6

SAN FRANCISCO OAKLAND BAY BRIDGE
EAST SPAN SEISMIC SAFETY PROJECT

OAKLAND APPROACH STRUCTURES
HINGES EW, EE, FW, FE AND ABUT 23 L&R

SEISMIC JOINT (TYPE I)

SUPPORT PLATE DETAILS

DISREGARD PRINTS BEARING EARLIER REVISION DATES

REVISION DATES

SHEET 9 OF 10

YBITS 1 CONTRACT

Sept 20, 2011

DIST	COUNTY	ROUTE	KILOMETER POST TOTAL PROJECT	SHEET No	TOTAL SHEETS
04	SF	80	12.7/13.2	790MS	806

REGISTERED CIVIL ENGINEER DATE

PLANS APPROVAL DATE

The State of California or its officers or agents shall not be responsible for the accuracy or completeness of electronic copies of this plan sheet.

To get to the Caltrans web site, go to: http://www.dot.ca.gov

REGISTERED PROFESSIONAL ENGINEER — EFTHYMIOS DELIS — No. 51434 — Exp. 6-30-12 — CIVIL — STATE OF CALIFORNIA

REGISTERED PROFESSIONAL ENGINEER — ENRICO C. MAGGENTI — No. 46920 — Exp. 6/30/11 — CIVIL — STATE OF CALIFORNIA

FOR REVISION ◇1 ONLY

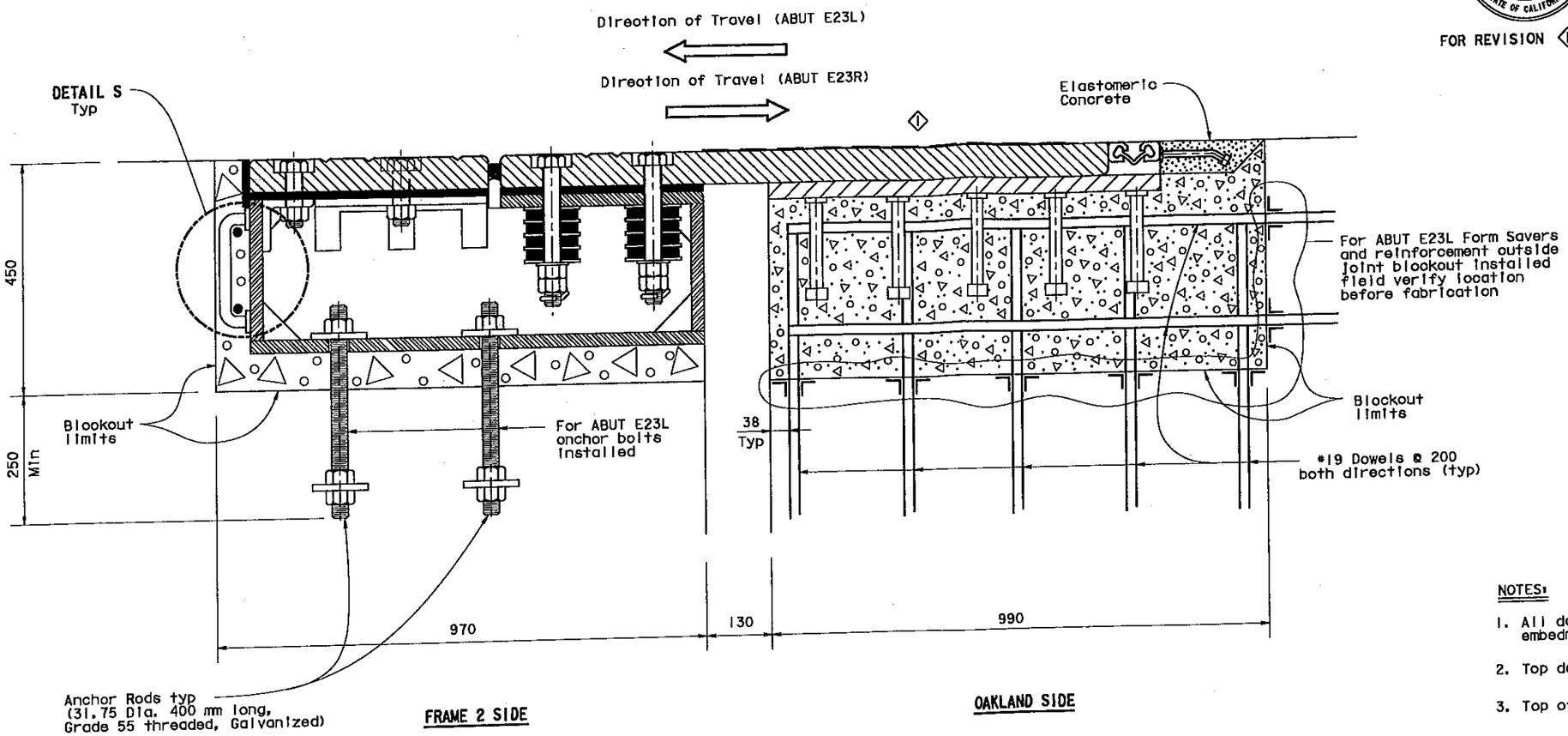

EASTBOUND / WESTBOUND ELEVATION

SCALE 1:5

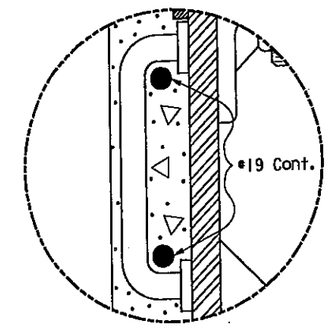

DETAIL S

NOTES:

1. All dowels are drill and bond with minimum embedment length of 200 mm.
2. Top deck plate placed at deck profile.
3. Top of support plate parallel to top deck plate.
4. For Frame 2 limits see 'GENERAL NOTES NO. 1' sheet.
5. Seismic joint shown position at 20°C.

Note:
Seismic joint at Abut 23L to be furnished and installed by Contractor (anchor bolts exist at this location), seismic joint at Abut 23R to be furnished by Contractor (inal anchor bolts) and installed by others.

SUPPLEMENTAL SHEET

CONTRACT CHANGE ORDER NO. 76S1

SHEET 21 OF 21

THE CONTRACTOR SHALL VERIFY ALL CONTROLLING FIELD DIMENSIONS BEFORE ORDERING OR FABRICATING ANY MATERIAL.

◇1 Revised some V-Grooves to traction ribs - 3/4/11

	BY	CHECKED
DESIGN	E DELIS	A KARTOUM
DETAILS	A R DUDSAK	A KARTOUM
QUANTITIES	E DELIS	A KARTOUM

STATE OF CALIFORNIA
DEPARTMENT OF TRANSPORTATION

DIVISION OF ENGINEERING SERVICES
STRUCTURE DESIGN
SPECIAL DESIGNS BRANCH

CU 04251
EA 0120S1

BRIDGE NO. 34-0006 L/R
KILOMETER POST 1.6

SAN FRANCISCO OAKLAND BAY BRIDGE
EAST SPAN SEISMIC SAFETY PROJECT

OAKLAND APPROACH STRUCTURES
HINGES EW, EE, FW, FE AND ABUT 23 L&R

SEISMIC JOINT (TYPE I)

REINFORCEMENT DETAILS

DISREGARD PRINTS BEARING EARLIER REVISION DATES

REVISION DATES

SHEET 10 OF 10

ORIGINAL SCALE IN MILLIMETERS FOR REDUCED PLANS 0 10 20 30 40 50 60 70 80 90 100

Caltrans Metric

Sept 20, 2011

YBITS 1 CONTRACT

STATE OF CALIFORNIA - DEPARTMENT OF TRANSPORTATION

CONTRACT CHANGE ORDER

Change Requested by: Engineer

CCO 76	Suppl. No. 2	Contract No. 04 - 0120S4	Road SF-80-12.7/13.2	FED. AID LOC.: NO FED AID

To: **M C M CONSTRUCTION INC**

You are directed to make the following changes from the plans and specifications or do the following described work not included in the plans and specifications for this contract. ***NOTE: This change order is not effective until approved by the Engineer.***

Description of work to be done, estimate of quantities and prices to be paid. (Segregate between additional work at contract price, agreed price and force account.) Unless otherwise stated, rates for rental of equipment cover only such time as equipment is actually used and no allowance will be made for idle time. This last percentage shown is the net accumulated increase or decrease from the original quantity in the Engineer's Estimate.

Extra Work at Force Account:

As authorized by the Engineer, and in accordance with Section 4-1.03D, "Extra Work" and Section 9-1.03, "Force Account Payment", of the Standard Specifications, and Section 5-1.17, "Force Account Payment", of the Special Provisions, provide all labor, equipment and materials necessary for the jobsite storage of the modular seismic joints at Hinges EE, EW, FE and FW; and for the installation of these joints at Hinges EE, EW and FW; for the San Francisco-Oakland Bay Bridge East Span Seismic Safety Project Yerba Buena Island Transition Structures, Bridge Nos. 340006L/R. Work shall be in accordance with plans and specifications provided with Contract Change Order No. 76, Supplement No. 1.

Estimated Cost of Extra Work at Force Account = $600,000.00

Estimated Cost: Increase ☑ Decrease ☐ **$600,000.00**

By reason of this order the time of completion will be adjusted as follows: 0 days

01.23.12

Submitted by

Signature	Resident Engineer	Date
William Howe	William Howe, Senior R.E.	01-19-12

Approval Recommended by

Signature	Principal T.E.	Date
Mike Forner	Mike Forner	1-19-12

Engineer Approval by

Signature	Principal T.E.	Date
Mike Forner	Mike Forner	1-30-12

We the undersigned contractor, have given careful consideration to the change proposed and agree, if this proposal is approved, that we will provide all equipment, furnish the materials, except as may otherwise be noted above, and perform all services necessary for the work above specified, and will accept as full payment therefor the prices shown above.

NOTE: If you, the contractor, do not sign acceptance of this order, your attention is directed to the requirements of the specifications as to proceeding with the ordered work and filing a written protest within the time therein specified.

Contractor Acceptance by

Signature	(Print name and title)	Date
Treasurer	Edmund A. Ruski	1-26-2012

STATE OF CALIFORNIA - DEPARTMENT OF TRANSPORTATION

CONTRACT CHANGE ORDER

Change Requested by: Engineer

CCO 77	Suppl. No. 0	Contract No. 04 - 0120S4	Road SF-80-12.7/13.2	FED. AID LOC.: NO FED AID

To: **M C M CONSTRUCTION INC**

You are directed to make the following changes from the plans and specifications or do the following described work not included in the plans and specifications for this contract. ***NOTE: This change order is not effective until approved by the Engineer.***

Description of work to be done, estimate of quantities and prices to be paid. (Segregate between additional work at contract price, agreed price and force account.) Unless otherwise stated, rates for rental of equipment cover only such time as equipment is actually used and no allowance will be made for idle time. This last percentage shown is the net accumulated increase or decrease from the original quantity in the Engineer's Estimate.

Adjustment of Compensation at Lump Sum:

1) Compensate the Contractor for the additional costs required to construct revisions to the YBITS electrical system, including conduit support and embed changes per revised drawing numbers 205R1, 206R1, 207R1, 208R1, 240R1, 241R1 242R1 and 243R1; and added drawing numbers 208A, and 208B (attached Sheets 2 through 11 of this change order).

For this work, the Contractor will be paid the sum of $144,804.00. This sum constitutes full and complete compensation, including all markups for this change.

Adjustment of Compensation at Agreed Lump Sum = $144,804.00

2) Compensate the Contractor for the additional costs required to provide Stainless Steel 316 embeds in lieu of the specified Hot-Dipped Galvanized (HDG) for the future light pipe embeds, which are specified as Hot-Dipped Galvanized (HDG) in Special Provision Section 10-3.07, Support Hardware for Conduits, Cable Trays and Wireways Stainless Steel Power-Stud Anchor-Threaded Version. These embeds are correctly shown as Stainless Steel embeds on Contract Drawing 295 (E-176), Detail A and Detail B.

For this work, the Contractor will be paid the sum of $37,154.00. This sum constitutes full and complete compensation, including all markups for this change.

Adjustment of Compensation at Agreed Lump Sum = $37,154.00

Estimated Cost: **Increase** ☑ **Decrease** ☐ **$181,958.00**

By reason of this order the time of completion will be adjusted as follows: 0 days

Submitted by		
Signature Deanna Vilcheck	Resident Engineer for William Howe, Senior R.E.	Date 6/13/12
Approval Recommended by		
Signature Deanna Vilcheck	Area Construction Manager Deanna Vilcheck	Date 6/13/12
Engineer Approval by		
Signature Deanna Vilcheck	Area Construction Manager Deanna Vilcheck	Date 7/18/12

We the undersigned contractor, have given careful consideration to the change proposed and agree, if this proposal is approved, that we will provide all equipment, furnish the materials, except as may otherwise be noted above, and perform all services necessary for the work above specified, and will accept as full payment therefor the prices shown above.

NOTE: If you, the contractor, do not sign acceptance of this order, your attention is directed to the requirements of the specifications as to proceeding with the ordered work and filing a written protest within the time therein specified.

Contractor Acceptance by		
Signature	(Print name and title) EDMUNDO A. PUCHI, TREASURER	Date 7/12/12

Dist	COUNTY	ROUTE	KILOMETER POST TOTAL PROJECT	SHEET No.	TOTAL SHEETS
04	SF	80	12.7/13.2	205 R1	806

REGISTERED ELECTRICAL ENGINEER 2/14/08

6-23-08
PLANS APPROVAL DATE

REGISTERED PROFESSIONAL ENGINEER FADI WALJEDDINE No. 11865 Exp. 12/31/09 ELECTRICAL STATE OF CALIFORNIA

THE STATE OF CALIFORNIA OR ITS OFFICERS OR AGENTS SHALL NOT BE RESPONSIBLE FOR THE ACCURACY OR COMPLETENESS OF ELECTRONIC COPIES OF THIS PLAN SHEET.

PB AMERICAS, Inc.
A Parsons Brinckerhoff Company
303 Second St., Suite 700N
San Francisco, CA 94107-1317

7

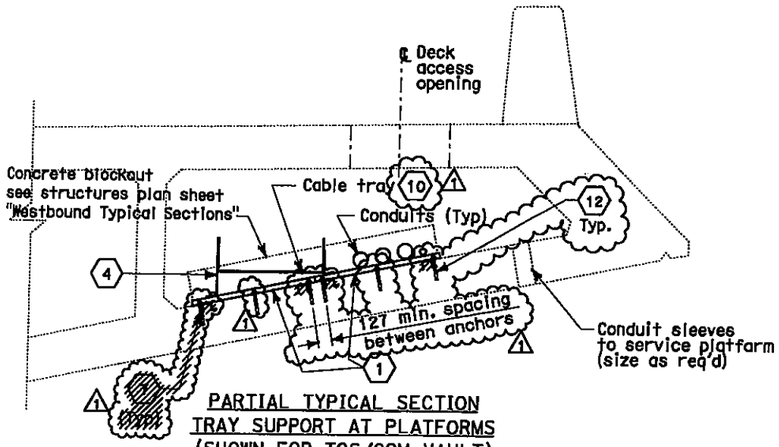

PARTIAL TYPICAL SECTION TRAY SUPPORT AT PLATFORMS (SHOWN FOR TOS/COM VAULT)

DETAIL 1 (3)
NO SCALE

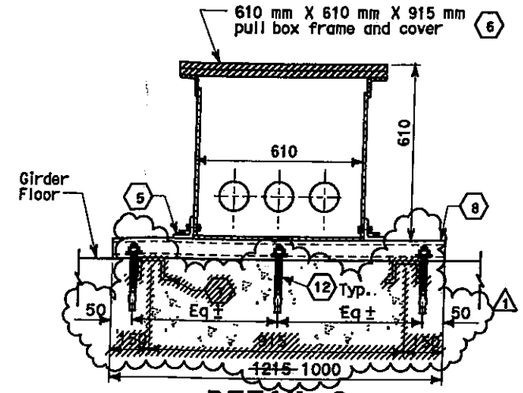

DETAIL 2
NO SCALE

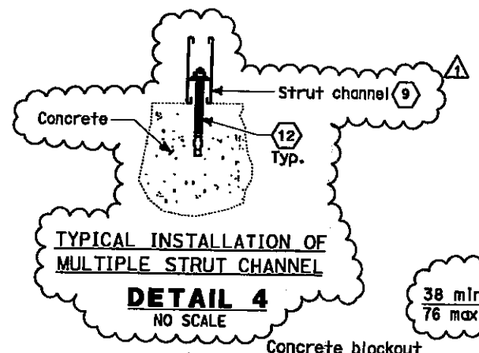

TYPICAL INSTALLATION OF MULTIPLE STRUT CHANNEL

DETAIL 4
NO SCALE

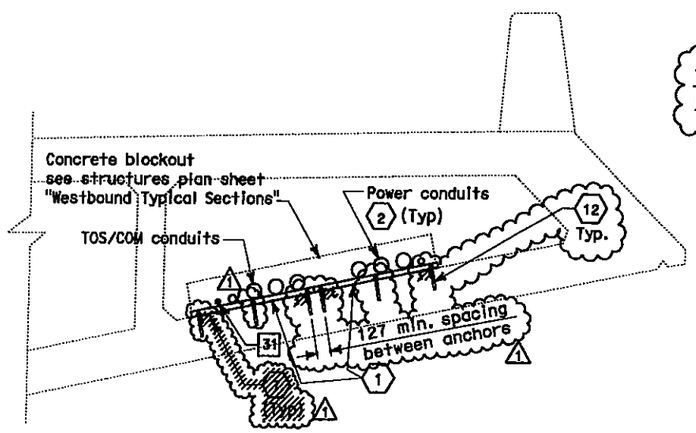

PARTIAL TYPICAL SECTION - CONDUIT SUPPORT

DETAIL 3
NO SCALE

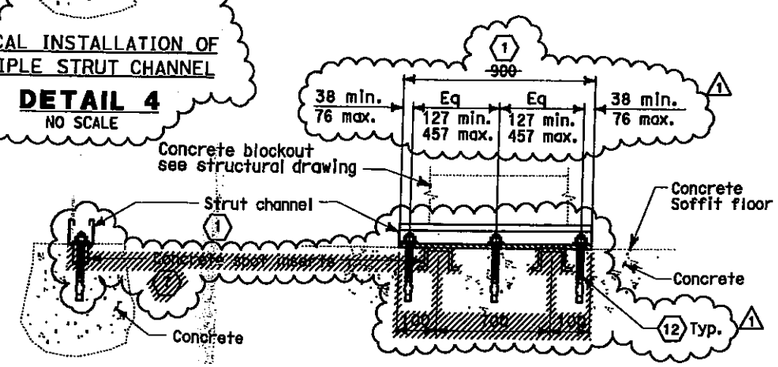

~~EMBEDDED CONCRETE SPOT INSERTS AND TYPICAL STRUT CHANNEL INSTALLATION DETAIL~~ (13)
NO SCALE

SHEET NOTES:

1. Galvanized strut channel, 41 mm x 41 mm ~~channel~~ length shall be approximately ~~900~~ 1000 mm or 2000 mm as required to support conduits and trays.
2. Use stainless steel conduit clamps/strap for clamping conduits to strut channel.
3. DETAIL 1 is shown for TOS/COM vault. For the 600 V cable tray and conduit locations, see plan sheets.
4. Use raised support plate for leveling trays where required.
5. Use stainless steel fittings for attaching pull box to strut channel.
6. PB-2A and PB-2E.
7. ~~Install two concrete spot inserts for each strut channel.~~
8. Install ~~Unistrut~~ strut channel to support PB-2A and ~~PB-2E~~.
9. Install single strut channel on top of the 41 mm x 41 mm strut channel or use double strut channel as required to accommodate the elevation of conduits as they enter through the concrete blockout.
10. Contractor may adjust orientation of cable tray to accommodate termination of conduits from adjacent cells. Contractor shall ensure electrical cables are appropriately tied down to cable tray as required.
11. Contractor shall ensure no reinforcement is cut or damaged during anchor installation. Contractor shall coordinate with structural plans for location of reinforcement and post tensioned tendons. Anchor spacing shall be adjusted as shown to avoid reinforcement.
12. Contractor shall use appropriate anchor bolts per the Table I shown. Anchor installation shall be per manufacturer's recommendation.
13. Detail shown is for 1000 mm long strut. For 2000 mm long strut, install five (5) equally spaced anchors.

NOTES:

1. Refer to structural drawings for location of utility openings.
2. For pull box schedule, see sheet E-69

TABLE I - ANCHOR SCHEDULE (11)(12)

ANCHOR DIAMETER	ANCHOR TYPE	MINIMUM EMBEDMENT DEPTH
9.5	ITW REDHEAD 'TRUBOLT' STAINLESS STEEL WEDGE ANCHOR OR APPROVED EQUAL (ESR2251)	76
12.7	POWER STUD-SDI STAINLESS STEEL ANCHOR OR APPROVED EQUAL (ESR2818)	95

REGISTERED PROFESSIONAL ENGINEER SAFWOOM A. MOHAMED No. 71894 Exp. 12/31/2011 CIVIL STATE OF CALIFORNIA

FOR REVISION ONLY

MARK	DATE	DESCRIPTIONS	BY	CH'D
1	07/29/11	ANCHOR BOLT INSTALLATION FOR STRUT SUPPORTS	TW RR	RG
		REVISIONS		

CONTRACT CHANGE ORDER NO. 77
SHEET 2 OF 11

DETAILS

~~YBI TRANSITON STRUCTURES GIRDER WESTBOUND (CONDUIT SUPPORT AND EMBEDDED CONCRETE INSERT CHANNEL)~~ (TYPICAL INSTALLATION AND SECTIONS)

~~SCALE AS NOTED~~

7 **REVISED PER ADDENDUM No. 7 DATED OCTOBER 19, 2009**

THIS PLAN ACCURATE FOR ELECTRICAL WORK ONLY.

ALL DIMENSIONS ARE IN MILLIMETERS UNLESS OTHERWISE SHOWN

E-86

STATE OF CALIFORNIA - DEPARTMENT OF TRANSPORTATION
CONSULTANT FUNCTIONAL SUPERVISOR: BEHZAD GOLEMOHAMMADI
CALCULATED-DESIGNED BY: FK
CHECKED BY: AB
REVISED BY / DATE REVISED

LAST REVISION 00-00-00 DATE PLOTTED => 02-AUG-2011 TIME PLOTTED => 08:53

Dist	COUNTY	ROUTE	KILOMETER POST TOTAL PROJECT	SHEET No.	TOTAL SHEETS
04	SF	80	12.7/13.2	206 R1	806

REGISTERED ELECTRICAL ENGINEER 2/14/08

6-23-08
PLANS APPROVAL DATE

REGISTERED PROFESSIONAL ENGINEER FADI MALIEDDINE No. 11885 Exp. 12/31/09 ELECTRICAL STATE OF CALIFORNIA

THE STATE OF CALIFORNIA OR ITS OFFICERS OR AGENTS SHALL NOT BE RESPONSIBLE FOR THE ACCURACY OR COMPLETENESS OF ELECTRONIC COPIES OF THIS PLAN SHEET.

PB AMERICAS, Inc.
A Parsons Brinckerhoff Company
303 Second St., Suite 700N
San Francisco, CA 94107-1317

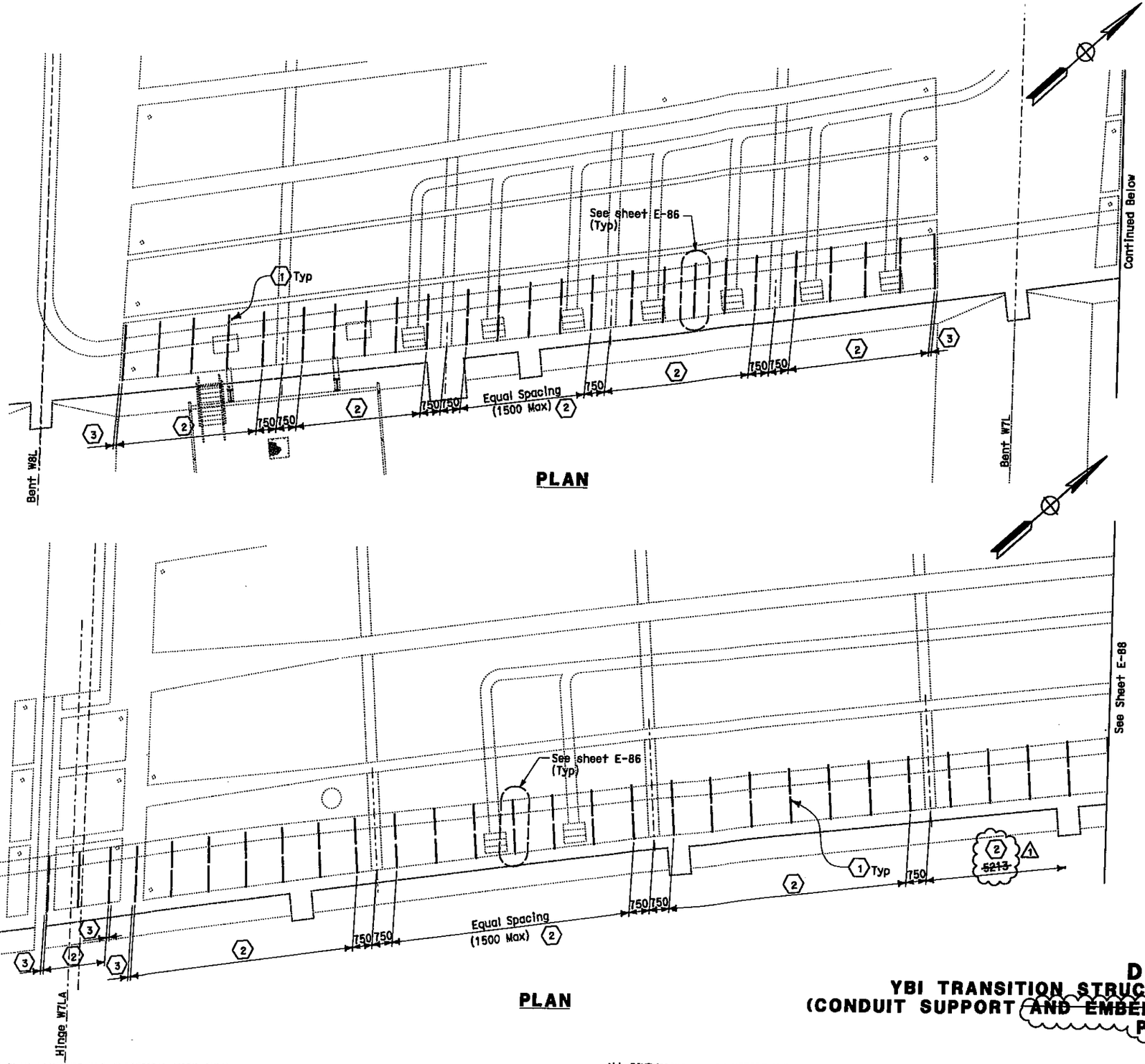

NOTES:

1. The Contractor to field ~~adjustment~~ adjust location of anchor bolts ~~concrete spot insert to avoid interference with bridge reinforcement~~. See E-86.
2. The strut channel shall ~~respond~~ correspond to conduit plan in girder level plan as shown on sheets E-73 thru E-76.

SHEET NOTES:

1. Install strut channel between intermediate diaphragms on the floor of the cells. Channel length shall be as required to support conduits and trays.
2. The Contractor to field adjust spacing of the ~~strut channels in the cells. However, spacing between anchor bolts spot channels shall not exceed 1500 mm.~~
3. Install strut channel 100 mm maximum from the cell wall.

MARK	DATE	DESCRIPTIONS	BY	CH'D
1	07/29/11	ANCHOR BOLT INSTALLATION FOR STRUT SUPPORTS	TW RR	RG

REVISIONS

CONTRACT CHANGE ORDER NO. 77
SHEET 3 OF 11

REGISTERED PROFESSIONAL ENGINEER SAFTUDDIN A. MOHAMED No. 71694 Exp. 12/31/2011 CIVIL STATE OF CALIFORNIA

FOR REVISION ONLY

DETAILS
YBI TRANSITION STRUCTURES GIRDER WESTBOUND
(CONDUIT SUPPORT ~~AND EMBEDDED CONCRETE INSERT CHANNEL~~ PLAN)

SCALE 1:75

THIS PLAN ACCURATE FOR ELECTRICAL WORK ONLY.

ALL DIMENSIONS ARE IN METERS UNLESS OTHERWISE SHOWN

E-87

STATE OF CALIFORNIA - DEPARTMENT OF TRANSPORTATION
Caltrans

CONSULTANT FUNCTIONAL SUPERVISOR: BEHZAD GOLEMOHAMMADI
CALCULATED-DESIGNED BY: FK
CHECKED BY: AB
REVISED BY / DATE REVISED

LAST REVISION 00-00-00
DATE PLOTTED => 28-JUL-2011
TIME PLOTTED => 15:56

BORDER LAST REVISED 3/1/2007
RELATIVE BORDER SCALE IS IN MILLIMETERS 0 20 40 60 80
USERNAME => llorico
DGN FILE => 40120sua087r01.dgn
CU 04251
EA 0120S1

District	COUNTY	ROUTE	KILOMETER POST TOTAL PROJECT	SHEET No.	TOTAL SHEETS
04	SF	80	12.7/13.2	207 R1	806

REGISTERED ELECTRICAL ENGINEER 2/14/08

6-23-08
PLANS APPROVAL DATE

REGISTERED PROFESSIONAL ENGINEER FADI WALIEDDINE No. 11968 Exp. 12/31/09 ELECTRICAL STATE OF CALIFORNIA

THE STATE OF CALIFORNIA OR ITS OFFICERS OR AGENTS SHALL NOT BE RESPONSIBLE FOR THE ACCURACY OR COMPLETENESS OF ELECTRONIC COPIES OF THIS PLAN SHEET.

PB AMERICAS, Inc.
A Parsons Brinckerhoff Company
303 Second St., Suite 700N
San Francisco, CA 94107-1317

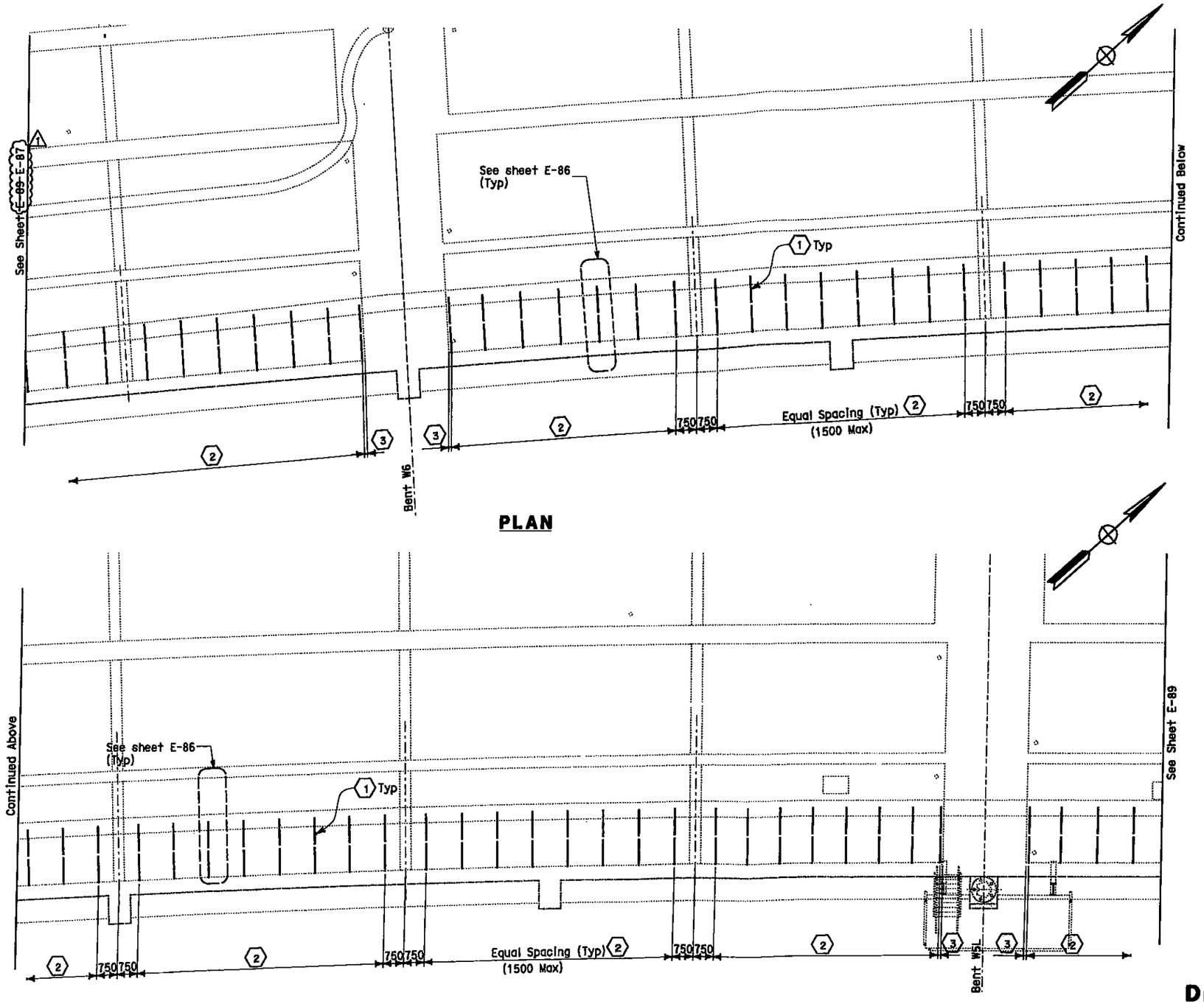

NOTES:

1. The Contractor to field adjustment adjust location of anchor bolts generate spot insert to avoid interference with bridge reinforcement. See E-86.
2. The strut channel shall respond correspond to conduit plan in girder level plan as shown on sheets E-73 thru E-76.

SHEET NOTES:

1. Install strut channel between intermediate diaphragms on the floor of the cells. Channel length shall be as required to support conduits and trays.
2. The Contractor to field adjust spacing of the strut channels in the cells. However, spacing between anchor bolts spot channels shall not exceed 1500 mm.
3. Install strut channel 100 mm maximum from the cell wall.

MARK	DATE	DESCRIPTIONS	BY	CH'D
1	07/29/11	ANCHOR BOLT INSTALLATION FOR STRUT SUPPORTS	TW RR	RG

REVISIONS

CONTRACT CHANGE ORDER NO. 77
SHEET 4 OF 11

REGISTERED PROFESSIONAL ENGINEER SAFIUDDIN A. MOHAMED No. 71894 Exp. 12/31/2011 CIVIL STATE OF CALIFORNIA

FOR REVISION ONLY
1

DETAILS
YBI TRANSITION STRUCTURES GIRDER WESTBOUND
(CONDUIT SUPPORT AND EMBEDDED CONCRETE INSERT CHANNEL) PLAN)

SCALE 1:75 1

E-88

THIS PLAN ACCURATE FOR ELECTRICAL WORK ONLY.

ALL DIMENSIONS ARE IN METERS UNLESS OTHERWISE SHOWN

STATE OF CALIFORNIA - DEPARTMENT OF TRANSPORTATION
Caltrans

CONSULTANT FUNCTIONAL SUPERVISOR: BEHZAD GOLEMOHAMMADI
CALCULATED-DESIGNED BY: FK
CHECKED BY: AB
REVISED BY
DATE REVISED

LAST REVISION 00-00-00
DATE PLOTTED => 02-AUG-2011
TIME PLOTTED => 08:53

BORDER LAST REVISED 3/1/2007
RELATIVE BORDER SCALE IS IN MILLIMETERS 0 20 40 60 80
USERNAME => florico
DGN FILE => 40120sua088r01.dgn
CU 04251
EA 0120S1

District	COUNTY	ROUTE	KILOMETER POST TOTAL PROJECT	SHEET No.	TOTAL SHEETS
04	SF	80	12.7/13.2	208A	806

REGISTERED ELECTRICAL ENGINEER 07/22/11

PLANS APPROVAL DATE

REGISTERED PROFESSIONAL ENGINEER SAFIUDDIN A. MOHAMED No. 71894 Exp. 12/31/2011 CIVIL STATE OF CALIFORNIA

THE STATE OF CALIFORNIA OR ITS OFFICERS OR AGENTS SHALL NOT BE RESPONSIBLE FOR THE ACCURACY OR COMPLETENESS OF ELECTRONIC COPIES OF THIS PLAN SHEET.

PB AMERICAS, Inc.
A Parsons Brinckerhoff Company
303 Second St., Suite 700N
San Francisco, CA 94107-1317

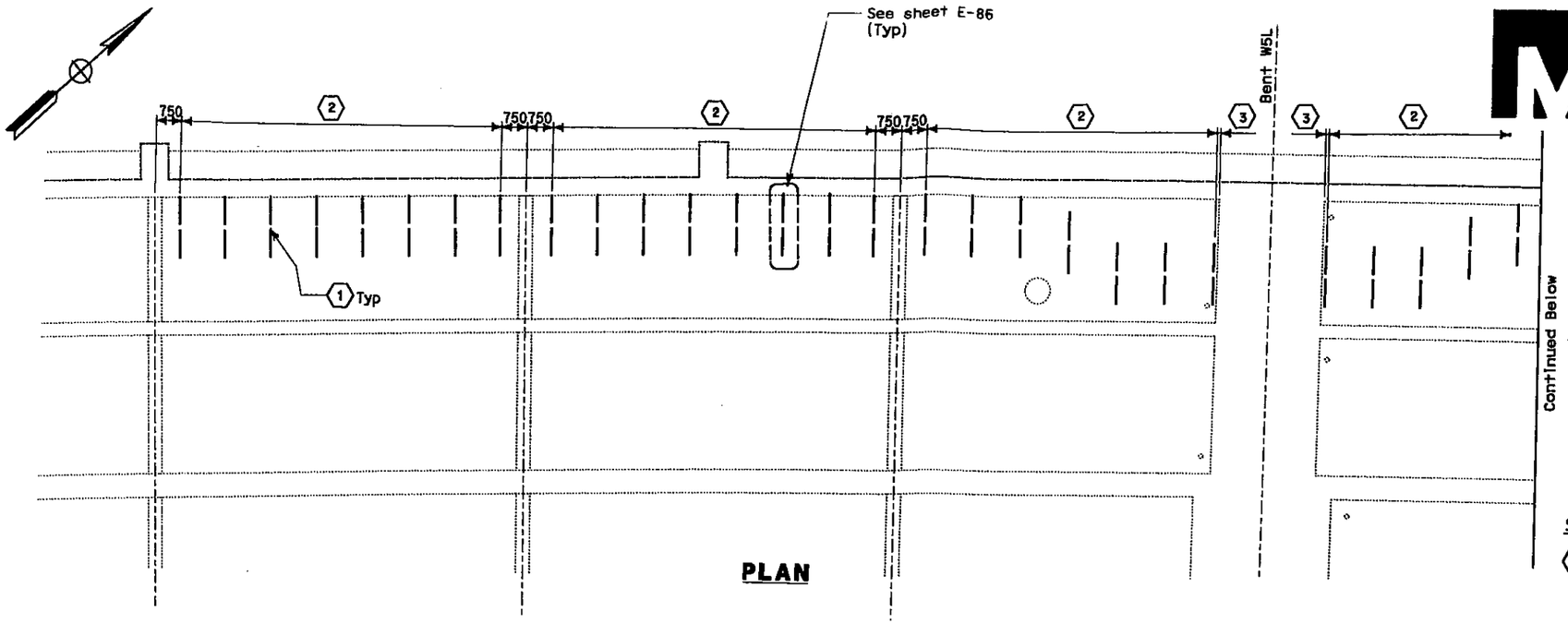

NOTES:

1. The Contractor to field adjust location of anchor bolts to avoid interference with bridge reinforcement. See E-86.
2. The strut channel shall correspond to conduit plan in girder level plan as shown on sheets E-73 thru E-76.

SHEET NOTES:

(1) Install strut channel between intermediate diaphragms on the floor of the cells. Channel length shall be as required to support conduits and trays.

(2) The Contractor to field adjust spacing of the strut channels in the cells.

(3) Install strut channel 100 mm maximum from the cell wall.

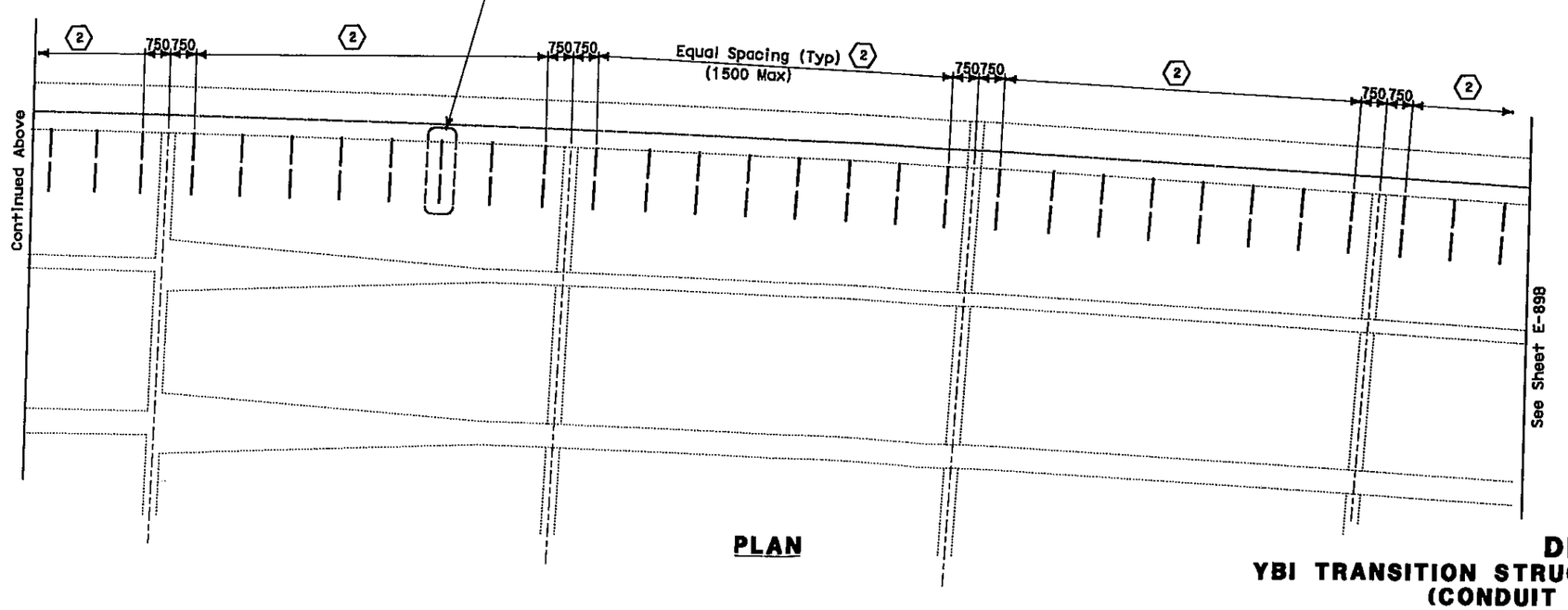

MARK	DATE	DESCRIPTIONS	BY	CH'D
1	07/28/11	ANCHOR BOLT INSTALLATION FOR STRUT SUPPORTS	TW RR	RG

REVISIONS

CONTRACT CHANGE ORDER NO. 77
SHEET 5 OF 11

DETAILS
YBI TRANSITION STRUCTURES GIRDER WESTBOUND (CONDUIT SUPPORT PLAN)
SCALE: 1:75

E-89A

STATE OF CALIFORNIA - DEPARTMENT OF TRANSPORTATION
Caltrans

CONSULTANT FUNCTIONAL SUPERVISOR: BRADY NADELL
CALCULATED-DESIGNED BY: TOM WU
CHECKED BY: ROCKY GARCIA
REVISED BY / DATE REVISED

THIS PLAN ACCURATE FOR ELECTRICAL WORK ONLY.

ALL DIMENSIONS ARE IN METERS UNLESS OTHERWISE SHOWN

LAST REVISION 00-00-00 DATE PLOTTED => 28-JUL-2011 TIME PLOTTED => 15:56

Dist	COUNTY	ROUTE	KILOMETER POST TOTAL PROJECT	SHEET No.	TOTAL SHEETS
04	SF	80	12.7/13.2	208B	806

REGISTERED ELECTRICAL ENGINEER 07/22/11

PLANS APPROVAL DATE

REGISTERED PROFESSIONAL ENGINEER SAIFUDDIN A. MOHAMED No. 71894 Exp. 12/31/2011 CIVIL STATE OF CALIFORNIA

THE STATE OF CALIFORNIA OR ITS OFFICERS OR AGENTS SHALL NOT BE RESPONSIBLE FOR THE ACCURACY OR COMPLETENESS OF ELECTRONIC COPIES OF THIS PLAN SHEET.

PB AMERICAS, Inc.
A Parsons Brinckerhoff Company
303 Second St., Suite 700N
San Francisco, CA 94107-1317

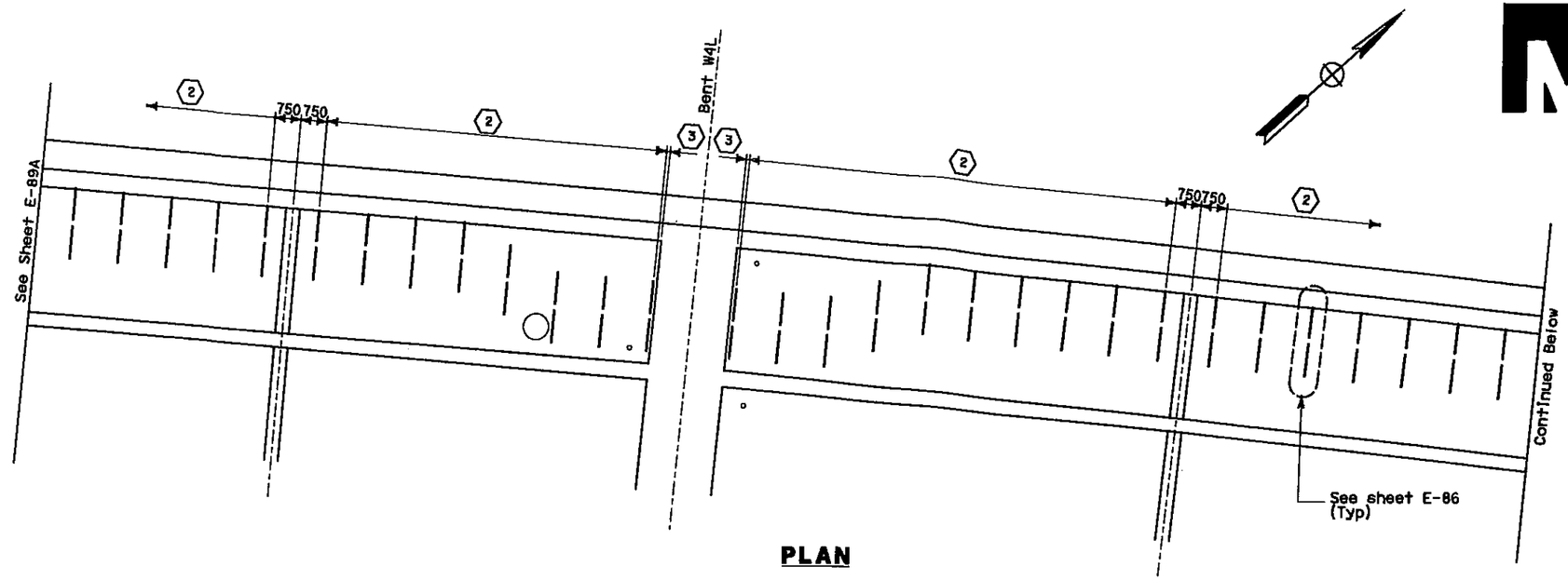

PLAN

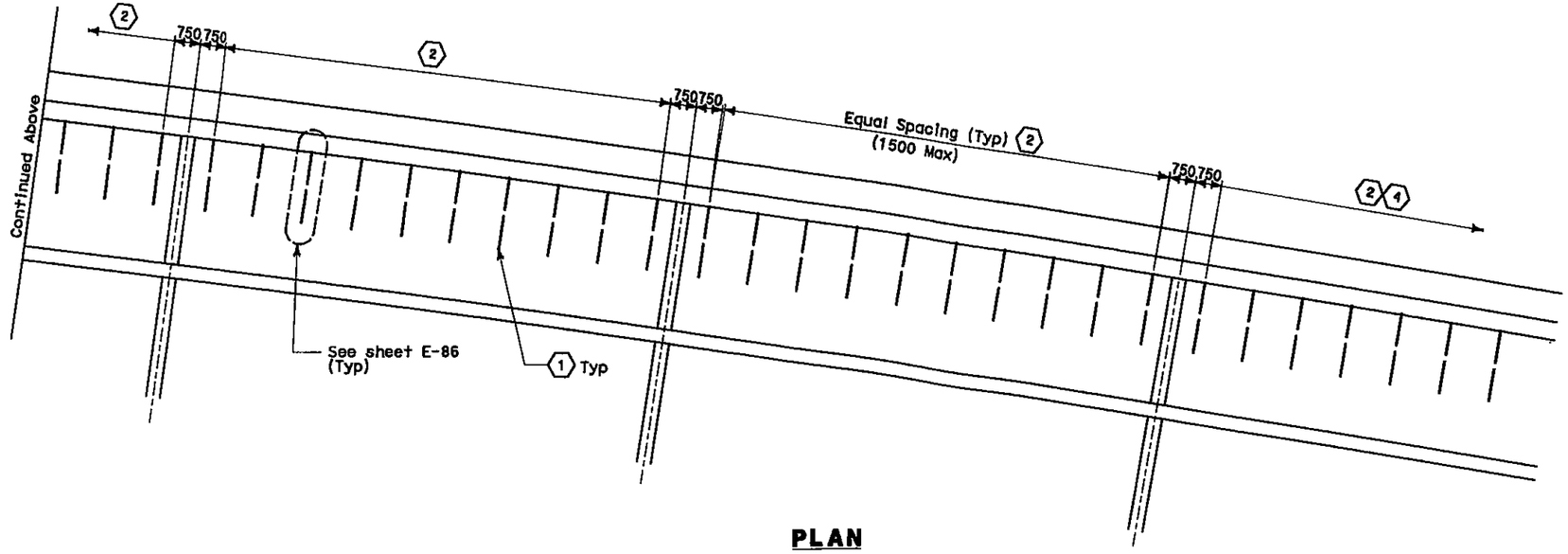

PLAN

NOTES:

1. The Contractor to field adjust location of anchor bolts to avoid interference with bridge reinforcement. See E-86.
2. The strut channel shall correspond to conduit plan in girder level plan as shown on sheets E-73 thru E-76.

SHEET NOTES:

(1) Install strut channel between intermediate diaphragms on the floor of the cells. Channel length shall be as required to support conduits and trays.

(2) The Contractor to field adjust spacing of the strut channels in the cells.

(3) Install strut channel 100 mm maximum from the cell wall.

(4) Install strut channels to W3L.

MARK	DATE	DESCRIPTIONS	BY	CH'D
1	07/22/11	ANCHOR BOLT INSTALLATION FOR STRUT SUPPORTS	TW RR	RG

REVISIONS

CONTRACT CHANGE ORDER NO. 77
SHEET 6 OF 11

DETAILS
YBI TRANSITION STRUCTURES GIRDER WESTBOUND (CONDUIT SUPPORT PLAN)
SCALE: 1:75

E-89B

THIS PLAN ACCURATE FOR ELECTRICAL WORK ONLY.

ALL DIMENSIONS ARE IN METERS UNLESS OTHERWISE SHOWN

STATE OF CALIFORNIA - DEPARTMENT OF TRANSPORTATION
Caltrans

CONSULTANT FUNCTIONAL SUPERVISOR: BRADY NADELL
CALCULATED-DESIGNED BY: TOM WU
CHECKED BY: ROCKY GARCIA
REVISED BY / DATE REVISED

LAST REVISION 00-00-00
DATE PLOTTED => 28-JUL-2011
TIME PLOTTED => 16:03

Dist	COUNTY	ROUTE	KILOMETER POST TOTAL PROJECT	SHEET No.	TOTAL SHEETS
04	SF	80	12.7/13.2	208 R1	806

REGISTERED ELECTRICAL ENGINEER 2/14/08

6-23-08
PLANS APPROVAL DATE

REGISTERED PROFESSIONAL ENGINEER FADI MALTEDDINE No. 11868 Exp. 12/31/08 ELECTRICAL STATE OF CALIFORNIA

THE STATE OF CALIFORNIA OR ITS OFFICERS OR AGENTS SHALL NOT BE RESPONSIBLE FOR THE ACCURACY OR COMPLETENESS OF ELECTRONIC COPIES OF THIS PLAN SHEET.

PB AMERICAS, Inc.
A Parsons Brinckerhoff Company
303 Second St., Suite 700N
San Francisco, CA 94107-1317

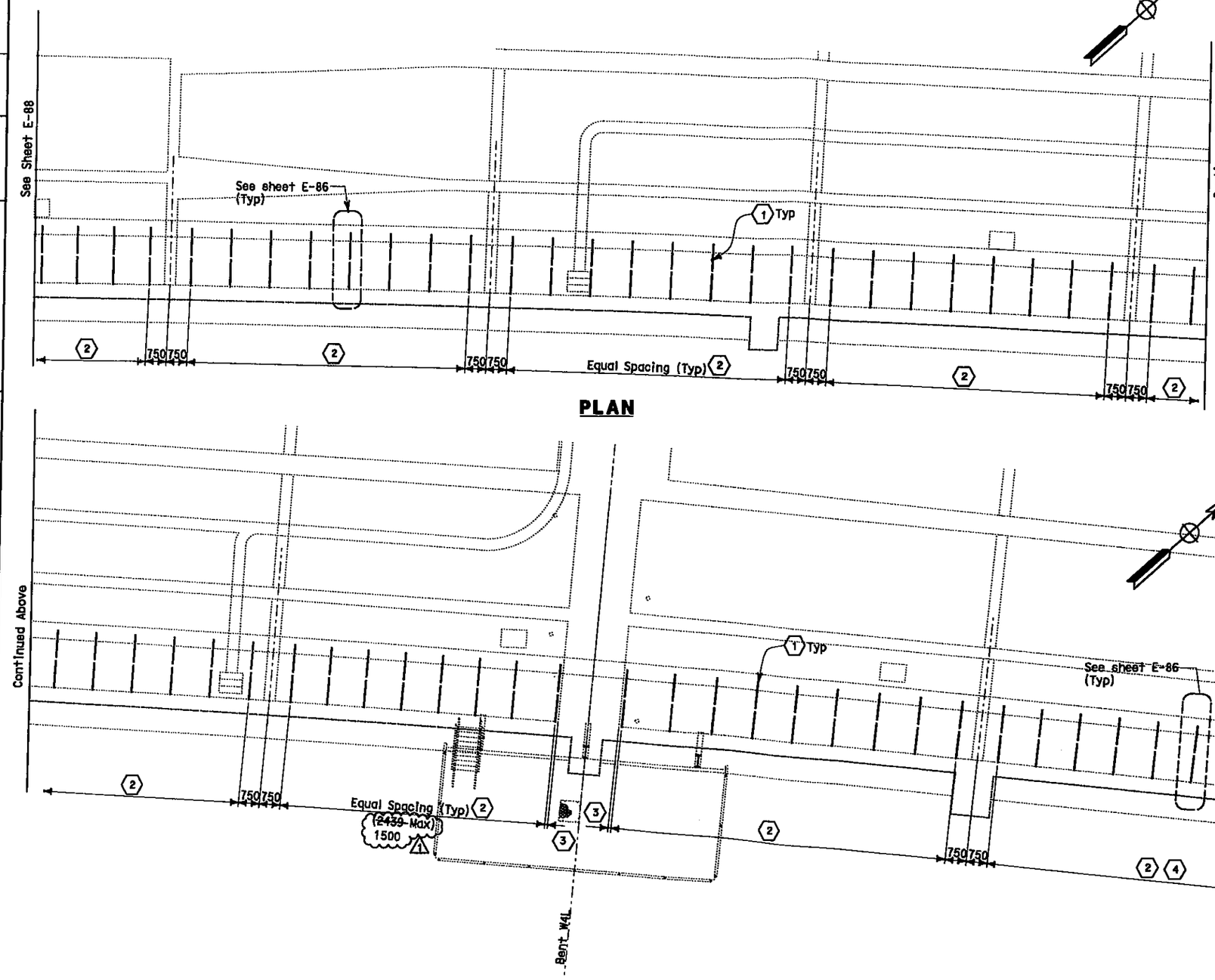

PLAN

PLAN

NOTES:

1. The Contractor to field ~~adjustment~~ adjust location of anchor bolts ~~concrete spot insert~~ to avoid ~~interference with bridge reinforcement~~. See E-86. 1
2. The strut channel shall ~~respond~~ correspond to conduit plan in girder ~~level plan as shown~~ on sheets E-73 thru E-76. 1

SHEET NOTES:

1. Install strut channel between intermediate diaphragms on the floor of the cells. Channel length shall be as required to support conduits and trays.
2. The Contractor to field adjust spacing of the ~~strut channels in the cells. However, spacing between anchor bolts spot channels shall not exceed 1500 mm.~~ 1
3. Install strut channel 100 mm maximum from the cell wall.

MARK	DATE	DESCRIPTIONS REVISIONS	BY	CH'D
1	01/29/11	ANCHOR BOLT INSTALLATION FOR STRUT SUPPORTS	TM RR	RG

CONTRACT CHANGE ORDER NO. 77
SHEET 7 OF 11

REGISTERED PROFESSIONAL ENGINEER SAFIUDDIN A. MOHAMED No. 71894 Exp. 12/31/2011 CIVIL STATE OF CALIFORNIA

FOR REVISION ONLY 1

DETAILS
YBI TRANSITION STRUCTURES GIRDER WESTBOUND
(CONDUIT SUPPORT ~~AND EMBEDDED CONCRETE INSERT CHANNEL~~ PLAN)

SCALE 1:75 1

E-89

THIS PLAN ACCURATE FOR ELECTRICAL WORK ONLY.

ALL DIMENSIONS ARE IN METERS UNLESS OTHERWISE SHOWN

STATE OF CALIFORNIA - DEPARTMENT OF TRANSPORTATION
Caltrans

CONSULTANT FUNCTIONAL SUPERVISOR: BEHZAD GOLEMOHAMMADI
CALCULATED-DESIGNED BY: FK
CHECKED BY: AB
REVISED BY
DATE REVISED

LAST REVISION 00-00-00
DATE PLOTTED => 28-JUL-2011
TIME PLOTTED => 15:56

Dist	COUNTY	ROUTE	KILOMETER POST TOTAL PROJECT	SHEET No.	TOTAL SHEETS
04	SF	80	12.7/13.2	240 R1	806

REGISTERED ELECTRICAL ENGINEER 2/14/08

6-23-08
PLANS APPROVAL DATE

REGISTERED PROFESSIONAL ENGINEER FADI WALTEDDINE No. 11885 Exp. 12/31/09 ELECTRICAL STATE OF CALIFORNIA

THE STATE OF CALIFORNIA OR ITS OFFICERS OR AGENTS SHALL NOT BE RESPONSIBLE FOR THE ACCURACY OR COMPLETENESS OF ELECTRONIC COPIES OF THIS PLAN SHEET.

PB AMERICAS, Inc.
A Parsons Brinckerhoff Company
303 Second St., Suite 700N
San Francisco, CA 94107-1317

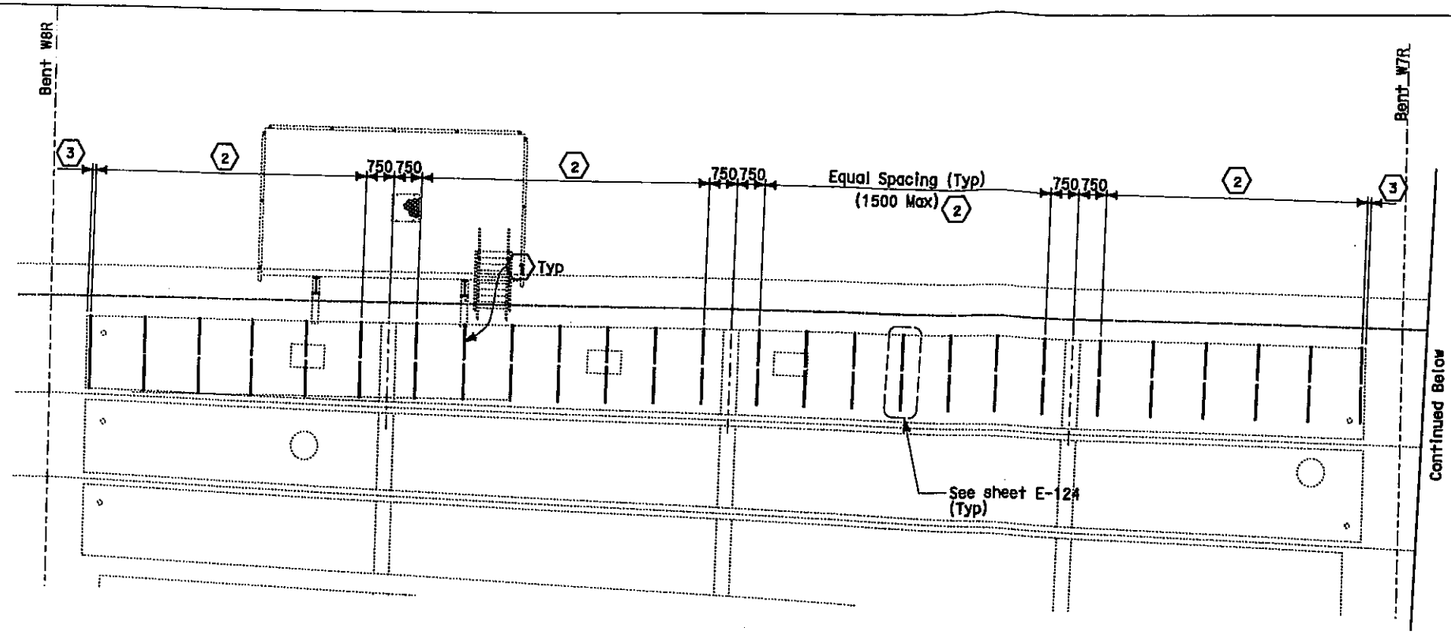

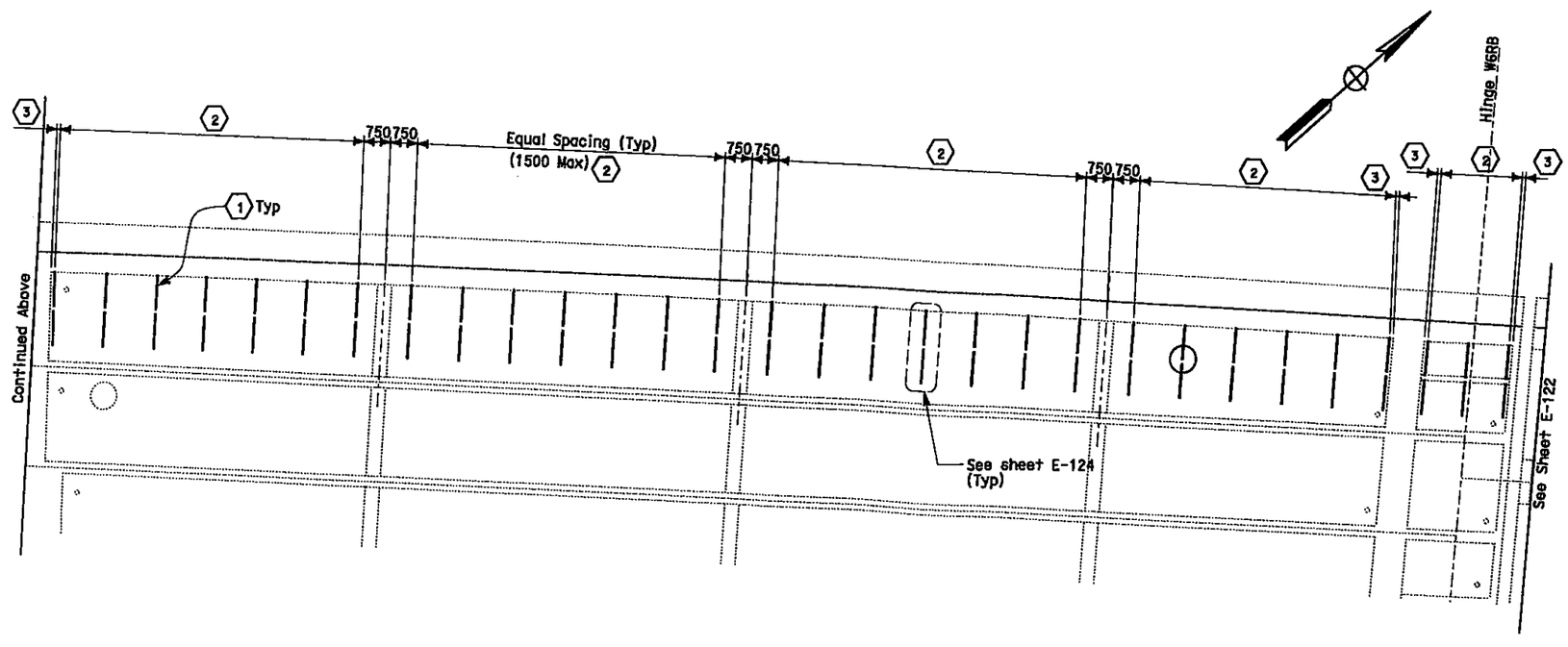

NOTES:

1. The Contractor to field ~~adjustment~~ adjust location of anchor bolts ~~concrete spot insert to avoid interference with bridge reinforcement~~. See E-124. △1
2. The strut channel shall ~~respond~~ correspond to conduit plan in girder ~~level plan as shown on~~ sheets E-117 thru E-120. △1

SHEET NOTES:

1. Install strut channel between intermediate diaphragms on the floor of the cells. Channel length shall be as required to support conduits and trays.
2. The Contractor to field adjust spacing of the ~~strut channels in the cells. However, spacing between anchor bolts spot channels shall not exceed 1500 mm.~~ △1
3. Install strut channel 100 mm maximum from the cell wall.

MARK	DATE	DESCRIPTIONS	BY	CH'D
△1	07/29/11	ANCHOR BOLT INSTALLATION FOR STRUT SUPPORTS	TW RR	RG
		REVISIONS		

CONTRACT CHANGE ORDER NO. 77
SHEET 8 OF 11

REGISTERED PROFESSIONAL ENGINEER SAFIUDDIN A. MOHAMED No. 71884 Exp. 12/31/2011 CIVIL STATE OF CALIFORNIA

FOR REVISION ONLY △1

DETAILS
YBI TRANSITION STRUCTURES GIRDER WESTBOUND
(CONDUIT SUPPORT ~~AND EMBEDDED CONCRETE INSERT CHANNEL~~ PLAN) △1

SCALE 1:75

E-121

REVISED BY	DATE REVISED
FK	AB

CALCULATED-DESIGNED BY: AB
CHECKED BY:

CONSULTANT FUNCTIONAL SUPERVISOR: BEHZAD GOLEMOHAMMADI

STATE OF CALIFORNIA - DEPARTMENT OF TRANSPORTATION

LAST REVISION 00-00-00 | DATE PLOTTED => 28-JUL-2011 | TIME PLOTTED => 15:56

THIS PLAN ACCURATE FOR ELECTRICAL WORK ONLY.

ALL DIMENSIONS ARE IN METERS UNLESS OTHERWISE SHOWN

BORDER LAST REVISED 3/1/2007

RELATIVE BORDER SCALE IS IN MILLIMETERS 0 20 40 60 80

USERNAME => llorico
DGN FILE => 40120sua121r01.dgn

CU 04251

EA 0120S1

Dist	COUNTY	ROUTE	KILOMETER POST TOTAL PROJECT	SHEET No.	TOTAL SHEETS
04	SF	80	12.7/13.2	241 R1	806

REGISTERED ELECTRICAL ENGINEER 2/14/08

6-23-08
PLANS APPROVAL DATE

REGISTERED PROFESSIONAL ENGINEER FADI WALIEDDINE No. 11865 Exp. 12/31/09 ELECTRICAL STATE OF CALIFORNIA

THE STATE OF CALIFORNIA OR ITS OFFICERS OR AGENTS SHALL NOT BE RESPONSIBLE FOR THE ACCURACY OR COMPLETENESS OF ELECTRONIC COPIES OF THIS PLAN SHEET.

PB AMERICAS, Inc.
A Parsons Brinckerhoff Company
303 Second St., Suite 700N
San Francisco, CA 94107-1317

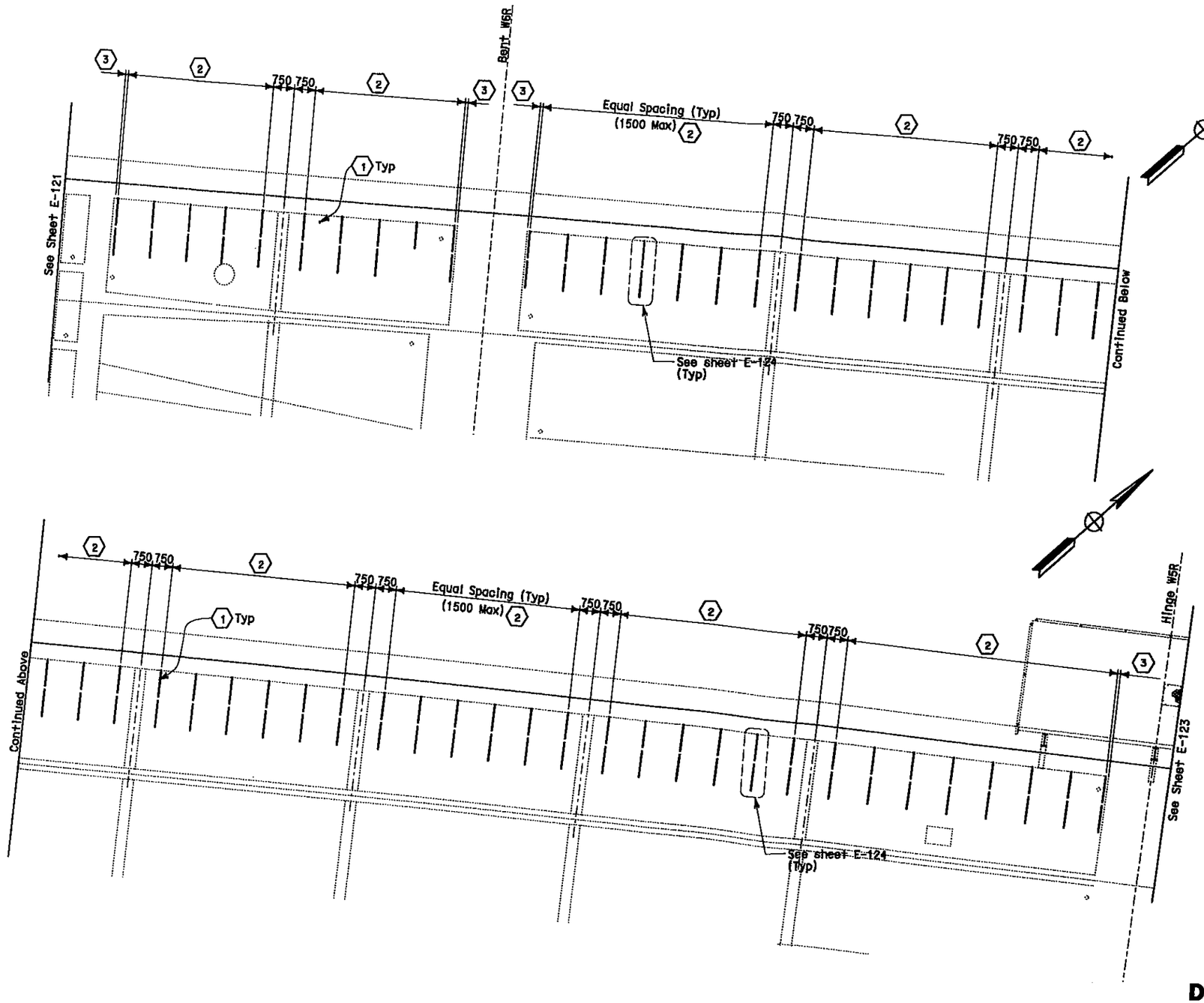

NOTES:

1. The Contractor to field adjustment adjust location of anchor bolts concrete spot insert to avoid interference with bridge reinforcement. See E-124. 1
2. The strut channel shall respond correspond to conduit plan in girder level plan as shown on sheets E-117 thru E-120. 1

SHEET NOTES:

1. Install strut channel between intermediate diaphragms on the floor of the cells. Channel length shall be as required to support conduits and trays.
2. The Contractor to field adjust spacing of the strut channels in the cells. However, spacing between anchor bolts spot channels shall not exceed 1500 mm. 1
3. Install strut channel 100 mm maximum from the cell wall.

MARK	DATE	DESCRIPTIONS	BY	CH'D
1	07/29/11	ANCHOR BOLT INSTALLATION FOR STRUT SUPPORTS	TW RR	RG

REVISIONS

CONTRACT CHANGE ORDER NO. 77
SHEET 9 OF 11

REGISTERED PROFESSIONAL ENGINEER SAFIUDDIN A. MOHAMED No. 71884 Exp. 12/31/2011 CIVIL STATE OF CALIFORNIA

FOR REVISION ONLY 1

DETAILS
YBI TRANSITION STRUCTURES GIRDER WESTBOUND
(CONDUIT SUPPORT AND EMBEDDED CONCRETE INSERT CHANNEL) PLAN) 1

SCALE 1:75

E-122

REVISED BY	DATE REVISED
FK	AB

CALCULATED-DESIGNED BY
CHECKED BY

CONSULTANT FUNCTIONAL SUPERVISOR
BEHZAD GOLEMOHAMMADI

STATE OF CALIFORNIA - DEPARTMENT OF TRANSPORTATION
Caltrans

THIS PLAN ACCURATE FOR ELECTRICAL WORK ONLY.

ALL DIMENSIONS ARE IN METERS UNLESS OTHERWISE SHOWN

LAST REVISION 00-00-00
DATE PLOTTED => 28-JUL-2011
TIME PLOTTED => 15:56

Dist	COUNTY	ROUTE	KILOMETER POST TOTAL PROJECT	SHEET No.	TOTAL SHEETS
04	SF	80	12.7/13.2	242 R1	806

REGISTERED ELECTRICAL ENGINEER 2/14/08

6-23-08
PLANS APPROVAL DATE

REGISTERED PROFESSIONAL ENGINEER FADI WALIEDDINE No. 11665 Exp. 12/31/09 ELECTRICAL STATE OF CALIFORNIA

THE STATE OF CALIFORNIA OR ITS OFFICERS OR AGENTS SHALL NOT BE RESPONSIBLE FOR THE ACCURACY OR COMPLETENESS OF ELECTRONIC COPIES OF THIS PLAN SHEET.

PB AMERICAS, Inc.
A Parsons Brinckerhoff Company
303 Second St., Suite 700N
San Francisco, CA 94107-1317

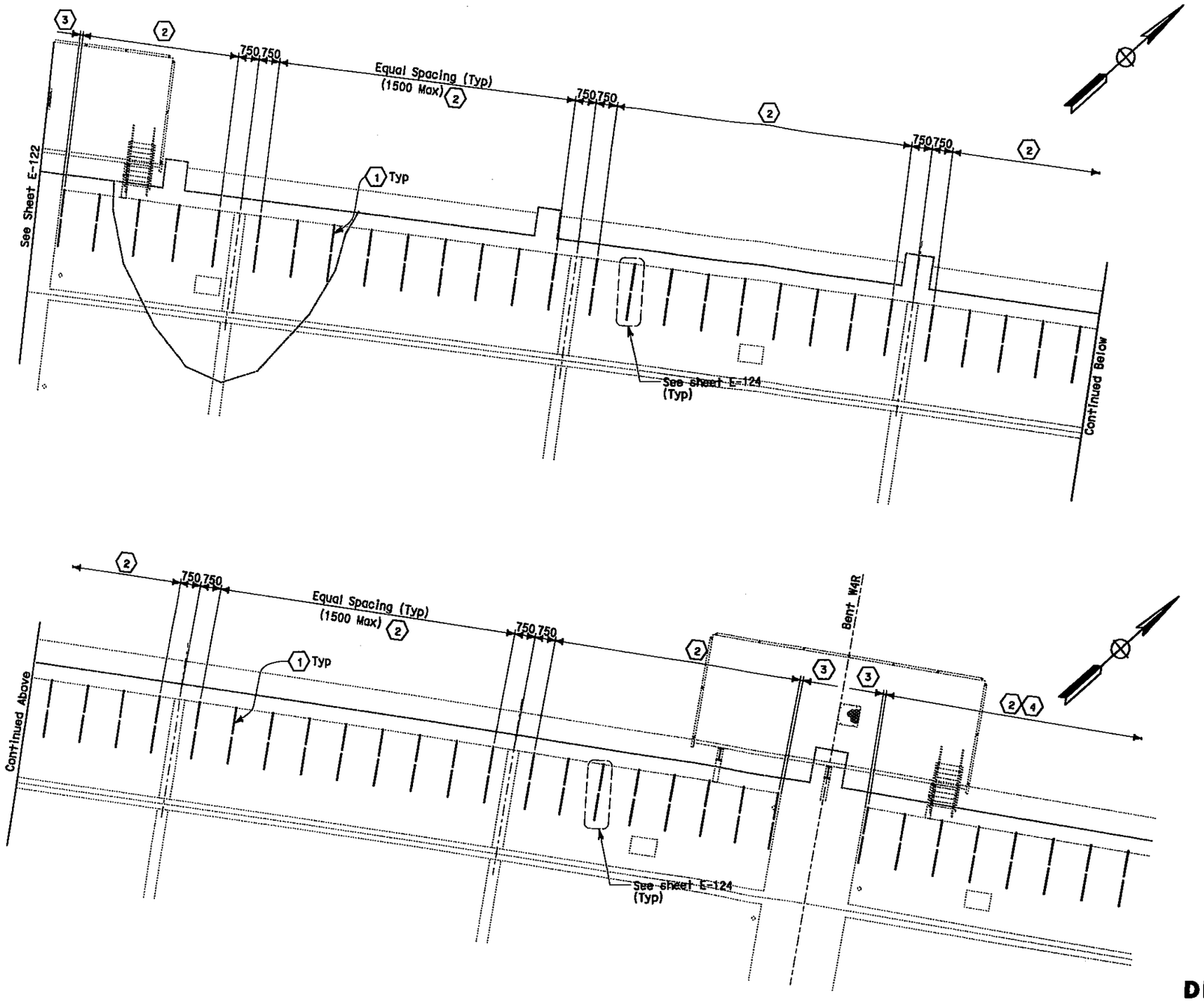

NOTES:

1. The Contractor to field adjustment adjust location of anchor bolts ~~generate spot insert to avoid interference with bridge reinforcement~~. See E-124. 1
2. The strut channel shall ~~respond~~ correspond to conduit plan in girder ~~level plan~~ as shown on sheets E-117 thru E-120. 1

SHEET NOTES:

1. Install strut channel between intermediate diaphragms on the floor of the cells. Channel length shall be as required to support conduits and trays.
2. The Contractor to field adjust spacing of the ~~strut channels in the cells. However, spacing between anchor bolts spot channels shall not exceed 1500 mm.~~ 1
3. Install strut channel 100 mm maximum from the cell wall.
4. Install strut channel to Hinge K.

MARK	DATE	DESCRIPTIONS	BY	CH'D
1	07/28/11	ANCHOR BOLT INSTALLATION FOR STRUT SUPPORTS	TW RR	RG
		REVISIONS		

CONTRACT CHANGE ORDER NO. 77
SHEET 10 OF 11

REGISTERED PROFESSIONAL ENGINEER SAFIUDDIN A. MOHAMED No. 71694 Exp. 12/31/2011 CIVIL STATE OF CALIFORNIA

FOR REVISION ONLY
1

DETAILS
YBI TRANSITION STRUCTURES GIRDER WESTBOUND
(CONDUIT SUPPORT ~~AND EMBEDDED CONCRETE INSERT CHANNEL~~ PLAN) 1

SCALE 1:75

E-123

STATE OF CALIFORNIA - DEPARTMENT OF TRANSPORTATION
Caltrans

CONSULTANT FUNCTIONAL SUPERVISOR: BEHZAD GOLEMOHAMMADI
CALCULATED-DESIGNED BY: FK
CHECKED BY: AB
REVISED BY / DATE REVISED

LAST REVISION 00-00-00
DATE PLOTTED => 28-JUL-2011
TIME PLOTTED => 15:56

THIS PLAN ACCURATE FOR ELECTRICAL WORK ONLY.

ALL DIMENSIONS ARE IN METERS UNLESS OTHERWISE SHOWN

BORDER LAST REVISED 3/1/2007

RELATIVE BORDER SCALE IS IN MILLIMETERS 0 20 40 60 80

USERNAME => florico
DGN FILE => 401206ua123r01.dgn

CU 04251

EA 0120S1

Dist	COUNTY	ROUTE	KILOMETER POST TOTAL PROJECT	SHEET No.	TOTAL SHEETS
04	SF	80	12.7/13.2	243 R1	806

REGISTERED ELECTRICAL ENGINEER 2/14/08

6-23-08
PLANS APPROVAL DATE

REGISTERED PROFESSIONAL ENGINEER FADI WALTEDDINE No. 11865 Exp. 12/31/09 ELECTRICAL STATE OF CALIFORNIA

THE STATE OF CALIFORNIA OR ITS OFFICERS OR AGENTS SHALL NOT BE RESPONSIBLE FOR THE ACCURACY OR COMPLETENESS OF ELECTRONIC COPIES OF THIS PLAN SHEET.

PB AMERICAS, Inc.
A Parsons Brinckerhoff Company
303 Second St., Suite 700N
San Francisco, CA 94107-1317

7

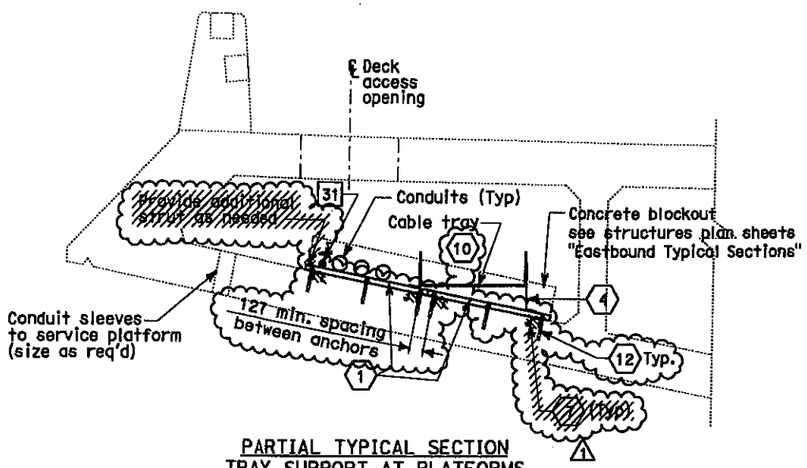

PARTIAL TYPICAL SECTION
TRAY SUPPORT AT PLATFORMS
(SHOWN FOR TOS/COM VAULT)

DETAIL 1 3
NO SCALE

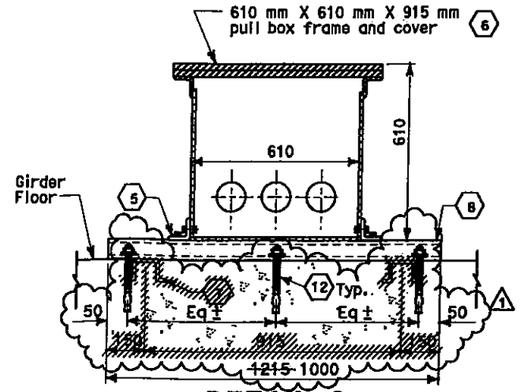

DETAIL 2
NO SCALE

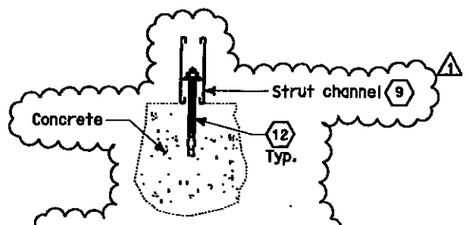

TYPICAL INSTALLATION OF
MULTIPLE STRUT CHANNEL

DETAIL 4
NO SCALE

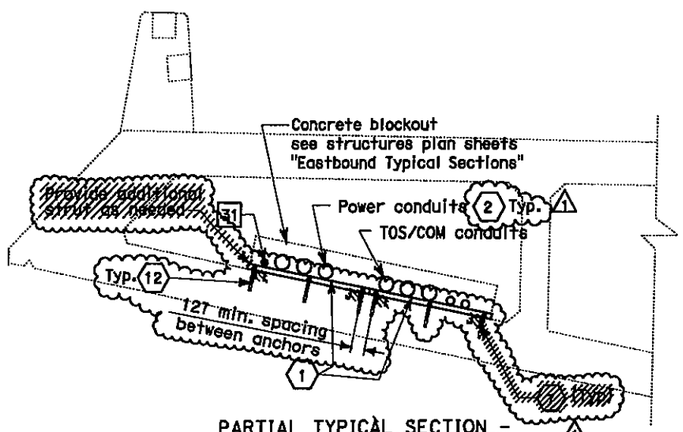

PARTIAL TYPICAL SECTION –
CONDUIT SUPPORT

DETAIL 3
NO SCALE

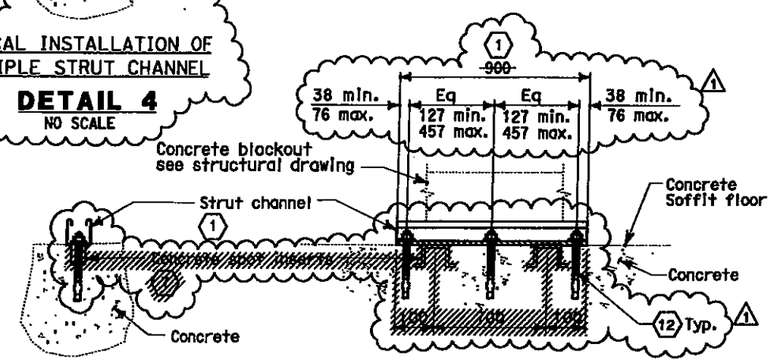

~~EMBEDDED CONCRETE SPOT INSERTS~~
~~AND TYPICAL STRUT CHANNEL INSTALLATION DETAIL~~ 13
NO SCALE

TABLE I - ANCHOR SCHEDULE 11 12		
ANCHOR DIAMETER	ANCHOR TYPE	MINIMUM EMBEDMENT DEPTH
9.5	ITW REDHEAD 'TRUBOLT' STAINLESS STEEL WEDGE ANCHOR OR APPROVED EQUAL (ESR2251)	76
12.7	POWER STUD-SDI STAINLESS STEEL ANCHOR OR APPROVED EQUAL (ESR2818)	95

REGISTERED PROFESSIONAL ENGINEER SAIFUDDIN A. MOHAMED No. 71894 Exp. 12/31/2011 CIVIL STATE OF CALIFORNIA

FOR REVISION ONLY

MARK	DATE	DESCRIPTIONS	BY	CH'D
1	07/29/11	ANCHOR BOLT INSTALLATION FOR STRUT SUPPORTS	TW RR	RG
		REVISIONS		

CONTRACT CHANGE ORDER NO. 77
SHEET 11 OF 11

SHEET NOTES:

1. Galvanized strut channel, 41 mm x 41 mm ~~channel~~ length shall be approximately ~~900~~ 1000 mm or 2000 mm as required to support conduits and trays.
2. Use stainless steel conduit clamps/strap for clamping conduits to strut channel.
3. DETAIL 1 is shown for TOS/COM vault. For the 600 V cable tray and conduit locations, see plan sheets.
4. Use raised support plate for leveling trays where required.
5. Use stainless steel fittings for attaching pull box to strut channel.
6. PB-2A and PB-2E.
7. ~~Install two concrete spot inserts for each strut channel.~~
8. Install ~~Unistrut~~ strut channel to support PB-2A and ~~PB-2E~~
9. Install single strut channel on top of the 41 mm x 41 mm strut channel or use double strut channel as required to accommodate the elevation of conduits as they enter through the concrete blockout.
10. Contractor may adjust orientation of cable tray to accommodate termination of conduits from adjacent cells. Contractor shall ensure electrical cables are appropriately tied down to cable tray as required.
11. Contractor shall ensure no reinforcement is cut or damaged during anchor installation. Contractor shall coordinate with structural plans for location of reinforcement and post tensioned tendons. Anchor spacing shall be adjusted as shown to avoid reinforcement.
12. Contractor shall use appropriate anchor bolts per the Table I shown. Anchor installation shall be per manufacturer's recommendation.
13. Detail shown is for 1000 mm long strut. For 2000 mm long strut, install five (5) equally spacsd anchors.

NOTES:

1. Refer to structural drawings for location of utility openings.
2. For pull box schedule, see sheet E-109.

DETAILS
YBI TRANSITION STRUCTURES GIRDER EASTBOUND (TYPICAL INSTALLATION AND SECTIONS)
SCALE AS NOTED

7 **REVISED PER ADDENDUM No. 7 DATED OCTOBER 19, 2009**

THIS PLAN ACCURATE FOR ELECTRICAL WORK ONLY.

ALL DIMENSIONS ARE IN MILLIMETERS UNLESS OTHERWISE SHOWN

E-124

STATE OF CALIFORNIA - DEPARTMENT OF TRANSPORTATION
Caltrans
CONSULTANT FUNCTIONAL SUPERVISOR: BEHZAD GOLEMOHAMMADI
CALCULATED-DESIGNED BY: FK
CHECKED BY: AB
REVISED BY / DATE REVISED

LAST REVISION 00-00-00
DATE PLOTTED => 02-AUG-2011
TIME PLOTTED => 08:53

PROGRAM CAS121
DATE 07/19/12
TIME 01:07 PM

STATE OF CALIFORNIA - DEPARTMENT OF TRANSPORTATION

RESIDENT ENGINEER HOWE, WILLIAM

PHONE NUMBER 510 385-7084

C O N T R A C T C H A N G E O R D E R 0 7 7 - 0 0 S

CONTRACT NO. 04-0120S4

FILING DATE 07/19/12

DESCRIPTION ELECTRICAL EMBEDS & SUPPORTS

CCO CATEGORY CBPC

APPROVAL DATE 07/18/12

TIME EXTENSION DAY NONE

ITEM NO.	DESCRIPTION OF CHANGE	APPROVED CHANGE QUANTITY	AMOUNT	CHANGES TO DATE CCO	QB	AUTHORIZED QUANTITY	QUANTITY PAID TO DATE	EST NO.
	ADJUSTMENT OF COMPENSATION -- LUMP SUM (+)		$181,958.00					
	NET CHANGE THIS C.C.O.		$181,958.00					
	AMOUNT OF 'BRIDGEWORK'		$0.00					

*** C.C.O. ACCEPTED AND FILED. ***

F E D E R A L DISP TYPE	P A R T I C I P A T I O N COST TYPE	COST	F E D E R A L S E G R E G A T I O N TYPE FUNDING SOURCE	PCT	FUNDING SOURCE	PCT
NEW N	181,958.00	.00				

STATE OF CALIFORNIA - DEPARTMENT OF TRANSPORTATION

CONTRACT CHANGE ORDER MEMORANDUM

DATE: 6/1/2012

TO: Deanna Vilcheck, ACM /	FILE: E.A. 04 - 0120S4
FROM: William Howe, Senior R.E.	CO-RTE-PM SF-80-12.7/13.2
	FED. NO. NO FED AID
CCO#: 77 SUPPLEMENT#: 0 Category Code: CBPC	CONTINGENCY BALANCE (incl. this change) $68,361,862.00
COST: $181,958.00 INCREASE ☑ DECREASE ☐	HEADQUARTERS APPROVAL REQUIRED? ☐ YES ☑ NO
SUPPLEMENTAL FUNDS PROVIDED: $0.00	IS THIS REQUEST IN ACCORDANCE WITH ENVIRONMENTAL DOCUMENTS? ☑ YES ☐ NO
CCO DESCRIPTION: Electrical Embeds & Supports	**PROJECT DESCRIPTION:** YBITS-1 (Yerba Buena Island Transition Structures)

Original Contract Time:	Time Adj. This Change:	Previously Approved CCO Time Adjustments:	Percentage Time Adjusted: (including this change)	Total # of Unreconciled Deferred Time CCO(s): (including this change)
1390 Day(s)	0 Day(s)	0 Day(s)	0 %	9

THIS CHANGE ORDER PROVIDES FOR:

This change order provides compensation to the Contractor for costs to revise electrical embeds, per drawings prepared by Caltrans Design (Sheets 2 through 11 of this change order), (reference RFI #116, copy attached); as well as to change the future light pipe embeds from Hot Dipped Galvanized (HDG) to Stainless Steel, (reference RFI #60, copy attached).

Compensation for this work shall be paid at a total Agreed Lump Sum cost of $181,958.00. This will be funded from the project's contingency fund. A cost analysis is on file.

No adjustment of contract time is warranted, as this change will not affect the controlling operation.

This change was requested and concurred by Bob Zandipour.

Maintenance concurrence will be obtained from Lina Ellis, HQ Strutures Maintenance.

CONCURRED BY:		
Construction Engineer:	William Howe	Date 6/13/12
Bridge Engineer:	Mehran Ardakanian	Date
Project Engineer:	Bob Zandipour, Design	Date 6-13-12
Project Manager:	Ken Terpstra	Date 6-13-12
FHWA Rep.:		Date
Environmental:		Date
Other (specify):	Lina Ellis, Str. Maintenance	Date 6-13-12
Other (specify):		Date
District Prior Approval By:		Date
HQ (Issue Approve) By:		Date
Resident Engineer's Signature:	Deanna Vilcheck	Date 6/13/12

ESTIMATE OF COST

	THIS REQUEST	TOTAL TO DATE
ITEMS	$0.00	$0.00
FORCE ACCOUNT	$0.00	$0.00
AGREED PRICE	$0.00	$0.00
ADJUSTMENT	$181,958.00	$181,958.00
TOTAL	$181,958.00	$181,958.00

FEDERAL PARTICIPATION

☐ PARTICIPATING ☐ PARTICIPATING IN PART ☑ NONE
☐ NON-PARTICIPATING (MAINTENANCE) ☐ NON-PARTICIPATING

FEDERAL SEGREGATION (if more than one Funding Source or P.I.P. type)
☐ CCO FUNDED PER CONTRACT ☐ CCO FUNDED AS FOLLOWS

FEDERAL FUNDING SOURCE	PERCENT

ADA Notice: For individuals with sensory disabilities, this document is available in alternate formats. For information call: (916) 654-6410 or TDD (916) 654-3880 or write Records and Forms Management, 1120 N Street, MS-89, Sacramento, CA 95814.

STATE OF CALIFORNIA - DEPARTMENT OF TRANSPORTATION

CONTRACT CHANGE ORDER

Change Requested by: Engineer

CCO 78	Suppl. No. 0	Contract No. 04 - 0120S4	Road SF-80-12.7/13.2	FED. AID LOC.: NO FED AID

To: **M C M CONSTRUCTION INC**

You are directed to make the following changes from the plans and specifications or do the following described work not included in the plans and specifications for this contract. ***NOTE: This change order is not effective until approved by the Engineer.***

Description of work to be done, estimate of quantities and prices to be paid. (Segregate between additional work at contract price, agreed price and force account.) Unless otherwise stated, rates for rental of equipment cover only such time as equipment is actually used and no allowance will be made for idle time. This last percentage shown is the net accumulated increase or decrease from the original quantity in the Engineer's Estimate.

Revision No. 1 (2/8/12):

Adjustment of Compensation at Lump Sum:

Modify the electrical work required for the westbound electrical systems in accordance with the revised details shown on sheets 2 of 92 of this change order for the Yerba Buena Island Transition Structures, Bridge Nos. 34-0006L/R of the San Francisco-Oakland Bay Bridge East Span Seismic Safety Project .

The revised contract plan sheets reflecting this change are 132R1, 160R1, 160A, 160B, 160C, 160D, 160E, 167R1, 168R1 169R1, 170R2, 171R1, 172R1, 175R1, 178R1, 181R1, 182R1, 185R1, 188R1, 192R1, 193R1, 194R2, 195R1, 196R1, 196AR1, 197R1, 200R1, 201R2, 202R1, 203R1, 320R1, 322R2, 326R1, 327R1, 349R1, 360R1, 361R1, 363CR1, 363DR1, 363ER1, 363HR2, 364R1, 365R1, 366R1, 367R1, 368R1, 370R1, 371R1, 372R1, 373R1, 375R1, 376R1, 377R1, 378R1, 379R1, 381R1, 382R1, 385R1, 386R1, 389R1, 390R2, 398R1, 403AR1, 403BR1, 403CR1, 403DR1, 403ER2, 404R2, 405R1, 406R2, 407R1, 408R2, 410R1, 411R1, 412R1, 413R1, 413AR1, 413BR1, 413C, 413D, 469R1, 491R1, 492R1, 503R1, 504R1, 506A, 511R1, 516ER1, 516FR1, 516GR1, and 516HR1 of 806 (total of 91 plan sheets).

For this reduction, the Contractor agrees to credit the State a Lump Sum of ($44,765.00). This sum constitutes full and complete compensation for this change.

Adjustment of Compensation at Lump Sum Credit = ($44,765.00)

Estimated Cost: Increase ☐ Decrease ☑ **($44,765.00)**

By reason of this order the time of completion will be adjusted as follows: 0 days

Submitted by		
Signature William Howe	**Resident Engineer** William Howe, Senior R.E.	**Date** 02-08-12
Approval Recommended by		
Signature Deanna Vilcheck	**Area Construction Manager** Deanna Vilcheck	**Date** 2/8/12
Engineer Approval by		
Signature Michael Fraum for	**Area Construction Manager** Deanna Vilcheck	**Date** 2/17/12

We the undersigned contractor, have given careful consideration to the change proposed and agree, if this proposal is approved, that we will provide all equipment, furnish the materials, except as may otherwise be noted above, and perform all services necessary for the work above specified, and will accept as full payment therefor the prices shown above.

NOTE: If you, the contractor, do not sign acceptance of this order, your attention is directed to the requirements of the specifications as to proceeding with the ordered work and filing a written protest within the time therein specified.

Contractor Acceptance by		
Signature	**(Print name and title)** Edmundo A. Ruchi Treasurer	**Date** 2-13-2012

Dist	COUNTY	ROUTE	KILOMETER POST TOTAL PROJECT	SHEET No.	TOTAL SHEETS
04	SF	80	12.7/13.2	132 R1	806

REGISTERED ELECTRICAL ENGINEER — DATE 2/14/08

6-23-08
PLANS APPROVAL DATE

REGISTERED PROFESSIONAL ENGINEER FADI WALIEDDINE No. 11465 Exp. 12/31/09 ELECTRICAL STATE OF CALIFORNIA

THE STATE OF CALIFORNIA OR ITS OFFICERS OR AGENTS SHALL NOT BE RESPONSIBLE FOR THE ACCURACY OR COMPLETENESS OF ELECTRONIC COPIES OF THIS PLAN SHEET.

PB AMERICAS, Inc.
A Parsons Brinckerhoff Company
303 Second St., Suite 700N
San Francisco, CA 94107-1317

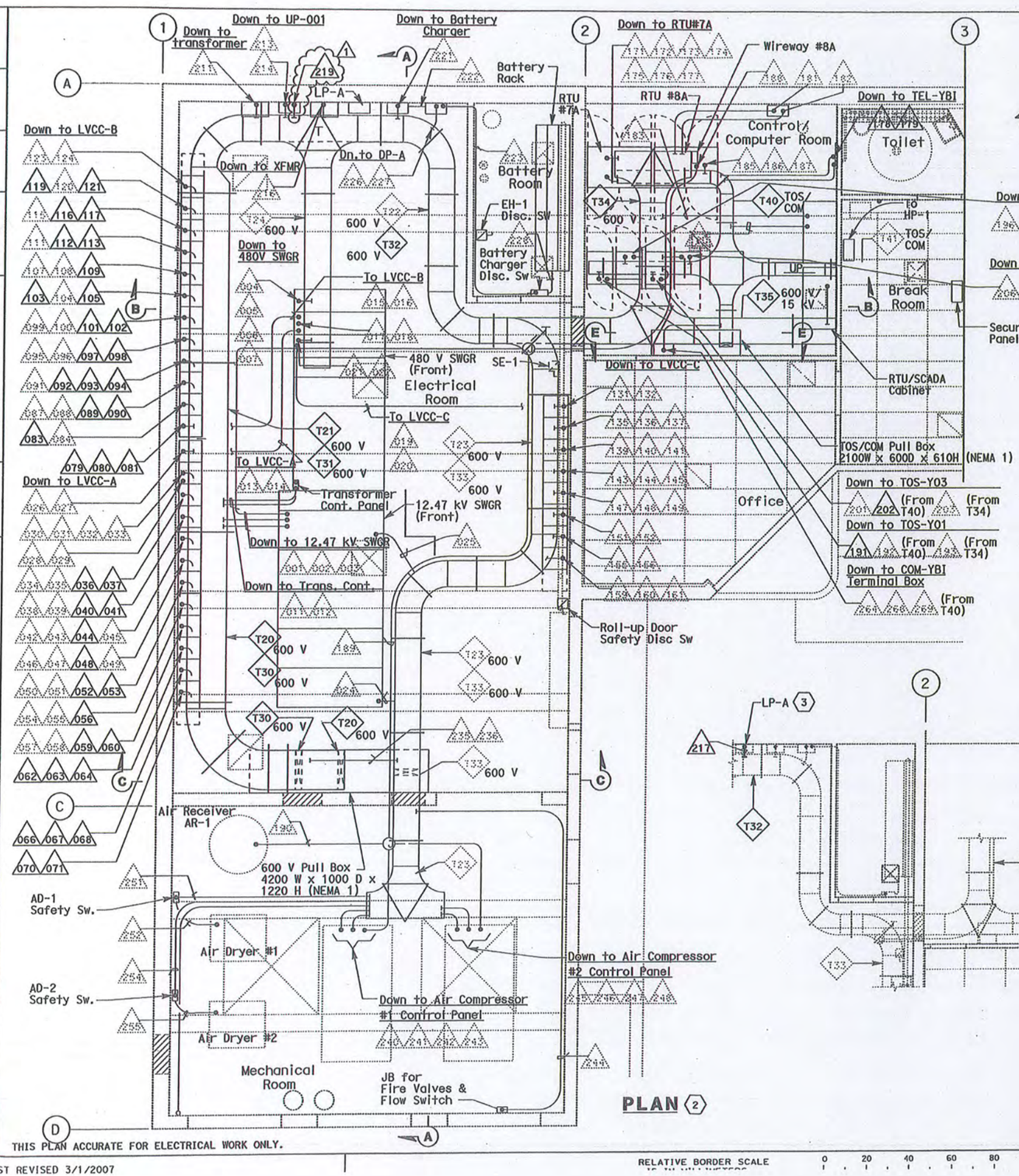

PLAN (2)

REGISTERED PROFESSIONAL ENGINEER SYN YEE CHIN No. 18186 Exp. 09/30/2011 ELECTRICAL STATE OF CALIFORNIA

Syn Yee Chin
FOR REVISION ONLY
△1 03/30/2011

NOTES:

1. References:
   - For sections, see sheets E-46 and E-47.
   - For equipment arrangement plan, see sheet E-12.
   - The Contractor to verify field conditions.

SHEET NOTES:

(1) Installed Irrigation Controller per Standard Plans ES-3H.

(2) Not in Contract. Conduits, cable trays pull boxes shown are existing installed on previous contract. It is provided as reference for routing cable/circuits only.

(3) 120 V power supply for irrigation controller shall be from existing LP-A. Contractor to terminate cable to LP-A circuit #36. Contractor to verify location and circuit availability.

(4) New conduit to terminate in existing T35.

CONTRACT NO. 04-0120S4

CONTRACT CHANGE ORDER NO. 78

SHEET 2 OF 92

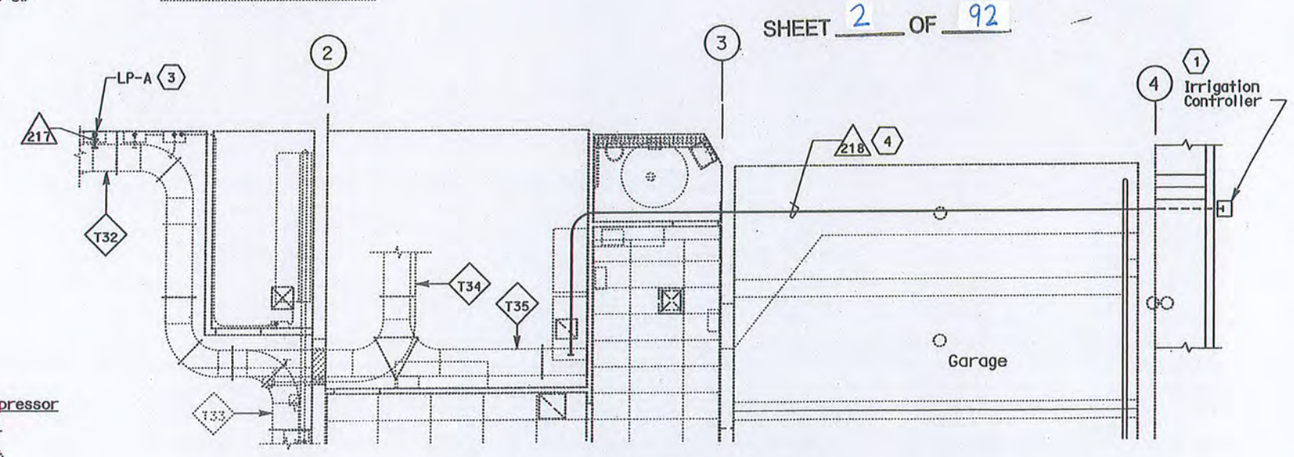

PARTIAL PLAN

DETAILS
UNDERGROUND
YBI SUBSTATION CONDUIT AND CABLE TRAY

SCALE: 1:50

E-13

STATE OF CALIFORNIA - DEPARTMENT OF TRANSPORTATION
Caltrans

CONSULTANT FUNCTIONAL SUPERVISOR: BEHZAD GOLEMOHAMMADI
CALCULATED-DESIGNED BY: AB
CHECKED BY: FK
REVISED BY
DATE REVISED

BORDER LAST REVISED 3/1/2007

RELATIVE BORDER SCALE 0 20 40 60 80

USERNAME => llorico

CU 04251

EA 0120S1

Dist	COUNTY	ROUTE	KILOMETER POST TOTAL PROJECT	SHEET No.	TOTAL SHEETS
04	SF	80	12.7/13.2	160 R1	806

REGISTERED ELECTRICAL ENGINEER 2/14/08

6-23-08
PLANS APPROVAL DATE

REGISTERED PROFESSIONAL ENGINEER FADI WALIEDDINE No. 11465 Exp. 12/31/09 ELECTRICAL STATE OF CALIFORNIA

THE STATE OF CALIFORNIA OR ITS OFFICERS OR AGENTS SHALL NOT BE RESPONSIBLE FOR THE ACCURACY OR COMPLETENESS OF ELECTRONIC COPIES OF THIS PLAN SHEET.

PB AMERICAS, Inc.
A Parsons Brinckerhoff Company
303 Second St., Suite 700N
San Francisco, CA 94107-1317

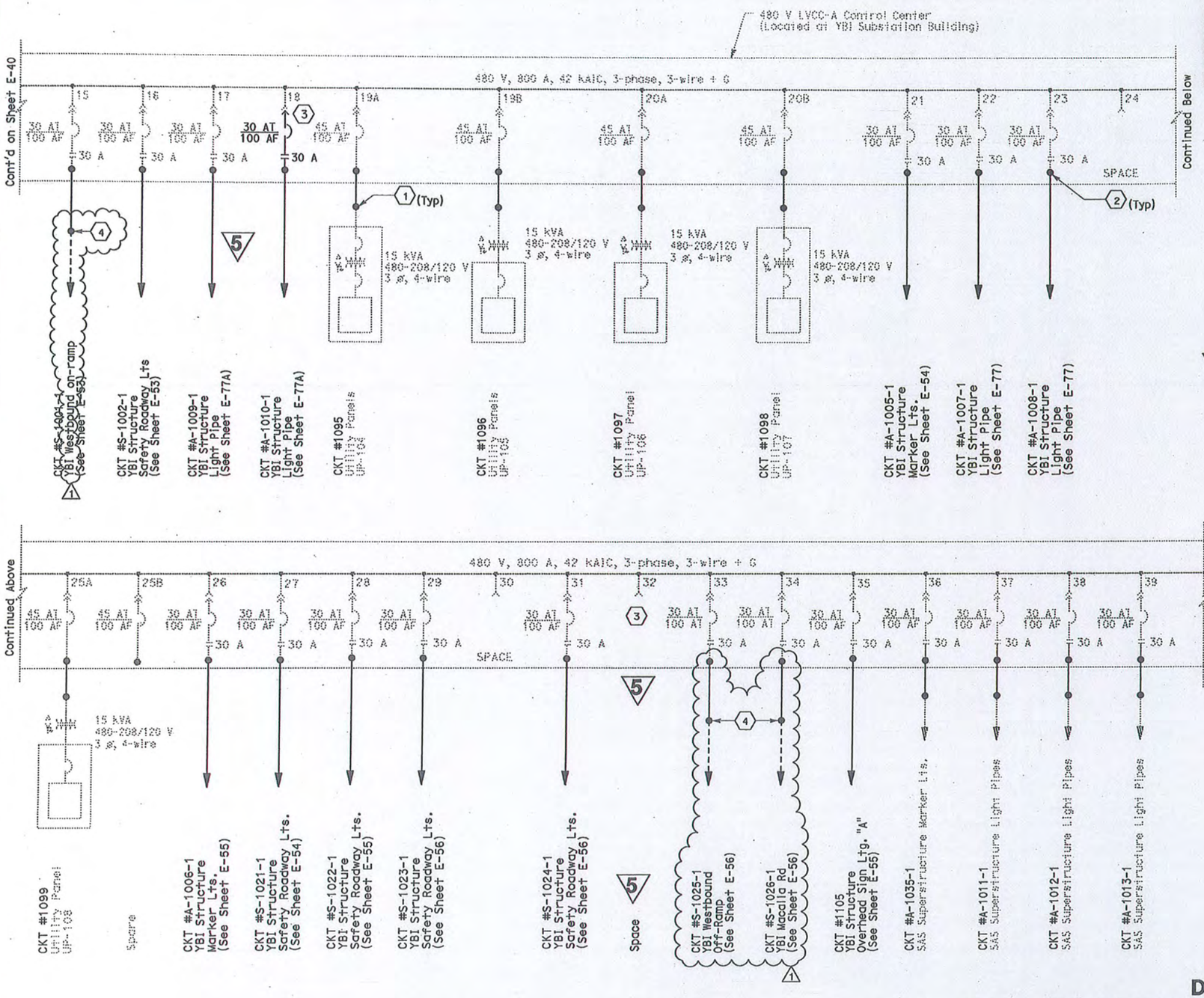

SHEET NOTES:

1. Conductors spliced inside Manhole-25, shall be moisture and water tight.
2. Provide appropriate connections for oversize feeder conductors.
3. The Contractor shall move circuit breaker/contactor from cubicle 32 and install to cubicle 18. Change nameplate as shown.
4. Conductors shall be spliced inside MH-5. Splices shall be moisture free and watertight. Conductors from MH-5 to light poles by others.

NOTES:

1. Only heavy lines are part of this contract (04-0120S4).

CONTRACT NO. 04-0120S4

CONTRACT CHANGE ORDER NO 78

SHEET 3 OF 92

REGISTERED PROFESSIONAL ENGINEER SYN YEE CHIN No. 18166 Exp. 09/30/2011 ELECTRICAL STATE OF CALIFORNIA

Syn Yee Chin
FOR REVISION ONLY
1 03/30/2011

5 REVISED PER ADDENDUM No. 5 DATED JULY 30, 2009

DETAILS
UNDERGROUND (ELECTRICAL DUCT BANK)
(480 V LVCC-A SINGLE LINE DIAGRAM)

NO SCALE

E-41

THIS PLAN ACCURATE FOR ELECTRICAL WORK ONLY.

STATE OF CALIFORNIA - DEPARTMENT OF TRANSPORTATION
Caltrans

CONSULTANT FUNCTIONAL SUPERVISOR: BEHZAD GOLEMOHAMMADI
CALCULATED-DESIGNED BY: AB
CHECKED BY: FK
REVISED BY
DATE REVISED

BORDER LAST REVISED 3/1/2007
RELATIVE BORDER SCALE 0 20 40 60 80
USERNAME => llorico
CU 04251
EA 0120S1

CUB NO	VERTICAL SECTION	NAME PLATE DESCRIPTION (SEE DETAIL)	DIAGRAM TYPE	REMARKS
1	1	CKT #1131 800 A Incoming Cubicle		
2	1	CKT #1110 YBI Substation Ventilation SF-1	4A	
3	1	CKT #1111 YBI Substation Ventilation SF-2	4A	
4	1	Space		
5A	1	CKT #1113 Air Dryer AD-1	3B	
5B	1	CKT #1114 Air Dryer AD-2	3B	
6	2	Space		
7	2	Space		
8A	2	CKT #1101 YBI Substation Bldg. Roll Up Doors	3B	
8B	2	CKT #1102 YBI Substation Heat Pump HP-1	3B	
9	2	CKT #1115 Dehumidification Unit #1 East Cable Anchorage	3A	
10	2	CKT #1117 Dehumidification Unit #3 East Cable Anchorage	3A	
11	2	CKT #1118 Dehumidification Unit #4 East Cable Anchorage	3A	
12	3	Space		
13A	3	CKT #1091 Utility Panel UP-101	3B	
13B	3	CKT #1092 Utility Panel UP-102	3B	
14A	3	CKT #1093 Utility Panel UP-103	3B	
14B	3	CKT #1094 Utility Panel UP-109	3B	
15	3	CKT #S-1001 YBI ~~Structures Safety Roadway Lts.~~	1A	1
16	3	CKT #S-1002 YBI Structures Safety Roadway Lts.	1A	
17	3	Spare	1A	
		Westbound On-Ramp Lts.		
18	4	Space		
19A	4	CKT #1095 Utility Panel UP-104	3B	
19B	4	CKT #1096 Utility Panel UP-105	3B	
20A	4	CKT #1097 Utility Panel UP-106	3B	
20B	4	CKT #1098 Utility Panel UP-107	3B	
21	4	CKT #A-1005 YBI Structures Marker Lts.	1A	
22	4	CKTc #A-1007 YBI Structures Light Pipes	1A	
23	4	CKT #A-1008 YBI Structures Light Pipes	1A	
24	5	Space		
25A	5	CKT #1099 Utility Panel UP-108	3B	
25B	5	Spare	3B	
26	5	Spare	1A	
27	5	CKT #S-1021 YBI Structures Safety Roadway Lts.	1A	
28	5	CKT #S-1022 YBI Structures Safety Roadway Lts.	1A	
29	5	CKT #S-1023 YBI Structures Safety Roadway Lts.	1A	

CUB NO	VERTICAL SECTION	NAME PLATE DESCRIPTION (SEE DETAIL)	DIAGRAM TYPE	REMARKS
30	6	Space		
31	6	CKT #S-1024 YBI Structures Safety Roadway Lts.	1A	
32	6	Spare	1A	
33	6	~~Spare~~ CKT #S-1025 YBI Westbound Off-Ramp Lts.	1A	1
34	6	~~Spare~~ CKT #S-1026 YBI Macalla Rd. Lts.	1A	
35	6	CKT #1105 YBI Structures Overhead Sign Ltg. "A"	1A	
36	7	CKT #A-1035 Main Span Marker Lts.	1A	
37	7	CKT #A-1011 Main Span Light Pipes	1A	
38	7	CKT #A-1012 Main Span Light Pipes	1A	
39	7	CKT #A-1013 Main Span Light Pipes	1A	
40	7	CKT #A-1014 Main Span Light Pipes	1A	
41	7	Spare	1A	
42	8	Space		
43	8	Spare	1A	
44	8	CKT #S-1031 Main Span Safety Roadway Lts.	1A	
45	8	CKT #S-1032 Main Span Safety Roadway Lts.	1A	
46	8	Spare	1A	
47	8	Spare	1A	
48	9	CKT #1106 Main Span Overhead Sign Ltg. "B"	1A	
49	9	CKT #A-3001 Main Span Suspender Aesthetic Uplight	1A	
50	9	CKT #A-3002 Main Span Suspender Aesthetic Uplight	1A	
51	9	CKT #A-3003 Main Span Suspender Aesthetic Uplight	1A	
52	9	CKT #A-3004 Main Span Suspender Aesthetic Uplight	1A	
53	9	CKT #A-3005 Main Span Suspender Aesthetic Uplight	1A	
54	10	CKT #A-3006 Main Span Suspender Aesthetic Uplight	1A	
55	10	CKT #S-3056 Pier 1 Tower Aviation Warning Systems	1A	
56	10	CKT #A-3008 Pier 1 Tower Pylon Marker Lts.	1A	
57	10	CKT #A-3009 Pier 1 Tower Pylon Marker Uplight	1A	
58	10	CKT #A-3010 Pier 1 Tower Pylon Marker Uplight	1A	
59	10	CKT #A-3011 Main Span Suspender Aesthetic Downlight	1A	
60	11	CKT. A-3012 Main Span Suspender Aesthetic Downlight	1A	
61	11	CKT. A-3013 Main Span Suspender Aesthetic Downlight	1A	
62	11	CKT #S-3021 Main Span Safety Roadway Lts.	1A	
63	11	CKT #S-3022 Main Span Safety Roadway Lts.	1A	
64	11	CKT #S-3023 Main Span Safety Roadway Lts.	1A	
65	11	120 v Feeder to Relay Cabinet LVCC-A	5A	
66	12	Relay Cabinet LVCC-A		

SCHEDULE

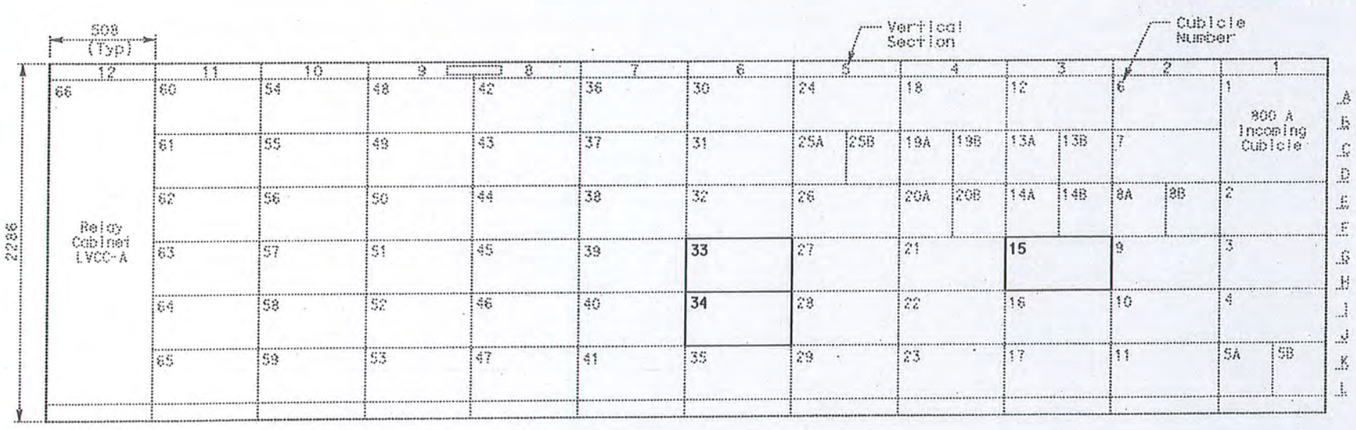

ELEVATION

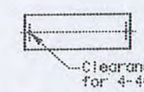

NOTE: Nameplates shall be mounted to the face of each cubicle door panel with 4-40 stainless steel machine screws. The control panel to be drilled and tapped. (no self-tapping screws)

NAMEPLATE DETAIL

Dist	COUNTY	ROUTE	KILOMETER POST TOTAL PROJECT	SHEET No.	TOTAL SHEETS
04	SF	80	12.7/13.2	160A	806

Syn Yee Chin 3/30/11
REGISTERED ELECTRICAL ENGINEER

PLANS APPROVAL DATE

REGISTERED PROFESSIONAL ENGINEER SYN YEE CHIN No. 18186 Exp. 09/30/2011 ELECTRICAL STATE OF CALIFORNIA

THE STATE OF CALIFORNIA OR ITS OFFICERS OR AGENTS SHALL NOT BE RESPONSIBLE FOR THE ACCURACY OR COMPLETENESS OF ELECTRONIC COPIES OF THIS PLAN SHEET.

PB AMERICAS, Inc.
A Parsons Brinckerhoff Company
303 Second St., Suite 700N
San Francisco, CA 94107-1317

Caltrans Metric

SHEET NOTES:

1. Replace nameplate accordingly.

NOTES:

1. This plan sheet is a record drawing from YBI Substation Contract. The Contractor shall verify the existing installation. See sheet 99 from YBI Substation Contract No. 04-0120G4.
2. Only heavy lines are part of this Contract (04-0120S4).
3. References:
   - For single line diagram, see sheet E-41.
   - For LVCC-A relay cabinet elementary, see sheet E41C.
   - For LVCC-A relay cabinet connection diagram, see sheet E41B.
   - For LVCC-A connection diagram, see sheet E41D.
   - For circuit and conduit/cable tray schedules, see sheets starting at E-182.

CONTRACT NO. 04-0120S4

CONTRACT CHANGE ORDER NO 78

SHEET 4 OF 92

DETAILS
YBI SUBSTATION
480 V LVCC-A ELEVATION AND SCHEDULE
NO SCALE

E-41A

STATE OF CALIFORNIA - DEPARTMENT OF TRANSPORTATION
Caltrans

CONSULTANT FUNCTIONAL SUPERVISOR: BEHZAD GOLEMOHAMMADI
CALCULATED-DESIGNED BY: TOM WU
CHECKED BY: ROCKY GARCIA
REVISED BY
DATE REVISED

THIS PLAN ACCURATE FOR ELECTRICAL WORK ONLY.

ALL DIMENSIONS ARE IN MILLIMETERS UNLESS OTHERWISE SHOWN

RELATIVE BORDER SCALE 0 20 40 60 80

DGN FILE => 40120sua041A.dgn

CU 04251

EA 0120S1

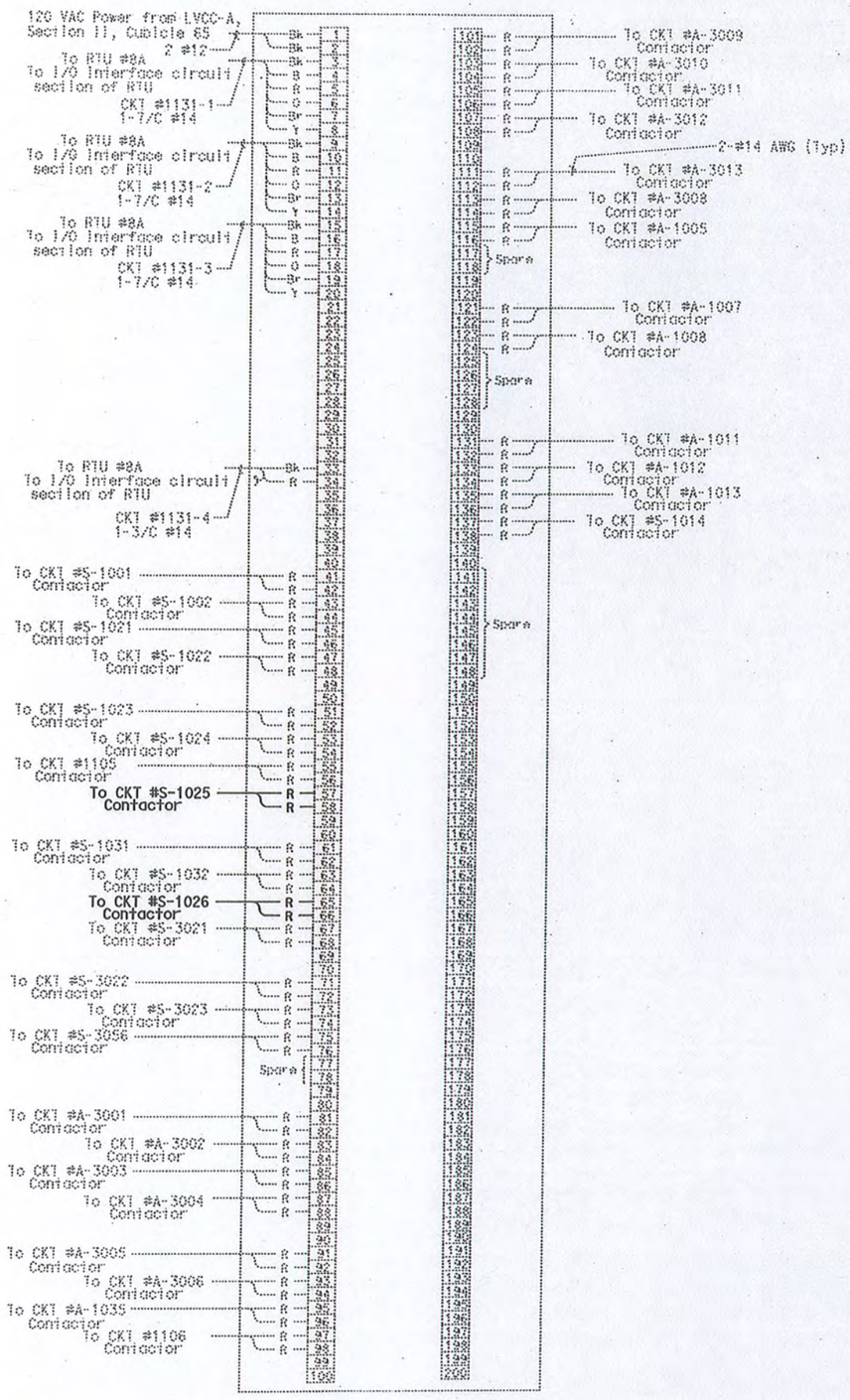

Dist	COUNTY	ROUTE	KILOMETER POST TOTAL PROJECT	SHEET No.	TOTAL SHEETS
04	SF	80	12.7/13.2	160B	806

Syn Yee Chin 3/30/11
REGISTERED ELECTRICAL ENGINEER

PLANS APPROVAL DATE

REGISTERED PROFESSIONAL ENGINEER SYN YEE CHIN No. 18186 Exp. 09/30/2011 ELECTRICAL STATE OF CALIFORNIA

THE STATE OF CALIFORNIA OR ITS OFFICERS OR AGENTS SHALL NOT BE RESPONSIBLE FOR THE ACCURACY OR COMPLETENESS OF ELECTRONIC COPIES OF THIS PLAN SHEET.

PB AMERICAS, Inc.
A Parsons Brinckerhoff Company
303 Second St., Suite 700N
San Francisco, CA 94107-1317

NOTES:

1. This plan sheet is a record drawing from YBI Substation Contract. The Contractor shall verify the existing installation. See sheet 109 from YBI Substation Contract No. 04-0120G4.
2. Only heavy lines are part of this Contract (04-0120S4).
3. References:
   - For single line diagram, see sheet E-41.
   - For LVCC-A relay cabinet elementary, see sheet E41C.
   - For LVCC-A connection diagram, see sheet E41D.
   - For elevation and schedules, see sheet E-41A.
   - For circuit and conduit/cable tray schedules, see sheets starting at E-182.

CONTRACT NO. 04-0120S4

CONTRACT CHANGE ORDER NO 78

SHEET 5 OF 92

DETAILS
YBI SUBSTATION
LVCC-A RELAY CABINET CONNECTION DIAGRAM
NO SCALE

E-41B

STATE OF CALIFORNIA - DEPARTMENT OF TRANSPORTATION
Caltrans

CONSULTANT FUNCTIONAL SUPERVISOR: BEHZAD GOLEMOHAMMADI
CALCULATED-DESIGNED BY: TOM WU
CHECKED BY: ROCKY GARCIA
REVISED BY
DATE REVISED

RELATIVE BORDER SCALE 0 20 40 60 80
DGN FILE => 40120sud041B.dgn
CU 04251
EA 0120S1

Dist	COUNTY	ROUTE	KILOMETER POST TOTAL PROJECT	SHEET No.	TOTAL SHEETS
04	SF	80	12.7/13.2	160C	806

Caltrans Metric

Syn Yee Chin 3/30/11
REGISTERED ELECTRICAL ENGINEER

PLANS APPROVAL DATE

REGISTERED PROFESSIONAL ENGINEER SYN YEE CHIN No. 18186 Exp. 09/30/2011 ELECTRICAL STATE OF CALIFORNIA

THE STATE OF CALIFORNIA OR ITS OFFICERS OR AGENTS SHALL NOT BE RESPONSIBLE FOR THE ACCURACY OR COMPLETENESS OF ELECTRONIC COPIES OF THIS PLAN SHEET.

PB AMERICAS, Inc.
A Parsons Brinckerhoff Company
303 Second St., Suite 700N
San Francisco, CA 94107-1317

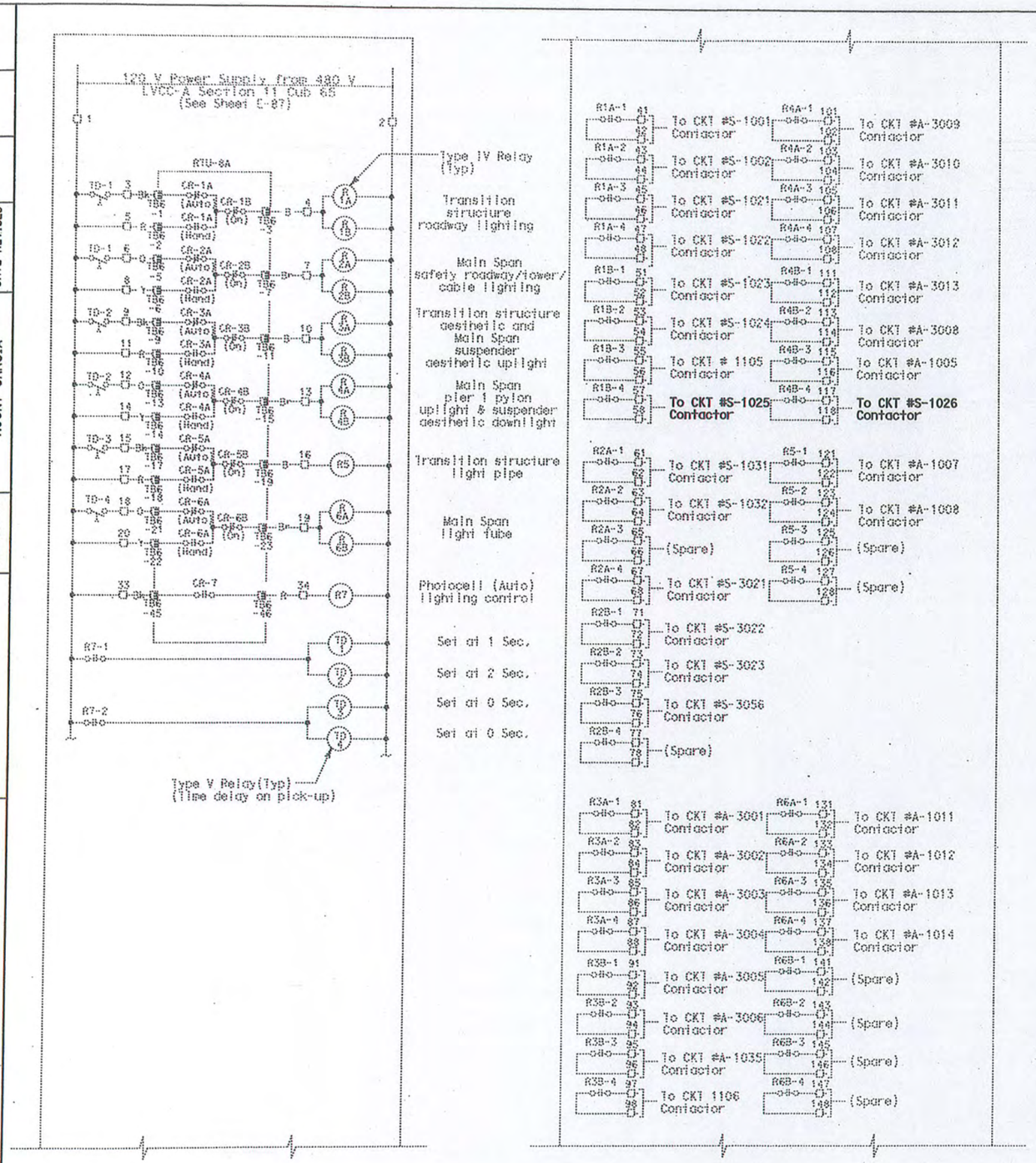

LVCC-A RELAY CABINET

NOTES:

1. This plan sheet is a record drawing from YBI Substation Contract. The Contractor shall verify the existing installation. See sheet 107 from YBI Substation Contract No. 04-012064.
2. Only heavy lines are part of this Contract (04-0120S4).
3. References:
   - For single line diagram, see sheet E-41.
   - For LVCC-A connection diagram, see sheet E41D.
   - For LVCC-A relay cabinet connection diagram, see sheet E41B.
   - For elevation and schedules, see sheet E-41A.
   - For circuit and conduit/cable tray schedules, see sheets starting at E-182.

CONTRACT NO. 04-0120S4

CONTRACT CHANGE ORDER NO 78

SHEET 6 OF 92

DETAILS
YBI SUBSTATION
LVCC-A RELAY CABINET ELEMENTARY DIAGRAM
NO SCALE

E-41C

STATE OF CALIFORNIA - DEPARTMENT OF TRANSPORTATION
Caltrans

CONSULTANT FUNCTIONAL SUPERVISOR: BEHZAD GOLEMOHAMMADI
CALCULATED-DESIGNED BY: TOM WU
CHECKED BY: ROCKY GARCIA
REVISED BY
DATE REVISED

RELATIVE BORDER SCALE 0 20 40 60 80
DGN FILE => 40120sua041C.dgn
CU 04251
EA 0120S1

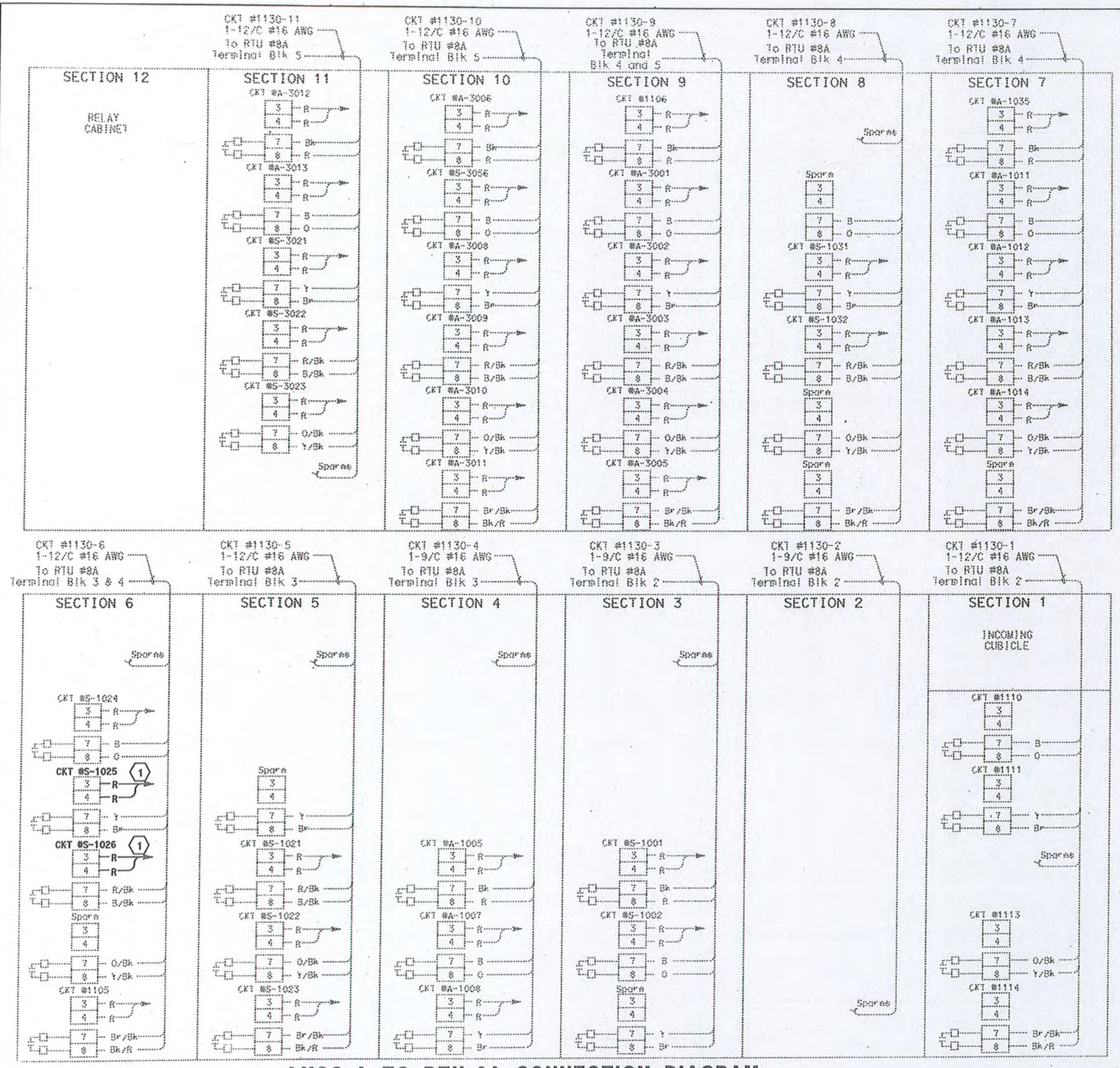

LVCC-A TO RTU-8A CONNECTION DIAGRAM

Caltrans Metric

Dist	COUNTY	ROUTE	KILOMETER POST TOTAL PROJECT	SHEET No.	TOTAL SHEETS
04	SF	80	12.7/13.2	160D	806

Syn Yee Chin 3/30/11
REGISTERED ELECTRICAL ENGINEER

PLANS APPROVAL DATE

REGISTERED PROFESSIONAL ENGINEER SYN YEE CHIN No. 18186 Exp. 09/30/2011 ELECTRICAL STATE OF CALIFORNIA

THE STATE OF CALIFORNIA OR ITS OFFICERS OR AGENTS SHALL NOT BE RESPONSIBLE FOR THE ACCURACY OR COMPLETENESS OF ELECTRONIC COPIES OF THIS PLAN SHEET.

PB AMERICAS, Inc.
A Parsons Brinckerhoff Company
303 Second St., Suite 700N
San Francisco, CA 94107-1317

SHEET NOTES:

(1) For LVCC-A relay cabinet connection diagram, see sheet E-41B.

NOTES:

1. This plan sheet is a record drawing from YBI Substation Contract. The Contractor shall verify the existing installation. See sheet 108 from YBI Substation Contract No. 04-0120G4.
2. Only heavy lines are part of this Contract (04-0120S4).
3. References:
   - For single line diagram, see sheet E-41.
   - For LVCC-A relay cabinet elementary, see sheet E41C.
   - For LVCC-A relay cabinet connection diagram, see sheet E41B.
   - For elevation and schedules, see sheet E-41A.
   - For circuit and conduit/cable tray schedules, see sheets starting at E-182.

CONTRACT NO. 04-0120S4

CONTRACT CHANGE ORDER NO 78

SHEET 7 OF 92

DETAILS
YBI SUBSTATION
LVCC-A CONNECTION DIAGRAM
NO SCALE

E-41D

STATE OF CALIFORNIA - DEPARTMENT OF TRANSPORTATION
Caltrans

CONSULTANT FUNCTIONAL SUPERVISOR: BEHZAD GOLEMOHAMMADI
CALCULATED-DESIGNED BY: TOM WU
CHECKED BY: ROCKY GARCIA
REVISED BY
DATE REVISED

RELATIVE BORDER SCALE 0 20 40 60 80
DGN FILE => 40120sua041D.dgn
CU 04251
EA 0120S1

Dist	COUNTY	ROUTE	KILOMETER POST TOTAL PROJECT	SHEET No.	TOTAL SHEETS
04	SF	80	12.7/13.2	160E	806

Caltrans Metric

Syn Yee Chin 3/30/11
REGISTERED ELECTRICAL ENGINEER

PLANS APPROVAL DATE

REGISTERED PROFESSIONAL ENGINEER SYN YEE CHIN No. 18186 Exp. 09/30/2011 ELECTRICAL STATE OF CALIFORNIA

THE STATE OF CALIFORNIA OR ITS OFFICERS OR AGENTS SHALL NOT BE RESPONSIBLE FOR THE ACCURACY OR COMPLETENESS OF ELECTRONIC COPIES OF THIS PLAN SHEET.

PB AMERICAS, Inc.
A Parsons Brinckerhoff Company
303 Second St., Suite 700N
San Francisco, CA 94107-1317

UTILITY PANEL UP-001 (CKT #1116-1)

Location: YBI SUBSTATION

LOAD DESCRIPTION	LTG	REC	OTH.	CB		CB	LTG	REC	OTH.	LOAD DESCRIPTION
RTU #7A (PLC Power Supply)			100	20/1	1 A 2	20/1	318		1080	Call Box West Span North Side CB-135,-136,-137, CB-335,-336,-337
RTU #7A (Lighting, Receptacle)	105	180	365	20/1	3 B 4	20/1	318		1080	Call Box West Span South Side CB-235,-236,-237, CB-435,-436,-437
Battery Charger			250	50/1	5 C 6	20/1			2000	Controller Cabinet 105-Y01
Spare				20/1	7 A 8	20/1			2000	Controller Cabinet 105-Y02
RTU #8A (Lighting, Receptacle)	105	180	365	20/1	9 B 10	20/1			2000	Controller Cabinet 105-Y04
RTU #8A (PLC Power Supply)			100	20/1	11 C 12	20/1	10		10	West Span Call Box Relay Cabinet
LVCC-A Space Heaters			2700	20/1	13 A 14	20/1				Spare
LVCC-B Space Heaters			2700	20/1	15 B 16	20/2			600	Transformer Cooling Fans
LVCC-C Space Heaters			2000	20/1	17 C 18				600	
Irrigation Controller (Rainbird ESP-MCC)			50	20/1	19 A 20	20/1				Base Equipment
Spare				20/1	21 B 22	20/1				Spare
YBI Ramp Metering ~~Spare~~ Controller Cabinet (WB)			2000	~~20~~ 30/1	23 C 24	30/1			2025	Unit Substation Space Heaters
TOTAL VA	210	360	10630				646	-	11,395	TOTAL VA

LOAD SUMMARY IN VA (INCLUDES .90 PF)	(VA)
Lighting (AT 100%): 856 VA	
Gen Use (1st 10 kVA at 100% Plus 50% Of Remainder): ~~10,575~~ VA	15.192
TOTAL kVA: ~~21.241~~	23.241
TOTAL A: ~~55.03~~ A at 208 V, 3 ø	55.867

BALANCE	(kVA)
Phase A	6.248
Phase B	7.998
Phase C	~~6.995~~ 8.995

VOLTAGE: 208/120 V
PHASE/WIRES: 3 ø,4-wire
BUS RATING: 100 A
MAIN: 100 A
MOUNTING: Surface
K.A.I.C.: 10

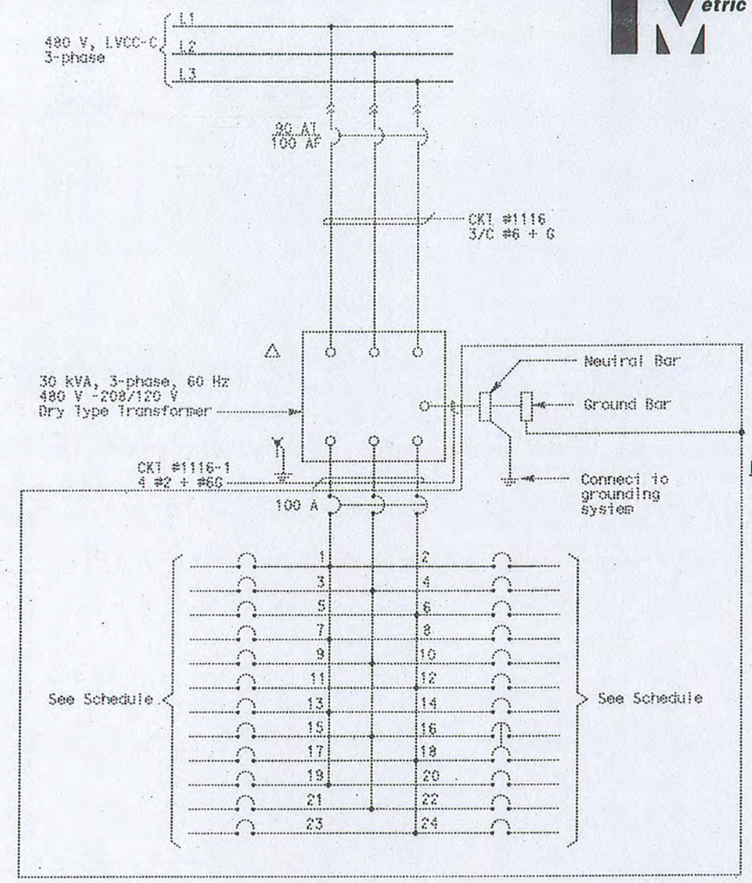

UTILITY PANEL UP-001

NOTES:

1. This plan sheet is a record drawing from YBI Substation Contract. The Contractor shall verify the existing installation. See sheet 102 from YBI Substation Contract No. 04-0120G4.
2. Only heavy lines are part of this Contract (04-0120S4).

CONTRACT NO. 04-0120S4

CONTRACT CHANGE ORDER NO 78

SHEET 8 OF 92

DETAILS
YBI SUBSTATION
UP-001 PANEL SCHEDULE
NO SCALE

E-41E

THIS PLAN ACCURATE FOR ELECTRICAL WORK ONLY.

STATE OF CALIFORNIA - DEPARTMENT OF TRANSPORTATION
Caltrans

CONSULTANT FUNCTIONAL SUPERVISOR: BEHZAD GOLEMOHAMMADI
CALCULATED-DESIGNED BY: TOM WU
CHECKED BY: ROCKY GARCIA
REVISED BY
DATE REVISED

Dist	COUNTY	ROUTE	KILOMETER POST TOTAL PROJECT	SHEET No.	TOTAL SHEETS
04	SF	80	12.7/13.2	167 R1	806

REGISTERED ELECTRICAL ENGINEER 2/14/08

6-23-08
PLANS APPROVAL DATE

REGISTERED PROFESSIONAL ENGINEER FADI WALIEDDINE No. 11465 Exp. 12/31/09 ELECTRICAL STATE OF CALIFORNIA

THE STATE OF CALIFORNIA OR ITS OFFICERS OR AGENTS SHALL NOT BE RESPONSIBLE FOR THE ACCURACY OR COMPLETENESS OF ELECTRONIC COPIES OF THIS PLAN SHEET.

PB AMERICAS, Inc.
A Parsons Brinckerhoff Company
303 Second St. Suite 700N
San Francisco, CA 94107-1317

Caltrans Metric

NOTE:

1. References:
   - For typical details and locations of conduit connections to light poles, barrier outlet boxes, call boxes, overhead sign lighting, CMS, CCTV and MVDS, see sheets E-58 through E-60.
   - TOS equipment is shown for conduit routing only. For typical details of TOS controllers and devices, see sheets E-146 through E-157.
   - For pull box schedule, see sheet E-69.
   - For call box mounting details, see AS-sheets.
   - For call box schedule, see sheet E-172.
   - For roadway lighting schedule, see sheet E-68.
   - For 480 V roadway lighting wiring diagram, see sheets E-53 through E-57.

SHEET NOTES:

(1) Install 41 mm (F) conduit in barrier to Pole 1001-16. Stub out at bent W31 required for future camera #11 (By others).

(2) PB-F Same as PB-COM, labeling to be determined by the Engineer.

(3) ~~Stub-up conduit for future connection to PB-F located at the roadway barrier.~~

(4) ~~Not in contract. Conduits shown are existing installed on previous contract. It is provided as reference for routing cable circuit only.~~

(5) Stub-out and cap conduits for future extension to PB-F and PB-LTG inside on-ramp north barrier.

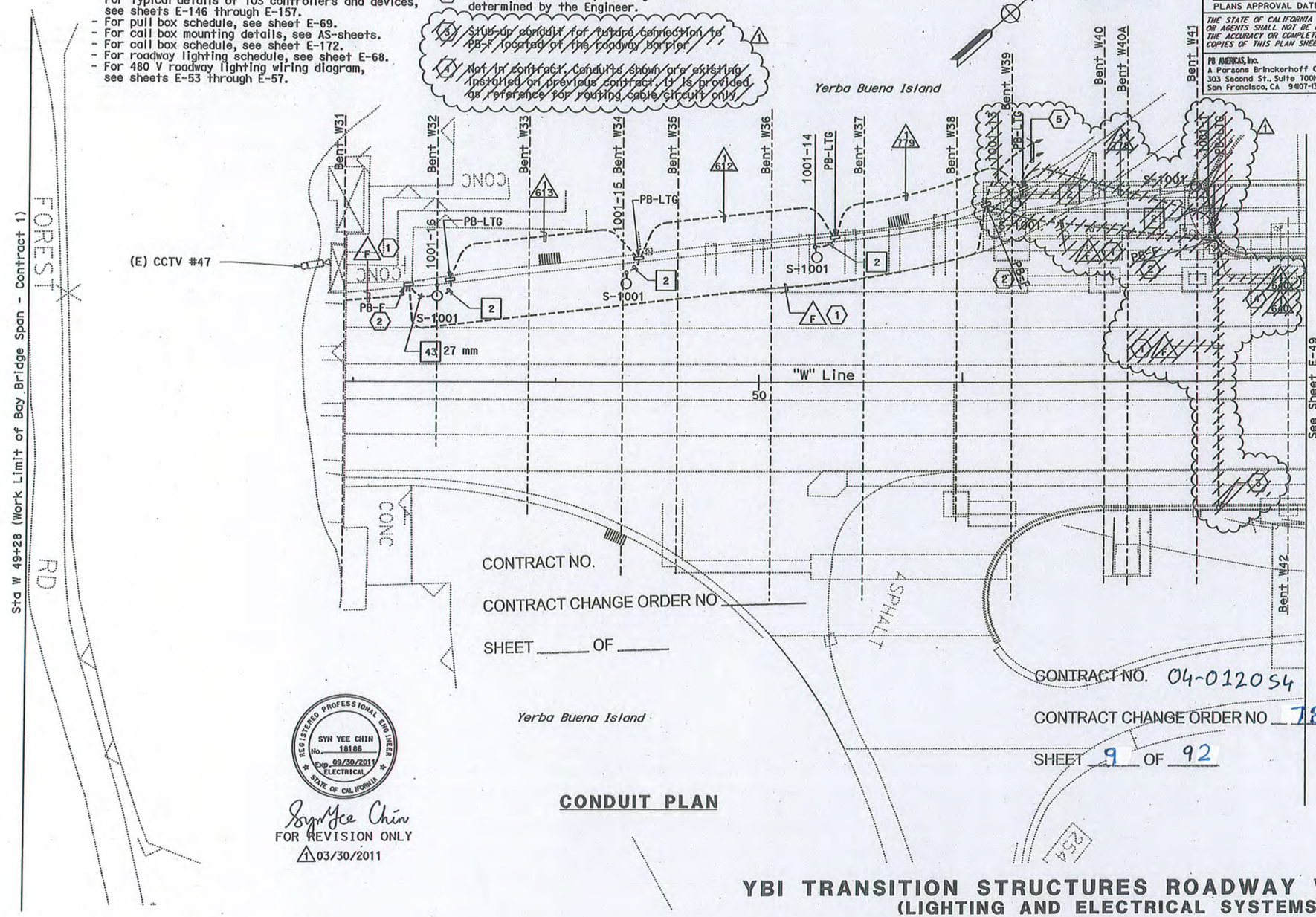

CONTRACT NO.

CONTRACT CHANGE ORDER NO _____

SHEET _____ OF _____

CONTRACT NO. 04-0120S4

CONTRACT CHANGE ORDER NO 78

SHEET 9 OF 92

REGISTERED PROFESSIONAL ENGINEER SYN YEE CHIN No. 18186 Exp. 09/30/2011 ELECTRICAL STATE OF CALIFORNIA

Syn Yee Chin
FOR REVISION ONLY
(1) 03/30/2011

CONDUIT PLAN

YBI TRANSITION STRUCTURES ROADWAY WESTBOUND
(LIGHTING AND ELECTRICAL SYSTEMS)

SCALE: 1:200

E-48

STATE OF CALIFORNIA - DEPARTMENT OF TRANSPORTATION
Caltrans

CONSULTANT FUNCTIONAL SUPERVISOR: BEHZAD GOLEMOHAMMADI
CALCULATED-DESIGNED BY: FK
CHECKED BY: AB
REVISED BY
DATE REVISED

THIS PLAN IS ACCURATE FOR ELECTRICAL WORK ONLY.

ALL DIMENSIONS ARE IN METERS UNLESS OTHERWISE SHOWN

BORDER LAST REVISED 3/1/2007

RELATIVE BORDER SCALE 0 20 40 60 80

USERNAME => llorico

CU 04251

EA 0120S1

Dist	COUNTY	ROUTE	KILOMETER POST TOTAL PROJECT	SHEET No.	TOTAL SHEETS
04	SF	80	12.7/13.2	168 R1	806

REGISTERED ELECTRICAL ENGINEER 2/14/08

6-23-08
PLANS APPROVAL DATE

REGISTERED PROFESSIONAL ENGINEER FADI WALIEDDINE No. 11465 Exp. 12/31/09 ELECTRICAL STATE OF CALIFORNIA

THE STATE OF CALIFORNIA OR ITS OFFICERS OR AGENTS SHALL NOT BE RESPONSIBLE FOR THE ACCURACY OR COMPLETENESS OF ELECTRONIC COPIES OF THIS PLAN SHEET.

PB AMERICAS, Inc.
A Parsons Brinckerhoff Company
303 Second St., Suite 700N
San Francisco, CA 94107-1317

Caltrans Metric

NOTES:

1. References:
   - For typical details and locations of conduit connections to light poles, barrier outlet boxes, call boxes, overhead sign lighting, CMS, CCTV and MVDS, see sheets E-58 through E-60.
   - TOS equipment is shown for conduit routing only. For typical details of TOS controllers and devices, see sheets E-146 through E-157.
   - For pull box schedule, see sheet E-69.
   - For call box mounting details, see sheet E-60.
   - For call box schedule and wiring diagram, see sheets E-170 & E-172.
   - For roadway fixture schedule, see sheet E-68.
   - For 480V roadway lighting wiring diagrams, see sheets E-53 through E-57.

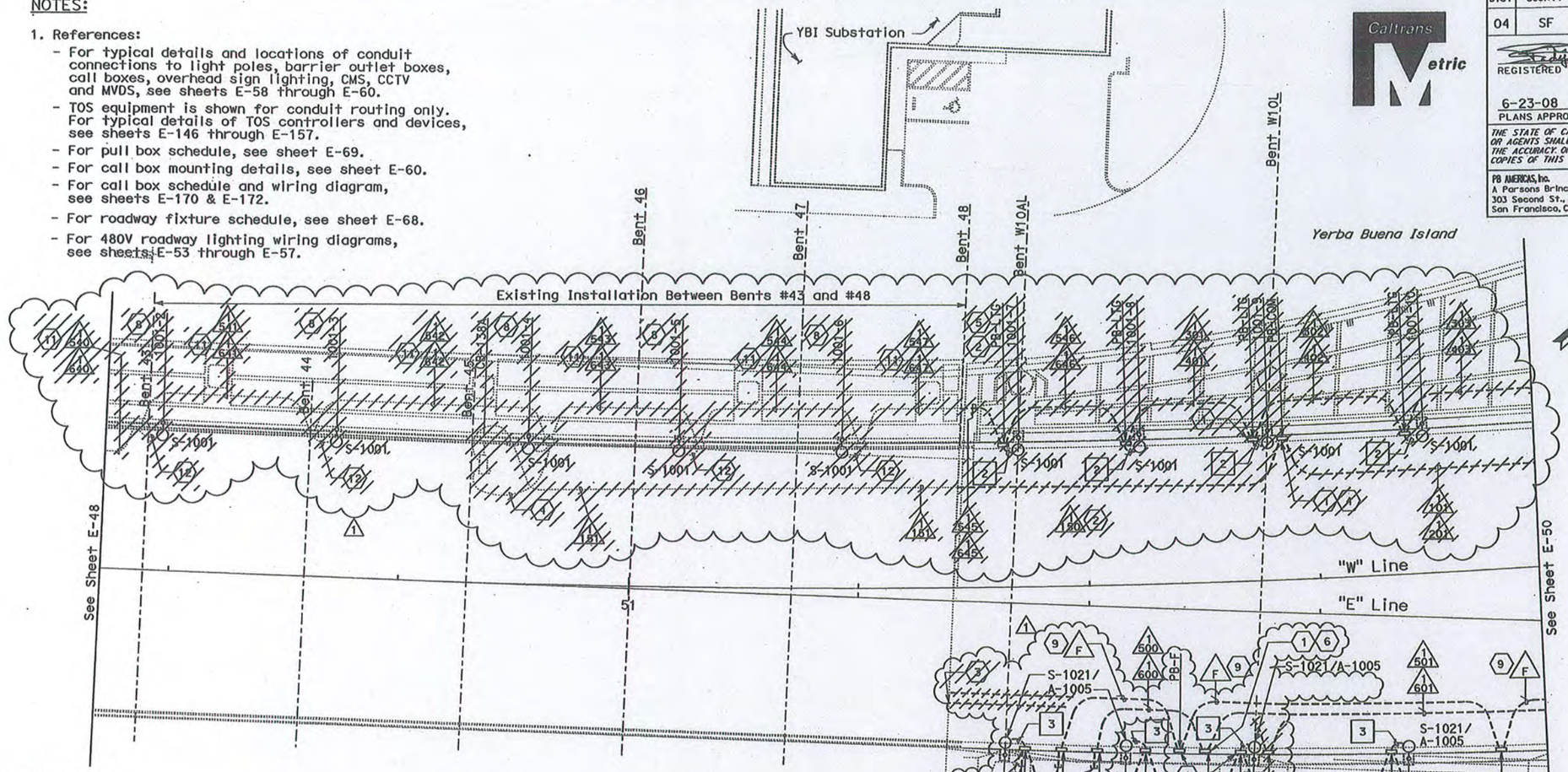

SYN YEE CHIN No. 18186 Exp. 09/30/2011 ELECTRICAL STATE OF CALIFORNIA

Syn Yee Chin
FOR REVISION ONLY
1 03/30/2011

SHEET NOTES:

1. Conduit down into girder, see sheet E-73.
2. ~~Connect conduits 1545 and 1150. To existing barrier Stub-outs.~~ 1
3. Stub-out and cap conduits at barrier for future extension, see Detail 1, sheet E-52.
4. ~~Existing 21C. Add 3#12, 1#12G.~~
5. ~~Extend UP101-2B to CB-130A and circuit S-1001-2 to fixtures 1001-1 thru 1001-6 and fixtures 1001-13 thru 1001-16.~~
6. Coil 2 m for Circuit #1138 in PB-COM for future splicing.
7. Coil 2 m for Circuits S-1021-2 and UP101-2A in PB-LTG for future splicing.
8. ~~Remove existing poles and fixtures and replace with new. Removed poles and fixtures shall be returned to Caltrans.~~ 1
9. Install 41 mm F conduit in the barrier to Bent 48. Stub out for future Camera #12 (By others).
10. PB-F same as PB-COM, labeling to be determined by the Engineer.
11. ~~Not in contract. Conduits shown are existing installed on previous contract. It is provided as reference for routing cable/circuits only.~~ 1
12. ~~Existing 27C. Add 2#10, 1#10G.~~

THIS PLAN IS ACCURATE FOR ELECTRICAL WORK ONLY.

CONTRACT NO. 04-0120S4

CONTRACT CHANGE ORDER NO 78

SHEET 10 OF 92

CONDUIT PLAN

ALL DIMENSIONS ARE IN METERS UNLESS OTHERWISE SHOWN

YBI TRANSITION STRUCTURES ROADWAY WESTBOUND
(LIGHTING AND ELECTRICAL SYSTEMS)

SCALE: 1:200

E-49

STATE OF CALIFORNIA - DEPARTMENT OF TRANSPORTATION
Caltrans

CONSULTANT FUNCTIONAL SUPERVISOR: BEHZAD GOLEMOHAMMADI
CALCULATED-DESIGNED BY: FK
CHECKED BY: AB
REVISED BY
DATE REVISED

BORDER LAST REVISED 3/1/2007

RELATIVE BORDER SCALE 0 20 40 60 80

USERNAME => llorico

CU 04251

EA 0120S1

Dist	COUNTY	ROUTE	KILOMETER POST TOTAL PROJECT	SHEET No.	TOTAL SHEETS
04	SF	80	12.7/13.2	169 R1	806

REGISTERED ELECTRICAL ENGINEER 2/14/08

6-23-08
PLANS APPROVAL DATE

THE STATE OF CALIFORNIA OR ITS OFFICERS OR AGENTS SHALL NOT BE RESPONSIBLE FOR THE ACCURACY OR COMPLETENESS OF ELECTRONIC COPIES OF THIS PLAN SHEET.

REGISTERED PROFESSIONAL ENGINEER FADI WALIEDDINE No. 11165 Exp. 12/31/09 ELECTRICAL STATE OF CALIFORNIA

PB AMERICAS, Inc.
A Parsons Brinckerhoff Company
303 Second St., Suite 700N
San Francisco, CA 94107-1317

Caltrans Metric

SHEET NOTES:

1. Conduit down into girder, see sheet E-81.
2. Conduit down into girder, see sheet E-74.
3. Conduit down into girder, ~~for overhead sign,~~ see sheet E-81. △1
4. PL-W11 requires dual performed loops in each of six lanes. See sheet E-147 for typical detail.
5. Install 41 mm △F conduit in the barrier from Platform IW to Bent 48. Future Camera #12 and #13 (By Others).
6. PB-F same as PB-COM, labeling to be determined by the Engineer.
7. Stub-out at light pole #1002-11 for future camera (By Others). △1

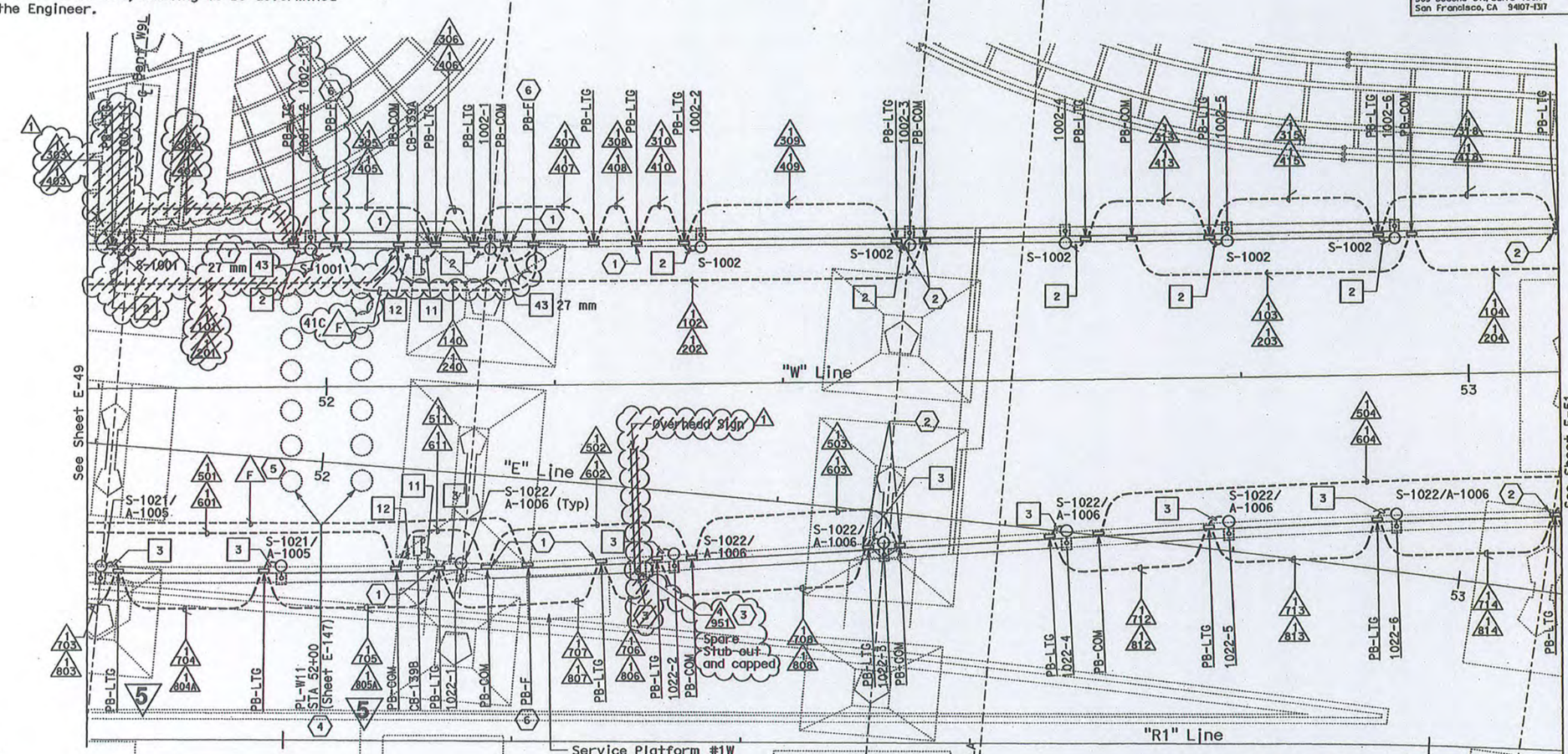

NOTES:

1. References:
   - For typical details and locations of conduit connections to light poles, barrier outlet boxes, call boxes, overhead sign lighting, CMS, CCTV and MVDS, see sheets E-58 through E-60.
   - TOS equipment is shown for conduit routing only. For typical details of TOS controllers and devices, see sheets E-146 through E-157.
   - For pull box schedule, see sheet E-69.
   - For call box mounting details, see sheet E-60.
   - For call box schedule and wiring diagram, see sheets E-170 & E-172.
   - For roadway fixture schdule, see sheet E-68.
   - For 480 V roadway lighting wiring diagram see sheets E-53 through E-57.

CONTRACT NO. 04-0120S4

CONTRACT CHANGE ORDER NO 78

SHEET 11 OF 92

REGISTERED PROFESSIONAL ENGINEER SYN YEE CHIN No. 16186 Exp. 09/30/2011 ELECTRICAL STATE OF CALIFORNIA

Syn Yee Chin
FOR REVISION ONLY
△1 03/30/2011

CONDUIT PLAN

YBI TRANSITION STRUCTURES ROADWAY WESTBOUND
(LIGHTING AND ELECTRICAL SYSTEMS)

SCALE: 1:200

△5 REVISED PER ADDENDUM No. 5 DATED JULY 30, 2009

ALL DIMENSIONS ARE IN METERS UNLESS OTHERWISE SHOWN

THIS PLAN IS ACCURATE FOR ELECTRICAL WORK ONLY.

E-50

STATE OF CALIFORNIA - DEPARTMENT OF TRANSPORTATION
Caltrans

CONSULTANT FUNCTIONAL SUPERVISOR: BEHZAD GOLEMOHAMMADI
CALCULATED-DESIGNED BY: FK
CHECKED BY: AB
REVISED BY
DATE REVISED

BORDER LAST REVISED 3/1/2007
RELATIVE BORDER SCALE 0 20 40 60 80
USERNAME => llorico
CU 04251
EA 0120S1

Dist	COUNTY	ROUTE	KILOMETER POST TOTAL PROJECT	SHEET No.	TOTAL SHEETS
04	SF	80	12.7/13.2	170 R2	806

REGISTERED ELECTRICAL ENGINEER 2/14/08

6-23-08
PLANS APPROVAL DATE

REGISTERED PROFESSIONAL ENGINEER FADI WALIEDDINE No. 11465 Exp. 12/31/09 ELECTRICAL STATE OF CALIFORNIA

THE STATE OF CALIFORNIA OR ITS OFFICERS OR AGENTS SHALL NOT BE RESPONSIBLE FOR THE ACCURACY OR COMPLETENESS OF ELECTRONIC COPIES OF THIS PLAN SHEET.

PB AMERICAS, Inc.
A Parsons Brinckerhoff Company
303 Second St., Suite 700N
San Francisco, CA 94107-1317

Metric

SHEET NOTES:

1. Conduit down into girder, see sheet E-75.
2. ~~27 mm conduit down into girder for future light pipe, see sheet E-75.~~
3. PB-F same as PB-COM, labeling to be determined by the Engineer.
4. ~~Install 41 mm~~ F conduit in barrier from ~~Platform 2W~~ Pole 1023-1 (see E-65) for future Camera #15 (By others).

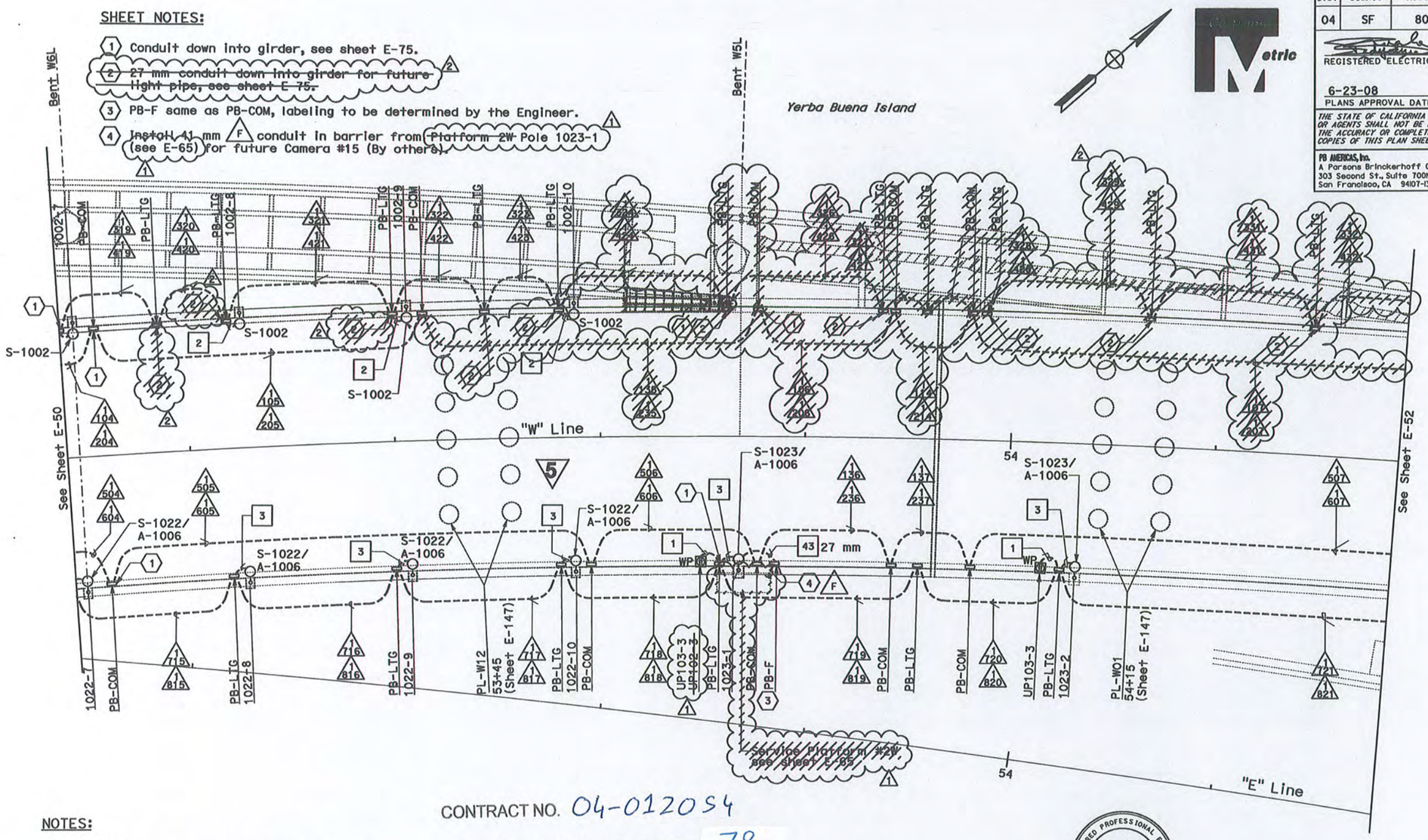

NOTES:

1. References:
   - For typical details and locations of conduit connections to light poles, barrier outlet boxes, call boxes, overhead sign lighting, CMS, CCTV and MVDS, see sheets E-58 through E-60.
   - TOS equipment is shown for conduit routing only. For typical details of TOS controllers and devices, see sheets E-146 through E-157.
   - For pull box schedule, see sheet E-69.
   - For roadway light pole and fixture schedule, see sheet E-68.
   - For call box schedule and wiring diagram, see sheets E-170 & E-172.
   - For 480V roadway lighting wiring diagram see sheets E-53 through E-57.

CONTRACT NO. 04-0120S4

CONTRACT CHANGE ORDER NO 78

SHEET 12 OF 92

CONDUIT PLAN

REGISTERED PROFESSIONAL ENGINEER SYN YEE CHIN No. 18186 Exp. 09/30/2011 ELECTRICAL STATE OF CALIFORNIA

Syn Yee Chin
FOR REVISION ONLY
1 11/22/2010
2 03/30/2011

YBI TRANSITION STRUCTURES ROADWAY WESTBOUND (LIGHTING AND ELECTRICAL SYSTEMS)

5 REVISED PER ADDENDUM No. 5 DATED JULY 30, 2009

SCALE: 1:200

E-51

THIS PLAN IS ACCURATE FOR ELECTRICAL WORK ONLY.

ALL DIMENSIONS ARE IN METERS UNLESS OTHERWISE SHOWN

STATE OF CALIFORNIA - DEPARTMENT OF TRANSPORTATION
Caltrans

REVISED BY	DATE REVISED	CALCULATED-DESIGNED BY	CHECKED BY	CONSULTANT FUNCTIONAL SUPERVISOR
FK	AB			BEHZAD GOLEMOHAMMADI

LAST REVISION 00-00-00 | DATE PLOTTED => 05-APR-2011 | TIME PLOTTED => 11:33

BORDER LAST REVISED 3/1/2007 | RELATIVE BORDER SCALE IS IN MILLIMETERS 0 20 40 60 80 | USERNAME => llorico | DGN FILE => 40120sua051r02.dgn | CU 04251 | EA 0120S1

Dist	COUNTY	ROUTE	KILOMETER POST TOTAL PROJECT	SHEET No.	TOTAL SHEETS
04	SF	80	12.7/13.2	171 R1	806

REGISTERED ELECTRICAL ENGINEER 2/14/08

6-23-08
PLANS APPROVAL DATE

REGISTERED PROFESSIONAL ENGINEER FADI WALIEDDINE No. 11465 Exp. 12/31/09 ELECTRICAL STATE OF CALIFORNIA

THE STATE OF CALIFORNIA OR ITS OFFICERS OR AGENTS SHALL NOT BE RESPONSIBLE FOR THE ACCURACY OR COMPLETENESS OF ELECTRONIC COPIES OF THIS PLAN SHEET.

PB AMERICAS, Inc.
A Parsons Brinckerhoff Company
303 Second St., Suite 700N
San Francisco, CA 94107-1317

Caltrans Metric

CONTRACT NO. 04-012054

CONTRACT CHANGE ORDER NO 78

SHEET 13 OF 92

NOTES:

1. References:
   - For lighting poles, outlet boxes and pull box schedules, see sheets E-68 and E-69.
   - For call box mounting detail, see sheet E-60.
   - For 480 V roadway lighting wiring see sheets E-53 through E-57.

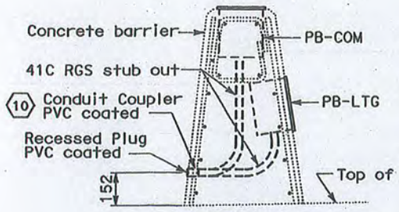

DETAIL 1
NO SCALE

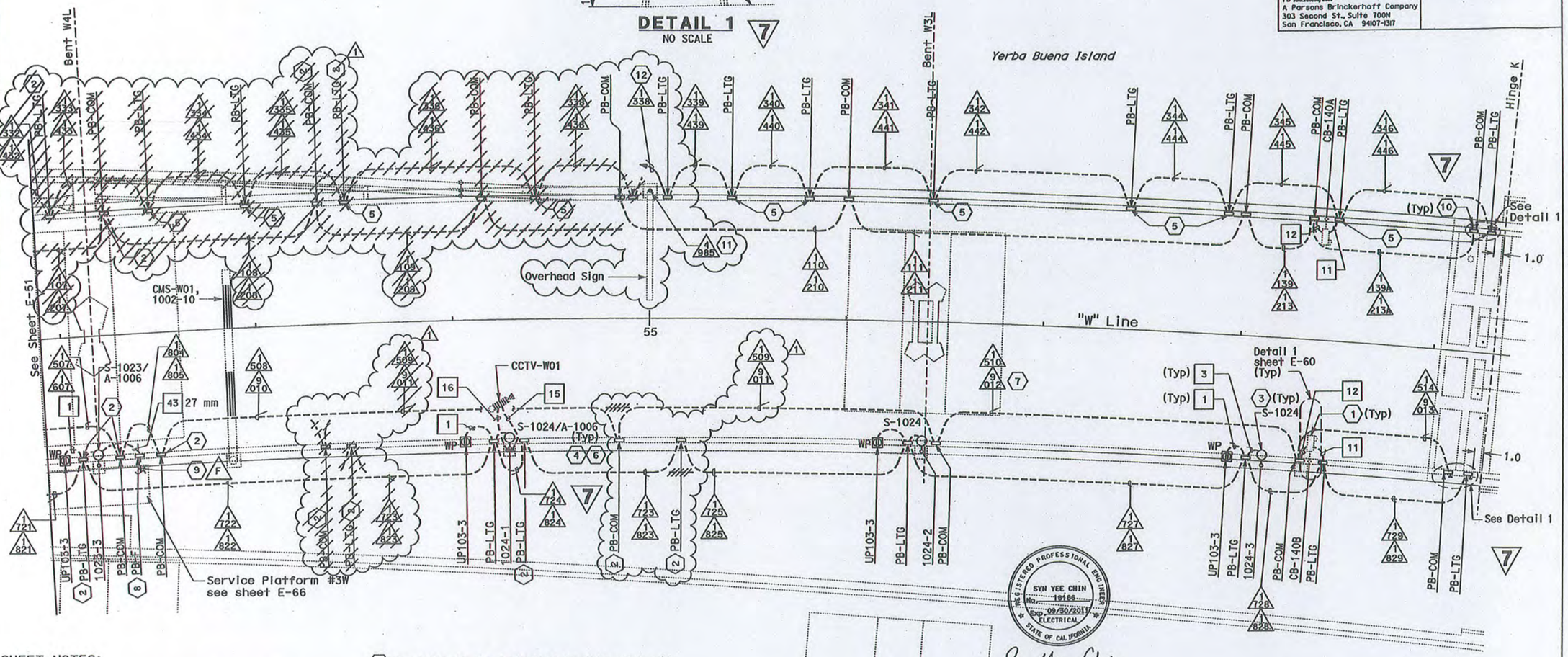

SHEET NOTES:

(1) For call box schedule and wiring diagram, see sheets E-170 & E-172.

(2) For routing of conduit in girder and crossing of roadway, see sheets E-73 thru E-76.

(3) For conduit routing inside barriers and pole bases, see sheets E-58 thru E-60.

(4) For 480 V roadway lighting wiring diagrams, see sheets E-53 thru E-57.

(5) For routing of light pipe conduit, down to girder level, see sheet E-76.

(6) For lighting schedules, see sheet E-68.

(7) Conduits to be installed in this contract but are reserved for SMD.

(8) PB-F same as PB-COM, labeling to be determined by the Engineer.

(9) Install 41 mm (F) conduit in barrier from Platform 3W for future Camera #16 (By others).

(10) Conduit shall stub-out at the non-roadway side of the barrier with the coupler flush to the barrier face wall and shall include a plug.

(11) Conduit down into girder. For overhead sign, see Sheet E-76.

(12) Stub-out and cap conduit for future extension to PB-LTG inside off-ramp barrier.

REGISTERED PROFESSIONAL ENGINEER SYN YEE CHIN No. 18186 Exp. 09/30/2011 ELECTRICAL STATE OF CALIFORNIA

Syn Yee Chin
FOR REVISION ONLY
1 03/30/2011

CONDUIT PLAN

REVISED PER ADDENDUM No. 7 DATED OCTOBER 19, 2009

THIS PLAN IS ACCURATE FOR ELECTRICAL WORK ONLY.

ALL DIMENSIONS ARE IN METERS UNLESS OTHERWISE SHOWN

YBI TRANSITION STRUCTURES ROADWAY WESTBOUND
(LIGHTING AND ELECTRICAL SYSTEMS)

SCALE: 1:200

E-52

STATE OF CALIFORNIA - DEPARTMENT OF TRANSPORTATION
Caltrans

CONSULTANT FUNCTIONAL SUPERVISOR: BEHZAD GOLEMOHAMMADI
CALCULATED-DESIGNED BY: FK
CHECKED BY: AB
REVISED BY
DATE REVISED

BORDER LAST REVISED 3/1/2007

RELATIVE BORDER SCALE 0 20 40 60 80

USERNAME => florico

CU 04251

EA 0120S1

Dist	COUNTY	ROUTE	KILOMETER POST TOTAL PROJECT	SHEET No.	TOTAL SHEETS
04	SF	80	12.7/13.2	172 R1	806

REGISTERED ELECTRICAL ENGINEER 2/14/08 DATE

6-23-08
PLANS APPROVAL DATE

REGISTERED PROFESSIONAL ENGINEER FADI WALIEDDINE No. 11465 Exp. 12/31/09 ELECTRICAL STATE OF CALIFORNIA

THE STATE OF CALIFORNIA OR ITS OFFICERS OR AGENTS SHALL NOT BE RESPONSIBLE FOR THE ACCURACY OR COMPLETENESS OF ELECTRONIC COPIES OF THIS PLAN SHEET.

PB AMERICAS, Inc.
A Parsons Brinckerhoff Company
303 Second St., Suite 700N
San Francisco, CA 94107-1317

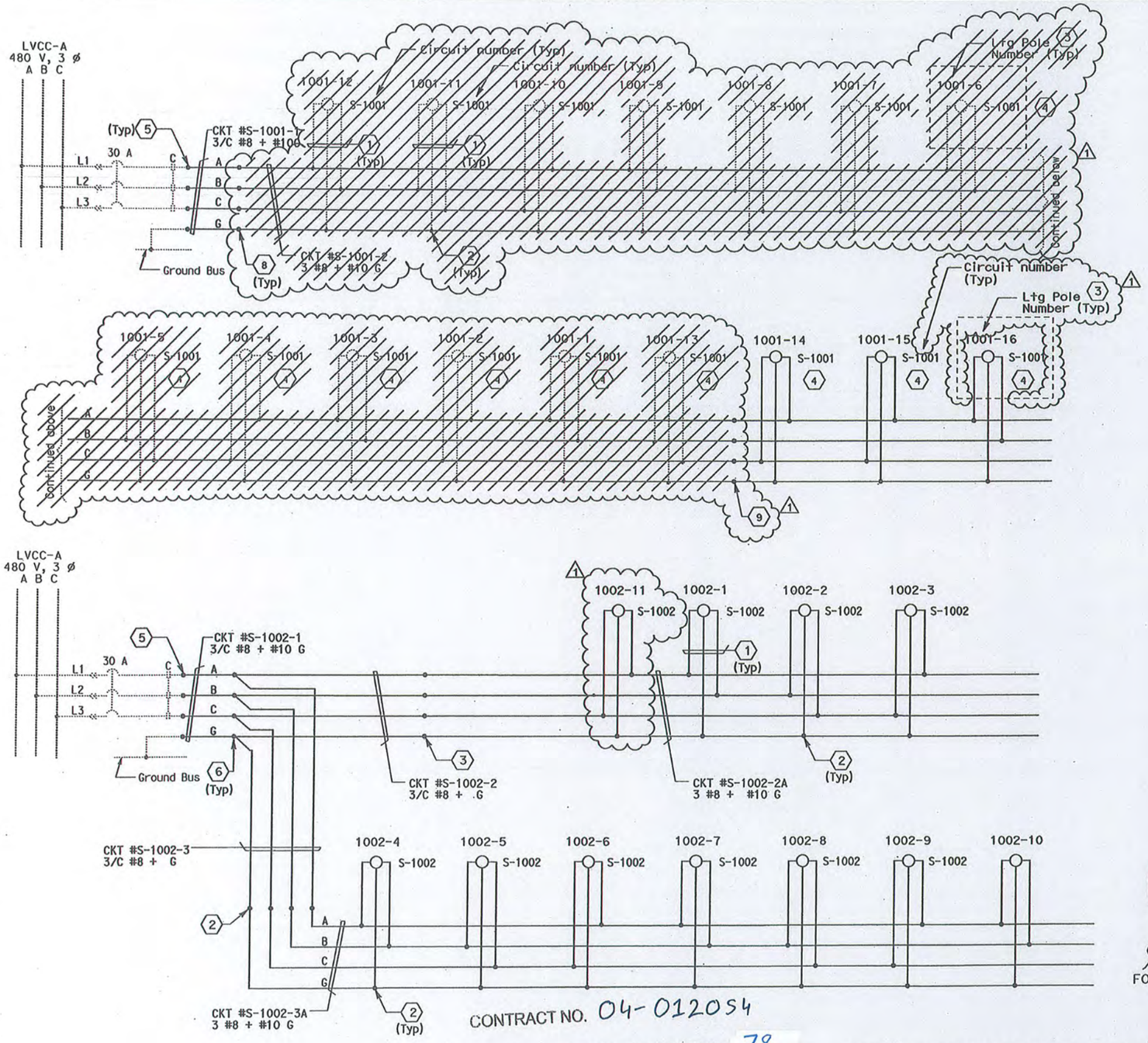

SHEET NOTES:

1. 3#10 AWG single conductors, see Detail 1.
2. Conductors spliced inside pull box PB-LTG.
3. For number of light fixtures on each light pole, see sheet E-68.
4. Remove existing poles and fixtures and replace with new.
5. Terminate conductors in existing LVCC-A.
6. Splice conductors in MH-30.
7. For type and size of in line fusing, see Caltrans standard plans. Locate inside terminal box at the base of the each roadway lighting pole.
8. Future WB on-ramp light connections by others. Coil and tape end of conductors in MH-5.
9. Disconnect existing lighting conductors from LVCC-C circuit breaker inside YBI Substation. Contractor to verify circuit and tag the circuit breaker as spare. Existing conductors may be abandoned. Connect lighting conductors to the same circuit (CKT #S-1001-1) as the lighting poles located on the north barrier of the WB on-ramp.

NOTES:

1. References:
   - For LVCC-A single line diagram, see sheet E-41.
   - For pull box schedule, see sheet E-69.
   - For roadway plans, see sheets E-48 thru E-52.

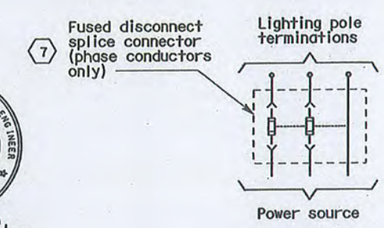

DETAIL-1
(TYP FOR EACH LTG POLE)

REGISTERED PROFESSIONAL ENGINEER SYN YEE CHIN No. 18186 Exp. 09/30/2011 ELECTRICAL STATE OF CALIFORNIA

Syn Yee Chin
FOR REVISION ONLY
1 03/30/2011

CONTRACT NO. 04-012054

CONTRACT CHANGE ORDER NO 78

SHEET 14 OF 92

DETAILS
YBI TRANSITION STRUCTURES ROADWAY WESTBOUND
(480 V ROADWAY LIGHTING WIRING DIAGRAM)

NO SCALE

E-53

STATE OF CALIFORNIA - DEPARTMENT OF TRANSPORTATION
Caltrans
CONSULTANT FUNCTIONAL SUPERVISOR
CALCULATED-DESIGNED BY FK
CHECKED BY AB
REVISED BY
DATE REVISED

THIS PLAN ACCURATE FOR ELECTRICAL WORK ONLY.

BORDER LAST REVISED 3/1/2007

RELATIVE BORDER SCALE 0 20 40 60 80

USERNAME => llorico

CU 04251

EA 012051

Dist	COUNTY	ROUTE	KILOMETER POST TOTAL PROJECT	SHEET No.	TOTAL SHEETS
04	SF	80	12.7/13.2	175R1	806

REGISTERED ELECTRICAL ENGINEER 2/14/08 DATE

6-23-08
PLAN APPROVAL DATE

REGISTERED PROFESSIONAL ENGINEER FADI WALIEDDINE No. 11465 Exp. 12/31/09 ELECTRICAL STATE OF CALIFORNIA

THE STATE OF CALIFORNIA OR ITS OFFICERS OR AGENTS SHALL NOT BE RESPONSIBLE FOR THE ACCURACY OR COMPLETENESS OF ELECTRONIC COPIES OF THIS PLAN SHEET.

PB AMERICAS, Inc.
A Parsons Brinckerhoff Company
303 Second St., Suite 700N
San Francisco, CA 94107-1317

Caltrans Metric

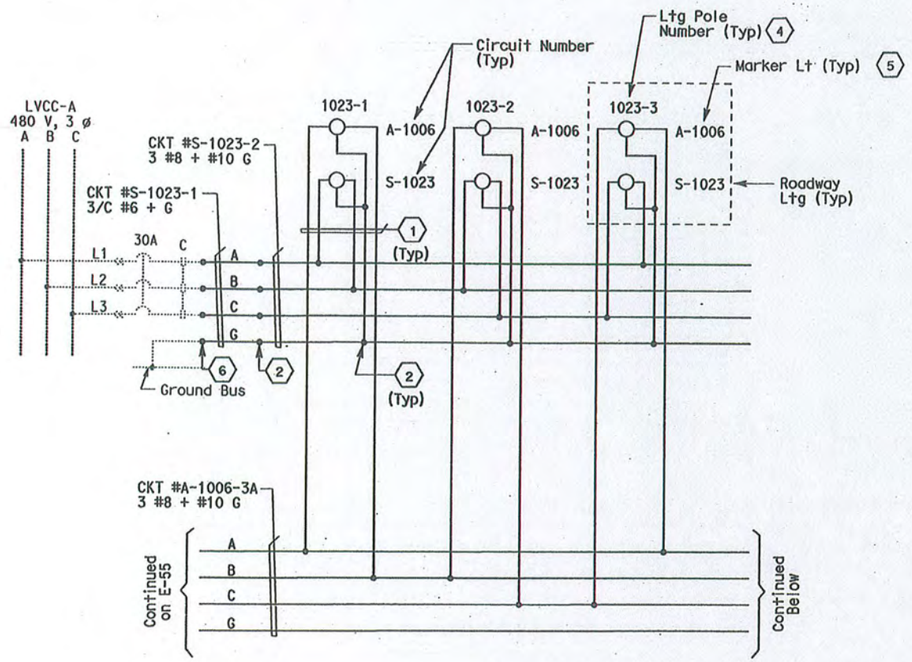

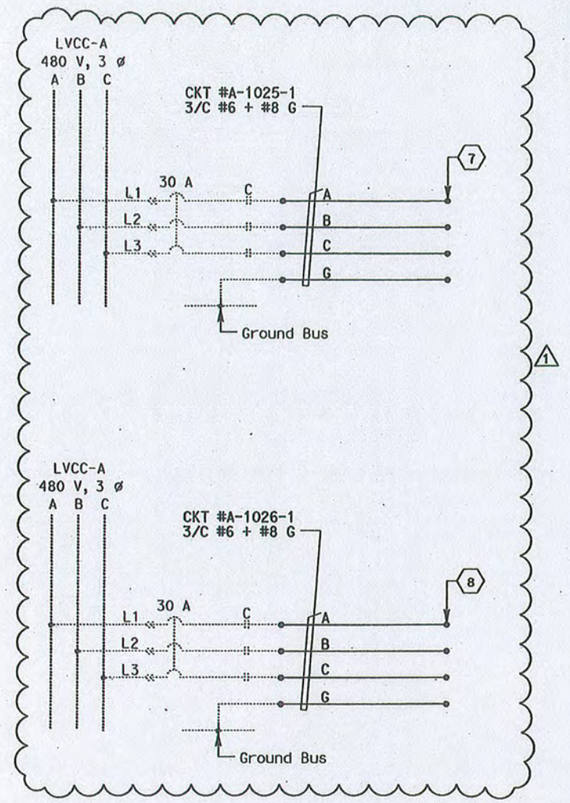

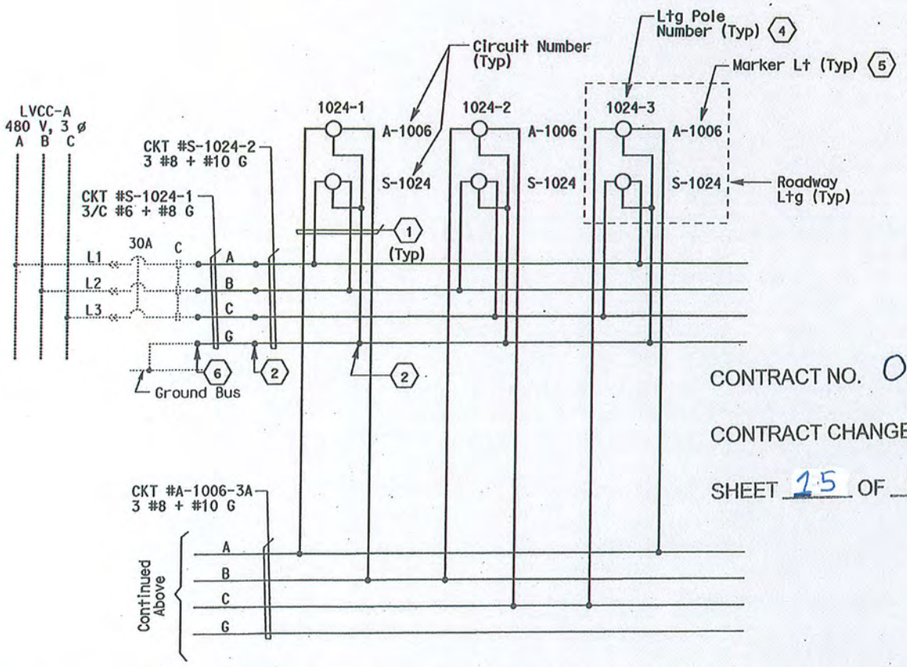

SHEET NOTES:

1. #10 AWG single conductors, see Detail 1.
2. Conductors spliced inside pull box PB-LTG.
3. For type and size of in line fusing see Caltrans standard plans. Locate inside terminal box at the base of each roadway lighting pole.
4. For number of light fixtures on each light pole, see sheet E-68.
5. Low voltage marker light assembly provided with 480 V, 1 phase, power converter.
6. Terminate conductors in existing LVCC-A.
7. Future WB off-ramp lighting connections by others. Coil and tape end of conductors in MH-5 (1)
8. Future Macalla Road lighting connections by others. Coil and tape end of conductors in MH-5

NOTES:

1. References:
   - For LVCC-A single line diagram, see sheet E-41.
   - For pull box schedule, see sheet E-69.

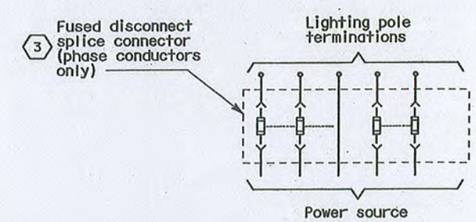

DETAIL-1
(TYP FOR EACH LTG POLE)

CONTRACT NO. 04-0120S4

CONTRACT CHANGE ORDER NO 78

SHEET 25 OF 92

REGISTERED PROFESSIONAL ENGINEER SYN YEE CHIN No. 18186 Exp. 09/30/2011 ELECTRICAL STATE OF CALIFORNIA

Syn Yee Chin
FOR REVISION ONLY
1 03/30/2011

DETAILS
YBI TRANSITION STRUCTURES ROADWAY WESTBOUND (480 V ROADWAY LIGHTING WIRING DIAGRAM)
NO SCALE

E-56

THIS PLAN ACCURATE FOR ELECTRICAL WORK ONLY.

STATE OF CALIFORNIA - DEPARTMENT OF TRANSPORTATION
Caltrans

CONSULTANT FUNCTIONAL SUPERVISOR | CALCULATED-DESIGNED BY | CHECKED BY | REVISED BY | DATE REVISED
BEHZ&H2SO-E0401EMMAPPAMADI | FK | AB

BORDER LAST REVISED 3/1/2007 | RELATIVE BORDER SCALE 0 20 40 60 80 | USERNAME => llorico | CU 04251 | EA 0120S1

Dist	COUNTY	ROUTE	KILOMETER POST TOTAL PROJECT	SHEET No.	TOTAL SHEETS
04	SF	80	12.7/13.2	178 R1	806

2/14/08
REGISTERED ELECTRICAL ENGINEER

6-23-08
PLANS APPROVAL DATE

REGISTERED PROFESSIONAL ENGINEER FADI WALIEDDINE No. 11365 Exp. 12/31/09 ELECTRICAL STATE OF CALIFORNIA

THE STATE OF CALIFORNIA OR ITS OFFICERS OR AGENTS SHALL NOT BE RESPONSIBLE FOR THE ACCURACY OR COMPLETENESS OF ELECTRONIC COPIES OF THIS PLAN SHEET.

PB AMERICAS, Inc.
A Parsons Brinckerhoff Company
303 Second St., Suite 700N
San Francisco, CA 94107-1317

Caltrans Metric

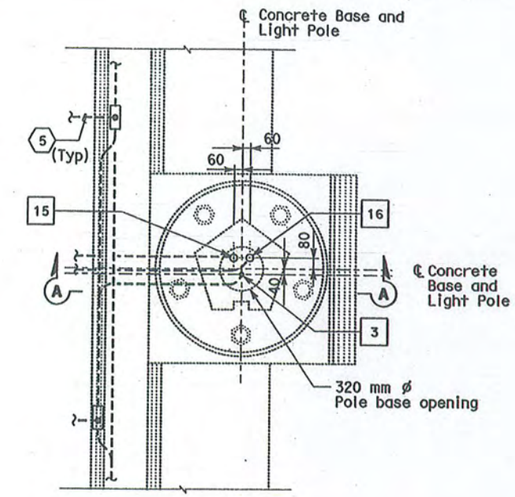

PLAN
CONDUIT STUB UPS FOR LIGHTING POLE 1024-1 WITH CCTV
NO SCALE

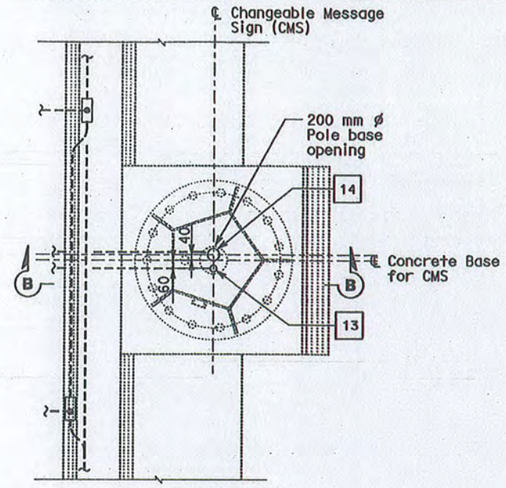

PLAN
CONDUITS FOR CMS-W01
NO SCALE

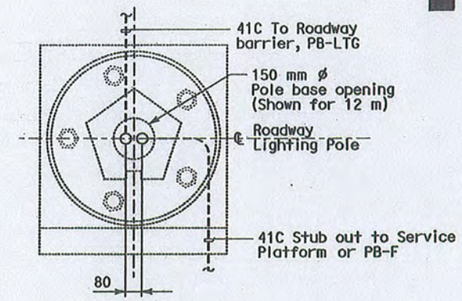

PLAN
(TYP FOR ROADWAY LIGHTING POLES 1001-16, 1002-1, 1002-16, 1022-2, 1023-1 AND 1023-3) 1
NO SCALE

SHEET NOTES:

1. For CCTV-W01 only. continued inside girder level, see sheet E-76.
2. Bond grounding bushing to ground lug of lighting pole or overhead sign post with #6 bare copper wire.
3. Conduits continued to Service Platform #1W embedded, see sheet E-81.
4. For continuation, see Service Platform plans Sheet E-83 for CMS-W01.
5. For continuation inside girder level, see sheet E-73 thru E-76.
6. Location of devices inside concrete barrier shall be installed by the direction of the Engineer.

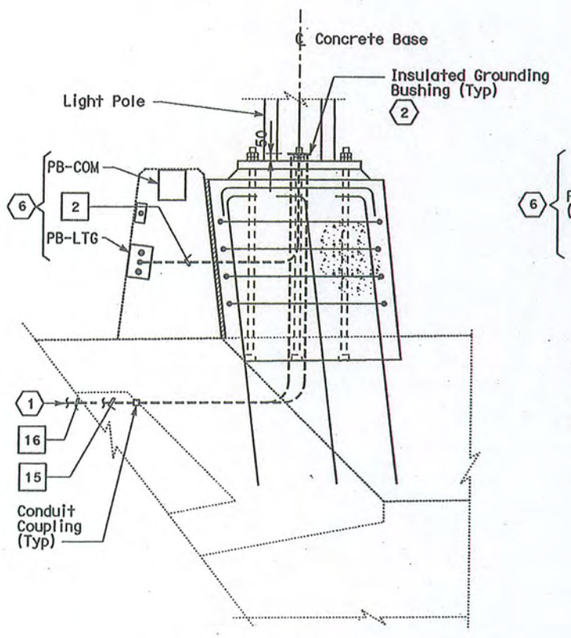

SECTION A-A
NO SCALE

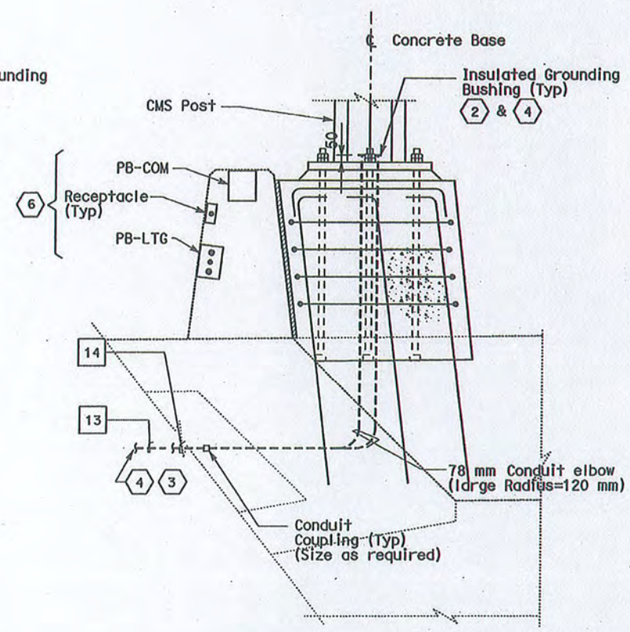

SECTION B-B
NO SCALE

NOTE:

1. References:
   - For light pole and fixture schedule and pull box schedules, see sheets E-68 and E-69.

REGISTERED PROFESSIONAL ENGINEER SYN YEE CHIN No. 18186 Exp. 09/30/2011 ELECTRICAL STATE OF CALIFORNIA

Syn Yee Chin
FOR REVISION ONLY
1 03/30/2011

CONTRACT NO. 04-012054

CONTRACT CHANGE ORDER NO 78

SHEET 16 OF 92

TOS CONDUIT PLANS AND SECTIONS WITH ELECTRICAL SYSTEMS

DETAILS
YBI TRANSITION STRUCTURES ROADWAY WESTBOUND (CONDUIT LOCATIONS)
SCALE AS NOTED

E-59

STATE OF CALIFORNIA - DEPARTMENT OF TRANSPORTATION
Caltrans

CONSULTANT FUNCTIONAL SUPERVISOR: BEHZAD GOLEMOHAMMADI
CALCULATED-DESIGNED BY: FK
CHECKED BY: AB
REVISED BY
DATE REVISED

THIS PLAN ACCURATE FOR ELECTRICAL WORK ONLY.

ALL DIMENSIONS ARE IN MILLIMETERS UNLESS OTHERWISE SHOWN

BORDER LAST REVISED 3/1/2007

RELATIVE BORDER SCALE IN MILLIMETERS 0 20 40 60 80

USERNAME => llorico

CU 04251

EA 0120S1

Dist	COUNTY	ROUTE	KILOMETER POST TOTAL PROJECT	SHEET No.	TOTAL SHEETS
04	SF	80	12.7/13.2	181 R1	806

CONTRACT NO. 04-012054

CONTRACT CHANGE ORDER NO 78

SHEET 17 OF 92

Caltrans Metric

7

2/14/08
REGISTERED ELECTRICAL ENGINEER

6-23-08
PLANS APPROVAL DATE

REGISTERED PROFESSIONAL ENGINEER FADI WALIEDDINE No. 11365 Exp. 12/31/09 ELECTRICAL STATE OF CALIFORNIA

THE STATE OF CALIFORNIA OR ITS OFFICERS OR AGENTS SHALL NOT BE RESPONSIBLE FOR THE ACCURACY OR COMPLETENESS OF ELECTRONIC COPIES OF THIS PLAN SHEET.

PB AMERICAS, Inc.
A Parsons Brinckerhoff Company
303 Second St., Suite 700N
San Francisco, CA 94107-1317

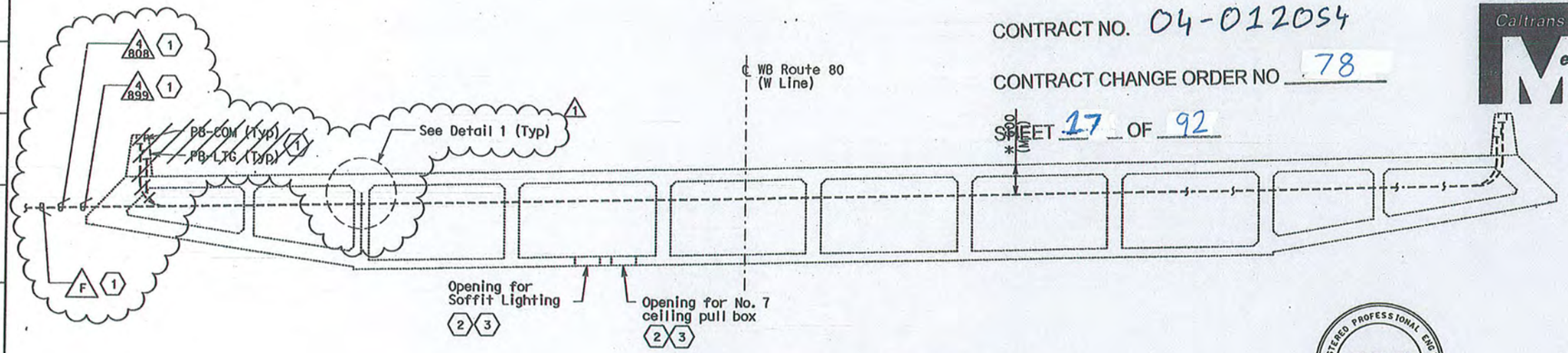

SECTION A-A AT BENT W10L 7

NO SCALE

REGISTERED PROFESSIONAL ENGINEER SYN YEE CHIN No. 18186 Exp. 09/30/2011 ELECTRICAL STATE OF CALIFORNIA

Syn Yee Chin
FOR REVISION ONLY
1 03/30/2011

NOTE:

1. Reference
   - (*) Dimension is provided by structures plan sheets.

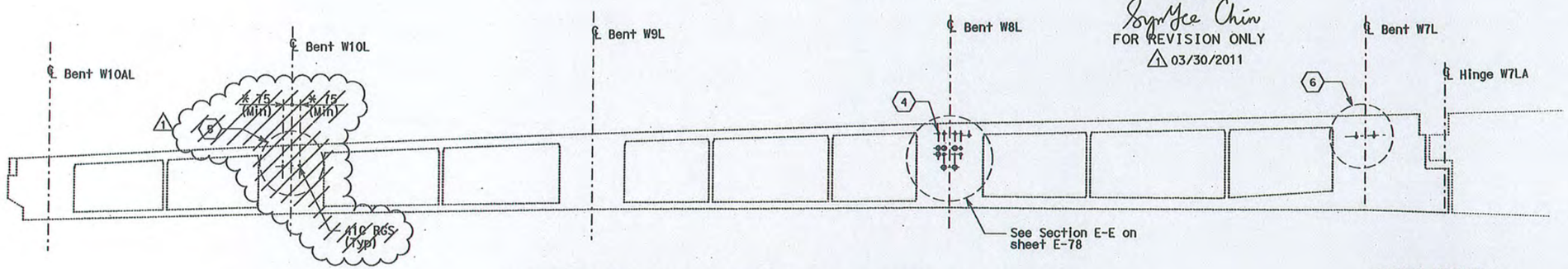

LONGITUDINAL SECTION - FRAME 1

NO SCALE

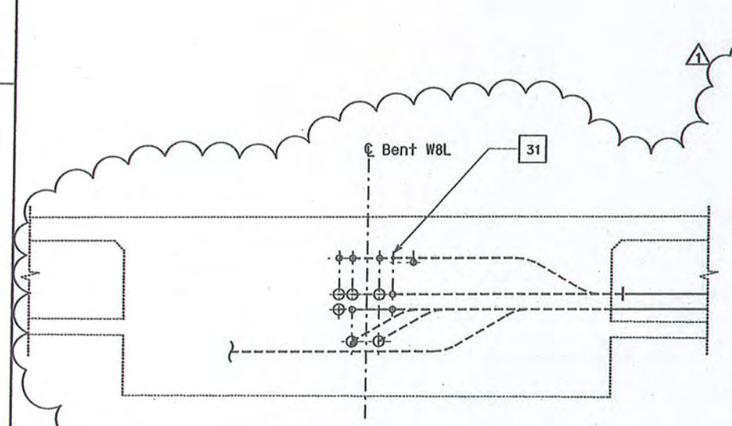

SECTION F-F 8

NO SCALE

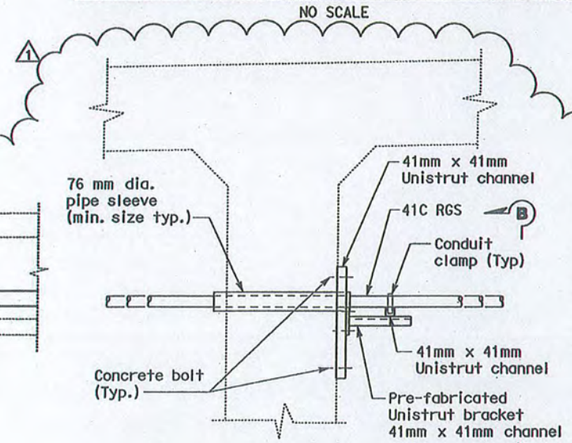

SECTION - DETAIL 1

NO SCALE

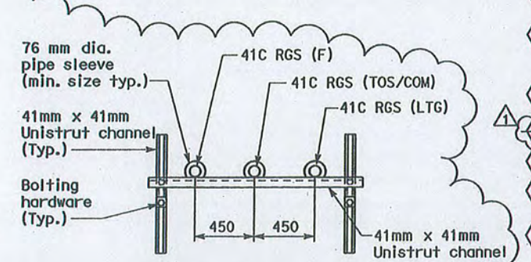

SECTION B-B

NO SCALE

SHEET NOTES:

1. ~~For locations of PB-LTG and PB-COM, see sheets E-49 to E-52.~~ Conduits to be extended to the north barrier of the on-ramp. Cap conduits for future extension if on-ramp is yet to be constructed.
2. For soffit lighting plan, see sheets E-73 thru E-76.
3. For soffit light fixture and No. 7 ceiling pull box mounting, see Standard Plans sheet ES-9E, Detail "F".
4. For embedded conduit layout, see sheet E-81.
5. ~~For embedded conduit, see sheet E-73.~~
6. For embedded conduit, see sheets E-74 to E-76.
7. Section A-A shown is from Bent W10L, see sheet E-73.
8. Section F-F shown is from Bent W8L, see sheet E-81.

7 REVISED PER ADDENDUM No. 7 DATED OCTOBER 19, 2009

DETAILS

YBI TRANSITION STRUCTURES ROADWAY WESTBOUND (SECTIONS)

SCALE AS NOTED

E-62

THIS PLAN ACCURATE FOR ELECTRICAL WORK ONLY.

ALL DIMENSIONS ARE IN MILLIMETERS UNLESS OTHERWISE SHOWN

STATE OF CALIFORNIA - DEPARTMENT OF TRANSPORTATION

Caltrans

CONSULTANT FUNCTIONAL SUPERVISOR: BEHZAD GOLEMOHAMMADI

CALCULATED-DESIGNED BY: FK

CHECKED BY: AB

REVISED BY

DATE REVISED

BORDER LAST REVISED 3/1/2007

RELATIVE BORDER SCALE 0 20 40 60 80

USERNAME => llorico

CU 04251

EA 0120S1

Dist	COUNTY	ROUTE	KILOMETER POST TOTAL PROJECT	SHEET No.	TOTAL SHEETS
04	SF	80	12.7/13.2	182 R1	806

REGISTERED ELECTRICAL ENGINEER 2/14/08

6-23-08
PLANS APPROVAL DATE

REGISTERED PROFESSIONAL ENGINEER FADI WALIEDDINE No. 11965 Exp. 12/31/09 ELECTRICAL STATE OF CALIFORNIA

THE STATE OF CALIFORNIA OR ITS OFFICERS OR AGENTS SHALL NOT BE RESPONSIBLE FOR THE ACCURACY OR COMPLETENESS OF ELECTRONIC COPIES OF THIS PLAN SHEET.

PB AMERICAS, Inc.
A Parsons Brinckerhoff Company
303 Second St., Suite 700N
San Francisco, CA 94107-1317

Caltrans Metric

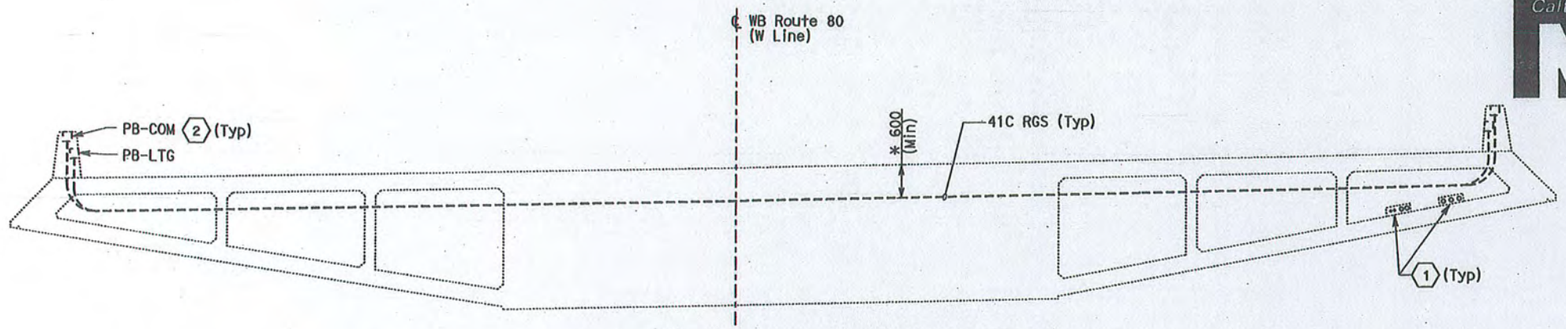

SECTION B-B AT BENT W7L (2)

SCALE: 1:50

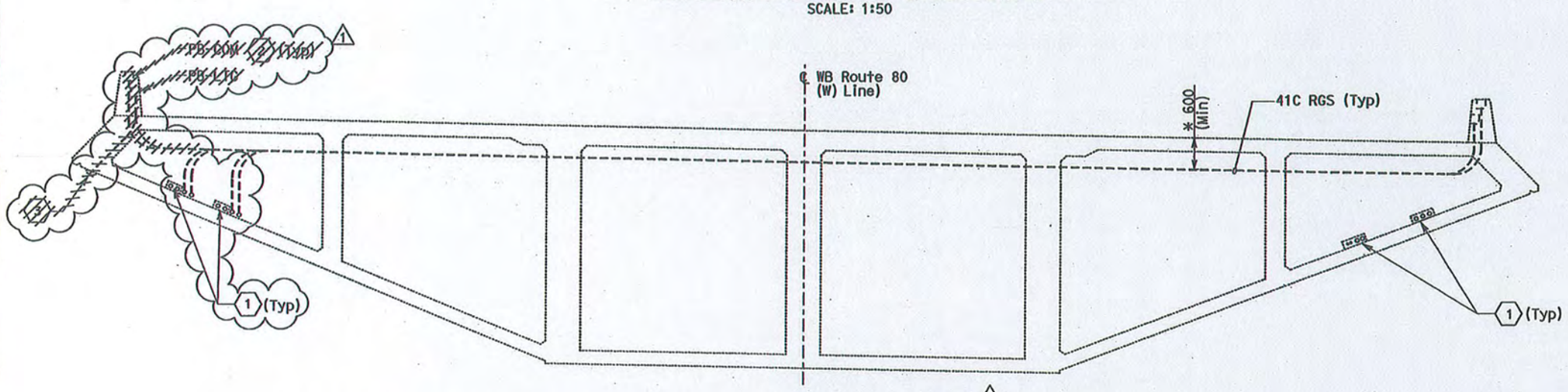

TYPICAL SECTION C-C AT BENTS ~~W6L,~~ W5L AND W4L (2)

SCALE: 1:50

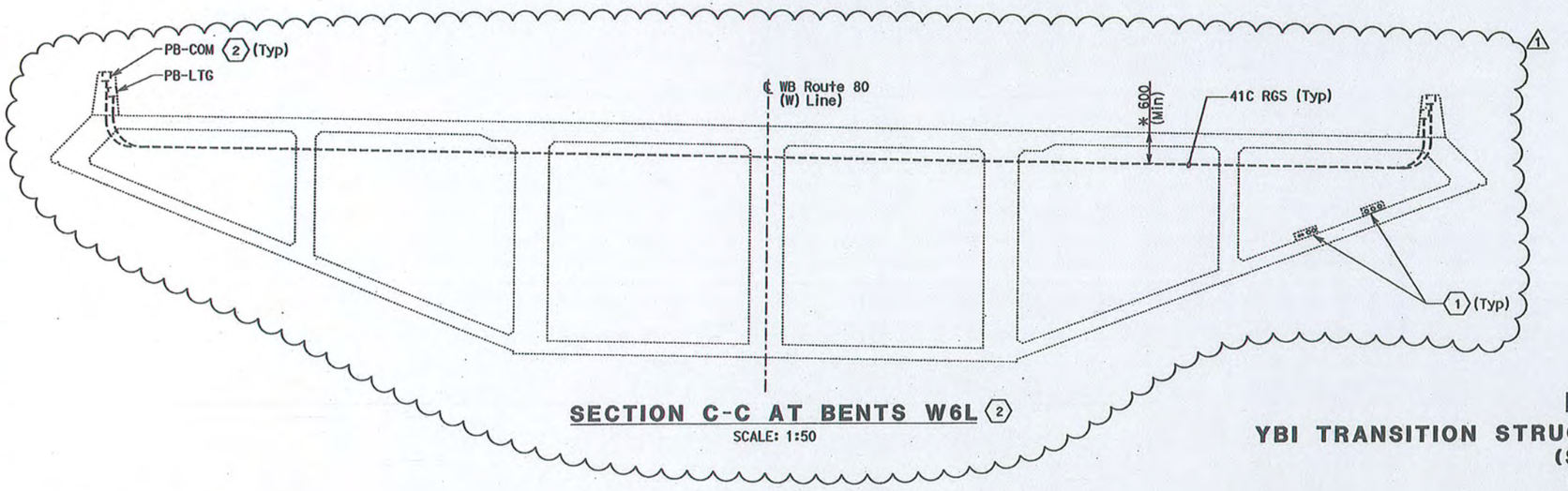

SECTION C-C AT BENTS W6L (2)

SCALE: 1:50

SHEET NOTES:

(1) For conduit openings in diaphragm, see structural dwg.

(2) For locations of PB-LTG and PB-COM, see sheet E-74 for Bent W7L, sheet E-75 for Bents W6L and W5L and sheet E-76 for Bent W4L and W3L.

(3) ~~Install 2"ø RGS conduit from PB-LTG. For future lightpipe, see sheets E-75 and E-76. Provide cap at end of conduit.~~

NOTES:

1. Reference
   - (*) Dimension to be provided by structural

CONTRACT NO. 04-012054

CONTRACT CHANGE ORDER NO 78

SHEET 28 OF 92

REGISTERED PROFESSIONAL ENGINEER SYN YEE CHIN No. 18186 Exp. 09/30/2011 ELECTRICAL STATE OF CALIFORNIA

Syn Yee Chin
FOR REVISION ONLY
(1) 03/30/2011

DETAILS
YBI TRANSITION STRUCTURES ROADWAY WESTBOUND (SECTIONS)

SCALE AS NOTED

E-63

REVISED BY	DATE REVISED
FK	AB

CALCULATED-DESIGNED BY FK
CHECKED BY AB
CONSULTANT FUNCTIONAL SUPERVISOR BEHZAD GOLEMOHAMMADI

STATE OF CALIFORNIA - DEPARTMENT OF TRANSPORTATION
Caltrans

THIS PLAN ACCURATE FOR ELECTRICAL WORK ONLY.

ALL DIMENSIONS ARE IN MILLIMETERS UNLESS OTHERWISE SHOWN

BORDER LAST REVISED 3/1/2007

RELATIVE BORDER SCALE 0 20 40 60 80

USERNAME => llorico

CU 04251 EA 0120S1

Dist	COUNTY	ROUTE	KILOMETER POST TOTAL PROJECT	SHEET No.	TOTAL SHEETS
04	SF	80	12.7/13.2	185 R1	806

REGISTERED ELECTRICAL ENGINEER 2/14/08

6-23-08
PLANS APPROVAL DATE

REGISTERED PROFESSIONAL ENGINEER FADI WALIEDDINE No. 11465 Exp. 12/31/09 ELECTRICAL STATE OF CALIFORNIA

THE STATE OF CALIFORNIA OR ITS OFFICERS OR AGENTS SHALL NOT BE RESPONSIBLE FOR THE ACCURACY OR COMPLETENESS OF ELECTRONIC COPIES OF THIS PLAN SHEET.

PB AMERICAS, Inc.
A Parsons Brinckerhoff Company
303 Second St., Suite 700N
San Francisco, CA 94107-1317

CONTRACT NO. 04-0120S4

CONTRACT CHANGE ORDER NO 78

SHEET 19 OF 92

SHEET NOTES:

1. The contractor to locate to suit site conditions.
2. Equipment dimensions and sizes shown shall be verified by the contractor prior to installation.
3. For conduit routing in electrical vault and TOS/COM vault see Sheet E-83.
4. Install 610 mm solid bottom tray with cover for routing TOS/COM cables.
5. Install 610 mm ladder type tray for routing 600 V rated cables.
6. Install pull irons in all vaults, cast in each end wall.
7. Install 41 mm (F) conduit from Platform 3W to Pole 1023-3 for future CCTV (C#16).
8. Connect to transformer neutral. See panel schedule.

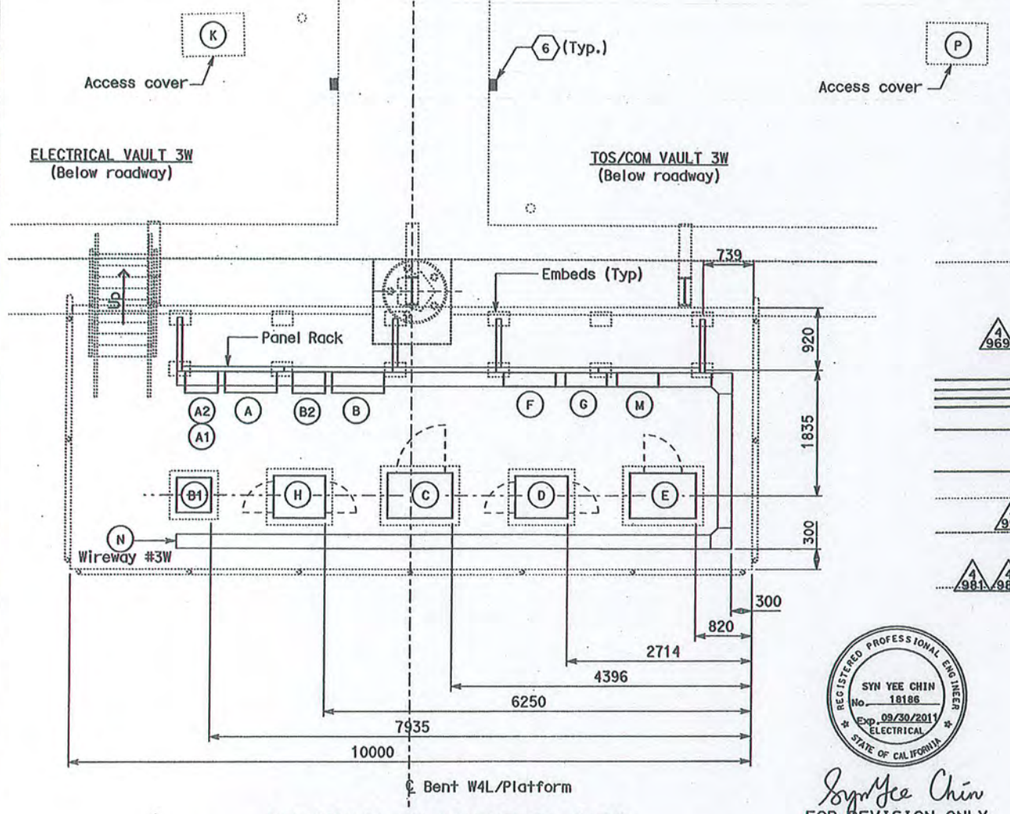

SERVICE PLATFORM #3W EQUIPMENT ARRANGEMENT PLAN (2)

SCALE: 1:40

REGISTERED PROFESSIONAL ENGINEER SYN YEE CHIN No. 18186 Exp. 09/30/2011 ELECTRICAL STATE OF CALIFORNIA

Syn Yee Chin
FOR REVISION ONLY
(1) 03/30/2011

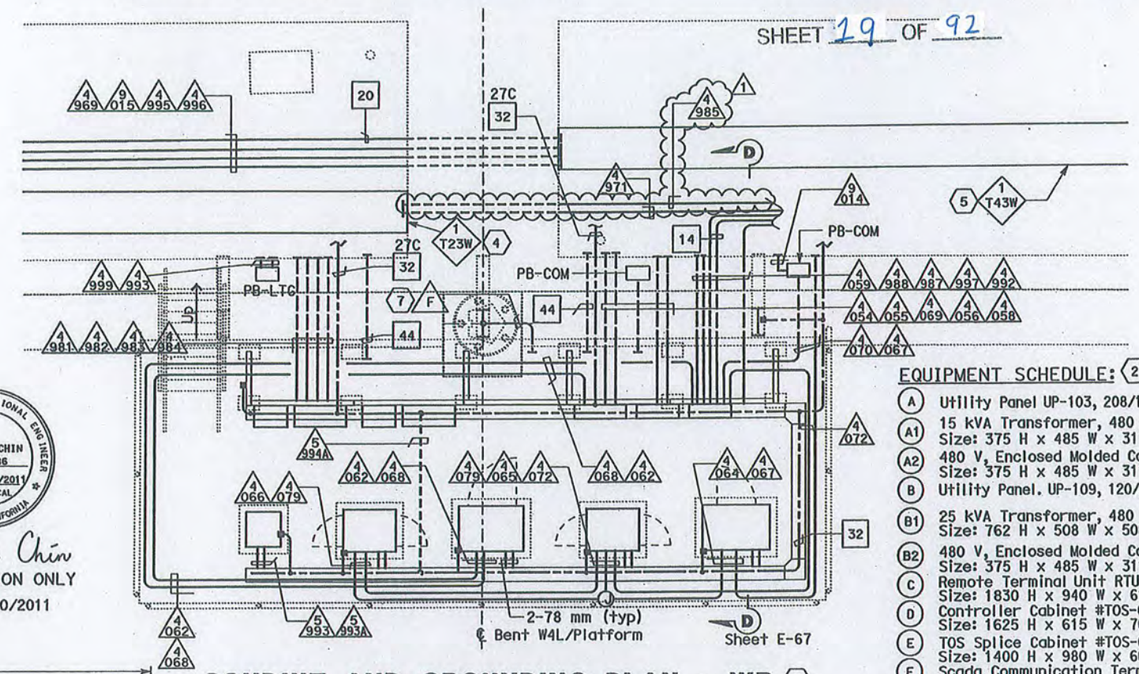

CONDUIT AND GROUNDING PLAN - WB (3)

SCALE: 1:40

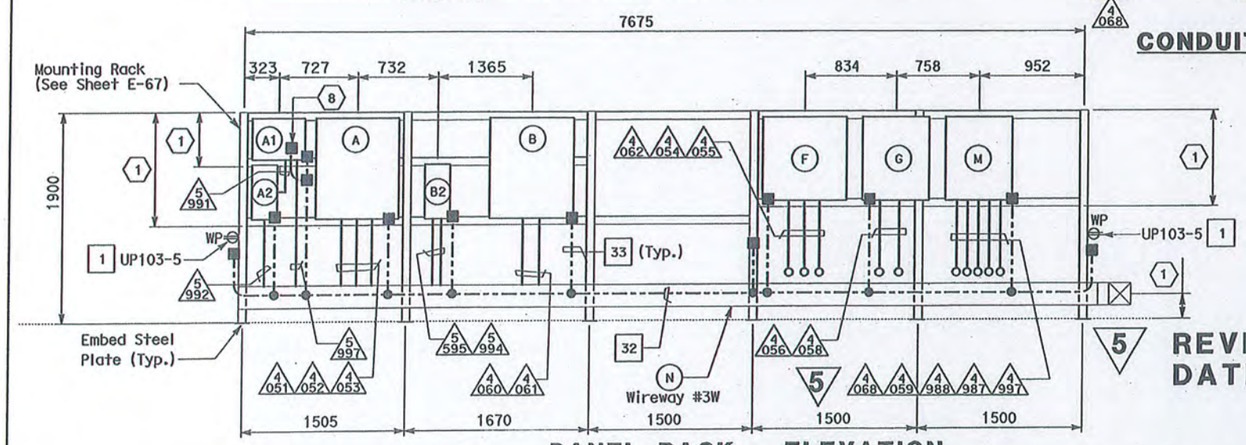

PANEL RACK - ELEVATION

SCALE: 1:25

NOTES:

1. For pull box schedule, refer to sheet E-69.
2. Conduit openings and locations through diaphragm, refer to structures sheets.
3. For details of embedd steel plates, refer to AS sheets.
4. Ground conductor routed outside or exposed shall be green insulated.
5. Conduits terminating inside vaults shall be provided with ground insulated bushing connected to ground bar.

EQUIPMENT SCHEDULE: (2)

- (A) Utility Panel UP-103, 208/120 V, (PB-8A).
- (A1) 15 kVA Transformer, 480 V (Nema 4X) Size: 375 H x 485 W x 311 D.
- (A2) 480 V, Enclosed Molded Case Ckt. Bkr. Size: 375 H x 485 W x 311 D.
- (B) Utility Panel. UP-109, 120/240 V (PB-8A).
- (B1) 25 kVA Transformer, 480 V (Nema 4X) Size: 762 H x 508 W x 508 D.
- (B2) 480 V, Enclosed Molded Case Ckt. Bkr. Size: 375 H x 485 W x 311 D.
- (C) Remote Terminal Unit RTU #09W Size: 1830 H x 940 W x 610 D.
- (D) Controller Cabinet #TOS-03WA Size: 1625 H x 615 W x 768 D.
- (E) TOS Splice Cabinet #TOS-03WS Size: 1400 H x 980 W x 660 D.
- (F) Scada Communication Terminal Box #COM-03W (PB-7B).
- (G) Telephone Terminal Box #TEL-03W (PB-7C).
- (H) Controller Cabinet #TOS-03WB Size: 1625 H x 615 W x 768 D.
- (M) PB-2B Mounted on panel rack.
- (N) 600 V, Wireway #3W (Nema 4X) 203 H x 203 W.

MISCELLANEOUS

- (K) Deck Utility access opening and cover. Engraving "ELECTRICAL VAULT 3W". Refer to structures plan sheets, miscellaneous superstructure details No. 2.
- (P) Deck Utility access opening and cover. Engraving "TOS/COM VAULT 3W". Refer to structures plan sheets, miscellaneous superstructure details No. 2.

REVISED PER ADDENDUM No. 5
DATED JULY 30, 2009

DETAILS

YBI TRANSITION STRUCTURES ROADWAY WESTBOUND (PLATFORM 3W ARRANGEMENT AND PLAN)

SCALE AS NOTED

E-66

REVISED BY	DATE REVISED
FK	AB

CALCULATED-DESIGNED BY
CHECKED BY
CONSULTANT FUNCTIONAL SUPERVISOR
BEHZAD GOLEMOHAMMADI

STATE OF CALIFORNIA - DEPARTMENT OF TRANSPORTATION
Caltrans

THIS PLAN IS ACCURATE FOR ELECTRICAL WORK ONLY.

ALL DIMENSIONS ARE IN MILLIMETERS UNLESS OTHERWISE SHOWN

RELATIVE BORDER SCALE 0 20 40 60 80

USERNAME => llorico

CU 04251 | EA 0120S1

BORDER LAST REVISED 3/1/2007

Dist	COUNTY	ROUTE	KILOMETER POST TOTAL PROJECT	SHEET No.	TOTAL SHEETS
04	SF	80	12.7/13.2	188 R1	806

REGISTERED ELECTRICAL ENGINEER 2/14/08

6-23-08
PLANS APPROVAL DATE

REGISTERED PROFESSIONAL ENGINEER FADI WALIEDDINE No. 11465 Exp. 12/31/09 ELECTRICAL STATE OF CALIFORNIA

THE STATE OF CALIFORNIA OR ITS OFFICERS OR AGENTS SHALL NOT BE RESPONSIBLE FOR THE ACCURACY OR COMPLETENESS OF ELECTRONIC COPIES OF THIS PLAN SHEET.

PB AMERICAS, Inc.
A Parsons Brinckerhoff Company
303 Second St., Suite 700N
San Francisco, CA 94107-1317

PANEL ENCLOSURES (1)

Location	Type	Cabinet/Terminal Box Size (mm)	Enclosure Type	Nameplate Cabinet/Terminal Cover	Remarks
Service Platform	PB-7C	762 H x 508 W x 203 D	NEMA 4X	Caltrans Telephone	Enclosure only - For Telephone Terminal Box
Service Platform	PB-8A	762 H x 914 W x 305 D	NEMA 4X	See Panel Schedules	Enclosure only - For Panel Board

PULL BOX (2) (3)

Location	Type	Pull Box size (mm)	Enclosure Type	Nameplate Pull Box Cover	Remarks
Roadway Barrier	PB-Com	-	-	Communication	Caltrans standard ES-9C (PB-9A)
Roadway Barrier	PB-Ltg	-	-	600 V - Electrical	Caltrans standard ES-9C (PB-9)
Roadway Barrier	-	Single Receptacle	-	Ckt # See Plan Dwg	Deep Single Gang Weatherproof And Threaded Cap
Girder	PB-2A	915 L x 610 W x 610 D	Nema 4X	TOS/COM	See E-74, E-86
Service Platform	PB-2B	762 L x 610 W x 203 D	Nema 4X	TOS System	
Roadway Deck	-	-	Concrete	Caltrans-TOS Preformed Loop	See E-147
Girder	PB-2E	915 L x 610 W x 610 D	Nema 4X	600 V - Electrical	See E-74, E-86
Bent W7L	PB-SMD	508 L x 610 W x 203 D	NEMA 4X	SMD System	See E-162
Roadway Barrier	PB-F	Same as PB-Com		*	See E-48
Inside Vault	PB-2J	203 L x 203 W x 102 D	NEMA 4X	600 V Electrical	
Grade W8L	PB-RM01	-	Concrete	TOS	Caltrans Standard ES-8 (6T)

1

* TO BE DETERMINED BY THE ENGINEER.

SHEET NOTES:

(1) Splice boxes and enclosure panels shall be provided with padlock provisions.

(2) Roadway pull box access covers including precast manhole access covers located at roadway traffic shall be anti-skid surface with counter sunk mounting bolts.

(3) Panel enclosures shall be provided by padlock provisions.

CONTRACT NO. 04-012054

CONTRACT CHANGE ORDER NO 78

SHEET 20 OF 92

REGISTERED PROFESSIONAL ENGINEER SYN YEE CHIN No. 18186 Exp. 09/30/2011 ELECTRICAL STATE OF CALIFORNIA

Syn Yee Chin
FOR REVISION ONLY
1 03/30/2011

DETAILS
YBI TRANSITION STRUCTURES ROADWAY WESTBOUND (PULL BOX SCHEDULES)
NO SCALE

E-69

THIS PLAN ACCURATE FOR ELECTRICAL WORK ONLY.

STATE OF CALIFORNIA - DEPARTMENT OF TRANSPORTATION
Caltrans
CONSULTANT FUNCTIONAL SUPERVISOR: BEHZAD GOLEMOHAMMADI
CALCULATED-DESIGNED BY: FK
CHECKED BY: AB
REVISED BY
DATE REVISED

Dist	COUNTY	ROUTE	KILOMETER POST TOTAL PROJECT	SHEET No.	TOTAL SHEETS
04	SF	80	12.7/13.2	192 R1	806

REGISTERED ELECTRICAL ENGINEER 2/14/08

6-23-08
PLANS APPROVAL DATE

THE STATE OF CALIFORNIA OR ITS OFFICERS OR AGENTS SHALL NOT BE RESPONSIBLE FOR THE ACCURACY OR COMPLETENESS OF ELECTRONIC COPIES OF THIS PLAN SHEET.

REGISTERED PROFESSIONAL ENGINEER FADI WALIEDDINE No. 11365 Exp. 12/31/09 ELECTRICAL STATE OF CALIFORNIA

PB AMERICAS, Inc.
A Parsons Brinckerhoff Company
303 Second St., Suite 700N
San Francisco, CA 94107-1317

Caltrans Metric

NOTES:

1. References:
   - For pull box mounting details, see sheet E-86.
   - For pull box schedules, see sheet E-69.
   - TOS equipment it shown for conduit routing only. For typical details of TOS controllers and devices, see sheets E-146 through E-157.
   - For lighting circuit and wiring diagram, see sheet E-57.
   - For light pipe schedule, see sheet E-84.
   - For 480 V light pipe wiring diagram, see sheet E-77A.
2. For fixture schedules, see sheet E-110.
3. For other related work not shown, see Electrical Special Provisions.

SHEET NOTES:

1. Conduit up to PB-LTG located in barrier.
2. Conduit up to PB-COM located in barrier.
3. Support and install lighting conduit flush on girder floor.
4. For soffit light fixture and No. 7 ceiling pull box mounting, see Caltrans Standard ES-9E, Detail F.
5. Conduit up to barrier PB-LTG for future light pipe. Provide cap at bottom end of conduit, see Section C-C sheet E-63.
6. Provide cap at bottom end of conduit, see Section C-C, sheet E-63.
7. Conduit up to PB-F located in barrier.
8. Conduits to be extended to the north barrier of the on-ramp. Cap conduits for future extension if on-ramp is yet to be constructed.

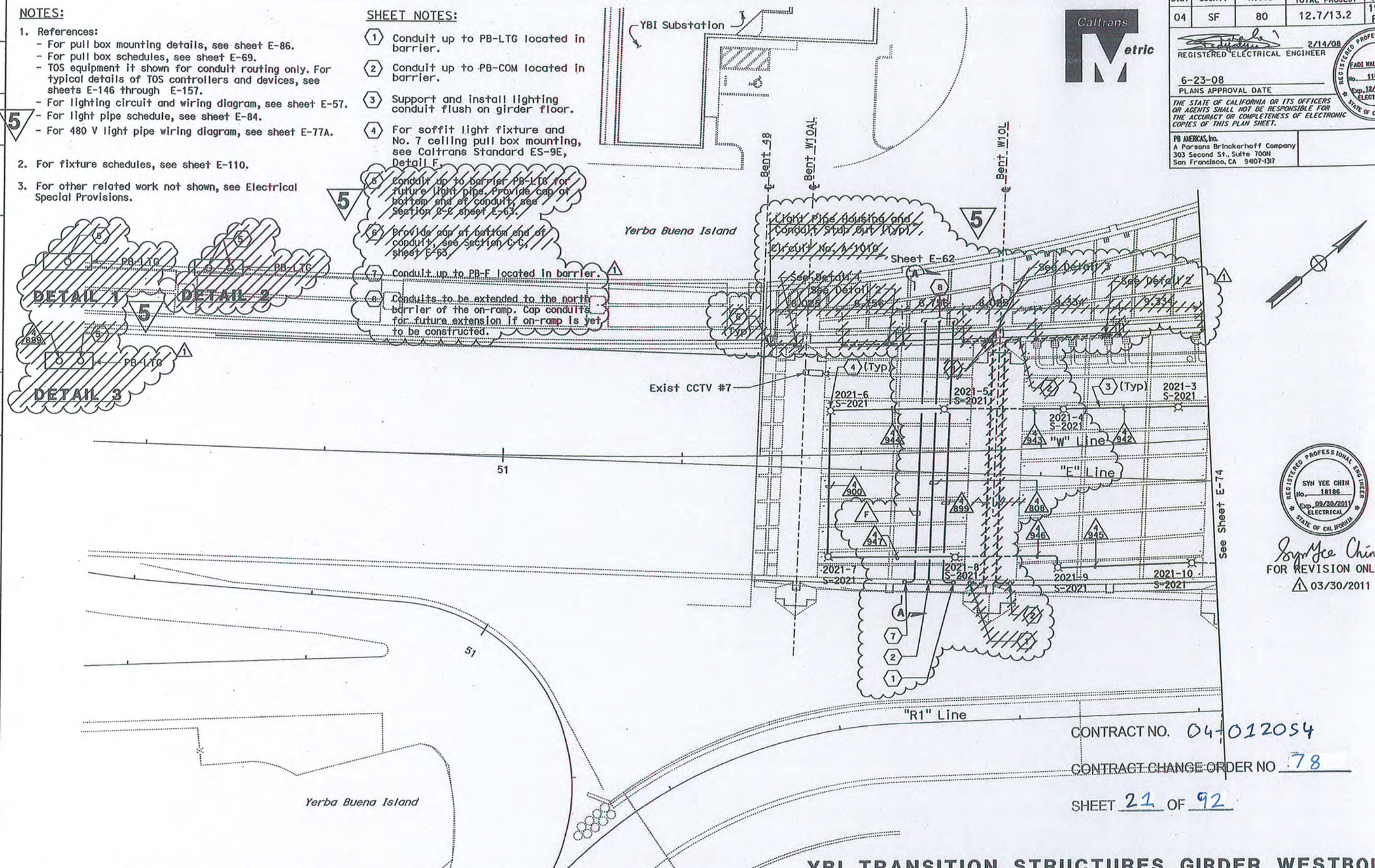

REGISTERED PROFESSIONAL ENGINEER SYN YEE CHIN No. 18186 Exp. 09/30/2011 ELECTRICAL STATE OF CALIFORNIA

Syn Yee Chin
FOR REVISION ONLY
△1 03/30/2011

CONTRACT NO. 04-012054

CONTRACT CHANGE ORDER NO 78

SHEET 21 OF 92

△5 REVISED PER ADDENDUM No. 5 DATED JULY 30, 2009

YBI TRANSITION STRUCTURES GIRDER WESTBOUND
(LIGHTING AND ELECTRICAL SYSTEMS)

SCALE: 1:200

CONDUIT PLAN

E-73

THIS PLAN IS ACCURATE FOR ELECTRICAL WORK ONLY.

ALL DIMENSIONS ARE IN METERS UNLESS OTHERWISE SHOWN

STATE OF CALIFORNIA - DEPARTMENT OF TRANSPORTATION

Caltrans

CONSULTANT FUNCTIONAL SUPERVISOR: BEHZAD GOLEMOHAMMADI

CALCULATED-DESIGNED BY: FK

CHECKED BY: AB

REVISED BY | DATE REVISED

BORDER LAST REVISED 3/1/2007

RELATIVE BORDER SCALE 0 20 40 60 80

USERNAME => llorico

CU 04251

EA 0120S1

Dist	COUNTY	ROUTE	KILOMETER POST TOTAL PROJECT	SHEET No.	TOTAL SHEETS
04	SF	80	12.7/13.2	193 R1	806

REGISTERED ELECTRICAL ENGINEER 2/14/08

6-23-08
PLANS APPROVAL DATE

REGISTERED PROFESSIONAL ENGINEER FADI WALIEDDINE No. 11465 Exp. 12/31/09 ELECTRICAL STATE OF CALIFORNIA

THE STATE OF CALIFORNIA OR ITS OFFICERS OR AGENTS SHALL NOT BE RESPONSIBLE FOR THE ACCURACY OR COMPLETENESS OF ELECTRONIC COPIES OF THIS PLAN SHEET.

PB AMERICAS, Inc.
A Parsons Brinckerhoff Company
303 Second St., Suite 700N
San Francisco, CA 94107-1317

Caltrans Metric

5

NOTES:

1. References:
   - For pull box mounting details, see sheet E-86.
   - For conduit support locations, see sheets E-87 through E-89.
   - For pull box schedules, see sheet E-69.
   - TOS equipment it shown for conduit routing only. For typical details of TOS controllers and devices, see sheets E-146 through E-157.
   - For lighting circuit and wiring diagram, see sheet E-57.
   - For light pipe schedule, see sheet E-84.
   - For 480 V light pipe wiring diagram, see sheet E-77 & E-77A.
2. For fixture schedule, see sheet E-110.
3. For other related work not shown, see Electrical Special Provisions.

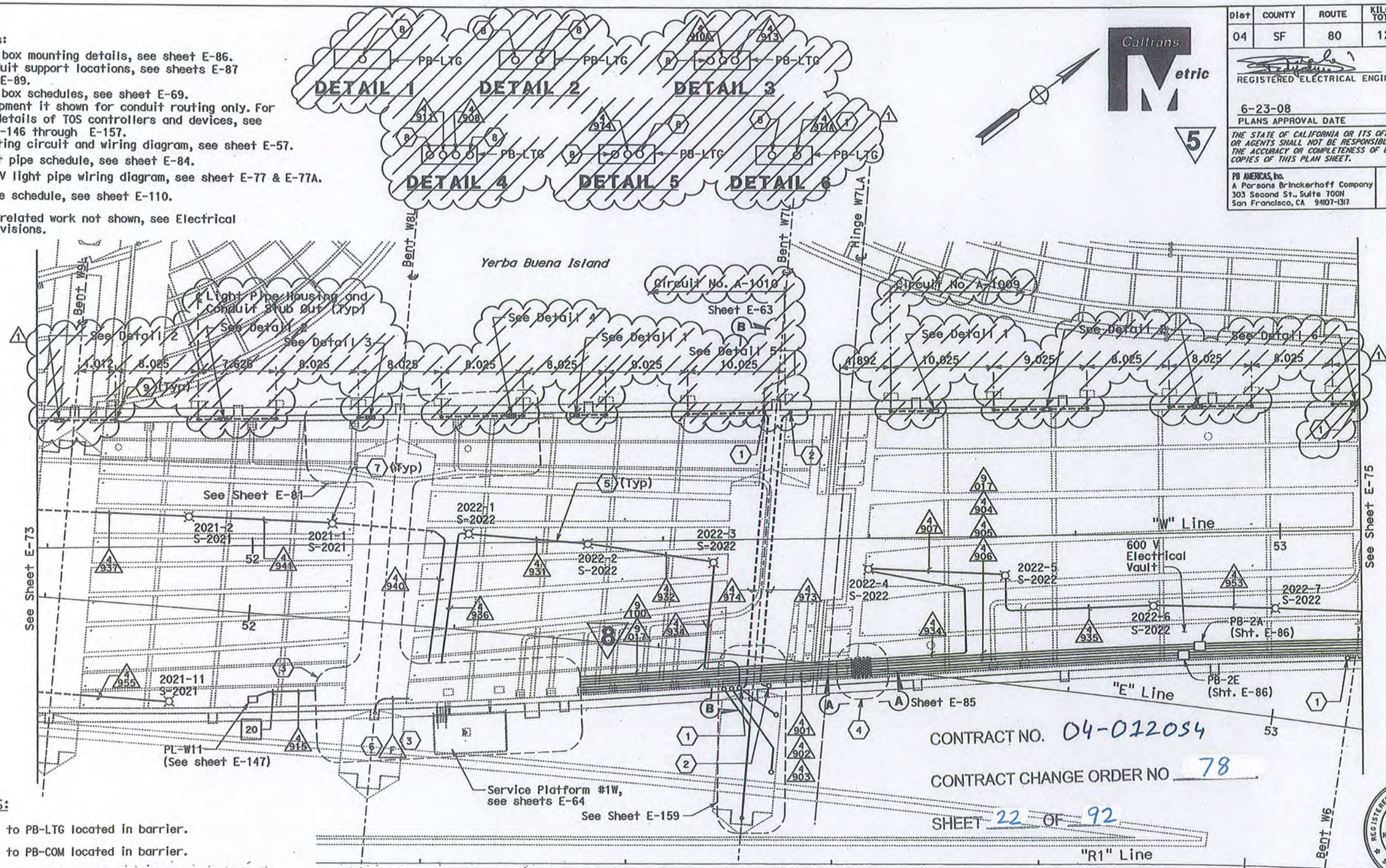

CONTRACT NO. 04-012054

CONTRACT CHANGE ORDER NO 78

SHEET 22 OF 92

REGISTERED PROFESSIONAL ENGINEER SYN YEE CHIN No. 18186 Exp. 09/30/2011 ELECTRICAL STATE OF CALIFORNIA

Syn Yee Chin
FOR REVISION ONLY
1 03/30/2011

CONDUIT PLAN

SHEET NOTES:

1. Conduit up to PB-LTG located in barrier.
2. Conduit up to PB-COM located in barrier.
3. For electrical vault section & details, see sheet E-81.
4. Deck access manhole required for installation of cable.
5. Support and install lighting conduit flush on girder floor.
6. Install 41 mm (F) conduit from 600 V vault in IW to Pole 1022-1. Required for future camera #14 (By others).
7. For soffit light fixture and No. 7 ceiling pull box mounting, see Caltrans Standard ES-9E, Detail F.
8. Conduit up to barrier PB-LTG for future light pipe. Provide cap at bottom end of conduit. See Section C-C sheet E-83. 1
9. Provide cap at bottom end of conduit. See Section C-C sheet E-63.

5 REVISED PER ADDENDUM No. 5 DATED JULY 30, 2009

8 REVISED PER ADDENDUM No. 8 DATED NOVEMBER 12, 2009

YBI TRANSITION STRUCTURES GIRDER WESTBOUND
(LIGHTING AND ELECTRICAL SYSTEMS)

SCALE: 1:200

E-74

THIS PLAN IS ACCURATE FOR ELECTRICAL WORK ONLY.

ALL DIMENSIONS ARE IN METERS UNLESS OTHERWISE SHOWN

STATE OF CALIFORNIA - DEPARTMENT OF TRANSPORTATION

Caltrans

CONSULTANT FUNCTIONAL SUPERVISOR: BEHZAD GOLEMOHAMMADI

CALCULATED-DESIGNED BY: FK

CHECKED BY: AB

REVISED BY

DATE REVISED

BORDER LAST REVISED 3/1/2007

RELATIVE BORDER SCALE 0 20 40 60 80

USERNAME => llorico

CU 04251

EA 0120S1

CONTRACT NO. 04-012054

CONTRACT CHANGE ORDER NO 78

SHEET 23 OF 92

Dist	COUNTY	ROUTE	KILOMETER POST TOTAL PROJECT	SHEET No.	TOTAL SHEETS
04	SF	80	12.7/13.2	194 R2	806

REGISTERED ELECTRICAL ENGINEER 2/14/08

6-23-08
PLANS APPROVAL DATE

REGISTERED PROFESSIONAL ENGINEER FADI WALIEDDINE No. 11985 Exp. 12/31/09 ELECTRICAL STATE OF CALIFORNIA

THE STATE OF CALIFORNIA OR ITS OFFICERS OR AGENTS SHALL NOT BE RESPONSIBLE FOR THE ACCURACY OR COMPLETENESS OF ELECTRONIC COPIES OF THIS PLAN SHEET.

PB AMERICAS, Inc.
A Parsons Brinckerhoff Company
303 Second St., Suite 700N
San Francisco, CA 94107-1317

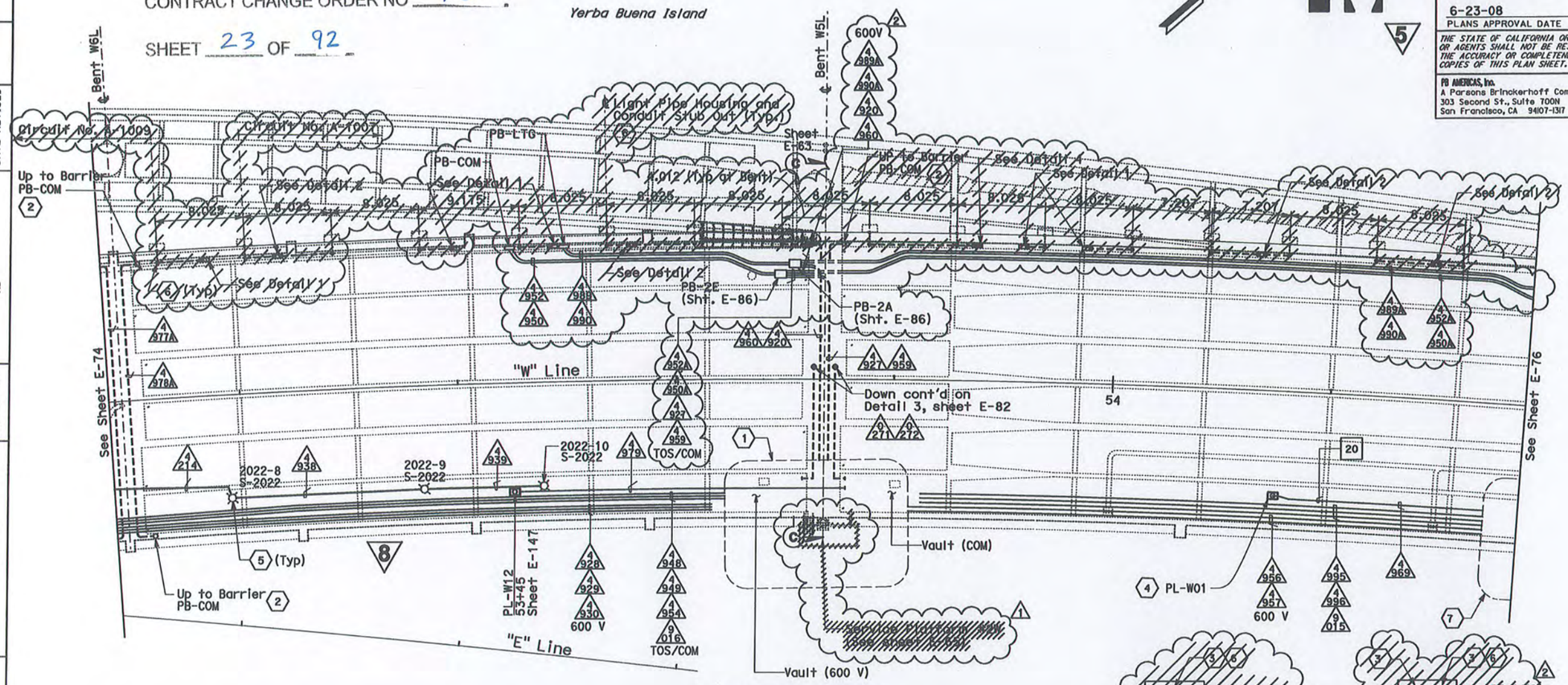

CONDUIT PLAN

5 REVISED PER ADDENDUM No. 5 DATED JULY 30, 2009

8 REVISED PER ADDENDUM No. 8 DATED NOVEMBER 12, 2009

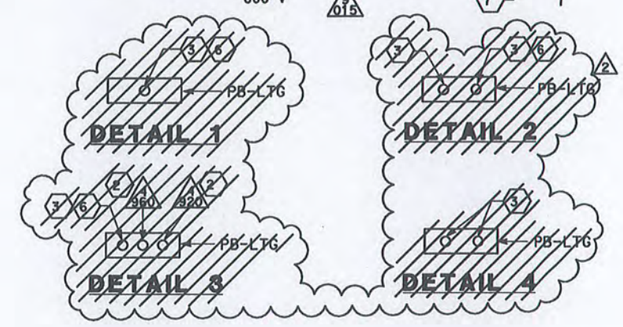

SHEET NOTES:

1. For vault section & details, see sheet E-82.
2. Conduit up Barrier PB-LTG and PB-COM.
3. ~~Conduit up to barrier PB-LTG for future light pipe. Provide cap at bottom end of conduit, see Section C-C sheet E-63.~~ 2
4. For traffic operations system preformed loop detector station installation, see sheet E-147.
5. For soffit light fixture and No. 7 ceiling pull box mounting, see Caltrans Standard ES-9E, Detail F.
6. ~~Provide cap at bottom end of conduit, see Section C-C, sheet E-63.~~ 2
7. For electrical vault section & details see sheet E-83.

THIS PLAN IS ACCURATE FOR ELECTRICAL WORK ONLY.

NOTES:

1. References:
   - For lighting poles, call boxes, outlet boxes and pull boxes schedules, see sheet E-69.
   - Lighting fixture mounted under westbound deck. Conduits routed inside girder box. 1
   - ~~For service platform plan and details, see sheet E-65.~~
   - For future light pipe schedule, see sheet E-84.
   - For 480 light pipe wiring diagram, see sheet E-77.
   - For typical detail of conduit & pull box support, see sheet E-86.
2. For fixture schedule, see sheet E-110.

ALL DIMENSIONS ARE IN METERS UNLESS OTHERWISE SHOWN

REGISTERED PROFESSIONAL ENGINEER SYN YEE CHIN No. 18186 Exp. 09/30/2011 ELECTRICAL STATE OF CALIFORNIA

Syn Yee Chin
FOR REVISION ONLY
1 11/22/2010
2 03/30/2011

YBI TRANSITION STRUCTURES GIRDER WESTBOUND
(LIGHTING AND ELECTRICAL SYSTEMS)

SCALE: 1:200

E-75

REVISED BY	DATE REVISED	FK	AB
CALCULATED-DESIGNED BY	CHECKED BY		
CONSULTANT FUNCTIONAL SUPERVISOR	BEHZAD GOLEMOHAMMADI		

STATE OF CALIFORNIA - DEPARTMENT OF TRANSPORTATION
Caltrans

LAST REVISION 00-00-00 | DATE PLOTTED => 05-APR-2011 | TIME PLOTTED => 11:33

BORDER LAST REVISED 3/1/2007 | RELATIVE BORDER SCALE IS IN MILLIMETERS 0 20 40 60 80 | USERNAME => llorico | DGN FILE => 40120sua075r02.dgn | CU 04251 | EA 0120S1

Dist	COUNTY	ROUTE	KILOMETER POST TOTAL PROJECT	SHEET No.	TOTAL SHEETS
04	SF	80	12.7/13.2	195 R1	806

REGISTERED ELECTRICAL ENGINEER 2/14/08

6-23-08
PLANS APPROVAL DATE

REGISTERED PROFESSIONAL ENGINEER FADI WALIEDDINE No. 11465 Exp. 12/31/09 ELECTRICAL STATE OF CALIFORNIA

THE STATE OF CALIFORNIA OR ITS OFFICERS OR AGENTS SHALL NOT BE RESPONSIBLE FOR THE ACCURACY OR COMPLETENESS OF ELECTRONIC COPIES OF THIS PLAN SHEET.

PB AMERICAS, Inc.
A Parsons Brinckerhoff Company
303 Second St., Suite 700N
San Francisco, CA 94107-1317

CONTRACT NO. 04-012054

CONTRACT CHANGE ORDER NO 78

SHEET 24 OF 92

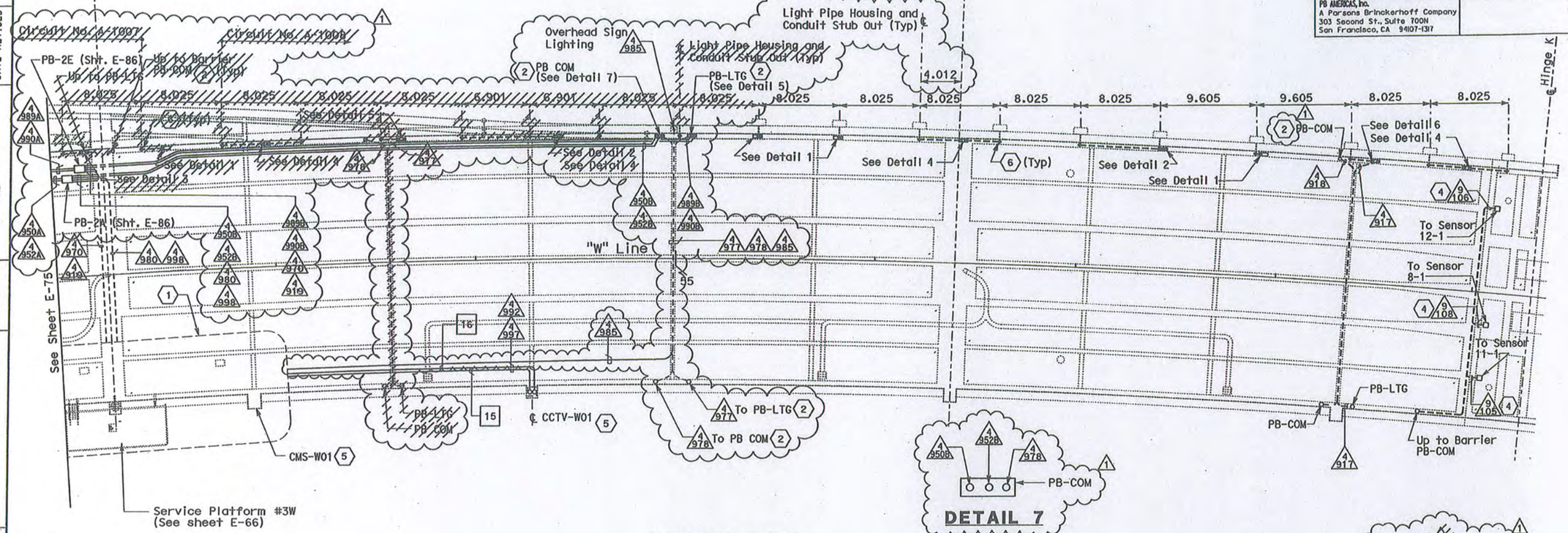

CONDUIT PLAN

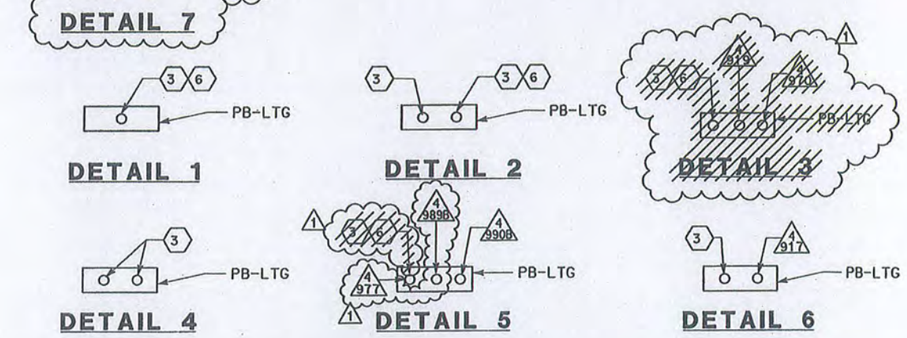

SHEET NOTES:

1. For electrical vault section & details see sheet E-83.
2. For conduit up to barrier PB-LTG and PB-COM.
3. Conduit up to barrier PB-LTG for future light pipe.
4. Conduits to be installed in this contract but are reserved for SMD.
5. Conduits up, see Sheet E-59.
6. Provide cap at bottom end of conduit. See Section C-C, sheet E-63.

NOTES:

1. References:
   - For lighting poles, call boxes, outlet boxes and pull boxes schedules, see sheet E-69.
   - Lighting fixture mounted under westbound deck. Conduits routed inside girder box.
   - For service platform plan and details, see sheet E-66.
   - For future light pipe schedule, see sheet E-84.
   - For 480 light pipe wiring diagram, see sheet E-77.

REGISTERED PROFESSIONAL ENGINEER SYN YEE CHIN No. 18186 Exp. 09/30/2011 ELECTRICAL STATE OF CALIFORNIA

Syn Yee Chin
FOR REVISION ONLY
1 03/30/2011

YBI TRANSITION STRUCTURES GIRDER WESTBOUND
(LIGHTING AND ELECTRICAL SYSTEMS)

SCALE: 1:200

5 REVISED PER ADDENDUM No. 5 DATED JULY 30, 2009

E-76

THIS PLAN IS ACCURATE FOR ELECTRICAL WORK ONLY.

ALL DIMENSIONS ARE IN METERS UNLESS OTHERWISE SHOWN

STATE OF CALIFORNIA - DEPARTMENT OF TRANSPORTATION
Caltrans

CONSULTANT FUNCTIONAL SUPERVISOR: BEHZAD GOLEMOHAMMADI
CALCULATED-DESIGNED BY: FK
CHECKED BY: AB
REVISED BY
DATE REVISED

BORDER LAST REVISED 3/1/2007

RELATIVE BORDER SCALE IS IN MILLIMETERS 0 20 40 60 80

USERNAME => llorico

CU 04251

EA 0120S1

Dist	COUNTY	ROUTE	KILOMETER POST TOTAL PROJECT	SHEET No.	TOTAL SHEETS
04	SF	80	12.7/13.2	196 R1	806

REGISTERED ELECTRICAL ENGINEER 2/14/08

6-23-08
PLANS APPROVAL DATE

THE STATE OF CALIFORNIA OR ITS OFFICERS OR AGENTS SHALL NOT BE RESPONSIBLE FOR THE ACCURACY OR COMPLETENESS OF ELECTRONIC COPIES OF THIS PLAN SHEET.

REGISTERED PROFESSIONAL ENGINEER FADI WALIEDDINE No. 11165 Exp. 12/31/09 ELECTRICAL STATE OF CALIFORNIA

PB AMERICAS, Inc.
A Parsons Brinckerhoff Company
303 Second St., Suite 700N
San Francisco, CA 94107-1317

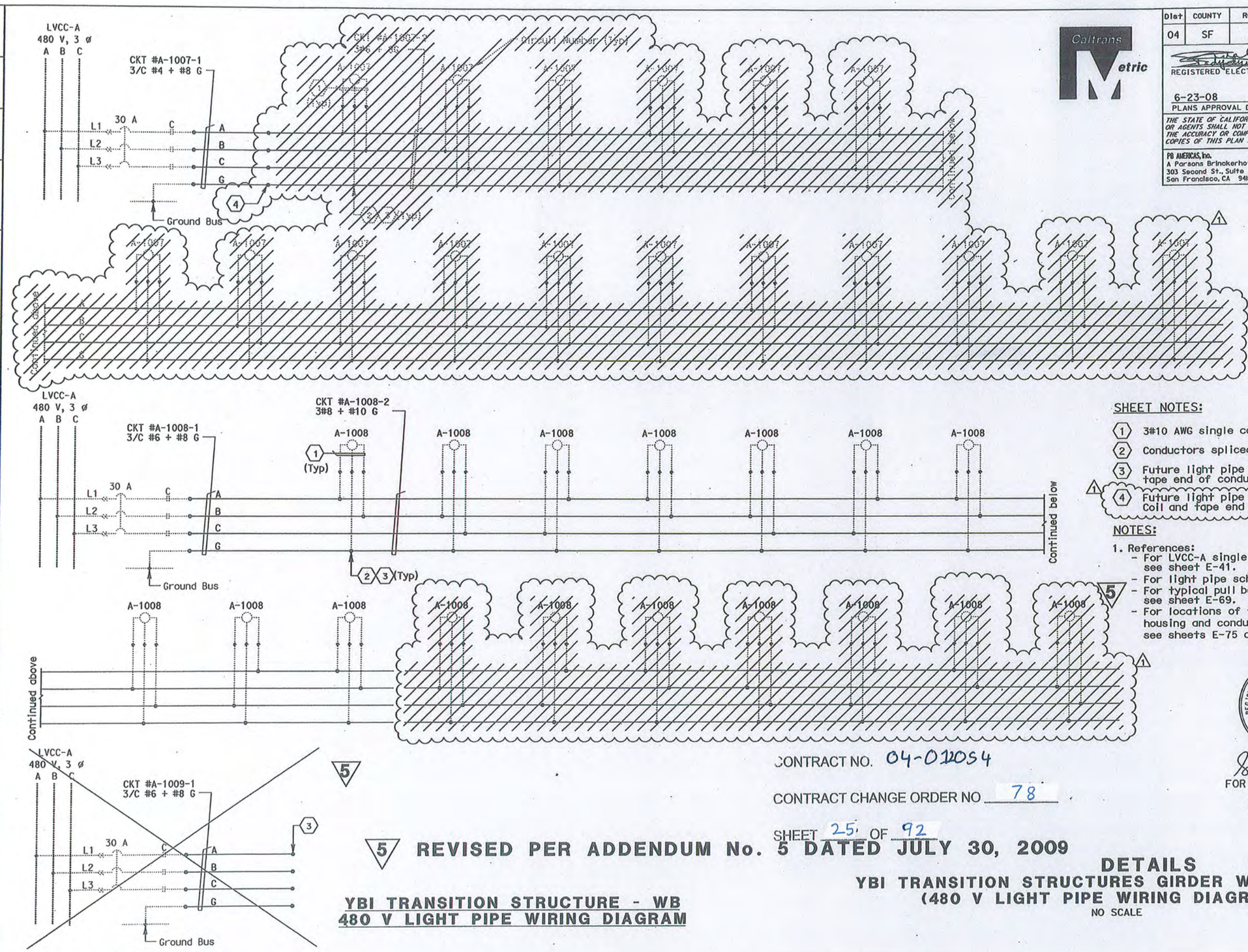

5 REVISED PER ADDENDUM No. 5 DATED JULY 30, 2009

YBI TRANSITION STRUCTURE - WB
480 V LIGHT PIPE WIRING DIAGRAM

SHEET NOTES:

1. 3#10 AWG single conductors.
2. Conductors spliced in pull box PB-LTG.
3. Future light pipe connections. Coil and tape end of conductors in pull box PB-LTG.
4. Future light pipe connections by others. Coil and tape end of conductors in MH-5.

NOTES:

1. References:
   - For LVCC-A single line diagrams, see sheet E-41.
   - For light pipe schedules, see sheet E-84.
   - For typical pull box schedules, see sheet E-69.
   - For locations of future light pipe housing and conduit stub out, see sheets E-75 and E-76.

REGISTERED PROFESSIONAL ENGINEER SYN YEE CHIN No. 18186 Exp. 09/30/2011 ELECTRICAL STATE OF CALIFORNIA

Syn Yee Chin
FOR REVISION ONLY
1 03/30/2011

CONTRACT NO. 04-0120S4

CONTRACT CHANGE ORDER NO 78

SHEET 25 OF 92

DETAILS
YBI TRANSITION STRUCTURES GIRDER WESTBOUND
(480 V LIGHT PIPE WIRING DIAGRAM)
NO SCALE

E-77

THIS PLAN ACCURATE FOR ELECTRICAL WORK ONLY.

STATE OF CALIFORNIA - DEPARTMENT OF TRANSPORTATION
Caltrans

CONSULTANT FUNCTIONAL SUPERVISOR: BEHZAD GOLEMOHAMMADI
CALCULATED-DESIGNED BY: FK
CHECKED BY: AB
REVISED BY
DATE REVISED

BORDER LAST REVISED 3/1/2007
RELATIVE BORDER SCALE 0 20 40 60 80
USERNAME => llorico
CU 04251
EA 0120S1

Dist	COUNTY	ROUTE	KILOMETER POST TOTAL PROJECT	SHEET No.	TOTAL SHEETS
04	SF	80	12.7/13.2	196A R1	806

REGISTERED ELECTRICAL ENGINEER 2/14/08

6-23-08
PLANS APPROVAL DATE

REGISTERED PROFESSIONAL ENGINEER FADI WALIEDDINE No. 11365 Exp. 12/31/09 ELECTRICAL STATE OF CALIFORNIA

THE STATE OF CALIFORNIA OR ITS OFFICERS OR AGENTS SHALL NOT BE RESPONSIBLE FOR THE ACCURACY OR COMPLETENESS OF ELECTRONIC COPIES OF THIS PLAN SHEET.

PB AMERICAS, Inc.
A Parsons Brinckerhoff Company
303 Second St., Suite 700N
San Francisco, CA 94107-1317

Caltrans Metric

5

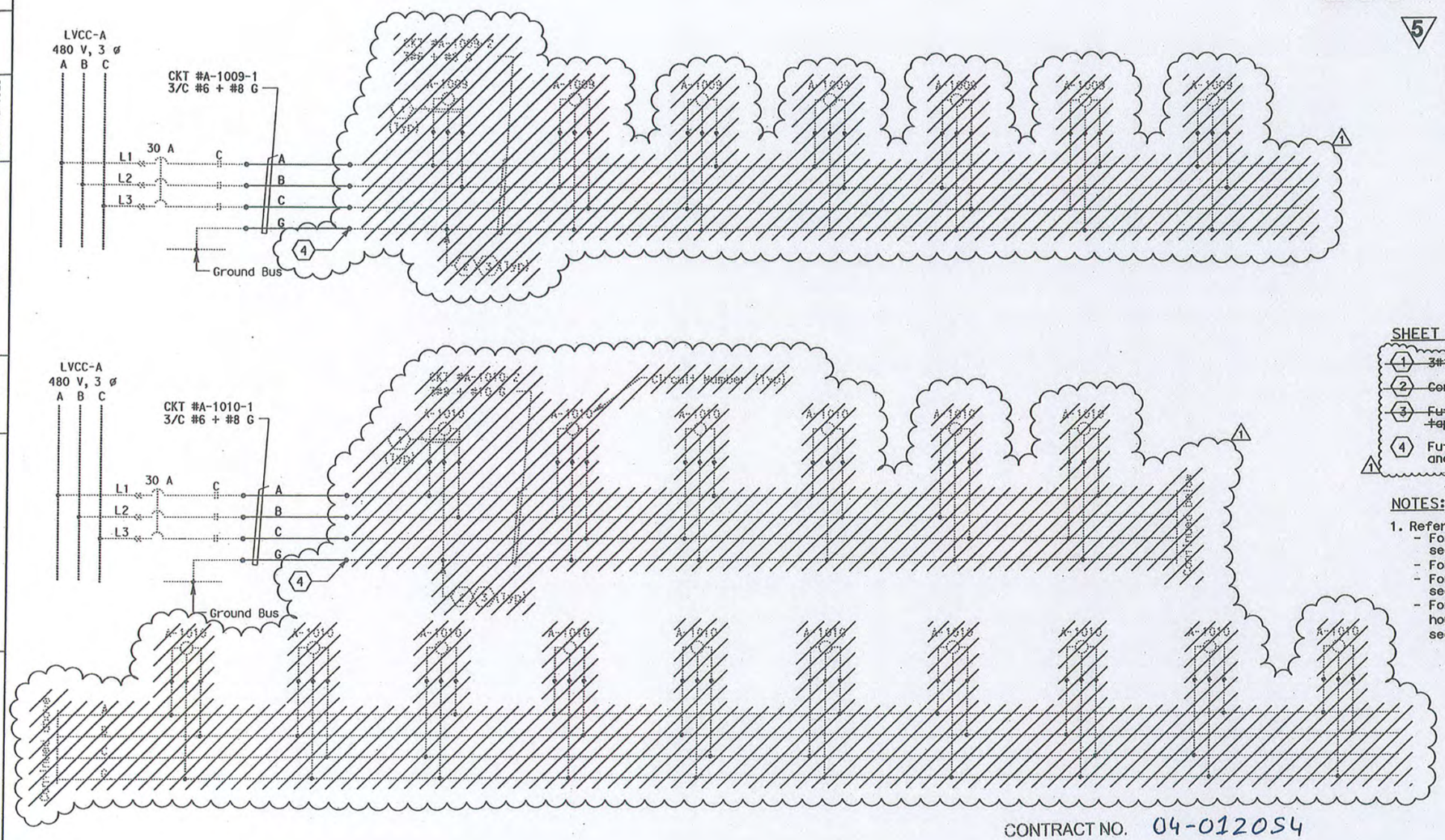

SHEET NOTES:

1. ~~3#10 AWG single conductors.~~
2. ~~Conductors spliced in pull box PB-LTG.~~
3. ~~Future light pipe connections. Coil and tape end of conductors in pull box PB-LTG.~~
4. Future light pipe connections by others. Coil and tape end of conductors in pull box MH-5.

NOTES:

1. References:
   - For LVCC-A single line diagrams, see sheet E-41.
   - For light pipe schedules, see sheet E-84.
   - For typical pull box schedules, see sheet E-69.
   - For locations of future light pipe housing and conduit stub out, see sheets E-75 and E-76.

REGISTERED PROFESSIONAL ENGINEER SYN YEE CHIN No. 18186 Exp. 09/30/2011 ELECTRICAL STATE OF CALIFORNIA

Syn Yee Chin
FOR REVISION ONLY
1 03/30/2011

CONTRACT NO. 04-0120S4

CONTRACT CHANGE ORDER NO 78

SHEET 26 OF 92

5 ADDED PER ADDENDUM No. 5 DATED JULY 30, 2009

YBI TRANSITION STRUCTURE - WB
480 V LIGHT PIPE WIRING DIAGRAM

DETAILS
YBI STRUCTURE GIRDER WESTBOUND
480 V LIGHT PIPE WIRING DIAGRAM
NO SCALE

E-77A

STATE OF CALIFORNIA - DEPARTMENT OF TRANSPORTATION
Caltrans

CONSULTANT FUNCTIONAL SUPERVISOR: BEHZAD GOLEMOHAMMADI
CALCULATED-DESIGNED BY: FK
CHECKED BY: AB
REVISED BY
DATE REVISED

THIS PLAN ACCURATE FOR ELECTRICAL WORK ONLY.

BORDER LAST REVISED 3/1/2007

RELATIVE BORDER SCALE 0 20 40 60 80

USERNAME => llorico

CU 04251

EA 0120S1

Dist	COUNTY	ROUTE	KILOMETER POST TOTAL PROJECT	SHEET No.	TOTAL SHEETS
04	SF	80	12.7/13.2	197 R1	806

REGISTERED ELECTRICAL ENGINEER 2/14/08 DATE

6-23-08
PLANS APPROVAL DATE

THE STATE OF CALIFORNIA OR ITS OFFICERS OR AGENTS SHALL NOT BE RESPONSIBLE FOR THE ACCURACY OR COMPLETENESS OF ELECTRONIC COPIES OF THIS PLAN SHEET.

REGISTERED PROFESSIONAL ENGINEER FADI WALIEDDINE No. 11465 Exp. 12/31/09 ELECTRICAL STATE OF CALIFORNIA

PB AMERICAS, Inc.
A Parsons Brinckerhoff Company
303 Second St., Suite 700N
San Francisco, CA 94107-1317

Caltrans Metric 5

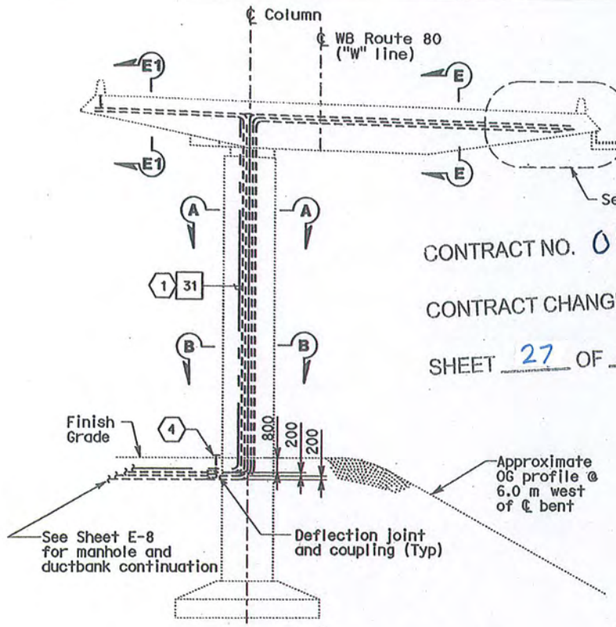

CONTRACT NO. 04-012054

CONTRACT CHANGE ORDER NO 78

SHEET 27 OF 92

BENT W8L ELEVATION
SCALE: 1:150

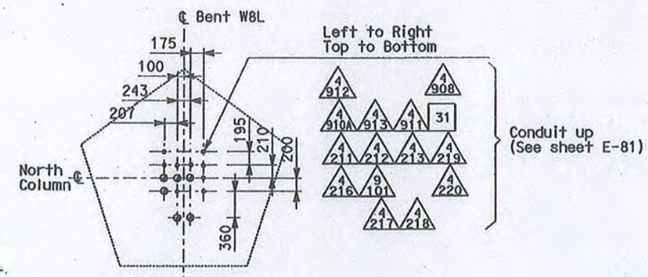

SECTION A-A
NO SCALE 7

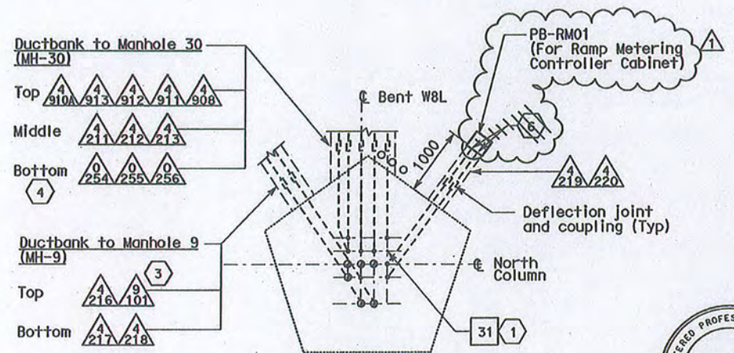

SECTION B-B
NO SCALE 7

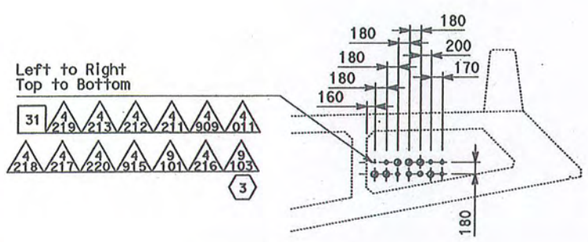

DETAIL 1 - BENT W8L
Looking East
NO SCALE 5 7

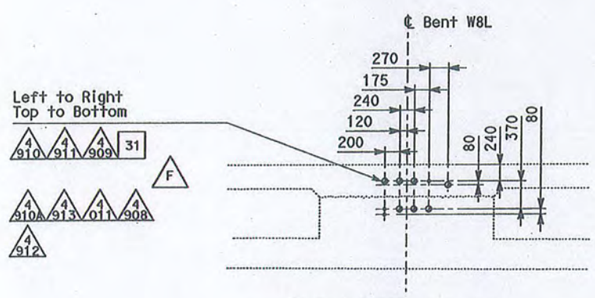

SECTION E1-E1
NO SCALE 7

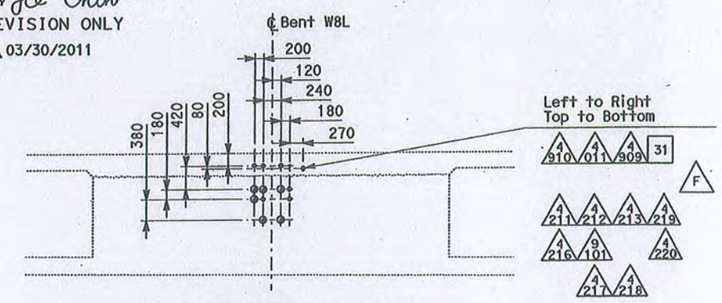

SECTION E-E
NO SCALE 7

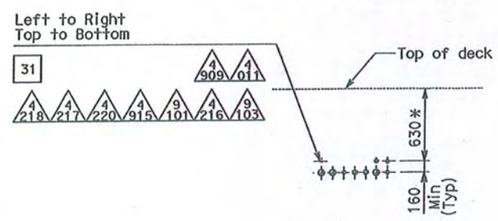

SECTION D-D
NO SCALE 5 7

STRUCTURE DETAILS OF CONDUIT RISER TO W8L 7

NOTES:

1. References:
   - For service platform, details refer to sheets E-64 thru E-66.
   - (*) Dimension to be provided by Structural.

SHEET NOTES:

1. Ground conductor for 250 kcmil bare copper wire. Routed inside underground duct banks in column Bent W8, connected and tapped from ground bar for service platform grounding system. Refer to sheets E-34 and E-79.
2. For typical conduit support, see sheet E-86.
3. Conduits to be installed in this contract but are reserved for future SMD.
4. Stub-out and cap conduits 0254, 0255 and 0256, 150 mm from the column edge.
5. Detail 1 and section D-D shown is from Bent W8L, see sheet E-81.
6. Stub out and cap conduits for future use. 1
7. The embedded conduits may be adjusted to avoid interference with rebars. 7
8. Conduits from PB-RM01 to Ramp Metering Controller Cabinet shall be others. 1

REGISTERED PROFESSIONAL ENGINEER SYN YEE CHIN No. 18186 Exp. 09/30/2011 ELECTRICAL STATE OF CALIFORNIA

Syn Yee Chin
FOR REVISION ONLY
1 03/30/2011

7 REVISED PER ADDENDUM No. 7 DATED OCTOBER 19, 2009

5 REVISED PER ADDENDUM No. 5 DATED JULY 30, 2009

DETAILS
YBI TRANSITION STRUCTURES GIRDER WESTBOUND (BENT W8L ELEVATION AND SECTIONS)
SCALE AS NOTED

ALL DIMENSIONS ARE IN MILLIMETERS UNLESS OTHERWISE SHOWN

THIS PLAN ACCURATE FOR ELECTRICAL WORK ONLY.

E-78

STATE OF CALIFORNIA - DEPARTMENT OF TRANSPORTATION
CONSULTANT FUNCTIONAL SUPERVISOR BEHZAD GOLEMOHAMMADI
CALCULATED-DESIGNED BY AB
CHECKED BY FK
REVISED BY
DATE REVISED

BORDER LAST REVISED 3/1/2007
RELATIVE BORDER SCALE 0 20 40 60 80
USERNAME => llorico
CU 04251
EA 0120S1

Dist	COUNTY	ROUTE	KILOMETER POST TOTAL PROJECT	SHEET No.	TOTAL SHEETS
04	SF	80	12.7/13.2	200 R1	806

REGISTERED ELECTRICAL ENGINEER 2/14/08

6-23-08
PLANS APPROVAL DATE

THE STATE OF CALIFORNIA OR ITS OFFICERS OR AGENTS SHALL NOT BE RESPONSIBLE FOR THE ACCURACY OR COMPLETENESS OF ELECTRONIC COPIES OF THIS PLAN SHEET.

REGISTERED PROFESSIONAL ENGINEER FADI WALIEDDINE No. 11465 Exp. 12/31/09 ELECTRICAL STATE OF CALIFORNIA

PB AMERICAS, Inc.
A Parsons Brinckerhoff Company
303 Second St., Suite 700N
San Francisco, CA 94107-1317

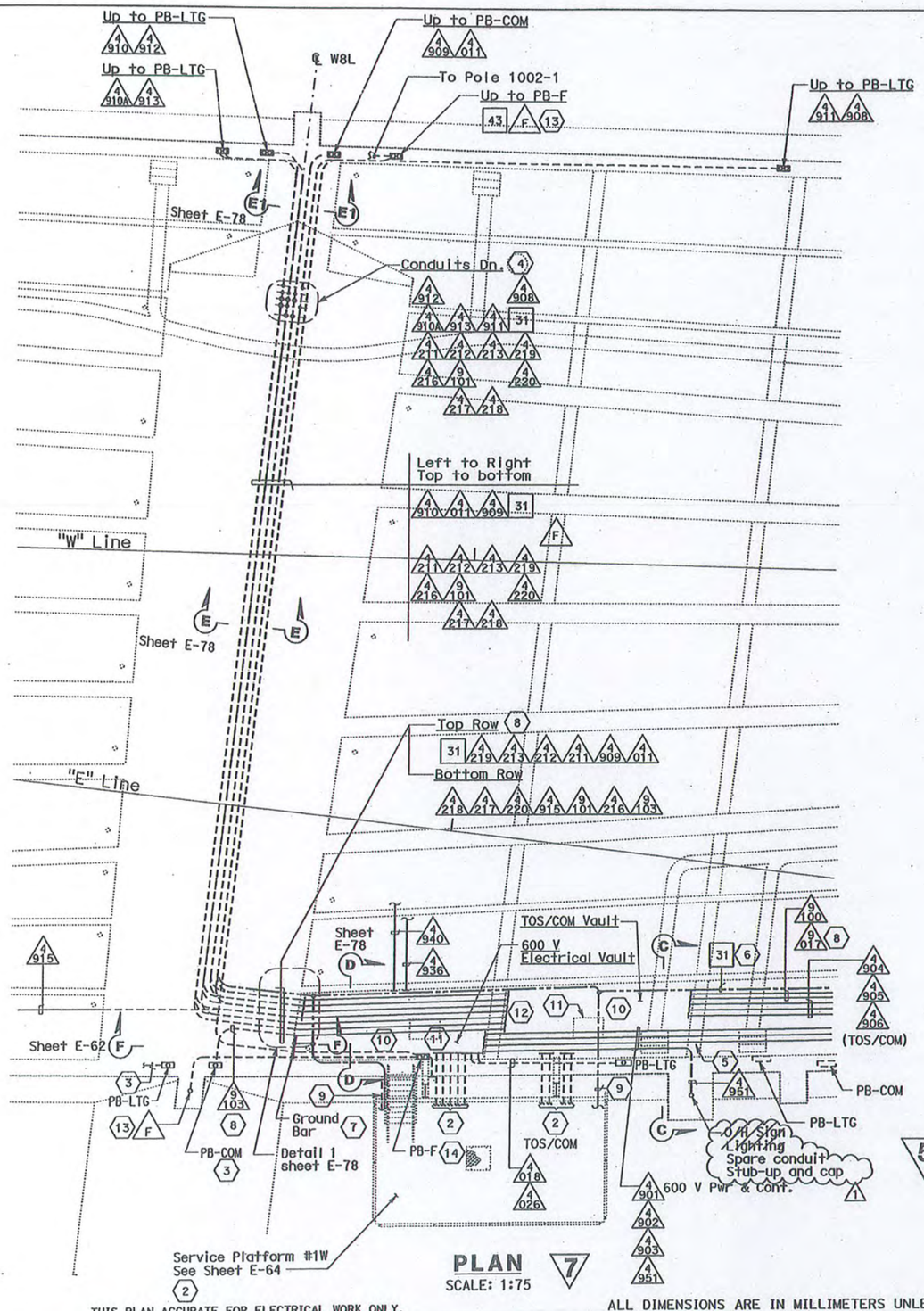

PLAN 7
SCALE: 1:75

THIS PLAN ACCURATE FOR ELECTRICAL WORK ONLY.

ALL DIMENSIONS ARE IN MILLIMETERS UNLESS OTHERWISE SHOWN

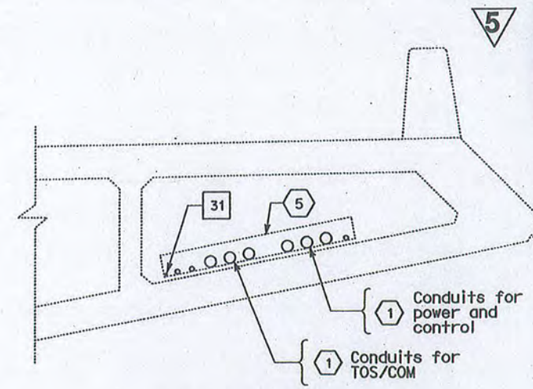

SECTION C-C 7
NO SCALE

NOTES:

1. References:
   - 103 mm conduits shall have a minimum bending radius of 610 mm.
   - For conduit support location, refer to sheets E-87 through E-89 and AS drawings for conduit support details.
2. For overall grounding system. Refer to sheet E-34.
3. For conduit support, see sheet E-87.
4. For overall plan of this area, see sheet E-74.

SHEET NOTES:

1. For conduit No. refer to plan layout as shown, U.N.O. see sheet E-50.
2. For Service Platform #1W equipment, conduit and grounding plan, see sheet E-64.
3. For conduit routing up to PB-LTG or PB-COM, see sheets E-50.
4. For embedded conduits in column. See sheet E-78.
5. For utility opening, see Structures Sheets.
6. For ground conductor 250 kcmil Bare copper, route inside underground duct bank and connect to main 500 kcmil system ground conductor. Refer to sheet E-79.
7. For grounding details see sheet E-80.
8. Conduits to be installed in this contract but are reserved for future SMD.
9. For service platform grounding use #4/0 AWG bare copper ground cable, tapped from ground bar, see sheet E-64 for continuation.
10. For tray installation, see E-86 detail 1 and E-64.
11. For roadway deck access opening, see structures sheets. Access cover engraving "ELECTRICAL" and "TOS/COM".
12. Install cable pull irons in all vaults, cast in each endwall.
13. Install 41 mm (F) conduit from 600 V Vault IW to Poles 1022-1 and 1002-1. Required for future camera #14 and #13 (By others).
14. PB-F same as PB-COM, label to be determined by the Engineer.

REGISTERED PROFESSIONAL ENGINEER SYN YEE CHIN No. 18186 Exp. 09/30/2011 ELECTRICAL STATE OF CALIFORNIA

Syn Yee Chin
FOR REVISION ONLY
1 03/30/2011

CONTRACT NO. 04-0120S4

CONTRACT CHANGE ORDER NO 78

SHEET 28 OF 92

7 **REVISED PER ADDENDUM No. 7 DATED OCTOBER 19, 2009**

5 **REVISED PER ADDENDUM No. 5 DATED JULY 30, 2009**

DETAILS
YBI TRANSITION STRUCTURES GIRDER WESTBOUND
(VAULT SECTIONS AND DETAILS)
SCALE AS NOTED

E-81

STATE OF CALIFORNIA - DEPARTMENT OF TRANSPORTATION
Caltrans

CONSULTANT FUNCTIONAL SUPERVISOR: BEHZAD GOLEMOHAMMADI
CALCULATED-DESIGNED BY: FK
CHECKED BY: AB
REVISED BY
DATE REVISED

BORDER LAST REVISED 3/1/2007
RELATIVE BORDER SCALE 0 20 40 60 80
USERNAME => llorico
CU 04251
EA 0120S1

Dist	COUNTY	ROUTE	KILOMETER POST TOTAL PROJECT	SHEET No.	TOTAL SHEETS
04	SF	80	12.7/13.2	201 R2	806

REGISTERED ELECTRICAL ENGINEER 2/14/08

6-23-08
PLANS APPROVAL DATE

REGISTERED PROFESSIONAL ENGINEER FADI WALIEDDINE No. 11865 Exp. 12/31/09 ELECTRICAL STATE OF CALIFORNIA

THE STATE OF CALIFORNIA OR ITS OFFICERS OR AGENTS SHALL NOT BE RESPONSIBLE FOR THE ACCURACY OR COMPLETENESS OF ELECTRONIC COPIES OF THIS PLAN SHEET.

PB AMERICAS, Inc.
A Parsons Brinckerhoff Company
303 Second St., Suite 700N
San Francisco, CA 94107-1317

Metric

5

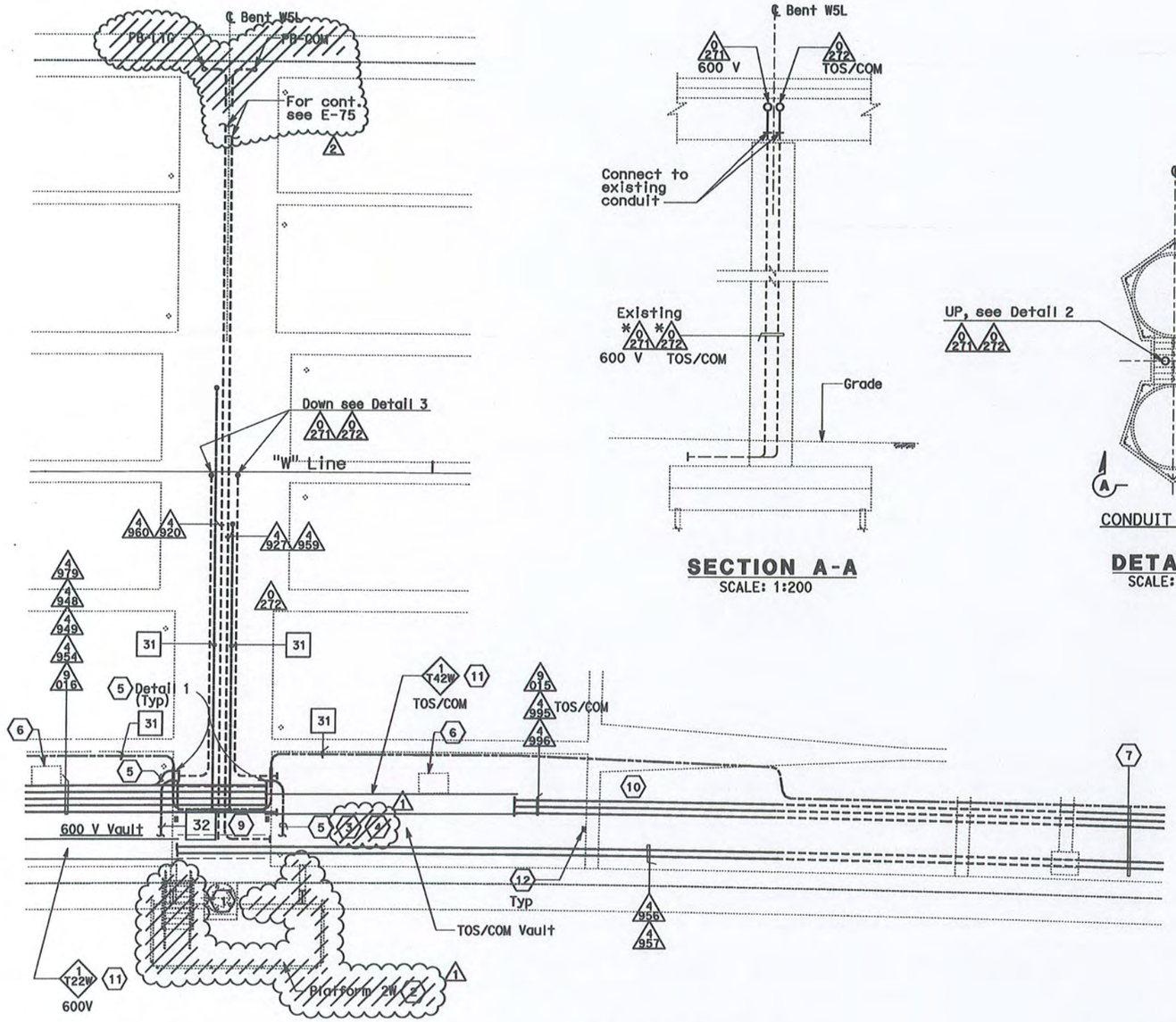

DETAIL 2
GIRDER CONDUIT PLAN
SCALE: 1:75

SECTION A-A
SCALE: 1:200

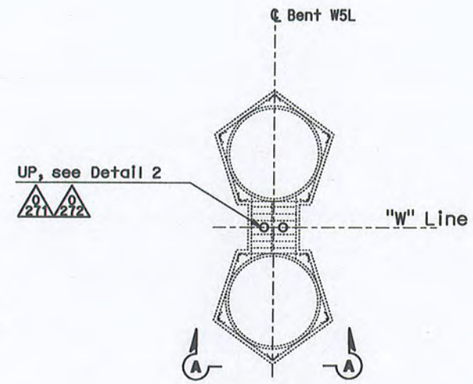

CONDUIT AT W5L

DETAIL 3
SCALE: 1:80

SHEET NOTES:

1. For conduit stub-up inside lighting pole on a concrete base. See sheet E-58 and E-59.
2. ~~For service platform plans & section, see sheet E-65.~~
3. ~~For continuation, see sheet E-65.~~
4. ~~For service platform grounding, use #4/0 AWG bare copper ground cables lapped from ground bars, passed thru 2"G-PVC conduits and bolted inside wireway. See sheet E-65 for continuation.~~
5. System ground conductor #4/0 bare copper wire, use a continuous bare cable to bond all rigid steel galv. (RGS) conduits and pull boxes. Refer to sheet E-80.
6. For roadway deck access opening, see structures sheets. Access cover engraving "ELECTRICAL" and "TOS/COM".
7. For conduit routing in barrier, see sheets E-75 and E-83.
8. Not used.
9. For conduit routing, see E-65.
10. For utility openings, see Structures Sheets.
11. For tray installation, see E-86 and E-65.
12. Install cable pull irons on all vaults, cast in each endwall.

CONTRACT NO. 04-012054

CONTRACT CHANGE ORDER NO 78

SHEET 29 OF 92

NOTES:

1. References:
   - Minimum conduit radius of 103 mm conduits shall be 610 mm.
   - For conduit support location, refer to sheets E-87 through E-89 and AS drawings for conduit support details.
2. For overall grounding system. Refer to sheet E-34.
3. For conduit support, see sheets E-86.

REGISTERED PROFESSIONAL ENGINEER SYN YEE CHIN No. 18186 Exp. 09/30/2011 ELECTRICAL STATE OF CALIFORNIA

Syn Yee Chin
FOR REVISION ONLY
1 11/22/2010
2 03/30/2011

5 REVISED PER ADDENDUM No. 5 DATED JULY 30, 2009

DETAILS
YBI TRANSITION STRUCTURES GIRDER WESTBOUND (VAULT SECTIONS AND DETAILS)
SCALE AS NOTED

E-82

THIS PLAN ACCURATE FOR ELECTRICAL WORK ONLY.

ALL DIMENSIONS ARE IN METERS UNLESS OTHERWISE SHOWN

STATE OF CALIFORNIA - DEPARTMENT OF TRANSPORTATION
Caltrans
CONSULTANT FUNCTIONAL SUPERVISOR: BEHZAD GOLEMOHAMMADI
CALCULATED-DESIGNED BY: FK
CHECKED BY: AB
REVISED BY
DATE REVISED

LAST REVISION 00-00-00
DATE PLOTTED => 05-APR-2011
TIME PLOTTED => 11:33

Dist	COUNTY	ROUTE	KILOMETER POST TOTAL PROJECT	SHEET No.	TOTAL SHEETS
04	SF	80	12.7/13.2	202 R1	806

REGISTERED ELECTRICAL ENGINEER 2/14/08

6-23-08
PLANS APPROVAL DATE

REGISTERED PROFESSIONAL ENGINEER FADI WALIEDDINE No. 11465 Exp. 12/31/09 ELECTRICAL STATE OF CALIFORNIA

THE STATE OF CALIFORNIA OR ITS OFFICERS OR AGENTS SHALL NOT BE RESPONSIBLE FOR THE ACCURACY OR COMPLETENESS OF ELECTRONIC COPIES OF THIS PLAN SHEET.

PB AMERICAS, Inc.
A Parsons Brinckerhoff Company
303 Second St., Suite 700N
San Francisco, CA 94107-1317

Caltrans Metric

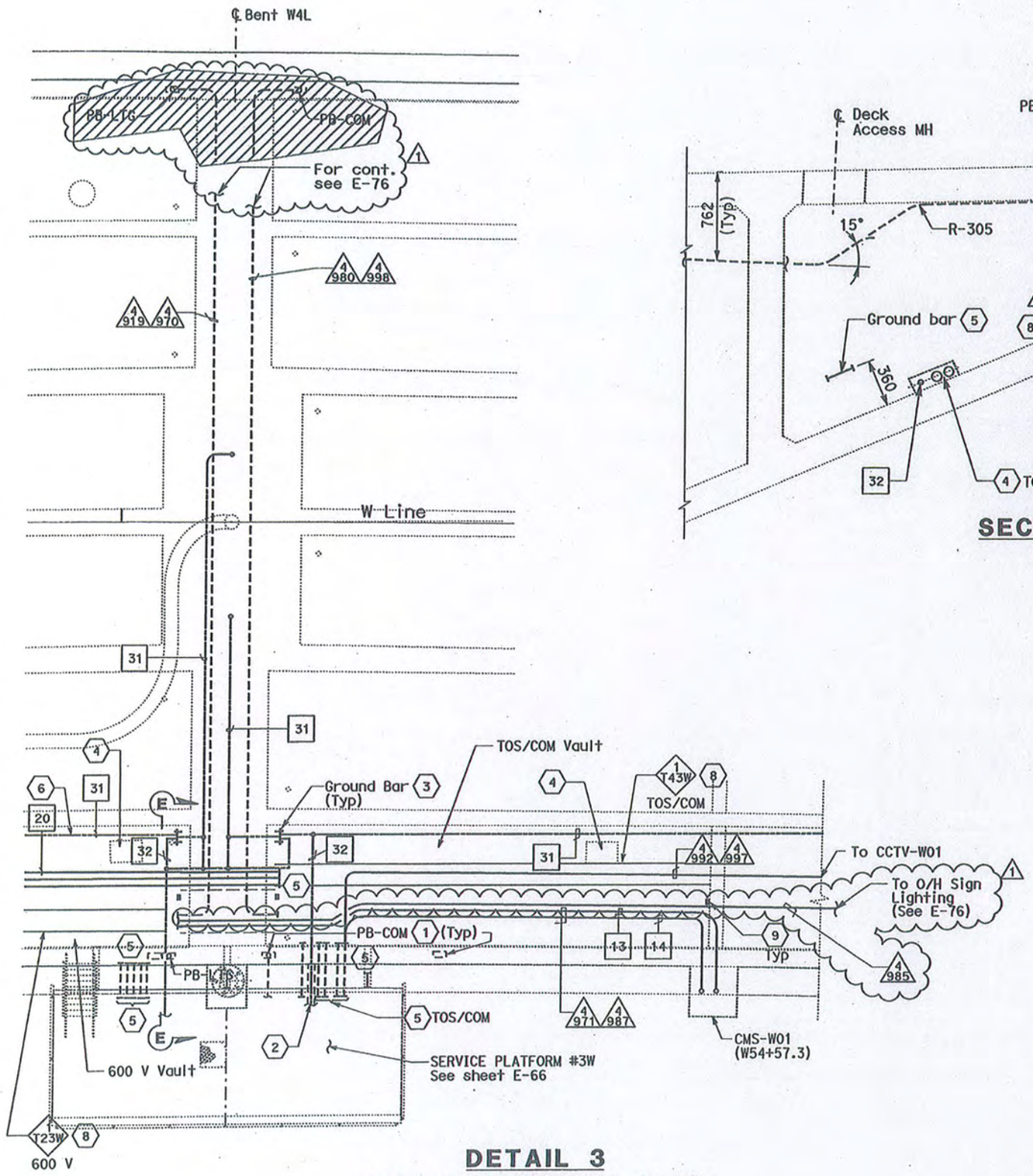

DETAIL 3
GIRDER CONDUIT PLAN
SCALE: 1:75

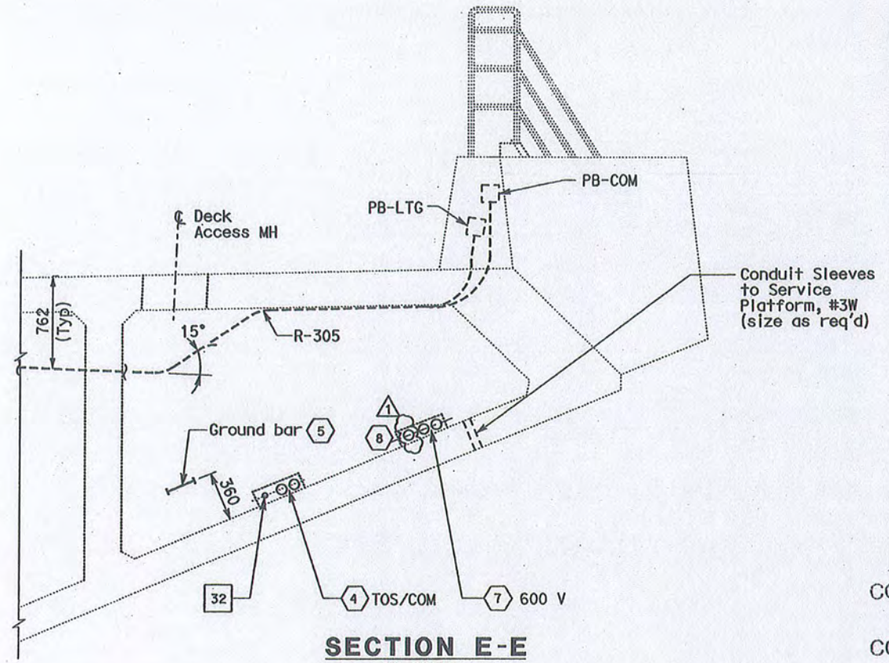

SECTION E-E
NO SCALE

NOTE:

1. See sheet E-82 for reference.

SHEET NOTES:

1. For conduit routing up to PB-LTG or PB-COM. See sheet E-52.
2. For service platform grounding, use #4/0 AWG bare copper ground cables tapped from ground bars, passed thru 27C-PVC conduits and bolted inside wireway. See sheet E-66 for continuation.
3. Ground conductor #4/0 bare copper wire, use a continuous bare cable to bond all rigid galv. steel (RGS) conduit and pull boxes. Refer to sheet E-80.
4. For roadway deck access opening, see structures sheets. Access cover engraving "ELECTRICAL" and "TOS/COM".
5. For continuation, see sheet E-66.
6. For grounding interface, see sheet E-34.
7. For utility openings, see Structure Sheets.
8. For tray installation, see E-86 and E-66.
9. Install cable pull irons on all vaults, cast in each endwall.

CONTRACT NO. 04-012054

CONTRACT CHANGE ORDER NO 78

SHEET 30 OF 92

REGISTERED PROFESSIONAL ENGINEER SYN YEE CHIN No. 18186 Exp. 09/30/2011 ELECTRICAL STATE OF CALIFORNIA

Syn Yee Chin
FOR REVISION ONLY
1 3/30/2011

DETAILS
YBI TRANSITION STRUCTURES GIRDER WESTBOUND (VAULT SECTIONS AND DETAILS)
SCALE AS NOTED

E-83

REVISED BY	DATE REVISED
FK	AB

CALCULATED-DESIGNED BY / CHECKED BY

CONSULTANT FUNCTIONAL SUPERVISOR: BEHZAD GOLEMOHAMMADI

STATE OF CALIFORNIA - DEPARTMENT OF TRANSPORTATION

Caltrans

THIS PLAN ACCURATE FOR ELECTRICAL WORK ONLY.

ALL DIMENSIONS ARE IN METERS UNLESS OTHERWISE SHOWN

BORDER LAST REVISED 3/1/2007

RELATIVE BORDER SCALE 0 20 40 60 80

USERNAME => llorico

CU 04251

EA 0120S1

Dist	COUNTY	ROUTE	KILOMETER POST TOTAL PROJECT	SHEET No.	TOTAL SHEETS
04	SF	80	12.7/13.2	203 R1	806

2/14/08
REGISTERED ELECTRICAL ENGINEER

6-23-08
PLANS APPROVAL DATE

REGISTERED PROFESSIONAL ENGINEER FADI WALIEDDINE No. 11465 Exp. 12/31/09 ELECTRICAL STATE OF CALIFORNIA

THE STATE OF CALIFORNIA OR ITS OFFICERS OR AGENTS SHALL NOT BE RESPONSIBLE FOR THE ACCURACY OR COMPLETENESS OF ELECTRONIC COPIES OF THIS PLAN SHEET.

PB AMERICAS, Inc.
A Parsons Brinckerhoff Company
303 Second St., Suite 700N
San Francisco, CA 94107-1317

Caltrans Metric

5

LIGHT PIPE SCHEDULE

Circuit Number	Location Reference (1)	Location Roadway side	Mounting	LTG. Fixture Type	Number/ Wattage	Remarks
~~A-1007~~	~~E-75~~	~~North~~	~~Bracket mounted~~	~~YAL~~	~~1-400 W~~	~~with Remote Ballast~~
~~A-1007~~	~~E-75~~	~~North~~	~~Bracket mounted~~	~~YAL~~	~~1-400 W~~	~~with Remote Ballast~~
~~A-1007~~	~~E-75~~	~~North~~	~~Bracket mounted~~	~~YAL~~	~~1-400 W~~	~~with Remote Ballast~~
~~A-1007~~	~~E-75~~	~~North~~	~~Bracket mounted~~	~~YAL~~	~~1-400 W~~	~~with Remote Ballast~~
~~A-1007~~	~~E-75~~	~~North~~	~~Bracket mounted~~	~~YAL~~	~~1-400 W~~	~~with Remote Ballast~~
~~A-1007~~	~~E-75~~	~~North~~	~~Bracket mounted~~	~~YAL~~	~~1-400 W~~	~~with Remote Ballast~~
~~A-1007~~	~~E-75~~	~~North~~	~~Bracket mounted~~	~~YAL~~	~~1-400 W~~	~~with Remote Ballast~~
~~A-1007~~	~~E-75~~	~~North~~	~~Bracket mounted~~	~~YAL~~	~~1-400 W~~	~~with Remote Ballast~~
~~A-1007~~	~~E-75~~	~~North~~	~~Bracket mounted~~	~~YAL~~	~~1-400 W~~	~~with Remote Ballast~~
~~A-1007~~	~~E-75~~	~~North~~	~~Bracket mounted~~	~~YAL~~	~~1-400 W~~	~~with Remote Ballast~~
~~A-1007~~	~~E-75~~	~~North~~	~~Bracket mounted~~	~~YAL~~	~~1-400 W~~	~~with Remote Ballast~~
~~A-1007~~	~~E-75~~	~~North~~	~~Bracket mounted~~	~~YAL~~	~~1-400 W~~	~~with Remote Ballast~~
~~A-1007~~	~~E-75~~	~~North~~	~~Bracket mounted~~	~~YAL~~	~~1-400 W~~	~~with Remote Ballast~~
~~A-1007~~	~~E-75, E-76~~	~~North~~	~~Bracket mounted~~	~~YAL~~	~~1-400 W~~	~~with Remote Ballast~~
~~A-1007~~	~~E-75, E-76~~	~~North~~	~~Bracket mounted~~	~~YAL~~	~~1-400 W~~	~~with Remote Ballast~~
~~A-1008~~	~~E-76~~	~~North~~	~~Bracket mounted~~	~~YAL~~	~~1-400 W~~	~~with Remote Ballast~~
~~A-1008~~	~~E-76~~	~~North~~	~~Bracket mounted~~	~~YAL~~	~~1-400 W~~	~~with Remote Ballast~~
~~A-1008~~	~~E-76~~	~~North~~	~~Bracket mounted~~	~~YAL~~	~~1-400 W~~	~~with Remote Ballast~~
~~A-1008~~	~~E-76~~	~~North~~	~~Bracket mounted~~	~~YAL~~	~~1-400 W~~	~~with Remote Ballast~~
~~A-1008~~	~~E-76~~	~~North~~	~~Bracket mounted~~	~~YAL~~	~~1-400 W~~	~~with Remote Ballast~~
~~A-1008~~	~~E-76~~	~~North~~	~~Bracket mounted~~	~~YAL~~	~~1-400 W~~	~~with Remote Ballast~~
~~A-1008~~	~~E-76~~	~~North~~	~~Bracket mounted~~	~~YAL~~	~~1-400 W~~	~~with Remote Ballast~~
A-1008	E-76	North	Bracket mounted	YAL	1-400 W	with Remote Ballast
A-1008	E-76	North	Bracket mounted	YAL	1-400 W	with Remote Ballast
A-1008	E-76	North	Bracket mounted	YAL	1-400 W	with Remote Ballast
A-1008	E-76	North	Bracket mounted	YAL	1-400 W	with Remote Ballast
A-1008	E-76	North	Bracket mounted	YAL	1-400 W	with Remote Ballast
A-1008	E-76	North	Bracket mounted	YAL	1-400 W	with Remote Ballast
A-1008	E-76	North	Bracket mounted	YAL	1-400 W	with Remote Ballast
A-1008	E-76	North	Bracket mounted	YAL	1-400 W	with Remote Ballast
A-1008	E-76	North	Bracket mounted	YAL	1-400 W	with Remote Ballast
A-1008	E-76	North	Bracket mounted	YAL	1-400 W	with Remote Ballast

3

LIGHT PIPE SCHEDULE

Circuit Number	Location Reference (1)	Location Roadway side	Mounting	LTG. Fixture Type	Number/ Wattage	Remarks
~~A-1009~~	~~E-74, E-75~~	~~North~~	~~Bracket mounted~~	~~YAL~~	~~1-400 W~~	~~with Remote Ballast~~
~~A-1009~~	~~E-74, E-75~~	~~North~~	~~Bracket mounted~~	~~YAL~~	~~1-400 W~~	~~with Remote Ballast~~
~~A-1009~~	~~E-74, E-75~~	~~North~~	~~Bracket mounted~~	~~YAL~~	~~1-400 W~~	~~with Remote Ballast~~
~~A-1009~~	~~E-74, E-75~~	~~North~~	~~Bracket mounted~~	~~YAL~~	~~1-400 W~~	~~with Remote Ballast~~
~~A-1009~~	~~E-74, E-75~~	~~North~~	~~Bracket mounted~~	~~YAL~~	~~1-400 W~~	~~with Remote Ballast~~
~~A-1009~~	~~E-74, E-75~~	~~North~~	~~Bracket mounted~~	~~YAL~~	~~1-400 W~~	~~with Remote Ballast~~
~~A-1009~~	~~E-74, E-75~~	~~North~~	~~Bracket mounted~~	~~YAL~~	~~1-400 W~~	~~with Remote Ballast~~
~~A-1010~~	~~E-73, E-74~~	~~North~~	~~Bracket mounted~~	~~YAL~~	~~1-400 W~~	~~with Remote Ballast~~
~~A-1010~~	~~E-73, E-74~~	~~North~~	~~Bracket mounted~~	~~YAL~~	~~1-400 W~~	~~with Remote Ballast~~
~~A-1010~~	~~E-73, E-74~~	~~North~~	~~Bracket mounted~~	~~YAL~~	~~1-400 W~~	~~with Remote Ballast~~
~~A-1010~~	~~E-73, E-74~~	~~North~~	~~Bracket mounted~~	~~YAL~~	~~1-400 W~~	~~with Remote Ballast~~
~~A-1010~~	~~E-73, E-74~~	~~North~~	~~Bracket mounted~~	~~YAL~~	~~1-400 W~~	~~with Remote Ballast~~
~~A-1010~~	~~E-73, E-74~~	~~North~~	~~Bracket mounted~~	~~YAL~~	~~1-400 W~~	~~with Remote Ballast~~
~~A-1010~~	~~E-73, E-74~~	~~North~~	~~Bracket mounted~~	~~YAL~~	~~1-400 W~~	~~with Remote Ballast~~
~~A-1010~~	~~E-73, E-74~~	~~North~~	~~Bracket mounted~~	~~YAL~~	~~1-400 W~~	~~with Remote Ballast~~
~~A-1010~~	~~E-73, E-74~~	~~North~~	~~Bracket mounted~~	~~YAL~~	~~1-400 W~~	~~with Remote Ballast~~
~~A-1010~~	~~E-73, E-74~~	~~North~~	~~Bracket mounted~~	~~YAL~~	~~1-400 W~~	~~with Remote Ballast~~
~~A-1010~~	~~E-73, E-74~~	~~North~~	~~Bracket mounted~~	~~YAL~~	~~1-400 W~~	~~with Remote Ballast~~
~~A-1010~~	~~E-73, E-74~~	~~North~~	~~Bracket mounted~~	~~YAL~~	~~1-400 W~~	~~with Remote Ballast~~
~~A-1010~~	~~E-73, E-74~~	~~North~~	~~Bracket mounted~~	~~YAL~~	~~1-400 W~~	~~with Remote Ballast~~
~~A-1010~~	~~E-73, E-74~~	~~North~~	~~Bracket mounted~~	~~YAL~~	~~1-400 W~~	~~with Remote Ballast~~
~~A-1010~~	~~E-73, E-74~~	~~North~~	~~Bracket mounted~~	~~YAL~~	~~1-400 W~~	~~with Remote Ballast~~
~~A-1010~~	~~E-73, E-74~~	~~North~~	~~Bracket mounted~~	~~YAL~~	~~1-400 W~~	~~with Remote Ballast~~
~~A-1010~~	~~E-73, E-74~~	~~North~~	~~Bracket mounted~~	~~YAL~~	~~1-400 W~~	~~with Remote Ballast~~
~~A-1010~~	~~E-73, E-74~~	~~North~~	~~Bracket mounted~~	~~YAL~~	~~1-400 W~~	~~with Remote Ballast~~
~~A-1010~~	~~E-73, E-74~~	~~North~~	~~Bracket mounted~~	~~YAL~~	~~1-400 W~~	~~with Remote Ballast~~
~~A-1010~~	~~E-73, E-74~~	~~North~~	~~Bracket mounted~~	~~YAL~~	~~1-400 W~~	~~with Remote Ballast~~

1

SHEET NOTES:

(1) Approximate location of light pipe housing.

NOTES:

1. References:
   - For circuit numbers, see single line diagrams, sheets E-77 and E-77A.
2. Light pipe lighting fixture type YAL are not supplied under this contract.
3. For fixture descriptions and specifications, see Electrical Special Provisions.

5

REGISTERED PROFESSIONAL ENGINEER SYN YEE CHIN No. 18186 Exp. 09/30/2011 ELECTRICAL STATE OF CALIFORNIA

Syn Yee Chin
FOR REVISION ONLY
1 3/30/2011

CONTRACT NO. 04-012054

CONTRACT CHANGE ORDER NO. 78

SHEET 31 OF 92

DETAILS
YBI TRANSITION STRUCTURES GIRDER WESTBOUND (LIGHT PIPE SCHEDULE)
NO SCALE

5 REVISED PER ADDENDUM No. 5 DATED JULY 30, 2009

E-84

REVISED BY | DATE REVISED | FK | AB | CALCULATED-DESIGNED BY | CHECKED BY | CONSULTANT FUNCTIONAL SUPERVISOR | BEHZAD GOLEMOHAMMADI

STATE OF CALIFORNIA - DEPARTMENT OF TRANSPORTATION
Caltrans

THIS PLAN ACCURATE FOR ELECTRICAL WORK ONLY.

BORDER LAST REVISED 3/1/2007 | RELATIVE BORDER SCALE 0 20 40 60 80 | USERNAME => llorico | CU 04251 | EA 0120S1

Dist	COUNTY	ROUTE	KILOMETER POST TOTAL PROJECT	SHEET No.	TOTAL SHEETS
04	SF	80	12.7/13.2	320 R1	806

REGISTERED ELECTRICAL ENGINEER 2/14/08

6-23-08
PLANS APPROVAL DATE

THE STATE OF CALIFORNIA OR ITS OFFICERS OR AGENTS SHALL NOT BE RESPONSIBLE FOR THE ACCURACY OR COMPLETENESS OF ELECTRONIC COPIES OF THIS PLAN SHEET.

REGISTERED PROFESSIONAL ENGINEER SYN YEE CHIN No. 18186 Exp. 09/30/2011 ELECTRICAL STATE OF CALIFORNIA

REGISTERED PROFESSIONAL ENGINEER FADI MALIEDDINE No. 11465 Exp. 12/31/09 ELECTRICAL STATE OF CALIFORNIA

PB AMERICAS, Inc.
A Parsons Brinckerhoff Company
303 Second St., Suite 700N
San Francisco, CA 94107-1317

Syn Yee Chin
FOR REVISION ONLY
1 03/30/2011

Caltrans Metric

Conduit/Tray No: 0154 | Reference: E-32, E-16, E-15
Size: 103 | Type: RGS conduit
From: (E) Manhole-5 | To: Manhole-7
Total Fill (mm2): 2635.90 | Remarks:
Allowable Fill (mm2): 3324.51
Description of Changes:

Included Cable No.	Conductor Type	Area (mm2)
1095	1-3/C + Gnd, #2, 600 V, EPR insulation	527.18
1096	1-3/C + Gnd, #2, 600 V, EPR insulation	527.18
1097	1-3/C + Gnd, #2, 600 V, EPR insulation	527.18
1098	1-3/C + Gnd, #2, 600 V, EPR insulation	527.18
1099	1-3/C + Gnd, #2, 600 V, EPR insulation	527.18
Pull Rope	Soft-Fiber Polyester	0.00

5

Conduit/Tray No: 0155 | Reference: E-32, E-16, E-15
Size: 103 | Type: RGS conduit
From: (E) Manhole-5 | To: Manhole-7
Total Fill (mm2): 2380.12 | Remarks:
Allowable Fill (mm2): 3324.51
Description of Changes:

Included Cable No.	Conductor Type	Area (mm2)
A-3008-1	1-2/C + Gnd, #8, 600 V, EPR insulation	227.46
A-3009-1	1-3/C + Gnd, #2, 600 V, EPR insulation	527.18
A-3010-1	1-3/C + Gnd, #2, 600 V, EPR insulation	527.18
Pull Rope	Soft-Fiber Polyester	0.00
S-3021-1	1-3/C + Gnd, #4, 600 V, EPR insulation	366.10
S-3022-1	1-3/C + Gnd, #4, 600 V, EPR insulation	366.10
S-3023-1	1-3/C + Gnd, #4, 600 V, EPR insulation	366.10

Conduit/Tray No: 0156 | Reference: E-32, E-16, E-15
Size: 103 | Type: RGS conduit
From: (E) Manhole-5 | To: Manhole-7
Total Fill (mm2): 1277.47 | Remarks:
Allowable Fill (mm2): 3324.51
Description of Changes:

Included Cable No.	Conductor Type	Area (mm2)
2125	3 + 1 Gnd, 250 kcmil, #1/0, 600 V, RHH/RHW insulation	1277.47
Pull Rope	Soft-Fiber Polyester	0.00

Conduit/Tray No: 0157 | Reference: E-32, E-16, E-15
Size: 103 | Type: RGS conduit
From: (E) Manhole-5 | To: Manhole-7
Total Fill (mm2): 754.18 | Remarks:
Allowable Fill (mm2): 3324.51
Description of Changes:

Included Cable No.	Conductor Type	Area (mm2)
2123	1-3/C + Gnd, #1/0, 600 V, EPR insulation	754.18
Pull Rope	Soft-Fiber Polyester	0.00

Conduit/Tray No: 0158 | Reference: E-32, E-16, E-15
Size: 103 | Type: RGS conduit
From: (E) Manhole-5 | To: Manhole-7
Total Fill (mm2): 2554.41 | Remarks:
Allowable Fill (mm2): 3324.51
Description of Changes:

Included Cable No.	Conductor Type	Area (mm2)
1106	1-3/C + Gnd, #6, 600 V, EPR insulation	324.29
A-1035-1	1-3/C + Gnd, #6, 600 V, EPR insulation	324.29
A-3011-1	1-3/C + Gnd, #2, 600 V, EPR insulation	527.18
A-3012-1	1-3/C + Gnd, #2, 600 V, EPR insulation	527.18
A-3013-1	1-3/C + Gnd, #2, 600 V, EPR insulation	527.18
Pull Rope	Soft-Fiber Polyester	0.00
S-3056-1	1-3/C + Gnd, #6, 600 V, EPR insulation	324.29

Conduit/Tray No: 0159 | Reference: E-32, E-16, E-15
Size: 103 | Type: RGS conduit
From: (E) Manhole-5 | To: Manhole-7
Total Fill (mm2): 0.00 | Remarks:
Allowable Fill (mm2): 3324.51
Description of Changes:

Included Cable No.	Conductor Type	Area (mm2)
Pull Rope	Soft-Fiber Polyester	0.00

Conduit/Tray No: 0160 | Reference: E-32, E-16, E-15
Size: 103 | Type: RGS conduit
From: (E) Manhole-5 | To: Manhole-7
Total Fill (mm2): ~~0.00~~ 227.46 1 | Remarks:
Allowable Fill (mm2): ~~3324.51~~ 4404.97
Description of Changes: Existing conduit, added new cable(s) as listed below due to YBI City Ramp by others.

Included Cable No.	Conductor Type	Area (mm2)
1 Pull Rope	Soft-Fiber Polyester	0.00
UP001-23	1-2/C + Gnd, #8, 600 V, EPR insulation	227.46

CONTRACT NO. 04-012054

CONTRACT CHANGE ORDER NO 78

SHEET 32 OF 92

CONDUIT AND TRAY SCHEDULE
UNDERGROUND

E-201

5 REVISED PER ADDENDUM No. 5 DATED JULY 30, 2009

REVISED BY | DATE REVISED
CARMELO RIVERA | ELLERY LUCAS
CALCULATED-DESIGNED BY | CHECKED BY
CONSULTANT FUNCTIONAL SUPERVISOR | BEHZAD GOLEMOHAMMADI
STATE OF CALIFORNIA - DEPARTMENT OF TRANSPORTATION
Caltrans

BORDER LAST REVISED 3/1/2007 | RELATIVE BORDER SCALE 0 20 40 60 80 | USERNAME => llorico | CU 04251 | EA 0120S1

Dist	COUNTY	ROUTE	KILOMETER POST TOTAL PROJECT	SHEET No.	TOTAL SHEETS
04	SF	80	12.7/13.2	322 R2	806

REGISTERED ELECTRICAL ENGINEER 2/14/08

6-23-08
PLANS APPROVAL DATE

REGISTERED PROFESSIONAL ENGINEER FADI WALIEDDINE No. 11465 Exp. 12/31/09 ELECTRICAL STATE OF CALIFORNIA

THE STATE OF CALIFORNIA OR ITS OFFICERS OR AGENTS SHALL NOT BE RESPONSIBLE FOR THE ACCURACY OR COMPLETENESS OF ELECTRONIC COPIES OF THIS PLAN SHEET.

PB AMERICAS, Inc.
A Parsons Brinckerhoff Company
303 Second St., Suite 700N
San Francisco, CA 94107-1317

REGISTERED PROFESSIONAL ENGINEER SYN YEE CHIN No. 18186 Exp. 09/30/2011 ELECTRICAL STATE OF CALIFORNIA

Syn Yee Chin
FOR REVISION ONLY
1 11/22/2010
2 03/30/2011

Metric

Conduit/Tray No:	0168
Size:	103
From:	(E) Manhole-5
Total Fill (mm2):	~~2320.00~~ 1375.01
Allowable Fill (mm2):	3324.51
Reference:	E-32, E-16, E-15
Type:	RGS conduit
To:	Manhole-7
Remarks:	

Description of Changes: Existing conduit, removed cable(s) as listed below due to YBI City Ramp by others. 2

Included Cable No.	Conductor Type	Area (mm2)
A-1005-1	1-3/C + Gnd, #8, 600 V, EPR Insulation	262.68
A-1006-1	1-3/C + Gnd, #8, 600 V, EPR Insulation	262.68
A-1007-1	1-3/C + Gnd, #4, 600 V, EPR Insulation	366.10
A-1008-1	1-3/C + Gnd, #6, 600 V, EPR Insulation	324.29
A-1009-1	1-3/C + Gnd, #6, 600 V, EPR Insulation	324.29
Pull Rope	Soft-Fiber Polyester	0.00
S-1001-1	1-3/C + Gnd, #8, 600 V, EPR Insulation	262.68
S-2021-1	1-3/C + Gnd, #8, 600 V, EPR Insulation	262.68
S-2022-1	1-3/C + Gnd, #8, 600 V, EPR Insulation	262.68

2 2 2

Conduit/Tray No:	0169
Size:	103
From:	(E) Manhole-5
Total Fill (mm2):	1436.68
Allowable Fill (mm2):	3324.51
Reference:	E-32, E-16, E-15
Type:	RGS conduit
To:	Manhole-7
Remarks:	

Description of Changes:

Included Cable No.	Conductor Type	Area (mm2)
Pull Rope	Soft-Fiber Polyester	0.00
S-1002-1	1-3/C + Gnd, #8, 600 V, EPR Insulation	262.68
S-1021-1	1-3/C + Gnd, #8, 600 V, EPR Insulation	262.68
S-1022-1	1-3/C + Gnd, #8, 600 V, EPR Insulation	262.68
S-1023-1	1-3/C + Gnd, #6, 600 V, EPR Insulation	324.29
S-1024-1	1-3/C + Gnd, #6, 600 V, EPR Insulation	324.29

5

Conduit/Tray No:	0170
Size:	103
From:	(E) Manhole-5
Total Fill (mm2):	1907.96
Allowable Fill (mm2):	3324.51
Reference:	E-32, E-16, E-15
Type:	RGS conduit
To:	Manhole-7
Remarks:	

Description of Changes: Delete due to elimination of platform #2W 1

Included Cable No.	Conductor Type	Area (mm2)
1091	1-3/C + Gnd, #6, 600 V, EPR Insulation	324.29
1092	1-3/C + Gnd, #4, 600 V, EPR Insulation	366.10
1093	1-3/C + Gnd, #4, 600 V, EPR Insulation	366.10
1094	1-3/C + Gnd, #2, 600 V, EPR Insulation	527.18
1105	1-3/C + Gnd, #6, 600 V, EPR Insulation	324.29
Pull Rope	Soft-Fiber Polyester	0.00

1

Conduit/Tray No:	0171
Size:	103
From:	(E) Manhole-5
Total Fill (mm2):	0.00
Allowable Fill (mm2):	3324.51
Reference:	E-32, E-16, E-15
Type:	RGS conduit
To:	Manhole-7
Remarks:	

Description of Changes:

Included Cable No.	Conductor Type	Area (mm2)
Pull Rope	Soft-Fiber Polyester	0.00

Conduit/Tray No:	0172
Size:	103
From:	(E) Manhole-5
Total Fill (mm2):	0.00
Allowable Fill (mm2):	3324.51
Reference:	E-32, E-16, E-15
Type:	RGS conduit
To:	Manhole-7
Remarks:	

Description of Changes:

Included Cable No.	Conductor Type	Area (mm2)
Pull Rope	Soft-Fiber Polyester	0.00

Conduit/Tray No:	0173
Size:	103
From:	(E) Manhole-5
Total Fill (mm2):	0.00
Allowable Fill (mm2):	3324.51
Reference:	E-32, E-16, E-15
Type:	RGS conduit
To:	Manhole-7
Remarks:	

Description of Changes:

Included Cable No.	Conductor Type	Area (mm2)
Pull Rope	Soft-Fiber Polyester	0.00

Conduit/Tray No:	0174
Size:	103
From:	(E) Manhole-5
Total Fill (mm2):	754.18
Allowable Fill (mm2):	4404.97
Reference:	E-32, E-16, E-15
Type:	RGS conduit
To:	Manhole-7
Remarks:	

Description of Changes:

Included Cable No.	Conductor Type	Area (mm2)
2120	1-3/C + Gnd, #1/0, 600 V, EPR Insulation	754.18
Pull Rope	Soft-Fiber Polyester	0.00

CONTRACT NO. 04-0120S4

CONTRACT CHANGE ORDER NO 78

SHEET 33 OF 92

5 **REVISED PER ADDENDUM No. 5 DATED JULY 30, 2009**

CONDUIT AND TRAY SCHEDULE
UNDERGROUND

E-203

STATE OF CALIFORNIA - DEPARTMENT OF TRANSPORTATION
Caltrans
CONSULTANT FUNCTIONAL SUPERVISOR: BEHZAD GOLEMOHAMMADI
CALCULATED-DESIGNED BY: ELLERY LUCAS
CHECKED BY: CARMELO RIVERA
REVISED BY / DATE REVISED

LAST REVISION 00-00-00 DATE PLOTTED => 05-APR-2011 TIME PLOTTED => 11:34

BORDER LAST REVISED 3/1/2007
RELATIVE BORDER SCALE IS IN MILLIMETERS 0 20 40 60 80
USERNAME => llorico
DGN FILE => 40120sua203r02.dgn
CU 04251
EA 0120S1

Dist	COUNTY	ROUTE	KILOMETER POST TOTAL PROJECT	SHEET No.	TOTAL SHEETS
04	SF	80	12.7/13.2	326 R1	806

REGISTERED ELECTRICAL ENGINEER 2/14/08

6-23-08
PLANS APPROVAL DATE

THE STATE OF CALIFORNIA OR ITS OFFICERS OR AGENTS SHALL NOT BE RESPONSIBLE FOR THE ACCURACY OR COMPLETENESS OF ELECTRONIC COPIES OF THIS PLAN SHEET.

REGISTERED PROFESSIONAL ENGINEER FADI WALIEDDINE No. 11365 Exp. 12/31/09 ELECTRICAL STATE OF CALIFORNIA

PB AMERICAS, Inc.
A Parsons Brinckerhoff Company
303 Second St., Suite 700N
San Francisco, CA 94107-1317

REGISTERED PROFESSIONAL ENGINEER SYN YEE CHIN No. 18186 Exp. 09/30/2011 ELECTRICAL STATE OF CALIFORNIA

Syn Yee Chin
FOR REVISION ONLY
△1 03/30/2011

Caltrans Metric

Conduit/Tray No:	0208
Size:	103
From:	Manhole-7
Total Fill (mm2):	3002.00
Allowable Fill (mm2):	3324.51
Reference:	E-32, E-16, E-17, E-33
Type:	RGS conduit
To:	Manhole-10
Remarks:	
Description of Changes:	

Included Cable No.	Conductor Type	Area (mm2)
A-1011-1	1-3/C + Gnd, #2, 600 V, EPR insulation	527.18
A-1012-1	1-3/C + Gnd, #2, 600 V, EPR insulation	527.18
A-1013-1	1-3/C + Gnd, #2, 600 V, EPR insulation	527.18
A-1014-1	1-3/C + Gnd, #2, 600 V, EPR insulation	527.18
Pull Rope	Soft-Fiber Polyester	0.00
S-1031-1	1-3/C + Gnd, #2, 600 V, EPR insulation	527.18
S-1032-1	1-3/C + Gnd, #4, 600 V, EPR insulation	366.10

Conduit/Tray No:	0209
Size:	103
From:	Manhole-7
Total Fill (mm2):	2554.41
Allowable Fill (mm2):	3324.51
Reference:	E-32, E-16, E-17, E-33
Type:	RGS conduit
To:	Manhole-10
Remarks:	
Description of Changes:	

Included Cable No.	Conductor Type	Area (mm2)
1106	1-3/C + Gnd, #6, 600 V, EPR insulation	324.29
A-1035-1	1-3/C + Gnd, #6, 600 V, EPR insulation	324.29
A-3011-1	1-3/C + Gnd, #2, 600 V, EPR insulation	527.18
A-3012-1	1-3/C + Gnd, #2, 600 V, EPR insulation	527.18
A-3013-1	1-3/C + Gnd, #2, 600 V, EPR insulation	527.18
Pull Rope	Soft-Fiber Polyester	0.00
S-3056-1	1-3/C + Gnd, #6, 600 V, EPR insulation	324.29

Conduit/Tray No:	0213
Size:	103
From:	Manhole-7
Total Fill (mm2):	0.00
Allowable Fill (mm2):	3324.51
Reference:	E-32, E-28, E-16
Type:	RGS conduit
To:	Manhole-29
Remarks:	
Description of Changes:	

Included Cable No.	Conductor Type	Area (mm2)
Pull Rope	Soft-Fiber Polyester	0.00

Conduit/Tray No:	0214
Size:	103
From:	Manhole-7
Total Fill (mm2):	0.00
Allowable Fill (mm2):	3324.51
Reference:	E-32, E-28, E-16
Type:	RGS conduit
To:	Manhole-29
Remarks:	
Description of Changes:	

Included Cable No.	Conductor Type	Area (mm2)
Pull Rope	Soft-Fiber Polyester	0.00

Conduit/Tray No:	0215
Size:	103
From:	Manhole-7
Total Fill (mm2):	~~0.00~~ 227.46 △1
Allowable Fill (mm2):	~~3324.51~~ 4404.97
Reference:	E-32, E-28, E-16
Type:	RGS conduit
To:	Manhole-30
Remarks:	
Description of Changes:	Existing conduit, added new cable(s) as listed below due to YBI City Ramp by others.

Included Cable No.	Conductor Type	Area (mm2)
△1 Pull Rope	Soft-Fiber Polyester	0.00
UP001-23	1-2/C + Gnd, #8, 600 V, EPR insulation	227.46

Conduit/Tray No:	0216
Size:	103
From:	Manhole-7
Total Fill (mm2):	2562.72
Allowable Fill (mm2):	3324.51
Reference:	E-32, E-16, E-17, E-33
Type:	RGS conduit
To:	Manhole-10
Remarks:	
Description of Changes:	

Included Cable No.	Conductor Type	Area (mm2)
2120	1-3/C + Gnd, #1/0, 600 V, EPR insulation	754.18
2123	1-3/C + Gnd, #1/0, 600 V, EPR insulation	754.18
2123-2	1-3/C + Gnd, #2, 600 V, EPR insulation	527.18
2123-3	1-3/C + Gnd, #2, 600 V, EPR insulation	527.18
Pull Rope	Soft-Fiber Polyester	0.00

Conduit/Tray No:	0217
Size:	103
From:	Manhole-7
Total Fill (mm2):	1277.47
Allowable Fill (mm2):	3324.51
Reference:	E-32, E-16, E-17, E-33
Type:	RGS conduit
To:	Manhole-10
Remarks:	
Description of Changes:	

Included Cable No.	Conductor Type	Area (mm2)
2119-B	3 + 1 Gnd, 250 kcmil, #1/0, 600 V, RHH/RHW insulation	1277.47
Pull Rope	Soft-Fiber Polyester	0.00

CONTRACT NO. 04-012054

CONTRACT CHANGE ORDER NO 78

SHEET 34 OF 92

CONDUIT AND TRAY SCHEDULE
UNDERGROUND

E-207

STATE OF CALIFORNIA - DEPARTMENT OF TRANSPORTATION
Caltrans

CONSULTANT FUNCTIONAL SUPERVISOR: BEHZAD GOLEMOHAMMADI
CALCULATED-DESIGNED BY: CARMELO RIVERA
CHECKED BY: ELLERY LUCAS
REVISED BY
DATE REVISED

Dist	COUNTY	ROUTE	KILOMETER POST TOTAL PROJECT	SHEET No.	TOTAL SHEETS
04	SF	80	12.7/13.2	327 R1	806

REGISTERED ELECTRICAL ENGINEER 2/14/08

6-23-08
PLANS APPROVAL DATE

THE STATE OF CALIFORNIA OR ITS OFFICERS OR AGENTS SHALL NOT BE RESPONSIBLE FOR THE ACCURACY OR COMPLETENESS OF ELECTRONIC COPIES OF THIS PLAN SHEET.

REGISTERED PROFESSIONAL ENGINEER SYN YEE CHIN No. 18186 Exp. 09/30/2011 ELECTRICAL STATE OF CALIFORNIA

REGISTERED PROFESSIONAL ENGINEER FADI WALIEDDINE No. 11465 Exp. 12/31/09 ELECTRICAL STATE OF CALIFORNIA

Caltrans Metric

PB AMERICAS, Inc.
A Parsons Brinckerhoff Company
303 Second St., Suite 700N
San Francisco, CA 94107-1317

Syn Yee Chin
FOR REVISION ONLY
1 03/30/2011

Conduit/Tray No:	0218
Size:	103
From:	Manhole-7
Total Fill (mm2):	0.00
Allowable Fill (mm2):	3324.51
Reference:	E-32, E-16, E-17, E-33
Type:	RGS conduit
To:	Manhole-10
Remarks:	
Description of Changes:	

Included Cable No.	Conductor Type	Area (mm2)
Pull Rope	Soft-Fiber Polyester	0.00

Conduit/Tray No:	0219
Size:	103
From:	Manhole-7
Total Fill (mm2):	0.00
Allowable Fill (mm2):	3324.51
Reference:	E-32, E-16, E-17, E-33
Type:	RGS conduit
To:	Manhole-10
Remarks:	
Description of Changes:	

Included Cable No.	Conductor Type	Area (mm2)
Pull Rope	Soft-Fiber Polyester	0.00

Conduit/Tray No:	0220
Size:	103
From:	Manhole-7
Total Fill (mm2):	0.00
Allowable Fill (mm2):	3324.51
Reference:	E-32, E-16, E-17, E-33
Type:	RGS conduit
To:	Manhole-10
Remarks:	
Description of Changes:	

Included Cable No.	Conductor Type	Area (mm2)
Pull Rope	Soft-Fiber Polyester	0.00

Conduit/Tray No:	0221
Size:	103
From:	Manhole-7
Total Fill (mm2):	1277.47
Allowable Fill (mm2):	3324.51
Reference:	E-32, E-16, E-17, E-33
Type:	RGS conduit
To:	Manhole-10
Remarks:	
Description of Changes:	

Included Cable No.	Conductor Type	Area (mm2)
2125	3 + 1 Gnd, 250 kcmil, #1/0, 600 V, RHH/RHW insulation	1277.47
Pull Rope	Soft-Fiber Polyester	0.00

Conduit/Tray No:	0222
Size:	103
From:	Manhole-7
Total Fill (mm2):	754.18
Allowable Fill (mm2):	4404.97
Reference:	E-32, E-16, E-17, E-33
Type:	RGS conduit
To:	Manhole-10
Remarks:	
Description of Changes:	

Included Cable No.	Conductor Type	Area (mm2)
2121	1-3/C + Gnd, #1/0, 600 V, EPR insulation	754.18
Pull Rope	Soft-Fiber Polyester	0.00

Conduit/Tray No:	0226
Size:	103
From:	Manhole-7
Total Fill (mm2):	~~2652.37~~ 1699.30
Allowable Fill (mm2):	3324.51
Reference:	E-32, E-28, E-16
Type:	RGS conduit
To:	Manhole-30
Remarks:	
Description of Changes:	Existing conduit, removed cable(s) as listed below due to YBI City Ramp by others.

Included Cable No.	Conductor Type	Area (mm2)
A-1005-1	1-3/C + Gnd, #8, 600 V, EPR insulation	262.68
A-1006-1	1-3/C + Gnd, #8, 600 V, EPR insulation	262.68
~~A-1007-1~~	~~1-3/C + Gnd, #4, 600 V, EPR insulation~~	~~366.10~~
~~A-1008-1~~	~~1-3/C + Gnd, #6, 600 V, EPR insulation~~	~~324.29~~
~~A-1009-1~~	~~1-3/C + Gnd, #6, 600 V, EPR insulation~~	~~324.29~~
Pull Rope	Soft-Fiber Polyester	0.00
~~S-1001-1~~	~~1-3/C + Gnd, #8, 600 V, EPR insulation~~	~~262.68~~
S-1024-1	1-3/C + Gnd, #6, 600 V, EPR insulation	324.29
S-2021-1	1-3/C + Gnd, #8, 600 V, EPR insulation	262.68
S-2022-1	1-3/C + Gnd, #8, 600 V, EPR insulation	262.68

5

Conduit/Tray No:	0227
Size:	103
From:	Manhole-7
Total Fill (mm2):	525.36
Allowable Fill (mm2):	2576.49
Reference:	E-32, E-28, E-16
Type:	RGS conduit
To:	Manhole-30
Remarks:	
Description of Changes:	

Included Cable No.	Conductor Type	Area (mm2)
Pull Rope	Soft-Fiber Polyester	0.00
S-1002-1	1-3/C + Gnd, #8, 600 V, EPR insulation	262.68
~~S-1021-1~~	1-3/C + Gnd, #8, 600 V, EPR insulation	262.68

CONTRACT NO. 04-0120S4

CONTRACT CHANGE ORDER NO 78

SHEET 35 OF 92

5 REVISED PER ADDENDUM No. 5 DATED JULY 30, 2009

CONDUIT AND TRAY SCHEDULE
UNDERGROUND

E-208

STATE OF CALIFORNIA - DEPARTMENT OF TRANSPORTATION
Caltrans
CONSULTANT FUNCTIONAL SUPERVISOR: BEHZAD GOLEMOHAMMADI
CALCULATED-DESIGNED BY: CARMELO RIVERA
CHECKED BY: ELLERY LUCAS
REVISED BY
DATE REVISED

Dist	COUNTY	ROUTE	KILOMETER POST TOTAL PROJECT	SHEET No.	TOTAL SHEETS
04	SF	80	12.7/13.2	349 R1	806

REGISTERED ELECTRICAL ENGINEER 2/14/08

6-23-08
PLANS APPROVAL DATE

REGISTERED PROFESSIONAL ENGINEER FADI WALIEDDINE No. 11465 Exp. 12/31/09 ELECTRICAL STATE OF CALIFORNIA

THE STATE OF CALIFORNIA OR ITS OFFICERS OR AGENTS SHALL NOT BE RESPONSIBLE FOR THE ACCURACY OR COMPLETENESS OF ELECTRONIC COPIES OF THIS PLAN SHEET.

PB AMERICAS, Inc.
A Parsons Brinckerhoff Company
303 Second St., Suite 700N
San Francisco, CA 94107-1317

Caltrans Metric

REGISTERED PROFESSIONAL ENGINEER SYN YEE CHIN No. 18186 Exp. 09/30/2011 ELECTRICAL STATE OF CALIFORNIA

Syn Yee Chin
FOR REVISION ONLY
△1 03/30/2011

5

~~Conduit/Tray No: 0478 | Reference: E-34, E-22, E-23~~
~~Size: 103 | Type: RGS conduit~~
~~From: (E) Manhole-19 | To: (E) Manhole-22~~
~~Total Fill (mm2): 2152.66 | Remarks: Existing conduit, add new cable (s) and pull rope thru the entire length of the connected conduits as listed below.~~
~~Allowable Fill (mm2): 3324.51~~
~~Description of Changes:~~

Included Cable No.	Conductor Type	Area (mm2)
Pull Rope	Soft-Fiber Polyester	0.00
S-2031-1	1-3/C + Gnd, #2, 600 V, EPR insulation	527.18
S-2032-1	1-3/C + Gnd, #4, 600 V, EPR insulation	366.10
S-3051-1	1-3/C + Gnd, #4, 600 V, EPR insulation	366.10
S-3052-1	1-3/C + Gnd, #2, 600 V, EPR insulation	527.18
S-3053-1	1-3/C + Gnd, #4, 600 V, EPR insulation	366.10

Conduit/Tray No: 0479 | Reference: E-34, E-22, E-23
Size: 103 | Type: RGS conduit
From: (E) Manhole-19 | To: (E) Manhole-22
Total Fill (mm2): 2433.01 | Remarks: Existing conduit, add new cable (s) and pull rope thru the entire length of the connected conduits as listed below.
Allowable Fill (mm2): 3324.51
Description of Changes:

Included Cable No.	Conductor Type	Area (mm2)
A-2011-1	1-3/C + Gnd, #2, 600 V, EPR insulation	527.18
A-2012-1	1-3/C + Gnd, #2, 600 V, EPR insulation	527.18
A-2013-1	1-3/C + Gnd, #2, 600 V, EPR insulation	527.18
A-2014-1	1-3/C + Gnd, #2, 600 V, EPR insulation	527.18
A-2035-1	1-3/C + Gnd, #6, 600 V, EPR insulation	324.29
Pull Rope	Soft-Fiber Polyester	0.00

Conduit/Tray No: 048 | Reference: E-13
Size: 78 | Type: RGS conduit
From: Stub-up below (E) T20 | To: (E) 480 V LVCC-A
Total Fill (mm2): ~~648.58~~ 1173.94 △1 | Remarks: Existing conduit, add new cable (s) and pull rope as listed below.
Allowable Fill (mm2): ~~1499.81~~ 1935.24
Description of Changes: Existing conduit, added new cable(s) as listed below due to YBI City Ramp by others.

Included Cable No.	Conductor Type	Area (mm2)
1105	1-3/C + Gnd, #6, 600 V, EPR insulation	324.29
Pull Rope	Soft-Fiber Polyester	0.00
△1 S-1024-1	1-3/C + Gnd, #6, 600 V, EPR insulation	324.29
S-1025-1	1-3/C + Gnd, #8, 600 V, EPR insulation	262.68
S-1026-1	1-3/C + Gnd, #8, 600 V, EPR insulation	262.68

Conduit/Tray No: 0480 | Reference: E-34, E-22, E-23
Size: 103 | Type: RGS conduit
From: (E) Manhole-19 | To: (E) Manhole-22
Total Fill (mm2): 2635.90 | Remarks: Existing conduit, add new cable (s) and pull rope thru the entire length of the connected conduits as listed below.
Allowable Fill (mm2): 3324.51
Description of Changes:

Included Cable No.	Conductor Type	Area (mm2)
2095	1-3/C + Gnd, #2, 600 V, EPR insulation	527.18
2096	1-3/C + Gnd, #2, 600 V, EPR insulation	527.18
2097	1-3/C + Gnd, #2, 600 V, EPR insulation	527.18
2098	1-3/C + Gnd, #2, 600 V, EPR insulation	527.18
2099	1-3/C + Gnd, #2, 600 V, EPR insulation	527.18
Pull Rope	Soft-Fiber Polyester	0.00

Conduit/Tray No: 0483 | Reference: E-34, E-22, E-24
Size: 103 | Type: RGS conduit
From: (E) Manhole-20 | To: (E) Manhole-23
Total Fill (mm2): 2780.99 | Remarks: Existing conduit, add new cable (s) and pull rope thru the entire length of the connected conduits as listed below.
Allowable Fill (mm2): 3324.51
Description of Changes:

Included Cable No.	Conductor Type	Area (mm2)
2391	3-1/C #4/0, 15 KV, EPR insulation	2780.99
Pull Rope	Soft-Fiber Polyester	0.00

Conduit/Tray No: 0486 | Reference: E-34, E-23, E-24
Size: 103 | Type: RGS conduit
From: (E) Manhole-21 | To: (E) Manhole-24
Total Fill (mm2): 124.55 | Remarks: Existing conduit, add new cable (s) and pull rope thru the entire length of the connected conduits as listed below.
Allowable Fill (mm2): 2576.49
Description of Changes:

Included Cable No.	Conductor Type	Area (mm2)
2910-2	4 pair #24, overall shielded, 300 V, PE insulation (Type IC)	77.13
2910-3	4 pair #22, shielded pairs, FEP insulation (Type SSC)	47.42
Pull Rope.	Soft-Fiber Polyester	0.00

CONTRACT NO. 04-012054
CONTRACT CHANGE ORDER NO 78
SHEET 36 OF 92

5 REVISED PER ADDENDUM No. 5 DATED JULY 30, 2009

CONDUIT AND TRAY SCHEDULE
UNDERGROUND

E-230

STATE OF CALIFORNIA - DEPARTMENT OF TRANSPORTATION
Caltrans
CONSULTANT FUNCTIONAL SUPERVISOR: BEHZAD GOLEMOHAMMADI
CALCULATED-DESIGNED BY: CARMELO RIVERA
CHECKED BY: ELLERY LUCAS
REVISED BY
DATE REVISED

Dist	COUNTY	ROUTE	KILOMETER POST TOTAL PROJECT	SHEET No.	TOTAL SHEETS
04	SF	80	12.7/13.2	360 R1	806

REGISTERED ELECTRICAL ENGINEER 2/14/08

6-23-08
PLANS APPROVAL DATE

THE STATE OF CALIFORNIA OR ITS OFFICERS OR AGENTS SHALL NOT BE RESPONSIBLE FOR THE ACCURACY OR COMPLETENESS OF ELECTRONIC COPIES OF THIS PLAN SHEET.

REGISTERED PROFESSIONAL ENGINEER FADI WALIEDDINE No. 11365 Exp. 12/31/09 ELECTRICAL STATE OF CALIFORNIA

PB AMERICAS, Inc.
A Parsons Brinckerhoff Company
303 Second St., Suite 700N
San Francisco, CA 94107-1317

REGISTERED PROFESSIONAL ENGINEER SYN YEE CHIN No. 18186 Exp. 09/30/2011 ELECTRICAL STATE OF CALIFORNIA

Syn Yee Chin
FOR REVISION ONLY
1 03/30/2011

Caltrans Metric

Conduit/Tray No:	202
Size:	53
From:	(E) T40
Total Fill (mm2):	647.30
Allowable Fill (mm2):	681.55
Reference:	E-13
Type:	RGS conduit
To:	Splice Cabinet TOS-Y03S
Remarks:	Existing conduit, add new cable (s) and pull rope as listed below.
Description of Changes:	

Included Cable No.	Conductor Type	Area (mm2)
1477-1	72 Fiber, single mode fiber optic riser cable	323.65
2475-1	72 Fiber, single mode fiber optic riser cable	323.65
Pull Rope	Soft-Fiber Polyester	0.00

Conduit/Tray No:	203
Size:	53
From:	(E) T34
Total Fill (mm2):	323.65
Allowable Fill (mm2):	879.42
Reference:	E-13
Type:	RGS conduit
To:	Splice Cabinet TOS-Y03S
Remarks:	Existing conduit, add new cable (s) and pull rope as listed below.
Description of Changes:	

Included Cable No.	Conductor Type	Area (mm2)
1475-1	72 Fiber, single mode fiber optic riser cable	323.65
Pull Rope	Soft-Fiber Polyester	0.00

Conduit/Tray No:	217
Size:	21
From:	(E) Panel LP-A
Total Fill (mm2):	102.61
Allowable Fill (mm2):	187.69
Reference:	E-13
Type:	RGS conduit
To:	(E) T32
Remarks:	
Description of Changes:	

Included Cable No.	Conductor Type	Area (mm2)
LPA-36	1-2/C + Gnd, #12, 600 V, EPR insulation	102.61
Pull Rope	Soft-Fiber Polyester	0.00

1

Conduit/Tray No:	219
Size:	27
From:	(E) Panel UP-001
Total Fill (mm2):	227.46
Allowable Fill (mm2):	303.46
Reference:	E-13
Type:	RGS conduit
To:	T21
Remarks:	
Description of Changes:	Added new conduit, pull rope & cable as listed below due to YBI City Ramp by others.

Included Cable No.	Conductor Type	Area (mm2)
Pull Rope	Soft-Fiber Polyester	0.00
UP001-23	1-2/C + Gnd, #8, 600 V, EPR insulation	227.46

Conduit/Tray No:	218
Size:	21
From:	(E) T35
Total Fill (mm2):	102.61
Allowable Fill (mm2):	187.69
Reference:	E-13
Type:	RGS conduit
To:	Irrigation Controller Panel
Remarks:	
Description of Changes:	

Included Cable No.	Conductor Type	Area (mm2)
LPA-36	1-2/C + Gnd, #12, 600 V, EPR insulation	102.61
Pull Rope	Soft-Fiber Polyester	0.00

Conduit/Tray No:	261
Size:	103
From:	(E) COM-YBI
Total Fill (mm2):	2403.42
Allowable Fill (mm2):	2576.49
Reference:	E-47
Type:	RGS conduit
To:	(E) Pull box TOS/COM
Remarks:	Existing conduit, add new cable (s) and pull rope thru the entire length of the connected conduits as listed below.
Description of Changes:	

Included Cable No.	Conductor Type	Area (mm2)
1474-1	50 pair #18, shielded pairs, IS/OS shield 600 V, XLPE insul., PVC jacket	1201.71
1474-4	50 pair #18, shielded pairs, IS/OS shield 600 V, XLPE insul., PVC jacket	1201.71
Pull Rope	Soft-Fiber Polyester	0.00

Conduit/Tray No:	262
Size:	103
From:	(E) COM-YBI
Total Fill (mm2):	1201.71
Allowable Fill (mm2):	4404.97
Reference:	E-47
Type:	RGS conduit
To:	(E) Pull box TOS/COM
Remarks:	Existing conduit, add new cable (s) and pull rope thru the entire length of the connected conduits as listed below.
Description of Changes:	

Included Cable No.	Conductor Type	Area (mm2)
2474-1	50 pair #18, shielded pairs, IS/OS shield 600 V, XLPE insul., PVC jacket	1201.71
Pull Rope	Soft-Fiber Polyester	0.00

CONTRACT NO. 04-012054

CONTRACT CHANGE ORDER NO 78

SHEET 37 OF 92

CONDUIT AND TRAY SCHEDULE
UNDERGROUND

E-241

STATE OF CALIFORNIA - DEPARTMENT OF TRANSPORTATION
Caltrans

CONSULTANT FUNCTIONAL SUPERVISOR: BEHZAD GOLEMOHAMMADI
CALCULATED-DESIGNED BY: CARMELO RIVERA
CHECKED BY: ELLERY LUCAS
REVISED BY
DATE REVISED

Dist	COUNTY	ROUTE	KILOMETER POST TOTAL PROJECT	SHEET No.	TOTAL SHEETS
04	SF	80	12.7/13.2	361 R1	806

REGISTERED ELECTRICAL ENGINEER 2/14/08

6-23-08
PLANS APPROVAL DATE

THE STATE OF CALIFORNIA OR ITS OFFICERS OR AGENTS SHALL NOT BE RESPONSIBLE FOR THE ACCURACY OR COMPLETENESS OF ELECTRONIC COPIES OF THIS PLAN SHEET.

REGISTERED PROFESSIONAL ENGINEER FADI WALIEDDINE No. 11365 Exp. 12/31/09 ELECTRICAL STATE OF CALIFORNIA

PB AMERICAS, Inc.
A Parsons Brinckerhoff Company
303 Second St., Suite 700N
San Francisco, CA 94107-1317

Caltrans Metric

REGISTERED PROFESSIONAL ENGINEER SYN YEE CHIN No. 18186 Exp. 09/30/2011 ELECTRICAL STATE OF CALIFORNIA

Syn Yee Chin
FOR REVISION ONLY
1 03/30/2011

5

Conduit/Tray No: T20 | Reference: E-13, E-46
Size: 910 | Type: 6" siderail ladder tray
From: (E) 600 V Pull Box | To: (E) T21
Total Fill (mm2): 21972.69 | Remarks: Existing tray, add new cable (s) as listed below.
Allowable Fill (mm2): 25161.24
Description of Changes:

Included Cable No.	Conductor Type	Area (mm2)
1091	1-3/C + Gnd, #6, 600 V, EPR insulation	324.29
1092	1-3/C + Gnd, #4, 600 V, EPR insulation	366.10
1093	1-3/C + Gnd, #4, 600 V, EPR insulation	366.10
1094	1-3/C + Gnd, #2, 600 V, EPR insulation	527.18
1095	1-3/C + Gnd, #2, 600 V, EPR insulation	527.18
1096	1-3/C + Gnd, #2, 600 V, EPR insulation	527.18
1097	1-3/C + Gnd, #2, 600 V, EPR insulation	527.18
1098	1-3/C + Gnd, #2, 600 V, EPR insulation	527.18
1099	1-3/C + Gnd, #2, 600 V, EPR insulation	527.18
1105	1-3/C + Gnd, #6, 600 V, EPR insulation	324.29
1106	1-3/C + Gnd, #6, 600 V, EPR insulation	324.29
2091	1-3/C + Gnd, #4, 600 V, EPR insulation	366.10
2092	1-3/C + Gnd, #4, 600 V, EPR insulation	366.10
2093	1-3/C + Gnd, #4, 600 V, EPR insulation	366.10
2094	1-3/C + Gnd, #2, 600 V, EPR insulation	527.18
2095	1-3/C + Gnd, #2, 600 V, EPR insulation	527.18
2096	1-3/C + Gnd, #2, 600 V, EPR insulation	527.18
2097	1-3/C + Gnd, #2, 600 V, EPR insulation	527.18
2123-3	1-3/C + Gnd, #2, 600 V, EPR insulation	527.18
A-1005-1	1-3/C + Gnd, #8, 600 V, EPR insulation	262.68
A-1006-1	1-3/C + Gnd, #8, 600 V, EPR insulation	262.68
A-1007-1	1-3/C + Gnd, #4, 600 V, EPR insulation	366.10
A-1008-1	1-3/C + Gnd, #6, 600 V, EPR insulation	324.29
A-1009-1	1-3/C + Gnd, #6, 600 V, EPR insulation	324.29
A-1011-1	1-3/C + Gnd, #2, 600 V, EPR insulation	527.18
A-1012-1	1-3/C + Gnd, #2, 600 V, EPR insulation	527.18
A-1013-1	1-3/C + Gnd, #2, 600 V, EPR insulation	527.18
A-1014-1	1-3/C + Gnd, #2, 600 V, EPR insulation	527.18
A-1035-1	1-3/C + Gnd, #6, 600 V, EPR insulation	324.29
A-3001-1	1-3/C + Gnd, #4, 600 V, EPR insulation	366.10
A-3002-1	1-3/C + Gnd, #4, 600 V, EPR insulation	366.10
A-3003-1	1-3/C + Gnd, #4, 600 V, EPR insulation	366.10
A-3004-1	1-3/C + Gnd, #2, 600 V, EPR insulation	527.18
A-3005-1	1-3/C + Gnd, #2, 600 V, EPR insulation	527.18
A-3006-1	1-3/C + Gnd, #4, 600 V, EPR insulation	366.10
A-3008-1	1-2/C + Gnd, #8, 600 V, EPR insulation	227.46
A-3009-1	1-3/C + Gnd, #2, 600 V, EPR insulation	527.18
A-3010-1	1-3/C + Gnd, #2, 600 V, EPR insulation	527.18
A-3011-1	1-3/C + Gnd, #2, 600 V, EPR insulation	527.18
A-3012-1	1-3/C + Gnd, #2, 600 V, EPR insulation	527.18
A-3013-1	1-3/C + Gnd, #2, 600 V, EPR insulation	527.18
S-1001-1	1-3/C + Gnd, #8, 600 V, EPR insulation	262.68
S-1002-1	1-3/C + Gnd, #8, 600 V, EPR insulation	262.68
S-1021-1	1-3/C + Gnd, #8, 600 V, EPR insulation	262.68
S-1022-1	1-3/C + Gnd, #8, 600 V, EPR insulation	262.68
S-1023-1	1-3/C + Gnd, #6, 600 V, EPR insulation	324.29
S-1024-1	1-3/C + Gnd, #6, 600 V, EPR insulation	324.29
S-1031-1	1-3/C + Gnd, #2, 600 V, EPR insulation	527.18
S-1032-1	1-3/C + Gnd, #4, 600 V, EPR insulation	366.10
S-3021-1	1-3/C + Gnd, #4, 600 V, EPR insulation	366.10
S-3022-1	1-3/C + Gnd, #4, 600 V, EPR insulation	366.10
S-3023-1	1-3/C + Gnd, #4, 600 V, EPR insulation	366.10
S-3056-1	1-3/C + Gnd, #6, 600 V, EPR insulation	324.29

Conduit/Tray No: T21 | Reference: E-13, E-46
Size: 910 | Type: 6" siderail ladder tray
From: (E) T20 1 | To: (E) T24/T22
Total Fill (mm2): ~~3734.20~~ 3961.66 | Remarks: Existing tray, add new cable (s) as listed below. 1
Allowable Fill (mm2): 25161.24
Description of Changes: Existing tray, added cable(s) as listed below due to YBI City Ramp by others.

Included Cable No.	Conductor Type	Area (mm2)
2091	1-3/C + Gnd, #4, 600 V, EPR insulation	366.10
2092	1-3/C + Gnd, #4, 600 V, EPR insulation	366.10
2093	1-3/C + Gnd, #4, 600 V, EPR insulation	366.10
2094	1-3/C + Gnd, #2, 600 V, EPR insulation	527.18
2095	1-3/C + Gnd, #2, 600 V, EPR insulation	527.18
2096	1-3/C + Gnd, #2, 600 V, EPR insulation	527.18
2097	1-3/C + Gnd, #2, 600 V, EPR insulation	527.18
1 2123-3	1-3/C + Gnd, #2, 600 V, EPR insulation	527.18
UP001-23	1-2/C + Gnd, #8, 600 V, EPR insulation	227.46

CONTRACT NO. 04-012054

CONTRACT CHANGE ORDER NO 78

SHEET 38 OF 92

5 REVISED PER ADDENDUM No. 5 DATED JULY 30, 2009

CONDUIT AND TRAY SCHEDULE
UNDERGROUND

E-242

STATE OF CALIFORNIA - DEPARTMENT OF TRANSPORTATION
Caltrans

CONSULTANT FUNCTIONAL SUPERVISOR: BEHZAD GOLEMOHAMMADI
CALCULATED-DESIGNED BY | CHECKED BY
REVISED BY: CARMELO RIVERA | DATE REVISED: ELLERY LUCAS

Dist	COUNTY	ROUTE	KILOMETER POST TOTAL PROJECT	SHEET No.	TOTAL SHEETS
04	SF	80	12.7/13.2	363C R1	806

REGISTERED ELECTRICAL ENGINEER 2/14/08

6-23-08
PLANS APPROVAL DATE

THE STATE OF CALIFORNIA OR ITS OFFICERS OR AGENTS SHALL NOT BE RESPONSIBLE FOR THE ACCURACY OR COMPLETENESS OF ELECTRONIC COPIES OF THIS PLAN SHEET.

REGISTERED PROFESSIONAL ENGINEER SYN YEE CHIN No. 18186 Exp. 09/30/2011 ELECTRICAL STATE OF CALIFORNIA

REGISTERED PROFESSIONAL ENGINEER FADI WALIEDDINE No. 11465 Exp. 12/31/09 ELECTRICAL STATE OF CALIFORNIA

PB AMERICAS, Inc.
A Parsons Brinckerhoff Company
303 Second St., Suite 700N
San Francisco, CA 94107-1317

Caltrans Metric 5

Syn Yee Chin
FOR REVISION ONLY
1 03/30/2011

Conduit/Tray No:	0080	Reference:	E-32, E-16
Size:	103	Type:	RGS conduit
From:	*0080	To:	Manhole-7
Total Fill (mm2):	2313.74	Remarks:	Connect new conduit to existing conduit. Add new cable (s) and pull rope thru the entire length of the connected conduits as listed below.
Allowable Fill (mm2):	3324.51		

Description of Changes:

Included Cable No.	Conductor Type	Area (mm2)
Pull Rope	Soft-Fiber Polyester	0.00
S-2031-1	1-3/C + Gnd, #2, 600 V, EPR insulation	527.18
S-2032-1	1-3/C + Gnd, #4, 600 V, EPR insulation	366.10
S-3051-1	1-3/C + Gnd, #4, 600 V, EPR insulation	366.10
S-3052-1	1-3/C + Gnd, #2, 600 V, EPR insulation	527.18
S-3053-1	1-3/C + Gnd, #2, 600 V, EPR insulation	527.18

Conduit/Tray No:	0110	Reference:	E-30, E15, E-31
Size:	103	Type:	RGS conduit
From:	(E) 600 V Pull Box	To:	(E) Manhole-5
Total Fill (mm2):	2475.13	Remarks:	Existing conduit, add new cable (s) and pull rope thru the entire length of the connected conduits as listed below.
Allowable Fill (mm2):	3324.51		

Description of Changes:

Included Cable No.	Conductor Type	Area (mm2)
2091	1-3/C + Gnd, #4, 600 V, EPR insulation	366.10
2092	1-3/C + Gnd, #4, 600 V, EPR insulation	366.10
2093	1-3/C + Gnd, #4, 600 V, EPR insulation	366.10
2094	1-3/C + Gnd, #2, 600 V, EPR insulation	527.18
A-2005-1	1-3/C + Gnd, #8, 600 V, EPR insulation	262.68
A-2007-1	1-3/C + Gnd, #6, 600 V, EPR insulation	324.29
A-2009-1	1-3/C + Gnd, #8, 600 V, EPR insulation	262.68
Pull Rope	Soft-Fiber Polyester	0.00

Conduit/Tray No:	0111	Reference:	E-30, E15, E-31
Size:	103	Type:	RGS conduit
From:	(E) 600 V Pull Box	To:	(E) Manhole-5
Total Fill (mm2):	~~1727.08~~ 2479.90 1	Remarks:	Existing conduit, add new cable (s) and pull rope thru the entire length of the connected conduits as listed below.
Allowable Fill (mm2):	3324.51		

Description of Changes: Existing conduit, added new cable(s) as listed below due to YBI City Ramp by others 1

Included Cable No.	Conductor Type	Area (mm2)
2100	1-3/C + Gnd, #4, 600 V, EPR insulation	366.10
2101	1-3/C + Gnd, #4, 600 V, EPR insulation	366.10
2102	1-3/C + Gnd, #4, 600 V, EPR insulation	366.10
A-2008-1	1-3/C + Gnd, #4, 600 V, EPR insulation	366.10
A-2010-1	1-3/C + Gnd, #8, 600 V, EPR insulation	262.68
1 Pull Rope	Soft-Fiber Polyester	0.00
UP001-23	1-2/C + Gnd, #8, 600 V, EPR insulation	227.46
S-1025-1	1-3/C + Gnd, #8, 600 V, EPR insulation	262.68
S-1026-1	1-3/C + Gnd, #8, 600 V, EPR insulation	262.68

Conduit/Tray No:	0115	Reference:	E-30, E15, E-31
Size:	103	Type:	RGS conduit
From:	(E) 600 V Pull Box	To:	(E) Manhole-5
Total Fill (mm2):	2541.20	Remarks:	Existing conduit, add new cable (s) and pull rope thru the entire length of the connected conduits as listed below.
Allowable Fill (mm2):	3324.51		

Description of Changes:

Included Cable No.	Conductor Type	Area (mm2)
A-3008-1	1-2/C + Gnd, #8, 600 V, EPR insulation	227.46
A-3009-1	1-3/C + Gnd, #2, 600 V, EPR insulation	527.18
A-3010-1	1-3/C + Gnd, #2, 600 V, EPR insulation	527.18
Pull Rope	Soft-Fiber Polyester	0.00
S-3021-1	1-3/C + Gnd, #4, 600 V, EPR insulation	366.10
S-3022-1	1-3/C + Gnd, #2, 600 V, EPR insulation	527.18
S-3023-1	1-3/C + Gnd, #4, 600 V, EPR insulation	366.10

Conduit/Tray No:	0124	Reference:	E-30, E15, E-31
Size:	103	Type:	RGS conduit
From:	(E) 600 V Pull Box	To:	(E) Manhole-5
Total Fill (mm2):	2389.69	Remarks:	Existing conduit, add new cable (s) and pull rope thru the entire length of the connected conduits as listed below.
Allowable Fill (mm2):	3324.51		

Description of Changes:

Included Cable No.	Conductor Type	Area (mm2)
A-1005-1	1-3/C + Gnd, #8, 600 V, EPR insulation	262.68
A-1006-1	1-3/C + Gnd, #8, 600 V, EPR insulation	262.68
A-1007-1	1-3/C + Gnd, #4, 600 V, EPR insulation	366.10
A-1008-1	1-3/C + Gnd, #6, 600 V, EPR insulation	324.29
A-1009-1	1-3/C + Gnd, #6, 600 V, EPR insulation	324.29
A-1010-1	1-3/C + Gnd, #6, 600 V, EPR insulation	324.29
Pull Rope	Soft-Fiber Polyester	0.00
S-2021-1	1-3/C + Gnd, #8, 600 V, EPR insulation	262.68
S-2022-1	1-3/C + Gnd, #8, 600 V, EPR insulation	262.68

CONTRACT NO. 04-012054

CONTRACT CHANGE ORDER NO 78

SHEET 39 OF 92

5 ADDED PER ADDENDUM No. 5 DATED JULY 30, 2009

CONDUIT AND TRAY SCHEDULE
UNDERGROUND

E-244C

REVISED BY | DATE REVISED | JEFFRI HALIM | ELLERY LUCAS | CALCULATED-DESIGNED BY | CHECKED BY | CONSULTANT FUNCTIONAL SUPERVISOR | BEHZAD GOLEMOHAMMADI

STATE OF CALIFORNIA - DEPARTMENT OF TRANSPORTATION

Caltrans

Dist	COUNTY	ROUTE	KILOMETER POST TOTAL PROJECT	SHEET No.	TOTAL SHEETS
04	SF	80	12.7/13.2	363D R1	806

REGISTERED ELECTRICAL ENGINEER 2/14/08

6-23-08
PLANS APPROVAL DATE

THE STATE OF CALIFORNIA OR ITS OFFICERS OR AGENTS SHALL NOT BE RESPONSIBLE FOR THE ACCURACY OR COMPLETENESS OF ELECTRONIC COPIES OF THIS PLAN SHEET.

REGISTERED PROFESSIONAL ENGINEER FADI WALIEDDINE No. 11465 Exp. 12/31/09 ELECTRICAL STATE OF CALIFORNIA

PB AMERICAS, Inc.
A Parsons Brinckerhoff Company
303 Second St., Suite 700N
San Francisco, CA 94107-1317

REGISTERED PROFESSIONAL ENGINEER SYN YEE CHIN No. 18186 Exp. 09/30/2011 ELECTRICAL STATE OF CALIFORNIA

Syn Yee Chin
FOR REVISION ONLY
△1 03/30/2011

Caltrans Metric

5

Conduit/Tray No:	0150
Size:	103
From:	(E) Manhole-5
Total Fill (mm2):	2475.13
Allowable Fill (mm2):	3324.51
Reference:	E-32, E-16, E-15
Type:	RGS conduit
To:	Manhole-7
Remarks:	
Description of Changes:	

Included Cable No.	Conductor Type	Area (mm2)
2091	1-3/C + Gnd, #4, 600 V, EPR insulation	366.10
2092	1-3/C + Gnd, #4, 600 V, EPR insulation	366.10
2093	1-3/C + Gnd, #4, 600 V, EPR insulation	366.10
2094	1-3/C + Gnd, #2, 600 V, EPR insulation	527.18
A-2005-1	1-3/C + Gnd, #8, 600 V, EPR insulation	262.68
A-2007-1	1-3/C + Gnd, #6, 600 V, EPR insulation	324.29
A-2009-1	1-3/C + Gnd, #8, 600 V, EPR insulation	262.68
Pull Rope	Soft-Fiber Polyester	0.00

Conduit/Tray No:	0151
Size:	103
From:	(E) Manhole-5
Total Fill (mm2):	1727.08
Allowable Fill (mm2):	3324.51
Reference:	E-32, E-16, E-15
Type:	RGS conduit
To:	Manhole-7
Remarks:	
Description of Changes:	

Included Cable No.	Conductor Type	Area (mm2)
2100	1-3/C + Gnd, #4, 600 V, EPR insulation	366.10
2101	1-3/C + Gnd, #4, 600 V, EPR insulation	366.10
2102	1-3/C + Gnd, #4, 600 V, EPR insulation	366.10
A-2008-1	1-3/C + Gnd, #4, 600 V, EPR insulation	366.10
A-2010-1	1-3/C + Gnd, #8, 600 V, EPR insulation	262.68
Pull Rope	Soft-Fiber Polyester	0.00

Conduit/Tray No:	0155
Size:	103
From:	(E) Manhole-5
Total Fill (mm2):	2541.20
Allowable Fill (mm2):	3324.51
Reference:	E-32, E-16, E-15
Type:	RGS conduit
To:	Manhole-7
Remarks:	
Description of Changes:	

Included Cable No.	Conductor Type	Area (mm2)
A-3008-1	1-2/C + Gnd, #8, 600 V, EPR insulation	227.46
A-3009-1	1-3/C + Gnd, #2, 600 V, EPR insulation	527.18
A-3010-1	1-3/C + Gnd, #2, 600 V, EPR insulation	527.18
Pull Rope	Soft-Fiber Polyester	0.00
S-3021-1	1-3/C + Gnd, #4, 600 V, EPR insulation	366.10
S-3022-1	1-3/C + Gnd, #2, 600 V, EPR insulation	527.18
S-3023-1	1-3/C + Gnd, #4, 600 V, EPR insulation	366.10

Conduit/Tray No:	0169
Size:	103
From:	(E) Manhole-5
Total Fill (mm2):	~~1760.91~~ 1436.62 △1
Allowable Fill (mm2):	3324.51
Reference:	E-32, E-16, E-15
Type:	RGS conduit
To:	Manhole-7
Remarks:	△1
Description of Changes:	Existing conduit, removed cable(s) as listed below due to YBI City Ramp by others. △1

Included Cable No.	Conductor Type	Area (mm2)
~~A-1010-1~~	~~1-3/C + Gnd, #6, 600 V, EPR insulation~~	~~324.29~~ △1
Pull Rope	Soft-Fiber Polyester	0.00
S-1002-1	1-3/C + Gnd, #8, 600 V, EPR insulation	262.68
S-1021-1	1-3/C + Gnd, #8, 600 V, EPR insulation	262.68
S-1022-1	1-3/C + Gnd, #8, 600 V, EPR insulation	262.68
S-1023-1	1-3/C + Gnd, #6, 600 V, EPR insulation	324.29
S-1024-1	1-3/C + Gnd, #6, 600 V, EPR insulation	324.29

Conduit/Tray No:	0200
Size:	103
From:	Manhole-7
Total Fill (mm2):	3207.33
Allowable Fill (mm2):	3324.51
Reference:	E-32, E-28, E-16
Type:	RGS conduit
To:	Manhole-29
Remarks:	
Description of Changes:	

Included Cable No.	Conductor Type	Area (mm2)
2091	1-3/C + Gnd, #4, 600 V, EPR insulation	366.10
2092	1-3/C + Gnd, #4, 600 V, EPR insulation	366.10
2093	1-3/C + Gnd, #4, 600 V, EPR insulation	366.10
2094	1-3/C + Gnd, #2, 600 V, EPR insulation	527.18
2100	1-3/C + Gnd, #4, 600 V, EPR insulation	366.10
2101	1-3/C + Gnd, #4, 600 V, EPR insulation	366.10
A-2005-1	1-3/C + Gnd, #8, 600 V, EPR insulation	262.68
A-2007-1	1-3/C + Gnd, #6, 600 V, EPR insulation	324.29
A-2009-1	1-3/C + Gnd, #8, 600 V, EPR insulation	262.68
Pull Rope	Soft-Fiber Polyester	0.00

CONTRACT NO. 04-0120S4

CONTRACT CHANGE ORDER NO 78

SHEET 40 OF 92

5 ADDED PER ADDENDUM No. 5 DATED JULY 30, 2009

CONDUIT AND TRAY SCHEDULE
UNDERGROUND

E-244D

STATE OF CALIFORNIA - DEPARTMENT OF TRANSPORTATION
Caltrans

CONSULTANT FUNCTIONAL SUPERVISOR: BEHZAD GOLEMOHAMMADI
CALCULATED-DESIGNED BY: JEFFRI HALIM
CHECKED BY: ELLERY LUCAS
REVISED BY
DATE REVISED

BORDER LAST REVISED 3/1/2007

RELATIVE BORDER SCALE 0 20 40 60 80

USERNAME => llorico

CU 04251 EA 0120S1

Dist	COUNTY	ROUTE	KILOMETER POST TOTAL PROJECT	SHEET No.	TOTAL SHEETS
04	SF	80	12.7/13.2	363E R1	806

REGISTERED ELECTRICAL ENGINEER 4/10/09

6-23-08
PLANS APPROVAL DATE

THE STATE OF CALIFORNIA OR ITS OFFICERS OR AGENTS SHALL NOT BE RESPONSIBLE FOR THE ACCURACY OR COMPLETENESS OF ELECTRONIC COPIES OF THIS PLAN SHEET.

REGISTERED PROFESSIONAL ENGINEER FADI WALIEDDINE No. 11365 Exp. 12/31/09 ELECTRICAL STATE OF CALIFORNIA

REGISTERED PROFESSIONAL ENGINEER SYN YEE CHIN No. 18186 Exp. 09/30/2011 ELECTRICAL STATE OF CALIFORNIA

Syn Yee Chin
FOR REVISION ONLY
△1 03/30/2011

Caltrans Metric ▽5

PB AMERICAS, Inc.
A Parsons Brinckerhoff Company
303 Second St., Suite 100N
San Francisco, CA 94107-1317

Conduit/Tray No:	0201	Reference:	E-32, E-28, E-16
Size:	103	Type:	RGS conduit
From:	Manhole-7	To:	Manhole-29
Total Fill (mm2):	1643.46	Remarks:	
Allowable Fill (mm2):	3324.51		

Description of Changes:

Included Cable No.	Conductor Type	Area (mm2)
2102	1-3/C + Gnd, #4, 600 V, EPR insulation	366.10
A-2008-1	1-3/C + Gnd, #4, 600 V, EPR insulation	366.10
A-2010-1	1-3/C + Gnd, #8, 600 V, EPR insulation	262.68
Pull Rope	Soft-Fiber Polyester	0.00
S-2023-1	1-3/C + Gnd, #6, 600 V, EPR insulation	324.29
S-2024-1	1-3/C + Gnd, #6, 600 V, EPR insulation	324.29

Conduit/Tray No:	0207	Reference:	E-32, E-16, E-17, E-33
Size:	103	Type:	RGS conduit
From:	Manhole-7	To:	Manhole-10
Total Fill (mm2):	2541.20	Remarks:	
Allowable Fill (mm2):	3324.51		

Description of Changes:

Included Cable No.	Conductor Type	Area (mm2)
A-3008-1	1-2/C + Gnd, #8, 600 V, EPR insulation	227.46
A-3009-1	1-3/C + Gnd, #2, 600 V, EPR insulation	527.18
A-3010-1	1-3/C + Gnd, #2, 600 V, EPR insulation	527.18
Pull Rope	Soft-Fiber Polyester	0.00
S-3021-1	1-3/C + Gnd, #4, 600 V, EPR insulation	366.10
S-3022-1	1-3/C + Gnd, #2, 600 V, EPR insulation	527.18
S-3023-1	1-3/C + Gnd, #4, 600 V, EPR insulation	366.10

Conduit/Tray No:	0227	Reference:	E-32, E-28, E-16
Size:	103	Type:	RGS conduit
From:	Manhole-7	To:	Manhole-30
Total Fill (mm2):	~~849.65~~ 525.36 △1	Remarks:	
Allowable Fill (mm2):	~~3324.51~~ 2576.49		

Description of Changes: Existing conduit, removed cable(s) as listed below due to YBI City Ramp by others.

Included Cable No.	Conductor Type	Area (mm2)
~~A-1010-1~~	~~1-3/C + Gnd, #6, 600 V, EPR insulation~~	~~324.29~~ △1
Pull Rope	Soft-Fiber Polyester	0.00
S-1002-1	1-3/C + Gnd, #8, 600 V, EPR insulation	262.68
S-1021-1	1-3/C + Gnd, #8, 600 V, EPR insulation	262.68

Conduit/Tray No:	0232	Reference:	E-32, E-16, E-17, E-33
Size:	103	Type:	RGS conduit
From:	Manhole-7	To:	Manhole-10
Total Fill (mm2):	2313.74	Remarks:	
Allowable Fill (mm2):	3324.51		

Description of Changes:

Included Cable No.	Conductor Type	Area (mm2)
Pull Rope	Soft-Fiber Polyester	0.00
S-2031-1	1-3/C + Gnd, #2, 600 V, EPR insulation	527.18
S-2032-1	1-3/C + Gnd, #4, 600 V, EPR insulation	366.10
S-3051-1	1-3/C + Gnd, #4, 600 V, EPR insulation	366.10
S-3052-1	1-3/C + Gnd, #2, 600 V, EPR insulation	527.18
S-3053-1	1-3/C + Gnd, #2, 600 V, EPR insulation	527.18

Conduit/Tray No:	0304	Reference:	E-33, E-17, E-19
Size:	103	Type:	RGS conduit
From:	Manhole-10	To:	Manhole-13
Total Fill (mm2):	2541.20	Remarks:	
Allowable Fill (mm2):	3324.51		

Description of Changes:

Included Cable No.	Conductor Type	Area (mm2)
A-3008-1	1-2/C + Gnd, #8, 600 V, EPR insulation	227.46
A-3009-1	1-3/C + Gnd, #2, 600 V, EPR insulation	527.18
A-3010-1	1-3/C + Gnd, #2, 600 V, EPR insulation	527.18
Pull Rope	Soft-Fiber Polyester	0.00
S-3021-1	1-3/C + Gnd, #4, 600 V, EPR insulation	366.10
S-3022-1	1-3/C + Gnd, #2, 600 V, EPR insulation	527.18
S-3023-1	1-3/C + Gnd, #4, 600 V, EPR insulation	366.10

Conduit/Tray No:	0328	Reference:	E-33, E-17, E-19
Size:	103	Type:	RGS conduit
From:	Manhole-10	To:	Manhole-13
Total Fill (mm2):	2313.74	Remarks:	
Allowable Fill (mm2):	3324.51		

Description of Changes:

Included Cable No.	Conductor Type	Area (mm2)
Pull Rope	Soft-Fiber Polyester	0.00
S-2031-1	1-3/C + Gnd, #2, 600 V, EPR insulation	527.18
S-2032-1	1-3/C + Gnd, #4, 600 V, EPR insulation	366.10
S-3051-1	1-3/C + Gnd, #4, 600 V, EPR insulation	366.10
S-3052-1	1-3/C + Gnd, #2, 600 V, EPR insulation	527.18
S-3053-1	1-3/C + Gnd, #2, 600 V, EPR insulation	527.18

CONTRACT NO. 04-012054

CONTRACT CHANGE ORDER NO 78

SHEET 41 OF 92

▽5 **ADDED PER ADDENDUM No. 5 DATED JULY 30, 2009**

CONDUIT AND TRAY SCHEDULE
UNDERGROUND

E-244E

REVISED BY | DATE REVISED
JEFFRI HALIM | ELLERY LUCAS
CALCULATED-DESIGNED BY | CHECKED BY
CONSULTANT FUNCTIONAL SUPERVISOR
BEHZAD GOLEMOHAMMADI

STATE OF CALIFORNIA - DEPARTMENT OF TRANSPORTATION
Caltrans

Dist	COUNTY	ROUTE	KILOMETER POST TOTAL PROJECT	SHEET No.	TOTAL SHEETS
04	SF	80	12.7/13.2	363H R2	806

REGISTERED ELECTRICAL ENGINEER 2/14/08

6-23-08
PLANS APPROVAL DATE

THE STATE OF CALIFORNIA OR ITS OFFICERS OR AGENTS SHALL NOT BE RESPONSIBLE FOR THE ACCURACY OR COMPLETENESS OF ELECTRONIC COPIES OF THIS PLAN SHEET.

REGISTERED PROFESSIONAL ENGINEER SYN YEE CHIN No. 18186 Exp. 09/30/2011 ELECTRICAL STATE OF CALIFORNIA

REGISTERED PROFESSIONAL ENGINEER FADI WALIEDDINE No. 11965 Exp. 12/31/09 ELECTRICAL STATE OF CALIFORNIA

PB AMERICAS, Inc.
A Parsons Brinckerhoff Company
303 Second St., Suite 700N
San Francisco, CA 94107-1317

Metric

5

Syn Yee Chin
FOR REVISION ONLY
1 11/22/2010
2 03/30/2011

Conduit/Tray No:	094	Reference:	E-13
Size:	78	Type:	RGS conduit
From:	Stub-up below (E) T31	To:	(E) 480 V LVCC-B
Total Fill (mm2):	1478.43	Remarks:	Existing conduit, add new cable (s) and pull rope as listed below.
Allowable Fill (mm2):	1935.24		
Description of Changes:			

Included Cable No.	Conductor Type	Area (mm2)
A-2005-1	1-3/C + Gnd, #8, 600 V, EPR Insulation	262.68
A-2007-1	1-3/C + Gnd, #6, 600 V, EPR Insulation	324.29
A-2008-1	1-3/C + Gnd, #4, 600 V, EPR Insulation	366.10
A-2009-1	1-3/C + Gnd, #8, 600 V, EPR Insulation	262.68
A-2010-1	1-3/C + Gnd, #8, 600 V, EPR Insulation	262.68
Pull Rope	Soft-Fiber Polyester	0.00

Conduit/Tray No:	121	Reference:	E-13
Size:	78	Type:	RGS conduit
From:	Stub-up below (E) T31	To:	(E) 480 V LVCC-B
Total Fill (mm2):	893.28	Remarks:	Existing conduit, add new cable (s) and pull rope as listed below.
Allowable Fill (mm2):	1499.81		
Description of Changes:			

Included Cable No.	Conductor Type	Area (mm2)
Pull Rope	Soft-Fiber Polyester	0.00
S-3051-1	1-3/C + Gnd, #4, 600 V, EPR Insulation	366.10
S-3053-1	1-3/C + Gnd, #2, 600 V, EPR Insulation	527.18

Conduit/Tray No:	T20	Reference:	E-13, E-46
Size:	910	Type:	152 mm siderail ladder tray
From:	(E) 600 V Pull Box 2	To:	(E) T21
Total Fill (mm2):	~~22458.06~~ 23210.88	Remarks:	Existing tray, add new cable (s) as listed below.
Allowable Fill (mm2):	25161.24		
Description of Changes:	1 Delete due to elimination of platform #2W 2 Existing tray, added/removed cable(s) as list below due to YBI City Ramp by others.		

Included Cable No.	Conductor Type	Area (mm2)
1 1091	1-3/C + Gnd, #6, 600 V, EPR Insulation	324.29
~~1092~~	~~1-3/C + Gnd, #4, 600 V, EPR Insulation~~	~~366.10~~
1093	1-3/C + Gnd, #4, 600 V, EPR Insulation	366.10
1094	1-3/C + Gnd, #2, 600 V, EPR Insulation	527.18
1095	1-3/C + Gnd, #2, 600 V, EPR Insulation	527.18
1096	1-3/C + Gnd, #2, 600 V, EPR Insulation	527.18
1097	1-3/C + Gnd, #2, 600 V, EPR Insulation	527.18
1098	1-3/C + Gnd, #2, 600 V, EPR Insulation	527.18
1099	1-3/C + Gnd, #2, 600 V, EPR Insulation	527.18
1105	1-3/C + Gnd, #6, 600 V, EPR Insulation	324.29
1106	1-3/C + Gnd, #6, 600 V, EPR Insulation	324.29
2091	1-3/C + Gnd, #4, 600 V, EPR Insulation	366.10
2092	1-3/C + Gnd, #4, 600 V, EPR Insulation	366.10
2093	1-3/C + Gnd, #4, 600 V, EPR Insulation	366.10
2094	1-3/C + Gnd, #2, 600 V, EPR Insulation	527.18
2095	1-3/C + Gnd, #2, 600 V, EPR Insulation	527.18
2096	1-3/C + Gnd, #2, 600 V, EPR Insulation	527.18
2097	1-3/C + Gnd, #2, 600 V, EPR Insulation	527.18
2123-3	1-3/C + Gnd, #2, 600 V, EPR Insulation	527.18
A-1005-1	1-3/C + Gnd, #8, 600 V, EPR Insulation	262.68
A-1006-1	1-3/C + Gnd, #8, 600 V, EPR Insulation	262.68
A-1007-1	1-3/C + Gnd, #4, 600 V, EPR Insulation	366.10
A-1008-1	1-3/C + Gnd, #6, 600 V, EPR Insulation	324.29
A-1009-1	1-3/C + Gnd, #6, 600 V, EPR Insulation	324.29
A-1010-1	1-3/C + Gnd, #6, 600 V, EPR Insulation	324.29
A-1011-1	1-3/C + Gnd, #2, 600 V, EPR Insulation	527.18
A-1012-1	1-3/C + Gnd, #2, 600 V, EPR Insulation	527.18
A-1013-1	1-3/C + Gnd, #2, 600 V, EPR Insulation	527.18
A-1014-1	1-3/C + Gnd, #2, 600 V, EPR Insulation	527.18
A-1035-1	1-3/C + Gnd, #6, 600 V, EPR Insulation	324.29
A-3001-1	1-3/C + Gnd, #4, 600 V, EPR Insulation	366.10
A-3002-1	1-3/C + Gnd, #4, 600 V, EPR Insulation	366.10
A-3003-1	1-3/C + Gnd, #4, 600 V, EPR Insulation	366.10
A-3004-1	1-3/C + Gnd, #2, 600 V, EPR Insulation	527.18
A-3005-1	1-3/C + Gnd, #2, 600 V, EPR Insulation	527.18
A-3006-1	1-3/C + Gnd, #4, 600 V, EPR Insulation	366.10
A-3008-1	1-2/C + Gnd, #8, 600 V, EPR Insulation	227.46
A-3009-1	1-3/C + Gnd, #2, 600 V, EPR Insulation	527.18
A-3010-1	1-3/C + Gnd, #2, 600 V, EPR Insulation	527.18
A-3011-1	1-3/C + Gnd, #2, 600 V, EPR Insulation	527.18
A-3012-1	1-3/C + Gnd, #2, 600 V, EPR Insulation	527.18
A-3013-1	1-3/C + Gnd, #2, 600 V, EPR Insulation	527.18
S-1001-1	1-3/C + Gnd, #8, 600 V, EPR Insulation	262.68
S-1002-1	1-3/C + Gnd, #8, 600 V, EPR Insulation	262.68
S-1021-1	1-3/C + Gnd, #8, 600 V, EPR Insulation	262.68
S-1022-1	1-3/C + Gnd, #8, 600 V, EPR Insulation	262.68
S-1023-1	1-3/C + Gnd, #6, 600 V, EPR Insulation	324.29
S-1024-1	1-3/C + Gnd, #6, 600 V, EPR Insulation	324.29
S-1031-1	1-3/C + Gnd, #2, 600 V, EPR Insulation	527.18
S-1032-1	1-3/C + Gnd, #4, 600 V, EPR Insulation	366.10
S-3021-1	1-3/C + Gnd, #4, 600 V, EPR Insulation	366.10
S-3022-1	1-3/C + Gnd, #2, 600 V, EPR Insulation	527.18
S-3023-1	1-3/C + Gnd, #4, 600 V, EPR Insulation	366.10
2 S-3056-1	1-3/C + Gnd, #6, 600 V, EPR Insulation	324.29
UP001-23	1-2/C + Gnd, #8, 600 V, EPR Insulation	227.46
S-1025-1	1-3/C + Gnd, #8, 600 V, EPR Insulation	262.68
S-1026-1	1-3/C + Gnd, #8, 600 V, EPR Insulation	262.68

CONTRACT NO. 04-0120S4

CONTRACT CHANGE ORDER NO 78

SHEET 42 OF 92

5 ADDED PER ADDENDUM No. 5 DATED JULY 30, 2009

CONDUIT AND TRAY SCHEDULE
UNDERGROUND

E-244H

REVISED BY | DATE REVISED
JEFFRI HALIM | ELLERY LUCAS
CALCULATED-DESIGNED BY | CHECKED BY
FUNCTIONAL SUPERVISOR | CONSULTANT
BEHZAD GOLEMOHAMMADI

STATE OF CALIFORNIA - DEPARTMENT OF TRANSPORTATION
Caltrans

LAST REVISION 00-00-00 | DATE PLOTTED => 05-APR-2011 | TIME PLOTTED => 11:43

Dist	COUNTY	ROUTE	KILOMETER POST TOTAL PROJECT	SHEET No.	TOTAL SHEETS
04	SF	80	12.7/13.2	364 R1	806

REGISTERED ELECTRICAL ENGINEER 2/14/08

6-23-08
PLANS APPROVAL DATE

REGISTERED PROFESSIONAL ENGINEER FADI WALIEDDINE No. 11465 Exp. 12/31/09 ELECTRICAL STATE OF CALIFORNIA

THE STATE OF CALIFORNIA OR ITS OFFICERS OR AGENTS SHALL NOT BE RESPONSIBLE FOR THE ACCURACY OR COMPLETENESS OF ELECTRONIC COPIES OF THIS PLAN SHEET.

PB AMERICAS, Inc.
A Parsons Brinckerhoff Company
303 Second St., Suite 700N
San Francisco, CA 94107-1317

REGISTERED PROFESSIONAL ENGINEER SYN YEE CHIN No. 18186 Exp. 09/30/2011 ELECTRICAL STATE OF CALIFORNIA

Synyee Chin
FOR REVISION ONLY
△1 03/30/2011

Caltrans Metric

1

Conduit/Tray No:	1101
Size:	41
From:	PB-COM
Total Fill (mm2):	0.00
Allowable Fill (mm2):	534.55
Reference:	E-49
Type:	RGS conduit
To:	PB-COM
Remarks:	
Description of Changes:	Deleted conduit and cable(s) as listed below due to YBI City Ramp by others.

Included Cable No.	Conductor Type	Area (mm2)
Pull Rope	Soft-Fiber Polyester	0.00

Conduit/Tray No:	1102
Size:	41
From:	PB-COM
Total Fill (mm2):	0.00
Allowable Fill (mm2):	534.55
Reference:	E-50
Type:	RGS conduit
To:	PB-COM
Remarks:	
Description of Changes:	

Included Cable No.	Conductor Type	Area (mm2)
Pull Rope	Soft-Fiber Polyester	0.00

Conduit/Tray No:	1103
Size:	41
From:	PB-COM
Total Fill (mm2):	0.00
Allowable Fill (mm2):	534.55
Reference:	E-50
Type:	RGS conduit
To:	PB-COM
Remarks:	
Description of Changes:	

Included Cable No.	Conductor Type	Area (mm2)
Pull Rope	Soft-Fiber Polyester	0.00

Conduit/Tray No:	1104
Size:	41
From:	PB-COM
Total Fill (mm2):	0.00
Allowable Fill (mm2):	534.55
Reference:	E-50
Type:	RGS conduit
To:	PB-COM
Remarks:	
Description of Changes:	

Included Cable No.	Conductor Type	Area (mm2)
Pull Rope	Soft-Fiber Polyester	0.00

Conduit/Tray No:	1105
Size:	41
From:	PB-COM
Total Fill (mm2):	0.00
Allowable Fill (mm2):	534.55
Reference:	E-51
Type:	RGS conduit
To:	PB-COM
Remarks:	
Description of Changes:	

Included Cable No.	Conductor Type	Area (mm2)
Pull Rope	Soft-Fiber Polyester	0.00

1

Conduit/Tray No:	1106
Size:	41
From:	PB-COM
Total Fill (mm2):	0.00
Allowable Fill (mm2):	534.55
Reference:	E-51
Type:	RGS conduit
To:	PB-COM
Remarks:	
Description of Changes:	Deleted conduit and cable(s) as listed below due to YBI City Ramp by others.

Included Cable No.	Conductor Type	Area (mm2)
Pull Rope	Soft-Fiber Polyester	0.00

Conduit/Tray No:	1107
Size:	41
From:	PB-COM
Total Fill (mm2):	0.00
Allowable Fill (mm2):	534.55
Reference:	E-51, E-52
Type:	RGS conduit
To:	PB-COM
Remarks:	
Description of Changes:	Deleted conduit and cable(s) as listed below due to YBI City Ramp by others.

Included Cable No.	Conductor Type	Area (mm2)
Pull Rope	Soft-Fiber Polyester	0.00

Conduit/Tray No:	1108
Size:	41
From:	PB-COM
Total Fill (mm2):	0.00
Allowable Fill (mm2):	534.55
Reference:	E-52
Type:	RGS conduit
To:	PB-COM
Remarks:	
Description of Changes:	Deleted conduit and cable(s) as listed below due to YBI City Ramp by others.

Included Cable No.	Conductor Type	Area (mm2)
Pull Rope	Soft-Fiber Polyester	0.00

CONTRACT NO. 04-012054

CONTRACT CHANGE ORDER NO 78

SHEET 43 OF 92

CONDUIT AND TRAY SCHEDULE
YBI TRANSITION STRUCTURES ROADWAY WB

E-245

STATE OF CALIFORNIA - DEPARTMENT OF TRANSPORTATION
Caltrans

CONSULTANT FUNCTIONAL SUPERVISOR: BEHZAD GOLEMOHAMMADI
CALCULATED-DESIGNED BY: CARMELO RIVERA
CHECKED BY: ELLERY LUCAS
REVISED BY
DATE REVISED

Dist	COUNTY	ROUTE	KILOMETER POST TOTAL PROJECT	SHEET No.	TOTAL SHEETS
04	SF	80	12.7/13.2	365 R1	806

REGISTERED ELECTRICAL ENGINEER 2/14/08

6-23-08
PLANS APPROVAL DATE

REGISTERED PROFESSIONAL ENGINEER FADI MALIEDDINE No. 11465 Exp. 12/31/09 ELECTRICAL STATE OF CALIFORNIA

THE STATE OF CALIFORNIA OR ITS OFFICERS OR AGENTS SHALL NOT BE RESPONSIBLE FOR THE ACCURACY OR COMPLETENESS OF ELECTRONIC COPIES OF THIS PLAN SHEET.

PB AMERICAS, Inc.
A Parsons Brinckerhoff Company
303 Second St., Suite 700N
San Francisco, CA 94107-1317

REGISTERED PROFESSIONAL ENGINEER SYN YEE CHIN No. 18186 Exp. 09/30/2011 ELECTRICAL STATE OF CALIFORNIA

Syn Yee Chin
FOR REVISION ONLY
△1 03/30/2011

Caltrans Metric

△1

Conduit/Tray No:	1109
Size:	41
From:	PB-COM
Total Fill (mm2):	0.00
Allowable Fill (mm2):	534.55
Reference:	E-52
Type:	RGS conduit
To:	PB-COM
Remarks:	
Description of Changes:	Deleted conduit and cable(s) as listed below due to YBI City Ramp by others.

Included Cable No.	Conductor Type	Area (mm2)
Pull Rope	Soft-Fiber Polyester	0.00

Conduit/Tray No:	1110
Size:	41
From:	PB-COM
Total Fill (mm2):	0.00
Allowable Fill (mm2):	534.55
Reference:	E-52
Type:	RGS conduit
To:	PB-COM
Remarks:	
Description of Changes:	

Included Cable No.	Conductor Type	Area (mm2)
Pull Rope	Soft-Fiber Polyester	0.00

Conduit/Tray No:	1111
Size:	41
From:	PB-COM
Total Fill (mm2):	0.00
Allowable Fill (mm2):	534.55
Reference:	E-52
Type:	RGS conduit
To:	PB-COM
Remarks:	
Description of Changes:	

Included Cable No.	Conductor Type	Area (mm2)
Pull Rope	Soft-Fiber Polyester	0.00

△1

Conduit/Tray No:	1114
Size:	41
From:	PB-COM
Total Fill (mm2):	0.00
Allowable Fill (mm2):	534.55
Reference:	E-51
Type:	RGS conduit
To:	PB-COM
Remarks:	
Description of Changes:	Deleted conduit and cable(s) as listed below due to YBI City Ramp by others.

Included Cable No.	Conductor Type	Area (mm2)
Pull Rope	Soft-Fiber Polyester	0.00

Conduit/Tray No:	1135
Size:	41
From:	PB-COM
Total Fill (mm2):	0.00
Allowable Fill (mm2):	534.55
Reference:	E-51
Type:	RGS conduit
To:	PB-COM
Remarks:	
Description of Changes:	Deleted conduit and cable(s) as listed below due to YBI City Ramp by others.

Included Cable No.	Conductor Type	Area (mm2)
Pull Rope	Soft-Fiber Polyester	0.00

CONTRACT NO. 04-012054

CONTRACT CHANGE ORDER NO. 78

SHEET 44 OF 92

△1

Conduit/Tray No:	1136
Size:	41
From:	PB-COM
Total Fill (mm2):	0.00
Allowable Fill (mm2):	534.55
Reference:	E-51
Type:	RGS conduit
To:	PB-COM
Remarks:	
Description of Changes:	Deleted conduit and cable(s) as listed below due to YBI City Ramp by others.

Included Cable No.	Conductor Type	Area (mm2)
Pull Rope	Soft-Fiber Polyester	0.00

Conduit/Tray No:	1137
Size:	41
From:	PB-COM
Total Fill (mm2):	0.00
Allowable Fill (mm2):	534.55
Reference:	E-51
Type:	RGS conduit
To:	PB-COM
Remarks:	
Description of Changes:	

Included Cable No.	Conductor Type	Area (mm2)
Pull Rope	Soft-Fiber Polyester	0.00

Conduit/Tray No:	1139
Size:	41
From:	PB-COM
Total Fill (mm2):	0.00
Allowable Fill (mm2):	534.55
Reference:	E-52
Type:	RGS conduit
To:	PB-COM
Remarks:	
Description of Changes:	

Included Cable No.	Conductor Type	Area (mm2)
Pull Rope	Soft-Fiber Polyester	0.00

▽7

Conduit/Tray No:	1139A
Size:	41
From:	PB-COM
Total Fill (mm2):	0.00
Allowable Fill (mm2):	534.55
Reference:	E-52
Type:	RGS conduit
To:	PB-COM
Remarks:	
Description of Changes:	

Included Cable No.	Conductor Type	Area (mm2)
Pull Rope	Soft-Fiber Polyester	0.00

▽7 REVISED PER ADDENDUM No. 7 DATED OCTOBER 19, 2009

CONDUIT AND TRAY SCHEDULE
YBI TRANSITION STRUCTURES ROADWAY WB

E-246

STATE OF CALIFORNIA - DEPARTMENT OF TRANSPORTATION
Caltrans

CONSULTANT FUNCTIONAL SUPERVISOR: BEHZAD GOLEMOHAMMADI
CALCULATED-DESIGNED BY: CARMELO RIVERA
CHECKED BY: ELLERY LUCAS
REVISED BY
DATE REVISED

Dist	COUNTY	ROUTE	KILOMETER POST TOTAL PROJECT	SHEET No.	TOTAL SHEETS
04	SF	80	12.7/13.2	366 R1	806

REGISTERED ELECTRICAL ENGINEER 2/14/08

6-23-08
PLANS APPROVAL DATE

REGISTERED PROFESSIONAL ENGINEER FADI WALIEDDINE No. 11465 Exp. 12/31/09 ELECTRICAL STATE OF CALIFORNIA

THE STATE OF CALIFORNIA OR ITS OFFICERS OR AGENTS SHALL NOT BE RESPONSIBLE FOR THE ACCURACY OR COMPLETENESS OF ELECTRONIC COPIES OF THIS PLAN SHEET.

PB AMERICAS, Inc.
A Parsons Brinckerhoff Company
303 Second St., Suite 700N
San Francisco, CA 94107-1317

REGISTERED PROFESSIONAL ENGINEER SYN YEE CHIN No. 18186 Exp. 09/30/2011 ELECTRICAL STATE OF CALIFORNIA

Synyee Chin
FOR REVISION ONLY
1 03/30/2011

Caltrans Metric

Conduit/Tray No:	1140	Reference:	E-50
Size:	41	Type:	RGS conduit
From:	PB-COM	To:	PB-COM
Total Fill (mm2):	98.10	Remarks:	
Allowable Fill (mm2):	534.55		
Description of Changes:			

Included Cable No.	Conductor Type	Area (mm2)
1169	1 - 2 pair, shielded #18 with IS/OA, 600 V, PVC jacket	98.10
Pull Rope	Soft-Fiber Polyester	0.00

1

Conduit/Tray No:	1150	Reference:	E-49
Size:	41	Type:	RGS conduit
From:	PB-COM	To:	1151
Total Fill (mm2):	0.00	Remarks:	Connect new conduit to existing conduit. Add new pull rope thru the entire length of the connected conduits as listed below.
Allowable Fill (mm2):	534.55		
Description of Changes:	Deleted conduit and cable(s) as listed below due to YBI City Ramp by others.		

Included Cable No.	Conductor Type	Area (mm2)
Pull Rope	Soft-Fiber Polyester	0.00

Conduit/Tray No:	1151	Reference:	E-49
Size:	41	Type:	RGS conduit
From:	1150	To:	(E) PB-COM
Total Fill (mm2):	0.00	Remarks:	Existing conduit, add new pull rope thru the entire length of the connected conduits as listed below.
Allowable Fill (mm2):	534.55		
Description of Changes:	Deleted conduit and cable(s) as listed below due to YBI City Ramp by others.		

Included Cable No.	Conductor Type	Area (mm2)
Pull Rope	Soft-Fiber Polyester	0.00

Conduit/Tray No:	1201	Reference:	E-49
Size:	41	Type:	RGS conduit
From:	PB-COM	To:	PB-COM
Total Fill (mm2):	0.00	Remarks:	
Allowable Fill (mm2):	534.55		
Description of Changes:	Deleted conduit and cable(s) as listed below due to YBI City Ramp by others.		

Included Cable No.	Conductor Type	Area (mm2)
Pull Rope	Soft-Fiber Polyester	0.00

Conduit/Tray No:	1202	Reference:	E-50
Size:	41	Type:	RGS conduit
From:	PB-COM	To:	PB-COM
Total Fill (mm2):	0.00	Remarks:	
Allowable Fill (mm2):	534.55		
Description of Changes:			

Included Cable No.	Conductor Type	Area (mm2)
Pull Rope	Soft-Fiber Polyester	0.00

CONTRACT NO. 04-012054

Conduit/Tray No:	1203	Reference:	E-50
Size:	41	Type:	RGS conduit
From:	PB-COM	To:	PB-COM
Total Fill (mm2):	0.00	Remarks:	
Allowable Fill (mm2):	534.55		
Description of Changes:			

Included Cable No.	Conductor Type	Area (mm2)
Pull Rope	Soft-Fiber Polyester	0.00

Conduit/Tray No:	1204	Reference:	E-50
Size:	41	Type:	RGS conduit
From:	PB-COM	To:	PB-COM
Total Fill (mm2):	0.00	Remarks:	
Allowable Fill (mm2):	534.55		
Description of Changes:			

Included Cable No.	Conductor Type	Area (mm2)
Pull Rope	Soft-Fiber Polyester	0.00

Conduit/Tray No:	1205	Reference:	E-51
Size:	41	Type:	RGS conduit
From:	PB-COM	To:	PB-COM
Total Fill (mm2):	0.00	Remarks:	
Allowable Fill (mm2):	534.55		
Description of Changes:			

Included Cable No.	Conductor Type	Area (mm2)
Pull Rope	Soft-Fiber Polyester	0.00

1

Conduit/Tray No:	1206	Reference:	E-51
Size:	41	Type:	RGS conduit
From:	PB-COM	To:	PB-COM
Total Fill (mm2):	0.00	Remarks:	
Allowable Fill (mm2):	534.55		
Description of Changes:	Deleted conduit and cable(s) as listed below due to YBI City Ramp by others.		

Included Cable No.	Conductor Type	Area (mm2)
Pull Rope	Soft-Fiber Polyester	0.00

CONTRACT CHANGE ORDER NO 178

SHEET 45 OF 92

CONDUIT AND TRAY SCHEDULE
YBI TRANSITION STRUCTURES ROADWAY WB

E-247

REVISED BY | DATE REVISED
CARMELO RIVERA | ELLERY LUCAS
CALCULATED-DESIGNED BY | CHECKED BY
CONSULTANT FUNCTIONAL SUPERVISOR
BEHZAD GOLEMOHAMMADI
STATE OF CALIFORNIA - DEPARTMENT OF TRANSPORTATION
Caltrans

Dist	COUNTY	ROUTE	KILOMETER POST TOTAL PROJECT	SHEET No.	TOTAL SHEETS
04	SF	80	12.7/13.2	367 R1	806

CONTRACT NO. 04-0120S4

CONTRACT CHANGE ORDER NO 78

SHEET 46 OF 92

REGISTERED ELECTRICAL ENGINEER 2/14/08

6-23-08
PLANS APPROVAL DATE

THE STATE OF CALIFORNIA OR ITS OFFICERS OR AGENTS SHALL NOT BE RESPONSIBLE FOR THE ACCURACY OR COMPLETENESS OF ELECTRONIC COPIES OF THIS PLAN SHEET.

REGISTERED PROFESSIONAL ENGINEER FADI WALIEDDINE No. 11965 Exp. 12/31/09 ELECTRICAL STATE OF CALIFORNIA

REGISTERED PROFESSIONAL ENGINEER SYN YEE CHIN No. 18186 Exp. 09/30/2011 ELECTRICAL STATE OF CALIFORNIA

Syn Yee Chin
FOR REVISION ONLY
1 03/30/2011

PB AMERICAS, Inc.
A Parsons Brinckerhoff Company
303 Second St., Suite 700N
San Francisco, CA 94107-1317

Caltrans Metric

Conduit/Tray No:	1207	Reference:	E-51, E-52
Size:	41	Type:	RGS conduit
From:	PB-COM	To:	PB-COM
Total Fill (mm2):	0.00	Remarks:	
Allowable Fill (mm2):	534.55		

Description of Changes: Deleted conduit and cable(s) as listed below due to YBI City Ramp by others.

Included Cable No.	Conductor Type	Area (mm2)
Pull Rope	Soft-Fiber Polyester	0.00

Conduit/Tray No:	1208	Reference:	E-52
Size:	41	Type:	RGS conduit
From:	PB-COM	To:	PB-COM
Total Fill (mm2):	0.00	Remarks:	
Allowable Fill (mm2):	534.55		

Description of Changes: Deleted conduit and cable(s) as listed below due to YBI City Ramp by others.

Included Cable No.	Conductor Type	Area (mm2)
Pull Rope	Soft-Fiber Polyester	0.00

Conduit/Tray No:	1209	Reference:	E-52
Size:	41	Type:	RGS conduit
From:	PB-COM	To:	PB-COM
Total Fill (mm2):	0.00	Remarks:	
Allowable Fill (mm2):	534.55		

Description of Changes: Deleted conduit and cable(s) as listed below due to YBI City Ramp by others.

Included Cable No.	Conductor Type	Area (mm2)
Pull Rope	Soft-Fiber Polyester	0.00

Conduit/Tray No:	1210	Reference:	E-52
Size:	41	Type:	RGS conduit
From:	PB-COM	To:	PB-COM
Total Fill (mm2):	0.00	Remarks:	
Allowable Fill (mm2):	534.55		

Description of Changes:

Included Cable No.	Conductor Type	Area (mm2)
Pull Rope	Soft-Fiber Polyester	0.00

Conduit/Tray No:	1211	Reference:	E-52
Size:	41	Type:	RGS conduit
From:	PB-COM	To:	PB-COM
Total Fill (mm2):	0.00	Remarks:	
Allowable Fill (mm2):	534.55		

Description of Changes:

Included Cable No.	Conductor Type	Area (mm2)
Pull Rope	Soft-Fiber Polyester	0.00

Conduit/Tray No:	1213	Reference:	E-52
Size:	41	Type:	RGS conduit
From:	PB-COM	To:	PB-COM
Total Fill (mm2):	0.00	Remarks:	
Allowable Fill (mm2):	534.55		

Description of Changes:

Included Cable No.	Conductor Type	Area (mm2)
Pull Rope	Soft-Fiber Polyester	0.00

Conduit/Tray No:	1213A	Reference:	E-52
Size:	41	Type:	RGS conduit
From:	PB-COM	To:	PB-COM
Total Fill (mm2):	0.00	Remarks:	
Allowable Fill (mm2):	534.55		

Description of Changes:

Included Cable No.	Conductor Type	Area (mm2)
Pull Rope	Soft-Fiber Polyester	0.00

Conduit/Tray No:	1214	Reference:	E-51
Size:	41	Type:	RGS conduit
From:	PB-COM	To:	PB-COM
Total Fill (mm2):	0.00	Remarks:	
Allowable Fill (mm2):	534.55		

Description of Changes: Deleted conduit and cable(s) as listed below due to YBI City Ramp by others.

Included Cable No.	Conductor Type	Area (mm2)
Pull Rope	Soft-Fiber Polyester	0.00

Conduit/Tray No:	1235	Reference:	E-51
Size:	41	Type:	RGS conduit
From:	PB-COM	To:	PB-COM
Total Fill (mm2):	0.00	Remarks:	
Allowable Fill (mm2):	534.55		

Description of Changes: Deleted conduit and cable(s) as listed below due to YBI City Ramp by others.

Included Cable No.	Conductor Type	Area (mm2)
Pull Rope	Soft-Fiber Polyester	0.00

Conduit/Tray No:	1236	Reference:	E-51
Size:	41	Type:	RGS conduit
From:	PB-COM	To:	PB-COM
Total Fill (mm2):	0.00	Remarks:	
Allowable Fill (mm2):	534.55		

Description of Changes:

Included Cable No.	Conductor Type	Area (mm2)
Pull Rope	Soft-Fiber Polyester	0.00

7 REVISED PER ADDENDUM No. 7
DATED OCTOBER 19, 2009

CONDUIT AND TRAY SCHEDULE
YBI TRANSITION STRUCTURES ROADWAY WB

E-248

STATE OF CALIFORNIA - DEPARTMENT OF TRANSPORTATION
Caltrans

CONSULTANT FUNCTIONAL SUPERVISOR: BEHZAD GOLEMOHAMMADI
CALCULATED-DESIGNED BY: CARMELO RIVERA
CHECKED BY: ELLERY LUCAS
REVISED BY
DATE REVISED

Dist	COUNTY	ROUTE	KILOMETER POST TOTAL PROJECT	SHEET No.	TOTAL SHEETS
04	SF	80	12.7/13.2	368 R1	806

REGISTERED ELECTRICAL ENGINEER 2/14/08

6-23-08
PLANS APPROVAL DATE

THE STATE OF CALIFORNIA OR ITS OFFICERS OR AGENTS SHALL NOT BE RESPONSIBLE FOR THE ACCURACY OR COMPLETENESS OF ELECTRONIC COPIES OF THIS PLAN SHEET.

REGISTERED PROFESSIONAL ENGINEER FADI WALIEDDINE No. 11465 Exp. 12/31/09 ELECTRICAL STATE OF CALIFORNIA

PB AMERICAS, Inc.
A Parsons Brinckerhoff Company
303 Second St., Suite 700N
San Francisco, CA 94107-1317

REGISTERED PROFESSIONAL ENGINEER SYN YEE CHIN No. 18186 Exp. 09/30/2011 ELECTRICAL STATE OF CALIFORNIA

Syn Yee Chin
FOR REVISION ONLY
1 03/30/2011

5

Conduit/Tray No:	1237	Reference:	E-51
Size:	41	Type:	RGS conduit
From:	PB-COM	To:	PB-COM
Total Fill (mm2):	0.00	Remarks:	
Allowable Fill (mm2):	534.55		
Description of Changes:			

Included Cable No.	Conductor Type	Area (mm2)
Pull Rope	Soft-Fiber Polyester	0.00

Conduit/Tray No:	1240	Reference:	E-50
Size:	41	Type:	RGS conduit
From:	PB-COM	To:	PB-COM
Total Fill (mm2):	0.00	Remarks:	
Allowable Fill (mm2):	534.55		
Description of Changes:			

Included Cable No.	Conductor Type	Area (mm2)
Pull Rope	Soft-Fiber Polyester	0.00

Conduit/Tray No:	1301	Reference:	E-49
Size:	41	Type:	RGS conduit
From:	PB-LTG	To:	PB-LTG
Total Fill (mm2):	133.19	Remarks:	
Allowable Fill (mm2):	534.55		
Description of Changes:			

Included Cable No.	Conductor Type	Area (mm2)
Pull Rope	Soft-Fiber Polyester	0.00
S-1001-2	3 + 1 Gnd, #8, #10, 600 V, RHH/RHW insulation	133.19

Conduit/Tray No:	1302	Reference:	E-49
Size:	41	Type:	RGS conduit
From:	PB-LTG	To:	PB-LTG
Total Fill (mm2):	198.80	Remarks:	
Allowable Fill (mm2):	534.55		
Description of Changes:			

Included Cable No.	Conductor Type	Area (mm2)
Pull Rope	Soft-Fiber Polyester	0.00
S-1001-2	3 + 1 Gnd, #8, #10, 600 V, RHH/RHW insulation	133.19
UP101-2B	3 + 1 Gnd, #12, #12, 600 V, RHH/RHW insulation	65.61

Conduit/Tray No:	1303	Reference:	E-49
Size:	41	Type:	RGS conduit
From:	PB-LTG	To:	PB-LTG
Total Fill (mm2):	198.80	Remarks:	
Allowable Fill (mm2):	534.55		
Description of Changes:			

Included Cable No.	Conductor Type	Area (mm2)
Pull Rope	Soft-Fiber Polyester	0.00
S-1001-2	3 + 1 Gnd, #8, #10, 600 V, RHH/RHW insulation	133.19
UP101-2B	3 + 1 Gnd, #12, #12, 600 V, RHH/RHW insulation	65.61

Conduit/Tray No:	1304	Reference:	E-50
Size:	41	Type:	RGS conduit
From:	PB-LTG	To:	PB-LTG
Total Fill (mm2):	198.80	Remarks:	
Allowable Fill (mm2):	534.55		
Description of Changes:			

Included Cable No.	Conductor Type	Area (mm2)
Pull Rope	Soft-Fiber Polyester	0.00
S-1001-2	3 + 1 Gnd, #8, #10, 600 V, RHH/RHW insulation	133.19
UP101-2B	3 + 1 Gnd, #12, #12, 600 V, RHH/RHW insulation	65.61

Conduit/Tray No:	1305	Reference:	E-50
Size:	41	Type:	RGS conduit
From:	PB-LTG	To:	PB-LTG
Total Fill (mm2):	198.80	Remarks:	
Allowable Fill (mm2):	534.55		
Description of Changes:			

Included Cable No.	Conductor Type	Area (mm2)
Pull Rope	Soft-Fiber Polyester	0.00
S-1001-2	3 + 1 Gnd, #8, #10, 600 V, RHH/RHW insulation	133.19
UP101-2B	3 + 1 Gnd, #12, #12, 600 V, RHH/RHW insulation	65.61

Conduit/Tray No:	1306	Reference:	E-50
Size:	41	Type:	RGS conduit
From:	PB-LTG 1	To:	PB-LTG
Total Fill (mm2):	~~133.19~~ 198.80	Remarks:	
Allowable Fill (mm2):	~~534.55~~ 414.28		
Description of Changes:	Existing conduit, added and removed cable(s) as listed below due to YBI City Ramp by others.		

Included Cable No.	Conductor Type	Area (mm2)
1 Pull Rope	Soft-Fiber Polyester	0.00
~~S-1001-2~~	~~3 + 1 Gnd, #8, #10, 600 V, RHH/RHW insulation~~	~~133.19~~
S-1002-2A	3 + 1 Gnd, #8, #10, 600 V, RHH/RHW insulation	133.19
UP101-2B	3 + 1 Gnd, #12, #12, 600 V, RHH/RHW insulation	65.61

5 REVISED PER ADDENDUM No. 5 DATED JULY 30, 2009

5 CONTRACT NO. 04-012054

CONTRACT CHANGE ORDER NO 78

SHEET 47 OF 92

CONDUIT AND TRAY SCHEDULE
YBI TRANSITION STRUCTURES ROADWAY WB

E-249

STATE OF CALIFORNIA - DEPARTMENT OF TRANSPORTATION
Caltrans

CONSULTANT FUNCTIONAL SUPERVISOR: BEHZAD GOLEMOHAMMADI
CALCULATED-DESIGNED BY: CARMELO RIVERA
CHECKED BY: ELLERY LUCAS
REVISED BY
DATE REVISED

BORDER LAST REVISED 3/1/2007
RELATIVE BORDER SCALE 0 20 40 60 80
USERNAME => llorico
CU 04251
EA 0120S1

Dist	COUNTY	ROUTE	KILOMETER POST TOTAL PROJECT	SHEET No.	TOTAL SHEETS
04	SF	80	12.7/13.2	370 R1	806

REGISTERED ELECTRICAL ENGINEER 2/14/08

6-23-08
PLANS APPROVAL DATE

REGISTERED PROFESSIONAL ENGINEER FADI WALIEDDINE No. 11465 Exp. 12/31/09 ELECTRICAL STATE OF CALIFORNIA

THE STATE OF CALIFORNIA OR ITS OFFICERS OR AGENTS SHALL NOT BE RESPONSIBLE FOR THE ACCURACY OR COMPLETENESS OF ELECTRONIC COPIES OF THIS PLAN SHEET.

PB AMERICAS, Inc.
A Parsons Brinckerhoff Company
303 Second St., Suite 700N
San Francisco, CA 94107-1317

REGISTERED PROFESSIONAL ENGINEER SYN YEE CHIN No. 18186 Exp. 09/30/2011 ELECTRICAL STATE OF CALIFORNIA

Syn Yee Chin
FOR REVISION ONLY
△1 03/30/2011

5

Conduit/Tray No:	1320
Reference:	E-51
Size:	41
Type:	RGS conduit
From:	PB-LTG
To:	PB-LTG
Total Fill (mm2):	133.19
Remarks:	
Allowable Fill (mm2):	534.55
Description of Changes:	

Included Cable No.	Conductor Type	Area (mm2)
Pull Rope	Soft-Fiber Polyester	0.00
S-1002-3A	3 + 1 Gnd, #8, #10, 600 V, RHH/RHW insulation	133.19

Conduit/Tray No:	1321
Reference:	E-51
Size:	41
Type:	RGS conduit
From:	PB-LTG
To:	PB-LTG
Total Fill (mm2):	133.19
Remarks:	
Allowable Fill (mm2):	534.55
Description of Changes:	

Included Cable No.	Conductor Type	Area (mm2)
Pull Rope	Soft-Fiber Polyester	0.00
S-1002-3A	3 + 1 Gnd, #8, #10, 600 V, RHH/RHW insulation	133.19

Conduit/Tray No:	1322
Reference:	E-51
Size:	41
Type:	RGS conduit
From:	PB-LTG
To:	PB-LTG
Total Fill (mm2):	~~346.04~~ 133.19
Remarks:	
Allowable Fill (mm2):	~~534.55~~ 708.28
Description of Changes:	Existing conduit, removed cable(s) as listed below due to YBI City Ramp by others.

△1 Included Cable No.	Conductor Type	Area (mm2)
~~A-1007-2~~	~~3 + 1 Gnd, #6, #8, 600 V, RHH/RHW insulation~~	~~212.85~~
Pull Rope	Soft-Fiber Polyester	0.00
S-1002-3A	3 + 1 Gnd, #8, #10, 600 V, RHH/RHW insulation	133.19

Conduit/Tray No:	1323
Reference:	E-51
Size:	41
Type:	RGS conduit
From:	PB-LTG
To:	PB-LTG
Total Fill (mm2):	~~346.04~~ 133.19
Remarks:	
Allowable Fill (mm2):	~~534.55~~ 708.28
Description of Changes:	Existing conduit, removed cable(s) as listed below due to YBI City Ramp by others.

△1 Included Cable No.	Conductor Type	Area (mm2)
~~A-1007-2~~	~~3 + 1 Gnd, #6, #8, 600 V, RHH/RHW insulation~~	~~212.85~~
Pull Rope	Soft-Fiber Polyester	0.00
S-1002-3A	3 + 1 Gnd, #8, #10, 600 V, RHH/RHW insulation	133.19

△1

Conduit/Tray No:	1324
Reference:	E-51
Size:	41
Type:	RGS conduit
From:	PB-LTG
To:	PB-LTG
Total Fill (mm2):	346.04
Remarks:	
Allowable Fill (mm2):	534.55
Description of Changes:	Deleted conduit and cable(s) as listed below due to YBI City Ramp by others.

Included Cable No.	Conductor Type	Area (mm2)
A-1007-2	3 + 1 Gnd, #6, #8, 600 V, RHH/RHW insulation	212.85
Pull Rope	Soft-Fiber Polyester	0.00
S-1002-3A	3 + 1 Gnd, #8, #10, 600 V, RHH/RHW insulation	133.19

Conduit/Tray No:	1326
Reference:	E-51
Size:	41
Type:	RGS conduit
From:	PB-LTG
To:	PB-LTG
Total Fill (mm2):	212.85
Remarks:	
Allowable Fill (mm2):	534.55
Description of Changes:	Deleted conduit and cable(s) as listed below due to YBI City Ramp by others.

Included Cable No.	Conductor Type	Area (mm2)
A-1007-2	3 + 1 Gnd, #6, #8, 600 V, RHH/RHW insulation	212.85
Pull Rope	Soft-Fiber Polyester	0.00

Conduit/Tray No:	1327
Reference:	E-51
Size:	41
Type:	RGS conduit
From:	PB-LTG
To:	PB-LTG
Total Fill (mm2):	212.85
Remarks:	
Allowable Fill (mm2):	534.55
Description of Changes:	Deleted conduit and cable(s) as listed below due to YBI City Ramp by others.

Included Cable No.	Conductor Type	Area (mm2)
A-1007-2	3 + 1 Gnd, #6, #8, 600 V, RHH/RHW insulation	212.85
Pull Rope	Soft-Fiber Polyester	0.00

CONTRACT NO. 04-012054

CONTRACT CHANGE ORDER NO 78

SHEET 48 OF 92

CONDUIT AND TRAY SCHEDULE
YBI TRANSITION STRUCTURES ROADWAY WB

5 REVISED PER ADDENDUM No. 5 DATED JULY 30, 2009

E-251

STATE OF CALIFORNIA - DEPARTMENT OF TRANSPORTATION
Caltrans

CONSULTANT FUNCTIONAL SUPERVISOR: BEHZAD GOLEMOHAMMADI
CALCULATED-DESIGNED BY: CARMELO RIVERA
CHECKED BY: ELLERY LUCAS
REVISED BY
DATE REVISED

Dist	COUNTY	ROUTE	KILOMETER POST TOTAL PROJECT	SHEET No.	TOTAL SHEETS
04	SF	80	12.7/13.2	371 R1	806

REGISTERED ELECTRICAL ENGINEER 2/14/08

6-23-08
PLANS APPROVAL DATE

THE STATE OF CALIFORNIA OR ITS OFFICERS OR AGENTS SHALL NOT BE RESPONSIBLE FOR THE ACCURACY OR COMPLETENESS OF ELECTRONIC COPIES OF THIS PLAN SHEET.

REGISTERED PROFESSIONAL ENGINEER FADI WALIEDDINE No. 11465 Exp. 12/31/09 ELECTRICAL STATE OF CALIFORNIA

PB AMERICAS, Inc.
A Parsons Brinckerhoff Company
303 Second St., Suite 700N
San Francisco, CA 94107-1317

REGISTERED PROFESSIONAL ENGINEER SYN YEE CHIN No. 18186 Exp. 09/30/2011 ELECTRICAL STATE OF CALIFORNIA

Syn Yee Chin
FOR REVISION ONLY
1 03/30/2011

Caltrans Metric

Conduit/Tray No:	1328	Reference:	E-51
Size:	41	Type:	RGS conduit
From:	PB-LTG	To:	PB-LTG
Total Fill (mm2):	212.85	Remarks:	
Allowable Fill (mm2):	534.55		

Description of Changes: Deleted conduit and cable(s) as listed below due to YBI City Ramp by others.

Included Cable No.	Conductor Type	Area (mm2)
A-1007-2	3 + 1 Gnd, #6, #8, 600 V, RHH/RHW insulation	212.85
Pull Rope	Soft-Fiber Polyester	0.00

Conduit/Tray No:	1329	Reference:	E-51
Size:	41	Type:	RGS conduit
From:	PB-LTG	To:	PB-LTG
Total Fill (mm2):	212.85	Remarks:	
Allowable Fill (mm2):	534.55		

Description of Changes: Deleted conduit and cable(s) as listed below due to YBI City Ramp by others.

Included Cable No.	Conductor Type	Area (mm2)
A-1007-2	3 + 1 Gnd, #6, #8, 600 V, RHH/RHW insulation	212.85
Pull Rope	Soft-Fiber Polyester	0.00

Conduit/Tray No:	1331	Reference:	E-51
Size:	41	Type:	RGS conduit
From:	PB-LTG	To:	PB-LTG
Total Fill (mm2):	212.85	Remarks:	
Allowable Fill (mm2):	534.55		

Description of Changes: Deleted conduit and cable(s) as listed below due to YBI City Ramp by others.

Included Cable No.	Conductor Type	Area (mm2)
A-1007-2	3 + 1 Gnd, #6, #8, 600 V, RHH/RHW insulation	212.85
Pull Rope	Soft-Fiber Polyester	0.00

Conduit/Tray No:	1332	Reference:	E-51, E-52
Size:	41	Type:	RGS conduit
From:	PB-LTG	To:	PB-LTG
Total Fill (mm2):	212.85	Remarks:	
Allowable Fill (mm2):	534.55		

Description of Changes: Deleted conduit and cable(s) as listed below due to YBI City Ramp by others.

Included Cable No.	Conductor Type	Area (mm2)
A-1007-2	3 + 1 Gnd, #6, #8, 600 V, RHH/RHW insulation	212.85
Pull Rope	Soft-Fiber Polyester	0.00

Conduit/Tray No:	1333	Reference:	E-52
Size:	41	Type:	RGS conduit
From:	PB-LTG	To:	PB-LTG
Total Fill (mm2):	346.04	Remarks:	
Allowable Fill (mm2):	534.55		

Description of Changes: Deleted conduit and cable(s) as listed below due to YBI City Ramp by others.

Included Cable No.	Conductor Type	Area (mm2)
A-1007-2	3 + 1 Gnd, #6, #8, 600 V, RHH/RHW insulation	212.85
A-1008-2	3 + 1 Gnd, #8, #10, 600 V, RHH/RHW insulation	133.19
Pull Rope	Soft-Fiber Polyester	0.00

1

Conduit/Tray No:	1334	Reference:	E-52
Size:	41	Type:	RGS conduit
From:	PB-LTG	To:	PB-LTG
Total Fill (mm2):	346.04	Remarks:	
Allowable Fill (mm2):	534.55		

Description of Changes: Deleted conduit and cable(s) as listed below due to YBI City Ramp by others.

Included Cable No.	Conductor Type	Area (mm2)
A-1007-2	3 + 1 Gnd, #6, #8, 600 V, RHH/RHW insulation	212.85
A-1008-2	3 + 1 Gnd, #8, #10, 600 V, RHH/RHW insulation	133.19
Pull Rope	Soft-Fiber Polyester	0.00

Conduit/Tray No:	1335	Reference:	E-52
Size:	41	Type:	RGS conduit
From:	PB-LTG	To:	PB-LTG
Total Fill (mm2):	133.19	Remarks:	
Allowable Fill (mm2):	534.55		

Description of Changes: Deleted conduit and cable(s) as listed below due to YBI City Ramp by others.

Included Cable No.	Conductor Type	Area (mm2)
A-1008-2	3 + 1 Gnd, #8, #10, 600 V, RHH/RHW insulation	133.19
Pull Rope	Soft-Fiber Polyester	0.00

Conduit/Tray No:	1336	Reference:	E-52
Size:	41	Type:	RGS conduit
From:	PB-LTG	To:	PB-LTG
Total Fill (mm2):	133.19	Remarks:	
Allowable Fill (mm2):	534.55		

Description of Changes: Deleted conduit and cable(s) as listed below due to YBI City Ramp by others.

Included Cable No.	Conductor Type	Area (mm2)
A-1008-2	3 + 1 Gnd, #8, #10, 600 V, RHH/RHW insulation	133.19
Pull Rope	Soft-Fiber Polyester	0.00

CONTRACT NO. 04-0120S4

CONTRACT CHANGE ORDER NO 78

SHEET 49 OF 92

CONDUIT AND TRAY SCHEDULE
YBI TRANSITION STRUCTURES ROADWAY WB

E-252

REVISED BY | DATE REVISED
CARMELO RIVERA | ELLERY LUCAS
CALCULATED-DESIGNED BY | CHECKED BY
CONSULTANT FUNCTIONAL SUPERVISOR
BEHZAD GOLEMOHAMMADI
STATE OF CALIFORNIA - DEPARTMENT OF TRANSPORTATION
Caltrans

Dist	COUNTY	ROUTE	KILOMETER POST TOTAL PROJECT	SHEET No.	TOTAL SHEETS
04	SF	80	12.7/13.2	372 R1	806

REGISTERED ELECTRICAL ENGINEER 2/14/08

6-23-08
PLANS APPROVAL DATE

THE STATE OF CALIFORNIA OR ITS OFFICERS OR AGENTS SHALL NOT BE RESPONSIBLE FOR THE ACCURACY OR COMPLETENESS OF ELECTRONIC COPIES OF THIS PLAN SHEET.

REGISTERED PROFESSIONAL ENGINEER SYN YEE CHIN No. 18186 Exp. 09/30/2011 ELECTRICAL STATE OF CALIFORNIA

REGISTERED PROFESSIONAL ENGINEER FADI WALIEDDINE No. 11465 Exp. 12/31/09 ELECTRICAL STATE OF CALIFORNIA

PB AMERICAS, Inc.
A Parsons Brinckerhoff Company
303 Second St., Suite 700N
San Francisco, CA 94107-1317

Caltrans Metric

Syn Yee Chin
FOR REVISION ONLY
1 03/30/2011

Conduit/Tray No:	1338
Reference:	E-52
Size:	41
Type:	RGS conduit
From:	PB-LTG
To:	~~PB-LTG~~ Stub-out 1
Total Fill (mm2):	~~133.19~~ 0.00 1
Allowable Fill (mm2):	534.55
Remarks:	1
Description of Changes:	Existing conduit, removed cable(s) as listed below due to YBI City Ramp by others.

Included Cable No.	Conductor Type	Area (mm2)
~~A-1008-2~~	~~3 + 1 Gnd, #8, #10, 600 V, RHH/RHW insulation~~	~~133.19~~ 1
Pull Rope	Soft-Fiber Polyester	0.00

Conduit/Tray No:	1339
Reference:	E-52
Size:	41
Type:	RGS conduit
From:	PB-LTG
To:	PB-LTG
Total Fill (mm2):	~~133.19~~ 324.29
Allowable Fill (mm2):	~~534.55~~ 708.28
Remarks:	
Description of Changes:	Existing conduit, added and removed cable(s) as listed below due to YBI City Ramp by others. 1

Included Cable No.	Conductor Type	Area (mm2)
~~A-1008-2~~	~~3 + 1 Gnd, #8, #10, 600 V, RHH/RHW insulation~~	~~133.19~~ 1
Pull Rope	Soft-Fiber Polyester	0.00
A-1008-1	1-3/C + Gnd, #6, 600 V, EPR insulation	329.24 1

Conduit/Tray No:	1340
Reference:	E-52
Size:	41
Type:	RGS conduit
From:	PB-LTG
To:	PB-LTG
Total Fill (mm2):	133.19
Allowable Fill (mm2):	534.55
Remarks:	
Description of Changes:	

Included Cable No.	Conductor Type	Area (mm2)
A-1008-2	3 + 1 Gnd, #8, #10, 600 V, RHH/RHW insulation	133.19
Pull Rope	Soft-Fiber Polyester	0.00

Conduit/Tray No:	1341
Reference:	E-52
Size:	41
Type:	RGS conduit
From:	PB-LTG
To:	PB-LTG
Total Fill (mm2):	133.19
Allowable Fill (mm2):	534.55
Remarks:	
Description of Changes:	

Included Cable No.	Conductor Type	Area (mm2)
A-1008-2	3 + 1 Gnd, #8, #10, 600 V, RHH/RHW insulation	133.19
Pull Rope	Soft-Fiber Polyester	0.00

Conduit/Tray No:	1342
Reference:	E-52
Size:	41
Type:	RGS conduit
From:	PB-LTG
To:	PB-LTG
Total Fill (mm2):	133.19
Allowable Fill (mm2):	534.55
Remarks:	
Description of Changes:	

Included Cable No.	Conductor Type	Area (mm2)
A-1008-2	3 + 1 Gnd, #8, #10, 600 V, RHH/RHW insulation	133.19
Pull Rope	Soft-Fiber Polyester	0.00

Conduit/Tray No:	1344
Reference:	E-52
Size:	41
Type:	RGS conduit
From:	PB-LTG
To:	PB-LTG
Total Fill (mm2):	133.19
Allowable Fill (mm2):	534.55
Remarks:	
Description of Changes:	

Included Cable No.	Conductor Type	Area (mm2)
A-1008-2	3 + 1 Gnd, #8, #10, 600 V, RHH/RHW insulation	133.19
Pull Rope	Soft-Fiber Polyester	0.00

Conduit/Tray No:	1345
Reference:	E-52
Size:	41
Type:	RGS conduit
From:	PB-LTG
To:	PB-LTG
Total Fill (mm2):	133.19
Allowable Fill (mm2):	534.55
Remarks:	
Description of Changes:	

Included Cable No.	Conductor Type	Area (mm2)
A-1008-2	3 + 1 Gnd, #8, #10, 600 V, RHH/RHW insulation	133.19
Pull Rope	Soft-Fiber Polyester	0.00

Conduit/Tray No:	1346
Reference:	E-52
Size:	41
Type:	RGS conduit
From:	PB-LTG
To:	PB-LTG
Total Fill (mm2):	133.19
Allowable Fill (mm2):	534.55
Remarks:	
Description of Changes:	

Included Cable No.	Conductor Type	Area (mm2)
A-1008-2	3 + 1 Gnd, #8, #10, 600 V, RHH/RHW insulation	133.19
Pull Rope	Soft-Fiber Polyester	0.00

CONTRACT NO. 04-0120S4

CONTRACT CHANGE ORDER NO 78

SHEET 50 OF 92

CONDUIT AND TRAY SCHEDULE
YBI TRANSITION STRUCTURES ROADWAY WB

E-253

STATE OF CALIFORNIA - DEPARTMENT OF TRANSPORTATION
Caltrans

CONSULTANT FUNCTIONAL SUPERVISOR: BEHZAD GOLEMOHAMMADI
CALCULATED-DESIGNED BY: CARMELO RIVERA
CHECKED BY: ELLERY LUCAS
REVISED BY
DATE REVISED

Dist	COUNTY	ROUTE	KILOMETER POST TOTAL PROJECT	SHEET No.	TOTAL SHEETS
04	SF	80	12.7/13.2	373 R1	806

REGISTERED ELECTRICAL ENGINEER 2/14/08

6-23-08
PLANS APPROVAL DATE

REGISTERED PROFESSIONAL ENGINEER FADI WALIEDDINE No. 11465 Exp. 12/31/09 ELECTRICAL STATE OF CALIFORNIA

THE STATE OF CALIFORNIA OR ITS OFFICERS OR AGENTS SHALL NOT BE RESPONSIBLE FOR THE ACCURACY OR COMPLETENESS OF ELECTRONIC COPIES OF THIS PLAN SHEET.

PB AMERICAS, Inc.
A Parsons Brinckerhoff Company
303 Second St., Suite 700N
San Francisco, CA 94107-1317

Caltrans Metric

REGISTERED PROFESSIONAL ENGINEER SYN YEE CHIN No. 18186 Exp. 09/30/2011 ELECTRICAL STATE OF CALIFORNIA

Synyee Chin
FOR REVISION ONLY
1 03/30/2011

1

Conduit/Tray No: 1401 | Reference: E-49
Size: 41 | Type: RGS conduit
From: PB-LTG | To: PB-LTG
Total Fill (mm2): 65.61 | Remarks:
Allowable Fill (mm2): 534.55
Description of Changes: Deleted conduit and cable(s) as listed below due to YBI City Ramp by others.

Included Cable No.	Conductor Type	Area (mm2)
Pull Rope	Soft-Fiber Polyester	0.00
UP101-2B	3 + 1 Gnd, #12, #12, 600 V, RHH/RHW Insulation	65.61

Conduit/Tray No: 1402 | Reference: E-49
Size: 41 | Type: RGS conduit
From: PB-LTG | To: PB-LTG
Total Fill (mm2): 0.00 | Remarks:
Allowable Fill (mm2): 534.55
Description of Changes: Deleted conduit and cable(s) as listed below due to YBI City Ramp by others.

Included Cable No.	Conductor Type	Area (mm2)
Pull Rope	Soft-Fiber Polyester	0.00

Conduit/Tray No: 1403 | Reference: E-49
Size: 41 | Type: RGS conduit
From: PB-LTG | To: PB-LTG
Total Fill (mm2): 0.00 | Remarks:
Allowable Fill (mm2): 534.55
Description of Changes: Deleted conduit and cable(s) as listed below due to YBI City Ramp by others.

Included Cable No.	Conductor Type	Area (mm2)
Pull Rope	Soft-Fiber Polyester	0.00

Conduit/Tray No: 1404 | Reference: E-50
Size: 41 | Type: RGS conduit
From: PB-LTG | To: PB-LTG
Total Fill (mm2): 0.00 | Remarks:
Allowable Fill (mm2): 534.55
Description of Changes: Deleted conduit and cable(s) as listed below due to YBI City Ramp by others.

Included Cable No.	Conductor Type	Area (mm2)
Pull Rope	Soft-Fiber Polyester	0.00

Conduit/Tray No: 1405 | Reference: E-50
Size: 41 | Type: RGS conduit
From: PB-LTG | To: PB-LTG
Total Fill (mm2): 0.00 | Remarks:
Allowable Fill (mm2): 534.55
Description of Changes:

Included Cable No.	Conductor Type	Area (mm2)
Pull Rope	Soft-Fiber Polyester	0.00

Conduit/Tray No: 1406 | Reference: E-50
Size: 41 | Type: RGS conduit
From: PB-LTG | To: PB-LTG
Total Fill (mm2): 0.00 | Remarks:
Allowable Fill (mm2): 534.55
Description of Changes:

Included Cable No.	Conductor Type	Area (mm2)
Pull Rope	Soft-Fiber Polyester	0.00

Conduit/Tray No: 1407 | Reference: E-50
Size: 41 | Type: RGS conduit
From: PB-LTG | To: PB-LTG
Total Fill (mm2): 0.00 | Remarks:
Allowable Fill (mm2): 534.55
Description of Changes:

Included Cable No.	Conductor Type	Area (mm2)
Pull Rope	Soft-Fiber Polyester	0.00

Conduit/Tray No: 1408 | Reference: E-50
Size: 41 | Type: RGS conduit
From: PB-LTG | To: PB-LTG
Total Fill (mm2): 0.00 | Remarks:
Allowable Fill (mm2): 534.55
Description of Changes:

Included Cable No.	Conductor Type	Area (mm2)
Pull Rope	Soft-Fiber Polyester	0.00

Conduit/Tray No: 1409 | Reference: E-50
Size: 41 | Type: RGS conduit
From: PB-LTG | To: PB-LTG
Total Fill (mm2): 0.00 | Remarks:
Allowable Fill (mm2): 534.55
Description of Changes:

Included Cable No.	Conductor Type	Area (mm2)
Pull Rope	Soft-Fiber Polyester	0.00

CONTRACT NO. 04-012054

CONTRACT CHANGE ORDER NO 78

SHEET 51 OF 92

CONDUIT AND TRAY SCHEDULE
YBI TRANSITION STRUCTURES ROADWAY WB

E-254

STATE OF CALIFORNIA - DEPARTMENT OF TRANSPORTATION
Caltrans
CONSULTANT FUNCTIONAL SUPERVISOR: BEHZAD GOLEMOHAMMADI
CALCULATED-DESIGNED BY: CARMELO RIVERA
CHECKED BY: ELLERY LUCAS
REVISED BY
DATE REVISED

BORDER LAST REVISED 3/1/2007
RELATIVE BORDER SCALE 0 20 40 60 80
USERNAME => llorico
CU 04251
EA 0120S1

Dist	COUNTY	ROUTE	KILOMETER POST TOTAL PROJECT	SHEET No.	TOTAL SHEETS
04	SF	80	12.7/13.2	375 R1	806

REGISTERED ELECTRICAL ENGINEER 2/14/08

6-23-08
PLANS APPROVAL DATE

THE STATE OF CALIFORNIA OR ITS OFFICERS OR AGENTS SHALL NOT BE RESPONSIBLE FOR THE ACCURACY OR COMPLETENESS OF ELECTRONIC COPIES OF THIS PLAN SHEET.

REGISTERED PROFESSIONAL ENGINEER FADI WALIEDDINE No. 11465 Exp. 12/31/09 ELECTRICAL STATE OF CALIFORNIA

PB AMERICAS, Inc.
A Parsons Brinckerhoff Company
303 Second St., Suite 700N
San Francisco, CA 94107-1317

REGISTERED PROFESSIONAL ENGINEER SYN YEE CHIN No. 18186 Exp. 09/30/2011 ELECTRICAL STATE OF CALIFORNIA

Syn Yee Chin
FOR REVISION ONLY
1 03/30/2011

5

Conduit/Tray No:	1424
Size:	41
From:	PB-LTG
Total Fill (mm2):	0.00
Allowable Fill (mm2):	534.55
Reference:	E-51
Type:	RGS conduit
To:	PB-LTG
Remarks:	
Description of Changes:	

Included Cable No.	Conductor Type	Area (mm2)
Pull Rope	Soft-Fiber Polyester	0.00

Conduit/Tray No:	1426
Size:	41
From:	PB-LTG
Total Fill (mm2):	0.00
Allowable Fill (mm2):	534.55
Reference:	E-51
Type:	RGS conduit
To:	PB-LTG
Remarks:	
Description of Changes:	Deleted conduit and cable(s) as listed below due to YBI City Ramp by others.

Included Cable No.	Conductor Type	Area (mm2)
Pull Rope	Soft-Fiber Polyester	0.00

Conduit/Tray No:	1427
Size:	41
From:	PB-LTG
Total Fill (mm2):	0.00
Allowable Fill (mm2):	534.55
Reference:	E-51
Type:	RGS conduit
To:	PB-LTG
Remarks:	
Description of Changes:	Deleted conduit and cable(s) as listed below due to YBI City Ramp by others.

Included Cable No.	Conductor Type	Area (mm2)
Pull Rope	Soft-Fiber Polyester	0.00

Conduit/Tray No:	1428
Size:	41
From:	PB-LTG
Total Fill (mm2):	0.00
Allowable Fill (mm2):	534.55
Reference:	E-51
Type:	RGS conduit
To:	PB-LTG
Remarks:	
Description of Changes:	Deleted conduit and cable(s) as listed below due to YBI City Ramp by others.

Included Cable No.	Conductor Type	Area (mm2)
Pull Rope	Soft-Fiber Polyester	0.00

Conduit/Tray No:	1429
Size:	41
From:	PB-LTG
Total Fill (mm2):	0.00
Allowable Fill (mm2):	534.55
Reference:	E-51
Type:	RGS conduit
To:	PB-LTG
Remarks:	
Description of Changes:	Deleted conduit and cable(s) as listed below due to YBI City Ramp by others.

Included Cable No.	Conductor Type	Area (mm2)
Pull Rope	Soft-Fiber Polyester	0.00

1

Conduit/Tray No:	1431
Size:	41
From:	PB-LTG
Total Fill (mm2):	0.00
Allowable Fill (mm2):	534.55
Reference:	E-51
Type:	RGS conduit
To:	PB-LTG
Remarks:	
Description of Changes:	Deleted conduit and cable(s) as listed below due to YBI City Ramp by others.

Included Cable No.	Conductor Type	Area (mm2)
Pull Rope	Soft-Fiber Polyester	0.00

Conduit/Tray No:	1432
Size:	41
From:	PB-LTG
Total Fill (mm2):	0.00
Allowable Fill (mm2):	534.55
Reference:	E-51, E-52
Type:	RGS conduit
To:	PB-LTG
Remarks:	
Description of Changes:	Deleted conduit and cable(s) as listed below due to YBI City Ramp by others.

Included Cable No.	Conductor Type	Area (mm2)
Pull Rope	Soft-Fiber Polyester	0.00

Conduit/Tray No:	1433
Size:	41
From:	PB-LTG
Total Fill (mm2):	0.00
Allowable Fill (mm2):	534.55
Reference:	E-52
Type:	RGS conduit
To:	PB-LTG
Remarks:	
Description of Changes:	Deleted conduit and cable(s) as listed below due to YBI City Ramp by others.

Included Cable No.	Conductor Type	Area (mm2)
Pull Rope	Soft-Fiber Polyester	0.00

Conduit/Tray No:	1434
Size:	41
From:	PB-LTG
Total Fill (mm2):	0.00
Allowable Fill (mm2):	534.55
Reference:	E-52
Type:	RGS conduit
To:	PB-LTG
Remarks:	
Description of Changes:	Deleted conduit and cable(s) as listed below due to YBI City Ramp by others.

Included Cable No.	Conductor Type	Area (mm2)
Pull Rope	Soft-Fiber Polyester	0.00

CONTRACT NO. 04-012054

CONTRACT CHANGE ORDER NO 781

SHEET 52 OF 92

5 REVISED PER ADDENDUM No. 5 DATED JULY 30, 2009

CONDUIT AND TRAY SCHEDULE
YBI TRANSITION STRUCTURES ROADWAY WB

E-256

STATE OF CALIFORNIA - DEPARTMENT OF TRANSPORTATION
Caltrans

CONSULTANT FUNCTIONAL SUPERVISOR: BEHZAD GOLEMOHAMMADI
CALCULATED-DESIGNED BY: CARMELO RIVERA
CHECKED BY: ELLERY LUCAS
REVISED BY
DATE REVISED

BORDER LAST REVISED 3/1/2007
RELATIVE BORDER SCALE 0 20 40 60 80
USERNAME => llorico
CU 04251
EA 0120S1

Dist	COUNTY	ROUTE	KILOMETER POST TOTAL PROJECT	SHEET No.	TOTAL SHEETS
04	SF	80	12.7/13.2	376 R1	806

REGISTERED ELECTRICAL ENGINEER 2/14/08

6-23-08
PLANS APPROVAL DATE

REGISTERED PROFESSIONAL ENGINEER FADI WALIEDDINE No. 11465 Exp. 12/31/09 ELECTRICAL STATE OF CALIFORNIA

THE STATE OF CALIFORNIA OR ITS OFFICERS OR AGENTS SHALL NOT BE RESPONSIBLE FOR THE ACCURACY OR COMPLETENESS OF ELECTRONIC COPIES OF THIS PLAN SHEET.

PB AMERICAS, Inc.
A Parsons Brinckerhoff Company
303 Second St., Suite 700N
San Francisco, CA 94107-1317

Caltrans Metric

REGISTERED PROFESSIONAL ENGINEER SYN YEE CHIN No. 18186 Exp. 09/30/2011 ELECTRICAL STATE OF CALIFORNIA

Syn Yee Chin
FOR REVISION ONLY
1 03/30/2011

1

Conduit/Tray No:	1435	Reference:	E-52
Size:	41	Type:	RGS conduit
From:	PB-LTG	To:	PB-LTG
Total Fill (mm2):	0.00	Remarks:	
Allowable Fill (mm2):	534.55		
Description of Changes:	Deleted conduit and cable(s) as listed below due to YBI City Ramp by others.		

Included Cable No.	Conductor Type	Area (mm2)
Pull Rope	Soft-Fiber Polyester	0.00

Conduit/Tray No:	1436	Reference:	E-52
Size:	41	Type:	RGS conduit
From:	PB-LTG	To:	PB-LTG
Total Fill (mm2):	0.00	Remarks:	
Allowable Fill (mm2):	534.55		
Description of Changes:	Deleted conduit and cable(s) as listed below due to YBI City Ramp by others.		

Included Cable No.	Conductor Type	Area (mm2)
Pull Rope	Soft-Fiber Polyester	0.00

Conduit/Tray No:	1438	Reference:	E-52
Size:	41	Type:	RGS conduit
From:	PB-LTG	To:	PB-LTG
Total Fill (mm2):	0.00	Remarks:	
Allowable Fill (mm2):	534.55		
Description of Changes:	Deleted conduit and cable(s) as listed below due to YBI City Ramp by others.		

Included Cable No.	Conductor Type	Area (mm2)
Pull Rope	Soft-Fiber Polyester	0.00

Conduit/Tray No:	1439	Reference:	E-52
Size:	41	Type:	RGS conduit
From:	PB-LTG	To:	PB-LTG
Total Fill (mm2):	0.00	Remarks:	
Allowable Fill (mm2):	534.55		
Description of Changes:			

Included Cable No.	Conductor Type	Area (mm2)
Pull Rope	Soft-Fiber Polyester	0.00

Conduit/Tray No:	1440	Reference:	E-52
Size:	41	Type:	RGS conduit
From:	PB-LTG	To:	PB-LTG
Total Fill (mm2):	0.00	Remarks:	
Allowable Fill (mm2):	534.55		
Description of Changes:			

Included Cable No.	Conductor Type	Area (mm2)
Pull Rope	Soft-Fiber Polyester	0.00

Conduit/Tray No:	1441	Reference:	E-52
Size:	41	Type:	RGS conduit
From:	PB-LTG	To:	PB-LTG
Total Fill (mm2):	0.00	Remarks:	
Allowable Fill (mm2):	534.55		
Description of Changes:			

Included Cable No.	Conductor Type	Area (mm2)
Pull Rope	Soft-Fiber Polyester	0.00

Conduit/Tray No:	1442	Reference:	E-52
Size:	41	Type:	RGS conduit
From:	PB-LTG	To:	PB-LTG
Total Fill (mm2):	0.00	Remarks:	
Allowable Fill (mm2):	534.55		
Description of Changes:			

Included Cable No.	Conductor Type	Area (mm2)
Pull Rope	Soft-Fiber Polyester	0.00

Conduit/Tray No:	1444	Reference:	E-52
Size:	41	Type:	RGS conduit
From:	PB-LTG	To:	PB-LTG
Total Fill (mm2):	0.00	Remarks:	
Allowable Fill (mm2):	534.55		
Description of Changes:			

Included Cable No.	Conductor Type	Area (mm2)
Pull Rope	Soft-Fiber Polyester	0.00

Conduit/Tray No:	1445	Reference:	E-52
Size:	41	Type:	RGS conduit
From:	PB-LTG	To:	PB-LTG
Total Fill (mm2):	0.00	Remarks:	
Allowable Fill (mm2):	534.55		
Description of Changes:			

Included Cable No.	Conductor Type	Area (mm2)
Pull Rope	Soft-Fiber Polyester	0.00

CONTRACT NO. 04-012054

CONTRACT CHANGE ORDER NO 78

SHEET 53 OF 92

CONDUIT AND TRAY SCHEDULE
YBI TRANSITION STRUCTURES ROADWAY WB

E-257

STATE OF CALIFORNIA - DEPARTMENT OF TRANSPORTATION
Caltrans

CONSULTANT FUNCTIONAL SUPERVISOR: BEHZAD GOLEMOHAMMADI
CALCULATED-DESIGNED BY: CARMELO RIVERA
CHECKED BY: ELLERY LUCAS
REVISED BY
DATE REVISED

Dist	COUNTY	ROUTE	KILOMETER POST TOTAL PROJECT	SHEET No.	TOTAL SHEETS
04	SF	80	12.7/13.2	377 R1	806

REGISTERED ELECTRICAL ENGINEER 2/14/08

6-23-08
PLANS APPROVAL DATE

THE STATE OF CALIFORNIA OR ITS OFFICERS OR AGENTS SHALL NOT BE RESPONSIBLE FOR THE ACCURACY OR COMPLETENESS OF ELECTRONIC COPIES OF THIS PLAN SHEET.

REGISTERED PROFESSIONAL ENGINEER FADI MALIEDDINE No. 11465 Exp. 12/31/09 ELECTRICAL STATE OF CALIFORNIA

PB AMERICAS, Inc.
A Parsons Brinckerhoff Company
303 Second St. Suite 700N
San Francisco, CA 94107-1317

REGISTERED PROFESSIONAL ENGINEER SYN YEE CHIN No. 18186 Exp. 09/30/2011 ELECTRICAL STATE OF CALIFORNIA

Syn Yee Chin
FOR REVISION ONLY
1 03/30/2011

Caltrans Metric

Conduit/Tray No:	1446	Reference:	E-52
Size:	41	Type:	RGS conduit
From:	PB-LTG	To:	PB-LTG
Total Fill (mm2):	0.00	Remarks:	
Allowable Fill (mm2):	534.55		

Description of Changes:

Included Cable No.	Conductor Type	Area (mm2)
Pull Rope	Soft-Fiber Polyester	0.00

Conduit/Tray No:	1500	Reference:	E-49
Size:	41	Type:	RGS conduit
From:	PB-COM	To:	~~End of conduit 1500~~ PB-COM 1
Total Fill (mm2):	0.00	Remarks:	Stub out conduit West of Bent #48 & cap.
Allowable Fill (mm2):	534.55		

Description of Changes: Revise "To" location due to YBI City Ramp by others. 1

Included Cable No.	Conductor Type	Area (mm2)
-		0.00

Conduit/Tray No:	1501	Reference:	E-49, E-50
Size:	41	Type:	RGS conduit
From:	PB-COM	To:	PB-COM
Total Fill (mm2):	0.00	Remarks:	
Allowable Fill (mm2):	534.55		

Description of Changes:

Included Cable No.	Conductor Type	Area (mm2)
Pull Rope	Soft-Fiber Polyester	0.00

~~Conduit/Tray No: 1502f Reference: E-50~~
~~Size: 41 Type: RGS conduit~~
~~From: PB-COM To: PB-COM~~
~~Total Fill (mm2): 0.00 Remarks:~~
~~Allowable Fill (mm2): 534.55~~
~~Description of Changes:~~

~~Included Cable No.~~	~~Conductor Type~~	~~Area (mm2)~~
~~Pull Rope~~	~~Soft-Fiber Polyester~~	~~0.00~~

5

Conduit/Tray No:	1503	Reference:	E-50
Size:	41	Type:	RGS conduit
From:	PB-COM	To:	PB-COM
Total Fill (mm2):	0.00	Remarks:	
Allowable Fill (mm2):	534.55		

Description of Changes:

Included Cable No.	Conductor Type	Area (mm2)
Pull Rope	Soft-Fiber Polyester	0.00

Conduit/Tray No:	1504	Reference:	E-50
Size:	41	Type:	RGS conduit
From:	PB-COM	To:	PB-COM
Total Fill (mm2):	0.00	Remarks:	
Allowable Fill (mm2):	534.55		

Description of Changes:

Included Cable No.	Conductor Type	Area (mm2)
Pull Rope	Soft-Fiber Polyester	0.00

Conduit/Tray No:	1505	Reference:	E-51
Size:	41	Type:	RGS conduit
From:	PB-COM	To:	PB-COM
Total Fill (mm2):	0.00	Remarks:	
Allowable Fill (mm2):	534.55		

Description of Changes:

Included Cable No.	Conductor Type	Area (mm2)
Pull Rope	Soft-Fiber Polyester	0.00

Conduit/Tray No:	1506	Reference:	E-51
Size:	41	Type:	RGS conduit
From:	PB-COM	To:	PB-COM
Total Fill (mm2):	0.00	Remarks:	
Allowable Fill (mm2):	534.55		

Description of Changes:

Included Cable No.	Conductor Type	Area (mm2)
Pull Rope	Soft-Fiber Polyester	0.00

Conduit/Tray No:	1507	Reference:	E-52
Size:	41	Type:	RGS conduit
From:	PB-COM	To:	PB-COM
Total Fill (mm2):	0.00	Remarks:	
Allowable Fill (mm2):	534.55		

Description of Changes:

Included Cable No.	Conductor Type	Area (mm2)
Pull Rope	Soft-Fiber Polyester	0.00

CONTRACT NO. 04-012054

CONTRACT CHANGE ORDER NO 78

SHEET 54 OF 92

5 REVISED PER ADDENDUM No. 5 DATED JULY 30, 2009

CONDUIT AND TRAY SCHEDULE
YBI TRANSITION STRUCTURES ROADWAY WB

E-258

STATE OF CALIFORNIA - DEPARTMENT OF TRANSPORTATION
Caltrans

CONSULTANT FUNCTIONAL SUPERVISOR: BEHZAD GOLEMOHAMMADI
CALCULATED-DESIGNED BY: CARMELO RIVERA
CHECKED BY: ELLERY LUCAS
REVISED BY
DATE REVISED

BORDER LAST REVISED 3/1/2007

RELATIVE BORDER SCALE 0 20 40 60 80

USERNAME => llorico

CU 04251 EA 0120S1

Dist	COUNTY	ROUTE	KILOMETER POST TOTAL PROJECT	SHEET No.	TOTAL SHEETS
04	SF	80	12.7/13.2	378 R1	806

REGISTERED ELECTRICAL ENGINEER 2/14/08

6-23-08
PLANS APPROVAL DATE

REGISTERED PROFESSIONAL ENGINEER FADI WALIEDDINE No. 11465 Exp. 12/31/09 ELECTRICAL STATE OF CALIFORNIA

THE STATE OF CALIFORNIA OR ITS OFFICERS OR AGENTS SHALL NOT BE RESPONSIBLE FOR THE ACCURACY OR COMPLETENESS OF ELECTRONIC COPIES OF THIS PLAN SHEET.

PB AMERICAS, Inc.
A Parsons Brinckerhoff Company
303 Second St., Suite 700N
San Francisco, CA 94107-1317

REGISTERED PROFESSIONAL ENGINEER SYN YEE CHIN No. 18186 Exp. 09/30/2011 ELECTRICAL STATE OF CALIFORNIA

Syn Yee Chin
FOR REVISION ONLY
1 03/30/2011

Caltrans Metric

Conduit/Tray No:	1508
Reference:	E-52
Size:	41
Type:	RGS conduit
From:	PB-COM
To:	PB-COM
Total Fill (mm2):	98.10
Remarks:	
Allowable Fill (mm2):	708.28
Description of Changes:	

Included Cable No.	Conductor Type	Area (mm2)
1149	1 - 2 pair, shielded #18 with IS/OA, 600 V, PVC jacket	98.10
Pull Rope	Soft-Fiber Polyester	0.00

Conduit/Tray No:	1509
Reference:	E-52
Size:	41
Type:	RGS conduit
From:	PB-COM
To:	PB-COM
Total Fill (mm2):	98.10
Remarks:	
Allowable Fill (mm2):	708.28
Description of Changes:	

Included Cable No.	Conductor Type	Area (mm2)
1149	1 - 2 pair, shielded #18 with IS/OA, 600 V, PVC jacket	98.10
Pull Rope	Soft-Fiber Polyester	0.00

Conduit/Tray No:	1510
Reference:	E-52
Size:	41
Type:	RGS conduit
From:	PB-COM
To:	PB-COM
Total Fill (mm2):	98.10
Remarks:	
Allowable Fill (mm2):	708.28
Description of Changes:	

Included Cable No.	Conductor Type	Area (mm2)
1149	1 - 2 pair, shielded #18 with IS/OA, 600 V, PVC jacket	98.10
Pull Rope	Soft-Fiber Polyester	0.00

Conduit/Tray No:	1511
Reference:	E-50
Size:	41
Type:	RGS conduit
From:	PB-COM
To:	PB-COM
Total Fill (mm2):	98.10
Remarks:	
Allowable Fill (mm2):	708.28
Description of Changes:	

Included Cable No.	Conductor Type	Area (mm2)
1148	1 - 2 pair, shielded #18 with IS/OA, 600 V, PVC jacket	98.10
Pull Rope	Soft-Fiber Polyester	0.00

Conduit/Tray No:	1514
Reference:	E-52
Size:	41
Type:	RGS conduit
From:	PB-COM
To:	PB-COM
Total Fill (mm2):	0.00
Remarks:	
Allowable Fill (mm2):	534.55
Description of Changes:	

Included Cable No.	Conductor Type	Area (mm2)
Pull Rope	Soft-Fiber Polyester	0.00

1

Conduit/Tray No:	1540
Reference:	E-48
Size:	41
Type:	RGS conduit
From:	(E) PB-LTG
To:	PB-LTG
Total Fill (mm2):	133.19
Remarks:	Existing conduit, add new cable (s) and pull rope thru the entire length of the connected conduits as listed below.
Allowable Fill (mm2):	534.55
Description of Changes:	Deleted conduit and cable(s) as listed below due to YBI City Ramp by others.

Included Cable No.	Conductor Type	Area (mm2)
Pull Rope	Soft-Fiber Polyester	0.00
S-1001-2	3 + 1 Gnd, #8, #10, 600 V, RHH/RHW insulation	133.19

Conduit/Tray No:	1541
Reference:	E-49
Size:	41
Type:	RGS conduit
From:	(E) PB-LTG
To:	(E) PB-LTG
Total Fill (mm2):	133.19
Remarks:	Existing conduit, add new cable (s) and pull rope as listed below.
Allowable Fill (mm2):	534.55
Description of Changes:	Deleted conduit and cable(s) as listed below due to YBI City Ramp by others.

Included Cable No.	Conductor Type	Area (mm2)
Pull Rope	Soft-Fiber Polyester	0.00
S-1001-2	3 + 1 Gnd, #8, #10, 600 V, RHH/RHW insulation	133.19

Conduit/Tray No:	1542
Reference:	E-49
Size:	41
Type:	RGS conduit
From:	(E) PB-LTG
To:	(E) PB-LTG
Total Fill (mm2):	133.19
Remarks:	Existing conduit, add new cable (s) and pull rope as listed below.
Allowable Fill (mm2):	534.55
Description of Changes:	Deleted conduit and cable(s) as listed below due to YBI City Ramp by others.

Included Cable No.	Conductor Type	Area (mm2)
Pull Rope	Soft-Fiber Polyester	0.00
S-1001-2	3 + 1 Gnd, #8, #10, 600 V, RHH/RHW insulation	133.19

CONTRACT NO. 04-012054

CONTRACT CHANGE ORDER NO 78

SHEET 55 OF 92

CONDUIT AND TRAY SCHEDULE
YBI TRANSITION STRUCTURES ROADWAY WB

E-259

REVISED BY | DATE REVISED
CARMELO RIVERA | ELLERY LUCAS
CALCULATED-DESIGNED BY | CHECKED BY
CONSULTANT FUNCTIONAL SUPERVISOR
BEHZAD GOLEMOHAMMADI
STATE OF CALIFORNIA - DEPARTMENT OF TRANSPORTATION
Caltrans

Dist	COUNTY	ROUTE	KILOMETER POST TOTAL PROJECT	SHEET No.	TOTAL SHEETS
04	SF	80	12.7/13.2	379 R1	806

REGISTERED ELECTRICAL ENGINEER 2/14/08

6-23-08
PLANS APPROVAL DATE

REGISTERED PROFESSIONAL ENGINEER FADI WALIEDDINE No. 11465 Exp. 12/31/09 ELECTRICAL STATE OF CALIFORNIA

THE STATE OF CALIFORNIA OR ITS OFFICERS OR AGENTS SHALL NOT BE RESPONSIBLE FOR THE ACCURACY OR COMPLETENESS OF ELECTRONIC COPIES OF THIS PLAN SHEET.

PB AMERICAS, Inc.
A Parsons Brinckerhoff Company
303 Second St., Suite 700N
San Francisco, CA 94107-1317

REGISTERED PROFESSIONAL ENGINEER SYN YEE CHIN No. 18186 Exp. 09/30/2011 ELECTRICAL STATE OF CALIFORNIA

Syn Yee Chin
FOR REVISION ONLY
1 03/30/2011

Caltrans Metric

Conduit/Tray No:	1543
Size:	41
From:	(E) PB-LTG
Total Fill (mm2):	133.19
Allowable Fill (mm2):	534.55
Reference:	E-49
Type:	RGS conduit
To:	(E) PB-LTG
Remarks:	Existing conduit, add new cable (s) and pull rope as listed below.
Description of Changes:	Deleted conduit and cable(s) as listed below due to YBI City Ramp by others.

Included Cable No.	Conductor Type	Area (mm2)
Pull Rope	Soft-Fiber Polyester	0.00
S-1001-2	3 + 1 Gnd, #8, #10, 600 V, RHH/RHW Insulation	133.19

Conduit/Tray No:	1544
Size:	41
From:	(E) PB-LTG
Total Fill (mm2):	133.19
Allowable Fill (mm2):	534.55
Reference:	E-49
Type:	RGS conduit
To:	(E) PB-LTG
Remarks:	Existing conduit, add new cable (s) and pull rope conduits as listed below.
Description of Changes:	Deleted conduit and cable(s) as listed below due to YBI City Ramp by others.

Included Cable No.	Conductor Type	Area (mm2)
Pull Rope	Soft-Fiber Polyester	0.00
S-1001-2	3 + 1 Gnd, #8, #10, 600 V, RHH/RHW Insulation	133.19

Conduit/Tray No:	1845
Size:	41
From:	PB-LTG
Total Fill (mm2):	133.19
Allowable Fill (mm2):	534.55
Reference:	E-49
Type:	RGS conduit
To:	1547
Remarks:	Connect new conduit to existing conduit. Add new cable (s) and pull rope thru the entire length of the connected conduits as listed below.
Description of Changes:	Deleted conduit and cable(s) as listed below due to YBI City Ramp by others.

Included Cable No.	Conductor Type	Area (mm2)
Pull Rope	Soft-Fiber Polyester	0.00
S-1001-2	3 + 1 Gnd, #8, #10, 600 V, RHH/RHW Insulation	133.19

Conduit/Tray No:	1546
Size:	41
From:	PB-LTG
Total Fill (mm2):	133.19
Allowable Fill (mm2):	534.55
Reference:	E-49
Type:	RGS conduit
To:	PB-LTG
Remarks:	5
Description of Changes:	

Included Cable No.	Conductor Type	Area (mm2)
Pull Rope	Soft-Fiber Polyester	0.00
S-1001-2	3 + 1 Gnd, #8, #10, 600 V, RHH/RHW Insulation	133.19

Conduit/Tray No:	1547
Size:	41
From:	1545
Total Fill (mm2):	133.19
Allowable Fill (mm2):	534.55
Reference:	E-49
Type:	RGS conduit
To:	(E) PB-LTG
Remarks:	Existing conduit, add new cable (s) and pull rope thru the entire length of the connected conduits as listed below.
Description of Changes:	Deleted conduit and cable(s) as listed below due to YBI City Ramp by others.

Included Cable No.	Conductor Type	Area (mm2)
Pull Rope	Soft-Fiber Polyester	0.00
S-1001-2	3 + 1 Gnd, #8, #10, 600 V, RHH/RHW Insulation	133.19

Conduit/Tray No:	1600
Size:	41
From:	PB-COM
Total Fill (mm2):	0.00
Allowable Fill (mm2):	534.55
Reference:	E-49
Type:	RGS conduit
To:	~~End of conduit 1600~~ 1
Remarks:	Stub out conduit West of Bent #48 & cap.
Description of Changes:	Revise "To" location due to YBI City Ramp by others. 1

Included Cable No.	Conductor Type	Area (mm2)
-		0.00

Conduit/Tray No:	1601
Size:	41
From:	PB-COM
Total Fill (mm2):	0.00
Allowable Fill (mm2):	534.55
Reference:	E-49, E-50
Type:	RGS conduit
To:	PB-COM
Remarks:	
Description of Changes:	

Included Cable No.	Conductor Type	Area (mm2)
Pull Rope	Soft-Fiber Polyester	0.00

CONTRACT NO. 04-012054

CONTRACT CHANGE ORDER NO 78

SHEET 56 OF 92

CONDUIT AND TRAY SCHEDULE
YBI TRANSITION STRUCTURES ROADWAY WB

5 REVISED PER ADDENDUM No. 5 DATED JULY 30, 2009

E-260

STATE OF CALIFORNIA - DEPARTMENT OF TRANSPORTATION
Caltrans

CONSULTANT FUNCTIONAL SUPERVISOR: BEHZAD GOLEMOHAMMADI
CALCULATED-DESIGNED BY: CARMELO RIVERA
CHECKED BY: ELLERY LUCAS
REVISED BY
DATE REVISED

BORDER LAST REVISED 3/1/2007
RELATIVE BORDER SCALE 0 20 40 60 80
USERNAME => llorico
CU 04251
EA 0120S1

Dist	COUNTY	ROUTE	KILOMETER POST TOTAL PROJECT	SHEET No.	TOTAL SHEETS
04	SF	80	12.7/13.2	381 R1	806

REGISTERED ELECTRICAL ENGINEER 2/14/08

6-23-08
PLANS APPROVAL DATE

REGISTERED PROFESSIONAL ENGINEER FADI WALIEDDINE No. 11365 Exp. 12/31/09 ELECTRICAL STATE OF CALIFORNIA

THE STATE OF CALIFORNIA OR ITS OFFICERS OR AGENTS SHALL NOT BE RESPONSIBLE FOR THE ACCURACY OR COMPLETENESS OF ELECTRONIC COPIES OF THIS PLAN SHEET.

PB AMERICAS, Inc.
A Parsons Brinckerhoff Company
303 Second St., Suite 700N
San Francisco, CA 94107-1317

Caltrans Metric

REGISTERED PROFESSIONAL ENGINEER SYN YEE CHIN No. 18186 Exp. 09/30/2011 ELECTRICAL STATE OF CALIFORNIA

Syn Yee Chin
FOR REVISION ONLY
△1 03/30/2011

△1

Conduit/Tray No:	1613	Reference:	E-48
Size:	41	Type:	RGS conduit
From:	PB-LTG	To:	PB-LTG
Total Fill (mm2):	133.19	Remarks:	
Allowable Fill (mm2):	534.55		

Description of Changes:

Included Cable No.	Conductor Type	Area (mm2)
Pull Rope	Soft-Fiber Polyester	0.00
S-1001-2	3 + 1 Gnd, #8, #10, 600 V, RHH/RHW insulation	133.19

Conduit/Tray No:	1640	Reference:	E-48
Size:	41	Type:	RGS conduit
From:	(E) PB-LTG	To:	PB-LTG
Total Fill (mm2):	0.00	Remarks:	Existing conduit, add new pull rope as listed below.
Allowable Fill (mm2):	534.55		

Description of Changes: Deleted conduit and cable(s) as listed below due to YBI City Ramp by others.

Included Cable No.	Conductor Type	Area (mm2)
Pull Rope	Soft-Fiber Polyester	0.00

Conduit/Tray No:	1641	Reference:	E-49
Size:	41	Type:	RGS conduit
From:	(E) PB-LTG	To:	(E) PB-LTG
Total Fill (mm2):	0.00	Remarks:	Existing conduit, add new pull rope as listed below.
Allowable Fill (mm2):	534.55		

Description of Changes: Deleted conduit and cable(s) as listed below due to YBI City Ramp by others.

Included Cable No.	Conductor Type	Area (mm2)
Pull Rope	Soft-Fiber Polyester	0.00

Conduit/Tray No:	1642	Reference:	E-49
Size:	41	Type:	RGS conduit
From:	(E) PB-LTG	To:	(E) PB-LTG
Total Fill (mm2):	0.00	Remarks:	Existing conduit, add new pull rope as listed below.
Allowable Fill (mm2):	534.55		

Description of Changes: Deleted conduit and cable(s) as listed below due to YBI City Ramp by others.

Included Cable No.	Conductor Type	Area (mm2)
Pull Rope	Soft-Fiber Polyester	0.00

Conduit/Tray No:	1643	Reference:	E-49
Size:	41	Type:	RGS conduit
From:	(E) PB-LTG	To:	(E) PB-LTG
Total Fill (mm2):	65.61	Remarks:	Existing conduit, add new cable (s) and pull rope as listed below.
Allowable Fill (mm2):	534.55		

Description of Changes: Deleted conduit and cable(s) as listed below due to YBI City Ramp by others.

Included Cable No.	Conductor Type	Area (mm2)
Pull Rope	Soft-Fiber Polyester	0.00
UP101-2B	3 + 1 Gnd, #12, #12, 600 V, RHH/RHW insulation	65.61

Conduit/Tray No:	1644	Reference:	E-49
Size:	41	Type:	RGS conduit
From:	(E) PB-LTG	To:	(E) PB-LTG
Total Fill (mm2):	65.61	Remarks:	Existing conduit, add new cable (s) and pull rope as listed below.
Allowable Fill (mm2):	534.55		

Description of Changes: Deleted conduit and cable(s) as listed below due to YBI City Ramp by others.

Included Cable No.	Conductor Type	Area (mm2)
Pull Rope	Soft-Fiber Polyester	0.00
UP101-2B	3 + 1 Gnd, #12, #12, 600 V, RHH/RHW insulation	65.61

Conduit/Tray No:	1645	Reference:	E-50
Size:	41	Type:	RGS conduit
From:	PB-LTG	To:	1647
Total Fill (mm2):	65.61	Remarks:	Connect new conduit to existing conduit. Add new pull rope thru the entire length of the connected conduits as listed below.
Allowable Fill (mm2):	534.55	Remarks:	

Description of Changes: Deleted conduit and cable(s) as listed below due to YBI City Ramp by others.

Included Cable No.	Conductor Type	Area (mm2)
Pull Rope	Soft-Fiber Polyester	0.00
UP101-2B	3 + 1 Gnd, #12, #12, 600 V, RHH/RHW insulation	65.61

Conduit/Tray No:	1646	Reference:	E-49
Size:	41	Type:	RGS conduit
From:	PB-LTG	To:	PB-LTG
Total Fill (mm2):	65.61	Remarks:	Existing conduit, add new cable (s) and pull rope as listed below.
Allowable Fill (mm2):	534.55		

Description of Changes: Deleted conduit and cable(s) as listed below due to YBI City Ramp by others.

Included Cable No.	Conductor Type	Area (mm2)
Pull Rope	Soft-Fiber Polyester	0.00
UP101-2B	3 + 1 Gnd, #12, #12, 600 V, RHH/RHW insulation	65.61

CONTRACT NO. 04-0120S4

CONTRACT CHANGE ORDER NO 78

SHEET 57 OF 92

CONDUIT AND TRAY SCHEDULE
YBI TRANSITION STRUCTURES ROADWAY WB

E-262

REVISED BY | DATE REVISED
CARMELO RIVERA | ELLERY LUCAS
CALCULATED-DESIGNED BY | CHECKED BY
CONSULTANT FUNCTIONAL SUPERVISOR
BEHZAD GOLEMOHAMMADI
STATE OF CALIFORNIA - DEPARTMENT OF TRANSPORTATION
Caltrans

Dist	COUNTY	ROUTE	KILOMETER POST TOTAL PROJECT	SHEET No.	TOTAL SHEETS
04	SF	80	12.7/13.2	382 R1	806

REGISTERED ELECTRICAL ENGINEER 2/14/08

6-23-08
PLANS APPROVAL DATE

REGISTERED PROFESSIONAL ENGINEER FADI WALIEDDINE No. 11465 Exp. 12/31/09 ELECTRICAL STATE OF CALIFORNIA

THE STATE OF CALIFORNIA OR ITS OFFICERS OR AGENTS SHALL NOT BE RESPONSIBLE FOR THE ACCURACY OR COMPLETENESS OF ELECTRONIC COPIES OF THIS PLAN SHEET.

PB AMERICAS, Inc.
A Parsons Brinckerhoff Company
303 Second St., Suite 700N
San Francisco, CA 94107-1317

REGISTERED PROFESSIONAL ENGINEER SYN YEE CHIN No. 18186 Exp. 09/30/2011 ELECTRICAL STATE OF CALIFORNIA

Syn Yee Chin
FOR REVISION ONLY
1 03/30/2011

Caltrans Metric

1

Conduit/Tray No:	1647
Size:	41
From:	1645
Total Fill (mm2):	65.61
Allowable Fill (mm2):	534.55
Reference:	E-49
Type:	RGS conduit
To:	(E) PB-LTG
Remarks:	Existing conduit, add new pull rope thru the entire length of the connected conduits as listed below.
Description of Changes:	Deleted conduit and cable(s) as listed below due to YBI City Ramp by others.

Included Cable No.	Conductor Type	Area (mm2)
Pull Rope	Soft-Fiber Polyester	0.00
UP101-2B	3 + 1 Gnd, #12, #12, 600 V, RHH/RHW insulation	65.61

Conduit/Tray No:	1701
Size:	41
From:	PB-LTG
Total Fill (mm2):	331.99
Allowable Fill (mm2):	534.55
Reference:	E-49
Type:	RGS conduit
To:	PB-LTG
Remarks:	
Description of Changes:	

Included Cable No.	Conductor Type	Area (mm2)
A-1005-2	3 + 1 Gnd, #8, #10, 600 V, RHH/RHW insulation	133.19
Pull Rope	Soft-Fiber Polyester	0.00
S-1021-2	3 + 1 Gnd, #8, #10, 600 V, RHH/RHW insulation	133.19
UP101-2A	3 + 1 Gnd, #12, #12, 600 V, RHH/RHW insulation	65.61

Conduit/Tray No:	1702
Size:	41
From:	PB-LTG
Total Fill (mm2):	331.99
Allowable Fill (mm2):	534.55
Reference:	E-49
Type:	RGS conduit
To:	PB-LTG
Remarks:	
Description of Changes:	

Included Cable No.	Conductor Type	Area (mm2)
A-1005-2	3 + 1 Gnd, #8, #10, 600 V, RHH/RHW insulation	133.19
Pull Rope	Soft-Fiber Polyester	0.00
S-1021-2	3 + 1 Gnd, #8, #10, 600 V, RHH/RHW insulation	133.19
UP101-2A	3 + 1 Gnd, #12, #12, 600 V, RHH/RHW insulation	65.61

Conduit/Tray No:	1703
Size:	41
From:	PB-LTG
Total Fill (mm2):	331.99
Allowable Fill (mm2):	534.55
Reference:	E-49
Type:	RGS conduit
To:	PB-LTG
Remarks:	
Description of Changes:	

Included Cable No.	Conductor Type	Area (mm2)
A-1005-2	3 + 1 Gnd, #8, #10, 600 V, RHH/RHW insulation	133.19
Pull Rope	Soft-Fiber Polyester	0.00
S-1021-2	3 + 1 Gnd, #8, #10, 600 V, RHH/RHW insulation	133.19
UP101-2A	3 + 1 Gnd, #12, #12, 600 V, RHH/RHW insulation	65.61

Conduit/Tray No:	1704
Size:	41
From:	PB-LTG
Total Fill (mm2):	331.99
Allowable Fill (mm2):	534.55
Reference:	E-50
Type:	RGS conduit
To:	PB-LTG
Remarks:	
Description of Changes:	

Included Cable No.	Conductor Type	Area (mm2)
A-1005-2	3 + 1 Gnd, #8, #10, 600 V, RHH/RHW insulation	133.19
Pull Rope	Soft-Fiber Polyester	0.00
S-1021-2	3 + 1 Gnd, #8, #10, 600 V, RHH/RHW insulation	133.19
UP101-2A	3 + 1 Gnd, #12, #12, 600 V, RHH/RHW insulation	65.61

Conduit/Tray No:	1705
Size:	41
From:	PB-LTG
Total Fill (mm2):	331.99
Allowable Fill (mm2):	534.55
Reference:	E-50
Type:	RGS conduit
To:	PB-LTG
Remarks:	
Description of Changes:	

Included Cable No.	Conductor Type	Area (mm2)
A-1005-2	3 + 1 Gnd, #8, #10, 600 V, RHH/RHW insulation	133.19
Pull Rope	Soft-Fiber Polyester	0.00
S-1021-2	3 + 1 Gnd, #8, #10, 600 V, RHH/RHW insulation	133.19
UP101-2A	3 + 1 Gnd, #12, #12, 600 V, RHH/RHW insulation	65.61

Conduit/Tray No:	1706
Size:	41
From:	PB-LTG
Total Fill (mm2):	266.38
Allowable Fill (mm2):	534.55
Reference:	E-50
Type:	RGS conduit
To:	PB-LTG
Remarks:	
Description of Changes:	

Included Cable No.	Conductor Type	Area (mm2)
A-1006-2A	3 + 1 Gnd, #8, #10, 600 V, RHH/RHW insulation	133.19
Pull Rope	Soft-Fiber Polyester	0.00
S-1022-2A	3 + 1 Gnd, #8, #10, 600 V, RHH/RHW insulation	133.19

CONTRACT NO. 04-0120S4

CONTRACT CHANGE ORDER NO 78

SHEET 58 OF 92

CONDUIT AND TRAY SCHEDULE
YBI TRANSITION STRUCTURES ROADWAY WB

E-263

STATE OF CALIFORNIA - DEPARTMENT OF TRANSPORTATION
Caltrans

CONSULTANT FUNCTIONAL SUPERVISOR: BEHZAD GOLEMOHAMMADI
CALCULATED-DESIGNED BY: CARMELO RIVERA
CHECKED BY: ELLERY LUCAS
REVISED BY
DATE REVISED

BORDER LAST REVISED 3/1/2007

RELATIVE BORDER SCALE 0 20 40 60 80

USERNAME => llorico

CU 04251

EA 0120S1

Dist	COUNTY	ROUTE	KILOMETER POST TOTAL PROJECT	SHEET No.	TOTAL SHEETS
04	SF	80	12.7/13.2	385 R1	806

REGISTERED ELECTRICAL ENGINEER 2/14/08

6-23-08
PLANS APPROVAL DATE

REGISTERED PROFESSIONAL ENGINEER FADI WALIEDDINE No. 11465 Exp. 12/31/09 ELECTRICAL STATE OF CALIFORNIA

THE STATE OF CALIFORNIA OR ITS OFFICERS OR AGENTS SHALL NOT BE RESPONSIBLE FOR THE ACCURACY OR COMPLETENESS OF ELECTRONIC COPIES OF THIS PLAN SHEET.

PB AMERICAS, Inc.
A Parsons Brinckerhoff Company
303 Second St., Suite 700N
San Francisco, CA 94107-1317

REGISTERED PROFESSIONAL ENGINEER SYN YEE CHIN No. 18186 Exp. 09/30/2011 ELECTRICAL STATE OF CALIFORNIA

Syn Yee Chin
FOR REVISION ONLY
1 03/30/2011

Caltrans Metric

Conduit/Tray No: 1728 | Reference: E-52
Size: 41 | Type: RGS conduit
From: PB-LTG | To: PB-LTG
Total Fill (mm2): 65.61 | Remarks:
Allowable Fill (mm2): 708.28
Description of Changes:

Included Cable No.	Conductor Type	Area (mm2)
Pull Rope	Soft-Fiber Polyester	0.00
UP103-2	3 + 1 Gnd, #12, #12, 600 V, RHH/RHW insulation	65.61

Conduit/Tray No: 1729 | Reference: E-52
Size: 41 | Type: RGS conduit
From: PB-LTG | To: PB-LTG
Total Fill (mm2): 0.00 | Remarks:
Allowable Fill (mm2): 708.28
Description of Changes:

Included Cable No.	Conductor Type	Area (mm2)
Pull Rope	Soft-Fiber Polyester	0.00

Conduit/Tray No: 1770 | Reference: E-50
Size: 41 | Type: RGS conduit
From: PB-LTG | To: PB-LTG
Total Fill (mm2): 0.00 | Remarks:
Allowable Fill (mm2): 534.55
Description of Changes:

Included Cable No.	Conductor Type	Area (mm2)
Pull Rope	Soft-Fiber Polyester	0.00

Conduit/Tray No: 1771 | Reference: E-50
Size: 41 | Type: RGS conduit
From: PB-LTG | To: PB-LTG
Total Fill (mm2): 0.00 | Remarks:
Allowable Fill (mm2): 534.55
Description of Changes:

Included Cable No.	Conductor Type	Area (mm2)
Pull Rope	Soft-Fiber Polyester	0.00

Conduit/Tray No: 1772 | Reference: E-50
Size: 41 | Type: RGS conduit
From: PB-LTG | To: PB-LTG
Total Fill (mm2): 0.00 | Remarks:
Allowable Fill (mm2): 534.55
Description of Changes:

Included Cable No.	Conductor Type	Area (mm2)
Pull Rope	Soft-Fiber Polyester	0.00

Conduit/Tray No: 1773 | Reference: E-50
Size: 41 | Type: RGS conduit
From: PB-LTG | To: PB-LTG
Total Fill (mm2): 0.00 | Remarks:
Allowable Fill (mm2): 534.55
Description of Changes:

Included Cable No.	Conductor Type	Area (mm2)
Pull Rope	Soft-Fiber Polyester	0.00

7

Conduit/Tray No: 1774 | Reference: E-50
Size: 41 | Type: RGS conduit
From: PB-LTG | To: PB-LTG
Total Fill (mm2): 0.00 | Remarks:
Allowable Fill (mm2): 534.55
Description of Changes:

Included Cable No.	Conductor Type	Area (mm2)
Pull Rope	Soft-Fiber Polyester	0.00

1

Conduit/Tray No: 1775 | Reference: E-49
Size: 41 | Type: RGS conduit
From: PB-LTG | To: End of conduit 1775
Total Fill (mm2): 0.00 | Remarks: Stub out conduit West of Bent #48 & cap.
Allowable Fill (mm2): 534.55
Description of Changes: Deleted conduit and cable(s) as listed below due to YBI City Ramp by others.

Included Cable No.	Conductor Type	Area (mm2)
		0.00

Conduit/Tray No: 1776 | Reference: E-49
Size: 41 | Type: RGS conduit
From: PB-LTG | To: PB-LTG
Total Fill (mm2): 331.99 | Remarks:
Allowable Fill (mm2): 534.55
Description of Changes:

Included Cable No.	Conductor Type	Area (mm2)
A-1005-2	3 + 1 Gnd, #8, #10, 600 V, RHH/RHW insulation	133.19
Pull Rope	Soft-Fiber Polyester	0.00
S-1021-2	3 + 1 Gnd, #8, #10, 600 V, RHH/RHW insulation	133.19
UP101-2A	3 + 1 Gnd, #12, #12, 600 V, RHH/RHW insulation	65.61

7 **REVISED PER ADDENDUM No. 7 DATED OCTOBER 19, 2009**

CONTRACT NO. 04-012054

CONTRACT CHANGE ORDER NO 78

SHEET 59 OF 92

CONDUIT AND TRAY SCHEDULE
YBI TRANSITION STRUCTURES ROADWAY WB

E-266

REVISED BY | DATE REVISED
CARMELO RIVERA | ELLERY LUCAS
CALCULATED-DESIGNED BY | CHECKED BY
CONSULTANT FUNCTIONAL SUPERVISOR | BEHZAD GOLEMOHAMMADI
STATE OF CALIFORNIA - DEPARTMENT OF TRANSPORTATION
Caltrans

BORDER LAST REVISED 3/1/2007 | RELATIVE BORDER SCALE 0 20 40 60 80 | USERNAME => llorico | CU 04251 | EA 0120S1

Dist	COUNTY	ROUTE	KILOMETER POST TOTAL PROJECT	SHEET No.	TOTAL SHEETS
04	SF	80	12.7/13.2	386 R1	806

REGISTERED ELECTRICAL ENGINEER 2/14/08

6-23-08
PLANS APPROVAL DATE

REGISTERED PROFESSIONAL ENGINEER FADI WALIEDDINE No. 11365 Exp. 12/31/09 ELECTRICAL STATE OF CALIFORNIA

THE STATE OF CALIFORNIA OR ITS OFFICERS OR AGENTS SHALL NOT BE RESPONSIBLE FOR THE ACCURACY OR COMPLETENESS OF ELECTRONIC COPIES OF THIS PLAN SHEET.

PB AMERICAS, Inc.
A Parsons Brinckerhoff Company
303 Second St., Suite 700N
San Francisco, CA 94107-1317

REGISTERED PROFESSIONAL ENGINEER SYN YEE CHIN No. 18186 Exp. 09/30/2011 ELECTRICAL STATE OF CALIFORNIA

Syn Yee Chin
FOR REVISION ONLY
1 03/30/2011

Caltrans Metric

1

Conduit/Tray No:	1778
Size:	41
From:	PB-LTG
Total Fill (mm2):	133.19
Allowable Fill (mm2):	534.55
Reference:	E-48
Type:	RGS conduit
To:	PB-LTG
Remarks:	
Description of Changes:	Deleted conduit and cable(s) as listed below due to YBI City Ramp by others.

Included Cable No.	Conductor Type	Area (mm2)
Pull Rope	Soft-Fiber Polyester	0.00
S-1001-2	3 + 1 Gnd, #8, #10, 600 V, RHH/RHW insulation	133.19

Conduit/Tray No:	1779
Size:	41
From:	PB-LTG
Total Fill (mm2):	133.19
Allowable Fill (mm2):	708.28
Reference:	E-48
Type:	RGS conduit
To:	PB-LTG
Remarks:	
Description of Changes:	

Included Cable No.	Conductor Type	Area (mm2)
Pull Rope	Soft-Fiber Polyester	0.00
S-1001-2	3 + 1 Gnd, #8, #10, 600 V, RHH/RHW insulation	133.19

Conduit/Tray No:	1801
Size:	41
From:	PB-LTG
Total Fill (mm2):	0.00
Allowable Fill (mm2):	534.55
Reference:	E-49
Type:	RGS conduit
To:	PB-LTG
Remarks:	
Description of Changes:	

Included Cable No.	Conductor Type	Area (mm2)
Pull Rope	Soft-Fiber Polyester	0.00

Conduit/Tray No:	1802
Size:	41
From:	PB-LTG
Total Fill (mm2):	0.00
Allowable Fill (mm2):	534.55
Reference:	E-49
Type:	RGS conduit
To:	PB-LTG
Remarks:	
Description of Changes:	

Included Cable No.	Conductor Type	Area (mm2)
Pull Rope	Soft-Fiber Polyester	0.00

Conduit/Tray No:	1803
Size:	41
From:	PB-LTG
Total Fill (mm2):	0.00
Allowable Fill (mm2):	534.55
Reference:	E-49
Type:	RGS conduit
To:	PB-LTG
Remarks:	
Description of Changes:	

Included Cable No.	Conductor Type	Area (mm2)
Pull Rope	Soft-Fiber Polyester	0.00

5

Conduit/Tray No:	1804
Size:	41
From:	PB-LTG
Total Fill (mm2):	98.10
Allowable Fill (mm2):	708.28
Reference:	E-52
Type:	RGS conduit
To:	PB-LTG
Remarks:	
Description of Changes:	

Included Cable No.	Conductor Type	Area (mm2)
1149	1 - 2 pair, shielded #18 with IS/OA, 600 V, PVC jacket	98.10
Pull Rope	Soft-Fiber Polyester	0.00

Conduit/Tray No:	1805
Size:	41
From:	PB-LTG
Total Fill (mm2):	0.00
Allowable Fill (mm2):	534.55
Reference:	E-52
Type:	RGS conduit
To:	PB-LTG
Remarks:	
Description of Changes:	

Included Cable No.	Conductor Type	Area (mm2)
Pull Rope	Soft-Fiber Polyester	0.00

Conduit/Tray No:	1806
Size:	41
From:	PB-LTG
Total Fill (mm2):	0.00
Allowable Fill (mm2):	534.55
Reference:	E-50
Type:	RGS conduit
To:	PB-LTG
Remarks:	
Description of Changes:	

Included Cable No.	Conductor Type	Area (mm2)
Pull Rope	Soft-Fiber Polyester	0.00

CONTRACT NO. 04-012054

CONTRACT CHANGE ORDER NO 78

SHEET 60 OF 92

5 REVISED PER ADDENDUM No. 5 DATED JULY 30, 2009

CONDUIT AND TRAY SCHEDULE
YBI TRANSITION STRUCTURES ROADWAY WB

E-267

REVISED BY | DATE REVISED
CARMELO RIVERA | ELLERY LUCAS
CALCULATED-DESIGNED BY | CHECKED BY
CONSULTANT FUNCTIONAL SUPERVISOR
BEHZAD GOLEMOHAMMADI
STATE OF CALIFORNIA - DEPARTMENT OF TRANSPORTATION
Caltrans

BORDER LAST REVISED 3/1/2007 | RELATIVE BORDER SCALE 0 20 40 60 80 | USERNAME => llorico | CU 04251 | EA 0120S1

Dist	COUNTY	ROUTE	KILOMETER POST TOTAL PROJECT	SHEET No.	TOTAL SHEETS
04	SF	80	12.7/13.2	389 R1	806

REGISTERED ELECTRICAL ENGINEER 2/14/08

6-23-08
PLANS APPROVAL DATE

REGISTERED PROFESSIONAL ENGINEER FADI WALIEDDINE No. 11465 Exp. 12/31/09 ELECTRICAL STATE OF CALIFORNIA

THE STATE OF CALIFORNIA OR ITS OFFICERS OR AGENTS SHALL NOT BE RESPONSIBLE FOR THE ACCURACY OR COMPLETENESS OF ELECTRONIC COPIES OF THIS PLAN SHEET.

PB AMERICAS, Inc.
A Parsons Brinckerhoff Company
303 Second St., Suite 700N
San Francisco, CA 94107-1317

Caltrans Metric

REGISTERED PROFESSIONAL ENGINEER SYN YEE CHIN No. 18186 Exp. 09/30/2011 ELECTRICAL STATE OF CALIFORNIA

Syn Yee Chin
FOR REVISION ONLY
△1 03/30/2011

7

Conduit/Tray No:	1828
Size:	41
From:	PB-LTG
Total Fill (mm2):	0.00
Allowable Fill (mm2):	534.55
Reference:	E-52
Type:	RGS conduit
To:	PB-LTG
Remarks:	
Description of Changes:	

Included Cable No.	Conductor Type	Area (mm2)
Pull Rope	Soft-Fiber Polyester	0.00

Conduit/Tray No:	1829
Size:	41
From:	PB-LTG
Total Fill (mm2):	0.00
Allowable Fill (mm2):	534.55
Reference:	E-52
Type:	RGS conduit
To:	PB-LTG
Remarks:	
Description of Changes:	

Included Cable No.	Conductor Type	Area (mm2)
Pull Rope	Soft-Fiber Polyester	0.00

Conduit/Tray No:	1870
Size:	41
From:	PB-LTG
Total Fill (mm2):	0.00
Allowable Fill (mm2):	534.55
Reference:	E-50
Type:	RGS conduit
To:	PB-LTG
Remarks:	
Description of Changes:	

Included Cable No.	Conductor Type	Area (mm2)
Pull Rope	Soft-Fiber Polyester	0.00

Conduit/Tray No:	1871
Size:	41
From:	PB-LTG
Total Fill (mm2):	0.00
Allowable Fill (mm2):	534.55
Reference:	E-50
Type:	RGS conduit
To:	PB-LTG
Remarks:	
Description of Changes:	

Included Cable No.	Conductor Type	Area (mm2)
Pull Rope	Soft-Fiber Polyester	0.00

Conduit/Tray No:	1872
Size:	41
From:	PB-LTG
Total Fill (mm2):	0.00
Allowable Fill (mm2):	534.55
Reference:	E-50
Type:	RGS conduit
To:	PB-LTG
Remarks:	
Description of Changes:	

Included Cable No.	Conductor Type	Area (mm2)
Pull Rope	Soft-Fiber Polyester	0.00

Conduit/Tray No:	1873
Size:	41
From:	PB-LTG
Total Fill (mm2):	0.00
Allowable Fill (mm2):	534.55
Reference:	E-50
Type:	RGS conduit
To:	PB-LTG
Remarks:	
Description of Changes:	

Included Cable No.	Conductor Type	Area (mm2)
Pull Rope	Soft-Fiber Polyester	0.00

Conduit/Tray No:	1874
Size:	41
From:	PB-LTG
Total Fill (mm2):	0.00
Allowable Fill (mm2):	534.55
Reference:	E-50
Type:	RGS conduit
To:	PB-LTG
Remarks:	
Description of Changes:	

Included Cable No.	Conductor Type	Area (mm2)
Pull Rope	Soft-Fiber Polyester	0.00

1

Conduit/Tray No:	1875
Size:	41
From:	PB-LTG
Total Fill (mm2):	0.00
Allowable Fill (mm2):	534.55
Reference:	E-49
Type:	RGS conduit
To:	End of conduit 1875
Remarks:	Stub out conduit West of Bent #48 & cap.
Description of Changes:	Deleted conduit and cable(s) as listed below due to YBI City Ramp by others.

Included Cable No.	Conductor Type	Area (mm2)
		0.00

Conduit/Tray No:	1876
Size:	41
From:	PB-LTG
Total Fill (mm2):	0.00
Allowable Fill (mm2):	534.55
Reference:	E-49
Type:	RGS conduit
To:	PB-LTG
Remarks:	
Description of Changes:	

Included Cable No.	Conductor Type	Area (mm2)
Pull Rope	Soft-Fiber Polyester	0.00

CONTRACT NO. 04-012054 7 **REVISED PER ADDENDUM No. 7 DATED OCTOBER 19, 2009**

CONTRACT CHANGE ORDER NO 178

SHEET 61 OF 92

CONDUIT AND TRAY SCHEDULE
YBI TRANSITION STRUCTURES ROADWAY WB

E-270

STATE OF CALIFORNIA - DEPARTMENT OF TRANSPORTATION
Caltrans

CONSULTANT FUNCTIONAL SUPERVISOR: BEHZAD GOLEMOHAMMADI
CALCULATED-DESIGNED BY
CHECKED BY
CARMELO RIVERA
ELLERY LUCAS
REVISED BY
DATE REVISED

BORDER LAST REVISED 3/1/2007
RELATIVE BORDER SCALE 0 20 40 60 80
USERNAME => llorico
CU 04251
EA 0120S1

Dist	COUNTY	ROUTE	KILOMETER POST TOTAL PROJECT	SHEET No.	TOTAL SHEETS
04	SF	80	12.7/13.2	390 R2	806

REGISTERED ELECTRICAL ENGINEER 2/14/08

6-23-08
PLANS APPROVAL DATE

REGISTERED PROFESSIONAL ENGINEER FADI WALIEDDINE No. 11865 Exp. 12/31/09 ELECTRICAL STATE OF CALIFORNIA

THE STATE OF CALIFORNIA OR ITS OFFICERS OR AGENTS SHALL NOT BE RESPONSIBLE FOR THE ACCURACY OR COMPLETENESS OF ELECTRONIC COPIES OF THIS PLAN SHEET.

PB AMERICAS, Inc.
A Parsons Brinckerhoff Company
303 Second St., Suite 700N
San Francisco, CA 94107-1317

REGISTERED PROFESSIONAL ENGINEER SYN YEE CHIN No. 18186 Exp. 09/30/2011 ELECTRICAL STATE OF CALIFORNIA

Syn Yee Chin
FOR REVISION ONLY
1 11/22/2010
2 03/30/2011

5

Conduit/Tray No:	1T21W	Reference:	E-64, E-81
Size:	610	Type:	6" siderail ladder tray
From:	Electrical Vault #1W	To:	Electrical Vault #1W
Total Fill (mm2):	5472.05	Remarks:	
Allowable Fill (mm2):	16774.16		
Description of Changes:			

Included Cable No.	Conductor Type	Area (mm2)
1091	1-3/C + Gnd, #6, 600 V, EPR insulation	324.29
1092	1-3/C + Gnd, #4, 600 V, EPR insulation	366.10
1093	1-3/C + Gnd, #4, 600 V, EPR insulation	366.10
1094	1-3/C + Gnd, #2, 600 V, EPR insulation	527.18
1105	1-3/C + Gnd, #6, 600 V, EPR insulation	324.29
1254-1	1-3/C #16, 600 V, EPR insulation	62.07
A-1006-2	1-3/C + Gnd, #8, 600 V, EPR insulation	262.68
A-1007-1	1-3/C + Gnd, #4, 600 V, EPR insulation	366.10
A-1008-1	1-3/C + Gnd, #6, 600 V, EPR insulation	324.29
A-1009-1	1-3/C + Gnd, #6, 600 V, EPR insulation	324.29
S-1002-3	1-3/C + Gnd, #8, 600 V, EPR insulation	262.68
S-1021-1	1-3/C + Gnd, #8, 600 V, EPR insulation	262.68
S-1022-1	1-3/C + Gnd, #8, 600 V, EPR insulation	262.68
S-1022-2	1-3/C + Gnd, #8, 600 V, EPR insulation	262.68
S-1023-1	1-3/C + Gnd, #6, 600 V, EPR insulation	324.29
S-1024-1	1-3/C + Gnd, #6, 600 V, EPR insulation	324.29
S-2021-1	1-3/C + Gnd, #8, 600 V, EPR insulation	262.68
S-2022-1	1-3/C + Gnd, #8, 600 V, EPR insulation	262.68

Conduit/Tray No:	1T22W	Reference:	E-65, E-82
Size:	610	Type:	6" siderail ladder tray
From:	Electrical Vault #2W	To:	Electrical Vault #2W
Total Fill (mm2):	~~4298.11~~ 4034.62 (2)	Remarks:	
Allowable Fill (mm2):	16774.16		
Description of Changes:	Delete due to elimination of platform #2W (1) Existing tray, add/remove cable(s) as listed below due to YBI City Ramp by others. (2)		

Included Cable No.	Conductor Type	Area (mm2)
~~1092~~	~~1-3/C + Gnd, #4, 600 V, EPR insulation~~	~~366.10~~ (1)
1093	1-3/C + Gnd, #4, 600 V, EPR insulation	366.10
1094	1-3/C + Gnd, #2, 600 V, EPR insulation	527.18
1254-1	1-3/C #16, 600 V, EPR insulation	62.07
A-1006-1	1-3/C + Gnd, #8, 600 V, EPR insulation	262.68
A-1006-2	1-3/C + Gnd, #8, 600 V, EPR insulation	262.68
A-1006-3	1-3/C + Gnd, #8, 600 V, EPR insulation	262.68
~~A-1007-1~~	~~1-3/C + Gnd, #4, 600 V, EPR insulation~~	~~366.10~~ (2)
~~A-1008-1~~	~~1-3/C + Gnd, #6, 600 V, EPR insulation~~	~~324.29~~ (2)
~~A-1009-1~~	~~1-3/C + Gnd, #6, 600 V, EPR insulation~~	~~324.29~~ (2)
S-1002-3	1-3/C + Gnd, #8, 600 V, EPR insulation	262.68
S-1022-3	1-3/C + Gnd, #8, 600 V, EPR insulation	262.68
S-1023-1	1-3/C + Gnd, #6, 600 V, EPR insulation	324.29
S-1024-1	1-3/C + Gnd, #6, 600 V, EPR insulation	324.29
1105	1-3/C + Gnd, #6, 600 V, EPR insulation	324.29 (2)
UP101-1	1-2/C #12 + Gnd #12, 600 V, EPR insulation	102.61

Conduit/Tray No:	1T23W	Reference:	E-66, E-83
Size:	610	Type:	6" siderail ladder tray
From:	Electrical Vault #3W	To:	Electrical Vault #3W
Total Fill (mm2):	1653.14	Remarks:	
Allowable Fill (mm2):	16774.16		
Description of Changes:			

Included Cable No.	Conductor Type	Area (mm2)
1093	1-3/C + Gnd, #4, 600 V, EPR insulation	366.10
1094	1-3/C + Gnd, #2, 600 V, EPR insulation	527.18
1254-1	1-3/C #16, 600 V, EPR insulation	62.07
A-1008-1	1-3/C + Gnd, #6, 600 V, EPR insulation	324.29
S-1024-1	1-3/C + Gnd, #6, 600 V, EPR insulation	324.29
UP103-3	2 + 1 Gnd, #12, #12, 600 V, RHH/RHW insulation	49.21

CONTRACT NO. 04-012054

CONTRACT CHANGE ORDER NO 78

SHEET 62 OF 92

5 REVISED PER ADDENDUM No. 5 DATED JULY 30, 2009

CONDUIT AND TRAY SCHEDULE
YBI TRANSITION STRUCTURES ROADWAY WB

E-271

STATE OF CALIFORNIA - DEPARTMENT OF TRANSPORTATION

CONSULTANT FUNCTIONAL SUPERVISOR: BEHZAD GOLEMOHAMMADI

CALCULATED-DESIGNED BY: CARMELO RIVERA | CHECKED BY: ELLERY LUCAS

REVISED BY | DATE REVISED

LAST REVISION 00-00-00 | DATE PLOTTED => 05-APR-2011 | TIME PLOTTED => 11:34

Dist	COUNTY	ROUTE	KILOMETER POST TOTAL PROJECT	SHEET No.	TOTAL SHEETS
04	SF	80	12.7/13.2	398 R1	806

REGISTERED ELECTRICAL ENGINEER 2/14/08

6-23-08
PLANS APPROVAL DATE

REGISTERED PROFESSIONAL ENGINEER FADI MAL HEDDINE No. 11365 Exp. 12/31/09 ELECTRICAL STATE OF CALIFORNIA

THE STATE OF CALIFORNIA OR ITS OFFICERS OR AGENTS SHALL NOT BE RESPONSIBLE FOR THE ACCURACY OR COMPLETENESS OF ELECTRONIC COPIES OF THIS PLAN SHEET.

PB AMERICAS, Inc.
A Parsons Brinckerhoff Company
303 Second St., Suite 700N
San Francisco, CA 94107-1317

REGISTERED PROFESSIONAL ENGINEER SYN YEE CHIN No. 18186 Exp. 09/30/2011 ELECTRICAL STATE OF CALIFORNIA

Syn Yee Chin
FOR REVISION ONLY
1 03/30/2011

Caltrans Metric

Conduit/Tray No:	4921
Size:	53
From:	Electrical Vault #1W
To:	Wireway #1W
Reference:	E-64
Type:	RGS-PVC coated conduit
Total Fill (mm2):	65.61
Allowable Fill (mm2):	879.42
Remarks:	
Description of Changes:	

Included Cable No.	Conductor Type	Area (mm2)
Pull Rope	Soft-Fiber Polyester	0.00
UP101-2A	3 + 1 Gnd, #12, #12, 600 V, RHH/RHW insulation	65.61

Conduit/Tray No:	4922
Size:	53
From:	Electrical Vault #1W
To:	Wireway #1W
Reference:	E-64
Type:	RGS-PVC coated conduit
Total Fill (mm2):	373.50
Allowable Fill (mm2):	879.42
Remarks:	
Description of Changes:	

Included Cable No.	Conductor Type	Area (mm2)
1091	1-3/C + Gnd, #6, 600 V, EPR insulation	324.29
Pull Rope	Soft-Fiber Polyester	0.00
UP101-1	2 + 1 Gnd, #12, #12, 600 V, RHH/RHW insulation	49.21

Conduit/Tray No:	4923
Size:	53
From:	Electrical Vault #1W
To:	Wireway #1W
Reference:	E-64
Type:	RGS-PVC coated conduit
Total Fill (mm2):	62.07
Allowable Fill (mm2):	1165.23
Remarks:	
Description of Changes:	

Included Cable No.	Conductor Type	Area (mm2)
1254-1	1-3/C #16, 600 V, EPR insulation	62.07
Pull Rope	Soft-Fiber Polyester	0.00

Conduit/Tray No:	4924
Size:	53
From:	Electrical Vault #1W
To:	Wireway #1W
Reference:	E-64
Type:	RGS-PVC coated conduit
Total Fill (mm2):	0.00
Allowable Fill (mm2):	879.42
Remarks:	
Description of Changes:	

Included Cable No.	Conductor Type	Area (mm2)
Pull Rope	Soft-Fiber Polyester	0.00

Conduit/Tray No:	4925
Size:	78
From:	TOS/COM Vault #1W
To:	PB-2B
Reference:	E-64
Type:	RGS-PVC coated conduit
Total Fill (mm2):	323.65
Allowable Fill (mm2):	2564.19
Remarks:	
Description of Changes:	

Included Cable No.	Conductor Type	Area (mm2)
1475-2	72 Fiber, single mode fiber optic riser cable	323.65
Pull Rope	Soft-Fiber Polyester	0.00

Conduit/Tray No:	4926
Size:	78
From:	TOS/COM Vault #1W
To:	PB-2B
Reference:	E-64
Type:	RGS-PVC coated conduit
Total Fill (mm2):	874.52
Allowable Fill (mm2):	1935.24
Remarks:	
Description of Changes:	

Included Cable No.	Conductor Type	Area (mm2)
1148	1 - 2 pair, shielded #18 with IS/OA, 600 V, PVC jacket	98.10
1475-1	72 Fiber, single mode fiber optic riser cable	323.65
PLW11	12 DLC	452.77
Pull Rope	Soft-Fiber Polyester	0.00

Conduit/Tray No:	4927
Size:	41
From:	~~PB-COM~~ PB-2E 1
To:	TOS/COM Vault #2W
Reference:	E-65, E-82, E-75
Type:	RGS conduit
Total Fill (mm2):	0.00
Allowable Fill (mm2):	708.28
Remarks:	
Description of Changes:	Revise "From" location due to YBI City Ramp by others. 1

Included Cable No.	Conductor Type	Area (mm2)
Pull Rope	Soft-Fiber Polyester	0.00

Conduit/Tray No:	4958
Size:	41
From:	Electrical Vault #2W
To:	PB-LTG
Reference:	E-65
Type:	RGS conduit
Total Fill (mm2):	262.68
Allowable Fill (mm2):	534.55
Remarks:	
Description of Changes:	

Included Cable No.	Conductor Type	Area (mm2)
A-1006-3	1-3/C + Gnd, #8, 600 V, EPR insulation	262.68
Pull Rope	Soft-Fiber Polyester	0.00

CONTRACT NO. 04-0120S4

CONTRACT CHANGE ORDER NO 78

SHEET 63 OF 92

CONDUIT AND TRAY SCHEDULE
YBI TRANSITION STRUCTURES ROADWAY WB

E-279

STATE OF CALIFORNIA - DEPARTMENT OF TRANSPORTATION
Caltrans
CONSULTANT FUNCTIONAL SUPERVISOR: BEHZAD GOLEMOHAMMADI
CALCULATED-DESIGNED BY
CHECKED BY
REVISED BY: CARMELO RIVERA
DATE REVISED: ELLERY LUCAS

BORDER LAST REVISED 3/1/2007
RELATIVE BORDER SCALE 0 20 40 60 80
USERNAME => llorico
CU 04251
EA 0120S1

Dist	COUNTY	ROUTE	KILOMETER POST TOTAL PROJECT	SHEET No.	TOTAL SHEETS
04	SF	80	12.7/13.2	403A R1	806

REGISTERED ELECTRICAL ENGINEER 2/14/08

6-23-08
PLANS APPROVAL DATE

THE STATE OF CALIFORNIA OR ITS OFFICERS OR AGENTS SHALL NOT BE RESPONSIBLE FOR THE ACCURACY OR COMPLETENESS OF ELECTRONIC COPIES OF THIS PLAN SHEET.

REGISTERED PROFESSIONAL ENGINEER SYN YEE CHIN No. 18186 Exp. 09/30/2011 ELECTRICAL STATE OF CALIFORNIA

REGISTERED PROFESSIONAL ENGINEER FADI MALIEDDINE No. 11365 Exp. 12/31/09 ELECTRICAL STATE OF CALIFORNIA

PB AMERICAS, Inc.
A Parsons Brinckerhoff Company
303 Second St., Suite 700N
San Francisco, CA 94107-1317

Syn Yee Chin
FOR REVISION ONLY
1 03/30/2011

5 Caltrans Metric

Conduit/Tray No: 1301 | Reference: E-49
Size: 41 | Type: RGS conduit
From: PB-LTG | To: PB-LTG
Total Fill (mm2): 346.04 | Remarks:
Allowable Fill (mm2): 534.55
Description of Changes: Deleted conduit and cable(s) as listed below due to YBI City Ramp by others.

Included Cable No.	Conductor Type	Area (mm2)
A-1010-2	3 + 1 Gnd, #6, #8, 600 V, RHH/RHW insulation	212.85
Pull Rope	Soft-Fiber Polyester	0.00
S-1001-2	3 + 1 Gnd, #8, #10, 600 V, RHH/RHW insulation	133.19

Conduit/Tray No: 1302 | Reference: E-49
Size: 41 | Type: RGS conduit
From: PB-LTG | To: PB-LTG
Total Fill (mm2): 411.65 | Remarks:
Allowable Fill (mm2): 534.55
Description of Changes: Deleted conduit and cable(s) as listed below due to YBI City Ramp by others.

Included Cable No.	Conductor Type	Area (mm2)
A-1010-2	3 + 1 Gnd, #6, #8, 600 V, RHH/RHW insulation	212.85
Pull Rope	Soft-Fiber Polyester	0.00
S-1001-2	3 + 1 Gnd, #8, #10, 600 V, RHH/RHW insulation	133.19
UP101-2B	3 + 1 Gnd, #12, #12, 600 V, RHH/RHW insulation	65.61

Conduit/Tray No: 1303 | Reference: E-49
Size: 41 | Type: RGS conduit
From: PB-LTG | To: PB-LTG
Total Fill (mm2): 411.65 | Remarks:
Allowable Fill (mm2): 534.55
Description of Changes: Deleted conduit and cable(s) as listed below due to YBI City Ramp by others.

Included Cable No.	Conductor Type	Area (mm2)
A-1010-2	3 + 1 Gnd, #6, #8, 600 V, RHH/RHW insulation	212.85
Pull Rope	Soft-Fiber Polyester	0.00
S-1001-2	3 + 1 Gnd, #8, #10, 600 V, RHH/RHW insulation	133.19
UP101-2B	3 + 1 Gnd, #12, #12, 600 V, RHH/RHW insulation	65.61

Conduit/Tray No: 1304 | Reference: E-50
Size: 41 | Type: RGS conduit
From: PB-LTG | To: PB-LTG
Total Fill (mm2): 411.65 | Remarks:
Allowable Fill (mm2): 534.55
Description of Changes: Deleted conduit and cable(s) as listed below due to YBI City Ramp by others.

Included Cable No.	Conductor Type	Area (mm2)
A-1010-2	3 + 1 Gnd, #6, #8, 600 V, RHH/RHW insulation	212.85
Pull Rope	Soft-Fiber Polyester	0.00
S-1001-2	3 + 1 Gnd, #8, #10, 600 V, RHH/RHW insulation	133.19
UP101-2B	3 + 1 Gnd, #12, #12, 600 V, RHH/RHW insulation	65.61

Conduit/Tray No: 1305 | Reference: E-50
Size: 41 | Type: RGS conduit
From: PB-LTG | To: PB-LTG
Total Fill (mm2): ~~411.65~~ 133.19 1 | Remarks:
Allowable Fill (mm2): 534.55
Description of Changes: Existing conduit, added & removed cable(s) as listed below due to YBI City Ramp by others 1

Included Cable No.	Conductor Type	Area (mm2)
~~A-1010-2~~	~~3 + 1 Gnd, #6, #8, 600 V, RHH/RHW insulation~~	~~212.85~~ 1
Pull Rope	Soft-Fiber Polyester	0.00
~~S-1001-2~~	~~3 + 1 Gnd, #8, #10, 600 V, RHH/RHW insulation~~	~~133.19~~ 1
~~UP101-2B~~	~~3 + 1 Gnd, #12, #12, 600 V, RHH/RHW insulation~~	~~65.61~~
S-1002-2A	3 + 1 Gnd, #8, #10, 600 V, RHH/RHW insulation	133.19

Conduit/Tray No: 1313 | Reference: E-50
Size: 41 | Type: RGS conduit
From: PB-LTG | To: PB-LTG
Total Fill (mm2): ~~346.04~~ 133.19 1 | Remarks:
Allowable Fill (mm2): 534.55
Description of Changes: Existing conduit, removed cable(s) as listed below due to YBI City Ramp by others. 1

Included Cable No.	Conductor Type	Area (mm2)
~~A-1009-2~~	~~3 + 1 Gnd, #6, #8, 600 V, RHH/RHW insulation~~	~~212.85~~ 1
Pull Rope	Soft-Fiber Polyester	0.00
S-1002-3A	3 + 1 Gnd, #8, #10, 600 V, RHH/RHW insulation	133.19

Conduit/Tray No: 1315 | Reference: E-50
Size: 41 | Type: RGS conduit
From: PB-LTG | To: PB-LTG
Total Fill (mm2): ~~346.04~~ 133.19 1 | Remarks:
Allowable Fill (mm2): 534.55
Description of Changes: Existing conduit, removed cable(s) as listed below due to YBI City Ramp by others. 1

Included Cable No.	Conductor Type	Area (mm2)
~~A-1009-2~~	~~3 + 1 Gnd, #6, #8, 600 V, RHH/RHW insulation~~	~~212.85~~ 1
Pull Rope	Soft-Fiber Polyester	0.00
S-1002-3A	3 + 1 Gnd, #8, #10, 600 V, RHH/RHW insulation	133.19

CONTRACT NO. 04-012054

CONTRACT CHANGE ORDER NO 78

SHEET 64 OF 92

5 ADDED PER ADDENDUM No. 5 DATED JULY 30, 2009

CONDUIT AND TRAY SCHEDULE
YBI TRANSITION STRUCTURES ROADWAY WB

E-284A

STATE OF CALIFORNIA - DEPARTMENT OF TRANSPORTATION
Caltrans

CONSULTANT FUNCTIONAL SUPERVISOR: BEHZAD GOLEMOHAMMADI
CALCULATED-DESIGNED BY | CHECKED BY
JEFFRI HALIM | ELLERY LUCAS
REVISED BY | DATE REVISED

Dist	COUNTY	ROUTE	KILOMETER POST TOTAL PROJECT	SHEET No.	TOTAL SHEETS
04	SF	80	12.7/13.2	403B R1	806

REGISTERED ELECTRICAL ENGINEER 2/14/08

6-23-08
PLANS APPROVAL DATE

THE STATE OF CALIFORNIA OR ITS OFFICERS OR AGENTS SHALL NOT BE RESPONSIBLE FOR THE ACCURACY OR COMPLETENESS OF ELECTRONIC COPIES OF THIS PLAN SHEET.

REGISTERED PROFESSIONAL ENGINEER FADI MALIEDDINE No. 11465 Exp. 12/31/09 ELECTRICAL STATE OF CALIFORNIA

PB AMERICAS, Inc.
A Parsons Brinckerhoff Company
303 Second St., Suite 700N
San Francisco, CA 94107-1317

REGISTERED PROFESSIONAL ENGINEER SIN YEE CHIN No. 18186 Exp. 09/30/2011 ELECTRICAL STATE OF CALIFORNIA

Sin Yee Chin
FOR REVISION ONLY
1 03/30/2011

5 Caltrans Metric

Conduit/Tray No:	1318	Reference:	E-50
Size:	41	Type:	RGS conduit
From:	PB-LTG	To:	PB-LTG
Total Fill (mm2):	~~346.04~~ 133.19 1	Remarks:	
Allowable Fill (mm2):	534.55		

Description of Changes: Existing conduit, removed cable(s) as listed below due to YBI City Ramp by others. 1

Included Cable No.	Conductor Type	Area (mm2)
~~A-1009-2~~	~~3 + 1 Gnd, #6, #8, 600 V, RHH/RHW Insulation~~	~~212.85~~ 1
Pull Rope	Soft-Fiber Polyester	0.00
S-1002-3A	3 + 1 Gnd, #8, #10, 600 V, RHH/RHW Insulation	133.19

Conduit/Tray No:	1319	Reference:	E-51
Size:	41	Type:	RGS conduit
From:	PB-LTG	To:	PB-LTG
Total Fill (mm2):	~~346.04~~ 133.19 1	Remarks:	
Allowable Fill (mm2):	534.55		

Description of Changes: Existing conduit, removed cable(s) as listed below due to YBI City Ramp by others. 1

Included Cable No.	Conductor Type	Area (mm2)
~~A-1009-2~~	~~3 + 1 Gnd, #6, #8, 600 V, RHH/RHW Insulation~~	~~212.85~~ 1
Pull Rope	Soft-Fiber Polyester	0.00
S-1002-3A	3 + 1 Gnd, #8, #10, 600 V, RHH/RHW Insulation	133.19

Conduit/Tray No:	1320	Reference:	E-51
Size:	41	Type:	RGS conduit
From:	PB-LTG	To:	PB-LTG
Total Fill (mm2):	~~346.04~~ 133.19 1	Remarks:	
Allowable Fill (mm2):	534.55		

Description of Changes: Existing conduit, removed cable(s) as listed below due to YBI City Ramp by others. 1

Included Cable No.	Conductor Type	Area (mm2)
~~A-1009-2~~	~~3 + 1 Gnd, #6, #8, 600 V, RHH/RHW Insulation~~	~~212.85~~ 1
Pull Rope	Soft-Fiber Polyester	0.00
S-1002-3A	3 + 1 Gnd, #8, #10, 600 V, RHH/RHW Insulation	133.19

Conduit/Tray No:	1321	Reference:	E-51
Size:	41	Type:	RGS conduit
From:	PB-LTG	To:	PB-LTG
Total Fill (mm2):	~~346.04~~ 133.19 1	Remarks:	
Allowable Fill (mm2):	534.55		

Description of Changes: Existing conduit, removed cable(s) as listed below due to YBI City Ramp by others. 1

Included Cable No.	Conductor Type	Area (mm2)
~~A-1009-2~~	~~3 + 1 Gnd, #6, #8, 600 V, RHH/RHW Insulation~~	~~212.85~~ 1
Pull Rope	Soft-Fiber Polyester	0.00
S-1002-3A	3 + 1 Gnd, #8, #10, 600 V, RHH/RHW Insulation	133.19

Conduit/Tray No:	1422	Reference:	E-51
Size:	41	Type:	RGS conduit
From:	PB-LTG	To:	PB-LTG
Total Fill (mm2):	~~212.85~~ 0.00 1	Remarks:	
Allowable Fill (mm2):	534.55		

Description of Changes: Existing conduit, removed cable(s) as listed below due to YBI City Ramp by others. 1

Included Cable No.	Conductor Type	Area (mm2)
~~A-1009-2~~	~~3 + 1 Gnd, #6, #8, 600 V, RHH/RHW Insulation~~	~~212.85~~ 1
Pull Rope	Soft-Fiber Polyester	0.00

Conduit/Tray No:	1423	Reference:	E-51
Size:	41	Type:	RGS conduit
From:	PB-LTG	To:	PB-LTG
Total Fill (mm2):	~~212.85~~ 0.00 1	Remarks:	
Allowable Fill (mm2):	534.55		

Description of Changes: Existing conduit, removed cable(s) as listed below due to YBI City Ramp by others. 1

Included Cable No.	Conductor Type	Area (mm2)
~~A-1009-2~~	~~3 + 1 Gnd, #6, #8, 600 V, RHH/RHW Insulation~~	~~212.85~~ 1
Pull Rope	Soft-Fiber Polyester	0.00

1

Conduit/Tray No:	1424	Reference:	E-51
Size:	41	Type:	RGS conduit
From:	PB-LTG	To:	PB-LTG
Total Fill (mm2):	212.85	Remarks:	
Allowable Fill (mm2):	534.55		

Description of Changes: Deleted conduit and cable(s) as list below due to YBI City Ramp by others.

Included Cable No.	Conductor Type	Area (mm2)
A-1009-2	3 + 1 Gnd, #6, #8, 600 V, RHH/RHW Insulation	212.85
Pull Rope	Soft-Fiber Polyester	0.00

CONTRACT NO. 04-012054

CONTRACT CHANGE ORDER NO 78

SHEET 65 OF 92

5 ADDED PER ADDENDUM No. 5 DATED JULY 30, 2009

CONDUIT AND TRAY SCHEDULE
YBI TRANSITION STRUCTURES ROADWAY WB

E-284B

STATE OF CALIFORNIA - DEPARTMENT OF TRANSPORTATION

CONSULTANT FUNCTIONAL SUPERVISOR: BEHZAD GOLEMOHAMMADI

CALCULATED-DESIGNED BY: JEFFRI HALIM

CHECKED BY: ELLERY LUCAS

REVISED BY / DATE REVISED

Caltrans

BORDER LAST REVISED 3/1/2007

RELATIVE BORDER SCALE 0 20 40 60 80

USERNAME => llorico

CU 04251

EA 0120S1

Dist	COUNTY	ROUTE	KILOMETER POST TOTAL PROJECT	SHEET No.	TOTAL SHEETS
04	SF	80	12.7/13.2	403C R1	806

REGISTERED ELECTRICAL ENGINEER 2/14/08

6-23-08
PLANS APPROVAL DATE

REGISTERED PROFESSIONAL ENGINEER FADI WALIEDDINE No. 11365 Exp. 12/31/09 ELECTRICAL STATE OF CALIFORNIA

THE STATE OF CALIFORNIA OR ITS OFFICERS OR AGENTS SHALL NOT BE RESPONSIBLE FOR THE ACCURACY OR COMPLETENESS OF ELECTRONIC COPIES OF THIS PLAN SHEET.

PB AMERICAS, Inc.
A Parsons Brinckerhoff Company
303 Second St., Suite 700N
San Francisco, CA 94107-1317

REGISTERED PROFESSIONAL ENGINEER SYN YEE CHIN No. 18186 Exp. 09/30/2011 ELECTRICAL STATE OF CALIFORNIA

Syn Yee Chin
FOR REVISION ONLY
1 03/30/2011

5 Caltrans Metric

Conduit/Tray No:	1502
Size:	41
From:	PB-COM
Total Fill (mm2):	0.00
Allowable Fill (mm2):	534.55
Reference:	E-50
Type:	RGS conduit
To:	PB-COM
Remarks:	
Description of Changes:	

Included Cable No.	Conductor Type	Area (mm2)
Pull Rope	Soft-Fiber Polyester	0.00

Conduit/Tray No:	1546
Size:	41
From:	PB-LTG
Total Fill (mm2):	346.04
Allowable Fill (mm2):	534.55
Reference:	E-49
Type:	RGS conduit
To:	PB-LTG
Remarks:	
Description of Changes:	Deleted conduit and cable(s) as list below due to YBI City Ramp by others.

Included Cable No.	Conductor Type	Area (mm2)
A-1010-2	3 + 1 Gnd, #6, #8, 600 V, RHH/RHW insulation	212.85
Pull Rope	Soft-Fiber Polyester	0.00
S-1001-2	3 + 1 Gnd, #8, #10, 600 V, RHH/RHW insulation	133.19

1

Conduit/Tray No:	1717
Size:	41
From:	PB-LTG
Total Fill (mm2):	266.38
Allowable Fill (mm2):	534.55
Reference:	E-51
Type:	RGS conduit
To:	PB-LTG
Remarks:	
Description of Changes:	

Included Cable No.	Conductor Type	Area (mm2)
A-1006-3A	3 + 1 Gnd, #8, #10, 600 V, RHH/RHW insulation	133.19
Pull Rope	Soft-Fiber Polyester	0.00
S-1022-3A	3 + 1 Gnd, #8, #10, 600 V, RHH/RHW insulation	133.19

Conduit/Tray No:	1718
Size:	41
From:	PB-LTG
Total Fill (mm2):	266.38
Allowable Fill (mm2):	534.55
Reference:	E-51
Type:	RGS conduit
To:	PB-LTG
Remarks:	
Description of Changes:	

Included Cable No.	Conductor Type	Area (mm2)
A-1006-3A	3 + 1 Gnd, #8, #10, 600 V, RHH/RHW insulation	133.19
Pull Rope	Soft-Fiber Polyester	0.00
S-1022-3A	3 + 1 Gnd, #8, #10, 600 V, RHH/RHW insulation	133.19

Conduit/Tray No:	1719
Size:	41
From:	PB-LTG
Total Fill (mm2):	266.38
Allowable Fill (mm2):	534.55
Reference:	E-51
Type:	RGS conduit
To:	PB-LTG
Remarks:	
Description of Changes:	

Included Cable No.	Conductor Type	Area (mm2)
A-1006-3A	3 + 1 Gnd, #8, #10, 600 V, RHH/RHW insulation	133.19
Pull Rope	Soft-Fiber Polyester	0.00
S-1023-2	3 + 1 Gnd, #8, #10, 600 V, RHH/RHW insulation	133.19

Conduit/Tray No:	1804
Size:	41
From:	PB-COM
Total Fill (mm2):	98.10
Allowable Fill (mm2):	708.28
Reference:	E-52
Type:	RGS conduit
To:	PB-COM
Remarks:	
Description of Changes:	

Included Cable No.	Conductor Type	Area (mm2)
1149	1 - 2 pair, shielded #18 with IS/OA, 600 V, PVC jacket	98.10
Pull Rope	Soft-Fiber Polyester	0.00

Conduit/Tray No:	1804A
Size:	41
From:	PB-LTG
Total Fill (mm2):	0.00
Allowable Fill (mm2):	534.55
Reference:	E-50
Type:	RGS conduit
To:	PB-LTG
Remarks:	
Description of Changes:	

Included Cable No.	Conductor Type	Area (mm2)
Pull Rope	Soft-Fiber Polyester	0.00

CONTRACT NO. 04-0120S4

CONTRACT CHANGE ORDER NO. 78

SHEET 66 OF 92

5 ADDED PER ADDENDUM No. 5 DATED JULY 30, 2009

CONDUIT AND TRAY SCHEDULE
YBI TRANSITION STRUCTURES ROADWAY WB

E-284C

STATE OF CALIFORNIA - DEPARTMENT OF TRANSPORTATION
Caltrans

CONSULTANT FUNCTIONAL SUPERVISOR: BEHZAD GOLEMOHAMMADI
CALCULATED-DESIGNED BY: JEFFRI HALIM
CHECKED BY: ELLERY LUCAS
REVISED BY
DATE REVISED

Dist	COUNTY	ROUTE	KILOMETER POST TOTAL PROJECT	SHEET No.	TOTAL SHEETS
04	SF	80	12.7/13.2	403D R1	806

REGISTERED ELECTRICAL ENGINEER 2/14/08

6-23-08
PLANS APPROVAL DATE

REGISTERED PROFESSIONAL ENGINEER FADI WALIEDDINE No. 11466 Exp. 12/31/09 ELECTRICAL STATE OF CALIFORNIA

THE STATE OF CALIFORNIA OR ITS OFFICERS OR AGENTS SHALL NOT BE RESPONSIBLE FOR THE ACCURACY OR COMPLETENESS OF ELECTRONIC COPIES OF THIS PLAN SHEET.

PB AMERICAS, Inc.
A Parsons Brinckerhoff Company
303 Second St., Suite 700N
San Francisco, CA 94107-1317

REGISTERED PROFESSIONAL ENGINEER SYN YEE CHIN No. 18186 Exp. 09/30/2011 ELECTRICAL STATE OF CALIFORNIA

Syn Yee Chin
FOR REVISION ONLY
△1 03/30/2011

5 Caltrans Metric

Conduit/Tray No:	1805
Reference:	E-52
Size:	41
Type:	RGS conduit
From:	PB-COM
To:	PB-COM
Total Fill (mm2):	0.00
Remarks:	
Allowable Fill (mm2):	534.55
Description of Changes:	

Included Cable No.	Conductor Type	Area (mm2)
Pull Rope	Soft-Fiber Polyester	0.00

Conduit/Tray No:	1805A
Reference:	E-50
Size:	41
Type:	RGS conduit
From:	PB-LTG
To:	PB-LTG
Total Fill (mm2):	0.00
Remarks:	
Allowable Fill (mm2):	534.55
Description of Changes:	

Included Cable No.	Conductor Type	Area (mm2)
Pull Rope	Soft-Fiber Polyester	0.00

Conduit/Tray No:	1T21W
Reference:	E-64, E-81
Size:	610
Type:	152 mm siderail ladder tray
From:	Electrical Vault #1W
To:	Electrical Vault #1W
Total Fill (mm2):	~~6260.09~~ 5672.31 △1
Remarks:	
Allowable Fill (mm2):	16774.16

Description of Changes: Existing tray added/removed cable(s) as listed below due to YBI City Ramp by others △1

Included Cable No.	Conductor Type	Area (mm2)
1091	1-3/C + Gnd, #6, 600 V, EPR insulation	324.29
1092	1-3/C + Gnd, #4, 600 V, EPR insulation	366.10
1093	1-3/C + Gnd, #4, 600 V, EPR insulation	366.10
1094	1-3/C + Gnd, #2, 600 V, EPR insulation	527.18
1105	1-3/C + Gnd, #6, 600 V, EPR insulation	324.29
1254-1	1-3/C #16, 600 V, EPR insulation	62.07
A-1005-1	1-3/C + Gnd, #8, 600 V, EPR insulation	262.68
A-1006-1	1-3/C + Gnd, #8, 600 V, EPR insulation	262.68
A-1006-2	1-3/C + Gnd, #8, 600 V, EPR insulation	262.68
A-1007-1	1-3/C + Gnd, #4, 600 V, EPR insulation	366.10 △1
A-1008-1	1-3/C + Gnd, #6, 600 V, EPR insulation	324.29
A-1009-1	1-3/C + Gnd, #6, 600 V, EPR insulation	324.29 △1
S-1002-3	1-3/C + Gnd, #8, 600 V, EPR insulation	262.68
S-1021-1	1-3/C + Gnd, #8, 600 V, EPR insulation	262.68
S-1022-1	1-3/C + Gnd, #8, 600 V, EPR insulation	262.68
S-1022-2	1-3/C + Gnd, #8, 600 V, EPR insulation	262.68
S-1022-3	1-3/C + Gnd, #8, 600 V, EPR insulation	262.68
S-1023-1	1-3/C + Gnd, #6, 600 V, EPR insulation	324.29
S-1024-1	1-3/C + Gnd, #6, 600 V, EPR insulation	324.29
S-2021-1	1-3/C + Gnd, #8, 600 V, EPR insulation	262.68
S-2022-1	1-3/C + Gnd, #8, 600 V, EPR insulation	262.68
UP101-1	1-2/C + Gnd #12, 600 V, EPR insulation	102.61 △1

Conduit/Tray No:	1T23W
Reference:	E-66, E-83
Size:	610
Type:	152 mm siderail ladder tray
From:	Electrical Vault #3W
To:	Electrical Vault #3W
Total Fill (mm2):	~~1970.03~~ 2030.83 △1
Remarks:	
Allowable Fill (mm2):	16774.16

Description of Changes: Existing tray added/removed cable(s) as listed below due to YBI City Ramp by others △1

Included Cable No.	Conductor Type	Area (mm2)
1093	1-3/C + Gnd, #4, 600 V, EPR insulation	366.10
1094	1-3/C + Gnd, #2, 600 V, EPR insulation	527.18
1254-1	1-3/C #16, 600 V, EPR insulation	62.07
A-1007-1	1-3/C + Gnd, #4, 600 V, EPR insulation	366.10 △1
A-1008-1	1-3/C + Gnd, #6, 600 V, EPR insulation	324.29
S-1024-1	1-3/C + Gnd, #6, 600 V, EPR insulation	324.29
1105	1-3/C + Gnd, #6, 600 V, EPR insulation	324.29 △1
UP101-1	1-2/C + Gnd #12, 600 V, EPR insulation	102.61

CONTRACT NO. 04-0120S4

CONTRACT CHANGE ORDER NO 78

SHEET 67 OF 92

△5 ADDED PER ADDENDUM No. 5 DATED JULY 30, 2009

CONDUIT AND TRAY SCHEDULE
YBI TRANSITION STRUCTURES ROADWAY WB
E-284D

STATE OF CALIFORNIA - DEPARTMENT OF TRANSPORTATION
Caltrans

CONSULTANT FUNCTIONAL SUPERVISOR: BEHZAD GOLEMOHAMMADI
CALCULATED-DESIGNED BY
CHECKED BY
JEFFRI HALIM
ELLERY LUCAS
REVISED BY
DATE REVISED

Dist	COUNTY	ROUTE	KILOMETER POST TOTAL PROJECT	SHEET No.	TOTAL SHEETS
04	SF	80	12.7/13.2	403E R2	806

REGISTERED ELECTRICAL ENGINEER 2/14/08

6-23-08
PLANS APPROVAL DATE

REGISTERED PROFESSIONAL ENGINEER FADI WALIEDDINE No. 11465 Exp. 12/31/09 ELECTRICAL STATE OF CALIFORNIA

THE STATE OF CALIFORNIA OR ITS OFFICERS OR AGENTS SHALL NOT BE RESPONSIBLE FOR THE ACCURACY OR COMPLETENESS OF ELECTRONIC COPIES OF THIS PLAN SHEET.

PB AMERICAS, Inc.
A Parsons Brinckerhoff Company
303 Second St., Suite 700N
San Francisco, CA 94107-1317

REGISTERED PROFESSIONAL ENGINEER SYN YEE CHIN No. 18186 Exp. 09/30/2011 ELECTRICAL STATE OF CALIFORNIA

Syn Yee Chin
FOR REVISION ONLY
1 11/22/2010
2 03/30/2011

5 Metric

Conduit/Tray No: 1T41W | Reference: E-64, E-81
Size: 610 | Type: 152 mm siderail solid bottom tray
From: TOS/COM Vault #1W | To: TOS/COM Vault #1W
Total Fill (mm2): 7375.16 | Remarks:
Allowable Fill (mm2): 16774.16
Description of Changes:

Included Cable No.	Conductor Type	Area (mm2)
1148	1 - 2 pair, shielded #18 with IS/OA, 600 V, PVC jacket	98.10
1169	1 - 2 pair, shielded #18 with IS/OA, 600 V, PVC jacket	98.10
1473-1	50 pair #18, shielded pairs, IS/OS shield 600 V, XLPE insul., PVC jacket	1201.71
1473-2	50 pair #18, shielded pairs, IS/OS shield 600 V, XLPE insul., PVC jacket	1201.71
1474-1	50 pair #18, shielded pairs, IS/OS shield 600 V, XLPE insul., PVC jacket	1201.71
1474-2	50 pair #18, shielded pairs, IS/OS shield 600 V, XLPE insul., PVC jacket	1201.71
1475-1	72 Fiber, single mode fiber optic riser cable	323.65
1475-2	72 Fiber, single mode fiber optic riser cable	323.65
1475-3	72 Fiber, single mode fiber optic riser cable	323.65
2900-111A	4 pair #22, shielded pairs, FEP insulation (Type SSC)	47.42
2900-111B	4 pair #22, shielded pairs, FEP insulation (Type SSC)	47.42
2900-11A	4 pair #22, shielded pairs, FEP insulation (Type SSC)	47.42
2900-11B	4 pair #22, shielded pairs, FEP insulation (Type SSC)	47.42
2900-11C	4 pair #22, shielded pairs, FEP insulation (Type SSC)	47.42
2900-121A	4 pair #22, shielded pairs, FEP insulation (Type SSC)	47.42
2900-121B	4 pair #22, shielded pairs, FEP insulation (Type SSC)	47.42
2900-121C	4 pair #22, shielded pairs, FEP insulation (Type SSC)	47.42
2900-21A	4 pair #22, shielded pairs, FEP insulation (Type SSC)	47.42
2900-21B	4 pair #22, shielded pairs, FEP insulation (Type SSC)	47.42
2900-21C	4 pair #22, shielded pairs, FEP insulation (Type SSC)	47.42
2900-31A	4 pair #22, shielded pairs, FEP insulation (Type SSC)	47.42
2900-31B	4 pair #22, shielded pairs, FEP insulation (Type SSC)	47.42
2900-31C	4 pair #22, shielded pairs, FEP insulation (Type SSC)	47.42
2900-41A	4 pair #22, shielded pairs, FEP insulation (Type SSC)	47.42
2900-41B	4 pair #22, shielded pairs, FEP insulation (Type SSC)	47.42
2900-51A	4 pair #22, shielded pairs, FEP insulation (Type SSC)	47.42
2900-51B	4 pair #22, shielded pairs, FEP insulation (Type SSC)	47.42
2900-51C	4 pair #22, shielded pairs, FEP insulation (Type SSC)	47.42
2900-81A	4 pair #22, shielded pairs, FEP insulation (Type SSC)	47.42
PLW11	12 DLC	452.77

Conduit/Tray No: 4018 | Reference: E-64, E-81
Size: 53 | Type: RGS conduit
From: Electrical Vault #1W | To: PB-LTG
Total Fill (mm2): 525.36 | Remarks: Exposed conduit shall be RGS-PVC coated.
Allowable Fill (mm2): 681.55
Description of Changes:

Included Cable No.	Conductor Type	Area (mm2)
A-1005-1	1-3/C + Gnd, #8, 600 V, EPR insulation	262.68
A-1006-2	1-3/C + Gnd, #8, 600 V, EPR insulation	262.68
Pull Rope	Soft-Fiber Polyester	0.00

Conduit/Tray No: 4920 | Reference: E-65, E-82, E-75
Size: 41 | Type: RGS conduit
From: Electrical Vault #2W | To: ~~PB-LTG~~ PB-2A 2
Total Fill (mm2): 262.68 | Remarks:
Allowable Fill (mm2): 708.28
Description of Changes: Revise "To" location due to YBI City Ramp by others. 2

Included Cable No.	Conductor Type	Area (mm2)
Pull Rope	Soft-Fiber Polyester	0.00
S-1002-3	1-3/C + Gnd, #8, 600 V, EPR insulation	262.68

Conduit/Tray No: 4962 | Reference: E-65
Size: 53 | Type: RGS-PVC coated conduit 1
From: Electrical Vault #2W | To: ~~Wireway #2W~~ Capped at Bent W5L
Total Fill (mm2): 49.21 | Remarks:
Allowable Fill (mm2): 879.42 1
Description of Changes: Delete due to elimination of platform #2W

Included Cable No.	Conductor Type	Area (mm2)
Pull Rope	Soft-Fiber Polyester	0.00
~~UP102-3~~	~~2 + 1 Gnd, #12, #12, 600 V, RHH/RHW insulation~~	~~49.21~~ 1

Conduit/Tray No: 4966 | Reference: E-65
Size: 41 | Type: RGS conduit
From: TOS/COM Vault #2W | To: PB-COM
Total Fill (mm2): 0.00 | Remarks:
Allowable Fill (mm2): 534.55
Description of Changes:

Included Cable No.	Conductor Type	Area (mm2)
Pull Rope	Soft-Fiber Polyester	0.00

Conduit/Tray No: 4981 | Reference: E-66
Size: 53 | Type: RGS-PVC coated conduit
From: Wireway #3W | To: Electrical Vault #3W
Total Fill (mm2): 642.00 | Remarks:
Allowable Fill (mm2): 1165.23
Description of Changes:

Included Cable No.	Conductor Type	Area (mm2)
1094	1-3/C + Gnd, #2, 600 V, EPR insulation	527.18
Pull Rope	Soft-Fiber Polyester	0.00
UP103-2	3 + 1 Gnd, #12, #12, 600 V, RHH/RHW insulation	65.61
UP103-3	2 + 1 Gnd, #12, #12, 600 V, RHH/RHW insulation	49.21

5 **ADDED PER ADDENDUM No. 5 DATED JULY 30, 2009**

CONTRACT NO. 04-012054

CONTRACT CHANGE ORDER NO 78

SHEET 68 OF 92

CONDUIT AND TRAY SCHEDULE
YBI TRANSITION STRUCTURES ROADWAY WB

E-284E

REVISED BY | DATE REVISED
JEFFRI HALIM | ELLERY LUCAS
CALCULATED-DESIGNED BY | CHECKED BY
FUNCTIONAL SUPERVISOR | CONSULTANT FUNCTIONAL SUPERVISOR
BEHZAD GOLEMOHAMMADI
STATE OF CALIFORNIA - DEPARTMENT OF TRANSPORTATION
Caltrans

LAST REVISION 00-00-00 | DATE PLOTTED => 05-APR-2011 | TIME PLOTTED => 11:34

Dist	COUNTY	ROUTE	KILOMETER POST TOTAL PROJECT	SHEET No.	TOTAL SHEETS
04	SF	80	12.7/13.2	404 R2	806

REGISTERED ELECTRICAL ENGINEER 2/14/08

6-23-08
PLANS APPROVAL DATE

REGISTERED PROFESSIONAL ENGINEER FADI WALIEDDINE No. 11465 Exp. 12/31/09 ELECTRICAL STATE OF CALIFORNIA

THE STATE OF CALIFORNIA OR ITS OFFICERS OR AGENTS SHALL NOT BE RESPONSIBLE FOR THE ACCURACY OR COMPLETENESS OF ELECTRONIC COPIES OF THIS PLAN SHEET.

PB AMERICAS, Inc.
A Parsons Brinckerhoff Company
303 Second St., Suite 700N
San Francisco, CA 94107-1317

REGISTERED PROFESSIONAL ENGINEER SYN YEE CHIN No. 18186 Exp. 09/30/2011 ELECTRICAL STATE OF CALIFORNIA

Syn Yee Chin
FOR REVISION ONLY
1 11/22/2010
2 03/30/2011

Conduit/Tray No:	4006	Reference:	E-64
Size:	78	Type:	RGS-PVC coated conduit
From:	TOS/COM Vault #1W	To:	Telephone Terminal Box TEL-01W
Total Fill (mm2):	1201.71	Remarks:	
Allowable Fill (mm2):	2564.19		
Description of Changes:			

Included Cable No.	Conductor Type	Area (mm2)
1473-1	50 pair #18, shielded pairs, IS/OS shield 600 V, XLPE insul., PVC jacket	1201.71
Pull Rope	Soft-Fiber Polyester	0.00

Conduit/Tray No:	4008	Reference:	E-64
Size:	78	Type:	RGS-PVC coated conduit
From:	TOS/COM Vault #1W	To:	Telephone Terminal Box TEL-01W
Total Fill (mm2):	1201.71	Remarks:	
Allowable Fill (mm2):	2564.19		
Description of Changes:			

Included Cable No.	Conductor Type	Area (mm2)
1473-2	50 pair #18, shielded pairs, IS/OS shield 600 V, XLPE insul., PVC jacket	1201.71
Pull Rope	Soft-Fiber Polyester	0.00

Conduit/Tray No:	4211	Reference:	E-28, E-33, E-81, E-78
Size:	103	Type:	RGS conduit
From:	Electrical Vault #1W	To:	Manhole-30
Total Fill (mm2):	2163.05	Remarks:	
Allowable Fill (mm2):	3324.51		
Description of Changes:			

Included Cable No.	Conductor Type	Area (mm2)
1105	1-3/C + Gnd, #6, 600 V, EPR insulation	324.29
A-1005-1	1-3/C + Gnd, #8, 600 V, EPR insulation	262.68
A-1006-1	1-3/C + Gnd, #8, 600 V, EPR insulation	262.68
Pull Rope	Soft-Fiber Polyester	0.00
S-1002-3	1-3/C + Gnd, #8, 600 V, EPR insulation	262.68
S-1021-1	1-3/C + Gnd, #8, 600 V, EPR insulation	262.68
S-1022-1	1-3/C + Gnd, #8, 600 V, EPR insulation	262.68
S-2021-1	1-3/C + Gnd, #8, 600 V, EPR insulation	262.68
S-2022-1	1-3/C + Gnd, #8, 600 V, EPR insulation	262.68

Conduit/Tray No:	4212	Reference:	E-28, E-33, E-81, E-78
Size:	103	Type:	RGS conduit
From:	Electrical Vault #1W	To:	Manhole-30
Total Fill (mm2):	~~2922.64~~ 2459.71 (2)	Remarks:	
Allowable Fill (mm2):	3324.51		
Description of Changes:	Deleted due to elimination of platform #2W. (1) Existing conduit, added/removed cable(s) as listed below due to YBI City Ramp by others. (2)		

Included Cable No.	Conductor Type	Area (mm2)
1091	1-3/C + Gnd, #6, 600 V, EPR insulation	324.29
~~1092~~	~~1-3/C + Gnd, #4, 600 V, EPR insulation~~	~~366.10~~ (1)
1093	1-3/C + Gnd, #4, 600 V, EPR insulation	366.10
1094	1-3/C + Gnd, #2, 600 V, EPR insulation	527.18
~~A-1007-1~~	~~1-3/C + Gnd, #4, 600 V, EPR insulation~~	~~366.10~~ (2)
~~A-1009-1~~	~~1-3/C + Gnd, #6, 600 V, EPR insulation~~	~~324.29~~
Pull Rope	Soft-Fiber Polyester	0.00
S-1023-1	1-3/C + Gnd, #6, 600 V, EPR insulation	324.29
~~S-1024-1~~	~~1-3/C + Gnd, #6, 600 V, EPR insulation~~	~~324.29~~ (2)
UP001-23	1-2/C + Gnd, #8, 600 V, EPR insulation	227.46

Conduit/Tray No:	4213	Reference:	E-28, E-33, E-81, E-78
Size:	103	Type:	RGS conduit
From:	Electrical Vault #1W	To:	Manhole-30
Total Fill (mm2):	324.29	Remarks:	
Allowable Fill (mm2):	4404.97		
Description of Changes:			

Included Cable No.	Conductor Type	Area (mm2)
A-1008-1	1-3/C + Gnd, #6, 600 V, EPR insulation	324.29
Pull Rope	Soft-Fiber Polyester	0.00

Conduit/Tray No:	4214	Reference:	E-75
Size:	41	Type:	RGS conduit
From:	JB (Soffitt Light 2022-7)	To:	JB (Soffitt light 2022-8)
Total Fill (mm2):	133.19	Remarks:	
Allowable Fill (mm2):	534.55		
Description of Changes:			

Included Cable No.	Conductor Type	Area (mm2)
Pull Rope	Soft-Fiber Polyester	0.00
S-2022-2	3 + 1 Gnd, #8, #10, 600 V, RHH/RHW insulation	133.19

Conduit/Tray No:	4215	Reference:	E-82
Size:	41	Type:	RGS conduit
From:	PB-COM	To:	PB-COM
Total Fill (mm2):	0.00	Remarks:	
Allowable Fill (mm2):	534.55		
Description of Changes:			

Included Cable No.	Conductor Type	Area (mm2)
Pull Rope	Soft-Fiber Polyester	0.00

CONTRACT NO. 04-0120S4

CONTRACT CHANGE ORDER NO. 78

SHEET 69 OF 92

CONDUIT AND TRAY SCHEDULE
YBI TRANSITION STRUCTURES GIRDER WB

E-285

STATE OF CALIFORNIA - DEPARTMENT OF TRANSPORTATION

CONSULTANT FUNCTIONAL SUPERVISOR: BEHZAD GOLEMOHAMMADI

CALCULATED-DESIGNED BY | CHECKED BY | REVISED BY | DATE REVISED

CARMELO RIVERA | ELLERY LUCAS

LAST REVISION 00-00-00 | DATE PLOTTED => 05-APR-2011 | TIME PLOTTED => 11:34

Dist	COUNTY	ROUTE	KILOMETER POST TOTAL PROJECT	SHEET No.	TOTAL SHEETS
04	SF	80	12.7/13.2	405 R1	806

REGISTERED ELECTRICAL ENGINEER 2/14/08

6-23-08
PLANS APPROVAL DATE

THE STATE OF CALIFORNIA OR ITS OFFICERS OR AGENTS SHALL NOT BE RESPONSIBLE FOR THE ACCURACY OR COMPLETENESS OF ELECTRONIC COPIES OF THIS PLAN SHEET.

REGISTERED PROFESSIONAL ENGINEER FADI WALIEDDINE No. 11465 Exp. 12/31/09 ELECTRICAL STATE OF CALIFORNIA

PB AMERICAS, Inc.
A Parsons Brinckerhoff Company
303 Second St., Suite 700N
San Francisco, CA 94107-1317

REGISTERED PROFESSIONAL ENGINEER SYN YEE CHIN No. 18186 Exp. 09/30/2011 ELECTRICAL STATE OF CALIFORNIA

Syn Yee Chin
FOR REVISION ONLY
1 03/30/2011

Caltrans Metric

Conduit/Tray No:	4216
Size:	103
From:	TOS/COM Vault #1W
Total Fill (mm2):	2403.42
Allowable Fill (mm2):	2576.49
Reference:	E-29, E-33, E-38, E-81, E-64, E-78
Type:	RGS conduit
To:	Manhole-9
Remarks:	
Description of Changes:	

Included Cable No.	Conductor Type	Area (mm2)
1473-1	50 pair #18, shielded pairs, IS/OS shield 600 V, XLPE insul., PVC jacket	1201.71
1474-1	50 pair #18, shielded pairs, IS/OS shield 600 V, XLPE insul., PVC jacket	1201.71
Pull Rope	Soft-Fiber Polyester	0.00

Conduit/Tray No:	4217
Size:	103
From:	TOS/COM Vault #1W
Total Fill (mm2):	647.30
Allowable Fill (mm2):	2576.49
Reference:	E-29, E-33, E-38, E-81, E-64, E-78
Type:	RGS conduit
To:	Manhole-9
Remarks:	
Description of Changes:	

Included Cable No.	Conductor Type	Area (mm2)
1475-1	72 Fiber, single mode fiber optic riser cable	323.65
1475-3	72 Fiber, single mode fiber optic riser cable	323.65
Pull Rope	Soft-Fiber Polyester	0.00

Conduit/Tray No:	4218
Size:	103
From:	TOS/COM Vault #1W
Total Fill (mm2):	0.00
Allowable Fill (mm2):	3324.51
Reference:	E-29, E-33, E-38, E-81, E-64, E-78
Type:	RGS conduit
To:	Manhole-9
Remarks:	
Description of Changes:	

Included Cable No.	Conductor Type	Area (mm2)
Pull Rope	Soft-Fiber Polyester	0.00

Conduit/Tray No:	4808
Size:	41
From:	PB-COM
Total Fill (mm2):	0.00
Allowable Fill (mm2):	534.55
Reference:	E-73
Type:	RGS conduit
To:	~~PB-COM~~ North barrier and cap (Bent W10L) 1
Remarks:	
Description of Changes:	Revise "To" location due to YBI City Ramp by others. 1

Included Cable No.	Conductor Type	Area (mm2)
Pull Rope	Soft-Fiber Polyester	0.00

Conduit/Tray No:	4899
Size:	41
From:	PB-LTG 1
Total Fill (mm2):	~~65.61~~ 00.00
Allowable Fill (mm2):	534.55
Reference:	E-73
Type:	RGS conduit
To:	~~PB-LTG~~ North barrier and cap (Bent W10L) 1
Remarks:	
Description of Changes:	Existing conduit, removed cable(s) as listed below due to YBI City Ramp by others. 1

Included Cable No.	Conductor Type	Area (mm2)
Pull Rope	Soft-Fiber Polyester	0.00
~~UP101-2B~~	~~3 + 1 Gnd, #12, #12, 600 V, RHH/RHW insulation~~	~~65.61~~ 1

Conduit/Tray No:	4900
Size:	41
From:	JB (Soffit Light 2021-6)
Total Fill (mm2):	133.19
Allowable Fill (mm2):	534.55
Reference:	E-73
Type:	RGS conduit
To:	JB (Soffit Light 2021-7)
Remarks:	
Description of Changes:	

Included Cable No.	Conductor Type	Area (mm2)
Pull Rope	Soft-Fiber Polyester	0.00
S-2021-2	3 + 1 Gnd, #8, #10, 600 V, RHH/RHW insulation	133.19

Conduit/Tray No:	4901
Size:	103
From:	Electrical Vault #1W
Total Fill (mm2):	~~2451.76~~ 1761.37 1
Allowable Fill (mm2):	3324.51
Reference:	E-74, E-81, E-64
Type:	RGS conduit
To:	PB-2E
Remarks:	
Description of Changes:	Existing conduit, removed cable(s) as list below due to YBI City Ramp by others. 1

Included Cable No.	Conductor Type	Area (mm2)
1254-1	1-3/C #16, 600 V, EPR insulation	62.07
A-1006-1	1-3/C + Gnd, #8, 600 V, EPR insulation	262.68
A-1006-2	1-3/C + Gnd, #8, 600 V, EPR insulation	262.68
~~A-1007-1~~	~~1-3/C + Gnd, #4, 600 V, EPR insulation~~	~~366.10~~ 1
A-1008-1	1-3/C + Gnd, #6, 600 V, EPR insulation	324.29
~~A-1009-1~~	~~1-3/C + Gnd, #6, 600 V, EPR insulation~~	~~324.29~~ 1
Pull Rope	Soft-Fiber Polyester	0.00
S-1002-3	1-3/C + Gnd, #8, 600 V, EPR insulation	262.68
S-1022-3	1-3/C + Gnd, #8, 600 V, EPR insulation	262.68
S-1023-1	1-3/C + Gnd, #6, 600 V, EPR insulation	324.29

Conduit/Tray No:	4902
Size:	103
From:	Electrical Vault #1W
Total Fill (mm2):	0.00
Allowable Fill (mm2):	3324.51
Reference:	E-74, E-81, E-64
Type:	RGS conduit
To:	PB-2E
Remarks:	
Description of Changes:	

Included Cable No.	Conductor Type	Area (mm2)
Pull Rope	Soft-Fiber Polyester	0.00

CONTRACT NO. 04-0120S4

CONTRACT CHANGE ORDER NO. 78

SHEET 70 OF 92

CONDUIT AND TRAY SCHEDULE
YBI TRANSITION STRUCTURES GIRDER WB

E-286

STATE OF CALIFORNIA - DEPARTMENT OF TRANSPORTATION
Caltrans

CONSULTANT FUNCTIONAL SUPERVISOR: BEHZAD GOLEMOHAMMADI
CALCULATED-DESIGNED BY: ELLERY LUCAS
CHECKED BY
REVISED BY: CARMELO RIVERA
DATE REVISED

BORDER LAST REVISED 3/1/2007
RELATIVE BORDER SCALE 0 20 40 60 80
USERNAME => llorico
CU 04251
EA 0120S1

Dist	COUNTY	ROUTE	KILOMETER POST TOTAL PROJECT	SHEET No.	TOTAL SHEETS
04	SF	80	12.7/13.2	406 R2	806

REGISTERED ELECTRICAL ENGINEER 2/14/08

6-23-08
PLANS APPROVAL DATE

REGISTERED PROFESSIONAL ENGINEER FADI WALIEDDINE No. 11865 Exp. 12/31/09 ELECTRICAL STATE OF CALIFORNIA

THE STATE OF CALIFORNIA OR ITS OFFICERS OR AGENTS SHALL NOT BE RESPONSIBLE FOR THE ACCURACY OR COMPLETENESS OF ELECTRONIC COPIES OF THIS PLAN SHEET.

PB AMERICAS, Inc.
A Parsons Brinckerhoff Company
303 Second St., Suite 700N
San Francisco, CA 94107-1317

REGISTERED PROFESSIONAL ENGINEER SYN YEE CHIN No. 18186 Exp. 09/30/2011 ELECTRICAL STATE OF CALIFORNIA

Syn Yee Chin
FOR REVISION ONLY
1 11/22/2010
2 03/30/2011

Metric

Conduit/Tray No:	4903
Reference:	E-74, E-81, E-64
Size:	103
Type:	RGS conduit
From:	Electrical Vault #1W
To:	PB-2E
Total Fill (mm2):	~~1503.67~~ 1644.47 (2)
Remarks:	
Allowable Fill (mm2):	3324.51
Description of Changes:	Delete due to elimination of platform #2W (1) Existing conduit, added new cable(s) as listed below due to YBI City Ramp by others (2)

Included Cable No.	Conductor Type	Area (mm2)
~~1092~~	~~1-3/C + Gnd, #4, 600 V, EPR insulation~~	~~366.10~~ (1)
1093	1-3/C + Gnd, #4, 600 V, EPR insulation	366.10
1094	1-3/C + Gnd, #2, 600 V, EPR insulation	527.18
Pull Rope	Soft-Fiber Polyester	0.00
~~S-1024-1~~	~~1-3/C + Gnd, #6, 600 V, EPR insulation~~	~~324.29~~
1105	1-3/C + Gnd, #6, 600 V, EPR insulation	324.29 (2)
UP101-1	1-2/C + Gnd #12, 600 V, EPR insulation	102.61

Conduit/Tray No:	4904
Reference:	E-81, E-74, E-64
Size:	103
Type:	RGS conduit
From:	TOS/COM Vault #1W
To:	PB-2A
Total Fill (mm2):	0.00
Remarks:	
Allowable Fill (mm2):	3324.51
Description of Changes:	

Included Cable No.	Conductor Type	Area (mm2)
Pull Rope	Soft-Fiber Polyester	0.00

Conduit/Tray No:	4905
Reference:	E-81, E-74, E-64
Size:	103
Type:	RGS conduit
From:	TOS/COM Vault #1W
To:	PB-2A
Total Fill (mm2):	647.30
Remarks:	
Allowable Fill (mm2):	2576.49
Description of Changes:	

Included Cable No.	Conductor Type	Area (mm2)
1475-2	72 Fiber, single mode fiber optic riser cable	323.65
1475-3	72 Fiber, single mode fiber optic riser cable	323.65
Pull Rope	Soft-Fiber Polyester	0.00

Conduit/Tray No:	4906
Reference:	E-81, E-74, E-64
Size:	103
Type:	RGS conduit
From:	TOS/COM Vault #1W
To:	PB-2A
Total Fill (mm2):	2599.62
Remarks:	
Allowable Fill (mm2):	3324.51
Description of Changes:	

Included Cable No.	Conductor Type	Area (mm2)
1148	1 - 2 pair, shielded #18 with IS/OA, 600 V, PVC jacket	98.10
1169	1 - 2 pair, shielded #18 with IS/OA, 600 V, PVC jacket	98.10
1473-2	50 pair #18, shielded pairs, IS/OS shield 600 V, XLPE insul., PVC jacket	1201.71
1474-2	50 pair #18, shielded pairs, IS/OS shield 600 V, XLPE insul., PVC jacket	1201.71
Pull Rope	Soft-Fiber Polyester	0.00

Conduit/Tray No:	4907
Reference:	E-74
Size:	41
Type:	RGS conduit
From:	JB (Soffitt light 2022-4)
To:	JB (Soffitt light 2022-5)
Total Fill (mm2):	133.19
Remarks:	
Allowable Fill (mm2):	534.55
Description of Changes:	

Included Cable No.	Conductor Type	Area (mm2)
Pull Rope	Soft-Fiber Polyester	0.00
S-2022-2	3 + 1 Gnd, #8, #10, 600 V, RHH/RHW insulation	133.19

Conduit/Tray No:	4908
Reference:	E-28, E-33, E-81, E-78
Size:	41
Type:	RGS conduit
From:	PB-LTG
To:	Manhole-30
Total Fill (mm2):	0.00
Remarks:	
Allowable Fill (mm2):	534.55
Description of Changes:	

Included Cable No.	Conductor Type	Area (mm2)
Pull Rope	Soft-Fiber Polyester	0.00

Conduit/Tray No:	4909
Reference:	E-81, E-64, E-78
Size:	41
Type:	RGS conduit
From:	TOS/COM Vault #1W
To:	PB-COM
Total Fill (mm2):	98.10
Remarks:	
Allowable Fill (mm2):	708.28
Description of Changes:	

Included Cable No.	Conductor Type	Area (mm2)
1169	1 - 2 pair, shielded #18 with IS/OA, 600 V, PVC jacket	98.10
Pull Rope	Soft-Fiber Polyester	0.00

CONTRACT NO. 04-012054

CONTRACT CHANGE ORDER NO 78

SHEET 71 OF 92

CONDUIT AND TRAY SCHEDULE
YBI TRANSITION STRUCTURES GIRDER WB

E-287

REVISED BY | DATE REVISED
CARMELO RIVERA | ELLERY LUCAS
CALCULATED-DESIGNED BY | CHECKED BY
CONSULTANT FUNCTIONAL SUPERVISOR
BEHZAD GOLEMOHAMMADI

STATE OF CALIFORNIA - DEPARTMENT OF TRANSPORTATION
Caltrans

LAST REVISION 00-00-00 | DATE PLOTTED => 05-APR-2011 | TIME PLOTTED => 11:34

Dist	COUNTY	ROUTE	KILOMETER POST TOTAL PROJECT	SHEET No.	TOTAL SHEETS
04	SF	80	12.7/13.2	407 R1	806

REGISTERED ELECTRICAL ENGINEER 2/14/08

6-23-08
PLANS APPROVAL DATE

THE STATE OF CALIFORNIA OR ITS OFFICERS OR AGENTS SHALL NOT BE RESPONSIBLE FOR THE ACCURACY OR COMPLETENESS OF ELECTRONIC COPIES OF THIS PLAN SHEET.

REGISTERED PROFESSIONAL ENGINEER SYN YEE CHIN No. 18186 Exp. 09/30/2011 ELECTRICAL STATE OF CALIFORNIA

REGISTERED PROFESSIONAL ENGINEER FADI MALIEDDINE No. 11465 Exp. 12/31/09 ELECTRICAL STATE OF CALIFORNIA

Syn Yee Chin
FOR REVISION ONLY
1 03/30/2011

Caltrans Metric

PB AMERICAS, Inc.
A Parsons Brinckerhoff Company
303 Second St., Suite 700N
San Francisco, CA 94107-1317

Conduit/Tray No: 4910 | Reference: E-81, E-78
Size: 41 | Type: RGS conduit
From: ~~PB-LTG~~ E. Vault #1W | To: PB-LTG
Total Fill (mm2): ~~0.00~~ 65.61 | Remarks:
Allowable Fill (mm2): 534.55
Description of Changes: Existing conduit, added new cable(s) as listed below due to YBI City Ramp by others (1)

Included Cable No.	Conductor Type	Area (mm2)
Pull Rope	Soft-Fiber Polyester	0.00
UP101-2B	3 + 1 Gnd #12, #12, 600V, RHH/RHW	65.61 (1)

Conduit/Tray No: 4911 | Reference: E-28, E-33, E-81, E-78
Size: 41 | Type: RGS conduit
From: PB-LTG | To: Manhole-30
Total Fill (mm2): 0.00 | Remarks:
Allowable Fill (mm2): 534.55
Description of Changes:

Included Cable No.	Conductor Type	Area (mm2)
Pull Rope	Soft-Fiber Polyester	0.00

Conduit/Tray No: 4912 | Reference: E-28, E-33, E-81, E-78
Size: 41 | Type: RGS conduit
From: PB-LTG | To: Manhole-30
Total Fill (mm2): 262.68 | Remarks:
Allowable Fill (mm2): 708.28
Description of Changes:

Included Cable No.	Conductor Type	Area (mm2)
Pull Rope	Soft-Fiber Polyester	0.00
S-1002-2	1-3/C + Gnd, #8, 600 V, EPR insulation	262.68

Conduit/Tray No: 4913 | Reference: E-28, E-33, E-81, E-78
Size: 41 | Type: RGS conduit
From: PB-LTG | To: Manhole-30
Total Fill (mm2): ~~262.68~~ 0.00 | Remarks:
Allowable Fill (mm2): ~~708.28~~ 534.55
Description of Changes: Existing conduit, removed cable(s) as list below due to YBI City Ramp by others. (1)

Included Cable No.	Conductor Type	Area (mm2)
Pull Rope	Soft-Fiber Polyester	0.00
~~S-1001-1~~	~~1-3/C + Gnd, #8, 600 V, EPR insulation~~	~~262.68~~ (1)

Conduit/Tray No: 4915 | Reference: E-64, E-81, E-74, E-78
Size: 78 | Type: RGS conduit
From: PL-W11 | To: TOS/COM Vault #1W
Total Fill (mm2): 452.77 | Remarks:
Allowable Fill (mm2): 2564.19
Description of Changes:

Included Cable No.	Conductor Type	Area (mm2)
PLW11	12 DLC	452.77
Pull Rope	Soft-Fiber Polyester	0.00

Conduit/Tray No: 4917 | Reference: E-76
Size: 41 | Type: RGS conduit
From: PB-LTG | To: PB-LTG
Total Fill (mm2): 65.61 | Remarks:
Allowable Fill (mm2): 534.55
Description of Changes:

Included Cable No.	Conductor Type	Area (mm2)
Pull Rope	Soft-Fiber Polyester	0.00
UP103-2	3 + 1 Gnd, #12, #12, 600 V, RHH/RHW insulation	65.61

Conduit/Tray No: 4918 | Reference: E-77
Size: 41 | Type: RGS conduit
From: PB-COM | To: PB-COM
Total Fill (mm2): 98.10 | Remarks:
Allowable Fill (mm2): 708.28
Description of Changes:

Included Cable No.	Conductor Type	Area (mm2)
1170	1 - 2 pair, shielded #18 with IS/OA, 600 V, PVC jacket	98.10
Pull Rope	Soft-Fiber Polyester	0.00

(5)

~~Conduit/Tray No: 4919 | Reference: E-83, E-76, E-82, E-65~~
~~Size: 41 | Type: RGS conduit~~
~~From: Wireway #1W | To: PB-LTG~~
~~Total Fill (mm2): 0.00 | Remarks:~~
~~Allowable Fill (mm2): 534.55~~
~~Description of Changes:~~

~~Included Cable No.~~	~~Conductor Type~~	~~Area (mm2)~~
~~Pull Rope~~	~~Soft-Fiber Polyester~~	~~0.00~~

CONTRACT NO. 04-012054

CONTRACT CHANGE ORDER NO 78

SHEET 72 OF 92

(5) REVISED PER ADDENDUM No. 5 DATED JULY 30, 2009

CONDUIT AND TRAY SCHEDULE
YBI TRANSITION STRUCTURES GIRDER WB

E-288

REVISED BY | DATE REVISED
CARMELO RIVERA | ELLERY LUCAS
CALCULATED-DESIGNED BY | CHECKED BY
CONSULTANT FUNCTIONAL SUPERVISOR | BEHZAD GOLEMOHAMMADI
STATE OF CALIFORNIA - DEPARTMENT OF TRANSPORTATION
Caltrans

BORDER LAST REVISED 3/1/2007 | RELATIVE BORDER SCALE 0 20 40 60 80 | USERNAME => llorico | CU 04251 | EA 012051

Dist	COUNTY	ROUTE	KILOMETER POST TOTAL PROJECT	SHEET No.	TOTAL SHEETS
04	SF	80	12.7/13.2	408 R2	806

REGISTERED ELECTRICAL ENGINEER 2/14/08

6-23-08
PLANS APPROVAL DATE

REGISTERED PROFESSIONAL ENGINEER FADI WALIEDDINE No. 11465 Exp. 12/31/09 ELECTRICAL STATE OF CALIFORNIA

THE STATE OF CALIFORNIA OR ITS OFFICERS OR AGENTS SHALL NOT BE RESPONSIBLE FOR THE ACCURACY OR COMPLETENESS OF ELECTRONIC COPIES OF THIS PLAN SHEET.

PB AMERICAS, Inc.
A Parsons Brinckerhoff Company
303 Second St., Suite 700N
San Francisco, CA 94107-1317

REGISTERED PROFESSIONAL ENGINEER SYN YEE CHIN No. 18186 Exp. 09/30/2011 ELECTRICAL STATE OF CALIFORNIA

Syn Yee Chin
FOR REVISION ONLY
1 11/22/2010
2 03/30/2011

Metric

Conduit/Tray No:	4928	Reference:	E-75
Size:	103	Type:	RGS conduit
From:	PB-2E	To:	Electrical Vault #2W
Total Fill (mm2):	~~1803.18~~ 1112.79 (2)	Remarks:	
Allowable Fill (mm2):	3324.51		

Description of Changes: Existing conduit, removed cable(s) as list below due to YBI City Ramp by others. (2)

Included Cable No.	Conductor Type	Area (mm2)
1254-1	1-3/C #16, 600 V, EPR insulation	62.07
A-1006-1	1-3/C + Gnd, #8, 600 V, EPR insulation	262.68
A-1006-2	1-3/C + Gnd, #8, 600 V, EPR insulation	262.68
~~A-1007-1~~	~~1-3/C + Gnd, #4, 600 V, EPR insulation~~	~~366.10~~ (2)
~~A-1009-1~~	~~1-3/C + Gnd, #6, 600 V, EPR insulation~~	~~324.29~~
Pull Rope	Soft-Fiber Polyester	0.00
S-1002-3	1-3/C + Gnd, #8, 600 V, EPR insulation	262.68
S-1022-3	1-3/C + Gnd, #8, 600 V, EPR insulation	262.68

Conduit/Tray No:	4929	Reference:	E-75
Size:	103	Type:	RGS conduit
From:	PB-2E	To:	Electrical Vault #2W
Total Fill (mm2):	324.29	Remarks:	
Allowable Fill (mm2):	4404.97		

Description of Changes:

Included Cable No.	Conductor Type	Area (mm2)
A-1008-1	1-3/C + Gnd, #6, 600 V, EPR insulation	324.29
Pull Rope	Soft-Fiber Polyester	0.00

Conduit/Tray No:	4930	Reference:	E-75
Size:	103	Type:	RGS conduit
From:	PB-2E	To:	Electrical Vault #2W
Total Fill (mm2):	~~1907.96~~ 1968.76 (2)	Remarks:	
Allowable Fill (mm2):	3324.51		

Description of Changes: Delete due to elimination of platform #2W (1)
Existing conduit, added new cable(s) as listed below due to YBI City Ramp by others (2)

Included Cable No.	Conductor Type	Area (mm2)
~~1092~~	~~1-3/C + Gnd, #4, 600 V, EPR insulation~~	~~366.10~~ (1)
1093	1-3/C + Gnd, #4, 600 V, EPR insulation	366.10
1094	1-3/C + Gnd, #2, 600 V, EPR insulation	527.18
Pull Rope	Soft-Fiber Polyester	0.00
S-1023-1	1-3/C + Gnd, #6, 600 V, EPR insulation	324.29
~~S-1024-1~~	~~1-3/C + Gnd, #6, 600 V, EPR insulation~~	~~324.29~~
1105	1-3/C + Gnd, #6, 600 V, EPR insulation	324.29 (2)
UP101-1	1-2/C + Gnd #12, 600 V, EPR insulation	102.61

Conduit/Tray No:	4931	Reference:	E-74
Size:	41	Type:	RGS conduit
From:	JB (Soffitt light 2022-1)	To:	JB (Soffitt light 2022-2)
Total Fill (mm2):	133.19	Remarks:	
Allowable Fill (mm2):	534.55		

Description of Changes:

Included Cable No.	Conductor Type	Area (mm2)
Pull Rope	Soft-Fiber Polyester	0.00
S-2022-2	3 + 1 Gnd, #8, #10, 600 V, RHH/RHW insulation	133.19

Conduit/Tray No:	4932	Reference:	E-74
Size:	41	Type:	RGS conduit
From:	JB (Soffitt light 2022-2)	To:	JB (Soffitt light 2022-3)
Total Fill (mm2):	133.19	Remarks:	
Allowable Fill (mm2):	534.55		

Description of Changes:

Included Cable No.	Conductor Type	Area (mm2)
Pull Rope	Soft-Fiber Polyester	0.00
S-2022-2	3 + 1 Gnd, #8, #10, 600 V, RHH/RHW insulation	133.19

Conduit/Tray No:	4934	Reference:	E-74
Size:	41	Type:	RGS conduit
From:	JB (Soffitt light 2022-3)	To:	JB (Soffitt light 2022-4)
Total Fill (mm2):	133.19	Remarks:	
Allowable Fill (mm2):	534.55		

Description of Changes:

Included Cable No.	Conductor Type	Area (mm2)
Pull Rope	Soft-Fiber Polyester	0.00
S-2022-2	3 + 1 Gnd, #8, #10, 600 V, RHH/RHW insulation	133.19

Conduit/Tray No:	4935	Reference:	E-74
Size:	41	Type:	RGS conduit
From:	JB (Soffitt light 2022-5)	To:	JB (Soffitt light 2022-6)
Total Fill (mm2):	133.19	Remarks:	
Allowable Fill (mm2):	534.55		

Description of Changes:

Included Cable No.	Conductor Type	Area (mm2)
Pull Rope	Soft-Fiber Polyester	0.00
S-2022-2	3 + 1 Gnd, #8, #10, 600 V, RHH/RHW insulation	133.19

CONTRACT NO. 04-0120S4

CONTRACT CHANGE ORDER NO 78

SHEET 73 OF 92

CONDUIT AND TRAY SCHEDULE
YBI TRANSITION STRUCTURES GIRDER WB

E-289

REVISED BY | DATE REVISED
CARMELO RIVERA | ELLERY LUCAS
CALCULATED-DESIGNED BY | CHECKED BY
CONSULTANT FUNCTIONAL SUPERVISOR: BEHZAD GOLEMOHAMMADI

STATE OF CALIFORNIA - DEPARTMENT OF TRANSPORTATION
Caltrans

LAST REVISION 00-00-00 | DATE PLOTTED => 05-APR-2011 | TIME PLOTTED => 11:34

Dist	COUNTY	ROUTE	KILOMETER POST TOTAL PROJECT	SHEET No.	TOTAL SHEETS
04	SF	80	12.7/13.2	410 R1	806

REGISTERED ELECTRICAL ENGINEER 2/14/08

6-23-08
PLANS APPROVAL DATE

REGISTERED PROFESSIONAL ENGINEER FADI WALIEDDINE No. 11465 Exp. 12/31/09 ELECTRICAL STATE OF CALIFORNIA

THE STATE OF CALIFORNIA OR ITS OFFICERS OR AGENTS SHALL NOT BE RESPONSIBLE FOR THE ACCURACY OR COMPLETENESS OF ELECTRONIC COPIES OF THIS PLAN SHEET.

PB AMERICAS, Inc.
A Parsons Brinckerhoff Company
303 Second St., Suite 700N
San Francisco, CA 94107-1317

REGISTERED PROFESSIONAL ENGINEER SYN YEE CHIN No. 18186 Exp. 09/30/2011 ELECTRICAL STATE OF CALIFORNIA

Syn Yee Chin
FOR REVISION ONLY
1 03/30/2011

Caltrans Metric

Conduit/Tray No:	4944	Reference:	E-73
Size:	41	Type:	RGS conduit
From:	JB (Soffitt light 2021-5)	To:	JB (Soffitt light 2021-6)
Total Fill (mm2):	133.19	Remarks:	
Allowable Fill (mm2):	534.55		
Description of Changes:			

Included Cable No.	Conductor Type	Area (mm2)
Pull Rope	Soft-Fiber Polyester	0.00
S-2021-2	3 + 1 Gnd, #8, #10, 600 V, RHH/RHW insulation	133.19

Conduit/Tray No:	4945	Reference:	E-73
Size:	41	Type:	RGS conduit
From:	JB (Soffitt light 2021-9)	To:	JB (Soffitt light 2021-10)
Total Fill (mm2):	133.19	Remarks:	
Allowable Fill (mm2):	534.55		
Description of Changes:			

Included Cable No.	Conductor Type	Area (mm2)
Pull Rope	Soft-Fiber Polyester	0.00
S-2021-2	3 + 1 Gnd, #8, #10, 600 V, RHH/RHW insulation	133.19

Conduit/Tray No:	4946	Reference:	E-73
Size:	41	Type:	RGS conduit
From:	JB (Soffitt light 2021-8)	To:	JB (Soffitt light 2021-9)
Total Fill (mm2):	133.19	Remarks:	
Allowable Fill (mm2):	534.55		
Description of Changes:			

Included Cable No.	Conductor Type	Area (mm2)
Pull Rope	Soft-Fiber Polyester	0.00
S-2021-2	3 + 1 Gnd, #8, #10, 600 V, RHH/RHW insulation	133.19

Conduit/Tray No:	4947	Reference:	E-73
Size:	41	Type:	RGS conduit
From:	JB (Soffitt light 2021-7)	To:	JB (Soffitt light 2021-8)
Total Fill (mm2):	133.19	Remarks:	
Allowable Fill (mm2):	534.55		
Description of Changes:			

Included Cable No.	Conductor Type	Area (mm2)
Pull Rope	Soft-Fiber Polyester	0.00
S-2021-2	3 + 1 Gnd, #8, #10, 600 V, RHH/RHW insulation	133.19

Conduit/Tray No:	4948	Reference:	E-75, E-82
Size:	103	Type:	RGS conduit
From:	PB-2A	To:	TOS/COM Vault #2W
Total Fill (mm2):	843.50	Remarks:	
Allowable Fill (mm2):	3324.51		
Description of Changes:			

Included Cable No.	Conductor Type	Area (mm2)
1148	1 - 2 pair, shielded #18 with IS/OA, 600 V, PVC jacket	98.10
1169	1 - 2 pair, shielded #18 with IS/OA, 600 V, PVC jacket	98.10
1475-2	72 Fiber, single mode fiber optic riser cable	323.65
1475-3	72 Fiber, single mode fiber optic riser cable	323.65
Pull Rope	Soft-Fiber Polyester	0.00

Conduit/Tray No:	4949	Reference:	E-75, E-82
Size:	103	Type:	RGS conduit
From:	PB-2A	To:	TOS/COM Vault #2W
Total Fill (mm2):	0.00	Remarks:	
Allowable Fill (mm2):	3324.51		
Description of Changes:			

Included Cable No.	Conductor Type	Area (mm2)
Pull Rope	Soft-Fiber Polyester	0.00

Conduit/Tray No:	4951	Reference:	E-81, E-64, E-50 1
Size:	41	Type:	RGS conduit
From:	Electrical Vault #1W	To:	~~Overhead Sign "A"~~ End of conduit 4951 1
Total Fill (mm2):	~~313.50~~ 0.00 1	Remarks:	
Allowable Fill (mm2):	534.55		
Description of Changes:	Existing conduit, removed cable(s) as list below due to YBI City Ramp by others. 1		

Included Cable No.	Conductor Type	Area (mm2)
~~1105~~	~~1 3/C + Gnd, #6, 600 V, EPR insulation~~	~~324.29~~ 1
Pull Rope	Soft-Fiber Polyester	0.00
~~UP101-1~~	~~2 + 1 Gnd, #12, #12, 600 V, RHH/RHW insulation~~	~~49.24~~ 1

CONTRACT NO. 04-012054

CONTRACT CHANGE ORDER NO 78

SHEET 74 OF 92

CONDUIT AND TRAY SCHEDULE
YBI TRANSITION STRUCTURES GIRDER WB

E-291

REVISED BY | DATE REVISED | CARMELO RIVERA | ELLERY LUCAS | CALCULATED-DESIGNED BY | CHECKED BY | SUPERVISOR | BEHZAD GOLEMOHAMMADI | CONSULTANT FUNCTIONAL SUPERVISOR

STATE OF CALIFORNIA - DEPARTMENT OF TRANSPORTATION
Caltrans

Dist	COUNTY	ROUTE	KILOMETER POST TOTAL PROJECT	SHEET No.	TOTAL SHEETS
04	SF	80	12.7/13.2	411 R1	806

REGISTERED ELECTRICAL ENGINEER 2/14/08

6-23-08
PLANS APPROVAL DATE

THE STATE OF CALIFORNIA OR ITS OFFICERS OR AGENTS SHALL NOT BE RESPONSIBLE FOR THE ACCURACY OR COMPLETENESS OF ELECTRONIC COPIES OF THIS PLAN SHEET.

REGISTERED PROFESSIONAL ENGINEER FADI WALIEDDINE No. 11465 Exp. 12/31/09 ELECTRICAL STATE OF CALIFORNIA

PB AMERICAS, Inc.
A Parsons Brinckerhoff Company
303 Second St., Suite 700N
San Francisco, CA 94107-1317

REGISTERED PROFESSIONAL ENGINEER SYN YEE CHIN No. 18186 Exp. 09/30/2011 ELECTRICAL STATE OF CALIFORNIA

Syn Yee Chin
FOR REVISION ONLY
1 03/30/2011

Caltrans Metric

Conduit/Tray No:	4953
Size:	41
From:	JB (Soffit Light 2022-6)
Total Fill (mm2):	133.19
Allowable Fill (mm2):	534.55
Reference:	E-74
Type:	RGS conduit
To:	JB (Soffit Light 2022-7)
Remarks:	
Description of Changes:	

Included Cable No.	Conductor Type	Area (mm2)
Pull Rope	Soft-Fiber Polyester	0.00
S-2022-2	3 + 1 Gnd, #8, #10, 600 V, RHH/RHW insulation	133.19

Conduit/Tray No:	4954
Size:	103
From:	PB-2A
Total Fill (mm2):	2403.42
Allowable Fill (mm2):	2576.49
Reference:	E-75, E-82
Type:	RGS conduit
To:	TOS/COM Vault #2W
Remarks:	
Description of Changes:	

Included Cable No.	Conductor Type	Area (mm2)
1473-2	50 pair #18, shielded pairs, IS/OS shield 600 V, XLPE insul., PVC jacket	1201.71
1474-2	50 pair #18, shielded pairs, IS/OS shield 600 V, XLPE insul., PVC jacket	1201.71
Pull Rope	Soft-Fiber Polyester	0.00

Conduit/Tray No:	4955
Size:	41
From:	JB (Soffitt light 2021-10)
Total Fill (mm2):	133.19
Allowable Fill (mm2):	534.55
Reference:	E-74
Type:	RGS conduit
To:	JB (Soffitt light 2021-11)
Remarks:	
Description of Changes:	

Included Cable No.	Conductor Type	Area (mm2)
Pull Rope	Soft-Fiber Polyester	0.00
S-2021-2	3 + 1 Gnd, #8, #10, 600 V, RHH/RHW insulation	133.19

Conduit/Tray No:	4956
Size:	103
From:	Electrical Vault #2W
Total Fill (mm2):	710.65
Allowable Fill (mm2):	3324.51
Reference:	E-83, E-75, E-82
Type:	RGS conduit
To:	Electrical Vault #3W
Remarks:	
Description of Changes:	

Included Cable No.	Conductor Type	Area (mm2)
1254-1	1-3/C #16, 600 V, EPR insulation	62.07
A-1008-1	1-3/C + Gnd, #6, 600 V, EPR insulation	324.29
Pull Rope	Soft-Fiber Polyester	0.00
S-1024-1	1-3/C + Gnd, #6, 600 V, EPR insulation	324.29

5

Conduit/Tray No:	4957
Size:	103
From:	Electrical Vault #2W
Total Fill (mm2):	~~893.20~~ 1320.18 1
Allowable Fill (mm2):	2576.49
Reference:	E-84, E-75, E-82
Type:	RGS conduit
To:	Electrical Vault #3W
Remarks:	
Description of Changes:	Existing conduit, added new cable(s) as listed below due to YBI City Ramp by others. 1

Included Cable No.	Conductor Type	Area (mm2)
1093	1-3/C + Gnd, #4, 600 V, EPR insulation	366.10
1094	1-3/C + Gnd, #2, 600 V, EPR insulation	527.18
Pull Rope	Soft-Fiber Polyester	0.00 1
1105	1-3/C + Gnd, #6, 600 V, EPR insulation	324.29
UP101-1	1-2/C + Gnd #12, 600 V, EPR insulation	102.61

Conduit/Tray No:	4959
Size:	41
From:	TOS/COM Vault #2W
Total Fill (mm2):	0.00
Allowable Fill (mm2):	534.55
Reference:	E-65, E-82, E-75
Type:	RGS conduit
To:	~~PB-COM~~ PB-2E 1
Remarks:	
Description of Changes:	Revise "To" location due to YBI City Ramp by others. 1

Included Cable No.	Conductor Type	Area (mm2)
Pull Rope	Soft-Fiber Polyester	0.00

Conduit/Tray No:	4960
Size:	41
From:	Wireway #2W
Total Fill (mm2):	690.39
Allowable Fill (mm2):	702.80
Reference:	E-65, E-82, E-75
Type:	RGS-PVC coated conduit
To:	PB-LTG
Remarks:	
Description of Changes:	

Included Cable No.	Conductor Type	Area (mm2)
A-1007-1	1-3/C + Gnd, #4, 600 V, EPR insulation	366.10
A-1009-1	1-3/C + Gnd, #6, 600 V, EPR insulation	324.29
Pull Rope	Soft-Fiber Polyester	0.00

5

CONTRACT NO. 04-012054

CONTRACT CHANGE ORDER NO 78

SHEET 75 OF 92

5 REVISED PER ADDENDUM No. 5 DATED JULY 30, 2009

CONDUIT AND TRAY SCHEDULE
YBI TRANSITION STRUCTURES GIRDER WB

E-292

REVISED BY | DATE REVISED
CARMELO RIVERA | ELLERY LUCAS
CALCULATED-DESIGNED-BY | CHECKED BY
CONSULTANT FUNCTIONAL SUPERVISOR
BEHZAD GOLEMOHAMMADI

STATE OF CALIFORNIA - DEPARTMENT OF TRANSPORTATION
Caltrans

BORDER LAST REVISED 3/1/2007 | RELATIVE BORDER SCALE 0 20 40 60 80 | USERNAME => llorico | CU 04251 | EA 0120S1

Dist	COUNTY	ROUTE	KILOMETER POST TOTAL PROJECT	SHEET No.	TOTAL SHEETS
04	SF	80	12.7/13.2	412 R1	806

REGISTERED ELECTRICAL ENGINEER 2/14/08

6-23-08
PLANS APPROVAL DATE

REGISTERED PROFESSIONAL ENGINEER FADI WALIEDDINE No. 11465 Exp. 12/31/09 ELECTRICAL STATE OF CALIFORNIA

THE STATE OF CALIFORNIA OR ITS OFFICERS OR AGENTS SHALL NOT BE RESPONSIBLE FOR THE ACCURACY OR COMPLETENESS OF ELECTRONIC COPIES OF THIS PLAN SHEET.

PB AMERICAS, Inc.
A Parsons Brinckerhoff Company
303 Second St., Suite 700N
San Francisco, CA 94107-1317

REGISTERED PROFESSIONAL ENGINEER SYN YEE CHIN No. 18186 Exp. 09/30/2011 ELECTRICAL STATE OF CALIFORNIA

Syn Yee Chin
FOR REVISION ONLY
1 03/30/2011

Caltrans Metric

Conduit/Tray No:	4969	Reference:	E-66, E-75
Size:	78	Type:	RGS conduit
From:	PL-W01	To:	TOS/COM Vault #3W
Total Fill (mm2):	316.24	Remarks:	
Allowable Fill (mm2):	2564.19		
Description of Changes:			

Included Cable No.	Conductor Type	Area (mm2)
PLW01	10 DLC	316.24
Pull Rope	Soft-Fiber Polyester	0.00

5

Conduit/Tray No:	4970	Reference:	E-83, E-76
Size:	41	Type:	RGS conduit
From:	PB-LTG	To:	Electrical Vault #3E
Total Fill (mm2):	324.29	Remarks:	
Allowable Fill (mm2):	708.28		
Description of Changes:			

Included Cable No.	Conductor Type	Area (mm2)
A-1008-1	1-3/C + Gnd, #6, 600 V, EPR Insulation	324.29
Pull Rope	Soft-Fiber Polyester	0.00

Conduit/Tray No:	4971	Reference:	E-83, E-66
Size:	41	Type:	RGS-PVC coated conduit
From:	Electrical Vault #3W	To:	TOS Sign CMS-W01
Total Fill (mm2):	450.97	Remarks:	
Allowable Fill (mm2):	534.55		
Description of Changes:			

Included Cable No.	Conductor Type	Area (mm2)
Pull Rope	Soft-Fiber Polyester	0.00
UP109-1	3 + 1 Gnd, #2, #6, 600 V, RHH/RHW insulation	410.43
UP109-2	2-1/C #10, 600 V, RHH/RHW Insulation	40.54

Conduit/Tray No:	4973	Reference:	E-74
Size:	41	Type:	RGS conduit
From:	PB-COM	To:	PB-COM
Total Fill (mm2):	0.00	Remarks:	
Allowable Fill (mm2):	534.55		
Description of Changes:			

Included Cable No.	Conductor Type	Area (mm2)
Pull Rope	Soft-Fiber Polyester	0.00

Conduit/Tray No:	4974	Reference:	E-74
Size:	41	Type:	RGS conduit
From:	PB-LTG	To:	PB-LTG
Total Fill (mm2):	0.00	Remarks:	
Allowable Fill (mm2):	534.55		
Description of Changes:			

Included Cable No.	Conductor Type	Area (mm2)
Pull Rope	Soft-Fiber Polyester	0.00

5

Conduit/Tray No:	4977	Reference:	E-75
Size:	41	Type:	RGS conduit
From:	PB-COM	To:	PB-LTG
Total Fill (mm2):	0.00	Remarks:	
Allowable Fill (mm2):	534.55		
Description of Changes:			

Included Cable No.	Conductor Type	Area (mm2)
Pull Rope	Soft-Fiber Polyester	0.00

5

Conduit/Tray No:	4978	Reference:	E-75
Size:	41	Type:	RGS conduit
From:	PB-LTG	To:	PB-COM
Total Fill (mm2):	0.00	Remarks:	
Allowable Fill (mm2):	534.55		
Description of Changes:			

Included Cable No.	Conductor Type	Area (mm2)
Pull Rope	Soft-Fiber Polyester	0.00

Conduit/Tray No:	4980	Reference:	E-76, E-83
Size:	41	Type:	RGS conduit
From:	~~PB-COM~~ PB-2A 1	To:	TOS/COM Vault #3W
Total Fill (mm2):	0.00	Remarks:	
Allowable Fill (mm2):	534.55		
Description of Changes:	Revise "From" location due to YBI City Ramp by others. 1		

Included Cable No.	Conductor Type	Area (mm2)
Pull Rope	Soft-Fiber Polyester	0.00

Conduit/Tray No:	4984	Reference:	E-66
Size:	53	Type:	RGS-PVC coated conduit
From:	Wireway #3W	To:	Electrical Vault #3W
Total Fill (mm2):	0.00	Remarks:	
Allowable Fill (mm2):	1165.23		
Description of Changes:			

Included Cable No.	Conductor Type	Area (mm2)
Pull Rope	Soft-Fiber Polyester	0.00

CONTRACT NO. 04-0120S4

CONTRACT CHANGE ORDER NO. 78

SHEET 76 OF 92

5 REVISED PER ADDENDUM No. 5 DATED JULY 30, 2009

CONDUIT AND TRAY SCHEDULE
YBI TRANSITION STRUCTURES GIRDER WB

E-293

STATE OF CALIFORNIA - DEPARTMENT OF TRANSPORTATION
Caltrans

CONSULTANT FUNCTIONAL SUPERVISOR: BEHZAD GOLEMOHAMMADI
CALCULATED-DESIGNED BY: CARMELO RIVERA
CHECKED BY: ELLERY LUCAS
REVISED BY
DATE REVISED

BORDER LAST REVISED 3/1/2007

RELATIVE BORDER SCALE 0 20 40 60 80

USERNAME => llorico

CU 04251

EA 0120S1

Dist	COUNTY	ROUTE	KILOMETER POST TOTAL PROJECT	SHEET No.	TOTAL SHEETS
04	SF	80	12.7/13.2	413 R1	806

REGISTERED ELECTRICAL ENGINEER 4/10/09

6-23-08
PLANS APPROVAL DATE

REGISTERED PROFESSIONAL ENGINEER FADI WALIEDDINE No. 11465 Exp. 12/31/09 ELECTRICAL STATE OF CALIFORNIA

THE STATE OF CALIFORNIA OR ITS OFFICERS OR AGENTS SHALL NOT BE RESPONSIBLE FOR THE ACCURACY OR COMPLETENESS OF ELECTRONIC COPIES OF THIS PLAN SHEET.

PB AMERICAS, Inc.
A Parsons Brinckerhoff Company
303 Second St., Suite 700N
San Francisco, CA 94107-1317

REGISTERED PROFESSIONAL ENGINEER SYN YEE CHIN No. 18186 Exp. 09/30/2011 ELECTRICAL STATE OF CALIFORNIA

Syn Yee Chin
FOR REVISION ONLY
1 03/30/2011

Caltrans Metric

Conduit/Tray No:	4994
Size:	41
From:	PB-COM
Total Fill (mm2):	0.00
Allowable Fill (mm2):	534.55
Reference:	E-77
Type:	RGS conduit
To:	PB-COM
Remarks:	
Description of Changes:	

Included Cable No.	Conductor Type	Area (mm2)
Pull Rope	Soft-Fiber Polyester	0.00

Conduit/Tray No:	4996
Size:	103
From:	TOS/COM Vault #2W
Total Fill (mm2):	745.40
Allowable Fill (mm2):	3324.51
Reference:	E-83, E-75, E-82
Type:	RGS conduit
To:	TOS/COM Vault #3W
Remarks:	
Description of Changes:	

Included Cable No.	Conductor Type	Area (mm2)
1169	1 - 2 pair, shielded #18 with IS/OA, 600 V, PVC jacket	98.10
1475-2	72 Fiber, single mode fiber optic riser cable	323.65
1475-3	72 Fiber, single mode fiber optic riser cable	323.65
Pull Rope	Soft-Fiber Polyester	0.00

Conduit/Tray No:	4998
Size:	41
From:	TOS/COM Vault #3W
Total Fill (mm2):	0.00
Allowable Fill (mm2):	534.55
Reference:	E-76, E-83
Type:	RGS conduit
To:	~~PB-COM~~ PB-2A 1
Remarks:	
Description of Changes:	Revise "To" location due to YBI City Ramp by others. 1

Included Cable No.	Conductor Type	Area (mm2)
Pull Rope	Soft-Fiber Polyester	0.00

CONTRACT NO. 04-0120S4

CONTRACT CHANGE ORDER NO 78

SHEET 77 OF 92

CONDUIT AND TRAY SCHEDULE
YBI TRANSITION STRUCTURES GIRDER WB

E-294

REVISED BY | DATE REVISED

CARMELO RIVERA | ELLERY LUCAS

CALCULATED-DESIGNED BY | CHECKED BY

CONSULTANT FUNCTIONAL SUPERVISOR: BEHZAD GOLEMOHAMMADI

STATE OF CALIFORNIA - DEPARTMENT OF TRANSPORTATION
Caltrans

Dist	COUNTY	ROUTE	KILOMETER POST TOTAL PROJECT	SHEET No.	TOTAL SHEETS
04	SF	80	12.7/13.2	413A R1	806

REGISTERED ELECTRICAL ENGINEER 4/10/09

6-23-08
PLANS APPROVAL DATE

THE STATE OF CALIFORNIA OR ITS OFFICERS OR AGENTS SHALL NOT BE RESPONSIBLE FOR THE ACCURACY OR COMPLETENESS OF ELECTRONIC COPIES OF THIS PLAN SHEET.

REGISTERED PROFESSIONAL ENGINEER FADI MALIEDDINE No. 11465 Exp. 12/31/09 ELECTRICAL STATE OF CALIFORNIA

PB AMERICAS, Inc.
A Parsons Brinckerhoff Company
303 Second St., Suite 700N
San Francisco, CA 94107-1317

REGISTERED PROFESSIONAL ENGINEER SYN YEE CHIN No. 18186 Exp. 09/30/2011 ELECTRICAL STATE OF CALIFORNIA

Syn Yee Chin
FOR REVISION ONLY
1 03/30/2011

Caltrans Metric

Conduit/Tray No:	0271
Size:	41
From:	*0271
Total Fill (mm2):	0.00
Allowable Fill (mm2):	534.55
Reference:	E-75, E-82
Type:	RGS conduit
To:	600 V Vault 2W
Remarks:	Connect to existing conduit (PL-W12)
Description of Changes:	

Included Cable No.	Conductor Type	Area (mm2)
Pull Rope	Soft-Fiber Polyester	0.00

Conduit/Tray No:	0272
Size:	41
From:	*0272
Total Fill (mm2):	0.00
Allowable Fill (mm2):	534.55
Reference:	E-75, E-82
Type:	RGS conduit
To:	TOS/COM Vault #2W
Remarks:	Connect to existing conduit (PL-W12)
Description of Changes:	

Included Cable No.	Conductor Type	Area (mm2)
Pull Rope	Soft-Fiber Polyester	0.00

Conduit/Tray No:	4007
Size:	53
From:	TOS/COM Vault #2W
Total Fill (mm2):	0.00
Allowable Fill (mm2):	879.42
Reference:	E-65
Type:	RGS-PVC coated conduit
To:	PB-COM
Remarks:	
Description of Changes:	

Included Cable No.	Conductor Type	Area (mm2)
Pull Rope	Soft-Fiber Polyester	0.00

Conduit/Tray No:	4011
Size:	41
From:	TOS/COM Vault #1W
Total Fill (mm2):	0.00
Allowable Fill (mm2):	534.55
Reference:	E-81, E-64, E-78
Type:	RGS conduit
To:	PB-COM
Remarks:	
Description of Changes:	

Included Cable No.	Conductor Type	Area (mm2)
Pull Rope	Soft-Fiber Polyester	0.00

Conduit/Tray No:	4219
Size:	41
From:	~~Stub out at Pier W8L~~ PB-RM01
Total Fill (mm2):	~~0.00~~ 227.46
Allowable Fill (mm2):	~~534.55~~ 708.28
Reference:	E-78, E-81
Type:	RGS conduit
To:	600 V Vault 1W
Remarks:	Stub out and cap for future use (PL-W12)
Description of Changes:	Existing conduit, added new cable(s) as listed below due to YBI City Ramp by others.

Included Cable No.	Conductor Type	Area (mm2)
1 Pull Rope	Soft-Fiber Polyester	0.00
UP001-23	1-2/C + Gnd, #8, 600 V, EPR insulation	227.46

Conduit/Tray No:	4220
Size:	41
From:	~~Stub out at Pier W8L~~ PB-RM01 1
Total Fill (mm2):	0.00
Allowable Fill (mm2):	534.55
Reference:	E-78, E-81
Type:	RGS conduit
To:	TOS/COM Vault #1W
Remarks:	Stub out and cap for future use (PL-W12)
Description of Changes:	Revise "From" location due to YBI City Ramp by others. 1

Included Cable No.	Conductor Type	Area (mm2)
Pull Rope	Soft-Fiber Polyester	0.00

Conduit/Tray No:	4910A
Size:	41
From:	Manhole-30
Total Fill (mm2):	~~324.29~~ 0.00 1
Allowable Fill (mm2):	~~708.28~~ 534.55
Reference:	E-81, E-78
Type:	RGS conduit
To:	PB-LTG
Remarks:	
Description of Changes:	Existing conduit, removed cable (s) as listed below due to YBI City Ramp by others.

Included Cable No.	Conductor Type	Area (mm2)
1 ~~A 1010 1~~	~~1 3/C + Gnd, #6, 600 V, EPR insulation~~	~~324.29~~
Pull Rope	Soft-Fiber Polyester	0.00

Conduit/Tray No:	4919
Size:	41
From:	Electrical Vault #3W
Total Fill (mm2):	~~366.10~~ 0.00 1
Allowable Fill (mm2):	~~708.28~~ 534.55
Reference:	E-83, E-76
Type:	RGS conduit
To:	~~PB-LTG~~ PB-2E 1
Remarks:	
Description of Changes:	Existing conduit, removed cable (s) as listed below due to YBI City Ramp by others.

Included Cable No.	Conductor Type	Area (mm2)
1 ~~A 1007 1~~	~~1 3/C + Gnd, #4, 600 V, EPR insulation~~	~~366.10~~
Pull Rope	Soft-Fiber Polyester	0.00

CONTRACT NO. 04-012054

CONTRACT CHANGE ORDER NO 78

SHEET 78 OF 92

5 ADDED PER ADDENDUM No. 5 DATED JULY 30, 2009

CONDUIT AND TRAY SCHEDULE
YBI TRANSITION STRUCTURES GIRDER WB

E-294A

STATE OF CALIFORNIA - DEPARTMENT OF TRANSPORTATION
Caltrans

CONSULTANT FUNCTIONAL SUPERVISOR: BEHZAD GOLEMOHAMMADI
CALCULATED-DESIGNED BY: JEFFRI HALIM
CHECKED BY: ELLERY LUCAS
REVISED BY
DATE REVISED

Dist	COUNTY	ROUTE	KILOMETER POST TOTAL PROJECT	SHEET No.	TOTAL SHEETS
04	SF	80	12.7/13.2	413B R1	806

REGISTERED ELECTRICAL ENGINEER 4/10/09

6-23-08
PLANS APPROVAL DATE

THE STATE OF CALIFORNIA OR ITS OFFICERS OR AGENTS SHALL NOT BE RESPONSIBLE FOR THE ACCURACY OR COMPLETENESS OF ELECTRONIC COPIES OF THIS PLAN SHEET.

REGISTERED PROFESSIONAL ENGINEER FADI WALIEDDINE No. 11365 Exp. 12/31/09 ELECTRICAL STATE OF CALIFORNIA

PB AMERICAS, Inc.
A Parsons Brinckerhoff Company
303 Second St., Suite 700N
San Francisco, CA 94107-1317

REGISTERED PROFESSIONAL ENGINEER SYN YEE CHIN No. 18186 Exp. 09/30/2011 ELECTRICAL STATE OF CALIFORNIA

Syn Yee Chin
FOR REVISION ONLY
1 03/30/2011

5 Caltrans Metric

Conduit/Tray No:	4956	Reference:	E-83, E-75, E-82
Size:	103	Type:	RGS conduit
From:	Electrical Vault #2W	To:	Electrical Vault #3W
Total Fill (mm2):	~~1076.75~~ 710.65 1	Remarks:	
Allowable Fill (mm2):	3324.51 1		

Description of Changes: Existing conduit, removed cable (s) as listed below due to YBI City Ramp by others.

Included Cable No.	Conductor Type	Area (mm2)
1254-1	1-3/C #16, 600 V, EPR insulation	62.07
~~A-1007-1~~	~~1-3/C + Gnd, #4, 600 V, EPR insulation~~	~~366.10~~ 1
A-1008-1	1-3/C + Gnd, #6, 600 V, EPR insulation	324.29
Pull Rope	Soft-Fiber Polyester	0.00
S-1024-1	1-3/C + Gnd, #6, 600 V, EPR insulation	324.29

Conduit/Tray No:	4960	Reference:	E-65, E-82, E-75
Size:	41	Type:	RGS-PVC coated conduit
From:	Electrical Vault #2W	To:	~~PB-LTG~~ PB-2A 1
Total Fill (mm2):	~~324.29~~ 0.00 1	Remarks:	
Allowable Fill (mm2):	~~702.80~~ 534.55 1		

Description of Changes: Existing conduit, removed cable (s) as listed below due to YBI City Ramp by others.

Included Cable No.	Conductor Type	Area (mm2)
~~A-1009-1~~	~~1-3/C + Gnd, #6, 600 V, EPR insulation~~	~~324.29~~ 1
Pull Rope	Soft-Fiber Polyester	0.00

Conduit/Tray No:	4970	Reference:	E-83, E-76
Size:	41	Type:	RGS conduit
From:	~~PB-LTG~~ PB-2E 1	To:	Electrical Vault #3W
Total Fill (mm2):	324.29	Remarks:	
Allowable Fill (mm2):	708.28		

Description of Changes: Revise "From" location due to YBI City Ramp by others. 1

Included Cable No.	Conductor Type	Area (mm2)
A-1008-1	1-3/C + Gnd, #6, 600 V, EPR insulation	324.29
Pull Rope	Soft-Fiber Polyester	0.00

Conduit/Tray No:	4977	Reference:	E-76
Size:	41	Type:	RGS conduit
From:	PB-LTG	To:	PB-LTG
Total Fill (mm2):	0.00	Remarks:	
Allowable Fill (mm2):	534.55		

Description of Changes:

Included Cable No.	Conductor Type	Area (mm2)
Pull Rope	Soft-Fiber Polyester	0.00

Conduit/Tray No:	4977A	Reference:	E-74, E-75
Size:	41	Type:	RGS conduit
From:	PB-LTG	To:	PB-LTG
Total Fill (mm2):	0.00	Remarks:	
Allowable Fill (mm2):	534.55		

Description of Changes:

Included Cable No.	Conductor Type	Area (mm2)
Pull Rope	Soft-Fiber Polyester	0.00

Conduit/Tray No:	4978	Reference:	E-76
Size:	41	Type:	RGS conduit
From:	PB-COM	To:	PB-COM
Total Fill (mm2):	0.00	Remarks:	
Allowable Fill (mm2):	534.55		

Description of Changes:

Included Cable No.	Conductor Type	Area (mm2)
Pull Rope	Soft-Fiber Polyester	0.00

Conduit/Tray No:	4978A	Reference:	E-75
Size:	41	Type:	RGS conduit
From:	PB-COM	To:	PB-COM
Total Fill (mm2):	0.00	Remarks:	
Allowable Fill (mm2):	534.55		

Description of Changes:

Included Cable No.	Conductor Type	Area (mm2)
Pull Rope	Soft-Fiber Polyester	0.00

Conduit/Tray No:	4979	Reference:	E-75, E-82
Size:	78	Type:	RGS conduit
From:	PL-W12 at sta. 53 + 45	To:	TOS/COM Vault #2W
Total Fill (mm2):	0.00	Remarks:	
Allowable Fill (mm2):	1935.24		

Description of Changes:

Included Cable No.	Conductor Type	Area (mm2)
Pull Rope	Soft-Fiber Polyester	0.00

CONTRACT NO. 04-012054

CONTRACT CHANGE ORDER NO 78

SHEET 79 OF 92

5 ADDED PER ADDENDUM No. 5 DATED JULY 30, 2009

CONDUIT AND TRAY SCHEDULE
YBI TRANSITION STRUCTURES GIRDER WB

E-294B

STATE OF CALIFORNIA - DEPARTMENT OF TRANSPORTATION
Caltrans

CONSULTANT FUNCTIONAL SUPERVISOR: BEHZAD GOLEMOHAMMADI
CALCULATED-DESIGNED BY
CHECKED BY
REVISED BY: JEFFRI HALIM
DATE REVISED: ELLERY LUCAS

BORDER LAST REVISED 3/1/2007
RELATIVE BORDER SCALE 0 20 40 60 80
USERNAME => llorico
CU 04251
EA 0120S1

Dist	COUNTY	ROUTE	KILOMETER POST TOTAL PROJECT	SHEET No.	TOTAL SHEETS
04	SF	80	12.7/13.2	413C	806

Caltrans Metric

Syn Yee Chin 3/30/11
REGISTERED ELECTRICAL ENGINEER

PLANS APPROVAL DATE

REGISTERED PROFESSIONAL ENGINEER SYN YEE CHIN No. 18186 Exp. 09/30/2011 ELECTRICAL STATE OF CALIFORNIA

THE STATE OF CALIFORNIA OR ITS OFFICERS OR AGENTS SHALL NOT BE RESPONSIBLE FOR THE ACCURACY OR COMPLETENESS OF ELECTRONIC COPIES OF THIS PLAN SHEET.

PB AMERICAS, Inc.
A Parsons Brinckerhoff Company
303 Second St., Suite 700N
San Francisco, CA 94107-1317

Conduit/Tray No:	4950	Reference:	E-75
Size:	53	Type:	RGS conduit
From:	PB-COM	To:	PB-2E
Total Fill (mm2):	0.00	Remarks:	
Allowable Fill (mm2):	879.42		

Description of Changes: Added new conduit, pull rope as list below due to YBI City Ramp by others.

Included Cable No.	Conductor Type	Area (mm2)
Pull Rope	Soft-Fiber Polyester	0.00

Conduit/Tray No:	4950A	Reference:	E-75, E-76
Size:	53	Type:	RGS conduit
From:	PB-2E	To:	PB-2A
Total Fill (mm2):	0.00	Remarks:	
Allowable Fill (mm2):	879.42		

Description of Changes: Added new conduit, pull rope as list below due to YBI City Ramp by others.

Included Cable No.	Conductor Type	Area (mm2)
Pull Rope	Soft-Fiber Polyester	0.00

Conduit/Tray No:	4950B	Reference:	E-76
Size:	53	Type:	RGS conduit
From:	PB-2A	To:	PB-COM
Total Fill (mm2):	0.00	Remarks:	
Allowable Fill (mm2):	879.42		

Description of Changes: Added new conduit, pull rope as list below due to YBI City Ramp by others.

Included Cable No.	Conductor Type	Area (mm2)
Pull Rope	Soft-Fiber Polyester	0.00

Conduit/Tray No:	4952	Reference:	E-75
Size:	53	Type:	RGS conduit
From:	PB-COM	To:	PB-2E
Total Fill (mm2):	0.00	Remarks:	
Allowable Fill (mm2):	879.42		

Description of Changes: Added new conduit, pull rope as list below due to YBI City Ramp by others.

Included Cable No.	Conductor Type	Area (mm2)
Pull Rope	Soft-Fiber Polyester	0.00

Conduit/Tray No:	4952A	Reference:	E-75, E-76
Size:	53	Type:	RGS conduit
From:	PB-2E	To:	PB-2A
Total Fill (mm2):	0.00	Remarks:	
Allowable Fill (mm2):	879.42		

Description of Changes: Added new conduit, pull rope as list below due to YBI City Ramp by others.

Included Cable No.	Conductor Type	Area (mm2)
Pull Rope	Soft-Fiber Polyester	0.00

Conduit/Tray No:	4952B	Reference:	E-76
Size:	53	Type:	RGS conduit
From:	PB-2A	To:	PB-COM
Total Fill (mm2):	0.00	Remarks:	
Allowable Fill (mm2):	879.42		

Description of Changes: Added new conduit, pull rope as list below due to YBI City Ramp by others.

Included Cable No.	Conductor Type	Area (mm2)
Pull Rope	Soft-Fiber Polyester	0.00

Conduit/Tray No:	4989	Reference:	E-75
Size:	53	Type:	RGS conduit
From:	PB-LTG	To:	PB-2A
Total Fill (mm2):	262.68	Remarks:	
Allowable Fill (mm2):	1165.23		

Description of Changes: Added new conduit, pull rope and cable (s) as list below due to YBI City Ramp by others.

Included Cable No.	Conductor Type	Area (mm2)
Pull Rope	Soft-Fiber Polyester	0.00
S-1002-3	1-3/C + Gnd, #8, 600 V, EPR Insulation	262.68

CONTRACT NO. 04-0120S4

CONTRACT CHANGE ORDER NO 78

SHEET 80 OF 92

CONDUIT AND TRAY SCHEDULE
YBI TRANSITION STRUCTURES GIRDER WB

E-294C

STATE OF CALIFORNIA - DEPARTMENT OF TRANSPORTATION

Caltrans

CONSULTANT FUNCTIONAL SUPERVISOR: BEHZAD GOLEMOHAMMADI

CALCULATED-DESIGNED BY: TOM WU

CHECKED BY: ROCKY GARCIA

REVISED BY

DATE REVISED

RELATIVE BORDER SCALE 0 20 40 60 80

DGN FILE => 40120sua294C.dgn

CU 04251

EA 0120S1

Dist	COUNTY	ROUTE	KILOMETER POST TOTAL PROJECT	SHEET No.	TOTAL SHEETS
04	SF	80	12.7/13.2	413D	806

Caltrans Metric

Syn Yee Chin 3/30/11
REGISTERED ELECTRICAL ENGINEER

PLANS APPROVAL DATE

REGISTERED PROFESSIONAL ENGINEER SYN YEE CHIN No. 18186 Exp. 09/30/2011 ELECTRICAL STATE OF CALIFORNIA

THE STATE OF CALIFORNIA OR ITS OFFICERS OR AGENTS SHALL NOT BE RESPONSIBLE FOR THE ACCURACY OR COMPLETENESS OF ELECTRONIC COPIES OF THIS PLAN SHEET.

PB AMERICAS, Inc.
A Parsons Brinckerhoff Company
303 Second St., Suite 700N
San Francisco, CA 94107-1317

Conduit/Tray No: 4989A | Reference: E-75, E-76
Size: 53 | Type: RGS conduit
From: PB-2A | To: PB-2E
Total Fill (mm2): 0.00 | Remarks:
Allowable Fill (mm2): 879.42
Description of Changes: Added new conduit, pull rope as list below due to YBI City Ramp by others.

Included Cable No.	Conductor Type	Area (mm2)
Pull Rope	Soft-Fiber Polyester	0.00

Conduit/Tray No: 4989B | Reference: E-76
Size: 53 | Type: RGS conduit
From: PB-2E | To: PB-LTG
Total Fill (mm2): 324.29 | Remarks:
Allowable Fill (mm2): 1165.23
Description of Changes: Added new conduit, pull rope and cable (s) as list below due to YBI City Ramp by others.

Included Cable No.	Conductor Type	Area (mm2)
Pull Rope	Soft-Fiber Polyester	0.00
A-1008-1	1-3/C + Gnd, #6, 600 V, EPR Insulation	324.29

Conduit/Tray No: 4990 | Reference: E-75
Size: 53 | Type: RGS conduit
From: PB-LTG | To: PB-2A
Total Fill (mm2): 0.00 | Remarks:
Allowable Fill (mm2): 879.42
Description of Changes: Added new conduit, pull rope as list below due to YBI City Ramp by others.

Included Cable No.	Conductor Type	Area (mm2)
Pull Rope	Soft-Fiber Polyester	0.00

Conduit/Tray No: 4990A | Reference: E-75, E-76
Size: 53 | Type: RGS conduit
From: PB-2A | To: PB-2E
Total Fill (mm2): 0.00 | Remarks:
Allowable Fill (mm2): 879.42
Description of Changes: Added new conduit, pull rope as list below due to YBI City Ramp by others.

Included Cable No.	Conductor Type	Area (mm2)
Pull Rope	Soft-Fiber Polyester	0.00

Conduit/Tray No: 4990B | Reference: E-76
Size: 53 | Type: RGS conduit
From: PB-2E | To: PB-LTG
Total Fill (mm2): 0.00 | Remarks:
Allowable Fill (mm2): 879.42
Description of Changes: Added new conduit, pull rope as list below due to YBI City Ramp by others.

Included Cable No.	Conductor Type	Area (mm2)
Pull Rope	Soft-Fiber Polyester	0.00

Conduit/Tray No: 4985 | Reference: E-52, E-66, E-76, E-83
Size: 53 | Type: RGS conduit
From: 1T23W | To: Overhead Sign "A"
Total Fill (mm2): 426.90 | Remarks:
Allowable Fill (mm2): 681.55
Description of Changes: Added new conduit, pull rope and cable (s) as list below due to YBI City Ramp by others.

Included Cable No.	Conductor Type	Area (mm2)
Pull Rope	Soft-Fiber Polyester	0.00
1105	1-3/C + Gnd, #6, 600 V, EPR Insulation	324.29
UP101-1	1-2/C + Gnd, #12, 600 V, EPR Insulation	324.29

CONTRACT NO. 04-0120S4
CONTRACT CHANGE ORDER NO 78
SHEET 81 OF 92

CONDUIT AND TRAY SCHEDULE
YBI TRANSITION STRUCTURES GIRDER WB

E-294D

STATE OF CALIFORNIA - DEPARTMENT OF TRANSPORTATION
Caltrans
CONSULTANT FUNCTIONAL SUPERVISOR: BEHZAD GOLEMOHAMMADI
CALCULATED-DESIGNED BY: TOM WU
CHECKED BY: ROCKY GARCIA
REVISED BY
DATE REVISED

Dist	COUNTY	ROUTE	KILOMETER POST TOTAL PROJECT	SHEET No.	TOTAL SHEETS
04	SF	80	12.7/13.2	469 R1	806

REGISTERED ELECTRICAL ENGINEER 6/25/08

6-23-08
PLANS APPROVAL DATE

REGISTERED PROFESSIONAL ENGINEER FADI WALIEDDINE No. 11365 Exp. 12/31/09 ELECTRICAL STATE OF CALIFORNIA

THE STATE OF CALIFORNIA OR ITS OFFICERS OR AGENTS SHALL NOT BE RESPONSIBLE FOR THE ACCURACY OR COMPLETENESS OF ELECTRONIC COPIES OF THIS PLAN SHEET.

PB AMERICAS, Inc.
A Parsons Brinckerhoff Company
303 Second St., Suite 700N
San Francisco, CA 94107-1317

Caltrans Metric

REGISTERED PROFESSIONAL ENGINEER SYN YEE CHIN No. 18186 Exp. 09/30/2011 ELECTRICAL STATE OF CALIFORNIA

Syn Yee Chin
FOR REVISION ONLY
1 03/30/2011

Cable/Ckt #: 1096 | Reference: E-41
Function: 480 V Feeder | Conductor Type: 1-3/C + Gnd, #2, 600 V, EPR insulation
From: (E) 480 V LVCC-A Cubicle #19B | To: (E) Manhole-25
Remarks: Splice cable to (E) cable inside MH. The same circuit number installed on previous contract. (For UP-105)
Description Of Changes:

Route	Conduit No.	Route	Conduit No.	Route	Conduit No.	Route	Conduit No.
1	040	2	T20	3	600 V PB	4	0114
5	MH-5	6	0154	7	MH-7	8	0205
9	MH-10	10	0302	11	MH-13	12	0352
13	*0352	14	MH-16	15	0402	16	MH-19
17	0452	18	MH-22	19	*0502	20	0502
21	MH-25						

Cable/Ckt #: 1097 | Reference: E-41
Function: 480 V Feeder | Conductor Type: 1-3/C + Gnd, #2, 600 V, EPR insulation
From: (E) 480 V LVCC-A Cubicle #20A | To: (E) Manhole-25
Remarks: Splice cable to (E) cable inside MH. The same circuit number installed on previous contract. (For UP-106)
Description Of Changes:

Route	Conduit No.	Route	Conduit No.	Route	Conduit No.	Route	Conduit No.
1	040	2	T20	3	600 V PB	4	0114
5	MH-5	6	0154	7	MH-7	8	0205
9	MH-10	10	0302	11	MH-13	12	0352
13	*0352	14	MH-16	15	0402	16	MH-19
17	0452	18	MH-22	19	*0502	20	0502
21	MH-25						

Cable/Ckt #: 1098 | Reference: E-41
Function: 480 V Feeder | Conductor Type: 1-3/C + Gnd, #2, 600 V, EPR insulation
From: (E) 480 V LVCC-A Cubicle #20B | To: (E) Manhole-25
Remarks: Splice cable to (E) cable inside MH. The same circuit number installed on previous contract. (For UP-107)
Description Of Changes:

Route	Conduit No.	Route	Conduit No.	Route	Conduit No.	Route	Conduit No.
1	041	2	T20	3	600 V PB	4	0114
5	MH-5	6	0154	7	MH-7	8	0205
9	MH-10	10	0302	11	MH-13	12	0352
13	*0352	14	MH-16	15	0402	16	MH-19
17	0452	18	MH-22	19	*0502	20	0502
21	MH-25						

Cable/Ckt #: 1099 | Reference: E-41
Function: 480 V Feeder | Conductor Type: 1-3/C + Gnd, #2, 600 V, EPR insulation
From: (E) 480 V LVCC-A Cubicle #25A | To: (E) Manhole-25
Remarks: Splice cable to (E) cable inside MH. The same circuit number installed on previous contract. (For UP-108)
Description Of Changes:

Route	Conduit No.	Route	Conduit No.	Route	Conduit No.	Route	Conduit No.
1	044	2	T20	3	600 V PB	4	0114
5	MH-5	6	0154	7	MH-7	8	0205
9	MH-10	10	0302	11	MH-13	12	0352
13	*0352	14	MH-16	15	0402	16	MH-19
17	0452	18	MH-22	19	*0502	20	0502
21	MH-25						

Cable/Ckt #: 1105 | Reference: E-41, E-55
Function: 480 V Power | Conductor Type: 1-3/C + Gnd, #6, 600 V, EPR insulation
From: (E) 480 V LVCC-A Cubicle #35 | To: Overhead Sign "A"
Remarks:
Description Of Changes: Relocated overhead sign due to YBI City Ramp by others. 1

Route	Conduit No.	Route	Conduit No.	Route	Conduit No.	Route	Conduit No.
1	048	2	T20	3	600 V PB	4	0126
5	MH-5	6	0170	7	MH-7	8	0228
9	MH-30	10	4211	11	E. Vault #1W	12	1T21W
13	~~4851~~ 4930	14	PB-2E	15	4930	16	E. Vault #2W 1
17	1T22W	18	4957	19	E. Vault #3W	20	1T23W
21	4985						

CONTRACT NO. 04-0120S4

CONTRACT CHANGE ORDER NO 78

SHEET 82 OF 92

CABLE AND CIRCUIT SCHEDULE

E-350

STATE OF CALIFORNIA - DEPARTMENT OF TRANSPORTATION
Caltrans
CONSULTANT FUNCTIONAL SUPERVISOR: BEHZAD GOLEMOHAMMADI
CALCULATED-DESIGNED BY: CARMELO RIVERA
CHECKED BY: ELLERY LUCAS
REVISED BY
DATE REVISED

Dist	COUNTY	ROUTE	KILOMETER POST TOTAL PROJECT	SHEET No.	TOTAL SHEETS
04	SF	80	12.7/13.2	491 R1	806

REGISTERED ELECTRICAL ENGINEER 6/25/08

6-23-08
PLANS APPROVAL DATE

REGISTERED PROFESSIONAL ENGINEER FADI WALIEDDINE No. 11365 Exp. 12/31/09 ELECTRICAL STATE OF CALIFORNIA

THE STATE OF CALIFORNIA OR ITS OFFICERS OR AGENTS SHALL NOT BE RESPONSIBLE FOR THE ACCURACY OR COMPLETENESS OF ELECTRONIC COPIES OF THIS PLAN SHEET.

PB AMERICAS, Inc.
A Parsons Brinckerhoff Company
303 Second St., Suite 700N
San Francisco, CA 94107-1317

Caltrans Metric

REGISTERED PROFESSIONAL ENGINEER SYN YEE CHIN No. 18186 Exp. 09/30/2011 ELECTRICAL STATE OF CALIFORNIA

Syn Yee Chin
FOR REVISION ONLY
△1 03/30/2011

Cable/Ckt #: A-1006-3 | Reference: E-55
Function: 480 V Lighting | Conductor Type: 1-3/C + Gnd, #8, 600 V, EPR insulation
From: PB-2J (Loc. Electrical Vault #2W) | To: PB-LTG (Platfrom #2W)
Remarks: Splice cables A-1006-1 and A-1006-2 inside PB-2J. (Multi-conductor to single conductor)
Description Of Changes:

Route	Conduit No.	Route	Conduit No.	Route	Conduit No.	Route	Conduit No.
1	PB-2J	2	4914	3	1T22W	4	4958
5	PB-LTG						

Cable/Ckt #: A-1006-3A | Reference: E-55
Function: 480 V Lighting | Conductor Type: 3 + 1 Gnd, #8, #10, 600 V, RHH/RHW insulation
From: PB-LTG (Platfrom #2W) | To: PB-LTG
Remarks: For Lighting Poles 1022-4,-5,-6,-7, -8,-9,-10 & 1023-1, -2,-3, 1024-1,-2 & -3.
Description Of Changes:

Route	Conduit No.	Route	Conduit No.	Route	Conduit No.	Route	Conduit No.
1	PB-LTG	2	1718	3	1717	4	1716
5	1715	6	1714	7	1713	8	1712
9	1719	10	1720	11	1721	12	1722
13	1723	14	1724	15	1725	16	1727

Cable/Ckt #: A-1007-1 | Reference: E-41, E-77
Function: 480 V Lighting | Conductor Type: 1-3/C + Gnd, #4, 600 V, EPR insulation
From: (E) 480 V LVCC-A cubicle #22 | To: PB-LTG (Bent W5L)
Remarks:
Description Of Changes:

Route	Conduit No.	Route	Conduit No.	Route	Conduit No.	Route	Conduit No.
1	041	2	T20	3	600 V PB	4	0124
5	MH-5	6	0168	7	MH-7	8	0226
9	MH-30	10	4212	11	E. Vault #1W	12	1T21W
13	4901	14	PB-2E	15	4928	16	E. Vault #2W
17	1T22W	18	4960	19	PB-LTG		

5

Cable/Ckt #: A-1007-2 | Reference: E-77
Function: 480 V Lighting | Conductor Type: 3 + 1 Gnd, #6, #8, 600 V, RHH/RHW insulation
From: PB-LTG (Bent W5L) | To: Pull Box PB-LTG
Remarks:
Description Of Changes: Cable deleted due to YBI City Ramp by others. △1

Route	Conduit No.	Route	Conduit No.	Route	Conduit No.	Route	Conduit No.
1	1324	2	1323	3	1322	4	1326
5	1327	6	1328	7	1329	8	1331
9	1332	10	1333	11	1334		

Cable/Ckt #: A-1008-1 | Reference: E-41, E-77
Function: 480 V Lighting | Conductor Type: 1-3/C + Gnd, #6, 600 V, EPR insulation
From: (E) 480 V LVCC-A cubicle #23 | To: PB-LTG (Bent W4L W3L) △1
Remarks:
Description Of Changes: Revised routing due to YBI City Ramp by others. △1

Route	Conduit No.	Route	Conduit No.	Route	Conduit No.	Route	Conduit No.
1	041	2	T20	3	600 V PB	4	0124
5	MH-5	6	0168	7	MH-7	8	0226
9	MH-30	10	4213	11	E. Vault #1W	12	1T21W
13	4901	14	PB-2E	15	4929	16	E. Vault #2W
17	1T22W	18	4956	19	E. Vault #3W	20	1T23W
21	4970	22	~~PB-LTG~~ PB-2F	23	4989B	24	PB-LTG
25	1339	26	PB-LTG				

Cable/Ckt #: A-1008-2 | Reference: E-77
Function: 480 V Lighting | Conductor Type: 3 + 1 Gnd, #8, #10, 600 V, RHH/RHW insulation
From: PB-LTG (Bent W4L W3L) △1 | To: Pull Box PB-LTG
Remarks:
Description Of Changes: Revised routing due to YBI City Ramp by others. △1

Route	Conduit No.	Route	Conduit No.	Route	Conduit No.	Route	Conduit No.
1	~~1333~~ 1340	2	~~1334~~ 1341	3	~~1335~~ 1342	4	~~1336~~ 1344
5	~~1338~~ 1345	6	~~1339~~ 1346	~~7~~	~~1340~~	~~8~~	~~1341~~
~~9~~	~~1342~~	~~10~~	~~1344~~	~~11~~	~~1345~~	~~12~~	~~1346~~

△1

CONTRACT NO. 04-0120S4
CONTRACT CHANGE ORDER NO. 78
SHEET 83 OF 92

CABLE AND CIRCUIT SCHEDULE

5 REVISED PER ADDENDUM No. 5 DATED JULY 30, 2009

E-372

REVISED BY | DATE REVISED
CARMELO RIVERA | ELLERY LUCAS
CALCULATED-DESIGNED BY | CHECKED BY
FUNCTIONAL SUPERVISOR | BEHZAD GOLEMOHAMMADI
CONSULTANT FUNCTIONAL SUPERVISOR
STATE OF CALIFORNIA - DEPARTMENT OF TRANSPORTATION
Caltrans

Dist	COUNTY	ROUTE	KILOMETER POST TOTAL PROJECT	SHEET No.	TOTAL SHEETS
04	SF	80	12.7/13.2	492 R1	806

REGISTERED ELECTRICAL ENGINEER 6/25/08

6-23-08
PLANS APPROVAL DATE

REGISTERED PROFESSIONAL ENGINEER FADI WALIEDDINE No. 11465 Exp. 12/31/09 ELECTRICAL STATE OF CALIFORNIA

THE STATE OF CALIFORNIA OR ITS OFFICERS OR AGENTS SHALL NOT BE RESPONSIBLE FOR THE ACCURACY OR COMPLETENESS OF ELECTRONIC COPIES OF THIS PLAN SHEET.

PB AMERICAS, Inc.
A Parsons Brinckerhoff Company
303 Second St., Suite 700N
San Francisco, CA 94107-1317

Caltrans Metric

REGISTERED PROFESSIONAL ENGINEER SYN YEE CHIN No. 18186 Exp. 09/30/2011 ELECTRICAL STATE OF CALIFORNIA

Syn Yee Chin
FOR REVISION ONLY
1 03/30/2011

Cable/Ckt #: A-1009-1
Reference: E-41, E-77
Function: 480 V Lighting
Conductor Type: 1-3/C + Gnd, #6, 600 V, EPR insulation
From: (E) 480 V LVCC-A cubicle #17
To: ~~PB LTG (Bent W5L)~~ MH-5 1
Remarks: This cable ends inside MH-5 for future extension due to YBI City Ramp by others. 1
Description Of Changes:

Route	Conduit No.	Route	Conduit No.	Route	Conduit No.	Route	Conduit No.
1	040	2	T20	3	600 V PB	4	0124
5	MH-5	~~6~~	~~0168~~	~~7~~	~~MH-7~~	~~8~~	~~0226~~
~~9~~	~~MH-30~~	~~10~~	~~4212~~	~~11~~	~~E. Vault #2W~~	~~12~~	~~1T21W~~
~~13~~	~~4901~~	~~14~~	~~PB-2E~~	~~15~~	~~4928~~	~~16~~	~~E. Vault #2W~~
~~17~~	~~1T22W~~	~~18~~	~~4960~~	~~19~~	~~PB-LTG~~		

1

Cable/Ckt #: A-1011-1
Reference: E-41
Function: 480 V Lighting
Conductor Type: 1-3/C + Gnd, #2, 600 V, EPR insulation
From: (E) 480 V LVCC-A cubicle #37
To: (E) Manhole-25
Remarks: Splice cable to (E) cable inside MH. The same circuit number installed on previous contract.
Description Of Changes:

Route	Conduit No.	Route	Conduit No.	Route	Conduit No.	Route	Conduit No.
1	052	2	T20	3	600 V PB	4	0123
5	MH-5	6	0167	7	MH-7	8	0208
9	MH-10	10	0305	11	MH-13	12	0355
13	*0355	14	MH-16	15	0405	16	MH-19
17	0455	18	MH-22	19	*0505	20	0505
21	MH-25						

Cable/Ckt #: A-1012-1
Reference: E-41
Function: 480 V Lighting
Conductor Type: 1-3/C + Gnd, #2, 600 V, EPR insulation
From: (E) 480 V LVCC-A Cubicle #38
To: (E) Manhole-25
Remarks: Splice cable to (E) cable inside MH. The same circuit number installed on previous contract.
Description Of Changes:

Route	Conduit No.	Route	Conduit No.	Route	Conduit No.	Route	Conduit No.
1	052	2	T20	3	600 V PB	4	0123
5	MH-5	6	0167	7	MH-7	8	0208
9	MH-10	10	0305	11	MH-13	12	0355
13	*0355	14	MH-16	15	0405	16	MH-19
17	0455	18	MH-22	19	*0505	20	0505
21	MH-25						

Cable/Ckt #: A-1013-1
Reference: E-41
Function: 480 V Lighting
Conductor Type: 1-3/C + Gnd, #2, 600 V, EPR insulation
From: (E) 480 V LVCC-A cubicle #39
To: (E) Manhole-25
Remarks: Splice cable to (E) cable inside MH. The same circuit number installed on previous contract.
Description Of Changes:

Route	Conduit No.	Route	Conduit No.	Route	Conduit No.	Route	Conduit No.
1	052	2	T20	3	600 V PB	4	0123
5	MH-5	6	0167	7	MH-7	8	0208
9	MH-10	10	0305	11	MH-13	12	0355
13	*0355	14	MH-16	15	0405	16	MH-19
17	0455	18	MH-22	19	*0505	20	0505
21	MH-25						

Cable/Ckt #: A-1014-1
Reference: E-42
Function: 480 V Lighting
Conductor Type: 1-3/C + Gnd, #2, 600 V, EPR insulation
From: (E) 480 V LVCC-A Cubicle #40
To: (E) Manhole-25
Remarks: Splice cable to (E) cable inside MH. The same circuit number installed on previous contract.
Description Of Changes:

Route	Conduit No.	Route	Conduit No.	Route	Conduit No.	Route	Conduit No.
1	053	2	T20	3	600 V PB	4	0123
5	MH-5	6	0167	7	MH-7	8	0208
9	MH-10	10	0305	11	MH-13	12	0355
13	*0355	14	MH-16	15	0405	16	MH-19
17	0455	18	MH-22	19	*0505	20	0505
21	MH-25						

CONTRACT NO. 04-012054

CONTRACT CHANGE ORDER NO 78

SHEET 84 OF 92

CABLE AND CIRCUIT SCHEDULE

E-373

REVISED BY | DATE REVISED
CARMELO RIVERA | ELLERY LUCAS
CALCULATED-DESIGNED BY | CHECKED BY
CONSULTANT FUNCTIONAL SUPERVISOR: BEHZAD GOLEMOHAMMADI
STATE OF CALIFORNIA - DEPARTMENT OF TRANSPORTATION
Caltrans

Dist	COUNTY	ROUTE	KILOMETER POST TOTAL PROJECT	SHEET No.	TOTAL SHEETS
04	SF	80	12.7/13.2	503 R1	806

REGISTERED ELECTRICAL ENGINEER 6/25/08

6-23-08
PLANS APPROVAL DATE

REGISTERED PROFESSIONAL ENGINEER FADI WALIEDDINE No. 11465 Exp. 12/31/09 ELECTRICAL STATE OF CALIFORNIA

THE STATE OF CALIFORNIA OR ITS OFFICERS OR AGENTS SHALL NOT BE RESPONSIBLE FOR THE ACCURACY OR COMPLETENESS OF ELECTRONIC COPIES OF THIS PLAN SHEET.

PB AMERICAS, Inc.
A Parsons Brinckerhoff Company
303 Second St., Suite 700N
San Francisco, CA 94107-1317

REGISTERED PROFESSIONAL ENGINEER SYN YEE CHIN No. 18186 Exp. 09/30/2011 ELECTRICAL STATE OF CALIFORNIA

Syn Yee Chin
FOR REVISION ONLY
1 03/30/2011

Caltrans Metric

Cable/Ckt #:	PLW01	Reference:	E-147, E-152
Function:	Low Level Signal	Conductor Type:	10 DLC
From:	Controller Cabinet TOS-03WB	To:	PL-W01 PB at Sta 54+15
Remarks:			
Description Of Changes:			

Route	Conduit No.	Route	Conduit No.	Route	Conduit No.	Route	Conduit No.
1	4079	2	TOS-03WA	3	4072	4	PB-2B
5	4059	6	TC Vault 3W	7	1T43W	8	4969
9	PL-W01						

Cable/Ckt #:	PLW11	Reference:	E-147, E-152
Function:	Low Level Signal	Conductor Type:	12 DLC
From:	PL-W11	To:	Controller Cabinet TOS-01A
Remarks:			
Description Of Changes:			

Route	Conduit No.	Route	Conduit No.	Route	Conduit No.	Route	Conduit No.
1	4044	2	PB-2B	3	4926	4	TC Vault #1W
5	1T41W	5	1T41W	6	4915	7	PL-W11

Cable/Ckt #:	S-1001	Reference:	E-53
Function:	480 V Lighting	Conductor Type:	3-1/C #10, 600 V, RHH/RHW insulation
From:	Barrier pull boxes PB-LTG	To:	Roadway Safety Lighting
Remarks:	For Light Poles 1001-16 to 1001-1		
Description Of Changes:			

Route	Conduit No.	Route	Conduit No.	Route	Conduit No.	Route	Conduit No.
1	FIELD						

Cable/Ckt #:	S-1001-1	Reference:	E-41, E-53
Function:	480 V Lighting	Conductor Type:	1-3/C + Gnd, #8, 600 V, EPR insulation
From:	(E) 480 V LVCC-A Cubicle #15	To:	~~Pull Box PB-LTG~~ MH-5 1
Remarks:	This cable ends inside MH-5 for future extention YBI City Ramp by others. 1		
Description Of Changes:			

Route	Conduit No.	Route	Conduit No.	Route	Conduit No.	Route	Conduit No.
1	037	2	T20	3	600 V PB	4	0125
5	MH-5	~~6~~	~~0168~~	~~7~~	~~MH-7~~	~~8~~	~~0226~~
~~9~~	~~MH-30~~	~~10~~	~~4913~~				

1

5

Cable/Ckt #:	S-1001-2	Reference:	E-53
Function:	480 V Lighting	Conductor Type:	3 + 1 Gnd, #8, #10, 600 V, RHH/RHW insulation
From:	Pull Box PB-LTG	To:	Barrier pull Boxes PB-LTG
Remarks:	For Light Poles S-1001-3 through S-1001-16		
Description Of Changes:			

Route	Conduit No.	Route	Conduit No.	Route	Conduit No.	Route	Conduit No.
1	1306	2	1305	3	1304	4	1303
5	1302	6	1301	7	1546	8	1547
9	1545	10	1544	11	1543	12	1542
13	1541	14	1540	15	1778	16	1779
17	1612	18	1613				

Cable/Ckt #:	S-1002	Reference:	E-53
Function:	480 V Lighting	Conductor Type:	3-1/C #10, 600 V, RHH/RHW insulation
From:	Barrier pull Boxes PB-LTG	To:	Transition Structure Roadway Safety Ltg.
Remarks:	For Light Poles 1002-1 to 1002-10		
Description Of Changes:			

Route	Conduit No.	Route	Conduit No.	Route	Conduit No.	Route	Conduit No.
1	FIELD						

Cable/Ckt #:	S-1002-1	Reference:	E-41, E-53
Function:	480 V Lighting	Conductor Type:	1-3/C + Gnd, #8, 600 V, EPR insulation
From:	(E) 480 V LVCC-A Cubicle #16	To:	Pull Box PB-LTG
Remarks:	Splice with cable S-1002-2 & S-1002-3 in MH-30. (Multi-conductor to single conductor)		
Description Of Changes:			

Route	Conduit No.	Route	Conduit No.	Route	Conduit No.	Route	Conduit No.
1	037	2	T20	3	600 V PB	4	0125
5	MH-5	6	0169	7	MH-7	8	0227
9	MH-30						

CONTRACT NO. 04-012054

CONTRACT CHANGE ORDER NO 78

SHEET 85 OF 92

CABLE AND CIRCUIT SCHEDULE

5 REVISED PER ADDENDUM No. 5 DATED JULY 30, 2009

E-384

REVISED BY | DATE REVISED
CARMELO RIVERA | ELLERY LUCAS
CALCULATED-DESIGNED BY | CHECKED BY
CONSULTANT FUNCTIONAL SUPERVISOR
BEHZAD GOLEMOHAMMADI
STATE OF CALIFORNIA - DEPARTMENT OF TRANSPORTATION
Caltrans

Dist	COUNTY	ROUTE	KILOMETER POST TOTAL PROJECT	SHEET No.	TOTAL SHEETS
04	SF	80	12.7/13.2	504 R1	806

REGISTERED ELECTRICAL ENGINEER 6/25/08

6-23-08
PLANS APPROVAL DATE

THE STATE OF CALIFORNIA OR ITS OFFICERS OR AGENTS SHALL NOT BE RESPONSIBLE FOR THE ACCURACY OR COMPLETENESS OF ELECTRONIC COPIES OF THIS PLAN SHEET.

REGISTERED PROFESSIONAL ENGINEER FADI WALIEDDINE No. 11465 Exp. 12/31/09 ELECTRICAL STATE OF CALIFORNIA

PB AMERICAS, Inc.
A Parsons Brinckerhoff Company
303 Second St., Suite 700N
San Francisco, CA 94107-1317

REGISTERED PROFESSIONAL ENGINEER SYN YEE CHIN No. 18186 Exp. 09/30/2011 ELECTRICAL STATE OF CALIFORNIA

Syn Yee Chin
FOR REVISION ONLY
1 03/30/2011

Caltrans Metric

Cable/Ckt #:	S-1002-2	Reference:	E-53
Function:	480 V Lighting	Conductor Type:	1-3/C + Gnd, #8, 600 V, EPR insulation
From:	Manhole-30	To:	PB-LTG (Bent W8L)
Remarks:	Splice with cable S-1002-1 and S-1002-3 in MH-30. (Multi-conductor to single conductor)		
Description Of Changes:			

Route	Conduit No.	Route	Conduit No.	Route	Conduit No.	Route	Conduit No.
1	MH-30	2	4912	3	PB-LTG		

Cable/Ckt #:	S-1002-2A	Reference:	E-53
Function:	480 V Lighting	Conductor Type:	3 + 1 Gnd, #8, #10, 600 V, RHH/RHW insulation
From:	PB-LTG (Bent W8L)	To:	PB-LTG
Remarks:	For Light Poles 1002-11, 1022-1, -2, & -3.		
Description Of Changes:	Reroute cable due to YBI City Ramp by others. 1		

Route	Conduit No.	Route	Conduit No.	Route	Conduit No.	Route	Conduit No.
1	~~1307~~ 1375	2	~~1308~~ 1306	3	~~1310~~ 1307	4	~~1309~~ 1308
5	1310	6	1309				

Cable/Ckt #:	S-1002-3	Reference:	E-53
Function:	480 V Lighting	Conductor Type:	1-3/C + Gnd, #8, 600 V, EPR insulation
From:	Manhole-30	To:	PB-LTG (Bent W5L)
Remarks:	Splice with cable S-1002-1 and S-1002-2 in MH-30. (Multi-conductor to single conductor)		
Description Of Changes:	Reroute cable due to YBI City Ramp by others. 1		

Route	Conduit No.	Route	Conduit No.	Route	Conduit No.	Route	Conduit No.
1	MH-30	2	4211	3	E. Vault #1W	4	1T21W
5	4901	6	PB-2E	7	4928	8	E. Vault #2W
9	1T22W	10	4920	11	~~PB-LTG~~ PB-2A	12	4989
13	PB-LTG						

Cable/Ckt #:	S-1002-3A	Reference:	E-53
Function:	480 V Lighting	Conductor Type:	3 + 1 Gnd, #8, #10, 600 V, RHH/RHW insulation
From:	PB-LTG (Bent W5L)	To:	PB-LTG
Remarks:	For Light Poles 1022-4, -5, -6. -7, -8, -9, & -10.		
Description Of Changes:	Reroute cable due to YBI City Ramp by others. 1		

Route	Conduit No.	Route	Conduit No.	Route	Conduit No.	Route	Conduit No.
1	~~1324~~ 1323	2	~~1323~~ 1322	3	~~1322~~ 1321	4	~~1321~~ 1320
5	~~1320~~ 1319	6	~~1319~~ 1318	7	~~1318~~ 1315	8	~~1315~~ 1313
9	~~1313~~						

Cable/Ckt #:	S-1021	Reference:	E-54
Function:	480 V Lighting	Conductor Type:	3-1/C #10, 600 V, RHH/RHW insulation
From:	Roadway Lighting Fixtures	To:	Barrier pull boxes PB-LTG
Remarks:	For Light Poles 1021-1 to 1021-3 and 1021-13,14,15 and 16.		
Description Of Changes:			

Route	Conduit No.	Route	Conduit No.	Route	Conduit No.	Route	Conduit No.
1	FIELD						

Cable/Ckt #:	S-1021-1	Reference:	E-41, E-54
Function:	480 V Lighting	Conductor Type:	1-3/C + Gnd, #8, 600 V, EPR insulation
From:	(E) 480 V LVCC-A Cubicle #27	To:	PB-LTG (Platform #1W)
Remarks:	Splice inside PB-LTG (Multi-conductor to single conductor)		
Description Of Changes:			

Route	Conduit No.	Route	Conduit No.	Route	Conduit No.	Route	Conduit No.
1	044	2	T20	3	600 V PB	4	0125
5	MH-5	6	0169	7	MH-7	8	0227
9	MH-30	10	4211	11	E. Vault #1W	12	1T21W
13	4019						

Cable/Ckt #:	S-1021-2	Reference:	E-54
Function:	480 V Lighting	Conductor Type:	3 + 1 Gnd, #8, #10, 600 V, RHH/RHW insulation
From:	PB-LTG (Platform #1W)	To:	PB-LTG
Remarks:	For Light Poles 1021-7 to 1021-12.		
Description Of Changes:			

Route	Conduit No.	Route	Conduit No.	Route	Conduit No.	Route	Conduit No.
1	PB-LTG	2	1705	3	1704	4	1703
5	1702	6	1701	7	1776	8	PB-LTG

CONTRACT NO. 04-012054

CONTRACT CHANGE ORDER NO 78

SHEET 86 OF 92

CABLE AND CIRCUIT SCHEDULE

E-385

REVISED BY | DATE REVISED | CARMELO RIVERA | ELLERY LUCAS | CALCULATED-DESIGNED BY | CHECKED BY | CONSULTANT FUNCTIONAL SUPERVISOR | BEHZAD GOLEMOHAMMADI

STATE OF CALIFORNIA - DEPARTMENT OF TRANSPORTATION

Caltrans

Dist	COUNTY	ROUTE	KILOMETER POST TOTAL PROJECT	SHEET No.	TOTAL SHEETS
04	SF	80	12.7/13.2	506A	806

Caltrans Metric

Syn Yee Chin 3/30/11
REGISTERED ELECTRICAL ENGINEER

PLANS APPROVAL DATE

REGISTERED PROFESSIONAL ENGINEER SYN YEE CHIN No. 18186 Exp. 09/30/2011 ELECTRICAL STATE OF CALIFORNIA

THE STATE OF CALIFORNIA OR ITS OFFICERS OR AGENTS SHALL NOT BE RESPONSIBLE FOR THE ACCURACY OR COMPLETENESS OF ELECTRONIC COPIES OF THIS PLAN SHEET.

PB AMERICAS, Inc.
A Parsons Brinckerhoff Company
303 Second St., Suite 700N
San Francisco, CA 94107-1317

Cable/Ckt #: S-1025-1
Reference: E-41
Function: 480 V Lighting
Conductor Type: 1-3/C + Gnd, #8, 600 V, EPR insulation
From: (E) 480V LVCC-A cubicle 33
To: MH-5
Remarks: This cable ends inside MH-5 for future extension to YBI City Ramp by others
Description Of Changes:

Route	Conduit No.	Route	Conduit No.	Route	Conduit No.	Route	Conduit No.
1	048	2	T20	3	PB-600	4	0111
5	MH-5						

Cable/Ckt #: S-1026-1
Reference: E-41
Function: 480 V Lighting
Conductor Type: 1-3/C + Gnd, #8, 600 V, EPR insulation
From: (E) 480V LVCC-A cubicle 34
To: MH-5
Remarks: This cable ends inside MH-5 for future extension to YBI City Ramp by others
Description Of Changes:

Route	Conduit No.	Route	Conduit No.	Route	Conduit No.	Route	Conduit No.
1	048	2	T20	3	PB-600	4	0111
5	MH-5						

Cable/Ckt #: UP001-23
Reference: E-41E, E-78
Function: 120 V Power
Conductor Type: 1-2/C + Gnd, #8, 600 V, EPR insulation
From: 208/120V Utility Panel UP-001
To: PB-RM01
Remarks:
Description Of Changes: Added Metering Controller Cabinet due to YBI City Ramp by others.

Route	Conduit No.	Route	Conduit No.	Route	Conduit No.	Route	Conduit No.
1	219	2	T21	3	T20	4	TB-600
5	0111	6	MH-5	7	0160	8	MH-7
9	0215	10	MH-30	11	4212	12	E. Vault #1W
13	4219	14	PB-RM01				

CONTRACT NO. 04-0120S4
CONTRACT CHANGE ORDER NO 78
SHEET 87 OF 92

CABLE AND CIRCUIT SCHEDULE

E-387A

STATE OF CALIFORNIA - DEPARTMENT OF TRANSPORTATION
Caltrans
CONSULTANT FUNCTIONAL SUPERVISOR: BEHZAD GOLEMOHAMMADI
CALCULATED-DESIGNED BY: TOM WU
CHECKED BY: ROCKY GARCIA
REVISED BY
DATE REVISED

RELATIVE BORDER SCALE 0 20 40 60 80
DGN FILE => 40120sua387A.dgn
CU 04251
EA 0120S1

Dist	COUNTY	ROUTE	KILOMETER POST TOTAL PROJECT	SHEET No.	TOTAL SHEETS
04	SF	80	12.7/13.2	511 R1	806

REGISTERED ELECTRICAL ENGINEER 6/25/08

6-23-08
PLANS APPROVAL DATE

THE STATE OF CALIFORNIA OR ITS OFFICERS OR AGENTS SHALL NOT BE RESPONSIBLE FOR THE ACCURACY OR COMPLETENESS OF ELECTRONIC COPIES OF THIS PLAN SHEET.

REGISTERED PROFESSIONAL ENGINEER FADI WALIEDDINE No. 11465 Exp. 12/31/09 ELECTRICAL STATE OF CALIFORNIA

PB AMERICAS, Inc.
A Parsons Brinckerhoff Company
303 Second St., Suite 700N
San Francisco, CA 94107-1317

REGISTERED PROFESSIONAL ENGINEER SYN YEE CHIN No. 18186 Exp. 09/30/2011 ELECTRICAL STATE OF CALIFORNIA

Syn Yee Chin
FOR REVISION ONLY
1 03/30/2011

Caltrans Metric

Cable/Ckt #: S-3051-1 | Reference: E-45
Function: 480 V Lighting | Conductor Type: 1-3/C + Gnd, #4, 600 V, EPR insulation
From: (E) 480 V LVCC-B Cubicle #62 | To: (E) Manhole-25
Remarks: Splice cable to (E) cable inside MH. The same circuit number installed on previous contract.
Description Of Changes:

Route	Conduit No.	Route	Conduit No.	Route	Conduit No.	Route	Conduit No.
1	121	2	T31	3	T30	4	600 V PB
5	*0080	6	0080	7	MH-7	8	0232
9	MH-10	10	0328	11	MH-13	12	0378
13	*0378	14	MH-16	15	0428	16	MH-19
17	0478	18	MH-22	19	*0528	20	0528
21	MH-25						

Cable/Ckt #: S-3052-1 | Reference: E-45
Function: 480 V Lighting | Conductor Type: 1-3/C + Gnd, #2, 600 V, EPR insulation
From: (E) 480 V LVCC-B Cubicle #63 | To: (E) Manhole-25
Remarks: Splice cable to (E) cable inside MH. The same circuit number installed on previous contract.
Description Of Changes:

Route	Conduit No.	Route	Conduit No.	Route	Conduit No.	Route	Conduit No.
1	119	2	T31	3	T30	4	600 V PB
5	*0080	6	0080	7	MH-7	8	0232
9	MH-10	10	0328	11	MH-13	12	0378
13	*0378	14	MH-16	15	0428	16	MH-19
17	0478	18	MH-22	19	*0528	20	0528
21	MH-25						

Cable/Ckt #: S-3053-1 | Reference: E-45
Function: 480 V Lighting | Conductor Type: 1-3/C + Gnd, #4, 600 V, EPR insulation
From: (E) 480 V LVCC-B Cubicle #64 | To: (E) Manhole-25
Remarks: Splice cable to (E) cable inside MH. The same circuit number installed on previous contract.
Description Of Changes:

Route	Conduit No.	Route	Conduit No.	Route	Conduit No.	Route	Conduit No.
1	121	2	T31	3	T30	4	600 V PB
5	*0080	6	0080	7	MH-7	8	0232
9	MH-10	10	0328	11	MH-13	12	0378
13	*0378	14	MH-16	15	0428	16	MH-19
17	0478	18	MH-22	19	*0528	20	0528
21	MH-25						

5

Cable/Ckt #: S-3056-1 | Reference: E-42
Function: 480 V Lighting | Conductor Type: 1-3/C + Gnd, #6, 600 V, EPR insulation
From: (E) 480 V LVCC-A Cubicle #55 | To: (E) Manhole-25
Remarks: Splice cable to (E) cable inside MH. The same circuit number installed on previous contract.
Description Of Changes:

Route	Conduit No.	Route	Conduit No.	Route	Conduit No.	Route	Conduit No.
1	062	2	T20	3	600 V PB	4	0116
5	MH-5	6	0158	7	MH-7	8	0209
9	MH-10	10	0306	11	MH-13	12	0356
13	MH-16	14	0406	15	MH-19	16	0456
17	MH-22	18	0506	19	MH-25		

5

Cable/Ckt #: UP101-1 | Reference: E-70
Function: 120 V Control Power | Conductor Type: 2 + 1 Gnd, #12, #12, 600 V, RHH/RHW insulation
From: 208/120 V Utility Panel UP-101 | To: Overhead Sign "A"
Remarks:
Description Of Changes: Relocated overhead sign due to YBI City Ramp by others. 1

Route	Conduit No.	Route	Conduit No.	Route	Conduit No.	Route	Conduit No.
1	UP-101	2	4002	3	Wireway #1W	4	4922
5	E. Vault #1W	6	~~4951~~ 1T21W	7	4903	8	PB-2E
9	4930	10	E. Vault #2W	11	1T22W	12	4957
13	E. Vault #3W	14	1T23W	15	4985		

1

Cable/Ckt #: UP101-10 | Reference: E-70
Function: 120 V Power | Conductor Type: 2 + 1 Gnd, #10, #10, 600 V, RHH/RHW insulation
From: 208/120 V Utility Panel UP-101 | To: Controller Cabinet TOS-01WA
Remarks:
Description Of Changes:

Route	Conduit No.	Route	Conduit No.	Route	Conduit No.	Route	Conduit No.
1	UP-101	2	4002	3	Wireway #1W	4	78 mm Nipple
5	TOS-01WA						

CONTRACT NO. 04-012054

CONTRACT CHANGE ORDER NO 78

SHEET 88 OF 92

5 REVISED PER ADDENDUM No. 5 DATED JULY 30, 2009

CABLE AND CIRCUIT SCHEDULE

E-392

STATE OF CALIFORNIA - DEPARTMENT OF TRANSPORTATION
Caltrans
CONSULTANT FUNCTIONAL SUPERVISOR: BEHZAD GOLEMOHAMMADI
CALCULATED-DESIGNED BY | CHECKED BY
REVISED BY: CARMELO RIVERA | DATE REVISED: ELLERY LUCAS

LAST REVISION | DATE PLOTTED => $DATE

BORDER LAST REVISED 3/1/2007 | RELATIVE BORDER SCALE 0 20 40 60 80 | USERNAME => $USER | CU 04251 | EA 012054

Dist	COUNTY	ROUTE	KILOMETER POST TOTAL PROJECT	SHEET No.	TOTAL SHEETS
04	SF	80	12.7/13.2	516E R1	806

REGISTERED ELECTRICAL ENGINEER 4/10/09

6-23-08
PLANS APPROVAL DATE

REGISTERED PROFESSIONAL ENGINEER FADI MALIEDDINE No. 11465 Exp. 12/31/09 ELECTRICAL STATE OF CALIFORNIA

THE STATE OF CALIFORNIA OR ITS OFFICERS OR AGENTS SHALL NOT BE RESPONSIBLE FOR THE ACCURACY OR COMPLETENESS OF ELECTRONIC COPIES OF THIS PLAN SHEET.

PB AMERICAS, Inc.
A Parsons Brinckerhoff Company
303 Second St. Suite 700N
San Francisco, CA 94107-1317

Caltrans Metric

REGISTERED PROFESSIONAL ENGINEER SYN YEE CHIN No. 18186 Exp. 09/30/2011 ELECTRICAL STATE OF CALIFORNIA

Syn Yee Chin
FOR REVISION ONLY
1 03/30/2011

5

Cable/Ckt #: 2910-3 | Reference: E-166, E-167
Function: Low Level Signal | Conductor Type: 4 pair #22, shielded pairs, FEP insulation (Type SSC)
From: Strong Motion Recorder #1 | To: 2910-3 Cable Splice MH-27
Remarks: Splice cable to (E) cable inside MH. The same circuit number installed on previous contract.
Description Of Changes:

Route	Conduit No.	Route	Conduit No.	Route	Conduit No.	Route	Conduit No.
1	9218	2	PB-2B	3	9217	4	TC Vault #1E
5	2T41E	6	9201	7	MH-9	8	0286
9	MH-12	10	0336	11	MH-15	12	0386
13	*0386	14	MH-18	15	0436	16	MH-21
17	0486	18	MH-24	19	*0536	20	0536
21	MH-27						

Cable/Ckt #: A-1005-1 | Reference: E-41, E-54
Function: 480 V Lighting | Conductor Type: 1-3/C + Gnd, #8, 600 V, EPR insulation
From: (E) 480 V LVCC-A cubicle #21 | To: PB-LTG (Platform #1W)
Remarks:
Description Of Changes:

Route	Conduit No.	Route	Conduit No.	Route	Conduit No.	Route	Conduit No.
1	041	2	T20	3	600 V PB	4	0124
5	MH-5	6	0168	7	MH-7	8	0226
9	MH-30	10	4211	11	E. Vault #1W	12	1T21W
13	4018						

Cable/Ckt #: A-1006-1 | Reference: E-41, E-55
Function: 480 V Lighting | Conductor Type: 1-3/C + Gnd, #8, 600 V, EPR insulation
From: (E) 480 V LVCC-A cubicle #26 | To: PB-2J (Loc. Electrical Vault #2W)
Remarks: Splice cables A-1006-2 and A-1006-3. (Multi-conductor to single conductor).
Description Of Changes:

Route	Conduit No.	Route	Conduit No.	Route	Conduit No.	Route	Conduit No.
1	041	2	T20	3	600 V PB	4	0124
5	MH-5	6	0168	7	MH-7	8	0226
9	MH-30	10	4211	11	E. Vault #1W	12	1T21W
13	4901	14	PB-2E	15	4928	16	E. Vault #2W
17	1T22W	18	4914	19	PB-2J		

Cable/Ckt #: A-1007-1 | Reference: E-41, E-77
Function: 480 V Lighting | Conductor Type: 1-3/C + Gnd, #4, 600 V, EPR insulation
From: (E) 480 V LVCC-A cubicle #22 | To: ~~PB-LTG (Bent W4L)~~ MH-5 1
Remarks: This cable ends inside MH-5 for future extension due to YBI City Ramp by others. 1
Description Of Changes:

Route	Conduit No.	Route	Conduit No.	Route	Conduit No.	Route	Conduit No.
1	041	2	T20	3	600 V PB	4	0124
5	MH-5	~~6~~	~~0168~~	~~7~~	~~MH-7~~	~~8~~	~~0226~~ 1
~~9~~	~~MH-30~~	~~10~~	~~4212~~	~~11~~	~~E. Vault #1W~~	~~12~~	~~1T21W~~
~~13~~	~~4901~~	~~14~~	~~PB-2E~~	~~15~~	~~4928~~	~~16~~	~~E. Vault #2W~~
~~17~~	~~1T22W~~	~~18~~	~~4956~~	~~19~~	~~E. Vault #3W~~	~~20~~	~~1T23W~~
~~21~~	~~4919~~	~~22~~	~~PB-LTG~~				

~~Cable/Ckt #: A-1009-2~~ | ~~Reference: E-77A~~
~~Function: 480 V Lighting~~ | ~~Conductor Type: 3 + 1 Gnd, #6, #8, 600 V, RHH/RHW insulation~~
~~From: PB-LTG (Bent W5L)~~ | ~~To: PB-LTG~~
~~Remarks:~~
~~Description Of Changes: Cable deleted due to YBI City Ramp by others.~~

Route	Conduit No.	Route	Conduit No.	Route	Conduit No.	Route	Conduit No.
1	1424	2	1423	3	1422	4	1321
5	1320	6	1319	7	1318	8	1315
9	1313						

CONTRACT NO. 04-0120S4
CONTRACT CHANGE ORDER NO 78
SHEET 89 OF 92

5 ADDED PER ADDENDUM No. 5 DATED JULY 30, 2009

CABLE AND CIRCUIT SCHEDULE

E-397E

REVISED BY | DATE REVISED
JEFFRI HALIM | ELLERY LUCAS
CALCULATED-DESIGNED BY | CHECKED BY
CONSULTANT FUNCTIONAL SUPERVISOR
BEHZAD GOLEMOHAMMADI
STATE OF CALIFORNIA - DEPARTMENT OF TRANSPORTATION
Caltrans

Dist	COUNTY	ROUTE	KILOMETER POST TOTAL PROJECT	SHEET No.	TOTAL SHEETS
04	SF	80	12.7/13.2	516F R1	806

REGISTERED ELECTRICAL ENGINEER 4/10/09

6-23-08
PLANS APPROVAL DATE

REGISTERED PROFESSIONAL ENGINEER FADI MALIEDDINE No. 11465 Exp. 12/31/09 ELECTRICAL STATE OF CALIFORNIA

THE STATE OF CALIFORNIA OR ITS OFFICERS OR AGENTS SHALL NOT BE RESPONSIBLE FOR THE ACCURACY OR COMPLETENESS OF ELECTRONIC COPIES OF THIS PLAN SHEET.

PB AMERICAS, Inc.
A Parsons Brinckerhoff Company
303 Second St., Suite 700N
San Francisco, CA 94107-1317

Caltrans Metric

REGISTERED PROFESSIONAL ENGINEER SYN YEE CHIN No. 18186 Exp. 09/30/2011 ELECTRICAL STATE OF CALIFORNIA

Syn Yee Chin
FOR REVISION ONLY
1 03/30/2011

5

Cable/Ckt #: A-1010-1 **Reference:** E-41, E-77A
Function: 480 V Lighting **Conductor Type:** 1-3/C + Gnd, #6, 600 V, EPR insulation
From: (E) 480 V LVCC-A cubicle #18 **To:** ~~PB-LTG (Bent W8L)~~ MH-5 1
Remarks: This cable ends inside MH-5 for future extension due to YBI City Ramp by others. 1
Description Of Changes:

Route	Conduit No.	Route	Conduit No.	Route	Conduit No.	Route	Conduit No.
1	041	2	T20	3	600 V PB	4	0124
5	MH-5	~~6~~	~~0169~~	~~7~~	~~MH-7~~	~~8~~	~~0227~~
~~9~~	~~MH-30~~	~~10~~	~~4910A~~	~~11~~	~~PB-LTG~~		

1

Cable/Ckt #: ~~A-1010-2~~ **Reference:** ~~E-77A~~
Function: ~~480 V Lighting~~ **Conductor Type:** ~~3 + 1 Gnd, #6, #8, 600 V, RHH/RHW insulation~~
From: ~~PB-LTG (Bent W8L)~~ **To:** ~~PB-LTG~~
Remarks:
Description Of Changes: ~~Cable deleted due to YBI City Ramp by others.~~

Route	Conduit No.	Route	Conduit No.	Route	Conduit No.	Route	Conduit No.
~~1~~	~~1305~~	~~2~~	~~1304~~	~~3~~	~~1303~~	~~4~~	~~1302~~
~~5~~	~~1301~~	~~6~~	~~1546~~				

Cable/Ckt #: A-2009-1 **Reference:** E-44, E-125
Function: 480 V Lighting **Conductor Type:** 1-3/C + Gnd, #8, 600 V, EPR insulation
From: (E) 480 V LVCC-B Cubicle #18 **To:** PB-LTG (Bent W5R)
Remarks:
Description Of Changes:

Route	Conduit No.	Route	Conduit No.	Route	Conduit No.	Route	Conduit No.
1	094	2	T31	3	T30	4	600 V PB
5	0110	6	MH-5	7	0150	8	MH-7
9	0200	10	MH-29	11	5908	12	E. Vault #1E
13	2T21E	14	5901	15	PB-2A	16	5901A
17	E. Vault #2E	18	2T22E	19	5940	20	PB-LTG

Cable/Ckt #: A-2010-1 **Reference:** E-44, E-125A
Function: 480 V Lighting **Conductor Type:** 1-3/C + Gnd, #8, 600 V, EPR insulation
From: (E) 480 V LVCC-B Cubicle #18 **To:** PB-LTG (Bent W8R)
Remarks:
Description Of Changes:

Route	Conduit No.	Route	Conduit No.	Route	Conduit No.	Route	Conduit No.
1	094	2	T31	3	T30	4	600 V PB
5	0111	6	MH-5	7	0151	8	MH-7
9	0201	10	MH-29	11	5908	12	E. Vault #1E
13	2T21E	14	5901	15	PB-2A	16	5901A
17	E. Vault #2E	18	2T22E	19	5929	20	PB-LTG

Cable/Ckt #: CMSE01 **Reference:** E-151, E-152
Function: Low Level Signal **Conductor Type:** Harness #4
From: Controller Cabinet TOS-03EA **To:** TOS Sign CMS-E01
Remarks:
Description Of Changes:

Route	Conduit No.	Route	Conduit No.	Route	Conduit No.	Route	Conduit No.
1	TOS-03EA	2	5033	3	PB-2B	4	5954
5	TC Vault 3E	6	2T43E	7	5959	8	CMS-E01

Cable/Ckt #: CMSE02 **Reference:** E-151, E-152
Function: Low Level Signal **Conductor Type:** Harness #5
From: Controller Cabinet TOS-03EA **To:** TOS Sign CMS-E01
Remarks:
Description Of Changes:

Route	Conduit No.	Route	Conduit No.	Route	Conduit No.	Route	Conduit No.
1	TOS-03EA	2	5033	3	PB-2B	4	5954
5	TC Vault 3E	6	2T43E	7	5959	8	CMS-E01

Cable/Ckt #: LP218-1,3,5A **Reference:** E-97, E-116
Function: 120 V Lighting **Conductor Type:** 4 + 1 Gnd, #10, #10, 600 V, RHH/RHW insulation
From: PB-LTG at 120 V Bike Path Ltg. **To:** PB-1C
Remarks:
Description Of Changes:

Route	Conduit No.	Route	Conduit No.	Route	Conduit No.	Route	Conduit No.
1	PB-LTG	2	PB-1C				

5 **ADDED PER ADDENDUM No. 5 DATED JULY 30, 2009**

CONTRACT NO. 04-0120S4

CONTRACT CHANGE ORDER NO 78 **CABLE AND CIRCUIT SCHEDULE**

SHEET 90 OF 92

E-397F

REVISED BY | DATE REVISED
JEFFRI HALIM | ELLERY LUCAS
CALCULATED-DESIGNED BY | CHECKED BY
CONSULTANT FUNCTIONAL SUPERVISOR
BEHZAD GOLEMOHAMMADI
STATE OF CALIFORNIA - DEPARTMENT OF TRANSPORTATION
Caltrans

Dist	COUNTY	ROUTE	KILOMETER POST TOTAL PROJECT	SHEET No.	TOTAL SHEETS
04	SF	80	12.7/13.2	516G R1	806

REGISTERED ELECTRICAL ENGINEER 4/10/09

6-23-08
PLANS APPROVAL DATE

REGISTERED PROFESSIONAL ENGINEER FADI MAL IEDDINE No. 11465 Exp. 12/31/09 ELECTRICAL STATE OF CALIFORNIA

THE STATE OF CALIFORNIA OR ITS OFFICERS OR AGENTS SHALL NOT BE RESPONSIBLE FOR THE ACCURACY OR COMPLETENESS OF ELECTRONIC COPIES OF THIS PLAN SHEET.

PB AMERICAS, Inc.
A Parsons Brinckerhoff Company
303 Second St., Suite 700N
San Francisco, CA 94107-1317

Caltrans Metric

5

REGISTERED PROFESSIONAL ENGINEER SYN YEE CHIN No. 18186 Exp. 09/30/2011 ELECTRICAL STATE OF CALIFORNIA

Syn Yee Chin
FOR REVISION ONLY
1 03/30/2011

1

Cable/Ckt #: S-1001-2
Reference: E-53
Function: 480 V Lighting
Conductor Type: 3 + 1 Gnd, #8, #10, 600 V, RHH/RHW insulation
From: Pull Box PB-LTG
To: Barrier pull Boxes PB-LTG
Remarks: For Light Poles S-1001-3 through S-1001-16.
Description Of Changes: Cable deleted due to YBI City Ramp by others.

Route	Conduit No.	Route	Conduit No.	Route	Conduit No.	Route	Conduit No.
1	1306	2	1305	3	1304	4	1303
5	1302	6	1301	7	1546	8	1545
9	1547	10	1544	11	1543	12	1542
13	1541	14	1540	15	1778	16	1779
17	1612	18	1613				

Cable/Ckt #: S-1022-3
Reference: E-55
Function: 480 V Lighting
Conductor Type: 1-3/C + Gnd, #8, 600 V, EPR insulation
From: PB-2J (Loc. Electrical Vault #1W)
To: PB-LTG (Platfrom #2W)
Remarks: Splice cable with S-1022-1 and S-1022-2. (Multi-conductor to single conductor).
Description Of Changes:

Route	Conduit No.	Route	Conduit No.	Route	Conduit No.	Route	Conduit No.
1	PB-2J	2	4016	3	1T21W	4	E. Vault #1W
5	4901	6	PB-2E	7	4928	8	E. Vault #2W
9	1T22W	10	4965	11	PB-LTG		

Cable/Ckt #: S-3022-1
Reference: E-42
Function: 480 V Lighting
Conductor Type: 1-3/C + Gnd, #2, 600 V, EPR insulation
From: (E) 480 V LVCC-A Cubicle #63
To: (E) Manhole-25
Remarks: Splice cable to (E) cable inside MH. The same circuit number installed on previous contract.
Description Of Changes:

Route	Conduit No.	Route	Conduit No.	Route	Conduit No.	Route	Conduit No.
1	067	2	T20	3	600 V PB	4	0115
5	MH-5	6	0155	7	MH-7	8	0207
9	MH-10	10	0304	11	MH-13	12	0354
13	*0354	14	MH-16	15	0404	16	MH-19
17	0454	18	MH-22	19	*0504	20	0504
21	MH-25						

Cable/Ckt #: S-3053-1
Reference: E-45
Function: 480 V Lighting
Conductor Type: 1-3/C + Gnd, #2, 600 V, EPR insulation
From: (E) 480 V LVCC-B Cubicle #64
To: (E) Manhole-25
Remarks: Splice cable to (E) cable inside MH. The same circuit number installed on previous contract.
Description Of Changes:

Route	Conduit No.	Route	Conduit No.	Route	Conduit No.	Route	Conduit No.
1	121	2	T31	3	T30	4	600 V PB
5	*0080	6	0080	7	MH-7	8	0232
9	MH-10	10	0328	11	MH-13	12	0378
13	*0378	14	MH-16	15	0428	16	MH-19
17	0478	18	MH-22	19	*0528	20	0528
21	MH-25						

Cable/Ckt #: S-3056-1
Reference: E-42
Function: 480 V Lighting
Conductor Type: 1-3/C + Gnd, #6, 600 V, EPR insulation
From: (E) 480 V LVCC-A Cubicle #55
To: (E) Manhole-25
Remarks: Splice cable to (E) cable inside MH. The same circuit number installed on previous contract.
Description Of Changes:

Route	Conduit No.	Route	Conduit No.	Route	Conduit No.	Route	Conduit No.
1	062	2	T20	3	600 V PB	4	0116
5	MH-5	6	0158	7	MH-7	8	0209
9	MH-10	10	0306	11	MH-13	12	0356
13	*0356	14	MH-16	15	0406	16	MH-19
17	0456	18	MH-22	19	*0506	20	0506
21	MH-25						

CONTRACT NO. 04-012054
CONTRACT CHANGE ORDER NO 78
SHEET 91 OF 92

5 ADDED PER ADDENDUM No. 5 DATED JULY 30, 2009

CABLE AND CIRCUIT SCHEDULE

E-397G

STATE OF CALIFORNIA - DEPARTMENT OF TRANSPORTATION
Caltrans
CONSULTANT FUNCTIONAL SUPERVISOR: BEHZAD GOLEMOHAMMADI
CALCULATED-DESIGNED BY: JEFFRI HALIM
CHECKED BY: ELLERY LUCAS
REVISED BY
DATE REVISED

Dist	COUNTY	ROUTE	KILOMETER POST TOTAL PROJECT	SHEET No.	TOTAL SHEETS
04	SF	80	12.7/13.2	516H R1	806

REGISTERED ELECTRICAL ENGINEER 4/10/09

6-23-08
PLANS APPROVAL DATE

REGISTERED PROFESSIONAL ENGINEER FADI MALIEDDINE No. 11365 Exp. 12/31/09 ELECTRICAL STATE OF CALIFORNIA

THE STATE OF CALIFORNIA OR ITS OFFICERS OR AGENTS SHALL NOT BE RESPONSIBLE FOR THE ACCURACY OR COMPLETENESS OF ELECTRONIC COPIES OF THIS PLAN SHEET.

PB AMERICAS, Inc.
A Parsons Brinckerhoff Company
303 Second St., Suite 700N
San Francisco, CA 94107-1317

Caltrans Metric

5

REGISTERED PROFESSIONAL ENGINEER SYN YEE CHIN No. 18186 Exp. 09/30/2011 ELECTRICAL STATE OF CALIFORNIA

Syn Yee Chin
FOR REVISION ONLY
1 03/30/2011

Cable/Ckt #: UP101-2A
Reference: E-70, E-170
Function: 120 V Power
Conductor Type: 3 + 1 Gnd, #12, #12, 600 V, RHH/RHW insulation
From: 208/120 V Utility Panel UP-101
To: CB-138B & CB-139B
Remarks: Coil cable inside PB-LTG route 16 for future extension to CB-138B. Splice circuit in PB-LTG route 5. On Route 4: Do not route cable inside Cable Tray.
Description Of Changes:

Route	Conduit No.	Route	Conduit No.	Route	Conduit No.	Route	Conduit No.
1	4002	2	Wireway #1W	3	4921	4	E. Vault #1W
5	4026	6	PB-LTG	7	1707	8	PB-LTG
9	CB-139B	10	1705	11	1704	12	1703
13	1702	14	1701	15	1776	16	PB-LTG

Cable/Ckt #: UP101-2B
Reference: E-70, E-170
Function: 120 V Power
Conductor Type: 3 + 1 Gnd, #12, #12, 600 V, RHH/RHW insulation
From: ~~PB-LTG~~ E. Vault #1W
To: ~~CB-138A &~~ CB-139A 1
Remarks: ~~Coil cable inside PB-LTG route 10 for future extion to CB-138A.~~ Splice this cable inside E.Vault #1W (Do not route cable inside cable tray) due to YBI City Ramp by others
Description Of Changes:

Route	Conduit No.	Route	Conduit No.	Route	Conduit No.	Route	Conduit No.
1	~~PB-LTG~~ E.Vault #1W	2	~~4899~~ 4910	3	PB-LTG	4	~~1401~~ 1306 1
5	~~1646~~ PB-LTG	6	~~1645~~ CB-139A	7	~~1647~~	8	~~1644~~
9	~~1643~~	10	~~PB-LTG~~	11	~~1302~~	12	~~1303~~
13	~~1304~~	14	~~1305~~	15	~~PB-LTG~~	16	~~CB-139A~~

Cable/Ckt #: UP102-3
Reference: E-70
Function: 120 V Power
Conductor Type: 2 + 1 Gnd, #12, #12, 600 V, RHH/RHW insulation
From: 208/120 V Utility Panel UP-102
To: Receptacle
Remarks:
Description Of Changes:

Route	Conduit No.	Route	Conduit No.	Route	Conduit No.	Route	Conduit No.
1	4021	2	Wireway #2W	3	4962	4	E. Vault #2W
5	4965	6	PB-LTG				

Cable/Ckt #: UP103-2
Reference: E-71, E-170
Function: 120 V Power
Conductor Type: 3 + 1 Gnd, #12, #12, 600 V, RHH/RHW insulation
From: 208/120 V Utility Panel UP-103
To: Call Box CB-140A/B
Remarks: Splice circuit in PB-LTG route 6. On Route 4: Do not route cable inside Cable Tray.
Description Of Changes:

Route	Conduit No.	Route	Conduit No.	Route	Conduit No.	Route	Conduit No.
1	4053	2	Wireway 3W	3	4981	4	E. Vault #3W
5	4999	6	PB-LTG	7	1722	8	1723
9	1724	10	1725	11	1727	12	1728
13	PB-LTG	14	CB-140B	15	4917	16	PB-LTG
17	CB-140A						

Cable/Ckt #: UP103-3
Reference: E-71
Function: 120 V Power
Conductor Type: 2 + 1 Gnd, #12, #12, 600 V, RHH/RHW insulation
From: 208/120 V Utility Panel UP-103
To: PB-LTG (South Barrier)
Remarks: For receptacle near Light Pole (south WB). On Route 4: Do not route cable inside Cable Tray.
Description Of Changes:

Route	Conduit No.	Route	Conduit No.	Route	Conduit No.	Route	Conduit No.
1	4051	2	Wireway 3W	3	4981	4	E. Vault #3W
5	4999	6	1722	7	1723	8	1724
9	1725	10	1727	11	1721		

Cable/Ckt #: UP201-12
Reference: E-111, E-171
Function: 120 V Power
Conductor Type: 2 + 1 Gnd, #12, #12, 600 V, RHH/RHW insulation
From: 208/ 120 V Utility Panel UP-201
To: Call Box CB-239 A/B & CB-238 A/B
Remarks: Coil cable inside PB-LTG route 11 and 18 for future extension to CB-238A/B. Splice circuit in PB-LTG route 5. On Route 4: Do not route cable inside Cable Tray.
Description Of Changes:

Route	Conduit No.	Route	Conduit No.	Route	Conduit No.	Route	Conduit No.
1	5043	2	Wireway #1E	3	5919	4	E. Vault #1E
5	5900	6	PB-LTG	7	7110	8	PB-LTG
9	CB-239A	10	2304	11	PB-LTG	12	5914
13	PB-LTG	14	CB-239B	15	2706	16	2705
17	2704	18	PB-LTG				

CONTRACT NO. 04-012054
CONTRACT CHANGE ORDER NO 78
SHEET 92 OF 92

CABLE AND CIRCUIT SCHEDULE

5 ADDED PER ADDENDUM No. 5 DATED JULY 30, 2009

E-397H

REVISED BY | DATE REVISED
JEFFRI HALIM | ELLERY LUCAS
CALCULATED-DESIGNED BY | CHECKED BY
SUPERVISOR BEHZAD GOLEMOHAMMADI
CONSULTANT FUNCTIONAL SUPERVISOR
STATE OF CALIFORNIA - DEPARTMENT OF TRANSPORTATION
Caltrans

STATE OF CALIFORNIA - DEPARTMENT OF TRANSPORTATION

CONTRACT CHANGE ORDER

Change Requested by: Engineer

CCO: 79	Suppl. No. 0	Contract No. 04 - 0120S4	Road SF-80-12.7/13.2	FED. AID LOC.: NO FED AID

To: **M C M CONSTRUCTION INC**

You are directed to make the following changes from the plans and specifications or do the following described work not included in the plans and specifications for this contract. ***NOTE: This change order is not effective until approved by the Engineer.***

Description of work to be done, estimate of quantities and prices to be paid. (Segregate between additional work at contract price, agreed price and force account.) Unless otherwise stated, rates for rental of equipment cover only such time as equipment is actually used and no allowance will be made for idle time. This last percentage shown is the net accumulated increase or decrease from the original quantity in the Engineer's Estimate.

Extra Work at Lump Sum:

Construct chain link fence at existing Westbound Route 80 in vicinity of station 51+00. Work includes approximately 86 lineal meters of galvanized type CL-1.8 chain link fence, with 6 inch x 6 inch x ¼ inch flange plates welded to posts with 5/8 inch x 3 inch long wedge anchors for anchorage to existing concrete deck, at location as directed by the Engineer in the field.

The agreed prices include all labor, equipment and material as required. The agreed price constitutes full payment, including all markups, for this change.

Cost of Extra Work at Lump Sum $6,517.00

Estimated Cost: Increase ☑ **Decrease** ☐ **$6,517.00**

By reason of this order the time of completion will be adjusted as follows: 0 days

Submitted by

Signature Deanna Vedine	Resident Engineer For William Howe, Senior R.E.	Date 9/14/11

Approval Recommended by

Signature Deanna Vedine	Senior Resident Engineer William Howe	Date 9/14/11

Engineer Approval by

Signature William Howe	Senior Resident Engineer William Howe	Date 09-26-11

We the undersigned contractor, have given careful consideration to the change proposed and agree, if this proposal is approved, that we will provide all equipment, furnish the materials, except as may otherwise be noted above, and perform all services necessary for the work above specified, and will accept as full payment therefor the prices shown above.

NOTE: If you, the contractor, do not sign acceptance of this order, your attention is directed to the requirements of the specifications as to proceeding with the ordered work and filing a written protest within the time therein specified.

Contractor Acceptance by

Signature	(Print name and title) Edmundo H. Rechi Treasurer	Date 9-21-2011

STATE OF CALIFORNIA - DEPARTMENT OF TRANSPORTATION

CONTRACT CHANGE ORDER MEMORANDUM

DATE: 9/8/2011 Page 1 of 1

TO: Deanna Vilcheck, ACM /	FILE: E.A. 04 - 0120S4
FROM: William Howe, Senior R.E.	CO-RTE-PM SF-80-12.7/13.2
	FED. NO. NO FED AID
CCO#: 79 SUPPLEMENT#: 0 Category Code: CGXX	CONTINGENCY BALANCE (incl. this change) $95,702,438.19
COST: $6,517.00 INCREASE ☑ DECREASE ☐	HEADQUARTERS APPROVAL REQUIRED? ☐ YES ☑ NO
SUPPLEMENTAL FUNDS PROVIDED: $0.00	IS THIS REQUEST IN ACCORDANCE WITH ENVIRONMENTAL DOCUMENTS? ☑ YES ☐ NO
CCO DESCRIPTION: Chain Link Fence at Westbound Route 80	**PROJECT DESCRIPTION:** YBITS-1 (Yerba Buena Island Transition Structures)

Original Contract Time:	Time Adj. This Change:	Previously Approved CCO Time Adjustments:	Percentage Time Adjusted: (including this change)	Total # of Unreconciled Deferred Time CCO(s): (including this change)
1390 Day(s)	0 Day(s)	0 Day(s)	0 %	9

THIS CHANGE ORDER PROVIDES FOR:

This change order provides funds to compensate the Contractor to construct chain link fencing at the existing Westbound Route 80, in the vicinity station 51+00, as directed by the Engineer in the field.

This contract calls for the construction of the Yerba Buena Island Transition structures of the east span of the new San Francisco Oakland Bay Bridge (SFOBB). A section of I-80 Westbound bridge deck structure has been temporarily bypassed by the South South Detour, and will remain unused during construction of the YBITS. Contract drawing 18 of 806 (C-6) includes this area as part of the Areas for Contractor Use. The contractor requested that this area be made available for storage of rebar cages and staging for some of the construction operations. Discussion with CT design has indicated that the structure should not carry significant loads in the middle portion of the deck, but that some of the outer portions of the structure can be used for limited storage. In order to secure the integrity of the middle portion of this deck, CT has directed the contractor to fence off this area during construction.

Compensation for this work will be paid as extra work at an agreed lump in the amount of $6,517.00, which shall be financed from the contract's contingency funds. A cost estimate is on file.

No adjustment of contract time is warranted, as this change will not affect the controlling operation.

Maintenance concurrence not required, as this does not affect any permanent features of the bridge.

CONCURRED BY:		
Construction Engineer:	William Howe	Date 07-26-11
Bridge Engineer:		Date
Project Engineer:	Bob Zandipour	Date 09/27/11
Project Manager:	Ken Terpstra	Date 9/28/11
FHWA Rep.:		Date
Environmental:		Date
Other (specify):		Date
Other (specify):		Date
District Prior Approval By:		Date
HQ (Issue Approve) By:		Date
Resident Engineer's Signature: William Howe		Date 09-26-11

ESTIMATE OF COST

	THIS REQUEST	TOTAL TO DATE
ITEMS	$0.00	$0.00
FORCE ACCOUNT	$0.00	$0.00
AGREED PRICE	$6,517.00	$6,517.00
ADJUSTMENT	$0.00	$0.00
TOTAL	$6,517.00	$6,517.00

FEDERAL PARTICIPATION

☐ PARTICIPATING ☐ PARTICIPATING IN PART ☑ NONE
☐ NON-PARTICIPATING (MAINTENANCE) ☐ NON-PARTICIPATING

FEDERAL SEGREGATION (if more than one Funding Source or P.I.P. type)
☐ CCO FUNDED PER CONTRACT ☐ CCO FUNDED AS FOLLOWS

FEDERAL FUNDING SOURCE	PERCENT

ADA Notice: For individuals with sensory disabilities, this document is available in alternate formats. For information call: (916) 654-6410 or TDD (916) 654-3880 or write Records and Forms Management, 1120 N Street, MS-89, Sacramento, CA 95814.

STATE OF CALIFORNIA - DEPARTMENT OF TRANSPORTATION

CONTRACT CHANGE ORDER

Change Requested by: Engineer

CCO 79	Suppl. No. 1	Contract No. 04 - 0120S4	Road SF-80-12.7/13.2	FED. AID LOC.: NO FED AID

To: **M C M CONSTRUCTION INC**

You are directed to make the following changes from the plans and specifications or do the following described work not included in the plans and specifications for this contract. ***NOTE: This change order is not effective until approved by the Engineer.***

Description of work to be done, estimate of quantities and prices to be paid. (Segregate between additional work at contract price, agreed price and force account.) Unless otherwise stated, rates for rental of equipment cover only such time as equipment is actually used and no allowance will be made for idle time. This last percentage shown is the net accumulated increase or decrease from the original quantity in the Engineer's Estimate.

Extra Work at Force Account:

Install and maintain barriers at existing Westbound Route 80 in vicinity of Station 51+00 as directed by the Engineer.

This work will be paid for in accordance with Section 5-1.17, "Force Account Payment", of the Special Provisions and Section 4-1.03D, "Extra Work", of the Standard Specifications.

Estimated Cost of Extra work at Force Account = $40,000.00

3-23-12

Estimated Cost: Increase ☑ Decrease ☐ **$40,000.00**

By reason of this order the time of completion will be adjusted as follows: 0 days

Submitted by

Signature	Resident Engineer	Date
William Howe	William Howe, Senior R.E.	03.16.12

Approval Recommended by

Signature	Area Construction Manager	Date
Michael Frame FOR	Deanna Vilcheck	3-16-12

Engineer Approval by

Signature	Area Construction Manager	Date
Deanna Vilcheck	Deanna Vilcheck	3/23/12

We the undersigned contractor, have given careful consideration to the change proposed and agree, if this proposal is approved, that we will provide all equipment, furnish the materials, except as may otherwise be noted above, and perform all services necessary for the work above specified, and will accept as full payment therefor the prices shown above.

NOTE: If you, the contractor, do not sign acceptance of this order, your attention is directed to the requirements of the specifications as to proceeding with the ordered work and filing a written protest within the time therein specified.

Contractor Acceptance by

Signature	(Print name and title)	Date
	Edmund A. Pucci - Treasurer	3-20-2012

STATE OF CALIFORNIA - DEPARTMENT OF TRANSPORTATION

CONTRACT CHANGE ORDER MEMORANDUM

DATE: 3/16/2012 Page 1 of 1

TO: Deanna Vilcheck, ACM / DV	FILE: E.A. 04 - 0120S4
FROM: William Howe, Senior R.E.	CO-RTE-PM SF-80-12.7/13.2
	FED. NO. NO FED AID
CCO#: 79 SUPPLEMENT#: 1 Category Code: CGXX	CONTINGENCY BALANCE (incl. this change) $51,017,947.00
COST: $40,000.00 INCREASE ☑ DECREASE ☐	HEADQUARTERS APPROVAL REQUIRED? ☐ YES ☑ NO
SUPPLEMENTAL FUNDS PROVIDED: $0.00	IS THIS REQUEST IN ACCORDANCE WITH ENVIRONMENTAL DOCUMENTS? ☑ YES ☐ NO
CCO DESCRIPTION: Barrier @ WB Route 80	**PROJECT DESCRIPTION:** YBITS-1 (Yerba Buena Island Transition Structures)

Original Contract Time:	Time Adj. This Change:	Previously Approved CCO Time Adjustments:	Percentage Time Adjusted: (including this change)	Total # of Unreconciled Deferred Time CCO(s): (including this change)
1390 Day(s)	0 Day(s)	0 Day(s)	0 %	9

THIS CHANGE ORDER PROVIDES FOR:

This change order provides funds to compensate the Contractor to install and maintain barriers at existing Westbound Route 80 in vicinity of Station 51+00 as directed by the Engineer.

This contract calls for the construction of the Yerba Buena Island Transition structures of the east span of the new San Francisco Oakland Bay Bridge (SFOBB). A section of I-80 Westbound bridge deck structure has been temporarily bypassed by the South South Detour, and will remain unused during construction of the YBITS. Contract Drawing Sht. 18 of 806 (C-6) includes this area as part of the Areas for Contractor Use. The Contractor requested that this area be made available for storage of rebar cages and staging for some of the construction operations. Discussion with CT design has indicated that the structure should not carry significant loads in the middle portion of the deck, but that some of the outer portions of the structure can be used for limited storage. Under Contract Change Order No. 79, Caltrans directed the Contractor to fence off this area during construction. This supplement will allow the installation of more secure barriers for the area.

This work will be paid for as Extra Work at Force Account for an estimated cost of $40,000.00, which will be financed from the project's contingency fund. A cost estimate is on file.

This Change Order received concurrence from Deanna Vilcheck, Area Construction Manager.

No adjustment of contract time is warranted, as this change will not affect the controlling operation.

Design concurrence is not required, as this CCO does not affect any feature of the work.

Maintenance concurrence is not required, as this work does not affect any permanent features.

CONCURRED BY:		
Construction Engineer:	William Howe	Date 03-16-12
Bridge Engineer:	for Mehran Ardakanian	Date 3-23-12
Project Engineer:	Bob Zandipour, Design	Date 3-20-12
Project Manager:	Ken Terpstra	Date 3/19/12
FHWA Rep.:		Date
Environmental:		Date
Other (specify):		Date
Other (specify):		Date
District Prior Approval By:		Date
HQ (Issue Approve) By:		Date
Resident Engineer's Signature: William Howe		Date 03-16-12

ESTIMATE OF COST

	THIS REQUEST	TOTAL TO DATE
ITEMS	$0.00	$0.00
FORCE ACCOUNT	$40,000.00	$40,000.00
AGREED PRICE	$0.00	$6,517.00
ADJUSTMENT	$0.00	$0.00
TOTAL	$40,000.00	$46,517.00

FEDERAL PARTICIPATION

☐ PARTICIPATING ☐ PARTICIPATING IN PART ☑ NONE
☐ NON-PARTICIPATING (MAINTENANCE) ☐ NON-PARTICIPATING

FEDERAL SEGREGATION (if more than one Funding Source or P.I.P. type)
☐ CCO FUNDED PER CONTRACT ☐ CCO FUNDED AS FOLLOWS

FEDERAL FUNDING SOURCE	PERCENT

ADA Notice: For individuals with sensory disabilities, this document is available in alternate formats. For information call: (916) 654-6410 or TDD (916) 654-3880 or write Records and Forms Management, 1120 N Street, MS-89, Sacramento, CA 95814.

STATE OF CALIFORNIA - DEPARTMENT OF TRANSPORTATION

CONTRACT CHANGE ORDER MEMORANDUM

DATE: 1/11/2012 Page 1 of 1

TO: Deanna Vilcheck, ACM / DV	FILE: E.A. 04 - 0120S4
FROM: William Howe, Senior R.E.	CO-RTE-PM SF-80-12.7/13.2
	FED. NO. NO FED AID
CCO#: 114 SUPPLEMENT#: 0 Category Code: CBPC	CONTINGENCY BALANCE (incl. this change) $51,057,947.00
COST: $39,436.00 INCREASE ☑ DECREASE ☐	HEADQUARTERS APPROVAL REQUIRED? ☐ YES ☑ NO
SUPPLEMENTAL FUNDS PROVIDED: $0.00	IS THIS REQUEST IN ACCORDANCE WITH ENVIRONMENTAL DOCUMENTS? ☑ YES ☐ NO
CCO DESCRIPTION: addit. electrical conduit & pull boxes	**PROJECT DESCRIPTION:** YBITS-1 (Yerba Buena Island Transition Structures)

Original Contract Time:	Time Adj. This Change:	Previously Approved CCO Time Adjustments:	Percentage Time Adjusted: (including this change)	Total # of Unreconciled Deferred Time CCO(s): (including this change)
1390 Day(s)	0 Day(s)	0 Day(s)	0 %	9

THIS CHANGE ORDER PROVIDES FOR:

This change order provides for furnishing and installing additional electrical conduit and pull boxes at Bent W5L, Platform 3W, and Hinge W7LA.

This change order is needed to resolve conflicts and ambiguities in the contract plans associated with furnishing and installing conduits and pull boxes at the locations identified herein.

This change order provides for compensating the Contractor as Extra Work at an Agreed Lump Sum amount of $39,436.00 for furnishing additional electrical conduit and pull boxes as shown on Sheet Nos. 2 through 15 of this change order. This change will result in a cost increase of $39,436.00, which can be financed from the project's contingency fund. A detailed cost analysis is available on file in the project records.

No adjustment of contract time is warranted, as this change will not affect the controlling operation.

Design concurrence will be obtained for this change order.

Maintenance concurrence will be required for this change.

CONCURRED BY:		
Construction Engineer:	William Howe	Date 03-22-12
Bridge Engineer:	Mehran Ardakanian	Date
Project Engineer:	Bob Zandipour, Design	Date 3-28-12
Project Manager:	Ken Terpstra	Date 3/21/12
FHWA Rep.:		Date
Environmental:		Date
Other (specify): Mtce. - Lina Ellis		Date 3-26-12
Other (specify):		Date
District Prior Approval By:		Date
HQ (Issue Approve) By:		Date
Resident Engineer's Signature: William Howe		Date 03-22-12

ESTIMATE OF COST	THIS REQUEST	TOTAL TO DATE
ITEMS	$0.00	$0.00
FORCE ACCOUNT	$0.00	$0.00
AGREED PRICE	$39,436.00	$39,436.00
ADJUSTMENT	$0.00	$0.00
TOTAL	$39,436.00	$39,436.00

FEDERAL PARTICIPATION

☐ PARTICIPATING ☐ PARTICIPATING IN PART ☑ NONE
☐ NON-PARTICIPATING (MAINTENANCE) ☐ NON-PARTICIPATING

FEDERAL SEGREGATION (if more than one Funding Source or P.I.P. type)
☐ CCO FUNDED PER CONTRACT ☐ CCO FUNDED AS FOLLOWS

FEDERAL FUNDING SOURCE	PERCENT

ADA Notice: For individuals with sensory disabilities, this document is available in alternate formats. For information call: (916) 654-6410 or TDD (916) 654-3880 or write Records and Forms Management, 1120 N Street, MS-89, Sacramento, CA 95814.

STATE OF CALIFORNIA - DEPARTMENT OF TRANSPORTATION

CONTRACT CHANGE ORDER

Change Requested by: Engineer

CCO: 80	Suppl. No. 0	Contract No. 04 - 0120S4	Road SF-80-12.7/13.2	FED. AID LOC.: NO FED AID

To: **M C M CONSTRUCTION INC**

You are directed to make the following changes from the plans and specifications or do the following described work not included in the plans and specifications for this contract. ***NOTE: This change order is not effective until approved by the Engineer.***

Description of work to be done, estimate of quantities and prices to be paid. (Segregate between additional work at contract price, agreed price and force account.) Unless otherwise stated, rates for rental of equipment cover only such time as equipment is actually used and no allowance will be made for idle time. This last percentage shown is the net accumulated increase or decrease from the original quantity in the Engineer's Estimate.

Extra Work at Lump Sum:

As authorized by the Engineer, fill the voids that have developed beneath the bottom of the footing at Bent W8L North with pressure grout as a result of local loss of soil due to the gaps in the cofferdam sheet piling for the San Francisco-Oakland Bay Bridge East Span Seismic Safety Project Yerba Buena Island Transition Structures, Bridge Nos. 34-0006L/R.

The procedure for the Work shall include the following activities:

1.) Additional exploration beneath the footing to determine the extent of the undermining;
2.) Installing a formwork system that can resist and withstand the grouting pressures;
3.) Installing grout vents/valves in the formwork to facilitate and monitor the pressure grouting;
4.) Pressure grouting slurry mix at 100 psi.

For this work, the Contractor shall be compensated an agreed lump sum of $4,193.00, which constitutes full and final compensation, including all markups, for all additional costs incurred in furnishing the seismic joints as defined by this change order.

Extra Work at Lump Sum $4,193.00

Estimated Cost: Increase ☑ Decrease ☐ **$4,193.00**

By reason of this order the time of completion will be adjusted as follows: 0 days

Submitted by		
Signature William Howe	Resident Engineer William Howe, Senior R.E.	Date 11-16-11
Approval Recommended by		
Signature William Howe	Senior Resident Engineer William Howe	Date 11-16-11
Engineer Approval by		
Signature William Howe	Senior Resident Engineer William Howe	Date 12-12-11

We the undersigned contractor, have given careful consideration to the change proposed and agree, if this proposal is approved, that we will provide all equipment, furnish the materials, except as may otherwise be noted above, and perform all services necessary for the work above specified, and will accept as full payment therefor the prices shown above.

NOTE: If you, the contractor, do not sign acceptance of this order, your attention is directed to the requirements of the specifications as to proceeding with the ordered work and filing a written protest within the time therein specified.

Contractor Acceptance by		
Signature	(Print name and title) EDMUNDO A. PUCHI, TREASURER	Date 12/6/11

STATE OF CALIFORNIA - DEPARTMENT OF TRANSPORTATION

CONTRACT CHANGE ORDER

Change Requested by: Engineer

CCO: 81	Suppl. No. 0	Contract No. 04 - 0120S4	Road SF-80-12.7/13.2	FED. AID LOC.: NO FED AID

To: **M C M CONSTRUCTION INC**

You are directed to make the following changes from the plans and specifications or do the following described work not included in the plans and specifications for this contract. ***NOTE: This change order is not effective until approved by the Engineer.***

Description of work to be done, estimate of quantities and prices to be paid. (Segregate between additional work at contract price, agreed price and force account.) Unless otherwise stated, rates for rental of equipment cover only such time as equipment is actually used and no allowance will be made for idle time. This last percentage shown is the net accumulated increase or decrease from the original quantity in the Engineer's Estimate.

Adjustment of Compensation at Lump Sum:

Provide an opening in the westbound Frame 2 falsework between Bents W3L and W2L in order to allow truck access through the falsework to the adjacent contract. Compensation includes all labor, equipment, materials and engineering costs associated with this change as submitted under the Contractor's approved westbound Frame 2 falsework plan.

For this work, the Contractor shall be compensated an agreed lump sum of $78,172.00 which constitutes full and final compensation, including all markups, for all additional costs incurred.

Any costs associated with providing a similar falsework opening in the eastbound Frame 2 falsework are excluded from this change and shall be compensated under a separate change order.

Adjustment of Compensation at Lump Sum $78,172.00

Consideration of a time adjustment pertaining to any delays to the prestressing milestone established under Change Order No. 72 is deferred. Determination of a commensurate time extension will be made in accordance with Section 8-1.07, "Liquidated Damages", of the Standard Specifications and Section 10-1.22 "Progress Schedule (Critical Path Method)" of the Special Provisions. There shall be no time extension to the completion of the Contract as a result of this change.

Estimated Cost: Increase ☑ Decrease ☐ $78,172.00

By reason of this order the time of completion will be adjusted as follows: 0 days

Submitted by

Signature	Resident Engineer	Date
William Howe	William Howe, Senior R.E.	11-17-11

Approval Recommended by

Signature	Area Construction Manager	Date
Deanna Vilcheck	Deanna Vilcheck	11/21/11

Engineer Approval by

Signature	Area Construction Manager	Date
Deanna Vilcheck	Deanna Vilcheck	12/14/11

We the undersigned contractor, have given careful consideration to the change proposed and agree, if this proposal is approved, that we will provide all equipment, furnish the materials, except as may otherwise be noted above, and perform all services necessary for the work above specified, and will accept as full payment therefor the prices shown above.

NOTE: If you, the contractor, do not sign acceptance of this order, your attention is directed to the requirements of the specifications as to proceeding with the ordered work and filing a written protest within the time therein specified.

Contractor Acceptance by

Signature	(Print name and title)	Date
	EDMUNDO A. PUCHI, TREASURER	12/13/11

11-11-11

CONTRACT CHANGE ORDER

Change Requested by: Engineer

CCO: 82	Suppl. No. 0	Contract No. 04 - 0120S4	Road SF-80-12.7/13.2	FED. AID LOC.: NO FED AID

To: **M C M CONSTRUCTION INC**

You are directed to make the following changes from the plans and specifications or do the following described work not included in the plans and specifications for this contract. ***NOTE: This change order is not effective until approved by the Engineer.***

Description of work to be done, estimate of quantities and prices to be paid. (Segregate between additional work at contract price, agreed price and force account.) Unless otherwise stated, rates for rental of equipment cover only such time as equipment is actually used and no allowance will be made for idle time. This last percentage shown is the net accumulated increase or decrease from the original quantity in the Engineer's Estimate.

Extra Work at Lump Sum:

As authorized by the Engineer, furnish and install bar reinforcing steel for each girder at Bent W3L haunch in accordance with the details shown on sheets 2 through 3 of this change order for the San Francisco-Oakland Bay Bridge East Span Seismic Safety Project Yerba Buena Island Transition Structures, Bridge Nos. 34-0006L/R.

The revised and added contract plan sheets reflecting this change are 551R4 and 621BSR1 of 806.

For this work, the Contractor shall be compensated an agreed lump sum of $109,102.69, which constitutes full and final compensation, including all markups, for all additional costs incurred in furnishing the seismic joints as defined by this change order.

The Contractor shall include the activities for this work on the Critical path method schedule for this change order work, in accordance with SSP 10-1.22 Progress Schedule (Critical Path Method).

Extra Work at Lump Sum $109,102.69

Estimated Cost: Increase ☑ Decrease ☐ **$109,102.69**

By reason of this order the time of completion will be adjusted as follows: 0 days

Submitted by

Signature	Resident Engineer	Date
William Howe	William Howe, Senior R.E.	12-20-11

Approval Recommended by

Signature	Area Construction Manager	Date
Michael Fromm FOR	Deanna Vilcheck	12-21-11

Engineer Approval by

Signature	Area Construction Manager	Date
Michael Fromm FOR	Deanna Vilcheck	2-8-12

We the undersigned contractor, have given careful consideration to the change proposed and agree, if this proposal is approved, that we will provide all equipment, furnish the materials, except as may otherwise be noted above, and perform all services necessary for the work above specified, and will accept as full payment therefor the prices shown above.

NOTE: If you, the contractor, do not sign acceptance of this order, your attention is directed to the requirements of the specifications as to proceeding with the ordered work and filing a written protest within the time therein specified.

Contractor Acceptance by

Signature	(Print name and title)	Date
	Edmund A Pucci - Treasurer	2-7-2012

INDEX TO BRIDGE PLANS

SHEET NO.	TITLE
1	GENERAL PLAN
2	INDEX TO BRIDGE PLANS
3	GENERAL NOTES
4	WESTBOUND STRUCTURE PLAN NO. 1
5	WESTBOUND STRUCTURE PLAN NO. 2
6	EASTBOUND STRUCTURE PLAN NO. 1
7	EASTBOUND STRUCTURE PLAN NO. 2
8	WESTBOUND DECK CONTOURS PLAN NO. 1
9	WESTBOUND DECK CONTOURS PLAN NO. 2
10	EASTBOUND DECK CONTOURS PLAN NO. 1
11	EASTBOUND DECK CONTOURS PLAN NO. 2
12	FOUNDATION PLAN NO. 1
13	FOUNDATION PLAN NO. 2
14	PILE DETAILS
15	ABUTMENT W1IR DETAILS NO. 1
16	ABUTMENT W1IR DETAILS NO. 2
17	ABUTMENT W1IR DETAILS NO. 3
18	BENT ELEVATIONS W10AL TO W9
19	BENT ELEVATIONS W8 TO W7
20	BENT ELEVATIONS W6 TO W5
21	BENT ELEVATIONS W4 TO W3
22	BENT W10AL DETAILS NO. 1
23	BENT W10AL DETAILS NO. 2
24	BENT W10AL DETAILS NO. 3
25	BENT W10AL DETAILS NO. 4
25A	BENT W10AL DETAILS NO. 5
26	BENT W10L DETAILS NO. 1
27	BENT W10L DETAILS NO. 2
28	BENT W10L DETAILS NO. 3
29	BENT W9L DETAILS NO. 1
30	BENT W9L DETAILS NO. 2
31	BENT W9L DETAILS NO. 3
32	BENT W9L DETAILS NO. 4
32A	BENT W9L DETAILS NO. 5
33	BENT W8L DETAILS NO. 1
34	BENT W8L DETAILS NO. 2
35	BENT W8L DETAILS NO. 3
36	BENT W8L DETAILS NO. 4
37	BENT W7L DETAILS NO. 1
38	BENT W7L DETAILS NO. 2
39	BENT W7L DETAILS NO. 3
40	PRESTRESS DETAILS - BENTS W10AL TO W9L
41	PRESTRESS DETAILS - BENTS W8L & W7L
42	BENT W6L DETAILS NO. 1
42A	BENT W6L DETAILS NO. 2
43	BENT W5L DETAILS NO. 1
44	BENT W5L DETAILS NO. 2
44A	BENT W5L DETAILS NO. 3
45	BENT W4L DETAILS NO. 1
45A	BENT W4L DETAILS NO. 2
45B	BENT W4L DETAILS NO. 3
46	BENT W3L DETAILS NO. 1
47	BENT W3L DETAILS NO. 2
48	BENT W10R DETAILS NO. 1
49	BENT W10R DETAILS NO. 2
50	BENT W10R DETAILS NO. 3
51	BENT W9R DETAILS NO. 1
52	BENT W9R DETAILS NO. 2
53	BENT W8R DETAILS NO. 1
54	BENT W8R DETAILS NO. 2
55	BENT W7R DETAILS NO. 1
56	BENT W7R DETAILS NO. 2
57	BENT W6R DETAILS NO. 1
58	BENT W6R DETAILS NO. 2
59	BENT W6R DETAILS NO. 3
60	BENT W5R DETAILS NO. 1
61	BENT W5R DETAILS NO. 2
62	BENT W4R DETAILS
63	BENT W3R DETAILS
64	COLUMN ISOLATION SLEEVE DETAILS
65	WESTBOUND TYPICAL SECTION NO. 1
66	WESTBOUND TYPICAL SECTION NO. 2
67	WESTBOUND TYPICAL SECTION NO. 3
68	WESTBOUND TYPICAL SECTION NO. 4
69	WESTBOUND TYPICAL SECTION NO. 5
70	WESTBOUND TYPICAL SECTION NO. 6
71	WESTBOUND TYPICAL SECTION NO. 7
72	WESTBOUND TYPICAL SECTION NO. 8
4 72A	WESTBOUND TYPICAL SECTION NO. 9
72B	ADDED REINF AT WB GIRDER HAUNCH AT BENT W3L
73	EASTBOUND TYPICAL SECTION NO. 1
74	EASTBOUND TYPICAL SECTION NO. 2
75	EASTBOUND TYPICAL SECTION NO. 3
76	EASTBOUND TYPICAL SECTION NO. 4
77	EASTBOUND TYPICAL SECTION NO. 5
78	EASTBOUND TYPICAL SECTION NO. 6
79	EASTBOUND TYPICAL SECTION NO. 7
80	ON-RAMP SPINE EXTENSION DETAILS NO. 1
81	ON-RAMP SPINE EXTENSION DETAILS NO. 2
81A	FRAME WB2 SOFFIT PROJECTIONS NO. 1
81B	FRAME WB2 SOFFIT PROJECTIONS NO. 2 3
81C	FRAME WB2 SOFFIT PROJECTIONS NO. 3
82	WESTBOUND GIRDER LAYOUT GEOMETRICS
83	WESTBOUND GIRDER LAYOUT NO. 1
84	WESTBOUND GIRDER LAYOUT NO. 2
85	WESTBOUND GIRDER LAYOUT NO. 3
86	WESTBOUND GIRDER LAYOUT NO. 4
87	WESTBOUND GIRDER LAYOUT NO. 5
88	EASTBOUND GIRDER LAYOUT GEOMETRICS
89	EASTBOUND GIRDER LAYOUT NO. 1
90	EASTBOUND GIRDER LAYOUT NO. 2
91	EASTBOUND GIRDER LAYOUT NO. 3
92	EASTBOUND GIRDER LAYOUT NO. 4
93	EASTBOUND GIRDER LAYOUT NO. 5
94	EASTBOUND GIRDER LAYOUT NO. 6
95	GIRDER PRESTRESS DETAILS
96	GIRDER DIAPHRAGM DETAILS NO. 1
97	GIRDER DIAPHRAGM DETAILS NO. 2
97A	GIRDER DIAPHRAGM DETAILS NO. 3 3
97B	GIRDER DIAPHRAGM DETAILS NO. 4
98	MISC SUPERSTRUCTURE DETAILS NO. 1
99	MISC SUPERSTRUCTURE DETAILS NO. 2
100	WESTBOUND GIRDER TOP REINFORCEMENT NO. 1
101	WESTBOUND GIRDER TOP REINFORCEMENT NO. 2
102	WESTBOUND GIRDER TOP REINFORCEMENT NO. 3
103	WESTBOUNO GIRDER TOP REINFORCEMENT NO. 4
104	WESTBOUNO GIRDER TOP REINFORCEMENT NO. 5
105	WESTBOUNO GIRDER BOTTOM REINFORCEMENT NO. 1
106	WESTBOUNO GIRDER BOTTOM REINFORCEMENT NO. 2
107	WESTBOUND GIRDER BOTTOM REINFORCEMENT NO. 3
108	EASTBOUND GIRDER TOP REINFORCEMENT NO. 1
109	EASTBOUND GIRDER TOP REINFORCEMENT NO. 2
110	EASTBOUND GIRDER BOTTOM REINFORCEMENT NO. 1
111	HINGE W7LA DETAILS NO. 1
112	HINGE W7LA DETAILS NO. 2
113	HINGE W7LA DETAILS NO. 3
114	HINGE W6RB DETAILS NO. 1
115	HINGE W6RB DETAILS NO. 2
116	HINGE W6RB DETAILS NO. 3
117	HINGE W6RB DETAILS NO. 4
118	HINGE K CLOSURE DETAILS NO. 1
119	HINGE K CLOSURE DETAILS NO. 2
120	HINGE K CLOSURE DETAILS NO. 3
121	HINGE K CLOSURE DETAILS NO. 4
122	HINGE K CLOSURE DETAILS NO. 5
123	HINGE K CLOSURE DETAILS NO. 6
124	HINGE K CLOSURE DETAILS NO. 7
125	HINGE K CLOSURE DETAILS NO. 8
126	HINGE K CLOSURE DETAILS NO. 9
127	HINGE K CLOSURE DETAILS NO. 10
128	HINGE K CLOSURE DETAILS NO. 11
129	HINGE K CLOSURE DETAILS NO. 12
130	HINGE K CLOSURE DETAILS NO. 13
131	HINGE K CLOSURE DETAILS NO. 14
132	HINGE K CLOSURE DETAILS NO. 15
133	CABLE RESTRAINER UNIT - TYPE 2
134	CABLE RESTRAINER UNIT - TYPE 2 DETAILS
135	SPHERICAL BEARING DETAILS
136	DECK JOINT DETAILS
137	SEISMIC JOINT
138	SEISMIC JOINT
139	SEISMIC JOINT
140	SEISMIC JOINT
141	SEISMIC JOINT
142	SEISMIC JOINT
143	SEISMIC JOINT
144	SEISMIC JOINT
145	SEISMIC JOINT
146	MODULAR DECK JOINT DETAILS NO. 1 2
147	MODULAR DECK JOINT DETAILS NO. 2
148	HINGE KE & KW EXPANSION JOINT DETAILS NO. 1
149	HINGE KE & KW EXPANSION JOINT DETAILS NO. 2
150	HINGE KE & KW EXPANSION JOINT DETAILS NO. 3
151	HINGE KE & KW EXPANSION JOINT DETAILS NO. 4
152	HINGE KE & KW EXPANSION JOINT DETAILS NO. 5
153	HINGE KE & KW EXPANSION JOINT DETAILS NO. 6
154	HINGE KE & KW EXPANSION JOINT DETAILS NO. 7 3a
155	HINGE KE & KW EXPANSION JOINT DETAILS NO. 8
156	HINGE KE & KW EXPANSION JOINT DETAILS NO. 9
156A	HINGE KE & KW EXPANSION JOINT DETAILS NO. 10
156B	HINGE K PIPE BEAM DUST COVER DETAILS
157	BIKE PATH DETAILS NO. 1
158	BIKE PATH DETAILS NO. 2
159	FUTURE BIKE PATH DETAILS NO. 1
160	FUTURE BIKE PATH DETAILS NO. 2
161	FUTURE BIKE PATH DETAILS NO. 3
162	BIKE PATH RAILING DETAILS NO. 1
163	BIKE PATH RAILING DETAILS NO. 2
164	BIKE PATH RAILING DETAILS NO. 3
1 165	BIKE PATH RAILING DETAILS NO. 4
165A	BIKE PATH FENCE DETAILS NO. 1
165B	BIKE PATH FENCE DETAILS NO. 2
166	CONCRETE BARRIER TYPE 732 (MOD)
167	STRUCTURE APPROACH TYPE E0 (3) - MOD
168	STRUCTURE APPROACH DRAINAGE DETAILS 2
169-189C	LOG OF TEST BORINGS (NO. 1 TO NO. ~~21~~ 24)
190-209	AS-BUILT LOG OF TEST BORINGS (NO. 1 TO NO. 20)

FOR REVISION 1, 2, 3a AND 4 ONLY

FOR REVISION 3 ONLY

8

APPLICABLE STANDARD PLANS (DATED JULY 2004)

A10A	ACRONYMS AND ABBREVIATIONS (A-L)
A10B	ACRONYMS AND ABBREVIATIONS (M-Z)
A10C	SYMBOLS (1 OF 2)
A10D	SYMBOLS (2 OF 2)
A62B	LIMITS OF PAYMENT FOR EXCAVATION AND BACKFILL - BRIDGE SURCHARGE AND WALL
A62C	LIMITS OF PAYMENT FOR EXCAVATION AND BACKFILL - BRIDGE
B0-1	BRIDGE DETAILS
B0-3	BRIDGE DETAILS
B0-5	BRIDGE DETAILS
B0-13	BRIDGE DETAILS
B3-1	RETAINING WALL TYPE 1 H=1200 THROUGH 9100
B3-8	RETAINING WALL DETAILS NO. 1
B7-1	BOX GIRDER DETAILS
B7-5	DECK DRAINS
B7-6	DECK DRAINS TYPES D-1 AND D-2
B7-10	UTILITY OPENING BOX GIRDER
B7-11	UTILITY DETAILS
B8-5	CAST-IN-PLACE PRESTRESSED GIRDER DETAILS
B14-3	COMMUNICATION AND SPRINKLER CONTROL CONDUITS (CONDUIT LESS THAN SIZE 103)
B14-4	WATER SUPPLY LINE (BRIDGE) (PIPE SIZES LESS THAN NPS 4)
B14-5	WATER SUPPLY LINE (DETAILS) (PIPE SIZES LESS THAN NPS 4)

MARK	DATE	DESCRIPTIONS	BY	CH'D
4	5-10-11	Added Reinf at WB Girder Haunch	TL	JB
3a	2-8-11	Revised Exp Jt at Hinge K	TL	JB
3	10-15-10	WB Ramp Revisions	TL	AE
2	10-14-10	Deleted Seismic Jt sheets for Hinges W7LA & W6RB, added Modular Jt sheets	TL	JB
1	9-1-10	Added Bike Path Fence Sheets	TL	JB

REVISIONS

CONTRACT CHANGE ORDER NO. 82
SHEET 2 OF 3

2 REVISED PER ADDENDUM NO. 2 DATED JANUARY 22, 2009

8 REVISED PER ADDENDUM NO. 8 DATED NOVEMBER 12, 2009

DIST.	COUNTY	ROUTE	KILOMETER POST TOTAL PROJECT	SHEET NO.	TOTAL SHEETS
04	SF	80	12.7/13.2	551R4	806

REGISTERED ENGINEER - CIVIL
6-23-08
PLANS APPROVAL DATE
The State of California or its officers or agents shall not be responsible for the accuracy or completeness of electronic copies of this plan sheet.

T.Y. LIN / MOFFATT & NICHOL
TWO HARRISON STREET
SAN FRANCISCO, CA 94105

DESIGN OVERSIGHT
JOHN MOOK, BERNARD CHAN, JUAN F. CARPIO, HASAN EL-NATUR
March 3, 2008
SIGN OFF DATE
5/16/2011
Rev. Date: 5-15-95

	BY	CHECKED
DESIGN	Desai	Jain
DETAILS	Van Ryn/Zucchi/Mal	Jain
QUANTITIES	Liao	E. Nichol

PREPARED FOR THE STATE OF CALIFORNIA DEPARTMENT OF TRANSPORTATION

Jal Birdy
PROJECT ENGINEER

BRIDGE NO. 34-0006 L/R
KILOMETER POST 12.8

CU 04251
EA 0120S1

DISREGARD PRINTS BEARING EARLIER REVISION DATES

SAN FRANCISCO OAKLAND BAY BRIDGE
EAST SPAN SEISMIC SAFETY PROJECT

YBI TRANSITION STRUCTURES

INDEX TO BRIDGE PLANS

SHEET 2 OF 209

ORIGINAL SCALE IN MILLIMETERS FOR REDUCED PLANS 0 10 20 30 40 50 60 70 80 90 100

FILE => P:\4141-06\CADD\TS\Checked Plans\YBITS #1-100% No. 2_03-03-08 (Final Renamed)\051011 Haunch Reinf TIO CCO\04-0120S1-34-006R1-a-ttp.dgn

May 10, 2011

USERNAME => fdawson DATE PLOTTED => 5/10/2011 TIME PLOTTED => 11:11:22 AM

DIST.	COUNTY	ROUTE	KILOMETER POST TOTAL PROJECT	SHEET NO.	TOTAL SHEETS
04	SF	80	12.7/13.2	621BSR	806

REGISTERED ENGINEER - CIVIL

5-16-11
PLANS APPROVAL DATE

REGISTERED PROFESSIONAL ENGINEER A.L. ELY No. 18880 Exp. 6-30-11 CIVIL STATE OF CALIFORNIA

The State of California or its officers or agents shall not be responsible for the accuracy or completeness of electronic copies of this plan sheet.

T.Y. LIN / MOFFATT & NICHOL
TWO HARRISON STREET
SAN FRANCISCO, CA 94105

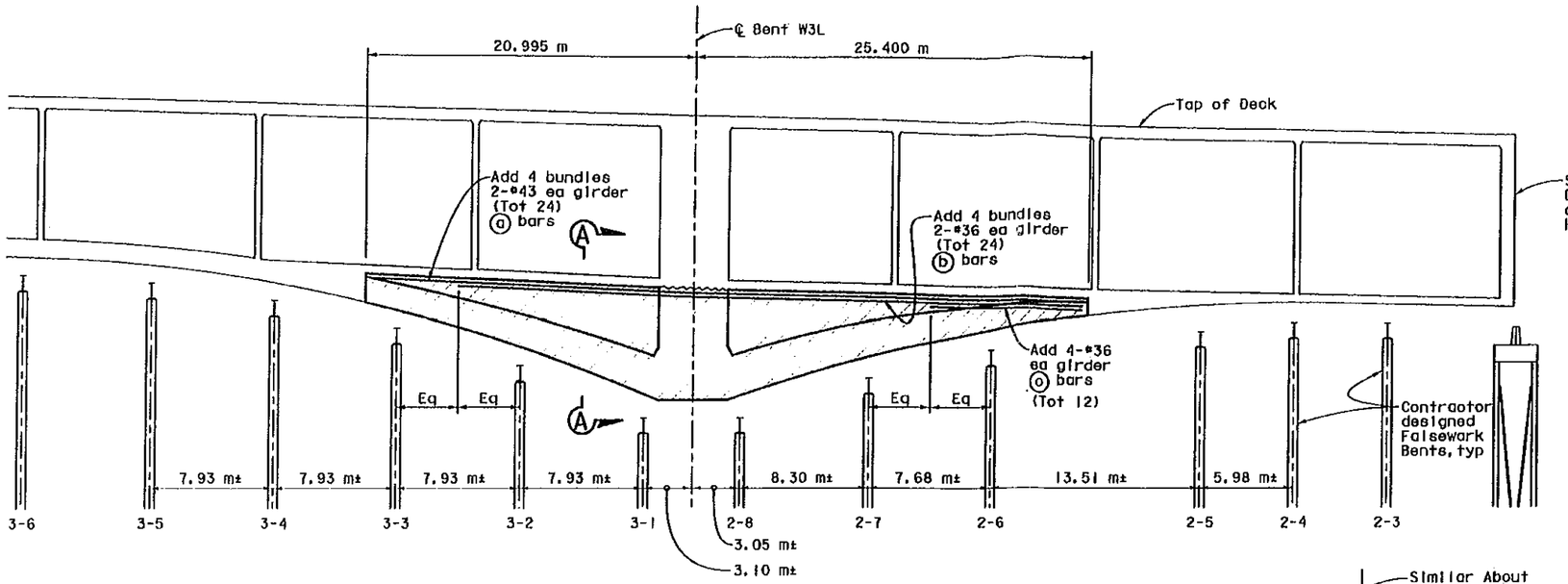

LONGITUDINAL SECTION

No Scale

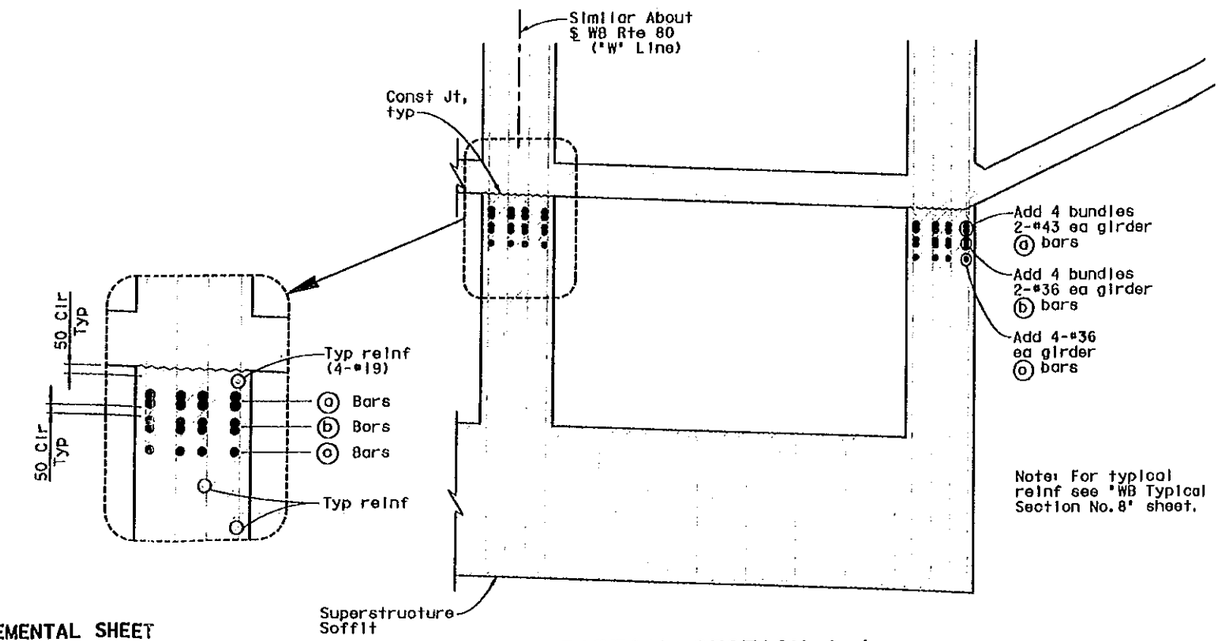

Note: For typical reinf see 'WB Typical Section No. 8' sheet.

PARTIAL SECTION A-A

1:25

Notes:

1. Added reinforcement shown shall be included in the first concrete pour in girder haunch area. Extent of first concrete pour shown hatched.
2. Contractor designed falsework supports (incl stringers) shown shall be in place under girder prior to making first concrete pour and until final deck pour is completed.

SUPPLEMENTAL SHEET

CONTRACT CHANGE ORDER NO. 82
SHEET 3 OF 3

ALL DIMENSIONS ARE IN MILLIMETERS UNLESS OTHERWISE SHOWN

SAN FRANCISCO OAKLAND BAY BRIDGE
EAST SPAN SEISMIC SAFETY PROJECT

YBI TRANSITION STRUCTURES

ADDED REINF AT WB GIRDER HAUNCH AT BENT W3L

DESIGN OVERSIGHT HASAN EL-HAYIR 6/8/11
SIGN OFF DATE

	BY	CHECKED
DESIGN	Lee	Birdy
DETAILS	Samson	Birdy
QUANTITIES	Lee	Birdy

PREPARED FOR THE STATE OF CALIFORNIA DEPARTMENT OF TRANSPORTATION

Jai Birdy
PROJECT ENGINEER

BRIDGE NO. 34-0006 L/R
KILOMETER POST 12.8

CU 04251
EA 0120S1

DISREGARD PRINTS BEARING EARLIER REVISION DATES

REVISION DATES (PRELIMINARY STAGE ONLY)

SHEET 72B OF 209

Rev. Date: 5-13-98

ORIGINAL SCALE IN MILLIMETERS FOR REDUCED PLANS 0 10 20 30 40 50 60 70 80 90 100

FILE => \\mlbfs\LB_Projects\4141-06\CADD\TS\Checked Plans\YBITS #1-100% No. 2_03-03-08 (Final Renamed)\051011 Haunch Reinf TIO CCO\04-0120a1-34-0006r1-k-t608b.dgn

June 7, 2011

USERNAME => fsamson DATE PLOTTED => 6/7/2011 TIME PLOTTED => 9:34:38 AM

CONTRACT CHANGE ORDER

Change Requested by: Engineer

CCO 82	Suppl. No. 1	Contract No. 04 - 0120S4	Road SF-80-12.7/13.2	FED. AID LOC.: NO FED AID

To: **M C M CONSTRUCTION INC**

You are directed to make the following changes from the plans and specifications or do the following described work not included in the plans and specifications for this contract. ***NOTE: This change order is not effective until approved by the Engineer.***

Description of work to be done, estimate of quantities and prices to be paid. (Segregate between additional work at contract price, agreed price and force account.) Unless otherwise stated, rates for rental of equipment cover only such time as equipment is actually used and no allowance will be made for idle time. This last percentage shown is the net accumulated increase or decrease from the original quantity in the Engineer's Estimate.

Extra Work at Lump Sum:

As authorized by the Engineer, furnish and erect added bar reinforcing steel for Bent W3R haunch in accordance with revised Contract Plan Sheet No. 628ASR1 of 806, Sheet No. 2 of 2 of this change order for the San Francisco-Oakland Bay Bridge East Span Seismic Safety Project Yerba Buena Island Transition Structures, Bridge Nos. 34-0006L/R.

For this work, the Contractor shall be compensated an Agreed Lump Sum of $94,164.00, which constitutes full and final compensation, including all markups, for all additional costs incurred as defined by this change order.

Extra Work at Lump Sum = $94,164.00

11.01.12

Estimated Cost: Increase ☑ Decrease ☐ **$94,164.00**

By reason of this order the time of completion will be adjusted as follows: 0 days

Submitted by

Signature	Resident Engineer	Date
William Howe	William Howe, Senior R.E.	10.31.12

Approval Recommended by

Signature	Area Construction Manager	Date
Deanna Vilcheck	Deanna Vilcheck	11/1/12

Engineer Approval by

Signature	Area Construction Manager	Date
Deanna Vilcheck	Deanna Vilcheck	12/4/12

We the undersigned contractor, have given careful consideration to the change proposed and agree, if this proposal is approved, that we will provide all equipment, furnish the materials, except as may otherwise be noted above, and perform all services necessary for the work above specified, and will accept as full payment therefor the prices shown above.

NOTE: If you, the contractor, do not sign acceptance of this order, your attention is directed to the requirements of the specifications as to proceeding with the ordered work and filing a written protest within the time therein specified.

Contractor Acceptance by

Signature	(Print name and title)	Date
	Edmundo A Ruch - Treasurer	11-30-2012

DIST.	COUNTY	ROUTE	KILOMETER POST TOTAL PROJECT	SHEET NO.	TOTAL SHEETS
04	SF	80	12.7/13.2	628ASR1	806

REGISTERED ENGINEER - CIVIL

PLANS APPROVAL DATE

The State of California or its officers or agents shall not be responsible for the accuracy or completeness of electronic copies of this plan sheet.

T.Y. LIN / MOFFATT & NICHOL
TWO HARRISON STREET
SAN FRANCISCO, CA 94105

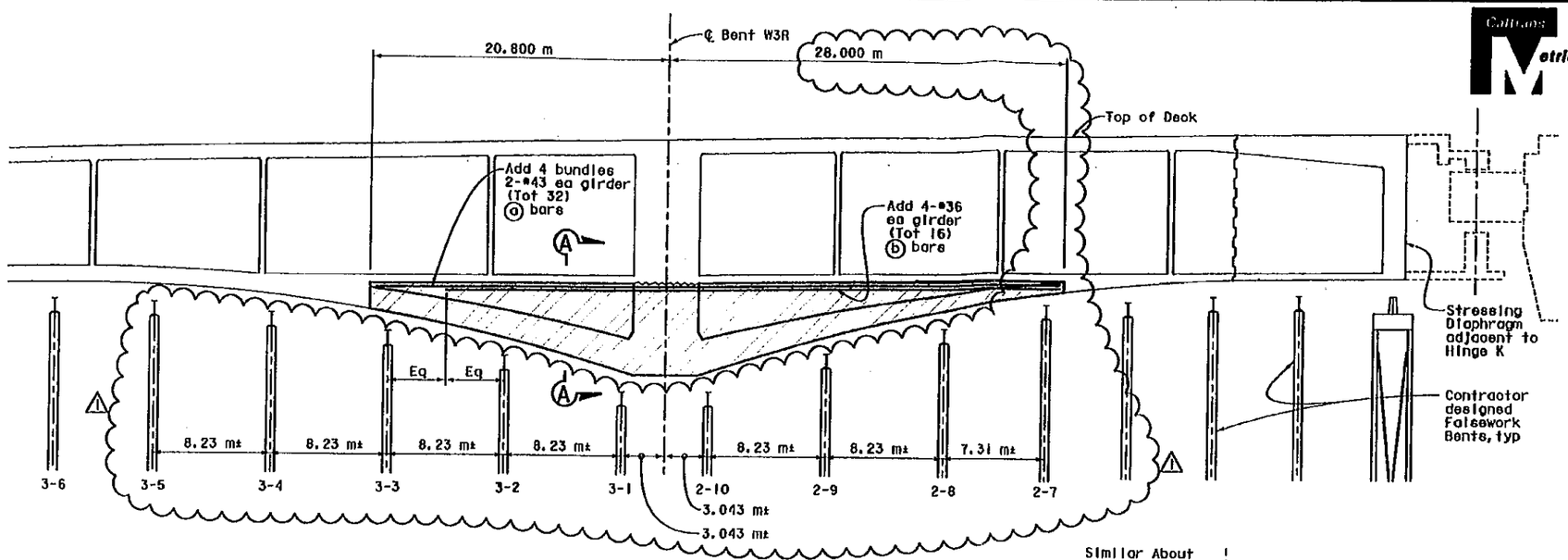

LONGITUDINAL SECTION

No Scale

MARK	DATE	DESCRIPTIONS	BY	CH'D
1	12-19-11	Rev Falsework Arrangement	TL	JB

REVISIONS

FOR REVISION 1 ONLY

Notes:

1. Added reinforcement shown shall be included in the first concrete pour in girder haunch area. Extent of first concrete pour shown hatched.
2. Contractor designed falsework supports (incl stringers) shown shall be in place under girder prior to making first concrete pour and until final deck pour is completed.

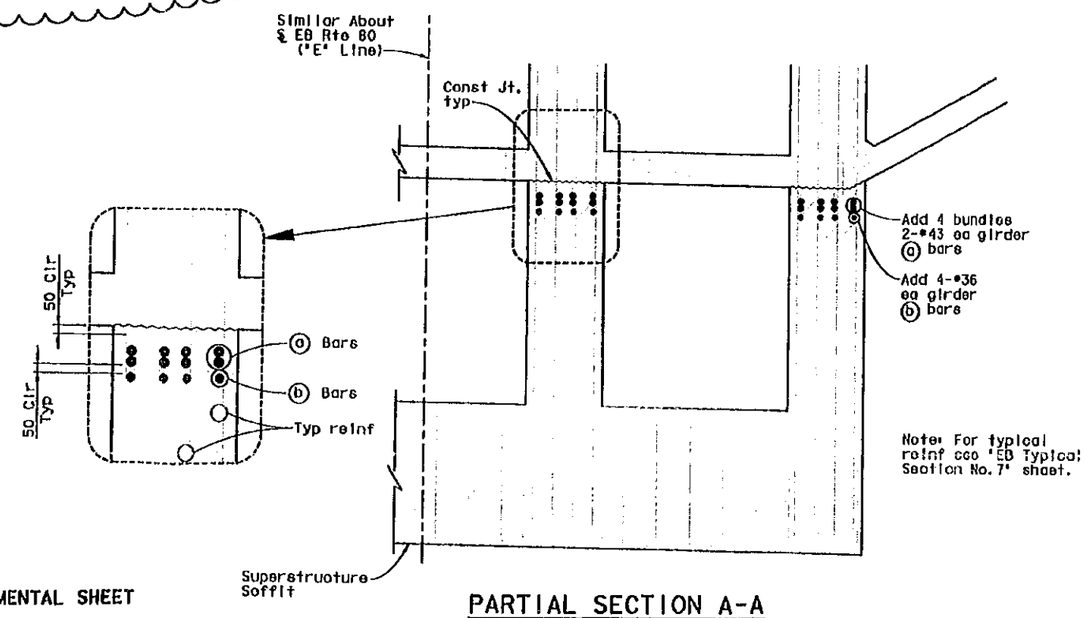

Note: For typical reinf see 'EB Typical Section No. 7' sheet.

PARTIAL SECTION A-A

1:25

SUPPLEMENTAL SHEET

CONTRACT CHANGE ORDER NO. 82S1
SHEET 2 OF 2

ALL DIMENSIONS ARE IN MILLIMETERS UNLESS OTHERWISE SHOWN

DESIGN OVERSIGHT HASAN EL-NATAR 1/12/12 SIGN OFF DATE

Rev. Date: 5-15-98

DESIGN	BY Lee	CHECKED Birdy	
DETAILS	BY Samson	CHECKED Birdy	
QUANTITIES	BY Lee	CHECKED Birdy	

PREPARED FOR THE STATE OF CALIFORNIA DEPARTMENT OF TRANSPORTATION

Jal Birdy
PROJECT ENGINEER

BRIDGE NO. 34-0006 L/R
KILOMETER POST 12.8

CU 04251
EA 0120S1

ORIGINAL SCALE IN MILLIMETERS FOR REDUCED PLANS 0 10 20 30 40 50 60 70 80 90 100

DIRECTORY PRINTS BEARING EARLIER REVISION DATES

REVISION DATES (PRELIMINARY BRIDGE ONLY)

SAN FRANCISCO OAKLAND BAY BRIDGE
EAST SPAN SEISMIC SAFETY PROJECT

YBI TRANSITION STRUCTURES

ADDED REINF AT EB GIRDER HAUNCH AT BENT W3R

SHEET 79A OF 209

FILE => P:\4141-06\CADD\TS\Checked Plans\YBITS #1-100% No. 2.03-03-08 (Final Renamed)\121911 EB Haunch Rebar T16 CCO\04-0120s1-34-0006r1-k-t615a.dgn

USERNAME => FSamson DATE PLOTTED => 12/19/2011 TIME PLOTTED => 3:00:21 PM

Dec 19, 2011

STATE OF CALIFORNIA - DEPARTMENT OF TRANSPORTATION

CONTRACT CHANGE ORDER MEMORANDUM

DATE: 3/6/2012 Page 1 of 1

TO: Deanna Vilcheck, ACM /	FILE: E.A. 04 - 0120S4
FROM: William Howe, Senior R.E.	CO-RTE-PM SF-80-12.7/13.2
	FED. NO. NO FED AID
CCO#: 82 SUPPLEMENT#: 1 Category Code: CHPT	CONTINGENCY BALANCE (incl. this change) $41,431,260.15
COST: $94,164.00 INCREASE ☑ DECREASE ☐	HEADQUARTERS APPROVAL REQUIRED? ☑ YES ☐ NO
SUPPLEMENTAL FUNDS PROVIDED: $0.00	IS THIS REQUEST IN ACCORDANCE WITH ENVIRONMENTAL DOCUMENTS? ☑ YES ☐ NO
CCO DESCRIPTION: Added Reinforcement @ W3R Haunch EB	**PROJECT DESCRIPTION:** YBITS-1 (Yerba Buena Island Transition Structures)

Original Contract Time:	Time Adj. This Change:	Previously Approved CCO Time Adjustments:	Percentage Time Adjusted: (including this change)	Total # of Unreconciled Deferred Time CCO(s): (including this change)
1390 Day(s)	0 Day(s)	0 Day(s)	0 %	9

THIS CHANGE ORDER PROVIDES FOR:

This change order provides for furnishing and erection of additional bar reinforcing steel for Bent W3R haunch girders as shown on revised Contract Plan Sheet No. 628ASR1 of 806.

This change is initiated by the Designer. The Bent W3E haunch consists of two layers of cells. Construction of the haunch requires a construction joint between the layers. Because this construction joint was not envisioned by the Designer, he has now strengthened the haunch girders with added reinforcement to allow for constructability.

This change provides for compensating the Contractor an Agreed Lump Sum amount for the work involved with implementing the modifications to the bar reinforcing steel at the Bent W3R haunch. This change will result in a cost increase of $94,164.00, which can be financed from the project's contingency fund. A detailed cost analysis is available on file in the project records.

The Contractor shall include the activities for this work on the critical path method schedule for this change order work, in accordance with SSP 10-1.22 Progress Schedule (Critical Path Method).

Maintenance concurrence is not required as this does not affect any permanent roadway maintenance features.

No adjustment to contract time is required due to these changes as they do not affect controlling operations.

CONCURRED BY:

Construction Engineer:	William Howe	Date 10.31.12
Bridge Engineer:	Mehran Ardakanian	Date 11.01.12
Project Engineer:	Bob Zandipour, Design	Date 11-5-12
Project Manager:	Ken Terpstra	Date 11-1-12
FHWA Rep.:		Date
Environmental:		Date
Other (specify):		Date
Other (specify):		Date
District Prior Approval By:		Date
HO (Issue Approve) By:	Larry Salhaney	Date 11-2-12
Resident Engineer's Signature:	William Howe	Date 10.31.12

ESTIMATE OF COST

	THIS REQUEST	TOTAL TO DATE
ITEMS	$0.00	$0.00
FORCE ACCOUNT	$0.00	$0.00
AGREED PRICE	$94,164.00	$203,266.69
ADJUSTMENT	$0.00	$0.00
TOTAL	$94,164.00	$203,266.69

FEDERAL PARTICIPATION

☐ PARTICIPATING ☐ PARTICIPATING IN PART ☑ NONE
☐ NON-PARTICIPATING (MAINTENANCE) ☐ NON-PARTICIPATING

FEDERAL SEGREGATION (if more than one Funding Source or P.I.P. type)
☐ CCO FUNDED PER CONTRACT ☐ CCO FUNDED AS FOLLOWS

FEDERAL FUNDING SOURCE	PERCENT

STATE OF CALIFORNIA - DEPARTMENT OF TRANSPORTATION

CONTRACT CHANGE ORDER

Change Requested by: Engineer

CCO 83	Suppl. No. 0	Contract No. 04 - 0120S4	Road SF-80-12.7/13.2	FED. AID LOC.: NO FED AID

To: M C M CONSTRUCTION INC

You are directed to make the following changes from the plans and specifications or do the following described work not included in the plans and specifications for this contract. ***NOTE: This change order is not effective until approved by the Engineer.***

Description of work to be done, estimate of quantities and prices to be paid. (Segregate between additional work at contract price, agreed price and force account.) Unless otherwise stated, rates for rental of equipment cover only such time as equipment is actually used and no allowance will be made for idle time. This last percentage shown is the net accumulated increase or decrease from the original quantity in the Engineer's Estimate.

Extra Work at Force Account:

Provide laboratory testing for concrete to measure Modulus of Elasticity, Maturity characteristics, Ceofficient of Thermal Expansion and as directed by the engineer.

This work will be paid for in accordance with Section 5-1.17 "Force Account Payment" of the Special Provisions, and Section 4-1.03D "Extra Work" of the Standard Specifications.

Estimated cost of Extra Work at Force Account $50,000.00

Estimated Cost: Increase ☑ Decrease ☐ **$50,000.00**

By reason of this order the time of completion will be adjusted as follows: 0 days

Submitted by		
Signature William Howe	Resident Engineer William Howe, Senior R.E.	Date 07-18-11
Approval Recommended by		
Signature Deanna Vilcheck	Area Construction Manager Deanna Vilcheck	Date 7/19/11
Final Approval by		
Signature Deanna Vilcheck	Area Construction Manager Deanna Vilcheck	Date 8/9/11

We the undersigned contractor, have given careful consideration to the change proposed and agree, if this proposal is approved, that we will provide all equipment, furnish the materials, except as may otherwise be noted above, and perform all services necessary for the work above specified, and will accept as full payment therefor the prices shown above.

NOTE: If you, the contractor, do not sign acceptance of this order, your attention is directed to the requirements of the specifications as to proceeding with the ordered work and filing a written protest within the time therein specified.

Contractor Acceptance by		
Signature	(Print name and title) Edmundo A. Pucki - Treasurer	Date 8-2-2011

STATE OF CALIFORNIA - DEPARTMENT OF TRANSPORTATION

CONTRACT CHANGE ORDER MEMORANDUM

DATE: 7/18/2011 Page 1 of 1

TO: Deanna Vilcheck, ACM / DV

FROM: William Howe, Senior R.E.

FILE: E.A. 04 - 0120S4
CO-RTE-PM SF-80-12.7/13.2
FED. NO. NO FED AID

CCO#: 83 | SUPPLEMENT#: 0 | Category Code: AVZZ

CONTINGENCY BALANCE (incl. this change) $68,038,844.19

COST: $50,000.00 INCREASE ☑ DECREASE ☐

HEADQUARTERS APPROVAL REQUIRED? ☐ YES ☑ NO

SUPPLEMENTAL FUNDS PROVIDED: $0.00

IS THIS REQUEST IN ACCORDANCE WITH ENVIRONMENTAL DOCUMENTS? ☑ YES ☐ NO

CCO DESCRIPTION:
laboratory testing for concrete

PROJECT DESCRIPTION:
YBITS-1 (Yerba Buena Island Transition Structures)

Original Contract Time:	Time Adj. This Change:	Previously Approved CCO Time Adjustments:	Percentage Time Adjusted (including this change)	Total # of Unreconciled Deferred Time CCO(s): (including this change)
1390 Day(s)	0 Day(s)	0 Day(s)	0 %	9

THIS CHANGE ORDER PROVIDES FOR:

All costs associated with laboratory testing for concrete to measure Modulus of Elasticity, Maturity characteristics, Ceofficient of Thermal Expansion and as directed by the engineer.

This project, the Yerba Buena Island Transition Structure (YBITS), provides for the construction of two bridges, which will connect eastbound and westbound traffic on the new east span of the San Francisco Oakland Bay Bridge (SFOBB) to the existing Yerba Buena Island (YBI) tunnel.

Section 10-1.59 "Concrete Structures" of contract special provisions calls for Frame 2 concrete for both eastbound and westbound Yerba Buena Island (YBI) transition Structures to be tested for Modulus of Elasticity, Creep, Shrinkage and Concrete density.

The contractor has performed this testing as required per the Special Provisions. RIC MAGGENTI, Toll Bridge Design, Materials & Research Engineer has now requested additional information for which the contractor will have to do additional tests to measure Modulus of Elasticity, Maturity characteristics, and Coefficients of Thermal Expansion.

This change order will provide for the added testing mentioned above , compensation for which shall be paid as Extra Work at Force Account at an estimated cost of $50,000.00, which will be financed from the projects contingency funds. A cost analysis is on file.

No adjustment of contract time is warranted, as this change will not affect the controlling operation.

Maintenance concurrence is not required, as this doesn't affect any permanent roadway features.

CONCURRED BY:

Construction Engineer:	William Howe	Date 07-18-11
Bridge Engineer:	Mehran Ardakanian	Date 07.18.11
Project Engineer:	Bob Zandipour, Design	Date 08.10.11
Project Manager:	Ken Terpstra	Date 08.09.11
FHWA Rep.:		Date
Environmental:		Date
Other (specify):		Date
Other (specify):		Date
District Prior Approval By:		Date
HQ (Issue Approve) By:		Date
Resident Engineer's Signature:	William Howe	Date 07-18-11

ESTIMATE OF COST

	THIS REQUEST	TOTAL TO DATE
ITEMS	$0.00	$0.00
FORCE ACCOUNT	$50,000.00	$50,000.00
AGREED PRICE	$0.00	$0.00
ADJUSTMENT	$0.00	$0.00
TOTAL	$50,000.00	$50,000.00

FEDERAL PARTICIPATION

☐ PARTICIPATING ☐ PARTICIPATING IN PART ☑ NONE
☐ NON-PARTICIPATING (MAINTENANCE) ☐ NON-PARTICIPATING

FEDERAL SEGREGATION (if more than one Funding Source or P.I.P. type)
☐ CCO FUNDED PER CONTRACT ☐ CCO FUNDED AS FOLLOWS

FEDERAL FUNDING SOURCE	PERCENT

ADA Notice: For individuals with sensory disabilities, this document is available in alternate formats. For information call: (916) 654-6410 or TDD (916) 654-3880 or write Records and Forms Management, 1120 N Street, MS-89, Sacramento, CA 95814.

CONTRACT CHANGE ORDER

Change Requested by: Engineer

CCO 85	Suppl. No. 0	Contract No. 04 - 0120S4	Road SF-80-12.7/13.2	FED. AID LOC.: NO FED AID

To: M C M CONSTRUCTION INC

You are directed to make the following changes from the plans and specifications or do the following described work not included in the plans and specifications for this contract. ***NOTE: This change order is not effective until approved by the Engineer.***

Description of work to be done, estimate of quantities and prices to be paid. (Segregate between additional work at contract price, agreed price and force account.) Unless otherwise stated, rates for rental of equipment cover only such time as equipment is actually used and no allowance will be made for idle time. This last percentage shown is the net accumulated increase or decrease from the original quantity in the Engineer's Estimate.

Adjustment of Compensation at Lump Sum:

Incorporate the revisions to the layout, profile and details of the duck bank and compressed airline and revisions to Retaining Wall No. 6 and Retaining Wall No. 7 as shown on Pages No. 3 through 76 of this change order (Plan Sheets No. 46R5, 48R3, 50R4, 54R2, 55R2, 55AR1, 55BR1, 57AR1, 58R1,59R3, 60R3, 112R1, 113R1, 114R1, 114AS1, 115R1, 120R5, 121R1, 127R4, 136R1, 137R2, 138R2, 138A, 138B, 138C, 139R3, 147R1, 148R2, 148A, 152R1, 152A, 153R2, 153B, 153C, 154A, 154B, 154C, 154D, 154ER1, 154FR1, 154G, 154H, 154J, 197R3, 246R1, 329R1, 330R2, 363L,363M, 450R2, 457AR2, 461R1, 466B, 474R1, 475R1, 477R1, 478R1, 482R1, 483R1, 483AR1, 484R2, 485R1, 486R1, 487R1, 488R1, 493R1, 494R1, 508R1, 509R1, 510R1, 516DR2, 516ER2, 516FR2 and 777R1).

The Contractor shall allocate labor and equipment resources for the construction of the following items of work as part of this change order:

1) Removal of the eastbound Frame 1 falsework.
2) Construction of the footing and column for Bent 8 of the YBI EB On-Ramp Structure.
3) Construction of Retaining Wall No. 6 and Retaining Wall No. 7.
4) Construction of the duct bank and airline from D Line Sta. 0+60 (approximate) to Sta. 1+63.
5) Installation of all utilities and appurtenances within the entire length of the duct bank.

The intent of this change order shall be to have all utilities within the duct bank ready for testing by January 1, 2013. The Contractor shall add additional shifts and work extended shifts with up to 120 trade laborers as necessary to achieve this January 1, 2013, date. Additional equipment shall be allocated as necessary to support the additional labor crews.

For all additional costs resulting from the revisions to the duct bank, compressed airline, Retaining Wall No. 6 and Retaining Wall No. 7 as incorporated under this change and for all additional costs pertaining to the allocation of resources as defined herein, the Contractor shall be compensated an Agreed Lump Sum of $7,599,030.00, which constitutes full and final compensation, including all markups, for all additional costs complete in place.

Compensation shall be paid with monthly progress payments through the completion of the duct bank work.

Adjustment of Compensation at Agreed Lump Sum = $7,599,030.00

Consideration of a time adjustment pertaining to any impacts to the Designated Portion of the Work 3 as defined under Section 4, Scope of Work, of the Contract Special Provisions is deferred. Determination of a commensurate time adjustment will be made in accordance with Section 8-1.07, "Liquidated Damages", of the Standard Specifications and Section 10-1.22, "Progress Schedule (Critical Path Method)", of the Special Provisions. There shall be no adjustment to the contract time of completion as a result of this change.

CONTRACT CHANGE ORDER

Change Requested by: Engineer

CCO 85	Suppl. No. 0	Contract No. 04 - 0120S4	Road SF-80-12.7/13.2	FED. AID LOC.: NO FED AID

Estimated Cost: Increase ☑ Decrease ☐ $7,599,030.00

By reason of this order the time of completion will be adjusted as follows: 0 days

Submitted by

Signature	Resident Engineer	Date
William Howe	William Howe, Senior R.E.	09-25-12

Approval Recommended by

Signature	Region Construction Division Chief	Date
	for Tony Anziano	9/25/12

Engineer Approval by

Signature	Region Construction Division Chief	Date
	Tony Anziano	11/12/12

We the undersigned contractor, have given careful consideration to the change proposed and agree, if this proposal is approved, that we will provide all equipment, furnish the materials, except as may otherwise be noted above, and perform all services necessary for the work above specified, and will accept as full payment therefor the prices shown above.

NOTE: If you, the contractor, do not sign acceptance of this order, your attention is directed to the requirements of the specifications as to proceeding with the ordered work and filing a written protest within the time therein specified.

Contractor Acceptance by

Signature	(Print name and title)	Date
	EDMUNDO A. NUCHI, TREASURER	11/8/12

DIST	COUNTY	ROUTE	TOTAL PROJECT	SHEET No.	TOTAL SHEETS
04	SF	80	12.7/13.2	46R5	806

3-05-08
REGISTERED CIVIL ENGINEER DATE

6-23-08
PLANS APPROVAL DATE

REGISTERED PROFESSIONAL ENGINEER T.T. Lai No. 63630 Exp. 9-30-08 CIVIL STATE OF CALIFORNIA

THE STATE OF CALIFORNIA OR ITS OFFICERS OR AGENTS SHALL NOT BE RESPONSIBLE FOR THE ACCURACY OR COMPLETENESS OF ELECTRONIC COPIES OF THIS PLAN SHEET.

PB AMERICAS, INC.
303 Second St., Suite 1000
San Francisco, CA 94107-1317

Caltrans Metric

FOR COMPLETE RIGHT OF WAY AND ACCURATE ACCESS DATA, SEE RIGHT OF WAY RECORD MAPS AT DISTRICT OFFICE.

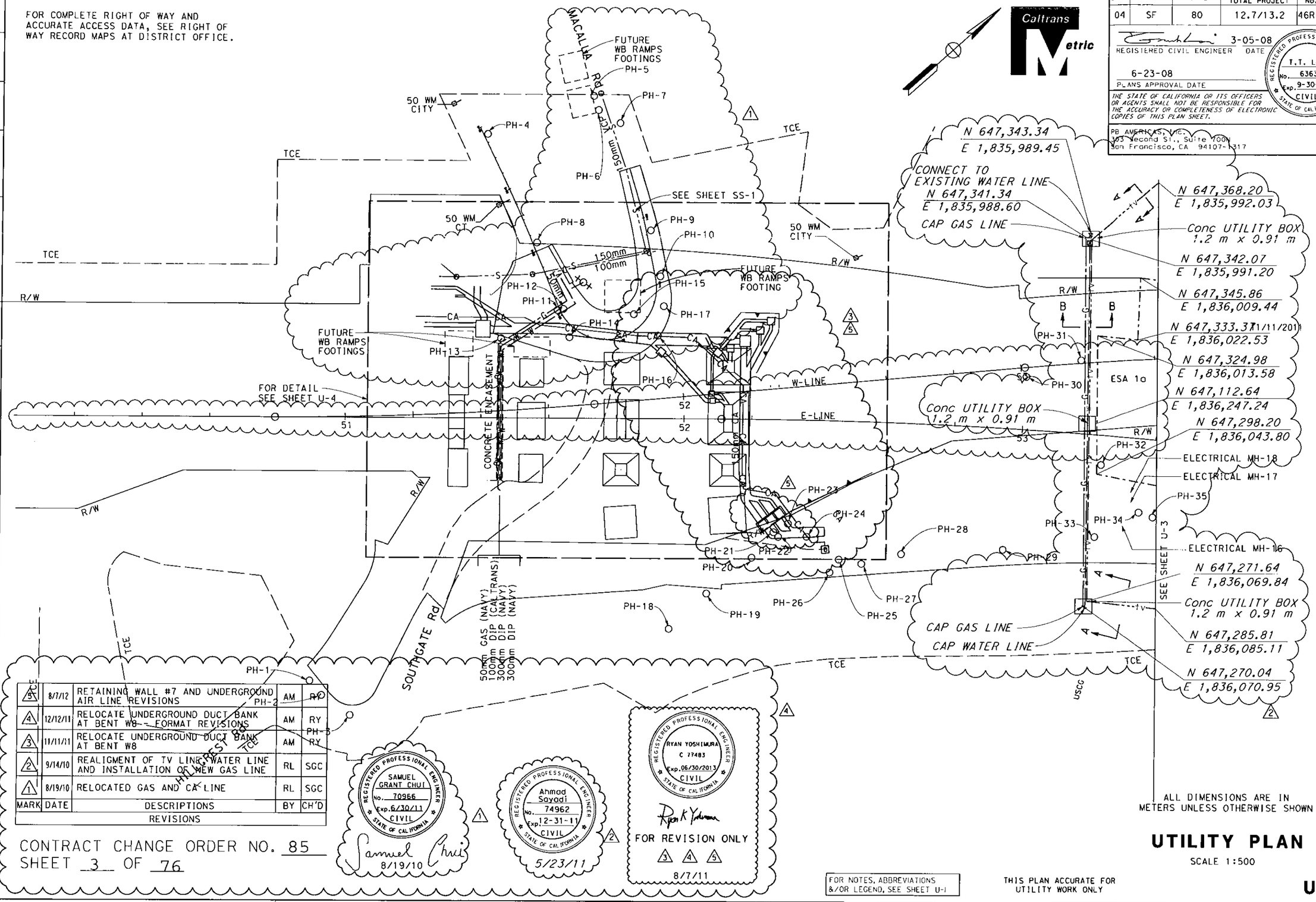

MARK	DATE	DESCRIPTIONS	BY	CH'D
5	8/7/12	RETAINING WALL #7 AND UNDERGROUND AIR LINE REVISIONS	AM	RY
4	12/12/11	RELOCATE UNDERGROUND DUCT BANK AT BENT W8 - FORMAT REVISIONS	AM	RY
3	11/11/11	RELOCATE UNDERGROUND DUCT BANK AT BENT W8	AM	RY
2	9/14/10	REALIGMENT OF TV LINE, WATER LINE AND INSTALLATION OF NEW GAS LINE	RL	SGC
1	8/19/10	RELOCATED GAS AND CA LINE	RL	SGC

REVISIONS

REGISTERED PROFESSIONAL ENGINEER SAMUEL GRANT CHUI No. 70966 Exp. 6/30/11 CIVIL STATE OF CALIFORNIA
Samuel Chui 8/19/10

REGISTERED PROFESSIONAL ENGINEER Ahmad Sayadi No. 74962 Exp. 12-31-11 CIVIL STATE OF CALIFORNIA
5/23/11

REGISTERED PROFESSIONAL ENGINEER RYAN YOSHIMURA C 77483 Exp. 06/30/2013 CIVIL STATE OF CALIFORNIA
Ryan K Yoshimura
FOR REVISION ONLY
3 4 5
8/7/11

CONTRACT CHANGE ORDER NO. 85
SHEET 3 OF 76

ALL DIMENSIONS ARE IN METERS UNLESS OTHERWISE SHOWN

UTILITY PLAN

SCALE 1:500

FOR NOTES, ABBREVIATIONS &/OR LEGEND, SEE SHEET U-1

THIS PLAN ACCURATE FOR UTILITY WORK ONLY

U-2

STATE OF CALIFORNIA - DEPARTMENT OF TRANSPORTATION
Caltrans
DESIGN

FUNCTIONAL SUPERVISOR: BOB ZANDIPOUR
CALCULATED-DESIGNED BY: TRINH LAI
CHECKED BY: BOB ZANDIPOUR
REVISED BY: TL
DATE REVISED: 10/07

LAST REVISION DATE PLOTTED => 8/7/2012
TIME PLOTTED => 9:11:43 PM

BORDER LAST REVISED 3/1/2007
RELATIVE BORDER SCALE IS IN MILLIMETERS 0 20 40 60 80
USERNAME => Yoshimura
DGN FILE => 40120Ska002r05.dgn
CU 04251
EA 0120S1

DIST	COUNTY	ROUTE	TOTAL PROJECT	NO.	SHEETS
04	SF	80	12.7/13.2	48R3	806

REGISTERED CIVIL ENGINEER 3-05-08 DATE

6-23-08
PLANS APPROVAL DATE

REGISTERED PROFESSIONAL ENGINEER T.T. Loi No. 63630 Exp. 9-30-08 CIVIL STATE OF CALIFORNIA

THE STATE OF CALIFORNIA OR ITS OFFICERS OR AGENTS SHALL NOT BE RESPONSIBLE FOR THE ACCURACY OR COMPLETENESS OF ELECTRONIC COPIES OF THIS PLAN SHEET.

PB AMERICAS, Inc.
303 Second St., Suite 700N
San Francisco, CA 94107-1317

Caltrans Metric

FOR COMPLETE RIGHT OF WAY AND ACCURATE ACCESS DATA, SEE RIGHT OF WAY RECORD MAPS AT DISTRICT OFFICE.

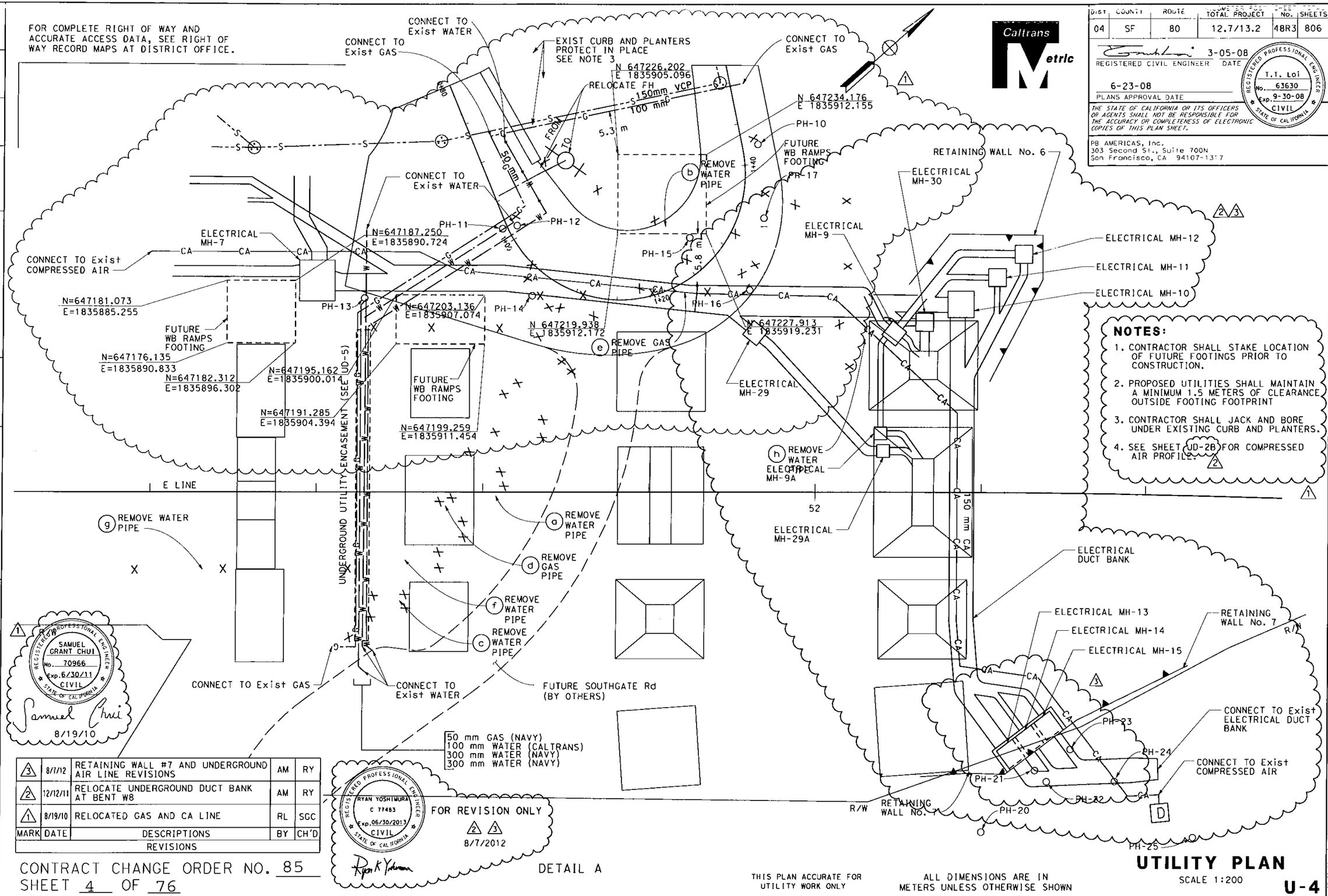

NOTES:

1. CONTRACTOR SHALL STAKE LOCATION OF FUTURE FOOTINGS PRIOR TO CONSTRUCTION.
2. PROPOSED UTILITIES SHALL MAINTAIN A MINIMUM 1.5 METERS OF CLEARANCE OUTSIDE FOOTING FOOTPRINT
3. CONTRACTOR SHALL JACK AND BORE UNDER EXISTING CURB AND PLANTERS.
4. SEE SHEET UD-2B FOR COMPRESSED AIR PROFILE. 2

REGISTERED PROFESSIONAL ENGINEER SAMUEL GRANT CHUI No. 70966 Exp. 6/30/11 CIVIL STATE OF CALIFORNIA
Samuel Chui
8/19/10

MARK	DATE	DESCRIPTIONS	BY	CH'D
3	8/7/12	RETAINING WALL #7 AND UNDERGROUND AIR LINE REVISIONS	AM	RY
2	12/12/11	RELOCATE UNDERGROUND DUCT BANK AT BENT W8	AM	RY
1	8/19/10	RELOCATED GAS AND CA LINE	RL	SGC

REVISIONS

REGISTERED PROFESSIONAL ENGINEER RYAN YOSHIMURA C 77483 Exp. 06/30/2013 CIVIL STATE OF CALIFORNIA
Ryan K Yoshimura
FOR REVISION ONLY 2 3
8/7/2012

DETAIL A

THIS PLAN ACCURATE FOR UTILITY WORK ONLY

ALL DIMENSIONS ARE IN METERS UNLESS OTHERWISE SHOWN

UTILITY PLAN

SCALE 1:200

U-4

CONTRACT CHANGE ORDER NO. 85
SHEET 4 OF 76

STATE OF CALIFORNIA - DEPARTMENT OF TRANSPORTATION
Caltrans
DESIGN

FUNCTIONAL SUPERVISOR: BOB ZANDIPOUR
CALCULATED-DESIGNED BY: TRINH LAI
CHECKED BY: BOB ZANDIPOUR
REVISED BY: TL
DATE REVISED: 10/07

LAST REVISION DATE PLOTTED => 8/7/2012
TIME PLOTTED => 9:53:03 PM

BORDER LAST REVISED 3/1/2007
RELATIVE BORDER SCALE IS IN MILLIMETERS 0 20 40 60 80
USERNAME => Yoshimura
DGN FILE => 40120Ska004r03.dgn
CU 04251
EA 0120S1

DIST	COUNTY	ROUTE	TOTAL PROJECT	SHEET No.	TOTAL SHEETS
04	SF	80	12.7/13.2	50R4	806

REGISTERED CIVIL ENGINEER 3-05-08 DATE

6-23-08
PLANS APPROVAL DATE

REGISTERED PROFESSIONAL ENGINEER T.T. Loi No. 63630 Exp. 9-30-08 CIVIL STATE OF CALIFORNIA

THE STATE OF CALIFORNIA OR ITS OFFICERS OR AGENTS SHALL NOT BE RESPONSIBLE FOR THE ACCURACY OR COMPLETENESS OF ELECTRONIC COPIES OF THIS PLAN SHEET.

PB AMERICAS, Inc.
303 Second St., Suite 700N
San Francisco, CA 94107-1317

Caltrans Metric

FOR COMPLETE RIGHT OF WAY AND ACCURATE ACCESS DATA, SEE RIGHT OF WAY RECORD MAPS AT DISTRICT OFFICE.

TYPICAL FOR DUCTBANK AND MANHOLES

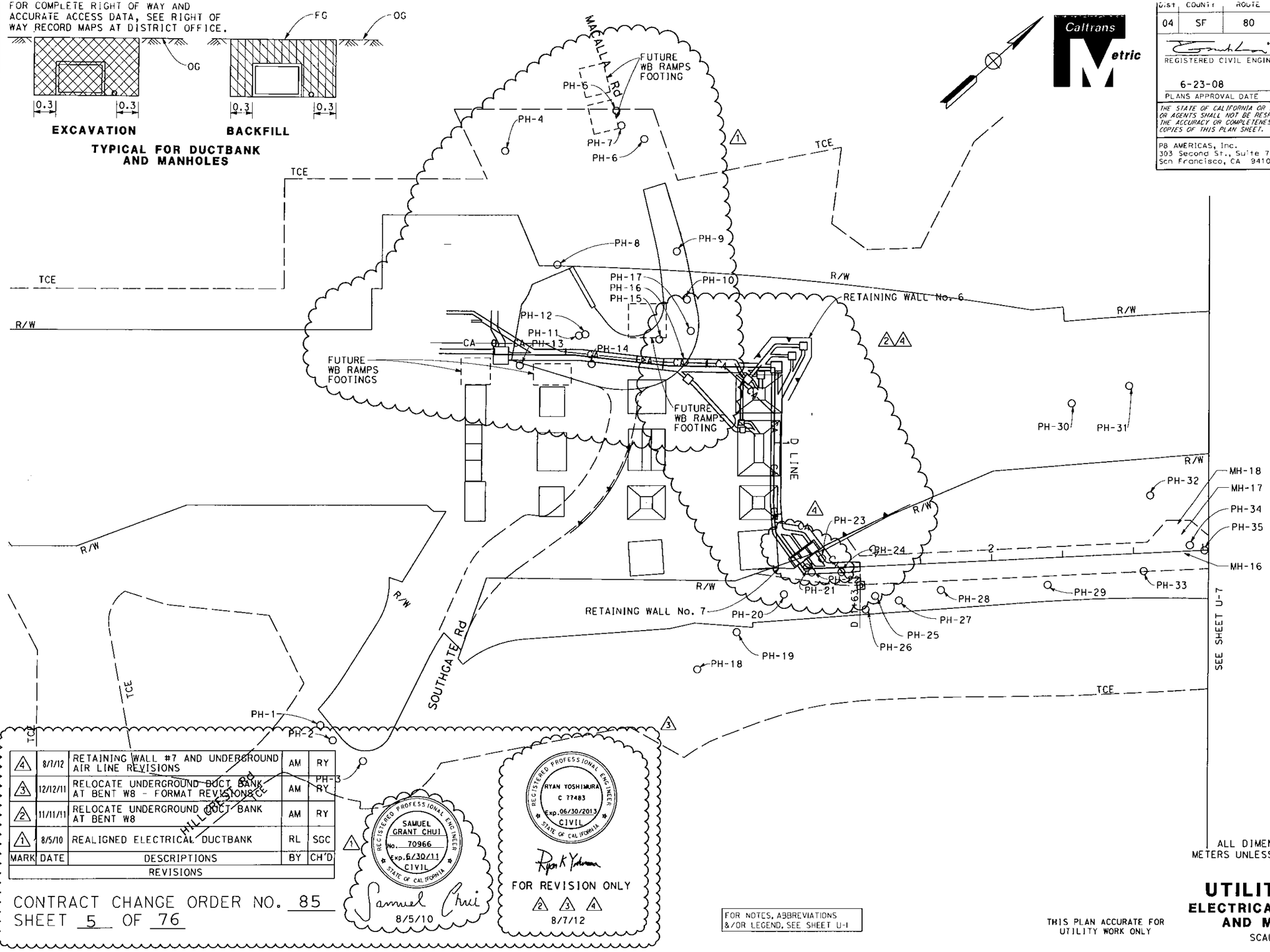

MARK	DATE	DESCRIPTIONS	BY	CH'D
4	8/7/12	RETAINING WALL #7 AND UNDERGROUND AIR LINE REVISIONS	AM	RY
3	12/12/11	RELOCATE UNDERGROUND DUCT BANK AT BENT W8 - FORMAT REVISIONS	AM	RY
2	11/11/11	RELOCATE UNDERGROUND DUCT BANK AT BENT W8	AM	RY
1	8/5/10	REALIGNED ELECTRICAL DUCTBANK	RL	SGC

REVISIONS

CONTRACT CHANGE ORDER NO. 85
SHEET 5 OF 76

REGISTERED PROFESSIONAL ENGINEER SAMUEL GRANT CHUI No. 70966 Exp. 6/30/11 CIVIL STATE OF CALIFORNIA
Samuel Chui
8/5/10

REGISTERED PROFESSIONAL ENGINEER RYAN YOSHIMURA C 77483 Exp. 06/30/2013 CIVIL STATE OF CALIFORNIA
Ryan K Yoshimura
FOR REVISION ONLY
2 3 4
8/7/12

FOR NOTES, ABBREVIATIONS &/OR LEGEND, SEE SHEET U-1

ALL DIMENSIONS ARE IN METERS UNLESS OTHERWISE SHOWN

THIS PLAN ACCURATE FOR UTILITY WORK ONLY

UTILITY PLAN
ELECTRICAL DUCT BANK AND MANHOLES
SCALE 1:500

U-6

STATE OF CALIFORNIA - DEPARTMENT OF TRANSPORTATION
Caltrans
DESIGN

FUNCTIONAL SUPERVISOR: BOB ZANDIPOUR
CALCULATED-DESIGNED BY: TRINH LAI
CHECKED BY: BOB ZANDIPOUR
REVISED BY: TL
DATE REVISED: 10/07

LAST REVISION 08-07-12
DATE PLOTTED => 8/7/2012
TIME PLOTTED => 10:32:55 PM

BORDER LAST REVISED 3/1/2007
RELATIVE BORDER SCALE IS IN MILLIMETERS 0 20 40 60 80
USERNAME => Yoshimura
DGN FILE => 401205ka006r04.dgn
CU 04251
EA 0120S1

DIST	COUNTY	ROUTE	TOTAL PROJECT	SHEET No.	TOTAL SHEETS
04	SF	80	12.7/13.2	54R2	806

REGISTERED CIVIL ENGINEER 3-05-08 DATE

6-23-08
PLANS APPROVAL DATE

REGISTERED PROFESSIONAL ENGINEER T.T. Lai No. 63630 Exp. 9-30-08 CIVIL STATE OF CALIFORNIA

THE STATE OF CALIFORNIA OR ITS OFFICERS OR AGENTS SHALL NOT BE RESPONSIBLE FOR THE ACCURACY OR COMPLETENESS OF ELECTRONIC COPIES OF THIS PLAN SHEET.

PB AMERICAS, Inc.
303 Second St., Suite 700N
San Francisco, CA 94107-1317

Caltrans Metric

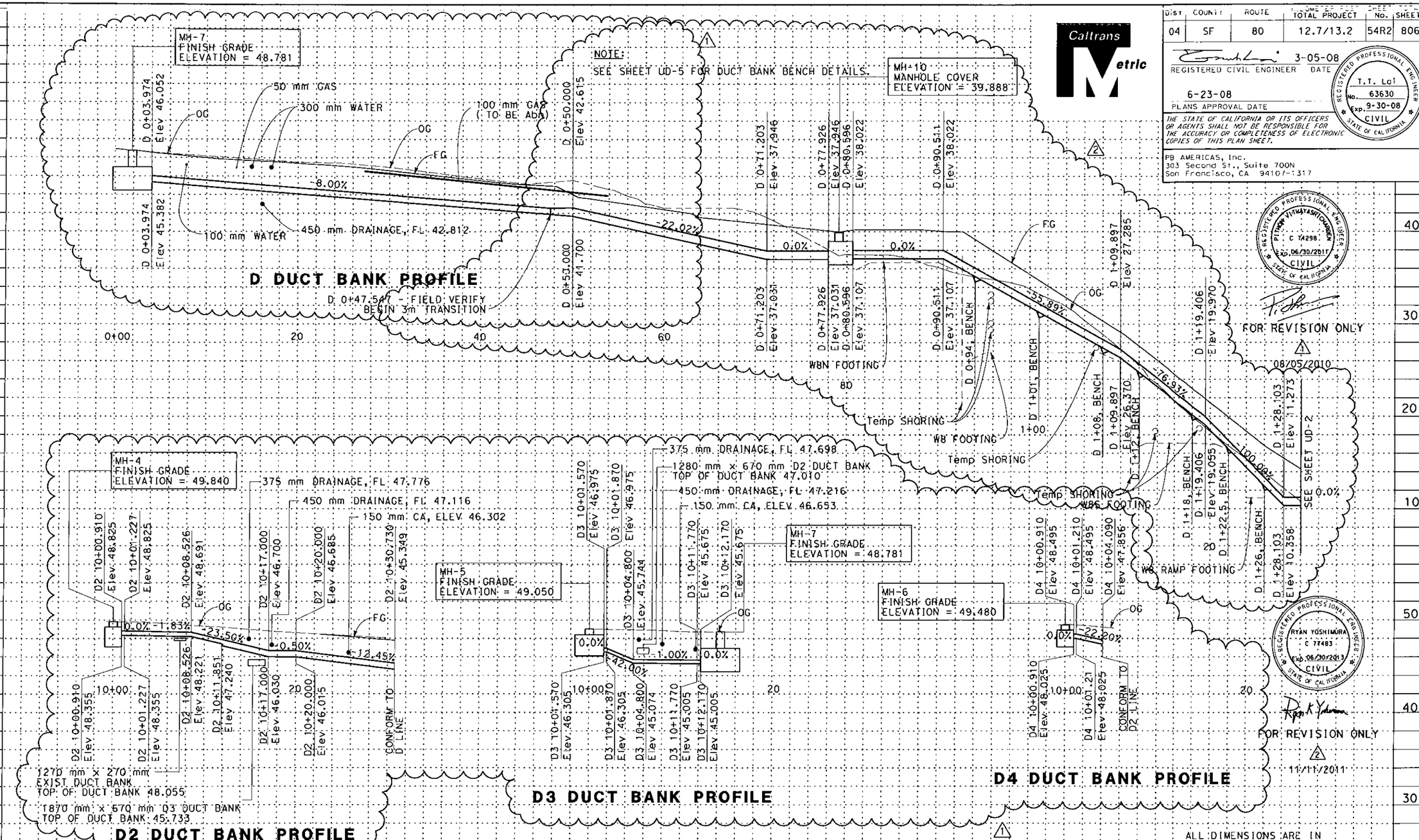

MARK	DATE	DESCRIPTIONS	REV	CK	DET
2	11/11/11	RELOCATE UNDERGROUND DUCT BANK AT BENT W8.	AM	RY	
1	6/11/10	REALIGNED ELECTRICAL DUCT BANK			

REVISIONS

CONTRACT CHANGE ORDER NO. 85
SHEET 6 OF 76

ALL DIMENSIONS ARE IN METERS UNLESS OTHERWISE SHOWN

UTILITY DETAILS
DUCT BANK PROFILE

SCALE HORIZ 1:200 VERT 1:200

UD-1

TRINH LAI	BOB ZANDIPOUR				
CALCULATED-DESIGNED BY	CHECKED BY	REVISED BY	DATE REVISED	TL	10/07
FUNCTIONAL SUPERVISOR	BOB ZANDIPOUR				

STATE OF CALIFORNIA - DEPARTMENT OF TRANSPORTATION
Caltrans
DESIGN

Station
m³ Exc Emb

LAST REVISION 11-11-11 DATE PLOTTED => 11/10/2011 TIME PLOTTED => 2:15:40 PM

BORDER LAST REVISED 3/1/2007 | RELATIVE BORDER SCALE IS IN MILLIMETERS 0 20 40 60 80 | USERNAME => Yoshimura DGN FILE => 40120Skb001r02.dgn | CU 04251 | EA 0120S1

DIST	COUNTY	ROUTE	TOTAL PROJECT	No.	SHEETS
04	SF	80	12.7/13.2	55R2	806

REGISTERED CIVIL ENGINEER 3-05-08 DATE

6-23-08
PLANS APPROVAL DATE

REGISTERED PROFESSIONAL ENGINEER T.T. Loi No. 63630 Exp. 9-30-08 CIVIL STATE OF CALIFORNIA

THE STATE OF CALIFORNIA OR ITS OFFICERS OR AGENTS SHALL NOT BE RESPONSIBLE FOR THE ACCURACY OR COMPLETENESS OF ELECTRONIC COPIES OF THIS PLAN SHEET.

PB AMERICAS, Inc.
303 Second St., Suite 700N
San Francisco, CA 94107-1317

Caltrans Metric

MARK	DATE	DESCRIPTIONS	REV.	CK.	DET.
2	7/24/12	RETAINING WALL #7 REVISIONS	AM	RY	
1	11/11/11	RELOCATE UNDERGROUND DUCT BANK AT BENT W8	AM	RY	

REVISIONS

CONTRACT CHANGE ORDER NO. 85
SHEET 7 OF 76

REGISTERED PROFESSIONAL ENGINEER RYAN YOSHIMURA C 77483 Exp. 06/30/2013 CIVIL STATE OF CALIFORNIA

FOR REVISION ONLY
1 2
7/24/2012

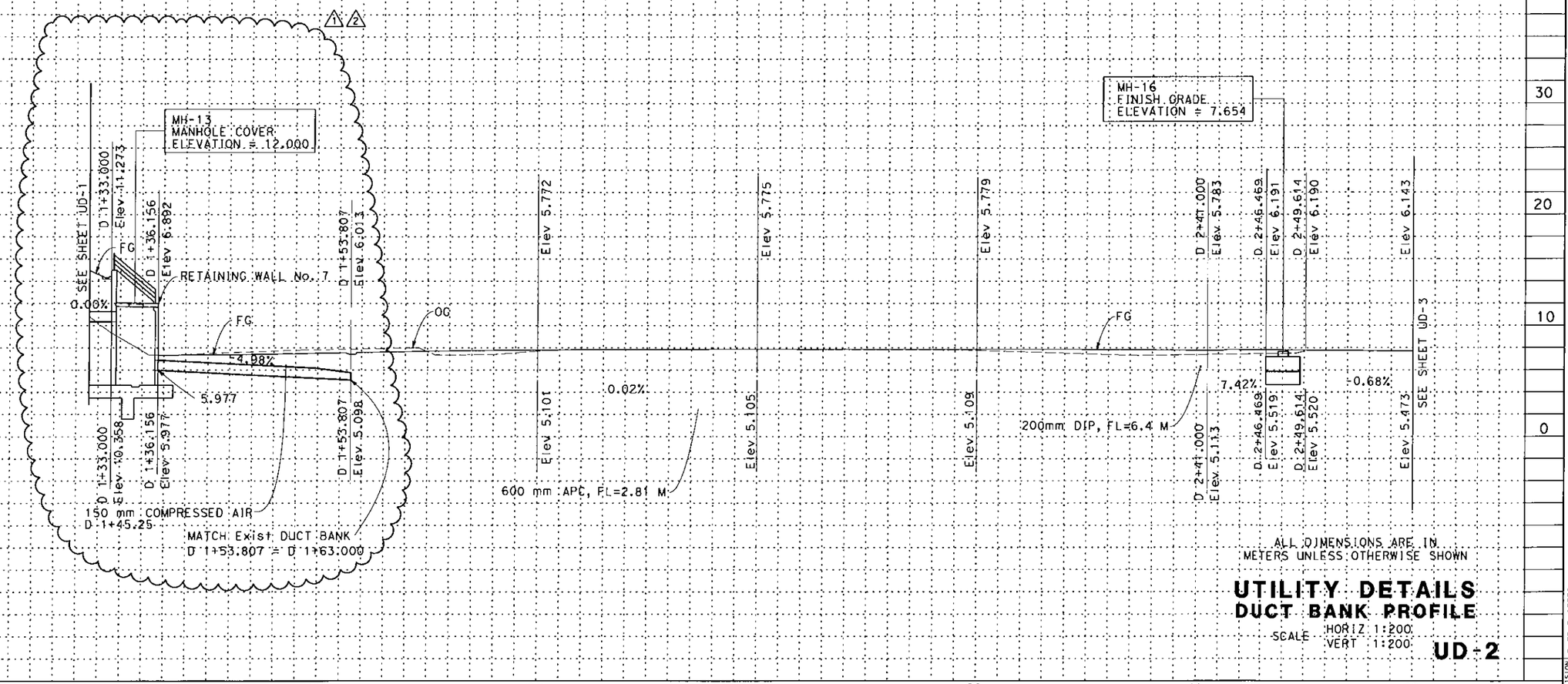

ALL DIMENSIONS ARE IN METERS UNLESS OTHERWISE SHOWN

UTILITY DETAILS
DUCT BANK PROFILE

SCALE HORIZ 1:200
VERT 1:200

UD-2

TRINH LAI	REVISED BY	TL	CALCULATED-DESIGNED BY
BOB ZANDIPOUR	DATE REVISED	10/07	CHECKED BY

FUNCTIONAL SUPERVISOR: BOB ZANDIPOUR

STATE OF CALIFORNIA - DEPARTMENT OF TRANSPORTATION
Caltrans
DESIGN

LAST REVISION 07-24-12
DATE PLOTTED => 7/24/2012
TIME PLOTTED => 10:52:42 AM

MARK	DATE	DESCRIPTIONS	REV	CK	DET
1	7/24/12	RETAINING WALL #7 REVISIONS	AM	RY	
0	11/11/11	RELOCATE UNDERGROUND DUCT BANK AT BENT W8	AM	RY	

REVISIONS

CONTRACT CHANGE ORDER NO. 85
SHEET 8 OF 76

REGISTERED PROFESSIONAL ENGINEER RYAN YOSHIMURA C 77483 Exp. 06/30/2013 CIVIL STATE OF CALIFORNIA

Ryan K Yoshimura

FOR REVISION ONLY
1
7/24/2012

NOTE:
1. SEE SHEET UD-5 FOR DUCT BANK BENCH DETAILS.

Caltrans Metric

DIST	COUNTY	ROUTE	TOTAL PROJECT	SHEET No.	TOTAL SHEETS
04	SF	80	12.7/13.2	55A R1	806

Ryan K Yoshimura 11-11-11
REGISTERED CIVIL ENGINEER DATE

PLANS APPROVAL DATE

REGISTERED PROFESSIONAL ENGINEER Ryan K. Yoshimura No. 77483 Exp. 6-30-13 CIVIL STATE OF CALIFORNIA

THE STATE OF CALIFORNIA OR ITS OFFICERS OR AGENTS SHALL NOT BE RESPONSIBLE FOR THE ACCURACY OR COMPLETENESS OF ELECTRONIC COPIES OF THIS PLAN SHEET.

PB AMERICAS, Inc.
303 Second St., Suite 700N
San Francisco, CA 94107-1317

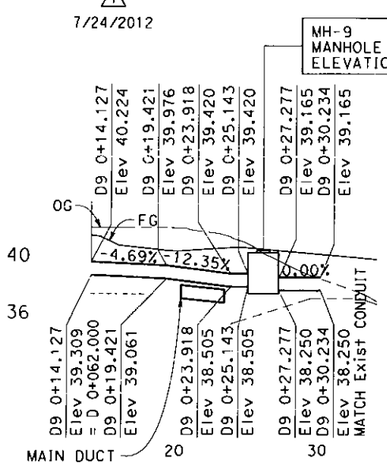

D9 DUCT BANK PROFILE

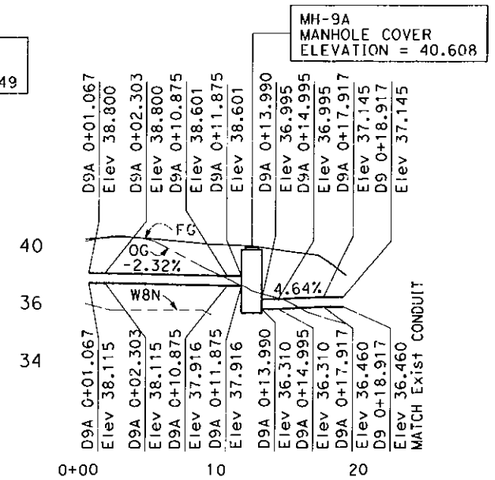

D9A DUCT BANK PROFILE

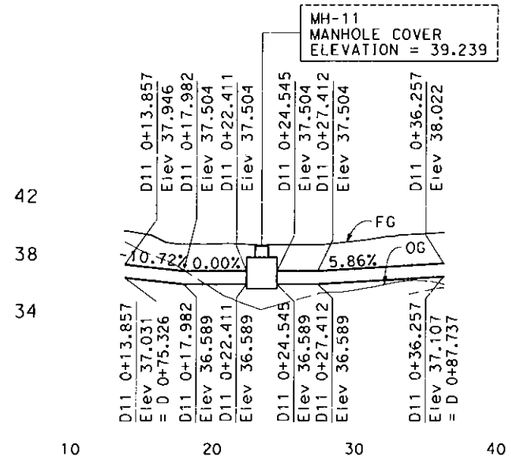

D11 DUCT BANK PROFILE

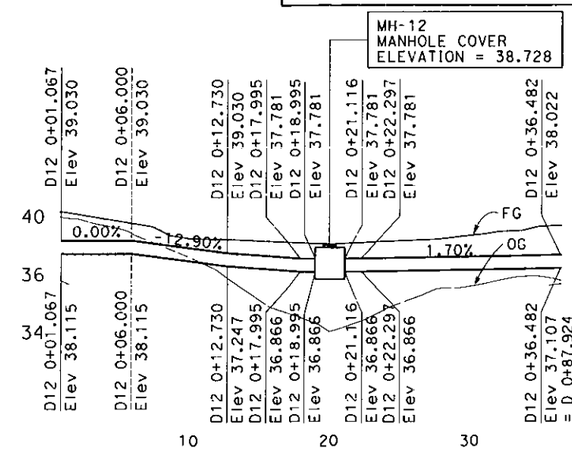

D12 DUCT BANK PROFILE

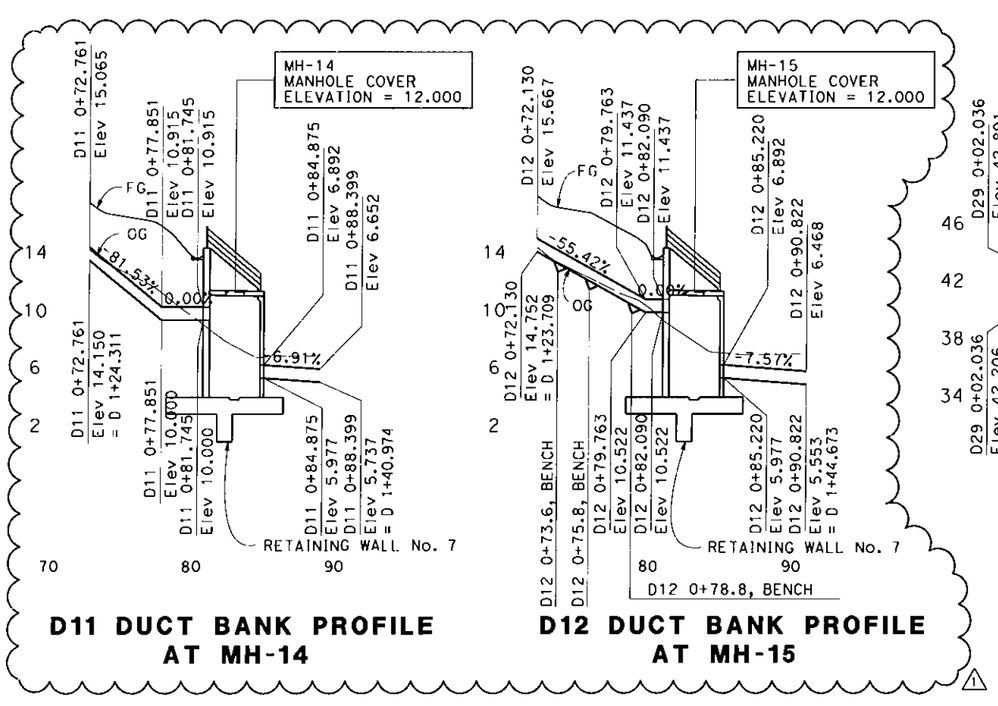

D11 DUCT BANK PROFILE AT MH-14

D12 DUCT BANK PROFILE AT MH-15

D29 DUCT BANK PROFILE

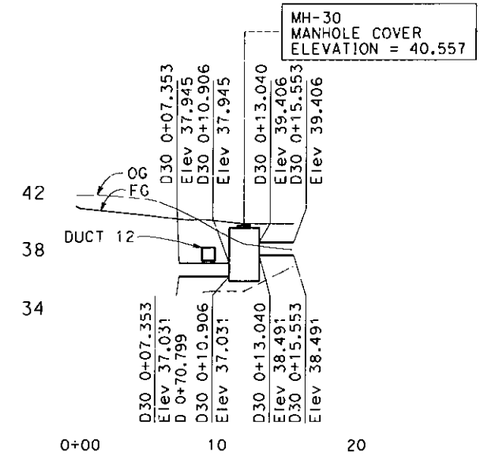

D30 DUCT BANK PROFILE

ALL DIMENSIONS ARE IN METERS UNLESS OTHERWISE SHOWN

UTILITY DETAILS
DUCT BANK PROFILE

SCALE HORIZ 1:200
VERT 1:200

UD-2A

STATE OF CALIFORNIA - DEPARTMENT OF TRANSPORTATION
Caltrans
DESIGN

FUNCTIONAL SUPERVISOR: BRADY NADELL
CALCULATED-DESIGNED BY: ANDREW MACGREGOR
CHECKED BY: RYAN YOSHIMURA
REVISED BY
DATE REVISED

Station
m^3 Exc Emb

LAST REVISION 07-24-12
DATE PLOTTED => 7/24/2012
TIME PLOTTED => 10:54:11 AM

DIST	COUNTY	ROUTE	TOTAL PROJECT	SHEET No.	TOTAL SHEETS
04	SF	80	12.7/13.2	55B R1	806

REGISTERED CIVIL ENGINEER 11-11-11 DATE

PLANS APPROVAL DATE

REGISTERED PROFESSIONAL ENGINEER Ryan K. Yoshimura No. 77483 Exp. 6-30-13 CIVIL STATE OF CALIFORNIA

THE STATE OF CALIFORNIA OR ITS OFFICERS OR AGENTS SHALL NOT BE RESPONSIBLE FOR THE ACCURACY OR COMPLETENESS OF ELECTRONIC COPIES OF THIS PLAN SHEET.

PB AMERICAS, Inc.
303 Second St., Suite 700N
San Francisco, CA 94107-1317

Caltrans Metric

REGISTERED PROFESSIONAL ENGINEER RYAN YOSHIMURA C 77483 Exp. 06/30/2013 CIVIL STATE OF CALIFORNIA

MARK	DATE	DESCRIPTIONS	REV.	CK.
1	8/7/12	RELOCATE UNDERGROUND AIR LINE AT BENT W8	AM	RY
0	11/11/11	RELOCATE UNDERGROUND DUCT BANK AT BENT W8	AM	RY

REVISIONS

CONTRACT CHANGE ORDER NO. 85
SHEET 9 OF 76

FOR REVISION ONLY
1
8/7/2012

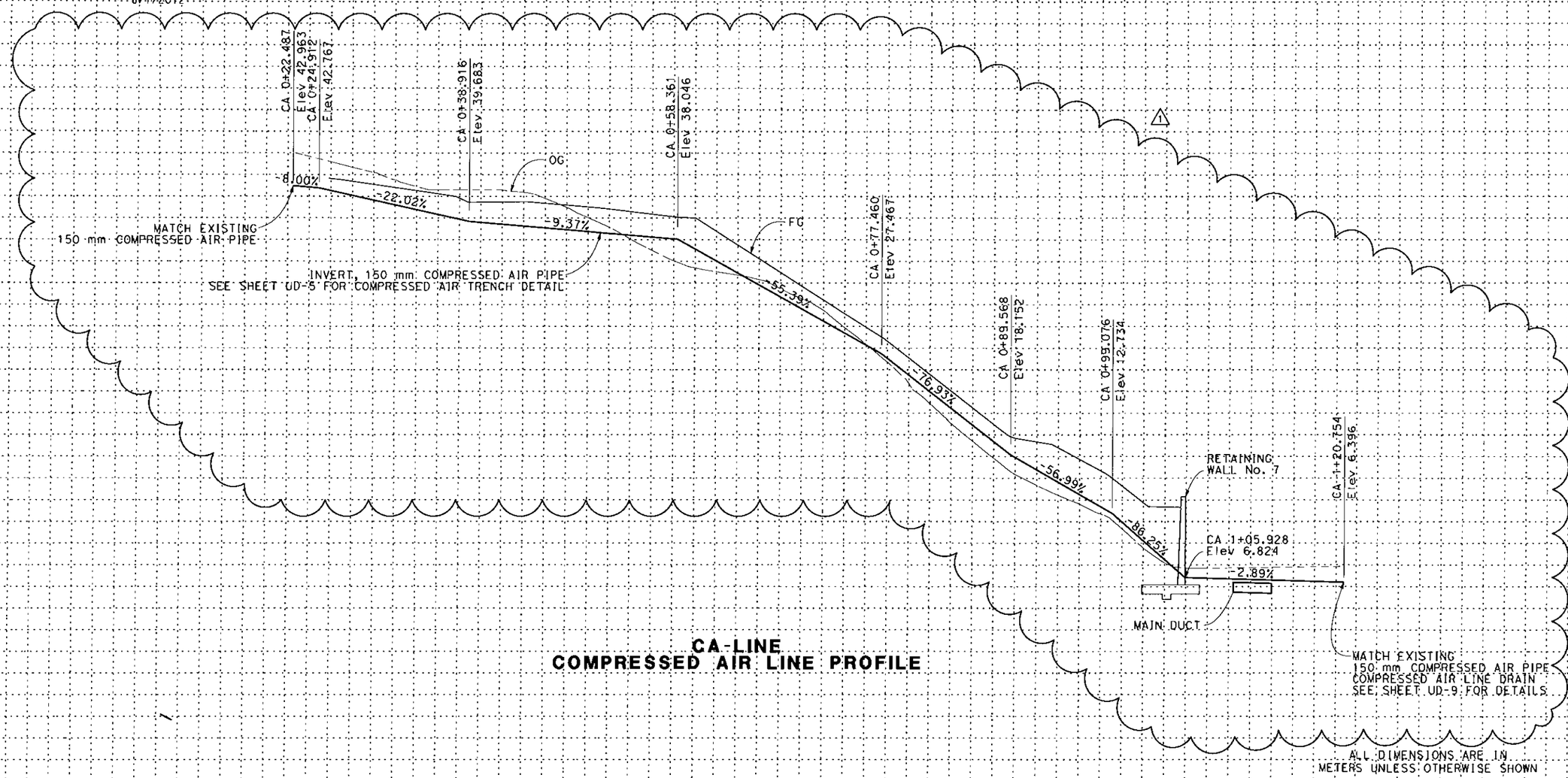

CA-LINE
COMPRESSED AIR LINE PROFILE

ALL DIMENSIONS ARE IN METERS UNLESS OTHERWISE SHOWN

UTILITY DETAILS
COMPRESSED AIR LINE PROFILE

SCALE HORIZ 1:200
VERT 1:200

UD-2B

Station	0+00	20	40	60	80	1+00	20	40
m^3 Exc								
m^3 Emb								

STATE OF CALIFORNIA - DEPARTMENT OF TRANSPORTATION
Caltrans
DESIGN

FUNCTIONAL SUPERVISOR: BRADY NADELL
CALCULATED-DESIGNED BY: ANDREW MACGREGOR
CHECKED BY: RYAN YOSHIMURA
REVISED BY
DATE REVISED

LAST REVISION 08-07-12
DATE PLOTTED => 8/7/2012
TIME PLOTTED => 10:46:29 PM

NOTE:
1. SEE SHEET UD-2B FOR COMPRESSED AIR PROFILE.
2. SEE SHEET UD-6 AND UD-7 FOR COMPRESSED AIR LAYOUT.
3. SEE SHEET UD-5 FOR COMPRESSED AIR DETAILS.

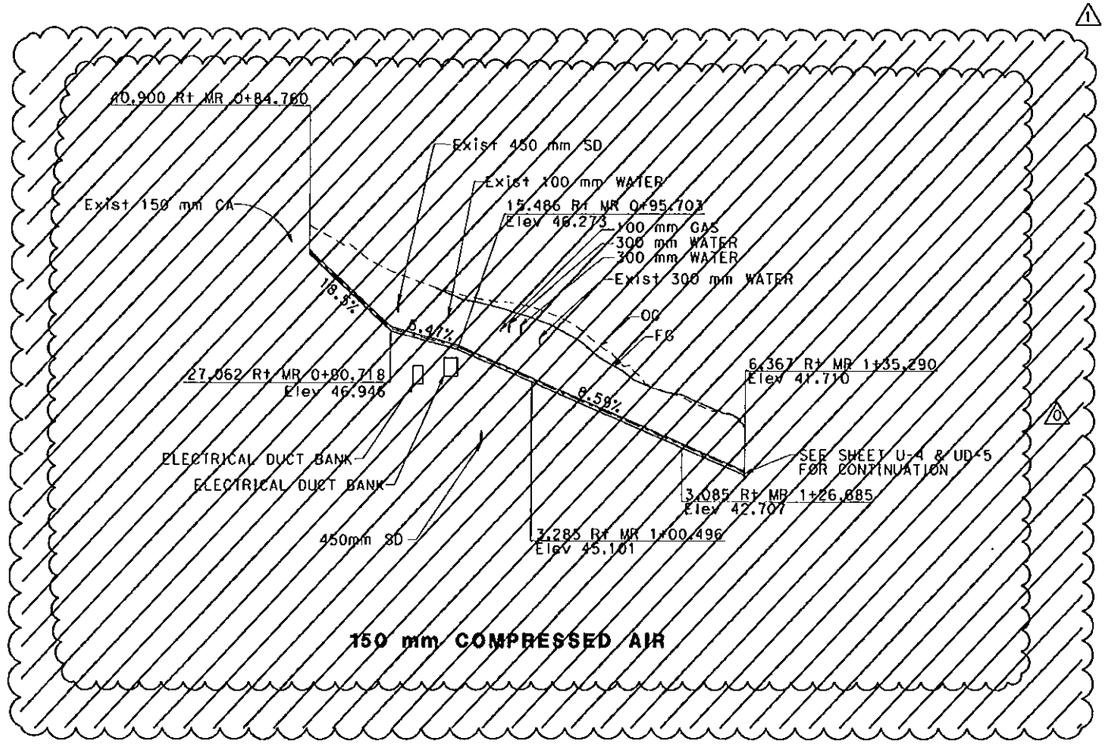

Dist	COUNTY	ROUTE	KILOMETER POST TOTAL PROJECT	SHEET No.	TOTAL SHEETS
04	SF	80	12.7/13.2	57A R1	806

REGISTERED CIVIL ENGINEER DATE

PLANS APPROVAL DATE

THE STATE OF CALIFORNIA OR ITS OFFICERS OR AGENTS SHALL NOT BE RESPONSIBLE FOR THE ACCURACY OR COMPLETENESS OF ELECTRONIC COPIES OF THIS PLAN SHEET.

REGISTERED PROFESSIONAL ENGINEER SAMUEL GRANT CHUI No. 70966 Exp. 6/30/11 CIVIL STATE OF CALIFORNIA

Samuel Chui 8/5/10

MARK	DATE	DESCRIPTIONS	BY	CH'D
1	12/12/11	RELOCATE UNDERGROUND DUCT BANK AT BENT W8	AM	RY
0	8/5/10	REALIGNED 150 mm CA	RL	SGC

REVISIONS

CONTRACT CHANGE ORDER NO. 85
SHEET 10 OF 76

REGISTERED PROFESSIONAL ENGINEER RYAN YOSHIMURA C 77483 Exp. 06/30/2013 CIVIL STATE OF CALIFORNIA

Ryan K Yoshimura

FOR REVISION ONLY
1
12/12/2011

ALL DIMENSIONS ARE IN METERS UNLESS OTHERWISE SHOWN

UTILITY DETAILS
COMPRESSED AIR PROFILE

SCALE HORIZ 1:500 VERT 1:100

UD-4A

STATE OF CALIFORNIA - DEPARTMENT OF TRANSPORTATION
CONSULTANT FUNCTIONAL SUPERVISOR BOB ZANDIPOUR
CALCULATED-DESIGNED BY H. NGUYEN
CHECKED BY B. NADELL
REVISED BY
DATE REVISED

Caltrans

Station		
m³	Exc	
	Emb	

BORDER LAST REVISED 3/1/2007

RELATIVE BORDER SCALE IS IN MILLIMETERS 0 20 40 60 80

USERNAME => yoshimura
DGN FILE => 40120skb004Ar01.dgn

CU 04251

EA 0120S1

LAST REVISION 12-12-11
DATE PLOTTED => 12/14/2011
TIME PLOTTED => 6:12:51 AM

Dist	COUNTY	ROUTE	KILOMETER POST TOTAL PROJECT	SHEET No.	TOTAL SHEETS
04	SF	80	12.7/13.2	58R1	806

REGISTERED CIVIL ENGINEER 2/14/08 DATE

6-23-08
PLANS APPROVAL DATE

REGISTERED PROFESSIONAL ENGINEER JOHNNY KUO No. C 60036 Exp. 6/30/08 CIVIL STATE OF CALIFORNIA

THE STATE OF CALIFORNIA OR ITS OFFICERS OR AGENTS SHALL NOT BE RESPONSIBLE FOR THE ACCURACY OR COMPLETENESS OF ELECTRONIC COPIES OF THIS PLAN SHEET.

PB AMERICAS, Inc.
A Parsons Brinckerhoff Company
303 Second St., Suite 700N
San Francisco, CA 94107-1317

Caltrans Metric

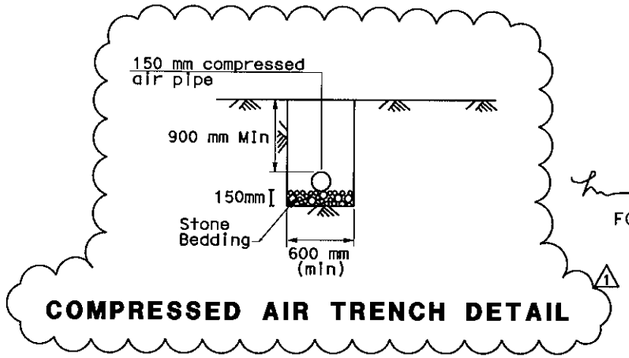

COMPRESSED AIR TRENCH DETAIL

REGISTERED PROFESSIONAL ENGINEER LAWRENCE W. JOHNSON No. C 44006 Exp. 6-30-13 CIVIL STATE OF CALIFORNIA

FOR REVISION ONLY

MARK	DATE	DESCRIPTIONS	BY	CH'D
1	11/11/11	Relocate duct bank at bent W8	LJ	EJL

REVISIONS

CONTRACT CHANGE ORDER NO. 85
SHEET 11 OF 76

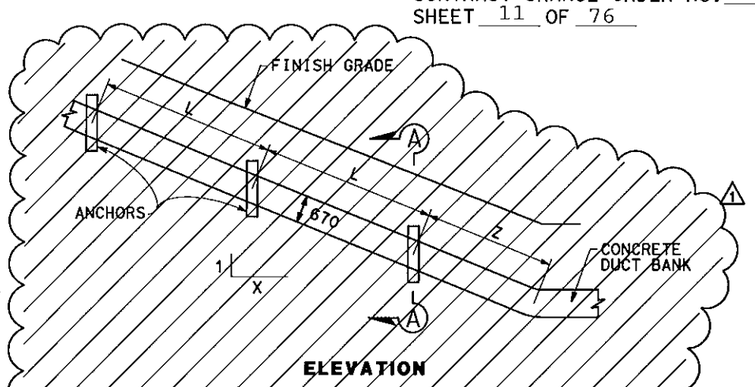

ELEVATION

CONCRETE DUCT BANK ANCHORS (3270 mm (W) X 670 mm (D))

TABLE A
(For 3270 X 670 DUCT BANK)

DUCT BANK SLOPE(1:X)	L (Max) (mm)	Z (Max) (mm)	Y (Max) (mm)
1:1	4570	1525	3000
1:1.5	5320	3000	4500
1:2	6140	4500	6000
1:2.5	6900	6000	7500
1:3	7500	7500	9000

TABLE B
(FOR 470 X 470 DUCT BANK)

DUCT BANK SLOPE(1:X)	LENGTH OF EXCAVATION IN STAGES (Max) (mm)	DUCT BANK ANCHOR SPACING (Max) (mm)
1:1	3000	5000
1:1.5	4500	6500
1:2	6000	8000
1:2.5	7500	9500
1:3	9000	11000

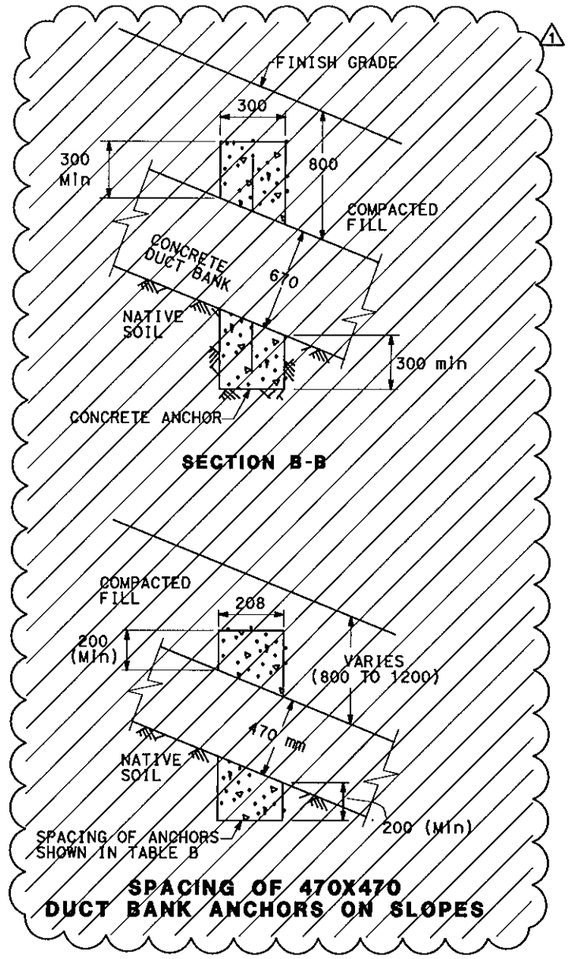

SPACING OF 470X470 DUCT BANK ANCHORS ON SLOPES

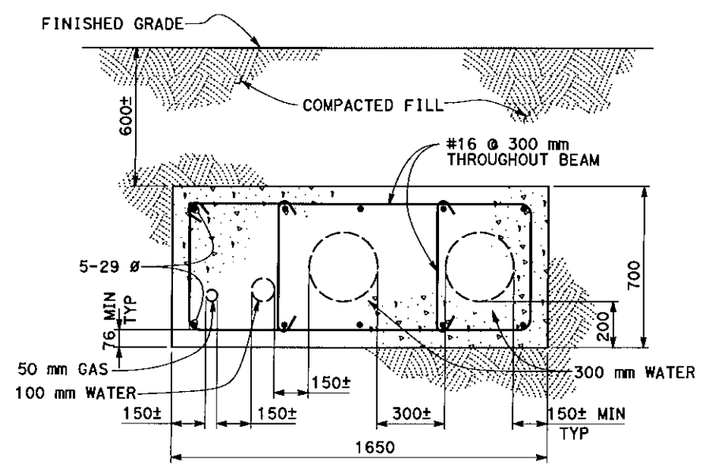

UNDERGROUND UTILITY ENCASEMENT

NOTES:

1. ~~SPACING OF CONCRETE ANCHORS FOR DUCT BANK ON SLOPES BETWEEN VALUES SHOWN IN TABLE A MAY BE PROPORTIONED.~~ FOR REINFORCING AT DUCT BANKS, SEE SHEETS E-34B AND E-34C.
2. ~~TRENCH BACKFILL SHALL BE COMPACTED IN LIFTS. IN LIEU OF MECHANICAL COMPACTION, SOIL CEMENT MAY BE USED. HOWEVER, THE TOP 300MM OF BACKFILL SHALL BE NATIVE SOIL, MECHANICALLY COMPACTED.~~
3. ~~SPACING OF GROUND STABILIZERS FOR SLOPES BETWEEN VALUES SHOWN IN TABLE A MAY BE PROPORTIONED.~~
4. ~~FOR CONCRETE DUCT BANKS OF WIDTH SHORTER THAN 500MM, NO SHORING IS REQUIRED. HOWEVER, EXCAVATION SHALL BE CARRIED OUT IN STAGES WITH MAXIMUM LENGTH OF EXCAVATION SHOWN IN TABLE B.~~
5. ~~TRENCH EXCAVATION PROPOSED HERE IN THIS DRAWING IS BASED UPON AN ASSUMPTION OF THE TRENCH BEING EXCAVATED IN DENSE SAND. SHOULD THE CONDITION OF SOIL DIFFER FROM WHAT IS ASSUMED HERE, THE CONTRACTOR SHALL STOP THE WORK AND NOTIFY THE ENGINEER IMMEDIATELY FOR INSTRUCTIONS.~~

2. ~~6.~~ FOR LIMIT OF UNDERGROUND UTILITY ENCASEMENT, SEE SHEET U-4. LOADING IS LIMITED TO 280 KPa.

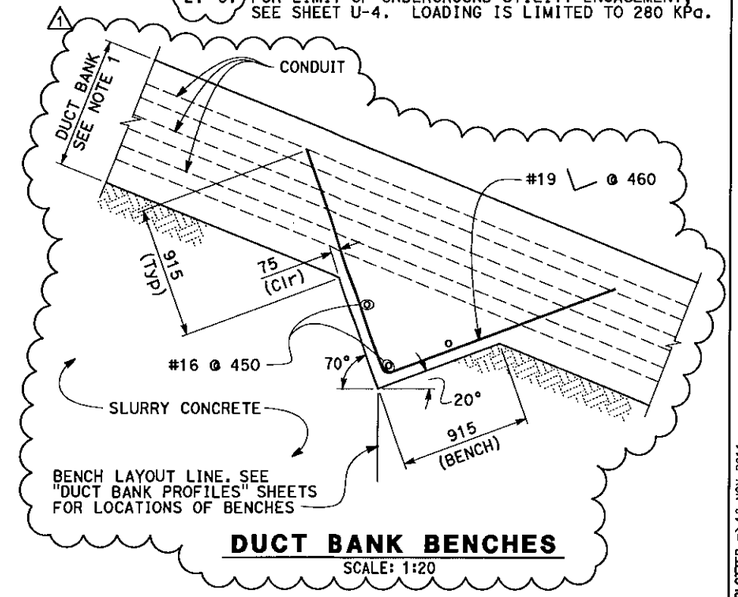

DUCT BANK BENCHES
SCALE: 1:20

UTILITY DETAILS
NO SCALE

ALL DIMENSIONS ARE IN MILLIMETERS UNLESS OTHERWISE SHOWN

UD-5

REVISED BY	DATE REVISED

CALCULATED-DESIGNED BY: H. NGUYEN
CHECKED BY: B. NADELL
CONSULTANT FUNCTIONAL SUPERVISOR: BOB ZANDIPOUR
STATE OF CALIFORNIA - DEPARTMENT OF TRANSPORTATION
Caltrans

LAST REVISION 11-11-11 DATE PLOTTED => 18-NOV-2011 TIME PLOTTED => 11:21

Dist	COUNTY	ROUTE	KILOMETER POST TOTAL PROJECT	SHEET No.	TOTAL SHEETS
04	SF	80	12.7/13.2	59R3	806

REGISTERED CIVIL ENGINEER 3-05-08 DATE

6-23-08
PLANS APPROVAL DATE

REGISTERED PROFESSIONAL ENGINEER T.T. Lai No. 63630 Exp. 9-30-08 CIVIL STATE OF CALIFORNIA

THE STATE OF CALIFORNIA OR ITS OFFICERS OR AGENTS SHALL NOT BE RESPONSIBLE FOR THE ACCURACY OR COMPLETENESS OF ELECTRONIC COPIES OF THIS PLAN SHEET.

PB AMERICAS, Inc.
303 Second St., Suite 700N
San Francisco, CA 94107-1317

Caltrans Metric

MARK	DATE	DESCRIPTIONS	REV	CK
3	8/7/12	RETAINING WALL #7 AND UNDERGROUND AIR LINE REVISIONS	AM	RY
2	11/11/11	RELOCATE UNDERGROUND DUCT BANK AT BENT W8	AM	RY
1	6/11/10	REALIGNED ELECTRICAL DUCT BANK		

REVISIONS

CONTRACT CHANGE ORDER NO. 85
SHEET 12 OF 76

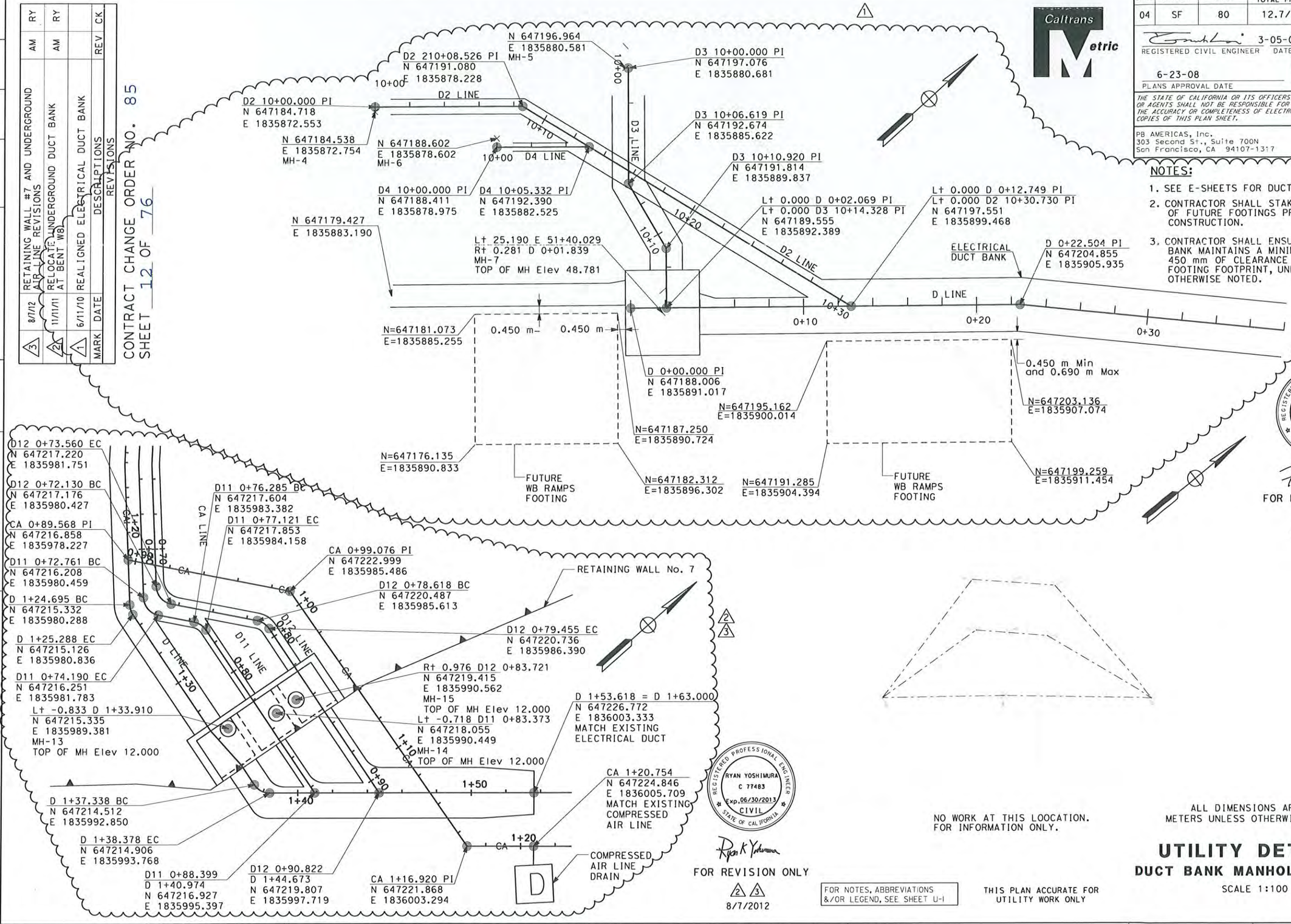

NOTES:

1. SEE E-SHEETS FOR DUCT BANK SECTIONS.
2. CONTRACTOR SHALL STAKE LOCATION OF FUTURE FOOTINGS PRIOR TO CONSTRUCTION.
3. CONTRACTOR SHALL ENSURE DUCT BANK MAINTAINS A MINIMUM 450 mm OF CLEARANCE OUTSIDE FOOTING FOOTPRINT, UNLESS OTHERWISE NOTED.

REGISTERED PROFESSIONAL ENGINEER PITHON VITHAYASRICHAROON C 74298 Exp. 06/30/2011 CIVIL STATE OF CALIFORNIA

FOR REVISION ONLY
1
08/05/2010

REGISTERED PROFESSIONAL ENGINEER RYAN YOSHIMURA C 77483 Exp. 06/30/2013 CIVIL STATE OF CALIFORNIA

FOR REVISION ONLY
2 3
8/7/2012

NO WORK AT THIS LOOCATION.
FOR INFORMATION ONLY.

ALL DIMENSIONS ARE IN METERS UNLESS OTHERWISE SHOWN

FOR NOTES, ABBREVIATIONS &/OR LEGEND, SEE SHEET U-1

THIS PLAN ACCURATE FOR UTILITY WORK ONLY

UTILITY DETAILS
DUCT BANK MANHOLE LAYOUT
SCALE 1:100

UD-6

LAST REVISION 08-07-12 DATE PLOTTED => 8/7/2012 TIME PLOTTED => 10:41:55 PM

CALCULATED-DESIGNED BY TRINH LAI REVISED BY TL
CHECKED BY BOB ZANDIPOUR DATE REVISED 10/07
FUNCTIONAL SUPERVISOR BOB ZANDIPOUR

STATE OF CALIFORNIA - DEPARTMENT OF TRANSPORTATION
DESIGN
Caltrans

DIST	COUNTY	ROUTE	TOTAL PROJECT	No.	SHEETS
04	SF	80	12.7/13.2	60R3	806

REGISTERED CIVIL ENGINEER 3-05-08 DATE

6-23-08
PLANS APPROVAL DATE

REGISTERED PROFESSIONAL ENGINEER T.T. Lai No. 63630 Exp. 9-30-08 CIVIL STATE OF CALIFORNIA

THE STATE OF CALIFORNIA OR ITS OFFICERS OR AGENTS SHALL NOT BE RESPONSIBLE FOR THE ACCURACY OR COMPLETENESS OF ELECTRONIC COPIES OF THIS PLAN SHEET.

PB AMERICAS, Inc.
303 Second St., Suite 700N
San Francisco, CA 94107-1317

Caltrans Metric

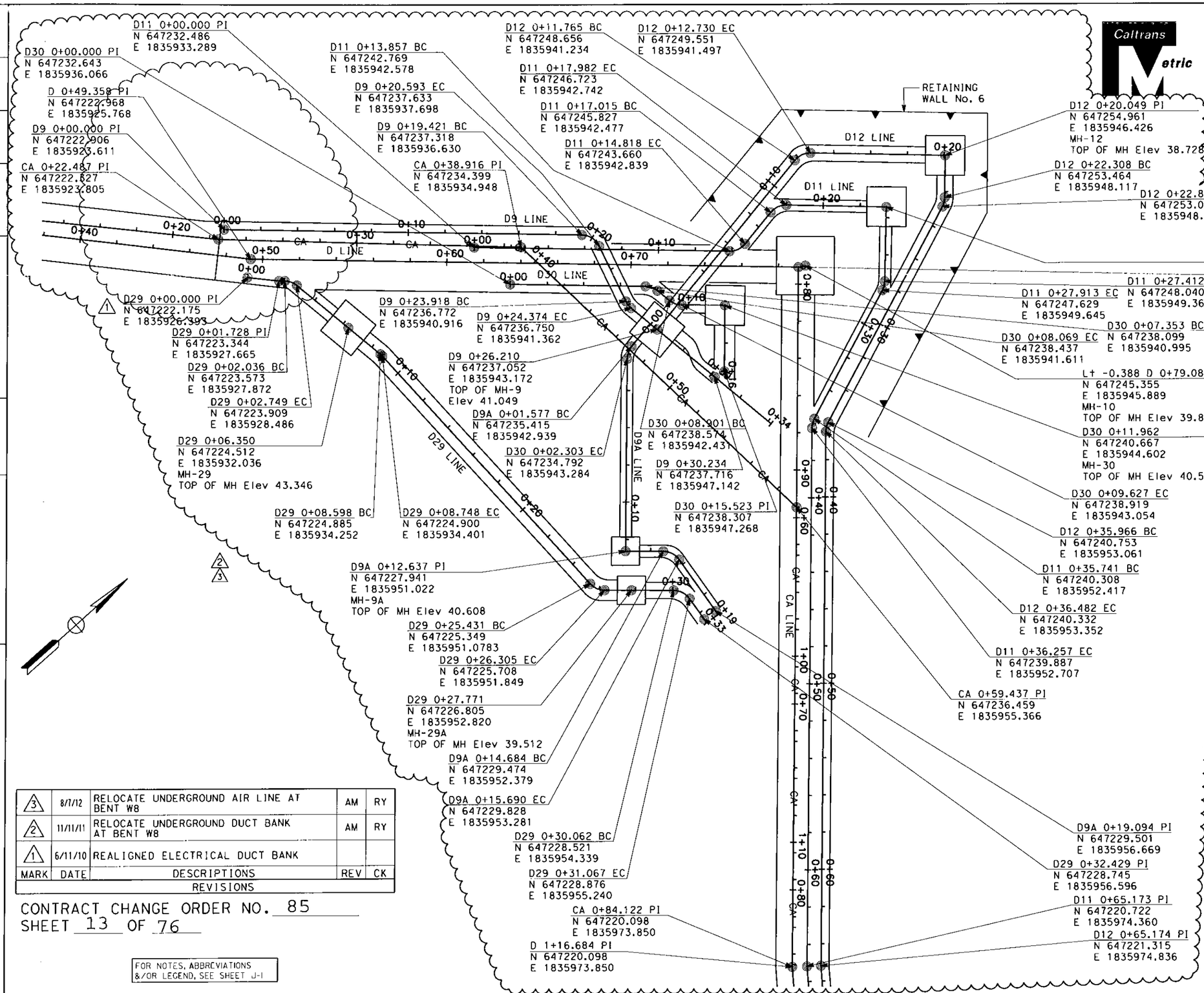

REGISTERED PROFESSIONAL ENGINEER PITHON VITHAYASRICHAREN C 74298 Exp. 06/30/2011 CIVIL STATE OF CALIFORNIA

FOR REVISION ONLY
1
08/05/2010

REGISTERED PROFESSIONAL ENGINEER RYAN YOSHIMURA C 77483 Exp. 06/30/2013 CIVIL STATE OF CALIFORNIA

FOR REVISION ONLY
2 3
8/7/2012

MARK	DATE	DESCRIPTIONS	REV	CK
3	8/7/12	RELOCATE UNDERGROUND AIR LINE AT BENT W8	AM	RY
2	11/11/11	RELOCATE UNDERGROUND DUCT BANK AT BENT W8	AM	RY
1	6/11/10	REALIGNED ELECTRICAL DUCT BANK		

REVISIONS

CONTRACT CHANGE ORDER NO. 85
SHEET 13 OF 76

FOR NOTES, ABBREVIATIONS &/OR LEGEND, SEE SHEET J-1

THIS PLAN ACCURATE FOR UTILITY WORK ONLY

ALL DIMENSIONS ARE IN METERS UNLESS OTHERWISE SHOWN

UTILITY DETAILS
DUCT BANK MANHOLE LAYOUT
SCALE 1:100

UD-7

FUNCTIONAL SUPERVISOR	BOB ZANDIPOUR	REVISED BY	TL
CALCULATED-DESIGNED BY	TRINH LAI	DATE REVISED	10/07
CHECKED BY	BOB ZANDIPOUR		

STATE OF CALIFORNIA - DEPARTMENT OF TRANSPORTATION
Caltrans
DESIGN

LAST REVISION 08-07-12
DATE PLOTTED => 8/7/2012
TIME PLOTTED => 10:49:40 PM

BORDER LAST REVISED 3/1/2007

RELATIVE BORDER SCALE IS IN MILLIMETERS 0 20 40 60 80

USERNAME => Yoshimura
DGN FILE => 40120Skb007r03.dgn

CU 04251 | EA 0120S1

Dist	COUNTY	ROUTE	KILOMETER POST TOTAL PROJECT	SHEET No.	TOTAL SHEETS
04	SF	80	12.7/13.2	112R1	806

REGISTERED CIVIL ENGINEER DATE 3/3/08

6-23-08
PLANS APPROVAL DATE

REGISTERED PROFESSIONAL ENGINEER A. L. ELY No. 18880 Exp. 9-30-09 CIVIL STATE OF CALIFORNIA

THE STATE OF CALIFORNIA OR ITS OFFICERS OR AGENTS SHALL NOT BE RESPONSIBLE FOR THE ACCURACY OR COMPLETENESS OF ELECTRONIC COPIES OF THIS PLAN SHEET.

T.Y. LIN / MOFFATT & NICHOL
TWO HARRISON STREET, SUITE 500
SAN FRANCISCO, CA 94105

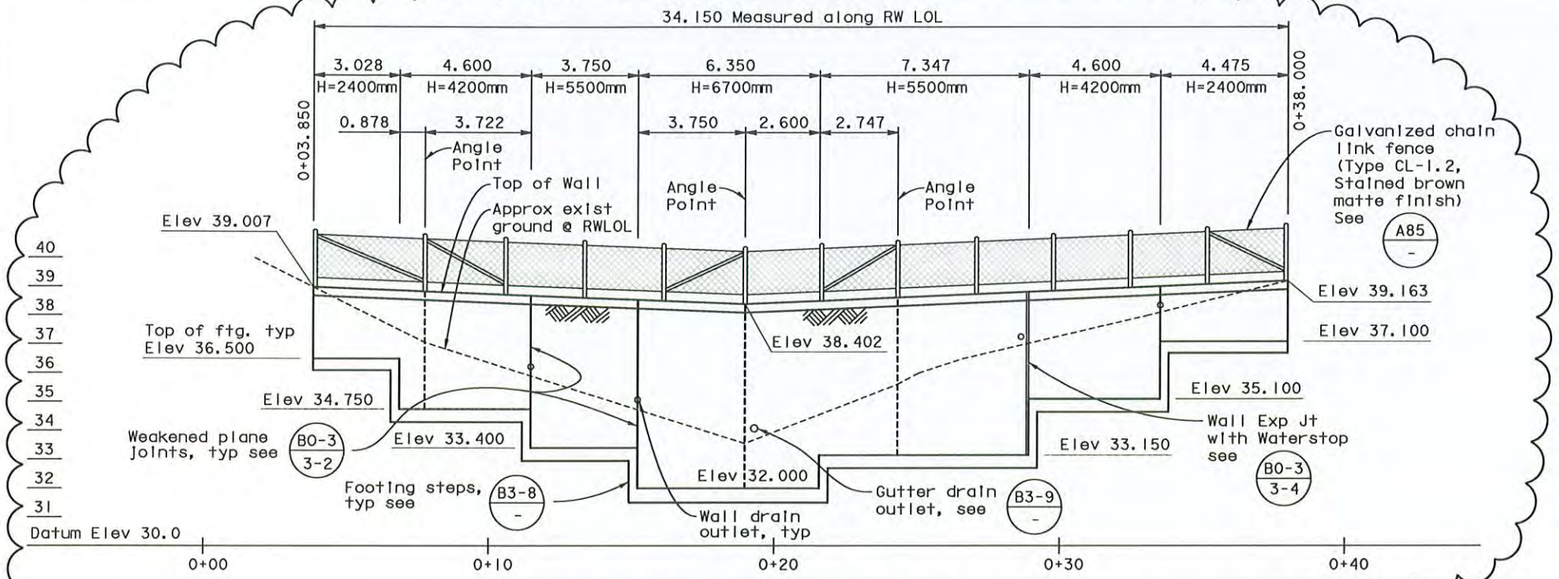

DEVELOPED REAR ELEVATION
1:100

APPROXIMATE QUANTITIES

Structure excavation (Retaining wall).....320 M3
Structure backfill (Retaining wall).....314 M3
Structural concrete, Retaining wall.....110 M3
Bar reinforcing steel (Retaining wall)..12,500 KG
Galvanized chain link fence (Type CL-1.2 Stained brown matte finish).....34 M

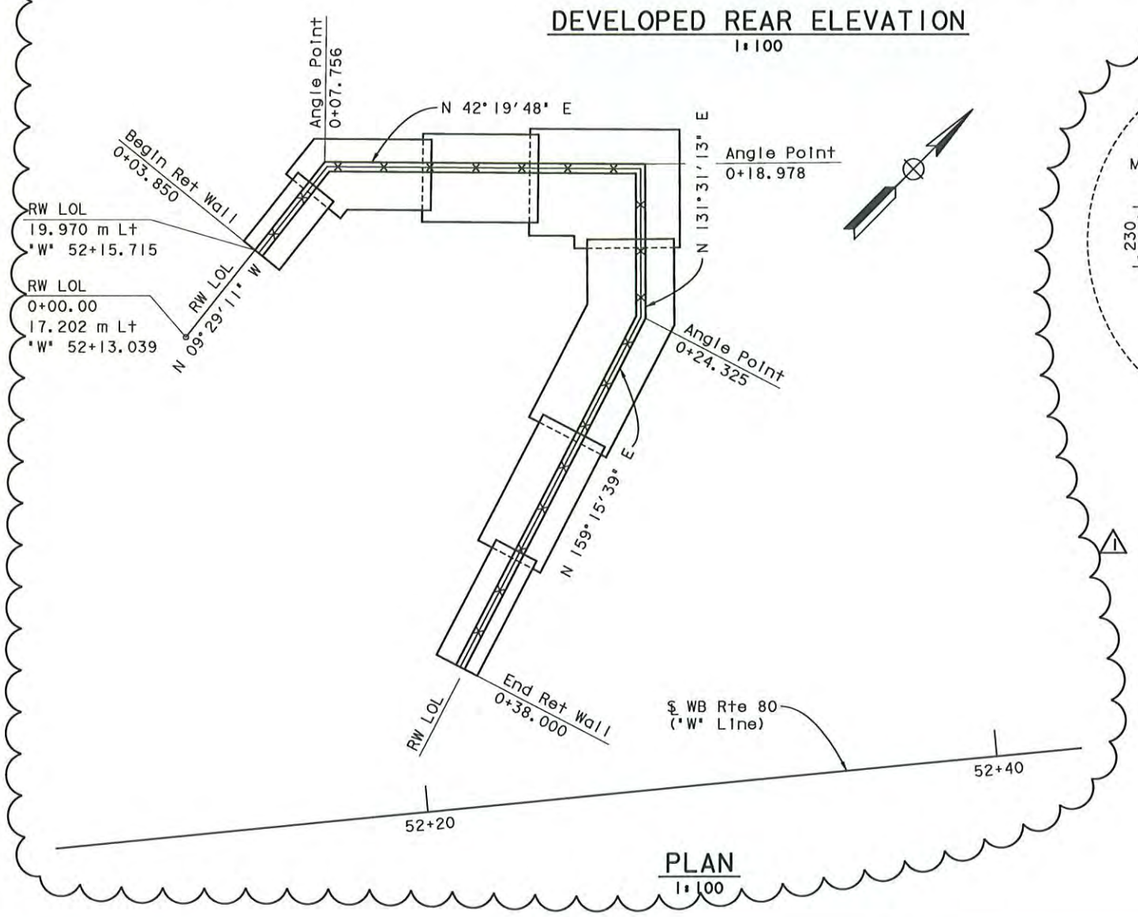

PLAN
1:100

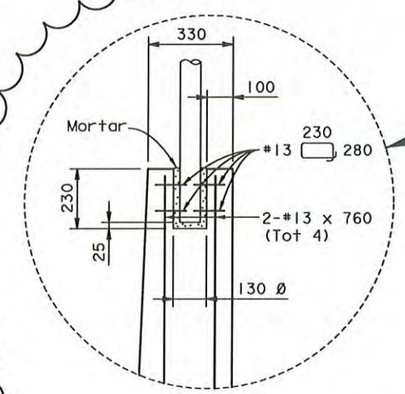

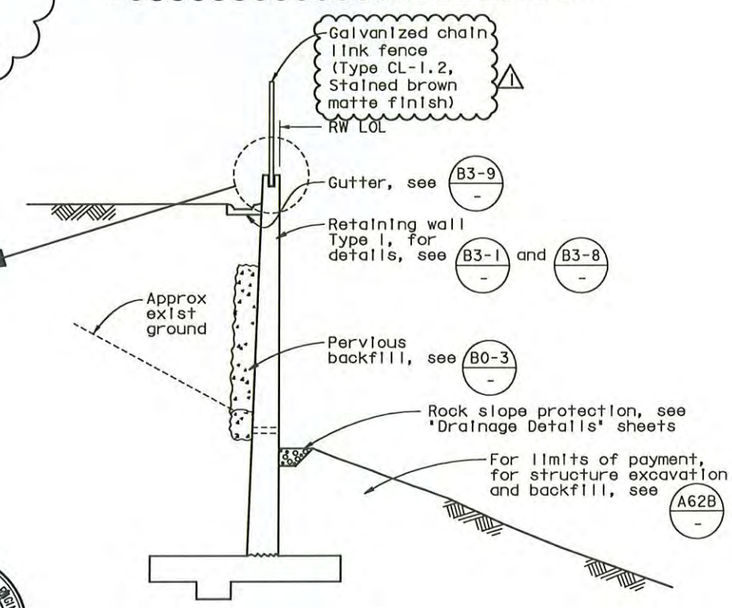

TYPICAL SECTION
1:50

REGISTERED PROFESSIONAL ENGINEER JAL BIRDY No. 41547 Exp. 12-31-13 CIVIL STATE OF CALIFORNIA

FOR REVISION △1 ONLY

CONTRACT CHANGE ORDER NO. 85
SHEET 14 OF 76

MARK	DATE	DESCRIPTIONS	BY	CH'D
△				
△1	7-24-12	Revised layout and details	TL	JB

REVISIONS

Notes:

1. For wall location, see roadway plans.
2. Elevations are based on 1929 National Geodetic Vertical Datum (NGVD).

RETAINING WALL NO. 6
SCALE AS NOTED

R-1

ALL DIMENSIONS ARE IN METERS UNLESS OTHERWISE SHOWN.

REVISED BY	DATE REVISED
JNB	6/13/08
JNB	1/31/08
JNB	MD

CALCULATED-DESIGNED BY
CHECKED BY
SUPERVISOR BOB ZANDIPOUR
CONSULTANT FUNCTIONAL SUPERVISOR
STATE OF CALIFORNIA - DEPARTMENT OF TRANSPORTATION
Caltrans

July 24, 2012

LAST REVISION 06-16-08
DATE PLOTTED = 07/26/2012
TIME PLOTTED = 09:06:33 AM

Dist	COUNTY	ROUTE	KILOMETER POST TOTAL PROJECT	SHEET No.	TOTAL SHEETS
04	SF	80	12.7/13.2	113R1	806

A. L. Ely 5/19/08
REGISTERED CIVIL ENGINEER DATE

6-23-08
PLANS APPROVAL DATE

REGISTERED PROFESSIONAL ENGINEER A. L. ELY No. 18880 Exp. 9-30-09 CIVIL STATE OF CALIFORNIA

THE STATE OF CALIFORNIA OR ITS OFFICERS OR AGENTS SHALL NOT BE RESPONSIBLE FOR THE ACCURACY OR COMPLETENESS OF ELECTRONIC COPIES OF THIS PLAN SHEET.

T.Y. LIN / MOFFATT & NICHOL
TWO HARRISON STREET, SUITE 500
SAN FRANCISCO, CA 94105

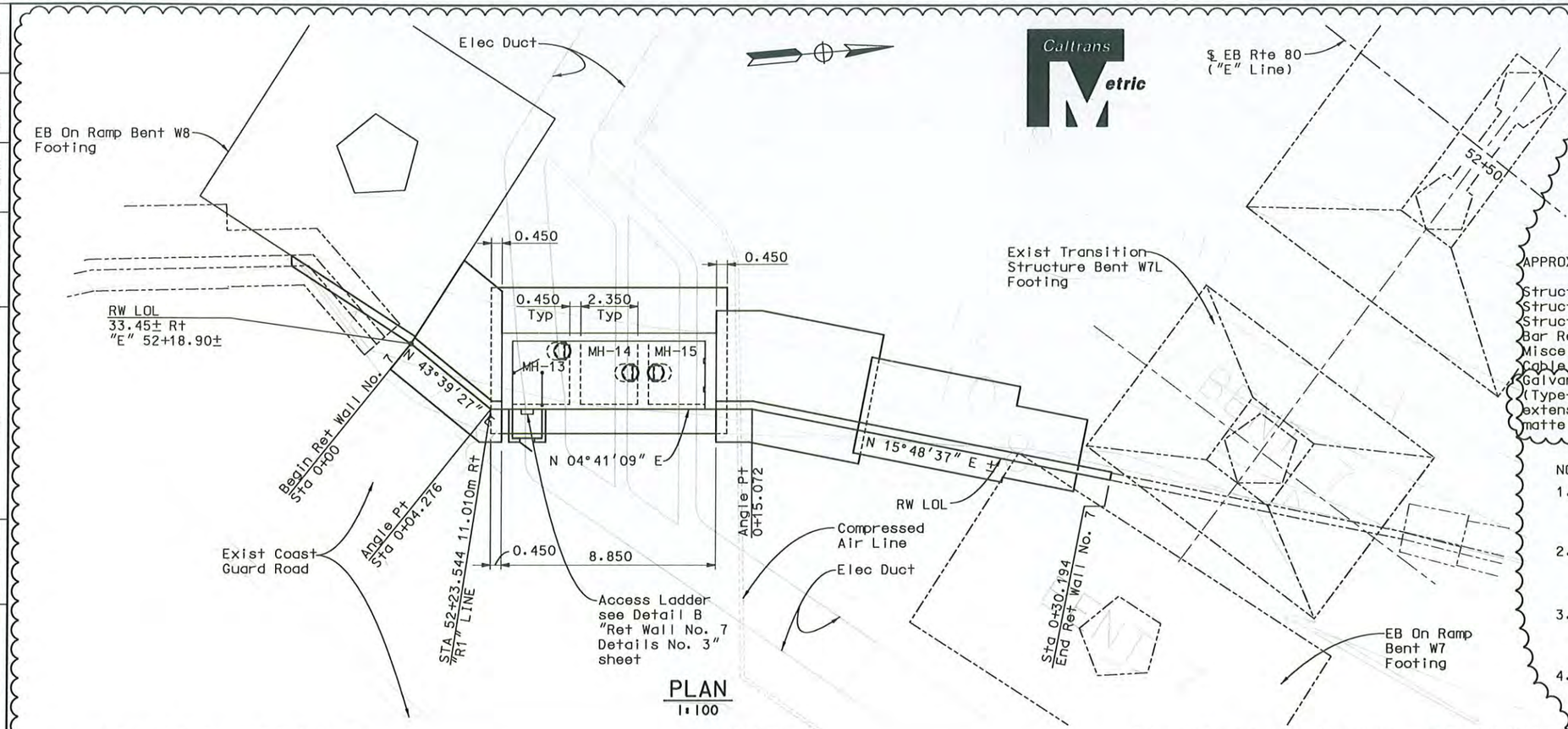

PLAN
1:100

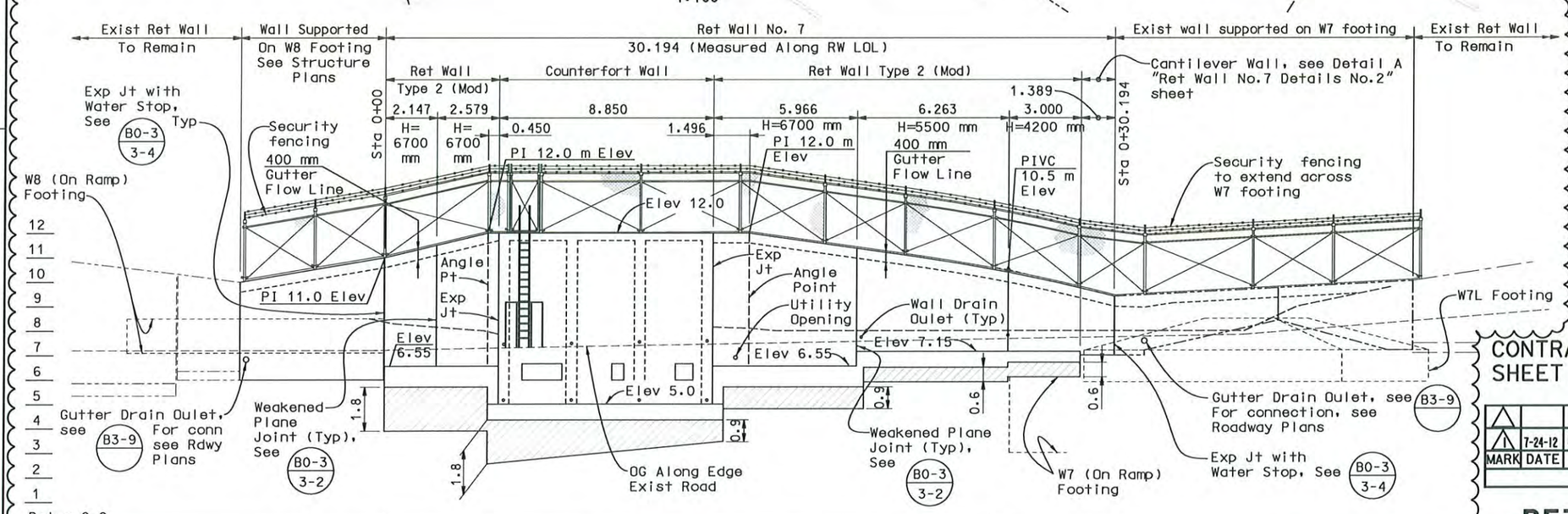

DEVELOPED ELEVATION
1:100

ALL DIMENSIONS ARE IN METERS UNLESS OTHERWISE SHOWN.

APPROXIMATE QUANTITIES

Structure Excavation (Retaining Wall)	830 M
Structure Backfill (Retaining Wall)	734 M
Structural Concrete, Retaining Wall	275 M^3
Bar Reinforcing Steel (Retaining Wall)	30,760 KG
Miscellaneous Metal	1,185 KG
Cable Railing	15 M
Galvanized chain link fence (Type- 2.4 w/ barbed wire extension arms, stained brown matte finish)	48 M

NOTES:

1. All new and existing utilities are not shown. For utility locations, see Roadway plans.
2. For limits of payment for Structure Excavation and Backfill, see "Ret Wall No.7 Details No.3" sheet.
3. For special reinforcement detail at utility openings, see "Ret Wall No.7 Details No.2" sheet.
4. For Detail A, see "Ret Wall No.7 Details No.2" sheet.

LEGEND:

Extent of required structure overexcavation, see note 2

REGISTERED PROFESSIONAL ENGINEER JAL BIRDY No. 41547 Exp. 12-31-13 CIVIL STATE OF CALIFORNIA

FOR REVISION 1 ONLY

CONTRACT CHANGE ORDER NO. 85
SHEET 15 OF 76

MARK	DATE	DESCRIPTIONS	BY	CH'D
1	7-24-12	Revised layout and details	TL	JB

REVISIONS

RETAINING WALL NO. 7 DETAILS NO. 1

SCALE AS NOTED

R-2

MD	REVISED BY	DATE REVISED
JNB	JNB	4/22/08
JNB	JNB	5/16/08
JNB	JNB	6/13/08

CALCULATED-DESIGNED BY JNB
CHECKED BY

CONSULTANT FUNCTIONAL SUPERVISOR BOB ZANDIPOUR

STATE OF CALIFORNIA - DEPARTMENT OF TRANSPORTATION
Caltrans

YBI STRUCTURES
July 24, 2012

LAST REVISION 06-16-08
DATE PLOTTED = 7/26/2012
TIME PLOTTED = 9:10:39 AM

Dist	COUNTY	ROUTE	KILOMETER POST TOTAL PROJECT	SHEET No.	TOTAL SHEETS
04	SF	80	12.7/13.2	114R1	806

REGISTERED CIVIL ENGINEER DATE

6-23-08
PLANS APPROVAL DATE

REGISTERED PROFESSIONAL ENGINEER A. L. ELY No. 18880 Exp. 9-30-09 CIVIL STATE OF CALIFORNIA

THE STATE OF CALIFORNIA OR ITS OFFICERS OR AGENTS SHALL NOT BE RESPONSIBLE FOR THE ACCURACY OR COMPLETENESS OF ELECTRONIC COPIES OF THIS PLAN SHEET.

T.Y. LIN / MOFFATT & NICHOL
TWO HARRISON STREET, SUITE 500
SAN FRANCISCO, CA 94105

Caltrans Metric

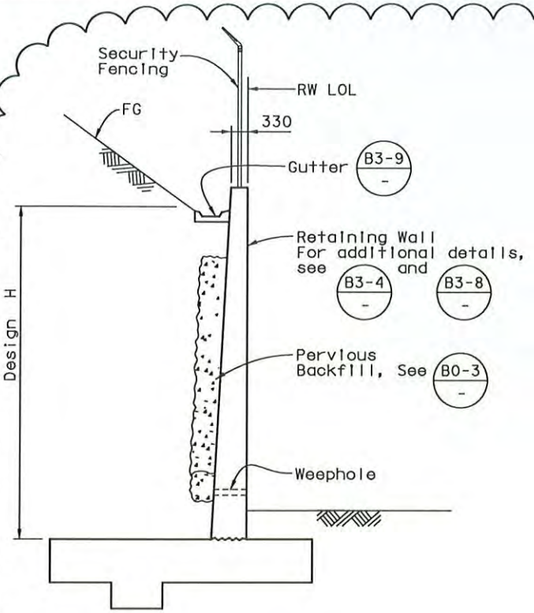

TYPICAL SECTION
RETAINING WALL TYPE 2 (MOD)
1:50

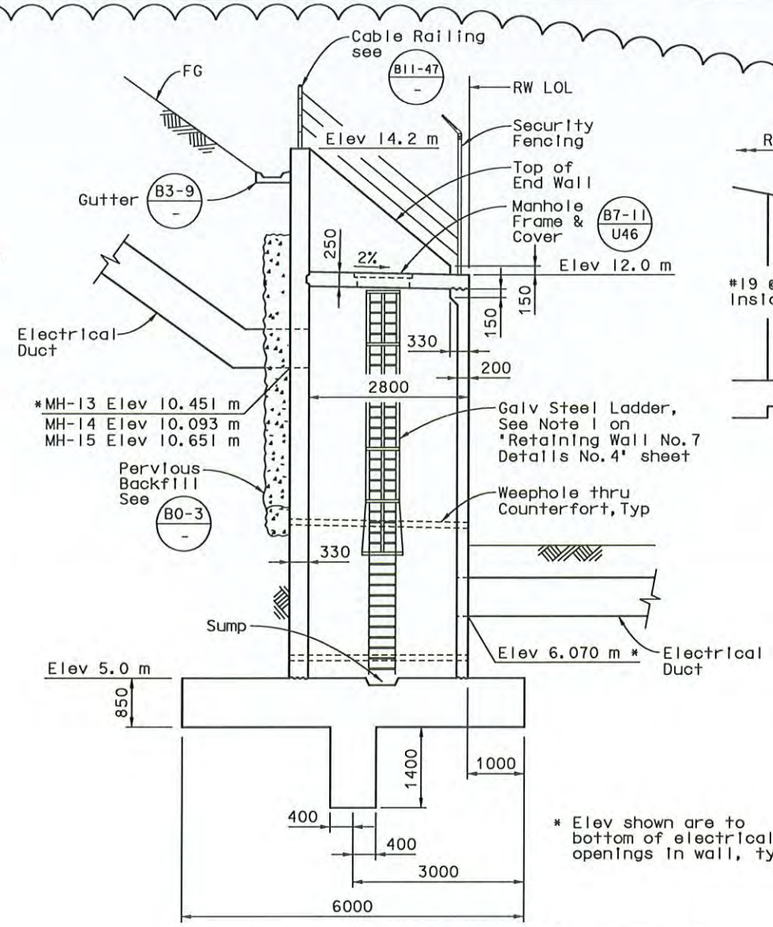

* Elev shown are to bottom of electrical openings in wall, typ.

Note: For Manhole Frame and Cover, Ladder, Sump and other Electrical appurtenences see Electrical plans.

TYPICAL SECTION - COUNTERFORT WALL
1:50

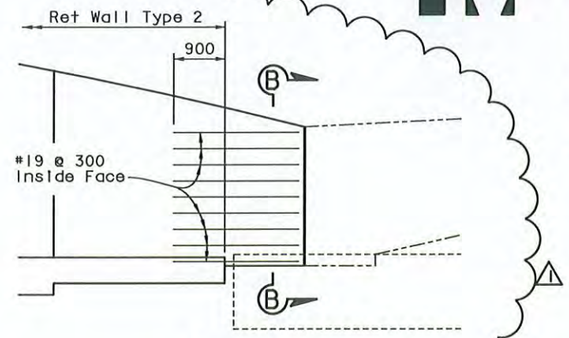

DETAIL A
1:50

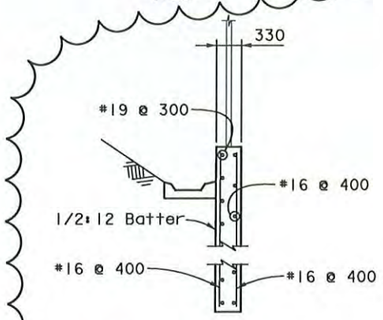

SECTION B-B
No Scale

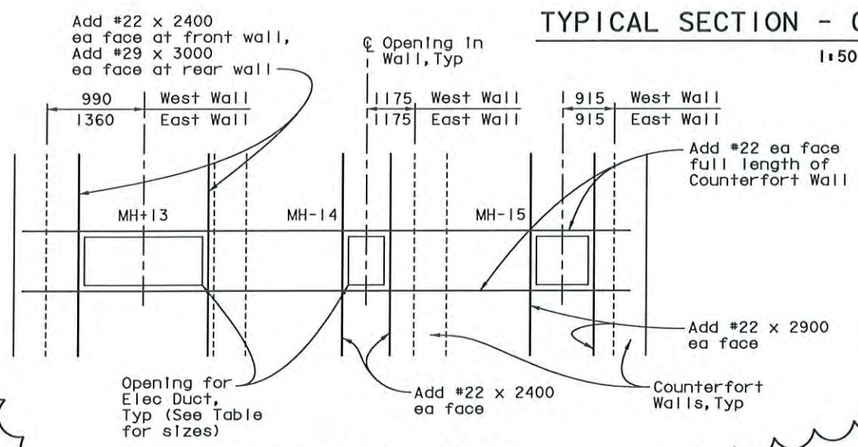

Opening Sizes Elect Duct (West Wall & East Wall)		
	Width	Height
MH-13	1650	730
MH-14	500	730
MH-15	730	730

UTILITY OPENING DETAIL
No Scale

ALL DIMENSIONS ARE IN MILLIMETERS UNLESS OTHERWISE SHOWN.

PROFESSIONAL ENGINEER JAL BIRDY No. 41547 Exp. 12-31-13 CIVIL STATE OF CALIFORNIA

FOR REVISION 1 ONLY

CONTRACT CHANGE ORDER NO. 85
SHEET 16 OF 76

MARK	DATE	DESCRIPTIONS	BY	CH'D
1	7-24-12	Revised layout and details	TL	JB

REVISIONS

RETAINING WALL NO. 7
DETAILS NO. 2

SCALE AS NOTED

R-3

REVISED BY	DATE REVISED
JNB	5/16/08
JNB	4/22/08
JNB	1/31/08

MD JNB — CALCULATED-DESIGNED BY — CHECKED BY

CONSULTANT FUNCTIONAL SUPERVISOR: BOB ZANDIPOUR

STATE OF CALIFORNIA - DEPARTMENT OF TRANSPORTATION — Caltrans

YBI STRUCTURES — July 24, 2012

LAST REVISION 05-19-08 — DATE PLOTTED = 7/24/2012 — TIME PLOTTED = 11:10:48 PM

BORDER LAST REVISED 3/1/2007 — RELATIVE BORDER SCALE IS IN MILLIMETERS 0 20 40 60 80

USERNAME = fsamson
DGN FILE = P:\4141-06\CADD\Roadway Plans\Checked Plans\YBITS #1-100% 03-03-08 (Final Renamed)\072412 CCO T22\40120sqb002.dgn

CU 04251 — EA 0120S1

Dist	COUNTY	ROUTE	KILOMETER POST TOTAL PROJECT	SHEET No.	TOTAL SHEETS
04	SF	80	12.7/13.2	114A51	806

REGISTERED CIVIL ENGINEER DATE

PLANS APPROVAL DATE

REGISTERED PROFESSIONAL ENGINEER A. L. ELY No. 18880 Exp. 9-30-13 CIVIL STATE OF CALIFORNIA

THE STATE OF CALIFORNIA OR ITS OFFICERS OR AGENTS SHALL NOT BE RESPONSIBLE FOR THE ACCURACY OR COMPLETENESS OF ELECTRONIC COPIES OF THIS PLAN SHEET.

T.Y. LIN / MOFFATT & NICHOL
TWO HARRISON STREET, SUITE 500
SAN FRANCISCO, CA 94105

To get to the Caltrans web site, go to: http://www.dot.ca.gov

Caltrans Metric

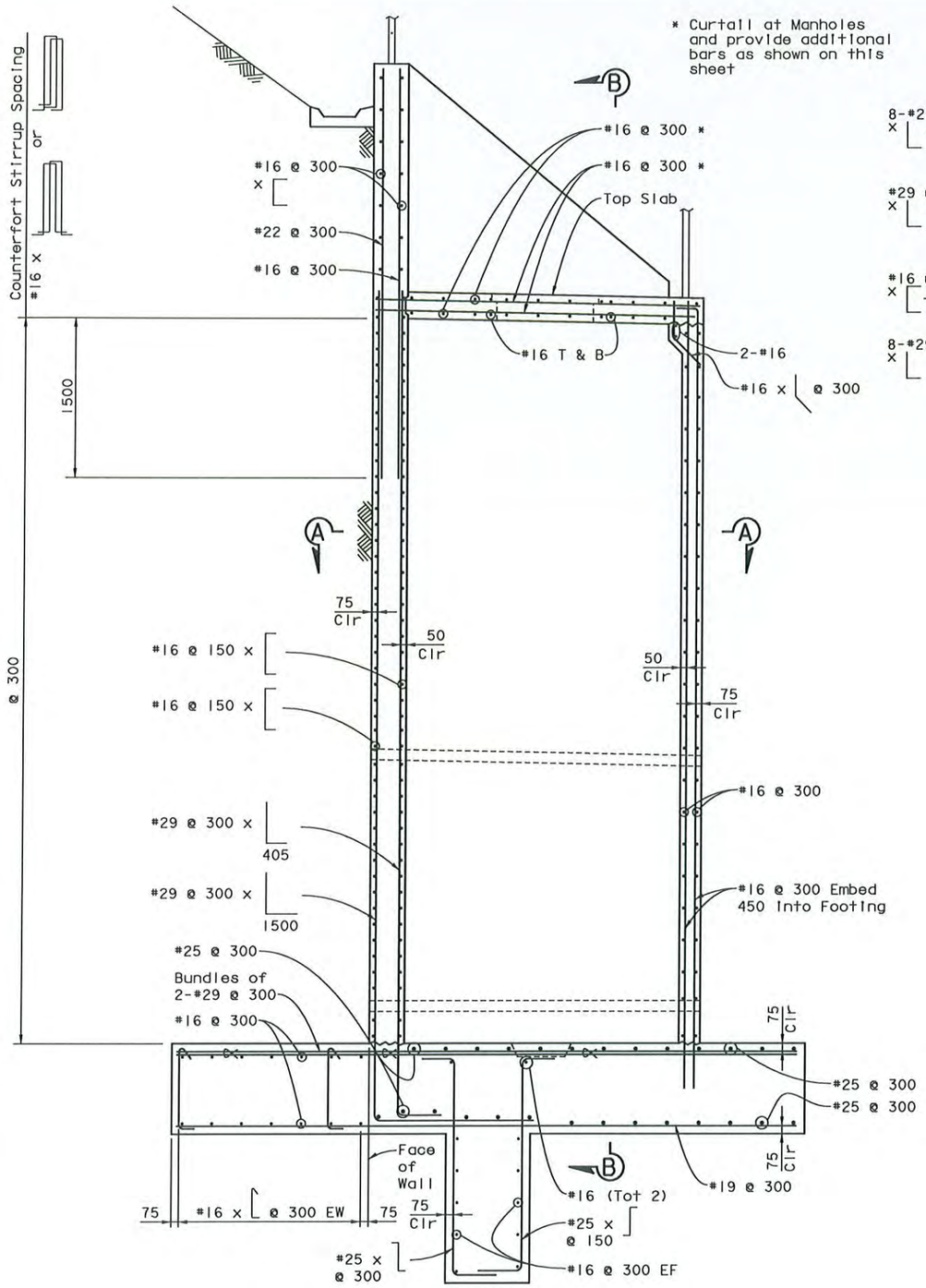

COUNTERFORT WALL - TYPICAL SECTION

1:25

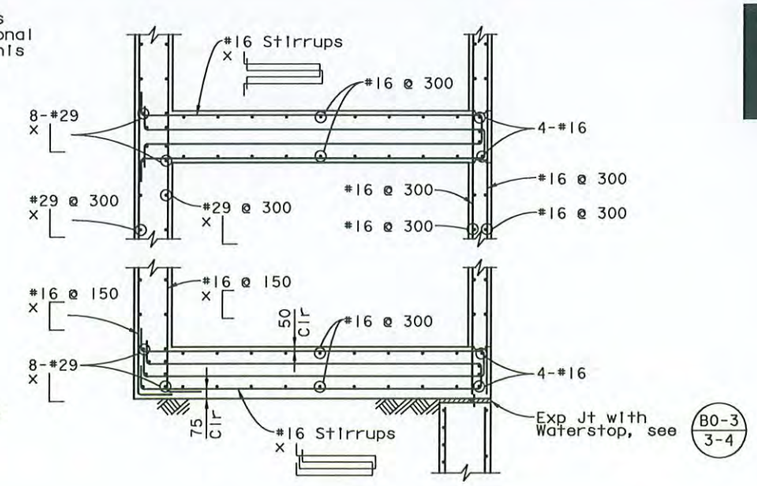

SECTION A-A

1:25

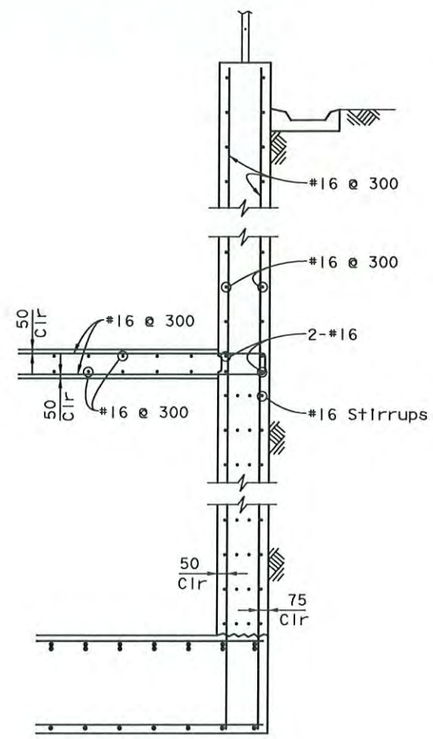

SECTION B-B

1:25

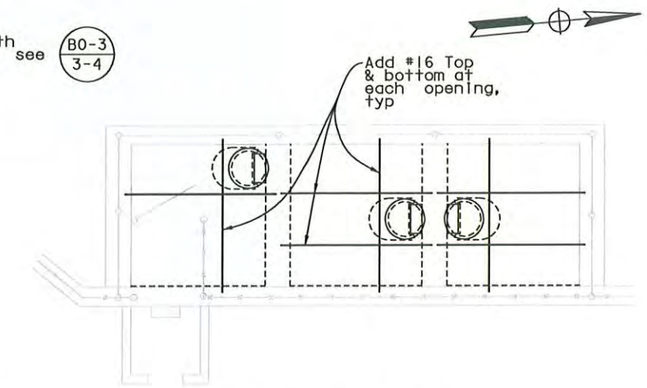

PLAN OF TOP SLAB

1:50

ALL DIMENSIONS ARE IN MILLIMETERS UNLESS OTHERWISE SHOWN.

SUPPLEMENTAL SHEET
CONTRACT CHANGE ORDER NO. 85
SHEET 17 OF 76

RETAINING WALL NO. 7 DETAILS NO. 2A

SCALE AS NOTED

R-3A

YBI STRUCTURES	MD	REVISED BY	JNB 5/16/08
	JNB	DATE REVISED	JNB 4/22/08
			JNB 1/31/08

STATE OF CALIFORNIA - DEPARTMENT OF TRANSPORTATION
Caltrans
CONSULTANT FUNCTIONAL SUPERVISOR BOB ZANDIPOUR
CALCULATED-DESIGNED BY JNB
CHECKED BY
July 24, 2012

LAST REVISION 00-00-00 DATE PLOTTED = 07/24/2012 TIME PLOTTED = 11:11:02 PM

BORDER LAST REVISED 3/1/2007

RELATIVE BORDER SCALE IS IN MILLIMETERS 0 20 40 60 80

USERNAME = fsamson
DGN FILE = P:*4141-06*CADD*Roadway Plans*Checked Plans*YBITS #1-100% 03-03-08 (Final Renamed)*072412 CCO T22*40120sqb002A.dgn

CU 04251 EA 0120H1

Dist	COUNTY	ROUTE	KILOMETER POST TOTAL PROJECT	SHEET No.	TOTAL SHEETS
04	SF	80	12.7/13.2	115R1	806

REGISTERED CIVIL ENGINEER DATE

6-23-08
PLANS APPROVAL DATE

REGISTERED PROFESSIONAL ENGINEER A. L. ELY No. 18880 Exp. 9-30-09 CIVIL STATE OF CALIFORNIA

THE STATE OF CALIFORNIA OR ITS OFFICERS OR AGENTS SHALL NOT BE RESPONSIBLE FOR THE ACCURACY OR COMPLETENESS OF ELECTRONIC COPIES OF THIS PLAN SHEET.

T.Y. LIN / MOFFATT & NICHOL
TWO HARRISON STREET, SUITE 500
SAN FRANCISCO, CA 94105

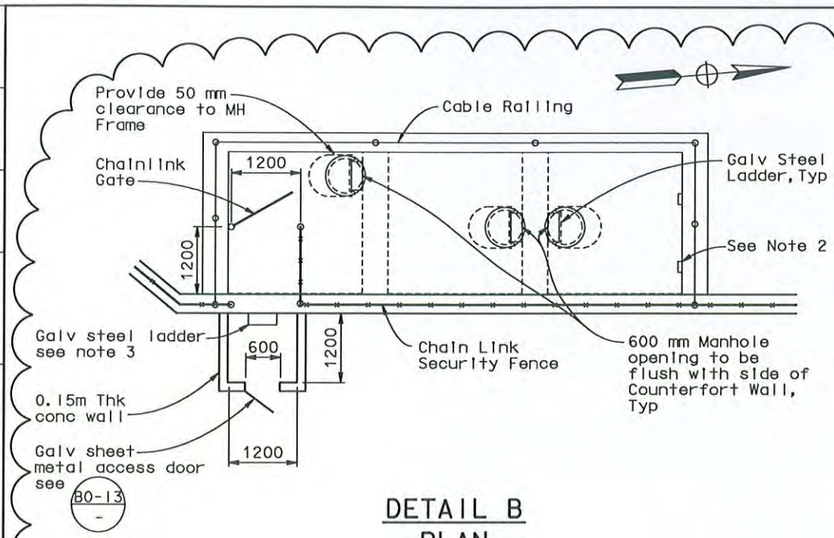

DETAIL B
PLAN
1:50

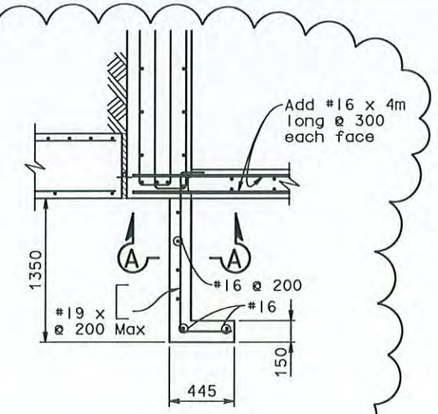

PLAN

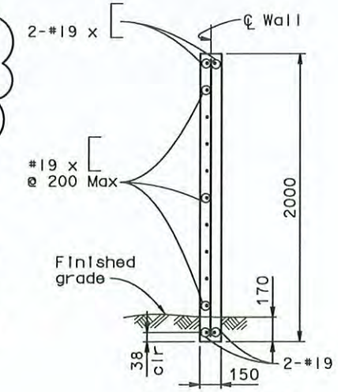

SECTION A-A

CONCRETE WALL ENCLOSURE DETAILS
1:20

NOTE:

1. Galv steel ladder conforming to CCR TITLE 3277 with capacity of supporting single 150 kg concentrated load. Contractor shall submit the design & shop drawing for engineer approval
2. For locations and details of pulling irons and embedded strut channels, see Roadway Plans. (△1)

LEGEND:

- Structure Excavation (Retaining Wall)
- Structure Backfill (Retaining Wall)
- Roadway Embankment

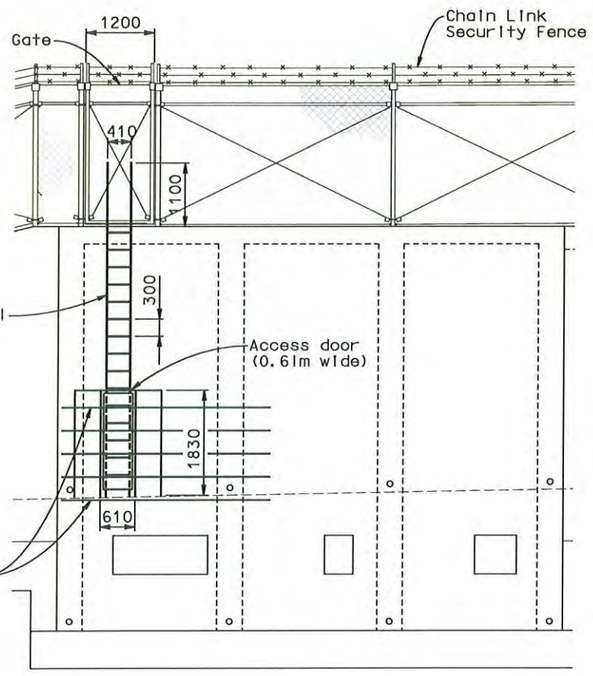

ELEVATION
1:50

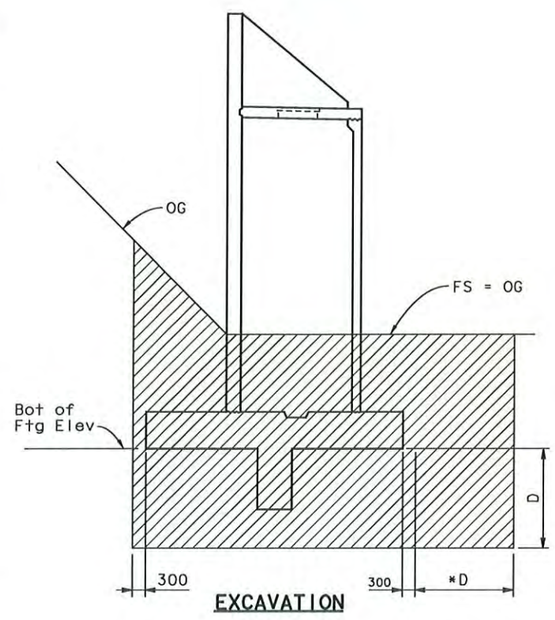

EXCAVATION

*D = Depth of required structure overexcavation, shown on 'Ret Wall No.7 Details No.1' sheet.

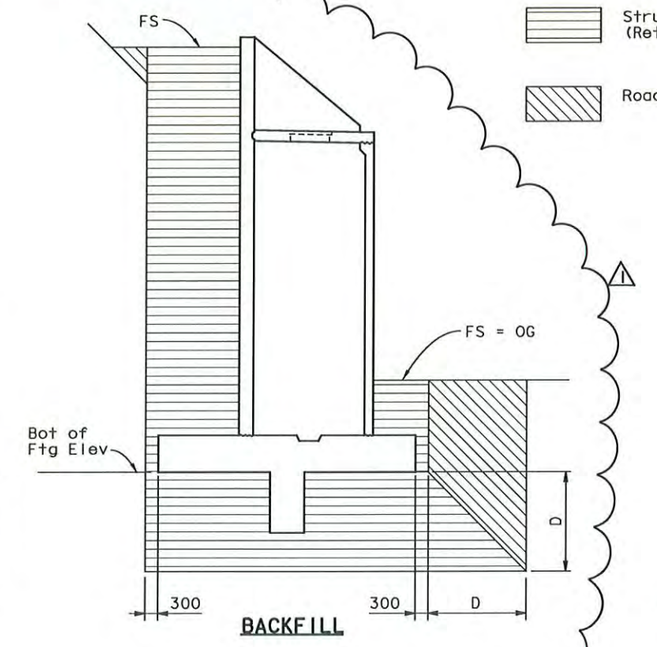

BACKFILL

NOTE: For details not shown, see A62B

LIMITS OF PAYMENT FOR EXCAVATION AND BACKFILL
No Scale

REGISTERED PROFESSIONAL ENGINEER JAL BIRDY No. 41547 Exp. 12-31-13 CIVIL STATE OF CALIFORNIA

FOR REVISION △1 ONLY

MARK	DATE	DESCRIPTIONS	BY	CH'D
△1	7-24-12	Revised layout and details	TL	JB

REVISIONS

CONTRACT CHANGE ORDER NO. 85
SHEET 18 OF 76

ALL DIMENSIONS ARE IN MILLIMETERS UNLESS OTHERWISE SHOWN.

RETAINING WALL NO. 7 DETAILS NO. 3

SCALE AS NOTED

R-4

REVISED BY	DATE REVISED
JNB	5/16/08
JNB	1/31/08

MD JNB — CALCULATED-DESIGNED BY — CHECKED BY

VISOR — CONSULTANT FUNCTIONAL SUPERVISOR — BOB ZANDIPOUR

STATE OF CALIFORNIA - DEPARTMENT OF TRANSPORTATION — Caltrans

YBI STRUCTURES — July 24, 2012

LAST REVISION 05-19-08 — DATE PLOTTED = 07/24/2012 — TIME PLOTTED = 11:11:13 PM

BORDER LAST REVISED 3/1/2007 — RELATIVE BORDER SCALE IS IN MILLIMETERS 0 20 40 60 80

USERNAME = fsamson
DGN FILE = P:\4141-06\CADD\Roadway Plans\Checked Plans\YBITS #1-100% 03-03-08 (Final Renamed)\072412 CCO T22\40120sqb003.dgn

CU 04251 — EA 0120S1

Dist	COUNTY	ROUTE	KILOMETER POST TOTAL PROJECT	SHEET No.	TOTAL SHEETS
04	SF	80	12.7/13.2	120 R5	806

REGISTERED ELECTRICAL ENGINEER 2/14/08

6-23-08
PLANS APPROVAL DATE

REGISTERED PROFESSIONAL ENGINEER FADI WALIEDDINE No. 11465 Exp. 12/31/09 ELECTRICAL STATE OF CALIFORNIA

THE STATE OF CALIFORNIA OR ITS OFFICERS OR AGENTS SHALL NOT BE RESPONSIBLE FOR THE ACCURACY OR COMPLETENESS OF ELECTRONIC COPIES OF THIS PLAN SHEET.

PB AMERICAS, Inc.
A Parsons Brinckerhoff Company
303 Second St., Suite 700N
San Francisco, CA 94107-1317

DRAWING TITLE	DRAWING No.
ELECTRICAL SHEET INDEX NO. 1	E-1
ELECTRICAL SHEET INDEX NO. 2	E-2
ELECTRICAL SHEET INDEX NO. 5 (SKYWAY STRUCTURES AND OAKLAND APPROACH STRUCTURE WESTBOUND)	E-2C
ELECTRICAL SHEET INDEX NO. 5 (SKYWAY STRUCTURES, OAKLAND APPROACH STRUCTURE WESTBOUND AND TOLL PLAZA)	E-2D
ELECTRICAL SYMBOLS	E-3
ELECTRICAL SYMBOLS AND ABBREVIATIONS	E-4
ELECTRICAL NOTES AND ABBREVIATIONS	E-5
ELECTRICAL NOTES AND ABBREVIATIONS	E-5A
ELECTRICAL KEY MAP	E-6
ELECTRICAL KEY MAP	E-6A
ELECTRICAL KEY MAP (SKYWAY STRUCTURES, OAKLAND APPROACH STRUCTURE WESTBOUND)	E-6B
ELECTRICAL KEY MAP (SKYWAY STRUCTURES, OAKLAND APPROACH STRUCTURE WESTBOUND AND TOLL PLAZA)	E-6C
UNDERGROUND (ELECTRICAL DUCT BANK) (DUCT BANKS AND MANHOLES)	E-7, E-8, E-9, E-10, E-11
DETAILS UNDERGROUND YBI SUBSTATION EQUIPMENT ARRANGEMENT	E-12
DETAILS UNDERGROUND YBI SUBSTATION CONDUIT AND CABLE TRAY	E-13
DETAILS UNDERGROUND (ELECTRICAL DUCT BANK) (MANHOLE PLANS AND SECTIONS)	E-14, E-15, E-16, E-17, E-18, E-19
DETAILS UNDERGROUND (ELECTRICAL DUCT BANK) (RETAINING WALL #7 MANHOLE SECTIONS)	E-19A, E-19B, E-19C
DETAILS UNDERGROUND (ELECTRICAL DUCT BANK) (MANHOLE PLANS AND SECTIONS)	E-20, E-21, E-22, E-23, E-24, E-25, E-26, E-27, E-28, E-29, E-29A
DETAILS UNDERGROUND SUBSTATION CONDUIT STUB-UPS	E-30
DETAILS UNDERGROUND (ELECTRICAL DUCT BANK) (DUCT BANK SECTIONS)	E-31, E-32, E-33, E-33A, E-34, E-34B, E-34C
DETAILS UNDERGROUND (ELECTRICAL DUCT BANK) (TYPICAL MANHOLE AND DUCT BANK)	E-35
GENERAL STRUCTURAL NOTES	E-35A
DETAILS UNDERGROUND (ELECTRICAL DUCT BANK) (MANHOLE MH-9 PLAN AND SECTIONS)	E-35B
DETAILS UNDERGROUND (ELECTRICAL DUCT BANK) (MANHOLE MH-9A PLAN AND SECTIONS)	E-35C
DETAILS UNDERGROUND (ELECTRICAL DUCT BANK) (MANHOLE MH-29A PLAN AND SECTIONS)	E-35D
DETAILS UNDERGROUND (ELECTRICAL DUCT BANK) (MANHOLE MH-13 PLAN AND SECTIONS)	E-35E
DETAILS UNDERGROUND (ELECTRICAL DUCT BANK) (MANHOLE MH-14, MH-15 PLAN AND SECTIONS)	E-35F
DETAILS UNDERGROUND (ELECTRICAL DUCT BANK) (MANHOLE MH-30 PLAN AND SECTIONS)	E-35G
DETAILS UNDERGROUND (ELECTRICAL DUCT BANK) (MANHOLE LADDER ELEVATIONS AND SECTIONS)	E-35H

DRAWING TITLE	DRAWING No.
DETAILS UNDERGROUND (ELECTRICAL DUCT BANK) TYPICAL REINFORCING AT WALL PENETRATIONS AND BLOCK-OUTS	E-35J
DETAILS UNDERGROUND (ELECTRICAL DUCT BANK) GROUNDING INTERFACE	E-36
DETAILS UNDERGROUND FOUNDATION GROUNDING	E-37
DETAILS UNDERGROUND (12.47 kV INTERFACE PLAN AND CABLE BLOCK DIAGRAM)	E-38
DETAILS UNDERGROUND 12.47 kV SINGLE LINE DIAGRAM	E-39
DETAILS UNDERGROUND (ELECTRICAL DUCT BANK) (480 V LVCC-A SINGLE LINE DIAGRAM)	E-40, E-41, E-42
DETAILS UNDERGROUND (ELECTRICAL DUCT BANK) (480 V LVCC-B SINGLE LINE DIAGRAM)	E-43, E-44, E-45
DETAILS UNDERGROUND (ELECTRICAL DUCT BANK) (YBI SUBSTATION SECTIONS)	E-46, E-47
YBI TRANSITION STRUCTURES ROADWAY WESTBOUND (LIGHTING AND ELECTRICAL SYSTEMS)	E-48, E-49, E-50, E-51, E-52
DETAILS YBI TRANSITION STRUCTURES ROADWAY WESTBOUND (480 V ROADWAY LIGHTING WIRING DIAGRAM)	E-53, E-54, E-55, E-56, E-57
DETAILS YBI TRANSITION STRUCTURES ROADWAY WESTBOUND (CONDUIT LOCATIONS)	E-5B, E-59, E-60, E-61
DETAILS YBI TRANSITION STRUCTURES ROADWAY WESTBOUND (SECTIONS)	E-62, E-63
DETAILS YBI TRANSITION STRUCTURES ROADWAY WESTBOUND (PLATFORM 1W ARRANGEMENT AND PLAN)	E-64
DETAILS YBI TRANSITION STRUCTURES ROADWAY WESTBOUND (PLATFORM 2W ARRANGEMENT AND PLAN)	E-65
DETAILS YBI TRANSITION STRUCTURES ROADWAY WESTBOUND (PLATFORM 3W ARRANGEMENT AND PLAN)	E-66
DETAILS YBI TRANSITION STRUCTURES ROADWAY WESTBOUND (TYPICAL PLATFORM SECTIONS)	E-67
DETAILS YBI TRANSITION STRUCTURES ROADWAY WESTBOUND (LIGHT POLE AND FIXTURE SCHEDULE)	E-68
DETAILS YBI TRANSITION STRUCTURES ROADWAY WESTBOUND (PULL BOX SCHEDULES)	E-69
DETAILS YBI TRANSITION STRUCTURES ROADWAY WESTBOUND (PANEL UP-101 AND UP-102 SCHEDULES)	E-70
DETAILS YBI TRANSITION STRUCTURES ROADWAY WESTBOUND (PANEL UP-103 SCHEDULE)	E-71
DETAILS YBI TRANSITION STRUCTURES ROADWAY WESTBOUND (PANEL UP-109 SCHEDULE)	E-73, E-74, E-75, E-76
YBI TRANSITION STRUCTURES GIRDER WESTBOUND (LIGHTING AND ELECTRICAL SYSTEMS)	E-72
DETAILS YBI TRANSITION STRUCTURES GIRDER WESTBOUND (480 V LIGHT PIPE WIRING DIAGRAM)	E-77

DRAWING TITLE	DRAWING NO.
DETAILS YBI STRUCTURE GIRDER WESTBOUND 480 V LIGHT PIPE WIRING DIAGRAM	E-77A
DETAILS YBI TRANSITION STRUCTURES GIRDER WESTBOUND (BENT W8L ELEVATION AND SECTIONS)	E-78
DETAILS YBI TRANSITION STRUCTURES GIRDER WESTBOUND (GROUNDING PLAN)	E-79
DETAILS YBI TRANSITION STRUCTURES GIRDER WESTBOUND (TYPICAL GROUNDING INSTALLATION)	E-80
DETAILS YBI TRANSITION STRUCTURES GIRDER WESTBOUND (VAULT SECTIONS AND DETAILS)	E-81, E-82, E-83
DETAILS YBI TRANSITION STRUCTURES GIROER WESTBOUND (LIGHT PIPE SCHEDULE)	E-84
DETAILS YBI TRANSITION STRUCTURES GIRDER WESTBOUND (HINGE W7LA)	E-85
DETAILS YBI TRANSITION STRUCTURES GIRDER WESTBOUND (CONDUIT SUPPORT AND EMBEDDED CONCRETE INSERT CHANNEL)	E-86, E-87, ~~E-88, E-89~~, E-89A, E-89B
YBI TRANSITION STRUCTURES ROADWAY EASTBOUND (LIGHTING AND ELECTRICAL SYSTEMS)	E-90, E-91, E-92, E-93
DETAILS YBI TRANSITION STRUCTURES ROADWAY EASTBOUND (480 V ROADWAY LIGHTING WIRING DIAGRAM)	E-94, E-95
DETAILS YBI TRANSITION STRUCTURES ROADWAY EASTBOUND (120 V BIKE PATH LIGHTING WIRING DIAGRAM)	E-96, E-97
DETAILS YBI TRANSITION STRUCTURES ROADWAY EASTBOUND (CONDUIT LOCATIONS)	E-98, E-99, E-100, E-101
DETAILS YBI TRANSITION STRUCTURES ROADWAY EASTBOUND (YBI STRUCTURE SECTIONS)	E-102
DETAILS YBI TRANSITION STRUCTURES ROADWAY EASTBOUND (TYPICAL BIKE PATH PLAN AND ELEVATION)	E-103
DETAILS YBI TRANSITION STRUCTURES ROADWAY EASTBOUND (TYPICAL BIKE PATH SECTION DETAILS)	E-103A
DETAILS YBI TRANSITION STRUCTURES ROADWAY EASTBOUND (TYPICAL BIKE PATH PLAN AND SECTIONS)	E-104
DETAILS YBI TRANSITION STRUCTURES ROADWAY EASTBOUND (PLATFORM 1E ARRANGEMENT AND PLAN)	E-105
DETAILS YBI TRANSITION STRUCTURES ROADWAY EASTBOUND (PLATFORM 2E ARRANGEMENT AND PLAN)	E-106
DETAILS YBI TRANSITION STRUCTURES ROADWAY EASTBOUND (PLATFORM 3E ARRANGEMENT AND PLAN)	E-107
DETAILS YBI TRANSITION STRUCTURES ROADWAY EASTBOUND (TYPICAL PLATFORM SECTIONS)	E-108
DETAILS YBI TRANSITION STRUCTURES ROADWAY EASTBOUND (PULL BOX SCHEDULES)	E-109

DRAWING TITLE	DRAWING NO.
DETAILS YBI TRANSITION STRUCTURES ROADWAY EASTBOUND (LIGHT POLE AND FIXTURE SCHEDULES)	E-110
DETAILS YBI TRANSITION STRUCTURES ROADWAY EASTBOUND (PANEL UP-201 AND UP-202 SCHEDULES)	E-111
DETAILS YBI TRANSITION STRUCTURES ROADWAY EASTBOUND (PANEL UP-203 SCHEDULE)	E-112
DETAILS YBI TRANSITION STRUCTURES ROADWAY EASTBOUND (PANEL UP-209 SCHEDULE)	E-113
DETAILS YBI TRANSITION STRUCTURES ROADWAY EASTBOUND (PANEL LP-216 SCHEDULE)	E-114
DETAILS YBI TRANSITION STRUCTURES ROADWAY EASTBOUND (PANEL LP-217 SCHEDULE)	E-115
DETAILS YBI TRANSITION STRUCTURES ROADWAY EASTBOUND (PANEL LP-218 SCHEDULE)	E-116
YBI TRANSITION STRUCTURES GIRDER EASTBOUND (LIGHTING AND ELECTRICAL SYSTEMS)	E-117, E-118, E-119, E-120
DETAILS YBI TRANSITION STRUCTURES GIRDER EASTBOUND (CONDUIT SUPPORT AND EMBEDDED CONCRETE INSERT CHANNEL)	E-121, E-122, E-123
DETAILS YBI TRANSITION STRUCTURES GIRDER EASTBOUND (TYPICAL INSTALLATION AND SECTIONS)	E-124

REGISTERED PROFESSIONAL ENGINEER SYN YEE CHIN No. 18186 Exp. 09/30/2011 ELECTRICAL STATE OF CALIFORNIA — FOR REVISION ONLY 1

REGISTERED PROFESSIONAL ENGINEER SAFIUDDIN A. MOHAMED No. 71894 Exp. 12/31/2011 CIVIL STATE OF CALIFORNIA — FOR REVISION ONLY 2

REGISTERED PROFESSIONAL ENGINEER DAVID H. OTO No. 10699 Exp. 06/30/2013 ELECTRICAL STATE OF CALIFORNIA — FOR REVISION ONLY 3 4 5

MARK	DATE	DESCRIPTIONS	BY	CH'D
5	07/24/12	Rev. retaining wall #7, MH-13, -14, & -15. Relocate U/G Duct Bank at Bent W8.	DO	EJL
4	04/20/12	TOS device installation	JH	EL
3	02/17/12	Light pole and call box installation	DO	EL
2	08/16/11	ANCHOR BOLT INSTALLATION FOR STRUT SUPPORTS	TW RR	RG
1	10/27/10	Bike Path Railing Elimination and Soffit Light Addition	JH	EL

REVISIONS

CONTRACT CHANGE ORDER NO. 85
SHEET 19 OF 76

ELECTRICAL SHEET INDEX NO. 1

5 REVISED PER ADDENDUM No. 5 DATED JULY 30, 2009

E-1

(100% SUBMITTAL #1 (04/20/2012)

STATE OF CALIFORNIA - DEPARTMENT OF TRANSPORTATION

CONSULTANT FUNCTIONAL SUPERVISOR: BEHZAD GOLEMOHAMMADI

CALCULATED-DESIGNED BY: AB — CHECKED BY: IAH — REVISED BY — DATE REVISED

LAST REVISION 04-20-12 — DATE PLOTTED => 24-JUL-2012 — TIME PLOTTED => 16:17

BORDER LAST REVISED 3/1/2007 — RELATIVE BORDER SCALE IS IN MILLIMETERS 0 20 40 60 80 — USERNAME => reyesl — DGN FILE => 40120sua001r05.dgn — CU 04251 — EA 0120S1

DRAWING TITLE	DRAWING No.
DETAILS YBI TRANSITION STRUCTURES GIRDER EASTBOUND (480 V LIGHT PIPE WIRING DIAGRAM)	E-125
DETAILS YBI STRUCTURE GIRDER EASTBOUND 480 V LIGHT PIPE WIRING DIAGRAM	E-125A
DETAILS YBI TRANSITION STRUCTURES GIRDER EASTBOUND (HINGE W6RB)	E-126
DETAILS YBI TRANSITON STRUCTURES GIRDER EASTBOUND (BENT W8R ELEVATION AND SECTIONS)	E-127
DETAILS YBI TRANSITION STRUCTURES GIRDER EASTBOUND (GROUNDING PLAN)	E-128
DETAILS YBI TRANSITION STRUCTURES GIRDER EASTBOUND (TYPICAL GROUNDING INSTALLATION)	E-129
DETAILS YBI TRANSITION STRUCTURES GIRDER EASTBOUND (VAULT SECTIONS AND DETAILS)	E-130, E-131, E-132, E-133
YBI TRANSITION STRUCTURES GIRDER EASTBOUND (LIGHT PIPE SCHEDULE)	E-134
DETAILS SCADA REMOTE TERMINAL UNIT SYSTEM (LOCATIONS)	E-135
DETAILS SCADA REMOTE TERMINAL UNIT SYSTEM (SCADA INTERFACE PLAN AND CABLE BLOCK DIAGRAM)	E-136
DETAILS SCADA REMOTE TERMINAL UNIT SYSTEM (TELEPHONE INTERFACE PLAN AND CABLE BLOCK DIAGRAM)	E-137
DETAILS SCADA REMOTE TERMINAL UNIT SYSTEM (SCADA AND TELEPHONE CABLE BLOCK DIAGRAM)	E-138
DETAILS SCADA REMOTE TERMINAL UNIT SYSTEM (RTU-9W AND RTU-9E PANEL LAYOUT)	E-139
DETAILS SCADA REMOTE TERMINAL UNIT SYSTEM (SCADA COMMUNICATION TERMINAL BOX LAYOUT)	E-140
DETAILS SCADA REMOTE TERMINAL UNIT SYSTEM (RTU-9W ELEMENTARY AND CONNECTION DIAGRAM)	E-141
DETAILS SCADA REMOTE TERMINAL UNIT SYSTEM (RTU-9E ELEMENTARY AND CONNECTION DIAGRAM)	E-142
DETAILS SCADA REMOTE TERMINAL UNIT SYSTEM (COM-1W TERMINAL BOX WIRING DIAGRAM)	E-143
DETAILS SCADA REMOTE TERMINAL UNIT SYSTEM (TEL-1W TERMINAL BOX WIRING DIAGRAM)	E-144
DETAILS SCADA REMOTE TERMINAL UNIT SYSTEM (TYPICAL RELAY WIRING DIAGRAM)	E-145
TRAFFIC OPERATIONS SYSTEM (FIELD ELEMENT LOCATIONS)	E-146
DETAILS TRAFFIC OPERATIONS SYSTEM (PREFORMED LOOP DETECTOR STATION INSTALLATION)	E-147
DETAILS TRAFFIC OPERATIONS SYSTEM (CLOSED CIRCUIT TELEVISION CAMERA STATION INSTALLATION)	E-148
DETAILS TRAFFIC OPERATIONS SYSTEM (CLOSED CIRCUIT TELEVISION CAMERA EQUIPMENT AND JUNCTION BOX WIRING DIAGRAM)	E-149

DRAWING TITLE	DRAWING No.
DETAILS TRAFFIC OPERATIONS SYSTEM (CLOSED CIRCUIT TELEVISION CAMERA CONTROLLER CABINET WIRING DIAGRAM)	E-150
DETAILS TRAFFIC OPERATIONS SYSTEM (CHANGEABLE MESSAGE SIGN STATION INSTALLATION)	E-151
DETAILS TRAFFIC OPERATIONS SYSTEM (CONTROLLER CABINET CONFIGURATION)	E-152
DETAILS TRAFFIC OPERATIONS SYSTEM (COMMUNICATION CABLE BLOCK DIAGRAM)	E-153
DETAILS TRAFFIC OPERATIONS SYSTEM (FIBER OPTIC TERMINATIONS WESTBOUND)	E-154
DETAILS TRAFFIC OPERATIONS SYSTEM (FIBER OPTIC TERMINATIONS EASTBOUND)	E-155
DETAILS TRAFFIC OPERATIONS SYSTEM (FIBER OPTIC SPLICE)	E-156, E-157
STRONG MOTION DETECTION SYSTEM (GENERAL PLAN AND ELEVATION)	E-158
STRONG MOTION DETECTION SYSTEM YBI TRANSITION STRUCTURES (BENT W7 CONDUIT AND SENSOR LOCATION)	E-159
STRONG MOTION DETECTION SYSTEM YBI TRANSITION STRUCTURES (BENT W4 CONDUIT AND SENSOR LOCATION)	E-160
STRONG MOTION DETECTION SYSTEM YBI TRANSITION STRUCTURES (WB AND EB HINGE K CONDUIT AND SENSOR LOCATION)	E-161
STRONG MOTION DETECTION SYSTEM YBI-TRANSITION STRUCTURES (BENT W7 CONDUIT AND SENSOR LOCATION)	E-162
DETAILS STRONG MOTION DETECTION SYSTEM (SENSOR AND RECORDER ENCLOSURES)	E-163
STRONG MOTION DETECTION SYSTEM (RECORDER SCHEDULE)	E-164
STRONG MOTION DETECTION SYSTEM (SENSOR SCHEDULE)	E-165
DETAILS STRONG MOTION DETECTION SYSTEM (CABLE BLOCK DIAGRAM)	E-166, E-167
CALL BOX SYSTEM (YBI STRUCTURE ROADWAY WESTBOUND LOCATIONS)	E-168
CALL BOX SYSTEM (YBI STRUCTURE ROADWAY EASTBOUND LOCATIONS)	E-169
CALL BOX SYSTEM (CALL BOX WIRING DIAGRAM)	E-170, E-171
CALL BOX SYSTEM (CALL BOX SCHEDULES)	E-172
MISCELLANEOUS DETAILS AT CALL BOX LOCATIONS	E-172A
DETAILS LIGHT POLE AND FIXTURE	E-173
DETAILS ROADWAY LIGHTING POLE ANCHORAGE	E-174
DETAILS VIADUCT LIGHT POLE FOUNDATIONS	E-174A
DETAILS YBI TRANSITION STRUCTURES ROADWAY EASTBOUND (TYPICAL BIKE PATH LIGHTING)	E-175

Caltrans Metric

5

DRAWING TITLE	DRAWING No.
DETAILS YBI TRANSITION STRUCTURES GIRDER (TYPICAL LIGHT PIPE INSTALLATION 1)	E-176
DETAILS YBI TRANSITION STRUCTURES GIRDER (TYPICAL LIGHT PIPE INSTALLATION 2)	E-177
DETAILS YBI TRANSITION STRUCTURES GIRDER (TYPICAL LIGHT PIPE INSTALLATION 3)	E-178
LIGHTING (LOCATION 1)	E-179
DETAILS LIGHTING (LOCATION 1)	E-180
DETAILS LIGHTING (LOCATION 1) (CITY OF SAN FRANCISCO TYPICAL STREET LIGHT)	E-181
CONDUIT AND TRAY SCHEDULE UNDERGROUND	E-182 THRU E-244
CONDUIT AND TRAY SCHEDULE UNDERGROUND	E-244A THRU E-244M 1
CONDUIT AND TRAY SCHEDULE YBI TRANSITION STRUCTURES ROADWAY WB	E-245 THRU E-284
CONDUIT AND TRAY SCHEDULE YBI TRANSITION STRUCTURES ROADWAY WB	E-284A THRU E-284F
CONDUIT AND TRAY SCHEDULE YBI TRANSITION STRUCTURES GIRDER WB	E-285 THRU E-294
CONDUIT AND TRAY SCHEDULE YBI TRANSITION STRUCTURES GIRDER WB	E-294A THRU E-294B
CONDUIT AND TRAY SCHEDULE YBI TRANSITION STRUCTURES ROADWAY EB	E-295 THRU E-328
CONDUIT AND TRAY SCHEDULE YBI TRANSITION STRUCTURES ROADWAY EB	E-328A THRU E-328C
CONDUIT AND TRAY SCHEDULE YBI TRANSITION STRUCTURES GIRDER EB	E-329 THRU E-338
CONDUIT AND TRAY SCHEDULE YBI TRANSITION STRUCTURES GIRDER EB	E-338A THRU E-338B
CONDUIT AND TRAY SCHEDULE STRONG MOTION DETECTION SYSTEM	E-339 THRU E-347
CONDUIT AND TRAY SCHEDULE STRONG MOTION DETECTION SYSTEM	E-347A, E-347B 1
CABLE AND CIRCUIT SCHEDULE	E-348 THRU E-397
CABLE AND CIRCUIT SCHEDULE	E-397A THRU E-397J

DIST	COUNTY	ROUTE	TOTAL PROJECT	SHEET No.	SHEETS
04	SF	80	12.7/13.2	121 R1	806

2/14/08
REGISTERED ELECTRICAL ENGINEER

6-23-08
PLANS APPROVAL DATE

REGISTERED PROFESSIONAL ENGINEER FADI WALIEDDINE No. 11465 Exp. 12/31/09 ELECTRICAL STATE OF CALIFORNIA

THE STATE OF CALIFORNIA OR ITS OFFICERS OR AGENTS SHALL NOT BE RESPONSIBLE FOR THE ACCURACY OR COMPLETENESS OF ELECTRONIC COPIES OF THIS PLAN SHEET.

PB AMERICAS, Inc.
A Parsons Brinckerhoff Company
303 Second St., Suite 700N
San Francisco, CA 94107-1317

REGISTERED PROFESSIONAL ENGINEER DAVID H. OTO No. 10699 Exp. 06/30/2013 ELECTRICAL STATE OF CALIFORNIA

FOR REVISION ONLY
1

MARK	DATE	DESCRIPTIONS	BY	CH'D
1	7/24/12	Rev. retaining wall #7, MH-13, -14, & -15. Relocate U/G Duct Bank at Bent W8.	DO	EJL

REVISIONS

CONTRACT CHANGE ORDER NO. 85
SHEET 20 OF 76

ELECTRICAL SHEET INDEX NO. 2

5 REVISED PER ADDENDUM No. 5 DATED JULY 30, 2009

E-2

REVISED BY | DATE REVISED
AB | IAH
CALCULATED-DESIGNED BY | CHECKED BY
SUPERVISOR | CONSULTANT FUNCTIONAL SUPERVISOR
BEHZAD GOLEMOHAMMADI

STATE OF CALIFORNIA - DEPARTMENT OF TRANSPORTATION
Caltrans

LAST REVISION 07-24-12 | DATE PLOTTED => 7/25/2012 | TIME PLOTTED => 7:14:03 AM

DIST	COUNTY	ROUTE	TOTAL PROJECT	No.	SHEETS
04	SF	80	12.7/13.2	127 R4	806

REGISTERED ELECTRICAL ENGINEER — 2/14/08 DATE

6-23-08
PLANS APPROVAL DATE

REGISTERED PROFESSIONAL ENGINEER FADI WALJEDDINE No. 11465 Exp. 12/31/09 ELECTRICAL STATE OF CALIFORNIA

THE STATE OF CALIFORNIA OR ITS OFFICERS OR AGENTS SHALL NOT BE RESPONSIBLE FOR THE ACCURACY OR COMPLETENESS OF ELECTRONIC COPIES OF THIS PLAN SHEET.

PB AMERICAS, Inc.
A Parsons Brinckerhoff Company
303 Second St., Suite 700N
San Francisco, CA 94107-1317

REGISTERED PROFESSIONAL ENGINEER SYN YEE CHIN No. 18186 Exp. 09/30/2013 ELECTRICAL STATE OF CALIFORNIA
Syn Yee Chin
FOR REVISION ONLY 1 2

REGISTERED PROFESSIONAL ENGINEER DAVID H. OTO No. 10699 Exp. 06/30/2013 ELECTRICAL STATE OF CALIFORNIA
FOR REVISION ONLY 3 4

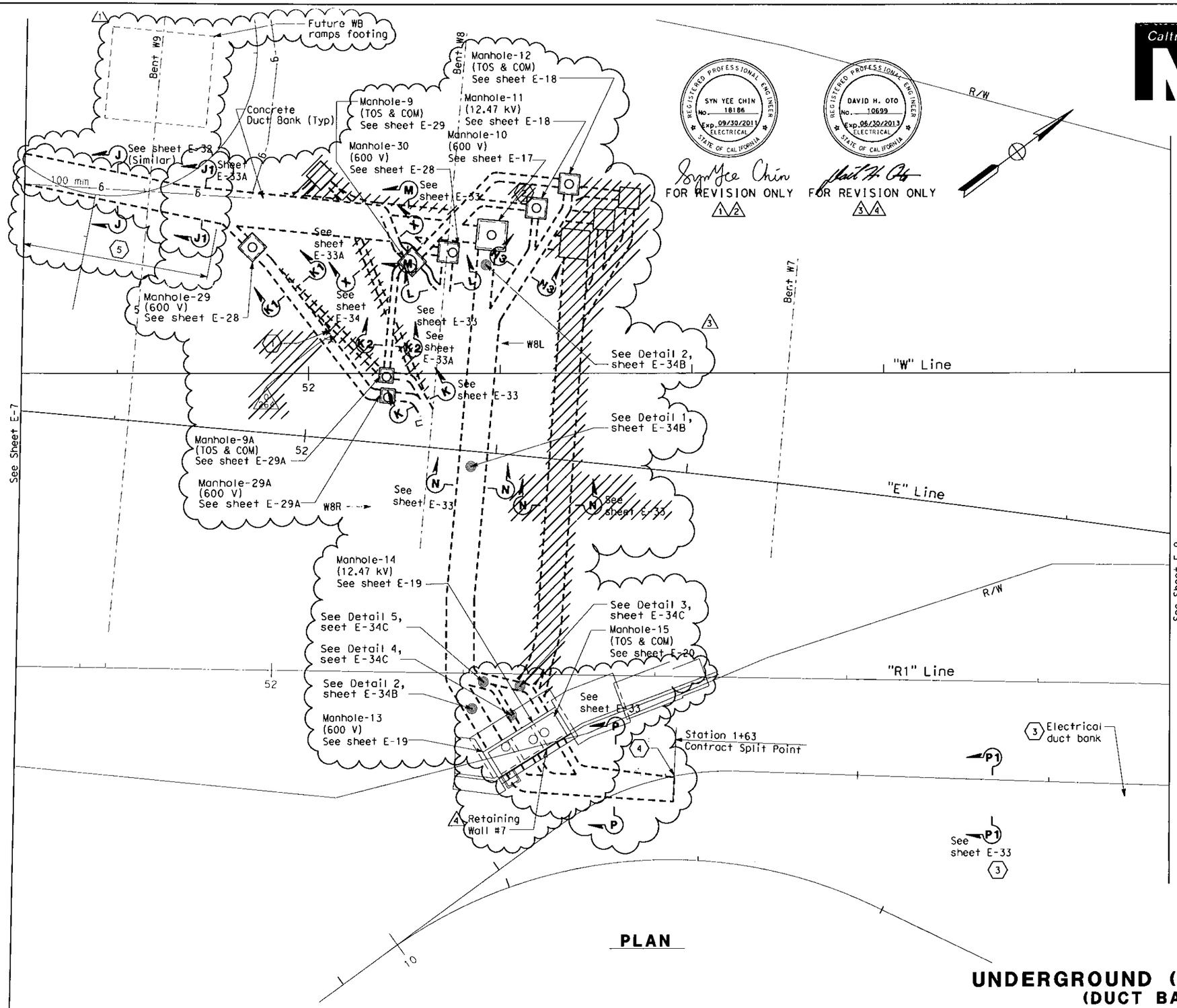

PLAN

NOTES:

1. References:
   - For manhole plans and sections, ~~see sheets E-17 through E-20, E-28, E-29 and E-29A.~~ 3
   - For manhole and duct bank details, see sheets E-35, E-35A thru E-35J.
   - For duct bank sections, see sheets E-32, E-33, E-33A and E-34.
   - ~~For bent W8L elevation~~ and sections, see sheet E-78.
   - For bent W8R elevation and sections, see sheet E-127.
   - For duct bank anchors on slopes, see Utility Sheets.
   - 2 For Conduit and Troy Schedules, Cable and Circuit Schedules, refer to sheets starting at E-182.
2. For location of manholes, see Utility Sheets.
3. 2 Furnish and install 4-25.4 mm innerducts inside TOS/COM conduits from MH-9 to MH-12 (0261), MH-9 to W8L (4218), MH-9 to W8R (5913), MH-12 to MH-15 (0311) and MH-15 to MH-18 (0361, *0361).
4. Furnish and install BASE fiber optic cable in innerduct inside TOS/COM conduits (0261, 4218, 5913, 0311, 0361, *0361). See sheets E-1102 and E-1103.

SHEET NOTES:

3
1. ~~Stub-out conduit for future extension.~~
2. ~~Duct banks shall be sweeped.~~
3. Not in contract. Conduits shown are existing installed on previous contract. It is provided as reference for routing cable/circuits only. Existing conduit is tagged with prefixed (*) on conduit and troy schedules.
4. The Contractor to extend existing duct bank from station 1+63 to manholes #13, #14 and #15. Connect conduits to existing stub-out conduits.
5. 1 For location of underground duct bank starting from manhole MH-7, see Utility Details sheets UD-1 and UD-6.

MARK	DATE	DESCRIPTIONS	BY	CH'D
4	07/24/12	Rev. retaining wall #7, MH-13, -14, & -15. Relocate U/G Duct Bank at Bent W8.	OO	EJL
3	11/11/11	Relocate U/G Duct Bank at Bent W8	JH	EJL
2	07/15/11	B.A.S.E. Trunkline	RB	WB
1	08/05/10	Duct Bank Realignment for CCSF Ramps	JH	EL

REVISIONS

CONTRACT CHANGE ORDER NO. 85
SHEET 21 OF 76

UNDERGROUND (ELECTRICAL DUCT BANK)
(DUCT BANK AND MANHOLES)

SCALE: 1:200

E-8

THIS PLAN ACCURATE FOR ELECTRICAL WORK ONLY.

ALL DIMENSIONS ARE IN METERS UNLESS OTHERWISE SHOWN

STATE OF CALIFORNIA - DEPARTMENT OF TRANSPORTATION — Caltrans

CONSULTANT FUNCTIONAL SUPERVISOR: BEHZAD GOLEMOHAMMADI
CALCULATED-DESIGNED BY: AB
CHECKED BY: FK
REVISED BY / DATE REVISED

LAST REVISION 07-24-12 — DATE PLOTTED => 7/25/2012 — TIME PLOTTED => 7:16:03 AM

Dist	COUNTY	ROUTE	KILOMETER POST TOTAL PROJECT	SHEET No.	TOTAL SHEETS
04	SF	80	12.7/13.2	136 R1	806

REGISTERED ELECTRICAL ENGINEER 2/14/08 DATE

6-23-08
PLANS APPROVAL DATE

REGISTERED PROFESSIONAL ENGINEER FADI WALIEDDINE No. 11465 Exp. 12/31/09 ELECTRICAL STATE OF CALIFORNIA

THE STATE OF CALIFORNIA OR ITS OFFICERS OR AGENTS SHALL NOT BE RESPONSIBLE FOR THE ACCURACY OR COMPLETENESS OF ELECTRONIC COPIES OF THIS PLAN SHEET.

PB AMERICAS, Inc.
A Parsons Brinckerhoff Company
303 Second St., Suite 700N
San Francisco, CA 94107-1317

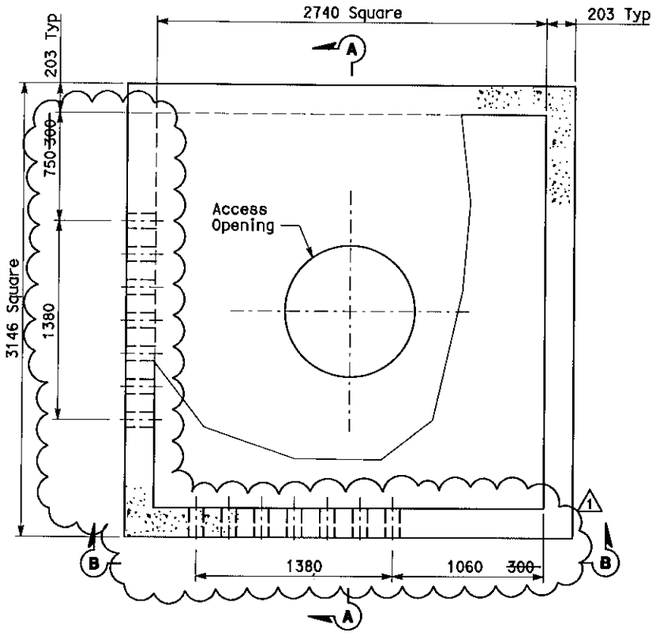

PLAN-MANHOLE-10
SCALE: 1:20 (600 V)

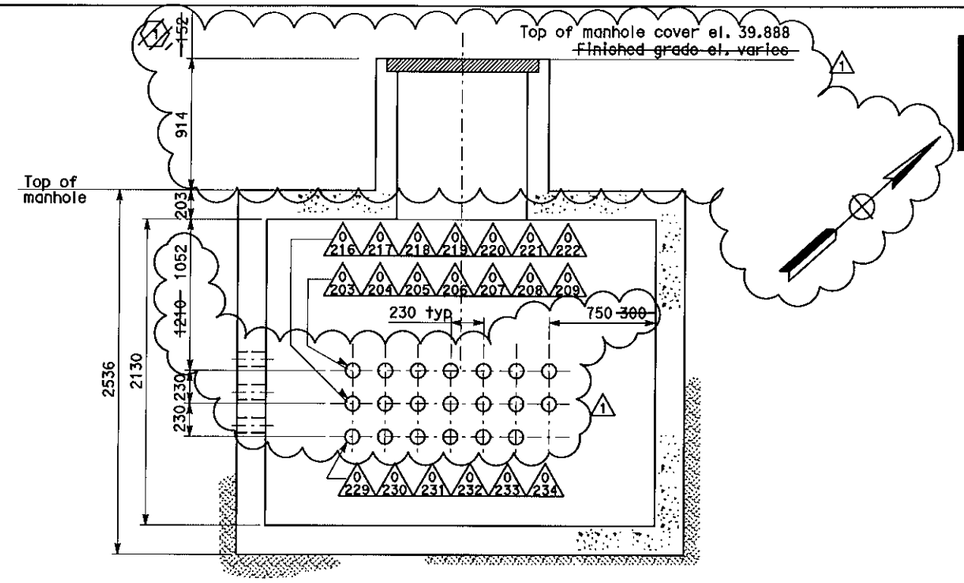

SECTION A-A
SCALE: 1:20

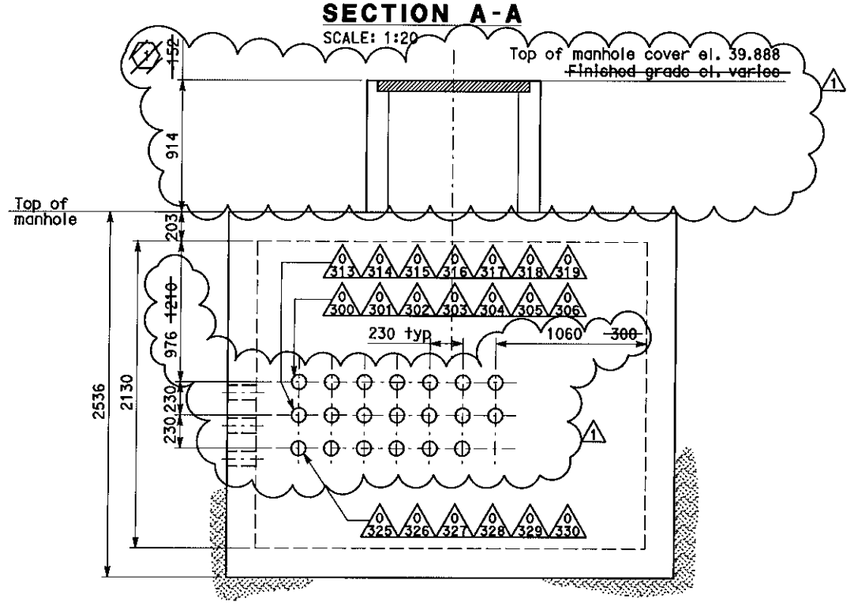

SECTION B-B
SCALE: 1:20

NOTES:

1. References:
   - For duct bank and manhole plan, see sheet E-8.
   - For typical manhole and duct bank details, see sheet E-35.
   - For duct bank sections, see sheets E-33 and E-33A. 1

SHEET NOTES:

1 ~~Approximate distance of manhole necking or riser is from the finished grade and top of manhole. Maximum length of manhole necking or riser shall be 914 mm.~~ 1

REGISTERED PROFESSIONAL ENGINEER DAVID H. OTO No. 10699 Exp. 06/30/2013 ELECTRICAL STATE OF CALIFORNIA

FOR REVISION ONLY
1

MARK	DATE	DESCRIPTIONS	BY	CH'D
1	11/11/11	Relocate U/G Duct Bank at Bent W8	JH	EJL

REVISIONS

CONTRACT CHANGE ORDER NO. 85
SHEET 22 OF 76

DETAILS
UNDERGROUND (ELECTRICAL DUCT BANK)
(MANHOLE PLANS AND SECTIONS)
SCALE AS NOTED

E-17

STATE OF CALIFORNIA - DEPARTMENT OF TRANSPORTATION
Caltrans

CONSULTANT FUNCTIONAL SUPERVISOR: BEHZAD GOLEMOHAMMADI
CALCULATED-DESIGNED BY: AB
CHECKED BY: FK
REVISED BY
DATE REVISED

THIS PLAN ACCURATE FOR ELECTRICAL WORK ONLY.

ALL DIMENSIONS ARE IN MILLIMETERS UNLESS OTHERWISE SHOWN

LAST REVISION 11-11-11
DATE PLOTTED => 18-NOV-2011
TIME PLOTTED => 11:21

Dist	COUNTY	ROUTE	KILOMETER POST TOTAL PROJECT	SHEET No.	TOTAL SHEETS
04	SF	80	12.7/13.2	137 R2	806

REGISTERED ELECTRICAL ENGINEER — 2/14/08 DATE

6-23-08
PLANS APPROVAL DATE

REGISTERED PROFESSIONAL ENGINEER — FADI WALIEDDINE No. 11465 Exp. 12/31/09 ELECTRICAL — STATE OF CALIFORNIA

THE STATE OF CALIFORNIA OR ITS OFFICERS OR AGENTS SHALL NOT BE RESPONSIBLE FOR THE ACCURACY OR COMPLETENESS OF ELECTRONIC COPIES OF THIS PLAN SHEET.

PB AMERICAS, Inc.
A Parsons Brinckerhoff Company
303 Second St., Suite 700N
San Francisco, CA 94107-1317

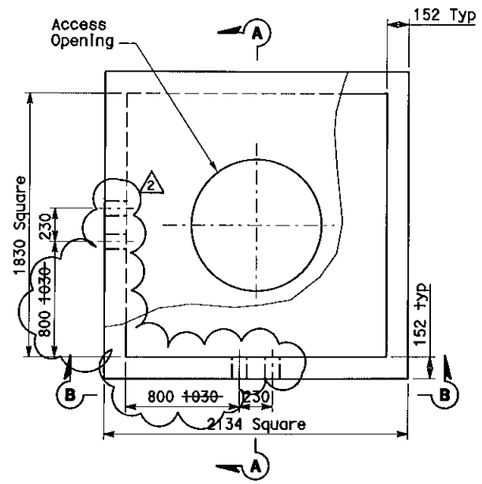

PLAN-MANHOLE-11
SCALE: 1:20 (12.47 kV)

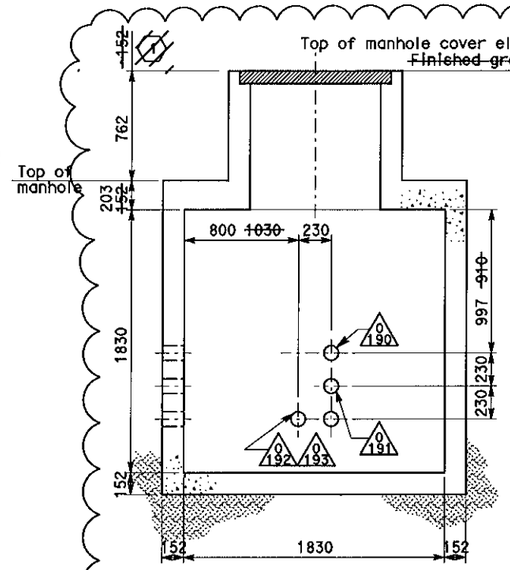

SECTION A-A
SCALE: 1:20

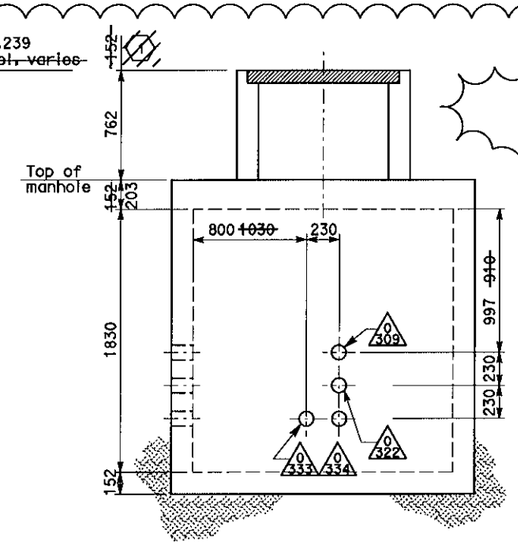

SECTION B-B
SCALE: 1:20

NOTES:

1. References:
   - For duct bank and manhole plan, see sheet E-8.
   - For duct bank sections, see sheets E-33 and E-33A.
   - For typical manhole and duct bank details, see sheet E-35.
   - For Conduit and Tray Schedules, Cable and Circuit Schedules, refer to sheets starting at E-182.
2. Furnish and Install 4-25.4 mm Innerducts inside TOS/COM conduits (0261, 0311). Refer to MH-12.
3. Furnish and Install BASE fiber optic cable in Innerduct. See sheets E-1102 and E-1103.

SHEET NOTES:

~~1 Approximate distance of manhole necking or riser is from the finished grade and top of manhole. Maximum length of manhole necking or riser shall be 914 mm.~~

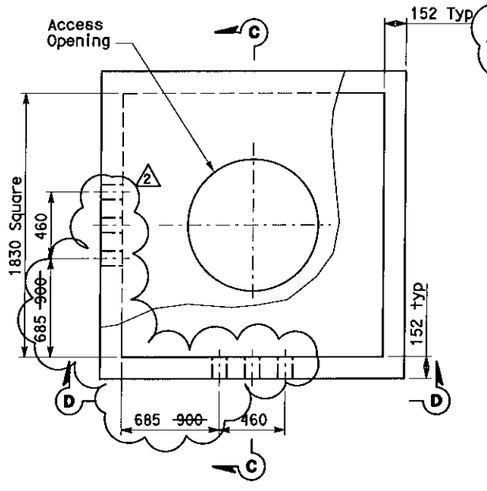

PLAN-MANHOLE-12
SCALE: 1:20 (TOS & COMMUNICATION)

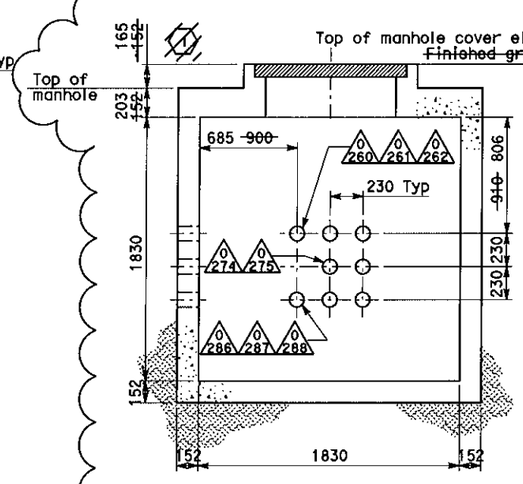

SECTION C-C
SCALE: 1:20

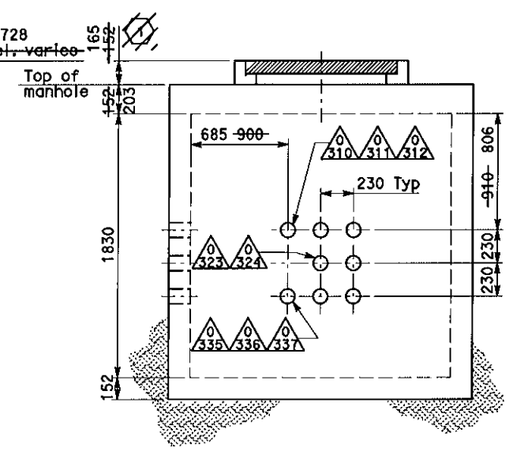

SECTION D-D
SCALE: 1:20

SYN YEE CHIN — REGISTERED PROFESSIONAL ENGINEER — No. 18198 — Exp. 09/30/2011 ELECTRICAL — STATE OF CALIFORNIA
FOR REVISION ONLY 1

DAVID H. OTO — REGISTERED PROFESSIONAL ENGINEER — No. 10699 — Exp. 06/30/2013 ELECTRICAL — STATE OF CALIFORNIA
FOR REVISION ONLY 2

MARK	DATE	DESCRIPTIONS	BY	CH'D
2	11/11/11	Relocate U/G Duct Bank at Bent W8	JH	EJL
1	07/15/11	B.A.S.E. Trunkline	RB	WB

REVISIONS

CONTRACT CHANGE ORDER NO. 85
SHEET 23 OF 76

DETAILS
UNDERGROUND (ELECTRICAL DUCT BANK)
(MANHOLE PLANS AND SECTIONS)
SCALE AS NOTED

E-18

REVISED BY	DATE REVISED
AB	FK

CALCULATED-DESIGNED BY: AB — CHECKED BY: FK
CONSULTANT FUNCTIONAL SUPERVISOR: BEHZAD GOLEMOHAMMADI

STATE OF CALIFORNIA - DEPARTMENT OF TRANSPORTATION — Caltrans

THIS PLAN ACCURATE FOR ELECTRICAL WORK ONLY.

ALL DIMENSIONS ARE IN MILLIMETERS UNLESS OTHERWISE SHOWN

LAST REVISION 11-11-11 — DATE PLOTTED => 18-NOV-2011 — TIME PLOTTED => 11:22

Dist	COUNTY	ROUTE	KILOMETER POST TOTAL PROJECT	SHEET No.	TOTAL SHEETS
04	SF	80	12.7/13.2	138 R2	806

REGISTERED ELECTRICAL ENGINEER — 2/14/08 DATE

6-23-08
PLANS APPROVAL DATE

REGISTERED PROFESSIONAL ENGINEER — FADI WALIEDDINE No. 11465 Exp. 12/31/09 ELECTRICAL — STATE OF CALIFORNIA

THE STATE OF CALIFORNIA OR ITS OFFICERS OR AGENTS SHALL NOT BE RESPONSIBLE FOR THE ACCURACY OR COMPLETENESS OF ELECTRONIC COPIES OF THIS PLAN SHEET.

PB AMERICAS, Inc.
A Parsons Brinckerhoff Company
303 Second St., Suite 700N
San Francisco, CA 94107-1317

Caltrans Metric

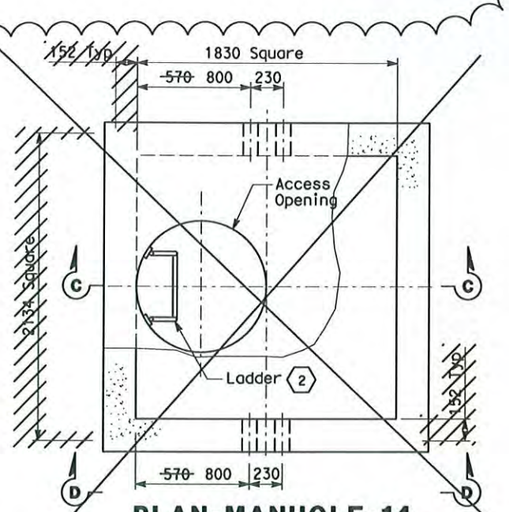

PLAN-MANHOLE-14

~~SCALE: 1:20~~ NO SCALE (12.47 kV)
For Manhole Details, see sheet E-35F

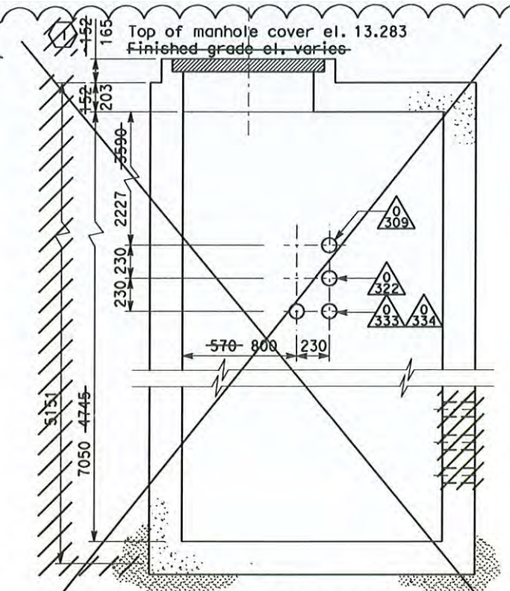

SECTION C-C

~~SCALE: 1:20~~ NO SCALE

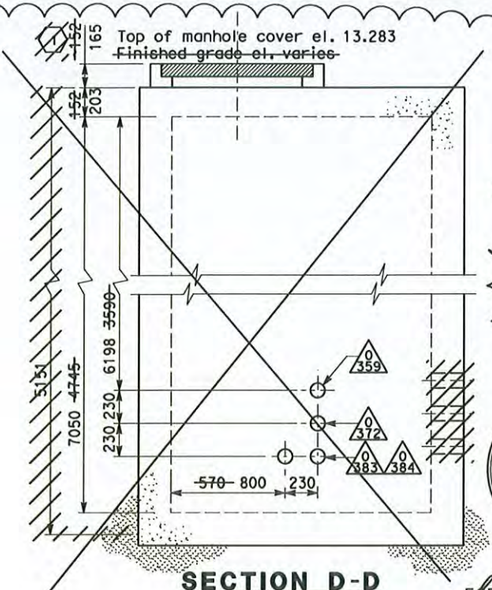

SECTION D-D

~~SCALE: 1:20~~ NO SCALE

REGISTERED PROFESSIONAL ENGINEER — DAVID H. OTO No. 10699 Exp. 06/30/2013 ELECTRICAL — STATE OF CALIFORNIA

FOR REVISION ONLY 1 2

NOTES:

1. References:
   - For duct bank and manhole plan, see sheet E-8.
   - For duct bank sections, see sheets E-33, and E-33A.
   - ~~For typical manhole and duct bank details, see sheet E-35.~~

SHEET NOTES:

1. ~~Approximate distance of manhole necking or riser is from the finished grade and top of manhole. Maximum length of manhole necking or riser shall be 914 mm.~~
2. For Details of ladder inside Manhole, see sheet E-35H.

MARK	DATE	DESCRIPTIONS	BY	CH'D
2	07/24/12	Drawing deleted. Relocate U/G Duct Bank at Bent W8	JH	EJL
1	11/11/11	Relocate U/G Duct Bank at Bent W8	JH	EJL

REVISIONS

CONTRACT CHANGE ORDER NO. 85
SHEET 24 OF 76

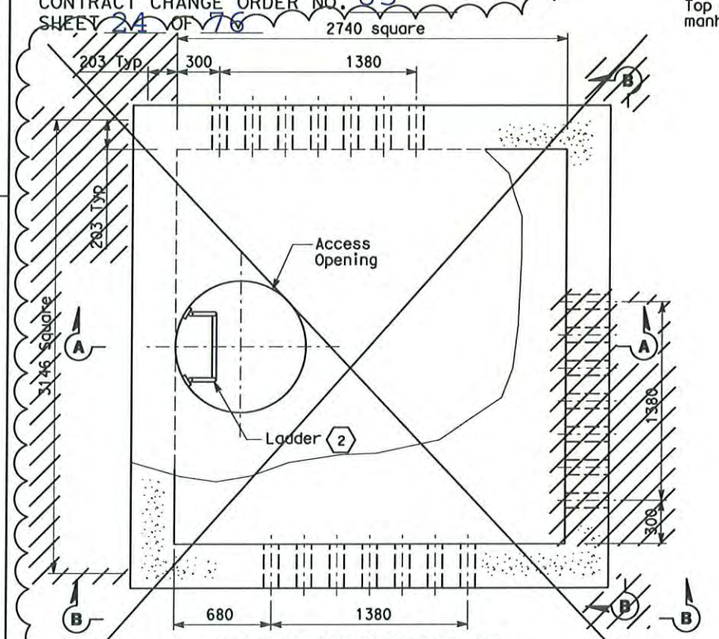

PLAN-MANHOLE-13

SCALE: 1:20 (600 V)
For Manhole Details, see sheet E-35E

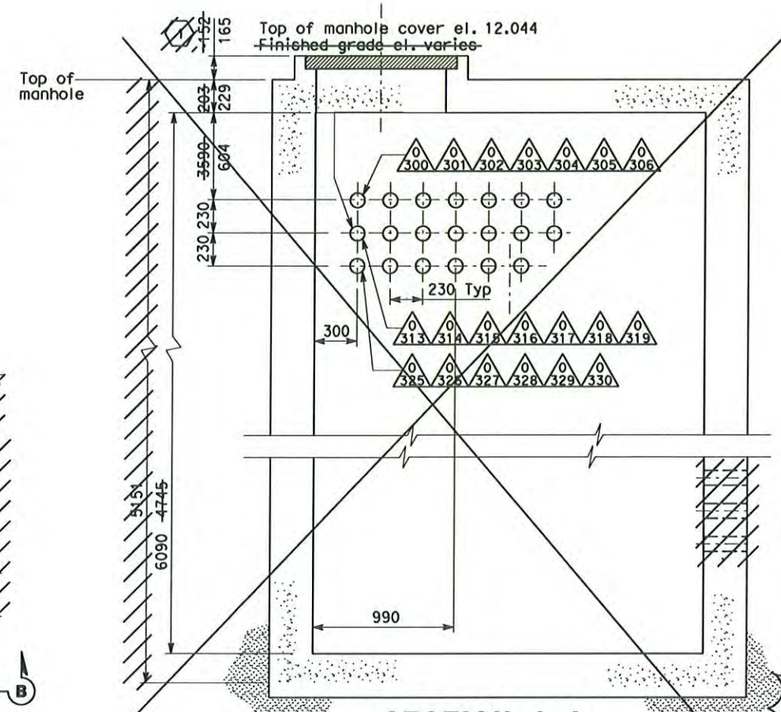

SECTION A-A

SCALE: 1:20

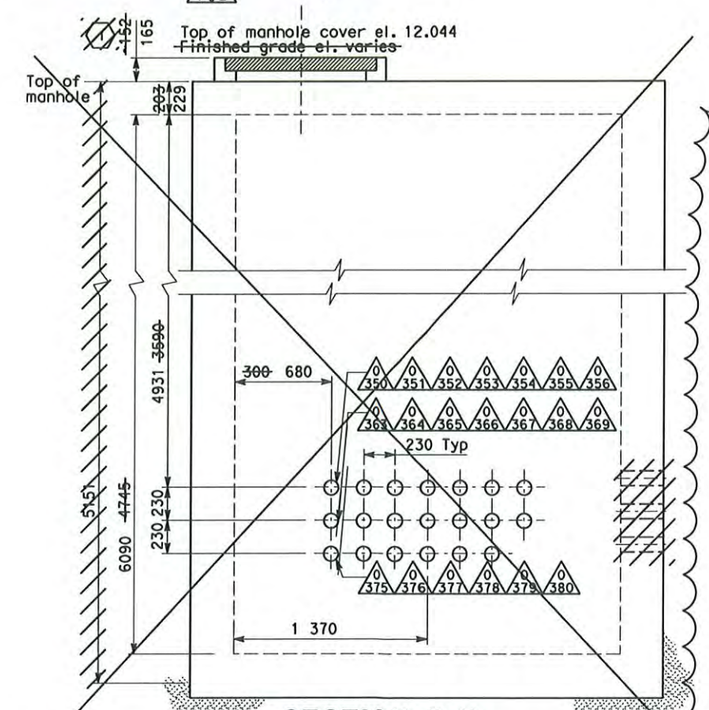

SECTION B-B

SCALE: 1:20

DETAILS
UNDERGROUND (ELECTRICAL DUCT BANK)
(MANHOLE PLANS AND SECTIONS)

SCALE AS NOTED

E-19

THIS PLAN ACCURATE FOR ELECTRICAL WORK ONLY.

ALL DIMENSIONS ARE IN MILLIMETERS UNLESS OTHERWISE SHOWN

STATE OF CALIFORNIA - DEPARTMENT OF TRANSPORTATION — Caltrans

CONSULTANT FUNCTIONAL SUPERVISOR: BEHZAD GOLEMOHAMMADI

CALCULATED-DESIGNED BY: AB — CHECKED BY: FK — REVISED BY — DATE REVISED

LAST REVISION 11-11-11 — DATE PLOTTED => 24-JUL-2012 — TIME PLOTTED => 16:17

BORDER LAST REVISED 3/1/2007 — RELATIVE BORDER SCALE IS IN MILLIMETERS 0 20 40 60 80 — USERNAME => reyesl — DGN FILE => 40120sua019r02.dgn — CU 04251 — EA 0120S1

Dist	COUNTY	ROUTE	KILOMETER POST TOTAL PROJECT	SHEET No.	TOTAL SHEETS
04	SF	80	12.2/14.3, 0.0/4.0	138A	806

REGISTERED ELECTRICAL ENGINEER 07/24/12

PLANS APPROVAL DATE

REGISTERED PROFESSIONAL ENGINEER DAVID H. OTO No. 10699 Exp. 06/30/2013 ELECTRICAL STATE OF CALIFORNIA

THE STATE OF CALIFORNIA OR ITS OFFICERS OR AGENTS SHALL NOT BE RESPONSIBLE FOR THE ACCURACY OR COMPLETENESS OF ELECTRONIC COPIES OF THIS PLAN SHEET.

PB AMERICAS, Inc.
A Parsons Brinckerhoff Company
303 Second St., Suite 700N
San Francisco, CA 94107-1317

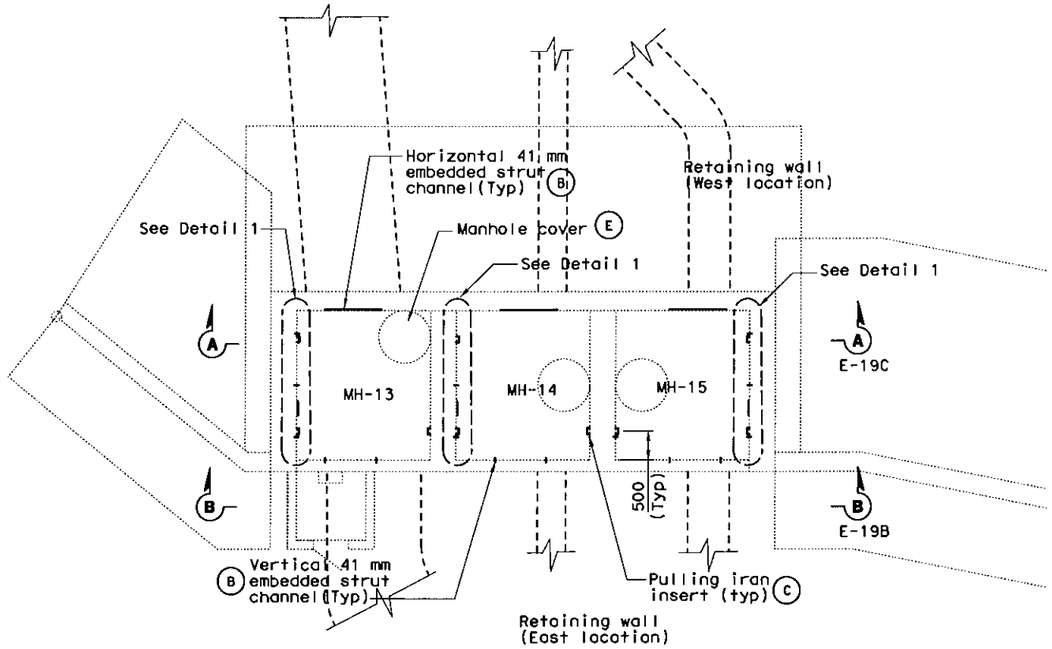

PLAN-RETAINING WALL (MH-13, MH-14 $ MH-15

SCALE: 1:50

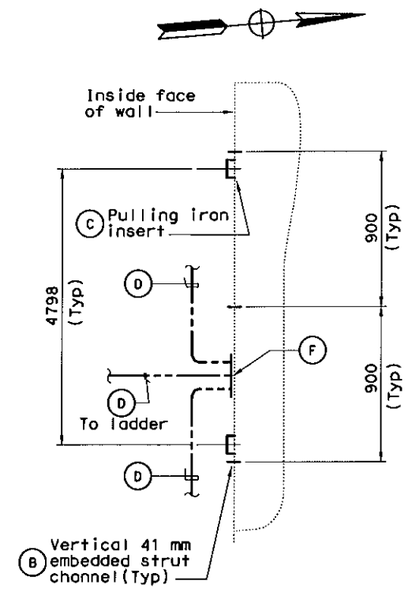

DETAIL 1

(MH-13 & MH-14 SIMILAR)
NO SCALE

NOTES:

1. Reference:
   - For location of retaining wall #7, mnhole location and ladder details, see Structures Plans.
   - For conduit locations and details, see sheets E-19B and E-19C.
   - For conduit duct bank and manholes, stationing and profiles, see plan sheets U and UD.
   - For underground duct bank plan, see sheet E-8.

LIST OF MATERIAL

ITEM NO	DESCRIPTION	REMARKS
(A)	End bells. For size & location see E-19A and E19B.	Shall be RGS and grounded
(B)	41 mm x 41 mm concrete insert strut channel (flush mounted)	Hot dip galvanized
(C)	Pull iron-insert type	3 Each location
(D)	500 kcmil bare copper ground conductor	From 15 kV duct bank & MH-14
	#4/0 AWG bare copper ground conductor	From 600 V & TOS duct banks & MH-13, MH-15
(E)	Manhole cover engraved nameplate	For MH-13 "Caltrans 600 V" For MH-14 "Caltrans High Voltage" For MH-15 "Caltrans TOS/COM"
(F)	Ground copper bar, 6 mm thick x 100 mm high x 600 mm long	1 Each location

MARK	DATE	DESCRIPTIONS	BY	CH'D
0	07/24/12	Rev. retaining wall #7, MH-13,-14 & -15. Relocate U/G Duct Bank at Bent W8	DO	EJL

REVISIONS

CONTRACT CHANGE ORDER NO. 85
SHEET 25 OF 76

DETAILS
UNDERGROUND (ELECTRICAL DUCT BANK)
(RETAINING WALL #7 PLAN AND SECTIONS)

SCALE: 1:50

E-19A

THIS PLAN ACCURATE FOR ELECTRICAL WORK ONLY.

ALL DIMENSIONS ARE IN MILLIMETERS UNLESS OTHERWISE SHOWN

STATE OF CALIFORNIA - DEPARTMENT OF TRANSPORTATION
Caltrans

CONSULTANT FUNCTIONAL SUPERVISOR: BRADY NADELL
CALCULATED-DESIGNED BY: JEFFRI HALIM
CHECKED BY: ELLERY LUCAS
REVISED BY / DATE REVISED

LAST REVISION 00-00-00 DATE PLOTTED => 24-JUL-2012 TIME PLOTTED => 16:03

Dist	COUNTY	ROUTE	KILOMETER POST TOTAL PROJECT	SHEET No.	TOTAL SHEETS
04	SF	80	12.2/14.3, 0.0/4.0	138B	806

Caltrans Metric

REGISTERED ELECTRICAL ENGINEER 07/24/12

PLANS APPROVAL DATE

REGISTERED PROFESSIONAL ENGINEER DAVID H. OTO No. 10699 Exp. 06/30/2013 ELECTRICAL STATE OF CALIFORNIA

THE STATE OF CALIFORNIA OR ITS OFFICERS OR AGENTS SHALL NOT BE RESPONSIBLE FOR THE ACCURACY OR COMPLETENESS OF ELECTRONIC COPIES OF THIS PLAN SHEET.

PB AMERICAS, Inc.
A Parsons Brinckerhoff Company
303 Second St., Suite 700N
San Francisco, CA 94107-1317

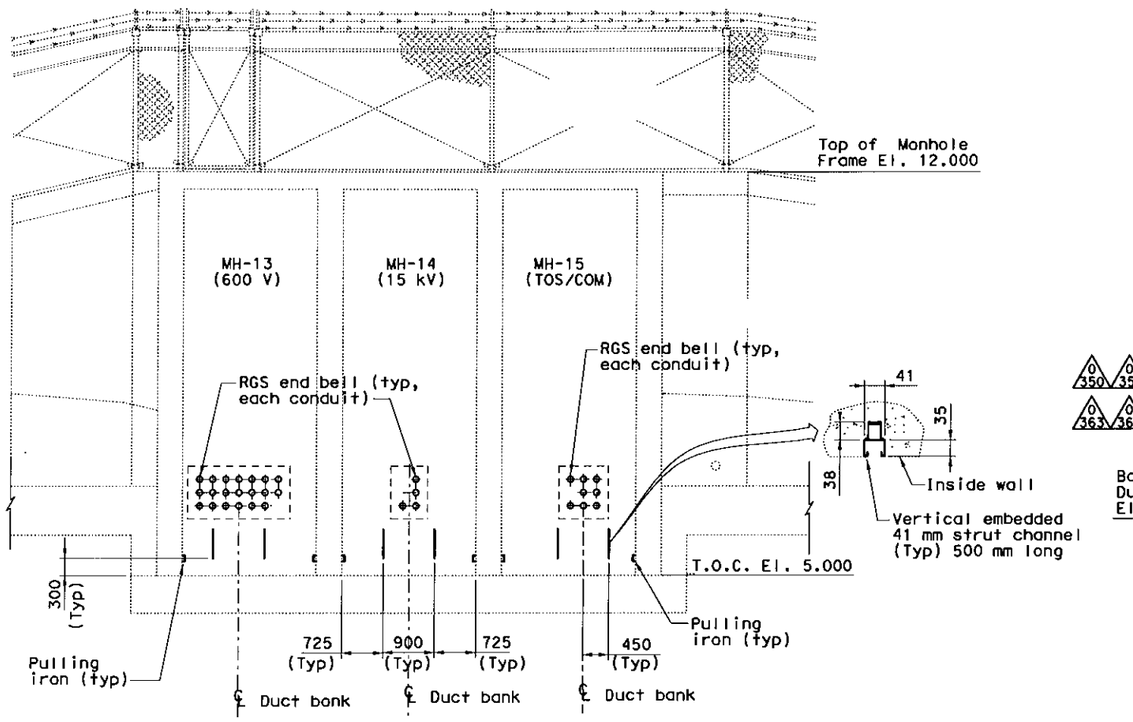

EAST WALL MISCELLANEOUS

ELEVATION B-B

SCALE: 1:50

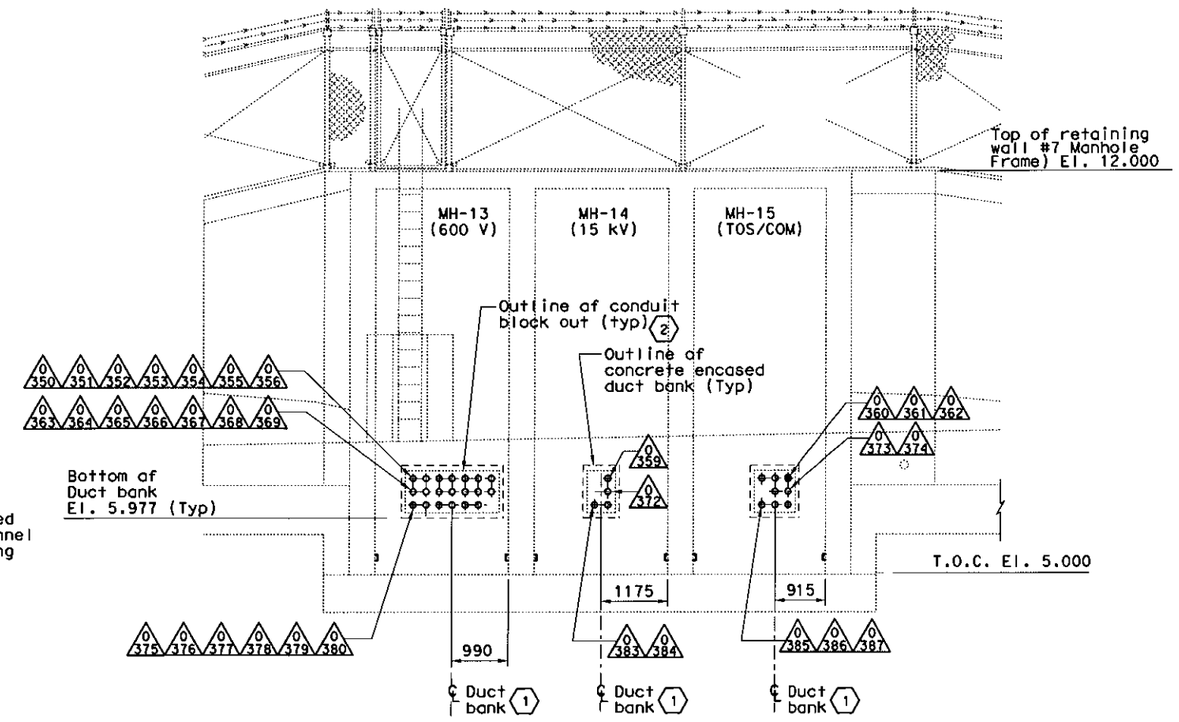

(EAST WALL CONDUIT LOCATIONS)

ELEVATION B-B

SCALE: 1:50

NOTES:

1. References:
   - For duct bank and manhole plans, see sheet E-8 and E-9.
   - For duct bank sections, see sheets E-33A.

SHEET NOTES:

1. For U/G duct bank station and location, see sheets U-6 and UD-6.
2. For elevation of conduit block out, see Structures Plans. When end bells and block out is grouted in between the conduits, field to provide a continuous hydrophilic waterstop. The hydrophilicc waterstop shall have a minimum cross section of 19.05 mm wide by 9.524 thick.

MARK	DATE	DESCRIPTIONS	BY	CH'D
0	07/24/12	Revise retaining Wall #7, WH-13,-14,-15. Relocate U/G Duct Bank at Bent W8.	DO	EJL

REVISIONS

CONTRACT CHANGE ORDER NO. 85
SHEET 26 OF 76

DETAIL
UNDERGROUND (ELECTRICAL DUCT BANK)
(RETAINING WALL #7 MANHOLE SECTIONS)

SCALE: 1:50

E-19B

THIS PLAN ACCURATE FOR ELECTRICAL WORK ONLY.

ALL DIMENSIONS ARE IN MILLIMETERS UNLESS OTHERWISE SHOWN

STATE OF CALIFORNIA - DEPARTMENT OF TRANSPORTATION

Caltrans

CONSULTANT FUNCTIONAL SUPERVISOR: BRADY NADELL

CALCULATED-DESIGNED BY: JEFFRI HALIM

CHECKED BY: ELLERY LUCAS

REVISED BY / DATE REVISED

LAST REVISION 00-00-00 DATE PLOTTED => 24-JUL-2012 TIME PLOTTED => 16:03

Dist	COUNTY	ROUTE	KILOMETER POST TOTAL PROJECT	SHEET No.	TOTAL SHEETS
04	SF	80	12.2/14.3, 0.0/4.0	138C	806

Caltrans Metric

REGISTERED ELECTRICAL ENGINEER 07/24/12

PLANS APPROVAL DATE

REGISTERED PROFESSIONAL ENGINEER DAVID H. OTO No. 10699 Exp. 06/30/2013 ELECTRICAL STATE OF CALIFORNIA

THE STATE OF CALIFORNIA OR ITS OFFICERS OR AGENTS SHALL NOT BE RESPONSIBLE FOR THE ACCURACY OR COMPLETENESS OF ELECTRONIC COPIES OF THIS PLAN SHEET.

PB AMERICAS, Inc.
A Parsons Brinckerhoff Company
303 Second St., Suite 700N
San Francisco, CA 94107-1317

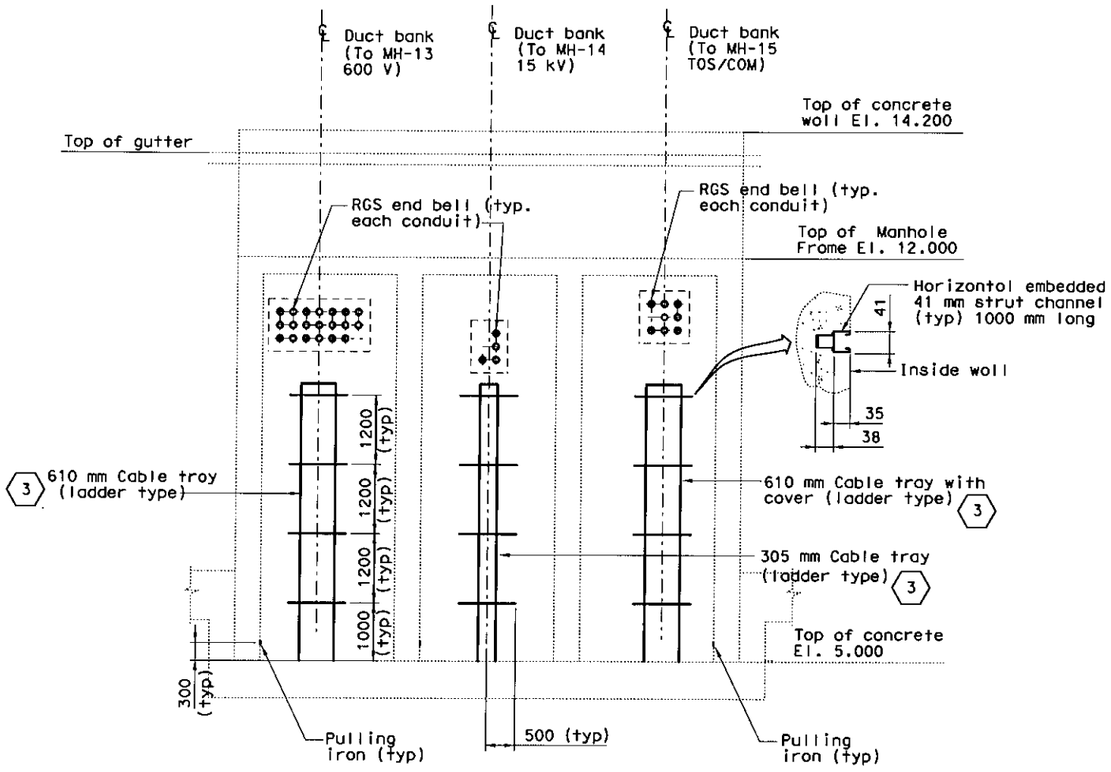

(WEST WALL MISCELLANEOUS)

ELEVATION A-A

SCALE: 1:50

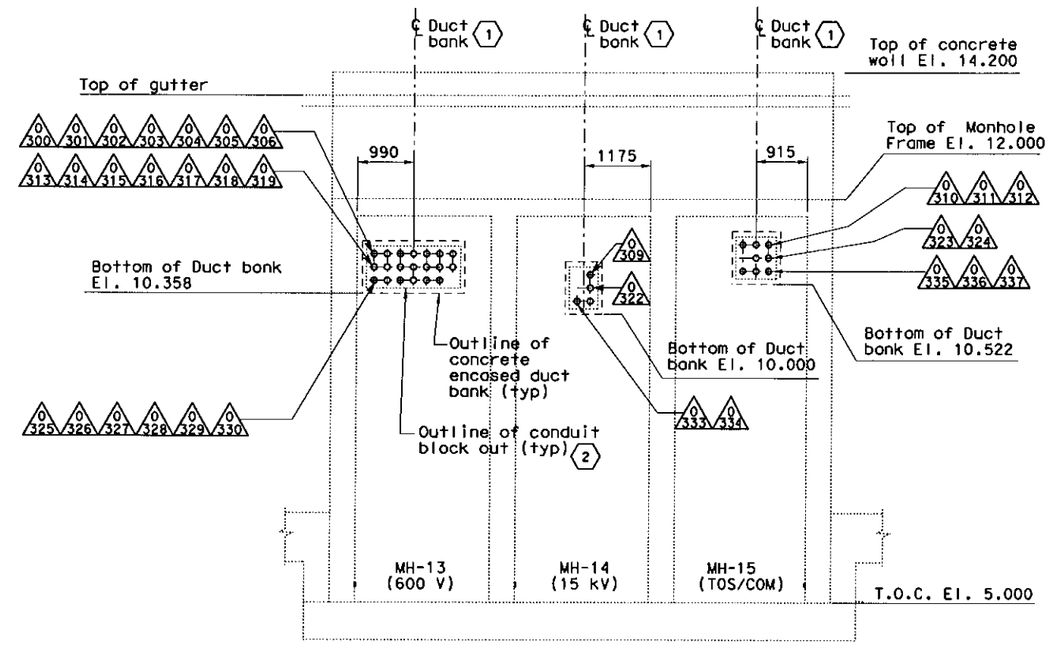

(WEST WALL CONDUIT LOCATIONS)

ELEVATION A-A

SCALE: 1:50

NOTES:

1. References:
   - For duct bank and manhole plans, see sheet E-8 and E-9.
   - For duct bank sections, see sheets E-34B, and E-34C and E-33.

SHEET NOTES:

(1) For duct bank station and location, see sheets U-6 and UD-6.

(2) For elevation of conduit block out, see Structures Plans. When endd bells and block out is grouted in between the conduits, field to provide a continuous hydrophilic waterstop. The hydrophylic waterstop shall have a minimum cross section of 19.05 mm wide by 9,524 mm.

(3) Tie down cables to each cable tray rung.

THIS PLAN ACCURATE FOR ELECTRICAL WORK ONLY.

MARK	DATE	DESCRIPTIONS	BY	CH'D
0	07/24/12	Revise retaining Wall #7, MH-13,-14,-15. Relocate U/G Duct Bank at Bent W8.	DO	EJL

REVISIONS

CONTRACT CHANGE ORDER NO. 85
SHEET 27 OF 76

DETAIL
UNDERGROUND (ELECTRICAL DUCT BANK)
(RETAINING WALLL #7 MANHOLE SECTIONS)

SCALE: 1:50

E-19C

STATE OF CALIFORNIA - DEPARTMENT OF TRANSPORTATION
CONSULTANT FUNCTIONAL SUPERVISOR: BRADY NADELL
CALCULATED-DESIGNED BY: JEFFRI HALIM
CHECKED BY: ELLERY LUCAS
REVISED BY / DATE REVISED

LAST REVISION 00-00-00 DATE PLOTTED => 24-JUL-2012 TIME PLOTTED => 16:04

Dist	COUNTY	ROUTE	KILOMETER POST TOTAL PROJECT	SHEET No.	TOTAL SHEETS
04	SF	80	12.7/13.2	139 R3	806

REGISTERED ELECTRICAL ENGINEER 2/14/08 DATE

6-23-08
PLANS APPROVAL DATE

REGISTERED PROFESSIONAL ENGINEER FADI WALIEDDINE No. 11465 Exp. 12/31/09 ELECTRICAL STATE OF CALIFORNIA

THE STATE OF CALIFORNIA OR ITS OFFICERS OR AGENTS SHALL NOT BE RESPONSIBLE FOR THE ACCURACY OR COMPLETENESS OF ELECTRONIC COPIES OF THIS PLAN SHEET.

PB AMERICAS, Inc.
A Parsons Brinckerhoff Company
303 Second St., Suite 700N
San Francisco, CA 94107-1317

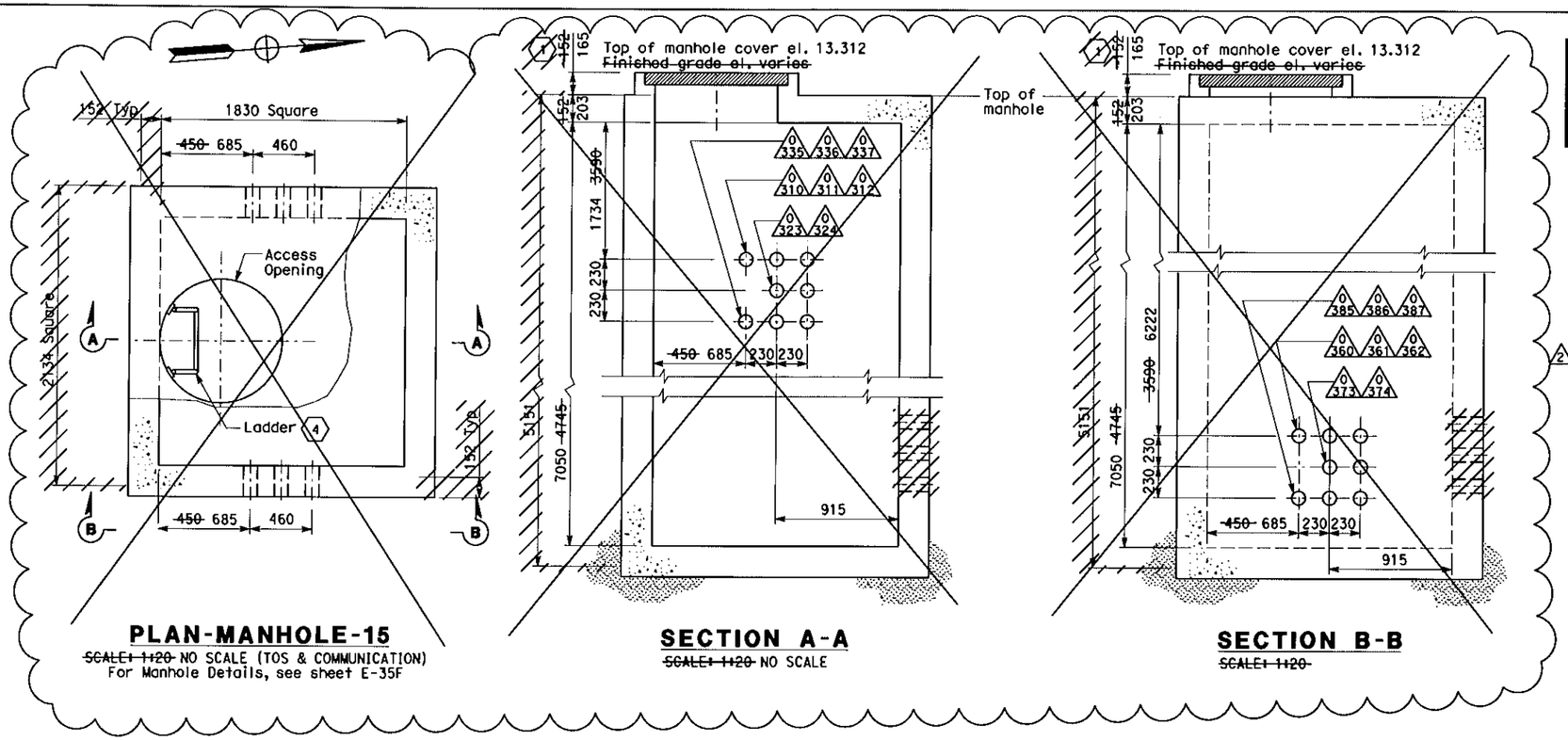

PLAN-MANHOLE-15
~~SCALE: 1:20~~ NO SCALE (TOS & COMMUNICATION)
For Manhole Details, see sheet E-35F

SECTION A-A
~~SCALE: 1:20~~ NO SCALE

SECTION B-B
~~SCALE: 1:20~~

NOTES:

1. References:
   - For duct bank and manhole plans, see sheet E-8 and E-9.
   - For duct bank sections, see sheets E-33, and E-33A.
   - For typical manhole and duct bank details, ~~see sheet E-35~~.
   - For Conduit and Tray Schedules, Cable and Circuit Schedules, refer to sheets starting at E-182.
2. Furnish and install 4-25.4 mm innerducts inside TOS/COM conduits (0311, 0361). Refer to MH-15.
3. Furnish and install BASE fiber optic cable in innerduct. See sheets E-1102 and E-1103.

SHEET NOTES:

~~(1) Approximate distance of manhole necking or riser is from the finished grade and top of manhole. Maximum length of manhole necking or riser shall be 914 mm.~~

(2) Not in contract. Conduits shown are existing installed on previous contract. It is provided as reference for routing cable/circuits only.

(3) Not in contract. Conduits shown are existing installed on previous contract. It is provided as reference for routing cable/circuits only. Existing conduit is tag prefixed (*) on conduit and tray schedules.

(4) For Details of ladder inside Manhole, see sheet E-35H.

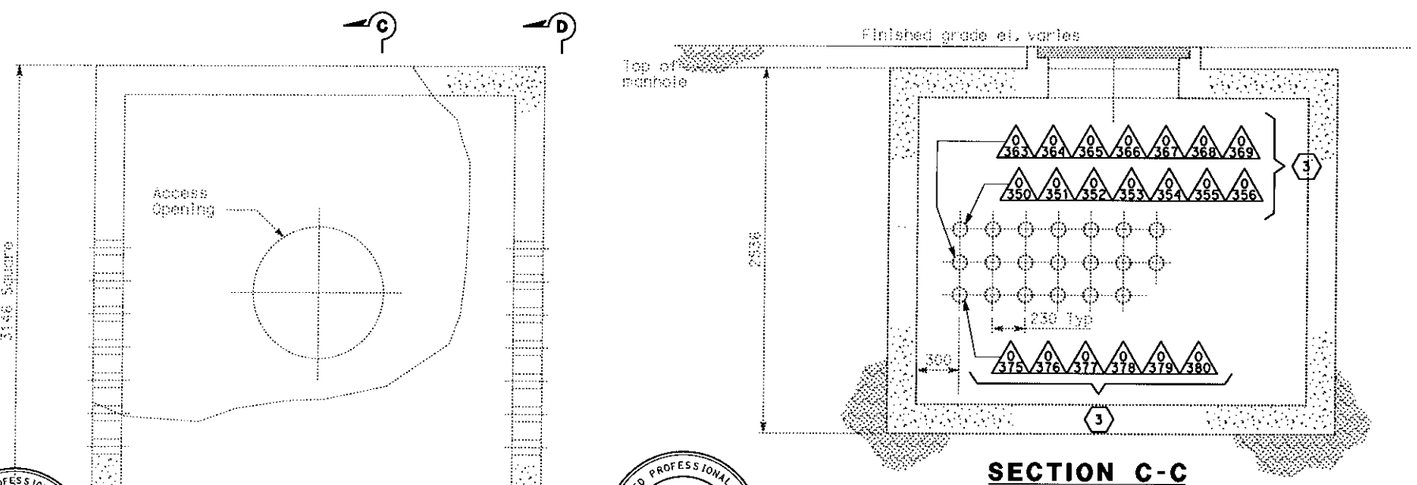

PLAN-MANHOLE-16
SCALE: 1:20 (600 V)

SECTION C-C
SCALE: 1:20

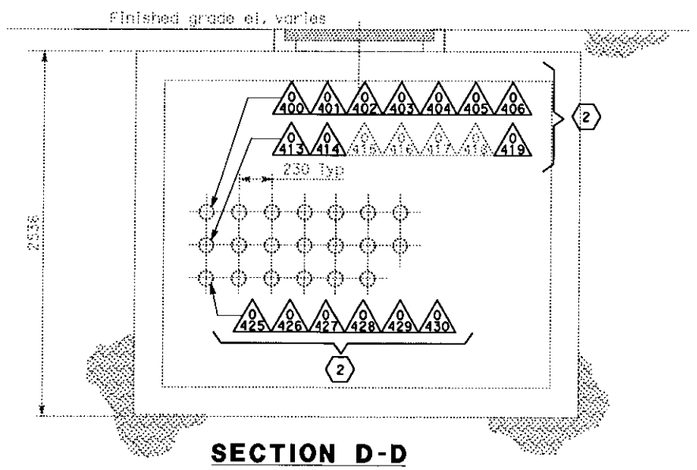

SECTION D-D
SCALE: 1:20

REGISTERED PROFESSIONAL ENGINEER DAVID H. OTO No. 10699 Exp. 06/30/2013 ELECTRICAL STATE OF CALIFORNIA

FOR REVISION ONLY
2 3

REGISTERED PROFESSIONAL ENGINEER SYN YEE CHIN No. 18186 Exp. 09/30/2011 ELECTRICAL STATE OF CALIFORNIA

FOR REVISION ONLY
1

THIS PLAN ACCURATE FOR ELECTRICAL WORK ONLY.

MARK	DATE	DESCRIPTIONS	BY	CH'D
3	07/24/12	Rev retaining wall #7, MH-13,-14,-15 Relocate U/G Duct Bank at Bent W8	DO	EJL
2	11/11/11	Relocate U/G Duct Bank at Bent W8	JH	EJL
1	07/15/11	B.A.S.E. Trunkline	RB	WB

REVISIONS

CONTRACT CHANGE ORDER NO. 85
SHEET 28 OF 76

ALL DIMENSIONS ARE IN MILLIMETERS UNLESS OTHERWISE SHOWN

DETAILS
UNDERGROUND (ELECTRICAL DUCT BANK)
(MANHOLE PLANS AND SECTIONS)

SCALE AS NOTED

E-20

STATE OF CALIFORNIA - DEPARTMENT OF TRANSPORTATION
Caltrans

CONSULTANT FUNCTIONAL SUPERVISOR: BEHZAD GOLEMOHAMMADI
CALCULATED-DESIGNED BY: AB
CHECKED BY: FK
REVISED BY
DATE REVISED

LAST REVISION 11-11-11
DATE PLOTTED => 24-JUL-2012
TIME PLOTTED => 16:17

Dist	COUNTY	ROUTE	KILOMETER POST TOTAL PROJECT	SHEET No.	TOTAL SHEETS
04	SF	80	12.7/13.2	147 R1	806

REGISTERED ELECTRICAL ENGINEER 2/14/08 DATE

6-23-08
PLANS APPROVAL DATE

REGISTERED PROFESSIONAL ENGINEER FADI WALIEDDINE No. 11465 Exp. 12/31/09 ELECTRICAL STATE OF CALIFORNIA

THE STATE OF CALIFORNIA OR ITS OFFICERS OR AGENTS SHALL NOT BE RESPONSIBLE FOR THE ACCURACY OR COMPLETENESS OF ELECTRONIC COPIES OF THIS PLAN SHEET.

PB AMERICAS, Inc.
A Parsons Brinckerhoff Company
303 Second St., Suite 700N
San Francisco, CA 94107-1317

Caltrans Metric

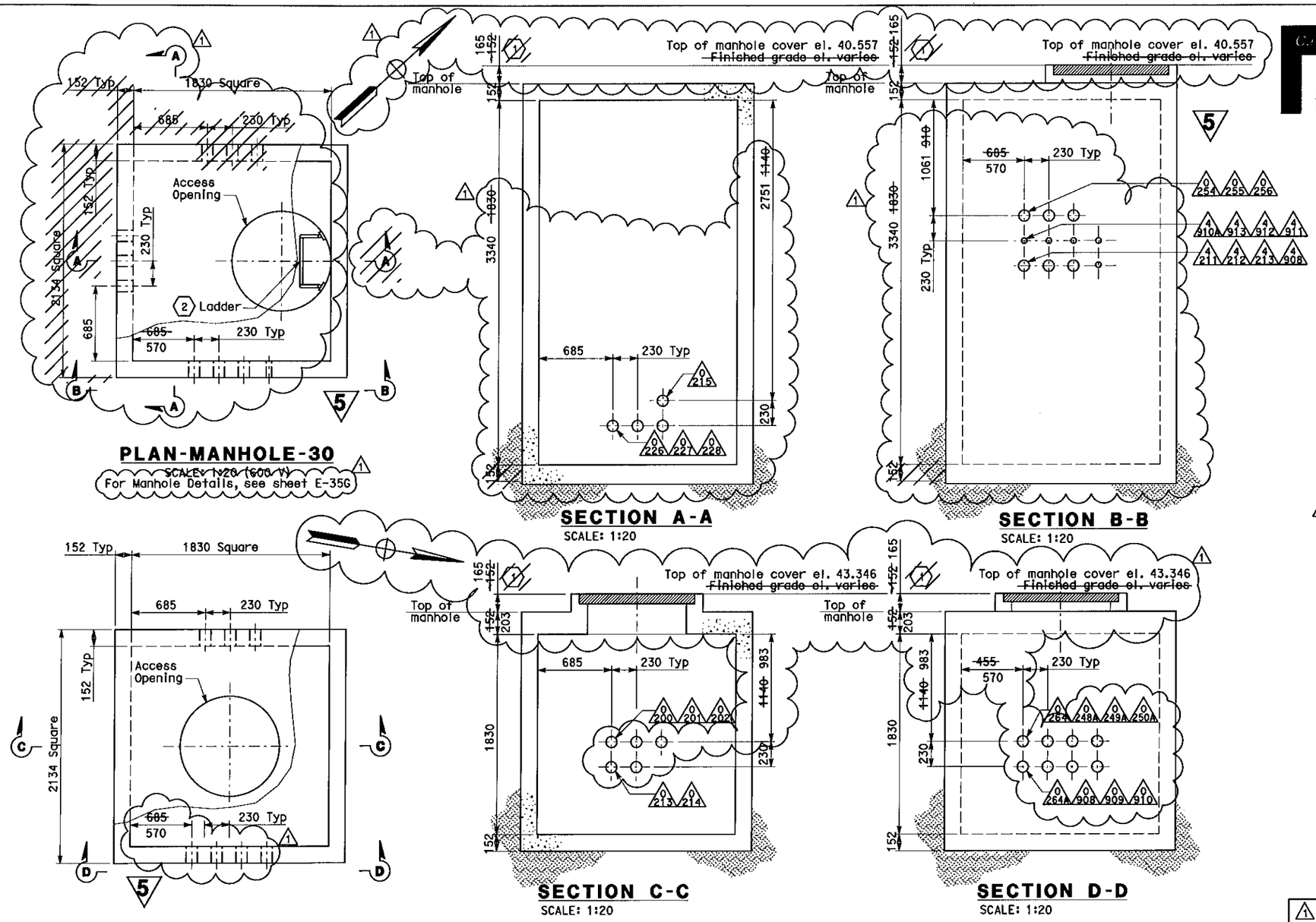

PLAN-MANHOLE-30
~~SCALE: 1:20 (600 V)~~
For Manhole Details, see sheet E-35G

SECTION A-A
SCALE: 1:20

SECTION B-B
SCALE: 1:20

PLAN-MANHOLE-29
SCALE: 1:20 (600 V)

SECTION C-C
SCALE: 1:20

SECTION D-D
SCALE: 1:20

NOTES:

1. References:
   - For duct banks and manhole plan, see sheet E-8.
   - For duct bank sections, see sheets E-32, E-33, and E-33A.
   - For typical duct bank and manhole details, see sheet E-35.

SHEET NOTES:

1. ~~Approximate distance of manhole necking or riser is from the finished grade and top of manhole. Maximum length of manhole necking or riser shall be 914 mm.~~
2. For Details of ladder inside Manhole, see sheet E-35H.

REGISTERED PROFESSIONAL ENGINEER DAVID H. OTO No. 10699 Exp. 06/30/2013 ELECTRICAL STATE OF CALIFORNIA

FOR REVISION ONLY 1

MARK	DATE	DESCRIPTIONS	BY	CH'D
1	11/11/11	Relocate U/G Duct Bank at Bent W8	JH	EJL
		REVISIONS		

CONTRACT CHANGE ORDER NO. 85
SHEET 29 OF 76

5 REVISED PER ADDENDUM No. 5 DATED JULY 30, 2009

DETAILS
UNDERGROUND (ELECTRICAL DUCT BANK)
(MANHOLE PLANS AND SECTIONS)

SCALE AS NOTED

E-28

THIS PLAN ACCURATE FOR ELECTRICAL WORK ONLY.

ALL DIMENSIONS ARE IN MILLIMETERS UNLESS OTHERWISE SHOWN

STATE OF CALIFORNIA - DEPARTMENT OF TRANSPORTATION
Caltrans

CONSULTANT FUNCTIONAL SUPERVISOR: BEHZAD GOLEMOHAMMADI
CALCULATED-DESIGNED BY: AB
CHECKED BY: FK
REVISED BY
DATE REVISED

LAST REVISION 11-11-11
DATE PLOTTED => 18-NOV-2011
TIME PLOTTED => 11:22

BORDER LAST REVISED 3/1/2007
RELATIVE BORDER SCALE IS IN MILLIMETERS 0 20 40 60 80
USERNAME => llorico
DGN FILE => 40120sua028R01.dgn
CU 04251
EA 0120S1

Dist	COUNTY	ROUTE	KILOMETER POST TOTAL PROJECT	SHEET No.	TOTAL SHEETS
04	SF	80	12.7/13.2	148 R2	806

REGISTERED ELECTRICAL ENGINEER — 2/14/08 DATE

6-23-08
PLANS APPROVAL DATE

REGISTERED PROFESSIONAL ENGINEER — FADI WALIEDDINE No. 11465 Exp. 12/31/09 ELECTRICAL — STATE OF CALIFORNIA

THE STATE OF CALIFORNIA OR ITS OFFICERS OR AGENTS SHALL NOT BE RESPONSIBLE FOR THE ACCURACY OR COMPLETENESS OF ELECTRONIC COPIES OF THIS PLAN SHEET.

PB AMERICAS, Inc.
A Parsons Brinckerhoff Company
303 Second St., Suite 700N
San Francisco, CA 94107-1317

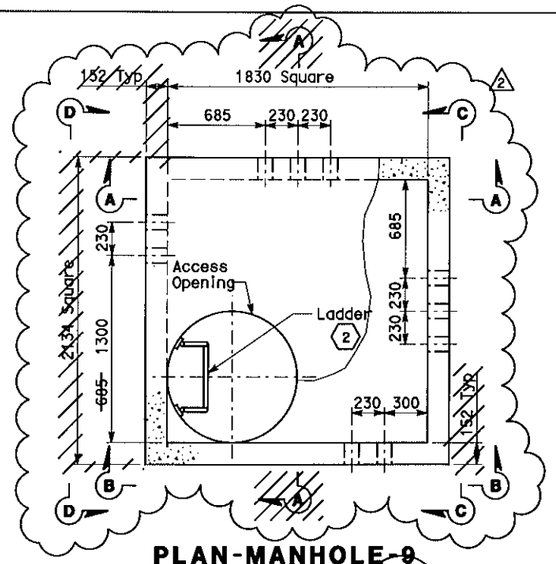

PLAN-MANHOLE-9
SCALE: 1:20 (TOS & COMMUNICATION)
For Manhole Details, see sheet E-35B

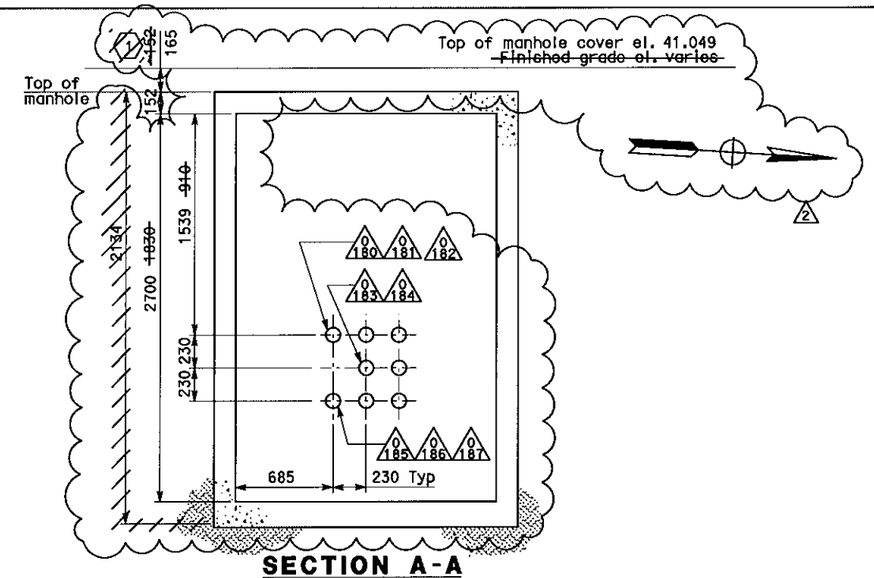

SECTION A-A
SCALE: 1:20

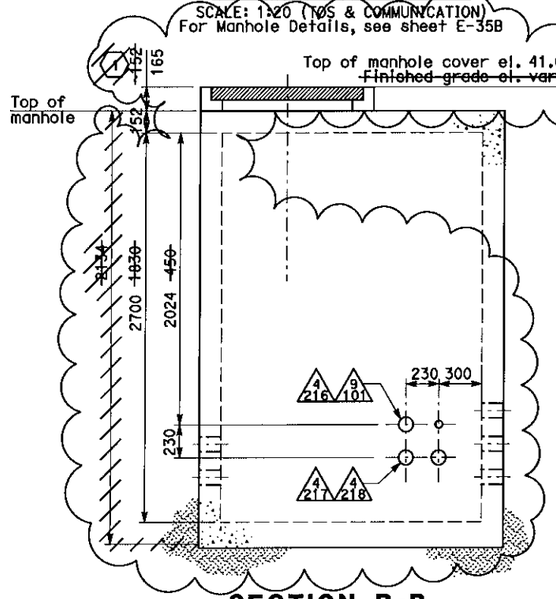

SECTION B-B
SCALE: 1:20

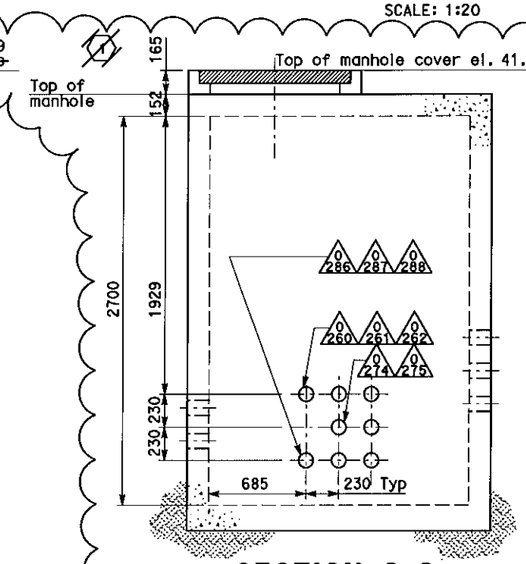

SECTION C-C
SCALE: 1:20

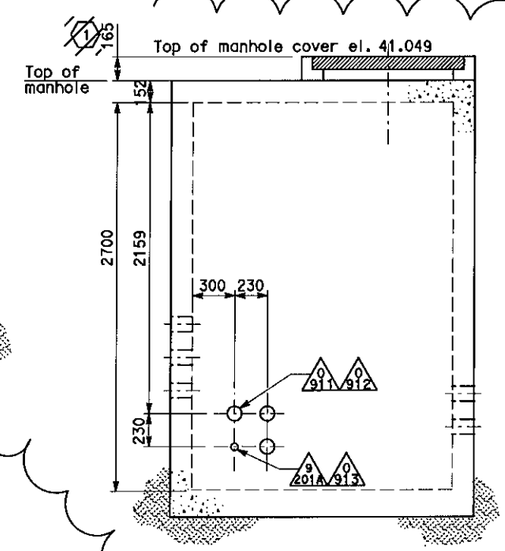

SECTION D-D
SCALE: 1:20

NOTES:

1. References:
   - For duct bank and manhole plan, see sheet E-8.
   - For duct bank sections, see sheets E-32 and ~~E-33.~~
   - ~~For typical manhole and duct bank details, see sheet E-35.~~
   - For Conduit and Tray Schedules, Cable and Circuit Schedules, refer to sheets starting at E-182.
2. Furnish and install 4-25.4 mm Innerducts inside TOS/COM conduits (0181, 0261).
3. Furnish and install BASE fiber optic cable in Innerduct. See sheets E-1102 and E-1103.

SHEET NOTES:

1. ~~Approximate distance of manhole necking or riser is from the finished grade and top of manhole. Maximum length of manhole necking or riser shall be 914 mm.~~
2. For Details of ladder inside Manhole, see sheet E-35H.

MARK	DATE	DESCRIPTIONS	BY	CH'D
2	11/11/11	Relocate U/G Duct Bank at Bent W8	JH	EJL
1	07/15/11	B.A.S.E. Trunkline	RB	WB

REVISIONS

REGISTERED PROFESSIONAL ENGINEER — SYN YEE CHIN No. 18186 Exp. 09/30/2011 ELECTRICAL — STATE OF CALIFORNIA
FOR REVISION ONLY 1

REGISTERED PROFESSIONAL ENGINEER — DAVID H. OTO No. 10699 Exp. 06/30/2013 ELECTRICAL — STATE OF CALIFORNIA
FOR REVISION ONLY 2

THIS PLAN ACCURATE FOR ELECTRICAL WORK ONLY.

CONTRACT CHANGE ORDER NO. 85
SHEET 30 OF 76

ALL DIMENSIONS IN MILLIMETERS UNLESS OTHERWISE SHOWN

DETAILS
UNDERGROUND (ELECTRICAL DUCT BANK)
(MANHOLE PLANS AND SECTIONS)
SCALE AS NOTED

E-29

STATE OF CALIFORNIA - DEPARTMENT OF TRANSPORTATION
CONSULTANT FUNCTIONAL SUPERVISOR: BEHZAD GOLEMOHAMMADI
CALCULATED-DESIGNED BY: AB — CHECKED BY: FK
REVISED BY — DATE REVISED

LAST REVISION 11-11-11 — DATE PLOTTED => 18-NOV-2011 — TIME PLOTTED => 11:23

Dist	COUNTY	ROUTE	KILOMETER POST TOTAL PROJECT	SHEET No.	TOTAL SHEETS
04	SF	80	12.7/13.2	148A	806

REGISTERED ELECTRICAL ENGINEER 11/11/11

PLANS APPROVAL DATE

REGISTERED PROFESSIONAL ENGINEER DAVID H. OTO No. 10699 EXP. 06/30/2013 ELECTRICAL STATE OF CALIFORNIA

THE STATE OF CALIFORNIA OR ITS OFFICERS OR AGENTS SHALL NOT BE RESPONSIBLE FOR THE ACCURACY OR COMPLETENESS OF ELECTRONIC COPIES OF THIS PLAN SHEET.

PB AMERICAS, Inc.
A Parsons Brinckerhoff Company
303 Second St., Suite 700N
San Francisco, CA 94107-1317

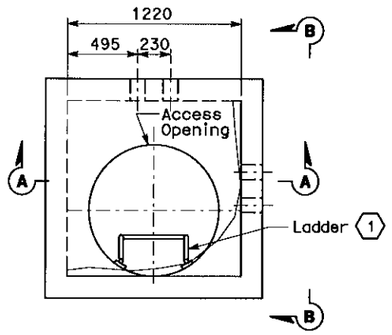

PLAN-MANHOLE-9A

SCALE: 1:20 (TOS & COMMUNICATION)
For Manhole Details, see sheet E-35C

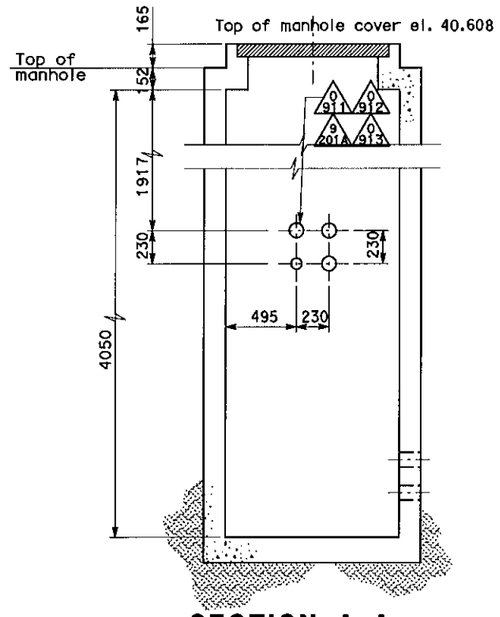

SECTION A-A

SCALE: 1:20

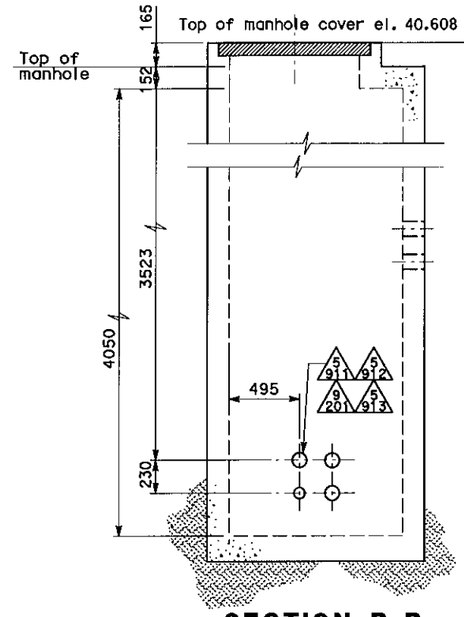

SECTION B-B

SCALE: 1:20

NOTES:

1. References:
   - For duct banks and manhole plan, see sheet E-8.
   - For duct bank sections, see sheets E-32 and E-33.
   - For typical duct bank and manhole details, see sheet E-35.

SHEET NOTES:

(1) For Details of ladder inside Manhole, see sheet E-35H.

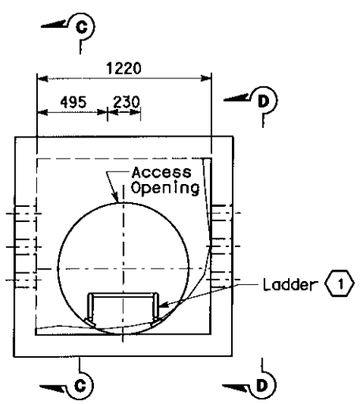

PLAN-MANHOLE-29A

SCALE: 1:20 (600 V)
For Manhole Details, see sheet E-35D

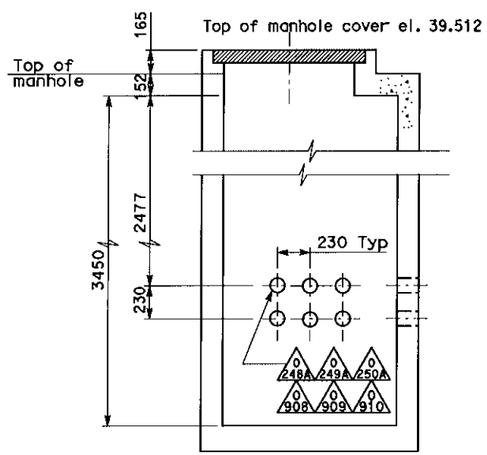

SECTION C-C

SCALE: 1:20

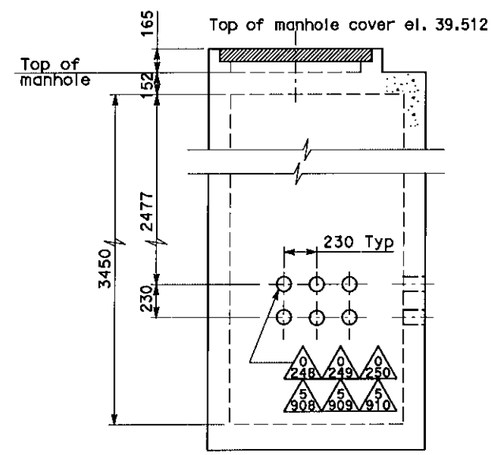

SECTION D-D

SCALE: 1:20

MARK	DATE	DESCRIPTIONS	BY	CH'D
0	11/11/11	Relocate U/G Duct Bank at Bent W8	JH	EJL
		REVISIONS		

CONTRACT CHANGE ORDER NO. 85
SHEET 31 OF 76

DETAILS
UNDERGROUND (ELECTRICAL DUCT BANK)
(MANHOLE PLANS AND SECTIONS)

SCALE AS NOTED

E-29A

THIS PLAN ACCURATE FOR ELECTRICAL WORK ONLY.

STATE OF CALIFORNIA - DEPARTMENT OF TRANSPORTATION
Caltrans

CONSULTANT FUNCTIONAL SUPERVISOR: BRADY NADELL
CALCULATED-DESIGNED BY: ELLERY LUCAS
CHECKED BY: JEFFRI HALIM
REVISED BY
DATE REVISED

LAST REVISION 11-11-11
DATE PLOTTED => 18-NOV-2011
TIME PLOTTED => 11:22

Dist	COUNTY	ROUTE	KILOMETER POST TOTAL PROJECT	SHEET No.	TOTAL SHEETS
04	SF	80	12.7/13.2	152 R1	806

REGISTERED ELECTRICAL ENGINEER 2/14/08 DATE

6-23-08
PLANS APPROVAL DATE

REGISTERED PROFESSIONAL ENGINEER FADI WALIEDDINE No. 11465 Exp. 12/31/09 ELECTRICAL STATE OF CALIFORNIA

THE STATE OF CALIFORNIA OR ITS OFFICERS OR AGENTS SHALL NOT BE RESPONSIBLE FOR THE ACCURACY OR COMPLETENESS OF ELECTRONIC COPIES OF THIS PLAN SHEET.

PB AMERICAS, Inc.
A Parsons Brinckerhoff Company
303 Second St., Suite 700N
San Francisco, CA 94107-1317

Caltrans Metric

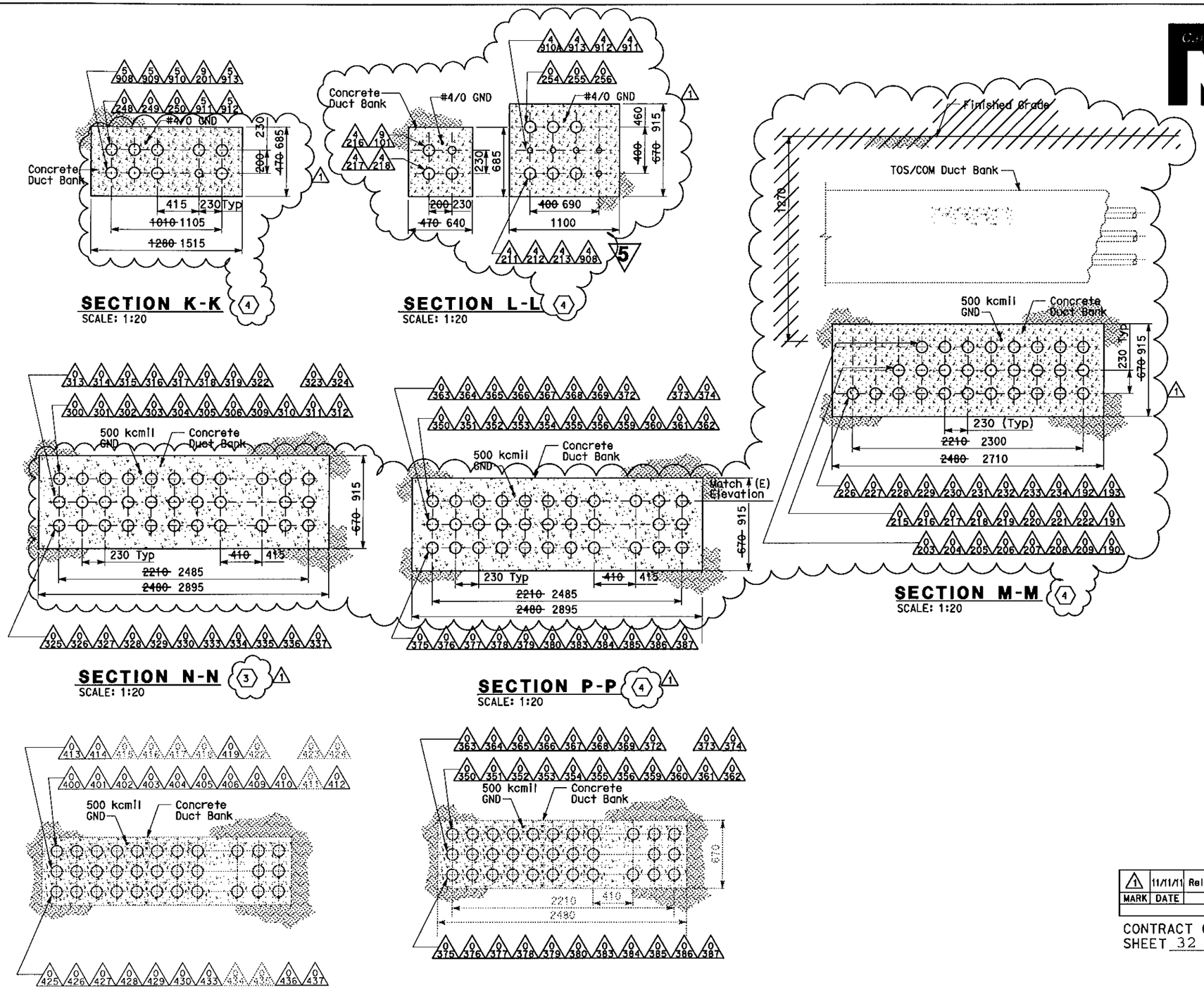

NOTES:

1. References:
   - For duct banks and manholes, see sheets E-8 and E-9.
   - For typical manhole and duct bank details, see sheet E-35.

SHEET NOTES:

(1) Not in contract. Conduits and grounds shown are existing installed on previous contract. It is provided as reference for routing cable/circuits only.

(2) Not in contract. Conduits and grounds shown are existing installed on previous contract. It is provided as reference for routing cable/circuits only. Existing conduit is tag prefixed (*) on conduit and tray schedules.

(3) For underground conduit duct bank reinforcing, see Detail 1, sheet E-34B.

(4) For underground conduit duct bank reinforcing, see Detail A, sheet E-33A.

REGISTERED PROFESSIONAL ENGINEER DAVID H. OTO No. 10699 Exp. 06/30/2013 ELECTRICAL STATE OF CALIFORNIA

FOR REVISION ONLY
(1)

MARK	DATE	DESCRIPTIONS	BY	CH'D
1	11/11/11	Relocate U/G Duct Bank at Bent W8	JH	EJL
		REVISIONS		

CONTRACT CHANGE ORDER NO. 85
SHEET 32 OF 76

DETAILS
UNDERGROUND (ELECTRICAL DUCT BANK)
(DUCT BANK SECTIONS)

SCALE AS NOTED

E-33

(5) REVISED PER ADDENDUM No. 5 DATED JULY 30, 2009

THIS PLAN ACCURATE FOR ELECTRICAL WORK ONLY.

ALL DIMENSIONS IN MILLIMETERS UNLESS OTHERWISE SHOWN

STATE OF CALIFORNIA - DEPARTMENT OF TRANSPORTATION
Caltrans

CONSULTANT FUNCTIONAL SUPERVISOR: BEHZAD GOLEMOHAMMADI
CALCULATED-DESIGNED BY: AB
CHECKED BY: FK
REVISED BY
DATE REVISED

LAST REVISION 11-11-11
DATE PLOTTED => 18-NOV-2011
TIME PLOTTED => 11:23

BORDER LAST REVISED 3/1/2007
RELATIVE BORDER SCALE IS IN MILLIMETERS 0 20 40 60 80
USERNAME => llorico
DGN FILE => 40120suc033r01.dgn
CU 04251
EA 0120S1

Dist	COUNTY	ROUTE	KILOMETER POST TOTAL PROJECT	SHEET No.	TOTAL SHEETS
04	SF	80	12.7/13.2	152A	806

REGISTERED ELECTRICAL ENGINEER 11/11/11

PLANS APPROVAL DATE

REGISTERED PROFESSIONAL ENGINEER DAVID H. OTO No. 10699 Exp. 06/30/2013 ELECTRICAL STATE OF CALIFORNIA

THE STATE OF CALIFORNIA OR ITS OFFICERS OR AGENTS SHALL NOT BE RESPONSIBLE FOR THE ACCURACY OR COMPLETENESS OF ELECTRONIC COPIES OF THIS PLAN SHEET.

PB AMERICAS, Inc.
A Parsons Brinckerhoff Company
303 Second St., Suite 700N
San Francisco, CA 94107-1317

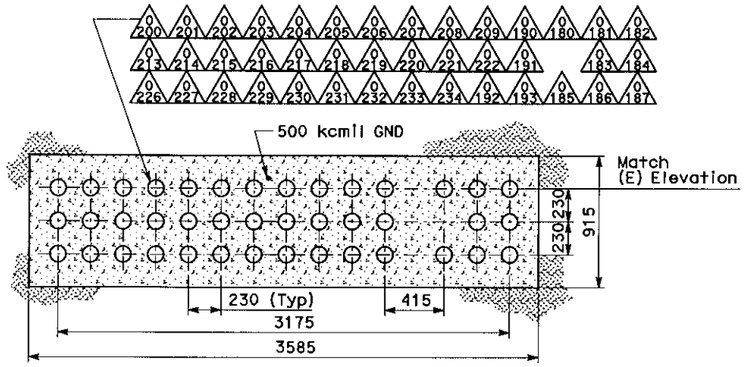

SECTION J1-J1 (1)
SCALE: 1:20

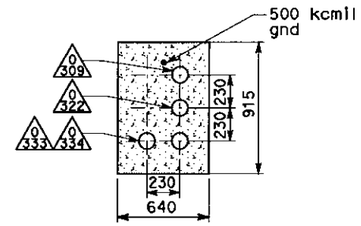

SECTION N1-N1 (1)
SCALE: 1:20
(From MH-11 South Wall)

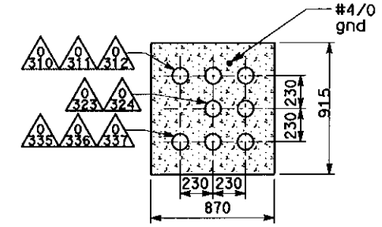

SECTION N2-N2 (1)
SCALE: 1:20
(From MH-12 South Wall)

NOTES:

1. References:
   - For duct banks and manholes, see sheet E-8.

SHEET NOTES:

(1) For underground conduit duct bank reinforcing, see Detail A.

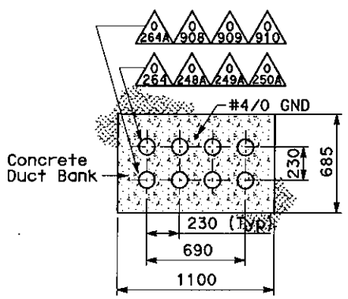

SECTION K1-K1 (1)
SCALE: 1:20
(From MH-29A)

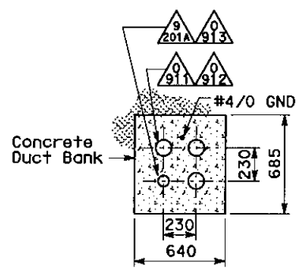

SECTION K2-K2 (1)
SCALE: 1:20
(From MH-9A)

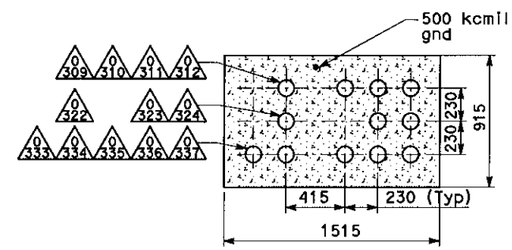

SECTION N3-N3 (1)
SCALE: 1:20

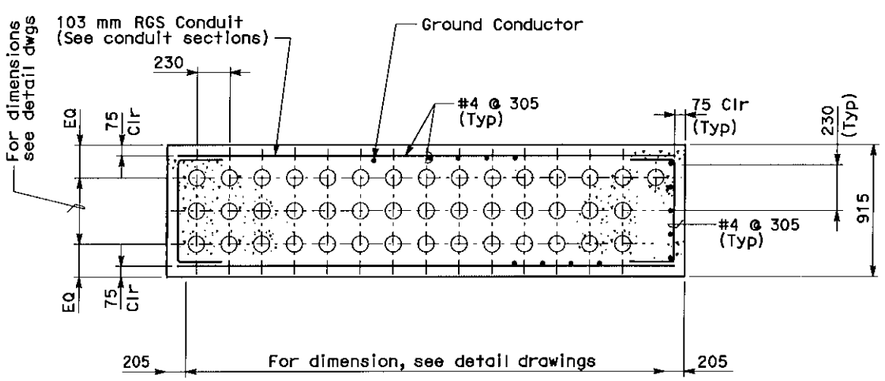

CONCRETE DUCT BANK DETAIL - A
(For rebar reinforcing detail only)
SCALE: 1:20

MARK	DATE	DESCRIPTIONS	BY	CH'D
0	11/11/11	Relocate U/G Duct Bank at Bent W8	JH	EJL

REVISIONS

CONTRACT CHANGE ORDER NO. 85
SHEET 33 OF 76

DETAILS
UNDERGROUND (ELECTRICAL DUCT BANK)
(DUCT BANK SECTIONS)

SCALE AS NOTED

E-33A

THIS PLAN ACCURATE FOR ELECTRICAL WORK ONLY.

ALL DIMENSIONS IN MILLIMETERS UNLESS OTHERWISE SHOWN

STATE OF CALIFORNIA - DEPARTMENT OF TRANSPORTATION
Caltrans

CONSULTANT FUNCTIONAL SUPERVISOR: BRADY NADELL
CALCULATED-DESIGNED BY: ELLERY LUCAS
CHECKED BY: JEFFRI HALIM
REVISED BY / DATE REVISED

LAST REVISION 11-11-11
DATE PLOTTED => 18-NOV-2011
TIME PLOTTED => 11:23

Dist	COUNTY	ROUTE	KILOMETER POST TOTAL PROJECT	SHEET No.	TOTAL SHEETS
04	SF	80	12.7/13.2	153 R2	806

REGISTERED ELECTRICAL ENGINEER 2/14/08 DATE

6-23-08
PLANS APPROVAL DATE

REGISTERED PROFESSIONAL ENGINEER FADI WALIEDDINE No. 11465 Exp. 12/31/09 ELECTRICAL STATE OF CALIFORNIA

THE STATE OF CALIFORNIA OR ITS OFFICERS OR AGENTS SHALL NOT BE RESPONSIBLE FOR THE ACCURACY OR COMPLETENESS OF ELECTRONIC COPIES OF THIS PLAN SHEET.

PB AMERICAS, Inc.
A Parsons Brinckerhoff Company
303 Second St., Suite 700N
San Francisco, CA 94107-1317

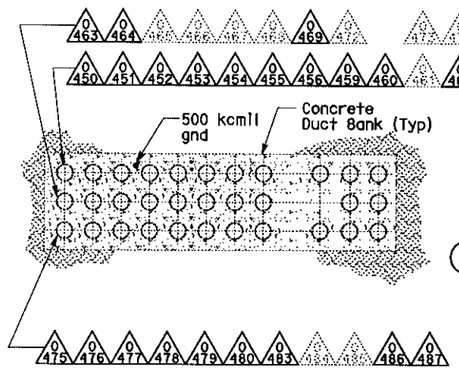

SECTION R-R (2)
SCALE: 1:20

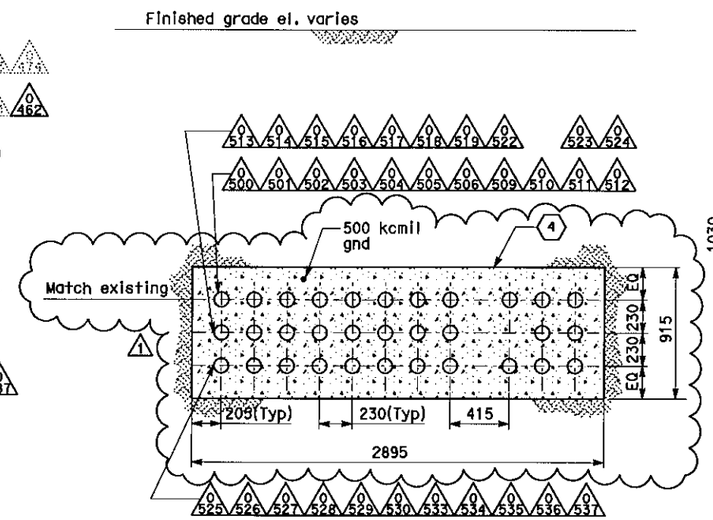

SECTION S-S
SCALE: 1:20

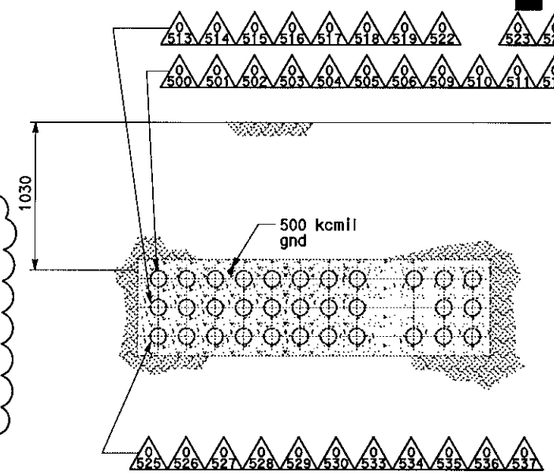

SECTION S1-S1 (3)
SCALE: 1:20

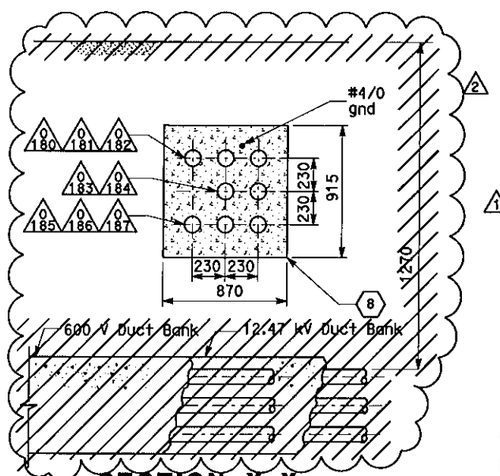

SECTION X-X
~~SCALE: 1:20~~ (From MH-9) (2)

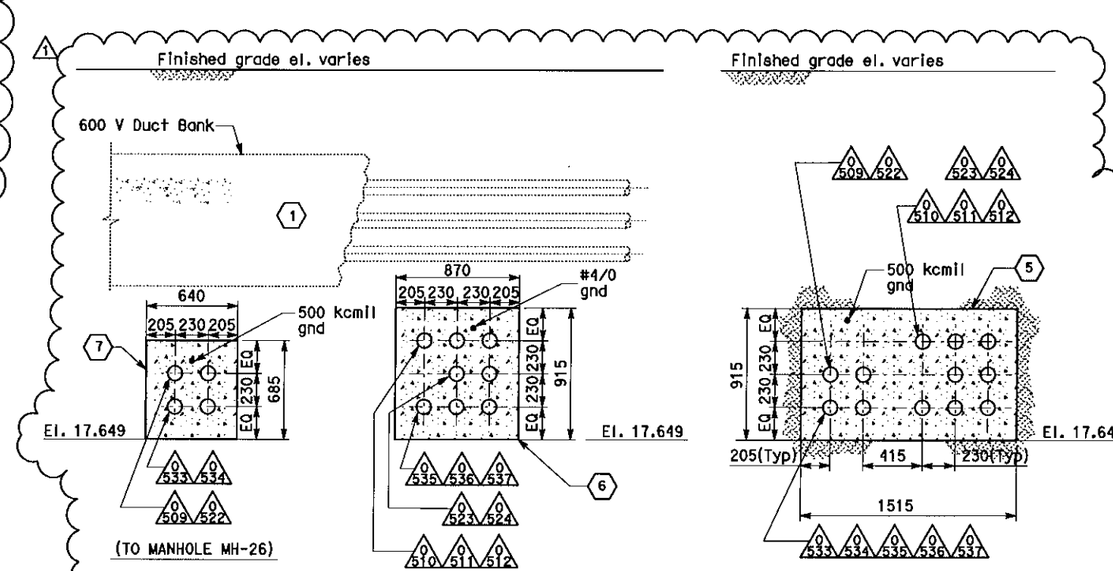

SECTION Y-Y
SCALE: 1:20

SECTION Y1-Y1
SCALE: 1:20

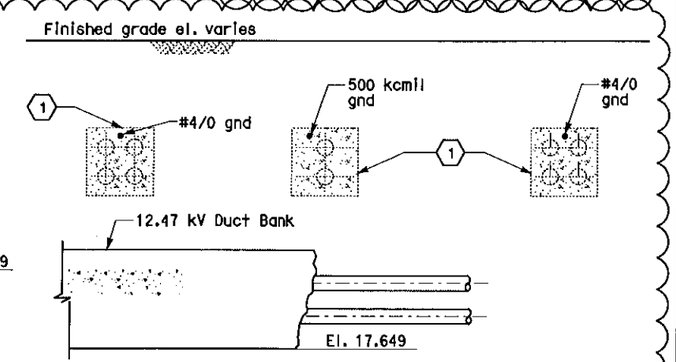

SECTION Z-Z
SCALE: 1:20

NOTES:

1. References:
   - For duct bank and manhole plans, see sheets E-8, E-10 and E-11.
   - For typical manhole and duct bank details, see sheet E-35.

SHEET NOTES:

(1) Not in contract.

(2) Not in contract. Conduits and grounds shown are existing installed on previous contract. It is provided as reference for routing cable/circuits only.

(3) Not in contract. Conduits and grounds shown are existing installed on previous contract. It is provided as reference for routing cable/circuits only. Existing conduit is tag prefixed (*) on conduit and tray schedules.

(4) For underground conduit duct bank reinforcing, see Detail 1 sheet E-34A.

(5) For underground conduit duct bank reinforcing, see Detail 3 sheet E-34A.

(6) For underground conduit duct bank reinforcing, see Detail 5 sheet E-34A.

(7) For underground conduit duct bank reinforcing, see Detail 4 sheet E-34A.

(8) For underground conduit duct bank reinforcing, see Detail A sheet E-33A.

REGISTERED PROFESSIONAL ENGINEER DAVID H. OTO No. 10699 Exp. 06/30/2013 ELECTRICAL STATE OF CALIFORNIA

FOR REVISION ONLY (1) (2)

MARK	DATE	DESCRIPTIONS	BY	CH'D
2	11/11/11	Relocate U/G Duct Bank at Bent W8	JH	EJL
1	07/20/11	W2 duct banks reinforcement.	JH	EJL

REVISIONS

CONTRACT CHANGE ORDER NO. 85
SHEET 34 OF 76

THIS PLAN ACCURATE FOR ELECTRICAL WORK ONLY.

ALL DIMENSIONS IN MILLIMETERS UNLESS OTHERWISE SHOWN

DETAILS
UNDERGROUND (ELECTRICAL DUCT BANK)
(DUCT BANK SECTIONS)
SCALE AS NOTED

E-34

STATE OF CALIFORNIA - DEPARTMENT OF TRANSPORTATION
CONSULTANT FUNCTIONAL SUPERVISOR: BEHZAD GOLEMOHAMMADI
CALCULATED-DESIGNED BY: AB
CHECKED BY: FK
REVISED BY
DATE REVISED

LAST REVISION 11-11-11
DATE PLOTTED => 18-NOV-2011
TIME PLOTTED => 11:24

BORDER LAST REVISED 3/1/2007
RELATIVE BORDER SCALE IS IN MILLIMETERS 0 20 40 60 80
USERNAME => llorico
DGN FILE => 40120sua034r02.dgn
CU 04251
EA 0120S1

Dist	COUNTY	ROUTE	KILOMETER POST TOTAL PROJECT	SHEET No.	TOTAL SHEETS
04	SF	80	12.7/13.2	153B	806

11/11/11
DATE

PLANS APPROVAL DATE

REGISTERED PROFESSIONAL ENGINEER
LAWRENCE M. JOHNSON
No. C 44006
Exp. 6-30-13
CIVIL
STATE OF CALIFORNIA

THE STATE OF CALIFORNIA OR ITS OFFICERS OR AGENTS SHALL NOT BE RESPONSIBLE FOR THE ACCURACY OR COMPLETENESS OF ELECTRONIC COPIES OF THIS PLAN SHEET.

PB AMERICAS, Inc.
A Parsons Brinckerhoff Company
303 Second St., Suite 700N
San Francisco, CA 94107-1317

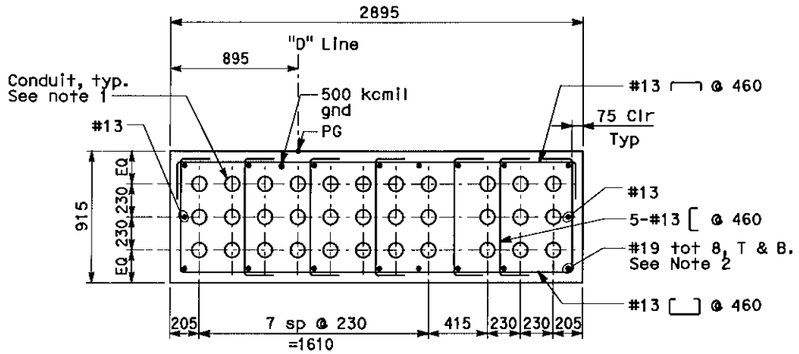

Note:
For location of duct bank, see sheets E-8 and E-33.

DETAIL 1
SCALE: 1:20

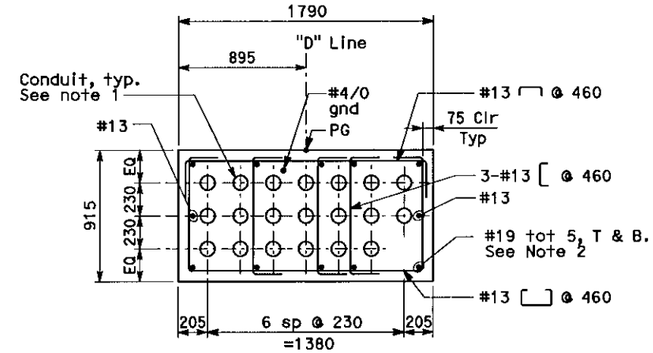

Note:
For location of duct bonk, see sheet E-8.

DETAIL 2
SCALE: 1:20

NOTES:

1. For conduit duct bank sections, see sheets E-33 and E-33A.
2. Where duct banks intersect, develop #19 top and bottom reinforcing a minimum distance of 1525 mm into adjacent duct bank.
3. The duct bank concrete compression strength at 28 days: f'c = 25 MPa.
4. The duct bank reinforcing bar yield strength: Fy = 414 MPa.

MARK	DATE	DESCRIPTIONS	BY	CH'D
0	11/11/11	Relocate duct bank at bent W8	LJ	EJL

REVISIONS

CONTRACT CHANGE ORDER NO. 85
SHEET 35 OF 76

DETAILS
UNDERGROUND (ELECTRICAL DUCT BANK) (DUCT BANK SECTIONS)
SCALE AS NOTED

E-34B

LAST REVISION 11-11-11 | DATE PLOTTED => 18-NOV-2011 | TIME PLOTTED => 11:23

STATE OF CALIFORNIA - DEPARTMENT OF TRANSPORTATION
Caltrans

CONSULTANT FUNCTIONAL SUPERVISOR: BRADY NADELL
CALCULATED-DESIGNED BY: LARRY JOHNSON
CHECKED BY: ELLERY LUCAS
REVISED BY
DATE REVISED

THIS PLAN ACCURATE FOR ELECTRICAL WORK ONLY.

ALL DIMENSIONS IN MILLIMETERS UNLESS OTHERWISE SHOWN

BORDER LAST REVISED 3/1/2007

RELATIVE BORDER SCALE IS IN MILLIMETERS 0 20 40 60 80

USERNAME => llorico
DGN FILE => 40120sua034B.dgn

CU 04251

EA 0120S1

Dist	COUNTY	ROUTE	KILOMETER POST TOTAL PROJECT	SHEET No.	TOTAL SHEETS
04	SF	80	12.7/13.2	153C	806

11/11/11
DATE

PLANS APPROVAL DATE

REGISTERED PROFESSIONAL ENGINEER
LAWRENCE N. JOHNSON
No. C 44006
Exp. 6-30-13
CIVIL
STATE OF CALIFORNIA

THE STATE OF CALIFORNIA OR ITS OFFICERS OR AGENTS SHALL NOT BE RESPONSIBLE FOR THE ACCURACY OR COMPLETENESS OF ELECTRONIC COPIES OF THIS PLAN SHEET.

PB AMERICAS, Inc.
A Parsons Brinckerhoff Company
303 Second St., Suite 700N
San Francisco, CA 94107-1317

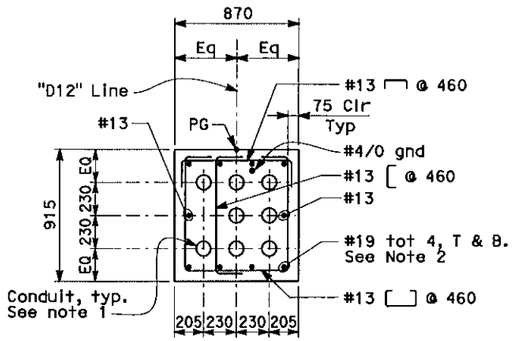

DETAIL 3
SCALE: 1:20

Note:
For location of duct bank, see sheet E-8.

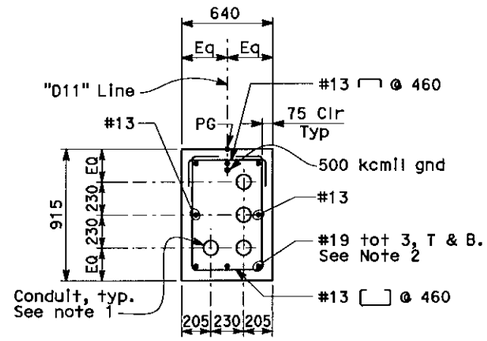

DETAIL 4
SCALE: 1:20

Note:
For location of duct bank, see sheet E-8.

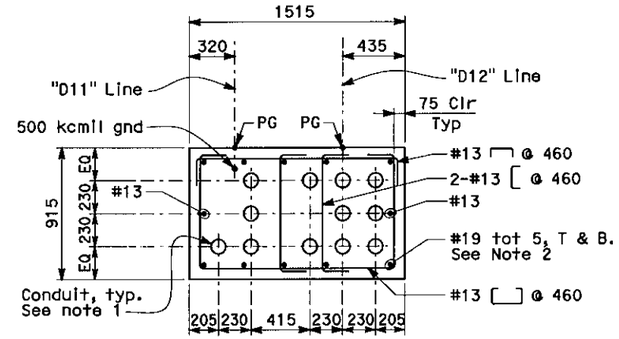

DETAIL 5
SCALE: 1:20

Note:
For location of duct bank, see sheet E-8.

NOTES:

1. For conduit duct bank sections, see sheets E-33 and E-33A.
2. Where duct banks intersect, develop #19 top and bottom reinforcing a minimum distance of 1525 mm into adjacent duct bank.
3. The duct bank concrete compression strength at 28 days: f'c = 25 MPa.
4. The duct bank reinforcing bar yield strength: Fy = 414 MPa.

MARK	DATE	DESCRIPTIONS	BY	CH'D
0	11/11/11	Relocate duct bank at bent W8	LJ	EJL

REVISIONS

CONTRACT CHANGE ORDER NO. 85
SHEET 36 OF 76

DETAILS
UNDERGROUND (ELECTRICAL DUCT BANK) (DUCT BANK SECTIONS)
SCALE AS NOTED

E-34C

THIS PLAN ACCURATE FOR ELECTRICAL WORK ONLY.

ALL DIMENSIONS IN MILLIMETERS UNLESS OTHERWISE SHOWN

STATE OF CALIFORNIA - DEPARTMENT OF TRANSPORTATION
Caltrans

CONSULTANT FUNCTIONAL SUPERVISOR: BRADY NADELL
CALCULATED-DESIGNED BY: LARRY JOHNSON
CHECKED BY: ELLERY LUCAS
REVISED BY / DATE REVISED

LAST REVISION 11-11-11
DATE PLOTTED => 18-NOV-2011
TIME PLOTTED => 11:24

Dist	COUNTY	ROUTE	KILOMETER POST TOTAL PROJECT	SHEET No.	TOTAL SHEETS
04	SF	80	12.7/13.2	154A	806

REGISTERED CIVIL ENGINEER — DATE 11/11/11

PLANS APPROVAL DATE

REGISTERED PROFESSIONAL ENGINEER — Mee Shing Owyang — No. 24960 — Exp. 12/31/11 — CIVIL — STATE OF CALIFORNIA

THE STATE OF CALIFORNIA OR ITS OFFICERS OR AGENTS SHALL NOT BE RESPONSIBLE FOR THE ACCURACY OR COMPLETENESS OF ELECTRONIC COPIES OF THIS PLAN SHEET.

PB AMERICAS, Inc.
A Parsons Brinckerhoff Company
303 Second St., Suite 700N
San Francisco, CA 94107-1317

GENERAL NOTES

A. REINFORCED CONCRETE

A.1 ALL CONCRETE SHALL BE NORMAL WEIGHT WITH TYPE II, LOW ALKALI PORTLAND CEMENT AND ULTIMATE COMPRESSIVE STRENGTH @ 28 DAYS OF 27.5828 MPA.

A.2 REINFORCEMENT FOR STRUCTURAL CONCRETE SHALL BE OEFORMED STEEL BARS CONFORMING TO ASTM A706M, WITH NOMINAL YIELD STRENGTH OF 413.742 MPA.

A.3 ALL REINFORCING BAR HOOKS SHALL BE STANDARD HOOKS AS DEFINED IN ACI 318-08 UNLESS OTHERWISE NOTED ON DESIGN DRAWINGS.

A.4 ALL REINFORCING BAR LAP SPLICE LENGTH (MM) SHALL BE CLASS B CONFORMING TO THE FOLLOWING TABLE BELOW UNLESS OTHERWISE NOTED ON DESIGN DRAWINGS:

1. FOR BARS EXCEPT TOP BARS*:

BAR SIZE	fc' = 27.5828 MPa
#13	635
#16	788
#19	940

*TOP BAR IS DEFINED AS HORIZONTAL REINFORCEMENT SO PLACED THAT MORE THAN 305mm OF FRESH CONCRETE IS CAST IN THE MEMBER BELOW THE DEVELOPMENT LENGTH OR SPLICE.

2. FOR TOP BARS:

BAR SIZE	fc' = 27.5828 MPa
#13	838
#16	1042
#19	1245

A.5 MINIMUM CONCRETE PROTECTIVE COVER FOR REINFORCEMENT SHALL BE BAS FOLLOWS, UNLESS OTHERWISE NOTED ON DESIGN DRAWINGS:

1. CONCRETE CAST AGAINST AND PERMANENTLY EXPOSED TO EARTH.....76mm
2. CONCRETE EXPOSED TO EARTH OR WEATHER: #16 AND SMALL.....31mm
3. CONCRETE NOT EXPOSED TO WEATHER OR IN CONTACT WITH GROUND: SLABS AND WALL: #36 AND SMALLER.....19mm

A.6 SEE PROJECT SPECIFICATIONS FOR MORE DETAILED REQUIREMENTS.

A.7 CONCRETE WORK SHALL CONFORM TO ALL REQUIREMENTS OF ACI 301, SPECIFICATIONS FOR STRUCTURAL CONCRETE FOR BUILDINGS, EXCEPT AS MODIFIED BY THE SUPPLEMENT REQUIREMENTS ABOVE.

B. STRUCTURAL STEEL

B.1 ALL STRUCTURAL STEEL SHALL CONFORM TO THE FOLLOWING ASTM MATERIAL STANDARD:

SHAPE/SECTION	ASTM
M, S ,C, MC	A36M
L	A36M
PIPE	A53 GRADE B
PLATES AND BARS	A36M

B.2 ALL STRUCTURAL BOLTED CONNECTIONS SHALL BE MADE USING 19.05mm DIAMETER HIGH STRENGTH STEEL TENSION CONTROL BOLTS CONFORMING TO ASTM A325M, SLIP-CRITICAL CONNECTION - CLASS A TYPE, UNLESS OTHERWISE NOTED.

B.3 ALL STRUCTURALLY WELDED CONNECTIONS SHALL BE MADE USING ELECRODES CONFORMING TO AWS A5.1 OR A5.5, E70XX.

B.4 ALL DRILLED AND SET-IN CONCRETE EXPANSION ANCHORS SHALL CONFORM TO CARBON STEEL CONFORMING TO ASTM A510M, ZINC COATED IN ACCORDANCE WITH ASTM B633 OR TYPE 304 STAINLESS STEEL.

B.5 ALL STRUCTURAL STEEL SHALL BE HOT-DIP GALVANIZED AFTER FABRICATION.

B.6 STEEL WORK SHALL CONFORM TO ALL REQUIREMENTS OF AISC, CODE OF STANDARED PRACTICE FOR STEEL BRUILDINGS AND BRIDGES, LATEST EDITION.

B.7 SEE PROJECT SPECIFICATIONS FOR MORE DETAILED REQUIREMENTS.

C. DESIGN LOADS AND ASSUMPTIONS

C.1 DEAD LOADS

1. STRUCTURALSELF WEIGHT
2. SOIL OVERBURDEN

C.2 LIVE LOAD

1. FOR ROOF AND BASE SLAB DESIGN-0.0287 MPa.

C.3 HYDROSTATIC PRESSURE-NONE.

C.4 LATERAL SOIL PRESSURES

1. THE LATERAL SOIL PRESSURES ACTING ON MANHOLES ARE CALCULATED BASED ON THE FOLLOWING ASSUMPTIONS:

(a) FOR MANHOLES 9, 9A, 29A, AND 30

SOIL UNIT WEIGTH, Y = 2002.31 Kg/m^3
ANGLE OF SOIL FRICTION, ø = 34.0 DEGREES
MAXIMUM BACKFILL SLOPE, I = 9.0 DEGREES
AT-REST PRESSURE COEFFICIENT, Ko = 0.502

(b) FOR MANHOLES 13, 14, AND 15

SOIL UNIT WEIGTH, Y = 2002.31 Kg/m^3
ANGLE OF SOIL FRICTION, ø = 38.5 DEGREES
MAXIMUM BACKFILL SLOPE, I = 37.57 DEGREES
AT-REST PRESSURE COEFFICIENT, Ko = 0.802

D. DESIGN LOAD FACTORS AND LOAD COMBINATIONS

D.1 1.4D

D.2 1.2D + 1.6L + 1.6H

WHERE D=DEAD LOAD
L=LIVE LOAD
H=LOAD DUE TO LATERAL EARTH PRESSURE

E. ABBREVIATIONS

ACI	AMERICAN CONCRETE INSTITUTE
AISC	AMERICAN INSTITUTE OF STEEL CONSTRUCTION
@	AT
&	ANO
ASTM	ASTM INTERNATIONAL
AWS	AMERICAN WELDING SOCIETY
#	BAR SIZE
BOTT	BOTTOM
B.O.	BOTTOM OF
C	CHANNEL SECTION
C.J.	CONSTRUCTION JOINT
CLR	CLEAR
cm	CENTIMETER
CONC	CONCRETE
CONT	CONTINUOUS
DIA OR ø	DIAMETER
DWG	DRAWING
DWGS	DRAWINGS
EA	EACH
E.F.	EACH FACE
EL, ELEV	ELEVATION
EQ	EQUAL
E.W.	EACH WAY
EXIST, (E)	EXIST
FIN	FINISHED
F.G.	FINISHED GRADE
F.S.	FAR SIDE
FT	FOOT/FEET
FTG	FOOTING

E. ABBREVIATIONS (CONT)

GA	GAGE
GALV	GALVANIZED
HORIZ	HORIZONTAL
H.P.	HIGH POINT
H.S.	HIGH STRENGTH
H.S.B.	HIGH STRENGTH BOLT
HT	HIGHT
I.D.	INSIDE DIAMETER
INFO	INFORMATION
JT	JOINT
Kg	KILOGRAM
KN	KILONEUTON
L	LENGTH OR ANGLE SECTION
LONGIT	LONGITUDINAL
L.P.	LOW POINT
M OR m	METER(S)
MAX	MAXIMUM
MC	CHANNEL SECTION
MIN	MINIMUM
MISC	MISCELLANEOUS
MPa	MEGAPASCAL
mm	MILLIMETER
NO.	NUMBER
NOM	NOMINAL
NTS	NOT TO SCALE
O.C.	ON CENTER
O.D.	OUTSIDE DIAMETER
OPP	OPPOSITE
PL	PLATE
R	RADIUS
REF	REFERENCE
REINF	REINFORCEMENT
REQD	REQUIRED
SECT	SECTION
SIM	SIMILAR
SHT	SHEET
SQ	SQUARE
STD	STANDARD
STR	STRUCTURE
SYMM	SYMMETRICAL
T	TOP
T. & B.	TOP AND BOTTOM
T.O.C.	TOP OF CONCRETE
TYP	TYPICAL
VERT	VERTICAL
U.N.O.	UNLESS NOTED OTHERWISE
W/	WITH
W/O	WITHOUT
W.P.	WORK POINT

MARK	DATE	DESCRIPTIONS	BY	CH'D
0	11/11/11	Relocate U/G Duct Bank at Bent W8	MSO	EL

REVISIONS

CONTRACT CHANGE ORDER NO. 85
SHEET 37 OF 76

GENERAL STRUCTURAL NOTES

E-35A

STATE OF CALIFORNIA - DEPARTMENT OF TRANSPORTATION — Caltrans
CONSULTANT FUNCTIONAL SUPERVISOR: BRADY NADELL
CALCULATED-DESIGNED BY: MEE SHING OWYANG — CHECKED BY: ELLERY LUCAS — REVISED BY — DATE REVISED

THIS PLAN ACCURATE FOR ELECTRICAL WORK ONLY.

ALL DIMENSIONS ARE IN MILLIMETERS UNLESS OTHERWISE SHOWN

BORDER LAST REVISED 3/1/2007 — RELATIVE BORDER SCALE IS IN MILLIMETERS 0 20 40 60 80 — USERNAME => llorico — DGN FILE => 40120suc035A.dgn — CU 04251 — EA 0120S1

LAST REVISION 11-11-11 — DATE PLOTTED => 18-NOV-2011 — TIME PLOTTED => 11:24

Dist	COUNTY	ROUTE	KILOMETER POST TOTAL PROJECT	SHEET No.	TOTAL SHEETS
04	SF	80	12.7/13.2	154B	806

REGISTERED CIVIL ENGINEER — DATE 11/11/11

PLANS APPROVAL DATE

REGISTERED PROFESSIONAL ENGINEER — Mee Shing Owyang — No. 24960 — Exp. 12/31/11 — CIVIL — STATE OF CALIFORNIA

THE STATE OF CALIFORNIA OR ITS OFFICERS OR AGENTS SHALL NOT BE RESPONSIBLE FOR THE ACCURACY OR COMPLETENESS OF ELECTRONIC COPIES OF THIS PLAN SHEET.

PB AMERICAS, Inc.
A Parsons Brinckerhoff Company
303 Second St., Suite 700N
San Francisco, CA 94107-1317

MARK	DATE	DESCRIPTIONS	BY	CH'D
0	11/11/11	Relocate U/G Duct Bank at Bent W8	MSO	EL

REVISIONS

CONTRACT CHANGE ORDER NO. 85
SHEET 38 OF 76

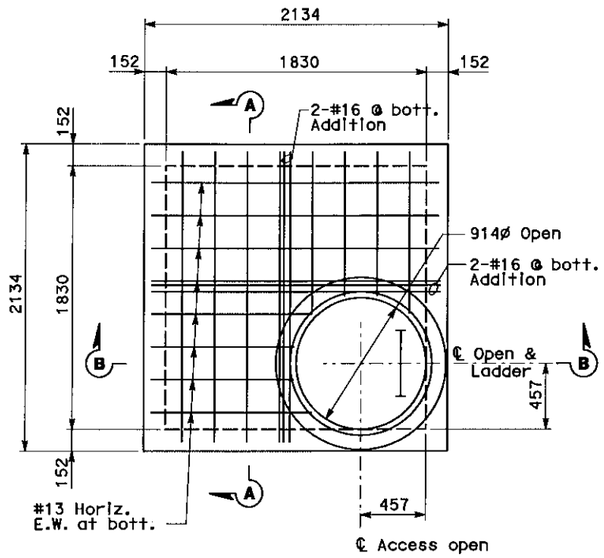

MAHOLE 9
(See Sheet E-29)

PLAN
SCALE: 1:20

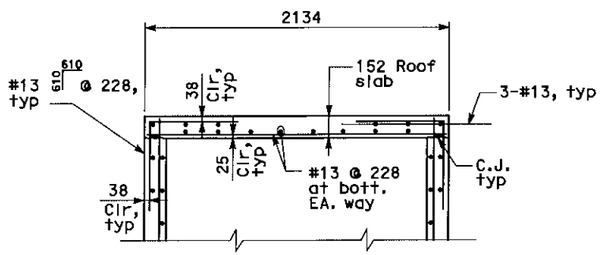

SECTION A-A
SCALE: 1:20

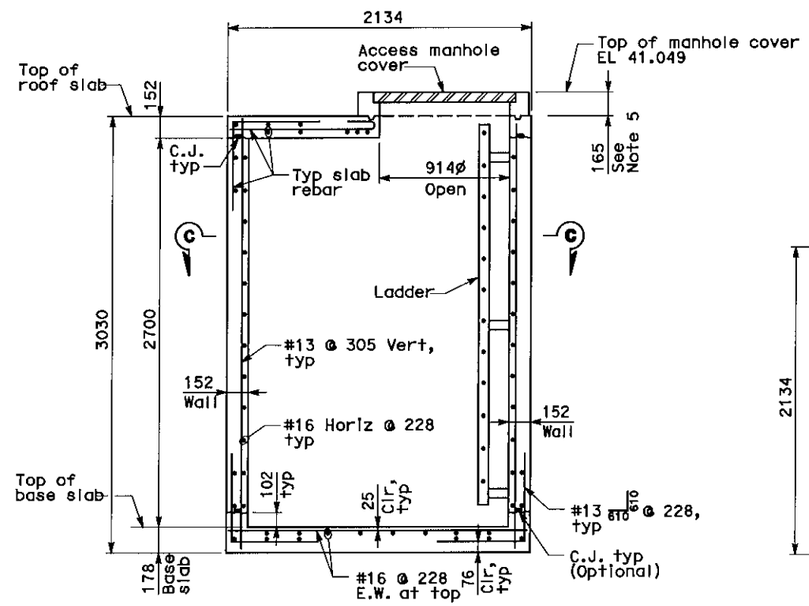

SECTION B-B
SCALE: 1:20

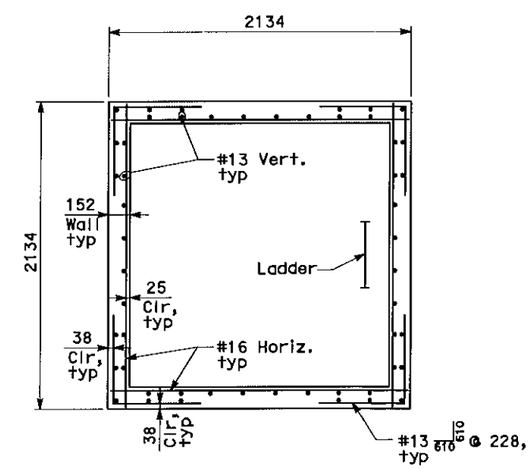

SECTION C-C
SCALE: 1:20

NOTES:

1. For general structural notes and design assumptions, see Drawing No. E-35A.
2. For orientation of manhole, see electrical drawings.
3. For location, size and arrangement of penetrations in the manhole walls for electrical conduits, see electrical drawings.
4. Provided a continuous hydrophilic waterstop at all construction joints. The hydrophilic waterstop shall have a minimum cross section of 19.05mm wide by 9.525mm thick.
5. Contractor to provide access manhole cover support detail. Cover to be cast iron traffic rated with ring, D&L model A-1463.

DETAILS
UNDERGROUND (ELECTRICAL DUCT BANK)
(MANHOLE MH-9 PLAN AND SECTIONS)
SCALE AS NOTED

E-35B

STATE OF CALIFORNIA - DEPARTMENT OF TRANSPORTATION
CONSULTANT FUNCTIONAL SUPERVISOR: BRADY NADELL
CALCULATED-DESIGNED BY: MEE SHING OWYANG
CHECKED BY: ELLERY LUCAS
REVISED BY / DATE REVISED

THIS PLAN ACCURATE FOR ELECTRICAL WORK ONLY.

ALL DIMENSIONS ARE IN MILLIMETERS UNLESS OTHERWISE SHOWN

LAST REVISION 11-11-11 — DATE PLOTTED => 18-NOV-2011 — TIME PLOTTED => 11:24

Dist	COUNTY	ROUTE	KILOMETER POST TOTAL PROJECT	SHEET No.	TOTAL SHEETS
04	SF	80	12.7/13.2	154C	806

REGISTERED CIVIL ENGINEER — DATE 11/11/11

PLANS APPROVAL DATE

REGISTERED PROFESSIONAL ENGINEER — Mee Shing Owyang — No. 24960 — Exp. 12/31/11 — CIVIL — STATE OF CALIFORNIA

THE STATE OF CALIFORNIA OR ITS OFFICERS OR AGENTS SHALL NOT BE RESPONSIBLE FOR THE ACCURACY OR COMPLETENESS OF ELECTRONIC COPIES OF THIS PLAN SHEET.

PB AMERICAS, Inc.
A Parsons Brinckerhoff Company
303 Second St., Suite 700N
San Francisco, CA 94107-1317

MARK	DATE	DESCRIPTIONS	BY	CH'D
0	11/11/11	Relocate U/G Duct Bank at Bent W8	MSO	EL

REVISIONS

CONTRACT CHANGE ORDER NO. 85
SHEET 39 OF 76

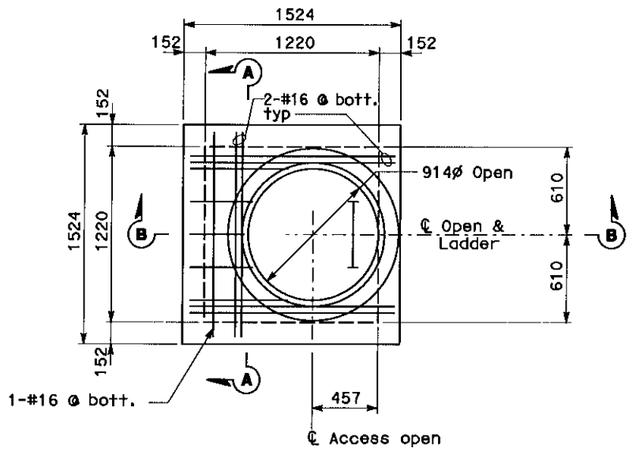

MAHOLE 9A
(See Sheet E-29A)

PLAN
SCALE: 1:20

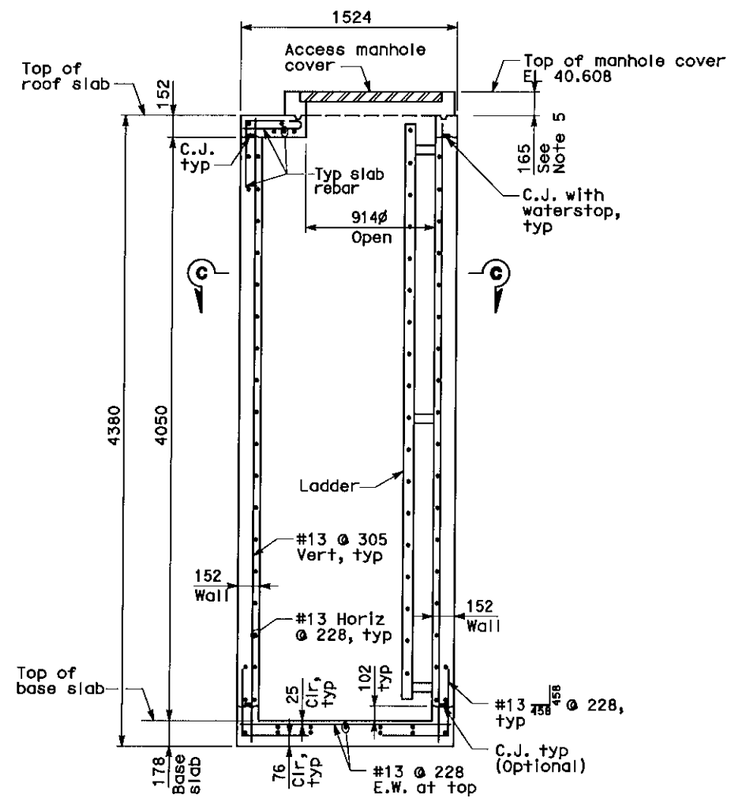

SECTION B-B
SCALE: 1:20

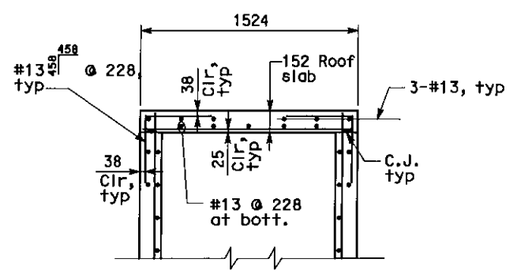

SECTION A-A
SCALE: 1:20

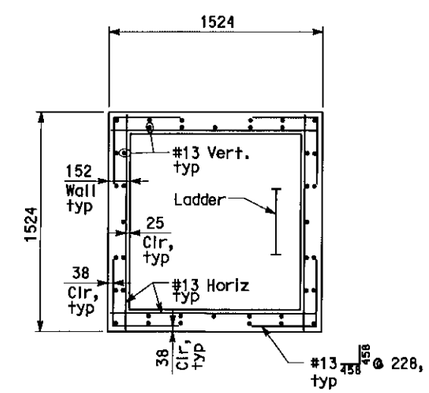

SECTION C-C
SCALE: 1:20

NOTES:

1. For general structural notes and design assumptions, see Drawing No. E-35A.
2. For orientation of manhole, see electrical drawings.
3. For location, size and arrangement of penetrations in the manhole walls for electrical conduits, see electrical drawings.
4. Provided a continuous hydrophilic waterstop at all construction joints. The hydrophilic waterstop shall have a minimum cross section of 19.05mm wide by 9.525mm thick.
5. Contractor to provide access manhole caver support detail. Cover to be cast iron traffic rated with ring, D&L model A-1463.

DETAILS
UNDERGROUND (ELECTRICAL DUCT BANK)
(MANHOLE MH-9A PLAN AND SECTIONS)
SCALE AS NOTED

E-35C

STATE OF CALIFORNIA - DEPARTMENT OF TRANSPORTATION
Caltrans
CONSULTANT FUNCTIONAL SUPERVISOR: BRADY NADELL
CALCULATED-DESIGNED BY: MEE SHING OWYANG
CHECKED BY: ELLERY LUCAS
REVISED BY
DATE REVISED

LAST REVISION 11-11-11
DATE PLOTTED => 18-NOV-2011
TIME PLOTTED => 11:24

THIS PLAN ACCURATE FOR ELECTRICAL WORK ONLY.

ALL DIMENSIONS ARE IN MILLIMETERS UNLESS OTHERWISE SHOWN

Dist	COUNTY	ROUTE	KILOMETER POST TOTAL PROJECT	SHEET No.	TOTAL SHEETS
04	SF	80	12.7/13.2	154D	806

REGISTERED CIVIL ENGINEER — DATE 11/11/11

PLANS APPROVAL DATE

REGISTERED PROFESSIONAL ENGINEER — Mee Shing Owyang — No. 24960 — Exp. 12/31/11 — CIVIL — STATE OF CALIFORNIA

THE STATE OF CALIFORNIA OR ITS OFFICERS OR AGENTS SHALL NOT BE RESPONSIBLE FOR THE ACCURACY OR COMPLETENESS OF ELECTRONIC COPIES OF THIS PLAN SHEET.

PB AMERICAS, Inc.
A Parsons Brinckerhoff Company
303 Second St., Suite 700N
San Francisco, CA 94107-1317

MARK	DATE	DESCRIPTIONS	BY	CH'D
0	11/11/11	Relocate U/G Duct Bank at Bent W8	MSO	EL

REVISIONS

CONTRACT CHANGE ORDER NO. 85
SHEET 40 OF 76

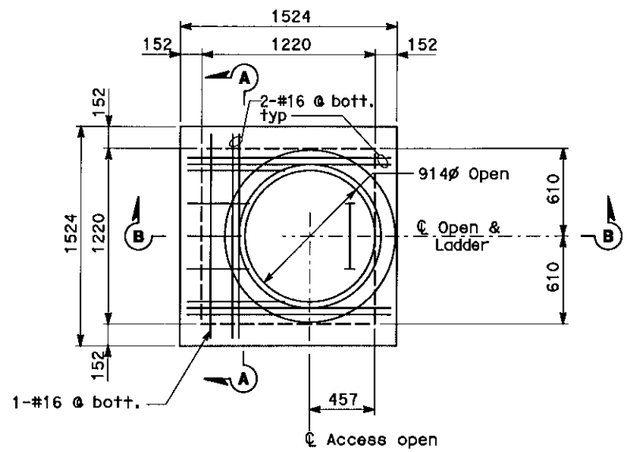

MAHOLE 29A
(See Sheet E-29A)

PLAN
SCALE: 1:20

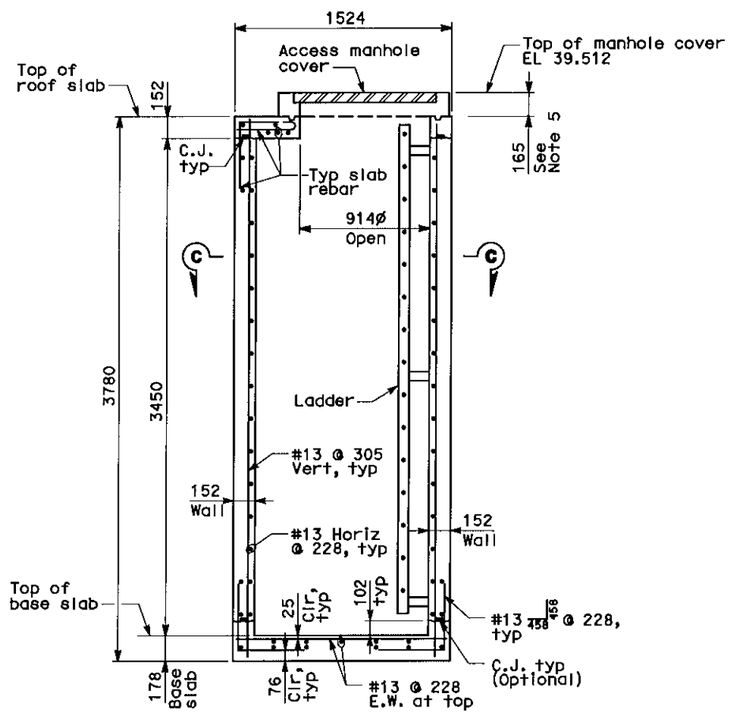

SECTION B-B
SCALE: 1:20

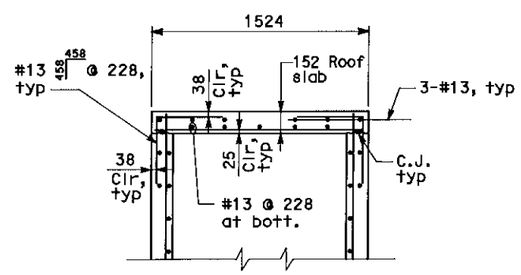

SECTION A-A
SCALE: 1:20

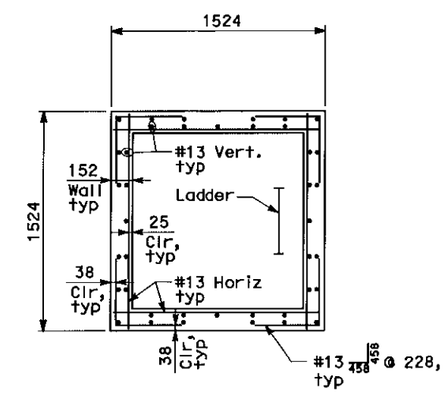

SECTION C-C
SCALE: 1:20

NOTES:

1. For general structural notes and design assumptions, see Drawing No. E-35A.
2. For orientation of manhole, see electrical drawings.
3. For location, size and arrangement of penetrations in the manhole walls for electrical conduits, see electrical drawings.
4. Provided a continuous hydrophilic waterstop at all construction joints. The hydrophilic waterstop shall have a minimum cross section of 19.05mm wide by 9.525mm thick.
5. Contractor to provide access manhole cover support detail. Cover to be cast iron traffic rated with ring, D&L model A-1463.

DETAILS
UNDERGROUND (ELECTRICAL DUCT BANK)
(MANHOLE MH-29A PLAN AND SECTIONS)
SCALE AS NOTED

E-35D

STATE OF CALIFORNIA - DEPARTMENT OF TRANSPORTATION — Caltrans
CONSULTANT FUNCTIONAL SUPERVISOR: BRADY NADELL
CALCULATED-DESIGNED BY: MEE SHING OWYANG
CHECKED BY: ELLERY LUCAS
REVISED BY / DATE REVISED

THIS PLAN ACCURATE FOR ELECTRICAL WORK ONLY.

ALL DIMENSIONS ARE IN MILLIMETERS UNLESS OTHERWISE SHOWN

LAST REVISION 11-11-11 — DATE PLOTTED => 18-NOV-2011 — TIME PLOTTED => 11:24

Dist	COUNTY	ROUTE	KILOMETER POST TOTAL PROJECT	SHEET No.	TOTAL SHEETS
04	SF	80	12.7/13.2	154E R1	806

REGISTERED CIVIL ENGINEER 11/11/11 DATE

PLANS APPROVAL DATE

REGISTERED PROFESSIONAL ENGINEER Mee Shing Owyang No. 24960 Exp. 12/31/11 CIVIL STATE OF CALIFORNIA

THE STATE OF CALIFORNIA OR ITS OFFICERS OR AGENTS SHALL NOT BE RESPONSIBLE FOR THE ACCURACY OR COMPLETENESS OF ELECTRONIC COPIES OF THIS PLAN SHEET.

PB AMERICAS, Inc.
A Parsons Brinckerhoff Company
303 Second St., Suite 700N
San Francisco, CA 94107-1317

Caltrans Metric

MARK	DATE	DESCRIPTIONS	BY	CH'D
1	07/24/12	Drawing Deleted. Relocate U/G Duct Bank at Bent W8	MSO	EJL
0	11/11/11	Relocate U/G Duct Bank at Bent W8	MSO	EL

REVISIONS

CONTRACT CHANGE ORDER NO. 85
SHEET 41 OF 76

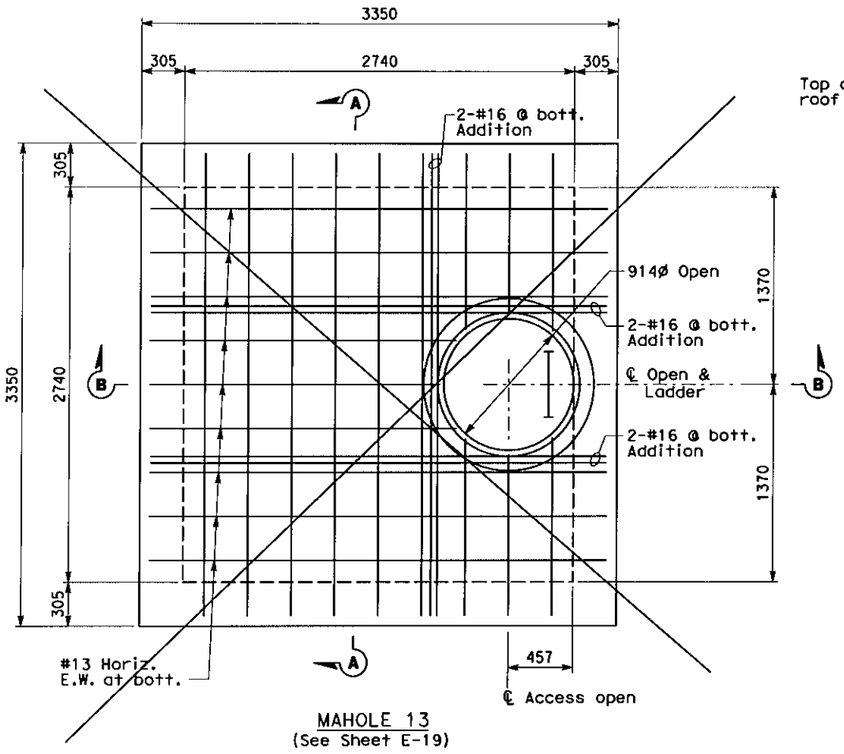

MAHOLE 13
(See Sheet E-19)

PLAN
SCALE: 1:20

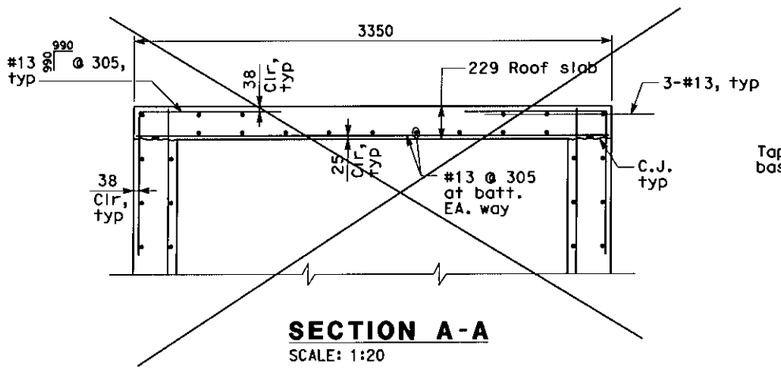

SECTION A-A
SCALE: 1:20

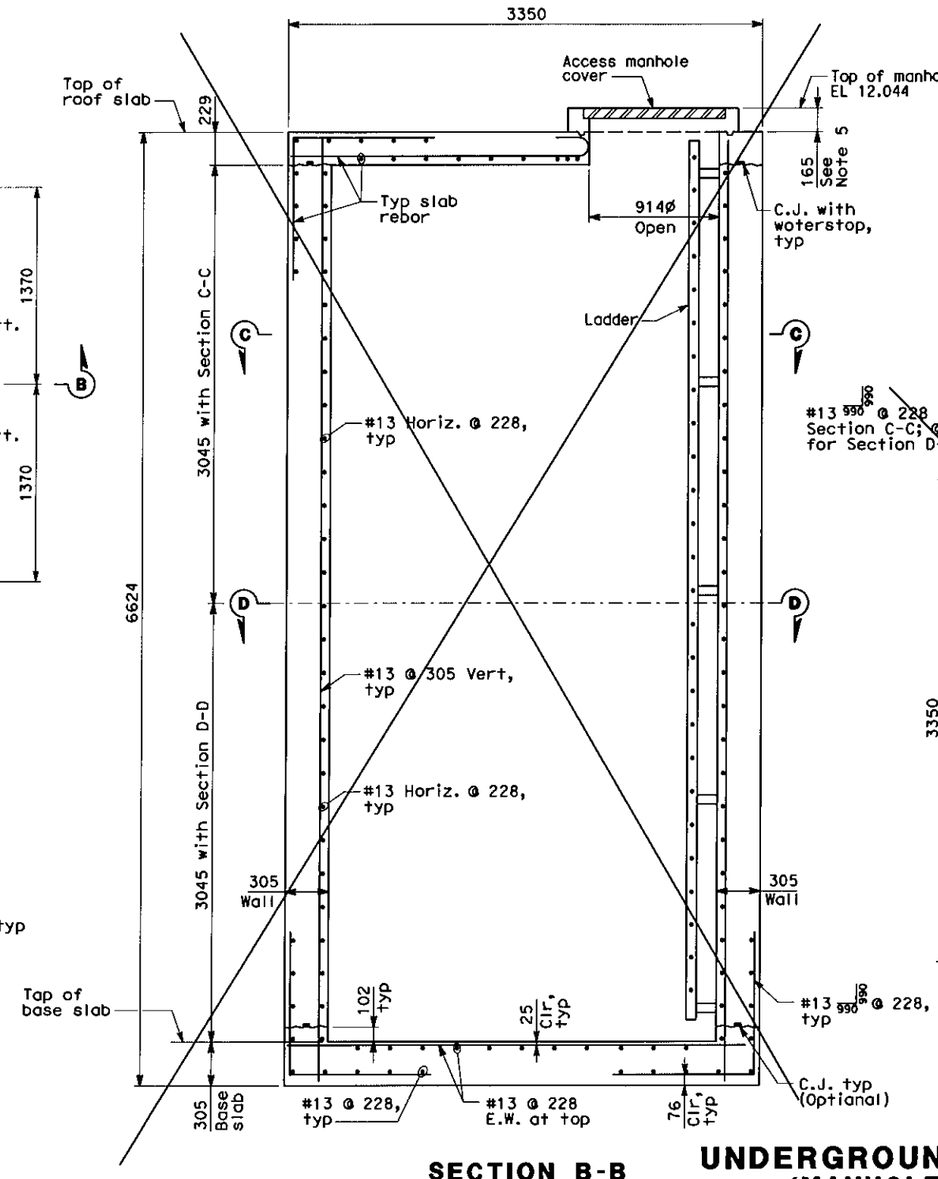

SECTION B-B
SCALE: 1:20

NOTES:

1. For general structural notes and design assumptions, see Drawing No. E-35A.
2. For orientation of manhole, see electrical drawings.
3. For location, size and arrangement of penetrations in the manhole walls for electrical conduits, see electrical drawings.
4. Provided a continuous hydrophilic waterstop at all construction joints. The hydrophilic waterstop shall have a minimum cross section of 19.05mm wide by 9.525mm thick.
5. Contractor to provide access manhole cover support detail. Cover to be cast iron traffic rated with ring, D&L model A-1463.

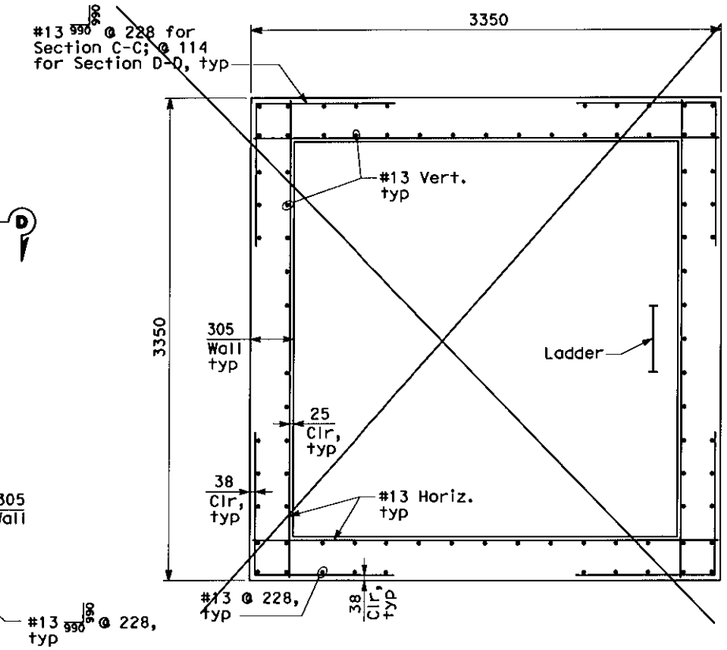

SECTION C-C/D-D
SCALE: 1:20

DETAILS
UNDERGROUND (ELECTRICAL DUCT BANK)
(MANHOLE MH-13 PLAN AND SECTIONS)
SCALE AS NOTED

E-35E

STATE OF CALIFORNIA - DEPARTMENT OF TRANSPORTATION	CONSULTANT FUNCTIONAL SUPERVISOR	CALCULATED-DESIGNED BY	CHECKED BY	REVISED BY	DATE REVISED
Caltrans	BRADY NADELL	MEE SHING OWYANG	ELLERY LUCAS		

THIS PLAN ACCURATE FOR ELECTRICAL WORK ONLY.

ALL DIMENSIONS ARE IN MILLIMETERS UNLESS OTHERWISE SHOWN

LAST REVISION 11-11-11 DATE PLOTTED => 24-JUL-2012 TIME PLOTTED => 16:17

Dist	COUNTY	ROUTE	KILOMETER POST TOTAL PROJECT	SHEET No.	TOTAL SHEETS
04	SF	80	12.7/13.2	154F R1	806

REGISTERED CIVIL ENGINEER 11/11/11 DATE

PLANS APPROVAL DATE

REGISTERED PROFESSIONAL ENGINEER Mee Shing Owyang No. 24960 Exp. 12/31/11 CIVIL STATE OF CALIFORNIA

THE STATE OF CALIFORNIA OR ITS OFFICERS OR AGENTS SHALL NOT BE RESPONSIBLE FOR THE ACCURACY OR COMPLETENESS OF ELECTRONIC COPIES OF THIS PLAN SHEET.

PB AMERICAS, Inc.
A Parsons Brinckerhoff Company
303 Second St., Suite 700N
San Francisco, CA 94107-1317

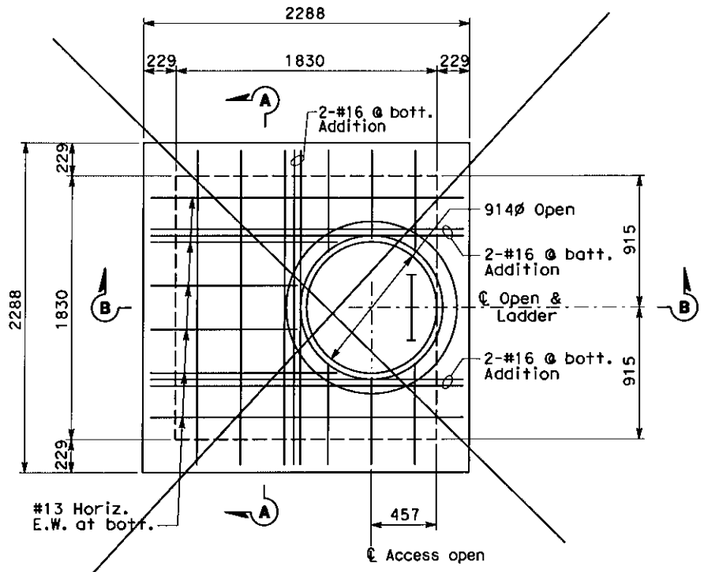

MAHOLES 14 & 15
(See Sheets E-19, E-20)

PLAN
SCALE: 1:20

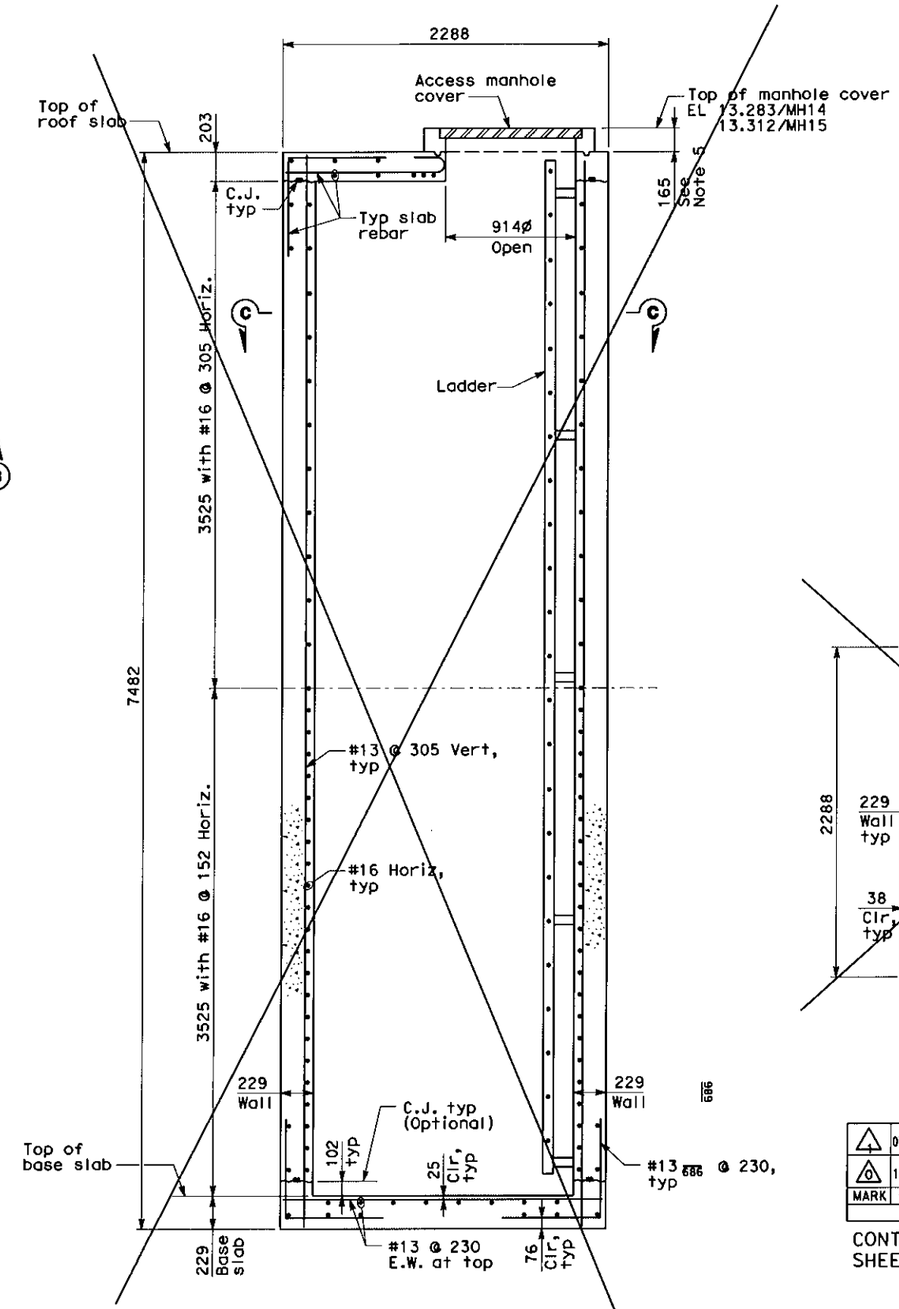

SECTION B-B
SCALE: 1:20

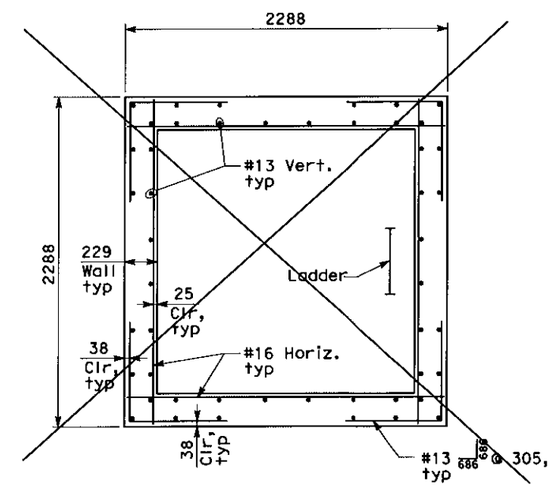

SECTION C-C
SCALE: 1:20

NOTES:

1. For general structural notes and design assumptions, see Drawing No. E-35A.
2. For orientation of monhole, see electricol drawings.
3. For location, size and arrangement of penetrations in the manhole walls for electrical conduits, see electrical drawings.
4. Provided a continuous hydrophilic waterstop at all construction joints. The hydrophilic waterstop shall have a minimum cross section of 19.05mm wide by 9.525mm thick.
5. Contractor to provide access manhole cover support detail. Cover to be cast iron traffic rated with ring, D&L model A-1463.

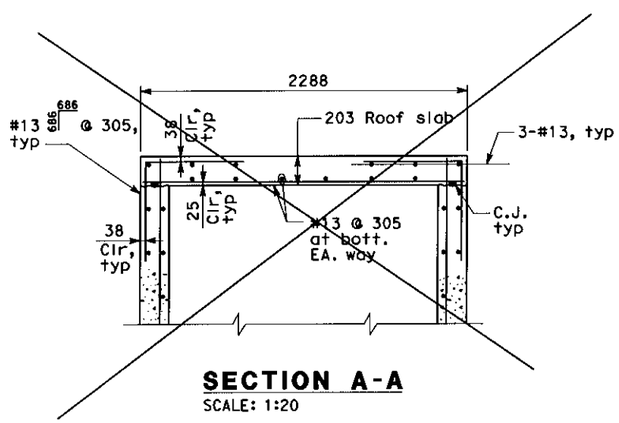

SECTION A-A
SCALE: 1:20

MARK	DATE	DESCRIPTIONS	BY	CH'D
1	07/24/12	Drawing Deleted. Relocate U/G Duct Bank at Bent W8	MSO	EJL
0	11/11/11	Relocate U/G Duct Bank at Bent W8	MSO	EL

REVISIONS

CONTRACT CHANGE ORDER NO. 85
SHEET 42 OF 76

DETAILS
UNDERGROUND (ELECTRICAL DUCT BANK)
(MANHOLE MH-14, MH-15 PLAN AND SECTIONS)
SCALE AS NOTED

E-35F

STATE OF CALIFORNIA - DEPARTMENT OF TRANSPORTATION
Caltrans

CONSULTANT FUNCTIONAL SUPERVISOR: BRADY NADELL
CALCULATED-DESIGNED BY: MEE SHING OWYANG
CHECKED BY: ELLERY LUCAS
REVISED BY
DATE REVISED

THIS PLAN ACCURATE FOR ELECTRICAL WORK ONLY.

ALL DIMENSIONS ARE IN MILLIMETERS UNLESS OTHERWISE SHOWN

LAST REVISION 11-11-11
DATE PLOTTED => 24-JUL-2012
TIME PLOTTED => 16:18

Dist	COUNTY	ROUTE	KILOMETER POST TOTAL PROJECT	SHEET No.	TOTAL SHEETS
04	SF	80	12.7/13.2	154G	806

REGISTERED CIVIL ENGINEER — DATE 11/11/11

PLANS APPROVAL DATE

REGISTERED PROFESSIONAL ENGINEER — Mee Shing Owyang — No. 24960 — Exp. 12/31/11 — CIVIL — STATE OF CALIFORNIA

THE STATE OF CALIFORNIA OR ITS OFFICERS OR AGENTS SHALL NOT BE RESPONSIBLE FOR THE ACCURACY OR COMPLETENESS OF ELECTRONIC COPIES OF THIS PLAN SHEET.

PB AMERICAS, Inc.
A Parsons Brinckerhoff Company
303 Second St., Suite 700N
San Francisco, CA 94107-1317

MARK	DATE	DESCRIPTIONS	BY	CH'D
0	11/11/11	Relocate U/G Duct Bank at Bent W8	MSO	EL

REVISIONS

CONTRACT CHANGE ORDER NO. 85
SHEET 43 OF 76

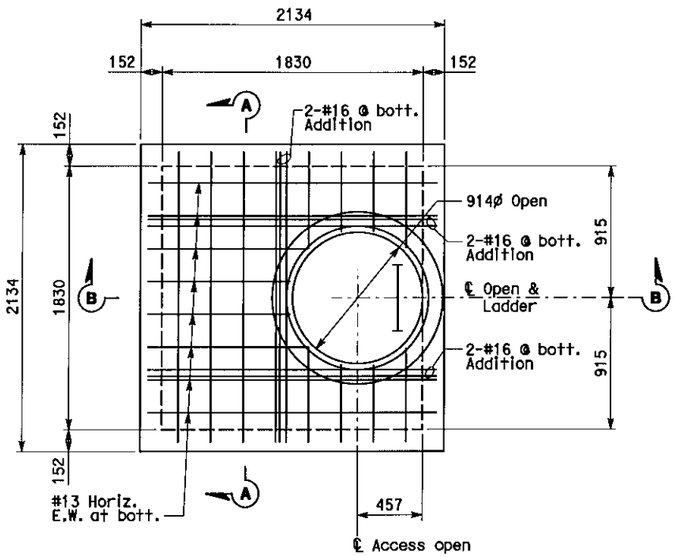

MAHOLE 30
(See Sheet E-28)

PLAN
SCALE: 1:20

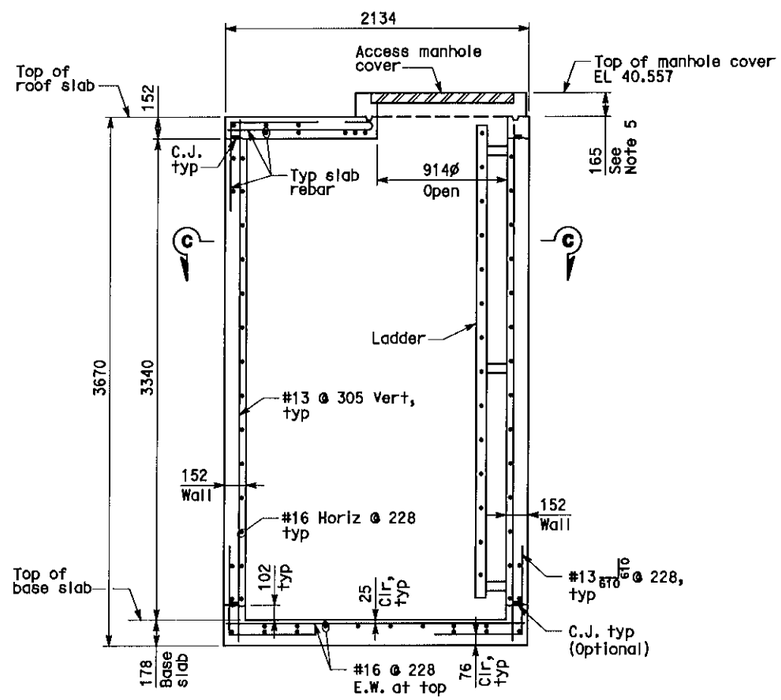

SECTION B-B
SCALE: 1:20

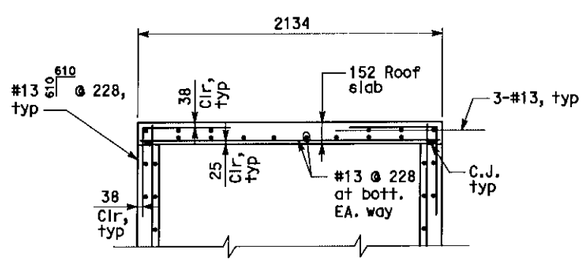

SECTION A-A
SCALE: 1:20

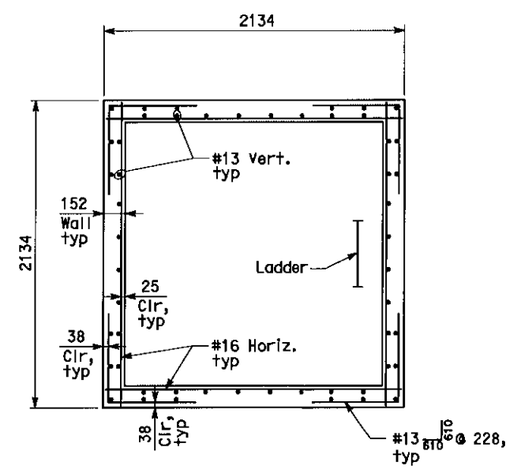

SECTION C-C
SCALE: 1:20

NOTES:

1. For general structural notes and design assumptions, see Drawing No. E-35A.
2. For orientation of manhole, see electrical drawings.
3. For location, size and arrangement of penetrations in the manhole walls for electrical conduits, see electrical drawings.
4. Provided a continuous hydrophilic waterstop at all construction joints. The hydrophilic waterstop shall have a minimum cross section of 19.05mm wide by 9.525mm thick.
5. Contractor to provide access manhole cover support detail. Cover to be cast iron traffic rated with ring, D&L model A-1463.

DETAILS
UNDERGROUND (ELECTRICAL DUCT BANK)
(MANHOLE MH-30 PLAN AND SECTIONS)
SCALE AS NOTED

E-35G

STATE OF CALIFORNIA - DEPARTMENT OF TRANSPORTATION
CONSULTANT FUNCTIONAL SUPERVISOR: BRADY NADELL
CALCULATED-DESIGNED BY: MEE SHING OWYANG — REVISED BY
CHECKED BY: ELLERY LUCAS — DATE REVISED

LAST REVISION 11-11-11 — DATE PLOTTED => 18-NOV-2011 — TIME PLOTTED => 11:25

THIS PLAN ACCURATE FOR ELECTRICAL WORK ONLY.

ALL DIMENSIONS ARE IN MILLIMETERS UNLESS OTHERWISE SHOWN

BORDER LAST REVISED 3/1/2007

RELATIVE BORDER SCALE IS IN MILLIMETERS 0 20 40 60 80

USERNAME => llorico
DGN FILE => 40120sua035G.dgn

CU 04251 | EA 0120S1

Dist	COUNTY	ROUTE	KILOMETER POST TOTAL PROJECT	SHEET No.	TOTAL SHEETS
04	SF	80	12.7/13.2	154H	806

REGISTERED CIVIL ENGINEER 11/11/11 DATE

PLANS APPROVAL DATE

REGISTERED PROFESSIONAL ENGINEER Mee Shing Owyang No. 24960 Exp. 12/31/11 CIVIL STATE OF CALIFORNIA

THE STATE OF CALIFORNIA OR ITS OFFICERS OR AGENTS SHALL NOT BE RESPONSIBLE FOR THE ACCURACY OR COMPLETENESS OF ELECTRONIC COPIES OF THIS PLAN SHEET.

PB AMERICAS, Inc.
A Parsons Brinckerhoff Company
303 Second St., Suite 700N
San Francisco, CA 94107-1317

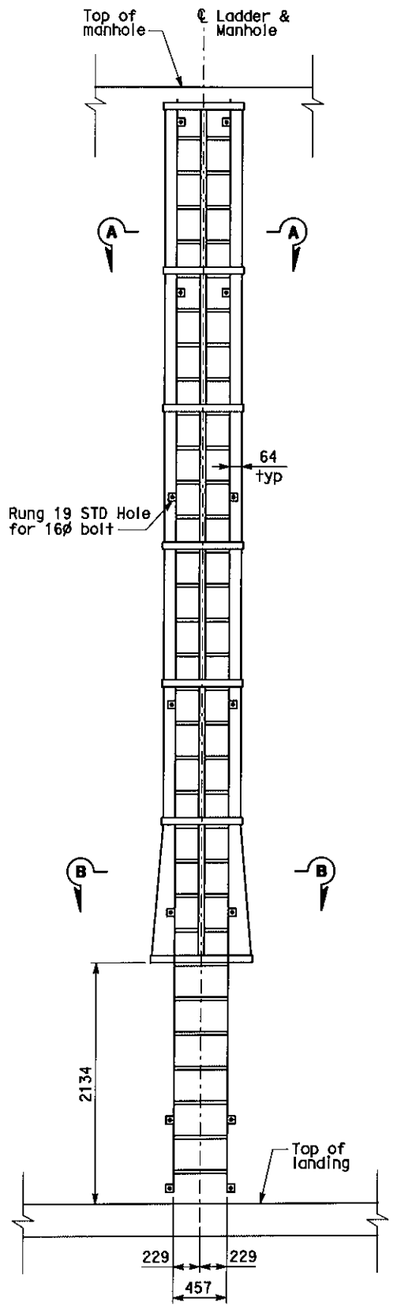

FRONT ELEVATION

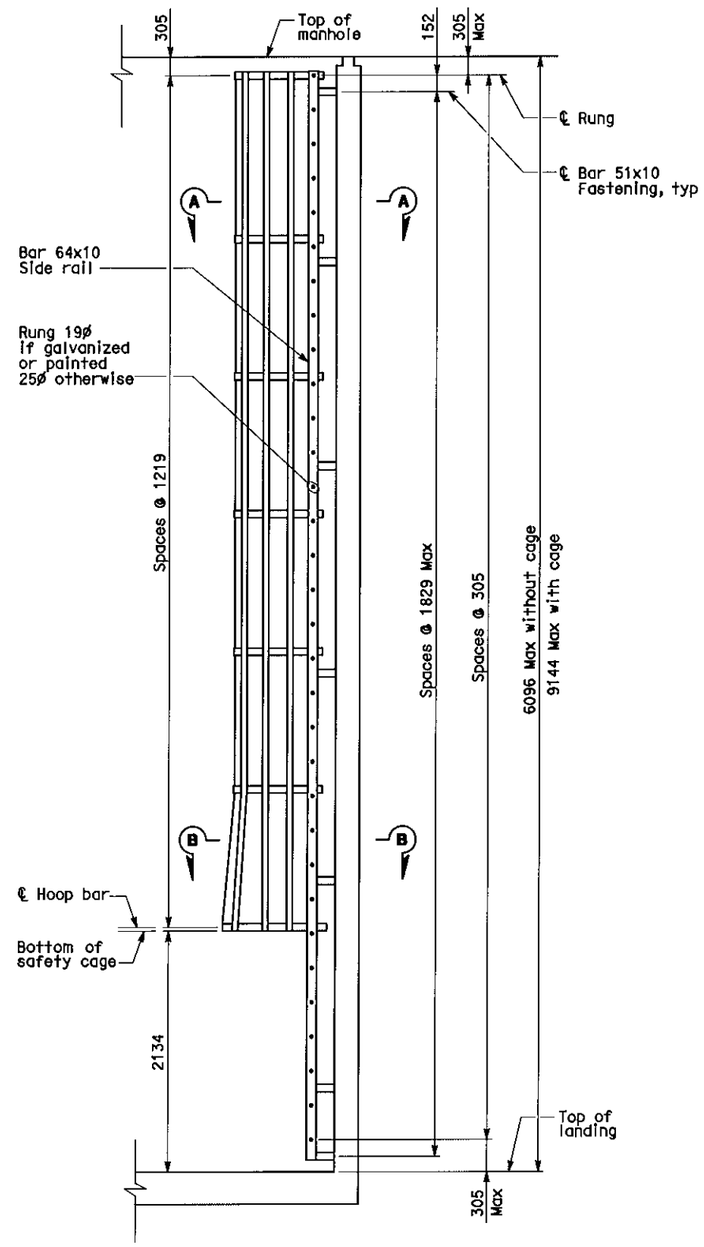

SIDE ELEVATION

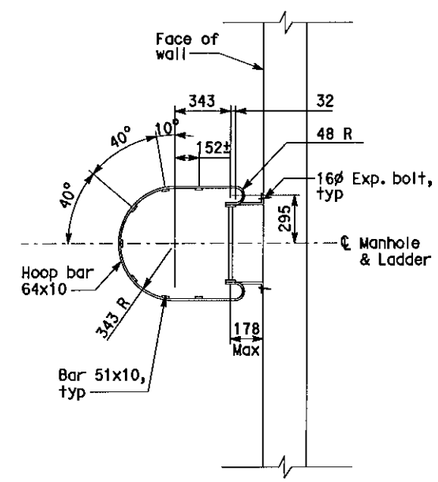

SECTION A-A
SCALE: NONE

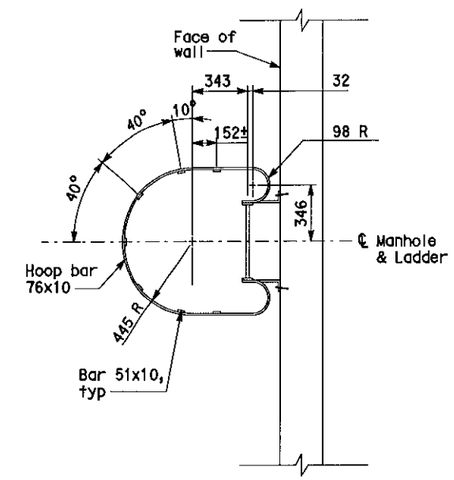

SECTION B-B
SCALE: NONE

NOTES:

1. The Contractor shall verify in the field all controlling dimensions before ordering or fabricating any materials.
2. All structural steel to be hot-dipped galvanized after fabrication.

MARK	DATE	DESCRIPTIONS	BY	CH'D
0	11/11/11	Relocate U/G Duct Bank at Bent W8	MSO	EL

REVISIONS

CONTRACT CHANGE ORDER NO. 85
SHEET 44 OF 76

DETAILS
UNDERGROUND (ELECTRICAL DUCT BANK)
MANHOLE LADDER ELEVATIONS AND SECTIONS
NO SCALE

E-35H

STATE OF CALIFORNIA - DEPARTMENT OF TRANSPORTATION
Caltrans
CONSULTANT FUNCTIONAL SUPERVISOR: BRADY NADELL
CALCULATED-DESIGNED BY: MEE SHING OWYANG
CHECKED BY: ELLERY LUCAS
REVISED BY
DATE REVISED

LAST REVISION 11-11-11
DATE PLOTTED => 18-NOV-2011
TIME PLOTTED => 11:25

THIS PLAN ACCURATE FOR ELECTRICAL WORK ONLY.

ALL DIMENSIONS ARE IN MILLIMETERS UNLESS OTHERWISE SHOWN

Dist	COUNTY	ROUTE	KILOMETER POST TOTAL PROJECT	SHEET No.	TOTAL SHEETS
04	SF	80	12.7/13.2	154J	806

REGISTERED CIVIL ENGINEER 11/11/11 DATE

PLANS APPROVAL DATE

REGISTERED PROFESSIONAL ENGINEER Mee Shing Owyang No. 24960 Exp. 12/31/11 CIVIL STATE OF CALIFORNIA

THE STATE OF CALIFORNIA OR ITS OFFICERS OR AGENTS SHALL NOT BE RESPONSIBLE FOR THE ACCURACY OR COMPLETENESS OF ELECTRONIC COPIES OF THIS PLAN SHEET.

PB AMERICAS, Inc.
A Parsons Brinckerhoff Company
303 Second St., Suite 700N
San Francisco, CA 94107-1317

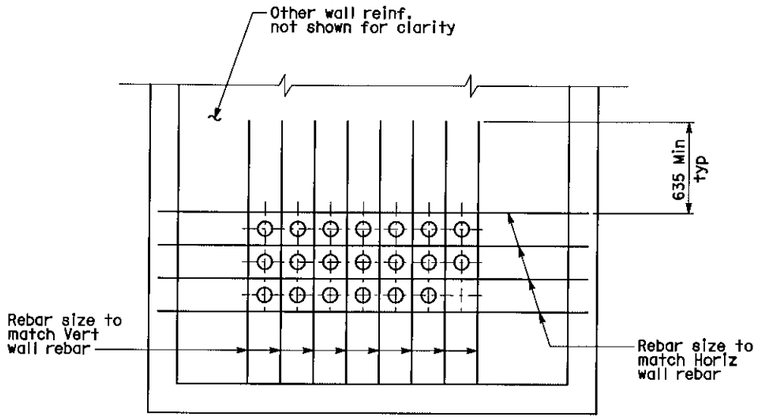

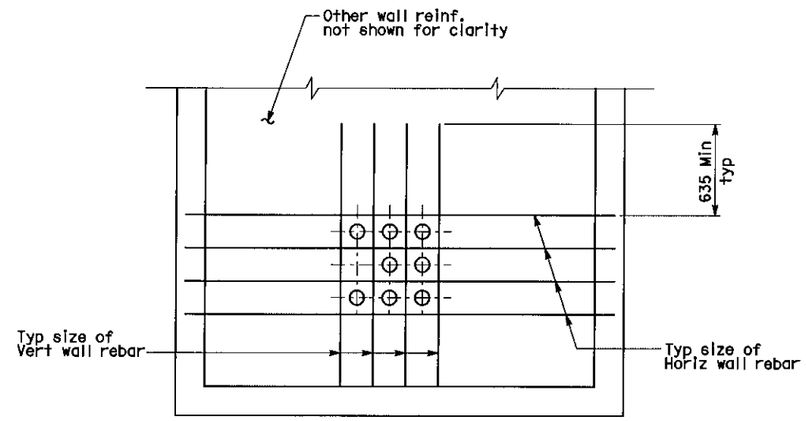

TYP REBAR LAYOUT AT WALL PENETRATIONS

SCALE: 1:20

NOTES:

1. For general structural notes and design assumptions, see Drawing No. E-35A.
2. For location, size and arrangement of penetrations in the manhole walls for electrical conduits, see electrical drawings.

MARK	DATE	DESCRIPTIONS	BY	CH'D
0	11/11/11	Relocate U/G Duct Bank at Bent W8	MSO	EL

REVISIONS

CONTRACT CHANGE ORDER NO. 85
SHEET 45 OF 76

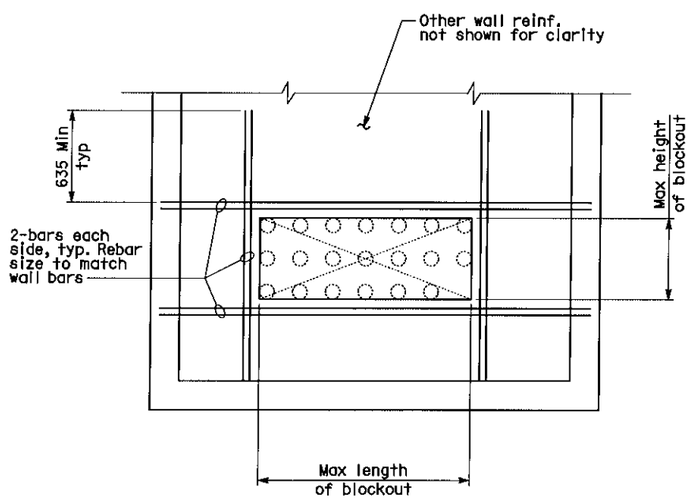

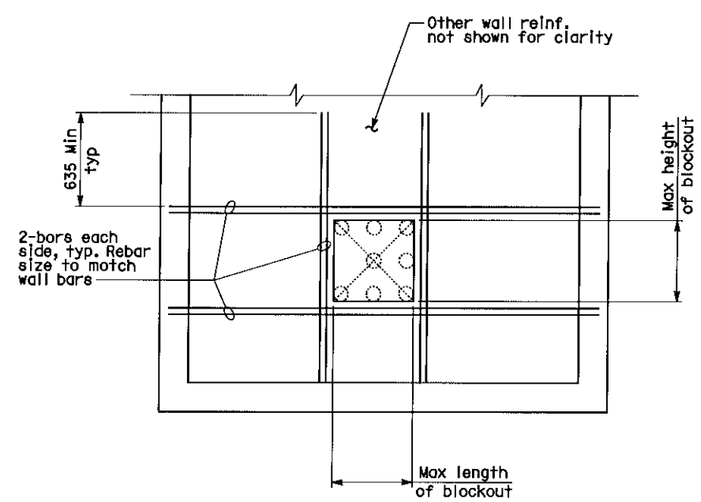

TYP REBAR LAYOUT AT WALL BLOCKOUTS

SCALE: 1:20

DETAILS
UNDERGROUND (ELECTRICAL DUCT BANK)
TYPICAL REINFORCING AT WALL PENETRATIONS AND BLOCK-OUTS

SCALE AS NOTED

E-35J

STATE OF CALIFORNIA - DEPARTMENT OF TRANSPORTATION
Caltrans

CONSULTANT FUNCTIONAL SUPERVISOR: BRADY NADELL
CALCULATED-DESIGNED BY: MEE SHING OWYANG
CHECKED BY: ELLERY LUCAS
REVISED BY / DATE REVISED

THIS PLAN ACCURATE FOR ELECTRICAL WORK ONLY.

ALL DIMENSIONS ARE IN MILLIMETERS UNLESS OTHERWISE SHOWN

BORDER LAST REVISED 3/1/2007

RELATIVE BORDER SCALE IS IN MILLIMETERS 0 20 40 60 80

USERNAME => llorico
DGN FILE => 40120sua035J.dgn

CU 04251 | EA 0120S1

LAST REVISION 11-11-11 | DATE PLOTTED => 18-NOV-2011 | TIME PLOTTED => 11:25

Dist	COUNTY	ROUTE	KILOMETER POST TOTAL PROJECT	SHEET No.	TOTAL SHEETS
04	SF	80	12.7/13.2	197 R3	806

REGISTERED ELECTRICAL ENGINEER — DATE 2/14/08

6-23-08
PLANS APPROVAL DATE

REGISTERED PROFESSIONAL ENGINEER — FADI WALIEDDINE No. 11465 Exp. 12/31/09 ELECTRICAL — STATE OF CALIFORNIA

THE STATE OF CALIFORNIA OR ITS OFFICERS OR AGENTS SHALL NOT BE RESPONSIBLE FOR THE ACCURACY OR COMPLETENESS OF ELECTRONIC COPIES OF THIS PLAN SHEET.

PB AMERICAS, Inc.
A Parsons Brinckerhoff Company
303 Second St., Suite 700N
San Francisco, CA 94107-1317

Caltrans Metric 5

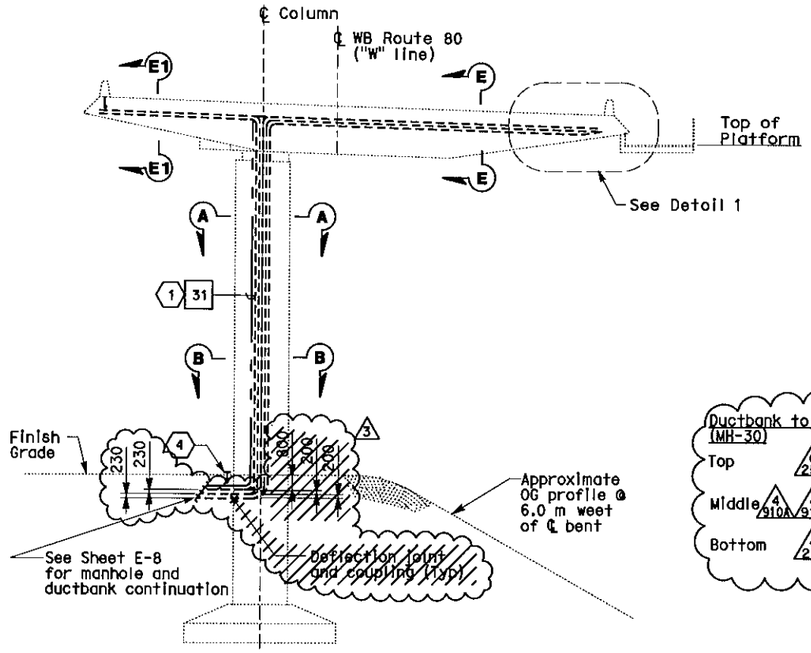

BENT W8L ELEVATION
SCALE: 1:150

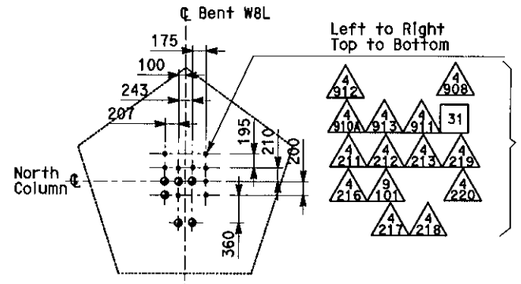

SECTION A-A
NO SCALE 7

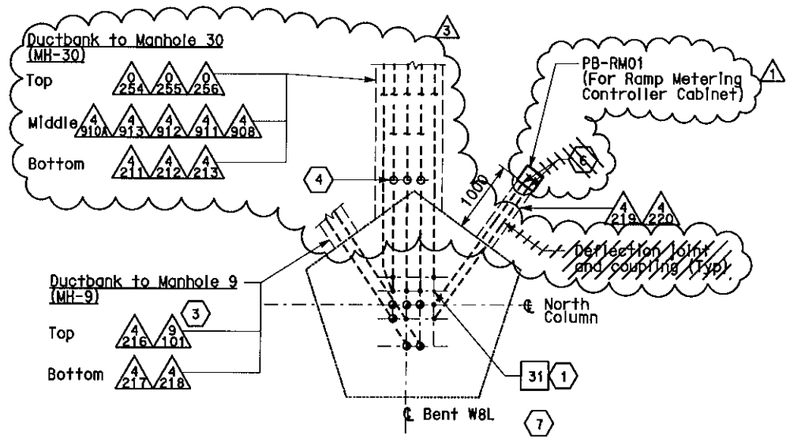

SECTION B-B
NO SCALE

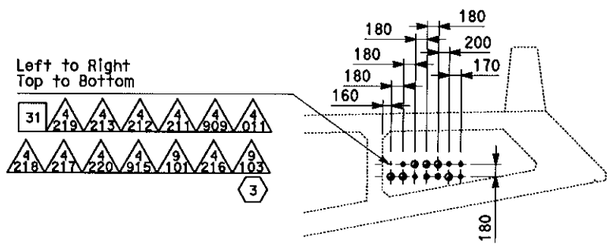

DETAIL 1 - BENT W8L
Looking East
NO SCALE 5 7

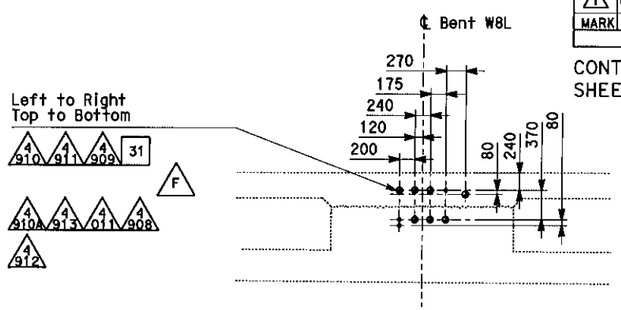

SECTION E1-E1
NO SCALE 7

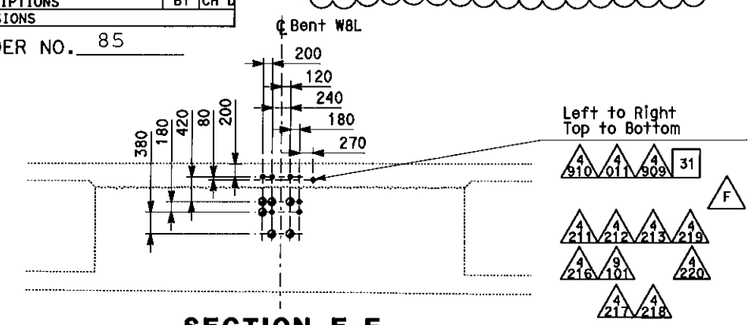

SECTION E-E
NO SCALE 7

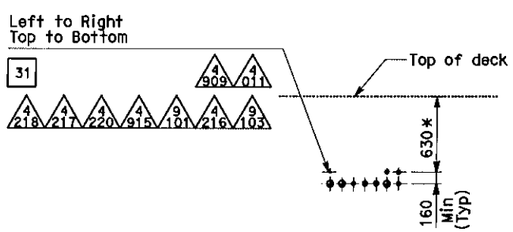

SECTION D-D
NO SCALE 5 7

FOR REVISION ONLY 3

FOR REVISION ONLY 1 2

NOTES:

1. References:
   - For service platform, details refer to sheets E-64 thru E-66.
   - ~~(*) Dimension to be provided by Structural~~
   - For Conduit and Tray Schedules, Cable and Circuit Schedules, refer to sheets starting ot E-182.
2. Furnish and install 4-25.4 mm innerducts inside TOS/COM conduit (4218).
3. Furnish and install BASE fiber optic cables in innerduct inside TOS/COM conduit (4218). See sheets E-1102 and E-1103.

SHEET NOTES:

1. Ground conductor for 250 kcmil bare copper wire. Routed inside underground duct banks in column Bent W8, connected and tapped from ground bar for service platform grounding system. Refer to sheets E-34 and E-79.
2. For typical conduit support, see sheet E-86.
3. Conduits to be installed in this contract but are reserved for future SMD.
4. Stub-out and cap conduits 0254, 0255 and 0256, 150 mm from the column edge.
5. Detail 1 and section D-D shown is from Bent W8L, see sheet E-81.
6. Stub out and cap conduits for future use.
7. The embedded conduits may be adjusted to avoid interference with rebars.
8. Conduits from PB-RM01 to Ramp Metering Controller Cabinet shall be others.

MARK	DATE	DESCRIPTIONS	BY	CH'D
3	11/11/11	Relocate U/G Duct Bank at Bent W8	JH	EJL
2	07/15/11	B.A.S.E. Trunkline	RB	WB
1	03/30/11	YBITS WB FRAME 2 CITY RAMP REVISION	RR	RG

REVISIONS

CONTRACT CHANGE ORDER NO. 85
SHEET 46 OF 76

7 REVISED PER ADDENDUM No. 7 DATED OCTOBER 19, 2009

5 REVISED PER ADDENDUM No. 5 DATED JULY 30, 2009

DETAILS
YBI TRANSITION STRUCTURES GIRDER WESTBOUND (BENT W8L ELEVATION AND SECTIONS)
SCALE AS NOTED

STRUCTURE DETAILS OF CONDUIT RISER TO W8L 7

THIS PLAN ACCURATE FOR ELECTRICAL WORK ONLY.

ALL DIMENSIONS ARE IN MILLIMETERS UNLESS OTHERWISE SHOWN

E-78

STATE OF CALIFORNIA - DEPARTMENT OF TRANSPORTATION — Caltrans
CONSULTANT FUNCTIONAL SUPERVISOR: BEHZAD GOLEMOHAMMADI
CALCULATED-DESIGNED BY: AB — CHECKED BY: FK
REVISED BY — DATE REVISED

LAST REVISION 11-11-11 — DATE PLOTTED => 18-NOV-2011 — TIME PLOTTED => 11:25

Dist	COUNTY	ROUTE	KILOMETER POST TOTAL PROJECT	SHEET No.	TOTAL SHEETS
04	SF	80	12.7/13.2	246 R1	806

REGISTERED ELECTRICAL ENGINEER 2/14/08

6-23-08
PLANS APPROVAL DATE

REGISTERED PROFESSIONAL ENGINEER FADI WALIEDDINE No. 11865 Exp. 12/31/09 ELECTRICAL STATE OF CALIFORNIA

THE STATE OF CALIFORNIA OR ITS OFFICERS OR AGENTS SHALL NOT BE RESPONSIBLE FOR THE ACCURACY OR COMPLETENESS OF ELECTRONIC COPIES OF THIS PLAN SHEET.

PB AMERICAS, Inc.
A Parsons Brinckerhoff Company
303 Second St., Suite 700N
San Francisco, CA 94107-1317

Metric

7

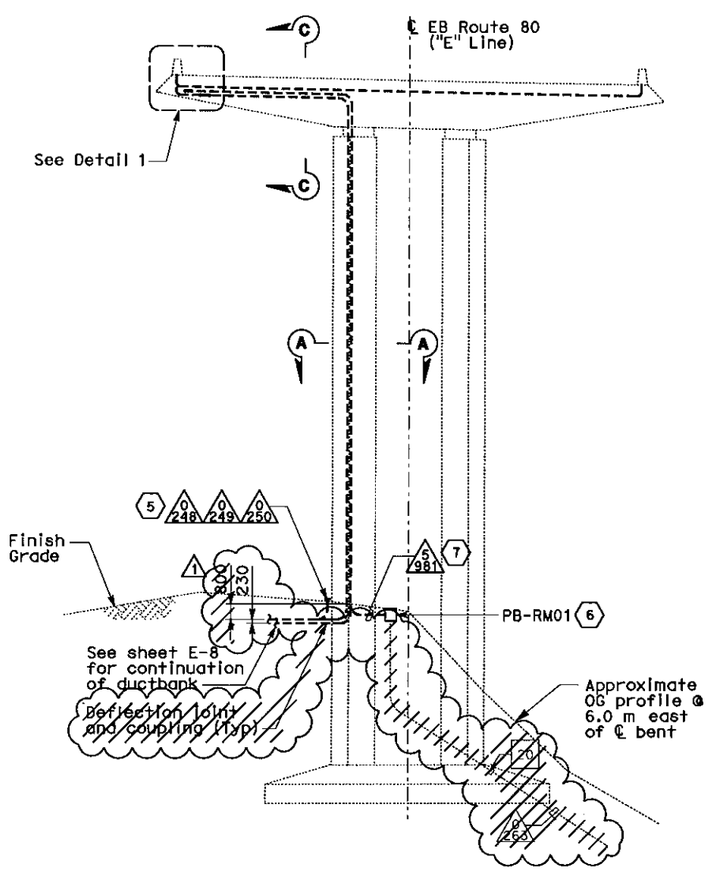

BENT W8R ELEVATION
SCALE: 1:150

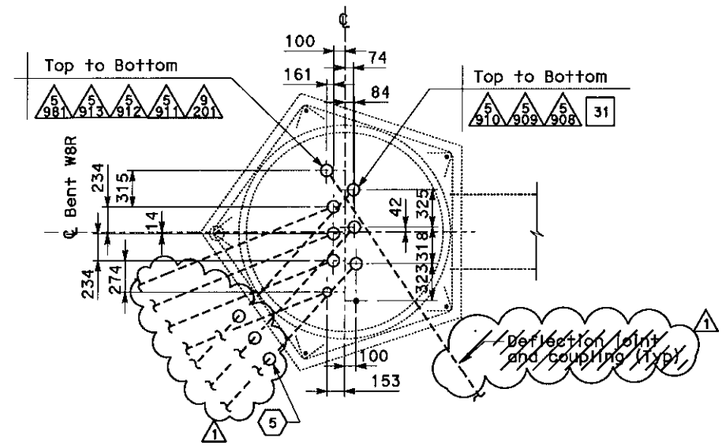

SECTION A-A (3)
NO SCALE

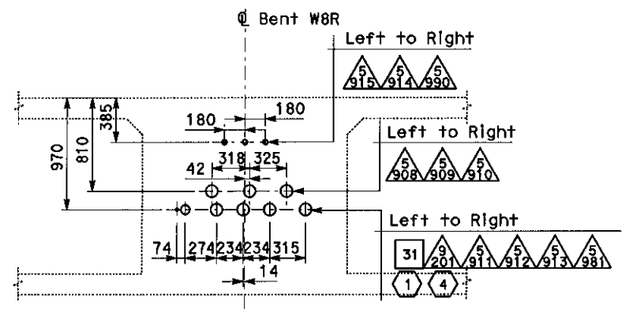

SECTION C-C (3)
NO SCALE

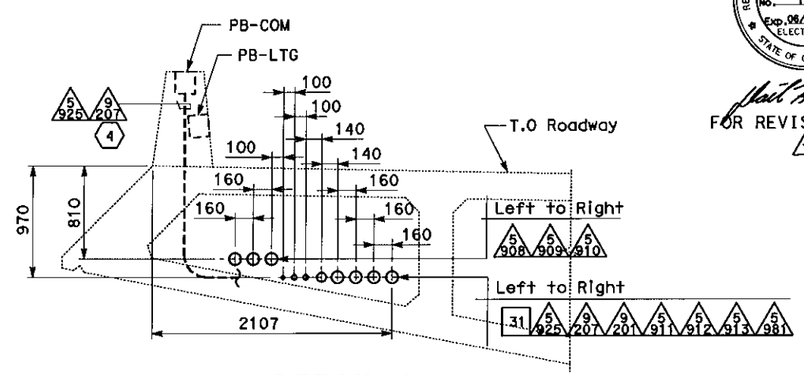

DETAIL 1 (3)
NO SCALE

REGISTERED PROFESSIONAL ENGINEER DAVID H. OTO No. 10699 Exp. 06/30/2013 ELECTRICAL STATE OF CALIFORNIA

FOR REVISION ONLY (1)

NOTES:

1. References:
   - For Transition Structure EB Roadway Plans, see sheet E-91.
   - For Transition Structure EB Girder Plans, see sheet E-118.
   - (*) Dimension to be provided by structural drawings.

SHEET NOTES:

(1) Ground conductor for 250 kcmil bare copper wire. Routed inside underground duct banks in column Bent W8, connected and tapped from ground bar for service platform grounding system. Refer to sheets E-36 and E-128.

(2) For typical conduit support, see sheets E-124.

(3) The embedded conduits may be ajusted to avoid interference with rebars.

(4) Conduits reserved for SMD use only.

(5) Stup out and cap conduits 0248, 0249 and 0250.

(6) Install PB-RM01 flush to finish grade.

(7) Minimum bending radius to be installed in the conduit shall be 20 times the outside diameter of the fiber optic cable. Approximate cable diameter = O.D.=20.07

MARK	DATE	DESCRIPTIONS	BY	CH'D
1	11/11/11	Relocate U/G Duct Bank at Bent W8	JH	EJL
		REVISIONS		

CONTRACT CHANGE ORDER NO. 85
SHEET 47 OF 76

DETAILS
YBI TRANSITION STRUCTURES GIRDER EASTBOUND (BENT W8R ELEVATION AND SECTIONS)
SCALE AS NOTED

E-127

STATE OF CALIFORNIA - DEPARTMENT OF TRANSPORTATION
CONSULTANT FUNCTIONAL SUPERVISOR: BEHZAD GOLEMOHAMMADI
CALCULATED-DESIGNED BY: FK
CHECKED BY: AB
REVISED BY
DATE REVISED

THIS PLAN ACCURATE FOR ELECTRICAL WORK ONLY.

ALL DIMENSIONS ARE IN MILLIMETERS UNLESS OTHERWISE SHOWN

BORDER LAST REVISED 3/1/2007

RELATIVE BORDER SCALE IS IN MILLIMETERS 0 20 40 60 80

USERNAME => llorico
DGN FILE => 40120sua127R01.dgn

CU 04251

EA 0120S1

LAST REVISION 11-11-11
DATE PLOTTED => 18-NOV-2011
TIME PLOTTED => 11:25

Dist	COUNTY	ROUTE	KILOMETER POST TOTAL PROJECT	SHEET No.	TOTAL SHEETS
04	SF	80	12.7/13.2	329 R1	806

REGISTERED ELECTRICAL ENGINEER 2/14/08

6-23-08
PLANS APPROVAL DATE

REGISTERED PROFESSIONAL ENGINEER FADI WALIEDDINE No. 11465 Exp. 12/31/09 ELECTRICAL STATE OF CALIFORNIA

THE STATE OF CALIFORNIA OR ITS OFFICERS OR AGENTS SHALL NOT BE RESPONSIBLE FOR THE ACCURACY OR COMPLETENESS OF ELECTRONIC COPIES OF THIS PLAN SHEET.

PB AMERICAS, Inc.
A Parsons Brinckerhoff Company
303 Second St., Suite 700N
San Francisco, CA 94107-1317

Caltrans Metric

Conduit/Tray No:	0233	Reference:	E-32, E-16, E-17, E-33
Size:	103	Type:	RGS conduit
From:	Manhole-7	To:	Manhole-10
Total Fill (mm2):	2433.01	Remarks:	
Allowable Fill (mm2):	3324.51		
Description of Changes:			

Included Cable No.	Conductor Type	Area (mm2)
A-2011-1	1-3/C + Gnd, #2, 600 V, EPR Insulation	527.18
A-2012-1	1-3/C + Gnd, #2, 600 V, EPR Insulation	527.18
A-2013-1	1-3/C + Gnd, #2, 600 V, EPR Insulation	527.18
A-2014-1	1-3/C + Gnd, #2, 600 V, EPR Insulation	527.18
A-2035-1	1-3/C + Gnd, #6, 600 V, EPR Insulation	324.29
Pull Rope	Soft-Fiber Polyester	0.00

Conduit/Tray No:	0234	Reference:	E-32, E-16, E-17, E-33
Size:	103	Type:	RGS conduit
From:	Manhole-7	To:	Manhole-10
Total Fill (mm2):	2635.90	Remarks:	
Allowable Fill (mm2):	3324.51		
Description of Changes:			

Included Cable No.	Conductor Type	Area (mm2)
2095	1-3/C + Gnd, #2, 600 V, EPR Insulation	527.18
2096	1-3/C + Gnd, #2, 600 V, EPR Insulation	527.18
2097	1-3/C + Gnd, #2, 600 V, EPR Insulation	527.18
2098	1-3/C + Gnd, #2, 600 V, EPR Insulation	527.18
2099	1-3/C + Gnd, #2, 600 V, EPR Insulation	527.18
Pull Rope	Soft-Fiber Polyester	0.00

Conduit/Tray No:	0248	Reference:	E-28, E-33
Size:	103	Type:	RGS conduit
From:	~~Manhole-29~~ Manhole-29A (1)	To:	Bent W8R
Total Fill (mm2):	0.00	Remarks:	Stub up and cap @ W8R
Allowable Fill (mm2):	3324.51		
Description of Changes:	Revise "From" location. (1)		

Included Cable No.	Conductor Type	Area (mm2)
Pull Rope	Soft-Fiber Polyester	0.00

Conduit/Tray No:	0249	Reference:	E-28, E-33
Size:	103	Type:	RGS conduit
From:	~~Manhole-29~~ Manhole-29A (1)	To:	Bent W8R
Total Fill (mm2):	0.00	Remarks:	Stub up and cap @ W8R
Allowable Fill (mm2):	3324.51		
Description of Changes:	Revise "From" location. (1)		

Included Cable No.	Conductor Type	Area (mm2)
Pull Rope	Soft-Fiber Polyester	0.00

Conduit/Tray No:	0250	Reference:	E-28, E-33
Size:	103	Type:	RGS conduit
From:	~~Manhole-29~~ Manhole-29A (1)	To:	Bent W8R
Total Fill (mm2):	0.00	Remarks:	Stub up and cap @ W8R
Allowable Fill (mm2):	3324.51		
Description of Changes:	Revise "From" location. (1)		

Included Cable No.	Conductor Type	Area (mm2)
Pull Rope	Soft-Fiber Polyester	0.00

Conduit/Tray No:	0254	Reference:	E-28, E-33
Size:	103	Type:	RGS conduit
From:	Manhole-30	To:	Bent W8L
Total Fill (mm2):	0.00	Remarks:	Stub up and cap @ W8L
Allowable Fill (mm2):	3324.51		
Description of Changes:			

Included Cable No.	Conductor Type	Area (mm2)
Pull Rope	Soft-Fiber Polyester	0.00

Conduit/Tray No:	0255	Reference:	E-28, E-33
Size:	103	Type:	RGS conduit
From:	Manhole-30	To:	Bent W8L
Total Fill (mm2):	0.00	Remarks:	Stub up and cap @ W8L
Allowable Fill (mm2):	3324.51		
Description of Changes:			

Included Cable No.	Conductor Type	Area (mm2)
Pull Rope	Soft-Fiber Polyester	0.00

REGISTERED PROFESSIONAL ENGINEER DAVID H. OTO No. 10699 Exp. 06/30/2013 ELECTRICAL STATE OF CALIFORNIA

FOR REVISION ONLY (1)

MARK	DATE	DESCRIPTIONS	BY	CH'D
1	11/11/11	Relocate U/G Duct Bank at Bent W8	JH	EJL

REVISIONS

CONTRACT CHANGE ORDER NO. 85
SHEET 48 OF 76

CONDUIT AND TRAY SCHEDULE
UNDERGROUND

E-210

REVISED BY	DATE REVISED
CARMELO RIVERA	ELLERY LUCAS

CALCULATED-DESIGNED BY	CHECKED BY

SUPERVISOR BEHZAD GOLEMOHAMMADI
CONSULTANT FUNCTIONAL SUPERVISOR

STATE OF CALIFORNIA - DEPARTMENT OF TRANSPORTATION
Caltrans

LAST REVISION 11-11-11
DATE PLOTTED => 18-NOV-2011
TIME PLOTTED => 11:25

Dist	COUNTY	ROUTE	KILOMETER POST TOTAL PROJECT	SHEET No.	TOTAL SHEETS
04	SF	80	12.7/13.2	330 R2	806

REGISTERED ELECTRICAL ENGINEER 2/14/08

6-23-08
PLANS APPROVAL DATE

THE STATE OF CALIFORNIA OR ITS OFFICERS OR AGENTS SHALL NOT BE RESPONSIBLE FOR THE ACCURACY OR COMPLETENESS OF ELECTRONIC COPIES OF THIS PLAN SHEET.

REGISTERED PROFESSIONAL ENGINEER FADI WALIEDDINE No. 11465 Exp. 12/31/09 ELECTRICAL STATE OF CALIFORNIA

PB AMERICAS, Inc.
A Parsons Brinckerhoff Company
303 Second St., Suite 700N
San Francisco, CA 94107-1317

REGISTERED PROFESSIONAL ENGINEER SYN YEE CHIN No. 18186 Exp. 09/30/2011 ELECTRICAL STATE OF CALIFORNIA
Syn Yee Chin
FOR REVISION ONLY 1

REGISTERED PROFESSIONAL ENGINEER DAVID H. OTO No. 10699 Exp. 06/30/2013 ELECTRICAL STATE OF CALIFORNIA
David H. Oto
FOR REVISION ONLY 2

Conduit/Tray No:	0256	Reference:	E-28, E-33
Size:	103	Type:	RGS conduit
From:	Manhole-30	To:	Bent W8L
Total Fill (mm2):	0.00	Remarks:	Stub up and cap @ W8L
Allowable Fill (mm2):	3324.51		
Description of Changes:			

Included Cable No.	Conductor Type	Area (mm2)
Pull Rope	Soft-Fiber Polyester	0.00

Conduit/Tray No:	0260	Reference:	E-33, E-18, E-29
Size:	103	Type:	RGS conduit
From:	Manhole-9	To:	Manhole-12
Total Fill (mm2):	970.95	Remarks:	
Allowable Fill (mm2):	3324.51		
Description of Changes:			

Included Cable No.	Conductor Type	Area (mm2)
1475-3	72 Fiber, single mode fiber optic riser cable	323.65
1477-1	72 Fiber, single mode fiber optic riser cable	323.65
2475-4	72 Fiber, single mode fiber optic riser cable	323.65
Pull Rope	Soft-Fiber Polyester	0.00

Conduit/Tray No:	0261	Reference:	E-33, E-18, E-29
Size:	103	Type:	RGS conduit
From:	Manhole-9	To:	Manhole-12
Total Fill (mm2):	3503.08 1	Remarks:	
Allowable Fill (mm2):	4404.97		
Description of Changes:	Added BASE cables and innerducts		

Included Cable No.	Conductor Type	Area (mm2)
1479-1	72 Fiber, single mode fiber optic riser cable inside brown innerduct	875.77
1481-2	12 Fiber, single mode fiber optic cable inside white innerduct	875.77
Blue Innerduct	25.4mm Smoothwall blue innerduct	875.77
Black Innerduct	25.4mm Smoothwall black innerduct	875.77

Conduit/Tray No:	0262	Reference:	E-33, E-18, E-29
Size:	103	Type:	RGS conduit
From:	Manhole-9	To:	Manhole-12
Total Fill (mm2):	1201.71	Remarks:	
Allowable Fill (mm2):	4404.97		
Description of Changes:			

Included Cable No.	Conductor Type	Area (mm2)
1474-4	50 pair #18, shielded pairs, IS/OS shield 600 V, XLPE insul., PVC jacket	1201.71
Pull Rope	Soft-Fiber Polyester	0.00

Conduit/Tray No:	0264	Reference:	E-8, E-28
Size:	53	Type:	RGS conduit
From:	Manhole-29	To:	~~End of conduit 0264~~ Manhole-29A 2
Total Fill (mm2):	0.00	Remarks:	Stub up and cap
Allowable Fill (mm2):	879.42		
Description of Changes:	Revise "To" location. 2		

Included Cable No.	Conductor Type	Area (mm2)
Pull Rope	Soft-Fiber Polyester	0.00

Conduit/Tray No:	0274	Reference:	E-33, E-18, E-29
Size:	103	Type:	RGS conduit
From:	Manhole-9	To:	Manhole-12
Total Fill (mm2):	0.00	Remarks:	
Allowable Fill (mm2):	3324.51		
Description of Changes:			

Included Cable No.	Conductor Type	Area (mm2)
Pull Rope	Soft-Fiber Polyester	0.00

Conduit/Tray No:	0275	Reference:	E-33, E-18, E-29
Size:	103	Type:	RGS conduit
From:	Manhole-9	To:	Manhole-12
Total Fill (mm2):	0.00	Remarks:	
Allowable Fill (mm2):	3324.51		
Description of Changes:			

Included Cable No.	Conductor Type	Area (mm2)
Pull Rope	Soft-Fiber Polyester	0.00

Conduit/Tray No:	0286	Reference:	E-33, E-18, E-29
Size:	103	Type:	RGS conduit
From:	Manhole-9	To:	Manhole-12
Total Fill (mm2):	124.55	Remarks:	
Allowable Fill (mm2):	2576.49		
Description of Changes:			

Included Cable No.	Conductor Type	Area (mm2)
2910-2	4 pair #24, overall shielded, 300 V, PE insulation (Type IC)	77.13
2910-3	4 pair #22, shielded pairs, FEP insulation (Type SSC)	47.42
Pull Rope	Soft-Fiber Polyester	0.00

MARK	DATE	DESCRIPTIONS	BY	CH'D
2	11/11/11	Relocate U/G Duct Bank at Bent W8	JH	EJL
1	07/15/11	B.A.S.E. Trunkline	RB	WB

REVISIONS

CONTRACT CHANGE ORDER NO. 85
SHEET 49 OF 76

CONDUIT AND TRAY SCHEDULE
UNDERGROUND

E-211

REVISED BY | DATE REVISED
CARMELO RIVERA | ELLERY LUCAS
CALCULATED-DESIGNED BY | CHECKED BY
CONSULTANT FUNCTIONAL SUPERVISOR: BEHZAD GOLEMOHAMMADI
STATE OF CALIFORNIA - DEPARTMENT OF TRANSPORTATION

LAST REVISION 11-11-11 | DATE PLOTTED => 18-NOV-2011 | TIME PLOTTED => 11:25

Dist	COUNTY	ROUTE	KILOMETER POST TOTAL PROJECT	SHEET No.	TOTAL SHEETS
04	SF	80	12.7/13.2	363L	806

REGISTERED ELECTRICAL ENGINEER 11/11/11

PLANS APPROVAL DATE

REGISTERED PROFESSIONAL ENGINEER DAVID H. OTO No. 10699 Exp. 06/30/2013 ELECTRICAL STATE OF CALIFORNIA

THE STATE OF CALIFORNIA OR ITS OFFICERS OR AGENTS SHALL NOT BE RESPONSIBLE FOR THE ACCURACY OR COMPLETENESS OF ELECTRONIC COPIES OF THIS PLAN SHEET.

PB AMERICAS, Inc.
A Parsons Brinckerhoff Company
303 Second St., Suite 700N
San Francisco, CA 94107-1317

Caltrans Metric

Conduit/Tray No:	0248A
Reference:	E-28, E-29A, E-33A
Size:	103
Type:	RGS conduit
From:	Manhole-29
To:	Manhole-29A
Total Fill (mm2):	0.00
Remarks:	
Allowable Fill (mm2):	3324.51
Description of Changes:	Added new conduit number.

Included Cable No.	Conductor Type	Area (mm2)
Pull Rope	Soft-Fiber Polyester	0.00

Conduit/Tray No:	0249A
Reference:	E-28, E-29A, E-33A
Size:	103
Type:	RGS conduit
From:	Manhole-29
To:	Manhole-29A
Total Fill (mm2):	0.00
Remarks:	
Allowable Fill (mm2):	3324.51
Description of Changes:	Added new conduit number.

Included Cable No.	Conductor Type	Area (mm2)
Pull Rope	Soft-Fiber Polyester	0.00

Conduit/Tray No:	0250A
Reference:	E-28, E-29A, E-33A
Size:	103
Type:	RGS conduit
From:	Manhole-29
To:	Manhole-29A
Total Fill (mm2):	0.00
Remarks:	
Allowable Fill (mm2):	3324.51
Description of Changes:	Added new conduit number.

Included Cable No.	Conductor Type	Area (mm2)
Pull Rope	Soft-Fiber Polyester	0.00

Conduit/Tray No:	0264A
Reference:	E-28, E-29A, E-33A
Size:	103
Type:	RGS conduit
From:	Manhole-29
To:	Manhole-29A
Total Fill (mm2):	0.00
Remarks:	
Allowable Fill (mm2):	3324.51
Description of Changes:	Added new conduit number.

Included Cable No.	Conductor Type	Area (mm2)
Pull Rope	Soft-Fiber Polyester	0.00

Conduit/Tray No:	0908
Reference:	E-28, E-29A, E-33A
Size:	103
Type:	RGS conduit
From:	Manhole-29
To:	Manhole-29A
Total Fill (mm2):	2573.71
Remarks:	
Allowable Fill (mm2):	3324.51
Description of Changes:	Added new conduit number.

Included Cable No.	Conductor Type	Area (mm2)
A-2007-1	1-3/C + Gnd, #6, 600 V, EPR insulation	324.29
A-2008-1	1-3/C + Gnd, #4, 600 V, EPR insulation	366.10
A-2009-1	1-3/C + Gnd, #8, 600 V, EPR insulation	262.68
A-2010-1	1-3/C + Gnd, #8, 600 V, EPR insulation	262.68
Pull Rope	Soft-Fiber Polyester	0.00
S-2023-1	1-3/C + Gnd, #6, 600 V, EPR insulation	324.29
S-2024-1	1-3/C + Gnd, #6, 600 V, EPR insulation	324.29
S-2041-1	1-3/C + Gnd, #6, 600 V, EPR insulation	324.29
S-2042-1	1-3/C + Gnd, #6, 600 V, EPR insulation	324.29
UP202-8	2 + 1 Gnd, #10, #10, 600 V, RHH/RHW insulation	60.80

Conduit/Tray No:	0909
Reference:	E-28, E-29A, E-33A
Size:	103
Type:	RGS conduit
From:	Manhole-29
To:	Manhole-29A
Total Fill (mm2):	2986.46
Remarks:	
Allowable Fill (mm2):	3324.51
Description of Changes:	Added new conduit number.

Included Cable No.	Conductor Type	Area (mm2)
2091	1-3/C + Gnd, #4, 600 V, EPR insulation	366.10
2092	1-3/C + Gnd, #4, 600 V, EPR insulation	366.10
2093	1-3/C + Gnd, #4, 600 V, EPR insulation	366.10
2094	1-3/C + Gnd, #2, 600 V, EPR insulation	527.18
2100	1-3/C + Gnd, #4, 600 V, EPR insulation	366.10
2101	1-3/C + Gnd, #4, 600 V, EPR insulation	366.10
2102	1-3/C + Gnd, #4, 600 V, EPR insulation	366.10
A-2005-1	1-3/C + Gnd, #8, 600 V, EPR insulation	262.68
Pull Rope	Soft-Fiber Polyester	0.00

MARK	DATE	DESCRIPTIONS	BY	CH'D
0	11/11/11	Relocate U/G Duct Bank at Bent W8	JH	EJL

REVISIONS

CONTRACT CHANGE ORDER NO. 85
SHEET 50 OF 76

CONDUIT AND TRAY SCHEDULE
UNDERGROUND

E-244L

THIS PLAN ACCURATE FOR ELECTRICAL WORK ONLY.

STATE OF CALIFORNIA - DEPARTMENT OF TRANSPORTATION
Caltrans

CONSULTANT FUNCTIONAL SUPERVISOR: BRADY NADELL
CALCULATED-DESIGNED BY: JEFFRI HALIM
CHECKED BY: ELLERY LUCAS
REVISED BY
DATE REVISED

LAST REVISION 00-00-00
DATE PLOTTED => 18-NOV-2011
TIME PLOTTED => 11:25

Dist	COUNTY	ROUTE	KILOMETER POST TOTAL PROJECT	SHEET No.	TOTAL SHEETS
04	SF	80	12.7/13.2	363M	806

Caltrans Metric

REGISTERED ELECTRICAL ENGINEER 11/11/11

PLANS APPROVAL DATE

REGISTERED PROFESSIONAL ENGINEER DAVID H. OTO No. 10699 Exp. 06/30/2013 ELECTRICAL STATE OF CALIFORNIA

THE STATE OF CALIFORNIA OR ITS OFFICERS OR AGENTS SHALL NOT BE RESPONSIBLE FOR THE ACCURACY OR COMPLETENESS OF ELECTRONIC COPIES OF THIS PLAN SHEET.

PB AMERICAS, Inc.
A Parsons Brinckerhoff Company
303 Second St., Suite 700N
San Francisco, CA 94107-1317

Conduit/Tray No:	0910
Size:	103
From:	Manhole-29
Total Fill (mm2):	0.00
Allowable Fill (mm2):	3324.51
Reference:	E-28, E-29A, E-33A
Type:	RGS conduit
To:	Manhole-29A
Remarks:	
Description of Changes:	Added new conduit number.

Included Cable No.	Conductor Type	Area (mm2)
Pull Rope	Soft-Fiber Polyester	0.00

Conduit/Tray No:	0911
Size:	103
From:	Manhole-9
Total Fill (mm2):	2403.42
Allowable Fill (mm2):	3324.51
Reference:	E-29, E-29A, E-33A
Type:	RGS conduit
To:	Manhole-9A
Remarks:	
Description of Changes:	Added new conduit number.

Included Cable No.	Conductor Type	Area (mm2)
2473-1	50 pair #18, shielded pairs, IS/OS shield 600 V, XLPE insul., PVC jacket	1201.71
2474-1	50 pair #18, shielded pairs, IS/OS shield 600 V, XLPE insul., PVC jacket	1201.71
Pull Rope	Soft-Fiber Polyester	0.00

Conduit/Troy No:	0912
Size:	103
From:	Manhole-9
Total Fill (mm2):	647.30
Allowable Fill (mm2):	3324.51
Reference:	E-29, E-29A, E-33A
Type:	RGS conduit
To:	Manhole-9A
Remarks:	
Description of Changes:	Added new conduit number.

Included Cable No.	Conductor Type	Area (mm2)
2475-1	72 Fiber, single mode fiber optic riser cable	323.65
2475-4	72 Fiber, single mode fiber optic riser cable	323.65
Pull Rope	Soft-Fiber Polyester	0.00

Conduit/Tray No:	0913
Size:	103
From:	Manhole-9
Total Fill (mm2):	3503.08
Allowable Fill (mm2):	4404.97
Reference:	E-29, E-29A, E-33A
Type:	RGS conduit
To:	Manhole-9A
Remarks:	
Description of Changes:	Added new conduit number.

Included Cable No.	Conductor Type	Area (mm2)
2481-1	12 Fiber, single mode fiber optic cable inside white innerduct	875.77
Black Innerduct	25.4mm Smoothwall black innerduct	875.77
Blue Innerduct	25.4mm Smoothwall blue innerduct	875.77
Brown Innerduct	25.4mm Smoothwall brown innerduct	875.77
Pull Rope		

MARK	DATE	DESCRIPTIONS	BY	CH'D
0	11/11/11	Relocate U/G Duct Bank at Bent W8	JH	EJL

REVISIONS

CONTRACT CHANGE ORDER NO. 85
SHEET 51 OF 76

THIS PLAN ACCURATE FOR ELECTRICAL WORK ONLY.

CONDUIT AND TRAY SCHEDULE
UNDERGROUND

E-244M

STATE OF CALIFORNIA - DEPARTMENT OF TRANSPORTATION
Caltrans

CONSULTANT FUNCTIONAL SUPERVISOR: BRADY NADELL
CALCULATED-DESIGNED BY: JEFFRI HALIM
CHECKED BY: ELLERY LUCAS
REVISED BY
DATE REVISED

LAST REVISION 00-00-00
DATE PLOTTED => 18-NOV-2011
TIME PLOTTED => 11:25

Dist	COUNTY	ROUTE	KILOMETER POST TOTAL PROJECT	SHEET No.	TOTAL SHEETS
04	SF	80	12.7/13.2	450 R2	806

REGISTERED ELECTRICAL ENGINEER 2/14/08

6-23-08
PLANS APPROVAL DATE

THE STATE OF CALIFORNIA OR ITS OFFICERS OR AGENTS SHALL NOT BE RESPONSIBLE FOR THE ACCURACY OR COMPLETENESS OF ELECTRONIC COPIES OF THIS PLAN SHEET.

REGISTERED PROFESSIONAL ENGINEER SYN YEE CHIN No. 18188 Exp. 09/30/2011 ELECTRICAL STATE OF CALIFORNIA

REGISTERED PROFESSIONAL ENGINEER DAVID H. OTO No. 10699 Exp. 06/30/2013 ELECTRICAL STATE OF CALIFORNIA

REGISTERED PROFESSIONAL ENGINEER FADI WALIEDDINE No. 11465 Exp. 12/31/09 ELECTRICAL STATE OF CALIFORNIA

PB AMERICAS, Inc.
A Parsons Brinckerhoff Company
303 Second St., Suite 700N
San Francisco, CA 94107-1317

Syn Yee Chin
FOR REVISION ONLY 1

David H. Oto
FOR REVISION ONLY 2

Conduit/Tray No: 5909 | Reference: E-28, E-33, E-127, E-130
Size: 103 | Type: RGS conduit
From: Electrical Vault #1E | To: ~~Manhole 29~~ Manhole-29A 2
Total Fill (mm2): 2986.46 | Remarks:
Allowable Fill (mm2): 3324.51
Description of Changes: Revise "To" location. 2

Included Cable No.	Conductor Type	Area (mm2)
2091	1-3/C + Gnd, #4, 600 V, EPR Insulation	366.10
2092	1-3/C + Gnd, #4, 600 V, EPR Insulation	366.10
2093	1-3/C + Gnd, #4, 600 V, EPR Insulation	366.10
2094	1-3/C + Gnd, #2, 600 V, EPR Insulation	527.18
2100	1-3/C + Gnd, #4, 600 V, EPR Insulation	366.10
2101	1-3/C + Gnd, #4, 600 V, EPR Insulation	366.10
2102	1-3/C + Gnd, #4, 600 V, EPR Insulation	366.10
A-2005-1	1-3/C + Gnd, #8, 600 V, EPR Insulation	262.68
Pull Rope	Soft-Fiber Polyester	0.00

Conduit/Tray No: 5910 | Reference: E-28, E-33, E-127, E-130
Size: 103 | Type: RGS conduit
From: Electrical Vault #1E | To: ~~Manhole 29~~ Manhole-29A 2
Total Fill (mm2): 0.00 | Remarks:
Allowable Fill (mm2): 3324.51
Description of Changes: Revise "To" location. 2

Included Cable No.	Conductor Type	Area (mm2)
Pull Rope	Soft-Fiber Polyester	0.00

Conduit/Tray No: 5911 | Reference: E-33, E-127, E-130, E-29
Size: 103 | Type: RGS conduit
From: TOS/COM Vault #1E | To: ~~Manhole 9~~ Manhole-9A 2
Total Fill (mm2): 2403.42 | Remarks:
Allowable Fill (mm2): 2576.49
Description of Changes: Revise "To" location. 2

Included Cable No.	Conductor Type	Area (mm2)
2473-1	50 pair #18, shielded pairs, IS/OS shield 600 V, XLPE insul., PVC jacket	1201.71
2474-1	50 pair #18, shielded pairs, IS/OS shield 600 V, XLPE insul., PVC jacket	1201.71
Pull Rope	Soft-Fiber Polyester	0.00

Conduit/Tray No: 5912 | Reference: E-33, E-127, E-130, E-29
Size: 103 | Type: RGS conduit
From: TOS/COM Vault #1E | To: ~~Manhole 9~~ Manhole-9A 2
Total Fill (mm2): 647.30 | Remarks:
Allowable Fill (mm2): 2576.49
Description of Changes: Revise "To" location. 2

Included Cable No.	Conductor Type	Area (mm2)
2475-1	72 Fiber, single mode fiber optic riser cable	323.65
2475-4	72 Fiber, single mode fiber optic riser cable	323.65
Pull Rope	Soft-Fiber Polyester	0.00

Conduit/Tray No: 5913 | Reference: E-33, E-127, E-130, E-29
Size: 103 | Type: RGS conduit
From: TOS/COM Vault #1E | To: ~~Manhole 9~~ Manhole 9A 2
Total Fill (mm2): 3503.08 1 | Remarks:
Allowable Fill (mm2): 4404.97
Description of Changes: Added BASE cable and innerducts. Revise "To" location. 2

Included Cable No.	Conductor Type	Area (mm2)
Brown Innerduct	25.4mm Smoothwall brown innerduct	875.77
2481-1	12 Fiber, single mode fiber optic cable inside white innerduct	875.77
Blue Innerduct	25.4mm Smoothwall blue innerduct	875.77
Black Innerduct	25.4mm Smoothwall black innerduct	875.77

Conduit/Tray No: 5914 | Reference: E-130
Size: 41 | Type: RGS conduit
From: PB-LTG | To: PB-LTG
Total Fill (mm2): 311.89 | Remarks:
Allowable Fill (mm2): 414.28
Description of Changes:

Included Cable No.	Conductor Type	Area (mm2)
Pull Rope	Soft-Fiber Polyester	0.00
S-2041-3	1-3/C + Gnd, #8, 600 V, EPR Insulation	262.68
UP201-12	2 + 1 Gnd, #12, #12, 600 V, RHH/RHW Insulation	49.21

Conduit/Tray No: 5915 | Reference: E-130
Size: 41 | Type: RGS conduit
From: PB-COM | To: PB-COM
Total Fill (mm2): 0.00 | Remarks:
Allowable Fill (mm2): 534.55
Description of Changes:

Included Cable No.	Conductor Type	Area (mm2)
Pull Rope	Soft-Fiber Polyester	0.00

MARK	DATE	DESCRIPTIONS	BY	CH'D
2	11/11/11	Relocate U/G Duct Bank at Bent W8	JH	EJL
1	07/15/11	B.A.S.E. Trunkline	RB	WB

REVISIONS

CONTRACT CHANGE ORDER NO. 85
SHEET 52 OF 76

CONDUIT AND TRAY SCHEDULE
YBI TRANSITION STRUCTURES GIRDER EB

E-331

STATE OF CALIFORNIA - DEPARTMENT OF TRANSPORTATION
CONSULTANT FUNCTIONAL SUPERVISOR: BEHZAD GOLEMOHAMMADI
CALCULATED-DESIGNED BY: CARMELO RIVERA | CHECKED BY: ELLERY LUCAS
REVISED BY | DATE REVISED

LAST REVISION 11-11-11 | DATE PLOTTED => 18-NOV-2011 | TIME PLOTTED => 11:25

Dist	COUNTY	ROUTE	KILOMETER POST TOTAL PROJECT	SHEET No.	TOTAL SHEETS
04	SF	80	12.7/13.2	457A R2	806

REGISTERED ELECTRICAL ENGINEER 4/10/09

6-23-08
PLANS APPROVAL DATE

REGISTERED PROFESSIONAL ENGINEER DAVID H. OTO No. 10699 Exp. 06/30/2013 ELECTRICAL STATE OF CALIFORNIA

REGISTERED PROFESSIONAL ENGINEER FADI WALIEDDINE No. 11465 Exp. 12/31/09 ELECTRICAL STATE OF CALIFORNIA

THE STATE OF CALIFORNIA OR ITS OFFICERS OR AGENTS SHALL NOT BE RESPONSIBLE FOR THE ACCURACY OR COMPLETENESS OF ELECTRONIC COPIES OF THIS PLAN SHEET.

PB AMERICAS, Inc.
A Parsons Brinckerhoff Company
303 Second St., Suite 700N
San Francisco, CA 94107-1317

Caltrans Metric

5

FOR REVISION ONLY 1 2

Conduit/Tray No:	5900	Reference:	E-130
Size:	41	Type:	RGS conduit
From:	Electrical Vault #1E	To:	PB-LTG
Total Fill (mm2):	49.21	Remarks:	
Allowable Fill (mm2):	534.55		
Description of Changes:			

Included Cable No.	Conductor Type	Area (mm2)
Pull Rope	Soft-Fiber Polyester	0.00
UP201-12	2 + 1 Gnd, #12, #12, 600 V, RHH/RHW Insulation	49.21

Conduit/Tray No:	5901	Reference:	E-118, E-130, E-133
Size:	103	Type:	RGS conduit
From:	Electrical Vault #1E	To:	PB-2A
Total Fill (mm2):	~~3268.59~~ 3207.99 1	Remarks:	
Allowable Fill (mm2):	3324.51		
Description of Changes:	Rerouted cable UP202-8. 1		

Included Cable No.	Conductor Type	Area (mm2)
2092	1-3/C + Gnd, #4, 600 V, EPR Insulation	366.10
2093	1-3/C + Gnd, #4, 600 V, EPR Insulation	366.10
2094	1-3/C + Gnd, #2, 600 V, EPR Insulation	527.18
2101	1-3/C + Gnd, #4, 600 V, EPR Insulation	366.10
2102	1-3/C + Gnd, #4, 600 V, EPR Insulation	366.10
2254-1	1-3/C #16, 600 V, EPR Insulation	62.07
A-2005-1	1-3/C + Gnd, #8, 600 V, EPR Insulation	262.68
A-2008-1	1-3/C + Gnd, #4, 600 V, EPR Insulation	366.10
A-2009-1	1-3/C + Gnd, #8, 600 V, EPR Insulation	262.68
A-2010-1	1-3/C + Gnd, #8, 600 V, EPR Insulation	262.68
Pull Rope	Soft-Fiber Polyester	0.00
1 ~~UP202-8~~	~~2 + 1 Gnd, #10, #10, 600 V, RHH/RHW Insulation~~	~~60.80~~

Conduit/Tray No:	5901A	Reference:	E-119, E-131, E-133
Size:	103	Type:	RGS conduit
From:	PB-2A	To:	Electrical Vault #2E
Total Fill (mm2):	~~3268.59~~ 3207.99 1	Remarks:	
Allowable Fill (mm2):	3324.51		
Description of Changes:	Rerouted cable UP202-8. 1		

Included Cable No.	Conductor Type	Area (mm2)
2092	1-3/C + Gnd, #4, 600 V, EPR Insulation	366.10
2093	1-3/C + Gnd, #4, 600 V, EPR Insulation	366.10
2094	1-3/C + Gnd, #2, 600 V, EPR Insulation	527.18
2101	1-3/C + Gnd, #4, 600 V, EPR Insulation	366.10
2102	1-3/C + Gnd, #4, 600 V, EPR Insulation	366.10
2254-1	1-3/C #16, 600 V, EPR Insulation	62.07
A-2005-1	1-3/C + Gnd, #8, 600 V, EPR Insulation	262.68
A-2008-1	1-3/C + Gnd, #4, 600 V, EPR Insulation	366.10
A-2009-1	1-3/C + Gnd, #8, 600 V, EPR Insulation	262.68
A-2010-1	1-3/C + Gnd, #8, 600 V, EPR Insulation	262.68
Pull Rope	Soft-Fiber Polyester	0.00
1 ~~UP202-8~~	~~2 + 1 Gnd, #10, #10, 600 V, RHH/RHW Insulation~~	~~60.80~~

Conduit/Tray No:	5908	Reference:	E-28, E-33, E-127, E-130
Size:	103	Type:	RGS conduit
From:	Electrical Vault #1E	To:	~~Manhole-29~~ Manhole-29A 2
Total Fill (mm2):	~~2573.71~~ 2512.91 1	Remarks:	
Allowable Fill (mm2):	3324.51 1		
Description of Changes:	Rerouted cable UP202-8. Revise "To" location. 2		

Included Cable No.	Conductor Type	Area (mm2)
A-2007-1	1-3/C + Gnd, #6, 600 V, EPR Insulation	324.29
A-2008-1	1-3/C + Gnd, #4, 600 V, EPR Insulation	366.10
A-2009-1	1-3/C + Gnd, #8, 600 V, EPR Insulation	262.68
A-2010-1	1-3/C + Gnd, #8, 600 V, EPR Insulation	262.68
Pull Rope	Soft-Fiber Polyester	0.00
S-2023-1	1-3/C + Gnd, #6, 600 V, EPR Insulation	324.29
S-2024-1	1-3/C + Gnd, #6, 600 V, EPR Insulation	324.29
S-2041-1	1-3/C + Gnd, #6, 600 V, EPR Insulation	324.29
S-2042-1	1-3/C + Gnd, #6, 600 V, EPR Insulation	324.29
1 ~~UP202-8~~	~~2 + 1 Gnd, #10, #10, 600 V, RHH/RHW Insulation~~	~~60.80~~

Conduit/Tray No:	5922	Reference:	E-118, E-130, E-133
Size:	103	Type:	RGS conduit
From:	TOS/COM Vault #1E	To:	PB-2E
Total Fill (mm2):	2599.62	Remarks:	
Allowable Fill (mm2):	3324.51		
Description of Changes:			

Included Cable No.	Conductor Type	Area (mm2)
2143	1 - 2 pair, shielded #18 with IS/OA, 600 V, PVC Jacket	98.10
2170	1 - 2 pair, shielded #18 with IS/OA, 600 V, PVC Jacket	98.10
2473-2	50 pair #18, shielded pairs, IS/OS shield 600 V, XLPE Insul., PVC Jacket	1201.71
2474-2	50 pair #18, shielded pairs, IS/OS shield 600 V, XLPE Insul., PVC Jacket	1201.71
Pull Rope	Soft-Fiber Polyester	0.00

MARK	DATE	DESCRIPTIONS	BY	CH'D
2	11/11/11	Relocate U/G Duct Bank at Bent W8	JH	EJL
1	06/30/11	PL-12W CABLE, SEISMIC JOINT CONDUIT, MISC.	TW	RG

REVISIONS

CONTRACT CHANGE ORDER NO. 85
SHEET 53 OF 76

CONDUIT AND TRAY SCHEDULE
YBI TRANSITION STRUCTURES GIRDER EB

E-338A

5 ADDED PER ADDENDUM No. 5 DATED JULY 30, 2009

STATE OF CALIFORNIA - DEPARTMENT OF TRANSPORTATION
Caltrans

CONSULTANT FUNCTIONAL SUPERVISOR: BEHZAD GOLEMOHAMMADI
CALCULATED-DESIGNED BY: JEFFRI HALIM
CHECKED BY: ELLERY LUCAS
REVISED BY
DATE REVISED

LAST REVISION 11-11-11
DATE PLOTTED => 18-NOV-2011
TIME PLOTTED => 11:25

Dist	COUNTY	ROUTE	KILOMETER POST TOTAL PROJECT	SHEET No.	TOTAL SHEETS
04	SF	80	12.7/13.2	461 R1	806

REGISTERED ELECTRICAL ENGINEER 2/14/08

6-23-08
PLANS APPROVAL DATE

THE STATE OF CALIFORNIA OR ITS OFFICERS OR AGENTS SHALL NOT BE RESPONSIBLE FOR THE ACCURACY OR COMPLETENESS OF ELECTRONIC COPIES OF THIS PLAN SHEET.

REGISTERED PROFESSIONAL ENGINEER DAVID H. OTO No. 10699 Exp. 06/30/2013 ELECTRICAL STATE OF CALIFORNIA

REGISTERED PROFESSIONAL ENGINEER FADI WALIEDDINE No. 11465 Exp. 12/31/09 ELECTRICAL STATE OF CALIFORNIA

PB AMERICAS, Inc.
A Parsons Brinckerhoff Company
303 Second St., Suite 700N
San Francisco, CA 94107-1317

FOR REVISION ONLY
1

Conduit/Tray No:	9201	Reference:	E-33, E-127, E-130
Size:	78	Type:	RGS conduit
From:	~~Manhole 9~~ Manhole-9A 1	To:	TOS/COM Vault #1E
Total Fill (mm2):	1072.95	Remarks:	
Allowable Fill (mm2):	1935.24		

Description of Changes: Revise "From" location. 1

Included Cable No.	Conductor Type	Area (mm2)
2900-111A	4 pair #22, shielded pairs, FEP insulation (Type SSC)	47.42
2900-111B	4 pair #22, shielded pairs, FEP insulation (Type SSC)	47.42
2900-11A	4 pair #22, shielded pairs, FEP insulation (Type SSC)	47.42
2900-11B	4 pair #22, shielded pairs, FEP insulation (Type SSC)	47.42
2900-11C	4 pair #22, shielded pairs, FEP insulation (Type SSC)	47.42
2900-121A	4 pair #22, shielded pairs, FEP insulation (Type SSC)	47.42
2900-121B	4 pair #22, shielded pairs, FEP insulation (Type SSC)	47.42
2900-121C	4 pair #22, shielded pairs, FEP insulation (Type SSC)	47.42
2900-21A	4 pair #22, shielded pairs, FEP insulation (Type SSC)	47.42
2900-21B	4 pair #22, shielded pairs, FEP insulation (Type SSC)	47.42
2900-21C	4 pair #22, shielded pairs, FEP insulation (Type SSC)	47.42
2900-31A	4 pair #22, shielded pairs, FEP insulation (Type SSC)	47.42
2900-31B	4 pair #22, shielded pairs, FEP insulation (Type SSC)	47.42
2900-31C	4 pair #22, shielded pairs, FEP insulation (Type SSC)	47.42
2900-41A	4 pair #22, shielded pairs, FEP insulation (Type SSC)	47.42
2900-41B	4 pair #22, shielded pairs, FEP insulation (Type SSC)	47.42
2900-51A	4 pair #22, shielded pairs, FEP insulation (Type SSC)	47.42
2900-51B	4 pair #22, shielded pairs, FEP insulation (Type SSC)	47.42
2900-51C	4 pair #22, shielded pairs, FEP insulation (Type SSC)	47.42
2900-81A	4 pair #22, shielded pairs, FEP insulation (Type SSC)	47.42
2910-2	4 pair #24, overall shielded, 300 V, PE insulation (Type IC)	77.13
2910-3	4 pair #22, shielded pairs, FEP insulation (Type SSC)	47.42
Pull Rope	Soft-Fiber Polyester	0.00

Conduit/Tray No:	9202	Reference:	E-169, E-82, E-75, E-29
Size:	53	Type:	RGS conduit
From:	Junction Box	To:	TOS/COM Vault #1W
Total Fill (mm2):	0.00	Remarks:	
Allowable Fill (mm2):	879.42		

Description of Changes:

Included Cable No.	Conductor Type	Area (mm2)
Pull Rope	Soft-Fiber Polyester	0.00

Conduit/Tray No:	9203	Reference:	E-160
Size:	27	Type:	RGS conduit
From:	Junction Box	To:	Sensor 6-1
Total Fill (mm2):	47.42	Remarks:	
Allowable Fill (mm2):	229.03		

Description of Changes:

Included Cable No.	Conductor Type	Area (mm2)
2900-61A	4 pair #22, shielded pairs, FEP insulation (Type SSC)	47.42
Pull Rope	Soft-Fiber Polyester	0.00

Conduit/Troy No:	9204	Reference:	E-120, E-161
Size:	27	Type:	RGS conduit
From:	Sensor 10-1	To:	PB-COM
Total Fill (mm2):	94.84	Remarks:	
Allowable Fill (mm2):	177.49		

Description of Changes:

Included Cable No.	Conductor Type	Area (mm2)
2900-101A	4 pair #22, shielded pairs, FEP insulation (Type SSC)	47.42
2900-101B	4 pair #22, shielded pairs, FEP insulation (Type SSC)	47.42
Pull Rope	Soft-Fiber Polyester	0.00

Conduit/Troy No:	9205	Reference:	E-120, E-161
Size:	27	Type:	RGS conduit
From:	Sensor 9-1	To:	PB-COM
Total Fill (mm2):	142.26	Remarks:	
Allowable Fill (mm2):	229.03		

Description of Changes:

Included Cable No.	Conductor Type	Area (mm2)
2900-91A	4 pair #22, shielded pairs, FEP insulation (Type SSC)	47.42
2900-91B	4 pair #22, shielded pairs, FEP insulation (Type SSC)	47.42
2900-91C	4 pair #22, shielded pairs, FEP insulation (Type SSC)	47.42
Pull Rope	Soft-Fiber Polyester	0.00

Conduit/Tray No:	9206	Reference:	E-120, E-161
Size:	27	Type:	RGS conduit
From:	Sensor 13-1	To:	PB-COM
Total Fill (mm2):	47.42	Remarks:	
Allowable Fill (mm2):	303.46		

Description of Changes:

Included Cable No.	Conductor Type	Area (mm2)
2900-131A	4 pair #22, shielded pairs, FEP insulation (Type SSC)	47.42
Pull Rope	Soft-Fiber Polyester	0.00

MARK	DATE	DESCRIPTIONS	BY	CH'D
1	11/11/11	Relocate U/G Duct Bank at Bent W8	JH	EJL

REVISIONS

CONTRACT CHANGE ORDER NO. 85
SHEET 54 OF 76

CONDUIT AND TRAY SCHEDULE
STRONG MOTION DETECTION SYSTEM

E-342

STATE OF CALIFORNIA - DEPARTMENT OF TRANSPORTATION

CONSULTANT FUNCTIONAL SUPERVISOR: BEHZAD GOLEMOHAMMADI

CALCULATED-DESIGNED BY: CARMELO RIVERA | CHECKED BY: ELLERY LUCAS

REVISED BY | DATE REVISED

LAST REVISION 11-11-11 | DATE PLOTTED => 18-NOV-2011 | TIME PLOTTED => 11:26

Dist	COUNTY	ROUTE	KILOMETER POST TOTAL PROJECT	SHEET No.	TOTAL SHEETS
04	SF	80	12.7/13.2	466B	806

REGISTERED ELECTRICAL ENGINEER 11/11/11

PLANS APPROVAL DATE

REGISTERED PROFESSIONAL ENGINEER DAVID H. OTO No. 10699 Exp. 06/30/2013 ELECTRICAL STATE OF CALIFORNIA

THE STATE OF CALIFORNIA OR ITS OFFICERS OR AGENTS SHALL NOT BE RESPONSIBLE FOR THE ACCURACY OR COMPLETENESS OF ELECTRONIC COPIES OF THIS PLAN SHEET.

PB AMERICAS, Inc.
A Parsons Brinckerhoff Company
303 Second St., Suite 700N
San Francisco, CA 94107-1317

Conduit/Tray No:	9201A
Size:	78
From:	Manhole-9
Total Fill (mm2):	1072.95
Allowable Fill (mm2):	1935.24
Reference:	E-29, E029A, E-33A
Type:	RGS conduit
To:	Manhole-9A
Remarks:	
Description of Changes:	Added new conduit number.

Included Cable No.	Conductor Type	Area (mm2)
2900-111A	4 pair #22, shielded pairs, FEP insulation (Type SSC)	47.42
2900-111B	4 pair #22, shielded pairs, FEP insulation (Type SSC)	47.42
2900-11A	4 pair #22, shielded pairs, FEP insulation (Type SSC)	47.42
2900-11B	4 pair #22, shielded pairs, FEP insulation (Type SSC)	47.42
2900-11C	4 pair #22, shielded pairs, FEP insulation (Type SSC)	47.42
2900-121A	4 pair #22, shielded pairs, FEP insulation (Type SSC)	47.42
2900-121B	4 pair #22, shielded pairs, FEP insulation (Type SSC)	47.42
2900-121C	4 pair #22, shielded pairs, FEP insulation (Type SSC)	47.42
2900-21A	4 pair #22, shielded pairs, FEP insulation (Type SSC)	47.42
2900-21B	4 pair #22, shielded pairs, FEP insulation (Type SSC)	47.42
2900-21C	4 pair #22, shielded pairs, FEP insulation (Type SSC)	47.42
2900-31A	4 pair #22, shielded pairs, FEP insulation (Type SSC)	47.42
2900-31B	4 pair #22, shielded pairs, FEP insulation (Type SSC)	47.42
2900-31C	4 pair #22, shielded pairs, FEP insulation (Type SSC)	47.42
2900-41A	4 pair #22, shielded pairs, FEP insulation (Type SSC)	47.42
2900-41B	4 pair #22, shielded pairs, FEP insulation (Type SSC)	47.42
2900-51A	4 pair #22, shielded pairs, FEP insulation (Type SSC)	47.42
2900-51B	4 pair #22, shielded pairs, FEP insulation (Type SSC)	47.42
2900-51C	4 pair #22, shielded pairs, FEP insulation (Type SSC)	47.42
2900-81A	4 pair #22, shielded pairs, FEP insulation (Type SSC)	47.42
2910-2	4 pair #24, overall shielded, 300 V, PE insulation (Type IC)	77.13
2910-3	4 pair #22, shielded pairs, FEP insulation (Type SSC)	47.42
Pull Rope	Soft-Fiber Polyester	0.00

MARK	DATE	DESCRIPTIONS	BY	CH'D
0	11/11/11	Relocate U/G Duct Bank at Bent W8	JH	EJL

REVISIONS

CONTRACT CHANGE ORDER NO. 85
SHEET 55 OF 76

CONDUIT AND TRAY SCHEDULE
STRONG MOTION DETECTION SYSTEM

E-347B

THIS PLAN ACCURATE FOR ELECTRICAL WORK ONLY.

STATE OF CALIFORNIA - DEPARTMENT OF TRANSPORTATION

CONSULTANT FUNCTIONAL SUPERVISOR: BRADY NADELL

CALCULATED-DESIGNED BY: JEFFRI HALIM

CHECKED BY: ELLERY LUCAS

REVISED BY / DATE REVISED

LAST REVISION 00-00-00 DATE PLOTTED => 18-NOV-2011 TIME PLOTTED => 11:26

BORDER LAST REVISED 3/1/2007

RELATIVE BORDER SCALE IS IN MILLIMETERS 0 20 40 60 80

USERNAME => llorico
DGN FILE => 40120suo347B.dgn

CU 04251

EA 0120S1

Dist	COUNTY	ROUTE	KILOMETER POST TOTAL PROJECT	SHEET No.	TOTAL SHEETS
04	SF	80	12.7/13.2	474 R1	806

REGISTERED ELECTRICAL ENGINEER 6/25/08

6-23-08
PLANS APPROVAL DATE

REGISTERED PROFESSIONAL ENGINEER FADI WALIEDDINE No. 11365 Exp. 12/31/09 ELECTRICAL STATE OF CALIFORNIA

THE STATE OF CALIFORNIA OR ITS OFFICERS OR AGENTS SHALL NOT BE RESPONSIBLE FOR THE ACCURACY OR COMPLETENESS OF ELECTRONIC COPIES OF THIS PLAN SHEET.

PB AMERICAS, Inc.
A Parsons Brinckerhoff Company
303 Second St., Suite 700N
San Francisco, CA 94107-1317

REGISTERED PROFESSIONAL ENGINEER DAVID H. OTO No. 10699 Exp. 06/30/2013 ELECTRICAL STATE OF CALIFORNIA

FOR REVISION ONLY △1

Metric

Cable/Ckt #:	1475-3	Reference:	E-153
Function:	TOS Data Com	Conductor Type:	72 Fiber, single mode fiber optic riser cable
From:	Splice Cabinet TOS-03WS	To:	Fiber Splice Closure (FSC)
Remarks:	Splice cable to (E) cable inside MH. The same circuit number installed on previous contract.		
Description Of Changes:			

Route	Conduit No.	Route	Conduit No.	Route	Conduit No.	Route	Conduit No.
1	TOS-03WS	2	4067	3	1T43W	4	TC Vault #3W
5	4996	6	1T42W	7	TC Vault #2W	8	4948
9	PB-2A	10	4905	11	TC Vault #1W	12	1T41W
13	4217	14	MH-9	15	0260	16	MH-12
17	0310	18	MH-15	19	0360	20	*0360
21	MH-18	22	0410	23	MH-21	24	0460
25	MH-24	26	*0510	27	0510	28	MH-27

Cable/Ckt #:	1477-1	Reference:	E-153
Function:	TOS Data Com	Conductor Type:	72 Fiber, single mode fiber optic riser cable
From:	(E) Splice Cabinet #TOS-Y03S	To:	Fiber Splice Closure (FSC)
Remarks:	Splice cable to (E) cable inside MH. The same circuit number installed on previous contract.		
Description Of Changes:			

Route	Conduit No.	Route	Conduit No.	Route	Conduit No.	Route	Conduit No.
1	202	2	T40	3	TOS/COM PB	4	0090
5	MH-4	6	0180	7	MH-9	8	0260
9	MH-12	10	0310	11	MH-15	12	0360
13	*0360	14	MH-18	15	0410	16	MH-21
17	D460	18	MH-24	19	*0510	20	0510
21	MH-27						

Cable/Ckt #:	2091	Reference:	E-43, E-111
Function:	480 V Feeder	Conductor Type:	1-3/C + Gnd, #4, 600 V, EPR insulation
From:	(E) 480 V LVCC-B Cubicle #7A	To:	480 V Breaker for UP-201
Remarks:			
Description Of Changes:	Rerouted cable. △1		

Route	Conduit No.	Route	Conduit No.	Route	Conduit No.	Route	Conduit No.
1	083	2	T21	3	T20	4	600 V PB
5	0110	6	MH-5	7	0150	8	MH-7
9	0200	10	MH-29	11	~~5909~~ 0909	12	~~E. Vault #1E~~ MH-29A
△1 13	~~2T21E~~ 5909	14	~~5919~~ E. Vault #1E	15	~~Wireway #1E~~ 2T21E	16	~~5998~~ 5919
17	Wireway #1E	18	5998				

Cable/Ckt #:	2091-1	Reference:	E-111
Function:	480 V Power	Conductor Type:	1-3/C + Gnd, #8, 600 V, EPR insulation
From:	480 V Breaker for UP-201	To:	15 KVA Transformer for UP-201
Remarks:			
Description Of Changes:			

Route	Conduit No.	Route	Conduit No.	Route	Conduit No.	Route	Conduit No.
1	5999						

Cable/Ckt #:	2091-2	Reference:	E-111
Function:	208/120 V Power	Conductor Type:	1-4/C + Gnd, #4, 600 V, EPR insulation
From:	15 KVA Transformer for UP-201	To:	208/120 V Panel UP-201
Remarks:			
Description Of Changes:			

Route	Conduit No.	Route	Conduit No.	Route	Conduit No.	Route	Conduit No.
1	5904	2	Wireway #1E	3	5043		

Cable/Ckt #:	2092	Reference:	E-43, E-111
Function:	480 V Feeder	Conductor Type:	1-3/C + Gnd, #4, 600 V, EPR insulation
From:	(E) 480 V LVCC-B Cubicle #8A	To:	480 V Breaker for UP-202
Remarks:			
Description Of Changes:	Rerouted cable. △1		

Route	Conduit No.	Route	Conduit No.	Route	Conduit No.	Route	Conduit No.
1	083	2	T21	3	T20	4	600 V PB
5	0110	6	MH-5	7	0150	8	MH-7
9	0200	10	MH-29	11	~~5909~~ 0909	12	~~E. Vault #1E~~ MH-29A
△1 13	~~2T21E~~ 5909	14	~~5901~~ E. Vault #1E	15	~~PB-2A~~ 2T21E	16	~~5901A~~ 5901
17	~~E. Vault #2E~~ PB-2A	18	~~2T22E~~ 5901A	19	~~5930~~ E. Vault #2E	20	~~Wireway #2E~~ 2T22E
21	~~5596~~ 5930	22	Wireway #2E	23	5596		

MARK	DATE	DESCRIPTIONS	BY	CH'D
△1	11/11/11	Relocate U/G Duct Bank at Bent W8	JH	EJL

REVISIONS

CONTRACT CHANGE ORDER NO. 85
SHEET 56 OF 76

CABLE AND CIRCUIT SCHEDULE

E-355

REVISED BY | DATE REVISED
CARMELO RIVERA | ELLERY LUCAS
CALCULATED-DESIGNED BY | CHECKED BY
CONSULTANT FUNCTIONAL SUPERVISOR
BEHZAD GOLEMOHAMMADI

STATE OF CALIFORNIA - DEPARTMENT OF TRANSPORTATION
Caltrans

LAST REVISION 11-11-11
DATE PLOTTED => 18-NOV-2011
TIME PLOTTED => 11:26

Dist	COUNTY	ROUTE	KILOMETER POST TOTAL PROJECT	SHEET No.	TOTAL SHEETS
04	SF	80	12.7/13.2	475 R1	806

REGISTERED ELECTRICAL ENGINEER 6/25/08

6-23-08
PLANS APPROVAL DATE

THE STATE OF CALIFORNIA OR ITS OFFICERS OR AGENTS SHALL NOT BE RESPONSIBLE FOR THE ACCURACY OR COMPLETENESS OF ELECTRONIC COPIES OF THIS PLAN SHEET.

REGISTERED PROFESSIONAL ENGINEER DAVID H. OTO No. 10699 Exp. 06/30/2013 ELECTRICAL STATE OF CALIFORNIA

REGISTERED PROFESSIONAL ENGINEER FADI WALIEDDINE No. 11465 Exp. 12/31/09 ELECTRICAL STATE OF CALIFORNIA

PB AMERICAS, Inc.
A Parsons Brinckerhoff Company
303 Second St., Suite 700N
San Francisco, CA 94107-1317

FOR REVISION ONLY △1

Caltrans Metric

Cable/Ckt #:	2092-1	Reference:	E-111
Function:	480 V Power	Conductor Type:	1-3/C + Gnd, #8, 600 V, EPR insulation
From:	480 V Breaker for UP-202	To:	15 KVA Transformer for UP-202
Remarks:			
Description Of Changes:			

Route	Conduit No.	Route	Conduit No.	Route	Conduit No.	Route	Conduit No.
1	5577						

Cable/Ckt #:	2092-2	Reference:	E-111
Function:	208/120 V Power	Conductor Type:	1-4/C + Gnd, #4, 600 V, EPR insulation
From:	15 KVA Transformer for UP-202	To:	208/120 V Panel UP-202
Remarks:			
Description Of Changes:			

Route	Conduit No.	Route	Conduit No.	Route	Conduit No.	Route	Conduit No.
1	5578	2	Wireway #2E	3	5021		

Cable/Ckt #:	2093	Reference:	E-43, E-112
Function:	480 V Feeder	Conductor Type:	1-3/C + Gnd, #4, 600 V, EPR insulation
From:	(E) 480 V LVCC-B Cubicle #9A	To:	480 V Breaker for UP-203
Remarks:			
Description Of Changes:	Rerouted cable. △1		

Route	Conduit No.	Route	Conduit No.	Route	Conduit No.	Route	Conduit No.
1	083	2	T21	3	T20	4	600 V PB
5	0110	6	MH-5	7	0150	8	MH-7
9	0200	10	MH-29	11	~~5909~~ 0909	12	~~E. Vault #1E~~ MH-29A
13	~~2T21E~~ 5909	14	~~5901~~ E. Vault #1E	15	~~PB-2A~~ 2T21E	16	~~5901A~~ 5901
17	~~E. Vault #2E~~ PB-2A	18	~~2T22E~~ 5901A	19	~~5941~~ E. Vault #2E	20	~~E. Vault #3E~~ 2T22E
21	~~2T23E~~ 5941	22	~~5950~~ E. Vault #3E	23	~~Wireway #3E~~ 2T23E	24	~~5586~~ 5950
25	Wireway #3E	26	5586				

△1

Cable/Ckt #:	2093-1	Reference:	E-112
Function:	480 V Power	Conductor Type:	1-3/C + Gnd, #8, 600 V, EPR insulation
From:	480 V Breaker for UP-203	To:	15 KVA Transformer for UP-203
Remarks:			
Description Of Changes:			

Route	Conduit No.	Route	Conduit No.	Route	Conduit No.	Route	Conduit No.
1	5587						

Cable/Ckt #:	2093-2	Reference:	E-112
Function:	208/120 V Power	Conductor Type:	1-4/C + Gnd, #4, 600 V, EPR insulation
From:	15 KVA Transformer for UP-203	To:	208/120 V Panel UP-203
Remarks:			
Description Of Changes:			

Route	Conduit No.	Route	Conduit No.	Route	Conduit No.	Route	Conduit No.
1	5588	2	Wireway #3E	3	5579		

Cable/Ckt #:	2094	Reference:	E-43, E-113
Function:	480 V Feeder	Conductor Type:	1-3/C + Gnd, #2, 600 V, EPR insulation
From:	(E) 480 V LVCC-B Cubicle #10A	To:	480 V Breaker for UP-209
Remarks:			
Description Of Changes:	Rerouted cable. △1		

Route	Conduit No.	Route	Conduit No.	Route	Conduit No.	Route	Conduit No.
1	083	2	T21	3	T20	4	600 V PB
5	0110	6	MH-5	7	0150	8	MH-7
9	0200	10	MH-29	11	~~5909~~ 0909	12	~~E. Vault #1E~~ MH-29A
13	~~2T21E~~ 5909	14	~~5901~~ E. Vault #1E	15	~~PB-2A~~ 2T21E	16	~~5901A~~ 5901
17	~~E. Vault #2E~~ PB-2A	18	~~2T22E~~ 5901A	19	~~5941~~ E. Vault #2E	20	~~E. Vault #3E~~ 2T22E
21	~~2T23E~~ 5941	22	~~5950~~ E. Vault #3E	23	~~Wireway #3E~~ 2T23E	24	~~5401~~ 5950
25	Wireway #3E	26	5401				

△1

Cable/Ckt #:	2094-1	Reference:	E-113
Function:	480 V Power	Conductor Type:	1-3/C + Gnd, #2, 600 V, EPR insulation
From:	480 V Breaker for UP-209	To:	25 kVA Transformer for UP-209
Remarks:			
Description Of Changes:			

Route	Conduit No.	Route	Conduit No.	Route	Conduit No.	Route	Conduit No.
1	5402	2	Wireway #3E	3	5402A	4	Wireway #3E
5	5406						

MARK	DATE	DESCRIPTIONS	BY	CH'D
△1	11/11/11	Relocate U/G Duct Bank at Bent W8	JH	EJL

REVISIONS

CONTRACT CHANGE ORDER NO. 85
SHEET 57 OF 76

CABLE AND CIRCUIT SCHEDULE

E-356

STATE OF CALIFORNIA - DEPARTMENT OF TRANSPORTATION
Caltrans

CONSULTANT FUNCTIONAL SUPERVISOR: BEHZAD GOLEMOHAMMADI
CALCULATED-DESIGNED BY: CARMELO RIVERA
CHECKED BY: ELLERY LUCAS
REVISED BY / DATE REVISED

LAST REVISION 11-11-11
DATE PLOTTED => 18-NOV-2011
TIME PLOTTED => 11:26

Dist	COUNTY	ROUTE	KILOMETER POST TOTAL PROJECT	SHEET No.	TOTAL SHEETS
04	SF	80	12.7/13.2	477 R1	806

6/25/08
REGISTERED ELECTRICAL ENGINEER

6-23-08
PLANS APPROVAL DATE

REGISTERED PROFESSIONAL ENGINEER FADI WALIEDDINE No. 11465 Exp. 12/31/09 ELECTRICAL STATE OF CALIFORNIA

THE STATE OF CALIFORNIA OR ITS OFFICERS OR AGENTS SHALL NOT BE RESPONSIBLE FOR THE ACCURACY OR COMPLETENESS OF ELECTRONIC COPIES OF THIS PLAN SHEET.

PB AMERICAS, Inc.
A Parsons Brinckerhoff Company
303 Second St., Suite 700N
San Francisco, CA 94107-1317

REGISTERED PROFESSIONAL ENGINEER DAVID H. OTO No. 10699 Exp. 06/30/2013 ELECTRICAL STATE OF CALIFORNIA

FOR REVISION ONLY △1

MARK	DATE	DESCRIPTIONS	BY	CH'D
△1	11/11/11	Relocate U/G Duct Bank at Bent W8	JH	EJL

REVISIONS

CONTRACT CHANGE ORDER NO. 85
SHEET 58 OF 76

Cable/Ckt #: 2099 — Reference: E-44
Function: 480 V Feeder — Conductor Type: 1-3/C + Gnd, #2, 600 V, EPR insulation
From: (E) 480 V LVCC-B Cubicle #19B — To: (E) Manhole-25
Remarks: Splice cable to (E) cable inside MH. The same circuit number installed on previous contract. (For UP-208)
Description Of Changes:

Route	Conduit No.	Route	Conduit No.	Route	Conduit No.	Route	Conduit No.
1	093	2	T31	3	T30	4	600 V PB
5	*0082	6	0082	7	MH-7	8	0234
9	MH-10	10	0330	11	MH-13	12	0380
13	*0380	14	MH-16	15	0430	16	MH-19
17	0480	18	MH-22	19	*0530	20	0530
21	MH-25						

Cable/Ckt #: 2100 — Reference: E-44, E-114
Function: 480 V Feeder — Conductor Type: 1-3/C + Gnd, #4, 600 V, EPR insulation
From: (E) 480 V LVCC-B Cubicle #20 — To: 480 V Breaker for LP-216
Remarks:
Description Of Changes: Rerouted cable. △1

Route	Conduit No.	Route	Conduit No.	Route	Conduit No.	Route	Conduit No.
1	093	2	T31	3	T30	4	600 V PB
5	0111	6	MH-5	7	0151	8	MH-7
9	0200	10	MH-29	11	~~5909~~ 0909	12	~~E. Vault #1E~~ MH-29A
13	~~2T21E~~ 5909	14	~~5919~~ E. Vault #1E	15	~~Wireway #1E~~ 2T21E	16	~~5937~~ 5919
17	Wireway #1E	18	5937				

Cable/Ckt #: 2100-1 — Reference: E-114
Function: 480 V Power — Conductor Type: 1-3/C + Gnd, #8, 600 V, EPR insulation
From: 480 V Breaker for LP-216 — To: 15 KVA Transformer for LP-216
Remarks:
Description Of Changes:

Route	Conduit No.	Route	Conduit No.	Route	Conduit No.	Route	Conduit No.
1	5934						

Cable/Ckt #: 2100-2 — Reference: E-114
Function: 208/120 V Power — Conductor Type: 1-4/C + Gnd, #4, 600 V, EPR insulation
From: 15 KVA Transformer for LP-216 — To: 208/120 V Panel LP-216
Remarks:
Description Of Changes:

Route	Conduit No.	Route	Conduit No.	Route	Conduit No.	Route	Conduit No.
1	5927	2	Wireway #1E	3	5010		

Cable/Ckt #: 2101 — Reference: E-44, E-115
Function: 480 V Feeder — Conductor Type: 1-3/C + Gnd, #4, 600 V, EPR insulation
From: (E) 480 V LVCC-B Cubicle #25 — To: 480 V Breaker for LP-217
Remarks:
Description Of Changes: Rerouted cable. △1

Route	Conduit No.	Route	Conduit No.	Route	Conduit No.	Route	Conduit No.
1	097	2	T31	3	T30	4	600 V PB
5	0111	6	MH-5	7	0151	8	MH-7
9	0200	10	MH-29	11	~~5909~~ 0909	12	~~E. Vault #1E~~ MH-29A
13	~~2T21E~~ 5909	14	~~5901~~ E. Vault #1E	15	~~PB-2A~~ 2T21E	16	~~5901A~~ 5901
17	~~E. Vault #2E~~ PB-2A	18	~~2T22E~~ 5901A	19	~~5930~~ E. Vault #2E	20	~~Wireway #2E~~ 2T22E
21	~~5589~~ 5930	22	Wireway #2E	23	5589		

Cable/Ckt #: 2101-1 — Reference: E-115
Function: 480 V Power — Conductor Type: 1-3/C + Gnd, #8, 600 V, EPR insulation
From: 480 V Breaker for LP-217 — To: 15 KVA Transformer for LP-217
Remarks:
Description Of Changes:

Route	Conduit No.	Route	Conduit No.	Route	Conduit No.	Route	Conduit No.
1	5584						

Cable/Ckt #: 2101-2 — Reference: E-115
Function: 208/120 V Power — Conductor Type: 1-4/C + Gnd, #4, 600 V, EPR insulation
From: 15 KVA Transformer for LP-217 — To: 208/120 V Panel LP-217
Remarks:
Description Of Changes:

Route	Conduit No.	Route	Conduit No.	Route	Conduit No.	Route	Conduit No.
1	5585	2	Wireway #2E	3	5046		

CABLE AND CIRCUIT SCHEDULE

E-358

STATE OF CALIFORNIA - DEPARTMENT OF TRANSPORTATION
CONSULTANT FUNCTIONAL SUPERVISOR: BEHZAD GOLEMOHAMMADI
CALCULATED-DESIGNED BY: CARMELO RIVERA — CHECKED BY: ELLERY LUCAS
REVISED BY — DATE REVISED

LAST REVISION 11-11-11 — DATE PLOTTED => 18-NOV-2011 — TIME PLOTTED => 11:26

Dist	COUNTY	ROUTE	KILOMETER POST TOTAL PROJECT	SHEET No.	TOTAL SHEETS
04	SF	80	12.7/13.2	478 R1	806

REGISTERED ELECTRICAL ENGINEER 6/25/08

6-23-08
PLANS APPROVAL DATE

REGISTERED PROFESSIONAL ENGINEER FADI WALIEDDINE No. 11465 Exp. 12/31/09 ELECTRICAL STATE OF CALIFORNIA

THE STATE OF CALIFORNIA OR ITS OFFICERS OR AGENTS SHALL NOT BE RESPONSIBLE FOR THE ACCURACY OR COMPLETENESS OF ELECTRONIC COPIES OF THIS PLAN SHEET.

PB AMERICAS, Inc.
A Parsons Brinckerhoff Company
303 Second St., Suite 700N
San Francisco, CA 94107-1317

REGISTERED PROFESSIONAL ENGINEER DAVID H. OTO No. 10699 Exp. 06/30/2013 ELECTRICAL STATE OF CALIFORNIA

FOR REVISION ONLY △1

Cable/Ckt #: 2102 | Reference: E-44, E-116
Function: 480 V Feeder | Conductor Type: 1-3/C + Gnd, #4, 600 V, EPR insulation
From: (E) 480 V LVCC-B Cubicle #26 | To: 480 V Breaker for LP-218
Remarks:
Description Of Changes: Rerouted cable. △1

Route	Conduit No.	Route	Conduit No.	Route	Conduit No.	Route	Conduit No.
1	097	2	T31	3	T30	4	600 V PB
5	0111	6	MH-5	7	0151	8	MH-7
9	0201	10	MH-29	11	~~5909~~ 0909	12	~~E. Vault #1E~~ MH-29A
13	~~2T21E~~ 5909	14	~~5901~~ E. Vault #1E	15	~~PB-2A~~ 2T21E	16	~~5901A~~ 5901
17	~~E. Vault #2E~~ PB-2A	18	~~2T22E~~ 5901A	19	~~5941~~ E. Vault #2E	20	~~E. Vault #3E~~ 2T22E
21	~~2T23E~~ 5941	22	~~5950~~ E. Vault #3E	23	~~Wireway #3E~~ 2T23E	24	~~5403~~ 5950
25	Wireway #3E	26	5403				

Cable/Ckt #: 2102-1 | Reference: E-116
Function: 480 V Power | Conductor Type: 1-3/C + Gnd, #8, 600 V, EPR insulation
From: 480 V Breaker for LP-218 | To: 15 KVA Transformer for LP-218
Remarks:
Description Of Changes:

Route	Conduit No.	Route	Conduit No.	Route	Conduit No.	Route	Conduit No.
1	5404						

Cable/Ckt #: 2102-2 | Reference: E-116
Function: 208/120 V Power | Conductor Type: 1-4/C + Gnd, #4, 600 V, EPR insulation
From: 15 KVA Transformer for LP-218 | To: 208/120 V Panel LP-218
Remarks:
Description Of Changes:

Route	Conduit No.	Route	Conduit No.	Route	Conduit No.	Route	Conduit No.
1	5405	2	Wireway #3E	3	5573		

Cable/Ckt #: 2103 | Reference: E-44
Function: 480 V Feeder | Conductor Type: 1-3/C + Gnd, #2, 600 V, EPR insulation
From: (E) 480 V LVCC-B Cubicle #27 | To: (E) Manhole-25
Remarks: Splice cable to (E) cable inside MH. The same circuit number installed on previous contract. (For UP-219)
Description Of Changes:

Route	Conduit No.	Route	Conduit No.	Route	Conduit No.	Route	Conduit No.
1	097	2	T31	3	T30	4	600 V PB
5	*0077	6	0077	7	MH-7	8	0229
9	MH-10	10	0325	11	MH-13	12	0375
13	*0375	14	MH-16	15	0425	16	MH-19
17	0475	18	MH-22	19	*0525	20	0525
21	MH-25						

Cable/Ckt #: 2104 | Reference: E-44
Function: 480 V Feeder | Conductor Type: 1-3/C + Gnd, #2, 600 V, EPR insulation
From: (E) 480 V LVCC-B Cubicle #32 | To: (E) Manhole-25
Remarks: Splice cable to (E) cable inside MH. The same circuit number installed on previous contract. (For UP-220)
Description Of Changes:

Route	Conduit No.	Route	Conduit No.	Route	Conduit No.	Route	Conduit No.
1	101	2	T31	3	T30	4	600 V PB
5	*0077	6	0077	7	MH-7	8	0229
9	MH-10	10	0325	11	MH-13	12	0375
13	*0375	14	MH-16	15	0425	16	MH-19
17	0475	18	MH-22	19	*0525	20	0525
21	MH-25						

Cable/Ckt #: 2105 | Reference: E-44
Function: 480 V Feeder | Conductor Type: 1-3/C + Gnd, #2, 600 V, EPR insulation
From: (E) 480 V LVCC-B Cubicle #33 | To: (E) Manhole-25
Remarks: Splice cable to (E) cable inside MH. The same circuit number installed on previous contract. (For UP-221)
Description Of Changes:

Route	Conduit No.	Route	Conduit No.	Route	Conduit No.	Route	Conduit No.
1	101	2	T31	3	T30	4	600 V PB
5	*0077	6	0077	7	MH-7	8	0229
9	MH-10	10	0325	11	MH-13	12	0375
13	*0375	14	MH-16	15	0425	16	MH-19
17	0475	18	MH-22	19	*0525	20	0525
21	MH-25						

MARK	DATE	DESCRIPTIONS	BY	CH'D
△1	11/11/11	Relocate U/G Duct Bank at Bent W8	JH	EJL

REVISIONS

CONTRACT CHANGE ORDER NO. 85
SHEET 59 OF 76

CABLE AND CIRCUIT SCHEDULE

E-359

REVISED BY | DATE REVISED
CARMELO RIVERA | ELLERY LUCAS
CALCULATED-DESIGNED BY | CHECKED BY
CONSULTANT FUNCTIONAL SUPERVISOR: BEHZAD GOLEMOHAMMADI
STATE OF CALIFORNIA - DEPARTMENT OF TRANSPORTATION
Caltrans

LAST REVISION 11-11-11 | DATE PLOTTED => 18-NOV-2011 | TIME PLOTTED => 11:26

Dist	COUNTY	ROUTE	KILOMETER POST TOTAL PROJECT	SHEET No.	TOTAL SHEETS
04	SF	80	12.7/13.2	482 R1	806

6/25/08
REGISTERED ELECTRICAL ENGINEER

6-23-08
PLANS APPROVAL DATE

REGISTERED PROFESSIONAL ENGINEER FADI WALIEDDINE No. 11485 Exp. 12/31/09 ELECTRICAL STATE OF CALIFORNIA

THE STATE OF CALIFORNIA OR ITS OFFICERS OR AGENTS SHALL NOT BE RESPONSIBLE FOR THE ACCURACY OR COMPLETENESS OF ELECTRONIC COPIES OF THIS PLAN SHEET.

PB AMERICAS, Inc.
A Parsons Brinckerhoff Company
303 Second St., Suite 700N
San Francisco, CA 94107-1317

REGISTERED PROFESSIONAL ENGINEER DAVID H. OTO No. 10699 Exp. 06/30/2013 ELECTRICAL STATE OF CALIFORNIA

FOR REVISION ONLY
1

Cable/Ckt #: 2254-4 | Reference: E-142
Function: 120 V DI | Conductor Type: 1-3/C #16, 600 V, EPR insulation
From: Remote Terminal Unit RTU #9E | To: Controller Cabinet TOS-03EA
Remarks:
Description Of Changes:

Route	Conduit No.	Route	Conduit No.	Route	Conduit No.	Route	Conduit No.
1	78 mm Nipple	2	Wireway #3E	3	78 mm Nipple		

Cable/Ckt #: 2391 | Reference: E-38, E-39
Function: 12.47 kV Feeder | Conductor Type: 3-1/C #4/0, 15 KV, EPR insulation
From: (E) 12.47 kV Swgr. Bkr. #52-10N | To: (E) Manhole-26
Remarks: Stress relief splice cable to (E) cable inside MH. The same circuit number installed on previous contract.
Description Of Changes:

Route	Conduit No.	Route	Conduit No.	Route	Conduit No.	Route	Conduit No.
1	0102	2	MH-6	3	0192	4	MH-11
5	0333	6	MH-14	7	0383	8	*0383
9	MH-17	10	0433	11	MH-20	12	0483
13	MH-23	14	*0533	15	0533	16	MH-26

Cable/Ckt #: 2473-1 | Reference: E-138, E-144
Function: Caltrans Telephone | Conductor Type: 50 pair #18, shielded pairs, IS/OS shield 600 V, XLPE insul., PVC jacket
From: (E) Telephone Terminal Box TEL-YBI | To: Telephone Terminal Box TEL-01E
Remarks:
Description Of Changes: Rerouted cable. 1

Route	Conduit No.	Route	Conduit No.	Route	Conduit No.	Route	Conduit No.
1	178	2	T40	~~4~~ 3	~~0096~~ TOS/COM PB	~~5~~ 4	~~MH-4~~ 0096
~~6~~ 5	~~0182~~ MH-4	~~7~~ 6	~~MH-9~~ 0182	~~8~~ 7	~~5911~~ MH-9	~~9~~ 8	~~TC Vault #1E~~ 0911
~~10~~ 9	~~2T41E~~ MH-9A	~~11~~ 10	~~5019~~ 5911	11	TC Vault #1E	12	2T41E
13	5019						

Cable/Ckt #: 2473-2 | Reference: E-138, E-144
Function: Caltrans Telephone | Conductor Type: 50 pair #18, shielded pairs, IS/OS shield 600 V, XLPE insul., PVC jacket
From: Telephone Terminal Box TEL-01E | To: Telephone Terminal Box TEL-02E
Remarks:
Description Of Changes:

Route	Conduit No.	Route	Conduit No.	Route	Conduit No.	Route	Conduit No.
1	5020	2	2T41E	3	TC Vault #1E	4	5922
5	PB-2E	6	5922A	7	TC Vault #2E	8	2T42E
9	5039						

Cable/Ckt #: 2473-3 | Reference: E-138,E-144
Function: Caltrans Telephone | Conductor Type: 50 pair #18, shielded pairs, IS/OS shield 600 V, XLPE insul., PVC jacket
From: Telephone Terminal Box TEL-02E | To: Telephone Terminal Box TEL-03E
Remarks:
Description Of Changes:

Route	Conduit No.	Route	Conduit No.	Route	Conduit No.	Route	Conduit No.
1	5038	2	2T42E	3	TC Vault #2E	4	5944
5	TC Vault 3E	6	2T43E	7	5582		

Cable/Ckt #: 2474-1 | Reference: E-138, E-143
Function: Scada Data Com | Conductor Type: 50 pair #18, shielded pairs, IS/OS shield 600 V, XLPE insul., PVC jacket
From: (E) Scada Com. Terminal Box COM-YBI | To: Scada Com. Terminal Box COM-1E
Remarks:
Description Of Changes: Rerouted cable. 1

Route	Conduit No.	Route	Conduit No.	Route	Conduit No.	Route	Conduit No.
1	262	2	TOS/COM PB	3	0098	4	MH-4
5	0183	6	MH-9	7	~~5911~~ 0911	8	~~TC Vault #1E~~ MH-9A
9	~~2T41E~~ 5911	10	~~5013~~ TC Vault #1E	11	2T41E	12	5013

Cable/Ckt #: 2474-2 | Reference: E-138, E-143
Function: Scada Data Com | Conductor Type: 50 pair #18, shielded pairs, IS/OS shield 600 V, XLPE insul., PVC jacket
From: Scada Com. Terminal Box COM-1E | To: Scada Com. Terminal 8ox COM-2E
Remarks:
Description Of Changes:

Route	Conduit No.	Route	Conduit No.	Route	Conduit No.	Route	Conduit No.
1	5014	2	TC Vault #1E	3	2T41E	4	5922
5	PB-2E	6	5922A	7	TC Vault #2E	8	2T42E
9	5024						

MARK	DATE	DESCRIPTIONS	BY	CH'D
1	11/11/11	Relocate U/G Duct Bank at Bent W8	JH	EJL

REVISIONS

CONTRACT CHANGE ORDER NO. 85
SHEET 60 OF 76

CABLE AND CIRCUIT SCHEDULE

E-363

REVISED BY | DATE REVISED
CARMELO RIVERA | ELLERY LUCAS
CALCULATED-DESIGNED BY | CHECKED BY
CONSULTANT FUNCTIONAL SUPERVISOR: BEHZAD GOLEMOHAMMADI
STATE OF CALIFORNIA - DEPARTMENT OF TRANSPORTATION
Caltrans

LAST REVISION 11-11-11 | DATE PLOTTED => 18-NOV-2011 | TIME PLOTTED => 11:26

Dist	COUNTY	ROUTE	KILOMETER POST TOTAL PROJECT	SHEET No.	TOTAL SHEETS
04	SF	80	12.7/13.2	483 R1	806

REGISTERED ELECTRICAL ENGINEER 6/25/08

6-23-08
PLANS APPROVAL DATE

REGISTERED PROFESSIONAL ENGINEER FADI WALIEDDINE No. 11465 Exp. 12/31/09 ELECTRICAL STATE OF CALIFORNIA

THE STATE OF CALIFORNIA OR ITS OFFICERS OR AGENTS SHALL NOT BE RESPONSIBLE FOR THE ACCURACY OR COMPLETENESS OF ELECTRONIC COPIES OF THIS PLAN SHEET.

PB AMERICAS, Inc.
A Parsons Brinckerhoff Company
303 Second St., Suite 700N
San Francisco, CA 94107-1317

Caltrans Metric

REGISTERED PROFESSIONAL ENGINEER DAVID H. OTO No. 10699 Exp. 06/30/2013 ELECTRICAL STATE OF CALIFORNIA

FOR REVISION ONLY

MARK	DATE	DESCRIPTIONS	BY	CH'D
1	11/11/11	Relocate U/G Duct Bank at Bent W8	JH	EJL

REVISIONS

CONTRACT CHANGE ORDER NO. 85
SHEET 61 OF 76

~~Cable/Ckt #: 2474-3~~ | ~~Reference: E-138, E-143~~
~~Function: Scada Data Com~~ | ~~Conductor Type: 50 pair #18, shielded pairs, IS/OS shield 600 V, XLPE insul., PVC jacket~~
~~From: Scada Com. Terminal Box COM-2E~~ | ~~To: Scada Com. Terminal Box COM-3E~~
~~Remarks:~~
~~Description Of Changes:~~

Route	Conduit No.	Route	Conduit No.	Route	Conduit No.	Route	Conduit No.
~~1~~	~~5025~~	~~2~~	~~2T42E~~	~~3~~	~~E. Vault #2E~~	~~4~~	~~5944~~
~~5~~	~~E. Vault #3E~~	~~6~~	~~2T43E~~	~~7~~	~~5580~~		

5

Cable/Ckt #: 2474-3A | Reference: E-138, E-142, E-143
Function: Scada Data Com | Conductor Type: 1 - 6 pair, shielded #18 with overall shield , 600 V, PVC jacket
From: Remote Terminal Unit RTU #9E | To: Scada Com. Terminal Box COM-3E
Remarks:
Description Of Changes:

Route	Conduit No.	Route	Conduit No.	Route	Conduit No.	Route	Conduit No.
1	5066						

Cable/Ckt #: 2474-3B | Reference: E-138, E-142, E-143
Function: Scada Data Com | Conductor Type: 1 - 6 pair, shielded #18 with overall shield , 600 V, PVC jacket
From: Remote Terminal Unit RTU #9E | To: Scada Com. Terminal Box COM-3E
Remarks:
Description Of Changes:

Route	Conduit No.	Route	Conduit No.	Route	Conduit No.	Route	Conduit No.
1	5066						

Cable/Ckt #: 2475-1 | Reference: E-153
Function: TOS Data Com | Conductor Type: 72 Fiber, single mode fiber optic riser cable
From: (E) Splice Cabinet #TOS-Y03S | To: Controller Cabinet #TOS-01EW
Remarks:
Description Of Changes: Rerouted cable. 1

Route	Conduit No.	Route	Conduit No.	Route	Conduit No.	Route	Conduit No.
1	TOS-Y03	2	202	3	T40	4	TOS/COM PB
5	0090	6	MH-4	7	0180	8	MH-9
9	~~5912~~ 0912	10	~~TC Vault #1E~~ MH-9A	11	~~2T41E~~ 5912	12	~~5906~~ TC Vault #1E
13	2T41E	14	5906				

Cable/Ckt #: 2475-1A | Reference: E-153
Function: TOS Data Com | Conductor Type: 12 Fiber, single mode fiber optic cable
From: Splice Cabinet TOS-03ES | To: Controller Cabinet #TOS-03EA
Remarks:
Description Of Changes:

Route	Conduit No.	Route	Conduit No.	Route	Conduit No.	Route	Conduit No.
1	5065						

Cable/Ckt #: 2475-1B | Reference: E-153
Function: TOS Data Com | Conductor Type: 12 Fiber, single mode fiber optic cable
From: Splice Cabinet #TOS-02ES | To: Controller Cabinet #TOS-02EA
Remarks:
Description Of Changes:

Route	Conduit No.	Route	Conduit No.	Route	Conduit No.	Route	Conduit No.
1	5561						

Cable/Ckt #: 2475-1C | Reference: E-153
Function: TOS Data Com | Conductor Type: 12 Fiber, single mode fiber optic cable
From: Controller Cabinet TOS-01EW | To: Controller Cabinet #TOS-01EA
Remarks:
Description Of Changes:

Route	Conduit No.	Route	Conduit No.	Route	Conduit No.	Route	Conduit No.
1	5007						

5

~~Cable/Ckt #: 2475-2~~ | ~~Reference: E-153~~
~~Function: TOS Data Com~~ | ~~Conductor Type: 72 Fiber, single mode fiber optic riser cable~~
~~From: Controller Cabinet TOS-01EW~~ | ~~To: Splice Cabinet TOS-02ES~~
~~Remarks:~~
~~Description Of Changes:~~

Route	Conduit No.	Route	Conduit No.	Route	Conduit No.	Route	Conduit No.
~~1~~	~~TOS-01EW~~	~~2~~	~~5906~~	~~3~~	~~2T41E~~	~~4~~	~~TC Vault #1E~~
~~5~~	~~5923~~	~~6~~	~~PB-2E~~	~~7~~	~~5923A~~	~~8~~	~~TC Vault #2E~~
~~9~~	~~2T42E~~	~~10~~	~~5936~~	~~11~~	~~5564~~	~~12~~	~~TOS-02ES~~

5 **REVISED PER ADDENDUM No. 5 DATED JULY 30, 2009**

CABLE AND CIRCUIT SCHEDULE

E-364

REVISED BY | DATE REVISED
CARMELO RIVERA | ELLERY LUCAS
CALCULATED-DESIGNED BY | CHECKED BY
CONSULTANT FUNCTIONAL SUPERVISOR | BRADY NADELL
STATE OF CALIFORNIA - DEPARTMENT OF TRANSPORTATION
Caltrans

LAST REVISION 11-11-11 | DATE PLOTTED => 18-NOV-2011 | TIME PLOTTED => 11:26

Dist	COUNTY	ROUTE	KILOMETER POST TOTAL PROJECT	SHEET No.	TOTAL SHEETS
04	SF	80	12.7/13.2	483A R1	806

Syn Yee Chin 7/15/11
REGISTERED ELECTRICAL ENGINEER

REGISTERED PROFESSIONAL ENGINEER SYN YEE CHIN No. 18186 Exp. 09/30/2011 ELECTRICAL STATE OF CALIFORNIA

PLANS APPROVAL DATE

THE STATE OF CALIFORNIA OR ITS OFFICERS OR AGENTS SHALL NOT BE RESPONSIBLE FOR THE ACCURACY OR COMPLETENESS OF ELECTRONIC COPIES OF THIS PLAN SHEET.

PB AMERICAS, Inc.
A Parsons Brinckerhoff Company
303 Second St., Suite 700N
San Francisco, CA 94107-1317

Cable/Ckt #: 2481-1 Reference:

Function: BASE Data Conductor Type: 12 Fiber, single mode fiber optic cable

From: BASE COM Panel #BCP-1W To: BASE COM Panel #BCP-2E

Remarks:

Description Of Changes: Added base cable. Rerouted cable. 1

Route	Conduit No.	Route	Conduit No.	Route	Conduit No.	Route	Conduit No.
1	FIELD	2	Wireway #1W	3	4004A	4	~~TC Vault #1W~~
5	4218	6	~~MH-9~~	7	~~5913~~ 0913	8	~~2T41E~~ MH-9A
9	~~5924~~ 5913	10	~~PB-2E~~ 2T41E	11	~~5924A~~ 5924	12	~~TC Vault #2E~~ PB-2E
13	~~5038A~~ 5924A	14	~~Wireway #2E~~ TC Vault #2E	15	~~FIELD~~ 5038A	16	Wireway #2E
17	FIELD						

1

DAVID H. OTO
REGISTERED PROFESSIONAL ENGINEER
No. 10699
Exp. 06/30/2013
ELECTRICAL
STATE OF CALIFORNIA

FOR REVISION ONLY
1

MARK	DATE	DESCRIPTIONS	BY	CH'D
1	11/11/11	Relocate U/G Duct Bank at Bent W8	JH	EJL
0	07/15/11	B.A.S.E. Trunkline	RB	WB

REVISIONS

CONTRACT CHANGE ORDER NO. 85
SHEET 62 OF 76

CABLE AND CIRCUIT SCHEDULE

E-364A

THIS PLAN ACCURATE FOR ELECTRICAL WORK ONLY.

STATE OF CALIFORNIA - DEPARTMENT OF TRANSPORTATION
Caltrans

CONSULTANT FUNCTIONAL SUPERVISOR: BRADY NADELL
CALCULATED-DESIGNED BY: REUBEN BUENVIAJE
CHECKED BY: WILLIAM BECK
REVISED BY / DATE REVISED

LAST REVISION 11-11-11
DATE PLOTTED => 18-NOV-2011
TIME PLOTTED => 11:26

Dist	COUNTY	ROUTE	KILOMETER POST TOTAL PROJECT	SHEET No.	TOTAL SHEETS
04	SF	80	12.7/13.2	484 R2	806

REGISTERED ELECTRICAL ENGINEER 6/25/08

6-23-08
PLANS APPROVAL DATE

REGISTERED PROFESSIONAL ENGINEER FADI WALIEDDINE No. 11465 Exp. 12/31/09 ELECTRICAL STATE OF CALIFORNIA

THE STATE OF CALIFORNIA OR ITS OFFICERS OR AGENTS SHALL NOT BE RESPONSIBLE FOR THE ACCURACY OR COMPLETENESS OF ELECTRONIC COPIES OF THIS PLAN SHEET.

PB AMERICAS, Inc.
A Parsons Brinckerhoff Company
303 Second St., Suite 700N
San Francisco, CA 94107-1317

REGISTERED PROFESSIONAL ENGINEER DAVID H. OTO No. 10699 Exp. 06/30/2013 ELECTRICAL STATE OF CALIFORNIA

FOR REVISION ONLY 1 2

5

Cable/Ckt #: 2475-3 | Reference: E-153
Function: TOS Data Com | Conductor Type: 72 Fiber, single mode fiber optic riser cable
From: Splice Cabinet TOS-02ES | To: Splice Cabinet TOS-03ES
Remarks:
Description Of Changes:

Route	Conduit No.	Route	Conduit No.	Route	Conduit No.	Route	Conduit No.
1	TOS-02ES	2	5564	3	5936	4	2T42E
5	TC Vault #2E	6	5945	7	TC Vault #3E	8	2T43E
9	5956	10	5071	11	TOS-03ES		

Cable/Ckt #: 2475-4 | Reference: E-153
Function: TOS Data Com | Conductor Type: 72 Fiber, single mode fiber optic riser cable
From: Splice Cabinet TOS-03ES | To: Fiber Splice Closure (FSC)
Remarks: Splice cable to (E) cable inside MH. The same circuit number installed on previous contract.
Description Of Changes:

Route	Conduit No.	Route	Conduit No.	Route	Conduit No.	Route	Conduit No.
1	TOS-03ES	2	5071	3	5956	4	2T43E
5	TC Vault 3E	6	5945	7	TC Vault #2E	8	2T42E
9	5923A	10	PB-2E	11	5923	12	TC Vault #1E
13	2T41E	14	5912	15	MH-9	16	0260
17	MH-12	18	0310	19	MH-15	20	0360
21	MH-18	22	0410	23	MH-21	24	0460
25	MH-24	26	0510	27	MH-27		

Cable/Ckt #: 2900-101A | Reference: E-165, E-166
Function: Low Level Signal | Conductor Type: 4 pair #22, shielded pairs, FEP insulation (Type SSC)
From: Sensor 10-1 | To: Strong Motion Recorder #1
Remarks:
Description Of Changes:

Route	Conduit No.	Route	Conduit No.	Route	Conduit No.	Route	Conduit No.
1	9204	2	9234	3	9233	4	9232
5	9231	6	9230	7	TC Vault 3E	8	2T43E
9	9235	10	TC Vault #2E	11	2T42E	12	9236A
13	PB-2E	15	TC Vault #1E	15	9236	16	9217
17	PB-2B	18	9218	19	Recorder #1		

Cable/Ckt #: 2900-101B | Reference: E-165, E-166
Function: Low Level Signal | Conductor Type: 4 pair #22, shielded pairs, FEP insulation (Type SSC)
From: Sensor 10-1 | To: Strong Motion Recorder #1
Remarks:
Description Of Changes: Rerouted cable. 1

Route	Conduit No.	Route	Conduit No.	Route	Conduit No.	Route	Conduit No.
1	9204	2	9234	3	9233	4	9232
5	9231	6	9230	7	TC Vault 3E	8	2T43E
9	9235	10	TC Vault #2E	11	2T42E	12	9236A
13	PB-2E	14	9236	15	TC Vault #1E	16	2T41E
17	9217	18	PB-2B	19	9218	20	Recorder #1

Cable/Ckt #: 2900-111A | Reference: E-165, E-166
Function: Low Level Signal | Conductor Type: 4 pair #22, shielded pairs, FEP insulation (Type SSC)
From: Sensor 11-1 | To: Strong Motion Recorder #1
Remarks:
Description Of Changes: Rerouted cable. 2

Route	Conduit No.	Route	Conduit No.	Route	Conduit No.	Route	Conduit No.
1	9105	2	9013	3	9012	4	9011
5	9010	6	9014	7	TC Vault 3W	8	1T43W
9	9015	10	TC Vault #2W	11	1T42W	12	9016
13	PB-2A	14	9017	15	TC Vault #1W	16	1T41W
17	9101	18	MH-9	19	~~9201~~ 9201A	20	~~TC Vault #1E~~ MH-9A
21	~~2T41E~~ 9201	22	~~9217~~ TC Vault #1E	23	~~PB-2B~~ 2T41E	24	~~9218~~ 9217
25	PB-2B	26	9218				

MARK	DATE	DESCRIPTIONS	BY	CH'D
2	11/11/11	Relocate U/G Duct Bank at Bent W8	JH	EJL
1	06/30/11	PL-12W CABLE, SEISMIC JOINT CONDUIT, MISC.	TW	RG

REVISIONS

CONTRACT CHANGE ORDER NO. 85
SHEET 63 OF 76

CABLE AND CIRCUIT SCHEDULE

5 REVISED PER ADDENDUM No. 5 DATED JULY 30, 2009

E-365

STATE OF CALIFORNIA - DEPARTMENT OF TRANSPORTATION
CONSULTANT FUNCTIONAL SUPERVISOR: BEHZAD GOLEMOHAMMADI
CALCULATED-DESIGNED BY: CARMELO RIVERA
CHECKED BY: ELLERY LUCAS
REVISED BY / DATE REVISED

LAST REVISION 11-11-11 DATE PLOTTED => 18-NOV-2011 TIME PLOTTED => 11:26

Dist	COUNTY	ROUTE	KILOMETER POST TOTAL PROJECT	SHEET No.	TOTAL SHEETS
04	SF	80	12.7/13.2	485 R1	806

REGISTERED ELECTRICAL ENGINEER 6/25/08

6-23-08
PLANS APPROVAL DATE

REGISTERED PROFESSIONAL ENGINEER FADI WALIEDDINE No. 11465 Exp. 12/31/09 ELECTRICAL STATE OF CALIFORNIA

THE STATE OF CALIFORNIA OR ITS OFFICERS OR AGENTS SHALL NOT BE RESPONSIBLE FOR THE ACCURACY OR COMPLETENESS OF ELECTRONIC COPIES OF THIS PLAN SHEET.

PB AMERICAS, Inc.
A Parsons Brinckerhoff Company
303 Second St., Suite 700N
San Francisco, CA 94107-1317

REGISTERED PROFESSIONAL ENGINEER DAVID H. OTO No. 10699 Exp. 06/30/2013 ELECTRICAL STATE OF CALIFORNIA

FOR REVISION ONLY △1

Metric

Cable/Ckt #: 2900-111B
Reference: E-165, E-166
Function: Low Level Signal
Conductor Type: 4 pair #22, shielded pairs, FEP insulation (Type SSC)
From: Sensor 11-1
To: Strong Motion Recorder #1
Remarks:
Description Of Changes: Rerouted cable. △1

Route	Conduit No.	Route	Conduit No.	Route	Conduit No.	Route	Conduit No.
1	9105	2	9013	3	9012	4	9011
5	9010	6	9014	7	TC Vault 3W	8	1T43W
9	9015	10	TC Vault #2W	11	1T42W	12	9016
13	PB-2A	14	9017	15	TC Vault #1W	16	1T41W
17	9101	18	MH-9	19	~~9201~~ 9201A	20	~~TC Vault #1E~~ MH-9A
21	~~2T41E~~ 9201	22	~~9217~~ TC Vault #1E	23	~~PB-2B~~ 2T41E	24	~~9218~~ 9217
25	PB-2B	26	9218				

Cable/Ckt #: 2900-11A
Reference: E-165, E-166
Function: Low Level Signal
Conductor Type: 4 pair #22, shielded pairs, FEP insulation (Type SSC)
From: Sensor 1-1
To: Strong Motion Recorder #1
Remarks:
Description Of Changes: Rerouted cable. △1

Route	Conduit No.	Route	Conduit No.	Route	Conduit No.	Route	Conduit No.
1	9211	2	*9209	3	9209	4	PB-SMD
5	9100	6	TC Vault #1W	7	1T41W	8	9101
9	MH-9	10	~~9201~~ 9201A	11	~~TC Vault #1E~~ MH-9A	12	~~2T41E~~ 9201
13	~~9217~~ TC Vault #1E	14	~~PB-2B~~ 2T41E	15	~~9218~~ 9217	16	~~Recorder #1~~ PB-2B
17	9218	18	Recorder #1				

Cable/Ckt #: 2900-11B
Reference: E-165, E-166
Function: Low Level Signal
Conductor Type: 4 pair #22, shielded pairs, FEP insulation (Type SSC)
From: Sensor 1-1
To: Strong Motion Recorder #1
Remarks:
Description Of Changes: Rerouted cable. △1

Route	Conduit No.	Route	Conduit No.	Route	Conduit No.	Route	Conduit No.
1	9211	2	*9209	3	9209	4	PB-SMD
5	9100	6	TC Vault #1W	7	1T41W	8	9101
9	MH-9	10	~~9201~~ 9201A	11	~~TC Vault #1E~~ MH-9A	12	~~2T41E~~ 9201
13	~~9217~~ TC Vault #1E	14	~~PB-2B~~ 2T41E	15	~~9218~~ 9217	16	~~Recorder #1~~ PB-2B
17	9218	18	Recorder #1				

Cable/Ckt #: 2900-11C
Reference: E-165, E-166
Function: Low Level Signal
Conductor Type: 4 pair #22, shielded pairs, FEP insulation (Type SSC)
From: Sensor 1-1
To: Strong Motion Recorder #1
Remarks:
Description Of Changes: Rerouted cable. △1

Route	Conduit No.	Route	Conduit No.	Route	Conduit No.	Route	Conduit No.
1	9211	2	*9209	3	9209	4	PB-SMD
5	9100	6	TC Vault #1W	7	1T41W	8	9101
9	MH-9	10	~~9201~~ 9201A	11	~~TC Vault #1E~~ MH-9A	12	~~2T41E~~ 9201
13	~~9217~~ TC Vault #1E	14	~~PB-2B~~ 2T41E	15	~~9218~~ 9217	16	~~Recorder #1~~ PB-2B
17	9218	18	Recorder #1				

Cable/Ckt #: 2900-121A
Reference: E-165, E-166
Function: Low Level Signal
Conductor Type: 4 pair #22, shielded pairs, FEP insulation (Type SSC)
From: Sensor 12-1
To: Strong Motion Recorder #1
Remarks:
Description Of Changes: Rerouted cable. △1

Route	Conduit No.	Route	Conduit No.	Route	Conduit No.	Route	Conduit No.
1	9106	2	9013	3	9012	4	9011
5	9010	6	9014	7	1T43W	8	TC Vault 3W
9	9015	10	TC Vault #2W	11	1T42W	12	9016
13	PB-2A	14	9017	15	TC Vault #1W	16	1T41W
17	9101	18	MH-9	19	~~9201~~ 9201A	20	~~TC Vault #1E~~ MH-9A
21	~~2T41E~~ 9201	22	~~9217~~ TC Vault #1E	23	~~PB-2B~~ 2T41E	24	~~9218~~ 9217
25	~~Recorder #1~~ PB-2B	26	9218	27	Recorder #1		

MARK	DATE	DESCRIPTIONS	BY	CH'D
△1	11/11/11	Relocate U/G Duct Bank at Bent WB	JH	EJL

REVISIONS

CONTRACT CHANGE ORDER NO. 85
SHEET 64 OF 76

CABLE AND CIRCUIT SCHEDULE

E-366

REVISED BY | DATE REVISED
CARMELO RIVERA | ELLERY LUCAS
CALCULATED-DESIGNED BY | CHECKED BY
CONSULTANT FUNCTIONAL SUPERVISOR
BEHZAD GOLEMOHAMMADI

STATE OF CALIFORNIA - DEPARTMENT OF TRANSPORTATION
Caltrans

LAST REVISION 11-11-11
DATE PLOTTED => 18-NOV-2011
TIME PLOTTED => 11:26

Dist	COUNTY	ROUTE	KILOMETER POST TOTAL PROJECT	SHEET No.	TOTAL SHEETS
04	SF	80	12.7/13.2	486 R1	806

REGISTERED ELECTRICAL ENGINEER 6/25/08

6-23-08
PLANS APPROVAL DATE

REGISTERED PROFESSIONAL ENGINEER FADI WALIEDDINE No. 11465 Exp. 12/31/09 ELECTRICAL STATE OF CALIFORNIA

THE STATE OF CALIFORNIA OR ITS OFFICERS OR AGENTS SHALL NOT BE RESPONSIBLE FOR THE ACCURACY OR COMPLETENESS OF ELECTRONIC COPIES OF THIS PLAN SHEET.

PB AMERICAS, Inc.
A Parsons Brinckerhoff Company
303 Second St., Suite 700N
San Francisco, CA 94107-1317

REGISTERED PROFESSIONAL ENGINEER DAVID H. OTO No. 10699 Exp. 06/30/2013 ELECTRICAL STATE OF CALIFORNIA

FOR REVISION ONLY 1

Metric

Cable/Ckt #: 2900-121B
Reference: E-165, E-166
Function: Low Level Signal
Conductor Type: 4 pair #22, shielded pairs, FEP insulation (Type SSC)
From: Sensor 12-1
To: Strong Motion Recorder #1
Remarks:
Description Of Changes: Rerouted cable.

Route	Conduit No.	Route	Conduit No.	Route	Conduit No.	Route	Conduit No.
1	9106	2	9013	3	9012	4	9011
5	9010	6	9014	7	1T43W	8	TC Vault 3W
9	9015	10	TC Vault #2W	11	1T42W	12	9016
13	PB-2A	14	9017	15	TC Vault #1W	16	1T41W
17	9101	18	MH-9	19	~~9201~~ 9201A	20	~~TC Vault #1E~~ MH-9A
21	~~2T41E~~ 9201	22	~~9217~~ TC Vault #1E	23	~~PB-2B~~ 2T41E	24	~~9218~~ 9217
25	~~Recorder #1~~ PB-2B	26	9218	27	Recorder #1		

1

Cable/Ckt #: 2900-121C
Reference: E-165, E-166
Function: Low Level Signal
Conductor Type: 4 pair #22, shielded pairs, FEP insulation (Type SSC)
From: Sensor 12-1
To: Strong Motion Recorder #1
Remarks:
Description Of Changes: Rerouted cable. 1

Route	Conduit No.	Route	Conduit No.	Route	Conduit No.	Route	Conduit No.
1	9106	2	9013	3	9012	4	9011
5	9010	6	9014	7	1T43W	8	TC Vault 3W
9	9015	10	TC Vault #2W	11	1T42W	12	9016
13	PB-2A	14	9017	15	TC Vault #1W	16	1T41W
17	9101	18	MH-9	19	~~9201~~ 9201A	20	~~TC Vault #1E~~ MH-9A
21	~~2T41E~~ 9201	22	~~9217~~ TC Vault #1E	23	~~PB-2B~~ 2T41E	24	~~9218~~ 9217
25	~~Recorder #1~~ PB-2B	26	9218	27	Recorder #1		

1

Cable/Ckt #: 2900-131A
Reference: E-165, E-166
Function: Low Level Signal
Conductor Type: 4 pair #22, shielded pairs, FEP insulation (Type SSC)
From: Sensor 13-1
To: Strong Motion Recorder #1
Remarks:
Description Of Changes:

Route	Conduit No.	Route	Conduit No.	Route	Conduit No.	Route	Conduit No.
1	9206	2	9234	3	9233	4	9232
5	9231	6	9230	7	TC Vault 3E	8	2T43E
9	9235	10	TC Vault #2E	11	2T42E	12	9236A
13	PB-2E	14	9236	15	TC Vault #1E	16	2T41E
17	9217	18	PB-2B	19	9218	20	Recorder #1

Cable/Ckt #: 2900-21A
Reference: E-165, E-166
Function: Low Level Signal
Conductor Type: 4 pair #22, shielded pairs, FEP insulation (Type SSC)
From: Sensor 2-1
To: Strong Motion Recorder #1
Remarks:
Description Of Changes: Rerouted cable. 1

Route	Conduit No.	Route	Conduit No.	Route	Conduit No.	Route	Conduit No.
1	9212	2	*9209	3	9209	4	PB-SMD
5	9100	6	TC Vault #1W	7	1T41W	8	9101
9	MH-9	10	~~9201~~ 9201A	11	~~TC Vault #1E~~ MH-9A	12	~~2T41E~~ 9201
13	~~9217~~ TC Vault #1E	14	~~PB-2B~~ 2T41E	15	~~9218~~ 9217	16	~~Recorder #1~~ PB-2B
17	9218	18	Recorder #1				

1

Cable/Ckt #: 2900-21B
Reference: E-165, E-166
Function: Low Level Signal
Conductor Type: 4 pair #22, shielded pairs, FEP insulation (Type SSC)
From: Sensor 2-1
To: Strong Motion Recorder #1
Remarks:
Description Of Changes: Rerouted cable. 1

Route	Conduit No.	Route	Conduit No.	Route	Conduit No.	Route	Conduit No.
1	9212	2	*9209	3	9209	4	PB-SMD
5	9100	6	TC Vault #1W	7	1T41W	8	9101
9	MH-9	10	~~9201~~ 9201A	11	~~TC Vault #1E~~ MH-9A	12	~~2T41E~~ 9201
13	~~9217~~ TC Vault #1E	14	~~PB-2B~~ 2T41E	15	~~9218~~ 9217	16	~~Recorder #1~~ PB-2B
17	9218	18	Recorder #1				

1

Cable/Ckt #: 2900-21C
Reference: E-165, E-166
Function: Low Level Signal
Conductor Type: 4 pair #22, shielded pairs, FEP insulation (Type SSC)
From: Sensor 2-1
To: Strong Motion Recorder #1
Remarks:
Description Of Changes: Rerouted cable. 1

Route	Conduit No.	Route	Conduit No.	Route	Conduit No.	Route	Conduit No.
1	9212	2	*9209	3	9209	4	PB-SMD
5	9100	6	TC Vault #1W	7	1T41W	8	9101
9	MH-9	10	~~9201~~ 9201A	11	~~TC Vault #1E~~ MH-9A	12	~~2T41E~~ 9201
13	~~9217~~ TC Vault #1E	14	~~PB-2B~~ 2T41E	15	~~9218~~ 9217	16	~~Recorder #1~~ PB-2B
17	9218	18	Recorder #1				

1

MARK	DATE	DESCRIPTIONS	BY	CH'D
1	11/11/11	Relocate U/G Duct Bank at Bent W8	JH	EJL

REVISIONS

CONTRACT CHANGE ORDER NO. 85
SHEET 65 OF 76

CABLE AND CIRCUIT SCHEDULE

E-367

REVISED BY | DATE REVISED
CARMELO RIVERA | ELLERY LUCAS
CALCULATED-DESIGNED BY | CHECKED BY
CONSULTANT FUNCTIONAL SUPERVISOR: BEHZAD GOLEMOHAMMADI
STATE OF CALIFORNIA - DEPARTMENT OF TRANSPORTATION
Caltrans

LAST REVISION 11-11-11 | DATE PLOTTED => 18-NOV-2011 | TIME PLOTTED => 11:26

Dist	COUNTY	ROUTE	KILOMETER POST TOTAL PROJECT	SHEET No.	TOTAL SHEETS
04	SF	80	12.7/13.2	487 R1	806

REGISTERED ELECTRICAL ENGINEER 6/25/08

6-23-08
PLANS APPROVAL DATE

REGISTERED PROFESSIONAL ENGINEER FADI WALIEDDINE No. 11465 Exp. 12/31/09 ELECTRICAL STATE OF CALIFORNIA

THE STATE OF CALIFORNIA OR ITS OFFICERS OR AGENTS SHALL NOT BE RESPONSIBLE FOR THE ACCURACY OR COMPLETENESS OF ELECTRONIC COPIES OF THIS PLAN SHEET.

PB AMERICAS, Inc.
A Parsons Brinckerhoff Company
303 Second St., Suite 700N
San Francisco, CA 94107-1317

REGISTERED PROFESSIONAL ENGINEER DAVID H. OTO No. 10699 Exp. 06/30/2013 ELECTRICAL STATE OF CALIFORNIA

FOR REVISION ONLY 1

MARK	DATE	DESCRIPTIONS	BY	CH'D
1	11/11/11	Relocate U/G Duct Bank at Bent W8	JH	EJL

REVISIONS

CONTRACT CHANGE ORDER NO. 85
SHEET 66 OF 76

Cable/Ckt #: 2900-31A
Reference: E-165, E-166
Function: Low Level Signal
Conductor Type: 4 pair #22, shielded pairs, FEP insulation (Type SSC)
From: Sensor 3-1
To: Strong Motion Recorder #1
Remarks:
Description Of Changes: Rerouted cable. 1

Route	Conduit No.	Route	Conduit No.	Route	Conduit No.	Route	Conduit No.
1	9219	2	*9210	3	9210	4	PB-SMD
5	9100	6	TC Vault #1W	7	1T41W	8	9101
9	MH-9	10	~~9201~~ 9201A	11	~~TC Vault #1E~~ MH-9A	12	~~2T41E~~ 9201
13	~~9217~~ TC Vault #1E	14	~~PB-2B~~ 2T41E	15	~~9218~~ 9217	16	~~Recorder #1~~ PB-2B
17	9218	18	Recorder #1				

Cable/Ckt #: 2900-31B
Reference: E-165, E-166
Function: Low Level Signal
Conductor Type: 4 pair #22, shielded pairs, FEP insulation (Type SSC)
From: Sensor 3-1
To: Strong Motion Recorder #1
Remarks:
Description Of Changes: Rerouted cable. 1

Route	Conduit No.	Route	Conduit No.	Route	Conduit No.	Route	Conduit No.
1	9219	2	*9210	3	9210	4	PB-SMD
5	9100	6	TC Vault #1W	7	1T41W	8	9101
9	MH-9	10	~~9201~~ 9201A	11	~~TC Vault #1E~~ MH-9A	12	~~2T41E~~ 9201
13	~~9217~~ TC Vault #1E	14	~~PB-2B~~ 2T41E	15	~~9218~~ 9217	16	~~Recorder #1~~ PB-2B
17	9218	18	Recorder #1				

Cable/Ckt #: 2900-31C
Reference: E-165, E-166
Function: Low Level Signal
Conductor Type: 4 pair #22, shielded pairs, FEP insulation (Type SSC)
From: Sensor 3-1
To: Strong Motion Recorder #1
Remarks:
Description Of Changes: Rerouted cable. 1

Route	Conduit No.	Route	Conduit No.	Route	Conduit No.	Route	Conduit No.
1	9219	2	*9210	3	9210	4	PB-SMD
5	9100	6	TC Vault #1W	7	1T41W	8	9101
9	MH-9	10	~~9201~~ 9201A	11	~~TC Vault #1E~~ MH-9A	12	~~2T41E~~ 9201
13	~~9217~~ TC Vault #1E	14	~~PB-2B~~ 2T41E	15	~~9218~~ 9217	16	~~Recorder #1~~ PB-2B
17	9218	18	Recorder #1				

5

Cable/Ckt #: 2900-41A
Reference: E-165, E-166
Function: Low Level Signal
Conductor Type: 4 pair #22, shielded pairs, FEP insulation (Type SSC)
From: Sensor 4-1
To: Strong Motion Recorder #1
Remarks:
Description Of Changes:

Route	Conduit No.	Route	Conduit No.	Route	Conduit No.	Route	Conduit No.
1	9214	2	PB-SMD	3	9100	4	TC Vault #1W
5	1T41W	6	9101	7	MH-9	8	9101
9	9201	10	TC Vault #1E	11	2T41E	12	9217
13	PB-2B	14	9218	15	Recorder #1		

5

Cable/Ckt #: 2900-41B
Reference: E-165, E-66
Function: Low Level Signal
Conductor Type: 4 pair #22, shielded pairs, FEP insulation (Type SSC)
From: Sensor 4-1
To: Strong Motion Recorder #1
Remarks:
Description Of Changes:

Route	Conduit No.	Route	Conduit No.	Route	Conduit No.	Route	Conduit No.
1	9214	2	PB-SMD	3	9100	4	TC Vault #1W
5	1T41W	6	9101	7	MH-9	8	9101
9	9201	10	TC Vault #1E	11	2T41E	12	9217
13	PB-2B	14	9218	15	Recorder #1		

Cable/Ckt #: 2900-51A
Reference: E-165, E-166
Function: Low Level Signal
Conductor Type: 4 pair #22, shielded pairs, FEP insulation (Type SSC)
From: Sensor 5-1
To: Strong Motion Recorder #1
Remarks:
Description Of Changes: Rerouted cable. 1

Route	Conduit No.	Route	Conduit No.	Route	Conduit No.	Route	Conduit No.
1	9213	2	PB-SMD	3	9100	4	TC Vault #1W
5	1T41W	6	9101	7	MH-9	8	~~9201~~ 9201A
9	~~TC Vault #1E~~ MH-9A	10	~~2T41E~~ 9201	11	~~9217~~ TC Vault #1E	12	~~PB-2B~~ 2T41E
13	~~9218~~ 9217	14	~~Recorder #1~~ PB-2B	15	9218	16	Recorder #1

Cable/Ckt #: 2900-51B
Reference: E-165, E-166
Function: Low Level Signal
Conductor Type: 4 pair #22, shielded pairs, FEP insulation (Type SSC)
From: Sensor 5-1
To: Strong Motion Recorder #1
Remarks:
Description Of Changes: Rerouted cable. 1

Route	Conduit No.	Route	Conduit No.	Route	Conduit No.	Route	Conduit No.
1	9213	2	PB-SMD	3	9100	4	TC Vault #1W
5	1T41W	6	9101	7	MH-9	8	~~9201~~ 9201A
9	~~TC Vault #1E~~ MH-9A	10	~~2T41E~~ 9201	11	~~9217~~ TC Vault #1E	12	~~PB-2B~~ 2T41E
13	~~9218~~ 9217	14	~~Recorder #1~~ PB-2B	15	9218	16	Recorder #1

5 **REVISED PER ADDENDUM No. 5 DATED JULY 30, 2009**

CABLE AND CIRCUIT SCHEDULE

E-368

STATE OF CALIFORNIA - DEPARTMENT OF TRANSPORTATION
Caltrans
CONSULTANT FUNCTIONAL SUPERVISOR: BEHZAD GOLEMOHAMMADI
CALCULATED-DESIGNED BY: CARMELO RIVERA
CHECKED BY: ELLERY LUCAS
REVISED BY
DATE REVISED

LAST REVISION 11-11-11
DATE PLOTTED => 18-NOV-2011
TIME PLOTTED => 11:26

BORDER LAST REVISED 3/1/2007
RELATIVE BORDER SCALE IS IN MILLIMETERS 0 20 40 60 80
USERNAME => llorico
DGN FILE => 40120sua368R01.dgn
CU 04251
EA 0120S1

Dist	COUNTY	ROUTE	KILOMETER POST TOTAL PROJECT	SHEET No.	TOTAL SHEETS
04	SF	80	12.7/13.2	488 R1	806

REGISTERED ELECTRICAL ENGINEER 6/25/08

6-23-08
PLANS APPROVAL DATE

REGISTERED PROFESSIONAL ENGINEER FADI WALIEDDINE No. 11465 Exp. 12/31/09 ELECTRICAL STATE OF CALIFORNIA

THE STATE OF CALIFORNIA OR ITS OFFICERS OR AGENTS SHALL NOT BE RESPONSIBLE FOR THE ACCURACY OR COMPLETENESS OF ELECTRONIC COPIES OF THIS PLAN SHEET.

PB AMERICAS, Inc.
A Parsons Brinckerhoff Company
303 Second St., Suite 700N
San Francisco, CA 94107-1317

Metric

Cable/Ckt #: 2900-51C
Reference: E-165, E-166
Function: Low Level Signal
Conductor Type: 4 pair #22, shielded pairs, FEP insulation (Type SSC)
From: Sensor 5-1
To: Strong Motion Recorder #1
Remarks:
Description Of Changes: Rerouted cable. 1

Route	Conduit No.	Route	Conduit No.	Route	Conduit No.	Route	Conduit No.
1	9213	2	PB-SMD	3	9100	4	TC Vault #1W
5	1T41W	6	9101	7	MH-9	8	~~9201~~ 9201A
9	~~TC Vault #1E~~ MH-9A	10	~~2T41E~~ 9201	11	~~9217~~ TC Vault #1E	12	~~PB-2B~~ 2T41E
13	~~9218~~ 9217	14	~~Recorder #1~~ PB-2B	15	9218	16	Recorder #1

1

Cable/Ckt #: 2900-61A
Reference: E-165, E-166
Function: Low Level Signal
Conductor Type: 4 pair #22, shielded pairs, FEP insulation (Type SSC)
From: Sensor 6-1
To: Strong Motion Recorder #1
Remarks:
Description Of Changes:

Route	Conduit No.	Route	Conduit No.	Route	Conduit No.	Route	Conduit No.
1	9203	2	*9208	3	9208	4	TC Vault 3E
5	2T43E	6	9235	7	TC Vault #2E	8	2T42E
9	9236A	10	PB-2E	11	9236	12	TC Vault #1E
13	2T41E	14	9217	15	PB-2B	16	9218
17	Recorder #1						

Cable/Ckt #: 2900-71A
Reference: E-165, E-166
Function: Low Level Signal
Conductor Type: 4 pair #22, shielded pairs, FEP insulation (Type SSC)
From: Sensor 7-1
To: Strong Motion Recorder #1
Remarks:
Description Of Changes:

Route	Conduit No.	Route	Conduit No.	Route	Conduit No.	Route	Conduit No.
1	9215	2	TC Vault 3E	3	2T43E	4	9235
5	TC Vault #2E	6	2T42E	7	9236A	8	PB-2E
9	9236	10	TC Vault #1E	11	2T41E	12	9217
13	PB-2B	14	9218	15	Recorder #1		

Cable/Ckt #: 2900-81A
Reference: E-165, E-166
Function: Low Level Signal
Conductor Type: 4 pair #22, shielded pairs, FEP insulation (Type SSC)
From: Sensor 8-1
To: Strong Motion Recorder #1
Remarks:
Description Of Changes: Rerouted cable. 1

Route	Conduit No.	Route	Conduit No.	Route	Conduit No.	Route	Conduit No.
1	9108	2	9013	3	9012	4	9011
5	9010	6	9014	7	TC Vault 3W	8	1T43W
9	9015	10	TC Vault #2W	11	1T42W	12	9016
13	PB-2A	14	9017	15	TC Vault #1W	16	1T41W
17	9101	18	MH-9	19	~~9201~~ 9201A	20	~~TC Vault #1E~~ MH-9A
21	~~2T41E~~ 9201	22	~~9217~~ TC Vault #1E	23	~~PB-2B~~ 2T41E	24	~~9218~~ 9217
25	~~Recorder #1~~ PB-2B	26	9218	27	Recorder #1		

1

Cable/Ckt #: 2900-91A
Reference: E-165, E-166
Function: Low Level Signal
Conductor Type: 4 pair #22, shielded pairs, FEP insulation (Type SSC)
From: Sensor 9-1
To: Strong Motion Recorder #1
Remarks:
Description Of Changes:

Route	Conduit No.	Route	Conduit No.	Route	Conduit No.	Route	Conduit No.
1	9205	2	9234	3	9233	4	9232
5	9231	6	9230	7	TC Vault 3E	8	2T43E
9	9235	10	TC Vault #2E	11	2T42E	12	9236A
13	PB-2E	14	9236	15	TC Vault #1E	16	2T41E
17	9217	18	PB-2B	19	9218	20	Recorder #1

MARK	DATE	DESCRIPTIONS	BY	CH'D
1	11/11/11	Relocate U/G Duct Bank at Bent W8	JH	EJL

REVISIONS

CONTRACT CHANGE ORDER NO. 85
SHEET 67 OF 76

REGISTERED PROFESSIONAL ENGINEER DAVID H. OTO No. 10699 Exp. 06/30/2013 ELECTRICAL STATE OF CALIFORNIA

FOR REVISION ONLY 1

CABLE AND CIRCUIT SCHEDULE

E-369

REVISED BY | DATE REVISED
CARMELO RIVERA | ELLERY LUCAS
CALCULATED-DESIGNED BY | CHECKED BY
CONSULTANT FUNCTIONAL SUPERVISOR: BEHZAD GOLEMOHAMMADI
STATE OF CALIFORNIA - DEPARTMENT OF TRANSPORTATION
Caltrans

LAST REVISION 11-11-11 | DATE PLOTTED => 18-NOV-2011 | TIME PLOTTED => 11:27

Dist	COUNTY	ROUTE	KILOMETER POST TOTAL PROJECT	SHEET No.	TOTAL SHEETS
04	SF	80	12.7/13.2	493 R1	806

REGISTERED ELECTRICAL ENGINEER 6/25/08

6-23-08
PLANS APPROVAL DATE

REGISTERED PROFESSIONAL ENGINEER FADI WALIEDDINE No. 11465 Exp. 12/31/09 ELECTRICAL STATE OF CALIFORNIA

THE STATE OF CALIFORNIA OR ITS OFFICERS OR AGENTS SHALL NOT BE RESPONSIBLE FOR THE ACCURACY OR COMPLETENESS OF ELECTRONIC COPIES OF THIS PLAN SHEET.

PB AMERICAS, Inc.
A Parsons Brinckerhoff Company
303 Second St., Suite 700N
San Francisco, CA 94107-1317

Caltrans Metric

Cable/Ckt #: A-1035-1 **Reference:** E-41
Function: 480 V Lighting **Conductor Type:** 1-3/C + Gnd, #6, 600 V, EPR insulation
From: (E) 480 V LVCC-A Cubicle #36 **To:** (E) Manhole-25
Remarks: Splice cable to (E) cable inside MH. The same circuit number installed on previous contract.
Description Of Changes:

Route	Conduit No.	Route	Conduit No.	Route	Conduit No.	Route	Conduit No.
1	052	2	T20	3	600 V PB	4	0116
5	MH-5	6	0158	7	MH-7	8	0209
9	MH-10	10	0306	11	MH-13	12	0356
13	*0356	14	MH-16	15	0406	16	MH-19
17	0456	18	MH-22	19	*0506	20	0506
21	MH-25						

Cable/Ckt #: A-2005 **Reference:** E-94
Function: 480 V Lighting **Conductor Type:** 2-1/C #10, 600 V, RHH/RHW insulation
From: Barrier pull boxes PB-LTG **To:** Roadway Lighting Fixtures
Remarks: For Lighting Poles 2023-1,2,3 & 4 and 2024-1,2 & 3
Description Of Changes:

Route	Conduit No.	Route	Conduit No.	Route	Conduit No.	Route	Conduit No.
1	FIELD						

Cable/Ckt #: A-2005-1 **Reference:** E-44, E-94
Function: 480 V Lighting **Conductor Type:** 1-3/C + Gnd, #8, 600 V, EPR insulation
From: (E) 480 V LVCC-B cubicle #21 **To:** PB-LTG (Bent W5R)
Remarks:
Description Of Changes: Rerouted cable. 1

Route	Conduit No.	Route	Conduit No.	Route	Conduit No.	Route	Conduit No.
1	094	2	T31	3	T30	4	600 V PB
5	0110	6	MH-5	7	0150	8	MH-7
9	0200	10	MH-29	11	~~5909~~ 0909	12	~~E. Vault #1E~~ MH-29A
13	~~2T21E~~ 5909	14	~~5901~~ E. Vault #1E	15	~~PB-2A~~ 2T21E	16	~~5901A~~ 5901
17	~~E. Vault #2E~~ PB-2A	18	~~2T22E~~ 5901A	19	~~5978~~ E. Vault #2E	20	~~2T22E~~
21	5978						

Cable/Ckt #: A-2005-2 **Reference:** E-94
Function: 480 V Lighting **Conductor Type:** 3-1/C #8, 600 V, RHH/RHW insulation
From: Electrical Vault #2E **To:** Barrier pull boxes PB-LTG
Remarks:
Description Of Changes:

Route	Conduit No.	Route	Conduit No.	Route	Conduit No.	Route	Conduit No.
1	E. Vault #2E	2	5975	3	2314	4	2315
5	2316	6	2321	7	2322	8	2323

Cable/Ckt #: A-2007-1 **Reference:** E-44, E-125
Function: 480 V Lighting **Conductor Type:** 1-3/C + Gnd, #6, 600 V, EPR insulation
From: (E) 480 V LVCC-B Cubicle #22 **To:** PB-LTG (Bent W5R)
Remarks:
Description Of Changes: Rerouted cable. 1

Route	Conduit No.	Route	Conduit No.	Route	Conduit No.	Route	Conduit No.
1	094	2	T31	3	T30	4	600 V PB
5	0110	6	MH-5	7	0150	8	MH-7
9	0200	10	MH-29	11	~~5908~~ 0908	12	~~E. Vault #1E~~ MH-29A
13	~~2T21E~~ 5908	14	~~5902~~ E. Vault #1E	15	~~PB-2A~~ 2T21E	16	~~5902A~~ 5902
17	~~E. Vault #2E~~ PB-2A	18	~~2T22E~~ 5902A	19	~~5940~~ E. Vault #2E	20	~~PB-LTG~~ 2T22E
21	5940	22	PB-LTG				

Cable/Ckt #: A-2007-2 **Reference:** E-125
Function: 480 V Lighting **Conductor Type:** 3 + 1 Gnd, #8, #10, 600 V, RHH/RHW insulation
From: PB-LTG (Bent W5R) **To:** PB-LTG
Remarks:
Description Of Changes:

Route	Conduit No.	Route	Conduit No.	Route	Conduit No.	Route	Conduit No.
1	2726	2	2735	3	2736	4	2737
5	2738	6	2739	7	2740	8	2734
9	2733	10	7108	11	2732	12	2731
13	2730	14	2729	15	2728	16	2727

MARK	DATE	DESCRIPTIONS	BY	CH'D
1	11/11/11	Relocate U/G Duct Bank at Bent W8	JH	EJL

REVISIONS

CONTRACT CHANGE ORDER NO. 85
SHEET 68 OF 76

REGISTERED PROFESSIONAL ENGINEER DAVID H. OTO No. 10699 Exp. 06/30/2013 ELECTRICAL STATE OF CALIFORNIA

FOR REVISION ONLY 1

CABLE AND CIRCUIT SCHEDULE

E-374

STATE OF CALIFORNIA - DEPARTMENT OF TRANSPORTATION
Caltrans
CONSULTANT FUNCTIONAL SUPERVISOR: BEHZAD GOLEMOHAMMADI
CALCULATED-DESIGNED BY: CARMELO RIVERA
CHECKED BY: ELLERY LUCAS
REVISED BY / DATE REVISED

LAST REVISION 11-11-11
DATE PLOTTED => 18-NOV-2011
TIME PLOTTED => 11:27

Dist	COUNTY	ROUTE	KILOMETER POST TOTAL PROJECT	SHEET No.	TOTAL SHEETS
04	SF	80	12.7/13.2	494 R1	806

Caltrans Metric

REGISTERED ELECTRICAL ENGINEER 6/25/08

6-23-08
PLANS APPROVAL DATE

REGISTERED PROFESSIONAL ENGINEER FADI WALIEDDINE No. 11465 Exp. 12/31/09 ELECTRICAL STATE OF CALIFORNIA

THE STATE OF CALIFORNIA OR ITS OFFICERS OR AGENTS SHALL NOT BE RESPONSIBLE FOR THE ACCURACY OR COMPLETENESS OF ELECTRONIC COPIES OF THIS PLAN SHEET.

PB AMERICAS, Inc.
A Parsons Brinckerhoff Company
303 Second St., Suite 700N
San Francisco, CA 94107-1317

Cable/Ckt #: A-2008-1 | Reference: E-44, E-125
Function: 480 V Lighting | Conductor Type: 1-3/C + Gnd, #4, 600 V, EPR insulation
From: (E) 480 V LVCC-B Cubicle #23 | To: PB-LTG (Bent W4R)
Remarks:
Description Of Changes: Rerouted cable. 1

Route	Conduit No.	Route	Conduit No.	Route	Conduit No.	Route	Conduit No.
1	094	2	T31	3	T30	4	600 V PB
5	0111	6	MH-5	7	0151	8	MH-7
9	0201	10	MH-29	11	~~5908~~ 0908	12	~~E. Vault #1E~~ MH-29A
13	~~2T21E~~ 5908	14	~~5901~~ E. Vault #1E	15	~~PB-2A~~ 2T21E	16	~~5901A~~ 5901
17	~~E. Vault #2E~~ PB-2A	18	~~2T22E~~ 5901A	19	~~5941~~ E. Vault #2E	20	~~E. Vault #3E~~ 2T22E
21	~~2T23E~~ 5941	22	~~5948~~ E. Vault #3E	23	~~PB-LTG~~ 2T23E	24	5948
25	PB-LTG						

1

Cable/Ckt #: A-2008-2 | Reference: E-125
Function: 480 V Lighting | Conductor Type: 3 + 1 Gnd, #6, #8, 600 V, RHH/RHW insulation
From: Electrical Vault #3E | To: Barrier pull boxes PB-LTG
Remarks:
Description Of Changes:

Route	Conduit No.	Route	Conduit No.	Route	Conduit No.	Route	Conduit No.
1	2742	2	2743	3	2744	4	2745
5	2746	6	2747	7	2748	8	2749
9	2750	10	2751	11	2752	12	2753
13	2754	14	2755	15	2756	16	7109
17	7300	18	7301	19	7302		

Cable/Ckt #: A-2009-1 | Reference: E-44, E-125
Function: 480 V Lighting | Conductor Type: 1-3/C + Gnd, #6, 600 V, EPR insulation
From: (E) 480 V LVCC-B Cubicle #18 | To: PB-LTG (Bent W5R)
Remarks:
Description Of Changes:

Route	Conduit No.	Route	Conduit No.	Route	Conduit No.	Route	Conduit No.
1	094	2	T31	3	T30	5	0110
6	MH-5	7	0150	8	MH-7	9	0200
10	MH-29	11	5908	12	E. Vault #1E	13	2T21E
14	5901	15	PB-2A	16	5901A	17	E. Vault #2E
18	2T22E	19	5940	20	PB-LTG	40	600 V PB

5

Cable/Ckt #: A-2011-1 | Reference: E-45
Function: 480 V Lighting | Conductor Type: 1-3/C + Gnd, #2, 600 V, EPR insulation
From: (E) 480 V LVCC-B Cubicle #37 | To: (E) Manhole-25
Remarks: Splice cable to (E) cable inside MH. The same circuit number installed on previous contract.
Description Of Changes:

Route	Conduit No.	Route	Conduit No.	Route	Conduit No.	Route	Conduit No.
1	103	2	T31	3	T30	4	600 V PB
5	*0081	6	0081	7	MH-7	8	0233
9	MH-10	10	0329	11	MH-13	12	0379
13	*0379	14	MH-16	15	0429	16	MH-19
17	0479	18	MH-22	19	*0529	20	0529
21	MH-25						

Cable/Ckt #: A-2012-1 | Reference: E-45
Function: 480 V Lighting | Conductor Type: 1-3/C + Gnd, #2, 600 V, EPR insulation
From: (E) 480 V LVCC-B Cubicle #38 | To: (E) Manhole-25
Remarks: Splice cable to (E) cable inside MH. The same circuit number installed on previous contract.
Description Of Changes:

Route	Conduit No.	Route	Conduit No.	Route	Conduit No.	Route	Conduit No.
1	105	2	T31	3	T30	4	600 V PB
5	*0081	6	0081	7	MH-7	8	0233
9	MH-10	10	0329	11	MH-13	12	0379
13	*0379	14	MH-16	15	0429	16	MH-19
17	0479	18	MH-22	19	*0529	20	0529
21	MH-25						

MARK	DATE	DESCRIPTIONS	BY	CH'D
1	11/11/11	Relocate U/G Duct Bank at Bent W8	JH	EJL

REVISIONS

CONTRACT CHANGE ORDER NO. 85
SHEET 69 OF 76

REGISTERED PROFESSIONAL ENGINEER DAVID H. OTO No. 10699 Exp. 06/30/2013 ELECTRICAL STATE OF CALIFORNIA

FOR REVISION ONLY 1

CABLE AND CIRCUIT SCHEDULE

5 **REVISED PER ADDENDUM No. 5 DATED JULY 30, 2009**

E-375

REVISED BY | DATE REVISED
CARMELO RIVERA | ELLERY LUCAS
CALCULATED-DESIGNED BY | CHECKED BY
CONSULTANT FUNCTIONAL SUPERVISOR: BEHZAD GOLEMOHAMMADI
STATE OF CALIFORNIA - DEPARTMENT OF TRANSPORTATION
Caltrans

LAST REVISION 11-11-11 | DATE PLOTTED => 18-NOV-2011 | TIME PLOTTED => 11:27

Dist	COUNTY	ROUTE	KILOMETER POST TOTAL PROJECT	SHEET No.	TOTAL SHEETS
04	SF	80	12.7/13.2	508 R1	806

REGISTERED ELECTRICAL ENGINEER 6/25/08

6-23-08
PLANS APPROVAL DATE

REGISTERED PROFESSIONAL ENGINEER FADI WALIEDDINE No. 11465 Exp. 12/31/09 ELECTRICAL STATE OF CALIFORNIA

THE STATE OF CALIFORNIA OR ITS OFFICERS OR AGENTS SHALL NOT BE RESPONSIBLE FOR THE ACCURACY OR COMPLETENESS OF ELECTRONIC COPIES OF THIS PLAN SHEET.

PB AMERICAS, Inc.
A Parsons Brinckerhoff Company
303 Second St., Suite 700N
San Francisco, CA 94107-1317

Metric

Cable/Ckt #: S-2023
Reference: E-94
Function: 480 V Lighting
Conductor Type: 3-1/C #10, 600 V, RHH/RHW Insulation
From: Barrier pull boxes PB-LTG
To: Roadway Lighting Fixtures
Remarks: For Light Poles 2023-1, 2, 3 & 4
Description Of Changes:

Route	Conduit No.	Route	Conduit No.	Route	Conduit No.	Route	Conduit No.
1	FIELD						

Cable/Ckt #: S-2023-1
Reference: E-44, E-94
Function: 480 V Lighting
Conductor Type: 1-3/C + Gnd, #6, 600 V, EPR Insulation
From: (E) 480 V LVCC-B Cubicle #30
To: PB-LTG
Remarks:
Description Of Changes: Rerouted cable. 1

Route	Conduit No.	Route	Conduit No.	Route	Conduit No.	Route	Conduit No.
1	101	2	T31	3	T30	4	600 V PB
5	0112	6	MH-5	7	0152	8	MH-7
9	0201	10	MH-29	11	~~5908~~ 0908	12	~~E. Vault #1E~~ MH-29A
13	~~2T21E~~ 5908	14	~~5902~~ E. Vault #1E	15	~~PB-2A~~ 2T21E	16	~~5902A~~ 5902
17	~~E. Vault #2E~~ PB-2A	18	~~2T22E~~ 5902A	19	~~5976~~ E. Vault #2E	20	2T22E
21	5976						

1

Cable/Ckt #: S-2023-2
Reference: E-94
Function: 480 V Lighting
Conductor Type: 3 + 1 Gnd, #8, #10, 600 V, RHH/RHW Insulation
From: PB-LTG (Platform #2E)
To: PB-LTG
Remarks: Splice in PB-LTG.
Description Of Changes:

Route	Conduit No.	Route	Conduit No.	Route	Conduit No.	Route	Conduit No.
1	2314	2	2315	3	2316		

Cable/Ckt #: S-2024
Reference: E-94
Function: 480 V Lighting
Conductor Type: 3-1/C #10, 600 V, RHH/RHW Insulation
From: Barrier pull boxes PB-LTG
To: Roadway Lighting Fixtures
Remarks: For Light Poles 2024-1, 2 & 3
Description Of Changes:

Route	Conduit No.	Route	Conduit No.	Route	Conduit No.	Route	Conduit No.
1	FIELD						

Cable/Ckt #: S-2024-1
Reference: E-44, E-94
Function: 480 V Lighting
Conductor Type: 1-3/C + Gnd, #6, 600 V, EPR Insulation
From: (E) 480 V LVCC-B Cubicle #31
To: PB-LTG (Bent W4R)
Remarks: Splice in PB-LTG.
Description Of Changes: Rerouted cable. 1

Route	Conduit No.	Route	Conduit No.	Route	Conduit No.	Route	Conduit No.
1	101	2	T31	3	T30	4	600 V PB
5	0112	6	MH-5	7	0152	8	MH-7
9	0201	10	MH-29	11	~~5908~~ 0908	12	~~E. Vault #1E~~ MH-29A
13	~~2T21E~~ 5908	14	~~5902~~ E. Vault #1E	15	~~PB-2A~~ 2T21E	16	~~5902A~~ 5902
17	~~E. Vault #2E~~ PB-2A	18	~~2T22E~~ 5902A	19	~~5941~~ E. Vault #2E	20	~~E. Vault #3E~~ 2T22E
21	~~2T23E~~ 5941	22	~~5962~~ E. Vault #3E	23	2T23E	24	5962

1

Cable/Ckt #: S-2024-2
Reference: E-94
Function: 480 V Lighting
Conductor Type: 3 + 1 Gnd, #8, #10, 600 V, RHH/RHW Insulation
From: PB-LTG (Bent W4R)
To: PB-LTG
Remarks:
Description Of Changes:

Route	Conduit No.	Route	Conduit No.	Route	Conduit No.	Route	Conduit No.
1	PB-LTG	3	2321	4	2322	5	2323

MARK	DATE	DESCRIPTIONS	BY	CH'D
1	11/11/11	Relocate U/G Duct Bank at Bent W8	JH	EJL

REVISIONS

CONTRACT CHANGE ORDER NO. 85
SHEET 70 OF 76

REGISTERED PROFESSIONAL ENGINEER DAVID H. OTO No. 10699 Exp. 06/30/2013 ELECTRICAL STATE OF CALIFORNIA

FOR REVISION ONLY
1

CABLE AND CIRCUIT SCHEDULE

E-389

REVISED BY | DATE REVISED
CARMELO RIVERA | ELLERY LUCAS
CALCULATED-DESIGNED BY | CHECKED BY
SUPERVISOR | FADI
CONSULTANT FUNCTIONAL SUPERVISOR | BEHZAD GOLEMOHAMMADI
STATE OF CALIFORNIA - DEPARTMENT OF TRANSPORTATION
Caltrans

LAST REVISION 11-11-11
DATE PLOTTED => 18-NOV-2011
TIME PLOTTED => 11:27

Dist	COUNTY	ROUTE	KILOMETER POST TOTAL PROJECT	SHEET No.	TOTAL SHEETS
04	SF	80	12.7/13.2	509 R1	806

REGISTERED ELECTRICAL ENGINEER 6/25/08

6-23-08
PLANS APPROVAL DATE

REGISTERED PROFESSIONAL ENGINEER FADI WALIEDDINE No. 11465 Exp. 12/31/09 ELECTRICAL STATE OF CALIFORNIA

THE STATE OF CALIFORNIA OR ITS OFFICERS OR AGENTS SHALL NOT BE RESPONSIBLE FOR THE ACCURACY OR COMPLETENESS OF ELECTRONIC COPIES OF THIS PLAN SHEET.

PB AMERICAS, Inc.
A Parsons Brinckerhoff Company
303 Second St., Suite 700N
San Francisco, CA 94107-1317

REGISTERED PROFESSIONAL ENGINEER DAVID H. OTO No. 10699 Exp. 06/30/2013 ELECTRICAL STATE OF CALIFORNIA

FOR REVISION ONLY △1

MARK	DATE	DESCRIPTIONS	BY	CH'D
△1	11/11/11	Relocate U/G Duct Bank at Bent W8	JH	EJL

REVISIONS

CONTRACT CHANGE ORDER NO. 85
SHEET 71 OF 76

Cable/Ckt #: S-2031-1 — Reference: E-45
Function: 480 V Lighting — Conductor Type: 1-3/C + Gnd, #2, 600 V, EPR Insulation
From: (E) 480 V LVCC-B Cubicle #44 — To: (E) Manhole-25
Remarks: Splice cable to (E) cable inside MH. The same circuit number installed on previous contract.
Description Of Changes:

Route	Conduit No.	Route	Conduit No.	Route	Conduit No.	Route	Conduit No.
1	109	2	T31	3	T30	4	600 V PB
5	*0080	6	0080	7	MH-7	8	0232
9	MH-10	10	0328	11	MH-13	12	0378
13	*0378	14	MH-16	15	0428	16	MH-19
17	0478	18	MH-22	19	*0528	20	0528
21	MH-25						

Cable/Ckt #: S-2032-1 — Reference: E-45
Function: 480 V Lighting — Conductor Type: 1-3/C + Gnd, #4, 600 V, EPR Insulation
From: (E) 480 V LVCC-B Cubicle #45 — To: (E) Manhole-25
Remarks: Splice cable to (E) cable inside MH. The same circuit number installed on previous contract.
Description Of Changes:

Route	Conduit No.	Route	Conduit No.	Route	Conduit No.	Route	Conduit No.
1	109	2	T31	3	T30	4	600 V PB
5	*0080	6	0080	7	MH-7	8	0232
9	MH-10	10	0328	11	MH-13	12	0378
13	*0378	14	MH-16	15	0428	16	MH-19
17	0478	18	MH-22	19	*0528	20	0528
21	MH-25						

Cable/Ckt #: S-2041 — Reference: E-95
Function: 480 V Lighting — Conductor Type: 3-1/C #10, 600 V, RHH/RHW Insulation
From: Barrier pull boxes PB-LTG — To: Roadway Lighting Fixtures
Remarks: For Light Poles 2041-1 to 2041-13
Description Of Changes:

Route	Conduit No.	Route	Conduit No.	Route	Conduit No.	Route	Conduit No.
1	FIELD						

Cable/Ckt #: S-2041-1 — Reference: E-44, E-95
Function: 480 V Lighting — Conductor Type: 1-3/C + Gnd, #6, 600 V, EPR Insulation
From: (E) 480 V LVCC-B Cubicle #15 — To: PB-2J
Remarks: Splice in PB-2J (loc at E. Vault 1E)
Description Of Changes: Rerouted cable. △1

Route	Conduit No.	Route	Conduit No.	Route	Conduit No.	Route	Conduit No.
1	090	2	T31	3	T30	4	600 V PB
5	0112	6	MH-5	7	0152	8	MH-7
9	0202	10	MH-29	11	~~5908~~ 0908	12	~~E. Vault #1E~~ MH-29A △1
13	~~2T21E~~ 5908	14	~~5081~~ E. Vault #1E	15	~~PB-2J~~ 2T21E	16	5081
17	PB-2J						

Cable/Ckt #: S-2041-2 — Reference: E-95
Function: 480 V Lighting — Conductor Type: 1-3/C + Gnd, #8, 600 V, EPR Insulation
From: PB-2J (Loc. Electrical Vault #1E) — To: PB-LTG (Bent W5R)
Remarks: Splice in PB-2J. For light poles 2041-8 to 2041-13
Description Of Changes:

Route	Conduit No.	Route	Conduit No.	Route	Conduit No.	Route	Conduit No.
1	5081	2	2T21E	3	5902	4	PB-2A
5	5902A	6	E. Vault #2E	7	2T22E	8	5929
9	PB-LTG						

Cable/Ckt #: S-2041-2A — Reference: E-95
Function: 480 V Lighting — Conductor Type: 3 + 1 Gnd, #8, #10, 600 V, RHH/RHW Insulation
From: PB-LTG (Bent W5R) — To: PB-LTG
Remarks: Splice in PB-LTG for light poles 2041-8 to 2041-13
Description Of Changes:

Route	Conduit No.	Route	Conduit No.	Route	Conduit No.	Route	Conduit No.
1	2726	2	2735	3	2734	4	2733
5	7108	6	2732	7	2731	8	2730
9	2729	10	2728				

Cable/Ckt #: S-2041-3 — Reference: E-95
Function: 480 V Lighting — Conductor Type: 1-3/C + Gnd, #8, 600 V, EPR Insulation
From: PB-2J (Loc. Electrical Vault #1E) — To: PB-LTG (Platform #1E)
Remarks: Splice in Electrical Vault 1E. For Light poles 2041-1 to 2041-7.
Description Of Changes:

Route	Conduit No.	Route	Conduit No.	Route	Conduit No.	Route	Conduit No.
1	5081	2	2T21E	3	5987	4	5914
5	PB-LTG						

CABLE AND CIRCUIT SCHEDULE

E-390

STATE OF CALIFORNIA - DEPARTMENT OF TRANSPORTATION — Caltrans
CONSULTANT FUNCTIONAL SUPERVISOR: BEHZAD GOLEMOHAMMADI
CALCULATED-DESIGNED BY: CARMELO RIVERA — CHECKED BY: ELLERY LUCAS
REVISED BY — DATE REVISED

LAST REVISION 11-11-11 — DATE PLOTTED => 18-NOV-2011 — TIME PLOTTED => 11:27

Dist	COUNTY	ROUTE	KILOMETER POST TOTAL PROJECT	SHEET No.	TOTAL SHEETS
04	SF	80	12.7/13.2	510 R1	806

REGISTERED ELECTRICAL ENGINEER 6/25/08

6-23-08
PLANS APPROVAL DATE

REGISTERED PROFESSIONAL ENGINEER FADI WALIEDDINE No. 11465 Exp. 12/31/09 ELECTRICAL STATE OF CALIFORNIA

THE STATE OF CALIFORNIA OR ITS OFFICERS OR AGENTS SHALL NOT BE RESPONSIBLE FOR THE ACCURACY OR COMPLETENESS OF ELECTRONIC COPIES OF THIS PLAN SHEET.

PB AMERICAS, Inc.
A Parsons Brinckerhoff Company
303 Second St., Suite 700N
San Francisco, CA 94107-1317

REGISTERED PROFESSIONAL ENGINEER DAVID H. OTO No. 10699 Exp. 06/30/2013 ELECTRICAL STATE OF CALIFORNIA

FOR REVISION ONLY 1

Cable/Ckt #: S-2041-3A
Reference: E-95
Function: 480 V Lighting
Conductor Type: 3 + 1 Gnd, #8, #10, 600 V, RHH/RHW Insulation
From: PB-LTG (Platform #1E)
To: PB-LTG
Remarks: Splice in PB-LTG for Light poles 2041-1 to 2041-7.
Description Of Changes:

Route	Conduit No.	Route	Conduit No.	Route	Conduit No.	Route	Conduit No.
1	2706	2	2705	3	2711	4	2707
5	2708	6	2791	7	2709	8	2710

~~Cable/Ckt #: S-2042~~
~~Reference: E-95~~
~~Function: 480 V Lighting~~
~~Conductor Type: 1-3/C #10, 600 V, EPR Insulation~~
~~From: Barrier pull boxes PB-LTG~~
~~To: Roadway Lighting Fixtures~~
~~Remarks: For Light Poles 2042-1 to 2042-11~~
~~Description Of Changes:~~

Route	Conduit No.	Route	Conduit No.	Route	Conduit No.	Route	Conduit No.
1	FIELD						

5

Cable/Ckt #: S-2042-1
Reference: E-44, E-95
Function: 480 V Lighting
Conductor Type: 1-3/C + Gnd, #6, 600 V, EPR Insulation
From: (E) 480 V LVCC-B Cubicle #16
To: PB-LTG (Hinge W6RB)
Remarks: Coil cable at the last PB-LTG for future ckt S-2042-1.
Description Of Changes: Rerouted cable. 1

Route	Conduit No.	Route	Conduit No.	Route	Conduit No.	Route	Conduit No.
1	090	2	T31	3	T30	4	600 V PB
5	0112	6	MH-5	7	0152	8	MH-7
9	0202	10	MH-29	11	~~5908~~ 0908	12	~~E. Vault #1E~~ MH-29A
13	~~2T21E~~ 5908	14	~~5902~~ E. Vault #1E	15	~~PB-2A~~ 2T21E	16	~~5902A~~ 5902
17	~~E. Vault #2E~~ PB-2A	18	~~2T22E~~ 5902A	19	~~5976~~ E. Vault #2E	20	~~2413~~ 2T22E
21	~~5888~~ 5976	22	~~PB-LTG~~ 2413	23	~~2727~~ 5888	24	~~PB-LTG~~
25	2727	26	PB-LTG				

1

Cable/Ckt #: S-3021-1
Reference: E-42
Function: 480 V Lighting
Conductor Type: 1-3/C + Gnd, #4, 600 V, EPR Insulation
From: (E) 480 V LVCC-A Cubicle #62
To: (E) Manhole-25
Remarks: Splice cable to (E) cable inside MH. The same circuit number installed on previous contract.
Description Of Changes:

Route	Conduit No.	Route	Conduit No.	Route	Conduit No.	Route	Conduit No.
1	067	2	T20	3	600 V PB	4	0115
5	MH-5	6	0155	7	MH-7	8	0207
9	MH-10	10	0304	11	MH-13	12	0354
13	*0354	14	MH-16	15	0404	16	MH-19
17	0454	18	MH-22	19	*0504	20	0504
21	MH-25						

~~Cable/Ckt #: S-3022-1~~
~~Reference: E-42~~
~~Function: 480 V Lighting~~
~~Conductor Type: 1-3/C + Gnd, #4, 600 V, EPR Insulation~~
~~From: (E) 480 V LVCC-A Cubicle #63~~
~~To: (E) Manhole-25~~
~~Remarks: Splice cable to (E) cable inside MH. The same circuit number installed on previous contract.~~
~~Description Of Changes:~~

Route	Conduit No.	Route	Conduit No.	Route	Conduit No.	Route	Conduit No.
1	067	2	120	3	600 V PB	4	0115
5	MH-5	6	0155	7	MH-7	8	0207
9	MH-10	10	0304	11	MH-13	12	0354
13	*0354	14	MH-16	15	0404	16	MH-19
17	0454	18	MH-22	19	*0504	20	0504
21	MH-25						

5

Cable/Ckt #: S-3023-1
Reference: E-42
Function: 480 V Lighting
Conductor Type: 1-3/C + Gnd, #4, 600 V, EPR Insulation
From: (E) 480 V LVCC-A Cubicle #64
To: (E) Manhole-25
Remarks: Splice cable to (E) cable inside MH. The same circuit number installed on previous contract.
Description Of Changes:

Route	Conduit No.	Route	Conduit No.	Route	Conduit No.	Route	Conduit No.
1	067	2	T20	3	600 V PB	4	0115
5	MH-5	6	0155	7	MH-7	8	0207
9	MH-10	10	0304	11	MH-13	12	0354
13	*0354	14	MH-16	15	0404	16	MH-19
17	0454	18	MH-22	19	*0504	20	0504
21	MH-25						

MARK	DATE	DESCRIPTIONS	BY	CH'D
1	11/11/11	Relocate U/G Duct Bank at Bent W8	JH	EJL

REVISIONS

CONTRACT CHANGE ORDER NO. 85
SHEET 72 OF 76

5 **REVISED PER ADDENDUM No. 5 DATED JULY 30, 2009**

CABLE AND CIRCUIT SCHEDULE

E-391

REVISED BY | DATE REVISED
CARMELO RIVERA | ELLERY LUCAS
CALCULATED-DESIGNED BY | CHECKED BY
SUPERVISOR: FADI | BEHZAD GOLEMOHAMMADI
CONSULTANT FUNCTIONAL SUPERVISOR
STATE OF CALIFORNIA - DEPARTMENT OF TRANSPORTATION

LAST REVISION 11-11-11 | DATE PLOTTED => 18-NOV-2011 | TIME PLOTTED => 11:27

Dist	COUNTY	ROUTE	KILOMETER POST TOTAL PROJECT	SHEET No.	TOTAL SHEETS
04	SF	80	12.7/13.2	516D R2	806

REGISTERED ELECTRICAL ENGINEER 4/10/09

6-23-08
PLANS APPROVAL DATE

REGISTERED PROFESSIONAL ENGINEER FADI WALIEDDINE No. 11485 Exp. 12/31/09 ELECTRICAL STATE OF CALIFORNIA

THE STATE OF CALIFORNIA OR ITS OFFICERS OR AGENTS SHALL NOT BE RESPONSIBLE FOR THE ACCURACY OR COMPLETENESS OF ELECTRONIC COPIES OF THIS PLAN SHEET.

PB AMERICAS, Inc.
A Parsons Brinckerhoff Company
303 Second St., Suite 700N
San Francisco, CA 94107-1317

REGISTERED PROFESSIONAL ENGINEER DAVID H. OTO No. 10699 Exp. 08/30/2013 ELECTRICAL STATE OF CALIFORNIA

FOR REVISION ONLY 1 2

5

Caltrans Metric

Cable/Ckt #: 2475-4 **Reference:** E-153
Function: TOS Data Com **Conductor Type:** 72 Fiber, single mode fiber optic riser cable
From: Splice Cabinet TOS-03ES **To:** Fiber Splice Closure (FSC)
Remarks: Splice cable to (E) cable inside MH. The same circuit number installed on previous contract.
Description Of Changes: Rerouted cable. 2

Route	Conduit No.	Route	Conduit No.	Route	Conduit No.	Route	Conduit No.
1	TOS-03ES	2	5956	3	2T43E	4	TC Vault 3E
5	5945	6	TC Vault #2E	7	2T42E	8	5923A
9	PB-2E	10	5923	11	TC Vault #1E	12	2T41E
13	5912	14	~~MH-9~~ MH-9A	15	~~0260~~ 0912	16	~~MH-12~~ MH-9
17	~~0310~~ 0260	18	~~MH-15~~ MH-12	19	~~0360~~ 0310	20	~~*0360~~ MH-15
21	~~MH-18~~ 0360	22	~~0410~~ *0360	23	~~MH-21~~ MH-18	24	~~0460~~ 0410
25	~~MH-24~~ MH-21	26	~~*0510~~ 0460	27	~~0510~~ MH-24	28	~~MH-27~~ *0510
29	0510	30	MH-27				

2

Cable/Ckt #: 2900-101A **Reference:** E-165, E-166
Function: Low Level Signal **Conductor Type:** 4 pair #22, shielded pairs, FEP insulation (Type SSC)
From: Sensor 10-1 **To:** Strong Motion Recorder #1
Remarks:
Description Of Changes: Rerouted cable. 1

Route	Conduit No.	Route	Conduit No.	Route	Conduit No.	Route	Conduit No.
1	9204	2	9234	3	9233	4	9232
5	9231	6	9230	7	TC Vault 3E	8	2T43E
9	9235	10	TC Vault #2E	11	2T42E	12	9236A
13	PB-2E	14	9236	15	TC Vault #1E	16	2T41E
17	9217	18	PB-2B	19	9218	20	Recorder #1

1

Cable/Ckt #: 2900-41A **Reference:** E-165, E-166
Function: Low Level Signal **Conductor Type:** 4 pair #22, shielded pairs, FEP insulation (Type SSC)
From: Sensor 4-1 **To:** Strong Motion Recorder #1
Remarks:
Description Of Changes: Rerouted cable. 2

Route	Conduit No.	Route	Conduit No.	Route	Conduit No.	Route	Conduit No.
1	9214	2	PB-SMD	3	9100	4	TC Vault #1W
5	1T41W	6	9101	7	MH-9	8	~~9201~~ 9201A
9	~~TC Vault #1E~~ MH-9A	10	~~2T41E~~ 9201	11	~~9217~~ TC Vault #1E	12	~~PB-2B~~ 2T41E
13	~~9218~~ 9217	14	~~Recorder #1~~ PB-2B	15	9218	16	Recorder #1

2

Cable/Ckt #: 2900-41B **Reference:** E-165, E-166
Function: Low Level Signal **Conductor Type:** 4 pair #22, shielded pairs, FEP insulation (Type SSC)
From: Sensor 4-1 **To:** Strong Motion Recorder #1
Remarks:
Description Of Changes: Rerouted cable. 2

Route	Conduit No.	Route	Conduit No.	Route	Conduit No.	Route	Conduit No.
1	9214	2	PB-SMD	3	9100	4	TC Vault #1W
5	1T41W	6	9101	7	MH-9	8	~~9201~~ 9201A
9	~~TC Vault #1E~~ MH-9A	10	~~2T41E~~ 9201	11	~~9217~~ TC Vault #1E	12	~~PB-2B~~ 2T41E
13	~~9218~~ 9217	14	~~Recorder #1~~ PB-2B	15	9218	16	Recorder #1

2

Cable/Ckt #: 2910-2 **Reference:** E-166, E-167
Function: 120 V DI **Conductor Type:** 4 pair #24, overall shielded, 300 V, PE insulation (Type IC)
From: Strong Motion Recorder #1 **To:** 2910-2 Cable Splice MH-27
Remarks: Splice cable to (E) cable inside MH. The same circuit number installed on previous contract.
Description Of Changes: Rerouted cable. 2

Route	Conduit No.	Route	Conduit No.	Route	Conduit No.	Route	Conduit No.
1	9218	2	PB-2B	3	9217	4	TC Vault #1E
5	2T41E	6	9201	7	~~MH-9~~ MH-9A	8	~~0286~~ 9201A
9	~~MH-12~~ MH-9	10	~~0336~~ 0286	11	~~MH-15~~ MH-12	12	~~0386~~ 0336
13	~~*0386~~ MH-15	14	~~MH-18~~ 0386	15	~~0436~~ *0386	16	~~MH-21~~ MH-18
17	~~0486~~ 0436	18	~~MH-24~~ MH-21	19	~~*0536~~ 0486	20	~~0536~~ MH-24
21	~~MH-27~~ *0536	22	0536	23	MH-27		

2

MARK	DATE	DESCRIPTIONS	BY	CH'D
2	11/11/11	Relocate U/G Duct Bank at Bent W8	JH	EJL
1	06/30/11	PL-12W CABLE, SEISMIC JOINT CONDUIT, MISC.	TW	RG

REVISIONS

CONTRACT CHANGE ORDER NO. 85
SHEET 73 OF 76

5 **ADDED PER ADDENDUM No. 5 DATED JULY 30, 2009**

CABLE AND CIRCUIT SCHEDULE

E-397D

REVISED BY | DATE REVISED
JEFFRI HALIM | ELLERY LUCAS
CALCULATED-DESIGNED BY | CHECKED BY
CONSULTANT FUNCTIONAL SUPERVISOR: BEHZAD GOLEMOHAMMADI
STATE OF CALIFORNIA - DEPARTMENT OF TRANSPORTATION
Caltrans

LAST REVISION 11-11-11 | DATE PLOTTED => 18-NOV-2011 | TIME PLOTTED => 11:27

Dist	COUNTY	ROUTE	KILOMETER POST TOTAL PROJECT	SHEET No.	TOTAL SHEETS
04	SF	80	12.7/13.2	516E R2	806

REGISTERED ELECTRICAL ENGINEER 4/10/09

6-23-08
PLANS APPROVAL DATE

REGISTERED PROFESSIONAL ENGINEER FADI WALIEDDINE No. 11465 Exp. 12/31/09 ELECTRICAL STATE OF CALIFORNIA

THE STATE OF CALIFORNIA OR ITS OFFICERS OR AGENTS SHALL NOT BE RESPONSIBLE FOR THE ACCURACY OR COMPLETENESS OF ELECTRONIC COPIES OF THIS PLAN SHEET.

PB AMERICAS, Inc.
A Parsons Brinckerhoff Company
303 Second St., Suite 700N
San Francisco, CA 94107-1317

REGISTERED PROFESSIONAL ENGINEER SYN YEE CHIN No. 19186 Exp. 09/30/2011 ELECTRICAL STATE OF CALIFORNIA
Syn Yee Chin
FOR REVISION ONLY
△1 03/30/2011

REGISTERED PROFESSIONAL ENGINEER DAVID H. OTO No. 10699 Exp. 06/30/2013 ELECTRICAL STATE OF CALIFORNIA
FOR REVISION ONLY
△2

Caltrans Metric

△5

Cable/Ckt #: 2910-3 — Reference: E-166, E-167
Function: Low Level Signal — Conductor Type: 4 pair #22, shielded pairs, FEP insulation (Type SSC)
From: Strong Motion Recorder #1 — To: 2910-3 Cable Splice MH-27
Remarks: Splice cable to (E) cable inside MH. The same circuit number installed on previous contract.
Description Of Changes: Rerouted cable. △2

Route	Conduit No.	Route	Conduit No.	Route	Conduit No.	Route	Conduit No.
1	9218	2	PB-2B	3	9217	4	TC Vault #1E
5	2T41E	6	9201	7	~~MH-9~~ MH-9A	8	~~0286~~ 9201A
9	~~MH-12~~ MH-9	10	~~0336~~ 0286	11	~~MH-15~~ MH-12	12	~~0386~~ 0336
13	~~*0386~~ MH-15	14	~~MH-18~~ 0386	15	~~0436~~ *0386	16	~~MH-21~~ MH-18
17	~~0486~~ 0436	18	~~MH-24~~ MH-21	19	~~*0536~~ 0486	20	~~0536~~ MH-24
21	~~MH-27~~ *0536	22	0536	23	MH-27		

△2

Cable/Ckt #: A-1005-1 — Reference: E-41, E-54
Function: 480 V Lighting — Conductor Type: 1-3/C + Gnd, #8, 600 V, EPR insulation
From: (E) 480 V LVCC-A cubicle #21 — To: PB-LTG (Platform #1W)
Remarks:
Description Of Changes:

Route	Conduit No.	Route	Conduit No.	Route	Conduit No.	Route	Conduit No.
1	041	2	T20	3	600 V PB	4	0124
5	MH-5	6	0168	7	MH-7	8	0226
9	MH-30	10	4211	11	E. Vault #1W	12	1T21W
13	4018						

Cable/Ckt #: A-1006-1 — Reference: E-41, E-55
Function: 480 V Lighting — Conductor Type: 1-3/C + Gnd, #8, 600 V, EPR insulation
From: (E) 480 V LVCC-A cubicle #26 — To: PB-2J (Loc. Electrical Vault #2W)
Remarks: Splice cables A-1006-2 and A-1006-3. (Multi-conductor to single conductor).
Description Of Changes:

Route	Conduit No.	Route	Conduit No.	Route	Conduit No.	Route	Conduit No.
1	041	2	T20	3	600 V PB	4	0124
5	MH-5	6	0168	7	MH-7	8	0226
9	MH-30	10	4211	11	E. Vault #1W	12	1T21W
13	4901	14	PB-2E	15	4928	16	E. Vault #2W
17	1T22W	18	4914	19	PB-2J		

Cable/Ckt #: A-1007-1 — Reference: E-41, E-77
Function: 480 V Lighting — Conductor Type: 1-3/C + Gnd, #4, 600 V, EPR insulation
From: (E) 480 V LVCC-A cubicle #22 — To: ~~PB-LTG (Bent W4L)~~ MH-5 △1
Remarks: This cable ende inside MH-5 for future extension due to YBI City Ramp by others. △1
Description Of Changes:

Route	Conduit No.	Route	Conduit No.	Route	Conduit No.	Route	Conduit No.
1	041	2	T20	3	600 V PB	4	0124
5	MH-5	~~6~~	~~0168~~	~~7~~	~~MH-7~~	~~8~~	~~0226~~
~~9~~	~~MH-30~~	~~10~~	~~4212~~	~~11~~	~~E. Vault #1W~~	~~12~~	~~1T21W~~
~~13~~	~~4901~~	~~14~~	~~PB-2E~~	~~15~~	~~4928~~	~~16~~	~~E. Vault #2W~~
~~17~~	~~1T22W~~	~~18~~	~~4956~~	~~19~~	~~E. Vault #3W~~	~~20~~	~~1T23W~~
~~21~~	~~4919~~	~~22~~	~~PB-LTG~~				

△1

~~Cable/Ckt #: A-1009-2 — Reference: E-77A~~
~~Function: 480 V Lighting — Conductor Type: 3 + 1 Gnd, #6, #8, 600 V, RHH/RHW insulation~~
~~From: PB-LTG (Bent W5L) — To: PB-LTG~~
~~Remarks:~~
~~Description Of Changes: Cable deleted due to YBI City Ramp by others.~~

Route	Conduit No.	Route	Conduit No.	Route	Conduit No.	Route	Conduit No.
1	1424	2	1423	3	1422	4	1321
5	1320	6	1319	7	1318	8	1315
9	1313						

MARK	DATE	DESCRIPTIONS	BY	CH'D
△2	11/11/11	Relocate U/G Duct Bank at Bent W8	JH	EJL
△1	03/30/11	Elimination of Service Platform at WSL	RR	RG

REVISIONS

CONTRACT CHANGE ORDER NO. 85
SHEET 74 OF 76

△5 **ADDED PER ADDENDUM No. 5 DATED JULY 30, 2009**

CABLE AND CIRCUIT SCHEDULE

E-397E

REVISED BY | DATE REVISED
JEFFRI HALIM | ELLERY LUCAS
CALCULATED-DESIGNED BY | CHECKED BY
CONSULTANT FUNCTIONAL SUPERVISOR: BEHZAD GOLEMOHAMMADI
STATE OF CALIFORNIA - DEPARTMENT OF TRANSPORTATION
Caltrans

LAST REVISION 11-11-11 | DATE PLOTTED => 18-NOV-2011 | TIME PLOTTED => 11:27

Dist	COUNTY	ROUTE	KILOMETER POST TOTAL PROJECT	SHEET No.	TOTAL SHEETS
04	SF	80	12.7/13.2	516F R2	806

REGISTERED ELECTRICAL ENGINEER 4/10/09

6-23-08
PLANS APPROVAL DATE

REGISTERED PROFESSIONAL ENGINEER FADI WALIEDDINE No. 11465 Exp. 12/31/09 ELECTRICAL STATE OF CALIFORNIA

THE STATE OF CALIFORNIA OR ITS OFFICERS OR AGENTS SHALL NOT BE RESPONSIBLE FOR THE ACCURACY OR COMPLETENESS OF ELECTRONIC COPIES OF THIS PLAN SHEET.

PB AMERICAS, Inc.
A Parsons Brinckerhoff Company
303 Second St., Suite 700N
San Francisco, CA 94107-1317

REGISTERED PROFESSIONAL ENGINEER SYN YEE CHIN No. 18186 Exp. 09/30/2011 ELECTRICAL STATE OF CALIFORNIA
Syn Yee Chin
FOR REVISION ONLY
1 03/30/2011

REGISTERED PROFESSIONAL ENGINEER DAVID H. OTO No. 10699 Exp. 06/30/2013 ELECTRICAL STATE OF CALIFORNIA
FOR REVISION ONLY
2

Caltrans Metric

5

Cable/Ckt #: A-1010-1
Reference: E-41, E-77A
Function: 480 V Lighting
Conductor Type: 1-3/C + Gnd, #6, 600 V, EPR insulation
From: (E) 480 V LVCC-A cubicle #18
To: ~~PB-LTG (Bent W8L)~~ MH-5 1
Remarks: This cable ends inside MH-5 for future extension due to YBI City Ramp by others. 1
Description Of Changes:

Route	Conduit No.	Route	Conduit No.	Route	Conduit No.	Route	Conduit No.
1	041	2	T20	3	600 V PB	4	0124
5	MH-5	~~6~~	~~0169~~	~~7~~	~~MH-7~~	~~8~~	~~0227~~
~~9~~	~~MH-30~~	~~10~~	~~4910A~~	~~11~~	~~PB-LTG~~		

1

Cable/Ckt #: A-1010-2
Reference: E-77A
Function: 480 V Lighting
Conductor Type: 3 + 1 Gnd, #6, #8, 600 V, RHH/RHW insulation
From: PB-LTG (Bent W8L)
To: PB-LTG
Remarks:
Description Of Changes: Cable deleted due to YBI City Ramp by others.

Route	Conduit No.	Route	Conduit No.	Route	Conduit No.	Route	Conduit No.
1	1305	2	1304	3	1303	4	1302
5	1301	6	1546				

Cable/Ckt #: A-2009-1
Reference: E-44, E-125
Function: 480 V Lighting
Conductor Type: 1-3/C + Gnd, #8, 600 V, EPR insulation
From: (E) 480 V LVCC-B Cubicle #18
To: PB-LTG (Bent W5R)
Remarks:
Description Of Changes: Rerouted cable. 2

Route	Conduit No.	Route	Conduit No.	Route	Conduit No.	Route	Conduit No.
1	094	2	T31	3	T30	4	600 V PB
5	0110	6	MH-5	7	0150	8	MH-7
9	0200	10	MH-29	11	~~5908~~ 0908	12	~~E. Vault #1E~~ MH-29A
13	~~2T21E~~ 5908	14	~~5901~~ E. Vault #1E	15	~~PB-2A~~ 2T21E	16	~~5901A~~ 5901
17	~~E. Vault #2E~~ PB-2A	18	~~2T22E~~ 5901A	19	~~5940~~ E. Vault #2E	20	~~PB-LTG~~ 2T22E
21	5940	22	PB-LTG				

2

Cable/Ckt #: A-2010-1
Reference: E-44, E-125A
Function: 480 V Lighting
Conductor Type: 1-3/C + Gnd, #8, 600 V, EPR insulation
From: (E) 480 V LVCC-B Cubicle #18
To: PB-LTG (Bent W8R)
Remarks:
Description Of Changes: Rerouted cable. 2

Route	Conduit No.	Route	Conduit No.	Route	Conduit No.	Route	Conduit No.
1	094	2	T31	3	T30	4	600 V PB
5	0111	6	MH-5	7	0151	8	MH-7
9	0201	10	MH-29	11	~~5908~~ 0908	12	~~E. Vault #1E~~ MH-29A
13	~~2T21E~~ 5908	14	~~5901~~ E. Vault #1E	15	~~PB-2A~~ 2T21E	16	~~5901A~~ 5901
17	~~E. Vault #2E~~ PB-2A	18	~~2T22E~~ 5901A	19	~~5929~~ E. Vault #2E	20	~~PB-LTG~~ 2T22E
21	5929	22	PB-LTG				

2

Cable/Ckt #: CMSE01
Reference: E-151, E-152
Function: Low Level Signal
Conductor Type: Harness #4
From: Controller Cabinet TOS-03EA
To: TOS Sign CMS-E01
Remarks:
Description Of Changes:

Route	Conduit No.	Route	Conduit No.	Route	Conduit No.	Route	Conduit No.
1	TOS-03EA	2	5033	3	PB-2B	4	5954
5	TC Vault 3E	6	2T43E	7	5959	8	CMS-E01

Cable/Ckt #: CMSE02
Reference: E-151, E-152
Function: Low Level Signal
Conductor Type: Harness #5
From: Controller Cabinet TOS-03EA
To: TOS Sign CMS-E01
Remarks:
Description Of Changes:

Route	Conduit No.	Route	Conduit No.	Route	Conduit No.	Route	Conduit No.
1	TOS-03EA	2	5033	3	PB-28	4	5954
5	TC Vault 3E	6	2T43E	7	5959	8	CMS-E01

Cable/Ckt #: LP218-1,3,5A
Reference: E-97, E-116
Function: 120 V Lighting
Conductor Type: 4 + 1 Gnd, #10, #10, 600 V, RHH/RHW insulation
From: PB-LTG at 120 V Bike Path Ltg.
To: PB-1C
Remarks:
Description Of Changes:

Route	Conduit No.	Route	Conduit No.	Route	Conduit No.	Route	Conduit No.
1	PB-LTG	2	PB-1C				

5 **ADDED PER ADDENDUM No. 5 DATED JULY 30, 2009**

MARK	DATE	DESCRIPTIONS	BY	CH'D
2	11/11/11	Relocate U/G Duct Bank at Bent W8	JH	EJL
1	03/30/11	Elimination of Service Platform at WSL	RR	RG

REVISIONS

CONTRACT CHANGE ORDER NO. 85
SHEET 75 OF 76

CABLE AND CIRCUIT SCHEDULE

E-397F

REVISED BY | DATE REVISED
JEFFRI HALIM | ELLERY LUCAS
CALCULATED-DESIGNED BY | CHECKED BY
CONSULTANT FUNCTIONAL SUPERVISOR: BEHZAD GOLEMOHAMMADI
STATE OF CALIFORNIA - DEPARTMENT OF TRANSPORTATION
Caltrans

LAST REVISION 11-11-11 | DATE PLOTTED => 18-NOV-2011 | TIME PLOTTED => 11:27

DIST.	COUNTY	ROUTE	KILOMETER POST TOTAL PROJECT	SHEET NO.	TOTAL SHEETS
04	SF	80	12.7/13.2	777R1	806

Caltrans Metric

REGISTERED ENGINEER - CIVIL
6-23-08
PLANS APPROVAL DATE

REGISTERED PROFESSIONAL ENGINEER A.L. ELY No. 18880 Exp. 6-30-09 CIVIL STATE OF CALIFORNIA

The State of California or its officers or agents shall not be responsible for the accuracy or completeness of electronic copies of this plan sheet.

T.Y. LIN / MOFFATT & NICHOL
TWO HARRISON STREET
SAN FRANCISCO, CA 94105

MARK	DATE	DESCRIPTIONS	BY	CH'D
1	7-24-12	Revised layout and details	TL	JB

REVISIONS

CONTRACT CHANGE ORDER NO. 85
SHEET 76 OF 76

REVISED PER ADDENDUM NO. 2 DATED JANUARY 22, 2009

July 24, 2012

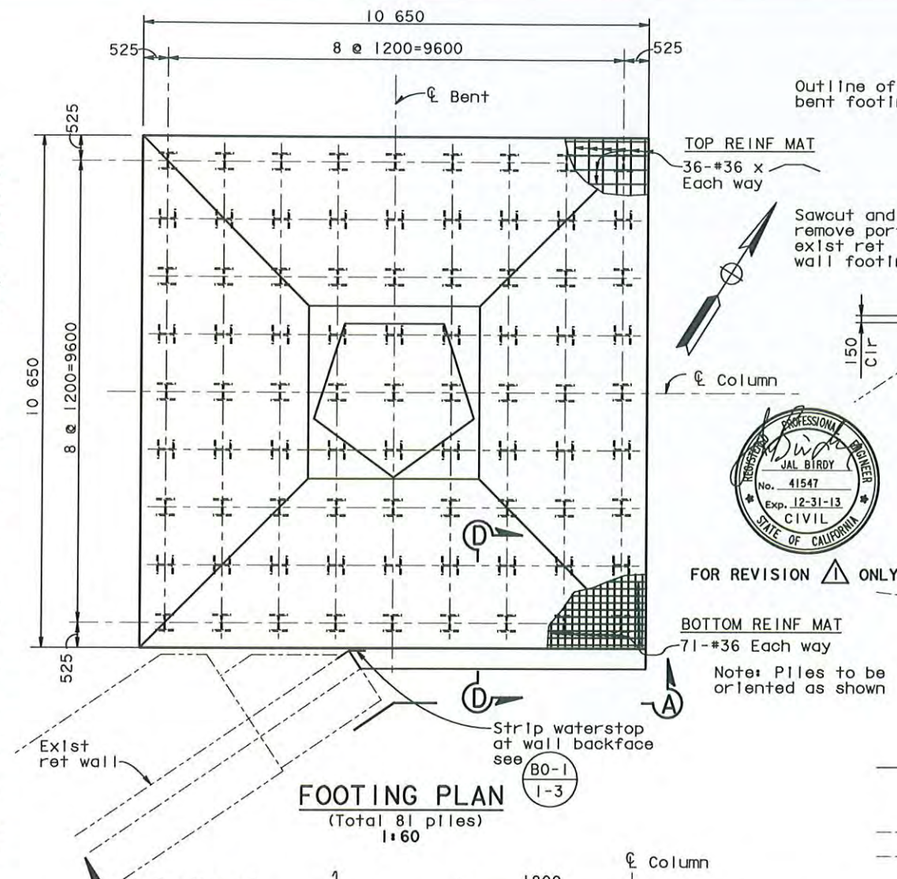

FOOTING PLAN
(Total 81 piles)
1:60

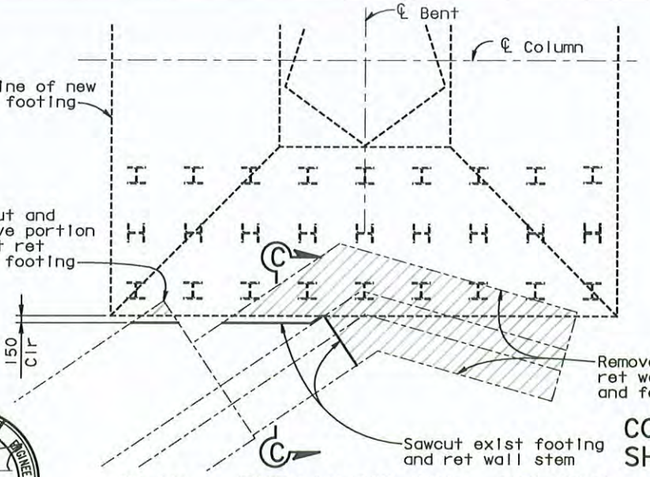

PLAN - RETAINING WALL REMOVAL
1:60

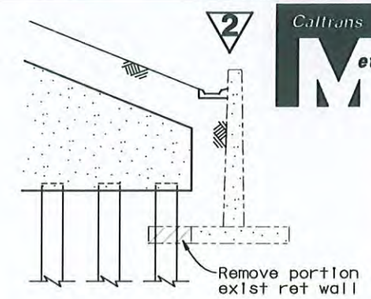

SECTION C-C
1:60

FOR REVISION 1 ONLY

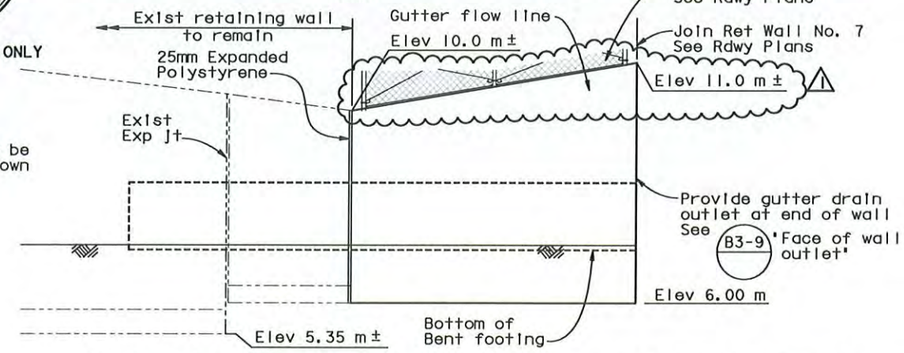

ELEVATION A-A
1:60

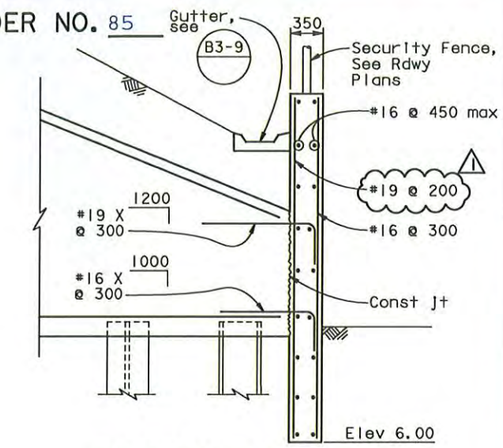

SECTION D-D
1:30

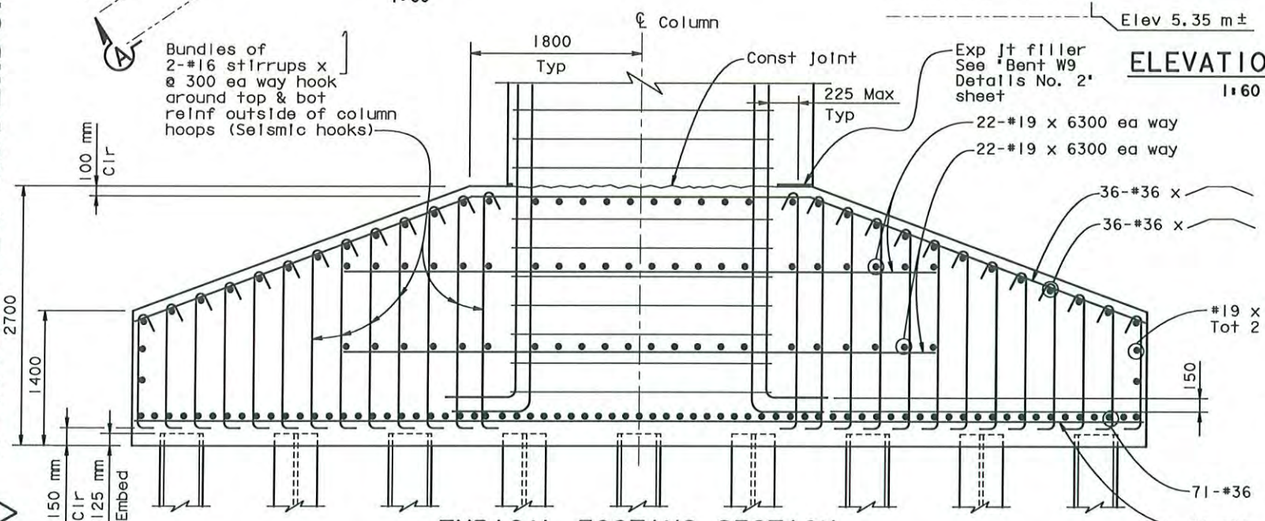

TYPICAL FOOTING SECTION
1:30

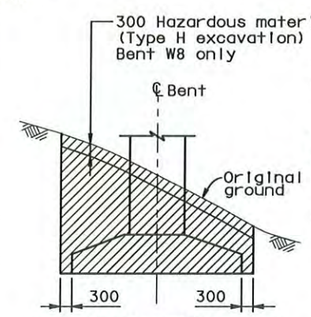

STRUCTURE EXCAVATION

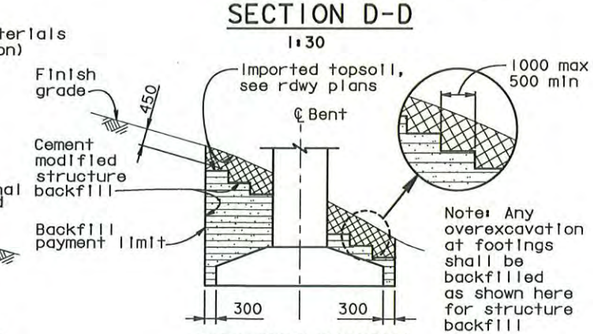

STRUCTURE BACKFILL

LIMITS OF PAYMENT FOR STRUCTURE EXCAVATION & BACKFILL

Typical Bents W8 and W9
For Details not shown see A62C & A62B
No Scale

ALL DIMENSIONS ARE IN MILLIMETERS UNLESS OTHERWISE SHOWN

DESIGN OVERSIGHT
JOHN MOOK, BERNARD CHAN, JUAN F. CARPIO, HASAN EL-NATUR
March 3, 2008
SIGN OFF DATE

Rev. Date: 5-18-98

	BY	CHECKED
DESIGN	Chou	Atiqullah
DETAILS	van Ryn/Zucchi/Mal	Chou
QUANTITIES	Chou	Liao

PREPARED FOR THE STATE OF CALIFORNIA DEPARTMENT OF TRANSPORTATION

Jal Birdy
PROJECT ENGINEER

CU 04251
EA 0120S1

BRIDGE NO. 34-172S
KILOMETER POST 12.8

SAN FRANCISCO OAKLAND BAY BRIDGE
EAST SPAN SEISMIC SAFETY PROJECT

YBI EB ON-RAMP STRUCTURE (INITIAL)

BENT W8 DETAILS NO. 2

ORIGINAL SCALE IN MILLIMETERS FOR REDUCED PLANS 0 10 20 30 40 50 60 70 80 90 100

DISREGARD PRINTS BEARING EARLIER REVISION DATES — REVISION DATES (PRELIMINARY STAGE ONLY) 8/28/07 9/27/07 1/24/08 3/24/08 9/18/08 5/28/12 2/14/03 3/24/06 10/26/06 1/24/07

SHEET 6 OF 17

FILE => P:\4141-06\CADD\Roadway Plans\Checked Plans\YBITS #1-100% 03-03-08 (Final Renamed)\072412 CCO T22\04-0120s1-34-172s-h-bdet0

USERNAME => fsamson DATE PLOTTED => 7/24/2012 TIME PLOTTED => 9:58:09 AM

STATE OF CALIFORNIA - DEPARTMENT OF TRANSPORTATION

CONTRACT CHANGE ORDER MEMORANDUM

TO: Deanna Vilcheck, ACM /	FILE: E.A. 04 - 0120S4
FROM: William Howe, Senior R.E.	CO-RTE-PM SF-80-12.7/13.2
	FED. NO. NO FED AID
CCO#: 85 SUPPLEMENT#: 0 Category Code: CHPT	CONTINGENCY BALANCE (incl. this change) $36,771,875.15
COST: $7,599,030.00 INCREASE ☑ DECREASE ☐	HEADQUARTERS APPROVAL REQUIRED? ☑ YES ☐ NO
SUPPLEMENTAL FUNDS PROVIDED: $0.00	IS THIS REQUEST IN ACCORDANCE WITH ENVIRONMENTAL DOCUMENTS? ☑ YES ☐ NO
CCO DESCRIPTION: Duct Bank in Bent W7 to Bent W8 Area	**PROJECT DESCRIPTION:** YBITS-1 (Yerba Buena Island Transition Structures)

Original Contract Time:	Time Adj. This Change:	Previously Approved CCO Time Adjustments:	Percentage Time Adjusted: (including this change)	Total # of Unreconciled Deferred Time CCO(s): (including this change)
1390 Day(s)	0 Day(s)	0 Day(s)	0 %	9

THIS CHANGE ORDER PROVIDES FOR:
Modifications to the duct bank, compressed airline and Retaining Walls No. 6 and No. 7.

The YBITS1 contract completes the remaining portions of the utility duck bank that feeds electrical power and fiber optic lines for the east span corridor lighting, elevators, dehumidifiers, traffic operations, communications and security systems. The duct bank alignment descends on a steep slope from Macalla Road running north to south where it passes under the YBITS structure. Due to interferences with abandoned falsework piles and retaining wall tiebacks within the slope, Project Development has provided revised plan sheets which relocate the duct bank to the east to avoid the abandoned piles and tie backs. The plan sheets also add benches along the bottom of the duct bank to help support it on the slope and relocate and increase the size of the two retaining walls that support the duct bank at the top and bottom of the slope.

This change order also calls for the Contractor to allocate resources to complete the duct bank as required to support the SFOBB corridor SSO date established by the Toll Bridge Program Oversight Committee (TBPOC). The Contractor's current schedule for duct bank completion supports the YBITS1 project SSO dates but not the SFOBB corridor SSO dates, which requires the connection of the utility feeds from the duct bank for the SAS, Skyway and OTD structures. The allocated labor resources will be provided with the intent of having all utilities within the duct bank ready for testing by January 1, 2013.

In order to construct the duct bank, the Contractor must first remove the Frame 1 falsework over the duct bank alignment, construct the adjacent footing and column for Bent W8 of the EB on-ramp structure and construct the two supporting retaining walls at the top and bottom of the slope. The construction of the duct bank itself includes excavating a 4 meter deep by 4 meter wide trench down the slope, constructing the 100 meter long 3 meter wide and 1 meter high reinforced concrete duct bank with 32 steel conduits installed and constructing 10 concrete reinforced manholes. Once the duct bank is constructed, 40,000 meters of cable will need to be pulled through the entire length of the duct bank from Macalla Rd. to the SAS structure.

As part of the change, the Contractor will provide trade laborers, work extended shift hours and add a night shift. Equipment resources shall be provided to support the increased labor force. Premium time labor costs and inefficiencies shall be compensated under this change order.

Compensation shall be provided for the changes to the duct bank, the changes to the two retaining walls and for the additional resources being allocated to the work. Compensation shall be paid as an Adjustment of Compensation at an Agreed Lump Sum of $7,599,030.00. The cost shall be financed from the contingency funds allotted to the contract. A detailed cost estimate is on file.

This change order was approved by the Toll Bridge Program Oversight Committee (TBPOC) at a cost not to exceed $8,000,000.00 on September 20, 2012.

The change order defers any time adjustment to the completion of the Designated Portion of the Work 3, an internal contract milestone, as the change may affect the controlling operation of that milestone. There will be no adjustment to the contract completion as the change doesn't affect the controlling operation to the contract completion.

Maintenance concurrence will be obtained from Lina Ellis, Structures Maintenance.

ADA Notice: For individuals with sensory disabilities, this document is available in alternate formats. For information call: (916) 654-6410 or TDD (916) 654-3880 or write Records and Forms Management, 1120 N Street, MS-89, Sacramento, CA 95814.

CONCURRED BY:		
Construction Engineer:	William Howe	Date 09-25-12
Bridge Engineer:	Mehran Ardakanian	Date
Project Engineer:	Brian Wood, Design	Date 10-29-12
Project Manager:	Ken Terpstra	Date 9/26/12
FHWA Rep.:		Date
Environmental:		Date
Other (specify):	Lina Ellis, Str. Maintenance	Date 10-1-12
Other (specify):		Date
District Prior Approval By:		Date
HQ (Issue Approve) By:	Larry Salhaney	Date 10-1-12
Resident Engineer's Signature:	William Howe	Date 09-25-12

ESTIMATE OF COST

	THIS REQUEST	TOTAL TO DATE
ITEMS	$0.00	$0.00
FORCE ACCOUNT	$0.00	$0.00
AGREED PRICE	$0.00	$0.00
ADJUSTMENT	$7,599,030.00	$7,599,030.00
TOTAL	$7,599,030.00	$7,599,030.00

FEDERAL PARTICIPATION

☐ PARTICIPATING ☐ PARTICIPATING IN PART ☑ NONE
☐ NON-PARTICIPATING (MAINTENANCE) ☐ NON-PARTICIPATING

FEDERAL SEGREGATION (if more than one Funding Source or P.I.P. type)
☐ CCO FUNDED PER CONTRACT ☐ CCO FUNDED AS FOLLOWS

FEDERAL FUNDING SOURCE	PERCENT

ADA Notice: For individuals with sensory disabilities, this document is available in alternate formats. For information call (916) 654-6410 or TDD (916) 654-3880 or write Records and Forms Management, 1120 N Street, MS-89, Sacramento, CA 95814.

STATE OF CALIFORNIA - DEPARTMENT OF TRANSPORTATION

CONTRACT CHANGE ORDER

Change Requested by: Engineer

CCO: 86	Suppl. No. 0	Contract No. 04 - 0120S4	Road SF-80-12.7/13.2	FED. AID LOC.: NO FED AID

To: **M C M CONSTRUCTION INC**

You are directed to make the following changes from the plans and specifications or do the following described work not included in the plans and specifications for this contract. ***NOTE: This change order is not effective until approved by the Engineer.***

Description of work to be done, estimate of quantities and prices to be paid. (Segregate between additional work at contract price, agreed price and force account.) Unless otherwise stated, rates for rental of equipment cover only such time as equipment is actually used and no allowance will be made for idle time. This last percentage shown is the net accumulated increase or decrease from the original quantity in the Engineer's Estimate.

Extra Work at Lump Sum:

As authorized by the Engineer, provide the texture on the surface of the deck joints at Bent W10AL North barrier in accordance with the revised details shown on sheets 2 and 3 of this change for the San Francisco-Oakland Bay Bridge East Span Seismic Safety Project Yerba Buena Island Transition Structures, Bridge Nos. 34-0006L/R.

The revised contract plan sheets reflecting this change are 688R2 and 693R2 of 806.

For this change, the Contractor will be paid an agreed lump sum of $936.00. This agreed lump sum constitutes full compensation, including all markups, for all direct and indirect costs, and all associated project impacts.

Extra Work at Lump Sum $936.00

Estimated Cost: Increase ☑ Decrease ☐ **$936.00**

By reason of this order the time of completion will be adjusted as follows: 0 days

Submitted by:		
Signature William Howe	Resident Engineer William Howe, Senior R.E.	Date 11-16-11
Approval Recommended by:		
Signature William Howe	Senior Resident Engineer William Howe	Date 11-16-11
Engineer Approval by:		
Signature William Howe	Senior Resident Engineer William Howe	Date 12-12-11

We the undersigned contractor, have given careful consideration to the change proposed and agree, if this proposal is approved, that we will provide all equipment, furnish the materials, except as may otherwise be noted above, and perform all services necessary for the work above specified, and will accept as full payment therefor the prices shown above.

NOTE: If you, the contractor, do not sign acceptance of this order, your attention is directed to the requirements of the specifications as to proceeding with the ordered work and filing a written protest within the time therein specified.

Contractor Acceptance by:		
Signature	(Print name and title) EDMUNDO A. PUCHI, TREASURER	Date 12/6/11

William Howe 11-16-11

DIST	COUNTY	ROUTE	KILOMETER POST PROJECT	SHEET No	TOTAL SHEETS
04	SF	80	12.13.2	688R2	806

REGISTERED CIVIL ENGINEER DATE

PLANS APPROVAL DATE

The State of California or its officers or agents shall not be responsible for the accuracy or completeness of electronic copies of this plan sheet.

REGISTERED PROFESSIONAL ENGINEER — EFTHYMIOS DELIS — No. 5143 — Exp. 6-30-08 — CIVIL — STATE OF CALIFORNIA

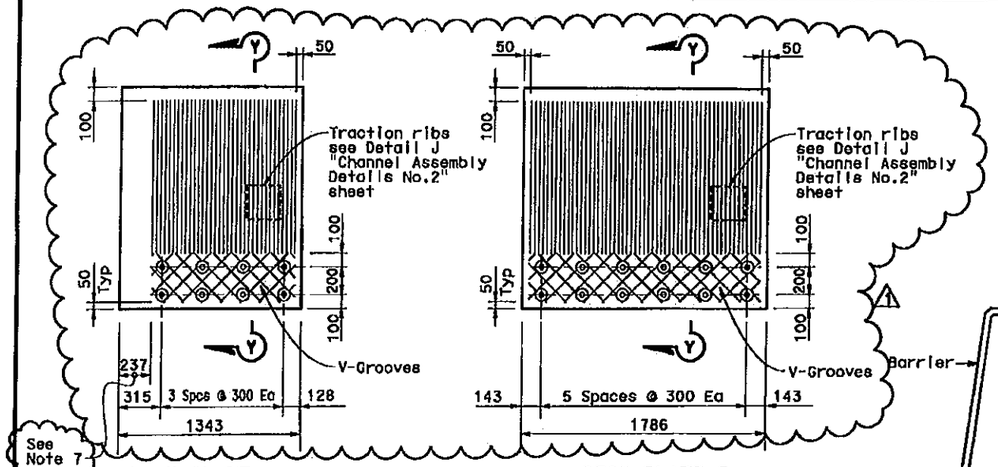

DECK PLATE A
SCALE = 1:20
Note: Barrier not shown for clarity

DECK PLATE B
SCALE = 1:20

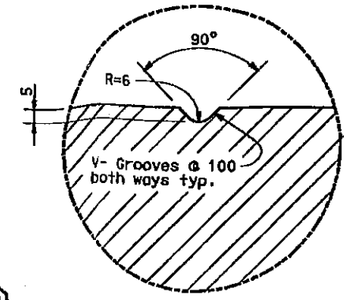

DETAIL K

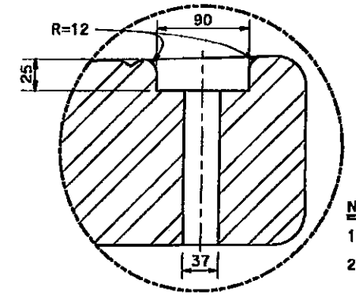

DETAIL L

NOTES:

1. V-Groove pattern is similar for all Plates
2. For deck plate plan see "DECK PLATE DETAILS NO 1" sheet for TYPE I joint.
3. In Section P-P, Y may vary from 10 mm (min) to 20 mm (max) at the thickest end of the deck ℄ (td). △1
4. Traction ribs to be machined.
5. For td, Lp, Lc, tc and Ls values see "CROSS SECTION" sheet for TYPE I joint.
6. Eye bolts can be used at set screw locations for lifting of cover plates.
7. For limits of traction ribs and V-Grooves at north barrier at Hinge W10AL see "Seismic Joint (Type 1) Reinf Details No.2" sheet △2

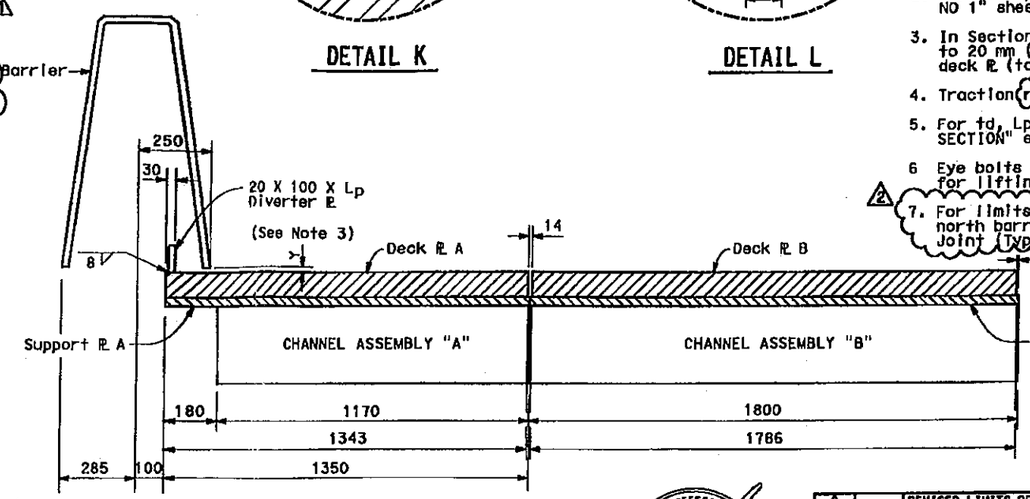

SECTION P-P
SCALE = 1:10

REGISTERED PROFESSIONAL ENGINEER — EVERETT G. MACDONALD — No. 46920 — Exp. 6/30/11 — CIVIL — STATE OF CALIFORNIA

FOR REVISION △1 ONLY

REGISTERED PROFESSIONAL ENGINEER — A.L. ELY — No. 18880 — Exp. 6-30-11 — CIVIL — STATE OF CALIFORNIA

FOR REVISION △2 ONLY

MARK	DATE	DESCRIPTIONS	BY	CH'D
△2	5-27-11	REVISED LIMITS OF TRACTION RIBS AND V-GROOVES AT W10AL	TL	AE
△1	3-29-10	REVISED SOME V-GROOVES TO TRACTION RIBS	BM	RM
		REVISIONS		

CONTRACT CHANGE ORDER NO. ____
SHEET ____ OF ____

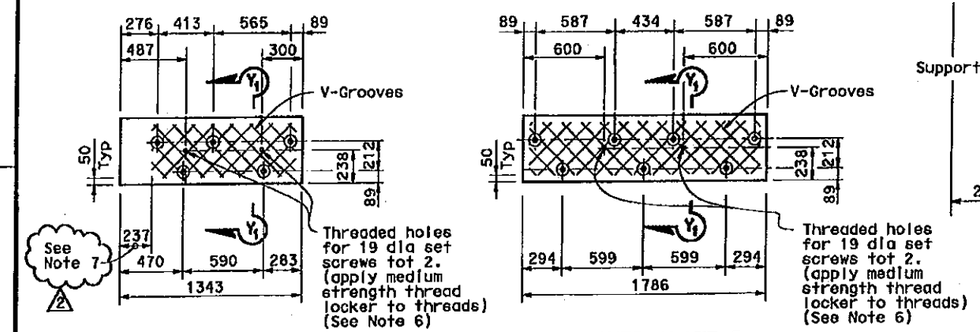

COVER PLATE A
SCALE = 1:20

COVER PLATE B
SCALE = 1:20

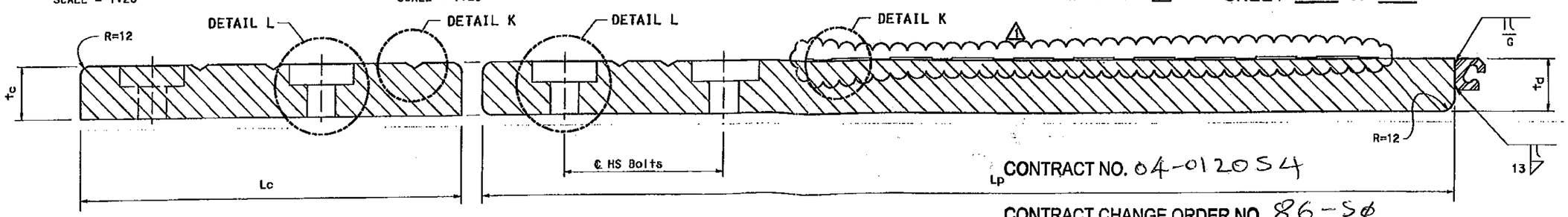

SECTION Y_1-Y_1
SCALE = 1:2.5

SECTION Y-Y
SCALE = 1:2.5

CONTRACT NO. 04-012054

CONTRACT CHANGE ORDER NO 86-50

SHEET 2 OF 3

THE CONTRACTOR SHALL VERIFY ALL CONTROLLING FIELD DIMENSIONS BEFORE ORDERING OR FABRICATING ANY MATERIAL.

SHEET OF

DESIGN	BY E DELIS	CHECKED	A KARTOUM
DETAILS	BY A R DUDSAK	CHECKED	A KARTOUM
QUANTITIES	BY E DELIS	CHECKED	A KARTOUM

STATE OF CALIFORNIA
DEPARTMENT OF TRANSPORTATION

DIVISION OF ENGINEERING SERVICES
STRUCTURE DESIGN
SPECIAL DESIGNS BRANCH

BRIDGE NO. 34-0006 L/R
KILOMETER POST 12.8

CU 04251
EA 012051

SAN FRANCISCO OAKLAND BAY BRIDGE
EAST SPAN SEISMIC SAFETY PROJECT
YBI TRANSITION STRUCTURES
SEISMIC JOINT (TYPE I)
DECK PLATE DETAILS NO 2

Caltrans Metric

ALL DIMENSIONS ARE IN MILLIMETERS UNLESS OTHERWISE SHOWN

ORIGINAL SCALE IN MILLIMETERS FOR REDUCED PLANS 0 10 20 30 40 50 60 70 80 90 100

DISREGARD PRINTS BEARING EARLIER REVISION DATES 10/26/07 1/22/08 2/25/08

REVISION DATES

SHEET 139 OF 209

FILE => spec_des_br_proj/20076d/04-012051/p:\4141-06\CADD\TS\Checked Plans\Traction Details\052711 Traction

USERNAME => fsamson DATE PLOTTED => 5/31/2011 TIME PLOTTED => 9:25:48 AM

DIST	COUNTY	ROUTE	KILOMETER POST TOTAL PROJECT	SHEET No	TOTAL SHEETS
04	SF	80	12.7/13.2	693R2	806

REGISTERED CIVIL ENGINEER DATE

PLANS APPROVAL DATE

REGISTERED PROFESSIONAL ENGINEER — E. THOMAS DELIS — No. 51434 — Exp. 6-30-08 — CIVIL — STATE OF CALIFORNIA

The State of California or its officers or agents shall not be responsible for the accuracy or completeness of electronic copies of this plan sheet.

CONTRACT NO. 04-012054

CONTRACT CHANGE ORDER NO 86-50

SHEET 3 OF 3

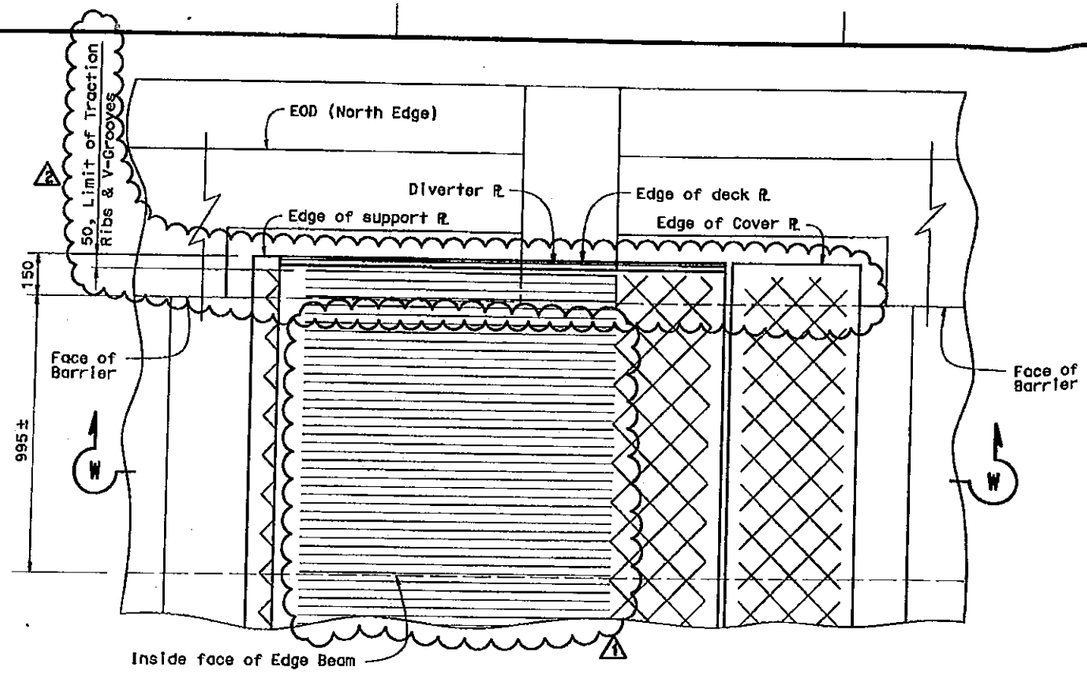

PARTIAL PLAN VIEW NORTH EDGE

SCALE = 1:10

NOTES:

1. Rebars with mechanical couplers extend beyond blockout limits by at least 50 d_b
2. Top deck placed at deck profile.
3. Top of support plate parallel to top deck plate.
4. Seismic joint shown position at 20°C.
5. Remove concrete cover and replace with elastomeric concrete.

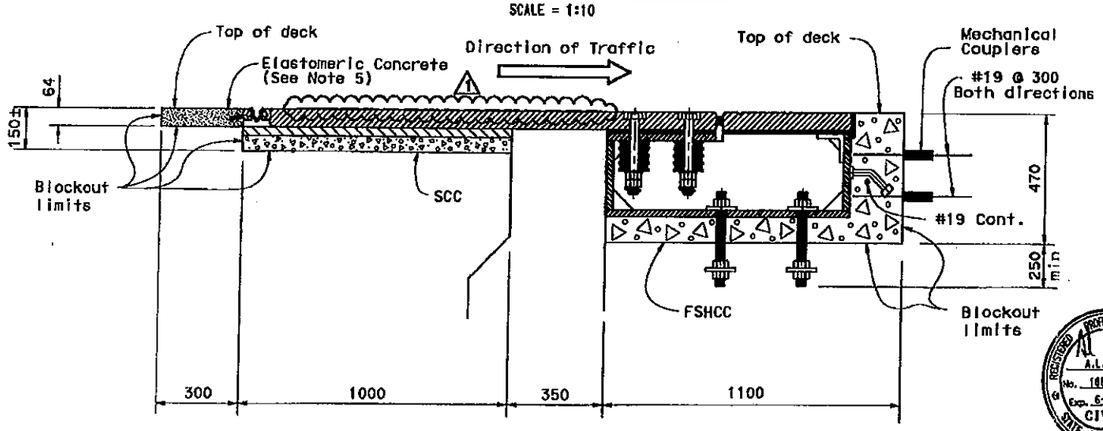

SAN FRANCISCO SIDE — OAKLAND SIDE

SECTION W-W

HINGE W10AL NORTH EDGE

SCALE = 1:10

REGISTERED PROFESSIONAL ENGINEER — A.L. ELY — No. 16880 — Exp. 6-30-11 — CIVIL — STATE OF CALIFORNIA

FOR REVISION 2 ONLY

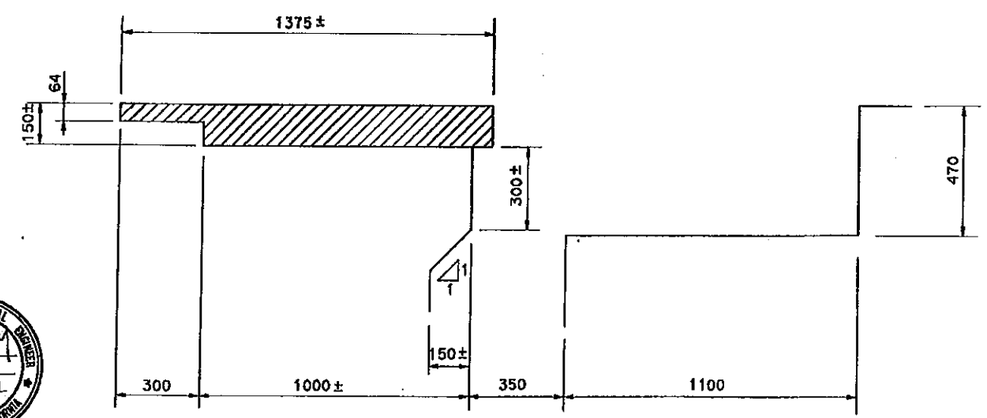

SAN FRANCISCO SIDE — OAKLAND SIDE

HINGE W10AL

(CONCRETE REMOVAL NORTH EDGE)

SCALE = 1:10

MARK	DATE	DESCRIPTIONS	BY	CH'D
2	5-27-11	REVISED LIMITS OF TRACTION RIBS AND V-GROOVES	TL	AE
1	3-29-10	REVISED SOME V-GROOVES TO TRACTION RIBS	BM	RM

REVISIONS

REGISTERED PROFESSIONAL ENGINEER — ERNESTO G. MAGCENTI — No. 46920 — Exp. 6/30/11 — CIVIL — STATE OF CALIFORNIA

FOR REVISION 1 ONLY

CONTRACT CHANGE ORDER NO. 86-50

SHEET 3 OF 3

THE CONTRACTOR SHALL VERIFY ALL CONTROLLING FIELD DIMENSIONS BEFORE ORDERING OR FABRICATING ANY MATERIAL.

SAN FRANCISCO OAKLAND BAY BRIDGE
EAST SPAN SEISMIC SAFETY PROJECT

YBI TRANSITION STRUCTURES

SEISMIC JOINT (TYPE I)

REINFORCEMENT DETAILS NO. 2

Williams Metric

DESIGN	BY E DEUS	CHECKED	A KARTOUM
DETAILS	BY A R DUDSAK	CHECKED	A KARTOUM
QUANTITIES	BY E DEUS	CHECKED	A KARTOUM

ALL DIMENSIONS ARE IN MILLIMETERS UNLESS OTHERWISE SHOWN

ORIGINAL SCALE IN MILLIMETERS FOR REDUCED PLANS 0 10 20 30 40 50 60 70 80 90 100

STATE OF CALIFORNIA
DEPARTMENT OF TRANSPORTATION

DIVISION OF ENGINEERING SERVICES
STRUCTURE DESIGN
SPECIAL DESIGNS BRANCH

BRIDGE NO. 34-0006
KILOMETER POST 12.8

CU 04251
EA 0120S1

DISREGARD PRINTS BEARING EARLIER REVISION DATES

REVISION DATES 1/24/06 2/25/06

SHEET 144 OF 209

FILE => spec_des_br_proj/20076d/04-0120S1/pi\4141-06\CADD\TS\Checked Plans\YBI Trans Details 06\YBI Trans Details 06 (Series) rev.dgn(rev.dgn)\052711 Traction

USERNAME => fdelmcon DATE PLOTTED => 5/31/2011 TIME PLOTTED => 9:25:39 AM

CONTRACT CHANGE ORDER

Change Requested by: Engineer

CCO 88	Suppl. No. 0	Contract No. 04 - 0120S4	Road SF-80-12.7/13.2	FED. AID LOC.: NO FED AID

To: **M C M CONSTRUCTION INC**

You are directed to make the following changes from the plans and specifications or do the following described work not included in the plans and specifications for this contract. ***NOTE: This change order is not effective until approved by the Engineer.***

Description of work to be done, estimate of quantities and prices to be paid. (Segregate between additional work at contract price, agreed price and force account.) Unless otherwise stated, rates for rental of equipment cover only such time as equipment is actually used and no allowance will be made for idle time. This last percentage shown is the net accumulated increase or decrease from the original quantity in the Engineer's Estimate.

The Contractor shall leave in place all materials below the existing grade from the following temporary structures defined below:

1) All 20-inch and 22-inch diameter pipe piles and appurtenances from the temporary trestle constructed as part of the Frame 1 falsework.

2) All sheet piles, soldier piles, steel beams, steel plates and appurtenances from the temporary shoring used to construct Bents W8R, W8L, W9R and W9L (south column only), foundations of the YBI Transition Structure (Br. No. 34-0006 L/R) and Bents W8 and W9 foundations of the YBI Eastbound On-Ramp Structure (34-172S).

3) All sheet piles and appurtenances from the temporary shoring used to construct Retaining Wall No. 7 as modified by Contract Change Order No. 85.

All materials shall be cut off to within 3 feet above the existing grade with all material above that elevation removed.

Extra Work at Force Account:

Cut and remove the portions of the piles and shoring left 3 feet above the existing grade under this change order to an established final grade and perform grading of the affected slope as determined by the Engineer.

This work will be paid for in accordance with Section 5-1.17, "Force Account Payment", of the Special Provisions and Section 4-1.03D, "Extra Work", of the Standard Specifications.

Estimated Cost of Extra Work at Force Account $80,000.00

Adjustment of Compensation at Lump Sum:

For all additional costs resulting from leaving the temporary trestle falsework piles and temporary shoring in place as defined under this change order, the Contractor shall be compensated an Agreed Lump Sum of $812,000.00, which constitutes full and final compensation, including all markups, for all additional costs complete in place. Compensation includes the cost of the materials left in place and the additional cost of cutting the materials to within 3 feet of the existing grade along with a credit to the Department for the eliminated work of removing the materials below grade.

Adjustment of Compensation at Agreed Lump Sum $812,000.00

STATE OF CALIFORNIA - DEPARTMENT OF TRANSPORTATION

CONTRACT CHANGE ORDER

Change Requested by: Engineer

CCO 88	Suppl. No. 0	Contract No. 04 - 012084	Road SF-80-12.7/13.2	FED. AID LOC.: NO FED AID

06/06/2013

Estimated Cost: Increase ☑ Decrease ☐ $892,000.00

By reason of this order the time of completion will be adjusted as follows: 0 days

Signature William Howe	Resident Engineer William Howe, Senior R.E.	Date 04.17.13
Signature Deanna Vilcheck	Area Construction Manager Deanna Vilcheck	Date 4/19/13
Signature [illegible]	Area Construction Manager FOR Deanna Vilcheck	Date 6-6-13

We the undersigned contractor, have given careful consideration to the change proposed and agree, if this proposal is approved, that we will provide all equipment, furnish the materials, except as may otherwise be noted above, and perform all services necessary for the work above specified, and will accept as full payment therefor the prices shown above.

NOTE: If you, the contractor, do not sign acceptance of this order, your attention is directed to the requirements of the specifications as to proceeding with the ordered work and filing a written protest within the time therein specified.

Signature [illegible]	(Print name and title) Edmundo Arellano-Treasurer	Date 6-4-2013

STATE OF CALIFORNIA - DEPARTMENT OF TRANSPORTATION

CONTRACT CHANGE ORDER MEMORANDUM

TO: Deanna Vilcheck, ACM /	FILE: E.A. 04 - 0120S4
	CO-RTE-PM SF-80-12.7/13.2
FROM: William Howe, Senior R.E.	FED. NO. NO FED AID
CCO#: 88 SUPPLEMENT#: 0 Category Code: CHPT	CONTINGENCY BALANCE (incl. this change) $38,663,854.15
COST: $892,000.00 INCREASE ☑ DECREASE ☐	HEADQUARTERS APPROVAL REQUIRED? ☑ YES ☐ NO
SUPPLEMENTAL FUNDS PROVIDED: $0.00	IS THIS REQUEST IN ACCORDANCE WITH ENVIRONMENTAL DOCUMENTS? ☑ YES ☐ NO
CCO DESCRIPTION: Bent W8 & W9 F/W & Shoring Left in Place	**PROJECT DESCRIPTION:** YBITS-1 (Yerba Buena Island Transition Structures)

Original Contract Time:	Time Adj. This Change:	Previously Approved CCO Time Adjustments:	Percentage Time Adjusted: (including this change)	Total # of Unreconciled Deferred Time CCO(s): (Including this change)
1390 Day(s)	0 Day(s)	0 Day(s)	0 %	9

THIS CHANGE ORDER PROVIDES FOR:

Cutting the temporary falsework piles and shoring at Bents 8 and 9 and Retaining Wall No. 7 above the existing grade and leaving the remaining portions of the piles and shoring in place.

This project, the Yerba Buena Island Transition Structure (YBITS), provides for the construction of two bridges, which will connect eastbound and westbound traffic on the new east span of the San Francisco Oakland Bay Bridge (SFOBB) to the existing Yerba Buena Island (YBI) tunnel. The structures are comprised of concrete box girder bridges each approximately 50 meters high and 450 meters in length.

Bents 8 and 9 and Retaining Wall No. 7 are constructed on a steep 100 foot high hillside with a 1:1 slope comprised of loose sand. To access and construct these structures, the Contractor constructed a temporary falsework trestle spanning the entire area and installed extensive temporary shoring. At the request of Toll Bridge Design and in conjunction with recommendations from Engineering Services, this change order provides for the temporary falsework piles and shoring materials for these structures that are embedded in the slope to be left in place. The materials above ground will be cut off and removed.

It is anticipated that removing these materials could jeopardize the integrity of the existing hillside while leaving the piles in place will add to the hillside's stability. The materials to be left in place include 221 steel pipe piles between 20-inches and 22-inches in diameter, 120 pairs of angled sheet piles, 18 soldier piles and related steel plates and appurtenances. Together the materials to be left in the ground make up approximately 700 tons of steel.

The change order will compensate the Contractor for the cost of replacing the materials left in place with materials in commensurate condition. A significant credit shall also be applied to these costs for the eliminated work of removing the portion of the falsework and shoring left in the ground. The change order provides for the Contractor to cut all piles and shoring to within 3 feet of the existing grade as the final grade and condition of the slope is currently being determined. The change order will also provide for the materials to be cut to the final grade when determined and provides for any ordered slope grading.

The cost of the materials left in place minus the credit for work not performed shall be paid as an Adjustment of Compensation at an Agreed Lump Sum of $812,000.00. The work of cutting the piles to the determined final grade and any required grading of the slope shall be paid as Extra Work at Force Account at an estimated cost of $80,000.00. The total estimated change order cost of $892,000.00 shall be financed from the contract's contingency funds. A detailed cost analysis is on file.

No adjustment of contract time is warranted as the does not affect the controlling operation.

Maintenance concurrence will be obtained from Lina Ellis, Structures Maintenance.

ADA Notice: For individuals with sensory disabilities, this document is available in alternate formats. For information call: (916) 654-6410 or TDD (916) 654-3880 or write Records and Forms Management, 1120 N Street, MS-89, Sacramento, CA 95814.

CONCURRED BY:		
Construction Engineer:	William Howe WBH	Date 04.17.13
Bridge Engineer:	Mehran Ardakanian M.A	Date 04.04.13
Project Engineer:	Bob Zandipour, Design	Date 4-19-13
Project Manager:	Ken Terpstra KT	Date 4/25/13
FHWA Rep.:		Date
Environmental:		Date
Other (specify):	Lina Ellis, Str. Maintenance	Date 4-29-13
Other (specify):		Date
District Prior Approval By:		Date
HQ (Issue Approve) By:	Larry Salhaney	Date 4-19-13
Resident Engineer's Signature: William Howe		Date 04.17.13

ESTIMATE OF COST

	THIS REQUEST	TOTAL TO DATE
ITEMS	$0.00	$0.00
FORCE ACCOUNT	$80,000.00	$80,000.00
AGREED PRICE	$0.00	$0.00
ADJUSTMENT	$812,000.00	$812,000.00
TOTAL	$892,000.00	$892,000.00

FEDERAL PARTICIPATION

☐ PARTICIPATING ☐ PARTICIPATING IN PART ☑ NONE
☐ NON-PARTICIPATING (MAINTENANCE) ☐ NON-PARTICIPATING

FEDERAL SEGREGATION (if more than one Funding Source or P.I.P. type)
☐ CCO FUNDED PER CONTRACT ☐ CCO FUNDED AS FOLLOWS

FEDERAL FUNDING SOURCE	PERCENT

ADA Notice: For individuals with sensory disabilities, this document is available in alternate formats. For information call: (916) 654-6410 or TDD (916) 654-3880 or write Records and Forms Management, 1120 N Street, MS-89, Sacramento, CA 95814.

CONTRACT CHANGE ORDER

Change Requested by: Engineer

CCO 89	Suppl. No. 0	Contract No. 04 - 0120S4	Road SF-80-12.7/13.2	FED. AID LOC.: NO FED AID

To: **M C M CONSTRUCTION INC**

You are directed to make the following changes from the plans and specifications or do the following described work not included in the plans and specifications for this contract. ***NOTE: This change order is not effective until approved by the Engineer.***

Description of work to be done, estimate of quantities and prices to be paid. (Segregate between additional work at contract price, agreed price and force account.) Unless otherwise stated, rates for rental of equipment cover only such time as equipment is actually used and no allowance will be made for idle time. This last percentage shown is the net accumulated increase or decrease from the original quantity in the Engineer's Estimate.

Adjustment of Compensation at Lump Sum:

Add the following work, in the W2 area, as described below:

a) Increase Duct Bank Reinforcement from Sta. 4+85 to Manholes #25, #26 and #27.
b) Install additional Duct Bank between Sta. 4+78 to 4+85.
c) Furnish and install Manholes #25, #26 and #27.
d) Remove and dispose of elevator slab.
e) Install additional compressed air line between Sta. 4+78 to 4+85.

The Contract Plans reflecting these changes are as follows:

- Issued with CCO No. 49 S0:
  47R3 of 806 (U-3)
  49R1 of 806 (U-5)
  67R3 of 806 (UQ-1)

- Issued with CCO No. 901 S1:
  130R4 of 806 (E-11)
  146R3 of 806 (E-27)

- Issued with CCO No. 89 S0 (Sheets 3 through 9 of this CCO):
  51R1 of 806 (U-7)
  57R2 of 806 (UD-4)
  144R2 of 806 (E-25)
  145R2 of 806 (E-26)
  153R1 of 806 (E-34)
  153A of 806 (E-34A)
  155R1 of 806 (E-36)

The added work includes the provision of material, equipment and labor necessary to perform the above items of work, including but not limited to; excavation, backfilling, placing reinforcement and concrete, installation of conduit, furnish and installation of manholes, and extension of existing compressed air line. The added work includes removal of portions of existing soil nail wall (including shotcrete and reinforcement) as required in the vicinity of Station 4+80 to install the duct bank and air line. This price includes disposal of debris generated by the soil nail wall and elevator slab. No replacement of the removed soil nail wall or of elevator slab is required.

This CCO does not include any of the changes for removal or tie to waterlines near W2, shown on drawings 47R3 and 49R1; these changes will be covered under CCO 49.

For the changes specified under this change order, the Contractor shall be paid an Agreed Lump Sum of $445,342.00, which constitutes full and final compensation, including all markups, for all costs associated with this work.

Adjustment of Compensation at Agreed Lump Sum = $445,342.00

CONTRACT CHANGE ORDER

Change Requested by: Engineer

CCO 89	Suppl. No. 0	Contract No. 04 - 012094	Road SF-80-12.7/13.2	FED. AID LOC.: NO FED AID

Estimated Cost: Increase ☑ Decrease ☐ $445,342.00

By reason of this order the time of completion will be adjusted as follows: 0 days

Submitted by

Signature William Howe	Resident Engineer William Howe, Senior R.E.	Date 10·19·12

Approval Recommended by

Signature Deanna Vilcheck	Area Construction Manager Deanna Vilcheck	Date 10/23/12

Engineer Approval by

Signature Deanna Vilcheck	Area Construction Manager Deanna Vilcheck	Date 7/24/13

We the undersigned contractor, have given careful consideration to the change proposed and agree; if this proposal is approved, that we will provide all equipment, furnish the materials, except as may otherwise be noted above, and perform all services necessary for the work above specified, and will accept as full payment therefor the prices shown above.

NOTE: If you, the contractor, do not sign acceptance of this order, your attention is directed to the requirements of the specifications as to proceeding with the ordered work and filing a written protest within the time therein specified.

Contractor Accepted by

Signature	(Print name and title) Edmundo A. Rocha - Treasurer	Date 7-22-2013

FOR COMPLETE RIGHT OF WAY AND ACCURATE ACCESS DATA, SEE RIGHT OF WAY RECORD MAPS AT DISTRICT OFFICE.

Dist	COUNTY	ROUTE	KILOMETER POST TOTAL PROJECT	SHEET No.	TOTAL SHEETS
04	SF	80	12.7/13.2	51R1	806

REGISTERED CIVIL ENGINEER DATE

6-23-08
PLANS APPROVAL DATE

REGISTERED PROFESSIONAL ENGINEER Ahmad Sayadi No. 74962 Exp. 12-31-11 CIVIL STATE OF CALIFORNIA

THE STATE OF CALIFORNIA OR ITS OFFICERS OR AGENTS SHALL NOT BE RESPONSIBLE FOR THE ACCURACY OR COMPLETENESS OF ELECTRONIC COPIES OF THIS PLAN SHEET.

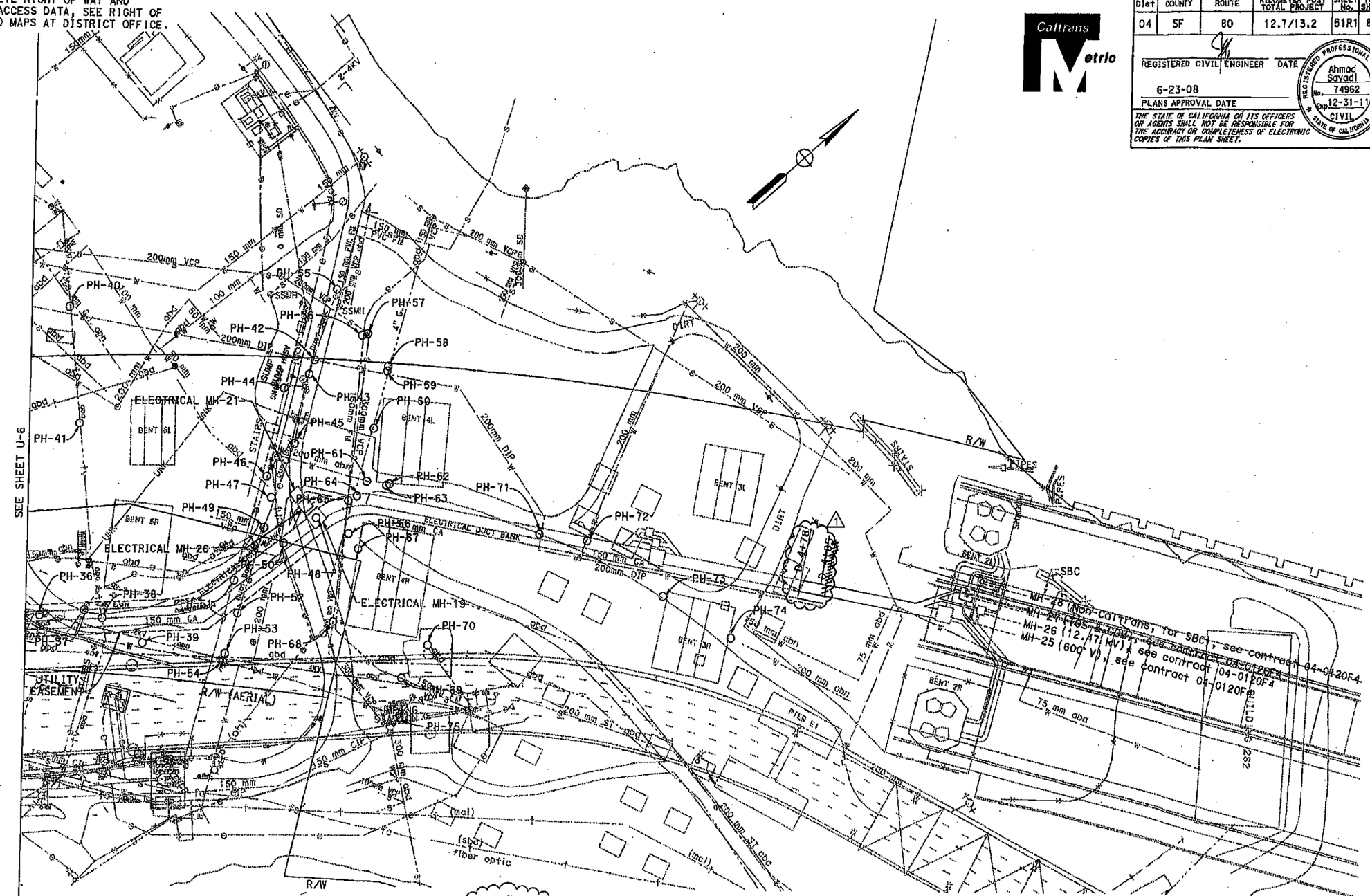

MARK	DATE	DESCRIPTIONS	BY	CH'D
1	10/25/10	REALIGMENT OF DUCT BANK, WATER LINE AND COMPRESED AIR	RL	SGC

REVISIONS

CONTRACT CHANGE ORDER NO. 89
SHEET 3 OF 9

REGISTERED PROFESSIONAL ENGINEER Ahmad Sayadi No. 74962 Exp. 12-31-11 CIVIL STATE OF CALIFORNIA
10/25/10

FOR NOTES, ABBREVIATIONS &/OR LEGEND, SEE SHEET U-1

ALL DIMENSIONS ARE IN METERS UNLESS OTHERWISE SHOWN

UTILITY PLAN
ELECTRICAL DUCT BANK AND MANHOLES

SCALE: 1:500

THIS PLAN ACCURATE FOR UTILITY WORK ONLY

U-7

STATE OF CALIFORNIA - DEPARTMENT OF TRANSPORTATION
Caltrans DESIGN

CALCULATED-DESIGNED BY	TRINH LAI	REVISED BY	TL
CHECKED BY	BOB ZANDIPOUR	DATE REVISED	10/07
FUNCTIONAL SUPERVISOR	BOB ZANDIPOUR		

LAST REVISION 03-17-08 | DATE PLOTTED => 03-NOV-2010 | TIME PLOTTED => 10:30

Dist	COUNTY	ROUTE	KILOMETER POST TOTAL PROJECT	SHEET No.	TOTAL SHEETS
04	SF	80	12.7/13.2	57R2	806

REGISTERED CIVIL ENGINEER DATE

6-23-08
PLANS APPROVAL DATE

REGISTERED PROFESSIONAL ENGINEER Ahmad Sayadi No. 74962 Exp. 12-31-11 CIVIL STATE OF CALIFORNIA

THE STATE OF CALIFORNIA OR ITS OFFICERS OR AGENTS SHALL NOT BE RESPONSIBLE FOR THE ACCURACY OR COMPLETENESS OF ELECTRONIC COPIES OF THIS PLAN SHEET.

Caltrans Metric

REVISED BY TL
DATE REVISED 10/07

AHMAD SAYADI
BOB ZANDIPOUR

CALCULATED-DESIGNED BY
CHECKED BY

FUNCTIONAL SUPERVISOR
BOB ZANDIPOUR

STATE OF CALIFORNIA - DEPARTMENT OF TRANSPORTATION
DESIGN

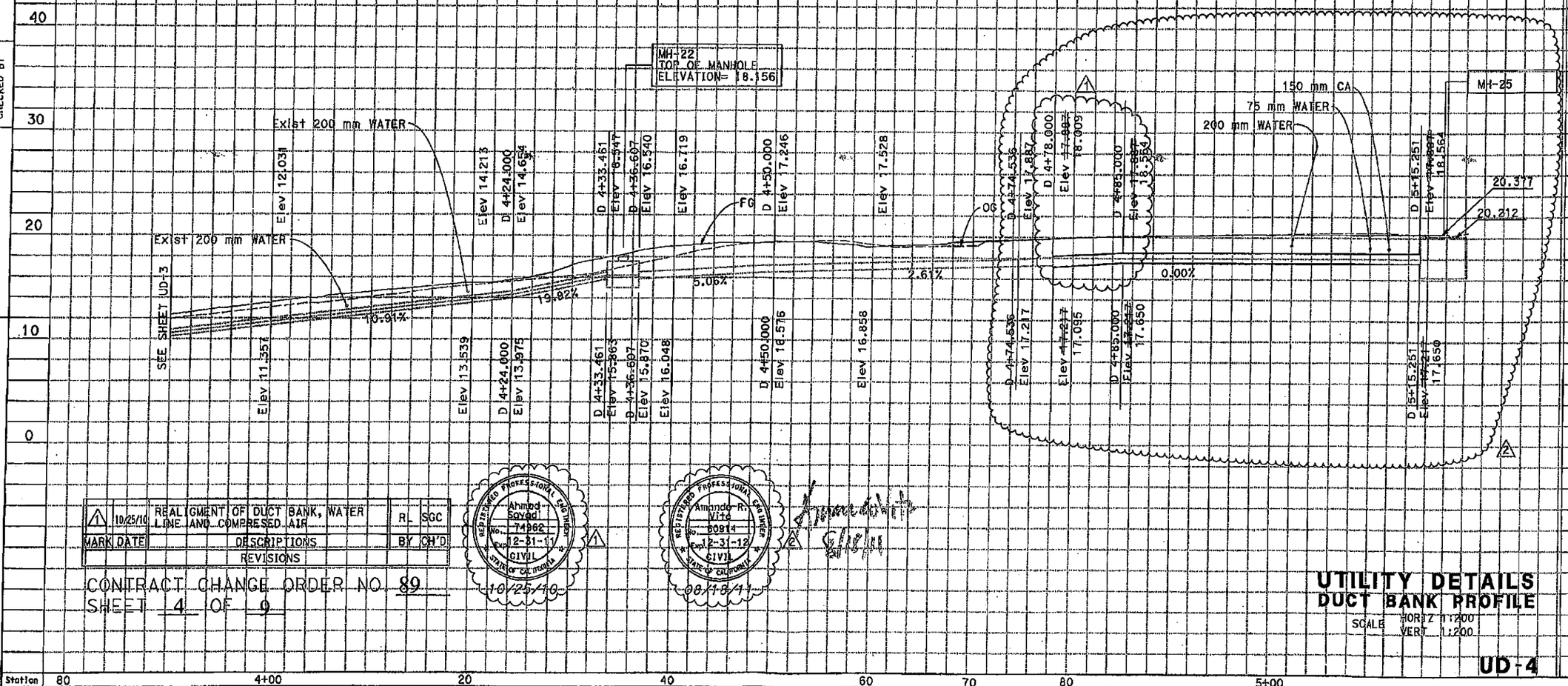

MARK	DATE	DESCRIPTIONS	BY	CH'D
1	10/25/10	REALIGMENT OF DUCT BANK, WATER LINE AND COMPRESSED AIR	R.	SGC

REVISIONS

CONTRACT CHANGE ORDER NO. 89
SHEET 4 OF 9

REGISTERED PROFESSIONAL ENGINEER Ahmad Sayadi No. 74962 Exp. 12-31-11 CIVIL STATE OF CALIFORNIA 10/25/10

REGISTERED PROFESSIONAL ENGINEER Amando R. Vila No. 60914 Exp. 12-31-12 CIVIL STATE OF CALIFORNIA 08/18/11

UTILITY DETAILS
DUCT BANK PROFILE

SCALE HORIZ 1:200
VERT 1:200

UD-4

LAST REVISION 08-21-07
DATE PLOTTED => 18-AUG-2011
TIME PLOTTED => 10:52

BORDER LAST REVISED 3/1/2007

RELATIVE BORDER SCALE IS IN MILLIMETERS

USERNAME =>
DGN FILE => 40120skb004.cce

CU 04251

EA 0120S1

Dist	COUNTY	ROUTE	KILOMETER POST TOTAL PROJECT	SHEET No.	TOTAL SHEETS
04	SF	80	12.7/13.2	144 R2	806

REGISTERED ELECTRICAL ENGINEER 2/14/08 DATE

6-23-08
PLANS APPROVAL DATE

REGISTERED PROFESSIONAL ENGINEER PAOI WALIEDDINE No. 11468 Exp. 12/31/09 ELECTRICAL STATE OF CALIFORNIA

THE STATE OF CALIFORNIA OR ITS OFFICERS OR AGENTS SHALL NOT BE RESPONSIBLE FOR THE ACCURACY OR COMPLETENESS OF ELECTRONIC COPIES OF THIS PLAN SHEET.

PB AMERICAS, Inc.
A Parsons Brinckerhoff Company
303 Second St., Suite 700N
San Francisco, CA 94107-1317

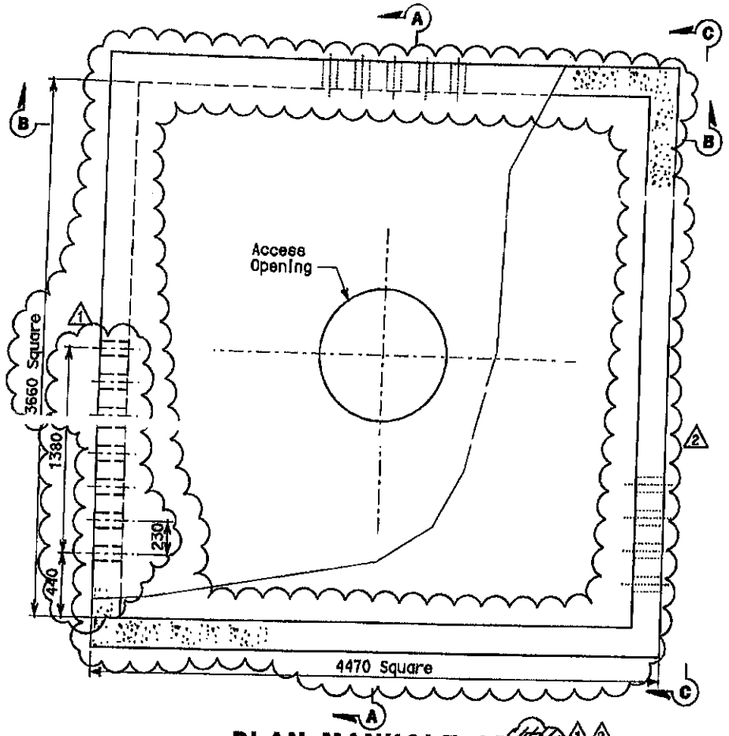

PLAN-MANHOLE-25

SCALE: 1:20 (600 V)

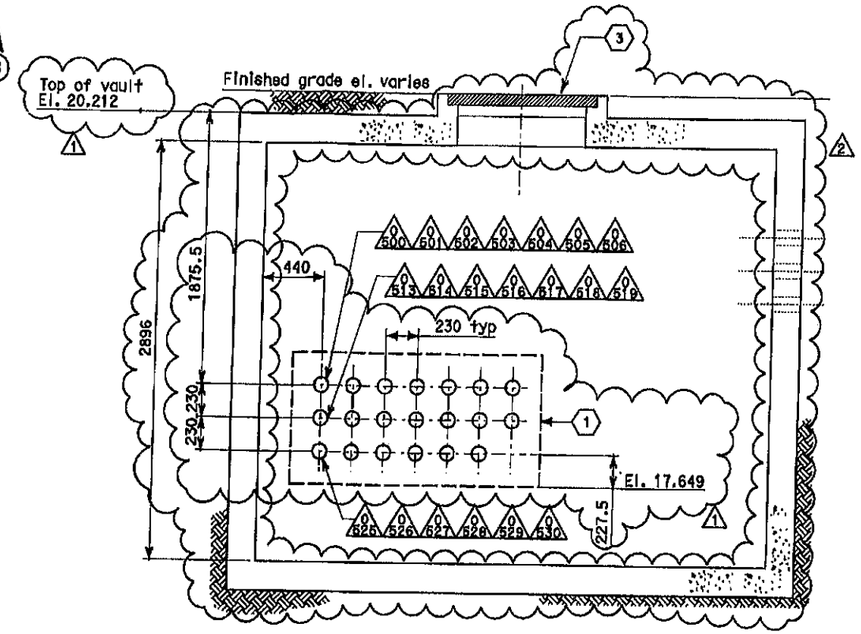

SECTION A-A

SCALE: 1:20

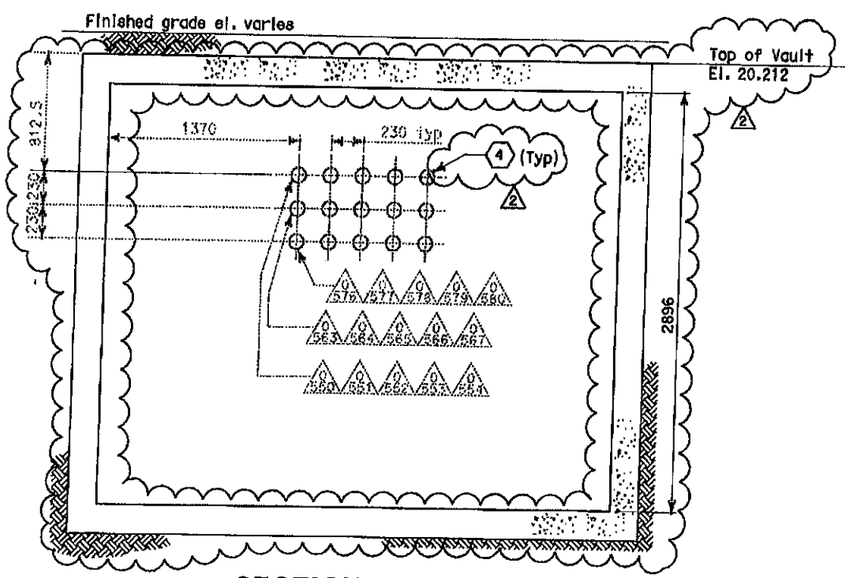

SECTION B-B

SCALE: 1:20

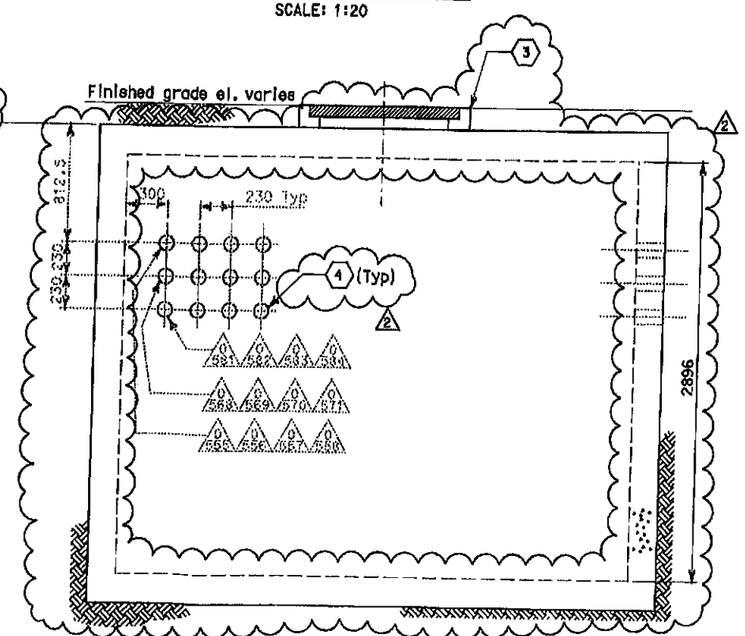

SECTION C-C

SCALE: 1:20

NOTES:

1. References:
   - For duct bank and manhole plan, see sheet E-11.
   - For duct bank sections, see sheet E-34.
   - For typical manhole and duct bank details, see sheet E-35.

SHEET NOTES:

1. Outline of underground conduit duct bank to manhole, for reinforcing details see Detail 2, sheet E-34A.
2. ~~Manhole 25 is furnished and installed under separate contract 04-120F4.~~ Deleted
3. Approximate distance of manhole necking or riser is from the finished grade and top of manhole. Maximum length of manhole necking or riser shall be 914 mm.
4. Not in contract. (Work included on contract 04-120P4).

REGISTERED PROFESSIONAL ENGINEER DAVID H. OTO No. 10699 Exp. 06/30/2013 ELECTRICAL STATE OF CALIFORNIA

FOR REVISION ONLY

MARK	DATE	DESCRIPTIONS	BY	CH'D
2	08/08/11	W2 duct banks reinforcement.	TW	RG
1	07/20/11	W2 duct banks reinforcement.	JH	EJL

REVISIONS

CONTRACT CHANGE ORDER NO. 89
SHEET 5 OF 9

DETAILS
UNDERGROUND (ELECTRICAL DUCT BANK)
(MANHOLE PLANS AND SECTIONS)

SCALE AS NOTED

E-25

THIS PLAN ACCURATE FOR ELECTRICAL WORK ONLY.

ALL DIMENSIONS IN MILLIMETERS UNLESS OTHERWISE SHOWN

STATE OF CALIFORNIA - DEPARTMENT OF TRANSPORTATION
CONSULTANT FUNCTIONAL SUPERVISOR: BEHZAD GOLEMOHAMMADI
CALCULATED-DESIGNED BY: AB
CHECKED BY: FK
REVISED BY / DATE REVISED

LAST REVISION 00-00-00
DATE PLOTTED => 10-AUG-2011
TIME PLOTTED => 08:03

BORDER LAST REVISED 3/17/2007

RELATIVE BORDER SCALE IS IN MILLIMETERS 0 20 40 60 80

USERNAME => llarloo
DGN FILE => 40120sua025r02.dgn

CU 04251 EA 0120S1

District	COUNTY	ROUTE	KILOMETER POST TOTAL PROJECT	SHEET No.	TOTAL SHEETS
04	SF	80	12.7/13.2	145 R2	806

REGISTERED ELECTRICAL ENGINEER — DATE 2/14/08

6-23-08
PLANS APPROVAL DATE

THE STATE OF CALIFORNIA OR ITS OFFICERS OR AGENTS SHALL NOT BE RESPONSIBLE FOR THE ACCURACY OR COMPLETENESS OF ELECTRONIC COPIES OF THIS PLAN SHEET.

REGISTERED PROFESSIONAL ENGINEER — FADI WALIEDDINE — No. 11865 — Exp. 12/31/09 — ELECTRICAL — STATE OF CALIFORNIA

PB AMERICAS, Inc.
A Parsons Brinckerhoff Company
303 Second St., Suite 700N
San Francisco, CA 94107-1317

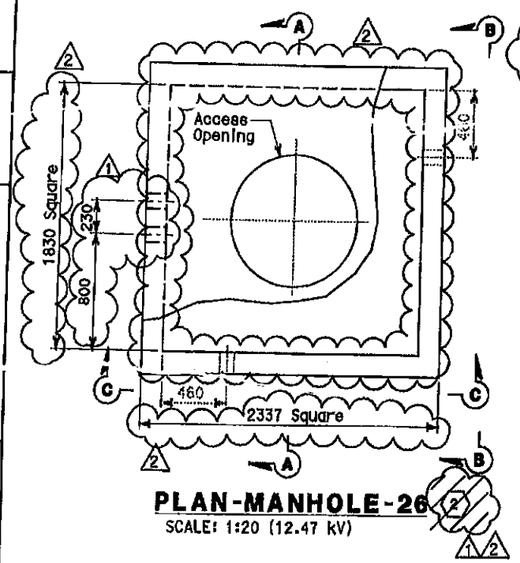

PLAN-MANHOLE-26
SCALE: 1:20 (12.47 kV)

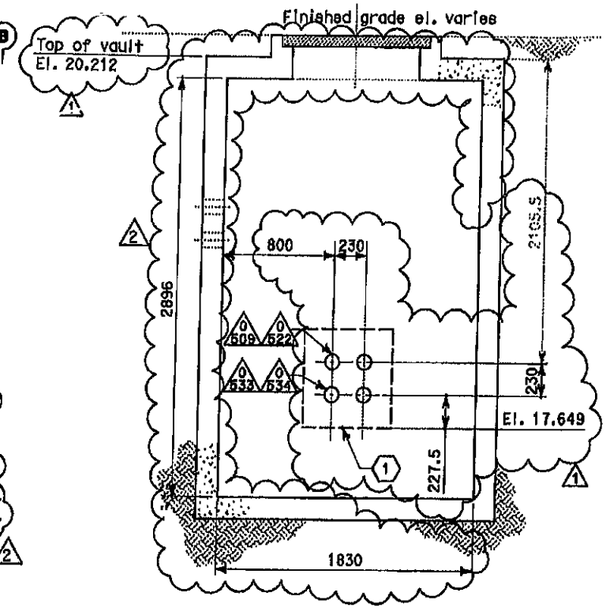

SECTION A-A
SCALE: 1:20

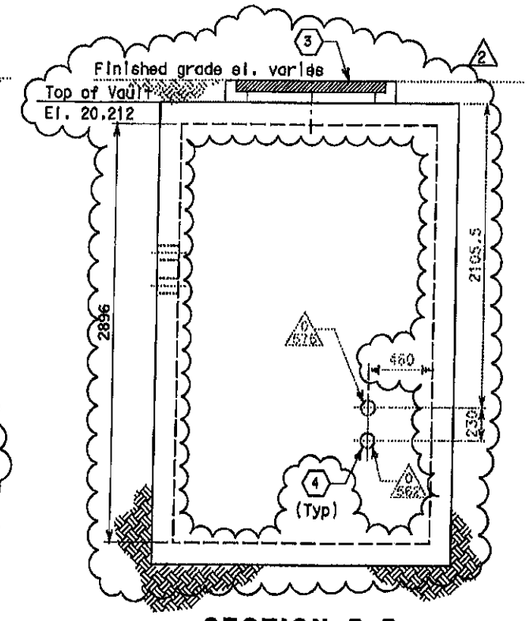

SECTION B-B
SCALE: 1:20

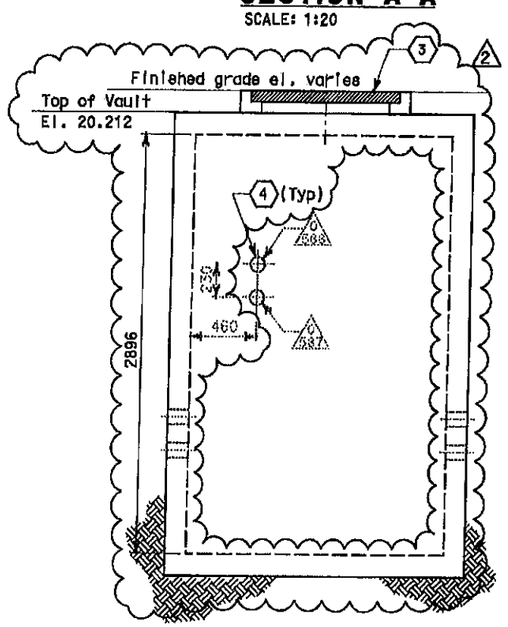

SECTION C-C
SCALE: 1:20

NOTES:

1. References:
   - For duct bank and manhole plan, see sheet E-11.
   - For duct bank sections, see sheet E-34.
   - For typical manhole and duct bank details, see sheet E-35.

SHEET NOTES:

1. (1) Outline of underground conduit duct bank to manhole. For reinforcing details see, Detail 4, sheet E-34A.
2. (2) ~~Manhole 26 is furnished and installed under separate contract 04-120F4.~~ Deleted
3. (3) Approximate distance of manhole necking or riser is from the finished grade and top of manhole. Maximum length of manhole necking or riser shall be 914 mm.
4. (4) Not in contract. (Work included on contract 04-120P4).

REGISTERED PROFESSIONAL ENGINEER — DAVID H. OTO — No. 10899 — Exp. 06/30/2013 — ELECTRICAL — STATE OF CALIFORNIA

FOR REVISION ONLY 1 2

MARK	DATE	DESCRIPTIONS	BY	CH'D
2	08/08/11	W2 duct banks reinforcement.	TW	RG
1	07/20/11	W2 duct banks reinforcement.	JH	EJL

REVISIONS

CONTRACT CHANGE ORDER NO. 89
SHEET 6 OF 9

DETAILS
UNDERGROUND (ELECTRICAL DUCT BANK)
(MANHOLE PLANS AND SECTIONS)

SCALE AS NOTED

E-26

STATE OF CALIFORNIA - DEPARTMENT OF TRANSPORTATION
Caltrans

CONSULTANT FUNCTIONAL SUPERVISOR: BEHZAD GOLEMOHAMMADI
CALCULATED-DESIGNED BY: AB
CHECKED BY: FK
REVISED BY / DATE REVISED

THIS PLAN ACCURATE FOR ELECTRICAL WORK ONLY.

ALL DIMENSIONS IN MILLIMETERS UNLESS OTHERWISE SHOWN

LAST REVISION 00-00-00 — DATE PLOTTED => 10-AUG-2011 — TIME PLOTTED => 08:03

DIST	COUNTY	ROUTE	TOTAL PROJECT	No.	SHEETS
04	SF	80	12.7/13.2	153 R1	806

REGISTERED ELECTRICAL ENGINEER 2/14/08 DATE

6-23-08
PLANS APPROVAL DATE

REGISTERED PROFESSIONAL ENGINEER FAOI WALIEOOINE No. 11365 Exp. 12/31/09 ELECTRICAL STATE OF CALIFORNIA

THE STATE OF CALIFORNIA OR ITS OFFICERS OR AGENTS SHALL NOT BE RESPONSIBLE FOR THE ACCURACY OR COMPLETENESS OF ELECTRONIC COPIES OF THIS PLAN SHEET.

PB AMERICAS, Inc.
A Parsons Brinckerhoff Company
303 Second St., Suite 700N
San Francisco, CA 94107-1317

Caltrans Metric

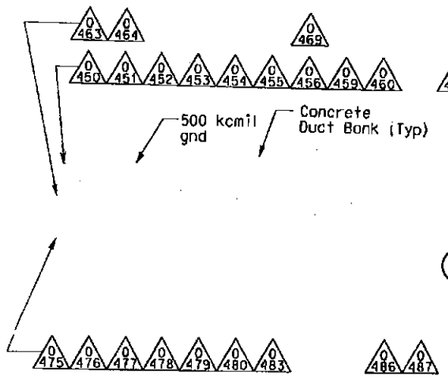

SECTION R-R (2)
SCALE: 1:20

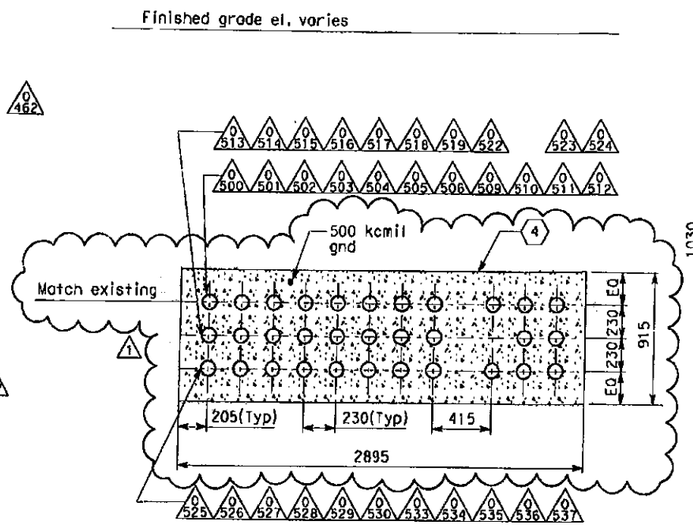

SECTION S-S
SCALE: 1:20

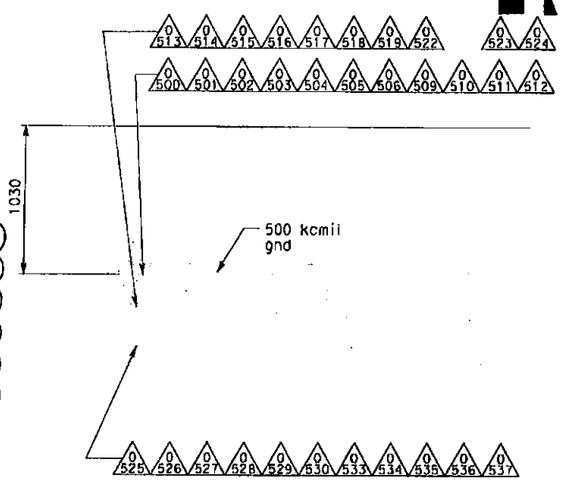

SECTION S1-S1 (3)
SCALE: 1:20

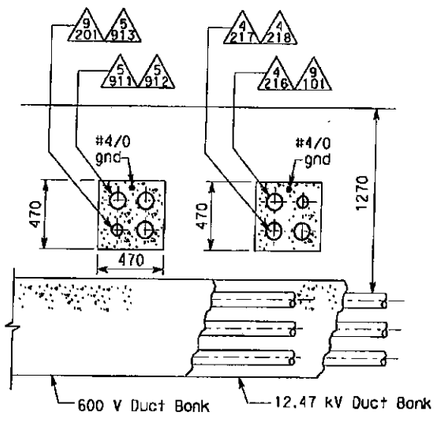

SECTION X-X
SCALE: 1:20

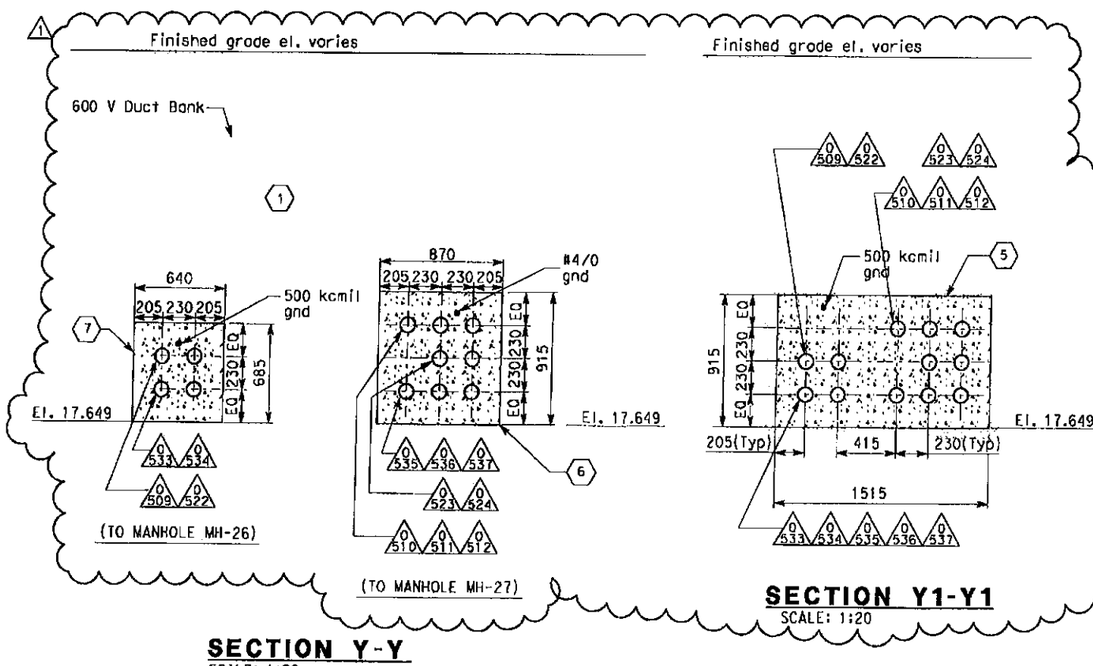

SECTION Y-Y
SCALE: 1:20

SECTION Y1-Y1
SCALE: 1:20

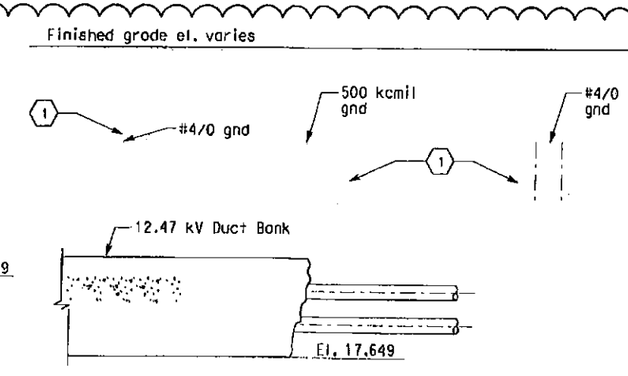

SECTION Z-Z
SCALE: 1:20

NOTES:

1. References:
   - For duct bank and manhole plans, see sheets E-8, E-10 and E-11.
   - For typical manhole and duct bank details, see sheet E-35.

SHEET NOTES:

(1) Not in contract.

(2) Not in contract. Conduits and grounds shown are existing installed on previous contract. It is provided as reference for routing cable/circuits only.

(3) Not in contract. Conduits and grounds shown are existing installed on previous contract. It is provided as reference for routing cable/circuits only. Existing conduit is tag prefixed (*) on conduit and tray schedules.

(4) For underground conduit duct bank reinforcing, see Detail 1 sheet E-34A.

(5) For underground conduit duct bank reinforcing, see Detail 3 sheet E-34A.

(6) For underground conduit duct bank reinforcing, see Detail 5 sheet E-34A.

(7) For underground conduit duct bank reinforcing, see Detail 4 sheet E-34A.

REGISTERED PROFESSIONAL ENGINEER DAVID H. OTO No. 10699 Exp. 06/30/2013 ELECTRICAL STATE OF CALIFORNIA

FOR REVISION ONLY
1

MARK	DATE	DESCRIPTIONS	BY	CH'D
1	07/20/11	W2 duct banks reinforcement.	JH	EJL

REVISIONS

CONTRACT CHANGE ORDER NO. 89
SHEET 7 OF 9

THIS PLAN ACCURATE FOR ELECTRICAL WORK ONLY.

STATE OF CALIFORNIA - DEPARTMENT OF TRANSPORTATION
Caltrans

CONSULTANT FUNCTIONAL SUPERVISOR: BEHZAD GOLEMOHAMMADI
CALCULATED-DESIGNED BY: AB
CHECKED BY: FK
REVISED BY
DATE REVISED

DETAILS
UNDERGROUND (ELECTRICAL DUCT BANK)
(DUCT BANK SECTIONS)

SCALE AS NOTED

E-34

ASL REVISION DATE PLOTTED => 7/20/2011
(10-00-00) TIME PLOTTED => 10:57:51 AM

BORDER LAST REVISED 3/1/2007

ALL DIMENSIONS IN MILLIMETERS UNLESS OTHERWISE SHOWN

RELATIVE BORDER SCALE IS IN MILLIMETERS 0 20 40 60 80

USERNAME => fuseco
DGN FILE => 401208u0034r01.dgn

CU 04251

EA 0120S1

DIST	COUNTY	ROUTE	POST MILE TOTAL PROJECT	SHEET No.	TOTAL SHEETS
04	SF	80	12.7/13.2	153A	806

07/20/11
DATE

PLANS APPROVAL DATE

REGISTERED PROFESSIONAL ENGINEER
LAWRENCE W. JOHNSON
No. C 41006
Exp. 6-30-13
CIVIL
STATE OF CALIFORNIA

THE STATE OF CALIFORNIA OR ITS OFFICERS OR AGENTS SHALL NOT BE RESPONSIBLE FOR THE ACCURACY OR COMPLETENESS OF ELECTRONIC COPIES OF THIS PLAN SHEET.

PB AMERICAS, Inc.
A Parsons Brinckerhoff Company
303 Second St., Suite 700N
San Francisco, CA 94107-1317

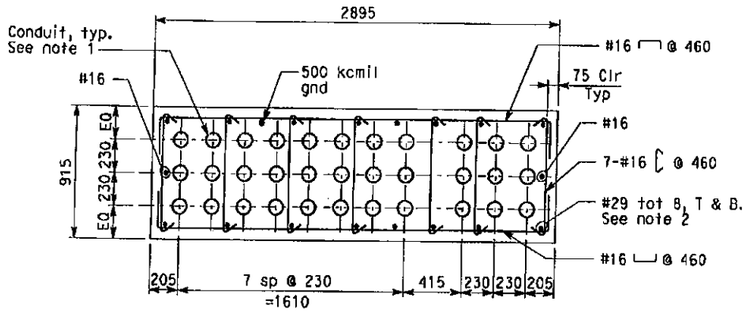

DETAIL 1
SCALE: 1:20

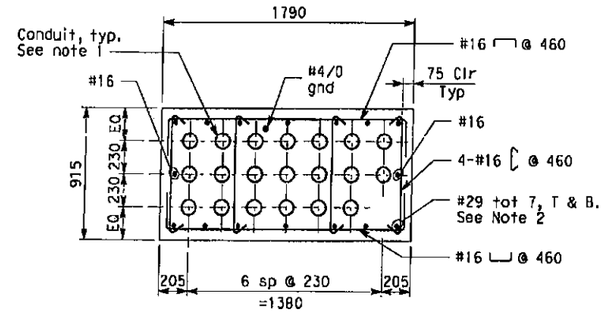

DETAIL 2
(TO MH-25)
SCALE: 1:20

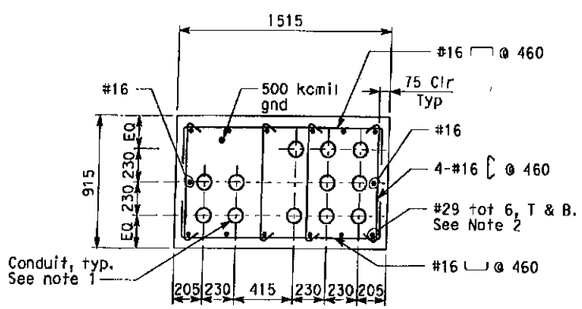

DETAIL 3
SCALE: 1:20

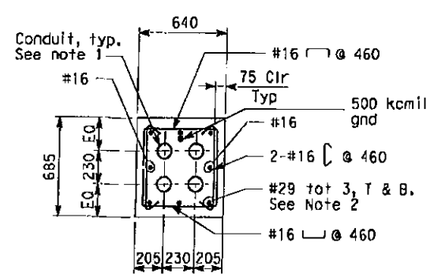

DETAIL 4
(TO MH-26)
SCALE: 1:20

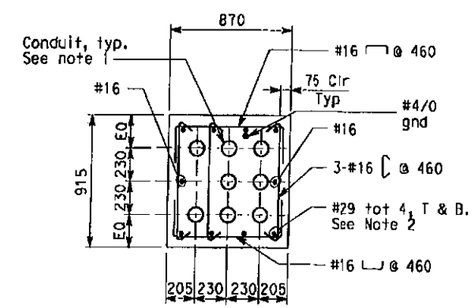

DETAIL 5
(TO MH-27)
SCALE: 1:20

NOTES:

1. For conduit duct bank sections, see sheet E-34.
2. Where duct banks intersect, develop #29 top and bottom reinforcing a minimum distance of 1525 mm into adjacent duct bank.
3. The duct bank concrete compression strength at 28 days: f'c = 25 MPa.
4. The duct bank reinforcing bar yield strength: Fy = 414 MPa.
5. The duct banks have been designed for a maximum point load of 1330 kN distributed over a 1000mm x 1000mm area at the finished grade elevation.

MARK	DATE	DESCRIPTIONS	BY	CH'D
0	07/20/11	N2 duct banks reinforcement.	LJ	EJL

REVISIONS

CONTRACT CHANGE ORDER NO. 89
SHEET 8 OF 9

DETAILS
UNDERGROUND (ELECTRICAL DUCT BANK)
(DUCT BANK SECTIONS)

SCALE AS NOTED

E-34A

REVISED BY	DATE REVISED

LARRY JOHNSON — ELLERY LUCAS

CALCULATED-DESIGNED BY — CHECKED BY

CONSULTANT FUNCTIONAL SUPERVISOR: BEHZAD GOLEMOHAMMADI

STATE OF CALIFORNIA - DEPARTMENT OF TRANSPORTATION

Caltrans

THIS PLAN ACCURATE FOR ELECTRICAL WORK ONLY.

ALL DIMENSIONS IN MILLIMETERS UNLESS OTHERWISE SHOWN

BORDER LAST REVISED 3/1/2007

RELATIVE BORDER SCALE IS IN MILLIMETERS 0 20 40 60 80

USERNAME => fusco
DGN FILE => 40120sua034A.dgn

CU 04251

EA 0120S1

LAST REVISION 00-00-00
DATE PLOTTED => 7/20/2011
TIME PLOTTED => 10:57:31 AM

Dist	COUNTY	ROUTE	KILOMETER POST TOTAL PROJECT	SHEET No.	TOTAL SHEETS
04	SF	80	12.7/13.2	155 R1	806

REGISTERED ELECTRICAL ENGINEER 2/14/08 DATE

G-23-08
PLANS APPROVAL DATE

REGISTERED PROFESSIONAL ENGINEER FADI WALIEDDINE No. 11465 Exp. 12/31/09 ELECTRICAL STATE OF CALIFORNIA

THE STATE OF CALIFORNIA OR ITS OFFICERS OR AGENTS SHALL NOT BE RESPONSIBLE FOR THE ACCURACY OR COMPLETENESS OF ELECTRONIC COPIES OF THIS PLAN SHEET.

PB AMERICAS, Inc.
A Parsons Brinckerhoff Company
303 Second St., Suite 700N
San Francisco, CA 94107-1317

Caltrans Metro

REGISTERED PROFESSIONAL ENGINEER SYN YEE CHIN No. 18186 Exp. 09/30/2011 ELECTRICAL STATE OF CALIFORNIA

Syn Yee Chin
FOR REVISION ONLY
1 11/02/2010

NOTES:

1. References:
   - For duct banks and manholes, see sheets E-7 through E-11.
   - For transition structure girder westbound grounding plan, see sheet E-79.
   - For transition structure girder eastbound grounding plan, see sheet E-128.

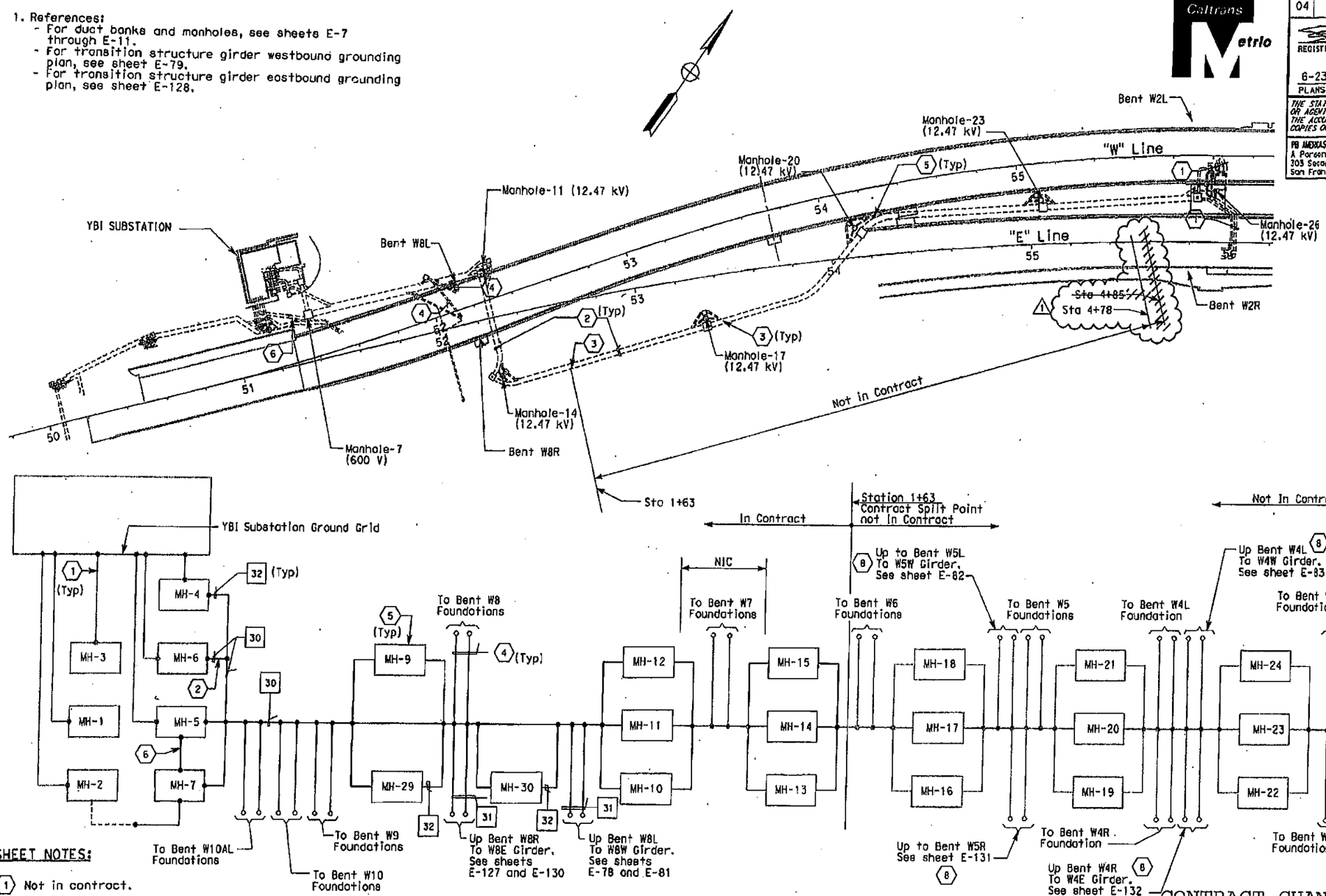

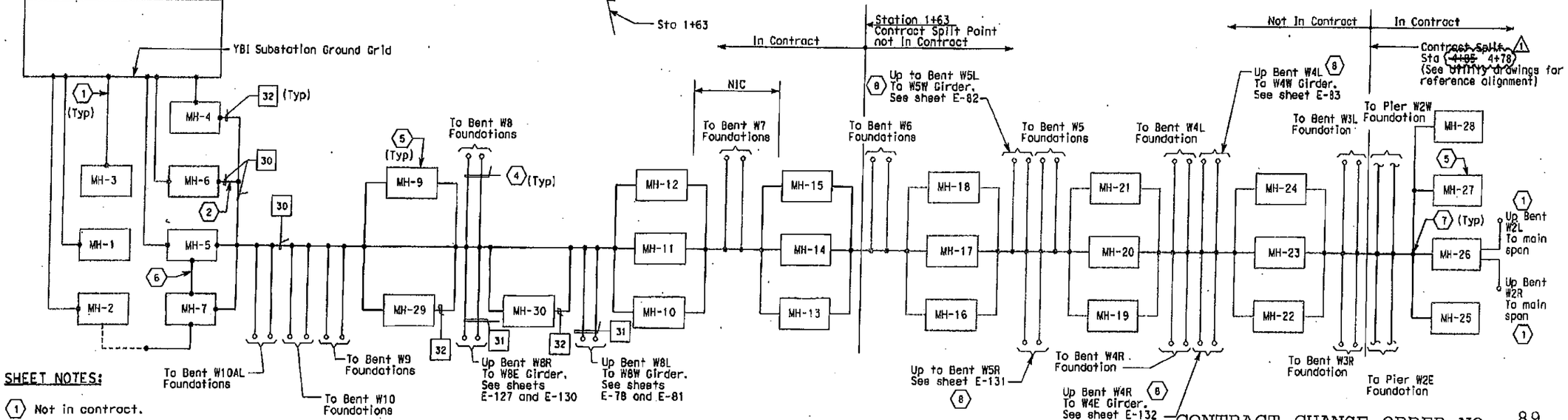

SHEET NOTES:

1. Not in contract.
2. A 500 kcmil bare copper system grounding conductor shall be installed in the 15 kV duct bank and continue through each 12.47 kV manhole.
3. At each split in the duct bank, #4/0 bare copper grounding conductors shall be exothermically welded to the 500 kcmil bare copper system grounding conductor and be continued in the 600 V and TOS/COM duct banks and manholes.
4. Two #4/0 bare copper grounding conductors shall be exothermically welded to the 500 kcmil bare copper system grounding conductor and continued to the foundations of the bent columns. For details of the foundation grounding, see sheet E-37.
5. For typical manhole grounding, see sheet E-35.
6. Exothermically weld to previously installed #4/0 bare copper grounding conductor and continue in duct bank to Manhole-7.
7. Exothermically weld 500 kcmil system grounding conductor to existing two 500 kcmil system grounding conductors in MH-26.
8. Intercept the two 250 kcmil bare copper conductors and extend to bent foundations.

CONTRACT CHANGE ORDER NO. 89

SHEET 9 OF 9

DETAILS
UNDERGROUND (ELECTRICAL DUCT BANK)
(GROUND INTERFACE)

SCALE: 1:1000

E-36

THIS PLAN ACCURATE FOR ELECTRICAL WORK ONLY.

STATE OF CALIFORNIA - DEPARTMENT OF TRANSPORTATION
Caltrans

CONSULTANT FUNCTIONAL SUPERVISOR: BEHZAD GOLEMOHAMMADI
CALCULATED-DESIGNED BY: AB
CHECKED BY: FK
REVISED BY
DATE REVISED

LAST REVISION 00-00-00
DATE PLOTTED => 11/2/2010
TIME PLOTTED => 1:28:22 PM

BORDER LAST REVISED 3/1/2007
RELATIVE BORDER SCALE IN INCHES 0 20 40 60 80
USERNAME => fusco

STATE OF CALIFORNIA - DEPARTMENT OF TRANSPORTATION

CONTRACT CHANGE ORDER MEMORANDUM

TO: Deanna Vilcheck, ACM I	FILE: E.A. 04 - 0120S4
FROM: William Howe, Senior R.E.	CO-RTE-PM SF-80-12.7/13.2
	FED. NO. NO FED AID
CCO#: 89 SUPPLEMENT#: 0 Category Code: CHPT	CONTINGENCY BALANCE (incl. this change) $41,546,250.15
COST: $445,342.00 INCREASE ☑ DECREASE ☐	HEADQUARTERS APPROVAL REQUIRED? ☑ YES ☐ NO
SUPPLEMENTAL FUNDS PROVIDED: $0.00	IS THIS REQUEST IN ACCORDANCE WITH ENVIRONMENTAL DOCUMENTS? ☑ YES ☐ NO
CCO DESCRIPTION: Reinforce Duct Bank In W2 Area	**PROJECT DESCRIPTION:** YBITS-1 (Yerba Buena Island Transition Structures)

Original Contract Time:	Time Adj. This Change:	Previously Approved CCO Time Adjustments:	Percentage Time Adjusted: (Including this change)	Total # of Unreconciled Deferred Time CCO(s): (including this change)
1390 Day(s)	0 Day(s)	0 Day(s)	0 %	0

THIS CHANGE ORDER PROVIDES FOR:

Add the following work, in the W2 area, as described below:

a) Increase Duct Bank Reinforcement from Sta. 4+85 to Manholes #25, #26 and #27.
b) Install additional Duct Bank between Sta. 4+78 to 4+85.
c) Furnish and install Manholes #25, #26 and #27.
d) Remove and dispose of elevator slab.
e) Install additional compressed air line between Sta. 4+78 to 4+85.

The added work includes the provision of material, equipment and labor necessary to perform the above items of work, including but not limited to; excavation, backfilling, concrete demolition and debris disposal, placing reinforcement and concrete, installation of condult, furnish and installation of manholes, and extension of existing compressed air line.

In the W2 area, the Contract Split Point was changed from Sta. 4+85 to 4+78, requiring an addition of 7M of duct bank and compressed air line to be added to the contract. Due to potential above ground construction traffic, additional reinforcement was added to the duct bank in this area, from Sta. 4+78 to Manholes #25, #26 and #27. Further, the furnish and installation of Manholes #25, #26 and #27, originally to be installed by others on the SAS contract, has been added to this contract. The change in duct bank will require additional excavation, additional concrete, and #16 and #29 reinforcement bar instead of the original #13 reinforcement bar. An elevator slab, constructed under the SAS contract must now be removed in order to complete the above listed work.

For this work, the Contractor will receive an Adjustment of Compensation at an Agreed Lump Sum of $445,342.00, which will be funded from the Contract's contingency fund. A cost analysis is on file.

No adjustment of contract time is warranted, as the work will not affect the controlling operation.

This work was requested by Bob Zandipour, Sr. Transportation Engineer, in a memo to Rajesh Oberoi dated November 4, 2010.

Maintenance concurrence will be obtained from Lina Ellis, Structure Maintenance.

ADA Notice: For individuals with sensory disabilities, this document is available in alternate formats. For information call: (916) 654-6410 or TDD (916) 654-3880 or write Records and Forms Management, 1120 N Street, MS-89, Sacramento, CA 95814.

CONCURRED BY:		
Construction Engineer:	William Howe	Date 10-19-12
Bridge Engineer:	Mehran Ardakanian	Date
Project Engineer:	Bob Zandipour, Design	Date 10-23-12
Project Manager:	Ken Terpstra	Date 11-1-12
FHWA Rep.:		Date
Environmental:		Date
Other (specify):	Lina Ellis, Str. Maintenance	Date 10-24-12
Other (specify):		Date
District Prior Approval By:		Date
HQ (Issue Approve) By:	Larry Salhaney	Date 10-23-12
Resident Engineer's Signature: William Howe		Date 10.19.12

ESTIMATE OF COST

	THIS REQUEST	TOTAL TO DATE
ITEMS	$0.00	$0.00
FORCE ACCOUNT	$0.00	$0.00
AGREED PRICE	$0.00	$0.00
ADJUSTMENT	$445,342.00	$445,342.00
TOTAL	$445,342.00	$445,342.00

FEDERAL PARTICIPATION

☐ PARTICIPATING ☐ PARTICIPATING IN PART ☑ NONE
☐ NON-PARTICIPATING (MAINTENANCE) ☐ NON-PARTICIPATING

FEDERAL SEGREGATION (If more than one Funding Source or P.I.P. type)
☐ CCO FUNDED PER CONTRACT ☐ CCO FUNDED AS FOLLOWS

FEDERAL FUNDING SOURCE	PERCENT

ADA Notice: For individuals with sensory disabilities, this document is available in alternate formats. For information call: (916) 654-6410 or TDD (916) 654-3880 or write Records and Forms Management, 1120 N Street, MS-89, Sacramento, CA 95814.

STATE OF CALIFORNIA - DEPARTMENT OF TRANSPORTATION

CONTRACT CHANGE ORDER MEMORANDUM

DATE: 1/12/2012

TO: Deanna Vilcheck, ACM / DV	FILE: E.A. 04 - 0120S4
FROM: William Howe, Senior R.E.	CO-RTE-PM SF-80-12.7/13.2
	FED. NO. NO FED AID
CCO#: 92 SUPPLEMENT#: 0 Category Code: CBPC	CONTINGENCY BALANCE (incl. this change) $60,705,877.20
COST: $0.00 INCREASE ☐ DECREASE ☐	HEADQUARTERS APPROVAL REQUIRED? ☐ YES ☑ NO
SUPPLEMENTAL FUNOS PROVIDED: $0.00	IS THIS REQUEST IN ACCORDANCE WITH ENVIRONMENTAL DOCUMENTS? ☑ YES ☐ NO
CCO DESCRIPTION: Light Pole Foundations	**PROJECT DESCRIPTION:** YBITS-1 (Yerba Buena Island Transition Structures)

Original Contract Time:	Time Adj. This Change:	Previously Approved CCO Time Adjustments:	Percentage Time Adjusted: (including this change)	Total # of Unreconciled Deferred Time CCO(s): (including this change)
1390 Day(s)	0 Day(s)	0 Day(s)	0 %	9

THIS CHANGE ORDER PROVIDES FOR:

This change order provides for modifying the base plates detail and anchor bolt layout for the roadway lighting pole anchorages.

Modification of base plate details is requested by the Engineer. This change simplifies material requirements for the lighting pole anchorages.

Anchor bolt layout revision is requested by the Engineer. This change rotates the lighting poles 90° and is recommended by Caltrans' Traffic Safety and the Architect. This change shall prevent light glare to on-coming traffic.

The modifications to the base plates required in this change do not cause additional costs for the Contractor; therefore, there shall be no cost or credit to the State as a result of this change.

Caltrans' Traffic Safety concurs with this change.

Maintenance concurrence will be obtained for this change.

CONCURRED BY:		
Construction Engineer:	William Howe DV	Date 4/13/12
Bridge Engineer:	Mehran Ardakanian	Date
Project Engineer:	Bob Zandipour, Design	Date 4-16-12
Project Manager:	Ken Terpstra KT	Date 5/2/12
FHWA Rep.:		Date
Environmental:		Date
Other (specify):	Lina Ellis, Str. Maintenance	Date 4-16-12
Other (specify):		Date
District Prior Approval By:		Date
HQ (Issue Approve) By:		Date
Resident Engineer's Signature:	Deanna Vilcheck 4/13/12	Date

ESTIMATE OF COST

	THIS REQUEST	TOTAL TO DATE
ITEMS	$0.00	$0.00
FORCE ACCOUNT	$0.00	$0.00
AGREED PRICE	$0.00	$0.00
ADJUSTMENT	$0.00	$0.00
TOTAL	$0.00	$0.00

FEDERAL PARTICIPATION

☐ PARTICIPATING ☐ PARTICIPATING IN PART ☑ NONE
☐ NON-PARTICIPATING (MAINTENANCE) ☐ NON-PARTICIPATING

FEDERAL SEGREGATION (if more than one Funding Source or P.I.P. type)
☐ CCO FUNDED PER CONTRACT ☐ CCO FUNDED AS FOLLOWS

FEDERAL FUNDING SOURCE	PERCENT

ADA Notice: For individuals with sensory disabilities, this document is available in alternate formats. For information call: (916) 654-6410 or TDD (916) 654-3880 or write Records and Forms Management, 1120 N Street, MS-89, Sacramento, CA 95814.

STATE OF CALIFORNIA - DEPARTMENT OF TRANSPORTATION

CONTRACT CHANGE ORDER MEMORANDUM

TO: Deanna Vilcheck, ACM / DV

FROM: William Howe, Senior R.E.

FILE: E.A. 04 - 0120S4
CO-RTE-PM SF-80-12.7/13.2
FED. NO. NO FED AID

CCO#: 117 | SUPPLEMENT#: 0 | Category Code: CBPC

CONTINGENCY BALANCE (incl. this change) $68,633,244.00

COST: $2,072.00 INCREASE ☑ DECREASE ☐

HEADQUARTERS APPROVAL REQUIRED? ☐ YES ☑ NO

SUPPLEMENTAL FUNDS PROVIDED: $0.00

IS THIS REQUEST IN ACCORDANCE WITH ENVIRONMENTAL DOCUMENTS? ☑ YES ☐ NO

CCO DESCRIPTION:
Call Box Wiring

PROJECT DESCRIPTION:
YBITS-1 (Yerba Buena Island Transition Structures)

Original Contract Time:	Time Adj. This Change:	Previously Approved CCO Time Adjustments:	Percentage Time Adjusted: (including this change)	Total # of Unreconciled Deferred Time CCO(s): (including this change)
1390 Day(s)	0 Day(s)	0 Day(s)	0 %	9

THIS CHANGE ORDER PROVIDES FOR:

This change order provides compensation to the Contractor for costs to revise the installation of call box wiring, per drawings prepared by Caltrans Design (Sheets 2 through 7 of the change order). The work includes revisions that the Engineer has determined are required to the call box system design.

Compensation for this work shall be paid at an Agreed Lump Sum of $2,072.00, which will be funded from the project's contingency fund. A cost analysis is on file.

No adjustment of contract time is warranted, as this change will not affect the controlling operation.

This change was requested by and concurred with Bob Zandipour, Design.

Maintenance concurrence will be obtained from Lina Ellis.

CONCURRED BY:

Construction Engineer:	William Howe	Date 05-29-12
Bridge Engineer:	Mehran Ardakanian	Date
Project Engineer:	Bob Zandipour, Design	Date 5-31-12
Project Manager:	Ken Terpstra	Date 5-30-12
FHWA Rep.:		Date
Environmental:		Date
Other (specify):	Lina Ellis, Str. Maintenance	Date 6-13-12
Other (specify):		Date
District Prior Approval By:		Date
HQ (Issue Approve) By:		Date
Resident Engineer's Signature:	William Howe	Date 05-25-12

ESTIMATE OF COST

	THIS REQUEST	TOTAL TO DATE
ITEMS	$0.00	$0.00
FORCE ACCOUNT	$0.00	$0.00
AGREED PRICE	$0.00	$0.00
ADJUSTMENT	$2,072.00	$2,072.00
TOTAL	$2,072.00	$2,072.00

FEDERAL PARTICIPATION

☐ PARTICIPATING ☐ PARTICIPATING IN PART ☑ NONE
☐ NON-PARTICIPATING (MAINTENANCE) ☐ NON-PARTICIPATING

FEDERAL SEGREGATION (if more than one Funding Source or P.I.P. type)
☐ CCO FUNDED PER CONTRACT ☐ CCO FUNDED AS FOLLOWS

FEDERAL FUNDING SOURCE	PERCENT

ADA Notice: For individuals with sensory disabilities, this document is available in alternate formats. For information call: (916) 654-6410 or TDD (916) 654-3880 or write Records and Forms Management, 1120 N Street, MS-89, Sacramento, CA 95814.

STATE OF CALIFORNIA - DEPARTMENT OF TRANSPORTATION

CONTRACT CHANGE ORDER

Change Requested by: Engineer

CCO 94	Suppl. No. 0	Contract No. 04 - 0120S4	Road SF-80-12.7/13.2	FED. AID LOC.: NO FED AID

To: **M C M CONSTRUCTION INC**

You are directed to make the following changes from the plans and specifications or do the following described work not included in the plans and specifications for this contract. ***NOTE: This change order is not effective until approved by the Engineer.***

Description of work to be done, estimate of quantities and prices to be paid. (Segregate between additional work at contract price, agreed price and force account.) Unless otherwise stated, rates for rental of equipment cover only such time as equipment is actually used and no allowance will be made for idle time. This last percentage shown is the net accumulated increase or decrease from the original quantity in the Engineer's Estimate.

Extra Work at Lump Sum:

Perform the following work pertaining to Lighting and Electrical Systems in accordance with Sheets 2 through 41 of this change order (attached sheet numbers 171R2, 187R1, 193R2, 194R3, 195R3, 201R3, 204R1, 228R1, 230R1, 238R1, 245R1, 252R1, 266R2, 384R1, 394R2, 398R2, 403CR2, 403DR2, 403ER4, 405A, 406R4, 406AR1, 410R3, 413AR3, 413BR2, 431R1, 433R1, 441R1, 447R1, 447AR1, 457AR1, 457BR1, 459A, 481R1, 484R1, 503AR1, 516AR1, 516DR1, 516HR2, 516IR1) for the San Francisco-Oakland Bay Bridge YBI Transition Structures.

Work activities associated with this change order include revisions to the conduits, cables; pull boxes, control equipment and associated components for the Traffic Operation Systems (TOS).

Extra Work @ Agreed Lump Sum = $61,914.00

Estimated Cost: Increase ☑ Decrease ☐ **$61,914.00**

By reason of this order the time of completion will be adjusted as follows: 0 days

Submitted by		
Signature William Howe	Resident Engineer William Howe, Senior R.E.	Date 04.05.12
Approval Recommended by		
Signature Deanna Vilcheck	Area Construction Manager Deanna Vilcheck	Date 4/10/12
Engineer Approval by		
Signature Deanna Vilcheck	Area Construction Manager Deanna Vilcheck	Date 5/4/12

We the undersigned contractor, have given careful consideration to the change proposed and agree, if this proposal is approved, that we will provide all equipment, furnish the materials, except as may otherwise be noted above, and perform all services necessary for the work above specified, and will accept as full payment therefor the prices shown above.

NOTE: If you, the contractor, do not sign acceptance of this order, your attention is directed to the requirements of the specifications as to proceeding with the ordered work and filing a written protest within the time therein specified.

Contractor Acceptance by		
Signature	(Print name and title) EDMUNDO A. PUCHI, TREASURER	Date 5/3/12

Dist	COUNTY	ROUTE	KILOMETER POST TOTAL PROJECT	SHEET No.	TOTAL SHEETS
04	SF	80	12.7/13.2	171 R2	806

REGISTERED ELECTRICAL ENGINEER 2/14/08

6-23-08
PLANS APPROVAL DATE

REGISTERED PROFESSIONAL ENGINEER FADI WALIEDDINE No. 11486 Exp. 12/31/09 ELECTRICAL STATE OF CALIFORNIA

THE STATE OF CALIFORNIA OR ITS OFFICERS OR AGENTS SHALL NOT BE RESPONSIBLE FOR THE ACCURACY OR COMPLETENESS OF ELECTRONIC COPIES OF THIS PLAN SHEET.

PB AMERICAS, Inc.
A Parsons Brinckerhoff Company
303 Second St., Suite 700N
San Francisco, CA 94107-1317

NOTES:

1. References:
   - For lighting poles, outlet boxes and pull box schedules, see sheets E-68 and E-69.
   - For call box mounting detail, see sheet E-60.
   - For 480 V roadway lighting wiring see sheets E-53 through E-57.

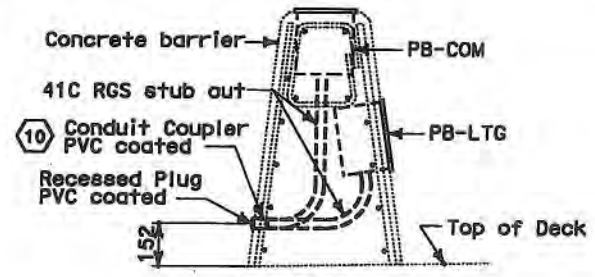

DETAIL 1
NO SCALE

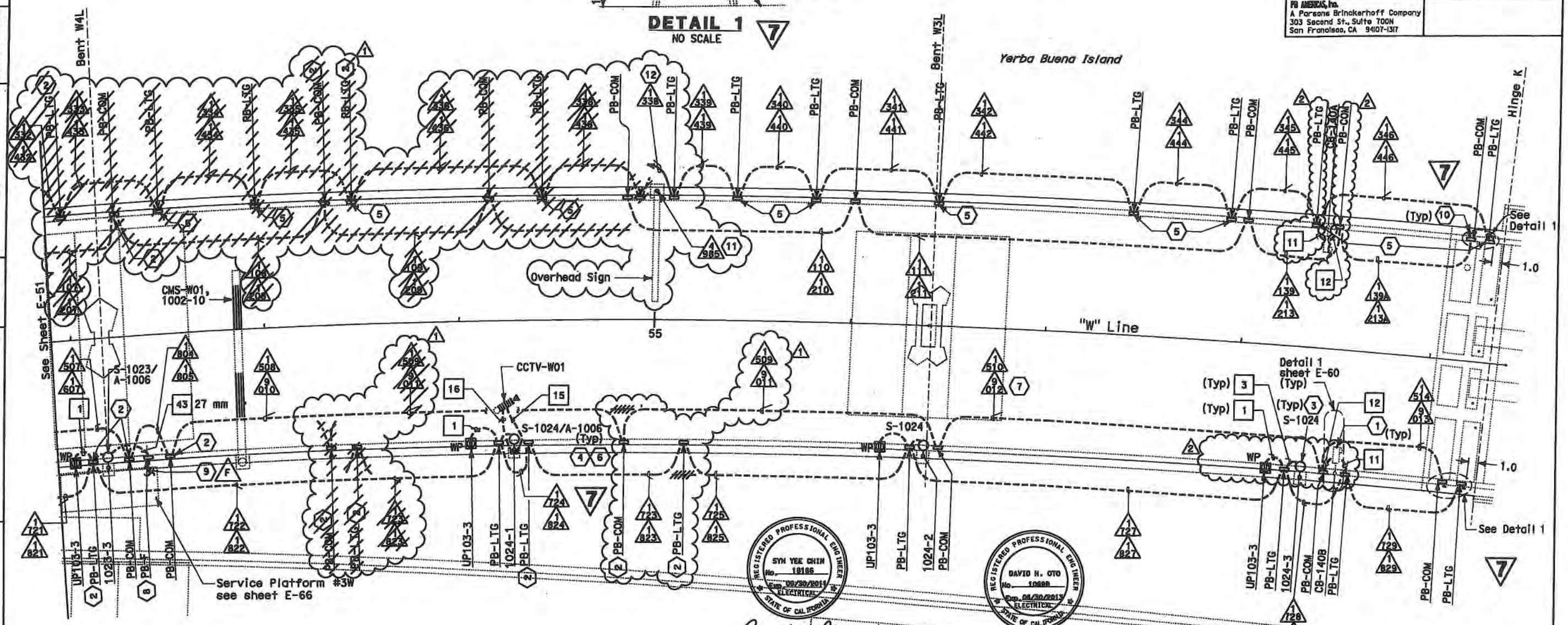

REGISTERED PROFESSIONAL ENGINEER SYN YEE CHIN No. 18166 Exp. 09/30/2011 ELECTRICAL STATE OF CALIFORNIA

Syn Yee Chin
FOR REVISION ONLY
1 03/30/2011

REGISTERED PROFESSIONAL ENGINEER DAVID H. OTO No. 10889 Exp. 06/30/2013 ELECTRICAL STATE OF CALIFORNIA

FOR REVISION ONLY
2

CONDUIT PLAN

SHEET NOTES:

1. For call box schedule and wiring diagram, see sheets E-170 & E-172.
2. For routing of conduit in girder and crossing of roadway, see sheets E-73 thru E-76.
3. For conduit routing inside barriers and pole bases, see sheets E-58 thru E-60.
4. For 480 V roadway lighting wiring diagrams, see sheets E-53 thru E-57.
5. For routing of light pipe conduit, down to girder level, see sheet E-76.
6. For lighting schedules, see sheet E-68.
7. Conduits to be installed in this contract but are reserved for SMD.
8. PB-F same as PB-COM, labeling to be determined by the Engineer.
9. Install 41 mm (F) conduit in barrier from Platform 3W for future Camera #16 (By others).
10. Conduit shall stub-out at the non-roadway side of the barrier with the coupler flush to the barrier face wall and shall include a plug.
11. Conduit down into girder. For overhead sign, see Sheet E-76.
12. Stub-out and cap conduit for future extension to PB-LTG inside off-ramp barrier.

MARK	DATE	DESCRIPTIONS	BY	CH'D
2	01/10/12	PL-W12 CABLE, SEISMIC JOINT CONDUIT, MISC	RR	RG
1	03/30/11	YBITS WB FRAME 2 CITY RAMP REVISION	RR	RG

REVISIONS

CONTRACT CHANGE ORDER NO. 94
SHEET 2 OF 41

7 REVISED PER ADDENDUM No. 7 DATED OCTOBER 19, 2009

YBI TRANSITION STRUCTURES ROADWAY WESTBOUND
(LIGHTING AND ELECTRICAL SYSTEMS)

SCALE: 1:200

E-52

THIS PLAN IS ACCURATE FOR ELECTRICAL WORK ONLY.

ALL DIMENSIONS ARE IN METERS UNLESS OTHERWISE SHOWN

STATE OF CALIFORNIA - DEPARTMENT OF TRANSPORTATION
Caltrans

CONSULTANT FUNCTIONAL SUPERVISOR: BEHZAD GOLEMOHAMMADI

CALCULATED-DESIGNED BY: FK
CHECKED BY: AB
REVISED BY
DATE REVISED

LAST REVISION 00-00-00
DATE PLOTTED => 12-JAN-2012
TIME PLOTTED => 15:09

Dist	COUNTY	ROUTE	KILOMETER POST TOTAL PROJECT	SHEET No.	TOTAL SHEETS
04	SF	80	12.7/13.2	187 R1	806

REGISTERED ELECTRICAL ENGINEER 2/14/08

6-23-08
PLANS APPROVAL DATE

REGISTERED PROFESSIONAL ENGINEER FADI WALIEDDINE No. 11465 Exp. 12/31/09 ELECTRICAL STATE OF CALIFORNIA

THE STATE OF CALIFORNIA OR ITS OFFICERS OR AGENTS SHALL NOT BE RESPONSIBLE FOR THE ACCURACY OR COMPLETENESS OF ELECTRONIC COPIES OF THIS PLAN SHEET.

PB AMERICAS, Inc.
A Parsons Brinckerhoff Company
303 Second St., Suite 700N
San Francisco, CA 94107-1317

Caltrans Metric

ROADWAY LIGHT POLE AND FIXTURE SCHEDULE (2)

Circuit Number	Pole Number	Location: Station	Location: Roadway side	Mounting Height (m)	LTG Fixture Type	Number/ Wattage	Remarks (Mounting Provisions)
S-1001	1001-1	Bent W41	North	7	HID Metal Halide	1-175 W	Pole mounted (1)
S-1001	1001-2	50+59.0	North	7	HID Metal Halide	1-175 W	Pole mounted
S-1001	1001-3	50+74.1	North	7	HID Metal Halide	1-175 W	Pole mounted
S-1001	1001-4	50+89.1	North	7	HID Metal Halide	1-175 W	Pole mounted
S-1001	1001-5	51+4.1	North	7	HID Metal Halide	1-175 W	Pole mounted
S-1001	1001-6	51+19.1	North	7	HID Metal Halide	1-175 W	Pole mounted
S-1001	1001-7	Bent W10AL	North	7	YSR-3A-P	1-250 W	Pole mounted
S-1001	1001-8	51+44.6	North	7	YSR-3A-P	1-250 W	Pole mounted
S-1001	1001-9	Bent W10L	North	7	YSR-3A-P	1-250 W	Pole mounted
S-1001	1001-10	51+69.3	North	7	YSR-3A-P	1-250 W	Pole mounted
S-1001	1001-11	Bent W9L	North	7	YSR-3A-P	1-250 W	Pole mounted
~~S-1001~~	~~1001-12~~	~~51+98.6~~	~~North~~	~~7~~	~~YSR-3A-P~~	~~1-250 W~~	~~Pole mounted~~
S-1001	1001-13	Bent W39	North	7	HID Metal Halide	1-175 W	Pole mounted
S-1001	1001-14	50+05	North	7	HID Metal Halide	1-175 W	Pole mounted
S-1001	1001-15	Bent W34	North	7	HID Metal Halide	1-175 W	Pole mounted
S-1001	1001-16	Bent W32	North	7	HID Metal Halide	1-175 W	Pole mounted
S-1002	1002-1	Bent W8L	North	7	YSR-3A-P	1-250 W	Pole mounted
S-1002	1002-2	52+32.8	North	7	YSR-3A-P	1-250 W	Pole mounted
S-1002	1002-3	Bent W7L	North	7	YSR-3A-P	1-250 W	Pole mounted
S-1002	1002-4	52+64.6	North	7	YSR-3A-P	1-250 W	Pole mounted
S-1002	1002-5	52+78.9	North	7	YSR-3A-P	1-250 W	Pole mounted
S-1002	1002-6	52+93.5	North	7	YSR-3A-P	1-250 W	Pole mounted
S-1002	1002-7	Bent W6L	North	7	YSR-3A-P	1-250 W	Pole mounted
S-1002	1002-8	53+25.3	North	7	YSR-3A-P	1-250 W	Pole mounted
S-1002	1002-9	53+41.4	North	7	YSR-3A-P	1-250 W	Pole mounted
S-1002	1002-10	53+57.5	North	7	YSR-3A-P	1-250 W	Pole mounted
S-1001	1002-11	51+98.6	North	7	YSR-3A-P	1-250 W	Pole mounted
S-1021	1021-7	Bent W10AL	South	7	YSR-3A-P	1-250 W	Pole mounted
A-1005					YAM	160 W	
S-1021	1021-8	51+42.9	South	7	YSR-3A-P	1-250 W	Pole mounted
A-1005					YAM	160 W	
S-1021	1021-9	Bent W10L	South	7	YSR-3A-P	1-250 W	Pole mounted
A-1005					YAM	160 W	
S-1021	1021-10	51+67	South	7	YSR-3A-P	1-250 W	Pole mounted
A-1005					YAM	160 W	
S-1021	1021-11	Bent W9L	South	7	YSR-3A-P	1-250 W	Pole mounted
A-1005					YAM	160 W	
S-1021	1021-12	51+96.1	South	7	YSR-3A-P	1-250 W	Pole mounted
A-1005					YAM	160 W	
S-1022	1022-1	Bent W8L	South	7	YSR-3A-P	1-250 W	Pole mounted
A-1005					YAM	160 W	
S-1022	1022-2	52+30.3	South	7	YSR-3A-P	1-250 W	Pole mounted
A-1005					YAM	160 W	
S-1022	1022-3	Bent W7L	South	7	YSR-3A-P	1-250 W	Pole mounted
A-1005					YAM	160 W	
S-1022	1022-4	52+64.6	South	7	YSR-3A-P	1-250 W	Pole mounted
A-1005					YAM	160 W	
S-1022	1022-5	52+78.8	South	7	YSR-3A-P	1-250 W	Pole mounted
A-1005					YAM	160 W	
S-1022	1022-6	52+93.5	South	7	YSR-3A-P	1-250 W	Pole mounted
A-1005					YAM	160 W	
S-1022	1022-7	Bent W6L	South	7	YSR-3A-P	1-250 W	Pole mounted
A-1005					YAM	160 W	
S-1022	1022-8	53+25.3	South	7	YSR-3A-P	1-250 W	Pole mounted
A-1005					YAM	160 W	
S-1022	1022-9	53+41.4	South	7	YSR-3A-P	1-250 W	Pole mounted
A-1005					YAM	160 W	
S-1022	1022-10	53+57.5	South	7	YSR-3A-P	1-250 W	Pole mounted
A-1005					YAM	160 W	

Continuation

Circuit Number	Pole Number	Location: Station	Location: Roadway side	Mounting Height (M)	LTG Fixture Type	Number/ Wattage	Remarks (Mounting Provisions)
S-1023	1023-1	Bent W5L	South	12	YSR-2B-L	2-400 W	Pole mounted
					YSR-3-L	1-250 W	
A-1005					YAM	160 W	
S-1023	1023-2	54+06.7	South	12	YSR-2B-L	2-400 W	Pole mounted
					YSR-3-L	1-250 W	
A-1005					YAM	160 W	
S-1023	1023-3	Bent W4L	South	15	YSR-2B-L	2-400 W	Pole mounted
					YSR-3-L	1-250 W	
A-1005					YAM	160 W	
S-1024	1024-1	54+85.6	South	15	YSR-2B-L	2-400 W	Pole mounted
					YSR-3-L	1-250 W	
A-1005					YAM	160 W	
S-1024	1024-2	Bent W3L	South	17.5	YSR-2B-L	2-400 W	Pole mounted
					YSR-3-L	1-250 W	
A-1005					YAM	160 W	
S-1024	1024-3	55+67.2	South	17.5	YSR-2B-L	2-400 W	Pole mounted
					YSR-3-L	1-250 W	
A-1005					YAM	160 W	

NOTES:

1. References:
   - For roadway lighting circuit numbers, see Single Line Diagram E-41.
   - For Roadway Level Plans, see sheets E-48 through E-52.
2. Pole mounted lighting fixtures 12 meters and higher are provided with a lowering device.
3. Marker light type YAM is a low voltage lighting assembly. Wattage indicated is for 12 LED strips. Each LED strip is rated at 13.4 watts for a fixture total of 160.8 watts.

REGISTERED PROFESSIONAL ENGINEER DAVID H. OTO No. 10699 Exp. 06/30/2011 ELECTRICAL STATE OF CALIFORNIA

FOR REVISION ONLY (1)

SHEET NOTES:

(1) Location and installation of poles and fixtures per separate contract. (1)

(2) The Roadway Lighting Pole assembly is State-furnished.

MARK	DATE	DESCRIPTIONS	BY	CH'D
(1)	06/30/11	PL-12W CABLE, SEISMIC JOINT CONDUIT, MISC.	TW	RG

REVISIONS

CONTRACT CHANGE ORDER NO. 94
SHEET 3 OF 41

DETAILS
YBI TRANSITION STRUCTURES ROADWAY WESTBOUND (LIGHT POLE AND FIXTURE SCHEDULE)
NO SCALE

E-68

(5) REVISED PER ADDENDUM No. 5 DATED JULY 30, 2009

THIS PLAN ACCURATE FOR ELECTRICAL WORK ONLY.

STATE OF CALIFORNIA - DEPARTMENT OF TRANSPORTATION
Caltrans
CONSULTANT FUNCTIONAL SUPERVISOR: BEHZAD GOLEMOHAMMADI
CALCULATED-DESIGNED BY: FK
CHECKED BY: AB
REVISED BY / DATE REVISED

LAST REVISION 00-00-00 DATE PLOTTED => 6/30/2011 TIME PLOTTED => 9:27:33 AM

BORDER LAST REVISED 3/1/2007

RELATIVE BORDER SCALE IS IN MILLIMETERS 0 20 40 60 80

USERNAME => gorclor
DGN FILE => O:\13103 SF_O Bay Bridge\A-SF08B Work Files after 11-05-08\Contract 1\CCO-PLW12\Issued for Submittal\10120sua068r01.dgn

CU 06251 EA 0120S1

Dist	COUNTY	ROUTE	KILOMETER POST TOTAL PROJECT	SHEET No.	TOTAL SHEETS
04	SF	80	12.7/13.2	193 R2	806

2/14/08
REGISTERED ELECTRICAL ENGINEER

6-23-08
PLANS APPROVAL DATE

REGISTERED PROFESSIONAL ENGINEER FADI WALIEDDINE No. 11865 Exp. 12/31/09 ELECTRICAL STATE OF CALIFORNIA

THE STATE OF CALIFORNIA OR ITS OFFICERS OR AGENTS SHALL NOT BE RESPONSIBLE FOR THE ACCURACY OR COMPLETENESS OF ELECTRONIC COPIES OF THIS PLAN SHEET.

PB AMERICAS, Inc.
A Parsons Brinckerhoff Company
303 Second St., Suite 700N
San Francisco, CA 94107-1317

Caltrans Metric

5

NOTES:

1. References:
   - For pull box mounting details, see sheet E-86.
   - For conduit support locations, see sheets E-87 through E-89.
   - For pull box schedules, see sheet E-69.
   - TOS equipment it shown for conduit routing only. For typical details of TOS controllers and devices, see sheets E-146 through E-157.
   - For lighting circuit and wiring diagram, see sheet E-57.
   - For light pipe schedule, see sheet E-84.
   - For 480 V light pipe wiring diagram, see sheet E-77 & E-77A.
2. For fixture schedule, see sheet E-110.
3. For other related work not shown, see Electrical Special Provisions.

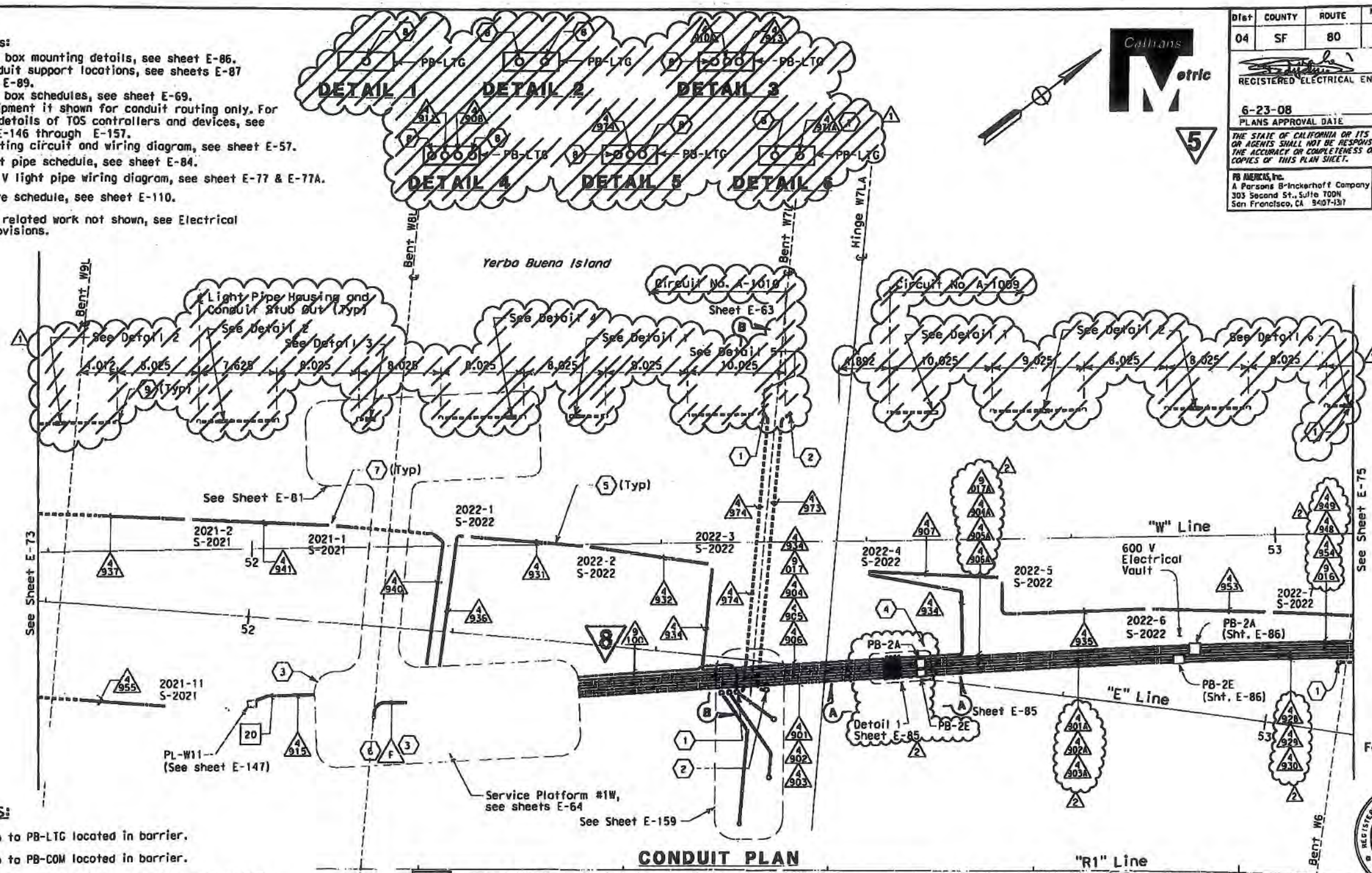

CONDUIT PLAN

5 REVISED PER ADDENDUM No. 5 DATED JULY 30, 2009

8 REVISED PER ADDENDUM No. 8 DATED NOVEMBER 12, 2009

REGISTERED PROFESSIONAL ENGINEER DAVID H. OTO No. 10699 Exp. 06/30/2013 ELECTRICAL STATE OF CALIFORNIA

FOR REVISION ONLY 2

REGISTERED PROFESSIONAL ENGINEER SYN YEE CHIN No. 18186 Exp. 09/30/2011 ELECTRICAL STATE OF CALIFORNIA

FOR REVISION ONLY 1

SHEET NOTES:

1. Conduit up to PB-LTG located in barrier.
2. Conduit up to PB-COM located in barrier.
3. For electrical vault section & details, see sheet E-81.
4. Deck access manhole required for installation of cable.
5. Support and install lighting conduit flush on girder floor.
6. Install 41 mm (F) conduit from 600 V vault in IW to Pole 1022-1. Required for future camera #14 (By others).
7. For soffit light fixture and No. 7 ceiling pull box mounting, see Caltrans Standard ES-9E, Detail F.
8. ~~Conduit up to barrier PB-LTG for future light pipe. Provide cap at bottom end of conduit. See Section C-C sheet E-83.~~ 1
9. ~~Provide cap at bottom end of conduit. See Section C-C sheet E-83.~~

MARK	DATE	DESCRIPTIONS	BY	CH'D
2	06/30/11	PL-W12 CABLE, SEISMIC JOINT CONDUIT, MISC.	TW	RG
1	03/30/11	ELIMINATION OF SERVICE PLATFORM AT WSL	RR	RG

REVISIONS

CONTRACT CHANGE ORDER NO. 94
SHEET 4 OF 41

THIS PLAN IS ACCURATE FOR ELECTRICAL WORK ONLY.

ALL DIMENSIONS ARE IN METERS UNLESS OTHERWISE SHOWN

YBI TRANSITION STRUCTURES GIRDER WESTBOUND
(LIGHTING AND ELECTRICAL SYSTEMS)

SCALE: 1:200

E-74

REVISED BY	DATE REVISED
FK	AB

CALCULATED-DESIGNED BY FK
CHECKED BY AB
CONSULTANT FUNCTIONAL SUPERVISOR BEHZAD GOLEMOHAMMADI

STATE OF CALIFORNIA - DEPARTMENT OF TRANSPORTATION
Caltrans

LAST REVISION 00-00-00
DATE PLOTTED => 6/29/2011
TIME PLOTTED => 6:25:46 PM

BORDER LAST REVISED 3/ /2007

RELATIVE BORDER SCALE IS IN MILLIMETERS 0 20 40 60 80

USERNAME => garclar
DGN FILE => O:\13103 SF_O Bay Bridge\A-SF088 Work Files after 11-05\A8 Contract 1\CCO-PLW12\Issued for Submittal\40120sua074r02.dgn

CU 04251 EA 012051

MARK	DATE	DESCRIPTIONS	BY	CH'D
3	06/30/11	PL-W12 CABLE, SEISMIC JOINT CONDUIT, MISC.	TW	RG
2	03/30/11	YBITS WB FRAME 2 CITY RAMP REVISION	TW RR	RG
1	11/22/10	ELIMINATION OF SERVICE PLATFORM AT WSL	RR	RG

REVISIONS

CONTRACT CHANGE ORDER NO. 94
SHEET 5 OF 41

Dist	COUNTY	ROUTE	KILOMETER POST TOTAL PROJECT	SHEET No.	TOTAL SHEETS
04	SF	80	12.7/13.2	194 R3	806

REGISTERED ELECTRICAL ENGINEER 2/14/08

6-23-08
PLANS APPROVAL DATE

REGISTERED PROFESSIONAL ENGINEER FADI WALEDDINE No. 11165 Exp. 12/31/09 ELECTRICAL STATE OF CALIFORNIA

THE STATE OF CALIFORNIA OR ITS OFFICERS OR AGENTS SHALL NOT BE RESPONSIBLE FOR THE ACCURACY OR COMPLETENESS OF ELECTRONIC COPIES OF THIS PLAN SHEET.

PB AMERICAS, Inc.
A Parsons Brinckerhoff Company
303 Second St., Suite 700N
San Francisco, CA 94107-1317

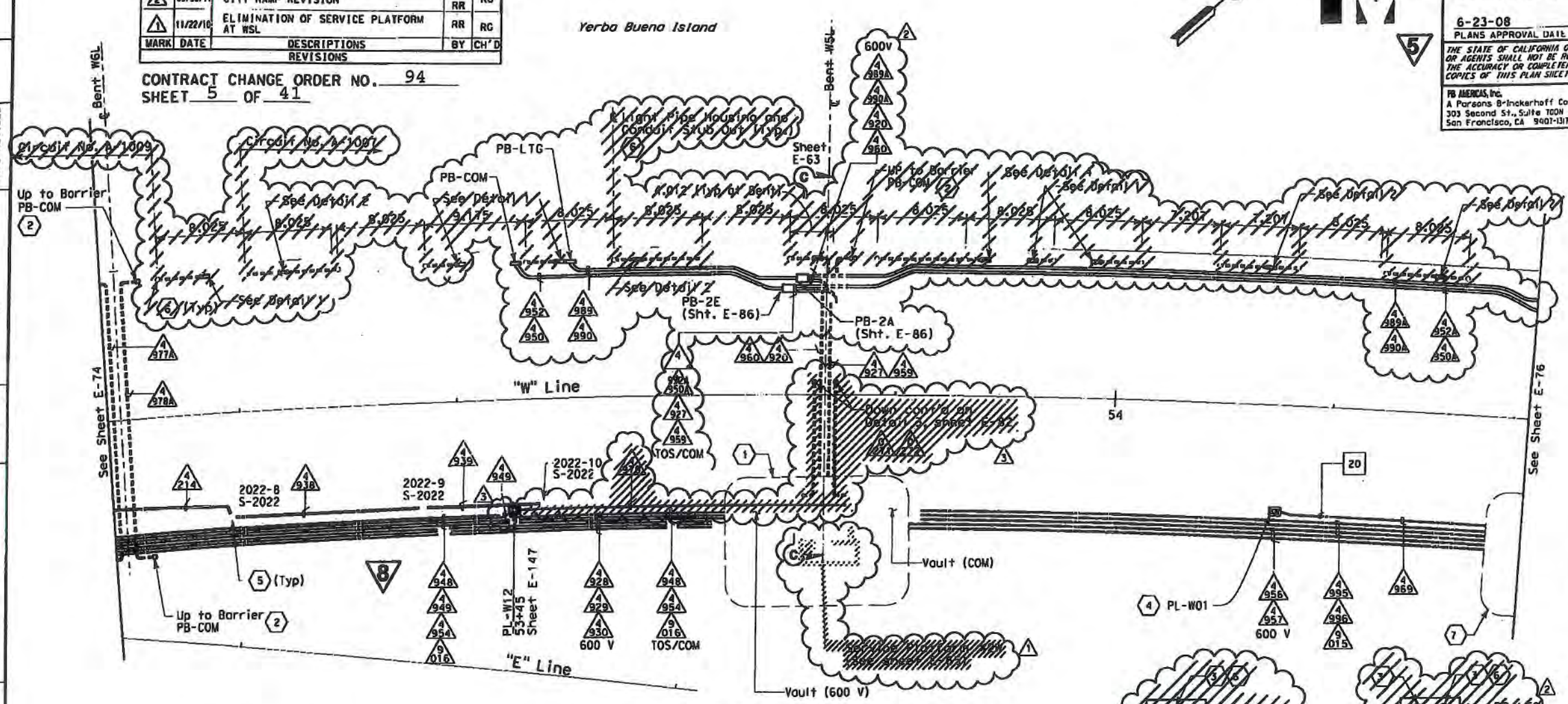

CONDUIT PLAN

5 REVISED PER ADDENDUM No. 5 DATED JULY 30, 2009

8 REVISED PER ADDENDUM No. 8 DATED NOVEMBER 12, 2009

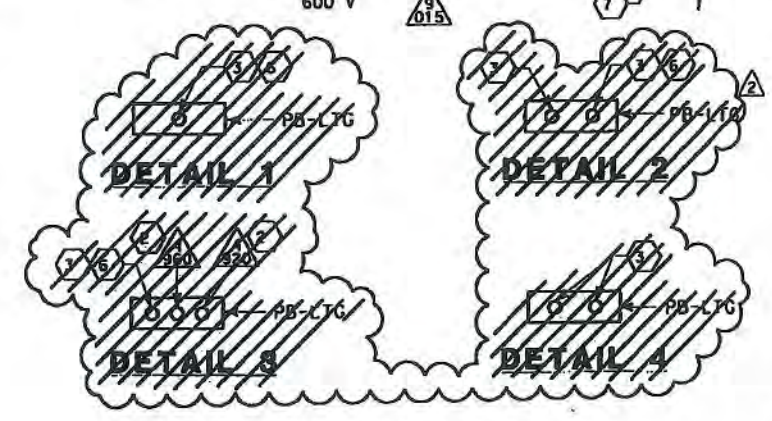

REGISTERED PROFESSIONAL ENGINEER DAVID H. OTO No. 10698 Exp. 06/30/2013 ELECTRICAL STATE OF CALIFORNIA

FOR REVISION ONLY 3

REGISTERED PROFESSIONAL ENGINEER SYN YEE CHIN No. 18188 Exp. 08/30/2011 ELECTRICAL STATE OF CALIFORNIA

FOR REVISION ONLY 1 2

SHEET NOTES:

1. For vault section & details, see sheet E-82.
2. Conduit up Barrier PB-LTG and PB-COM.
3. ~~Conduit up to barrier PB-LTG for future light pipe. Provide cap at bottom end of conduit, see Section C-C sheet E-63.~~ 2
4. For traffic operations system preformed loop detector station installation, see sheet E-147.
5. For soffit light fixture and No. 7 ceiling pull box mounting, see Caltrans Standard ES-9E, Detail F.
6. ~~Provide cap at bottom end of conduit, see Section C-C, sheet E-63.~~ 2
7. For electrical vault section & details see sheet E-83.

THIS PLAN IS ACCURATE FOR ELECTRICAL WORK ONLY.

NOTES:

1. References:
   - For lighting poles, call boxes, outlet boxes and pull boxes schedules, see sheet E-69.
   - Lighting fixture mounted under westbound deck. Conduits routed inside girder box. 1
   - ~~For service platform plan and details, see sheet E-65.~~
   - For future light pipe schedule, see sheet E-84.
   - For 480 light pipe wiring diagram, see sheet E-77.
   - For typical detail of conduit & pull box support, see sheet E-86.
2. For fixture schedule, see sheet E-110.

YBI TRANSITION STRUCTURES GIRDER WESTBOUND
(LIGHTING AND ELECTRICAL SYSTEMS)

SCALE: 1:200

ALL DIMENSIONS ARE IN METERS UNLESS OTHERWISE SHOWN

E-75

STATE OF CALIFORNIA - DEPARTMENT OF TRANSPORTATION
Caltrans
CONSULTANT FUNCTIONAL SUPERV'SOR: BEHZAD GOLEMOHAMMADI
CALCULATED-DESIGNED BY: FK
CHECKED BY: AB
REVISED BY
DATE REVISED

LAST REVISION 00-00-00
DATE PLOTTED => 6/30/2011
TIME PLOTTED => 7:41:38 AM

BORDER LAST REVISED 3/1/2007

RELATIVE BORDER SCALE IS IN MILLIMETERS 0 20 40 60 80

USERNAME => gorclor
DGN FILE => O:\13103 SF_O Bay Bridge\A-SF08B Work Files after 11-09-08\Contract 1\CCO-PLW12\Issued for Submittal\40120sua075r03.d

CU 04251 EA 0120S1

MARK	DATE	DESCRIPTIONS	BY	CH'D
3	01/10/12	PL-W12 CABLE, SEISMIC JOINT CONDUIT, MISC.	RR	RG
2	06/30/11	PL-W12 CABLE, SEISMIC JOINT CONDUIT, MISC.	TW	RG
1	03/30/11	YBITS WB FRAME 2 CITY RAMP REVISION	RR	RG

REVISIONS

CONTRACT CHANGE ORDER NO. 94
SHEET 6 OF 41

Dist	COUNTY	ROUTE	KILOMETER POST TOTAL PROJECT	SHEET No.	TOTAL SHEETS
04	SF	80	12.7/13.2	195 R3	806

REGISTERED ELECTRICAL ENGINEER 2/14/08

6-23-08
PLANS APPROVAL DATE

REGISTERED PROFESSIONAL ENGINEER FADI WALIEDDINE No. 11985 Exp. 12/31/09 ELECTRICAL STATE OF CALIFORNIA

THE STATE OF CALIFORNIA OR ITS OFFICERS OR AGENTS SHALL NOT BE RESPONSIBLE FOR THE ACCURACY OR COMPLETENESS OF ELECTRONIC COPIES OF THIS PLAN SHEET.

PB AMERICAS, Inc.
A Parsons Brinckerhoff Company
303 Second St., Suite 700N
San Francisco, CA 94107-1317

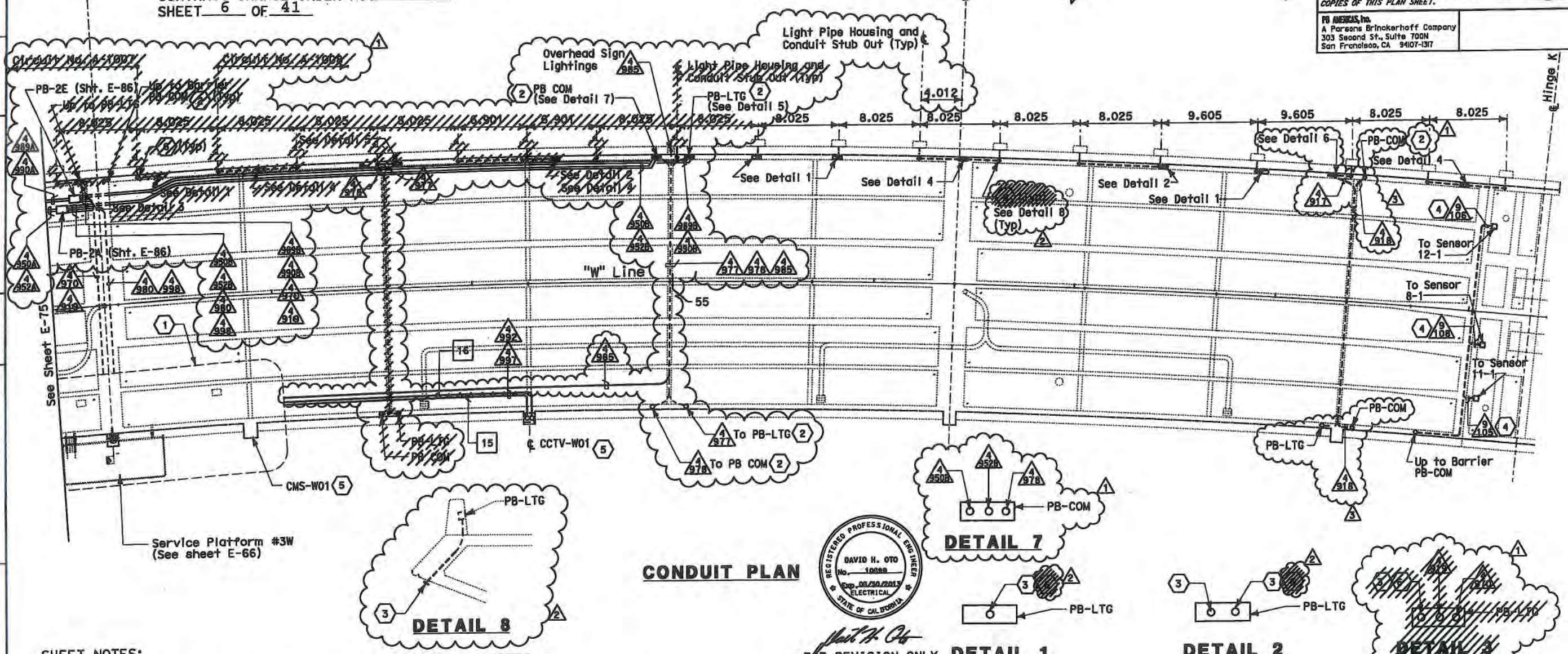

CONDUIT PLAN

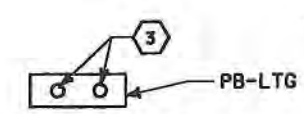

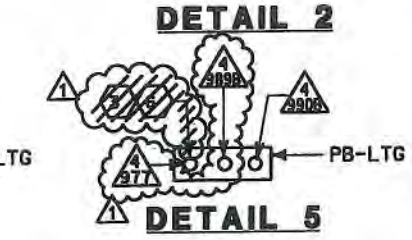

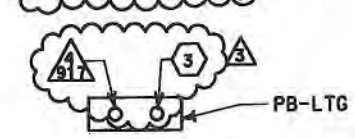

REGISTERED PROFESSIONAL ENGINEER DAVID H. OTO No. 10088 Exp. 09/30/2015 ELECTRICAL STATE OF CALIFORNIA

FOR REVISION ONLY 2 3

REGISTERED PROFESSIONAL ENGINEER SIN YEE CHIN No. 18186 Exp. 09/30/2015 ELECTRICAL STATE OF CALIFORNIA

FOR REVISION ONLY 1

SHEET NOTES:

1. For electrical vault section & details see sheet E-83.
2. For conduit up to barrier PB-LTG and PB-COM.
3. ~~Conduit up to barrier PB-LTG for future light bpipe.~~ Install 27C RGS conduit from PB-Ltg. Provide cap at end of conduit, see Detail 8. 2
4. Conduits to be installed in this contract but are reserved for SMD.
5. Conduits up, see Sheet E-59.
6. ~~Provide cap at bottom end of conduit. See Section E-1, Sheet E-83.~~ 2

NOTES:

1. References:
   - For lighting poles, call boxes, outlet boxes and pull boxes schedules, see sheet E-69.
   - Lighting fixture mounted under westbound deck. Conduits routed inside girder box.
   - For service platform plan and details, see sheet E-66.
   - For future light pipe schedule, see sheet E-84.
   - For 480 light pipe wiring diagram, see sheet E-77.

YBI TRANSITION STRUCTURES GIRDER WESTBOUND (LIGHTING AND ELECTRICAL SYSTEMS)

SCALE: 1:200

5 **REVISED PER ADDENDUM No. 5 DATED JULY 30, 2009**

E-76

THIS PLAN IS ACCURATE FOR ELECTRICAL WORK ONLY.

ALL DIMENSIONS ARE IN METERS UNLESS OTHERWISE SHOWN

STATE OF CALIFORNIA - DEPARTMENT OF TRANSPORTATION

CONSULTANT FUNCTIONAL SUPERVISOR: BEHZAD GOLEMOHAMMADI

CALCULATED-DESIGNED BY: FK AB

CHECKED BY

REVISED BY / DATE REVISED

LAST REVISION 00-00-00

DATE PLOTTED => 12-JAN-2012
TIME PLOTTED => 15:09

USERNAME =>
DGN FILE => 40120sud076r03.dgn

IS IN MILLIMETERS

BORDER LAST REVISED 3/1/2001

Dist	COUNTY	ROUTE	KILOMETER POST TOTAL PROJECT	SHEET NO.	TOTAL SHEETS
04	SF	80	12.7/13.2	201 R3	806

REGISTERED ELECTRICAL ENGINEER 2/14/08

6-23-08
PLANS APPROVAL DATE

REGISTERED PROFESSIONAL ENGINEER TADE MAI TEODORE No. 11465 Exp. 12/31/09 ELECTRICAL STATE OF CALIFORNIA

THE STATE OF CALIFORNIA OR ITS OFFICERS OR AGENTS SHALL NOT BE RESPONSIBLE FOR THE ACCURACY OR COMPLETENESS OF ELECTRONIC COPIES OF THIS PLAN SHEET.

PB AMERICAS, Inc.
A Parsons Brinckerhoff Company
303 Second St., Suite 700N
San Francisco, CA 94107-1317

MARK	DATE	DESCRIPTIONS	BY	CH'D
3	06/30/11	PL-W12 CABLE, SEISMIC JOINT CONDUIT, MISC.	TW	RG
2	03/30/11	YBITS WB FRAME 2 CITY RAMP REVISION	TW RR	RG
1	11/22/10	ELIMINATION OF SERVICE PLATFORM AT WSL	RR	RG

REVISIONS

CONTRACT CHANGE ORDER NO. 94
SHEET 7 OF 41

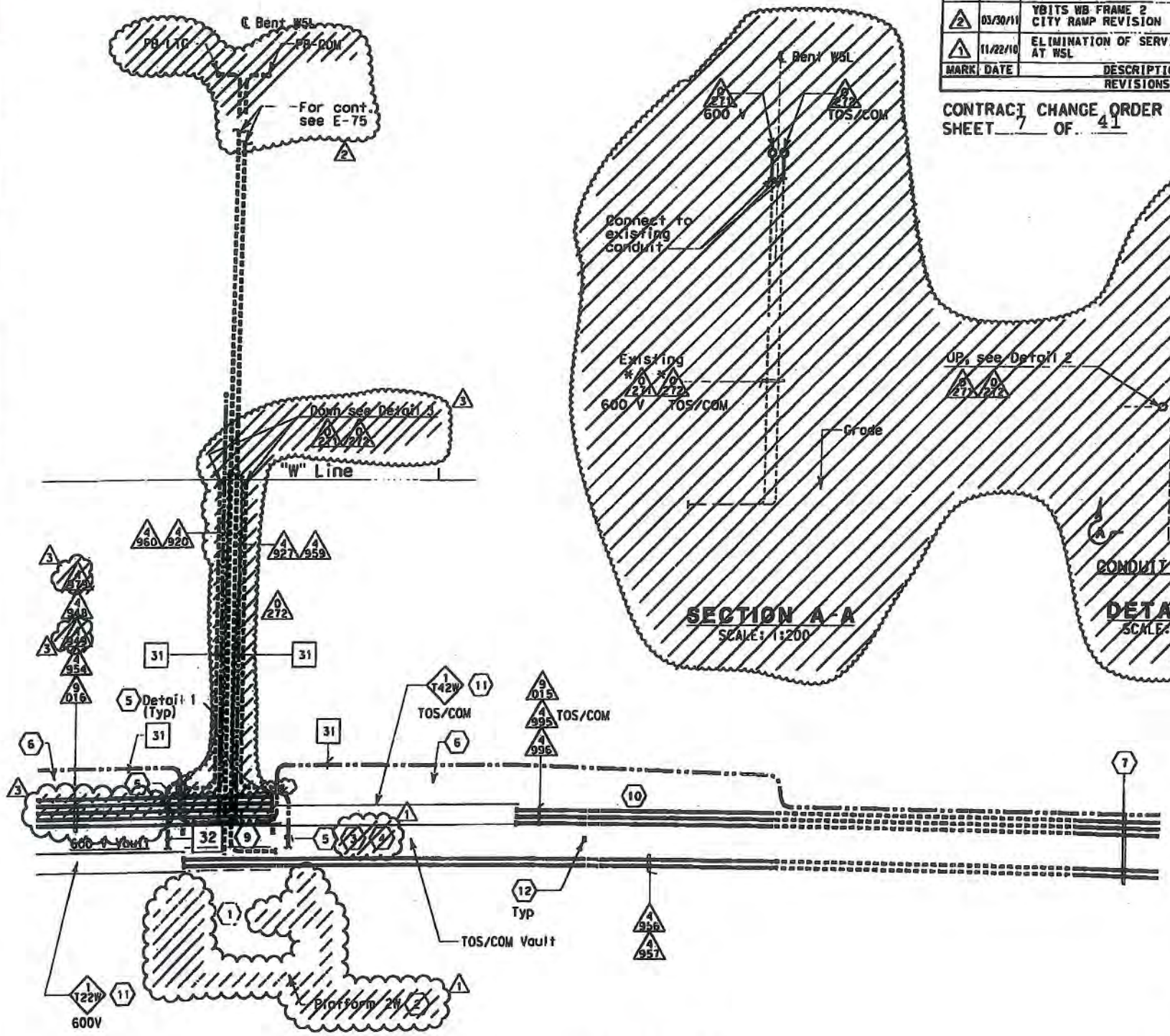

DETAIL 2
GIRDER CONDUIT PLAN
SCALE: 1:75

REGISTERED PROFESSIONAL ENGINEER DAVID H. OTO No. 10599 Exp. 06/30/2013 ELECTRICAL STATE OF CALIFORNIA

FOR REVISION ONLY 3

REGISTERED PROFESSIONAL ENGINEER SYN YEE CHIN No. 18186 Exp. 09/30/2011 ELECTRICAL STATE OF CALIFORNIA

FOR REVISION ONLY 1 2

5 REVISED PER ADDENDUM No. 5 DATED JULY 30, 2009

SHEET NOTES:

1. For conduit stub-up inside lighting pole on a concrete base. See sheet E-58 and E-59.
2. ~~For service platform plans & section, see sheet E-65.~~
3. ~~For continuation, see sheet E-65.~~
4. ~~For service platform grounding, use #4/0 AWG bare copper ground cables lapped from ground bars, passed thru 2"C PVC conduits and bolted inside wireway. See sheet E-65 for continuation.~~
5. System ground conductor #4/0 bare copper wire, use a continuous bare cable to bond all rigid steel galv. (RGS) conduits and pull boxes. Refer to sheet E-80.
6. For roadway deck access opening, see structures sheets. Access cover engraving "ELECTRICAL" and "TOS/COM".
7. For conduit routing in barrier, see sheets E-75 and E-83.
8. Not used.
9. For conduit routing, see E-65.
10. For utility openings, see Structures Sheets.
11. For tray installation, see E-86 and E-65.
12. Install cable pull irons on all vaults, cast in each endwall.

NOTES:

1. References:
   - Minimum conduit radius of 103 mm conduits shall be 610 mm.
   - For conduit support location, refer to sheets E-87 through E-89 and AS drawings for conduit support details.
2. For overall grounding system. Refer to sheet E-34.
3. For conduit support, see sheets E-86.

DETAILS
YBI TRANSITION STRUCTURES GIRDER WESTBOUND (VAULT SECTIONS AND DETAILS)
SCALE AS NOTED

E-82

THIS PLAN ACCURATE FOR ELECTRICAL WORK ONLY.

ALL DIMENSIONS ARE IN METERS UNLESS OTHERWISE SHOWN

STATE OF CALIFORNIA - DEPARTMENT OF TRANSPORTATION
Caltrans
CONSULTANT FUNCTIONAL SUPERVISOR: BEHZAD GOLEMOHAMMADI
CALCULATED-DESIGNED BY: AB
CHECKED BY: FK
REVISED BY
DATE REVISED

LAST REVISION 00-00-00
DATE PLOTTED => 6/30/2011
TIME PLOTTED => 11:43:25 AM

BORDER LAST REVISED 3/1/2007

RELATIVE BORDER SCALE IS IN MILLIMETERS 0 20 40 60 80

USERNAME => garcior
DGN FILE => D:\13103 SF_O Bay Bridge\A-SFOBB Work Files after 11-05\Bi Contract 1\CCO-PLW12\Issued for Submittal\60120sua082r03.c

CU 04251 EA 0120S1

Dist	COUNTY	ROUTE	KILOMETER POST TOTAL PROJECT	SHEET No.	TOTAL SHEETS
04	SF	80	12.7/13.2	204 R1	806

REGISTERED ELECTRICAL ENGINEER 2/14/08

6-23-08
PLANS APPROVAL DATE

REGISTERED PROFESSIONAL ENGINEER FADI WALIEDDINE No. 11365 Exp. 12/31/09 ELECTRICAL STATE OF CALIFORNIA

THE STATE OF CALIFORNIA OR ITS OFFICERS OR AGENTS SHALL NOT BE RESPONSIBLE FOR THE ACCURACY OR COMPLETENESS OF ELECTRONIC COPIES OF THIS PLAN SHEET.

PB AMERICAS, Inc.
A Parsons Brinckerhoff Company
303 Second St., Suite 700N
San Francisco, CA 94107-1317

Caltrans Metric

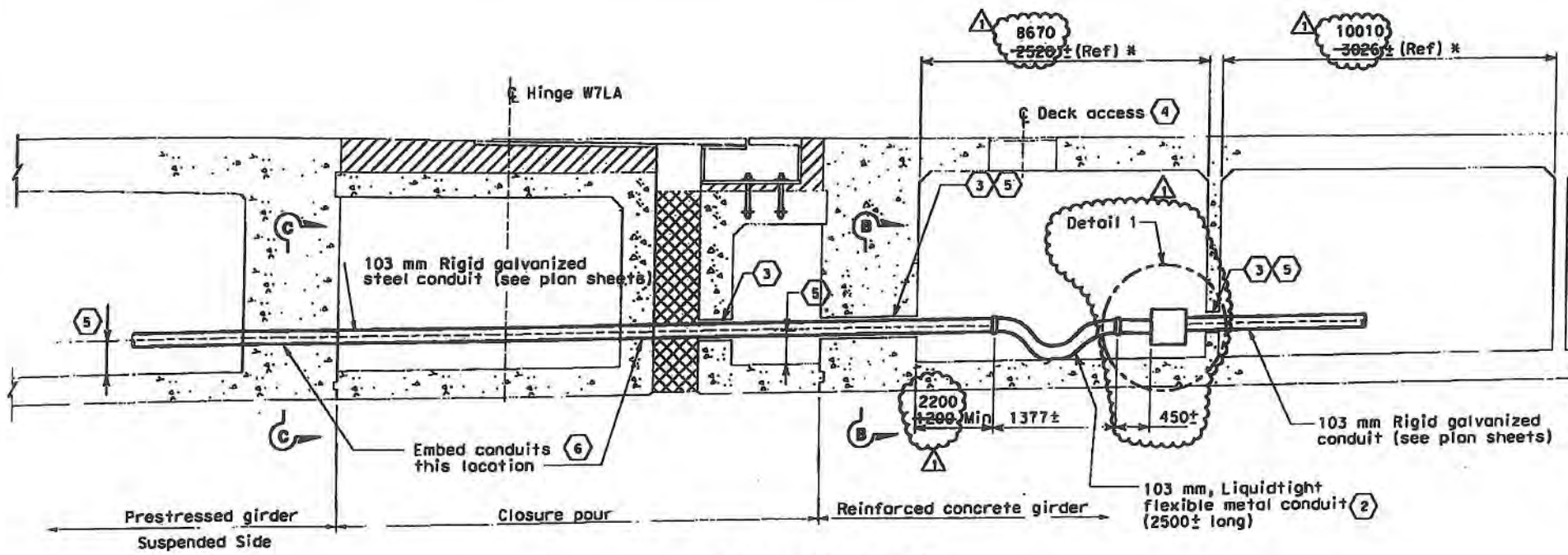

SECTION A-A (1)

SCALE: ~~1:25~~ NTS

SHEET NOTES:

(1) Hinge W7LA electrical design is based on the maximum expansion joint movement opening of 1040 mm.

(2) Provide slack to liquidtight flexible metal conduits for seismic displacement of hinge. Provide conduit system separation, distance similar to Section C-C.

(3) For location of concrete blockout, refer to girder diaphragm details of Structures sheets.

(4) Deck access opening required for installation and inspection of conduits and cables.

(5) The Contractor to ensure the embedded conduits and concrete blockout are aligned.

(6) The Contractor to embed rigid steel conduits to anchor conduits during hinge expansion movement.

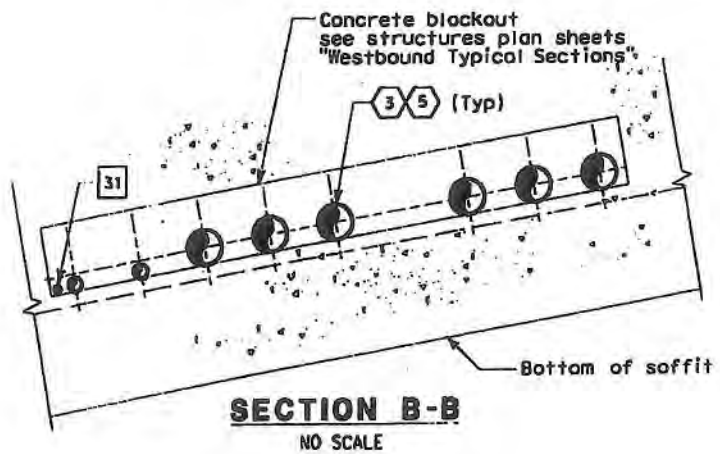

SECTION B-B

NO SCALE

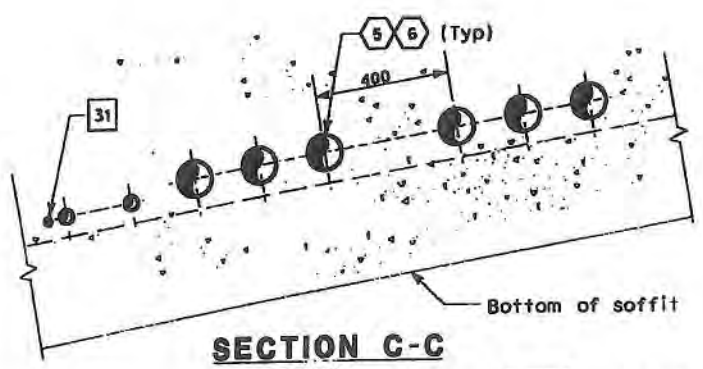

SECTION C-C

NO SCALE

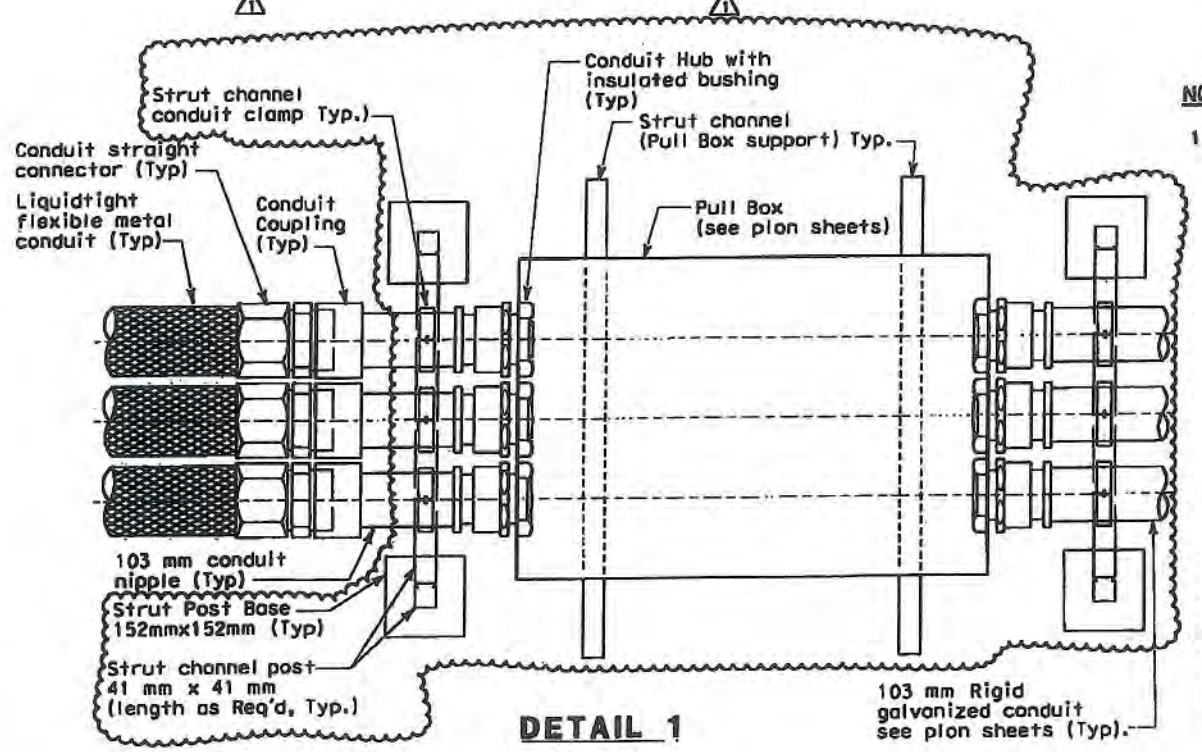

DETAIL 1

NO SCALE

NOTES:

1. Refer to structural drawing for expansion joint displacement location and dimension indicated with asterisk (*).

REGISTERED PROFESSIONAL ENGINEER DAVID N. OTO No. 10659 Exp. 06/30/2013 ELECTRICAL STATE OF CALIFORNIA

FOR REVISION ONLY (1)

MARK	DATE	DESCRIPTIONS	BY	CH'D
1	06/30/11	PL-W12 CABLE, SEISMIC JOINT CONDUIT, MISC.	TW	RG

REVISIONS

CONTRACT CHANGE ORDER NO. 94
SHEET 8 OF 41

DETAILS
YBI TRANSITION STRUCTURES GIRDER WESTBOUND (HINGE W7LA)

SCALE AS NOTED

(7) REVISED PER ADDENDUM No. 7 DATED OCTOBER 19, 2009

E-85

STATE OF CALIFORNIA - DEPARTMENT OF TRANSPORTATION
Caltrans

CONSULTANT FUNCTIONAL SUPERVISOR: BEHZAD GOLEMOHAMMADI
CALCULATED-DESIGNED BY: FK
CHECKED BY: AB
REVISED BY / DATE REVISED

THIS PLAN ACCURATE FOR ELECTRONIC WORK ONLY.

ALL DIMENSIONS IN MILLIMETERS UNLESS OTHERWISE SHOWN

RELATIVE BORDER SCALE IS IN MILLIMETERS 0 20 40 60 80

USERNAME => gerclar
DGN FILE => G:\13103 SF-O Bay Bridge\A-SF088 Work Files after 11-p\Var Contract 1\CCO-PLW12\Issued For Submittal\40120sua085r01.d

CU 0625I | EA 0120S1

LAST REVISION 00-00-00 | DATE PLOTTED => 6/30/2011 | TIME PLOTTED => 7:44:33 AM

BORDER LAST REVISED 3/1/2007

Dist	COUNTY	ROUTE	KILOMETER POST TOTAL PROJECT	SHEET No.	TOTAL SHEETS
04	SF	80	12.7/13.2	228 R1	806

REGISTERED ELECTRICAL ENGINEER 2/14/08 DATE

6-23-08
PLANS APPROVAL DATE

REGISTERED PROFESSIONAL ENGINEER FADI WALIEDDINE No. 11465 Exp. 12/31/09 ELECTRICAL STATE OF CALIFORNIA

THE STATE OF CALIFORNIA OR ITS OFFICERS OR AGENTS SHALL NOT BE RESPONSIBLE FOR THE ACCURACY OR COMPLETENESS OF ELECTRONIC COPIES OF THIS PLAN SHEET.

PB AMERICAS, Inc.
A Parsons Brinckerhoff Company
303 Second St., Suite 700N
San Francisco, CA 94107-1317

PANEL ENCLOSURES (1)

Location	Type	Cabinet/Terminal Box Size (mm)	Enclosure Type	Nameplate Cabinet/Terminal Cover	Remarks
Service Platform	PB-7C	762 H x 508 W x 203 D	NEMA 4X	Caltrans Telephone	Enclosure only - For Telephone Terminal Box
Service Platform	PB-8A	914 H x 762 W x 203 D	NEMA 4X	See Panel Schedules	Enclosure only - For Panel Board
Service Platform	—	—	—	Scada Communication Terminal Box	See Sheet E-140

PULL BOX (2)

Location	Type	Pull Box size (mm)	Enclosure Type	Nameplate Pull Box Cover	Remarks
Roadway Barrier	PB-Com	—	—	Communication	Caltrans standard ES-9C (PB-9A)
Roadway Barrier	PB-Ltg	—	—	600 V - Electrical	Caltrans standard ES-9C (PB-9)
Roadway Barrier		Single Receptacle		Ckt # See Plan Dwg	Deep Single Gang Weatherproof & Threaded Cap
Service Platform	PB-2B	762 L x 610 W x 203 D	NEMA 4X	TOS System	
Girder Floor	PB-2A	915 L x 610 W x 610 D	NEMA 4X	~~TOS/COM~~ Caltrans-600 V - Electrical	See E-133, E-124
Girder Floor	PB-2E	915 L x 610 W x 610 D	NEMA 4X	~~Caltrans- TOS/COM 600 V - Electrical~~	See E-133, E-124
Roadway Deck	Modified 6T	—	Concrete	Caltrans - TOS Preformed Loop (1)	TOS System
Inside Vault	PB-2J	203 L x 203 W x 102 D	NEMA 4X	600 V - Electrical	TOS System
Bike Path	PB-1C	152 L x 152 W x 102 D	NEMA 4X	600 V - Electrical	See E-103
Grade WBR	PB-RM01	—	Concrete	TOS	Caltrans standard ES-8 (6T)

SHEET NOTES:

(1) Splice boxes and panel enclosures shall be provided with padlock provisions.

(2) Roadway pull box access covers including precast manhole access covers located at roadway traffic shall be anti-skid surface with counter sunk mounting bolts.

REGISTERED PROFESSIONAL ENGINEER DAVID H. OTO No. 10699 Exp. 06/30/2011 ELECTRICAL STATE OF CALIFORNIA

FOR REVISION ONLY (1)

MARK	DATE	DESCRIPTIONS	BY	CH'D
(1)	06/30/11	PL-12W CABLE, SEISMIC JOINT CONDUIT, MISC.	TW	RG

REVISIONS

CONTRACT CHANGE ORDER NO. 94
SHEET 9 OF 41

DETAILS
YBI TRANSITION STRUCTURES ROADWAY EASTBOUND (PULL BOX SCHEDULES)

E-109

REV'SED BY | DATE REVISED
CALCULATED-DESIGNED BY: FK | CHECKED BY: AB
CONSULTANT FUNCTIONAL SUPERVISOR: BEHZAD GOLEMOHAMMADI
STATE OF CALIFORNIA - DEPARTMENT OF TRANSPORTATION

THIS PLAN ACCURATE FOR ELECTRICAL WORK ONLY.

BORDER LAST REVISED 3/1/2007

RELATIVE BORDER SCALE IS IN MILLIMETERS 0 20 40 60 80

USERNAME => garciar
DGN FILE => G:\13103 SF_O Bay Bridge\A-SFOBB Work Files after 11-09\Bid Contract 1\CCO-PL012\Issued for Submittal\40120sua109r01.dgn

CU 04251 | EA 0120S1

LAST REVISION 00-00-00 | DATE PLOTTED => 6/30/2011 | TIME PLOTTED => 7:46:14 AM

Dist	COUNTY	ROUTE	KILOMETER POST TOTAL PROJECT	SHEET No.	TOTAL SHEETS
04	SF	80	12.7/13.2	230 R1	806

REGISTERED ELECTRICAL ENGINEER — 2/14/08 DATE

6-23-08
PLANS APPROVAL DATE

REGISTERED PROFESSIONAL ENGINEER — FADI HALIEDDINE No. 11469 Exp. 12/31/09 ELECTRICAL — STATE OF CALIFORNIA

THE STATE OF CALIFORNIA OR ITS OFFICERS OR AGENTS SHALL NOT BE RESPONSIBLE FOR THE ACCURACY OR COMPLETENESS OF ELECTRONIC COPIES OF THIS PLAN SHEET.

PB AMERICAS, Inc.
A Parsons Brinckerhoff Company
303 Second St., Suite 700N
San Francisco, CA 94107-1317

UTILITY PANEL UP-201 (CKT.#2091)

Location: TRANSITION STRUCTURE SERVICE PLATFORM #1E

LOAD DESCRIPTION	LTG	REC	OTH.	CB		CB	LTG	REC	OTH.	LOAD DESCRIPTION
Spare				20/1	1 A 2	20/1				Spare
Spare				20/1	3 B 4	20/1				
Recept (2) Service Platform #1E		360		20/1	5 C 6	20/1				
Strong Motion Recorder #1			900	20/1	7 A 8	20/1				
Spare				20/1	9 B 10	30/1			2000	Controller Cabinet #TOS-01EA
				20/1	11 C 12	20/1			720	CB239A, CB238A CB239B, CB238B
TOTAL VA		360	900						2720	TOTAL VA

LOAD SUMMARY IN VA (INCLUDES .90 PF)

Lighting (At 100%):
Gen Use (1st 10 kVA at 100% Plus 50% of remainder): 4160

TOTAL kVA: 3.98 kVA

BALANCE (kVA)
Phase A - 0.900
Phase B - 2.000
Phase C - 1.080

VOLTAGE: 208/120 V
PHASE/WIRES: 3-Phase, 4-Wire
BUS RATING: 100 A
MAIN: 60 A
MOUNTING: Surface
K.A.I.C.: 10

UTILITY PANEL UP-202 (CKT.#2092)

Location: TRANSITION STRUCTURE SERVICE PLATFORM #2E

LOAD DESCRIPTION	LTG	REC	OTH.	CB		CB	LTG	REC	OTH.	LOAD DESCRIPTION
Recept (2) Eastbound North Barrier		360		20/1	1 A 2	20/1				Spare
Spare				20/1	3 B 4	20/1				
Recept (2) Service Platform #2E		360		20/1	5 C 6	20/1				
Spare				20/1	7 A 8	30/1 (20/1)			900	Ramp Meter Cabinet TOS-RM01
				20/1	9 B 10	30/1			2000	Controller Cabinet #TOS-02EA
				20/1	11 C 12	20/1			540	CB239C, CB238C CB240
TOTAL VA		720							3440	TOTAL VA

LOAD SUMMARY IN VA (INCLUDES .90 PF)

Lighting (At 100%):
Gen Use (1st 10 kVA at 100% Plus 50% of remainder): 2720

TOTAL kVA: 4.16 kVA

BALANCE (kVA)
Phase A - 1.260
Phase B - 2.000
Phase C - 0.900

VOLTAGE: 208/120 V
PHASE/WIRES: 3-Phase, 4-Wire
BUS RATING: 100 A
MAIN: 60 A
MOUNTING: Surface in Fiberglass Enclosure
K.A.I.C.: 10

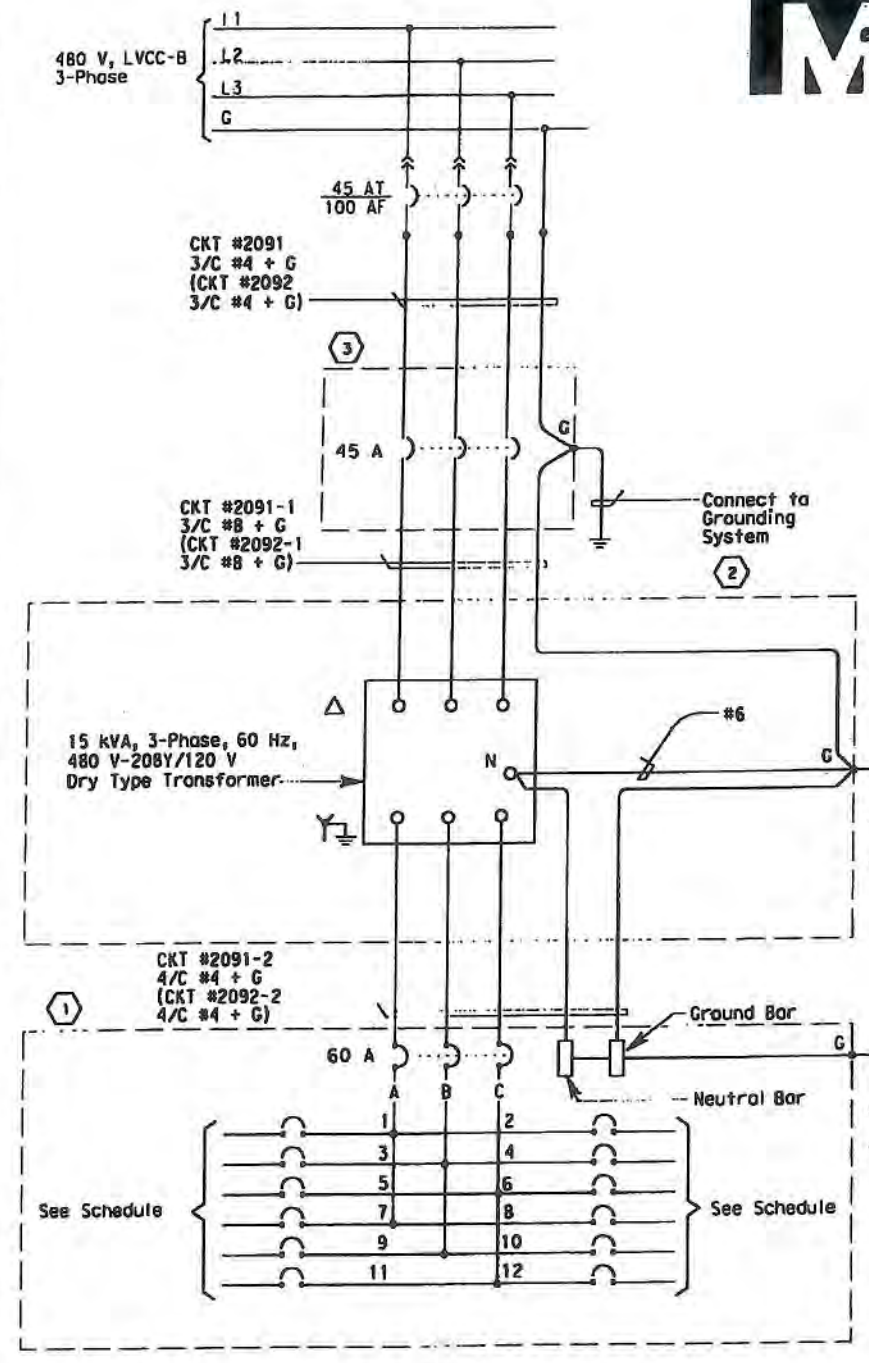

NOTES:

1. The Contractor shall provide nameplates as shown.

SHEET NOTES:

1. Install the panel board inside a vented P8-8A NEMA 4X stainless steel enclosure.
2. Transformer to be furnished with a NEMA 4X stainless steel enclosure with ANSI 61 Power Coat.
3. Install the Molded Case Circuit Breaker inside a NEMA 4X stainless steel enclosure.

REGISTERED PROFESSIONAL ENGINEER — DAVID H. OTO No. 10599 Exp. 06/30/2013 ELECTRICAL — STATE OF CALIFORNIA

FOR REVISION ONLY 1

MARK	DATE	DESCRIPTIONS	BY	CH'D
1	06/30/11	PL-12W CABLE, SEISMIC JOINT CONDUIT, MISC.	TW	RG

REVISIONS

CONTRACT CHANGE ORDER NO. 94
SHEET 10 OF 41

DETAILS
YBI TRANSITION STRUCTURES ROADWAY EASTBOUND (PANEL UP-201 AND UP-202 SCHEDULES)
NO SCALE

E-111

STATE OF CALIFORNIA - DEPARTMENT OF TRANSPORTATION
CONSULTANT FUNCTIONAL SUPERVISOR: BEHZAD GOLEMOHAMMADI
CALCULATED-DESIGNED BY: FK — CHECKED BY: AB
REVISED BY — DATE REVISED

THIS PLAN ACCURATE FOR ELECTRICAL WORK ONLY.

BORDER LAST REVISED 3/1/2007

RELATIVE BORDER SCALE IS IN MILLIMETERS 0 20 40 60 80

USERNAME => garcior
DGN FILE => O:\13103 SF_O Bay Bridge\4-SFOBB Work Files after 11-05\01 Contract 1\CCO-PLW12\Issued for Submittal\40120sua111r01.d

CU 04251 — EA 012051

LAST REVISION 00-00-00 — DATE PLOTTED => 6/30/2011 — TIME PLOTTED => 7:46:50 AM

Dist	COUNTY	ROUTE	KILOMETER POST TOTAL PROJECT	SHEET No.	TOTAL SHEETS
04	SF	80	12.7/13.2	238 R1	806

REGISTERED ELECTRICAL ENGINEER 2/14/08

6-23-08
PLANS APPROVAL DATE

THE STATE OF CALIFORNIA OR ITS OFFICERS OR AGENTS SHALL NOT BE RESPONSIBLE FOR THE ACCURACY OR COMPLETENESS OF ELECTRONIC COPIES OF THIS PLAN SHEET.

REGISTERED PROFESSIONAL ENGINEER TADI BALIKOONE No. 11865 Exp. 12/31/09 ELECTRICAL STATE OF CALIFORNIA

PB AMERICAS, Inc.
A Parsons Brinckerhoff Company
303 Second St., Suite 700N
San Francisco, CA 94107-1317

MARK	DATE	DESCRIPTIONS	BY	CH'D
1	06/30/11	PL-12W CABLE, SEISMIC JOINT CONDUIT, MISC.	TW	RG

REVISIONS

CONTRACT CHANGE ORDER NO. 94
SHEET 11 OF 41

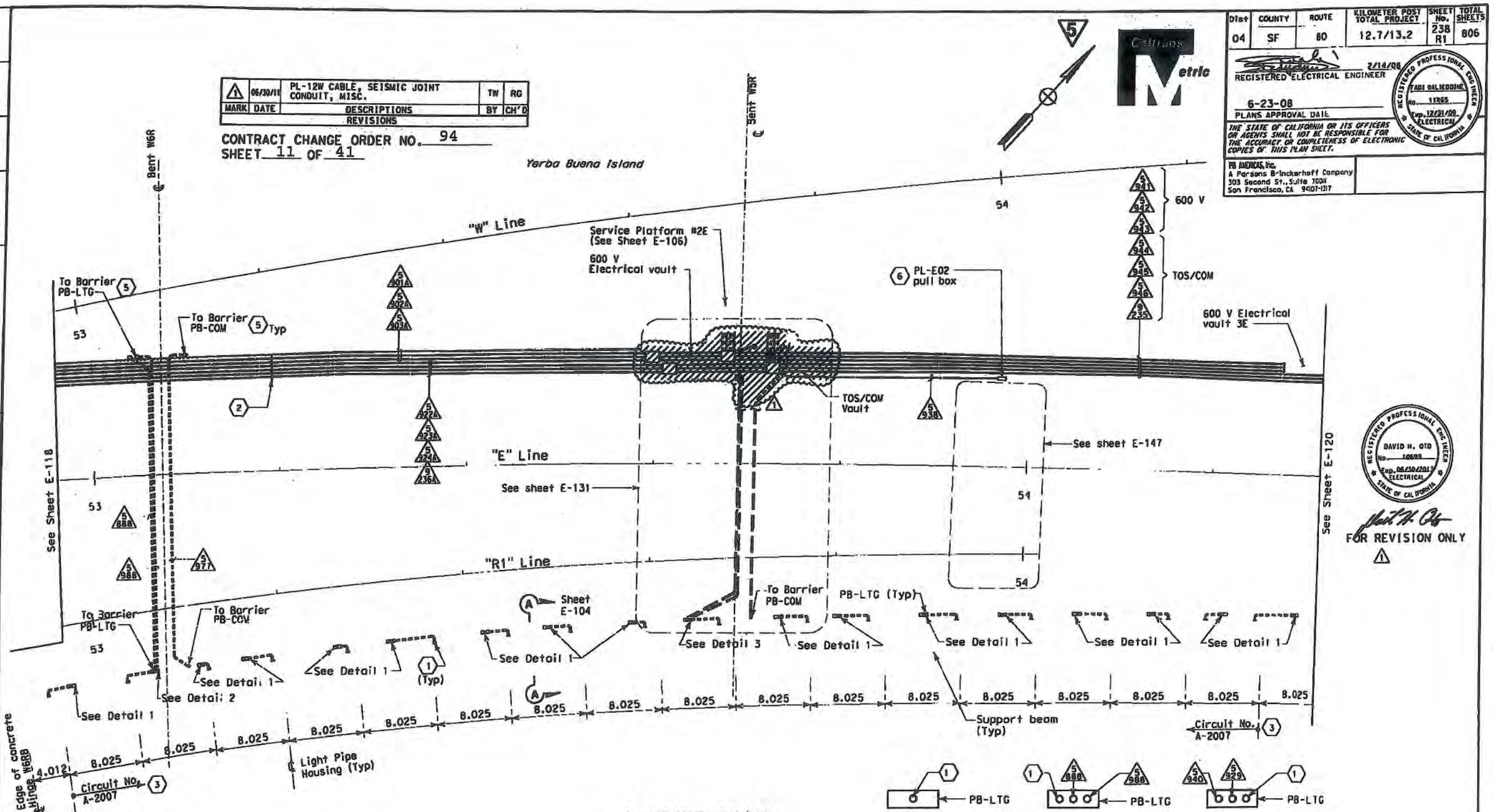

CONDUIT PLAN

SHEET NOTES:

1. Provide cap at end of conduit, see Section A-A sheet E-104.
2. For typical details of conduit & pull box support, see sheet E-124.
3. For 480 V light pipe wiring diagram, see sheet E-125.
4. ~~Embedded conduit stub-down for future light pipe connection. See sheet E-104.~~
5. For conduit up to PB-LTG and PB-COM located in barrier, see sheet E-92.
6. For details, see sheet E-147.

YBI TRANSITION STRUCTURES GIRDER EASTBOUND
(LIGHTING AND ELECTRICAL SYSTEMS)

SCALE: 1:200

5 REVISED PER ADDENDUM No. 5 DATED JULY 30, 2009

E-119

THIS PLAN IS ACCURATE FOR ELECTRICAL WORK ONLY.

ALL DIMENSIONS ARE IN METERS UNLESS OTHERWISE SHOWN

STATE OF CALIFORNIA - DEPARTMENT OF TRANSPORTATION
Caltrans

CONSULTANT FUNCTIONAL SUPERVISOR: BEHZAD GOLEMOHAMMADI
CALCULATED-DESIGNED BY: FK
CHECKED BY: AB
REVISED BY
DATE REVISED

LAST REVISION 00-00-00
DATE PLOTTED => 6/30/2011
TIME PLOTTED => 7:47:37 AM

BORDER LAST REVISED 3/1/2007

RELATIVE BORDER SCALE IS IN MILLIMETERS 0 20 40 60 80

USERNAME => garciar
DGN FILE => D:\13103 SF_O Bay Bridge\A-SF08B Work Files after 11-05-08\Contrac- 1\CCO-PLN12\Issued for Submittal\40120sua119R1.dgn

CU 04251 EA 0120S1

Dist	COUNTY	ROUTE	KILOMETER POST TOTAL PROJECT	SHEET No.	TOTAL SHEETS
04	SF	80	12.7/13.2	245 R1	806

REGISTERED ELECTRICAL ENGINEER 2/14/08

6-23-08
PLANS APPROVAL DATE

REGISTERED PROFESSIONAL ENGINEER FADI BALIEDDINE No. 11165 Exp. 12/31/08 ELECTRICAL STATE OF CALIFORNIA

THE STATE OF CALIFORNIA OR ITS OFFICERS OR AGENTS SHALL NOT BE RESPONSIBLE FOR THE ACCURACY OR COMPLETENESS OF ELECTRONIC COPIES OF THIS PLAN SHEET.

PB AMERICAS, Inc.
a Parsons Brinckerhoff Company
303 Second St., Suite 700N
San Francisco, CA 94107-1317

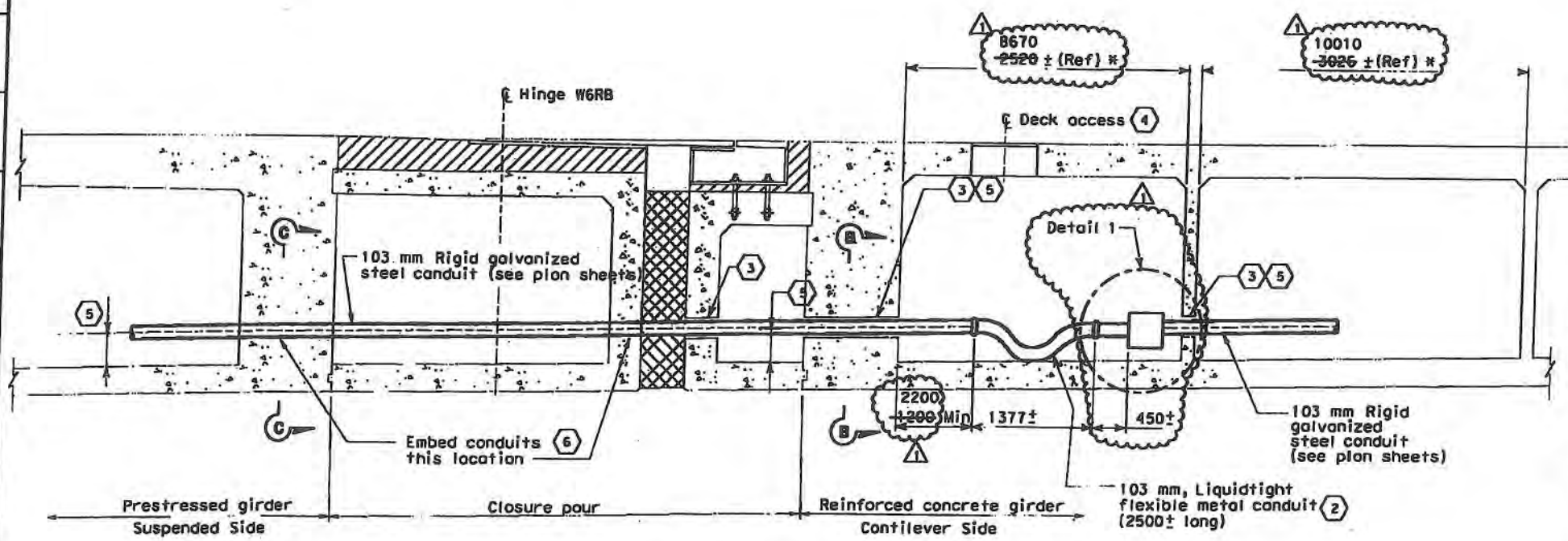

SECTION A-A (1)

SCALE: ~~1:125~~ NTS

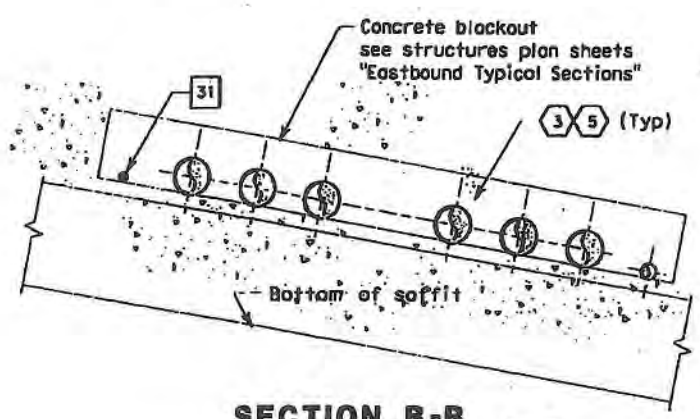

SECTION B-B

NO SCALE

7

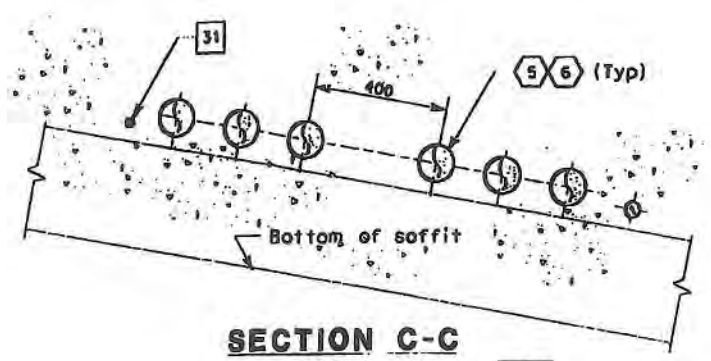

SECTION C-C

NO SCALE

7

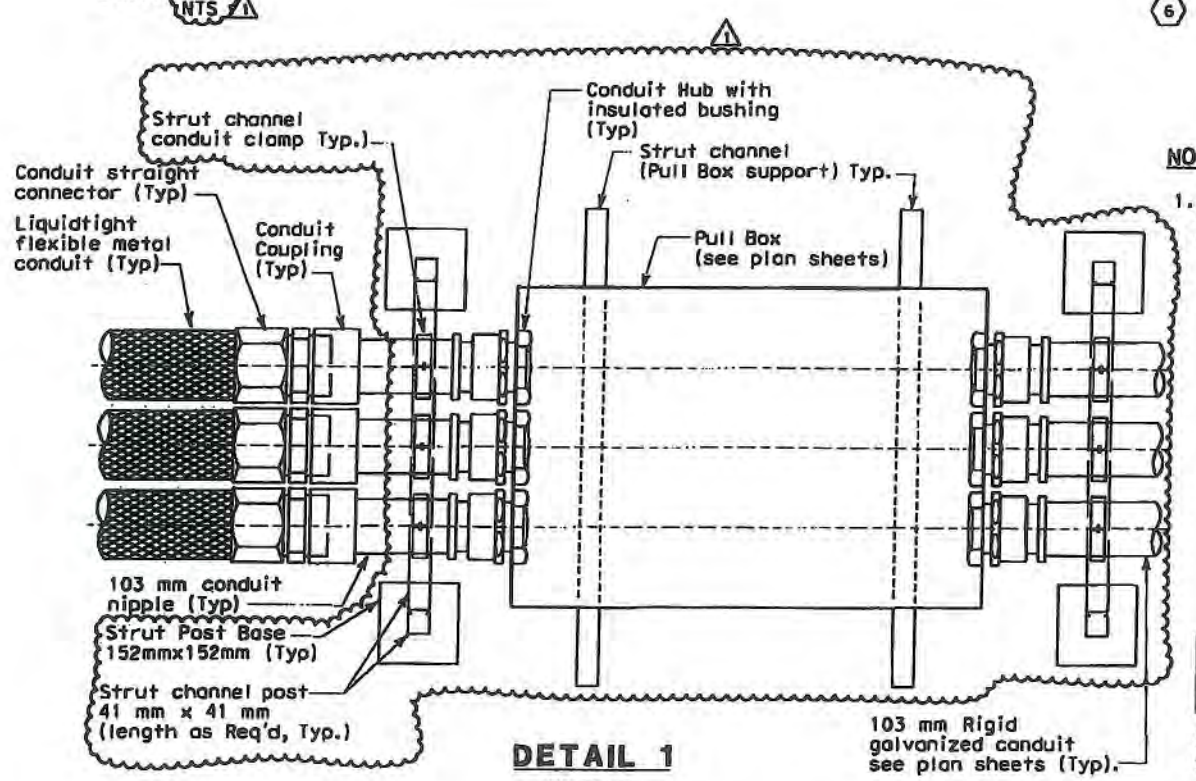

DETAIL 1

NO SCALE

SHEET NOTES: 7

(1) Hinge W6RB electrical design is based on the maximum expansion joint movement opening of 1040 mm.

(2) Provide slack to liquidtight flexible metal conduits for seismic displacement of hinge. Provide conduit system separation, distance similar to Section C-C.

(3) For location of concrete blockout, refer to girder diaphragm details of Structures sheets.

(4) Deck access opening required for installation and inspection of conduits and cables.

(5) The Contractor to ensure the embedded conduits and concrete blockout are aligned.

(6) The Contractor to embed rigid steel conduits to anchor conduits during hinge expansion movement.

NOTES:

1. Refer to structural drawing for expansion joint displacement location and dimension indicated with asterisk (*).

REGISTERED PROFESSIONAL ENGINEER DAVID H. OTO No. 10689 Exp. 06/30/2011 ELECTRICAL STATE OF CALIFORNIA

FOR REVISION ONLY 1

MARK	DATE	DESCRIPTIONS	BY	CH'D
1	06/30/11	PL-12W CABLE, SEISMIC JOINT CONDUIT, MISC.	TW	RG
		REVISIONS		

CONTRACT CHANGE ORDER NO. 94
SHEET 12 OF 41

DETAILS
YBI TRANSITION STRUCTURES GIRDER EASTBOUND (HINGE W6RB)

SCALE AS NOTED

7 REVISED PER ADDENDUM No. 7 DATED OCTOBER 19, 2009

E-126

STATE OF CALIFORNIA - DEPARTMENT OF TRANSPORTATION
Caltrans
CONSULTANT FUNCTIONAL SUPERVISOR: BEHZAD GOLEMOHAMMADI
CALCULATED-DESIGNED BY: FK
CHECKED BY: AB
REVISED BY / DATE REVISED

THIS PLAN ACCURATE FOR ELECTRICAL WORK ONLY.

ALL DIMENSIONS ARE IN MILLIMETERS UNLESS OTHERWISE SHOWN

RELATIVE BORDER SCALE 0 20 40 60 80

DATE PLOTTED => 6/30/2011
TIME PLOTTED => 7:48:52 AM
LAST REVISION 00-00-00

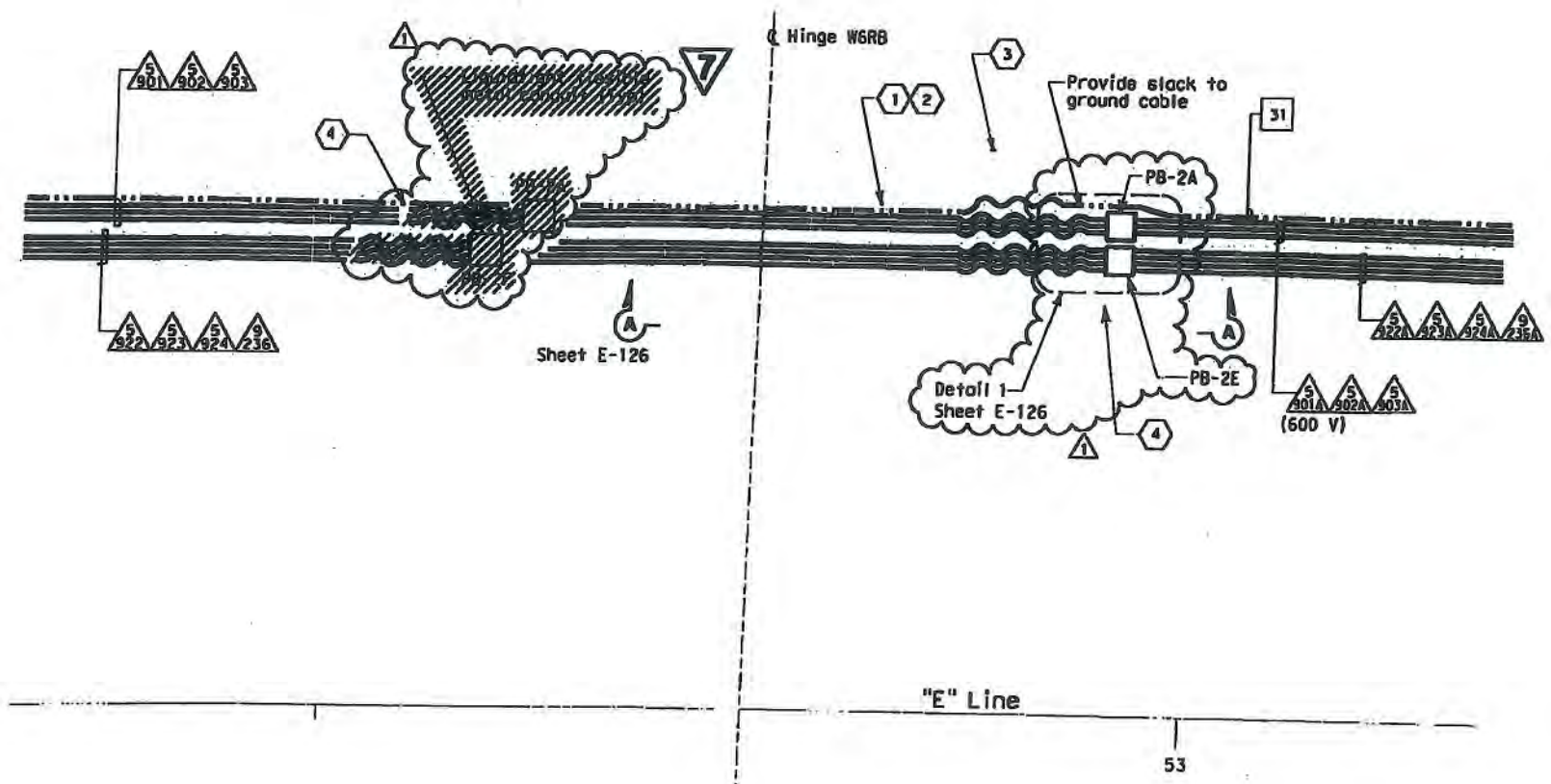

Dist	COUNTY	ROUTE	KILOMETER POST TOTAL PROJECT	SHEET No.	TOTAL SHEETS
04	SF	80	12.7/13.2	252 R1	806

REGISTERED ELECTRICAL ENGINEER 2/14/08

6-23-08
PLANS APPROVAL DATE

THE STATE OF CALIFORNIA OR ITS OFFICERS OR AGENTS SHALL NOT BE RESPONSIBLE FOR THE ACCURACY OR COMPLETENESS OF ELECTRONIC COPIES OF THIS PLAN SHEET.

PB AMERICAS, Inc.
A Parsons Brinckerhoff Company
303 Second St., Suite 700N
San Francisco, CA 94107-1317

REGISTERED PROFESSIONAL ENGINEER DAVID H. OTO No. 10699 Exp. 06/30/2013 ELECTRICAL STATE OF CALIFORNIA

REGISTERED PROFESSIONAL ENGINEER FADI WALEDDINE No. 11465 Exp. 12/31/09 ELECTRICAL STATE OF CALIFORNIA

FOR REVISION ONLY 1

SHEET NOTES:

1. Opening for conduits, refer to YBI Transition Structure Drawings. Girder Diaphragm Detail 1.
2. For Hinge W6RB Details see sheet E-126.
3. For conduit routing in barrier, see sheets E-90 thru E-93.
4. Roadway deck access opening required. See Structures sheets. Access cover engraving "ELECTRICAL".

MARK	DATE	DESCRIPTIONS	BY	CH'D
1	06/30/11	PL-12W CABLE, SEISMIC JOINT CONDUIT, MISC.	TW	RG

REVISIONS

CONTRACT CHANGE ORDER NO. 94
SHEET 13 OF 41

DETAILS
YBI TRANSITION STRUCTURES GIRDER EASTBOUND (VAULT SECTIONS AND DETAILS)

SCALE: 1:75

7 REVISED PER ADDENDUM No. 7 DATED OCTOBER 19, 2009

E-133

STATE OF CALIFORNIA - DEPARTMENT OF TRANSPORTATION
Caltrans

CONSULTANT FUNCTIONAL SUPERVISOR: BEHZAD GOLEMOHAMMADI
CALCULATED-DESIGNED BY: FK
CHECKED BY: AB
REVISED BY
DATE REVISED

THIS PLAN ACCURATE FOR ELECTRICAL WORK ONLY.

ALL DIMENSIONS ARE IN MILLIMETERS UNLESS OTHERWISE SHOWN

BORDER LAST REVISED 3/ /2007

RELATIVE BORDER SCALE IS IN MILLIMETERS 0 20 40 60 80

USERNAME => garciar
DGN FILE => D:\13103 SF_O Bay Bridge\A-SFOBB Work Files after 11-05\Bal Contract- 1\CCO-PL#12\Issued for Submittal\40120sua133R01.c

CU: 04251 EA 0120S1

LAST REVISION 00-00-00
DATE PLOTTED => 6/30/2011
TIME PLOTTED => 8:05:50 AM

DIST	COUNTY	ROUTE	KILOMETER POST TOTAL PROJECT	SHEET No.	TOTAL SHEETS
04	SF	80	12.7/13.2	266 R2	806

REGISTERED ELECTRICAL ENGINEER 3-26-08

PLANS APPROVAL DATE 6-23-08

The State of California or its officers or agents shall not be responsible for the accuracy or completeness of electronic copies of this plan sheet.

To get to the Caltrans web site, go to: http://www.dot.ca.gov

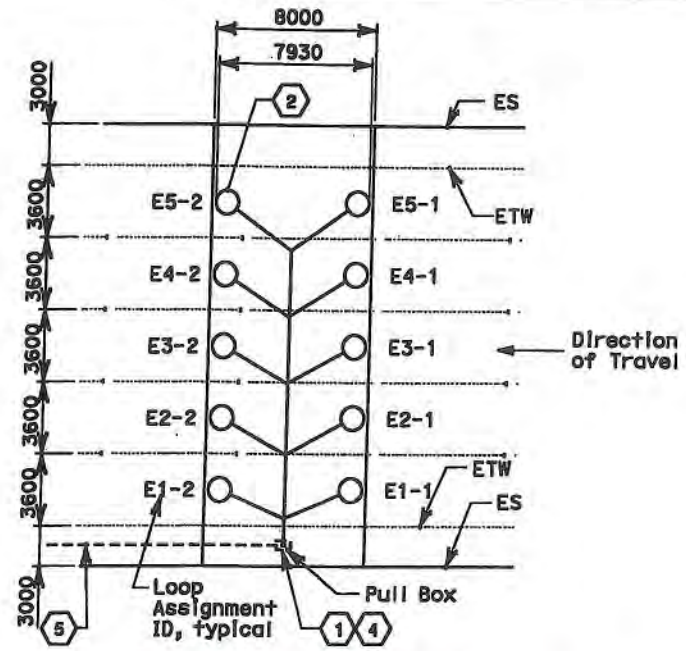

TYPICAL PREFORMED LOOP DETECTOR STATION CONFIGURATION

NO SCALE

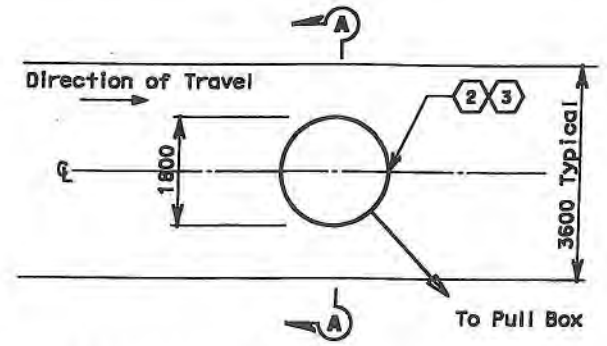

TYPICAL TYPE E LOOP DETECTOR PER LANE DETAIL

SEE SHEET ES-5B FOR ADDITIONAL DETAILS
NO SCALE

FOR REVISION ONLY 1 2

LOOP ASSIGNMENT ID

E 4-1

- First row of loops
- Lane number
- Direction
  - E-Eastbound
  - W- Westbound

1 - Leading Detector

2 - Trailing Detector

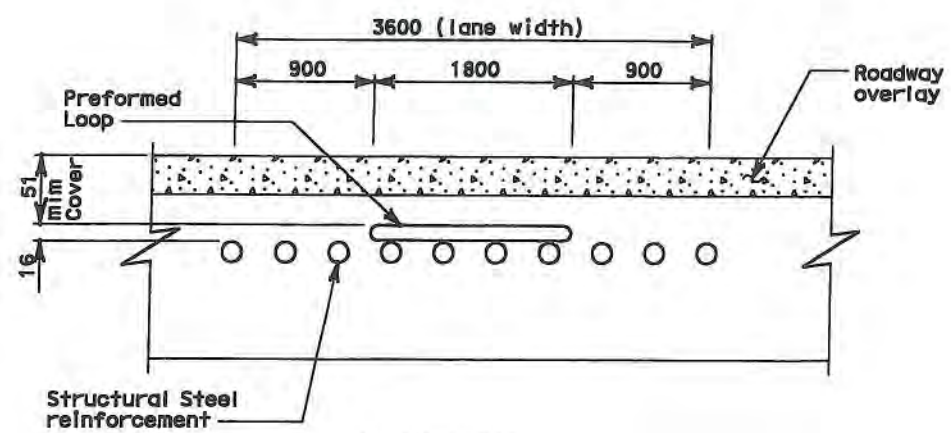

SECTION A-A

NO SCALE

SHEET NOTES:

1. Use splice Type "S", RSP ES-13A. Splicing allowed only in the pull box between DLC and home run DLC using approved splicing kit.
2. Type E Preformed Loops.
3. Loops shall be centered in each lane.
4. DLC will be labeled with loop assignment ID in the pull box.
5. For conduit routing to service platform refer to Service Platform Reference Sheet listed in the Preformed Loop Schedule. Home run DLC cable shall be routed through this conduit to the appropriate cabinet identified in the Preformed Loop Schedule.
6. Six Lanes.
7. DLC cable for this station shall be installed by others. Control cabinet TOS-RM01 and conduit run from PB-RM01 shall be by others.

1 2 ~~8. DLC cable for this station shall be installed by others. Control cabinet TOS-RM02 and conduit run from PB-RM01 shall be by others.~~

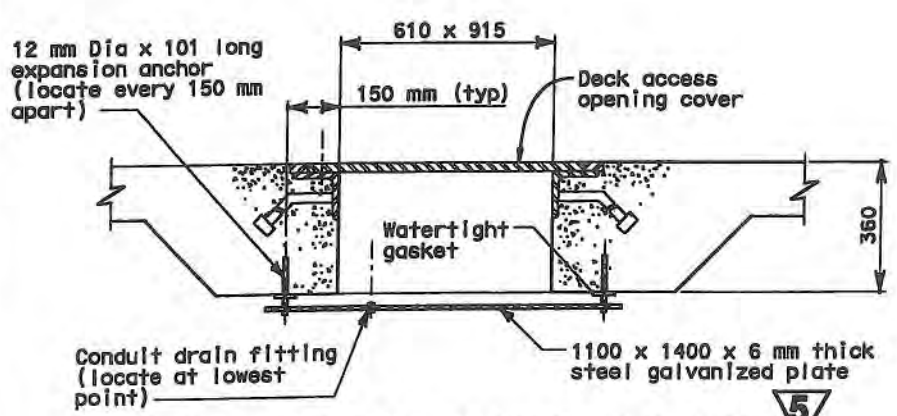

PULL BOX FOR PREFORMED LOOP

5

NO SCALE

PREFORMED LOOP SCHEDULE

ID #	STATION	CABINET ID #	SERVICE PLATFORM REFERENCE SHEET
PL-E01	E 52+33	TOS-RM01	E-105
PL-E02	E 53+97	TOS-02EA	E-106
PL-W01	W 54+15	TOS-03WB	E-66
PL-W11	W 52+00	TOS-01WA	E-64
PL-W12	W 53+45	TOS-01WA	E-64

7 6 1 2 5

MARK	DATE	REVISIONS	BY	CH'D
2	01/10/12	PL-W12 CABLE, SEISMIC JOINT CONDUIT, MISC.	RR	RG
1	06/30/11	PL-W12 CABLE, SEISMIC JOINT CONDUIT, MISC.	TW	RG

CONTRACT CHANGE ORDER NO. 94

SHEET 14 OF 41

DETAILS

TRAFFIC OPERATIONS SYSTEM (PREFORMED LOOP DETECTOR STATION INSTALLATION)

SCALE AS NOTED

E-147

STATE OF CALIFORNIA - DEPARTMENT OF TRANSPORTATION

PROJECT ENGINEER: BEHZAD GOLEMOHAMMADI

CALCULATED/DESIGNED BY | CHECKED BY | DATE REVISED BY | DATE REVISED

THIS PLAN ACCURATE FOR ELECTRICAL WORK ONLY

ALL DIMENSIONS IN MILLIMETERS UNLESS OTHERWISE SHOWN

RELATIVE BORDER SCALE IS IN MILLIMETERS

DGN FILE => 40120suc147r02.dgn

CU 04251

EA 012051

REVISION DATE PLOTTED => 12-JAN-2012 TIME PLOTTED => 15:09

00-00

Dist	COUNTY	ROUTE	KILOMETER POST TOTAL PROJECT	SHEET No.	TOTAL SHEETS
04	SF	80	12.7/13.2	384 R1	806

REGISTERED ELECTRICAL ENGINEER 2/14/08

6-23-08
PLANS APPROVAL DATE

REGISTERED PROFESSIONAL ENGINEER FADI WALIEDDINE No. 11965 Exp. 12/31/09 ELECTRICAL STATE OF CALIFORNIA

THE STATE OF CALIFORNIA OR ITS OFFICERS OR AGENTS SHALL NOT BE RESPONSIBLE FOR THE ACCURACY OR COMPLETENESS OF ELECTRONIC COPIES OF THIS PLAN SHEET.

PB AMERICAS, Inc.
A Parsons Brinckerhoff Company
303 Second St., Suite 700N
San Francisco, CA 94107-1317

REGISTERED PROFESSIONAL ENGINEER DAVID H. OTO No. 10899 Exp. 06/30/2012 ELECTRICAL STATE OF CALIFORNIA

FOR REVISION ONLY

MARK	DATE	DESCRIPTIONS	BY	CH'D
1	01/10/11	PL-W12 CABLE, SEISMIC JOINT CONDUIT, MISC.	RR	RG

REVISIONS

CONTRACT CHANGE ORDER NO. 94
SHEET 15 OF 41

Conduit/Tray No: 1720 | Reference: E-51
Size: 41 | Type: RGS conduit
From: PB-LTG (315.59) | To: PB-LTG
Total Fill (mm2): ~~266.38~~ 315.59 1 | Remarks:
Allowable Fill (mm2): 534.55
Description of Changes:

Included Cable No.	Conductor Type	Area (mm2)
A-1006-3A	3 + 1 Gnd, #8, #10, 600 V, RHH/RHW Insulation	133.19
Pull Rope	Soft-Fiber Polyester	0.00
~~S-1023-2~~	~~3 + 1 Gnd, #8, #10, 600 V, RHH/RHW Insulation~~	~~133.19~~
UP103-3	2 + 1 Gnd, #12, #12, 600 V, RHH/RHW Insulation	49.21

1

Conduit/Tray No: 1721 | Reference: E-51, E-52
Size: 41 | Type: RGS conduit
From: PB-LTG | To: PB-LTG
Total Fill (mm2): 315.59 | Remarks:
Allowable Fill (mm2): 534.55
Description of Changes:

Included Cable No.	Conductor Type	Area (mm2)
A-1006-3A	3 + 1 Gnd, #8, #10, 600 V, RHH/RHW Insulation	133.19
Pull Rope	Soft-Fiber Polyester	0.00
S-1023-2	3 + 1 Gnd, #8, #10, 600 V, RHH/RHW Insulation	133.19
UP103-3	2 + 1 Gnd, #12, #12, 600 V, RHH/RHW Insulation	49.21

Conduit/Tray No: 1722 | Reference: E-52
Size: 41 | Type: RGS conduit
From: PB-LTG | To: PB-LTG
Total Fill (mm2): 381.20 | Remarks:
Allowable Fill (mm2): 534.55
Description of Changes:

Included Cable No.	Conductor Type	Area (mm2)
A-1006-3A	3 + 1 Gnd, #8, #10, 600 V, RHH/RHW Insulation	133.19
Pull Rope	Soft-Fiber Polyester	0.00
S-1024-2	3 + 1 Gnd, #8, #10, 600 V, RHH/RHW Insulation	133.19
UP103-2	3 + 1 Gnd, #12, #12, 600 V, RHH/RHW Insulation	65.61
UP103-3	2 + 1 Gnd, #12, #12, 600 V, RHH/RHW Insulation	49.21

Conduit/Tray No: 1723 | Reference: E-52
Size: 41 | Type: RGS conduit
From: PB-LTG | To: PB-LTG
Total Fill (mm2): 381.20 | Remarks:
Allowable Fill (mm2): 534.55
Description of Changes:

Included Cable No.	Conductor Type	Area (mm2)
A-1006-3A	3 + 1 Gnd, #8, #10, 600 V, RHH/RHW Insulation	133.19
Pull Rope	Soft-Fiber Polyester	0.00
S-1024-2	3 + 1 Gnd, #8, #10, 600 V, RHH/RHW Insulation	133.19
UP103-2	3 + 1 Gnd, #12, #12, 600 V, RHH/RHW Insulation	65.61
UP103-3	2 + 1 Gnd, #12, #12, 600 V, RHH/RHW Insulation	49.21

Conduit/Tray No: 1724 | Reference: E-52
Size: 41 | Type: RGS conduit
From: PB-LTG | To: PB-LTG
Total Fill (mm2): 381.20 | Remarks:
Allowable Fill (mm2): 534.55
Description of Changes:

Included Cable No.	Conductor Type	Area (mm2)
A-1006-3A	3 + 1 Gnd, #8, #10, 600 V, RHH/RHW Insulation	133.19
Pull Rope	Soft-Fiber Polyester	0.00
S-1024-2	3 + 1 Gnd, #8, #10, 600 V, RHH/RHW Insulation	133.19
UP103-2	3 + 1 Gnd, #12, #12, 600 V, RHH/RHW Insulation	65.61
UP103-3	2 + 1 Gnd, #12, #12, 600 V, RHH/RHW Insulation	49.21

Conduit/Tray No: 1725 | Reference: E-52
Size: 41 | Type: RGS conduit
From: PB-LTG | To: PB-LTG
Total Fill (mm2): 381.20 | Remarks:
Allowable Fill (mm2): 534.55
Description of Changes:

Included Cable No.	Conductor Type	Area (mm2)
A-1006-3A	3 + 1 Gnd, #8, #10, 600 V, RHH/RHW Insulation	133.19
Pull Rope	Soft-Fiber Polyester	0.00
S-1024-2	3 + 1 Gnd, #8, #10, 600 V, RHH/RHW Insulation	133.19
UP103-2	3 + 1 Gnd, #12, #12, 600 V, RHH/RHW Insulation	65.61
UP103-3	2 + 1 Gnd, #12, #12, 600 V, RHH/RHW Insulation	49.21

Conduit/Tray No: 1727 | Reference: E-52
Size: 41 | Type: RGS conduit
From: PB-LTG | To: PB-LTG
Total Fill (mm2): 381.20 | Remarks:
Allowable Fill (mm2): 534.55
Description of Changes:

Included Cable No.	Conductor Type	Area (mm2)
A-1006-3A	3 + 1 Gnd, #8, #10, 600 V, RHH/RHW Insulation	133.19
Pull Rope	Soft-Fiber Polyester	0.00
S-1024-2	3 + 1 Gnd, #8, #10, 600 V, RHH/RHW Insulation	133.19
UP103-2	3 + 1 Gnd, #12, #12, 600 V, RHH/RHW Insulation	65.61
UP103-3	2 + 1 Gnd, #12, #12, 600 V, RHH/RHW Insulation	49.21

CONDUIT AND TRAY SCHEDULE
YBI TRANSITION STRUCTURES ROADWAY WB

E-265

REVISED BY | DATE REVISED
CARMELO RIVERA | ELLERY LUCAS
CALCULATED-DESIGNED BY | CHECKED BY
CONSULTANT FUNCTIONAL SUPERVISOR
BEHZAD GOLEMOHAMMADI
STATE OF CALIFORNIA - DEPARTMENT OF TRANSPORTATION
Caltrans

LAST REVISION 00-00-00 | DATE PLOTTED => 12-JAN-2012 | TIME PLOTTED => 15:19

Dist	COUNTY	ROUTE	KILOMETER POST TOTAL PROJECT	SHEET No.	TOTAL SHEETS
04	SF	80	12.7/13.2	394 R2	806

REGISTERED ELECTRICAL ENGINEER 2/14/08

6-23-08
PLANS APPROVAL DATE

REGISTERED PROFESSIONAL ENGINEER FADI WALIEDDINE No. 11865 Exp. 12/31/09 ELECTRICAL STATE OF CALIFORNIA

THE STATE OF CALIFORNIA OR ITS OFFICERS OR AGENTS SHALL NOT BE RESPONSIBLE FOR THE ACCURACY OR COMPLETENESS OF ELECTRONIC COPIES OF THIS PLAN SHEET.

PB AMERICAS, Inc.
A Parsons Brinckerhoff Company
303 Second St., Suite 700N
San Francisco, CA 94107-1317

REGISTERED PROFESSIONAL ENGINEER SYN YEE CHIN No. 18189 Exp. 09/30/2011 ELECTRICAL STATE OF CALIFORNIA
FOR REVISION ONLY 1

REGISTERED PROFESSIONAL ENGINEER DAVID H. OTO No. 18899 Exp. 09/30/2013 ELECTRICAL STATE OF CALIFORNIA
FOR REVISION ONLY 2

Metric

~~Conduit/Tray No: 4022 | Reference: E-65~~
~~Size: 53 | Type: RGS-PVC coated conduit~~
~~From: Wireway #2W | To: Panel UP-102~~
~~Total Fill (mm2): 49.21 | Remarks:~~
~~Allowable Fill (mm2): 879.42~~
~~Description of Changes: Delete due to elimination of platform #2W~~

Included Cable No.	Conductor Type	Area (mm2)
Pull Rope	Soft-Fiber Polyester	0.00
UP102-5	2 + 1 Gnd, #12, #12, 600 V, RHH/RHW insulation	49.21

~~Conduit/Tray No: 4023 | Reference: E-65~~
~~Size: 53 | Type: RGS-PVC coated conduit~~
~~From: Wireway #2W | To: Panel UP-102~~
~~Total Fill (mm2): 0.00 | Remarks:~~
~~Allowable Fill (mm2): 879.42~~
~~Description of Changes: Delete due to elimination of platform #2W~~

Included Cable No.	Conductor Type	Area (mm2)
Pull Rope	Soft-Fiber Polyester	0.00

Conduit/Tray No: 4026 | Reference: E-64, E-81
Size: 41 | Type: RGS conduit
From: Electrical Vault #1W | To: PB-LTG
Total Fill (mm2): 328.29 | Remarks: Exposed conduit shall be RGS-PVC coated.
Allowable Fill (mm2): 534.55
Description of Changes:

Included Cable No.	Conductor Type	Area (mm2)
Pull Rope	Soft-Fiber Polyester	0.00
S-1022-2	1-3/C + Gnd, #8, 600 V, EPR insulation	262.68
UP101-2A	3 + 1 Gnd, #12, #12, 600 V, RHH/RHW insulation	65.61

~~Conduit/Tray No: 4027 | Reference: E-65~~
~~Size: 78 | Type: RGS-PVC coated conduit~~
~~From: Stub-out TOS/COM Vault #2W | To: Telephone Terminal Box TEL-02W~~
~~Total Fill (mm2): 1201.71 | Remarks:~~
~~Allowable Fill (mm2): 2564.19~~
~~Description of Changes: Delete due to elimination of platform #2W~~

Included Cable No.	Conductor Type	Area (mm2)
1473-2	50 pair #18, shielded pairs, IS/OS shield 600 V, XLPE insul., PVC jacket	1201.71
Pull Rope	Soft-Fiber Polyester	0.00

~~Conduit/Tray No: 4028 | Reference: E-65~~
~~Size: 78 | Type: RGS-PVC coated conduit~~
~~From: Stub-out TOS/COM Vault #2W | To: Telephone Terminal Box TEL-02W~~
~~Total Fill (mm2): 1201.71 | Remarks:~~
~~Allowable Fill (mm2): 2564.19~~
~~Description of Changes: Delete due to elimination of platform #2W~~

Included Cable No.	Conductor Type	Area (mm2)
1473-3	50 pair #18, shielded pairs, IS/OS shield 600 V, XLPE insul., PVC jacket	1201.71
Pull Rope	Soft-Fiber Polyester	0.00

Conduit/Tray No: 4044 | Reference: E-64
Size: 53 | Type: RGS-PVC coated conduit
From: Controller Cabinet #TOS-01WA | To: PB-2B
Total Fill (mm2): 769.01 2 | Remarks: 2 PLW12 cable will be replaced when connecting to City Ramp metering cabinet. Replacement cable will be furnished and installed by others.
Allowable Fill (mm2): 1165.23
Description of Changes:

Included Cable No.	Conductor Type	Area (mm2)
PLW11	12 DLC	452.77
PLW12	10 DLC (See Remarks)	316.24
Pull Rope	Soft-Fiber Polyester	0.00

Conduit/Tray No: 4051 | Reference: E-66
Size: 53 | Type: RGS-PVC coated conduit
From: Panel UP-103 | To: Wireway #3W
Total Fill (mm2): 647.57 | Remarks:
Allowable Fill (mm2): 879.42
Description of Changes:

Included Cable No.	Conductor Type	Area (mm2)
1093-2	1-4/C + Gnd, #4, 600 V, EPR insulation	476.76
Pull Rope	Soft-Fiber Polyester	0.00
UP103-10	2 + 1 Gnd, #10, #10, 600 V, RHH/RHW insulation	60.80
UP103-12	2 + 1 Gnd, #10, #10, 600 V, RHH/RHW insulation	60.80
UP103-3	2 + 1 Gnd, #12, #12, 600 V, RHH/RHW insulation	49.21

Conduit/Tray No: 4052 | Reference: E-66
Size: 53 | Type: RGS-PVC coated conduit
From: Panel UP-103 | To: Wireway #3W
Total Fill (mm2): 49.21 | Remarks:
Allowable Fill (mm2): 1165.23
Description of Changes:

Included Cable No.	Conductor Type	Area (mm2)
Pull Rope	Soft-Fiber Polyester	0.00
UP103-5	2 + 1 Gnd, #12, #12, 600 V, RHH/RHW insulation	49.21

MARK	DATE	DESCRIPTIONS	BY	CH'D
2	01/10/11	PL-W12 CABLE, SEISMIC JOINT CONDUIT, MISC.	RR	RG
1	11/22/11	ELIMINATION OF SERVICE PLATFORM AT W5L.	RR	RG

REVISIONS

CONTRACT CHANGE ORDER NO. 94
SHEET 16 OF 41

CONDUIT AND TRAY SCHEDULE
YBI TRANSITION STRUCTURES ROADWAY WB

E-275

REVISED BY | DATE REVISED
CARMELO RIVERA | ELLERY LUCAS
CALCULATED-DESIGNED BY | CHECKED BY
SUPERVISOR BEHZAD GOLEMOHAMMADI
CONSULTANT FUNCTIONAL
STATE OF CALIFORNIA - DEPARTMENT OF TRANSPORTATION
Caltrans

REV. 45 | REVISION 00-00-00 | DATE PLOTTED => 12-JAN-2012 | TIME PLOTTED => 15:09

BORDER LAST REVISED ON 7/2001 | IS IN MILLIMETERS | USERNAME => | DGN FILE => 801209ub275r03.dgn | CU 0425 | EA 01200

Dist	COUNTY	ROUTE	KILOMETER POST TOTAL PROJECT	SHEET No.	TOTAL SHEETS
04	SF	80	12.7/13.2	398 R2	806

REGISTERED ELECTRICAL ENGINEER 2/14/08

6-23-08
PLANS APPROVAL DATE

THE STATE OF CALIFORNIA OR ITS OFFICERS OR AGENTS SHALL NOT BE RESPONSIBLE FOR THE ACCURACY OR COMPLETENESS OF ELECTRONIC COPIES OF THIS PLAN SHEET.

PB AMERICAS, Inc.
A Parsons Brinckerhoff Company
303 Second St., Suite 700N
San Francisco, CA 94107-1317

REGISTERED PROFESSIONAL ENGINEER SYN YEE CHIN No. 18186 Exp. 09/30/2011 ELECTRICAL STATE OF CALIFORNIA
Syn Yee Chin
FOR REVISION ONLY 1

REGISTERED PROFESSIONAL ENGINEER DAVID H. OTO No. 16899 Exp. 09/30/2013 ELECTRICAL STATE OF CALIFORNIA
FOR REVISION ONLY 2

REGISTERED PROFESSIONAL ENGINEER FADI WALEDDINE No. 11806 Exp. 12/31/09 ELECTRICAL STATE OF CALIFORNIA

Metric

Conduit/Tray No:	4921	Reference:	E-64
Size:	53	Type:	RGS-PVC coated conduit
From:	Electrical Vault #1W	To:	Wireway #1W
Total Fill (mm2):	65.61	Remarks:	
Allowable Fill (mm2):	879.42		

Description of Changes:

Included Cable No.	Conductor Type	Area (mm2)
Pull Rope	Soft-Fiber Polyester	0.00
UP101-2A	3 + 1 Gnd, #12, #12, 600 V, RHH/RHW Insulation	65.61

Conduit/Tray No:	4922	Reference:	E-64
Size:	53	Type:	RGS-PVC coated conduit
From:	Electrical Vault #1W	To:	Wireway #1W
Total Fill (mm2):	373.50	Remarks:	
Allowable Fill (mm2):	879.42		

Description of Changes:

Included Cable No.	Conductor Type	Area (mm2)
1091	1-3/C + Gnd, #6, 600 V, EPR insulation	324.29
Pull Rope	Soft-Fiber Polyester	0.00
UP101-1	2 + 1 Gnd, #12, #12, 600 V, RHH/RHW Insulation	49.21

Conduit/Tray No:	4923	Reference:	E-64
Size:	53	Type:	RGS-PVC coated conduit
From:	Electrical Vault #1W	To:	Wireway #1W
Total Fill (mm2):	62.07	Remarks:	
Allowable Fill (mm2):	1165.23		

Description of Changes:

Included Cable No.	Conductor Type	Area (mm2)
1254-1	1-3/C #16, 600 V, EPR insulation	62.07
Pull Rope	Soft-Fiber Polyester	0.00

Conduit/Tray No:	4924	Reference:	E-64
Size:	53	Type:	RGS-PVC coated conduit
From:	Electrical Vault #1W	To:	Wireway #1W
Total Fill (mm2):	0.00	Remarks:	
Allowable Fill (mm2):	879.42		

Description of Changes:

Included Cable No.	Conductor Type	Area (mm2)
Pull Rope	Soft-Fiber Polyester	0.00

Conduit/Tray No:	4925	Reference:	E-64
Size:	78	Type:	RGS-PVC coated conduit
From:	TOS/COM Vault #1W	To:	PB-2B
Total Fill (mm2):	323.65	Remarks:	
Allowable Fill (mm2):	2564.19		

Description of Changes:

Included Cable No.	Conductor Type	Area (mm2)
1475-2	72 Fiber, single mode fiber optic riser cable	323.65
Pull Rope	Soft-Fiber Polyester	0.00

Conduit/Tray No:	4926	Reference:	E-64
Size:	78	Type:	RGS-PVC coated conduit
From:	TOS/COM Vault #1W	To:	PB-2B
Total Fill (mm2):	~~874.52~~ 1190.76 2	Remarks:	2 PLW12 cable will be replaced when connecting to City Ramp metering cabinet. Replacement cable will be furnished and installed by others.
Allowable Fill (mm2):	1935.24		

Description of Changes:

Included Cable No.	Conductor Type	Area (mm2)
1148	1 - 2 pair, shielded #18 with IS/OA, 600 V, PVC jacket	98.10
1475-1	72 Fiber, single mode fiber optic riser cable	323.65
PLW11	12 DLC	452.77
2 ~~Pull Rope~~	~~Soft-Fiber Polyester~~	~~0.00~~
PL-W12	10 DLC (See Remarks)	316.24

Conduit/Tray No:	4927	Reference:	E-65, E-82, E-75
Size:	41	Type:	RGS conduit
From:	~~PB-COM~~ PB-2E 1	To:	TOS/COM Vault #2W
Total Fill (mm2):	0.00	Remarks:	
Allowable Fill (mm2):	708.28		

Description of Changes: Revise "From" location due to YBI City Ramp by others. 1

Included Cable No.	Conductor Type	Area (mm2)
Pull Rope	Soft-Fiber Polyester	0.00

Conduit/Tray No:	4958	Reference:	E-65
Size:	41	Type:	RGS conduit
From:	Electrical Vault #2W	To:	PB-LTG
Total Fill (mm2):	262.68	Remarks:	
Allowable Fill (mm2):	534.55		

Description of Changes:

Included Cable No.	Conductor Type	Area (mm2)
A-1006-3	1-3/C + Gnd, #8, 600 V, EPR insulation	262.68
Pull Rope	Soft-Fiber Polyester	0.00

MARK	DATE	DESCRIPTIONS	BY	CH'D
2	01/10/11	PL-W12 CABLE, SEISMIC JOINT CONDUIT, MISC.	RR	RG
1	03/30/11	YBITS WB FRAME 2 CITY RAMP REVISION.	RR	RG

REVISIONS

CONTRACT CHANGE ORDER NO. 94
SHEET 17 OF 41

CONDUIT AND TRAY SCHEDULE
YBI TRANSITION STRUCTURES ROADWAY WB

E-279

STATE OF CALIFORNIA - DEPARTMENT OF TRANSPORTATION
Caltrans
CONSULTANT FUNCTIONAL SUPERVISOR: BEHZAD GOLEMOHAMMADI
CALCULATED-DESIGNED BY: CARMELO RIVERA
CHECKED BY: ELLERY LUCAS
REVISED BY
DATE REVISED

LAST REVISION 01-00-00
DATE PLOTTED => 12-JAN-2012
TIME PLOTTED => 15:09

Dist	COUNTY	ROUTE	KILOMETER POST TOTAL PROJECT	SHEET No.	TOTAL SHEETS
04	SF	80	12.7/13.2	403C R2	806

REGISTERED ELECTRICAL ENGINEER 2/14/08

6-23-08
PLANS APPROVAL DATE

THE STATE OF CALIFORNIA OR ITS OFFICERS OR AGENTS SHALL NOT BE RESPONSIBLE FOR THE ACCURACY OR COMPLETENESS OF ELECTRONIC COPIES OF THIS PLAN SHEET.

REGISTERED PROFESSIONAL ENGINEER SYN YEE CHIN No. 16186 Exp. 09/30/2011 ELECTRICAL STATE OF CALIFORNIA

Syn Yee Chin
FOR REVISION ONLY 1

REGISTERED PROFESSIONAL ENGINEER DAVID H. OTO No. 10890 Exp. 06/30/2011 ELECTRICAL STATE OF CALIFORNIA

FOR REVISION ONLY 2

REGISTERED PROFESSIONAL ENGINEER FADI WALIEDDINE No. 11155 Exp. 12/31/09 ELECTRICAL STATE OF CALIFORNIA

5 Metric

PB AMERICAS, Inc.
A Parsons Brinckerhoff Company
303 Second St., Suite 700N
San Francisco, CA 94107-1317

Conduit/Tray No:	1502	Reference:	E-50
Size:	41	Type:	RGS conduit
From:	PB-COM	To:	PB-COM
Total Fill (mm2):	0.00	Remarks:	
Allowable Fill (mm2):	534.55		

Description of Changes:

Included Cable No.	Conductor Type	Area (mm2)
Pull Rope	Soft-Fiber Polyester	0.00

Conduit/Tray No:	1546	Reference:	E-49
Size:	41	Type:	RGS conduit
From:	PB-LTG	To:	PB-LTG
Total Fill (mm2):	346.04	Remarks:	
Allowable Fill (mm2):	534.55		

Description of Changes:

Included Cable No.	Conductor Type	Area (mm2)
A-1010-2	3 + 1 Gnd, #6, #8, 600 V, RHH/RHW insulation	212.85
Pull Rope	Soft-Fiber Polyester	0.00
~~S-1001-2~~	3 + 1 Gnd, #8, #10, 600 V, RHH/RHW insulation	133.19

Conduit/Tray No:	1717	Reference:	E-51
Size:	41	Type:	RGS conduit
From:	PB-LTG	To:	PB-LTG
Total Fill (mm2):	266.38	Remarks:	
Allowable Fill (mm2):	534.55		

Description of Changes:

Included Cable No.	Conductor Type	Area (mm2)
A-1006-3A	3 + 1 Gnd, #8, #10, 600 V, RHH/RHW insulation	133.19
Pull Rope	Soft-Fiber Polyester	0.00
S-1022-3A	3 + 1 Gnd, #8, #10, 600 V, RHH/RHW insulation	133.19

Conduit/Tray No:	1718	Reference:	E-51
Size:	41	Type:	RGS conduit
From:	PB-LTG	To:	PB-LTG
Total Fill (mm2):	266.38	Remarks:	
Allowable Fill (mm2):	534.55		

Description of Changes:

Included Cable No.	Conductor Type	Area (mm2)
A-1006-3A	3 + 1 Gnd, #8, #10, 600 V, RHH/RHW insulation	133.19
Pull Rope	Soft-Fiber Polyester	0.00
S-1022-3A	3 + 1 Gnd, #8, #10, 600 V, RHH/RHW insulation	133.19

Conduit/Tray No:	1719	Reference:	E-51
Size:	41	Type:	RGS conduit
From:	PB-LTG	To:	PB-LTG
Total Fill (mm2):	~~266.38~~ 315.59 2	Remarks:	
Allowable Fill (mm2):	534.55		

Description of Changes:

Included Cable No.	Conductor Type	Area (mm2)
A-1006-3A	3 + 1 Gnd, #8, #10, 600 V, RHH/RHW insulation	133.19
Pull Rope	Soft-Fiber Polyester	0.00
S-1023-2	3 + 1 Gnd, #8, #10, 600 V, RHH/RHW insulation	133.19
UP103-3	2 + 1 Gnd, #12, #12, 600 V, RHH/RHW insulation	49.21

Conduit/Tray No:	1804	Reference:	E-52
Size:	41	Type:	RGS conduit
From:	PB-COM	To:	PB-COM
Total Fill (mm2):	98.10	Remarks:	
Allowable Fill (mm2):	708.28		

Description of Changes:

Included Cable No.	Conductor Type	Area (mm2)
1149	1 - 2 pair, shielded #18 with IS/OA, 600 V, PVC jacket	98.10
Pull Rope	Soft-Fiber Polyester	0.00

Conduit/Tray No:	1804A	Reference:	E-50
Size:	41	Type:	RGS conduit
From:	PB-LTG	To:	PB-LTG
Total Fill (mm2):	0.00	Remarks:	
Allowable Fill (mm2):	534.55		

Description of Changes:

Included Cable No.	Conductor Type	Area (mm2)
Pull Rope	Soft-Fiber Polyester	0.00

MARK	DATE	DESCRIPTIONS	BY	CH'D
2	01/10/11	PL-W12 CABLE, SEISMIC JOINT CONDUIT, MISC.	RR	RG
1	07/30/09	YBITS WB FRAME 2 CITY RAMP REVISION	RR	RG

REVISIONS

CONTRACT CHANGE ORDER NO. 94
SHEET 18 OF 41

CONDUIT AND TRAY SCHEDULE
YBI TRANSITION STRUCTURES ROADWAY WB
E-284C

5 ADDED PER ADDENDUM No. 5 DATED JULY 30, 2009

REVISED BY | DATE REVISED
JEFFRI HALIM | ELLERY LUCAS
CALCULATED-DESIGNED BY | CHECKED BY
CONSULTANT FUNCTIONAL SUPERVISOR: BEHZAD GOLEMOHAMMADI
STATE OF CALIFORNIA - DEPARTMENT OF TRANSPORTATION
Caltrans

DATE PLOTTED => 12-JAN-2012
TIME PLOTTED => 15:21

Dist	COUNTY	ROUTE	KILOMETER POST TOTAL PROJECT	SHEET No.	TOTAL SHEETS
04	SF	80	12.7/13.2	403D R2	806

REGISTERED ELECTRICAL ENGINEER 2/14/08

6-23-08
PLANS APPROVAL DATE

THE STATE OF CALIFORNIA OR ITS OFFICERS OR AGENTS SHALL NOT BE RESPONSIBLE FOR THE ACCURACY OR COMPLETENESS OF ELECTRONIC COPIES OF THIS PLAN SHEET.

REGISTERED PROFESSIONAL ENGINEER DAVID H. OTO No. 10699 Exp. 06/30/2013 ELECTRICAL STATE OF CALIFORNIA

FOR REVISION ONLY 2

REGISTERED PROFESSIONAL ENGINEER SYN YEE CHIN No. 18186 Exp. 09/30/2011 ELECTRICAL STATE OF CALIFORNIA

FOR REVISION ONLY 1

REGISTERED PROFESSIONAL ENGINEER FADI WALIEDDINE No. 11865 Exp. 12/31/09 ELECTRICAL STATE OF CALIFORNIA

PB AMERICAS, Inc.
A Parsons Brinckerhoff Company
303 Second St., Suite 300N
San Francisco, CA 94107-1317

5 Caltrans Metric

Conduit/Tray No:	1805
Size:	41
From:	PB-COM
Total Fill (mm2):	0.00
Allowable Fill (mm2):	534.55
Reference:	E-52
Type:	RGS conduit
To:	PB-COM
Remarks:	

Description of Changes:

Included Cable No.	Conductor Type	Area (mm2)
Pull Rope	Soft-Fiber Polyester	0.00

Conduit/Tray No:	1805A
Size:	41
From:	PB-LTG
Total Fill (mm2):	0.00
Allowable Fill (mm2):	534.55
Reference:	E-50
Type:	RGS conduit
To:	PB-LTG
Remarks:	

Description of Changes:

Included Cable No.	Conductor Type	Area (mm2)
Pull Rope	Soft-Fiber Polyester	0.00

Conduit/Tray No:	1T21W
Size:	610
From:	Electrical Vault #1W 1 2
Total Fill (mm2):	~~6260.09 5672.31~~ 5306.21
Allowable Fill (mm2):	16774.16
Reference:	E-64, E-81
Type:	152 mm siderail ladder tray
To:	Electrical Vault #1W
Remarks:	

Description of Changes: Existing tray added/removed cable(s) as listed below due to YBI City Ramp by others 1
Deleted due to elimination of platform #2W 2

Included Cable No.	Conductor Type	Area (mm2)
1091	1-3/C + Gnd, #6, 600 V, EPR insulation	324.29
1092	1-3/C + Gnd, #4, 600 V, EPR insulation	366.10
1093	1-3/C + Gnd, #4, 600 V, EPR insulation	366.10
1094	1-3/C + Gnd, #2, 600 V, EPR insulation	527.18
1105	1-3/C + Gnd, #6, 600 V, EPR insulation	324.29
1254-1	1-3/C #16, 600 V, EPR insulation	62.07
A-1005-1	1-3/C + Gnd, #8, 600 V, EPR insulation	262.68
A-1006-1	1-3/C + Gnd, #8, 600 V, EPR insulation	262.68
A-1006-2	1-3/C + Gnd, #8, 600 V, EPR insulation	262.68
A-1007-1	1-3/C + Gnd, #4, 600 V, EPR insulation	366.10
A-1008-1	1-3/C + Gnd, #6, 600 V, EPR insulation	324.29
A-1009-1	1-3/C + Gnd, #6, 600 V, EPR insulation	324.29
S-1002-3	1-3/C + Gnd, #8, 600 V, EPR insulation	262.68
S-1021-1	1-3/C + Gnd, #8, 600 V, EPR insulation	262.68
S-1022-1	1-3/C + Gnd, #8, 600 V, EPR insulation	262.68
S-1022-2	1-3/C + Gnd, #8, 600 V, EPR insulation	262.68
S-1022-3	1-3/C + Gnd, #8, 600 V, EPR insulation	262.68
S-1023-1	1-3/C + Gnd, #6, 600 V, EPR insulation	324.29
S-1024-1	1-3/C + Gnd, #6, 600 V, EPR insulation	324.29
S-2021-1	1-3/C + Gnd, #8, 600 V, EPR insulation	262.68
S-2022-1	1-3/C + Gnd, #8, 600 V, EPR insulation	262.68
UP101-1	1-2/C + Gnd #12, 600 V, EPR insulation	102.61

Conduit/Tray No:	1T23W
Size:	610
From:	Electrical Vault #3W
Total Fill (mm2):	~~1970.03~~ 2030.83 1
Allowable Fill (mm2):	16774.16
Reference:	E-66, E-83
Type:	152 mm siderail ladder tray
To:	Electrical Vault #3W
Remarks:	

Description of Changes: Existing tray added/removed cable(s) as listed below due to YBI City Ramp by others 1

Included Cable No.	Conductor Type	Area (mm2)
1093	1-3/C + Gnd, #4, 600 V, EPR insulation	366.10
1094	1-3/C + Gnd, #2, 600 V, EPR insulation	527.18
1254-1	1-3/C #16, 600 V, EPR insulation	62.07
A-1007-1	1-3/C + Gnd, #4, 600 V, EPR insulation	366.10
A-1008-1	1-3/C + Gnd, #6, 600 V, EPR insulation	324.29
S-1024-1	1-3/C + Gnd, #6, 600 V, EPR insulation	324.29
1105	1-3/C + Gnd, #6, 600 V, EPR insulation	324.29
UP101-1	1-2/C + Gnd #12, 600 V, EPR insulation	102.61

MARK	DATE	DESCRIPTIONS	BY	CH'D
2	06/30/11	PL-12W CABLE, SEISMIC JOINT CONDUIT, MISC.	TW	RG
1	03/30/11	ELIMINATION OF SERVICE PLATFORM AT WSL	RR	RG

REVISIONS

CONTRACT CHANGE ORDER NO. 94
SHEET 19 OF 41

5 ADDED PER ADDENDUM No. 5 DATED JULY 30, 2009

CONDUIT AND TRAY SCHEDULE
YBI TRANSITION STRUCTURES ROADWAY WB

E-284D

REVISED BY | DATE REVISED
JEFFRE HALM | ELLERY LUCAS
CALCULATED-DESIGNED BY | CHECKED BY
CONSULTANT FUNCTIONAL SUPERVISOR: BEHZAD GOLEMOHAMMADI
STATE OF CALIFORNIA - DEPARTMENT OF TRANSPORTATION
Caltrans

LAST REVISION 00-00-00 | DATE PLOTTED => 7/6/2011 | TIME PLOTTED => 2:43:11 PM

Dist	COUNTY	ROUTE	KILOMETER POST TOTAL PROJECT	SHEET No.	TOTAL SHEETS
04	SF	80	12.7/13.2	403E R4	806

REGISTERED ELECTRICAL ENGINEER 2/14/08

6-23-08
PLANS APPROVAL DATE

THE STATE OF CALIFORNIA OR ITS OFFICERS OR AGENTS SHALL NOT BE RESPONSIBLE FOR THE ACCURACY OR COMPLETENESS OF ELECTRONIC COPIES OF THIS PLAN SHEET.

REGISTERED PROFESSIONAL ENGINEER FADI WALIEDDINE No. 11966 Exp. 12/31/09 ELECTRICAL STATE OF CALIFORNIA

PB AMERICAS, Inc.
A Parsons Brinckerhoff Company
303 Second St., Suite 700N
San Francisco, CA 94107-1317

REGISTERED PROFESSIONAL ENGINEER DAVID N. OTO No. 16699 Exp. 06/30/2011 ELECTRICAL STATE OF CALIFORNIA
FOR REVISION ONLY 3 4

REGISTERED PROFESSIONAL ENGINEER SYN YEE CHIN No. 18166 Exp. 06/30/2011 ELECTRICAL STATE OF CALIFORNIA
FOR REVISION ONLY 1 2

5 Metric

5 ADDED PER ADDENDUM No. 5 DATED JULY 30, 2009

Conduit/Tray No: 4962 — Reference: E-65
Size: 53 — Type: RGS-PVC coated conduit 4
From: Electrical Vault #2W — To: ~~Wireway #2W~~ Capped at Bent W5L
Total Fill (mm2): 49.21 — Remarks:
Allowable Fill (mm2): 879.42
Description of Changes: Delete due to elimination of platform #2W 1

Included Cable No.	Conductor Type	Area (mm2)
Pull Rope	Soft-Fiber Polyester	0.00
~~UP102-3~~	~~2 + 1 Gnd, #12, #12, 600 V, RHH/RHW insulation~~	~~49.21~~ 1

Conduit/Tray No: 4966 — Reference: E-65
Size: 41 — Type: RGS conduit
From: TOS/COM Vault #2W — To: PB-COM
Total Fill (mm2): 0.00 — Remarks:
Allowable Fill (mm2): 534.55
Description of Changes:

Included Cable No.	Conductor Type	Area (mm2)
Pull Rope	Soft-Fiber Polyester	0.00

Conduit/Tray No: 4981 — Reference: E-66
Size: 53 — Type: RGS-PVC coated conduit
From: Wireway #3W — To: Electrical Vault #3W
Total Fill (mm2): 642.00 — Remarks:
Allowable Fill (mm2): 1165.23
Description of Changes:

Included Cable No.	Conductor Type	Area (mm2)
1094	1-3/C + Gnd, #2, 600 V, EPR Insulation	527.18
Pull Rope	Soft-Fiber Polyester	0.00
UP103-2	3 + 1 Gnd, #12, #12, 600 V, RHH/RHW insulation	65.61
UP103-3	2 + 1 Gnd, #12, #12, 600 V, RHH/RHW insulation	49.21

Conduit/Tray No: 1T41W — Reference: E-64, E-81
Size: 610 — Type: 152 mm siderail solid bottom tray
From: TOS/COM Vault #1W — To: TOS/COM Vault #1W
Total Fill (mm2): ~~7375.16~~ 7691.40 3 — Remarks: PLW12 cable will be replaced when connecting to City Ramp metering cabinet. Replacement cable will be furnished and installed by others. 3 4
Allowable Fill (mm2): 16774.16
Description of Changes: Pre-Formed Loop PL-W12, cable routing change 4

Included Cable No.	Conductor Type	Area (mm2)
1148	1 - 2 pair, shielded #18 with IS/OA, 600 V, PVC jacket	98.10
1169	1 - 2 pair, shielded #18 with IS/OA, 600 V, PVC jacket	98.10
1473-1	50 pair #18, shielded pairs, IS/OS shield 600 V, XLPE insul., PVC jacket	1201.71
1473-2	50 pair #18, shielded pairs, IS/OS shield 600 V, XLPE insul., PVC jacket	1201.71
1474-1	50 pair #18, shielded pairs, IS/OS shield 600 V, XLPE insul., PVC jacket	1201.71
1474-2	50 pair #18, shielded pairs, IS/OS shield 600 V, XLPE insul., PVC jacket	1201.71
1475-1	72 Fiber, single mode fiber optic riser cable	323.65
1475-2	72 Fiber, single mode fiber optic riser cable	323.65
1475-3	72 Fiber, single mode fiber optic riser cable	323.65
2900-111A	4 pair #22, shielded pairs, FEP insulation (Type SSC)	47.42
2900-111B	4 pair #22, shielded pairs, FEP insulation (Type SSC)	47.42
2900-11A	4 pair #22, shielded pairs, FEP insulation (Type SSC)	47.42
2900-11B	4 pair #22, shielded pairs, FEP insulation (Type SSC)	47.42
2900-11C	4 pair #22, shielded pairs, FEP insulation (Type SSC)	47.42
2900-121A	4 pair #22, shielded pairs, FEP insulation (Type SSC)	47.42
2900-121B	4 pair #22, shielded pairs, FEP insulation (Type SSC)	47.42
2900-121C	4 pair #22, shielded pairs, FEP insulation (Type SSC)	47.42
2900-21A	4 pair #22, shielded pairs, FEP insulation (Type SSC)	47.42
2900-21B	4 pair #22, shielded pairs, FEP insulation (Type SSC)	47.42
2900-21C	4 pair #22, shielded pairs, FEP insulation (Type SSC)	47.42
2900-31A	4 pair #22, shielded pairs, FEP insulation (Type SSC)	47.42
2900-31B	4 pair #22, shielded pairs, FEP insulation (Type SSC)	47.42
2900-31C	4 pair #22, shielded pairs, FEP insulation (Type SSC)	47.42
2900-41A	4 pair #22, shielded pairs, FEP insulation (Type SSC)	47.42
2900-41B	4 pair #22, shielded pairs, FEP insulation (Type SSC)	47.42
2900-51A	4 pair #22, shielded pairs, FEP insulation (Type SSC)	47.42
2900-51B	4 pair #22, shielded pairs, FEP insulation (Type SSC)	47.42
2900-51C	4 pair #22, shielded pairs, FEP insulation (Type SSC)	47.42
2900-81A	4 pair #22, shielded pairs, FEP insulation (Type SSC)	47.42
PLW11	12 DLC	452.77
PLW12	10 DLC (See Remarks)	316.24 3

Conduit/Tray No: 4018 — Reference: E-64, E-81
Size: 53 — Type: RGS conduit
From: Electrical Vault #1W — To: PB-LTG
Total Fill (mm2): 525.36 — Remarks: Exposed conduit shall be RGS-PVC coated.
Allowable Fill (mm2): 681.55
Description of Changes:

Included Cable No.	Conductor Type	Area (mm2)
A-1005-1	1-3/C + Gnd, #8, 600 V, EPR insulation	262.68
A-1006-2	1-3/C + Gnd, #8, 600 V, EPR insulation	262.68
Pull Rope	Soft-Fiber Polyester	0.00

Conduit/Tray No: 4920 — Reference: E-65, E-82, E-75
Size: 41 — Type: RGS conduit
From: Electrical Vault #2W — To: ~~PB-LTG~~ PB-2A 2
Total Fill (mm2): 262.68 — Remarks:
Allowable Fill (mm2): 708.28
Description of Changes: Revise "To" location due to YBI City Ramp by others. 2

Included Cable No.	Conductor Type	Area (mm2)
Pull Rope	Soft-Fiber Polyester	0.00
S-1002-3	1-3/C + Gnd, #8, 600 V, EPR insulation	262.68

MARK	DATE	DESCRIPTIONS	BY	CH'D
4	01/10/11	PL-W12 CABLE, SEISMIC JOINT CONDUIT, MISC.	RR	RG
3	06/30/11	PL-W12 CABLE, SEISMIC JOINT CONDUIT, MISC.	TW	RG
2	03/30/11	YBITS WB FRAME 2 CITY RAMP REVISION	TW RR	RG
1	11/22/10	ELIMINATION OF SERVICE PLATFORM AT W5L	RR	RG

REVISIONS

CONTRACT CHANGE ORDER NO. 94
SHEET 20 OF 41

CONDUIT AND TRAY SCHEDULE
YBI TRANSITION STRUCTURES ROADWAY WB

E-284E

STATE OF CALIFORNIA - DEPARTMENT OF TRANSPORTATION
Caltrans

CONSULTANT FUNCTIONAL SUPERVISOR: BEHZAD GOLEMOHAMMADI
CALCULATED-DESIGNED BY: JEFFRI HALIM
CHECKED BY: ELLERY LUCAS
REVISED BY / DATE REVISED

LAST REVISION 00-00-00
DATE PLOTTED => 12-JAN-2012
TIME PLOTTED => 15:10

RELATIVE BORDER SCALE IN MILLIMETERS 0 20 40 60 80
USERNAME => DGN FILE =>

DIST	COUNTY	ROUTE	KILOMETER POST TOTAL PROJECT	SHEET NO	TOTAL SHEETS
04	SF	80	12.7/13.2	405A	806

REGISTERED ELECTRICAL ENGINEER — DATE 06/30/11

PLANS APPROVAL DATE

REGISTERED PROFESSIONAL ENGINEER — DAVID H. OTO — No. 10699 — Exp. 06/30/2013 — ELECTRICAL — STATE OF CALIFORNIA

PB AMERICAS, Inc.
A Parsons Brinckerhoff Company
303 Second St., Suite 700N
San Francisco, CA 94107-1317

The State of California or its officers or agents shall not be responsible for the accuracy or completeness of electronic copies of this plan sheet.

Caltrans now has a web site! To get to the web site, go to http://www.dot.ca.gov

Caltrans Metric

Conduit/Tray No:	4901A	Reference:	E-74
Size:	103	Type:	RGS conduit
From:	PB-2E	To:	PB-2E
Total Fill (mm2):	1761.37	Remarks:	
Allowable Fill (mm2):	3324.51		
Description of Changes:	Added new conduit		

Included Cable No.	Conductor Type	Area (mm2)
1254-1	1-3/C #16, 600 V, EPR insulation	62.07
A-1006-1	1-3/C + Gnd, #8, 600 V, EPR insulation	262.68
A-1006-2	1-3/C + Gnd, #8, 600 V, EPR insulation	262.68
A-1008-1	1-3/C + Gnd, #6, 600 V, EPR insulation	324.29
Pull Rope	Soft-Fiber Polyester	0.00
S-1002-3	1-3/C + Gnd, #8, 600 V, EPR insulation	262.68
S-1022-3	1-3/C + Gnd, #8, 600 V, EPR insulation	262.68
S-1023-1	1-3/C + Gnd, #6, 600 V, EPR insulation	324.29

Conduit/Tray No:	4902A	Reference:	E-74
Size:	103	Type:	RGS conduit
From:	PB-2E	To:	PB-2E
Total Fill (mm2):	0.00	Remarks:	
Allowable Fill (mm2):	3324.51		
Description of Changes:	Added new conduit		

Included Cable No.	Conductor Type	Area (mm2)
Pull Rope	Soft-Fiber Polyester	0.00

MARK	DATE	DESCRIPTIONS	BY	CH'D
0	06/30/11	PL-12W CABLE, SEISMIC JOINT CONDUIT, MISC.	TW	RG

REVISIONS

CONTRACT CHANGE ORDER NO. 94
SHEET 21 OF 41

CONDUIT AND TRAY SCHEDULE
YBI TRANSITION STRUCTURES GIRDER WB

E-286A

DESIGN OVERSIGHT	CALCULATED/DESIGNED BY	DATE XX/XX	REVISED BY	DATE REVISED
BEHZAD GOLEMOHAMMADI	CHECKED BY	XX	XX	XX/XX

STATE OF CALIFORNIA - DEPARTMENT OF TRANSPORTATION
Caltrans

THIS PLAN ACCURATE FOR ELECTRICAL WORK ONLY.

FOR REDUCED PLANS ORIGINAL SCALE IS IN MILLIMETERS 0 20 40 60 80

DGN FILE =>O:\13103 SF_O Bay Bridge\A-SFOBB Work Files after 11-05\YBI-Contract 1\CCO-PLW17\Issued for Submittal\40170su0286A.dgn
USERNAME =>garciar

CU 04251 | EA 0120F1

LAST REVISION 00-00-00 | DATE PLOTTED => 6/30/2011 | TIME PLOTTED => 8:38:14 AM

Dist	COUNTY	ROUTE	KILOMETER POST TOTAL PROJECT	SHEET No.	TOTAL SHEETS
04	SF	80	12.7/13.2	406 R4	806

REGISTERED ELECTRICAL ENGINEER 2/14/08

6-23-08
PLANS APPROVAL DATE

THE STATE OF CALIFORNIA OR ITS OFFICERS OR AGENTS SHALL NOT BE RESPONSIBLE FOR THE ACCURACY OR COMPLETENESS OF ELECTRONIC COPIES OF THIS PLAN SHEET.

REGISTERED PROFESSIONAL ENGINEER FADI WALIEDDINE No. 11805 Exp. 12/31/09 ELECTRICAL STATE OF CALIFORNIA

PB AMERICAS, Inc.
A Parsons Brinckerhoff Company
303 Second St., Suite 700N
San Francisco, CA 94107-1317

REGISTERED PROFESSIONAL ENGINEER DAVID H. OTO No. 10859 Exp. 06/30/2013 ELECTRICAL STATE OF CALIFORNIA
FOR REVISION ONLY 3 4

REGISTERED PROFESSIONAL ENGINEER SYN YEE CHIN No. 18168 Exp. 06/30/2013 ELECTRICAL STATE OF CALIFORNIA
FOR REVISION ONLY 1 2

Metric

Conduit/Tray No: 4903 | Reference: E-74, E-81, E-64
Size: 103 | Type: RGS conduit
From: Electrical Vault #1W | To: PB-2E
Total Fill (mm2): ~~1583.67~~ 1644.47 2 | Remarks:
Allowable Fill (mm2): 3324.51
Description of Changes: Delete due to elimination of platform #2W 1
Existing conduit, added new cable(s) as listed below due to YBI City Ramp by others 2

Included Cable No.	Conductor Type	Area (mm2)
~~1092~~	~~1-3/C + Gnd, #4, 600 V, EPR insulation~~	~~366.10~~
1093	1-3/C + Gnd, #4, 600 V, EPR insulation	366.10 1
1094	1-3/C + Gnd, #2, 600 V, EPR insulation	366.10
Pull Rope	Soft-Fiber Polyester	527.18
~~S-1024-1~~	~~1-3/C + Gnd, #6, 600 V, EPR insulation~~	~~0.00~~
1105	1-3/C + Gnd, #6, 600 V, EPR insulation	324.29
UP101-1	1-2/C + Gnd #12, 600 V, EPR insulation	324.29 2
		102.61

Conduit/Tray No: 4904 | Reference: E-81, E-74, E-64
Size: 103 | Type: RGS conduit
From: TOS/COM Vault #1W | To: PB-2A
Total Fill (mm2): ~~0.00~~ 316.24 3 | Remarks: PLW12 cable will be replaced when connecting to City Ramp metering cabinet. Replacement cable will be furnished and installed by others. 3 4
Allowable Fill (mm2): 3324.51
Description of Changes: Pre-Formed Loop PL-W12 3

Included Cable No.	Conductor Type	Area (mm2)
Pull Rope	Soft-Fiber Polyester	0.00
PLW12	10 DLC (See Remarks)	316.24 3

Conduit/Tray No: 4905 | Reference: E-81, E-74, E-64
Size: 103 | Type: RGS conduit
From: TOS/COM Vault #1W | To: PB-2A
Total Fill (mm2): 647.30 | Remarks:
Allowable Fill (mm2): 2576.49
Description of Changes:

Included Cable No.	Conductor Type	Area (mm2)
1475-2	72 Fiber, single mode fiber optic riser cable	323.65
1475-3	72 Fiber, single mode fiber optic riser cable	323.65
Pull Rope	Soft-Fiber Polyester	0.00

Conduit/Tray No: 4906 | Reference: E-81, E-74, E-64
Size: 103 | Type: RGS conduit
From: TOS/COM Vault #1W | To: PB-2A
Total Fill (mm2): 2599.62 | Remarks:
Allowable Fill (mm2): 3324.51
Description of Changes:

Included Cable No.	Conductor Type	Area (mm2)
1148	1 - 2 pair, shielded #18 with IS/OA, 600 V, PVC jacket	98.10
1169	1 - 2 pair, shielded #18 with IS/OA, 600 V, PVC jacket	98.10
1473-2	50 pair #18, shielded pairs, IS/OS shield 600 V, XLPE insul., PVC jacket	1201.71
1474-2	50 pair #18, shielded pairs, IS/OS shield 600 V, XLPE insul., PVC jacket	1201.71
Pull Rope	Soft-Fiber Polyester	0.00

Conduit/Tray No: 4907 | Reference: E-74
Size: 41 | Type: RGS conduit
From: JB (Soffitt light 2022-4) | To: JB (Soffitt light 2022-5)
Total Fill (mm2): 133.19 | Remarks:
Allowable Fill (mm2): 534.55
Description of Changes:

Included Cable No.	Conductor Type	Area (mm2)
Pull Rope	Soft-Fiber Polyester	0.00
S-2022-2	3 + 1 Gnd, #8, #10, 600 V, RHH/RHW insulation	133.19

Conduit/Tray No: 4908 | Reference: E-28, E-33, E-81, E-78
Size: 41 | Type: RGS conduit
From: PB-LTG | To: Manhole-30
Total Fill (mm2): 0.00 | Remarks:
Allowable Fill (mm2): 534.55
Description of Changes:

Included Cable No.	Conductor Type	Area (mm2)
Pull Rope	Soft-Fiber Polyester	0.00

Conduit/Tray No: 4909 | Reference: E-81, E-64, E-78
Size: 41 | Type: RGS conduit
From: TOS/COM Vault #1W | To: PB-COM
Total Fill (mm2): 98.10 | Remarks:
Allowable Fill (mm2): 708.28
Description of Changes:

Included Cable No.	Conductor Type	Area (mm2)
1169	1 - 2 pair, shielded #18 with IS/OA, 600 V, PVC jacket	98.10
Pull Rope	Soft-Fiber Polyester	0.00

MARK	DATE	DESCRIPTIONS	BY	CH'D
4	01/10/11	PL-W12 CABLE, SEISMIC JOINT CONDUIT, MISC.	RR	RG
3	06/30/11	PL-W12 CABLE, SEISMIC JOINT CONDUIT, MISC.	TW	RG
2	03/30/11	YBITS WB FRAME 2 CITY RAMP REVISION	TW RR	RG
1	11/22/10	ELIMINATION OF SERVICE PLATFORM AT W5L	RR	RG

REVISIONS

CONTRACT CHANGE ORDER NO. 94
SHEET 22 OF 41

CONDUIT AND TRAY SCHEDULE
YBI TRANSITION STRUCTURES GIRDER WB

E 287

STATE OF CALIFORNIA - DEPARTMENT OF TRANSPORTATION
CONSULTANT FUNCTIONAL SUPERVISOR: BEHZAD GOLEMOHAMMADI
CALCULATED-DESIGNED BY: CARMELO RIVERA | CHECKED BY: ELLERY LUCAS
REVISED BY | DATE REVISED

LAST REVISION 00-00-00 | DATE PLOTTED => 12-JAN-2012 | TIME PLOTTED => 15:10

RELATIVE BORDER SCALE IN MILLIMETERS 0 20 40 60 80 | USERNAME => llorico | DGN FILE => 4F

DIST	COUNTY	ROUTE	KILOMETER POST TOTAL PROJECT	SHEET No	TOTAL SHEETS
04	SF	80	12.7/13.2	406A R1	806

REGISTERED ELECTRICAL ENGINEER 06/30/11 DATE

PLANS APPROVAL DATE

REGISTERED PROFESSIONAL ENGINEER DAVID H. OTO No. 10699 Exp. 06/30/2013 ELECTRICAL STATE OF CALIFORNIA

PB AMERICAS, Inc.
A Parsons Brinckerhoff Company
303 Second St., Suite 700N
San Francisco, CA 94107-1317

The State of California or its officers or agents shall not be responsible for the accuracy or completeness of electronic copies of this plan sheet.

Caltrans now has a web site! To get to the web site, go to http://www.dot.ca.gov

Metric

Conduit/Tray No:	4903A
Reference:	E-74
Size:	103
Type:	RGS conduit
From:	PB-2E
To:	PB-2E
Total Fill (mm2):	1644.47
Remarks:	
Allowable Fill (mm2):	3324.51
Description of Changes:	Added new conduit

Included Cable No.	Conductor Type	Area (mm2)
1093	1-3/C + Gnd, #4, 600 V, EPR insulation	366.10
1094	1-3/C + Gnd, #2, 600 V, EPR insulation	527.18
Pull Rope	Soft-Fiber Polyester	0.00
S-1024-1	1-3/C + Gnd, #6, 600 V, EPR insulation	324.29
1105	1-3/C + Gnd, #6, 600 V, EPR insulation	324.29
UP101-1	1-2/C + Gnd #12, 600 V, EPR insulation	102.61

Conduit/Tray No:	4904A
Reference:	E-74
Size:	103
Type:	RGS conduit
From:	PB-2A
To:	PB-2A
Total Fill (mm2):	316.24
Remarks:	1 PLW12 cable will be replaced when connecting to City Ramp metering cabinet. Replacement cable will be furnished and installed by others.
Allowable Fill (mm2):	3324.51
Description of Changes:	Added new conduit

Included Cable No.	Conductor Type	Area (mm2)
Pull Rope	Soft-Fiber Polyester	0.00
PLW12	10 DLC (See Remarks)	316.24

Conduit/Tray No:	4905A
Reference:	E-74
Size:	103
Type:	RGS conduit
From:	PB-2A
To:	PB-2A
Total Fill (mm2):	647.30
Remarks:	
Allowable Fill (mm2):	2576.49
Description of Changes:	Added new conduit

Included Cable No.	Conductor Type	Area (mm2)
1475-2	72 Fiber, single mode fiber optic riser cable	323.65
1475-3	72 Fiber, single mode fiber optic riser cable	323.65
Pull Rope	Soft-Fiber Polyester	0.00

Conduit/Tray No:	4906A
Reference:	E-74
Size:	103
Type:	RGS conduit
From:	PB-2A
To:	PB-2A
Total Fill (mm2):	2599.62
Remarks:	
Allowable Fill (mm2):	3324.51
Description of Changes:	Added new conduit

Included Cable No.	Conductor Type	Area (mm2)
1148	1 - 2 pair, shielded #18 with IS/OA, 600 V, PVC jacket	98.10
1169	1 - 2 pair, shielded #18 with IS/OA, 600 V, PVC jacket	98.10
1473-2	50 pair #18, shielded pairs, IS/OS shield 600 V, XLPE insul., PVC jacket	1201.71
1474-2	50 pair #18, shielded pairs, IS/OS shield 600 V, XLPE insul., PVC jacket	1201.71
Pull Rope	Soft-Fiber Polyester	0.00

REGISTERED PROFESSIONAL ENGINEER DAVID H. OTO No. 10699 Exp. 06/30/2013 ELECTRICAL STATE OF CALIFORNIA

1 FOR REVISION ONLY

MARK	DATE	DESCRIPTIONS	BY	CH'D
1	01/10/11	PL-12W CABLE, SEISMIC JOINT CONDUIT, MISC.	RR	RG
0	06/30/11	PL-12W CABLE, SEISMIC JOINT CONDUIT, MISC.	TW	RG

REVISIONS

CONTRACT CHANGE ORDER NO. 94
SHEET 23 OF 41

CONDUIT AND TRAY SCHEDULE
YBI TRANSITION STRUCTURES GIRDER WB

E-287A

THIS PLAN ACCURATE FOR ELECTRICAL WORK ONLY.

STATE OF CALIFORNIA - DEPARTMENT OF TRANSPORTATION
Caltrans

DESIGN OVERSIGHT: BEHZAD GOLEMOHAMMADI

CALCULATED/DESIGNED BY: XX DATE XX/10 REVISED BY
CHECKED BY: XX XX/10 DATE REVISED

LAST REVISION 00-00-00 DATE PLOTTED => 10-MAY-2012 TIME PLOTTED => 13:46

Dist	COUNTY	ROUTE	KILOMETER POST TOTAL PROJECT	SHEET No.	TOTAL SHEETS
04	SF	80	12.7/13.2	410 R3	806

REGISTERED ELECTRICAL ENGINEER 2/14/08

6-23-08
PLANS APPROVAL DATE

THE STATE OF CALIFORNIA OR ITS OFFICERS OR AGENTS SHALL NOT BE RESPONSIBLE FOR THE ACCURACY OR COMPLETENESS OF ELECTRONIC COPIES OF THIS PLAN SHEET.

REGISTERED PROFESSIONAL ENGINEER DAVID H. OTO No. 10688 Exp. 09/30/2011 ELECTRICAL STATE OF CALIFORNIA

FOR REVISION ONLY 2 3

REGISTERED PROFESSIONAL ENGINEER SYN YEE CHIN No. 18168 Exp. 09/30/2011 ELECTRICAL STATE OF CALIFORNIA

FOR REVISION ONLY 1

REGISTERED PROFESSIONAL ENGINEER FADI WALIEDDINE No. 11805 Exp. 12/31/09 ELECTRICAL STATE OF CALIFORNIA

PB AMERICAS, Inc.
A Parsons Brinckerhoff Company
303 Second St., Suite 700N
San Francisco, CA 94107-1317

Conduit/Tray No: 4944 | Reference: E-73
Size: 41 | Type: RGS conduit
From: JB (Soffitt light 2021-5) | To: JB (Soffitt light 2021-6)
Total Fill (mm2): 133.19 | Remarks:
Allowable Fill (mm2): 534.55
Description of Changes:

Included Cable No.	Conductor Type	Area (mm2)
Pull Rope	Soft-Fiber Polyester	0.00
S-2021-2	3 + 1 Gnd, #8, #10, 600 V, RHH/RHW insulation	133.19

Conduit/Tray No: 4945 | Reference: E-73
Size: 41 | Type: RGS conduit
From: JB (Soffitt light 2021-9) | To: JB (Soffitt light 2021-10)
Total Fill (mm2): 133.19 | Remarks:
Allowable Fill (mm2): 534.55
Description of Changes:

Included Cable No.	Conductor Type	Area (mm2)
Pull Rope	Soft-Fiber Polyester	0.00
S-2021-2	3 + 1 Gnd, #8, #10, 600 V, RHH/RHW insulation	133.19

Conduit/Tray No: 4946 | Reference: E-73
Size: 41 | Type: RGS conduit
From: JB (Soffitt light 2021-8) | To: JB (Soffitt light 2021-9)
Total Fill (mm2): 133.19 | Remarks:
Allowable Fill (mm2): 534.55
Description of Changes:

Included Cable No.	Conductor Type	Area (mm2)
Pull Rope	Soft-Fiber Polyester	0.00
S-2021-2	3 + 1 Gnd, #8, #10, 600 V, RHH/RHW insulation	133.19

Conduit/Tray No: 4947 | Reference: E-73
Size: 41 | Type: RGS conduit
From: JB (Soffitt light 2021-7) | To: JB (Soffitt light 2021-8)
Total Fill (mm2): 133.19 | Remarks:
Allowable Fill (mm2): 534.55
Description of Changes:

Included Cable No.	Conductor Type	Area (mm2)
Pull Rope	Soft-Fiber Polyester	0.00
S-2021-2	3 + 1 Gnd, #8, #10, 600 V, RHH/RHW insulation	133.19

Conduit/Tray No: 4948 | Reference: E-75, E-82
Size: 103 | Type: RGS conduit
From: PB-2A | To: TOS/COM Vault #2W
Total Fill (mm2): 843.50 | Remarks:
Allowable Fill (mm2): 3324.51
Description of Changes:

Included Cable No.	Conductor Type	Area (mm2)
1148	1 - 2 pair, shielded #18 with IS/OA, 600 V, PVC jacket	98.10
1169	1 - 2 pair, shielded #18 with IS/OA, 600 V, PVC jacket	98.10
1475-2	72 Fiber, single mode fiber optic riser cable	323.65
1475-3	72 Fiber, single mode fiber optic riser cable	323.65
Pull Rope	Soft-Fiber Polyester	0.00

Conduit/Tray No: 4949 | Reference: E-74, E-75, E-82 (2)
Size: 103 | Type: RGS conduit
From: PB-2A | To: ~~TOS/COM Vault #2W~~ PL-W12 (2 3)
Total Fill (mm2): ~~0.00~~ 316.24 (2) | Remarks: PLW12 cable will be replaced when connecting to City Ramp metering cabinet. Replacement cable will be furnished and installed by others.
Allowable Fill (mm2): 3324.51 (2)
Description of Changes: Pre-Formed Loop PL-W12

Included Cable No.	Conductor Type	Area (mm2)
Pull Rope	Soft-Fiber Polyester	0.00
PLW12	10 DLC (See Remarks)	316.24 (2)

Conduit/Tray No: 4951 | Reference: E-81, E-64, E-50 (1)
Size: 41 | Type: RGS conduit
From: Electrical Vault #1W | To: ~~Overhead Sign "A"~~ End of conduit 4951 (1)
Total Fill (mm2): ~~313.59~~ 0.00 (1) | Remarks:
Allowable Fill (mm2): 534.55
Description of Changes: Existing conduit, removed cable(s) as list below due to YBI City Ramp by others. (1)

Included Cable No.	Conductor Type	Area (mm2)
~~1105~~	~~1 3/C + Gnd, #6, 600 V, EPR insulation~~	~~324.25~~ (1)
Pull Rope	Soft-Fiber Polyester	0.00
~~JP101-1~~	~~2 + 1 Gnd, #12, #12, 600 V, RHH/RHW insulation~~	~~15.24~~ (1)

MARK	DATE	DESCRIPTIONS	BY	CH'D
3	01/10/11	PL-W12 CABLE, SEISMIC JOINT CONDUIT, MISC.	RR	RG
2	06/30/11	PL-W12 CABLE, SEISMIC JOINT CONDUIT, MISC.	TW	RG
1	03/30/11	YBITS WB FRAME 2 CITY RAMP REVISION	RR	RG

REVISIONS

CONTRACT CHANGE ORDER NO. 94
SHEET 24 OF 41

CONDUIT AND TRAY SCHEDULE
YBI TRANSITION STRUCTURES GIRDER WB

E-291

STATE OF CALIFORNIA - DEPARTMENT OF TRANSPORTATION
Caltrans
CONSULTANT FUNCTIONAL SUPERVISOR: BEHZAD GOLEMOHAMMADI
CALCULATED-DESIGNED BY: ELLERY LUCAS
CHECKED BY: CARMELO RIVERA
REVISED BY
DATE REVISED

1ST REVISION 00-00-00
DATE PLOTTED => 12-JAN-2012
TIME PLOTTED => 15:10

USERNAME
DGN FILE => 4012080229

Dist	COUNTY	ROUTE	KILOMETER POST TOTAL PROJECT	SHEET No.	TOTAL SHEETS
04	SF	80	12.7/13.2	413A R3	806

REGISTERED ELECTRICAL ENGINEER 4/10/08

6-23-08
PLANS APPROVAL DATE

THE STATE OF CALIFORNIA OR ITS OFFICERS OR AGENTS SHALL NOT BE RESPONSIBLE FOR THE ACCURACY OR COMPLETENESS OF ELECTRONIC COPIES OF THIS PLAN SHEET.

REGISTERED PROFESSIONAL ENGINEER DAVID H. OTO No. 10600 Exp. 09/30/2012 ELECTRICAL STATE OF CALIFORNIA — FOR REVISION ONLY 2 3

REGISTERED PROFESSIONAL ENGINEER SIW YEE CHIN No. 18188 Exp. 09/30/2011 ELECTRICAL STATE OF CALIFORNIA — FOR REVISION ONLY 1

REGISTERED PROFESSIONAL ENGINEER FADI WALIEDDINE No. 11986 Exp. 12/31/09 ELECTRICAL STATE OF CALIFORNIA

PB AMERICAS, Inc.
A Parsons Brinckerhoff Company
303 Second St., Suite 700N
San Francisco, CA 94107-1317

5 Metric

~~Conduit/Tray No: 0271~~ | ~~Reference: E-75, E-82~~
~~Size: 41~~ | ~~Type: RGS conduit~~
~~From: #0271~~ | ~~To: 600 V Vault 2W~~
~~Total Fill (mm2): 0.00~~ | ~~Remarks: Connect to existing conduit (PL-W12)~~ Conduit not install
~~Allowable Fill (mm2): 534.55~~
~~Description of Changes: Pre-Formed Loop PL-W12, cable routing change~~
~~Included Cable No.~~ | ~~Conductor Type~~ | ~~Area (mm2)~~
~~Pull Rope~~ | ~~Soft-Fiber Polyester~~ | ~~0.00~~

2

~~Conduit/Tray No: 0272~~ | ~~Reference: E-75, E-82~~
~~Size: 41~~ | ~~Type: RGS conduit~~
~~From: #0272~~ | ~~To: TOS/COM Vault #2W~~
~~Total Fill (mm2): 0.00~~ | ~~Remarks: Connect to existing conduit (PL-W12)~~ Conduit not install
~~Allowable Fill (mm2): 534.55~~
~~Description of Changes: Pre-Formed Loop PL-W12, cable routing change~~
~~Included Cable No.~~ | ~~Conductor Type~~ | ~~Area (mm2)~~
~~Pull Rope~~ | ~~Soft-Fiber Polyester~~ | ~~0.00~~

Conduit/Tray No: 4007 | Reference: E-65
Size: 53 | Type: RGS-PVC coated conduit
From: TOS/COM Vault #2W | To: PB-COM
Total Fill (mm2): 0.00 | Remarks:
Allowable Fill (mm2): 879.42
Description of Changes:

Included Cable No.	Conductor Type	Area (mm2)
Pull Rope	Soft-Fiber Polyester	0.00

Conduit/Tray No: 4011 | Reference: E-81, E-64, E-78
Size: 41 | Type: RGS conduit
From: TOS/COM Vault #1W | To: PB-COM
Total Fill (mm2): 0.00 | Remarks:
Allowable Fill (mm2): 534.55
Description of Changes:

Included Cable No.	Conductor Type	Area (mm2)
Pull Rope	Soft-Fiber Polyester	0.00

Conduit/Tray No: 4219 | Reference: E-78, E-81
Size: 41 | Type: RGS conduit
From: ~~Stub out at Pier W8L~~ PB-RM01 | To: 600 V Vault 1W
Total Fill (mm2): ~~0.00~~ 227.46 | Remarks: Stub out and cap for future use (PL-W12)
Allowable Fill (mm2): ~~534.55~~ 708.28
Description of Changes: Existing conduit, added new cable(s) as listed below due to YBI City Ramp by others.

Included Cable No.	Conductor Type	Area (mm2)
1 Pull Rope	Soft-Fiber Polyester	0.00
UP001-23	1-2/C + Gnd, #8, 600 V, EPR Insulation	227.46

Conduit/Tray No: 4220 | Reference: E-78, E-81
Size: 41 | Type: RGS conduit
From: ~~Stub out at Pier W8L~~ PB-RM01 | To: TOS/COM Vault #1W
Total Fill (mm2): ~~0.00~~ 316.24 | Remarks: Stub out and cap for future use (PL-W12). Cable PL-W12 will be furnished and installed by others for future City Ramp construction. 2 3
Allowable Fill (mm2): 534.55
Description of Changes: Revise "From" location due to YBI City Ramp by others and Pre-Formed Loop PL-W12 2

Included Cable No.	Conductor Type	Area (mm2)
Pull Rope	Soft-Fiber Polyester	0.00
PLW12	10 DLC (See Remarks)	316.24

Conduit/Tray No: 4910A | Reference: E-81, E-78
Size: 41 | Type: RGS conduit
From: Manhole-30 | To: PB-LTG
Total Fill (mm2): ~~324.29~~ 0.00 | Remarks:
Allowable Fill (mm2): ~~708.28~~ 534.55
Description of Changes: Existing conduit, removed cable (s) as listed below due to YBI City Ramp by others.

Included Cable No.	Conductor Type	Area (mm2)
~~A 1010 1~~	~~1 3/C + Gnd, #6, 600 V, EPR Insulation~~	~~324.29~~
Pull Rope	Soft-Fiber Polyester	0.00

Conduit/Tray No: 4919 | Reference: E-83, E-76
Size: 41 | Type: RGS conduit
From: Electrical Vault #3W | To: ~~PB-LTG~~ PB-2E
Total Fill (mm2): ~~366.10~~ 0.00 | Remarks:
Allowable Fill (mm2): ~~708.28~~ 534.55
Description of Changes: Existing conduit, removed cable (s) as listed below due to YBI City Ramp by others.

Included Cable No.	Conductor Type	Area (mm2)
~~A 1007 1~~	~~1 3/C + Gnd, #4, 600 V, EPR Insulation~~	~~366.10~~
Pull Rope	Soft-Fiber Polyester	0.00

* Removed cable as listed. Conduit #4220 for future routing of PL-W12 to YBI City ramp by others.

MARK	DATE	DESCRIPTIONS	BY	CH'D
3	01/10/11	PL-W12 CABLE, SEISMIC JOINT CONDUIT, MISC.	RR	RG
2	06/30/11	PL-W12 CABLE, SEISMIC JOINT CONDUIT, MISC.	TW	RG
1	03/30/11	YBITS WB FRAME 2 CITY RAMP REVISION	RR	RG

REVISIONS

CONTRACT CHANGE ORDER NO. 94
SHEET 25 OF 41

5 ADDED PER ADDENDUM No. 5 DATED JULY 30, 2009

CONDUIT AND TRAY SCHEDULE
YBI TRANSITION STRUCTURES GIRDER WB

E-294A

REVISED BY | DATE REVISED
JEFFRI HALIM | ELLERY LUCAS
CALCULATED-DESIGNED BY | CHECKED BY
CONSULTANT FUNCTIONAL SUPERVISOR
BEHZAD GOLEMOHAMMADI

STATE OF CALIFORNIA - DEPARTMENT OF TRANSPORTATION
Caltrans

LAST REVISION 00-00-00 | DATE PLOTTED => 12-JAN-2012 | TIME PLOTTED => 16:35

USERNAME =
DGN FILE

Dist	COUNTY	ROUTE	KILOMETER POST TOTAL PROJECT	SHEET No.	TOTAL SHEETS
04	SF	80	12.7/13.2	413B R2	806

REGISTERED ELECTRICAL ENGINEER 4/10/09

6-23-08
PLANS APPROVAL DATE

THE STATE OF CALIFORNIA OR ITS OFFICERS OR AGENTS SHALL NOT BE RESPONSIBLE FOR THE ACCURACY OR COMPLETENESS OF ELECTRONIC COPIES OF THIS PLAN SHEET.

PB AMERICAS, Inc.
A Parsons Brinckerhoff Company
303 Second St., Suite 100N
San Francisco, CA 94107-1317

REGISTERED PROFESSIONAL ENGINEER DAVID H. OTO No. 10699 Exp. 06/30/2013 ELECTRICAL STATE OF CALIFORNIA

FOR REVISION ONLY (2)

REGISTERED PROFESSIONAL ENGINEER SYK YEE CHIN No. 18195 Exp. 09/30/2011 ELECTRICAL STATE OF CALIFORNIA

FOR REVISION ONLY (1)

5

Caltrans Metric

REGISTERED PROFESSIONAL ENGINEER FADI DALIEDDING No. 11269 Exp. 12/31/09 ELECTRICAL STATE OF CALIFORNIA

Conduit/Tray No: 4956
Size: 103
From: Electrical Vault #2W
Total Fill (mm2): ~~1076.75~~ 710.65 (1)
Allowable Fill (mm2): 3324.51
Reference: E-83, E-75, E-82
Type: RGS conduit
To: Electrical Vault #3W
Remarks:
Description of Changes: Existing conduit, removed cable (s) as listed below due to YBI City Ramp by others. (1)

Included Cable No.	Conductor Type	Area (mm2)
1254-1	1-3/C #16, 600 V, EPR insulation	62.07
~~A-1007-1~~	~~1-3/C + Gnd, #4, 600 V, EPR insulation~~	~~366.10~~
A-1008-1	1-3/C + Gnd, #6, 600 V, EPR insulation	324.29
Pull Rope	Soft-Fiber Polyester	0.00
S-1024-1	1-3/C + Gnd, #6, 600 V, EPR insulation	324.29

Conduit/Tray No: 4960
Size: 41
From: Electrical Vault #2W
Total Fill (mm2): ~~324.29~~ 0.00 (1)
Allowable Fill (mm2): ~~702.80~~ 534.55
Reference: E-65, E-82, E-75
Type: RGS-PVC coated conduit
To: ~~PB-LTG~~ PB-2A (1)
Remarks:
Description of Changes: Existing conduit, removed cable (s) as listed below due to YBI City Ramp by others. (1)

Included Cable No.	Conductor Type	Area (mm2)
~~A-1009-1~~	~~1-3/C + Gnd, #6, 600 V, EPR insulation~~	~~324.29~~
Pull Rope	Soft-Fiber Polyester	0.00

Conduit/Tray No: 4970
Size: 41
From: ~~PB-LTG~~ PB-2E (1)
Total Fill (mm2): 324.29
Allowable Fill (mm2): 708.28
Reference: E-83, E-76
Type: RGS conduit
To: Electrical Vault #3W
Remarks:
Description of Changes: Revise "From" location due to YBI City Ramp by others. (1)

Included Cable No.	Conductor Type	Area (mm2)
A-1008-1	1-3/C + Gnd, #6, 600 V, EPR insulation	324.29
Pull Rope	Soft-Fiber Polyester	0.00

Conduit/Tray No: 4977
Size: 41
From: PB-LTG
Total Fill (mm2): 0.00
Allowable Fill (mm2): 534.55
Reference: E-76
Type: RGS conduit
To: PB-LTG
Remarks:
Description of Changes:

Included Cable No.	Conductor Type	Area (mm2)
Pull Rope	Soft-Fiber Polyester	0.00

Conduit/Tray No: 4977A
Size: 41
From: PB-LTG
Total Fill (mm2): 0.00
Allowable Fill (mm2): 534.55
Reference: E-74, E-75
Type: RGS conduit
To: PB-LTG
Remarks:
Description of Changes:

Included Cable No.	Conductor Type	Area (mm2)
Pull Rope	Soft-Fiber Polyester	0.00

Conduit/Tray No: 4978
Size: 41
From: PB-COM
Total Fill (mm2): 0.00
Allowable Fill (mm2): 534.55
Reference: E-76
Type: RGS conduit
To: PB-COM
Remarks:
Description of Changes:

Included Cable No.	Conductor Type	Area (mm2)
Pull Rope	Soft-Fiber Polyester	0.00

Conduit/Tray No: 4978A
Size: 41
From: PB-COM
Total Fill (mm2): 0.00
Allowable Fill (mm2): 534.55
Reference: E-75
Type: RGS conduit
To: PB-COM
Remarks:
Description of Changes:

Included Cable No.	Conductor Type	Area (mm2)
Pull Rope	Soft-Fiber Polyester	0.00

~~Conduit/Tray No: 4979~~
~~Size: 78~~
~~From: PL-W12 at sta. 53 + 45~~
~~Total Fill (mm2): 0.00~~
~~Allowable Fill (mm2): 1935.24~~
~~Reference: E-75, E-82~~
~~Type: RGS conduit~~
~~To: TOS/COM Vault #2W~~
~~Remarks:~~
~~Description of Changes: Pre-Formed Loop PL-W12~~

~~Included Cable No.~~	~~Conductor Type~~	~~Area (mm2)~~
~~Pull Rope~~	~~Soft-Fiber Polyester~~	~~0.00~~

(2)

MARK	DATE	DESCRIPTIONS	BY	CH'D
2	06/30/11	PL-W12 CABLE, SEISMIC JOINT CONDUIT, MISC.	TW	RG
1	03/30/11	ELIMINATION OF SERVICE PLATFORM AT WSL	RR	RG

REVISIONS

CONTRACT CHANGE ORDER NO. 94
SHEET 26 OF 41

CONDUIT AND TRAY SCHEDULE
YBI TRANSITION STRUCTURES GIRDER WB

E-294B

5 ADDED PER ADDENDUM No. 5 DATED JULY 30, 2009

STATE OF CALIFORNIA - DEPARTMENT OF TRANSPORTATION
Caltrans
CONSULTANT FUNCTIONAL SUPERV'SOR: BEHZAD GOLEMOHAMMADI
CALCULATED-DESIGNED BY: JEFFRI MALIM
CHECKED BY: ELLERY LUCAS
REVISED BY
DATE REVISED

LAST REVISION 00-00-00
DATE PLOTTED => 6/30/2011
TIME PLOTTED => 8:45:17 AM

BORDER LAST REVISED 3/1/2007
RELATIVE BORDER SCALE IS IN MILLIMETERS 0 20 40 60 80
USERNAME => garciar
DGN FILE => O:\13103 SF_O Bay Bridge\A-SFOBB Work Files after 11-05\YBI Contract 1\CCO-PLW12\Issued for Submittal\40120suo294Br02.
CU 04251 EA 0120S1

Dist	COUNTY	ROUTE	KILOMETER POST TOTAL PROJECT	SHEET No.	TOTAL SHEETS
04	SF	80	12.7/13.2	431 R1	806

REGISTERED ELECTRICAL ENGINEER 2/14/08

6-23-08
PLANS APPROVAL DATE

THE STATE OF CALIFORNIA OR ITS OFFICERS OR AGENTS SHALL NOT BE RESPONSIBLE FOR THE ACCURACY OR COMPLETENESS OF ELECTRONIC COPIES OF THIS PLAN SHEET.

REGISTERED PROFESSIONAL ENGINEER DAVID H. OTO No. 10699 Exp. 06/30/2011 ELECTRICAL STATE OF CALIFORNIA

REGISTERED PROFESSIONAL ENGINEER FADI WALLEDDINE No. 11465 Exp. 12/31/09 ELECTRICAL STATE OF CALIFORNIA

PB AMERICAS, Inc.
A Parsons Brinckerhoff Company
303 Second St., Suite 700N
San Francisco, CA 94107-1317

Parsons Metric

FOR REVISION ONLY 1

Conduit/Tray No: 2T22E
Size: 610
From: Electrical Vault #2E
Total Fill (mm2): 5284.46
Allowable Fill (mm2): 16774.16
Reference: E-106, E-131
Type: 6" siderail ladder tray
To: Electrical Vault #2E
Remarks:
Description of Changes:

Included Cable No.	Conductor Type	Area (mm2)
2092	1-3/C + Gnd, #4, 600 V, EPR insulation	366.10
2093	1-3/C + Gnd, #4, 600 V, EPR insulation	366.10
2094	1-3/C + Gnd, #2, 600 V, EPR insulation	527.18
2101	1-3/C + Gnd, #4, 600 V, EPR insulation	366.10
2102	1-3/C + Gnd, #4, 600 V, EPR insulation	366.10
2254-1	1-3/C #16, 600 V, EPR insulation	62.07
2254-2	1-3/C #16, 600 V, EPR insulation	62.07
2910-1	1-3/C #16, 600 V, EPR insulation	62.07
A-2005-1	1-3/C + Gnd, #8, 600 V, EPR insulation	262.68
A-2007-1	1-3/C + Gnd, #6, 600 V, EPR insulation	324.29
A-2008-1	1-3/C + Gnd, #4, 600 V, EPR insulation	366.10
A-2009-1	1-3/C + Gnd, #6, 600 V, EPR insulation	324.29
LP217-1,3,5	1-4/C + Gnd, #8, 600 V, EPR insulation	266.48
LP217-2,4,6	1-4/C + Gnd, #8, 600 V, EPR insulation	266.48
S-2023-1	1-3/C + Gnd, #6, 600 V, EPR insulation	324.29
S-2024-1	1-3/C + Gnd, #6, 600 V, EPR insulation	324.29
S-2041-2	1-3/C + Gnd, #8, 600 V, EPR insulation	262.68
S-2042-1	1-3/C + Gnd, #6, 600 V, EPR insulation	324.29
UP202-8	2 + 1 Gnd, #10, #10, 600 V, RHH/RHW insulation	66.80

5

Conduit/Tray No: 2T23E
610
From: Electrical Vault #3E
2718.15
Allowable Fill (mm2): 16774.16
Reference: E-107, E-132
Type: 6" siderail ladder tray
To: Electrical Vault #3E
Remarks:
Description of Changes:

Included Cable No.	Conductor Type	Area (mm2)
2093	1-3/C + Gnd, #4, 600 V, EPR insulation	366.10
2094	1-3/C + Gnd, #2, 600 V, EPR insulation	527.18
2102	1-3/C + Gnd, #4, 600 V, EPR insulation	366.10
2254-1	1-3/C #16, 600 V, EPR insulation	62.07
2254-2	1-3/C #16, 600 V, EPR insulation	62.07
2910-1	1-3/C #16, 600 V, EPR insulation	62.07
A-2008-1	1-3/C + Gnd, #4, 600 V, EPR insulation	366.10
LP218-1,3,5	1-4/C + Gnd, #8, 600 V, EPR insulation	266.48
LP218-2,4,6	1-4/C + Gnd, #8, 600 V, EPR insulation	266.48
S-2024-1	1-3/C + Gnd, #6, 600 V, EPR insulation	324.29
UP203-2	2 + 1 Gnd, #12, #12, 600 V, RHH/RHW insulation	49.21

5

Conduit/Tray No: 2T41E
Size: 610
From: TOS/COM Vault #1E 1
Total Fill (mm2): ~~7331.46~~ 7426.30
Allowable Fill (mm2): 16774.16
Reference: E-130
Type: 6" siderail solid bottom tray
To: TOS/COM Vault #1E
Remarks:
Description of Changes: Pre-Formed loop PL-W12, cable routing change 1

Included Cable No.	Conductor Type	Area (mm2)
2143	1 - 2 pair, shielded #18 with IS/OA, 600 V, PVC jacket	98.10
2170	1 - 2 pair, shielded #18 with IS/OA, 600 V, PVC jacket	98.10
2473-1	50 pair #18, shielded pairs, IS/OS shield 600 V, XLPE insul., PVC jacket	1201.71
2473-2	50 pair #18, shielded pairs, IS/OS shield 600 V, XLPE insul., PVC jacket	1201.71
2474-1	50 pair #18, shielded pairs, IS/OS shield 600 V, XLPE insul., PVC jacket	1201.71
2474-2	50 pair #18, shielded pairs, IS/OS shield 600 V, XLPE insul., PVC jacket	1201.71
2475-1	72 Fiber, single mode fiber optic riser cable	323.65
2475-2	72 Fiber, single mode fiber optic riser cable	323.65
2475-4	72 Fiber, single mode fiber optic riser cable	323.65
2900-111A	4 pair #22, shielded pairs, FEP insulation (Type SSC)	47.42
2900-111B	4 pair #22, shielded pairs, FEP insulation (Type SSC)	47.42
2900-11A	4 pair #22, shielded pairs, FEP insulation (Type SSC)	47.42
2900-11B	4 pair #22, shielded pairs, FEP insulation (Type SSC)	47.42
2900-11C	4 pair #22, shielded pairs, FEP insulation (Type SSC)	47.42
2900-121A	4 pair #22, shielded pairs, FEP insulation (Type SSC)	47.42
2900-121B	4 pair #22, shielded pairs, FEP insulation (Type SSC)	47.42
2900-121C	4 pair #22, shielded pairs, FEP insulation (Type SSC)	47.42
2900-131A	4 pair #22, shielded pairs, FEP insulation (Type SSC)	47.42
2900-21A	4 pair #22, shielded pairs, FEP insulation (Type SSC)	47.42
2900-21B	4 pair #22, shielded pairs, FEP insulation (Type SSC)	47.42
2900-21C	4 pair #22, shielded pairs, FEP insulation (Type SSC)	47.42
2900-31A	4 pair #22, shielded pairs, FEP insulation (Type SSC)	47.42
2900-31B	4 pair #22, shielded pairs, FEP insulation (Type SSC)	47.42
2900-31C	4 pair #22, shielded pairs, FEP insulation (Type SSC)	47.42
2900-41A	4 pair #22, shielded pairs, FEP insulation (Type SSC)	47.42
2900-41B	4 pair #22, shielded pairs, FEP insulation (Type SSC)	47.42
2900-51A	4 pair #22, shielded pairs, FEP insulation (Type SSC)	47.42
2900-51B	4 pair #22, shielded pairs, FEP insulation (Type SSC)	47.42
2900-51C	4 pair #22, shielded pairs, FEP insulation (Type SSC)	47.42
2900-61A	4 pair #22, shielded pairs, FEP insulation (Type SSC)	47.42
2900-71A	4 pair #22, shielded pairs, FEP insulation (Type SSC)	47.42
2900-81A	4 pair #22, shielded pairs, FEP insulation (Type SSC)	47.42
2900-91A	4 pair #22, shielded pairs, FEP insulation (Type SSC)	47.42
2900-91B	4 pair #22, shielded pairs, FEP insulation (Type SSC)	47.42
2900-91C	4 pair #22, shielded pairs, FEP insulation (Type SSC)	47.42
2910-2	4 pair #24, overall shielded, 300 V, PE insulation (Type IC)	77.13
2910-3	4 pair #22, shielded pairs, FEP insulation (Type SSC)	47.42
2900-101A	4 pair #24, overall shielded, 300 V, PE insulation (Type IC)	77.13
2900-101B	4 pair #22, shielded pairs, FEP insulation (Type SSC)	47.42

1

MARK	DATE	DESCRIPTIONS	BY	CH'D
1	06/30/11	PL-12W CABLE, SEISMIC JOINT CONDUIT, MISC.	TW	RG

REVISIONS

CONTRACT CHANGE ORDER NO. 94
SHEET 27 OF 41

5 REVISED PER ADDENDUM No. 5 DATED JULY 30, 2009

CONDUIT AND TRAY SCHEDULE
YBI TRANSITION STRUCTURES ROADWAY EB

E-312

DRAFT 1 (11/01/2010 - BASE INTEGRATION)
STATE OF CALIFORNIA - DEPARTMENT OF TRANSPORTATION
Caltrans
CONSULTANT FUNCTIONAL SUPERVISOR: BEHZAD GOLEMOHAMMADI
CALCULATED-DESIGNED BY
CHECKED BY
REVISED BY
DATE REVISED
CARMELO RIVERA
ELLERY LUCAS

LAST REVISION 00-00-00
DATE PLOTTED => 6/30/2011
TIME PLOTTED => 9:19:47 AM

BORDER LAST REVISED 3/1/2007
RELATIVE BORDER SCALE IS IN MILLIMETERS 0 20 40 60 80
USERNAME => garcior
DGN FILE => U:\13103 SF_O Bay Bridge\A-SFOBB Work Files after 11-05\Bid Contract 1\CCO-PLW12\Issued for Submittal\40120su0312R01.dgn
CU 04251
EA 0120S1

Dist	COUNTY	ROUTE	KILOMETER POST TOTAL PROJECT	SHEET No.	TOTAL SHEETS
04	SF	80	12.7/13.2	433 R1	806

REGISTERED ELECTRICAL ENGINEER 2-14-08

6-23-08
PLANS APPROVAL DATE

REGISTERED PROFESSIONAL ENGINEER FADI HALIKOUDINE No. 81865 Exp. 12/31/09 ELECTRICAL STATE OF CALIFORNIA

THE STATE OF CALIFORNIA OR ITS OFFICERS OR AGENTS SHALL NOT BE RESPONSIBLE FOR THE ACCURACY OR COMPLETENESS OF ELECTRONIC COPIES OF THIS PLAN SHEET.

PB AMERICAS, Inc.
A Parsons Brinckerhoff Company
303 Second St., Suite 7004
San Francisco, CA 94107-1317

Caltrans Metric

MARK	DATE	DESCRIPTIONS	BY	CH'D
1	05/30/11	PL-12W CABLE, SEISMIC JOINT CONDUIT, MISC.	TW	RG

REVISIONS

CONTRACT CHANGE ORDER NO. 94
SHEET 28 OF 41

REGISTERED PROFESSIONAL ENGINEER DAVID H. OTO No. 10699 Exp. 06/30/2011 ELECTRICAL STATE OF CALIFORNIA

FOR REVISION ONLY 1

Conduit/Troy No: 5010 | Reference: E-105
Size: 78 | Type: RGS-PVC coated conduit
From: Panel LP-216 | To: Wireway #1E
Total Fill (mm2): 476.76 | Remarks:
Allowable Fill (mm2): 2564.19
Description of Changes:

Included Cable No.	Conductor Type	Area (mm2)
2100-2	1-4/C + Gnd, #4, 600 V, EPR insulation	476.76
Pull Rope	Soft-Fiber Polyester	0.00

Conduit/Troy No: 5011 | Reference: E-105
Size: 78 | Type: RGS-PVC coated conduit
From: Panel LP-216 | To: Wireway #1E
Total Fill (mm2): 0.00 | Remarks:
Allowable Fill (mm2): 1935.24
Description of Changes:

Included Cable No.	Conductor Type	Area (mm2)
Pull Rope	Soft-Fiber Polyester	0.00

Conduit/Troy No: 5012 | Reference: E-105
Size: 78 | Type: RGS-PVC coated conduit
From: Panel LP-216 | To: Wireway #1E
Total Fill (mm2): 0.00 | Remarks:
Allowable Fill (mm2): 1935.24
Description of Changes:

Included Cable No.	Conductor Type	Area (mm2)
Pull Rope	Soft-Fiber Polyester	0.00

Conduit/Troy No: 5013 | Reference: E-105, E-130
Size: 78 | Type: RGS-PVC coated conduit
From: COM-01E | To: TOS/COM Vault #1E
Total Fill (mm2): 1201.71 | Remarks:
Allowable Fill (mm2): 2564.19
Description of Changes:

Included Cable No.	Conductor Type	Area (mm2)
2474-1	50 pair #18, shielded pairs, IS/OS shield 600 V, XLPE insul., PVC jacket	1201.71
Pull Rope	Soft-Fiber Polyester	0.00

Conduit/Troy No: 5014 | Reference: E-105, E-130
Size: 78 | Type: RGS-PVC coated conduit
From: COM-01E | To: TOS/COM Vault #1E
Total Fill (mm2): 1201.71 | Remarks:
Allowable Fill (mm2): 2564.19
Description of Changes:

Included Cable No.	Conductor Type	Area (mm2)
2474-2	50 pair #18, shielded pairs, IS/OS shield 600 V, XLPE insul., PVC jacket	1201.71
Pull Rope	Soft-Fiber Polyester	0.00

Conduit/Troy No: 5019 | Reference: E-105, E-130
Size: 78 | Type: RGS-PVC coated conduit
From: COM-01E | To: TOS/COM Vault #1E
Total Fill (mm2): 1201.71 | Remarks:
Allowable Fill (mm2): 2564.19
Description of Changes:

Included Cable No.	Conductor Type	Area (mm2)
2473-1	50 pair #18, shielded pairs, IS/OS shield 600 V, XLPE insul., PVC jacket	1201.71
Pull Rope	Soft-Fiber Polyester	0.00

Conduit/Troy No: 5020 | Reference: E-105, E-130
Size: 78 | Type: RGS-PVC coated conduit
From: COM-01E | To: TOS/COM Vault #1E
Total Fill (mm2): 1201.71 | Remarks:
Allowable Fill (mm2): 2564.19
Description of Changes:

Included Cable No.	Conductor Type	Area (mm2)
2473-2	50 pair #18, shielded pairs, IS/OS shield 600 V, XLPE insul., PVC jacket	1201.71
Pull Rope	Soft-Fiber Polyester	0.00

Conduit/Troy No: 5021 | Reference: E-106
Size: 78 | Type: RGS-PVC coated conduit
From: Panel UP-202 | To: Wireway #2E
Total Fill (mm2): ~~773.98~~ 840.06 1 | Remarks:
Allowable Fill (mm2): 1935.24
Description of Changes: Revised single conductor to Multi conductor 1

Included Cable No.	Conductor Type	Area (mm2)
2092-2	1-4/C + Gnd, #4, 600 V, EPR insulation	476.76
Pull Rope	Soft-Fiber Polyester	0.00
UP202-1	2 + 1 Gnd, #10, #10, 600 V, RHH/RHW insulation	60.80
UP202-10	2 + 1 Gnd, #10, #10, 600 V, RHH/RHW insulation	60.80
UP202-12	3 + 1 Gnd, #12, #12, 600 V, RHH/RHW insulation	65.61
UP202-5	2 + 1 Gnd, #12, #12, 600 V, RHH/RHW insulation	49.21
UP202-8	1 ~~2 + 1 Gnd, #10, #10, 600 V, RHH/RHW insulation~~	~~60.80~~
	1-2/C + Gnd, #10, 600 V, EPR insulation	126.88

CONDUIT AND TRAY SCHEDULE
YBI TRANSITION STRUCTURES ROADWAY EB

E-314

STATE OF CALIFORNIA - DEPARTMENT OF TRANSPORTATION
Caltrans

CONSULTANT FUNCTIONAL SUPERVISOR: BEHZAD GOLEMOHAMMADI
CALCULATED-DESIGNED BY: CARMELO RIVERA
CHECKED BY: ELLERY LUCAS
REVISED BY
DATE REVISED

LAST REVISION 00-00-00
DATE PLOTTED => 6/30/2011
TIME PLOTTED => 9:20:26 AM

BORDER LAST REVISED 3/1/2007
RELATIVE BORDER SCALE IS IN MILLIMETERS 0 20 40 60 80
USERNAME => garcior
DGN FILE => 0:\13103 SF_O Bay Bridge\4-SFOBB Work Files after 11-05-08\Contract\CCO-PLW12\Issued for Submittal\01120S01.dgn
CU 04251 | EA 0120S1

Dist	COUNTY	ROUTE	KILOMETER POST TOTAL PROJECT	SHEET No.	TOTAL SHEETS
04	SF	80	12.7/13.2	441 R1	806

REGISTERED ELECTRICAL ENGINEER 2-14-08

6-23-08
PLANS APPROVAL DATE

THE STATE OF CALIFORNIA OR ITS OFFICERS OR AGENTS SHALL NOT BE RESPONSIBLE FOR THE ACCURACY OR COMPLETENESS OF ELECTRONIC COPIES OF THIS PLAN SHEET.

REGISTERED PROFESSIONAL ENGINEER DAVID H. OTO No. 30689 Exp. 06/30/2011 ELECTRICAL STATE OF CALIFORNIA

REGISTERED PROFESSIONAL ENGINEER FADI WALIEDDINE No. 18465 Exp. 12/31/09 ELECTRICAL STATE OF CALIFORNIA

PB AMERICAS, Inc.
A Parsons Brinckerhoff Company
303 Second St., Suite 700N
San Francisco, CA 94107-1317

FOR REVISION ONLY 1

Caltrans Metric

Conduit/Troy No:	5919	Reference:	E-105, E-130
Size:	78	Type:	RGS-PVC coated conduit
From:	Electrical Vault #1E	To:	Wireway #1E
Total Fill (mm2):	843.48	Remarks:	
Allowable Fill (mm2):	1935.24		

Description of Changes:

Included Cable No.	Conductor Type	Area (mm2)
2091	1-3/C + Gnd, #4, 600 V, EPR insulation	366.10
2100	1-3/C + Gnd, #4, 600 V, EPR insulation	366.10
2910-1	1-3/C #16, 600 V, EPR insulation	62.07
Pull Rope	Soft-Fiber Polyester	0.00
UP201-12	2 + 1 Gnd, #12, #12, 600 V, RHH/RHW insulation	49.21

Conduit/Troy No:	5920	Reference:	E-105, E-130
Size:	78	Type:	RGS-PVC coated conduit
From:	Electrical Vault #1E	To:	Wireway #1E
Total Fill (mm2):	0.00	Remarks:	
Allowable Fill (mm2):	1935.24		

Description of Changes:

Included Cable No.	Conductor Type	Area (mm2)
Pull Rope	Soft-Fiber Polyester	0.00

Conduit/Troy No:	5921	Reference:	E-105, E-130
Size:	78	Type:	RGS-PVC coated conduit
From:	Electrical Vault #1E	To:	Wireway #1E
Total Fill (mm2):	0.00	Remarks:	
Allowable Fill (mm2):	1935.24		

Description of Changes:

Included Cable No.	Conductor Type	Area (mm2)
Pull Rope	Soft-Fiber Polyester	0.00

Conduit/Troy No:	5927	Reference:	E-105
Size:	41	Type:	RGS-PVC coated conduit
From:	15 KVA Transformer for LP-216	To:	Wireway #1E
Total Fill (mm2):	476.76	Remarks:	
Allowable Fill (mm2):	702.80		

Description of Changes:

Included Cable No.	Conductor Type	Area (mm2)
2100-2	1-4/C + Gnd, #4, 600 V, EPR insulation	476.76
Pull Rope	Soft-Fiber Polyester	0.00

Conduit/Troy No:	5930	Reference:	E-106
Size:	78	Type:	RGS-PVC coated conduit
From:	Electrical Vault #2E	To:	Wireway #2E
Total Fill (mm2):	858.61	Remarks:	
Allowable Fill (mm2):	1935.24		

Description of Changes:

Included Cable No.	Conductor Type	Area (mm2)
2092	1-3/C + Gnd, #4, 600 V, EPR insulation	366.10
2101	1-3/C + Gnd, #4, 600 V, EPR insulation	366.10
Pull Rope	Soft-Fiber Polyester	0.00
UP202-1	2 + 1 Gnd, #10, #10, 600 V, RHH/RHW insulation	60.80
UP202-12	3 + 1 Gnd, #12, #12, 600 V, RHH/RHW insulation	65.61

Conduit/Troy No:	5931	Reference:	E-106
Size:	78	Type:	RGS-PVC coated conduit
From:	Electrical Vault #2E	To:	Wireway #2E
Total Fill (mm2):	~~655.83~~ 731.91 1	Remarks:	
Allowable Fill (mm2):	1935.24		

Description of Changes: Revised single conductor to Multi conductor 1

Included Cable No.	Conductor Type	Area (mm2)
2254-2	1-3/C #16, 600 V, EPR insulation	62.07
LP217-1,3,5	1-4/C + Gnd, #8, 600 V, EPR insulation	266.48
LP217-2,4,6	1-4/C + Gnd, #8, 600 V, EPR insulation	266.48
Pull Rope	Soft-Fiber Polyester	0.00
UP202-8 1	~~2 + 1 Gnd, #10, #10, 600 V, RHH/RHW insulation~~	~~60.80~~
	1-2/C + Gnd, #10, 600 V, EPR insulation	126.88

Conduit/Troy No:	5932	Reference:	E-106
Size:	78	Type:	RGS-PVC coated conduit
From:	Electrical Vault #2E	To:	Wireway #2E
Total Fill (mm2):	0.00	Remarks:	
Allowable Fill (mm2):	1935.24		

Description of Changes:

Included Cable No.	Conductor Type	Area (mm2)
Pull Rope	Soft-Fiber Polyester	0.00

MARK	DATE	DESCRIPTIONS	BY	CH'D
1	06/30/11	PL-12W CABLE, SEISMIC JOINT CONDUIT, MISC.	TW	RG

REVISIONS

CONTRACT CHANGE ORDER NO. 94
SHEET 29 OF 41

CONDUIT AND TRAY SCHEDULE
YBI TRANSITION STRUCTURES ROADWAY EB

E-322

STATE OF CALIFORNIA - DEPARTMENT OF TRANSPORTATION
Caltrans

CONSULTANT FUNCTIONAL SUPERVISOR: BEHZAD GOLEMOHAMMADI
CALCULATED-DESIGNED BY: CARMELO RIVERA
CHECKED BY: ELLERY LUCAS
REVISED BY
DATE REVISED

LAST REVISION 00-00-00
DATE PLOTTED => 6/30/2011
TIME PLOTTED => 9:20:51 AM

Dist	COUNTY	ROUTE	KILOMETER POST TOTAL PROJECT	SHEET No.	TOTAL SHEETS
04	SF	80	12.7/13.2	447 R1	806

REGISTERED ELECTRICAL ENGINEER 2/14/08

6-23-08
PLANS APPROVAL DATE

THE STATE OF CALIFORNIA OR ITS OFFICERS OR AGENTS SHALL NOT BE RESPONSIBLE FOR THE ACCURACY OR COMPLETENESS OF ELECTRONIC COPIES OF THIS PLAN SHEET.

REGISTERED PROFESSIONAL ENGINEER DAVID N. OTO No. 10699 Exp. 06/30/2013 ELECTRICAL STATE OF CALIFORNIA

REGISTERED PROFESSIONAL ENGINEER FADI BALIEDDINE No. 11965 Exp. 12/31/09 ELECTRICAL STATE OF CALIFORNIA

FOR REVISION ONLY 1

PB AMERICAS, Inc.
A Parsons Brinckerhoff Company
303 Second St., Suite 700N
San Francisco, CA 94107-1317

Conduit/Tray No: Wireway #1E
Size: 203.2
From: Platform #1E
Total Fill (mm2): 2060.10
Allowable Fill (mm2): 8258.05
Reference: E-105, E-108
Type: 8" x 8" wireway, Nemo 4X
To: Platform #1E
Remarks:
Description of Changes:

Included Cable No.	Conductor Type	Area (mm2)
2091	1-3/C + Gnd, #4, 600 V, EPR insulation	366.10
2091-2	1-4/C + Gnd, #4, 600 V, EPR insulation	476.76
2100	1-3/C + Gnd, #4, 600 V, EPR insulation	366.10
2100-2	1-4/C + Gnd, #4, 600 V, EPR insulation	476.76
2254-1	1-3/C #16, 600 V, EPR insulation	62.07
2910-1	1-3/C #16, 600 V, EPR insulation	62.07
UP201-10	2 + 1 Gnd, #12, #12, 600 V, RHH/RHW insulation	49.21
UP201-12	2 + 1 Gnd, #12, #12, 600 V, RHH/RHW insulation	49.21
UP201-5	2 + 1 Gnd, #12, #12, 600 V, RHH/RHW insulation	49.21
UP201-7	1-3/C #12, 600 V, EPR insulation	102.61

Conduit/Tray No: Wireway #2E
Size: 203.2
From: Platform #2E
Total Fill (mm2): ~~2577.97~~ 2644.05 1
Allowable Fill (mm2): 8258.05
Reference: E-106, E-108
Type: 8" x 8" wireway, Nemo 4X
To: Platform #2E
Remarks:
Description of Changes: Revised single conductor to Multi conductor 1

Included Cable No.	Conductor Type	Area (mm2)
2092	1-3/C + Gnd, #4, 600 V, EPR insulation	366.10
2092-2	1-4/C + Gnd, #4, 600 V, EPR insulation	476.76
2101	1-3/C + Gnd, #4, 600 V, EPR insulation	366.10
2101-2	1-4/C + Gnd, #4, 600 V, EPR insulation	476.76
2254-2	1-3/C #16, 600 V, EPR insulation	62.07
LP217-1,3,5	1-4/C + Gnd, #8, 600 V, EPR insulation	266.48
LP217-2,4,6	1-4/C + Gnd, #8, 600 V, EPR insulation	266.48
UP202-1	2 + 1 Gnd, #10, #10, 600 V, RHH/RHW insulation	60.80
UP202-10	2 + 1 Gnd, #10, #10, 600 V, RHH/RHW insulation	60.80
UP202-12	3 + 1 Gnd, #12, #12, 600 V, RHH/RHW insulation	65.61
UP202-5	2 + 1 Gnd, #12, #12, 600 V, RHH/RHW insulation	49.21
UP202-8	~~2 + 1 Gnd, #10, #10, 600 V, RHH/RHW insulation~~ 1	~~60.80~~
	1-2/C + Gnd, #10, 600 V, EPR insulation	126.88

Conduit/Tray No: Wireway #3E
Size: 203.2
From: Platform #3E
Total Fill (mm2): 5678.89
Allowable Fill (mm2): 8258.05
Reference: E-107, E-108
Type: 8" x 8" wireway, Nemo 4X
To: Platform #3E
Remarks:
Description of Changes:

Included Cable No.	Conductor Type	Area (mm2)
2093	1-3/C + Gnd, #4, 600 V, EPR insulation	366.10
2093-2	1-4/C + Gnd, #4, 600 V, EPR insulation	476.76
2094	1-3/C + Gnd, #2, 600 V, EPR insulation	527.18
2094-1	1-3/C + Gnd, #2, 600 V, EPR insulation	527.18
2094-1	1-3/C + Gnd, #2, 600 V, EPR insulation	527.18
2094-2	1-3/C + Gnd, #1/0, 600 V, EPR insulation	754.18
2102	1-3/C + Gnd, #4, 600 V, EPR insulation	366.10
2102-2	1-4/C + Gnd, #4, 600 V, EPR insulation	476.76
2254-1	1-3/C #16, 600 V, EPR insulation	62.07
2254-2	1-3/C #16, 600 V, EPR insulation	62.07
2254-4	1-3/C #16, 600 V, EPR insulation	62.07
2910-1	1-3/C #16, 600 V, EPR insulation	62.07
LP218-1,3,5	1-4/C + Gnd, #8, 600 V, EPR insulation	266.48
LP218-2,4,6	1-4/C + Gnd, #8, 600 V, EPR insulation	266.48
UP203-1	2 + 1 Gnd, #10, #10, 600 V, RHH/RHW insulation	60.80
UP203-11	1-2/C + Gnd, #12, 600 V, EPR insulation	102.61
UP203-2	2 + 1 Gnd, #12, #12, 600 V, RHH/RHW insulation	49.21
UP203-5	2 + 1 Gnd, #12, #12, 600 V, RHH/RHW insulation	49.21
UP203-9	1-2/C + Gnd, #12, 600 V, EPR insulation	102.61
UP209-1, 3	3 + 1 Gnd, #2, #6, 600 V, RHH/RHW insulation	410.43
UP209-2	2-1/C #10, 600 V, RHH/RHW insulation	40.54
UP209-4	2 + 1 Gnd, #10, #10, 600 V, RHH/RHW insulation	60.80

5

MARK	DATE	DESCRIPTIONS	BY	CH'D
1	06/30/11	PL-12W CABLE, SEISMIC JOINT CONDUIT, MISC.	TW	RG
		REVISIONS		

CONTRACT CHANGE ORDER NO. 94
SHEET 30 OF 41

5 REVISED PER ADDENDUM No. 5 DATED JULY 30, 2009

CONDUIT AND TRAY SCHEDULE
YBI TRANSITION STRUCTURES ROADWAY EB

E-328

STATE OF CALIFORNIA - DEPARTMENT OF TRANSPORTATION
Caltrans

CONSULTANT FUNCTIONAL SUPERVISOR: BEHZAD GOLEMOHAMMADI
CALCULATED-DESIGNED BY: CARMELO RIVERA
CHECKED BY: ELLERY LUCAS
REVISED BY
DATE REVISED

DATE PLOTTED => 6/30/2011
TIME PLOTTED => 9:21:22 AM

BORDER LAST REVISED 3/ /2007
RELATIVE BORDER SCALE IS IN MILLIMETERS 0 20 40 60 80
USERNAME => gorelor
DGN FILE => D:\13103 SF_O Bay Bridge\A-SFOBB Work Files after 11-05\Contract 1\CCO-PL\12\Issued for Submittal\40120sua328r01.c
CU 06251 EA 0120S1

Dist	COUNTY	ROUTE	KILOMETER POST TOTAL PROJECT	SHEET No.	TOTAL SHEETS
04	SF	80	12.7/13.2	447A R1	806

REGISTERED ELECTRICAL ENGINEER 4/10/08

PLANS APPROVAL DATE

THE STATE OF CALIFORNIA OR ITS OFFICERS OR AGENTS SHALL NOT BE RESPONSIBLE FOR THE ACCURACY OR COMPLETENESS OF ELECTRONIC COPIES OF THIS PLAN SHEET.

PB AMERICAS, Inc.
A Parsons Brinckerhoff Company
303 Second St., Suite 700N
San Francisco, CA 94107-1317

REGISTERED PROFESSIONAL ENGINEER DAVID H. OTO No. E0699 Exp. 06/30/2013 ELECTRICAL STATE OF CALIFORNIA

FOR REVISION ONLY 1

Caltrans Metric 5

Conduit/Tray No: 2313 | Reference: E-92
Size: 53 | Type: RGS conduit
From: PB-LTG | To: PB-LTG
Total Fill (mm2): 532.96 | Remarks:
Allowable Fill (mm2): 681.55
Description of Changes:

Included Cable No.	Conductor Type	Area (mm2)
LP217-1,3,5	1-4/C + Gnd, #8, 600 V, EPR insulation	266.48
LP217-2,4,6	1-4/C + Gnd, #8, 600 V, EPR insulation	266.48
Pull Rope	Soft-Fiber Polyester	0.00

Conduit/Tray No: 2T21E | Reference: E-130
Size: 610 | Type: 152 mm siderail ladder tray
From: Electrical Vault #1E | To: Electrical Vault #1E
Total Fill (mm2): ~~6086.88~~ 6148.87 1 | Remarks:
Allowable Fill (mm2): 16774.16
Description of Changes: Reroute cable 2254-1 1

Included Cable No.	Conductor Type	Area (mm2)
2091	1-3/C + Gnd, #4, 600 V, EPR insulation	366.10
2092	1-3/C + Gnd, #4, 600 V, EPR insulation	366.10
2093	1-3/C + Gnd, #4, 600 V, EPR insulation	366.10
2094	1-3/C + Gnd, #2, 600 V, EPR insulation	527.18
2100	1-3/C + Gnd, #4, 600 V, EPR insulation	366.10
2101	1-3/C + Gnd, #4, 600 V, EPR insulation	366.10
2102	1-3/C + Gnd, #4, 600 V, EPR insulation	366.10
2910-1	1-3/C #16, 600 V, EPR insulation	62.07
A-2005-1	1-3/C + Gnd, #8, 600 V, EPR insulation	262.68
A-2007-1	1-3/C + Gnd, #6, 600 V, EPR insulation	324.29
A-2008-1	1-3/C + Gnd, #4, 600 V, EPR insulation	366.10
A-2009-1	1-3/C + Gnd, #8, 600 V, EPR insulation	262.68
A-2010-1	1-3/C + Gnd, #8, 600 V, EPR insulation	262.68
S-2023-1	1-3/C + Gnd, #6, 600 V, EPR insulation	324.29
S-2024-1	1-3/C + Gnd, #6, 600 V, EPR insulation	324.29
S-2041-1	1-3/C + Gnd, #6, 600 V, EPR insulation	324.29
S-2041-2	1-3/C + Gnd, #8, 600 V, EPR insulation	262.68
S-2041-3	1-3/C + Gnd, #8, 600 V, EPR insulation	262.68
S-2042-1	1-3/C + Gnd, #6, 600 V, EPR insulation	324.29
2254-1	1-3/C #6, 600 V, EPR insulation	62.07 1

Conduit/Tray No: 2T22E | Reference: E-106, E-131
Size: 610 | Type: 152 mm siderail ladder tray
From: Electrical Vault #2E | To: Electrical Vault #2E
Total Fill (mm2): 5424.73 | Remarks:
Allowable Fill (mm2): 16774.16
Description of Changes:

Included Cable No.	Conductor Type	Area (mm2)
2092	1-3/C + Gnd, #4, 600 V, EPR insulation	366.10
2093	1-3/C + Gnd, #4, 600 V, EPR insulation	366.10
2094	1-3/C + Gnd, #2, 600 V, EPR insulation	527.18
2101	1-3/C + Gnd, #4, 600 V, EPR insulation	366.10
2102	1-3/C + Gnd, #4, 600 V, EPR insulation	366.10
2254-1	1-3/C #16, 600 V, EPR insulation	62.07
2254-2	1-3/C #16, 600 V, EPR insulation	62.07
2910-1	1-3/C #16, 600 V, EPR insulation	62.07
A-2005-1	1-3/C + Gnd, #8, 600 V, EPR insulation	262.68
A-2007-1	1-3/C + Gnd, #6, 600 V, EPR insulation	324.29
A-2008-1	1-3/C + Gnd, #4, 600 V, EPR insulation	366.10
A-2009-1	1-3/C + Gnd, #8, 600 V, EPR insulation	262.68
A-2010-1	1-3/C + Gnd, #8, 600 V, EPR insulation	262.68
LP217-1,3,5	1-4/C + Gnd, #8, 600 V, EPR insulation	266.48
LP217-2,4,6	1-4/C + Gnd, #8, 600 V, EPR insulation	266.48
S-2023-1	1-3/C + Gnd, #6, 600 V, EPR insulation	324.29
S-2024-1	1-3/C + Gnd, #6, 600 V, EPR insulation	324.29
S-2041-2	1-3/C + Gnd, #8, 600 V, EPR insulation	262.68
S-2042-1	1-3/C + Gnd, #6, 600 V, EPR insulation	324.29

MARK	DATE	DESCRIPTIONS	BY	CH'D
1	06/30/11	PL-12W CABLE, SEISMIC JOINT CONDUIT, MISC.	TW	RG

REVISIONS

CONTRACT CHANGE ORDER NO. 94
SHEET 31 OF 41.

5 ADDED PER ADDENDUM No. 5 DATED JULY 30, 2009

CONDUIT AND TRAY SCHEDULE
YBI TRANSITION STRUCTURES ROADWAY EB

E-328A

REVISED BY | DATE REVISED
JEFFRI HALIM | ELLERY LUCAS
CALCULATED-DESIGNED BY | CHECKED BY
CONSULTANT FUNCTIONAL SUPERVISOR
BEHZAD GOLEMOHAMMADI

STATE OF CALIFORNIA - DEPARTMENT OF TRANSPORTATION
Caltrans

LAST REVISION 00-00-00 | DATE PLOTTED => 6/30/2011 | TIME PLOTTED => 9:35:44 AM

Dist	COUNTY	ROUTE	KILOMETER POST TOTAL PROJECT	SHEET No.	TOTAL SHEETS
04	SF	80	12.7/13.2	457A R1	806

REGISTERED ELECTRICAL ENGINEER 4/10/09

6-23-08
PLANS APPROVAL DATE

THE STATE OF CALIFORNIA OR ITS OFFICERS OR AGENTS SHALL NOT BE RESPONSIBLE FOR THE ACCURACY OR COMPLETENESS OF ELECTRONIC COPIES OF THIS PLAN SHEET.

REGISTERED PROFESSIONAL ENGINEER DAVID H. OTO No. 10639 Exp. 06/30/2011 ELECTRICAL STATE OF CALIFORNIA

REGISTERED PROFESSIONAL ENGINEER FADI WALIEDDINE No. 11985 Exp. 12/31/09 ELECTRICAL STATE OF CALIFORNIA

FOR REVISION ONLY 1

Caltrans Metric 5

PB AMERICAS, Inc.
A Parsons Brinckerhoff Company
303 Second St., Suite 700N
San Francisco, CA 94107-017

Conduit/Tray No:	5900	Reference:	E-130
Size:	41	Type:	RGS conduit
From:	Electrical Vault #1E	To:	PB-LTG
Total Fill (mm2):	49.21	Remarks:	
Allowable Fill (mm2):	534.55		

Description of Changes:

Included Cable No.	Conductor Type	Area (mm2)
Pull Rope	Soft-Fiber Polyester	0.00
UP201-12	2 + 1 Gnd, #12, #12, 600 V, RHH/RHW insulation	49.21

Conduit/Tray No:	5901	Reference:	E-118, E-130, E-133
Size:	103	Type:	RGS conduit
From:	Electrical Vault #1E	To:	PB-2A
Total Fill (mm2):	~~3260.59~~ 3207.99 1	Remarks:	
Allowable Fill (mm2):	3324.51		

Description of Changes: Rerouted cable UP202-8 1

Included Cable No.	Conductor Type	Area (mm2)
2092	1-3/C + Gnd, #4, 600 V, EPR insulation	366.10
2093	1-3/C + Gnd, #4, 600 V, EPR insulation	366.10
2094	1-3/C + Gnd, #2, 600 V, EPR insulation	527.18
2101	1-3/C + Gnd, #4, 600 V, EPR insulation	366.10
2102	1-3/C + Gnd, #4, 600 V, EPR insulation	366.10
2254-1	1-3/C #16, 600 V, EPR insulation	62.07
A-2005-1	1-3/C + Gnd, #8, 600 V, EPR insulation	262.68
A-2008-1	1-3/C + Gnd, #4, 600 V, EPR insulation	366.10
A-2009-1	1-3/C + Gnd, #8, 600 V, EPR insulation	262.68
A-2010-1	1-3/C + Gnd, #8, 600 V, EPR insulation	262.68
Pull Rope	Soft-Fiber Polyester	0.00
1 ~~UP202-8~~	~~2 + 1 Gnd, #10, #10, 600 V, RHH/RHW insulation~~	~~66.06~~

Conduit/Tray No:	5901A	Reference:	E-119, E-131, E-133
Size:	103	Type:	RGS conduit
From:	PB-2A	To:	Electrical Vault #2E
Total Fill (mm2):	~~3260.59~~ 3207.99 1	Remarks:	
Allowable Fill (mm2):	3324.51		

Description of Changes: Rerouted cable UP202-8 1

Included Cable No.	Conductor Type	Area (mm2)
2092	1-3/C + Gnd, #4, 600 V, EPR insulation	366.10
2093	1-3/C + Gnd, #4, 600 V, EPR insulation	366.10
2094	1-3/C + Gnd, #2, 600 V, EPR insulation	527.18
2101	1-3/C + Gnd, #4, 600 V, EPR insulation	366.10
2102	1-3/C + Gnd, #4, 600 V, EPR insulation	366.10
2254-1	1-3/C #16, 600 V, EPR insulation	62.07
A-2005-1	1-3/C + Gnd, #8, 600 V, EPR insulation	262.68
A-2008-1	1-3/C + Gnd, #4, 600 V, EPR insulation	366.10
A-2009-1	1-3/C + Gnd, #8, 600 V, EPR insulation	262.68
A-2010-1	1-3/C + Gnd, #8, 600 V, EPR insulation	262.68
Pull Rope	Soft-Fiber Polyester	0.00
1 ~~UP202-8~~	~~2 + 1 Gnd, #10, #10, 600 V, RHH/RHW insulation~~	~~66.06~~

Conduit/Tray No:	5908	Reference:	E-28, E-33, E-127, E-130
Size:	103	Type:	RGS conduit
From:	Electrical Vault #1E	To:	Manhole-29
Total Fill (mm2):	~~2573.11~~ 2512.91 1	Remarks:	
Allowable Fill (mm2):	3324.51 1		

Description of Changes: Rerouted cable UP202-8

Included Cable No.	Conductor Type	Area (mm2)
A-2007-1	1-3/C + Gnd, #6, 600 V, EPR insulation	324.29
A-2008-1	1-3/C + Gnd, #4, 600 V, EPR insulation	366.10
A-2009-1	1-3/C + Gnd, #8, 600 V, EPR insulation	262.68
A-2010-1	1-3/C + Gnd, #8, 600 V, EPR insulation	262.68
Pull Rope	Soft-Fiber Polyester	0.00
S-2023-1	1-3/C + Gnd, #6, 600 V, EPR insulation	324.29
S-2024-1	1-3/C + Gnd, #6, 600 V, EPR insulation	324.29
S-2041-1	1-3/C + Gnd, #6, 600 V, EPR insulation	324.29
S-2042-1	1-3/C + Gnd, #6, 600 V, EPR insulation	324.29
1 ~~UP202-8~~	~~2 + 1 Gnd, #10, #10, 600 V, RHH/RHW insulation~~	~~66.06~~

Conduit/Tray No:	5922	Reference:	E-118, E-130, E-133
Size:	103	Type:	RGS conduit
From:	TOS/COM Vault #1E	To:	PB-2E
Total Fill (mm2):	2599.62	Remarks:	
Allowable Fill (mm2):	3324.51		

Description of Changes:

Included Cable No.	Conductor Type	Area (mm2)
2143	1 - 2 pair, shielded #18 with IS/OA, 600 V, PVC jacket	98.10
2170	1 - 2 pair, shielded #18 with IS/OA, 600 V, PVC jacket	98.10
2473-2	50 pair #18, shielded pairs, IS/OS shield 600 V, XLPE insul., PVC jacket	1201.71
2474-2	50 pair #18, shielded pairs, IS/OS shield 600 V, XLPE insul., PVC jacket	1201.71
Pull Rope	Soft-Fiber Polyester	0.00

MARK	DATE	DESCRIPTIONS	BY	CH'D
1	06/30/11	PL-12W CABLE, SEISMIC JOINT CONDUIT, MISC.	TW	RG

REVISIONS

CONTRACT CHANGE ORDER NO. 94
SHEET 32 OF 41

5 ADDED PER ADDENDUM No. 5 DATED JULY 30, 2009

CONDUIT AND TRAY SCHEDULE
YBI TRANSITION STRUCTURES GIRDER EB

E-338A

STATE OF CALIFORNIA - DEPARTMENT OF TRANSPORTATION
Caltrans
CONSULTANT: FUNCTIONAL SUPERVISOR BEHZAD GOLEMOHAMMADI
CALCULATED-DESIGNED BY JEFFRI HALM
CHECKED BY ELLERY LUCAS
REVISED BY
DATE REVISED

LOST REVISION 00-00-00 DATE PLOTTED => 6/30/2011 TIME PLOTTED => 9:21:54 AM

BORDER LAST REVISED 3/ /2007
RELATIVE BORDER SCALE IS IN MILLIMETERS 0 20 40 60 80
USERNAME => gorcior
OGN FILE => Q:\13103 SF_O Bay Bridge\A-SFOBB Work Files after 11-05\Contract 1\CCO-PLW12\Issued for Submittal\40120suo338Ar01.
CU 04251 EA 012051

Dist	COUNTY	ROUTE	KILOMETER POST TOTAL PROJECT	SHEET No.	TOTAL SHEETS
04	SF	80	12.7/13.2	457B R1	806

REGISTERED ELECTRICAL ENGINEER 4/10/09

6-23-08
PLANS APPROVAL DATE

THE STATE OF CALIFORNIA OR ITS OFFICERS OR AGENTS SHALL NOT BE RESPONSIBLE FOR THE ACCURACY OR COMPLETENESS OF ELECTRONIC COPIES OF THIS PLAN SHEET.

REGISTERED PROFESSIONAL ENGINEER DAVID H. OTO No. 18698 Exp. 06/30/2011 ELECTRICAL STATE OF CALIFORNIA

REGISTERED PROFESSIONAL ENGINEER FADI WALIEDDINE No. 11805 Exp. 12/31/09 ELECTRICAL STATE OF CALIFORNIA

PB AMERICAS, Inc.
A Parsons Brinckerhoff Company
303 Second St., Suite 700N
San Francisco, CA 94107-1317

FOR REVISION ONLY ⚠1

Caltrans Metric

Conduit/Tray No: 5922A
Size: 103
From: PB-2E
Total Fill (mm2): 2599.62
Allowable Fill (mm2): 3324.51
Reference: E-106, E-119, E-131, E-133
Type: RGS conduit
To: TOS/COM Vault #2E
Remarks:
Description of Changes:

Included Cable No.	Conductor Type	Area (mm2)
2143	1 - 2 pair, shielded #18 with IS/OA, 600 V, PVC jacket	98.10
2170	1 - 2 pair, shielded #18 with IS/OA, 600 V, PVC jacket	98.10
2473-2	50 pair #18, shielded pairs, IS/OS shield 600 V, XLPE insul., PVC jacket	1201.71
2474-2	50 pair #18, shielded pairs, IS/OS shield 600 V, XLPE insul., PVC jacket	1201.71
Pull Rope	Soft-Fiber Polyester	0.00

Conduit/Tray No: 5929
Size: 53
From: Electrical Vault #2E
Total Fill (mm2): 590.97
Allowable Fill (mm2): 879.42
Reference: E-131
Type: RGS conduit
To: PB-LTG (Bike Path)
Remarks:
Description of Changes:

Included Cable No.	Conductor Type	Area (mm2)
A-2010-1	1-3/C + Gnd, #8, 600 V, EPR insulation	262.68
Pull Rope	Soft-Fiber Polyester	0.00
S-2041-2	1-3/C + Gnd, #8, 600 V, EPR insulation	262.68
UP202-12	3 + 1 Gnd, #12, #12, 600 V, RHH/RHW insulation	65.61

Conduit/Tray No: 5936
Size: 78
From: PB-2B (TOS/COM)
Total Fill (mm2): 316.24
Allowable Fill (mm2): 2564.19
Reference: E-131, E-106
Type: RGS-PVC coated conduit
To: TOS/COM Vault #2E
Remarks:
Description of Changes:

Included Cable No.	Conductor Type	Area (mm2)
PLE02A	10 DLC	316.24
Pull Rope	Soft-Fiber Polyester	0.00

Conduit/Tray No: 5940
Size: 53
From: PB-LTG (Bike Path)
Total Fill (mm2): ~~586.97~~ 713.85 ⚠1
Allowable Fill (mm2): ~~681.55~~ 879.42
Reference: E-131
Type: RGS conduit
To: Electrical Vault #2E
Remarks:
Description of Changes: Added cable UP202-8

Included Cable No.	Conductor Type	Area (mm2)
A-2007-1	1-3/C + Gnd, #6, 600 V, EPR insulation	324.29
A-2009-1	1-3/C + Gnd, #8, 600 V, EPR insulation	262.68
Pull Rope	Soft-Fiber Polyester	0.00
UP202-8	1-2/C + Gnd, #10, 600 V, EPR insulation	126.88

⚠1

Conduit/Tray No: 5987
Size: 41
From: Electrical Vault #1E
Total Fill (mm2): 262.68
Allowable Fill (mm2): 708.28
Reference: E-130
Type: RGS conduit
To: PB-LTG
Remarks:
Description of Changes:

Included Cable No.	Conductor Type	Area (mm2)
Pull Rope	Soft-Fiber Polyester	0.00
S-2041-3	1-3/C + Gnd, #8, 600 V, EPR insulation	262.68

Conduit/Tray No: 5988
Size: 53
From: PB-LTG
Total Fill (mm2): 532.96
Allowable Fill (mm2): 681.55
Reference: E-119
Type: RGS conduit
To: PB-LTG (Bike Path)
Remarks:
Description of Changes:

Included Cable No.	Conductor Type	Area (mm2)
LP217-1,3,5	1-4/C + Gnd, #8, 600 V, EPR insulation	266.48
LP217-2,4,6	1-4/C + Gnd, #8, 600 V, EPR insulation	266.48
Pull Rope	Soft-Fiber Polyester	0.00

MARK	DATE	DESCRIPTIONS	BY	CH'D
⚠1	06/30/11	PL-12W CABLE, SEISMIC JOINT CONDUIT, MISC.	TW	RG

REVISIONS

CONTRACT CHANGE ORDER NO. 94
SHEET 33 OF 41

CONDUIT AND TRAY SCHEDULE
YBI TRANSITION STRUCTURES GIRDER EB

E-338B

⚠5 ADDED PER ADDENDUM No. 5 DATED JULY 30, 2009

STATE OF CALIFORNIA - DEPARTMENT OF TRANSPORTATION
Caltrans
CONSULTANT FUNCTIONAL SUPERVISOR: BEHZAD GOLEMOHAMMADI
CALCULATED-DESIGNED BY: JEFFRI HALIM
CHECKED BY: ELLERY LUCAS
REVISED BY
DATE REVISED

LAST REVISION 00-00-00
DATE PLOTTED => 6/30/2011
TIME PLOTTED => 9:22:20 AM

Conduit/Tray No:	9017A
Size:	41
From:	PB-2A
Total Fill (mm2):	284.52
Allowable Fill (mm2):	534.55
Reference:	E-74
Type:	RGS conduit
To:	PB-2A
Remarks:	
Description of Changes:	Added new conduit

Included Cable No.	Conductor Type	Area (mm2)
2900-111A	4 pair #22, shielded pairs, FEP insulation (Type SSC)	47.42
2900-111B	4 pair #22, shielded pairs, FEP insulation (Type SSC)	47.42
2900-121A	4 pair #22, shielded pairs, FEP insulation (Type SSC)	47.42
2900-121B	4 pair #22, shielded pairs, FEP insulation (Type SSC)	47.42
2900-121C	4 pair #22, shielded pairs, FEP insulation (Type SSC)	47.42
2900-81A	4 pair #22, shielded pairs, FEP insulation (Type SSC)	47.42
Pull Rope	Soft-Fiber Polyester	0.00

DIST	COUNTY	ROUTE	KILOMETER POST TOTAL PROJECT	SHEET No	TOTAL SHEETS
04	SF	80	12.7/13.2	459A	806

REGISTERED ELECTRICAL ENGINEER 06/30/11 DATE

PROFESSIONAL ENGINEER DAVID H. OTO No. 16699 Exp. 06/30/2013 ELECTRICAL STATE OF CALIFORNIA

PLANS APPROVAL DATE

PB AMERICAS, Inc.
A Parsons Brinckerhoff Company
303 Second St., Suite 700N
San Francisco, CA 94107-1317

The State of California or its officers or agents shall not be responsible for the accuracy or completeness of electronic copies of this plan sheet.

Caltrans now has a web site! To get to the web site, go to http://www.dot.ca.gov

MARK	DATE	DESCRIPTIONS	BY	CH'D
0	06/30/11	PL-12W CABLE, SEISMIC JOINT CONDUIT, MISC.	TW	RG

REVISIONS

CONTRACT CHANGE ORDER NO. 94
SHEET 34 OF 41

CONDUIT AND TRAY SCHEDULE
STRONG MOTION DETECTION SYSTEM

E-340A

STATE OF CALIFORNIA - DEPARTMENT OF TRANSPORTATION
Caltrans

DESIGN OVERSIGHT
BEHZAD GOLEMOHAMMADI

CALCULATED/DESIGNED BY XX DATE XX/10 REVISED BY
CHECKED BY XX XX/10 DATE REVISED

THIS PLAN ACCURATE FOR ELECTRICAL WORK ONLY.

FOR REDUCED PLANS ORIGINAL SCALE IS IN MILLIMETERS 0 20 40 60 80

DGN FILE =>O:\13103 SF_O Bay Bridge\A-SFOBB Work Files after 11-05\YBI-Contract 1\CCO-PLW12\Issued for Submittal\40120Sua340A.dgn
USERNAME =>garcior

CU 04251 EA 0120F1

LAST REVISION 00-00-00 DATE PLOTTED => 6/30/2011 TIME PLOTTED => 9:23:10 AM

Dist	COUNTY	ROUTE	KILOMETER POST TOTAL PROJECT	SHEET No.	TOTAL SHEETS
04	SF	80	12.7/13.2	481 R1	806

REGISTERED ELECTRICAL ENGINEER 6/25/08

6-23-08
PLANS APPROVAL DATE

THE STATE OF CALIFORNIA OR ITS OFFICERS OR AGENTS SHALL NOT BE RESPONSIBLE FOR THE ACCURACY OR COMPLETENESS OF ELECTRONIC COPIES OF THIS PLAN SHEET.

REGISTERED PROFESSIONAL ENGINEER PAUL WALECKOWSKI No. 11465 Exp. 12/31/09 ELECTRICAL STATE OF CALIFORNIA

PB AMERICAS, Inc.
A Parsons Brinckerhoff Company
303 Second St., Suite 700N
San Francisco, CA 94107-1317

Caltrans Metric

MARK	DATE	DESCRIPTIONS	BY	CH'D
1	06/30/11	PL-12W CABLE, SEISMIC JOINT CONDUIT, MISC.	TW	RG

REVISIONS

CONTRACT CHANGE ORDER NO. 94
SHEET 35 OF 41

REGISTERED PROFESSIONAL ENGINEER DAVID H. OTO No. 10808 Exp. 06/30/2013 ELECTRICAL STATE OF CALIFORNIA

FOR REVISION ONLY 1

Cable/Ckt #: 2142
Function: Low Level Signal
Reference: E-171, E-142
Conductor Type: 1 - 2 pair, shielded #18 with IS/OA, 600 V, PVC jacket
From: Remote Terminal Unit RTU #9E
To: Call Box CB-240B
Remarks:
Description Of Changes:

Route	Conduit No.	Route	Conduit No.	Route	Conduit No.	Route	Conduit No.
1	RTU #9E	2	5072	3	PB-2B	4	5955
5	TC Vault 3E	6	2T43E	7	5944	8	TC Vault #2E
9	2T42E	10	5964	11	2504	12	CB-240

Cable/Ckt #: 2143
Function: Low Level Signal
Reference: E-171, E-142
Conductor Type: 1 - 2 pair, shielded #18 with IS/OA, 600 V, PVC jacket
From: Remote Terminal Unit RTU #9E
To: Call Box CB-239A
Remarks:
Description Of Changes:

5

Route	Conduit No.	Route	Conduit No.	Route	Conduit No.	Route	Conduit No.
1	RTU #9E	2	5072	3	PB-2B	4	TC Vault 3E
5	2T43E	6	5944	7	TC Vault #2E	8	2T42E
9	5922A	10	PB-2E	11	5922	12	TC Vault #1E
13	2T41E	14	5925	15	CB-239A		

Cable/Ckt #: 2144
Function: Low Level Signal
Reference: E-171, E-142
Conductor Type: 1 - 2 pair, shielded #18 with IS/OA, 600 V, PVC jacket
From: Remote Terminal Unit RTU #9E
To: Call Box CB-241B
Remarks:
Description Of Changes:

Route	Conduit No.	Route	Conduit No.	Route	Conduit No.	Route	Conduit No.
1	RTU #9E	2	5072	3	PB-2B	4	5955
5	TC Vault 3E	6	2T43E	7	5970	8	2507
9	2508	10	2509	11	2537	12	CB-241B

Cable/Ckt #: 2170
Function: Low Level Signal
Reference: E-171, E-142
Conductor Type: 1 - 2 pair, shielded #18 with IS/OA, 600 V, PVC jacket
From: Remote Terminal Unit RTU #9E
To: Call Box CB-239B
Remarks:
Description Of Changes:

5

Route	Conduit No.	Route	Conduit No.	Route	Conduit No.	Route	Conduit No.
1	RTU #9E	2	5072	3	PB-2B	4	5955
5	TC Vault 3E	6	2T43E	7	5944	8	TC Vault #2E
9	2T42E	10	5944	11	TC Vault #1E	12	2T41E
13	5925	14	2100	15	5969	16	2500
17	CB-239B						

Cable/Ckt #: 2172
Function: Low Level Signal
Reference: E-171
Conductor Type: 1 - 2 pair, shielded #18 with IS/OA, 600 V, PVC jacket
From: Call Box CB-241B
To: Call Box CB-241A
Remarks:
Description Of Changes:

Route	Conduit No.	Route	Conduit No.	Route	Conduit No.	Route	Conduit No.
1	CB-241B	2	2537	3	5968	4	2108
5	CB-241A						

Cable/Ckt #: 2254-1
Function: 120 V DI
Reference: E-142
Conductor Type: 1-3/C #16, 600 V, EPR insulation
From: Remote Terminal Unit RTU #9E
To: Controller Cabinet TOS-01EA
Remarks: Rerouted cable 1
Description Of Changes:

Route	Conduit No.	Route	Conduit No.	Route	Conduit No.	Route	Conduit No.
1	78 mm Nipple	2	Wireway #3E	3	5950	4	E. Vault #3E
5	2T23E	6	5942	7	E. Vault #2E	8	2T22E
9	5901A	10	PB-2A	11	5901	12	E. Vault #1E 1
13	2T21E	14	5918	15	Wireway #1E	16	78 mm Nipple
17	TOS-01EA						

Cable/Ckt #: 2254-2
Function: 120 V DI
Reference: E-142
Conductor Type: 1-3/C #16, 600 V, EPR insulation
From: Remote Terminal Unit RTU #9E
To: Controller Cabinet TOS-02EA
Remarks:
Description Of Changes:

Route	Conduit No.	Route	Conduit No.	Route	Conduit No.	Route	Conduit No.
1	78 mm Nipple	2	Wireway #3E	3	5950	4	2T23E
5	E. Vault #3E	6	5942	7	E. Vault #2E	8	2T22E
9	5931	10	Wireway #2E	11	78 mm Nipple	12	TOS-02EA

CABLE AND CIRCUIT SCHEDULE

5 REVISED PER ADDENDUM No. 5 DATED JULY 30, 2009

E-362

STATE OF CALIFORNIA - DEPARTMENT OF TRANSPORTATION
Caltrans
CONSULTANT FUNCTIONAL SUPERVISOR: BEHZAD GOLEMOHAMMADI
CALCULATED-DESIGNED BY: CARMELO RIVERA
CHECKED BY: ELLERY LUCAS
REVISED BY / DATE REVISED

LAST REVISION 00-00-00
DATE PLOTTED => 6/30/2011
TIME PLOTTED => 9:23:48 AM

BORDER LAST REVISED 3/1/2007
RELATIVE BORDER SCALE IS IN MILLIMETERS 0 20 40 60 80
USERNAME => garclar
DGN FILE => D:\13103 SF_O Bay Bridge\A-SF088 Work Files after 11-05\AB-Contract 1\CCO-PLW12\Issued for Submittal\40120sud362r01.dgn

CU 04251 EA 0120S1

Dist	COUNTY	ROUTE	KILOMETER POST TOTAL PROJECT	SHEET No.	TOTAL SHEETS
04	SF	80	12.7/13.2	484 R1	806

REGISTERED ELECTRICAL ENGINEER 6/25/08

6-23-08
PLANS APPROVAL DATE

THE STATE OF CALIFORNIA OR ITS OFFICERS OR AGENTS SHALL NOT BE RESPONSIBLE FOR THE ACCURACY OR COMPLETENESS OF ELECTRONIC COPIES OF THIS PLAN SHEET.

REGISTERED PROFESSIONAL ENGINEER DAVID H. OTO No. 10609 Exp. 06/30/2011 ELECTRICAL STATE OF CALIFORNIA

FOR REVISION ONLY 1

Cultrans Metric

PB AMERICAS, Inc.
A Parsons Brinckerhoff Company
303 Second St., Suite 700N
San Francisco, CA 94107-1317

5

Cable/Ckt #: 2475-3
Reference: E-153
Function: TOS Data Com
Conductor Type: 72 Fiber, single mode fiber optic riser cable
From: Splice Cabinet TOS-02ES
To: Splice Cabinet TOS-03ES
Remarks:
Description Of Changes:

Route	Conduit No.	Route	Conduit No.	Route	Conduit No.	Route	Conduit No.
1	TOS-02ES	2	5564	3	5936	4	2T42E
5	TC Vault #2E	6	5945	7	TC Vault #3E	8	2T43E
9	5956	10	5071	11	TOS-03ES		

Cable/Ckt #: 2475-4
Reference: E-153
Function: TOS Data Com
Conductor Type: 72 Fiber, single mode fiber optic riser cable
From: Splice Cabinet TOS-03ES
To: Fiber Splice Closure (FSC)
Remarks: Splice cable to (E) cable inside MH. The same circuit number installed on previous contract.
Description Of Changes:

Route	Conduit No.	Route	Conduit No.	Route	Conduit No.	Route	Conduit No.
1	TOS-03ES	2	5071	3	5956	4	2T43E
5	TC Vault 3E	6	5945	7	TC Vault #2E	8	2T42E
9	5923A	10	PB-2E	11	5923	12	TC Vault #1E
13	2T41E	14	5912	15	MH-9	16	0260
17	MH-12	18	0310	19	MH-15	20	0360
21	MH-18	22	0410	23	MH-21	24	0460
25	MH-24	26	0510	27	MH-27		

Cable/Ckt #: 2900-101A
Reference: E-165, E-166
Function: Low Level Signal
Conductor Type: 4 pair #22, shielded pairs, FEP insulation (Type SSC)
From: Sensor 10-1
To: Strong Motion Recorder #1
Remarks:
Description Of Changes:

Route	Conduit No.	Route	Conduit No.	Route	Conduit No.	Route	Conduit No.
1	9204	2	9234	3	9233	4	9232
5	9231	6	9230	7	TC Vault 3E	8	2T43E
9	9235	10	TC Vault #2E	11	2T42E	12	9236A
13	PB-2E	15	TC Vault #1E	15	9236	16	9217
17	PB-2B	18	9218	19	Recorder #1		

Cable/Ckt #: 2900-101B
Reference: E-165, E-166
Function: Low Level Signal
Conductor Type: 4 pair #22, shielded pairs, FEP insulation (Type SSC)
From: Sensor 10-1
To: Strong Motion Recorder #1
Remarks:
Description Of Changes: Rerouted cable 1

Route	Conduit No.	Route	Conduit No.	Route	Conduit No.	Route	Conduit No.
1	9204	2	9234	3	9233	4	9232
5	9231	6	9230	7	TC Vault 3E	8	2T43E
9	9235	10	TC Vault #2E	11	2T42E	12	9236A
13	PB-2E	14	9236	15	TC Vault #1E	16	2T41E
17	9217	18	PB-2B	19	9218	20	Recorder #1

Cable/Ckt #: 2900-111A
Reference: E-165, E-166
Function: Low Level Signal
Conductor Type: 4 pair #22, shielded pairs, FEP insulation (Type SSC)
From: Sensor 11-1
To: Strong Motion Recorder #1
Remarks:
Description Of Changes:

Route	Conduit No.	Route	Conduit No.	Route	Conduit No.	Route	Conduit No.
1	9105	2	9013	3	9012	4	9011
5	9010	6	9014	7	TC Vault 3W	8	1T43W
9	9015	10	TC Vault #2W	11	1T42W	12	9016
13	PB-2A	14	9017	15	TC Vault #1W	16	1T41W
17	9101	18	MH-9	19	9201	20	TC Vault #1E
21	2T41E	22	9217	23	PB-2B	24	9218

MARK	DATE	DESCRIPTIONS	BY	CH'D
1	06/30/11	PL-12W CABLE, SEISMIC JOINT CONDUIT, MISC.	TW	RG

REVISIONS

CONTRACT CHANGE ORDER NO. 94
SHEET 36 OF 41

CABLE AND CIRCUIT SCHEDULE

5 REVISED PER ADDENDUM No. 5 DATED JULY 30, 2009

E-365

REVISED BY | DATE REVISED
CARMELO RIVERA | ELLERY LUCAS
CALCULATED-DESIGNED BY | CHECKED BY
CONSULTANT FUNCTIONAL SUPERVISOR
BEHZAD GOLEMOHAMMADI
STATE OF CALIFORNIA - DEPARTMENT OF TRANSPORTATION
Caltrans

BORDER LAST REVISED 3/1/2007
RELATIVE BORDER SCALE IS IN MILLIMETERS 0 20 40 60 80
USERNAME => gorclar
DGN FILE => 0:\13103 SF_O Bay Bridge\A-SFOBB Work Files after 11-05\Bid Const\ac- 1\CCO-PL\12\1\Issued for Submittal\E0120sua365r01.dgn
CU 04251 | EA 0120S1
LAST REVISION 00-00-00 | DATE PLOTTED => 6/30/2011 | TIME PLOTTED => 9:24:23 AM

DIST	COUNTY	ROUTE	KILOMETER POST TOTAL PROJECT	SHEET No	TOTAL SHEETS
04	SF	80	12.7/13.2	503A R1	806

REGISTERED ELECTRICAL ENGINEER DATE 06/20/11

PLANS APPROVAL DATE

REGISTERED PROFESSIONAL ENGINEER DAVID H. OTO No. 10699 Exp. 06/30/2013 ELECTRICAL STATE OF CALIFORNIA

PB AMERICAS, Inc.
A Parsons Brinckerhoff Company
303 Second St., Suite 700N
San Francisco, CA 94107-1317

The State of California or its officers or agents shall not be responsible for the accuracy or completeness of electronic copies of this plan sheet.

Caltrans now has a web site! To get to the web site, go to http://www.dot.ca.gov

Metric

Cable/Ckt #: PLW12 — Reference: E-75, E-78, E-147, E-152

Function: Low Level Signal — Conductor Type: 10 DLC

From: PL-W12 at sta. 53+45 — To: Controller Cabinet #TOS-01WA

Remarks: PLW12 cable will be replaced when connecting to city Ramp metering cabinet. Replacement cable will be furnished and installed by others. (1)

Description Of Changes:

(1)

Route	Conduit No.	Route	Conduit No.	Route	Conduit No.	Route	Conduit No.
1	4949	2	PB-2A	3	4904A	4	4904
5	TC Vault #1W	6	IT41W	7	4926	8	PB-2B
9	4044						

REGISTERED PROFESSIONAL ENGINEER DAVID H. OTO No. 10699 Exp. 06/30/2013 ELECTRICAL STATE OF CALIFORNIA

(1) FOR REVISION ONLY

MARK	DATE	DESCRIPTIONS	BY	CH'D
(1)	01/10/12	PL-W12 CABLE, SEISMIC JOINT CONDUIT, MISC.	RR	RG
(0)	06/30/11	PL-W12 CABLE, SEISMIC JOINT CONDUIT, MISC.	TW	RG

REVISIONS

CONTRACT CHANGE ORDER NO. 94
SHEET 37 OF 41

CABLE AND CIRCUIT SCHEDULE

E-384A

THIS PLAN ACCURATE FOR ELECTRICAL WORK ONLY.

STATE OF CALIFORNIA - DEPARTMENT OF TRANSPORTATION

Caltrans

DESIGN OVERSIGHT: BEHZAD GOLEMOHAMMADI

CALCULATED/DESIGNED BY: XX — CHECKED BY: XX

DATE XX/10 REVISED BY — DATE XX/10 REVISED

LAST REVISION 00-00-00 — DATE PLOTTED => 10-MAY-2012 TIME PLOTTED => 14:11

FOR REDUCED PLANS ORIGINAL SCALE IS IN MILLIMETERS 0 20 40 60 80

DGN FILE =>40120sua384Ar01.dgn
USERNAME =>llorico

CU 04251 — EA 0120F1

Dist	COUNTY	ROUTE	KILOMETER POST TOTAL PROJECT	SHEET No.	TOTAL SHEETS
04	SF	80	12.7/13.2	516A R1	806

REGISTERED ELECTRICAL ENGINEER 4/10/09

PLANS APPROVAL DATE

THE STATE OF CALIFORNIA OR ITS OFFICERS OR AGENTS SHALL NOT BE RESPONSIBLE FOR THE ACCURACY OR COMPLETENESS OF ELECTRONIC COPIES OF THIS PLAN SHEET.

REGISTERED PROFESSIONAL ENGINEER DAVID H. OTO No. 10699 Exp. 06/30/2013 ELECTRICAL STATE OF CALIFORNIA

REGISTERED PROFESSIONAL ENGINEER FADI DALEDDINE No. 11485 Exp. 12/31/09 ELECTRICAL STATE OF CALIFORNIA

FOR REVISION ONLY 1

5

PB AMERICAS, Inc.
A Parsons Brinckerhoff Company
303 Second St., Suite 700N
San Francisco, CA 94107-1317

Cable/Ckt #: 1091-1
Function: 480 V Feeder
From: 15 KVA Transformer for UP-101
Reference: E-70
Conductor Type: 1-3/C + Gnd, #6, 600 V, EPR insulation
To: 480 V Breaker for UP-101
Remarks:
Description Of Changes:

Route	Conduit No.	Route	Conduit No.	Route	Conduit No.	Route	Conduit No.
1	5907						

Cable/Ckt #: 1092
Function: 480 V Feeder
From: (E) 480 V LVCC-A Cubicle #13B
Reference: E-40, E-70
Conductor Type: 1-3/C + Gnd, #4, 600 V, EPR insulation
To: 480 V Breaker for UP-102
Remarks:
Description Of Changes: Deleted due to elimination of platform #2W

Route	Conduit No.	Route	Conduit No.	Route	Conduit No.	Route	Conduit No.
1	036	2	T20	3	600 V PB	4	0126
5	MH-5	6	0170	7	MH-7	8	0228
9	MH-30	10	4212	11	E. Vault #1W	12	1T21W
13	4903	14	PB-2E	15	4930	16	E. Vault #2W
17	1T22W	18	4963	19	Wireway #2W	20	5972A

Cable/Ckt #: 1092-1
Function: 480 V Feeder
From: 480 V Breaker for UP-102
Reference: E-70
Conductor Type: 1-3/C + Gnd, #6, 600 V, EPR insulation
To: 15 kVA Transformer for UP-102
Remarks:
Description Of Changes:

Route	Conduit No.	Route	Conduit No.	Route	Conduit No.	Route	Conduit No.
1	5972	2	Wireway #2W	3	5974		

Cable/Ckt #: 1093
Function: 480 V Feeder
From: (E) 480 V LVCC-A Cubicle #14A
References: E-40, E-71
Conductor Type: 1-3/C + Gnd, #4, 600 V, EPR insulation
To: 480 V Breaker for UP-103
Remarks:
Description Of Changes:

Route	Conduit No.	Route	Conduit No.	Route	Conduit No.	Route	Conduit No.
1	036	2	T20	3	600 V PB	4	0126
5	MH-5	6	0170	7	MH-7	8	0228
9	MH-30	10	4212	11	E. Vault #1W	12	1T21W
13	4903	14	PB-2E	15	4930	16	E. Vault #2W
17	1T22W	18	4957	19	E. Vault #3W	20	1T23W
21	4983	22	Wireway 3W	23	5992		

Cable/Ckt #: 1093-1
Function: 480 V Feeder
From: 480 V Breaker for UP-103
Reference: E-71
Conductor Type: 1-3/C + Gnd, #6, 600 V, EPR insulation
To: 15 KVA Transformer for UP-103
Remarks:
Description Of Changes:

Route	Conduit No.	Route	Conduit No.	Route	Conduit No.	Route	Conduit No.
1	5991						

Cable/Ckt #: 1115
Function: 480 V Power
From: (E) 480 V LVCC-A Cubicle #9
Reference: E-40
Conductor Type: 1-3/C + Gnd, #1/0, 600 V, EPR insulation
To: (E) Manhole-25
Remarks: Splice cable to (E) cable inside MH. The same circuit number installed on previous contract.
Description Of Changes:

Route	Conduit No.	Route	Conduit No.	Route	Conduit No.	Route	Conduit No.
1	0132	2	MH-5	3	0164	4	MH-7
5	0206	6	MH-10	7	0303	8	MH-13
9	0353	10	*0353	11	MH-16	12	0403
13	MH-19	14	0453	15	*0503	15	MH-22
16	0503	18	MH-25				

MARK	DATE	DESCRIPTIONS	BY	CH'D
1	06/30/11	PL-12W CABLE, SEISMIC JOINT CONDUIT, MISC.	TW	RG

REVISIONS

CONTRACT CHANGE ORDER NO. 94
SHEET 38 OF 41

5 ADDED PER ADDENDUM No. 5 DATED JULY 30, 2009

CABLE AND CIRCUIT SCHEDULE

E-397A

STATE OF CALIFORNIA - DEPARTMENT OF TRANSPORTATION

CONSULTANT FUNCTIONAL SUPERVISOR: BEHZAD GOLEMOHAMMADI

CALCULATED-DESIGNED BY: JEFFRI MALIM

CHECKED BY: ELLERY LUCAS

REVISED BY / DATE REVISED

LAST REVISION 00-00-00

DATE PLOTTED => 6/30/2011
TIME PLOTTED => 9:25:41 AM

BORDER LAST REVISED 3/ /2007

RELATIVE BORDER SCALE IS IN MILLIMETERS 0 20 40 60 80

USERNAME => gorclor
DGN FILE => 01\13103 SF_O Bay Bridge\4-SFOBB Work Files after 11-05\BI-Contract- 1\CCO-PLW12\Issued for Submittal\40120su0397a01.dgn

CU 04251 EA 0120S1

Dist	COUNTY	ROUTE	KILOMETER POST TOTAL PROJECT	SHEET No.	TOTAL SHEETS
04	SF	80	12.7/13.2	516D R1	806

REGISTERED ELECTRICAL ENGINEER 4/10/08

6-23-08
PLANS APPROVAL DATE

THE STATE OF CALIFORNIA OR ITS OFFICERS OR AGENTS SHALL NOT BE RESPONSIBLE FOR THE ACCURACY OR COMPLETENESS OF ELECTRONIC COPIES OF THIS PLAN SHEET.

REGISTERED PROFESSIONAL ENGINEER DAVID H. OTO No. 10599 Exp. 09/30/2011 ELECTRICAL STATE OF CALIFORNIA

REGISTERED PROFESSIONAL ENGINEER FADI WALIEDDINE No. 11465 Exp. 12/31/08 ELECTRICAL STATE OF CALIFORNIA

PB AMERICAS, Inc.
A Parsons Brinckerhoff Company
303 Second St., Suite 700N
San Francisco, CA 94107-1317

FOR REVISION ONLY 1

5

Cable/Ckt #: 2475-4
Reference: E-153
Function: TOS Data Com
Conductor Type: 72 Fiber, single mode fiber optic riser cable
From: Splice Cabinet TOS-03ES
To: Fiber Splice Closure (FSC)
Remarks: Splice cable to (E) cable inside MH. The same circuit number installed on previous contract.
Description Of Changes:

Route	Conduit No.	Route	Conduit No.	Route	Conduit No.	Route	Conduit No.
1	TOS-03ES	2	5956	3	2T43E	4	TC Vault 3E
5	5945	6	TC Vault #2E	7	2T42E	8	5923A
9	PB-2E	10	5923	11	TC Vault #1E	12	2T41E
13	5912	14	MH-9	15	0260	16	MH-12
17	0310	18	MH-15	19	0360	20	*0360
21	MH-18	22	0410	23	MH-21	24	0460
25	MH-24	26	*0510	27	0510	28	MH-27

Cable/Ckt #: 2900-101A
Reference: E-165, E-166
Function: Low Level Signal
Conductor Type: 4 pair #22, shielded pairs, FEP insulation (Type SSC)
From: Sensor 10-1
To: Strong Motion Recorder #1
Remarks:
Description Of Changes: Rerouted cable 1

Route	Conduit No.	Route	Conduit No.	Route	Conduit No.	Route	Conduit No.
1	9204	2	9234	3	9233	4	9232
5	9231	6	9230	7	TC Vault 3E	8	2T43E
9	9235	10	TC Vault #2E	11	2T42E	12	9236A
13	PB-2E	14	9236	15	TC Vault #1E	16	2T41E
17	9217	18	PB-2B	19	9218	20	Recorder #1

1

Cable/Ckt #: 2900-41A
Reference: E-165, E-166
Function: Low Level Signal
Conductor Type: 4 pair #22, shielded pairs, FEP insulation (Type SSC)
From: Sensor 4-1
To: Strong Motion Recorder #1
Remarks:
Description Of Changes:

Route	Conduit No.	Route	Conduit No.	Route	Conduit No.	Route	Conduit No.
1	9214	2	PB-SMD	3	9100	4	TC Vault #1W
5	1T41W	6	9101	7	MH-9	8	9201
9	TC Vault #1E	10	2T41E	11	9217	12	PB-2B
13	9218	14	Recorder #1				

Cable/Ckt #: 2900-41B
Reference: E-165, E-166
Function: Low Level Signal
Conductor Type: 4 pair #22, shielded pairs, FEP insulation (Type SSC)
From: Sensor 4-1
To: Strong Motion Recorder #1
Remarks:
Description Of Changes:

Route	Conduit No.	Route	Conduit No.	Route	Conduit No.	Route	Conduit No.
1	9214	2	PB-SMD	3	9100	4	TC Vault #1W
5	1T41W	6	9101	7	MH-9	8	9201
9	TC Vault #1E	10	2T41E	11	9217	12	PB-2B
13	9218	14	Recorder #1				

Cable/Ckt #: 2910-2
Reference: E-166, E-167
Function: 120 V DI
Conductor Type: 4 pair #24, overall shielded, 300 V, PE insulation (Type IC)
From: Strong Motion Recorder #1
To: 2910-2 Cable Splice MH-27
Remarks: Splice cable to (E) cable inside MH. The same circuit number installed on previous contract.
Description Of Changes:

Route	Conduit No.	Route	Conduit No.	Route	Conduit No.	Route	Conduit No.
1	9218	2	PB-2B	3	9217	4	TC Vault #1E
5	2T41E	6	9201	7	MH-9	8	0286
9	MH-12	10	0336	11	MH-15	12	0386
13	*0386	14	MH-18	15	0436	16	MH-21
17	0486	18	MH-24	19	*0536	20	0536
21	MH-27						

MARK	DATE	DESCRIPTIONS	BY	CH'D
1	06/30/11	PL-12W CABLE, SEISMIC JOINT CONDUIT, MISC.	TW	RG
		REVISIONS		

CONTRACT CHANGE ORDER NO. 94
SHEET 39 OF 41

5 ADDED PER ADDENDUM No. 5 DATED JULY 30, 2009

CABLE AND CIRCUIT SCHEDULE

E-397D

STATE OF CALIFORNIA - DEPARTMENT OF TRANSPORTATION
Caltrans

CONSULTANT FUNCTIONAL SUPERVISOR: BEHZAD GOLEMOHAMMADI
CALCULATED-DESIGNED BY: JEFFRI HALIM
CHECKED BY: ELLERY LUCAS
REVISED BY / DATE REVISED

LAST REVISION 00-00-00
DATE PLOTTED => 6/30/2011
TIME PLOTTED => 9:26:19 AM

Dist	COUNTY	ROUTE	KILOMETER POST TOTAL PROJECT	SHEET No.	TOTAL SHEETS
04	SF	80	12.7/13.2	516H R2	806

REGISTERED ELECTRICAL ENGINEER 4/10/09

6-23-08
PLANS APPROVAL DATE

THE STATE OF CALIFORNIA OR ITS OFFICERS OR AGENTS SHALL NOT BE RESPONSIBLE FOR THE ACCURACY OR COMPLETENESS OF ELECTRONIC COPIES OF THIS PLAN SHEET.

REGISTERED PROFESSIONAL ENGINEER FADI WALIEDDINE No. 11865 Exp. 12/31/09 ELECTRICAL STATE OF CALIFORNIA

PB AMERICAS, Inc.
A Parsons Brinckerhoff Company
303 Second St., Suite 700N
San Francisco, CA 94107-1317

REGISTERED PROFESSIONAL ENGINEER SYN YEE CHIN No. 18168 Exp. 09/30/2011 ELECTRICAL STATE OF CALIFORNIA
Syn Yee Chin
FOR REVISION ONLY
1 03/30/2011

REGISTERED PROFESSIONAL ENGINEER DAVID H. OTO No. 10899 Exp. 06/30/2013 ELECTRICAL STATE OF CALIFORNIA
FOR REVISION ONLY
2

Metric

5

Cable/Ckt #: UP101-2A
Reference: E-70, E-170
Function: 120 V Power
Conductor Type: 3 + 1 Gnd, #12, #12, 600 V, RHH/RHW Insulation
From: 208/120 V Utility Panel UP-101
To: CB-138B & CB-139B
Remarks: Coil cable inside PB-LTG route 16 for future extension to CB-138B. Splice circuit in PB-LTG route 5. On Route 4: Do not route cable inside Cable Tray.
Description Of Changes:

Route	Conduit No.	Route	Conduit No.	Route	Conduit No.	Route	Conduit No.
1	4002	2	Wireway #1W	3	4921	4	E. Vault #1W
5	4026	6	PB-LTG	7	1707	8	PB-LTG
9	CB-139B	10	1705	11	1704	12	1703
13	1702	14	1701	15	1776	16	PB-LTG

Cable/Ckt #: UP101-2B
Reference: E-70, E-170
Function: 120 V Power
Conductor Type: 3 + 1 Gnd, #12, #12, 600 V, RHH/RHW Insulation
From: ~~PB-LTG~~ E. Vault #1W
To: ~~CB-138A &~~ CB-139A
Remarks: ~~Coil cable inside PB-LTG route 16 for future extion to CB-138A.~~ Splice this cable inside E.Vault #1W (Do not route cable inside cable tray) due to YBI City Ramp by others
Description Of Changes:

Route	Conduit No.	Route	Conduit No.	Route	Conduit No.	Route	Conduit No.
1	~~PB-LTG~~ E.Vault #1W	2	~~4899~~ 4910	3	PB-LTG	4	~~1401~~ 1306
5	~~1646~~ PB-LTG	6	~~1645~~ CB-139A	7	1647	8	1644
9	1643	10	PB-LTG	11	1302	12	1303
13	1304	14	1305	15	PB-LTG	16	CB-139A

2

Cable/Ckt #: UP102-3
Reference: E-70
Function: 120 V Power
Conductor Type: 2 + 1 Gnd, #12, #12, 600 V, RHH/RHW Insulation
From: 208/120 V Utility Panel UP-102
To: Receptacle
Remarks:
Description Of Changes:

Route	Conduit No.	Route	Conduit No.	Route	Conduit No.	Route	Conduit No.
1	4021	2	Wireway #2W	3	4962	4	E. Vault #2W
5	4965	6	PB-LTG				

Cable/Ckt #: UP103-2
Reference: E-71, E-170
Function: 120 V Power
Conductor Type: 3 + 1 Gnd, #12, #12, 600 V, RHH/RHW Insulation
From: 208/120 V Utility Panel UP-103
To: Call Box CB-140A/B
Remarks: Splice circuit in PB-LTG route 6. On Route 4: Do not route cable inside Cable Tray.
Description Of Changes:

Route	Conduit No.	Route	Conduit No.	Route	Conduit No.	Route	Conduit No.
1	4053	2	Wireway 3W	3	4981	4	E. Vault #3W
5	4999	6	PB-LTG	7	1722	8	1723
9	1724	10	1725	11	1727	12	1728
13	PB-LTG	14	CB-140B	15	4917	16	PB-LTG
17	CB-140A						

Cable/Ckt #: UP103-3
Reference: E-71
Function: 120 V Power
Conductor Type: 2 + 1 Gnd, #12, #12, 600 V, RHH/RHW Insulation
From: 208/120 V Utility Panel UP-103
To: PB-LTG (South Barrier)
Remarks: ~~For receptacle near Light Pole (south WB). On Route 4: Do not route cable inside Cable Tray.~~ Circuit UP103-3 is T-spliced inside PB-LTG (from conduit 4999) to both east and west of platform #3W.
Description Of Changes: Reroute cable due to elimination of platform #2W.

Route	Conduit No.	Route	Conduit No.	Route	Conduit No.	Route	Conduit No.
1	4051	2	Wireway 3W	3	4981	4	E. Vault #3W
5	4999	6	1722	7	~~1723~~ 1724	8	~~1724~~ 1723
9	1725	10	1727	11	1721	12	1720
13	1719						

Cable/Ckt #: UP201-12
Reference: E-111, E-171
Function: 120 V Power
Conductor Type: 2 + 1 Gnd, #12, #12, 600 V, RHH/RHW Insulation
From: 208/ 120 V Utility Panel UP-201
To: Call Box CB-239 A/B & CB-238 A/B
Remarks: Coil cable inside PB-LTG route 11 and 18 for future extension to CB-238A/B. Splice circuit in PB-LTG route 5. On Route 4: Do not route cable inside Cable Tray.
Description Of Changes:

Route	Conduit No.	Route	Conduit No.	Route	Conduit No.	Route	Conduit No.
1	5043	2	Wireway #1E	3	5919	4	E. Vault #1E
5	5900	6	PB-LTG	7	7110	8	PB-LTG
9	CB-239A	10	2304	11	PB-LTG	12	5914
13	PB-LTG	14	CB-239B	15	2706	16	2705
17	2704	18	PB-LTG				

MARK	DATE	DESCRIPTIONS REVISIONS	BY	CH'D
2	01/10/11	PL-W12 CABLE, SEISMIC JOINT CONDUIT, MISC.	RR	RG
1	07/30/09	YBITS WB FRAME 2 CITY RAMP REVISION	RR	RG

CONTRACT CHANGE ORDER NO. 94
SHEET 40 OF 41

5 ADDED PER ADDENDUM No. 5 DATED JULY 30, 2009

CABLE AND CIRCUIT SCHEDULE

E-397H

REVISED BY | DATE REVISED | JEFFRI HALIM | ELLERY LUCAS | CALCULATED-DESIGNED BY | CHECKED BY | CONSULTANT FUNCTIONAL SUPERVISOR BEHZAD GOLEMOHAMMADI

STATE OF CALIFORNIA - DEPARTMENT OF TRANSPORTATION
Caltrans

1ST REVISION DATE PLOTTED => 13-JAN-2012
0-00-00 TIME PLOTTED => 10:59

USERNAME =>
DGN FILE => 40120sua397hr02.dgn

Dist	COUNTY	ROUTE	KILOMETER POST TOTAL PROJECT	SHEET No.	TOTAL SHEETS
04	SF	80	12.7/13.2	516I R1	806

REGISTERED ELECTRICAL ENGINEER 4/10/09

6-23-08
PLANS APPROVAL DATE

THE STATE OF CALIFORNIA OR ITS OFFICERS OR AGENTS SHALL NOT BE RESPONSIBLE FOR THE ACCURACY OR COMPLETENESS OF ELECTRONIC COPIES OF THIS PLAN SHEET.

REGISTERED PROFESSIONAL ENGINEER FADI WALEDDINE No. 11965 Exp. 12/31/09 ELECTRICAL STATE OF CALIFORNIA

PB AMERICAS, Inc.
A Parsons Brinckerhoff Company
303 Second St., Suite 700N
San Francisco, CA 94107-1317

Caltrans Metric

5

Cable/Ckt #: UP202-12
Reference: E-111, E-171
Function: 120 V Power
Conductor Type: 3 + 1 Gnd, #12, #12, 600 V, RHH/RHW insulation
From: 208/120 V Utility Panel UP-202
To: CB-238C, CB-239C, CB-240B
Remarks: Coil cable inside PB-LTG route 16 for future extension to CB-238C and CB-239C. Splice circuit in PB-LTG route 6. On Route 4: Do not route cable inside Cable Tray.
Description Of Changes: Addendum #4. Miscellaneous design correction

Route	Conduit No.	Route	Conduit No.	Route	Conduit No.	Route	Conduit No.
1	5021	2	Wireway #2E	3	5930	4	E. Vault #2E
5	5929	6	PB-LTG	7	2834	8	2833
9	7208	10	2832	11	2831	12	2830
13	2829	14	2828	15	2827	16	PB-LTG
17	2826	18	2835	19	2836	20	PB-LTG
21	CB-240B						

Cable/Ckt #: UP202-8
Reference: E-111
Function: 120 V Power
Conductor Type: ~~2 + 1 Gnd, #10, #10, 600 V, RHH/RHW insulation~~ 1-2/c + gnd#10, 600V, EPR insulation 1
From: 208/120 V Utility Panel UP-202
To: Manhole-29
Remarks: ~~Coil and isolate circuit in UP-202 @ MH 29. (at PB-Ltg). This circuit is for future TOS-RM01. On Route 5 and 9: Do not route cable inside Cable Tray.~~ (Reroute ckt UP202-8 & conductor type)
Description Of Changes: Addendum #4. Miscellaneous design correction 1

Route	Conduit No.	Route	Conduit No.	Route	Conduit No.	Route	Conduit No.
1	UP-202	2	5021	3	Wireway #2E	4	5931
5	E.Vault #2E	6	~~5901A~~ 5940	7	~~PB-2A~~ PB-Ltg	8	~~5901~~ Field
~~9~~	~~E. Vault #1E~~	~~10~~	~~5900~~	~~11~~	~~MH-29~~		

1

Cable/Ckt #: UP203-2
Reference: E-112, E-171
Function: 120 V Power
Conductor Type: 2 + 1 Gnd, #12, #12, 600 V, RHH/RHW insulation
From: 208/120 V Utility Panel UP-203
To: CB-241A/B
Remarks: Splice circuit in PB-LTG route 6. On Route 5: Do not route cable inside Cable Tray.
Description Of Changes: Addendum #4. Miscellaneous design correction

Route	Conduit No.	Route	Conduit No.	Route	Conduit No.	Route	Conduit No.
1	UP-203	2	5060	3	Wireway #3E	4	5951
5	E. Vault #3E	6	5989	7	PB-LTG	8	2321
9	2322	10	2323	11	2324	12	PB-LTG
13	CB-241A	14	5966	15	PB-LTG	16	CB-241B

REGISTERED PROFESSIONAL ENGINEER DAVID H. OTO No. 10589 Exp. 06/30/2011 ELECTRICAL STATE OF CALIFORNIA

FOR REVISION ONLY 1

MARK	DATE	DESCRIPTIONS	BY	CH'D
1	06/30/11	PL-12W CABLE, SEISMIC JOINT CONDUIT, MISC.	TW	RG

REVISIONS

CONTRACT CHANGE ORDER NO. 94
SHEET 41 OF 41

CABLE AND CIRCUIT SCHEDULE

5 ADDED PER ADDENDUM No. 5 DATED JULY 30, 2009

E-397I

STATE OF CALIFORNIA - DEPARTMENT OF TRANSPORTATION
Caltrans
CONSULTANT FUNCTIONAL SUPERVISOR: BEHZAD GOLEMOHAMMADI
CALCULATED-DESIGNED BY: JEFFRI HALOM
CHECKED BY: ELLERY LUCAS
REVISED BY / DATE REVISED

LAST REVISION .00-00-00 DATE PLOTTED => 6/30/2011 TIME PLOTTED => 9:26:58 AM

BORDER LAST REVISED 3/1/2007
RELATIVE BORDER SCALE IS IN MILLIMETERS 0 20 40 60 80
USERNAME => gorcior
DGN FILE => O:\13103 SF_O Bay Bridge\A-SF088 Work Files after 11-05\Va\Contract 1\CCO-PLW12\Issued for Submittal\40120sua397ir01.dgn
CU 04251 EA 0120S1

STATE OF CALIFORNIA - DEPARTMENT OF TRANSPORTATION

CONTRACT CHANGE ORDER

Change Requested by: Engineer

CCO 95	Suppl. No. 0	Contract No. 04 - 0120S4	Road SF-80-12.7/13.2	FED. AID LOC.: NO FED AID

To: **M C M CONSTRUCTION INC**

You are directed to make the following changes from the plans and specifications or do the following described work not included in the plans and specifications for this contract. ***NOTE: This change order is not effective until approved by the Engineer.***

Description of work to be done, estimate of quantities and prices to be paid. (Segregate between additional work at contract price, agreed price and force account.) Unless otherwise stated, rates for rental of equipment cover only such time as equipment is actually used and no allowance will be made for idle time. This last percentage shown is the net accumulated increase or decrease from the original quantity in the Engineer's Estimate.

Extra Work at Lump Sum:

Provide payment to the San Francisco Public Utilities Commission for the invoiced cost of relocating the light pole at Macalla Road (left of MR Line Sta. 1+20 +/-) and the cost of reconnecting the relocated water lines at Macalla Road and Southgate Road along the MR Line.

For these costs, the Contractor shall be compensated an agreed lump sum of $77,256.90 which constitutes full and final compensation, including all markups, for all additional costs incurred.

Cost of Extra Work at Lump Sum $77,256.90

Estimated Cost: Increase ☑ Decrease ☐ $77,256.90

By reason of this order the time of completion will be adjusted as follows: 0 days

Submitted by:		
Signature William Howe	Resident Engineer William Howe, Senior R.E.	Date 07.21.11
Recommended by:		
Signature Deanna Vilcheck	Area Construction Manager Deanna Vilcheck	Date 7/21/11
Approved by:		
Signature Deanna Vilcheck	Area Construction Manager Deanna Vilcheck	Date 8/9/11

We the undersigned contractor, have given careful consideration to the change proposed and agree, if this proposal is approved, that we will provide all equipment, furnish the materials, except as may otherwise be noted above, and perform all services necessary for the work above specified, and will accept as full payment therefor the prices shown above.

NOTE: If you, the contractor, do not sign acceptance of this order, your attention is directed to the requirements of the specifications as to proceeding with the ordered work and filing a written protest within the time therein specified.

Contractor Accepted by:		
Signature	(Print name and title) EDMUNDO A. PUCHI, TREASURER	Date 8/3/11

STATE OF CALIFORNIA - DEPARTMENT OF TRANSPORTATION

CONTRACT CHANGE ORDER MEMORANDUM

DATE: 7/13/2011 Page 1 of 1

TO: Deanna Vilcheck, ACM /

FROM: William Howe, Senior R.E.

FILE: E.A. 04 - 0120S4
CO-RTE-PM SF-80-12.7/13.2
FED. NO. NO FED AID

CCO#: 95 | SUPPLEMENT#: 0 | Category Code: CLXX

CONTINGENCY BALANCE (incl. this change) $68,841,654.19

COST: $77,256.90 INCREASE ☑ DECREASE ☐

HEADQUARTERS APPROVAL REQUIRED? ☐ YES ☑ NO

SUPPLEMENTAL FUNDS PROVIDED: $0.00

IS THIS REQUEST IN ACCORDANCE WITH ENVIRONMENTAL DOCUMENTS? ☑ YES ☐ NO

CCO DESCRIPTION:
SFPUC Macalla Road Utility Relocations

PROJECT DESCRIPTION:
YBITS-1 (Yerba Buena Island Transition Structures)

Original Contract Time:	Time Adj. This Change:	Previously Approved CCO Time Adjustments:	Percentage Time Adjusted: (including this change)	Total # of Unreconciled Deferred Time CCO(s): (including this change)
1390 Day(s)	0 Day(s)	0 Day(s)	0 %	9

THIS CHANGE ORDER PROVIDES FOR:

Provide payment for utility relocation work performed by the San Francisco Public Utilities Commission (SFPUC).

This project, the Yerba Buena Island Transition Structure (YBITS), provides for the construction of two bridges which will connect eastbound and westbound traffic on the new east span of the San Francisco Oakland Bay Bridge (SFOBB) to the existing Yerba Buena Island (YBI) tunnel. The structures are comprised of concrete box girder bridges each approximately 26 meters wide, 40 meters high and 450 meters in length.

The contract provides for the reconstruction of the existing Macalla Road along a hairpin turn that abuts the bridges. This work includes the relocation of various utilities including water, sewer, electrical and natural gas lines and a light pole. Under an agreement with the SFPUC, that agency assumed the responsibility of performing the relocation of the light pole and the responsibility of performing the reconnection of the relocated water lines. The cost of this work is to be reimbursed by the Department per the agreement.

This change order provides compensation to the contractor to provide payment to the SFPUC for the invoiced cost of performing the pole relocation and the water line reconnections.

Compensation for this work shall be paid as extra work at an agreed lump sum of $77,256.90 which shall be financed from the contract's contingency funds. A cost analysis is on file.

No adjustment of contract time is warranted as the change will not affect the controlling operation.

Maintenance concurrence is not required as the lighting and water lines shall be maintained by the SFPUC.

CONCURRED BY:

Construction Engineer:	William Howe	Date 07-21-11
Bridge Engineer:	Mehran Ardakanian	Date 08-15-11
Project Engineer:	BOB ZANDIPOUR	Date 08-12-11
Project Manager:	KEN TERPSTRA	Date 08/09/11
FHWA Rep.:		Date
Environmental:		Date
Other (specify):		Date
Other (specify):		Date
District Prior Approval By:		Date
HQ (Issue Approve) By:		Date
Resident Engineer's Signature:	William Howe	Date 07-21-11

ESTIMATE OF COST

	THIS REQUEST	TOTAL TO DATE
ITEMS	$0.00	$0.00
FORCE ACCOUNT	$0.00	$0.00
AGREED PRICE	$77,256.90	$77,256.90
ADJUSTMENT	$0.00	$0.00
TOTAL	$77,256.90	$77,256.90

FEDERAL PARTICIPATION

☐ PARTICIPATING ☐ PARTICIPATING IN PART ☑ NONE
☐ NON-PARTICIPATING (MAINTENANCE) ☐ NON-PARTICIPATING

FEDERAL SEGREGATION (if more than one Funding Source or P.I.P. type)
☑ CCO FUNDED PER CONTRACT ☐ CCO FUNDED AS FOLLOWS

FEDERAL FUNDING SOURCE PERCENT

ADA Notice: For individuals with sensory disabilities, this document is available in alternate formats. For information call: (916) 654-6410 or TDD (916) 654-3880 or write Records and Forms Management, 1120 N Street, MS-89, Sacramento, CA 95814.

STATE OF CALIFORNIA - DEPARTMENT OF TRANSPORTATION

CONTRACT CHANGE ORDER

Change Requested by: Engineer

CCO 98	Suppl. No. 0	Contract No. 04 - 0120S4	Road SF-80-12.7/13.2	FED. AID LOC.: NO FED AID

To: **M C M CONSTRUCTION INC**

You are directed to make the following changes from the plans and specifications or do the following described work not included in the plans and specifications for this contract. ***NOTE: This change order is not effective until approved by the Engineer.***

Description of work to be done, estimate of quantities and prices to be paid. (Segregate between additional work at contract price, agreed price and force account.) Unless otherwise stated, rates for rental of equipment cover only such time as equipment is actually used and no allowance will be made for idle time. This last percentage shown is the net accumulated increase or decrease from the original quantity in the Engineer's Estimate.

Extra Work at Force Account:

As authorized by the Engineer, and in accordance with Section 4-1.03D, "Extra Work", and Section 9-1.03, "Force Account Payment", of the Standard Specifications, and Section 5-1.17, "Force Account Payment", of the Special Provisions, provide all labor, equipment and materials necessary to construct concrete slope protection beneath Bent Nos. 10 through 6 as described below and as directed by the Engineer for the San Francisco-Oakland Bay Bridge East Span Seismic Safety Project Yerba Buena Island Transition Structures, Bridge Nos. 340006L/R.

As directed by the Engineer, drive 4 ft. long #8 bar reinforcing steel dowels four (4) feet deep into the existing slope at a 90 degree angle. The centerline to centerline spacing of the dowels shall be ten (10) feet. Attach wire mesh to the dowels with tie wire. Use adjacent piles where practical. The concrete for the slope protection shall be a minimum of 100mm, and shall be applied by the shotcrete method of placement in accordance with Section 53: "Shotcrete", of the Standard Specifications.

Estimated Cost of Extra Work at Force Account = $350,000.00

Estimated Cost: Increase ☑ Decrease ☐ **$350,000.00**

By reason of this order the time of completion will be adjusted as follows: 0 days

Submitted by

Signature	Resident Engineer	Date
William Howe	William Howe, Senior R.E.	01-20-12

Approval Recommended by

Signature	Area Construction Manager	Date
Deanna Vilcheck	Deanna Vilcheck	1/23/12

Engineer Approval by

Signature	Area Construction Manager	Date
Michael Fromm FOR	Deanna Vilcheck	1/30/12

We the undersigned contractor, have given careful consideration to the change proposed and agree, if this proposal is approved, that we will provide all equipment, furnish the materials, except as may otherwise be noted above, and perform all services necessary for the work above specified, and will accept as full payment therefor the prices shown above.

NOTE: If you, the contractor, do not sign acceptance of this order, your attention is directed to the requirements of the specifications as to proceeding with the ordered work and filing a written protest within the time therein specified.

Contractor Acceptance by

Signature	(Print name and title)	Date
[signature]	Edmundo A. Ruch - Treasurer	1-26-2012

STATE OF CALIFORNIA - DEPARTMENT OF TRANSPORTATION

CONTRACT CHANGE ORDER

Change Requested by: Engineer

CCO 98	Suppl. No. 1	Contract No. 04 - 0120S4	Road SF-80-12.7/13.2	FED. AID LOC.: NO FED AID

To: **M C M CONSTRUCTION INC**

You are directed to make the following changes from the plans and specifications or do the following described work not included in the plans and specifications for this contract. ***NOTE: This change order is not effective until approved by the Engineer.***

Description of work to be done, estimate of quantities and prices to be paid. (Segregate between additional work at contract price, agreed price and force account.) Unless otherwise stated, rates for rental of equipment cover only such time as equipment is actually used and no allowance will be made for idle time. This last percentage shown is the net accumulated increase or decrease from the original quantity in the Engineer's Estimate.

Extra Work at Force Account:

Provide additional funds for the work specified under the original Change Order No. 098 S0.

Estimated Cost of Extra Work at Force Account = $600,000.00

Estimated Cost: Increase ☑ **Decrease** ☐ **$600,000.00**

By reason of this order the time of completion will be adjusted as follows: 0 days

Submitted by

Signature William Howe	Resident Engineer William Howe, Senior R.E.	Date 06-05-12

Approval Recommended by

Signature Deanna Vilcheck	Area Construction Manager Deanna Vilcheck	Date 6/5/12

Engineer Approval by

Signature Deanna Vilcheck	Area Construction Manager Deanna Vilcheck	Date 6/6/12

We the undersigned contractor, have given careful consideration to the change proposed and agree, if this proposal is approved, that we will provide all equipment, furnish the materials, except as may otherwise be noted above, and perform all services necessary for the work above specified, and will accept as full payment therefor the prices shown above.

NOTE: If you, the contractor, do not sign acceptance of this order, your attention is directed to the requirements of the specifications as to proceeding with the ordered work and filing a written protest within the time therein specified.

Contractor Acceptance by

Signature Not Required	(Print name and title)	Date

STATE OF CALIFORNIA - DEPARTMENT OF TRANSPORTATION

CONTRACT CHANGE ORDER MEMORANDUM

DATE: 6/5/2012 Page 1 of 1

TO: Deanna Vilcheck, ACM / DV	FILE: E.A. 04 - 0120S4
	CO-RTE-PM SF-80-12.7/13.2
FROM: William Howe, Senior R.E.	FED. NO. NO FED AID
CCO#: 98 SUPPLEMENT#: 1 Category Code: BZZZ	CONTINGENCY BALANCE (incl. this change) $67,760,964.00
COST: $600,000.00 INCREASE ☑ DECREASE ☐	HEADQUARTERS APPROVAL REQUIRED? ☑ YES ☐ NO
SUPPLEMENTAL FUNDS PROVIDED: $0.00	IS THIS REQUEST IN ACCORDANCE WITH ENVIRONMENTAL DOCUMENTS? ☑ YES ☐ NO
CCO DESCRIPTION: Shotcrete Slope W7-W8-W9 Area SupplFunds	**PROJECT DESCRIPTION:** YBITS-1 (Yerba Buena Island Transition Structures)

Original Contract Time:	Time Adj. This Change:	Previously Approved CCO Time Adjustments:	Percentage Time Adjusted: (including this change)	Total # of Unreconciled Deferred Time CCO(s): (including this change)
1390 Day(s)	0 Day(s)	0 Day(s)	0 %	9

THIS CHANGE ORDER PROVIDES FOR:

Additional force account funding for the work defined under the original Contract Change Order No. 98 S0, constructing shotcrete "goat" slope protection beneath the area between Bent No. 6 through 10, as directed by the Engineer.

Contract Change Order No. 98 S0 provided temporary slope protection in the steep slope areas of Yerba Buena Island, which are very susceptible to erosion. Since Contract Change Order No. 98 S0 was issued in January 2012, significant areas have been shotcreted. This treatment has been very successful at minimizing any erosion in these historically erodible slopes. The success of the shotcrete has managed to eliminate turbid runoff and significantly reduce Notices of Discharge (NOD's) in numerous areas. The success of this shotcrete treatment has allowed the work to continue through the stormy season with very little disruption. The treatment will be extended to other areas to help maintain the current success of the SWPP measures on the site.

Compensation for this additional work shall be paid as Extra Work at Force Account, which can be financed from the project's contingency funds at an estimated cost of $600,000.00. The detailed cost analysis for this change order is on file.

The Contractor's signature is not required for additional funds for Extra Work at Force Account change orders.

This change was requested by Deanna Vilcheck, Supervising Engineer, Toll Bridge Construction, and concurrence will be obtained from Bob Zandipour, Design, and Ken Terpstra, Project Manager.

Maintenance concurrence is not required because this measure is temporary and will not affect the permanent structure.

No adjustment in contract time of completion is warranted as this change does not affect the controlling operation.

CONCURRED BY:

Construction Engineer:	William Howe	Date 06-05-12
Bridge Engineer:	Mehran Ardakanian	Date
Project Engineer:	Bob Zandipour, Design	Date 6-5-12
Project Manager:	Ken Terpstra	Date 6-8-12
FHWA Rep.:		Date
Environmental:		Date
Other (specify):		Date
Other (specify):		Date
District Prior Approval By:		Date
HQ (Issue Approve) By:	Sey Hossnieh	Date 6-5-12
Resident Engineer's Signature: William Howe		Date 06.05.12

ESTIMATE OF COST

	THIS REQUEST	TOTAL TO DATE
ITEMS	$0.00	$0.00
FORCE ACCOUNT	$600,000.00	$950,000.00
AGREED PRICE	$0.00	$0.00
ADJUSTMENT	$0.00	$0.00
TOTAL	$600,000.00	$950,000.00

FEDERAL PARTICIPATION

☐ PARTICIPATING ☐ PARTICIPATING IN PART ☑ NONE
☐ NON-PARTICIPATING (MAINTENANCE) ☐ NON-PARTICIPATING

FEDERAL SEGREGATION (if more than one Funding Source or P.I.P. type)
☐ CCO FUNDED PER CONTRACT ☐ CCO FUNDED AS FOLLOWS

FEDERAL FUNDING SOURCE	PERCENT

ADA Notice: For individuals with sensory disabilities, this document is available in alternate formats. For information call: (916) 654-6410 or TDD (916) 654-3880 or write Records and Forms Management, 1120 N Street, MS-89, Sacramento, CA 95814.

STATE OF CALIFORNIA - DEPARTMENT OF TRANSPORTATION

CONTRACT CHANGE ORDER MEMORANDUM

TO: Deanna Vilcheck, ACM /	FILE: **E.A.** 04 - 0120S4
FROM: William Howe, Senior R.E.	**CO-RTE-PM** SF-80-12.7/13.2
	FED. NO. NO FED AID
CCO#: **68** SUPPLEMENT#: **1** Category Code: **BZZZ**	CONTINGENCY BALANCE (incl. this change) **$70,135,316.00**
COST: **$550,000.00** INCREASE ☑ DECREASE ☐	HEADQUARTERS APPROVAL REQUIRED? ☑ YES ☐ NO
SUPPLEMENTAL FUNDS PROVIDED: **$0.00**	IS THIS REQUEST IN ACCORDANCE WITH ENVIRONMENTAL DOCUMENTS? ☑ YES ☐ NO
CCO DESCRIPTION: Additional Funds for Elevator Operation	**PROJECT DESCRIPTION:** YBITS-1 (Yerba Buena Island Transition Structures)

Original Contract Time:	Time Adj. This Change:	Previously Approved CCO Time Adjustments:	Percentage Time Adjusted: (including this change)	Total # of Unreconciled Deferred Time CCO(s): (including this change)
1390 Day(s)	**0** Day(s)	**0** Day(s)	**0** %	**9**

THIS CHANGE ORDER PROVIDES FOR:

Additional funds to operate the temporary elevator that provides access to the Frame 2 superstructure.

This project, the Yerba Buena Island Transition Structure (YBITS), provides for the construction of two bridges which will connect eastbound and westbound traffic on the new east span of the San Francisco Oakland Bay Bridge (SFOBB) to the existing Yerba Buena Island (YBI) tunnel. The structures are comprised of concrete box girder bridges each approximately 50 meters high and 450 meters in length.

The original Change Order No. 68 S0 provided a temporary elevator to access the Frame 2 superstructure that could be used as emergency egress from the structure during any weather event and eliminate the Department's risk pertaining to weather delays affecting the Seismic Safety Opening date that has been established via the TBPOC for the new SFOBB east span. The original Change Order No. 68 S0 provided a lump sum payment to furnish and install the elevator with the operational costs paid as extra work at force account.

Subsequent to Change Order No. 68 S0 being issued, Change Order 72, Supplement No. 1, was approved to establish milestones to release areas of the project to the adjacent SAS project and to mitigate delays incurred to the YBITS contract. Supplement No. 1 required the Contractor to work double shifts and additional weekends to meet the milestone dates. These additional work shifts will require increased operation of the elevator, which is paid on a force account basis as defined under the original Change Order No. 68 S0. This change order will provide additional funding for operating the elevator based on the revised estimate of the costs to be incurred.

Compensation for these additional costs shall be paid as extra work at force account at an estimated cost of $550,000.00, which shall be funded from the Contract's contingency fund. A detailed cost estimate is on file.

This change order was approved by the TBPOC on June 6, 2012, copy attached.

No adjustment of contract time shall be granted as the change will not affect the controlling operation.

Maintenance concurrence is not required as this change affects a temporary structure and doesn't affect any permanent roadway features.

ADA Notice: For individuals with sensory disabilities, this document is available in alternate formats. For [illegible]
Records and Forms Management, 1120 N Street, MS-89, Sacramento, CA 95814

CONCURRED BY:		
Construction Engineer:	William Howe	Date 05-10-12
Bridge Engineer:	Mehran Ardakanian	Date
Project Engineer:	Bob Zandipour, Design	Date 6-8-12
Project Manager:	Ken Terpstra	Date 6-8-12
FHWA Rep.:		Date
Environmental:		Date
Other (specify):		Date
Other (specify):		Date
District Prior Approval By:		Date
HQ (Issue Approve) By:	Larry Salhaney	Date 6-8-12
Resident Engineer's Signature: William Howe		Date 05-10-12

ESTIMATE OF COST

	THIS REQUEST	TOTAL TO DATE
ITEMS	$0.00	$0.00
FORCE ACCOUNT	$550,000.00	$920,000.00
AGREED PRICE	$0.00	$564,770.00
ADJUSTMENT	$0.00	$0.00
TOTAL	$550,000.00	$1,484,770.00

FEDERAL PARTICIPATION

☐ PARTICIPATING ☐ PARTICIPATING IN PART ☑ NONE
☐ NON-PARTICIPATING (MAINTENANCE) ☐ NON-PARTICIPATING

FEDERAL SEGREGATION (if more than one Funding Source or P.I.P. type)
☐ CCO FUNDED PER CONTRACT ☐ CCO FUNDED AS FOLLOWS

FEDERAL FUNDING SOURCE	PERCENT

ADA Notice: For individuals with sensory disabilities, this document is available in alternate formats. For information call (916) 654-6410 or TDD (916) 654-3880 or write Records and Forms Management, 1120 N Street, MS-89, Sacramento, CA 95814

STATE OF CALIFORNIA - DEPARTMENT OF TRANSPORTATION

CONTRACT CHANGE ORDER

Change Requested by: Engineer

CCO 99	Suppl. No. 1	Contract No. 04 - 0120S4	Road SF-80-12.7/13.2	FED. AID LOC.: NO FED AID

To: **M C M CONSTRUCTION INC**

You are directed to make the following changes from the plans and specifications or do the following described work not included in the plans and specifications for this contract. ***NOTE: This change order is not effective until approved by the Engineer.***

Description of work to be done, estimate of quantities and prices to be paid. (Segregate between additional work at contract price, agreed price and force account.) Unless otherwise stated, rates for rental of equipment cover only such time as equipment is actually used and no allowance will be made for idle time. This last percentage shown is the net accumulated increase or decrease from the original quantity in the Engineer's Estimate.

Extra Work at Force Account:

Provide additional funds.

Estimate of Extra Work @ Force Account = $200,000.00

Estimated Cost: **Increase** ☑ **Decrease** ☐ **$200,000.00**

By reason of this order the time of completion will be adjusted as follows: 0 days

Submitted by

Signature	Resident Engineer	Date
William Howe	William Howe, Senior R.E.	10·04·12

Approval Recommended by

Signature	Area Construction Manager	Date
Deanna Vilcheck	Deanna Vilcheck	10/4/12

Engineer Approval by

Signature	Area Construction Manager	Date
Deanna Vilcheck	Deanna Vilcheck	10/9/12

We the undersigned contractor, have given careful consideration to the change proposed and agree, if this proposal is approved, that we will provide all equipment, furnish the materials, except as may otherwise be noted above, and perform all services necessary for the work above specified, and will accept as full payment therefor the prices shown above.

NOTE: If you, the contractor, do not sign acceptance of this order, your attention is directed to the requirements of the specifications as to proceeding with the ordered work and filing a written protest within the time therein specified.

Contractor Acceptance by

Signature	(Print name and title)	Date
Not Required		

STATE OF CALIFORNIA - DEPARTMENT OF TRANSPORTATION

CONTRACT CHANGE ORDER MEMORANDUM

TO: Deanna Vilcheck, ACM / DV	FILE: E.A. 04 - 0120S4
	CO-RTE-PM SF-80-12.7/13.2
FROM: William Howe, Senior R.E.	FED. NO. NO FED AID
CCO#: 99 SUPPLEMENT#: 1 Category Code: CXXX	CONTINGENCY BALANCE (incl. this change) $42,095,534.15
COST: $200,000.00 INCREASE ☑ DECREASE ☐	HEADQUARTERS APPROVAL REQUIRED? ☑ YES ☐ NO
SUPPLEMENTAL FUNDS PROVIDED: $0.00	IS THIS REQUEST IN ACCORDANCE WITH ENVIRONMENTAL DOCUMENTS? ☑ YES ☐ NO
CCO DESCRIPTION: Additional Funds	**PROJECT DESCRIPTION:** YBITS-1 (Yerba Buena Island Transition Structures)

Original Contract Time:	Time Adj. This Change:	Previously Approved CCO Time Adjustments:	Percentage Time Adjusted: (including this change)	Total # of Unreconciled Deferred Time CCO(s): (including this change)
1390 Day(s)	0 Day(s)	0 Day(s)	0 %	9

THIS CHANGE ORDER PROVIDES FOR:

The lease of a material storage site adjacent to the project.

This project, the Yerba Buena Island Transition Structure (YBITS), provides for the construction of two bridges which will connect eastbound and westbound traffic on the new east span of the San Francisco Oakland Bay Bridge (SFOBB) to the existing Yerba Buena Island (YBI) tunnel. The structures are comprised of concrete box girder bridges each approximately 50 meters high and 450 meters in length.

The western third of the jobsite is encompassed by a steep sandy slope, the middle third has the primary and secondary access roads to the adjacent U.S. Coast Guard (USCG) base running through it and the eastern third is on a slope and is a shared area with the abutting Self-Anchored Suspension (SAS) contract.

The Toll Bridge Program Oversight Committee (TBPOC) has established a goal of the Seismic Safety Opening (SSO) of the new SFOBB east span by 2013. As part of this goal, this project has issued Change Order No. 72, Supplement No. 0 and No. 1, to mitigate project delays and set milestones for the completion of the YBITS structure consistent with the SSO schedule. Since CCO 99 S1 was issued, additional CCO's 72 S2, S3, S4, S5 and S6 have been or are being issued. These change orders have resulted in increased labor forces and equipment along with working extended and double shifts on this project, which has created increased disruptions to both the USCG station's access through the jobsite and to the abutting SAS contract.

In order to mitigate these disruptions, this change order provides for the Contractor to continue to lease a parcel of land adjacent to the project site in order to store project materials, which would otherwise have to be stored on the jobsite. The storage area will reduce the congestion within the project site.

The parcel shall provide approximately 3 acres of storage area and is now anticipated to be leased through the January, 2013. The quoted monthly lease price has been determined to be in line with typical leased properties in the area. In addition to the cost of leasing the parcel, the change order shall provide for the Contractor to secure and power the storage site and pay for any double handling of the materials being stored at the site as determined by the Engineer.

The work shall be performed as Extra Work at Force Account at an estimated cost of $200,000.00 and shall be financed from the contract's contingency funds. An updated cost analysis is on file. Total cost for this change order is $700,000.00.

No adjustment of contract time is warranted as the work will not affect the controlling operation.

Maintenance concurrence is not required as this change order will not affect any permanent roadway features.

ADA Notice: For individuals with sensory disabilities, this document is available in alternate formats. For information call: (916) 654-6410 or TDD (916) 654-3880 or write Records and Forms Management, 1120 N Street, MS-89, Sacramento, CA 95814.

CONCURRED BY:		
Construction Engineer:	William Howe	Date 10-04-12
Bridge Engineer:	Mehran Ardakanian	Date
Project Engineer:	Bob Zandipour, Design	Date 10-8-12
Project Manager:	Ken Terpstra	Date 10/5/12
FHWA Rep.:		Date
Environmental:		Date
Other (specify):		Date
Other (specify):		Date
District Prior Approval By:		Date
HQ (Issue Approve) By:	Larry Salhaney	Date 10-5-12
Resident Engineer's Signature: William Howe		Date 10-04-12

ESTIMATE OF COST

	THIS REQUEST	TOTAL TO DATE
ITEMS	$0.00	$0.00
FORCE ACCOUNT	$200,000.00	$700,000.00
AGREED PRICE	$0.00	$0.00
ADJUSTMENT	$0.00	$0.00
TOTAL	$200,000.00	$700,000.00

FEDERAL PARTICIPATION

☐ PARTICIPATING ☐ PARTICIPATING IN PART ☑ NONE
☐ NON-PARTICIPATING (MAINTENANCE) ☐ NON-PARTICIPATING

FEDERAL SEGREGATION (if more than one Funding Source or P.I.P. type)
☐ CCO FUNDED PER CONTRACT ☐ CCO FUNDED AS FOLLOWS

FEDERAL FUNDING SOURCE	PERCENT

ADA Notice: For individuals with sensory disabilities, this document is available in alternate formats. For information call: (916) 654-6410 or TDD (916) 654-3880 or write Records and Forms Management, 1120 N Street, MS-89, Sacramento, CA 95814.

STATE OF CALIFORNIA - DEPARTMENT OF TRANSPORTATION

CONTRACT CHANGE ORDER

Change Requested by: Engineer

CCO 99	Suppl. No. 2	Contract No. 04 - 0120S4	Road SF-80-12.7/13.2	FED. AID LOC.: NO FED AID

To: **M C M CONSTRUCTION INC**

You are directed to make the following changes from the plans and specifications or do the following described work not included in the plans and specifications for this contract. ***NOTE: This change order is not effective until approved by the Engineer.***

Description of work to be done, estimate of quantities and prices to be paid. (Segregate between additional work at contract price, agreed price and force account.) Unless otherwise stated, rates for rental of equipment cover only such time as equipment is actually used and no allowance will be made for idle time. This last percentage shown is the net accumulated increase or decrease from the original quantity in the Engineer's Estimate.

Extra Work at Force Account:

Provide additional funds.

Estimate of Extra Work at Force Account = $250,000.00

Estimated Cost: Increase ☑ Decrease ☐ **$250,000.00**

By reason of this order the time of completion will be adjusted as follows: 0 days

Submitted by

Signature William Howe	Resident Engineer William Howe, Senior R.E.	Date 12-20-12

Approval Recommended by

Signature Deanna Vilcheck	Area Construction Manager Deanna Vilcheck	Date 12/20/12

Engineer Approval by

Signature Deanna Vilcheck	Area Construction Manager Deanna Vilcheck	Date 12/20/12

We the undersigned contractor, have given careful consideration to the change proposed and agree, if this proposal is approved, that we will provide all equipment, furnish the materials, except as may otherwise be noted above, and perform all services necessary for the work above specified, and will accept as full payment therefor the prices shown above.

NOTE: If you, the contractor, do not sign acceptance of this order, your attention is directed to the requirements of the specifications as to proceeding with the ordered work and filing a written protest within the time therein specified.

Contractor Acceptance by

Signature Not Required	(Print name and title)	Date

STATE OF CALIFORNIA - DEPARTMENT OF TRANSPORTATION

CONTRACT CHANGE ORDER MEMORANDUM

TO: Deanna Vilcheck, ACM / DN	FILE: E.A. 04 - 0120S4
	CO-RTE-PM SF-80-12.7/13.2
FROM: William Howe, Senior R.E.	FED. NO. NO FED AID
CCO#: 99 SUPPLEMENT#: 2 Category Code: CXXX	CONTINGENCY BALANCE (incl. this change) $36,308,863.15
COST: $250,000.00 INCREASE ☑ DECREASE ☐	HEADQUARTERS APPROVAL REQUIRED? ☑ YES ☐ NO
SUPPLEMENTAL FUNDS PROVIDED: $0.00	IS THIS REQUEST IN ACCORDANCE WITH ENVIRONMENTAL DOCUMENTS? ☑ YES ☐ NO
CCO DESCRIPTION: additional funds	**PROJECT DESCRIPTION:** YBITS-1 (Yerba Buena Island Transition Structures)

Original Contract Time:	Time Adj. This Change:	Previously Approved CCO Time Adjustments:	Percentage Time Adjusted: (including this change)	Total # of Unreconciled Deferred Time CCO(s): (including this change)
1390 Day(s)	0 Day(s)	0 Day(s)	0 %	0

THIS CHANGE ORDER PROVIDES FOR:

The lease of a material storage site adjacent to the project.

This project, the Yerba Buena Island Transition Structure (YBITS), provides for the construction of two bridges which will connect eastbound and westbound traffic on the new east span of the San Francisco Oakland Bay Bridge (SFOBB) to the existing Yerba Buena Island (YBI) tunnel. The structures are comprised of concrete box girder bridges each approximately 50 meters high and 450 meters in length.

The western third of the jobsite is encompassed by a steep sandy slope, the middle third has the primary and secondary access roads to the adjacent U.S. Coast Guard (USCG) base running through it and the eastern third is on a slope and is a shared area with the abutting Self-Anchored Suspension (SAS) contract.

The Toll Bridge Program Oversight Committee (TBPOC) has established a goal of the Seismic Safety Opening (SSO) of the new SFOBB east span by 2013. As part of this goal, this project has issued Change Order No. 72, Supplement No. 0 and Nos. 1, 2, 3, 4 and 5 to mitigate project delays and set milestones for the completion of the YBITS structure consistent with the SSO schedule. Since CCO 99 S1 was issued, additional CCO's 85 and 89 have been or are being issued. These change orders have resulted in increased labor forces and equipment along with working extended and double shifts on this project, which has created increased disruptions to both the USCG station's access through the jobsite and to the abutting SAS contract.

In order to mitigate these disruptions, this change order provides for the Contractor to continue to lease a parcel of land adjacent to the project site in order to store project materials, which would otherwise have to be stored on the jobsite. The storage area will reduce the congestion within the project site.

The parcel provides approximately 3 acres of storage area and is now anticipated to be leased through the January, 2013. The quoted monthly lease price has been determined to be in line with typical leased properties in the area. In addition to the cost of leasing the parcel, the change order shall provide for the Contractor to secure and power the storage site and pay for any double handling of the materials being stored at the site as determined by the Engineer.

The work shall be performed as Extra Work at Force Account at an estimated cost of $250,000.00 and shall be financed from the contract's contingency funds. An updated cost analysis is on file. Total cost for this change order is $950,000.00.

No adjustment of contract time is warranted as the work will not affect the controlling operation.

Maintenance concurrence is not required as this change order will not affect any permanent roadway features.

ADA Notice: For individuals with sensory disabilities, this document is available in alternate formats. For information call: (916) 654-6410 or TDD (916) 654-3880 or write Records and Forms Management, 1120 N Street, MS-89, Sacramento, CA 95814.

CONCURRED BY:		
Construction Engineer:	William Howe	Date 12-19-12
Bridge Engineer:	Mehran Ardakanian	Date
Project Engineer:	Bob Zandipour, Design	Date 12-20-12
Project Manager:	Ken Terpstra	Date 12/20/12
FHWA Rep.:		Date
Environmental:		Date
Other (specify):		Date
Other (specify):		Date
District Prior Approval By:		Date
HQ (Issue Approve) By:	Larry Salhaney	Date 12-20-12
Resident Engineer's Signature:	William Howe	Date 12.19.12

ESTIMATE OF COST

	THIS REQUEST	TOTAL TO DATE
ITEMS	$0.00	$0.00
FORCE ACCOUNT	$250,000.00	$950,000.00
AGREED PRICE	$0.00	$0.00
ADJUSTMENT	$0.00	$0.00
TOTAL	$250,000.00	$950,000.00

FEDERAL PARTICIPATION

☐ PARTICIPATING ☐ PARTICIPATING IN PART ☑ NONE
☐ NON-PARTICIPATING (MAINTENANCE) ☐ NON-PARTICIPATING

FEDERAL SEGREGATION (if more than one Funding Source or P.I.P. type)
☐ CCO FUNDED PER CONTRACT ☐ CCO FUNDED AS FOLLOWS

FEDERAL FUNDING SOURCE	PERCENT

ADA Notice: For individuals with sensory disabilities, this document is available in alternate formats. For information call: (916) 654-6410 or TDD (916) 654-3880 or write Records and Forms Management, 1120 N Street, MS-89, Sacramento, CA 95814.

STATE OF CALIFORNIA - DEPARTMENT OF TRANSPORTATION

CONTRACT CHANGE ORDER

Change Requested by: Engineer

CCO: 100	Suppl. No. 0	Contract No. 04 - 0120S4	Road SF-80-12.7/13.2	FED. AID LOC.: NO FED AID

To: M C M CONSTRUCTION INC

You are directed to make the following changes from the plans and specifications or do the following described work not included in the plans and specifications for this contract. ***NOTE: This change order is not effective until approved by the Engineer.***

Description of work to be done, estimate of quantities and prices to be paid. (Segregate between additional work at contract price, agreed price and force account.) Unless otherwise stated, rates for rental of equipment cover only such time as equipment is actually used and no allowance will be made for idle time. This last percentage shown is the net accumulated increase or decrease from the original quantity in the Engineer's Estimate.

Incorporate the revisions to the Hinge K closure details and the Hinge KE and KW expansion joint details of the Yerba Buena Island Transition Structure (Br. No. 34-0006 L/R) into the Contract as shown on Sheets No. 3 through 15 of this change order (Contract Plan Sheets 679R1, 680R1, 681R1, 697R2, 698R2, 699R2, 700R2, 701R2, 702R2, 703R2, 704R2, 705R2 and 705AS).

Estimate of Decrease in Contract Item at Contract Price:

Item No. 106: SEISMIC JOINT (HINGE KW)
-1 LS (-100.00%) @$250,000.00 /LS = -$250,000.00 (-100.00%)

Item No. 109: SEISMIC JOINT (HINGE KE)
-1 LS (-100.00%) @$250,000.00 /LS = -$250,000.00 (-100.00%)

Total cost for Decrease in Contract Item.....($500,000.00)

In accordance with Section 4-1.03B(3), "Eliminated Items," of the Standard Specifications, the adjustment due to the elimination of Item No.106 " Seismic Joint (Hinge KW)" and Item No. 109 "Seismic Joint(Hinge KE)" is zero.

Extra Work at Lump Sum:

Provide compensation to the Contractor for all costs associated with furnishing the Hinge KE and KW expansion joints as specified under this change order.

For these costs, the Contractor shall be compensated an agreed lump sum of $2,267,613.00 which constitutes full and final compensation, including all markups, for furnishing the expansion joints as modified by this change order.

Compensation provided under this change order includes all costs associated with the fabrication of the Hinge KE and KW expansion joints including the deck plates, support plates, Trelleborg Transflex 2400 (including support bars and all connection hardware), channel assemblies and neoprene sheets and pads including all appurtenances associated with these items except as excluded herein. Compensation also includes the transportation of the joints to the project site.

Any costs pertaining to the installation and jobsite storage of the expansion joints shall be deferred and shall be provided under a supplemental change order.

The cost of furnishing the elastomeric concrete, galvanized steel gutters and anchor bolts, polyethylene foam or glazed open cell backer rod, silicone seal, fast setting hydraulic cement concrete and self consolidating concrete shall be deferred and shall be provided under a supplemental change order.

Any adjustment of compensation concerning changes to the Hinge K closure reinforcing steel and mechanical couplers shall be deferred and shall be provided under a supplemental change order.

Any adjustment of compensation or contract item quantity adjustment concerning Contract Bid Item #149 (CONCRETE BARRIER (TYPE 732 MODIFIED) and #194 (MODIFY CONCRETE BARRIER TYPE 732 (MOD)) shall be defferred and shall be provided under supplemental change order.

Cost of Extra Work at Lump Sum $2,267,613.00

STATE OF CALIFORNIA - DEPARTMENT OF TRANSPORTATION

CONTRACT CHANGE ORDER

Change Requested by: Engineer

CCO 100	Suppl. No. 0	Contract No. 04 - 0120S4	Road SF-80-12.7/13.2	FED. AID LOC.: NO FED AID

04-16-2011

Estimated Cost: Increase ☑ Decrease ☐ $1,767,613.00

By reason of this order the time of completion will be adjusted as follows: Deferred

Submitted by		
Signature	Resident Engineer William Howe, Senior R.E.	Date 9/14/11
Approval Recommended by		
Signature	Construction Manager Mike Forner	Date 9-15-11
Engineer Approval by		
Signature	Construction Manager Mike Forner	Date 10/11/11

We the undersigned contractor, have given careful consideration to the change proposed and agree, if this proposal is approved, that we will provide all equipment, furnish the materials, except as may otherwise be noted above, and perform all services necessary for the work above specified, and will accept as full payment therefor the prices shown above.

NOTE: If you, the contractor, do not sign acceptance of this order, your attention is directed to the requirements of the specifications as to proceeding with the ordered work and filing a written protest within the time therein specified.

Contractor Acceptance by		
Signature	(Print name and title) JAMES A. CARTER, PRESIDENT	Date 10/4/11

DIST.	COUNTY	ROUTE	KILOMETER POST TOTAL PROJECT	SHEET NO.	TOTAL SHEETS
04	SF	80	12.7/13.2	679R1	806

REGISTERED ENGINEER - CIVIL

6-23-08

PLANS APPROVAL DATE

The State of California or its officers or agents shall not be responsible for the accuracy or completeness of electronic copies of this plan sheet.

A.L. ELY
No. 18880
Exp. 6-30-11
CIVIL
STATE OF CALIFORNIA

T.Y. LIN / MOFFATT & NICHOL
TWO HARRISON STREET
SAN FRANCISCO, CA 94105

Caltrans now has a web site! To get to the web site, go to http://www.dot.ca.gov

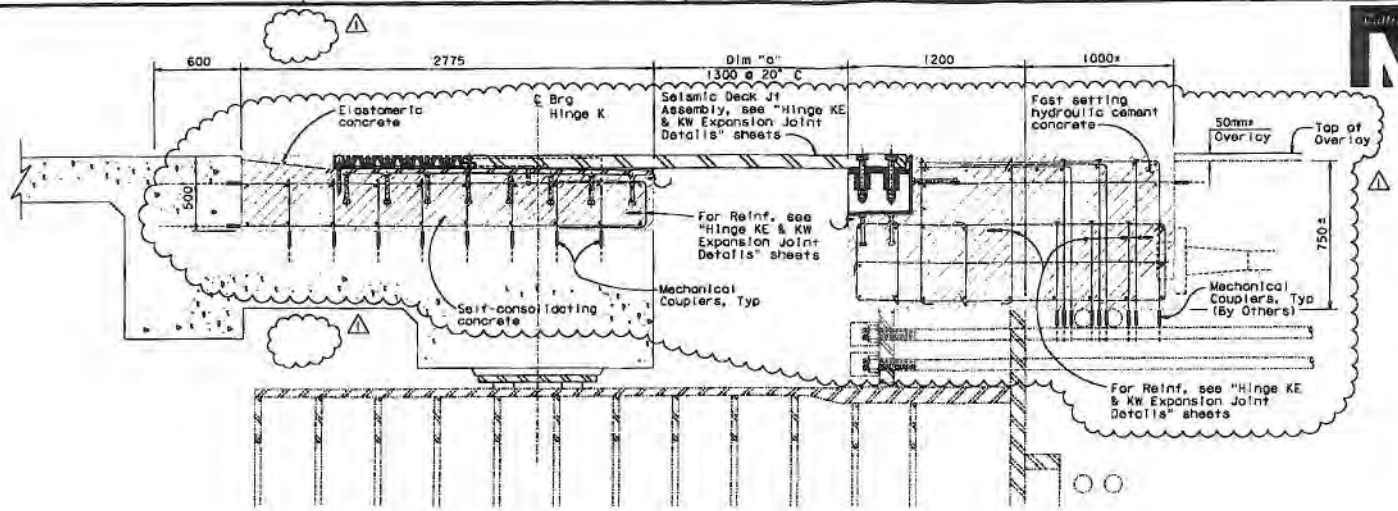

TYPICAL SECTION AT EXPANSION JOINT

1:15

Expansion Joint Information Movement Rating (MR): 280 mm	
Air Temperature (T)	Dimension "a" (mm)
5° C	1350
10° C	1333
15° C	1317
20° C	1300
25° C	1284
30° C	1267
35° C	1251

Indicates concrete placed when deck joint installed

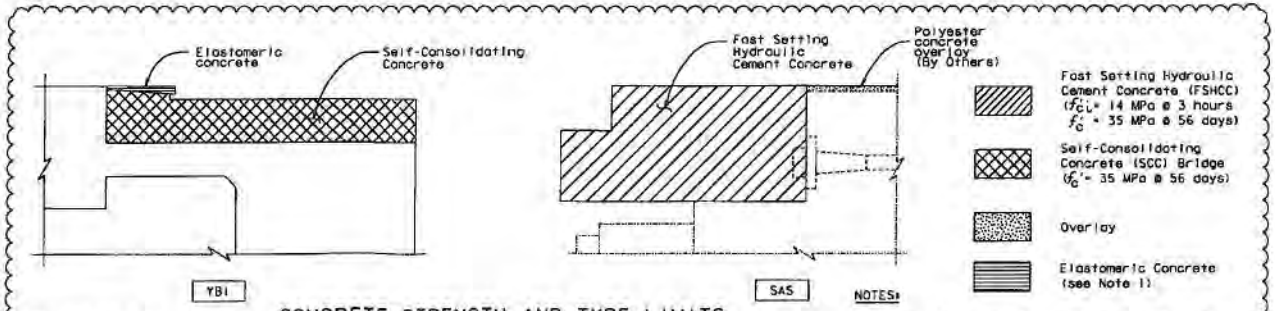

CONCRETE STRENGTH AND TYPE LIMITS

NOTES:

1. At the Contractor's option, Watson Bowman's WaboCrete II Elastomeric Concrete may be used, subject to review and approval of the Engineer.

HINGE K EXPANSION JOINT DETAILS

March 25, 2008

04-012054
CONTRACT CHANGE ORDER NO. 100 SO
SHEET 3 OF 15

FOR REVISION △1 ONLY

REGISTERED PROFESSIONAL ENGINEER
Marwan N. Nader
No. C 054426
Exp. 12/31/11
CIVIL
STATE OF CALIFORNIA

DESIGN OVERSIGHT
JASON WOOK, RICHARD CHAN, JUAN F. CARRIO

HASAN EL-NATUR
SIGN OFF DATE

REQUESTS FOR INFORMATION NOT ADDRESSED IN THIS CCO REMAIN IN FORCE

MARK	DATE	DESCRIPTIONS	BY	CH'D	CCO#
△1	8/8/11	SEISMIC JOINT MODIFICATIONS HINGE K	CR	MN	

REVISIONS

DESIGN	BY Lee	CHECKED Wang	
DETAILS	BY von Ryn/Zucchi/Wal	CHECKED Jain	
QUANTITIES	BY Liao	CHECKED L. Nicol	

ORIGINAL SCALE IN MILLIMETERS FOR REDUCED PLANS 0 10 20 30 40 50 60 70 80 90 100

PREPARED FOR THE STATE OF CALIFORNIA DEPARTMENT OF TRANSPORTATION

ALL DIMENSIONS ARE IN MILLIMETERS UNLESS OTHERWISE SHOWN

Jai Birdy
PROJECT ENGINEER

BRIDGE NO. 34-0006L/R
KILOMETER POST 12.8

CU 04251
EA 012051

DISREGARD PRINTS BEARING EARLIER REVISION DATES

REVISION DATES (PRELIM. OR FINAL ONLY)

SAN FRANCISCO OAKLAND BAY BRIDGE
EAST SPAN SEISMIC SAFETY PROJECT

YBI TRANSITION STRUCTURES

HINGE K CLOSURE DETAILS NO. 13

SHEET 130 OF 209

FILE -> I:\bb\04-012001\sae\contract plans and ccs\cco\hinge k cco - yoltahi-original 02-01-11\dgn\04-012061-34-006r1-h-hingedet20.dgn

TIME PLOTTED -> 09:14:23 DATE PLOTTED -> 03 FEB 2011

DIST.	COUNTY	ROUTE	KILOMETER POST TOTAL PROJECT	SHEET NO.	TOTAL SHEETS
04	SF	80	12.7/13.2	680R1	806

REGISTERED ENGINEER - CIVIL
6-23-08
PLANS APPROVAL DATE
The State of California or its officers or agents shall not be responsible for the accuracy or completeness of electronic copies of this plan sheet.

T.Y. LIN / MOFFATT & NICHOL
TWO HARRISON STREET
SAN FRANCISCO, CA 94105

Caltrans now has a web site! To get to the web site, go to: http://www.dot.ca.gov

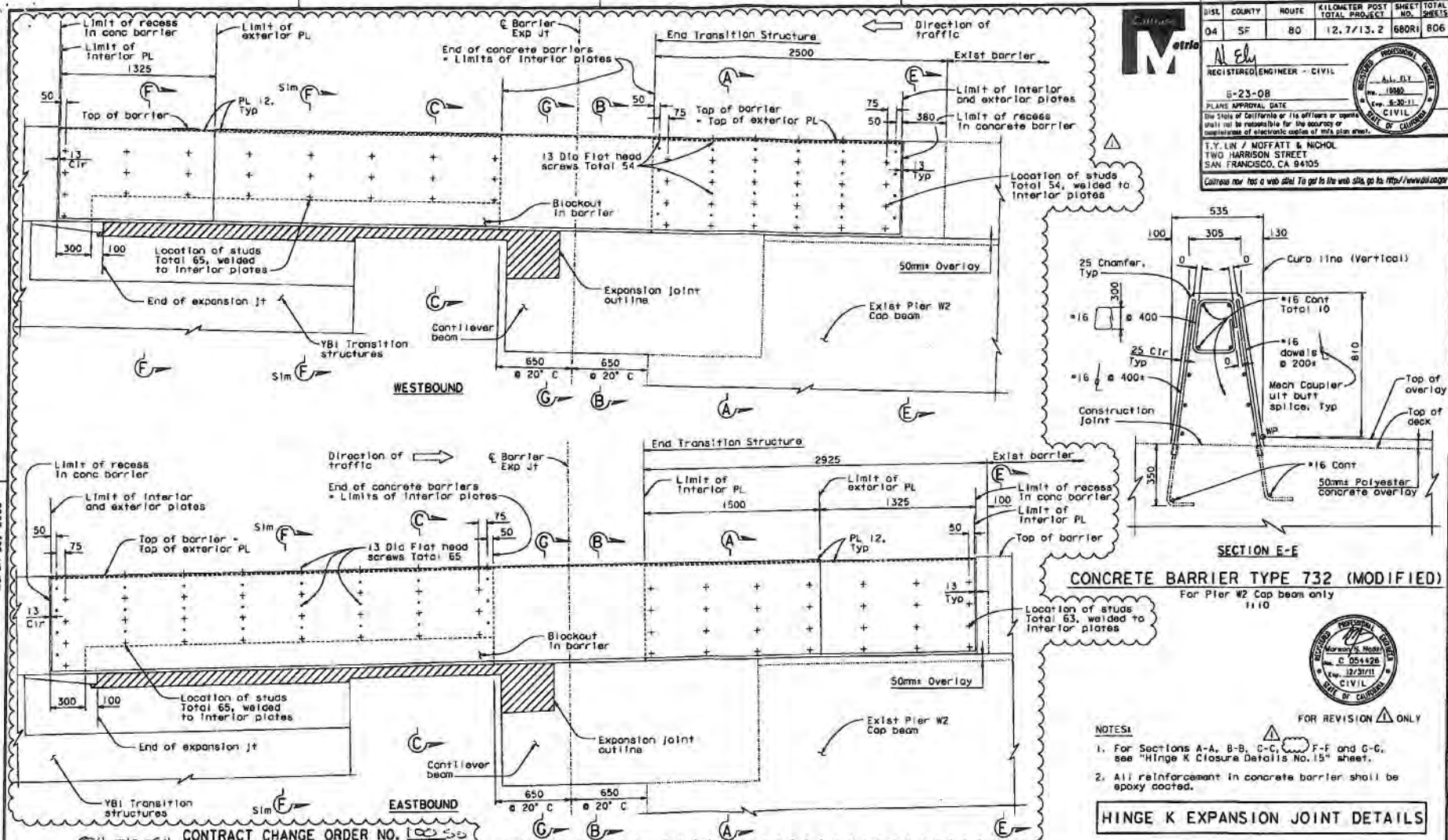

FOR REVISION ⚠ ONLY

NOTES:

1. For Sections A-A, B-B, C-C, F-F and G-G, see "Hinge K Closure Details No. 15" sheet.
2. All reinforcement in concrete barrier shall be epoxy coated.

HINGE K EXPANSION JOINT DETAILS

04-012054 CONTRACT CHANGE ORDER NO. 100 SS
SHEET 4 OF 15

REQUESTS FOR INFORMATION NOT ADDRESSED IN THIS CCO REMAIN IN FORCE

MARK	DATE	DESCRIPTIONS	BY	CH'D	CCO#
⚠	02/01/11	SEISMIC JOINT MODIFICATIONS HINGE K	CR	MN	

REVISIONS

DESIGN OVERSIGHT: JOHN BOOE, BERNARD CHAN, JUAN F. CARRIO
DESIGN OFF DATE
Rev. Date: 8-13-08

DESIGN BY LOB; DETAILS BY van Ryn/Zuccki/Mol; QUANTITIES BY Lloa; CHECKED Nang, John, E. Nichol

PREPARED FOR THE STATE OF CALIFORNIA DEPARTMENT OF TRANSPORTATION

Jai Birdy
PROJECT ENGINEER

BRIDGE NO. 34-0006L/R
KILOMETER POST 12.8

SAN FRANCISCO OAKLAND BAY BRIDGE
EAST SPAN SEISMIC SAFETY PROJECT

YBI TRANSITION STRUCTURES
HINGE K CLOSURE DETAILS NO. 14

CU 04251
EA 012051

DISCARD PRINTS BEARING EARLIER REVISION DATES

REVISION DATES UNCLASSIFIED STUDY ONLY: 10/08 10/08 10/08 10/08 10/08 10/08 10/08 10/08 10/08 10/08

SHEET 131 OF 209

FILE => I:\bb\04-012001\aas\contract plans and cco\cco\hinge k cco - ybitts\1-original 02-01-11\dgn\04-012051-34-0006r1-n-hingeck21.dgn

March 25, 2008

DATE PLOTTED => 03 FEB 2011 TIME PLOTTED => 08:15:39

DIST.	COUNTY	ROUTE	KILOMETER POST TOTAL PROJECT	SHEET NO.	TOTAL SHEETS
04	SF	80	12.7/13.2	681R1	806

REGISTERED ENGINEER - CIVIL

6-23-08

PLANS APPROVAL DATE

The State of California or its officers or agents shall not be responsible for the accuracy or completeness of electronic copies of this plan sheet.

T.Y. LIN / MOFFATT & NICHOL
TWO HARRISON STREET
SAN FRANCISCO, CA 94105

Caltrans now has a web site! To get to the web site, go to: http://www.dot.ca.gov

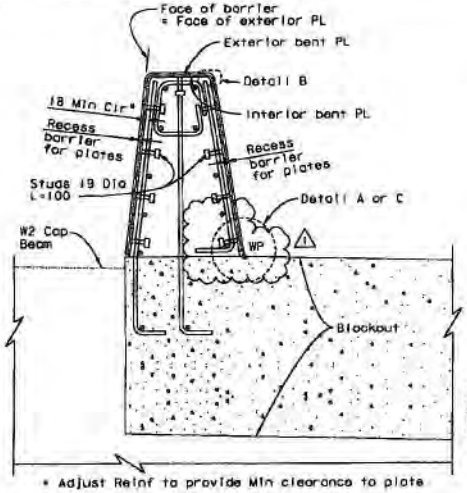

* Adjust Reinf to provide Min clearance to plate

SECTION A-A
1:10

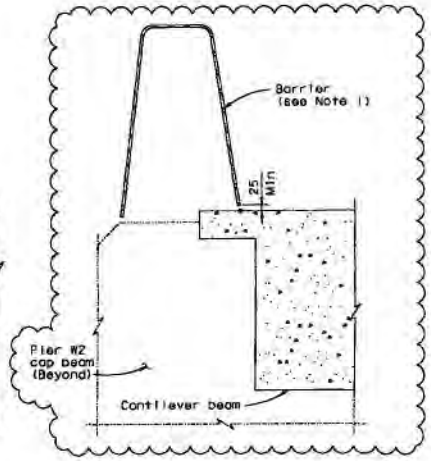

SECTION B-B
1:10

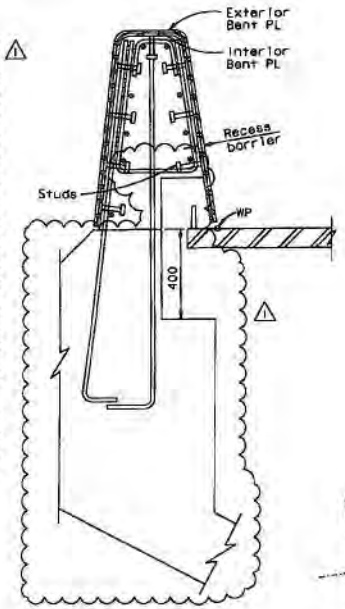

SECTION C-C
1:10

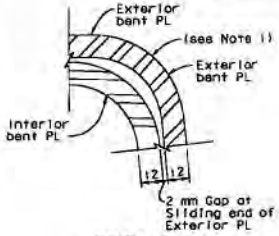

DETAIL B
NTS

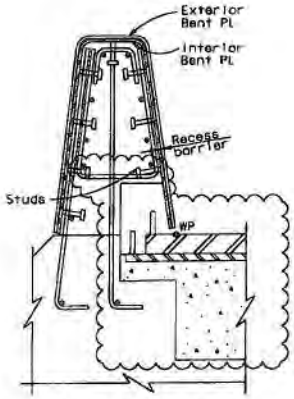

SECTION F-F
1:10

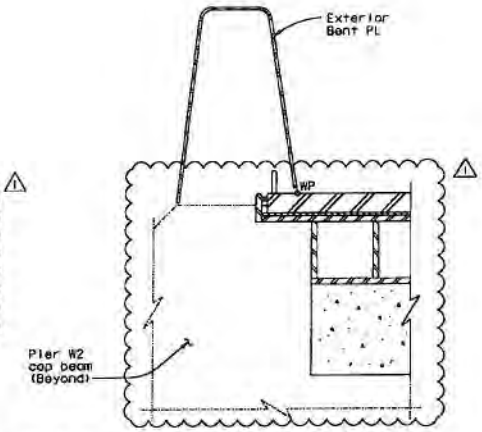

SECTION G-G
1:10

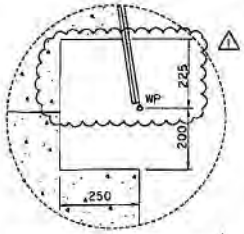

TYPICAL BARRIER BLOCKOUT
NTS

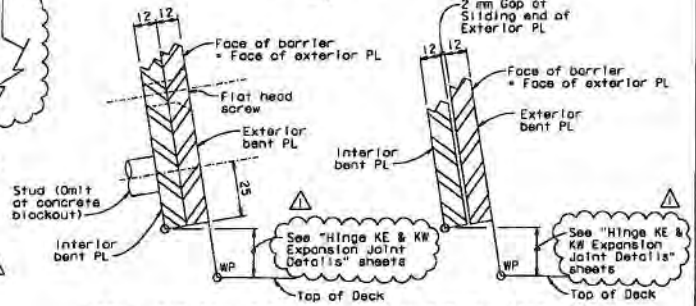

DETAIL TYPICAL AT FIXED END OF EXTERIOR PL
DETAIL A
NTS

DETAIL TYPICAL AT SLIDING END OF EXTERIOR PL
DETAIL C
NTS

NOTES:

1. Bend steel plates to conform to shape of concrete barrier.
2. Galvanize all metal hardware after fabrication.

FOR REVISION 1 ONLY

ALL DIMENSIONS ARE IN MILLIMETERS UNLESS OTHERWISE SHOWN

HINGE K EXPANSION JOINT DETAILS

04-012054
CONTRACT CHANGE ORDER NO. 100 SO
SHEET 5 OF 15

REGION OVERSIGHT
JOHN WOOD, BERNARD CHANG, JUAN F. CARPIO

HASAN EL-NATUR

SIGN OFF DATE

REQUESTS FOR INFORMATION NOT ADDRESSED IN THIS CCO REMAIN IN FORCE

MARK	DATE	DESCRIPTIONS	BY	CH'D	CCO#
1	02/01/11	SEISMIC JOINT MODIFICATIONS HINGE K	CR	MN	

REVISIONS

DESIGN BY Lee — CHECKED Wang
DETAILS BY Van Ryn/Zucchi/Wol — CHECKED Jain
QUANTITIES BY Liao — CHECKED E. Nichol

PREPARED FOR THE STATE OF CALIFORNIA DEPARTMENT OF TRANSPORTATION

J. Birdy
PROJECT ENGINEER

BRIDGE NO. 34-0006L/R
KILOMETER POST 12.8

SAN FRANCISCO OAKLAND BAY BRIDGE
EAST SPAN SEISMIC SAFETY PROJECT

YBI TRANSITION STRUCTURES
HINGE K CLOSURE DETAILS NO. 15

SHEET 132 OF 209

CU 04251
EA 012051

ORIGINAL SCALE IN MILLIMETERS FOR REDUCED PLANS 0 10 20 30 40 50 60 70 80 90 100

REVISION DATES (YYYY MM DD) SHEET ONLY
ENTIRE PLAN SHEET REVISION DATES

FILE => I:\bb\04-012051\sea\contract plans and sca\cco\hinge k cco - ybttsl-original 02-01-11\dgn\04-0126s1-34-0006r1-n-hinge22.dgn

March 3, 2008

DATE PLOTTED => 03 FEB 2011 TIME PLOTTED => 08:18:36

BRSL	COUNTY	ROUTE	KILOMETER POST TOTAL PROJECT	SHEET NO.	TOTAL SHEETS
04	SF	80	12.7/13.2	697R2	806

REGISTERED ENGINEER - CIVIL

02-01-11

PLANS APPROVAL DATE

The State of California or its officers or agents shall not be responsible for the accuracy or completeness of electronic copies of this plan sheet.

Maureen H. Noder No. C 054426 Exp. 12/31/11 CIVIL STATE OF CALIFORNIA

T.Y. LIN / MOFFATT & NICHOL
TWO HARRISON STREET
SAN FRANCISCO, CA 94105

California now has a web site! To get to the web site, go to: http://www.dot.ca.gov

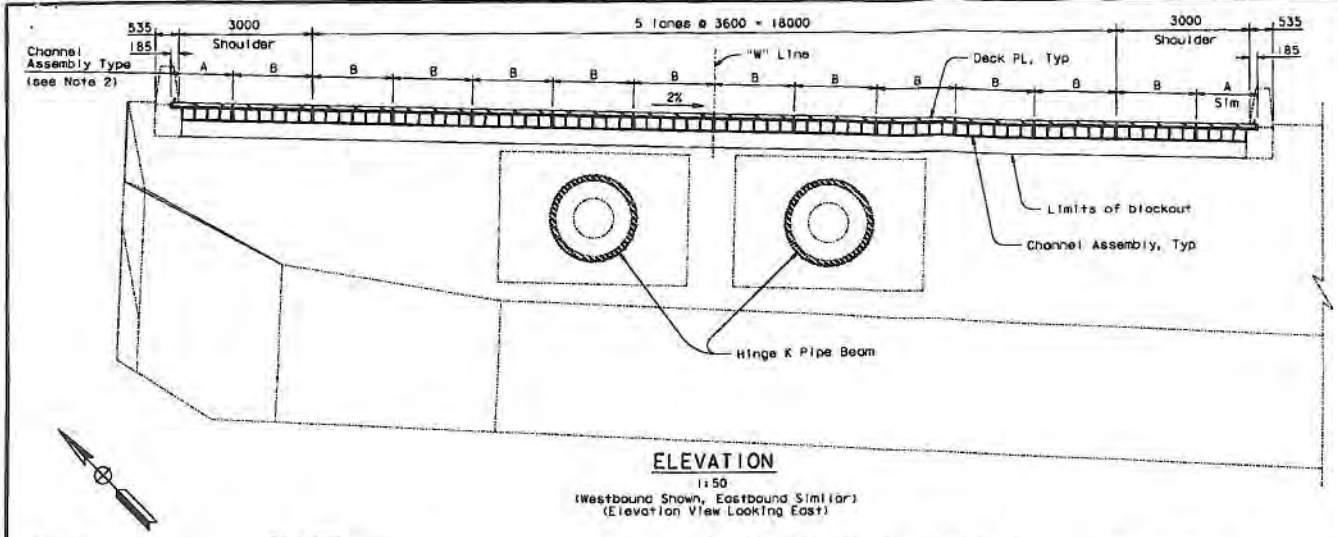

ELEVATION

1:50
(Westbound Shown, Eastbound Similar)
(Elevation View Looking East)

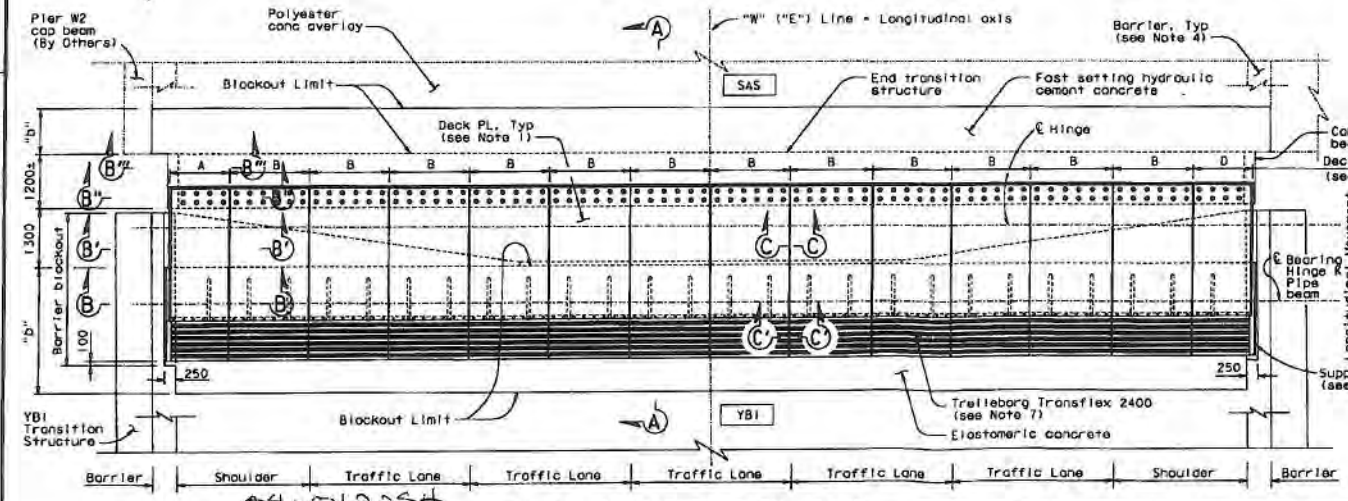

04-012054
CONTRACT CHANGE ORDER NO. 100.50 PLAN-EXPANSION JOINT
SHEET 6 OF 15

1:50
(Westbound Shown, Eastbound Similar)

THIS SHEET REPLACES SHEET NO. 697R1/806

NOTES:

1. For Deck Plates A, B and D, see "Hinge KE & KW Expansion Joint Details No.3" sheet.
2. Deck Plate A and D matches with Support Plate A and the Channel Assembly A (Module A). Deck Plate B matches with Support Plate B and the Channel Assembly B (Module B). For details, see "Hinge KE & KW Expansion Joint Details No.3" and "Hinge KE & KW Expansion Joint Details No.5" sheets.
3. One module "B" is placed per half traffic lane.
4. Portions of barriers are not shown for clarity. For barrier details at expansion joint, see "Hinge K Closure Details No.14" sheet.
5. For Section A-A, see "Hinge KE & KW Expansion Joint Details No.2" sheet.
6. For Sections B-B, B'-B', B''-B'', B'''-B''', C-C and C'-C', see "Hinge KE & KW Expansion Joint Details No.3" sheet.
7. The expansion joint shall be 1800 wide Transflex 2400 module with movement rating of 600. The joint between the Transflex modules shall be water tight.
8. For General Notes, see "General Notes" sheets.

DESIGN OVERSIGHT
JOHN GOOK, BERNARD CHAN, JUAN F. CARPIO
HASAN EL-BATUR
SIGN OFF DATE
Rev. Date: 3-10-99

REQUESTS FOR INFORMATION NOT ADDRESSED IN THIS CCO REMAIN IN FORCE

MARK	DATE	DESCRIPTIONS	BY	CH'D	CCO#
A	02/01/11	SEISMIC JOINT MODIFICATIONS HINGE K	CR	MN	

REVISIONS

DESIGN	BY C. Redfield	CHECKED	M. Noder
DETAILS	BY H. Patel	CHECKED	J. Duxbury
QUANTITIES	BY H. Patel	CHECKED	J. Duxbury

PREPARED FOR THE STATE OF CALIFORNIA DEPARTMENT OF TRANSPORTATION

ORIGINAL SCALE IN MILLIMETERS FOR REDUCED PLANS 0 10 20 30 40 50 60 70 80 90 100

ALL DIMENSIONS ARE IN MILLIMETERS UNLESS OTHERWISE SHOWN

Jai Birdy
PROJECT ENGINEER

CU 04251
EA 012051

BRIDGE NO. 34-0006 L/R
KILOMETER POST 12.8

DISCARD PRINTS BEARING EARLIER REVISION DATES

REVISION DATES (PRELIM MAY STAND ONLY)
02/01/11

SAN FRANCISCO OAKLAND BAY BRIDGE
EAST SPAN SEISMIC SAFETY PROJECT

YBI TRANSITION STRUCTURES

HINGE KE & KW EXPANSION JOINT DETAILS NO. 1

SHEET 148 OF 209

FILE => I:\bb\04-012051\sas\contract plans and cos\cco\hinge k cco - ybi trs\i-original 02-01-11\dgn\ak jab03.dgn

March 3, 2008

100 % PS&E

TIME PLOTTED => 09:11:15
DATE PLOTTED => 03 FEB 2011
USERNAME => GRWORD

DIST.	COUNTY	ROUTE	KILOMETER POST TOTAL PROJECT	SHEET NO.	TOTAL SHEETS
04	SF	80	12.7/13.2	698R2	806

REGISTERED ENGINEER - CIVIL

02-01-11

PLANS APPROVAL DATE

The State of California or its officers or agents shall not be responsible for the accuracy or completeness of electronic copies of this plan sheet.

REGISTERED PROFESSIONAL ENGINEER Myron N. Nader No. C 054426 Exp. 12/31/11 CIVIL STATE OF CALIFORNIA

T.Y. LIN / MOFFATT & NICHOL
TWO HARRISON STREET
SAN FRANCISCO, CA 94105

Caltrans now has a web site! To get to the web site, go to: http://www.dot.ca.gov

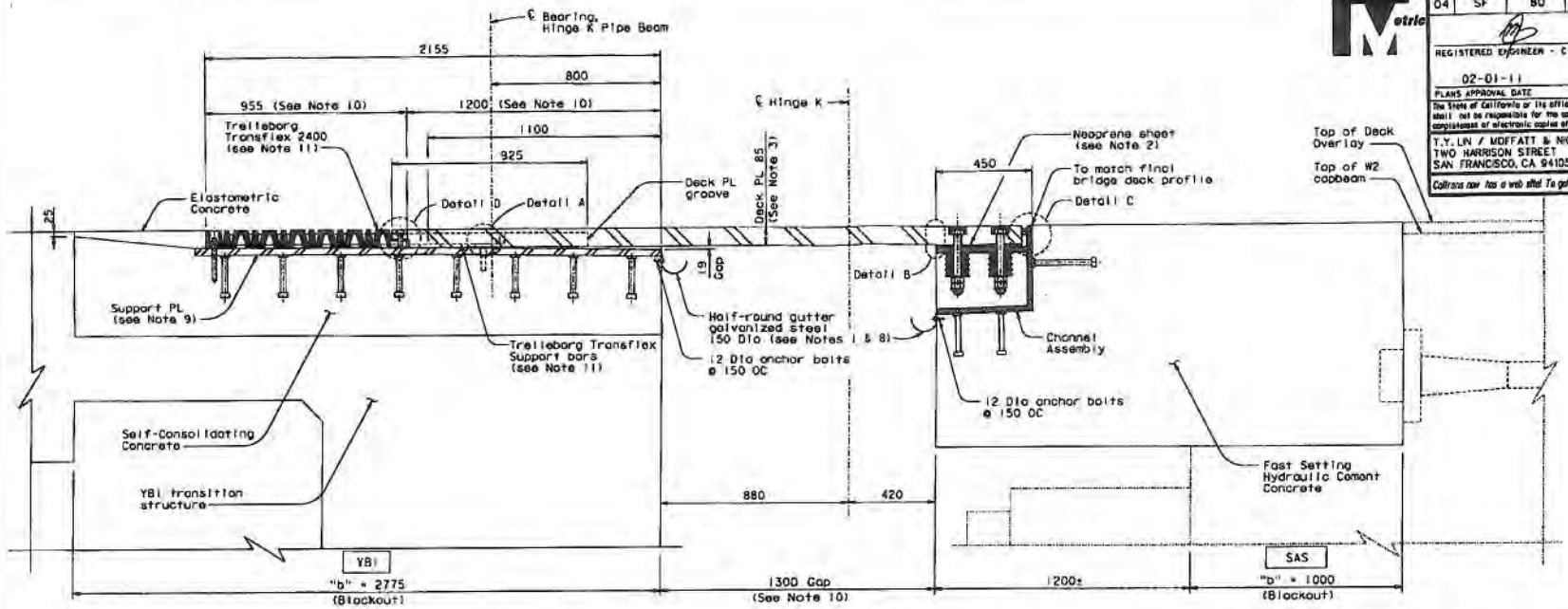

SECTION A-A
1:10

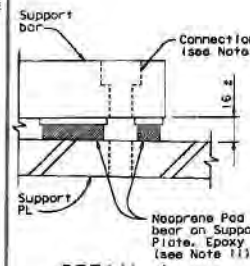

DETAIL A
1:2

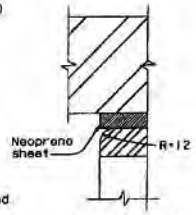

DETAIL B

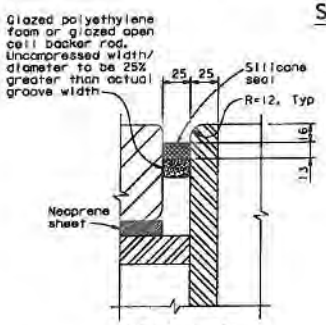

DETAIL C
1:2

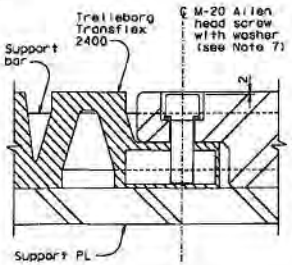

DETAIL D
1:2

NOTES:

1. Use caulking or sealant between gutter and concrete.
2. 40 mm holes in neoprene sheets shall be drilled or punched so that the neoprene is not distorted at the time of installation. See "Hinge KE & KW Expansion Joint Details No.6" sheet.
3. For deck plate layout and details, see "Hinge KE & KW Expansion Joint Details No.1" sheet. For deck plate friction groove pattern, see "Hinge KE & KW Expansion Joint Details No.4" sheet.
4. For mild steel reinforcement in blockout areas, see "Hinge KE & KW Expansion Joint Details No.8" sheet.
5. For channel assembly details, see "Hinge KE & KW Expansion Joint Details No.5" and "Hinge KE & KW Expansion Joint Details No.6" sheets.
6. Place deck plate, support plate and channel assembly so that full bearing is achieved between 1) deck plate and channel assembly and 11) deck plate and support plates as shown in Section A-A.
7. M-20 Allen head screw shall be stainless steel.
8. Gutter shall be placed 75 mm minimum clear from the deck plate and shall be parallel to deck cross slope.
9. For support plate details see "Hinge KE & KW Expansion Joint Details No.7" sheet.
10. Values are for mean temperature of 20°C.
11. All the connection hardware shall be supplied with Trelleborg Transflex 2400. The connection of Transflex 2400 and that of the support bar to the blockout concrete shall be drill and bond dowels.

04-012054 12
CONTRACT CHANGE ORDER NO. 100 SC
SHEET 7 OF 15

THIS SHEET REPLACES SHEET NO. 698R1/806

REQUESTS FOR INFORMATION NOT ADDRESSED IN THIS CCO REMAIN IN FORCE

ALL DIMENSIONS ARE IN MILLIMETERS UNLESS OTHERWISE SHOWN

DESIGN OVERSIGHT
JOHN GOEL, BERNARD CHAN, JUAN F. CARRIO
HASAN EL-MATUR
SIGN OFF DATE

MARK	DATE	DESCRIPTIONS	BY	CH'D	CCO#
A	02/01/11	SEISMIC JOINT MODIFICATIONS HINGE K	CR	MN	

REVISIONS

DESIGN	C. Redfield	CHECKED	M. Nader
DETAILS	H. Patel	CHECKED	J. Duxbury
QUANTITIES	H. Patel	CHECKED	J. Duxbury

PREPARED FOR THE STATE OF CALIFORNIA DEPARTMENT OF TRANSPORTATION

Jai Birdy
PROJECT ENGINEER

BRIDGE NO. 34-0006 L/R
KILOMETER POST 12.8

CU 04251
EA 012051

SAN FRANCISCO OAKLAND BAY BRIDGE
EAST SPAN SEISMIC SAFETY PROJECT

YBI TRANSITION STRUCTURES
HINGE KE & KW EXPANSION JOINT DETAILS NO.2

ENGINEERING PRINTED DRAWING SHEET SIZE REVISION DATE

REVISION DATES (PRELIMINARY STAGE ONLY)

SHEET 149 OF 209

ORIGINAL SCALE IN MILLIMETERS FOR REDUCED PLANS 0 10 20 30 40 50 60 70 80 90 100

FILE => L:\SB\04-012001\545\Contract Plans and CCO\CCO\Hinge K CCO - YBITS\11-Original 02-01-11\DGN\ok]s004.dgn

March 3, 2008

100 % PS&E

DATE PLOTTED => 01 FEB 2011 TIME PLOTTED => 09:02:46

USERNAME => DGN\ok]s004

DIST.	COUNTY	ROUTE	KILOMETER POST TOTAL PROJECT	SHEET NO.	TOTAL SHEETS
04	SF	80	12.7/13.2	699R2	806

REGISTERED ENGINEER - CIVIL
02-01-11
PLANS APPROVAL DATE
The State of California or its officers or agents shall not be responsible for the accuracy or completeness of electronic copies of this plan sheet.

Moreen N. Noder
No. C 054426
Exp. 12/31/11
CIVIL
STATE OF CALIFORNIA

T.Y. LIN / MOFFATT & NICHOL
TWO HARRISON STREET
SAN FRANCISCO, CA 94105

Caltrans now has a web site! To get to the web site, go to: http://www.dot.ca.gov

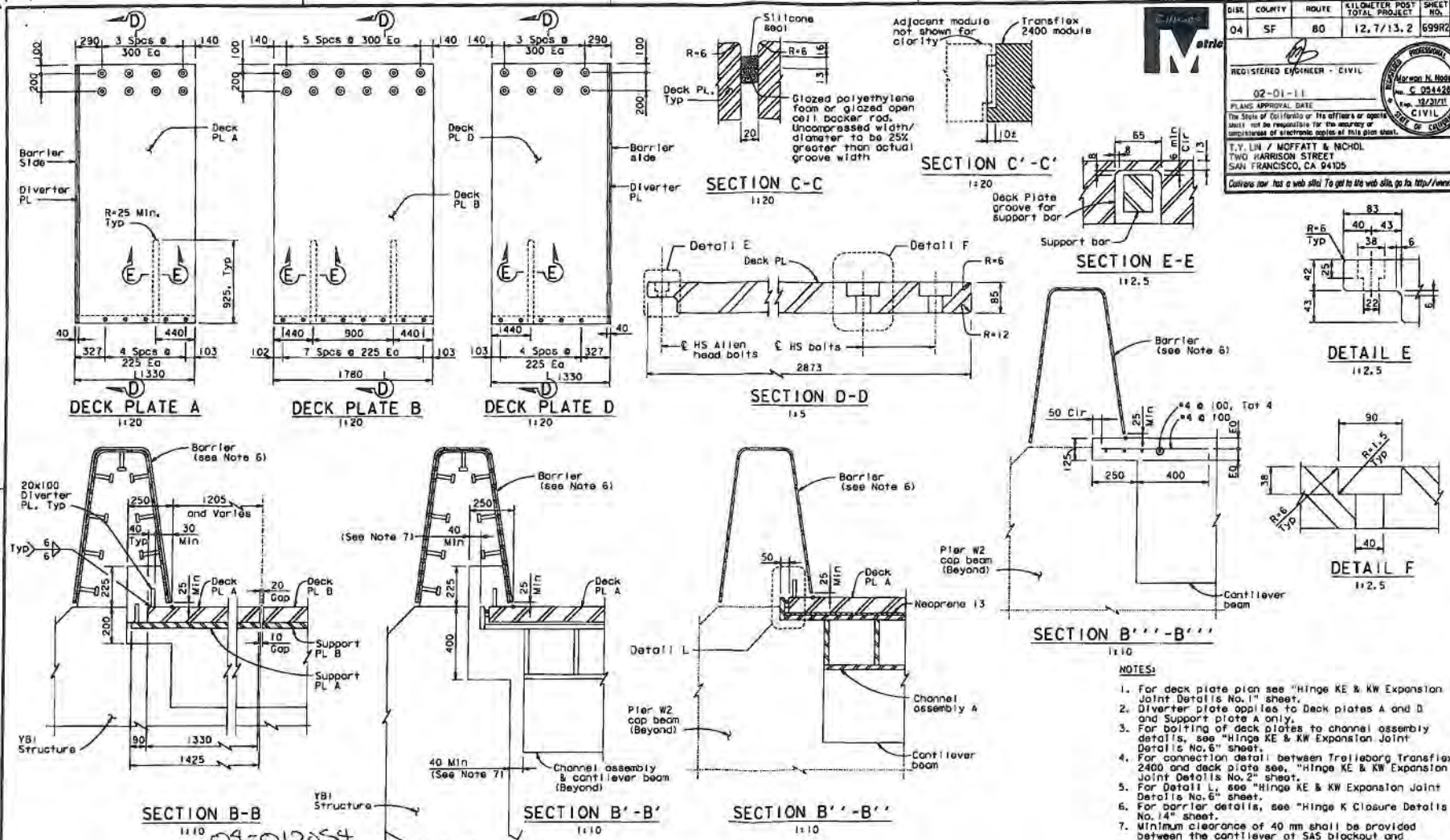

NOTES:

1. For deck plate plan see "Hinge KE & KW Expansion Joint Details No.1" sheet.
2. Diverter plate applies to Deck plates A and D and Support plate A only.
3. For bolting of deck plates to channel assembly details, see "Hinge KE & KW Expansion Joint Details No.6" sheet.
4. For connection detail between Trelleborg Transflex 2400 and deck plate see, "Hinge KE & KW Expansion Joint Details No.2" sheet.
5. For Detail L, see "Hinge KE & KW Expansion Joint Details No.6" sheet.
6. For barrier details, see "Hinge K Closure Details No.14" sheet.
7. Minimum clearance of 40 mm shall be provided between the cantilever at SAS blockout and interior face of YBI edge girder to ensure free seismic closing movement.

CONTRACT CHANGE ORDER NO. 04-012054 100 SO
SHEET 8 OF 15

THIS SHEET REPLACES SHEET NO. 699R1/806

ALL DIMENSIONS ARE IN MILLIMETERS UNLESS OTHERWISE SHOWN

DESIGN OVERSIGHT: JOHN MOOK, BERNARD CHAN, JUAN F. CHAPIO
HASAN EL-NATUR
SIGN OFF DATE
Rev. Date: 5-18-90

REQUESTS FOR INFORMATION NOT ADDRESSED IN THIS CCO REMAIN IN FORCE

MARK	DATE	DESCRIPTIONS	BY	CH'D	CCO#
2	02/01/11	SEISMIC JOINT MODIFICATIONS HINGE K	CR	MN	

REVISIONS

DESIGN	C. Redfield	CHECKED	M. Noder
DETAILS	H. Patel	CHECKED	J. Duxbury
QUANTITIES	H. Patel	CHECKED	J. Duxbury

PREPARED FOR THE STATE OF CALIFORNIA DEPARTMENT OF TRANSPORTATION

Jai Birdy
PROJECT ENGINEER

BRIDGE NO. 34-0005 L/R
KILOMETER POST 12.8

SAN FRANCISCO OAKLAND BAY BRIDGE
EAST SPAN SEISMIC SAFETY PROJECT

YBI TRANSITION STRUCTURES

HINGE KE & KW EXPANSION JOINT DETAILS NO.3

ORIGINAL SCALE IN MILLIMETERS FOR REDUCED PLANS

CU 04251
EA 012051

SHEET 150 OF 209

FILE => I:\bb\04-012001\sas\contract plans and sas\sas\hinge k sas - ybitsk1-original 02-01-11\dgn\ak\sb05.dgn

USE VALUE => 3 DAYS DATE PLOTTED => 03 FEB 2011 TIME PLOTTED => 08:19:26

100 % PS&E

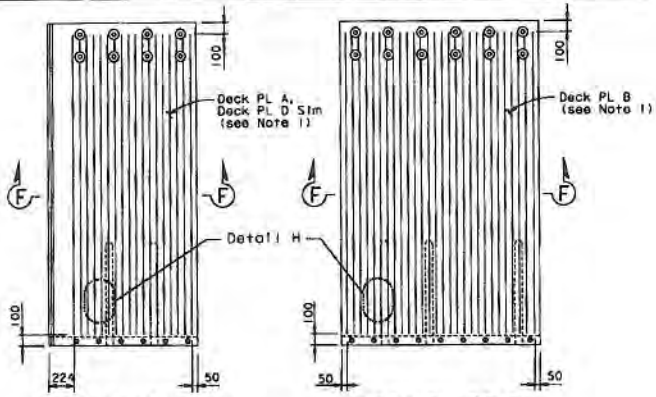

DECK PLATE A/D
(Deck PL A Shown, Deck PL D Similar)

DECK PLATE B

FRICTION PATTERN (See Note 2)
1:20

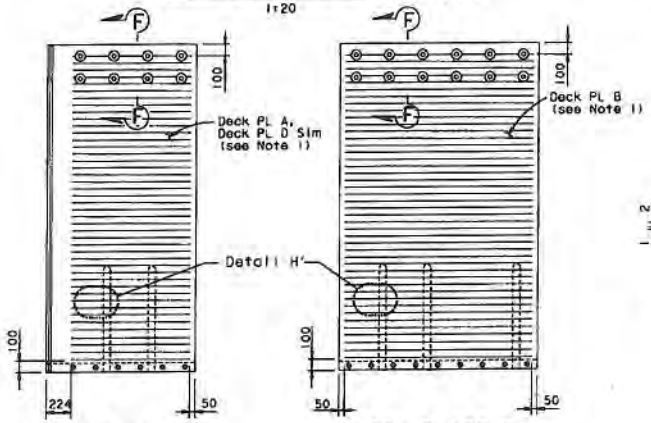

DECK PLATE A/D
(Deck PL A Shown, Deck PL D Similar)

DECK PLATE B

ALT FRICTION PATTERN (See Note 2)
1:20

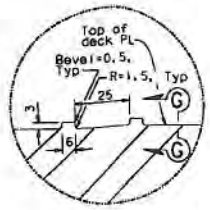

DETAIL G
1:1

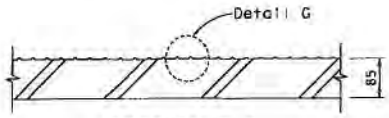

SECTION F-F
1:5

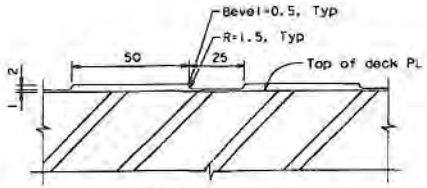

SECTION G-G
1:1

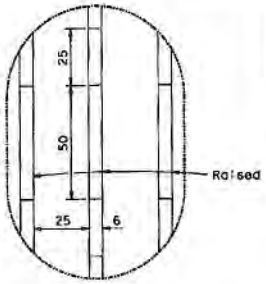

DETAIL H
1:1

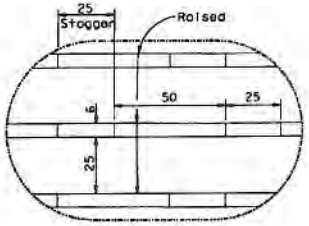

DETAIL H'
1:1

NOTES:

1. For Details not shown, see "Hinge KE & KW Expansion Joint Details No. 3" sheet.
2. Friction pattern type shall be selected as directed by the Engineer. Polymer/Aggregate Skid Coat (PASC) may be applied per Engineer's direction.

DIST	COUNTY	ROUTE	KILOMETER POST TOTAL PROJECT	SHEET NO	TOTAL SHEETS
04	SF	80	12.7/13.2	700R2	806

REGISTERED CIVIL ENGINEER DATE

02-01-11
PLANS APPROVAL DATE

REGISTERED PROFESSIONAL ENGINEER — Eurice C. Haggerty — No. 46920 — Exp. 6/30/11 — CIVIL — STATE OF CALIFORNIA

The State of California or its officers or agents shall not be responsible for the accuracy or completeness of electronic copies of this plan sheet.

Caltrans now has a web site! To get to the web site, go to http://www.dot.ca.gov

CONTRACT CHANGE ORDER NO. 04-019054 100 So
SHEET 9 OF 15

REQUESTS FOR INFORMATION NOT ADDRESSED IN THIS CCO REMAIN IN FORCE

THIS SHEET REPLACES SHEET NO. 700R1/806

MARK	DATE	DESCRIPTIONS	BY	CH'D	CCO#
2	02/01/11	SEISMIC JOINT MODIFICATIONS HINGE K	RM	AA	

REVISIONS

	BY	CHECKED
DESIGN	R MAGGENTI	A AKINSANYA
DETAILS	R MAGGENTI	A AKINSANYA
QUANTITIES	R MAGGENTI	A AKINSANYA

STATE OF CALIFORNIA
DEPARTMENT OF TRANSPORTATION

DIVISION OF ENGINEERING SERVICES
STRUCTURE DESIGN
SPECIAL DESIGNS BRANCH

CU 04251
EA 012051

BRIDGE NO. 34-0006 L/R
KILOMETER POST 12.8

STANDARD UNLESS DEBING EARLIER REVISION DATES

ORIGINAL SCALE IN MILLIMETERS FOR REDUCED PLANS 0 10 20 30 40 50 60 70 80 90 100

ALL DIMENSIONS ARE IN MILLIMETERS UNLESS OTHERWISE SHOWN

SAN FRANCISCO OAKLAND BAY BRIDGE
EAST SPAN SEISMIC SAFETY PROJECT

YBI TRANSITION STRUCTURES

SEISMIC JOINT (TYPE II)

HINGE KE & KW EXPANSION JOINT DETAILS NO. 4

ORIGINAL	REVISION DATES	SHEET	OF
		151	209

FILE => spec_des_br_proj/04-012051/200ts0/11\bb\04-012051\sos\contract plans and ccos\cco\hinge k cco - ybits11-original 02-01-11

DATE PLOTTED => 03 FEB 2011
TIME PLOTTED => 09:20:30

DIST.	COUNTY	ROUTE	KILOMETER POST TOTAL PROJECT	SHEET NO.	TOTAL SHEETS
04	SF	80	12.7/13.2	701R2	806

REGISTERED ENGINEER - CIVIL

02-01-11

PLANS APPROVAL DATE

The State of California or its officers or agents shall not be responsible for the accuracy or completeness of electronic copies of this plan sheet.

REGISTERED PROFESSIONAL ENGINEER Mansen N. Nader No. C 054428 Exp. 12/31/11 CIVIL STATE OF CALIFORNIA

T.Y. LIN / MOFFATT & NICHOL
TWO HARRISON STREET
SAN FRANCISCO, CA 94105

Caltrans now has a web site! To get to its web site, go to http://www.dot.ca.gov

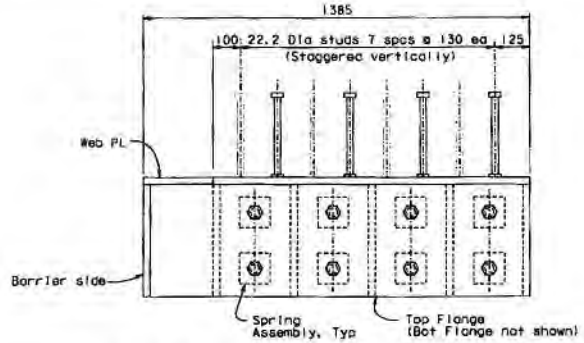

PLAN - BUILT UP CHANNEL ASSEMBLY "A"
NTS

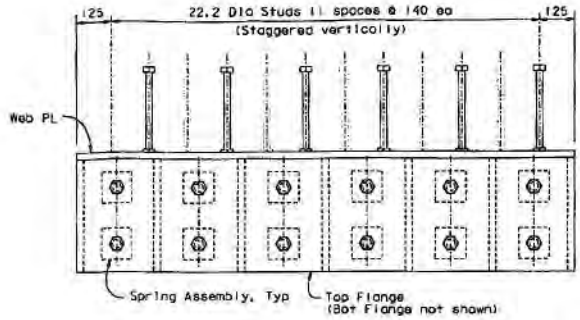

PLAN - BUILT UP CHANNEL ASSEMBLY "B"
NTS

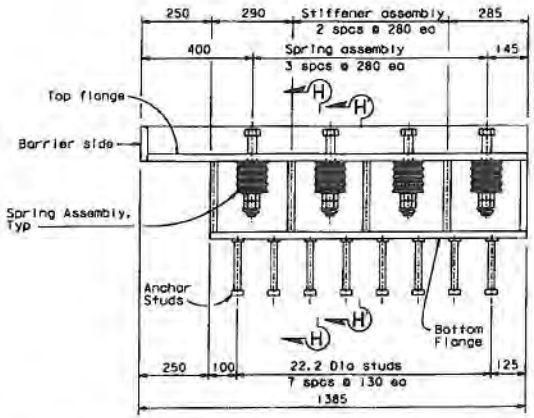

ELEVATION - BUILT UP CHANNEL ASSEMBLY "A"
NTS

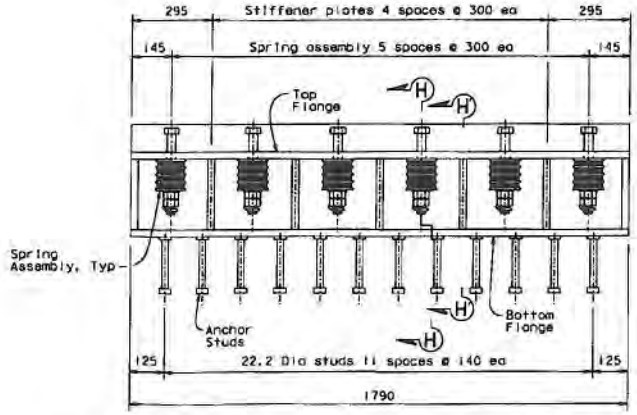

ELEVATION - BUILT UP CHANNEL ASSEMBLY "B"
NTS

NOTES:

1. For Sections H-H and H'-H', see "Hinge KE & KW Expansion Joint Details No. 6" sheet.

CONTRACT CHANGE ORDER NO. ____
SHEET 10 OF 15

REQUESTS FOR INFORMATION NOT ADDRESSED IN THIS CCO REMAIN IN FORCE

THIS SHEET REPLACES SHEET NO. 701R1/806

ALL DIMENSIONS ARE IN MILLIMETERS UNLESS OTHERWISE SHOWN

DESIGN OVERSIGHT
JOHN SOOK, BERNARD CHAN, JUAN T. CARPIO
HASAN EL-NATUR
SIGN OFF DATE
Rev. Date: 5-18-98

MARK	DATE	DESCRIPTIONS	BY	CH'D	CCO#
2	10/01/11	SEISMIC JOINT MODIFICATIONS HINGE K	CR	MN	

REVISIONS

DESIGN BY C. Redfield CHECKED M. Nader
DETAILS BY H. Patel CHECKED J. Duxbury
QUANTITIES BY H. Patel CHECKED J. Duxbury

PREPARED FOR THE STATE OF CALIFORNIA DEPARTMENT OF TRANSPORTATION

Jol Birdy
PROJECT ENGINEER

BRIDGE NO. 34-0006 L/R
KILOMETER POST 12.8

SAN FRANCISCO OAKLAND BAY BRIDGE
EAST SPAN SEISMIC SAFETY PROJECT

YBI TRANSITION STRUCTURES

HINGE KE & KW EXPANSION JOINT DETAILS NO. 5

ORIGINAL SCALE IN MILLIMETERS FOR REDUCED PLANS 0 10 20 30 40 50 60 70 80 90 100

CU 04251
EA 012051

DISREGARD PRINTS BEARING EARLIER REVISION DATES

REVISION DATES (PRELIM. OR WORK STAGE ONLY)

SHEET 752R2 OF 209

FILE => I:\bb\04-012001\eas\contract plans and cco\cco\hinge k cco - ybitsl-original 02-01-11\dgn\dkjsb07.dgn

March 3, 2008

100 % PS&E

USERNAME => bcrispo DATE PLOTTED => 03 FEB 2011 TIME PLOTTED => 08:21:06

DIST.	COUNTY	ROUTE	KILOMETER POST TOTAL PROJECT	SHEET NO.	TOTAL SHEETS
04	SF	80	12.7/13.2	702R2	806

REGISTERED ENGINEER - CIVIL

02-01-11

PLANS APPROVAL DATE

The State of California or its officers or agents shall not be responsible for the accuracy or completeness of electronic copies of this plan sheet.

REGISTERED PROFESSIONAL ENGINEER Morsen N. Nader No. C 054426 Exp. 12/31/11 CIVIL STATE OF CALIFORNIA

T.Y. LIN / MOFFATT & NICHOL
TWO HARRISON STREET
SAN FRANCISCO, CA 94105

California now has a web site! To get to its web site, go to: http://www.dot.ca.gov

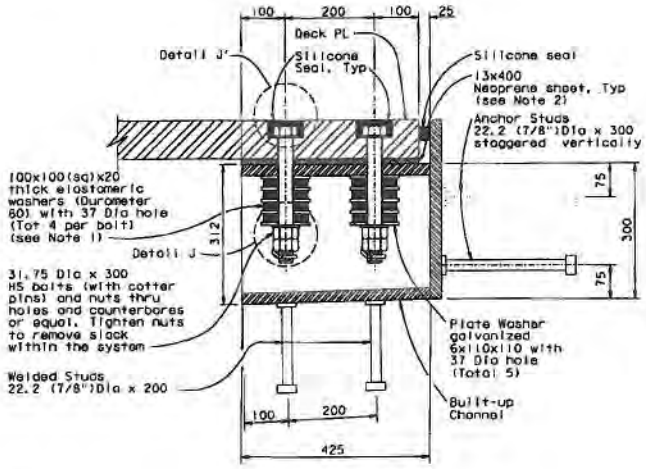

SECTION H-H
NTS

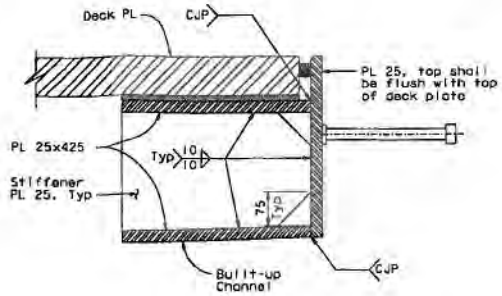

SECTION H'-H'
NTS

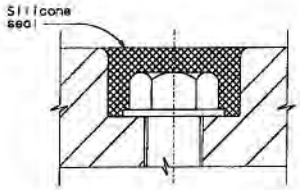

DETAIL J'
NTS

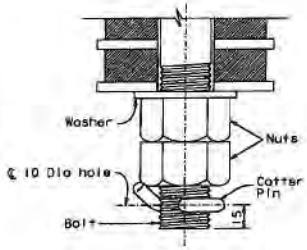

DETAIL J
NTS

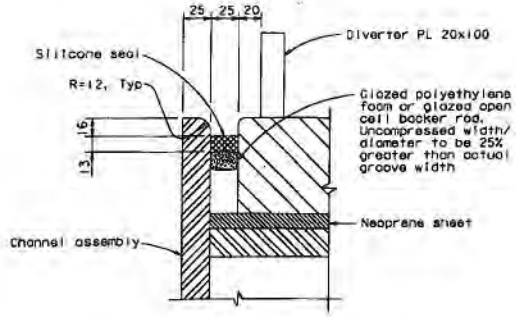

DETAIL L
NTS

NOTES:

1. Elastomeric washers shall be plain neoprene.
2. The length of the 13x400 mm neoprene sheet below the deck plate is 1360 mm and 1790 mm long for modules "A" and "B" respectively.

04-012054
CONTRACT CHANGE ORDER NO. 100 SO
SHEET 11 OF 15

REQUESTS FOR INFORMATION NOT ADDRESSED IN THIS CCO REMAIN IN FORCE

THIS SHEET REPLACES SHEET NO. 702R1/806

BRANCH CHIEF(S): ROHIN MODI, BERNARD CHAN, JUAN F. CARPIO
HASAN EL-HATUR
SIGN OFF DATE
Rev. Date: 5-15-98

MARK	DATE	DESCRIPTIONS	BY	CH'D	CCO#
2	02/01/11	SEISMIC JOINT MODIFICATIONS HINGE K	CR	MN	

REVISIONS

DESIGN	BY C. Redfield	CHECKED	M. Nader
DETAILS	BY H. Patel	CHECKED	J. Duxbury
QUANTITIES	BY H. Patel	CHECKED	J. Duxbury

ORIGINAL SCALE IN MILLIMETERS FOR REDUCED PLANS 0 10 20 30 40 50 60 70 80 90 100

PREPARED FOR THE STATE OF CALIFORNIA DEPARTMENT OF TRANSPORTATION

Jol Birdy
PROJECT ENGINEER

ALL DIMENSIONS ARE IN MILLIMETERS UNLESS OTHERWISE SHOWN

CU 04251
EA 012051

BRIDGE NO. 34-0006 L/R
KILOMETER POST 12.8

DISPLAYED PRINTS READING EARLIER REVISION DATES

SAN FRANCISCO OAKLAND BAY BRIDGE
EAST SPAN SEISMIC SAFETY PROJECT

YBI TRANSITION STRUCTURES

HINGE KE & KW EXPANSION JOINT DETAILS NO. 6

SHEET 153 OF 209

FILE => I:\bb\04-012001\sos\contract plans and coo\cco\hinge k cco - ybitsk1-original 02-01-11\dgn\ak1s008.dgn

March 3, 2008

100 % PSAE

USERNAME => srivers DATE PLOTTED => 09 FEB 2011 TIME PLOTTED => 09:21:37

DIST.	COUNTY	ROUTE	KILOMETER POST TOTAL PROJECT	SHEET NO.	TOTAL SHEETS
04	SF	80	12.7/13.2	703R2	806

REGISTERED ENGINEER - CIVIL
02-01-11
PLANS APPROVAL DATE
Mohsen N. Nader
No. C 054426
Exp. 12/31/11
CIVIL
STATE OF CALIFORNIA
REGISTERED PROFESSIONAL ENGINEER

The State of California or its officers or agents shall not be responsible for the accuracy or completeness of electronic copies of this plan sheet.

T.Y. LIN / MOFFATT & NICHOL
TWO HARRISON STREET
SAN FRANCISCO, CA 94105

California now has a web site! To get to the web site, go to http://www.dot.ca.gov/

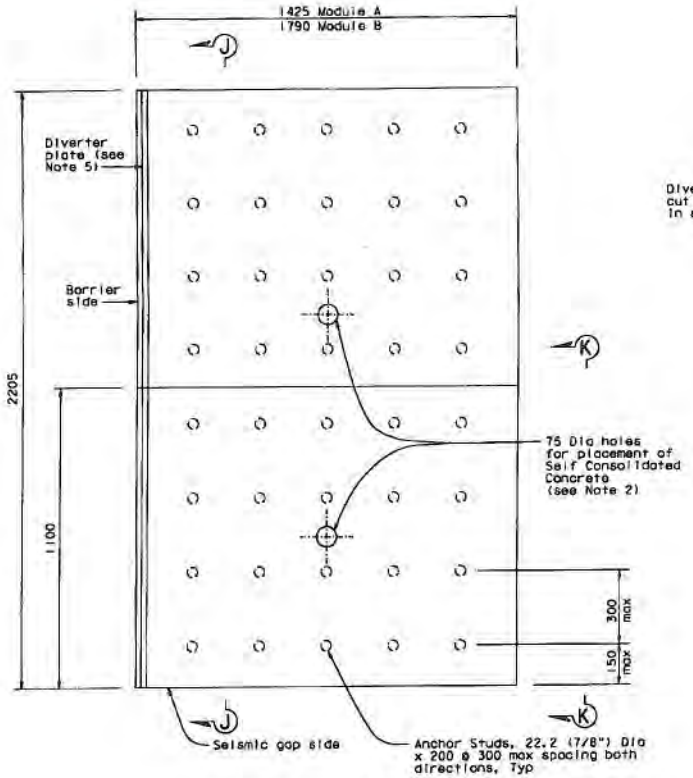

PLAN-SUPPORT PLATE
NTS

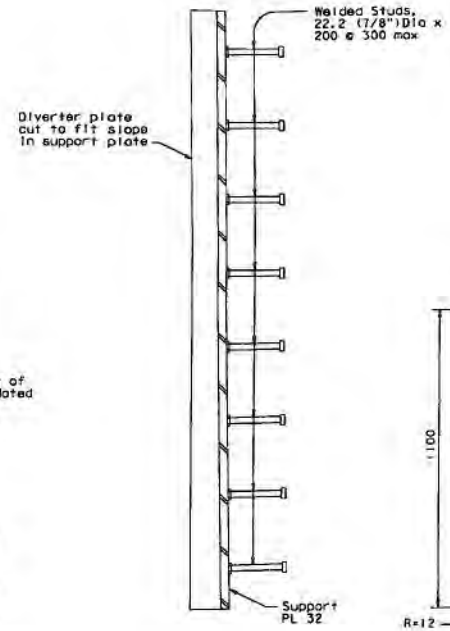

SECTION J-J
NTS

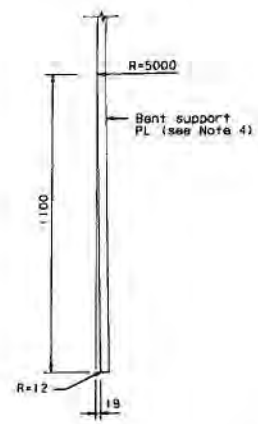

SECTION K-K
NTS

NOTES:

1. Support Plate A shown, Support Plate B similar.
2. Exact location of 75 Dia holes to be determined prior to support plate fabrication.
3. Anchor holes for Trelleborg Transflex 2400 and Trelleborg Support Bar connection not shown. Coordinate anchor hole location with Transflex modules.
4. At the Contractor's option, the support plate may be machined in lieu of bending.
5. For diverter plate details see "Hinge KE & KW Expansion Joint Details No.3" sheet. Diverter plate applies only to support plate A.

04-012054
CONTRACT CHANGE ORDER NO. 100 SO
SHEET 12 OF 15

REQUESTS FOR INFORMATION NOT ADDRESSED IN THIS CCO PERMIT IN FORCE

THIS SHEET REPLACES SHEET NO. 703R1/806

ALL DIMENSIONS ARE IN MILLIMETERS UNLESS OTHERWISE SHOWN

DESIGN OVERSIGHT
JOHN MOOK, BERNARD CHAN, JUAN F. CARRIO
HASAN EL-NATUR
SIGN OFF DATE
Rev. Date: 8-18-99

MARK	DATE	DESCRIPTIONS	BY	CH'D	CCO#
A	02/04/11	SEISMIC JOINT MODIFICATIONS HINGE K	CR	MN	

REVISIONS

	BY	CHECKED	
DESIGN	C. Redfield	M. Nader	
DETAILS	H. Patel	J. Duxbury	
QUANTITIES	H. Patel	J. Duxbury	

PREPARED FOR THE STATE OF CALIFORNIA DEPARTMENT OF TRANSPORTATION

Jai Birdy
PROJECT ENGINEER

BRIDGE NO. 34-0006 L/R
KILOMETER POST 12.8

CU 04251
EA 012051

ORIGINAL SCALE IN MILLIMETERS FOR REDUCED PLANS 0 10 20 30 40 50 60 70 80 90 100

DISREGARD PRINTS BEARING EARLIER REVISION DATES

REVISION DATES (PRELIMINARY STAGE ONLY)

SAN FRANCISCO OAKLAND BAY BRIDGE
EAST SPAN SEISMIC SAFETY PROJECT

YBI TRANSITION STRUCTURES

HINGE KE & KW EXPANSION JOINT DETAILS NO. 7

SHEET 154 OF 209

FILE => I:\bb\04-012001\eas\contract plans and ccos\cco\hinge k cco - ybi1a\l-original 02-01-11\dgn\akjs009.dgn

March 3, 2008

USERNAME => crlang DATE PLOTTED => 03 FEB 2011 TIME PLOTTED => 09:21:08

100 % PS&E

DIST.	COUNTY	ROUTE	KILOMETER POST TOTAL PROJECT	SHEET NO.	TOTAL SHEETS
04	SF	80	12.7/13.2	704R2	806

REGISTERED ENGINEER - CIVIL
02-01-11
PLANS APPROVAL DATE
The State of California or its officers or agents shall not be responsible for the accuracy or completeness of electronic copies of this plan sheet.

REGISTERED PROFESSIONAL ENGINEER Mervyn M. Noder No. C 054426 Exp. 12/31/11 CIVIL STATE OF CALIFORNIA

T.Y. LIN / MOFFATT & NICHOL
TWO HARRISON STREET
SAN FRANCISCO, CA 94105

Caltrans now has a web site! To get to the web site, go to http://www.dot.ca.gov

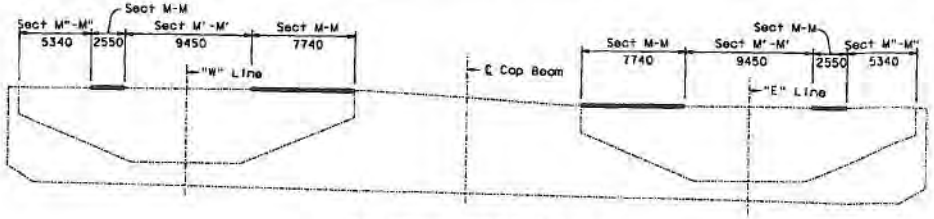

LOCATION - SECTION M-M

NTS

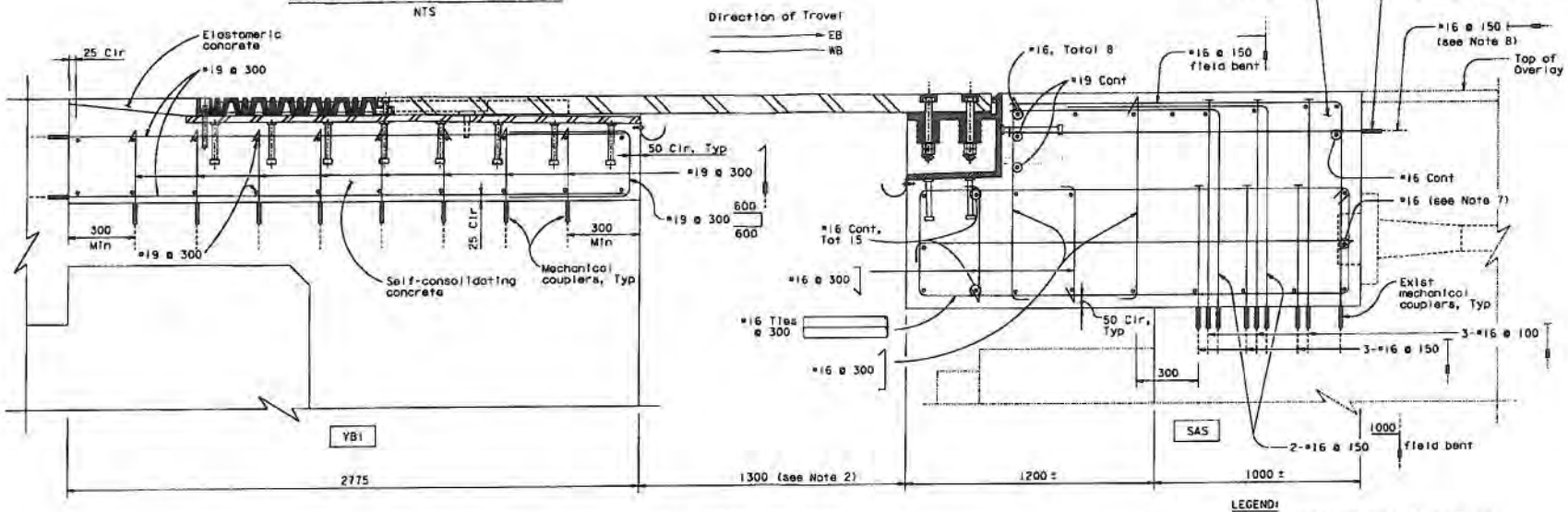

SECTION M-M

1:10

LEGEND:

⊢ Indicates "T" head reinforcement.

NOTES:

1. Rebars with mechanical couplers shall extend beyond blockout limits by at least 50 db.
2. Values are for mean temperature of 20°C.
3. Contractor shall locate all existing mechanical couplers.
4. Contractor shall connect reinforcement to existing rebar couplers at blockout limits.
5. Rebars may be relocated to match existing couplers.
6. Mechanical couplers at SAS side provided by Others.
7. Rebar shall be discontinued 25 mm clear of postensioning hardware.
8. Rebar may be bent horizontally to clear anchor studs on channel assembly.

CA-012054
CONTRACT CHANGE ORDER NO. 100 SO
SHEET 13 OF 15

REQUESTS FOR INFORMATION NOT ADDRESSED IN THIS CCO REMAIN IN FORCE

THIS SHEET REPLACES SHEET NO. 704R1/806

ALL DIMENSIONS ARE IN MILLIMETERS UNLESS OTHERWISE SHOWN

DESIGN OVERSIGHT
MOHSEN SADIK / BERNARD CHAN / JUAN F. CARPIO
HASAN EL-NATUR
SIGN OFF DATE
Rev. Date: 3-10-00

MARK	DATE	DESCRIPTIONS	BY	CH'D	CCO#
2	12/13/11	SEISMIC JOINT MODIFICATIONS HINGE K	CR	MN	

REVISIONS

DESIGN	BY C. Redfield	CHECKED	M. Noder
DETAILS	BY H. Patel	CHECKED	J. Duxbury
QUANTITIES	BY H. Patel	CHECKED	J. Duxbury

PREPARED FOR THE STATE OF CALIFORNIA DEPARTMENT OF TRANSPORTATION

Joi Biroy
PROJECT ENGINEER

BRIDGE NO. 34-0006 L/R
KILOMETER POST 12.8

CU 04251
EA 012051

ORIGINAL SCALE IN MILLIMETERS FOR REDUCED PLANS 0 10 20 30 40 50 60 70 80 90 100

FILE => I:\bb\04-01200\\sos\contract plans and cco\cco\hinge k cco - ybi1&\l-original 02-01-11\dgn\akjsb12.dgn

SAN FRANCISCO OAKLAND BAY BRIDGE
EAST SPAN SEISMIC SAFETY PROJECT

YBI TRANSITION STRUCTURES

HINGE KE & KW EXPANSION JOINT DETAILS NO. 8

REVISION DATES (PRELIMINARY STAGE ONLY)

SHEET 155 OF 209

100 % PS&E

March 3, 2008

LISEWAME => DATEFORM DATE PLOTTED => 02-FEB-2011 TIME PLOTTED => 09:56:04

DIST.	COUNTY	ROUTE	KILOMETER POST TOTAL PROJECT	SHEET NO.	TOTAL SHEETS
04	SF	80	12.7/13.2	705R2	806

REGISTERED ENGINEER - CIVIL

02-01-11

PLANS APPROVAL DATE

The State of California or its officers or agents shall not be responsible for the accuracy or completeness of electronic copies of this plan sheet.

Norman N. Nader, No. C 054428, Exp. 12/31/11, CIVIL, STATE OF CALIFORNIA

T.Y. LIN / MOFFATT & NICHOL
TWO HARRISON STREET
SAN FRANCISCO, CA 94105

Caltrans now has a web site! To get to the web site, go to http://www.dot.ca.gov

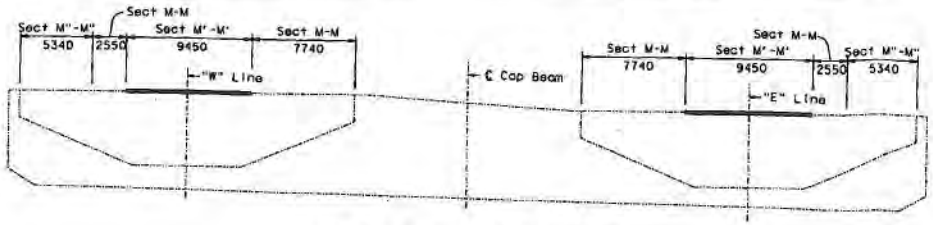

LOCATION - SECTION M'-M'

NTS

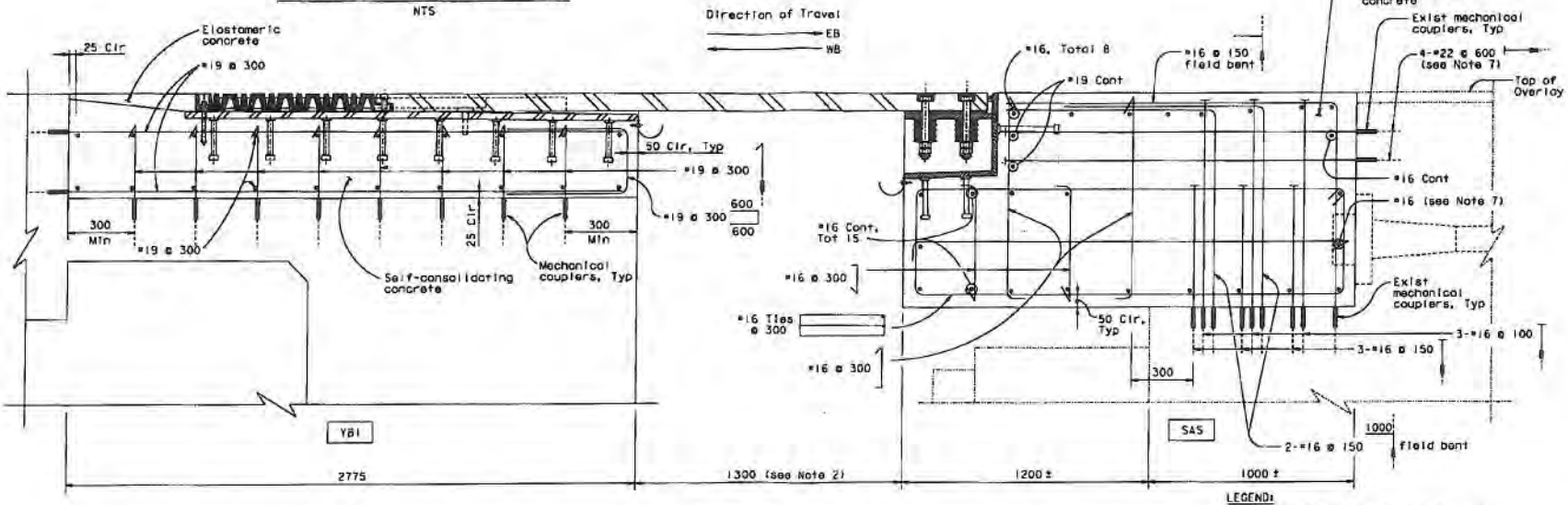

SECTION M'-M'

1:10

LEGEND:

|— indicates "T" head reinforcement.

NOTES:

1. Rebars with mechanical couplers shall extend beyond blockout limits by at least 50 d_b.
2. Values are for mean temperature 20°C.
3. Contractor shall locate all existing mechanical couplers.
4. Contractor shall connect reinforcement to existing rebar couplers at blockout limits.
5. Rebars may be relocated to match existing couplers.
6. Mechanical couplers at SAS side provided by Others.
7. At locations where the spacing between continuity tendons is 500 mm or less, 2-#22 bars may be placed vertically. Rebar may be bent horizontally to clear anchor studs on channel assembly.
8. Rebar shall be discontinued 25 mm clear of postensioning hardware.

March 3, 2008

04-012054
CONTRACT CHANGE ORDER NO. 100 SO
SHEET 14 OF 15

REQUESTS FOR INFORMATION NOT ADDRESSED IN THIS CCO REMAIN IN FORCE

THIS SHEET REPLACES SHEET NO. 705R1/806

ALL DIMENSIONS ARE IN MILLIMETERS UNLESS OTHERWISE SHOWN

BRANCH OVERSIGHT: JOHN BOOK, BERNARD CHAN, JUAN F. CARPIO

HASAN EL-NATUR

SIGN OFF DATE

Rev. Date: 5-13-98

MARK	DATE	DESCRIPTIONS	BY	CH'D	CCO#
2	02/01/11	SEISMIC JOINT MODIFICATIONS HINGE K	CR	MN	

REVISIONS

DESIGN	BY C. Redfield	CHECKED M. Nader	
DETAILS	BY H. Patel	CHECKED J. Duxbury	
QUANTITIES	BY H. Patel	CHECKED J. Duxbury	

ORIGINAL SCALE IN MILLIMETERS FOR REDUCED PLANS 0 10 20 30 40 50 60 70 80 90 100

PREPARED FOR THE STATE OF CALIFORNIA DEPARTMENT OF TRANSPORTATION

Jai Birdy
PROJECT ENGINEER

BRIDGE NO. 34-0006 L/R
KILOMETER POST 12.8

CU 04251
EA 012051

DISREGARD PRINTS BEARING EARLIER REVISION DATES

SAN FRANCISCO OAKLAND BAY BRIDGE
EAST SPAN SEISMIC SAFETY PROJECT

YBI TRANSITION STRUCTURES

HINGE KE & KW EXPANSION JOINT DETAILS NO. 9

REVISION DATES (PRELIMINARY STAGE ONLY)

SHEET 156 OF 209

FILE => I:\bbv\04-012051\sas\contract plans and ccs\cco\hinge k.cco - ybitsl-original 02-01-11\dgn\akisb13.dgn

DATEFRAME => 04/01/08 TIME PLOTTED => 09:06:48 DATE PLOTTED => 01 FEB 2011

100 % PSSE

DIST.	COUNTY	ROUTE	KILOMETER POST TOTAL PROJECT	SHEET NO.	TOTAL SHEETS
04	SF	80	12.7/13.2	705AS	806

REGISTERED ENGINEER - CIVIL

02-01-11

PLANS APPROVAL DATE

The State of California or its officers or agents shall not be responsible for the accuracy or completeness of electronic copies of this plan sheet.

REGISTERED PROFESSIONAL ENGINEER Marwan N. Nader No. C 054426 Exp. 12/31/11 CIVIL STATE OF CALIFORNIA

T.Y. LIN / MOFFATT & NICHOL
TWO HARRISON STREET
SAN FRANCISCO, CA 94105

Caltrans now has a web site! To get to the web site, go to: http://www.dot.ca.gov

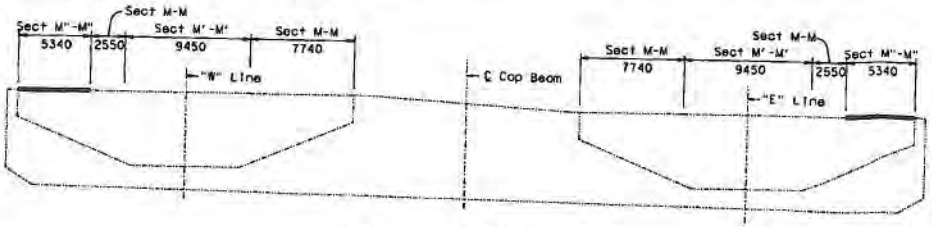

LOCATION - SECTION M"-M"

NTS

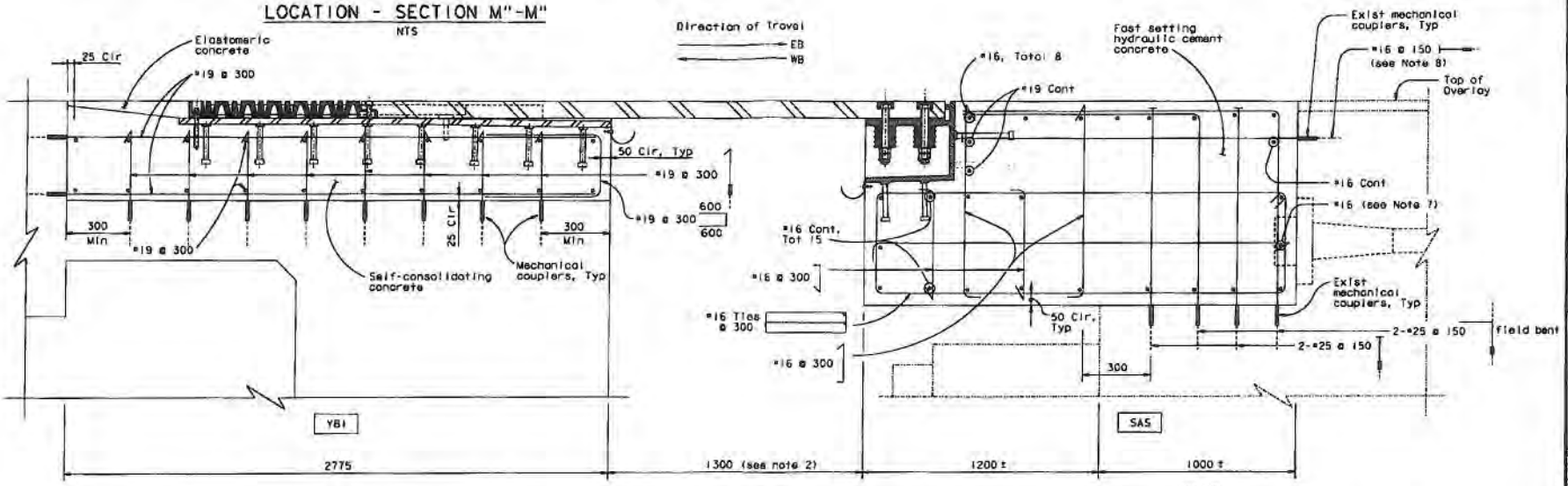

SECTION M"-M"

1:10

LEGEND:

⊢ indicates "T" head reinforcement.

NOTES:

1. Rebars with mechanical couplers shall extend beyond blockout limits by at least 50 dp.
2. Values are for mean temperature 20°C.
3. Contractor shall locate all existing mechanical couplers.
4. Contractor shall connect reinforcement to existing rebar couplers at blockout limits.
5. Rebars may be relocated to match existing couplers.
6. Mechanical couplers at SAS side provided by Others.
7. Rebar shall be discontinued 25 mm clear of postensioning hardware.
8. Rebar may be bent horizontally to clear anchor studs on channel assembly.

04-012054
CONTRACT CHANGE ORDER NO. 100 SC
SHEET 15 OF 15

REQUESTS FOR INFORMATION NOT ADDRESSED IN THIS CCO REMAIN IN FORCE

SUPPLEMENT SHEET

ALL DIMENSIONS ARE IN MILLIMETERS UNLESS OTHERWISE SHOWN

DESIGN OVERSIGHT: JOHN MOOK, BERNARD CHAN, JUAN F. CARPIO

NASAN EL-NAFLR

SIGN OFF DATE

MARK	DATE	DESCRIPTIONS	BY	CH'D	CCO#
A	02/01/11	SEISMIC JOINT MODIFICATIONS HINGE K	CR	MN	

REVISIONS

DESIGN	C. Redfield	CHECKED	M. Nader
DETAILS	H. Patel	CHECKED	J. Duxbury
QUANTITIES	H. Patel	CHECKED	J. Duxbury

PREPARED FOR THE STATE OF CALIFORNIA DEPARTMENT OF TRANSPORTATION

Jai Birdy
PROJECT ENGINEER

BRIDGE NO. 34-0006 L/R
KILOMETER POST 12.8

SAN FRANCISCO OAKLAND BAY BRIDGE
EAST SPAN SEISMIC SAFETY PROJECT

YBI TRANSITION STRUCTURES

HINGE KE & KW EXPANSION JOINT DETAILS NO. 10

ORIGINAL SCALE IN MILLIMETERS FOR REDUCED PLANS 0 10 20 30 40 50 60 70 80 90 100

CU 04251
EA 012051

DISREGARD PRINTS BEARING EARLIER REVISION DATES

REVISION DATES (PRELIMINARY STAGE ONLY)

SHEET 156A OF 209

FILE -> /s/bb\04-012051\sas\contract plans and ccs\cco\hinge k cco - ybitsl-original 02-01-11\dgn\cckjob13a.dgn

March 3, 2008

100% PS&E

TIME PLOTTED -> 09:08:36 DATE PLOTTED -> 07 FEB 2011 USERNAME -> bdrivon

STATE OF CALIFORNIA - DEPARTMENT OF TRANSPORTATION

CONTRACT CHANGE ORDER MEMORANDUM

TO: Deanna Vilcheck, ACM /	FILE: E.A. 04 - 0120S4
	CO-RTE-PM SF-80-12.7/13.2
FROM: William Howe, Senior R.E.	FED. NO. NO FED AID
CCO#: 100 SUPPLEMENT#: 0 Category Code: CHPT	CONTINGENCY BALANCE (incl. this change) $87,994,343.49
COST: $1,767,613.00 INCREASE ☑ DECREASE ☐	HEADQUARTERS APPROVAL REQUIRED? ☑ YES ☐ NO
SUPPLEMENTAL FUNDS PROVIDED: $0.00	IS THIS REQUEST IN ACCORDANCE WITH ENVIRONMENTAL DOCUMENTS? ☑ YES ☐ NO
CCO DESCRIPTION: Hinge K Seismic Joints	**PROJECT DESCRIPTION:** YBITS-1 (Yerba Buena Island Transition Structures)

Original Contract Time:	Time Adj. This Change:	Previously Approved CCO Time Adjustments:	Percentage Time Adjusted: (including this change)	Total # of Unreconciled Deferred Time CCO(s): (including this change)
1390 Day(s)	DEF Day(s)	0 Day(s)	0 %	9

THIS CHANGE ORDER PROVIDES FOR:
Revisions to the Hinge K closure details and associated seismic expansion joints.

This project, the Yerba Buena Island Transition Structure (YBITS), provides for the construction of two bridges which will connect eastbound and westbound traffic on the new east span of the San Francisco Oakland Bay Bridge (SFOBB) to the existing Yerba Buena Island (YBI) tunnel. The structures are comprised of concrete box girder bridges each approximately 26 meters wide, 40 meters high and 450 meters in length.

At the eastern end of the structures, the contract provides for the installation of two separate seismic expansion joints at Hinge K which connects the YBITS structure to the adjacent Self-Anchored Suspension Bridge (SAS). The as-bid seismic joints are each comprised of a 21 meter long by 4 meter wide steel deck plate assembly which rests upon a steel support plate. Mike Whiteside the YBI Coordination Engineer has requested modifications to these joints which are being incorporated under this change order.

The major modifications to the joints include changing the deck plate from a tapered plate to a uniform thickness, adding a 1 meter wide joint seal across the length of the joint and modifying the surface of the plate to provide an improved friction pattern. Numerous miscellaneous plates and brackets are also required to provide a more detailed connection of the plates. In order to mitigate potential delays to the project, this change order provides for the fabrication of the expansion joints. A supplemental change order shall provide for the installation of the joints and for changes to the hinge reinforcing steel.

The major costs associated with this work include furnishing the 48 square meters of joint seal and approximately 20 metric tons of additional steel fabrication costs associated with the larger plates. Additional costs will also be incurred due to the more difficult surface treatment being milled from the plate. Furnishing the added joint seal accounts for the majority of the added costs as the seal is a unique product that requires extensive fabrication methods.

Due to the significant changes to the as-planned joints, the 2 lump sum contract bid items providing for furnishing and installing these joints shall be eliminated resulting in a credit of $500,000.00. Compensation for furnishing the 2 modified expansion joints will be paid as extra work at an agreed lump sum of $2,267,613.00. The net change order cost of $1,767,613.00 shall be financed from the contract's contingency funds. A detailed cost analysis is on file.

Any costs pertaining to the installation and jobsite storage of the joints along with any costs associated with the modifications to the hinge details provided under this change order shall be deferred and shall be provided under a supplement to this change order. The total cost of this change including this change order and all future supplements is anticipated not to exceed $2,300,000.

This change order was approved by the Toll Bridge Program Oversight Committee on September 8, 2011.

Adjustment of contract time is deferred as the work may affect the controlling operation.

Maintenance concurrence required as this change will affect permanent caltrans owned features.

ADA Notice: For individuals with sensory disabilities, this document is available in alternate formats. For information call: (916) 654-6410 or TDD (916) 654-3880 or write Records and Forms Management, 1120 N Street, MS-89, Sacramento, CA 95814.

CONCURRED BY:		
Construction Engineer:	William Howe	Date 9/19/11
Bridge Engineer:	Mehran Ardakanian	Date 9/16/11
Project Engineer:	Bob Zandipour, Design	Date 10/11/11
Project Manager:	Ken Terpstra	Date 10/17/11
FHWA Rep.:		Date
Environmental:		Date
Other (specify):	Lina Ellis, Str. Maintenance	Date 10/18/11
Other (specify):		Date
District Prior Approval By:		Date
HQ (Issue Approve) By:	Larry Salhaney	Date 7/16/11
Resident Engineer's Signature: William Howe		Date 09-19-11

ESTIMATE OF COST

	THIS REQUEST	TOTAL TO DATE
ITEMS	($500,000.00)	($500,000.00)
FORCE ACCOUNT	$0.00	$0.00
AGREED PRICE	$2,267,613.00	$2,267,613.00
ADJUSTMENT	$0.00	$0.00
TOTAL	$1,767,613.00	$1,767,613.00

FEDERAL PARTICIPATION

☐ PARTICIPATING ☐ PARTICIPATING IN PART ☑ NONE
☐ NON-PARTICIPATING (MAINTENANCE) ☐ NON-PARTICIPATING

FEDERAL SEGREGATION (if more than one Funding Source or P.I.P. type)
☐ CCO FUNDED PER CONTRACT ☐ CCO FUNDED AS FOLLOWS

FEDERAL FUNDING SOURCE	PERCENT

ADA Notice: For individuals with sensory disabilities, this document is available in alternate formats. For information call: (916) 654-6410 or TDD (916) 654-3880 or write Records and Forms Management, 1120 N Street, MS-89, Sacramento, CA 95814.

STATE OF CALIFORNIA - DEPARTMENT OF TRANSPORTATION

CONTRACT CHANGE ORDER MEMORANDUM

TO: Deanna Vilcheck, ACM /	FILE: E.A. 04 - 0120S4
	CO-RTE-PM SF-80-12.7/13.2
FROM: William Howe, Senior R.E.	FED. NO. NO FED AID
CCO#: 100 SUPPLEMENT#: 1 Category Code: CHPT	CONTINGENCY BALANCE (incl. this change) $67,230,494.00
COST: $12,859.00 INCREASE ☑ DECREASE ☐	HEADQUARTERS APPROVAL REQUIRED? ☑ YES ☐ NO
SUPPLEMENTAL FUNDS PROVIDED: $0.00	IS THIS REQUEST IN ACCORDANCE WITH ENVIRONMENTAL DOCUMENTS? ☑ YES ☐ NO
CCO DESCRIPTION: Hinge K Barrier Plate Modifications	**PROJECT DESCRIPTION:** YBITS-1 (Yerba Buena Island Transition Structures)

Original Contract Time:	Time Adj. This Change:	Previously Approved CCO Time Adjustments:	Percentage Time Adjusted: (including this change)	Total # of Unreconciled Deferred Time CCO(s): (including this change)
1390 Day(s)	0 Day(s)	0 Day(s)	0 %	9

THIS CHANGE ORDER PROVIDES FOR:
Compensation for additional fabrication costs associated with modifications to the steel barrier plates at the Hinge K Closure.

This project, the Yerba Buena Island Transition Structure (YBITS), provides for the construction of two bridges which will connect eastbound and westbound traffic on the new east span of the San Francisco Oakland Bay Bridge (SFOBB) to the existing Yerba Buena Island (YBI) tunnel. The structures are comprised of concrete box girder bridges each approximately 26 meters wide, 40 meters high and 450 meters in length.

At the eastern end of the structures, the contract provides for the installation of two separate seismic expansion joints at Hinge K which connects the YBITS structure to the adjacent Self-Anchored Suspension Bridge (SAS). The original Change Order No. 100 provided modifications to the planned seismic joint as requested by Mike Whiteside the YBI Coordination Engineer. Compensation for the added fabrication cost of the joints was provided under that change order.

The original change order also provided modifications to the steel barrier plates which span the seismic joint and cover the concrete barrier at the gap between the joint. The costs of the modifications to the steel plates were deferred under that change order. This change order provides compensation for these deferred costs.

The modifications to the barrier plates extended the length of the plates by approximately 1.2 meters on the westbound structure and 1.5 meters on the eastbound structure. The added costs include fabricating the additional plate length for the 12 mm thick barrier plates which include both the exterior bent plate and the interior bent plate for each of the 4 barriers. The additional plate length will also require a total of 64 additional steel studs to be furnished and welded onto the inside of the interior plates.

Compensation for these costs will be paid as Extra Work at Agreed Lump Sum of $12,859.00, which shall be financed from the contract's contingency funds. A detailed cost analysis is on file.

The Toll Bridge program Oversight Committee approved costs not to exceed $500,000.00 pertaining to the barrier plate fabrication costs and the installation of the barrier plate and seismic joint at their September 8, 2011 meeting. This change order falls within that approved cost.

No adjustment of contract time is warranted as the work does not affect the controlling operation.

Maintenance concurrence is required as this change will affect permanent Caltrans' owned features.

ADA Notice: For individuals with sensory disabilities, this document is available in alternate formats. For information call: (916) 654-6410 or TDD (916) 654-3880 or write Records and Forms Management, 1120 N Street, MS-89, Sacramento, CA 95814.

CONCURRED BY:		
Construction Engineer:	William Howe	Date 12-23-11
Bridge Engineer:	Mehran Ardakanian	Date 1-11-12
Project Engineer:	Bob Zandipour, Design	Date 12-27-11
Project Manager:	Ken Terpstra	Date 12-27-11
FHWA Rep.:		Date
Environmental:		Date
Other (specify):	Lina Ellis, Str. Maintenance	Date 12-27-11
Other (specify):		Date
District Prior Approval By:		Date
HQ (Issue Approve) By:	Sey Hossnieh	Date 12-27-11
Resident Engineer's Signature: William Howe		Date 12-23-11

ESTIMATE OF COST

	THIS REQUEST	TOTAL TO DATE
ITEMS	$0.00	($500,000.00)
FORCE ACCOUNT	$0.00	$0.00
AGREED PRICE	$12,859.00	$2,280,472.00
ADJUSTMENT	$0.00	$0.00
TOTAL	$12,859.00	$1,780,472.00

FEDERAL PARTICIPATION

☐ PARTICIPATING ☐ PARTICIPATING IN PART ☑ NONE
☐ NON-PARTICIPATING (MAINTENANCE) ☐ NON-PARTICIPATING

FEDERAL SEGREGATION (if more than one Funding Source or P.I.P. type)
CCO FUNDED PER CONTRACT ☐ CCO FUNDED AS FOLLOWS

FEDERAL FUNDING SOURCE	PERCENT

ADA Notice: For individuals with sensory disabilities, this document is available in alternate formats. For information call: (916) 654-6410 or TDD (916) 654-3880 or write Records and Forms Management, 1120 N Street, MS-89, Sacramento, CA 95814.

STATE OF CALIFORNIA - DEPARTMENT OF TRANSPORTATION

CONTRACT CHANGE ORDER MEMORANDUM

TO: Deanna Vilcheck, ACM / DV	FILE: E.A. 04 - 0120S4
FROM: William Howe, Senior R.E.	CO-RTE-PM SF-80-12.7/13.2
	FED. NO. NO FED AID
CCO#: 105 SUPPLEMENT#: 0 Category Code: AXZZ	CONTINGENCY BALANCE (incl. this change) $54,782,704.80
COST: $140,000.00 INCREASE ☑ DECREASE ☐	HEADQUARTERS APPROVAL REQUIRED? ☐ YES ☑ NO
SUPPLEMENTAL FUNDS PROVIDED: $0.00	IS THIS REQUEST IN ACCORDANCE WITH ENVIRONMENTAL DOCUMENTS? ☑ YES ☐ NO
CCO DESCRIPTION: flumes for stormwater basins near burma	**PROJECT DESCRIPTION:** YBITS-1 (Yerba Buena Island Transition Structures)

Original Contract Time:	Time Adj. This Change:	Previously Approved CCO Time Adjustments:	Percentage Time Adjusted: (including this change)	Total # of Unreconciled Deferred Time CCO(s): (including this change)
1390 Day(s)	0 Day(s)	0 Day(s)	0 %	9

THIS CHANGE ORDER PROVIDES FOR:

This change order provides for installing flumes and related apparatus inside the bioretention basin system of the San Francisco-Oakland Bay Bridge (SFOBB) storm water treatment facilities located west of the SFOBB Toll Plaza.

The installation of the flumes and related apparatus is needed to monitor the incoming and outgoing water flow inside the basins. Without the flumes, it would not be possible to determine whether the bioretention basins meet the storm water treatment requirements for the SFOBB East Span Seismic Safety Project as set by California Regional Water Quality Control Board's Waste Discharge Requirements Order No. R2-2002-0011.

Work associated with this change includes the removal of existing flumes, the fabrication and installation of H flumes, HS flumes in existing manholes, and downspouts, and other work as directed by the Engineer. This work will be done per the plans and specifications attached to the Contract Change Order.

This change was requested by Mimy Ma, Toll Bridge Structures Design, in a memo dated August 26, 2011.

Compensation for this work shall be paid as extra work at force account in the amount of $140,000.00, which shall be financed from the contract's contingency funds. A detailed cost analysis is on file.

No adjustment of contract time is warranted, as this change will not affect the controlling operation.

CONCURRED BY:		
Construction Engineer:	William Howe	Date 12-6-11
Bridge Engineer:		Date
Project Engineer:	Bob Zandipour, Design	Date 12-6-11
Project Manager:	Ken Terpstra	Date 12-6-11
FHWA Rep.:		Date
Environmental:		Date
Other (specify):	Lina Ellis, Str. Maintenance	Date 12-6-11
Other (specify):		Date
District Prior Approval By:		Date
HQ (Issue Approve) By:		Date
Resident Engineer's Signature: William Howe		Date 12-06-11

ESTIMATE OF COST

	THIS REQUEST	TOTAL TO DATE
ITEMS	$0.00	$0.00
FORCE ACCOUNT	$140,000.00	$140,000.00
AGREED PRICE	$0.00	$0.00
ADJUSTMENT	$0.00	$0.00
TOTAL	$140,000.00	$140,000.00

FEDERAL PARTICIPATION

☐ PARTICIPATING ☐ PARTICIPATING IN PART ☑ NONE
☐ NON-PARTICIPATING (MAINTENANCE) ☐ NON-PARTICIPATING

FEDERAL SEGREGATION (if more than one Funding Source or P.I.P. type)
☐ CCO FUNDED PER CONTRACT ☐ CCO FUNDED AS FOLLOWS

FEDERAL FUNDING SOURCE	PERCENT

ADA Notice: For individuals with sensory disabilities, this document is available in alternate formats. For information call: (916) 654-6410 or TDD (916) 654-3880 or write Records and Forms Management, 1120 N Street, MS-89, Sacramento, CA 95814.

STATE OF CALIFORNIA - DEPARTMENT OF TRANSPORTATION

CONTRACT CHANGE ORDER MEMORANDUM

TO: Deanna Vilcheck, ACM / DV	FILE: E.A. 04 - 0120S4
FROM: William Howe, Senior R.E.	CO-RTE-PM SF-80-12.7/13.2
	FED. NO. NO FED AID
CCO#: 107 SUPPLEMENT#: 0 Category Code: CHPT	CONTINGENCY BALANCE (incl. this change) $66,882,526.00
COST: $966,782.00 INCREASE ☑ DECREASE ☐	HEADQUARTERS APPROVAL REQUIRED? ☑ YES ☐ NO
SUPPLEMENTAL FUNDS PROVIDED: $0.00	IS THIS REQUEST IN ACCORDANCE WITH ENVIRONMENTAL DOCUMENTS? ☑ YES ☐ NO
CCO DESCRIPTION: furnish and install seismic joints	**PROJECT DESCRIPTION:** YBITS-1 (Yerba Buena Island Transition Structures)

Original Contract Time:	Time Adj. This Change:	Previously Approved CCO Time Adjustments:	Percentage Time Adjusted: (including this change)	Total # of Unreconciled Deferred Time CCO(s): (including this change)
1390 Day(s)	0 Day(s)	0 Day(s)	0 %	9

THIS CHANGE ORDER PROVIDES FOR:

This change order provides for furnishing seismic joints for Abutment 23L and Abutment 23R, and the installation of the seismic joint at Abutment 23L. This work shall be performed in accordance with revised contract plan sheets issued with this change order and also in accordance with the requirements prescribed in Specification Section 10-1.33 issued with Contract Change Order No. 76, Supplement No. 1.

This project, the Yerba Buena Island Transition Structure (YBITS), provides for the construction of two bridges which will connect eastbound and westbound traffic on the new east span of the San Francisco Oakland Bay Bridge (SFOBB) to the existing Yerba Buena Island (YBI) tunnel.

In association with the seismic safety opening of the Bay Bridge Eastbound Corridor, the completion of seismic deck joints at the eastern end of the bridge are required. The Project Management Team (PMT) has determined that the purchase of these specialized joints and installation of the westbound (Abutment 23L) joint be accomplished as a contract change order on this contract; the installation of the eastbound (Abutment 23R) joint will be done under the Oakland Touchdown 2 contract.

This change provides for compensating the Contractor an agreed lump sum amount for furnishing seismic joints for Abutments E23L/R for a cost of $866,782. This agreed lump sum amount has been revised from the previous request of $788,486 as the Contractor's markup was omitted. In addition, this change provides compensating the Contractor extra work at force account to install the seismic joint at Abutment E23L for a cost of $100,000. This change will result in a total cost increase of $966,782.00, which can be financed from the project's contingency fund. A detailed cost analysis is available on file in the project records.

Any costs pertaining to the backer and silicon seal material, coating touch-up due to handling, shipping, and installation, third party inspection, and self-consolidating concrete shall be deferred and shall be provided under a supplement to this change order.

This change was requested by Mike Whiteside, Toll Bridge Structures Design, on a memo dated September 22, 2011.

Maintenance concurrence is required.

As this change does not affect the controlling operations, no adjustment of contract time is warranted.

ADA Notice: For individuals with sensory disabilities, this document is available in alternate formats. For information call: (916) 654-6410 or TDD (916) 654-3880 or write Records and Forms Management, 1120 N Street, MS-89, Sacramento, CA 95814.

CONCURRED BY:		
Construction Engineer:	William Howe	Date 12-28-11
Bridge Engineer:	Mehran Ardakanian	Date 1-11-12
Project Engineer:	Bob Zandipour, Design	Date 12-28-11
Project Manager:	Ken Terpstra	Date 12-29-11
FHWA Rep.:		Date
Environmental:		Date
Other (specify):	Lina Ellis, Str. Maintenance	Date 12-28-11
Other (specify):		Date
District Prior Approval By:		Date
HQ (Issue Approve) By:	Larry Salhaney	Date 12-29-11
Resident Engineer's Signature: William Howe		Date 12-28-11

ESTIMATE OF COST

	THIS REQUEST	TOTAL TO DATE
ITEMS	$0.00	$0.00
FORCE ACCOUNT	$100,000.00	$100,000.00
AGREED PRICE	$866,782.00	$866,782.00
ADJUSTMENT	$0.00	$0.00
TOTAL	$966,782.00	$966,782.00

FEDERAL PARTICIPATION

☐ PARTICIPATING ☐ PARTICIPATING IN PART ☑ NONE
☐ NON-PARTICIPATING (MAINTENANCE) ☐ NON-PARTICIPATING

FEDERAL SEGREGATION (if more than one Funding Source or P.I.P. type)
☐ CCO FUNDED PER CONTRACT ☐ CCO FUNDED AS FOLLOWS

FEDERAL FUNDING SOURCE	PERCENT

ADA Notice: For individuals with sensory disabilities, this document is available in alternate formats. For information call: (916) 654-6410 or TDD (916) 654-3880 or write Records and Forms Management, 1120 N Street, MS-89, Sacramento, CA 95814.

STATE OF CALIFORNIA - DEPARTMENT OF TRANSPORTATION

CONTRACT CHANGE ORDER MEMORANDUM

DATE: 12/7/2011

TO: Deanna Vilcheck, ACM / DV	FILE: E.A. 04 - 0120S4
FROM: William Howe, Senior R.E.	CO-RTE-PM SF-80-12.7/13.2
	FED. NO. NO FED AID
CCO#: 110 SUPPLEMENT#: 0 Category Code: CHMX	CONTINGENCY BALANCE (incl. this change) $86,604,021.49
COST: $50,000.00 INCREASE ☑ DECREASE ☐	HEADQUARTERS APPROVAL REQUIRED? ☐ YES ☑ NO
SUPPLEMENTAL FUNDS PROVIDED: $0.00	IS THIS REQUEST IN ACCORDANCE WITH ENVIRONMENTAL DOCUMENTS? ☑ YES ☐ NO
CCO DESCRIPTION: Mockup concrete pour for steep slopes	**PROJECT DESCRIPTION:** YBITS-1 (Yerba Buena Island Transition Structures)

Original Contract Time:	Time Adj. This Change:	Previously Approved CCO Time Adjustments:	Percentage Time Adjusted: (including this change)	Total # of Unreconciled Deferred Time CCO(s): (including this change)
1390 Day(s)	0 Day(s)	0 Day(s)	0 %	9

THIS CHANGE ORDER PROVIDES FOR:

This change order provides for the contractor to perform concrete pour mockups for the steep sloped sidewalls of the superstructure and the piles as directed by the Engineer.

This contract provides for the construction of the Yerba Buena Island Transition Structures for the east span of the new San Francisco Oakland Bay Bridge (SFOBB).

The superstructure of the new bridge has several locations that have steep sidewalls (up to a 1:1 Horizontal: Vertical grade) and are congested.The concrete mix design to be used for this superstructure has to be very fluid (have a high slump) in order to fill all the congested rebar locations.Due to an existing problem at the cement plant used in the concrete mixes, all previously approved concrete mixes are being revised. The engineer has concerns about a fluid concrete mix staying in place while it sets up at the steep sidewalls and has directed the contractor to demonstrate that a mix can be designed to handle the competing necessities of flowing into the voids, and still being able to stand sufficiently on the steep side slopes. Under this change order, the Contractor will conduct tests on the concrete, as directed by the Engineer. In addition to the above mentioned work there are existing piles that the engineer is concerned about.The engineer has determined that it will be useful to demonstrate that these piles were designed to handle the geology and geometry of the existing condition by attempting to install a similar mock pile under controlled conditions.

Gilel Klebanov, CT Senior Structures representative, requested this change on October 6, 2011.

Compensation for this work shall be paid as extra work at force account in the amount of $50,000.00, which shall be financed from the contract's contingency funds. A cost analysis is on file.

Maintenance concurrence is not required, as this does not affect any permanent features of the bridge.

No adjustment of contract time is warranted, as this change will not affect the controlling operation.

ADA Notice: For individuals with sensory disabilities, this document is available in alternate formats. For information call: (916) 654-6410 or TDD (916) 654-3880 or write Records and Forms Management, 1120 N Street, MS-89, Sacramento, CA 95814.

CONCURRED BY:		
Construction Engineer:	William Howe	Date 12-08-11
Bridge Engineer:	Mehran Ardakanian	Date 12-8-11
Project Engineer:	Bob Zandipour, Design	Date 12-9-11
Project Manager:	Ken Terpstra KT	Date 12-20-11
FHWA Rep.:		Date
Environmental:		Date
Other (specify):		Date
Other (specify):		Date
District Prior Approval By:		Date
HQ (Issue Approve) By:		Date
Resident Engineer's Signature: William Howe		Date 12-08-11

ESTIMATE OF COST

	THIS REQUEST	TOTAL TO DATE
ITEMS	$0.00	$0.00
FORCE ACCOUNT	$50,000.00	$50,000.00
AGREED PRICE	$0.00	$0.00
ADJUSTMENT	$0.00	$0.00
TOTAL	$50,000.00	$50,000.00

FEDERAL PARTICIPATION

PARTICIPATING ☐ PARTICIPATING IN PART ☑ NONE
☐ NON-PARTICIPATING (MAINTENANCE) ☐ NON-PARTICIPATING

FEDERAL SEGREGATION (if more than one Funding Source or P.I.P. type)
CCO FUNDED PER CONTRACT ☐ CCO FUNDED AS FOLLOWS

FEDERAL FUNDING SOURCE	PERCENT

ADA Notice: For individuals with sensory disabilities, this document is available in alternate formats. For information call: (916) 654-6410 or TDD (916) 654-3880 or write Records and Forms Management, 1120 N Street, MS-89, Sacramento, CA 95814.

CONTRACT CHANGE ORDER

Change Requested by: Engineer

CCO 100	Suppl. No. 2	Contract No 04 - 0120S4	Road SF-80-12.7/13.2	FED. AID LOC.: NO FED AID

To: M C M CONSTRUCTION INC

You are directed to make the following changes from the plans and specifications or do the following described work not included in the plans and specifications for this contract. ***NOTE: This change order is not effective until approved by the Engineer.***

Description of work to be done, estimate of quantities and prices to be paid. (Segregate between additional work at contract price, agreed price and force account.) Unless otherwise stated, rates for rental of equipment cover only such time as equipment is actually used and no allowance will be made for idle time. This last percentage shown is the net accumulated increase or decrease from the original quantity in the Engineer's Estimate.

Adjustment of Compensation at Lump Sum:

1) Add specification, Section 10-1.62a, "Seismic Joint (Hinge K), Sheet Nos. 2 to 11 of 11 to the Special Provisions of this Contract. The specification for non-skid coating, included in these specifications, shall also apply to CCO No. 7 S1 and CCO No. 107 S1.

2) Machine faying surfaces between the deck plates and support plates, and the deck plates and channel assemblies, for seismic joints at Hinges KE and KW for mill-to-bear contact.

3) The installation of the non-skid surface coating for Hinges KE and KW will be performed by others.

For this work, the Contractor shall receive and accept the Agreed Lump Sum of $51,243.00. This sum constitutes full and complete compensation for providing all labor, material, equipment, tools and incidentals, including all markups and expedited performance by the reason of this change.

Adjustment of Compensation @ Agreed Lump Sum = $51,243.00

Estimated Cost: Increase ☑ Decrease ☐ **$51,243.00**

By reason of this order the time of completion will be adjusted as follows: 0 days

Submitted by

Signature	Resident Engineer	Date
William Howe	William Howe, Senior R.E.	08-22-12

Approval Recommended by

Signature	Region Construction Division Chief	Date
Tony Anziano	Tony Anziano	8/23/12

Engineer Approval by

Signature	Region Construction Division Chief	Date
Tony Anziano	Tony Anziano	4/18/13

We the undersigned contractor, have given careful consideration to the change proposed and agree, if this proposal is approved, that we will provide all equipment, furnish the materials, except as may otherwise be noted above, and perform all services necessary for the work above specified, and will accept as full payment therefor the prices shown above.

NOTE: If you, the contractor, do not sign acceptance of this order, your attention is directed to the requirements of the specifications as to proceeding with the ordered work and filing a written protest within the time therein specified.

Contractor Acceptance by

Signature	(Print name and title)	Date
	EDMUNDO A. LUCHI, TREASURER	4/16/13

10-1.62a

~~10-1.62~~ SEISMIC JOINT (HINGE K)

Seismic joints shall consist of steel deck plates with *traction rib pattern*, channel assemblies, support plates, fast setting hydraulic cement concrete, elastomeric concrete, self-consolidating concrete, *Trelleborg joint assembly*, self-consolidating concrete, sealing elements, gutter, and anchorage components and shall be fabricated and installed *at Hinges KW & KE* in conformance with the details shown on the plans, the provisions in Section 51, "Concrete Structures," of Standard Specifications, and these special provisions.

Attention is directed to "Cooperation" of these special provisions.

Unless otherwise directed by the Engineer, prior to submitting working drawings, the Contractor shall inspect the hinge blockouts in the adjacent structures constructed by others in Contract No. 04-0120F4. The Contractor shall submit to the Engineer an inspection report for review and approval. This inspection report shall be titled "Blockouts Inspection Report (Hinges KW & KE)" and shall include the actual blockout sizes; potential interference with the blockout reinforcement and seismic anchorages shown on the plans; any conflicts with the details shown on the plans; and recommendations to resolve the conflicts. The Contractor shall allow the Engineer 10 days to review and approve the "Blockouts Inspection Report (Hinges KW & KE)."

WORKING DRAWINGS

The Contractor shall submit working drawings in conformance with the provisions in "Working Drawings," of these special provisions, and the requirements specified herein.

Working drawings shall include complete details, information, and drawings of the seismic joints and anchorage components and the method, materials, equipment, and procedures for fabrication and installation that the Contractor proposes to use.

Working drawing submittals shall include the following:

A. Fabrication plans including all details, elevations, and sections of the seismic joint as shown on the plans. All dimensions and design tolerances shall be specified. Fabrication plans for the sizes of deck plates and support plates shall consider roadway super elevations and longitudinal gaps between the plates for sealing elements. Unless otherwise directed by the Engineer, fabrication plans shall conform to the actual blockout sizes and recommendations specified in the approved "Blockouts Inspection Report (Hinges KW & KE)."
B. All ASTM or other material designations.
C. Sections showing all materials comprising the seismic joint with complete details of all individual components including welded splices and connections and welding procedures.
D. Joint installation plans including methods, materials, equipment, sequence, lifting mechanisms and locations, details of temporary anchorage during setting, temperature adjustment devices, method for maintaining full contact between deck plates and support plates during and after installation, installation details at curbs, seal installation details, and other procedures that the Contractor proposes to use for installation of the seismic joints.
E. Fast setting hydraulic cement concrete mix design and placement procedures. The Contractor's proposed fast setting hydraulic cement concrete mix design submittals shall be as specified in "Fast Setting Hydraulic Cement Concrete" in these special provisions.
F. Elastomeric concrete technical information. Technical information shall be furnished from the manufacturer elastomeric concrete proposed for use in the work.
G. Self-consolidating concrete mix design and placement procedures. The Contractor's proposed self-consolidating concrete mix design submittals shall include test results for slump flow, slump

flow time to a 500 mm diameter, stability of the concrete mixture, and compressive strengths at 7 and 28 days.

H. Details and procedures of the mock-up construction to demonstrate self-consolidating concrete.

I. List of coating system for seismic joints identifying cleaning and painting of all steel components as specified in "Clean and Paint (Seismic Joints, Joint Seal Assemblies, and PTFE Bearings)" of these special provisions.

J. Anchorage components including concrete blockout details and any additions or rearrangements of the reinforcing steel from that shown on the plans.

K. Storage plans for manufacture storage, interim storage, and on-site storage details including temporary support for the seismic joints.

L. Shipping plans including handling of the seismic joints during transportation. Each shipment of the seismic joint materials shall be accompanied by a Certificate of Compliance in conformance with the provisions in Section 6-1.07, "Certificates of Compliance," of the Standard Specifications. The certificate shall state that the materials and fabrication involved comply in all respects to the specifications and data submitted in obtaining approval.

After complete working drawings are received by the Engineer, the Contractor shall allow the Engineer 40 days to review the submittal. No fabrication of the seismic joint shall begin until complete working drawings are reviewed and approved, in writing, by the Engineer.

The final approval of the Contractor's mix design for self-consolidating concrete is contingent upon the successful mock-up construction as specified in "Demonstration Pours" herein.

MATERIALS

Attention is directed to "Welding" of these special provisions. Welding of seismic joint shall conform to AWS D1.5.

Structural steel, including anchor studs, shall conform to "Steel Structures" of these special provisions. Structural steel shall conform to the requirements of ASTM Designation: A 709M, Grade 345. High strength bolts shall *be galvanized and* conform to the requirements of ASTM Designation: A 449, Type 1. Nuts and washers shall conform to the requirements in Section 75, "Miscellaneous Metal," of the Standard Specifications.

Concrete for filling blockouts shall conform to the requirements in "Fast Setting Hydraulic Cement Concrete," "Elastomeric Concrete," and "Self-Consolidating Concrete" of these special provisions.

Neoprene sheet *and elastomeric washers* shall conform to Section 51-1.145, "Strip Waterstops," of the Standard Specifications.

Sealing elements shall conform to the requirements in "Sealing Elements" of these special provisions.

Reinforcing steel shall conform to the provisions in "Reinforcement" of these special provisions.

Gutter shall conform to the provisions in "Miscellaneous Metal (Bridge)" of these special provisions.

Fast Setting Hydraulic Cement Concrete

Fast setting hydraulic cement concrete shall conform to the provisions in Section 51, "Concrete Structures," of the Standard Specifications and these special provisions.

Fast Setting Hydraulic Cement Concrete (FSHCC) shall consist of hydraulic cement, conforming to the requirements below, aggregate, and any admixtures used. The combined aggregate grading used in FSHCC shall be any of the maximum size grading limits specified in Section 90-3.04, "Combined Aggregate Gradings," of the Standard Specifications. The minimum 3 hour compressive strength shall be 14 MPa and the minimum 56 day compressive strength shall be 35 MPa.

FSHCC shall conform to the provisions in Section 90, "Portland Cement Concrete," of the Standard Specifications, except that any cement meeting the requirements specified in ASTM Designation: C 219 and conforming to the following requirements may be used.

TEST DESCRIPTION	REQUIREMENT	TEST METHOD
Contraction in Air	0.053 %, max.	California Test 527, W/C Ratio = 0.39 ± 0.010
Mortar Expansion in Water	0.04 %, max.	ASTM Designation: C 1038
Soluble Chloride*	0.05 %, max.	California Test 422
Soluble Sulfates*	0.30 %, max.	California Test 417
Thermal Stability	90 %, min.	California Test 553
Compressive Strength @ 3 days	17 MPa	ASTM Designation: C 109

*Test is to be done on a cube specimen, fabricated in conformance with the requirements in ASTM Designation: C 109, cured at least 14 days and then pulverized to 100% passing the 300-µm sieve

Type C accelerating chemical admixtures conforming to the provisions in Section 90-4, "Admixtures," of the Standard Specifications may be used. In addition to the admixtures listed on the Department's current list of approved admixtures, citric acid or borax may be used if requested in writing by the cement manufacturer and a sample is submitted to the Engineer. Chemical admixtures, if used, shall be included in the testing for requirements listed in the table above.

Penetration requirements in Section 90-6.06, "Amount of Water and Penetration," of the Standard Specifications shall not apply.

The Contractor shall submit mix designs that include the following:

A. Compressive Strength, at 3 hours, 24 hours, 3 days, 7 days, 28 days and 56 days.
B. Proposed aggregate grading.
C. Mix proportions of hydraulic cement, aggregate and water.
D. Types and amounts of chemical admixtures, if used.
E. Initial and Final set time of a 300mm x 300mm x 138mm concrete block curing at 21 ± 5°C ambient temperature.
F. Range of ambient temperatures over which the mix design will achieve the required minimum 3 hour and 56 day compressive strengths.

At the Contractor's option, more than one mix design may be submitted to account for ambient temperature variations that exceed the ranges specified herein.

FSHCC shall be proportioned and placed by volumetric continuous mixers capable of proportioning cement, water, aggregate and admixtures by volume. Identifying numbers or letters of volumetric continuous mixers shall be located on the front or rear of the equipment. Calibration of the volumetric continuous mixers shall be performed demonstrating that the equipment is capable of delivering the proportioned concrete material per the approved mix design. The volumetric continuous mixers shall produce a log of production data, at no less then 20 minute intervals, showing the proportions of cement, aggregate and water dispatched.

The Contractor shall furnish aggregate moisture determinations per California Test Method 223. During actual placement the percent fine aggregate moisture content to be used shall be limited to a maximum value of 2% more then moisture content determined during calibration.

The aggregate and cement proportioning calibrations shall be determined by weight.

The first 3 volumetric continuous mixers to be used during actual production at the site shall be loaded with all material at least 4 hours prior to placement. A trial mix to be disposed of by the Contractor shall be batched for the Engineer's inspection. The mix size shall be from a minimum 20 second operation of the mixer. At 3 hours after discharge the batched material shall be visibly hard indicating at least a final set.

After the calibration and acceptance of the use of a volumetric continuous mixer, water to account for any allowable change in fine aggregate moisture content may be adjusted just prior to placement. Only the water reducer admixtures, if used, may be adjusted during actual placement.

A Certificate of Compliance in conformance with the provisions in Section 6-1.07, "Certificates of Compliance," of the Standard Specifications shall be furnished with each delivery of aggregate, cement, and admixtures used for calibration tests and shall be submitted to the Engineer with a certified copy of the mass of each delivery.

The concrete curing method shall be as recommended by the manufacturer of the cement and as approved by the Engineer.

Elastomeric Concrete

Elastomeric concrete shall be a polymer binder material mixed with fiberglass fibers and natural sand. The polymer binder shall be polyurethane, or epoxy, or a combination of epoxy and polyurethane. Elastomeric concrete shall formulated to be flexible, have high load bearing capacity and be resistant to spalling and cracking.

The Contractor shall furnish and install elastomeric concrete as shown on the plans and in conformance with these special provisions.

Elastomeric concrete shall be mixed, placed, and cured as recommended by the manufacturer, and as approved by the Engineer. A representative of the elastomeric concrete manufacturer shall be present during mixing and placement of elastomeric concrete.

The elastomeric concrete (binder and aggregate) shall have the following physical properties:

ELASTOMERIC CONCRETE (BINDER AND AGGREGATE)		
PROPERTY	REQUIREMENT	TEST METHOD
* Modulus of Elasticity	2000 MPa, maximum, at 24 hours at 21°± 2°C followed by 13 days at 38°± 2°C	California Test 551
* Compressive Stress	7.0 MPa, minimum, at 24 hours at 21°± 2°C followed by 13 days at 38°± 2°C	California Test 551 (Machine crosshead speed @1.3mm per minute.)
* Impact	4 intervals with no cracks, minimum	Ball Drop*
PCC Saturated Surface-Dry Bond Strength	2.1 MPa, minimum at 24 hours and 21 ± 1°C	California Test 551
* Test specimen is a cast disk 63.5 mm in diameter and 9.5 mm thick. Specimens are conditioned four hours at test temperatures of: 40 C (± 2 C), 20 C (± 2 C), 10 C (± 2 C), & 0 C (± 2 C). A 0.45 kg steel ball is dropped onto the center of the specimen through a plastic guiding tube from an initial height of 1500 mm. The drop height is increased by 150 mm intervals.		

The polymer binder shall have the following physical properties:

POLYMER BINDER		
PROPERTY	REQUIREMENT	TEST METHOD
Tensile Strength	3.45 MPa, minimum, at 7 days at 38°± 1°C	ASTM D 412
	3.45 MPa s , minimum, at 24 hours at 21°± 1°C followed by 13 days at 70°± 2°C	ASTM D 412
Elongation	180 percent, minimum, at 7 days at 38°± 1°C	ASTM D 412
	180 percent, minimum, at 24 hours at 21°± 1°C followed by 13 days at 70°± 2°C	ASTM D 412
Hardness, Type D Durometer, points	45, minimum, at 7 days at 38°± 1°C	ASTM D 2240
	45 points, minimum, at 24 hours at 21°± 1°C followed by 13 days at 70°± 2°C	ASTM D 2240

Elastomeric concrete shall not be used until the Engineer has approved the elastomeric concrete submittal in writing, has inspected the materials, and the manufacturer's technical representative has instructed the Contractor and Engineer in the surface preparation, mixing and application of the elastomeric concrete.

At a minimum, cleaning of the contact surfaces of existing concrete shall be accomplished by abrasive blast cleaning. The concrete and any exposed reinforcing steel shall be free of all rust, paint, grease, asphalt or other foreign materials. Steel contact surfaces shall be cleaned by methods approved by the Engineer to remove all rust, paint, grease, or other foreign materials. Immediately prior to placing the elastomeric concrete, the surfaces shall be re-cleaned by sweeping and pressure jetting, or by other approved means, as necessary to remove any debris which has accumulated during construction or after abrasive blast cleaning. The surface temperature of the areas to be covered shall be within the manufacturer's recommendations when the elastomeric concrete is placed. Methods proposed to heat said surfaces are subject to approval by the Engineer.

Self-Consolidating Concrete

Self-consolidating concrete shall be flowing concrete capable of spreading without segregation to a level state without the use of internal or external vibrators. Self-consolidating concrete shall conform to "Concrete Structures" of these special provisions and the requirements specified herein.

In addition to the chemical admixtures listed on the Department's current list of approved brands of admixtures that may be used, the Contractor may use a viscosity modifying admixture made by a chemical admixture manufacturer for the purpose of producing a self-consolidating concrete. The use of the viscosity modifying admixture shall be in accordance with the manufacturer's recommendations. The combined aggregate grading shall be any of the four maximum size grading limits specified in Section 90-3.04, "Combined Aggregate Gradings," of the Standard Specifications.

The Contractor's proposed mix design shall be pre-qualified for use in the demonstration pour by trial batch reports in conformance with Section 90-9 "Compressive Strength," of the Standard

Specifications except that the consistency shall be measured by the slump flow test and bleeding shall be measured by ASTM Designation, C 232, Method A. The slump flow test shall conform to the requirements in ASTM Designation: C 143 except the following:

A. The cone shall be filled in one lift without rodding. The cone shall be placed on a flat, moist, nonabsorbent, rigid base plate that is at least 700mm x 700 mm. The base plate shall have concentric circle marks showing 200-mm and 500-mm diameter circles.
B. Measure the time it takes for the concrete to reach 500 mm diameter circle. Report this as "Slump Flow Time" to the nearest 0.5 seconds.
C. After the concrete ceases to flow, measure the diameter in two perpendicular directions. Report this as "Slump Flow" to the nearest 5 mm.
D. Visually inspect the concrete spread to observe the distribution of coarse aggregate throughout the spread. Measure and record the radial width of any mortar ring without coarse aggregate. If no mortar ring without coarse aggregate exists, report as zero.

Consistency of the self-consolidating concrete shall be determined using the slump flow test method. The self-consolidating concrete shall have a minimum slump flow of 550 mm without segregation. The slump flow shall be selected by the Contractor based on the concrete constituent materials and placement procedures as specified in the approved working drawings.

The percent bleeding shall not exceed 1.5% when determined by ASTM Designation, C 232, Method A except that the container shall be filled in one lift without rodding.

Amendment to California Test 540

The following amendments to California Test 540, "Method of Making, Handling, and Storing Concrete Compressive Test Specimens in the Field," shall only apply to self-consolidating concrete. The Items "a" and "b" under "2. Test Specimen Fabrication" of "C. Preparation of Test Specimens" of California Test 540 shall be amended to read:

a. Place test molds on a firm, flat surface to prevent distortion of the bottom surface. When more than one specimen is to be made from the same batch, make all specimens simultaneously. Fill the mold in one lift with a circular motion of the scoop to distribute the concrete evenly in the mold. Pat sides of the mold lightly by hand, or jig by rocking the mold from side to side.
b. After the sides of the mold have been patted, strike off the surface of the concrete even with the top edge of the mold. Wipe the sides of the mold free of excess concrete and press the lid on to prevent evaporation.

Demonstration Pours

Prior to placing self-consolidating concrete, the Contractor shall construct at least one mock-up to demonstrate that the concrete will flow for the distance required by the proposed construction procedure. The placement of the self-consolidating concrete in the mock-up shall be witnessed by the Engineer.

The mock-up shall have a depth and length equal to that of the blockout detailed on the plans. The width of the mock-up shall be selected by the Contractor based on the distance that the concrete is required to flow according to the proposed construction procedure but shall not be less than 2 meters. The mock-up shall include concrete, reinforcement, and all concrete embedments as shown on the plans and approved working drawings, except that all reinforcement and embedments shall stop 300 mm from both longitudinal ends of the blockout so that concrete can be removed later and tested for segregation. The mock-up shall be covered with removable 27 mm plus or minus 3 mm thick transparent plastic top plate. The Contractor may submit a proposal for approval using multiple transparent plastic top plates to cover the mock-up instead of a single top plate provided that the plates are adequately tied together and

are watertight at the vertical edges where joined together as determined by the Engineer. The plastic top plate shall have vent holes of the same size and spacing as those in the support plate.

Acceptance criteria of the self-consolidating concrete shall be as follows:

A. Self-consolidating concrete shall flow under the plastic top plate and shall completely fill the void in the blockout.
B. After consolidation against the plastic top plate is verified, the Contractor shall remove the plastic top plate and shall take a sample of at least 45 kg of concrete from each end of the blockout to check for segregation by comparing coarse aggregate content with mix design values. The coarse aggregate content of each sample shall be determined using California Test 529 and shall not differ from the mix design value by more than 110 kg/m^3.
C. The percent bleeding shall not exceed 1.5% when determined by ASTM Designation, C 232, Method A except that the container shall be filled in one lift without rodding.

If the concrete fails to meet any of the acceptance criteria as determined by the Engineer, additional mock-ups shall be constructed at the Contractor's expense.

The mock-up shall not be part of the permanent structure and shall become the property of the Contractor. The mock-up shall be removed from the work site and shall be disposed of in conformance with the provisions in Section 7-1.13, "Disposal of Material Outside the Highway Right of Way," of the Standard Specifications.

Drill and Bond Dowels

Drilling and bonding *seismic joint anchors* shall conform to the details shown on the plans, the provisions in Section 83-2.02D(1), "General," of the Standard Specifications, and these special provisions.

Seismic joint anchors shall be supplied by the seismic joint manufacturer.

Nonskid Surface

The roadway riding surface of deck plates shall receive a nonskid surface consisting of polymer and fine aggregate skid coat (PASC).

The PASC shall be applied by a broom and seed method. Prior to placement of PASC, the plate shall be cleaned by abrasive blasting. All contaminates including rust shall be removed from the steel plate surface. A polymer resin shall be applied to the plate surface by broom, brush or other appropriate means:

The polymer resin shall be one of the following:

PRODUCT NAME	SUPPLIER
POLY-CARB Mark 163 Flexogrid Overlay System	Poly-Carb, Inc. 33095 Bainbridge Road Solon, OH 44139 Telephone: (800) 225-5649 Emergency Service: 1-440-914-3034 www.poly-carb.com
Low Modulus Polysulfide Epoxy Based Sealer Overlay (T-48) Chip Seal	Transpo Industries Inc. 20 Jones Street New Rochelle, NY 10801 Telephone: (914) 636-1000 FAX: 914-636-1282 http://www.transpo.com
Low Modulus Multi-Layer Epoxy Overlay	E-Bond Epoxies, Inc. P. O. Box 23069 501 N.E. 33rd Street Ft Lauderdale, Fl. 33307 Telephone: (954) 566-6555 FAX: (954) 566-6663 info@ebondepoxies.com
Unitex Pro-Poxy Type III DOT Epoxy Overlay System	Unitex 3101 Gardner Avenue Kansas City, MO 64120 Telephone: (800) 821-5846

The fine aggregate to be used shall meet the following gradation requirements:

Sieve Sizes	Percent Passing
9.5-mm	100
4.75-mm	95-100
2.36-mm	0-35
1.18-mm	0-10
600-µm	0-3
75-µm	0-3

The aggregate shall be evenly distributed on the resin coated plate so as to fill in between the ribs. The aggregate shall be applied to be appoximately even with the top surface of the ribs. This may require use of a strike-off prior to the resin gelling.

Sealing Elements

Sealing elements shall conform to the details shown on the plans and shall be continuous without splices.

Silicone sealing elements shall be 2 component silicone sealant that meets the requirements of Type A and AL seal in Section, 51-1.12F(3), "Materials and Installation," of the Standard Specifications.

The expansion joint system shall be a Trelleborg 2400 modified as shown on the plans and manufactured by the following manufacturer:

Trelleborg Izarra, S.A.U.
C/ Rio Manzanares, Numero 20-22
Poligono Industrial Jose Luis Velasco
28500 Arganda del Rey (Madrid) Spain
Phone: +34 918 701 700
Fax: +34 918 703 465
http://www.trelleborg.com/transflex/

Contact: Laura Ruiz and Juan Carlos Minaya

The Trelleborg 2400 expansion system shall be installed per manufacturer's recommendations.

FABRICATION

The seismic joint shall be fabricated in conformance with the details, dimensions, material specifications, and procedures shown in the approved working drawings.

The roadway riding surface of deck plates shall be machined with the traction rib pattern shown on the plans.

The surfaces between deck plates and support plates shall be in full contact. The contact surfaces between deck plates and support plates shall be within one millimeter in 300 mm and within 2 mm over the longest dimension of the plate measured before applying coatings to steel surfaces.

All plate welds shall be ground smooth. The welds shall not protrude into the sliding surface of the deck plates or support plates.

Sealing compound for caulking between gutter and concrete, as shown on the plans, shall be non-sag or gunnable sealant conforming to the requirements in ASTM Designation: C 920 and shall be Type NS. The sealing compound shall cure as recommended by the manufacturer prior to painting.

Cleaning and painting of all new metal surfaces of the seismic joints, except where embedded in concrete shall conform to the requirements specified in "Clean and Paint (Seismic Joints, Joint Seal Assemblies, and PTFE Bearings)" of these special provisions.

Damage to the seismic joint during shipping or handling shall be cause for rejection of the seismic joint.

Damage to the corrosion protection system shall be repaired to the satisfaction of the Engineer prior to installation.

INSTALLATION

Each seismic joint shall be installed in accordance with the approved working drawings.

The maximum gap between sliding surfaces shall not exceed 2 mm in any unloaded position.

Each seismic joint deck plate shall be installed such that there is no offset in alignment between adjacent plates along the edge surface where strip seal is to be placed.

Each installed seismic joint shall match the finished roadway profile and grades as shown on the plans.

The Contractor shall protect the seismic joint from damage. The Contractor shall protect concrete blockouts and support systems from damage and construction traffic prior to installation of the seismic joints.

Sealing elements not fully bonded to the steel extrusions shall be replaced by the Contractor at the Contractor's expense.

PAYMENT

The contract lump sum price paid for seismic joint at the locations listed in the Engineer's Estimate shall include full compensation for furnishing all labor, materials, tools, equipment and incidentals, and for doing all the work involved in fabricating, furnishing, transporting, storing, and installing the seismic joints, including fast setting hydraulic cement concrete, self-consolidating concrete, elastomeric concrete, bar reinforcing steel, neoprene sheets, gutter, elastomeric washers, anchorage components, mock-up construction, protecting, repairing, cleaning and painting, and sealing elements *and drilling and bonding dowels,* including silicone seals, complete in place, as shown on the plans, as specified in the Standard Specifications and these special provisions, and as directed by the Engineer.

If a portion or all of the structural steel for use in the seismic joint is fabricated more than 480 air line kilometers from both Sacramento and Los Angeles, additional shop inspection expenses will be sustained by the State. Whereas it is and will be impracticable and extremely difficult to ascertain and determine the actual increase in these expenses, it is agreed that payment to the Contractor for furnishing the structural steel for the seismic joint from each fabrication site located more than 480 air line kilometers from both Sacramento and Los Angeles will be reduced $5000 or by an amount computed at $0.044 per kilogram of structural steel fabricated, whichever is greater, or in the case of each fabrication site located more than 4800 air line kilometers from both Sacramento and Los Angeles, payment will be reduced $8000 or by $0.079 per kilogram of structural steel fabricated, whichever is greater.

REGISTERED PROFESSIONAL ENGINEER
STEVE MARGARIS
No. 56845
Exp. 6/30/12
CIVIL
STATE OF CALIFORNIA

STATE OF CALIFORNIA - DEPARTMENT OF TRANSPORTATION

CONTRACT CHANGE ORDER MEMORANDUM

DATE: 4/30/2012 Page 1 of 1

TO: Deanna Vilcheck, ACM /

FROM: William Howe, Senior R.E.

FILE: E.A. 04 - 0120S4
CO-RTE-PM SF-80-12.7/13.2
FED. NO. NO FED AID

CCO#: 100 | SUPPLEMENT#: 2 | Category Code: CHPT

CONTINGENCY BALANCE (incl. this change) $57,404,480.40

COST: $51,243.00 INCREASE ☑ DECREASE ☐

HEADQUARTERS APPROVAL REQUIRED? ☑ YES ☐ NO

SUPPLEMENTAL FUNDS PROVIDED: $0.00

IS THIS REQUEST IN ACCORDANCE WITH ENVIRONMENTAL DOCUMENTS? ☑ YES ☐ NO

CCO DESCRIPTION:
Seismic Joints KE, KW Fab.Red.Tolerances

PROJECT DESCRIPTION:
YBITS-1 (Yerba Buena Island Transition Structures)

Original Contract Time:	Time Adj. This Change:	Previously Approved CCO Time Adjustments:	Percentage Time Adjusted: (including this change)	Total # of Unreconciled Deferred Time CCO(s): (including this change)
1390 Day(s)	0 Day(s)	0 Day(s)	0 %	9

THIS CHANGE ORDER PROVIDES FOR:
Changes to fabrication for seismic joints at Hinges KE and KW.

Contract Change Order No. 100 changed the design of the seismic joints at Hinges KE and KW. The attached specification, Section 10.1.62a, "Seismic Joint (Hinge K)", of the Contract Special Provisions, pertains to the fabrication requirement for these joints.

The Engineer changed the tolerance of the faying surfaces of these joints to mill-to-bear. This change shall mitigate fit-up conflicts during installation. Thicker and/or longer material shall be used at the faying surfaces and then machine down to dimensions called out in the Contract Plans.

Non-skid coating for seismic joint Hinges KE and KW shown in CCO No. 100 is deleted from these joints. Refer to added specification for non-skid surface in Section 10-1.62a of the Special Provisions, to be performed by others.

Payment for this work will be an Adjustment in Compensation at Agreed Lump Sum of $51,243.00, which can be financed from the Contract's contingency fund. A detailed cost analysis is on file.

This change order was approved by the TBPOC on August 21, 2012, for a not to exceed (NTE) amount of $51,243.00; for a total cost of $1,831,715.00, copy attached.

Maintenance concurrence will be obtained for this change from Lina Ellis, Structures Maintenance.

CONCURRED BY:

Construction Engineer:	William Howe	Date 08-22-12
Bridge Engineer:	Mehran Ardakanian GKMA 8/24/12	Date 08-22-12
Project Engineer:	Bob Zandipour, Design	Date 8-28-12
Project Manager:	Ken Terpstra	Date 8-23-12
FHWA Rep.:		Date
Environmental:		Date
Other (specify):	Lina Ellis, Str. Maintenance	Date 9-4-12
Other (specify):		Date
District Prior Approval By:		Date
HQ (Issue Approve) By:	Larry Salhaney	Date 8-24-12
Resident Engineer's Signature:	William Howe	Date 08-22-12

ESTIMATE OF COST

	THIS REQUEST	TOTAL TO DATE
ITEMS	$0.00	($500,000.00)
FORCE ACCOUNT	$0.00	$0.00
AGREED PRICE	$0.00	$2,280,472.00
ADJUSTMENT	$51,243.00	$51,243.00
TOTAL	$51,243.00	$1,831,715.00

FEDERAL PARTICIPATION

☐ PARTICIPATING ☐ PARTICIPATING IN PART ☑ NONE
☐ NON-PARTICIPATING (MAINTENANCE) ☐ NON-PARTICIPATING

FEDERAL SEGREGATION (if more than one Funding Source or P.I.P. type)
☐ CCO FUNDED PER CONTRACT ☐ CCO FUNDED AS FOLLOWS

FEDERAL FUNDING SOURCE PERCENT

ADA Notice: For individuals with sensory disabilities, this document is available in alternate formats. For information call: (916) 654-6410 or TDD (916) 654-3880 or write Records and Forms Management, 1120 N Street, MS-89, Sacramento, CA 95814.

STATE OF CALIFORNIA - DEPARTMENT OF TRANSPORTATION

CONTRACT CHANGE ORDER

Change Requested by: Engineer

CCO 102	Suppl. No. 1	Contract No 04 - 0120S4	Road SF-80-12.7/13.2	FED. AID LOC.: NO FED AID

To: **M C M CONSTRUCTION INC**

You are directed to make the following changes from the plans and specifications or do the following described work not included in the plans and specifications for this contract. ***NOTE: This change order is not effective until approved by the Engineer.***

Description of work to be done, estimate of quantities and prices to be paid (Segregate between additional work at contract price, agreed price and force account.) Unless otherwise stated, rates for rental of equipment cover only such time as equipment is actually used and no allowance will be made for idle time. This last percentage shown is the net accumulated increase or decrease from the original quantity in the Engineer's Estimate

Extra Work at Force Account:

Provide additional funds

Estimated Cost Extra Work at Force Account = $50,000.00

Estimated Cost: Increase ✓ Decrease $50,000.00

By reason of this order the time of completion will be adjusted as follows: 0 days

Submitted by

Signature	Resident Engineer	Date
William Howe	William Howe, Senior R.E.	05-03-13

Approval Recommended by

Signature	Area Construction Manager	Date
Deanna Vi	Deanna Vilcheck	5/3/13

Engineer Approval by

Signature	Area Construction Manager	Date
Deanna Vilcheck	Deanna Vilcheck	5/3/13

We the undersigned contractor, have given careful consideration to the change proposed and agree, if this proposal is approved, that we will provide all equipment, furnish the materials, except as may otherwise be noted above, and perform all services necessary for the work above specified, and will accept as full payment therefor the prices shown above

NOTE: If you, the contractor, do not sign acceptance of this order, your attention is directed to the requirements of the specifications as to proceeding with the ordered work and filing a written protest within the time therein specified.

Contractor Acceptance by

Signature	(Print name and title)	Date
Not Required		

STATE OF CALIFORNIA - DEPARTMENT OF TRANSPORTATION

CONTRACT CHANGE ORDER MEMORANDUM

DATE: 3/7/2013 Page 1 of 1

TO Deanna Vilcheck, ACM / RJ

FROM: William Howe, Senior R.E.

FILE E.A. 04 - 0120S4
CO-RTE-PM SF-80-12.7/13.2
FED. NO. NO FED AID

CCO# 102 SUPPLEMENT#: 1 Category Code: CGMX

CONTINGENCY BALANCE (incl this change) $28,732,837.15

COST $50,000.00 INCREASE ✓ DECREASE

HEADQUARTERS APPROVAL REQUIRED? YES ✓ NO

SUPPLEMENTAL FUNDS PROVIDED $0.00

IS THIS REQUEST IN ACCORDANCE WITH ENVIRONMENTAL DOCUMENTS? ✓ YES NO

CCO DESCRIPTION:
addit funds-grout enhancements

PROJECT DESCRIPTION:
YBITS-1 (Yerba Buena Island Transition Structures)

Original Contract Time	Time Adj This Change	Previously Approved CCO Time Adjustments	Percentage Time Adjusted (including this change)	Total # of Unreconciled Deferred Time CCO(s) (including this change)
1390 Day(s)	0 Day(s)	0 Day(s)	0 %	9

THIS CHANGE ORDER PROVIDES FOR:
Procuring and utilizing BASF Zero-C, "Self-Consolidating and BASF Zero-C," Self-Consolidating Extended mortars in place of BASF Masterflow® 928 for patching as directed by the Engineer. The Contractor shall be compensated only for the material cost differential between the above mentioned materials.

This project, the Yerba Buena Island Transition Structure (YBITS), provides for the construction of two bridges which will connect eastbound and westbound traffic on the new east span of the San Francisco Oakland Bay Bridge (SFOBB) to the existing Yerba Buena Island (YBI) tunnel. The structures are comprised of concrete box girder bridges each approximately 26 meters wide, 40 meters high and 450 meters in length

The Engineer directed the Contractor to use BASF Zero-C, "Self-Consolidating and BASF Zero-C", Self-Consolidating Extended mortars in lieu of previously approved BASF Masterflow® 928 for patching. The BASF Zero-C, "Self-Consolidating and BASF Zero-C", Self-Consolidating Extended mortars properties are more compatible with the properties of the concrete being used on this project. These products were recommended by METS for patching

Contract Change Order No. 102 S0, compensated the Contractor at Extra Work at Force Account in the amount of $35,000.00. Contract Change Order No. 102 S1 will provide for additional funds at Extra Work at Force Account in the amount of $50,000.00, which shall be financed from the contract's contingency funds. Total cost of this change order is $85,000.00. A detailed cost analysis is on file.

Structure Maintenance concurrence is not required as this change does not change any design of the bridge

As this change does not affect controlling item, no adjustment of contract time is warranted

CONCURRED BY:

Construction Engineer	William Howe WBH	Date 05-05-13
Bridge Engineer for	Mehran Ardakanian	Date 5-6-13
Project Engineer	Bob Zandipour, Design	Date 5-6-13
Project Manager	Ken Terpstra	Date 5-7-13
FHWA Rep		Date
Environmental		Date
Other (specify)		Date
Other (specify)		Date
District Prior Approval By		Date
HQ (Issue Approve) By		Date
Resident Engineer's Signature		Date
William Howe		05 03 13

ESTIMATE OF COST

	THIS REQUEST	TOTAL TO DATE
ITEMS	$0.00	$0.00
FORCE ACCOUNT	$50,000.00	$85,000.00
AGREED PRICE	$0.00	$0.00
ADJUSTMENT	$0.00	$0.00
TOTAL	$50,000.00	$85,000.00

FEDERAL PARTICIPATION

PARTICIPATING PARTICIPATING IN PART ✓ NONE

NON PARTICIPATING (MAINTENANCE) NON PARTICIPATING

FEDERAL SEGREGATION (if more than one Funding Source or P.T.P. type)

CCO FUNDED PER CONTRACT CCO FUNDED AS FOLLOWS

FEDERAL FUNDING SOURCE PERCENT

ADA Notice: For individuals with sensory disabilities, this document is available in alternate formats. For information call (916) 654-6410 or TDD (916) [illegible]
Records and Forms Management, 1120 N Street, MS 49, Sacramento, CA 95814

STATE OF CALIFORNIA - DEPARTMENT OF TRANSPORTATION

CONTRACT CHANGE ORDER

Change Requested by: Engineer

CCO 103	Suppl. No. 0	Contract No. 04 - 0120S4	Road SF-80-12.7/13.2	FED. AID LOC.: NO FED AID

To: **M C M CONSTRUCTION INC**

You are directed to make the following changes from the plans and specifications or do the following described work not included in the plans and specifications for this contract. ***NOTE: This change order is not effective until approved by the Engineer.***

Description of work to be done, estimate of quantities and prices to be paid. (Segregate between additional work at contract price, agreed price and force account.) Unless otherwise stated, rates for rental of equipment cover only such time as equipment is actually used and no allowance will be made for idle time. This last percentage shown is the net accumulated increase or decrease from the original quantity in the Engineer's Estimate.

Adjustment of Compensation at Lump Sum:

Cut reinforcement bar at the east side of Hinge W7LA that is in conflict with the placement of the bearing assemblies as directed by the Engineer. After installation of the bearings, couple the cut reinforement bar to provide reinforcement shown on the Contract Plans.

For this work, the Contractor will be paid the sum of $66,000.00. This sum constitutes full and complete compensation, including all markups for this change.

Adjustment of Compensation @ Agreed Lump Sum = $66,000.00

8/17/12

Estimated Cost: Increase ☑ Decrease ☐ **$66,000.00**

By reason of this order the time of completion will be adjusted as follows: 0 days

Submitted by		
Signature William Howe	Resident Engineer William Howe, Senior R.E.	Date 07-13-12
Approval Recommended by		
Signature Deanna Vilcheck	Area Construction Manager Deanna Vilcheck	Date 7/13/12
Engineer Approval by		
Signature Deanna Vilcheck	Area Construction Manager Deanna Vilcheck	Date 8/17/12

We the undersigned contractor, have given careful consideration to the change proposed and agree, if this proposal is approved, that we will provide all equipment, furnish the materials, except as may otherwise be noted above, and perform all services necessary for the work above specified, and will accept as full payment therefor the prices shown above.

NOTE: If you, the contractor, do not sign acceptance of this order, your attention is directed to the requirements of the specifications as to proceeding with the ordered work and filing a written protest within the time therein specified.

Contractor Acceptance by		
Signature	(Print name and title) Edmundo Arechi - Treasurer	Date 8/13/2012

STATE OF CALIFORNIA - DEPARTMENT OF TRANSPORTATION

CONTRACT CHANGE ORDER MEMORANDUM

DATE: 5/4/2012 Page 1 of 1

TO: Deanna Vilcheck, ACM / DV	FILE: E.A. 04 - 0120S4
FROM: William Howe, Senior R.E.	CO-RTE-PM SF-80-12.7/13.2
	FED. NO. NO FED AID
CCO#: 103 SUPPLEMENT#: 0 Category Code: CHPT	CONTINGENCY BALANCE (incl. this change) $57,975,283.40
COST: $66,000.00 INCREASE ☑ DECREASE ☐	HEADQUARTERS APPROVAL REQUIRED? ☐ YES ☑ NO
SUPPLEMENTAL FUNDS PROVIDED: $0.00	IS THIS REQUEST IN ACCORDANCE WITH ENVIRONMENTAL DOCUMENTS? ☑ YES ☐ NO
CCO DESCRIPTION: Hinge W7LA - couplers for constr.staging	**PROJECT DESCRIPTION:** YBITS-1 (Yerba Buena Island Transition Structures)

Original Contract Time:	Time Adj. This Change:	Previously Approved CCO Time Adjustments:	Percentage Time Adjusted: (including this change)	Total # of Unreconciled Deferred Time CCO(s): (including this change)
1390 Day(s)	0 Day(s)	0 Day(s)	0 %	9

THIS CHANGE ORDER PROVIDES FOR:

Cutting the upper hinge rebars placed at Hinge W7LA east side of Frame 2 that are in conflict with the placement of the bearing assembly and to couple them after installation of the bearing assembly.

There is a space conflict between the rebar and bearing assembly at Hinge W7LA. The installed upper hinge seat rebar assembly, Frame 2, had to be removed and rebar couplers added after the lower bearings were installed.

Payment for this work will be an Adjustment in Compensation at Agreed Lump sum of $66,000.00, which can be financed from the Contract's contingency fund.

Structure Maintenance concurrence is not required as this change does not affect the design intent as permanent work.

No adjustment to contract time is required due to these changes as they do not affect controlling operations.

CONCURRED BY:

Construction Engineer:	William Howe	Date 07.16.12
Bridge Engineer:	Mehran Ardakanian MA	Date 8/17/12
Project Engineer:	Bob Zandipour, Design	Date 7-16-12
Project Manager:	Ken Terpstra KT	Date 7-25-12
FHWA Rep.:		Date
Environmental:		Date
Other (specify):		Date
Other (specify):		Date
District Prior Approval By:		Date
HQ (Issue Approve) By:		Date
Resident Engineer's Signature: William Howe		Date 07.16.12

ESTIMATE OF COST

	THIS REQUEST	TOTAL TO DATE
ITEMS	$0.00	$0.00
FORCE ACCOUNT	$0.00	$0.00
AGREED PRICE	$0.00	$0.00
ADJUSTMENT	$66,000.00	$66,000.00
TOTAL	$66,000.00	$66,000.00

FEDERAL PARTICIPATION

☐ PARTICIPATING ☐ PARTICIPATING IN PART ☑ NONE

☐ NON-PARTICIPATING (MAINTENANCE) ☐ NON-PARTICIPATING

FEDERAL SEGREGATION (if more than one Funding Source or P.I.P. type)

☐ CCO FUNDED PER CONTRACT ☐ CCO FUNDED AS FOLLOWS

FEDERAL FUNDING SOURCE	PERCENT

ADA Notice: For individuals with sensory disabilities, this document is available in alternate formats. For information, call (916) 654-6410 or TDD (916) 654-3880 or write to Records and Forms Management, 1120 N Street, MS-89, Sacramento, CA 95814.

STATE OF CALIFORNIA - DEPARTMENT OF TRANSPORTATION

CONTRACT CHANGE ORDER

Change Requested by: Engineer

CCO 105	Suppl. No. 0	Contract No. 04 - 0120S4	Road SF-80-12.7/13.2	FED. AID LOC.: NO FED AID

To: **M C M CONSTRUCTION INC**

You are directed to make the following changes from the plans and specifications or do the following described work not included in the plans and specifications for this contract. ***NOTE: This change order is not effective until approved by the Engineer.***

Description of work to be done, estimate of quantities and prices to be paid. (Segregate between additional work at contract price, agreed price and force account.) Unless otherwise stated, rates for rental of equipment cover only such time as equipment is actually used and no allowance will be made for idle time. This last percentage shown is the net accumulated increase or decrease from the original quantity in the Engineer's Estimate.

Extra Work at Force Account:

Furnish all labor, equipment, and materials necessary to install flumes and related apparatus in the bioretention basin system located west of the San Francisco-Oakland Bay Bridge (SFOBB) Toll Plaza for the San Francisco-Oakland Bay Bridge East Span Seismic Safety Project Yerba Buena Island Transition Structures, Bridge Nos. 34-0006L/R.This work shall be performed as shown on attached Plan Sheet Nos. D-1, DD-1, DD-2 and DD-3, and per attached Standard Specification Sections 10-1.01, "H Flume, HS Flume and Approach Section", and 10-1.02, "Forced Main Terminus Downspout".

The attached plan sheets and specifications, Sheet Nos. 2 through 8, shall be incorporated into the Contract Documents by reason of this change.

The work of this change shall include, but shall not be limited to:

1.) Removal of two (2) existing flumes and delivery to the nearby Caltrans Maintenance Yard located on the I-80 frontage road;
2.) Fabrication and installation of four (4) each H flumes;
3.) Fabrication and installation of three (3) each HS flumes in existing manholes;
4.) Fabrication and installation of two (2) each downspouts; and
5.) Other work as directed by the Engineer.

This work will be paid for in accordance with Section 5-1.17 "Force Account Payment" of the Special Provisions and Section 4-1.03D "Extra Work" of the Standard Specifications.

Estimated cost of Extra Work at Force Account $140,000.00

Estimated Cost: Increase ☑ Decrease ☐ **$140,000.00**

By reason of this order the time of completion will be adjusted as follows: 0 days

Submitted by

Signature Deanna Vilcheck	Resident Engineer for William Howe, Senior R.E.	Date 12/5/11

Approval Recommended by

Signature Deanna Vilcheck	Area Construction Manager Deanna Vilcheck	Date 12/5/11

Engineer Approval by

Signature Deanna Vilcheck	Area Construction Manager Deanna Vilcheck	Date 1/13/12

We the undersigned contractor, have given careful consideration to the change proposed and agree, if this proposal is approved, that we will provide all equipment, furnish the materials, except as may otherwise be noted above, and perform all services necessary for the work above specified, and will accept as full payment therefor the prices shown above.

NOTE: If you, the contractor, do not sign acceptance of this order, your attention is directed to the requirements of the specifications as to proceeding with the ordered work and filing a written protest within the time therein specified.

Contractor Acceptance by

Signature	(Print name and title) Edmundo A. Ruchi Treas.	Date 1-10-2012

10-1.01 H Flume, HS Flume and Approach Section:

Summary

This work includes furnishing and installing H and HS flumes with approach sections.

Quality Control and Assurance

Internal dimensions must conform to the latest revision of the Field Manual for Research in Agricultural Hydrology, Agriculture Handbook Number 224, published by the U.S. Department of Agriculture.

MATERIALS

Flume and approach sections must be composite fiberglass reinforced plastic and must conform to,

1. Tensile strength (ASTM D638) 9.65 MPa (min.)
2. Flexural strength (ASTM D 790) 186 MPai (Min.)
3. Flexural modulus (ASTM D 790) 6895 MPA (Min.)
4. Barcol hardness (ASTM D 2583) 50.
5. Minimum wall thickness must be 6 mm.
6. Minimum glass content must be 30 percent by weight
7. Coating must be 15 mil isophthalic, UV resistant, white interior and grey exterior.
8. Stiffening ribs must be molded-in and provided at maximum 300 mm spacing.
9. Integral ridged stainless-steel bubble tube must be provided for head measurement.
10. Approach section must have 50 mm flange for assembly with 304 stainless steel hardware.

Flumes and approach sections can be obtained from following manufacturers:

1. Plati-Fab Inc, Tualatin, Oregon
2. Tracom Inc, Alpharetta, Georgia
3. Free Flow Inc., Gretna, Nebraska

10-1.02 Forced Main Terminus Downspout:

Summary

This work includes furnishing and installing terminus downspout.

MATERIALS

1. 300 mm and 450 mm elbow must be ductile iron fitting and conform to ASTM C153
2. 300 mm and 450 mm pipe extension must be plain ductile iron, malleable, and conform to ASTM C153
3. 300 mm and 450 mm joint sleeve must be plain ductile iron and conform to ASTM C153
4. 300 mm and 450 mm joint accessory set must conform to ASTM C153.

REGISTERED PROFESSIONAL ENGINEER
Wilfung Martono
No. 77159
Exp. 12/31/12
CIVIL
STATE OF CALIFORNIA

CONTRACT NO. 04-012054

CONTRACT CHANGE ORDER NO 105 SO

SHEET 2 OF 8

Narrative Direction – DRAFT

San Francisco Oakland Bay Bridge Bioretention Pilot Project – Flume Extensions

Installation Notes

Part 1. 1.0 ft. HS flumes in bioretention basin metering manhole

1. Do not enter type G2 metering manhole without proper confined space entry procedures in place.
2. Cut/grind the existing 150 mm or 200 mm plastic discharge pipe flush with the concrete back wall.
3. Insert the flume and approach sections (two 2-foot sections) into the vault as three separate pieces and assemble within the vault if the fully assembled piece will not fit through the manhole.
4. Assemble the flume and approach sections by bolting the pieces together with stainless-steel hardware provided by the manufacturer and sealing each joint with Dap® Dynaflex 3.0 Advanced All Purpose Sealant with Kwik Dry Technology.
5. Install angle iron ledgers on either side wall at an elevation that ensures the flume can be mounted level to the bottom of the plastic discharge pipe. Use four anchor bolts per side.
6. Install three threaded mounting rods on each angle iron.
7. Install three square tube cross pieces to support the flume, one supporting the approximate midpoint of the flume and two supporting the flume extension. Each tube support should be cut to fit across the angle iron ledgers. Ensure that the flume stiffening ribs and flanges do not rest on the tube supports; the floor of the flume (between stiffening ribs and flanges) should rest on the tube supports.
8. Mount the flume approach section to the concrete back wall with wedge anchor bolts (two anchors per side and two anchors on the bottom) such that the floor of the plastic discharge pipe is level with the floor of the flume approach section. Ensure that the plastic discharge pipe is centered side to side within the flume approach section. Seal the joint between the flume and the concrete back wall with Dap® Dynaflex 3.0 Advanced All Purpose Sealant with Kwik Dry Technology to help prevent leaks.
9. Adjust the square tube mounting bolts to level the flume and approach sections front to back, and side to side.

Part 2. 2.0 ft. H flumes at bioretention basin inlet box distribution structures

I For bioretention basin inlet structures 1, 2, 4, 5 east and 5 west:

1. Install 2" x 6" wood ledger (sill) on top of lower concrete support wall with concrete anchors.
2. Install 4" x 6" x 8" lg. wood blocks on top of 2" x 6" ledger by nails or screws.
3. Install 2" x 6" wood ledger (sill) on top of higher concrete support wall with concrete anchors.
4. Install 4" x 4" x 48" lg. wood support beams across wood supports such that the flume stiffening ribs and flanges do not rest on the support beams. Nail or screw

the beams in place. The floor of the flume (between stiffening ribs and flanges) should rest on the support beams.

5. Assemble the flume and approach sections (two six-foot [1800 mm] sections) in place by bolting the pieces together with stainless-steel hardware provided by the manufacturer and sealing each joint with Dap® Dynaflex 3.0 Advanced All Purpose Sealant with Kwik Dry Technology.
6. Use wood shims to level the flume and approach sections front to back and side to side.
7. Mount the flume approach section to the concrete back wall with concrete wedge anchor bolts (three anchors per side and three anchors on the bottom) such that the floor of the opening from the box distribution structure is level with the floor of the flume approach section. Seal the joint between the flume and the concrete back wall with Dap® Dynaflex 3.0 Advanced All Purpose Sealant with Kwik Dry Technology to help prevent leaks.
8. Fill the flume and approach sections to one-half capacity with a load of water, check level front to back and side to side. Check for leaks. Drain the flume and adjust level if necessary. If leaks are found, repair with Dap® Dynaflex 3.0 Advanced All Purpose Sealant with Kwik Dry Technology. Repeat this procedure until flume maintains level and leaks are repaired.

II For bioretention basin inlet structure 3:

Proceed as in part 2.I above, except use only ONE 6-foot (1800 mm) approach section instead of TWO 6-foot (1800 mm) approach sections. This is due to a bend in the receiving channel such that the channel will accommodate only one 1800 mm approach section.

III For bioretention basin inlet box distribution structures 6 east and 6 west:

1. Uninstall the existing flumes and approach sections such that they will be reused at the same location.
2. Proceed as in part 2.II above. (i.e., use only ONE 6-foot [1800 mm] approach section and proceed as in part 2.I above.)

Part 3. Forced main terminus downspouts in inlet box distribution structures.

1. Chip away concrete to expose terminal pipe section.
2. Install new 90 degree elbow inside of inlet box distribution structure such that discharge point is equidistant to the front and back wall of the inlet box interior.
3. Attach a straight pipe downspout extension (if required) to ensure that the terminus of downspout is 1.5 feet from the floor of the inlet structure.
4. Grout around pipe with Portland cement to seal inlet structure.

NOTE:
FOR DETAILS SEE DD-1, DD-2 AND DD-3

CONTRACT NO 04-012054

CONTRACT CHANGE ORDER NO 105 50

SHEET 5 OF 8

DIST	COUNTY	ROUTE	KILOMETER POST TOTAL PROJECT	SHEET No	TOTAL SHEETS
04	Ala	80	2.5/5.6	58	260

REGISTERED CIVIL ENGINEER

PLANS APPROVAL DATE

ADH ENVIRONMENTAL
3065 PORTER STREET, SUITE 101
SOQUEL, CALIFORNIA 95073

REGISTERED PROFESSIONAL ENGINEER No. C54036 EXP. 12-31-11 CIVIL STATE OF CALIFORNIA

The State of California or its officers or agents shall not be responsible for the accuracy or completeness of electronic copies of this plan sheet, or completeness of electronic copies of this plan

To get to the web site, go to: http://www.dot.ca.gov

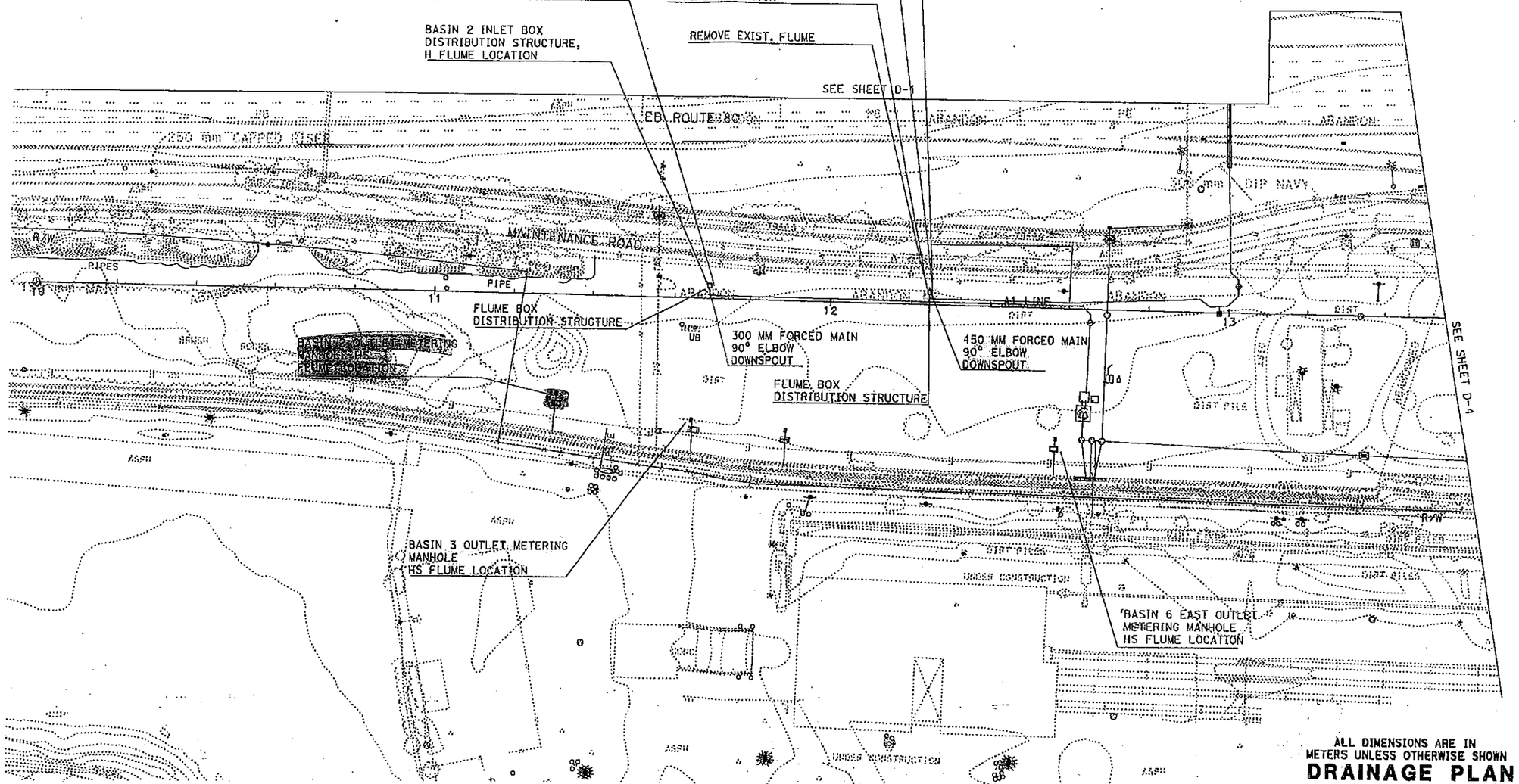

FOR NOTES, ABBREVIATIONS &/OR LEGEND, SEE SHEET D-1

THIS PLAN ACCURATE FOR DRAINAGE WORK ONLY

ALL DIMENSIONS ARE IN METERS UNLESS OTHERWISE SHOWN

DRAINAGE PLAN
LOCATION 2

SCALE: 1:500

D-1

STATE OF CALIFORNIA - DEPARTMENT OF TRANSPORTATION
Caltrans

DESIGN OVERSIGHT: R. PATEL
CALCULATED/DESIGNED BY
CHECKED BY
DATE REVISED BY
DATE REVISED

LAST REVISION 07-15-05
DATE PLOTTED => 26-AUG-2011
TIME PLOTTED => 11:35

RELATIVE BORDER SCALE IS IN MILLIMETERS 0 20 40 60 80

USERNAME => s133458
DGN FILE => 40120jic002_1.dgn

CU 04274

EA 0120J1

Dist	COUNTY	ROUTE	POST MILES TOTAL PROJECT	SHEET No.	TOTAL SHEETS
04	ALA	80	2.5/3.6		

REGISTERED CIVIL ENGINEER — DATE 9-10-11

PLANS APPROVAL DATE

REGISTERED PROFESSIONAL ENGINEER No. C54036 Exp. 12-31-11 CIVIL STATE OF CALIFORNIA

THE STATE OF CALIFORNIA OR ITS OFFICERS OR AGENTS SHALL NOT BE RESPONSIBLE FOR THE ACCURACY OR COMPLETENESS OF SCANNED COPIES OF THIS PLAN SHEET.

CONTRACT NO. 04-012054

CONTRACT CHANGE ORDER NO 105 S0

SHEET 6 OF 8

NOTES:

1. INSTALL 100X150X200 TIMBER BLOCKS ON LOWER SUPPORT WALL OF CONCTRETE CHANNEL ONLY AND CONNECT IT TO 50X150 TIMBER LEDGER WITH NAILS OR SCREWS.
2. CONNECT 100 X 100 TIMBER BEAMS TO 50X150 TIMBER LEDGER OR 100 X 150 X 200 TIMBER BLOCK WITH NAILS OR SCREWS.
3. LOCATE 100 X 100 TIMBER BEAMS SUCH THAT THE FLUME STIFFENING RIBS AND FLANGES DO NOT REST ON THESE SUPPORT BEAMS
4. ASSEMBLE THE FLUME AND APPROACH SECTIONS IN PLACE BY BOLTING THE PIECES TOGETHER WITH STAINLESS STEEL HARDWARE PROVIDED BY THE MANUFACTURER AND SEALING ALL JOINTS WITH SILICONE SEALANT.
5. USE WOOD SHIMS TO LEVEL THE FLUME AND APPROACH SECTION FRONT TO BACK AND SIDE TO SIDE.
6. FILL FLUME AND APPROACH SECTIONS WITH WATER TO HALF DEPTH AND CHECK FOR LEVEL AND LEAK. DRAIN WATER AND ADJUST LEVEL AND FIX ANY LEAK IF NECESSARY.
7. FOR BASIN 2 INLET BOX DISTRIBUTION STRUCTURE USE ONE 1800 MM APPROACH SECTION ONLY.
8. FOR BASIN 6, EAST AND WEST INLET BOX DISTRIBUTION STRUCTURE REMOVE EXISTING FLUME/ APPOACH SECTIONS AND INSTALL NEW FLUMES/APPROACH SECTIONS.

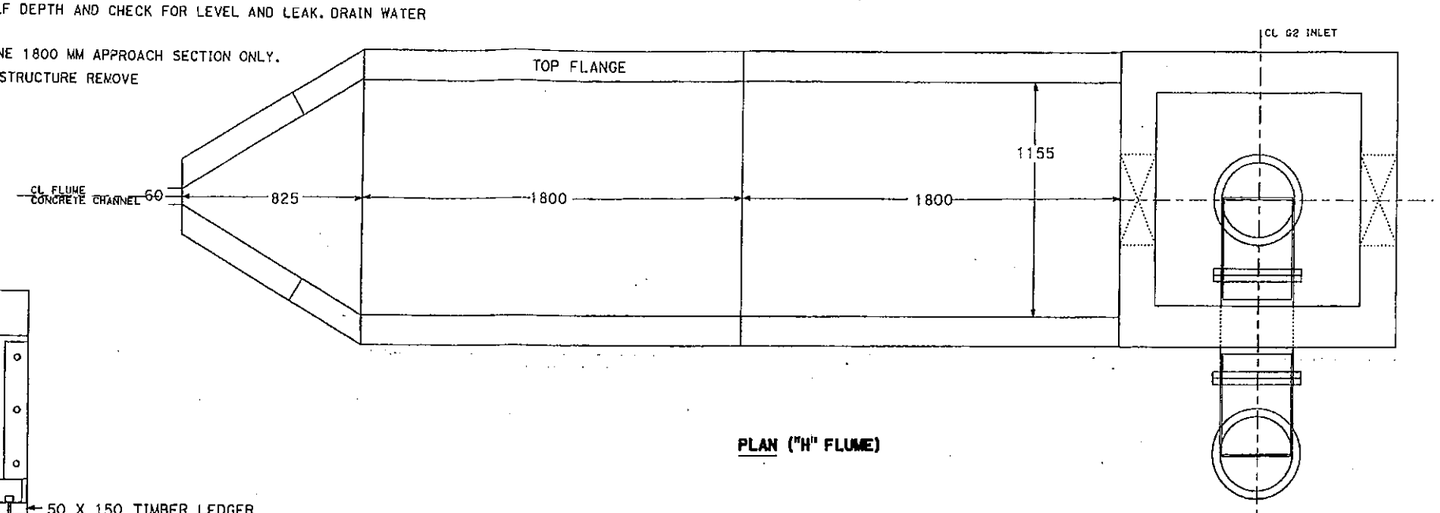

PLAN ("H" FLUME)

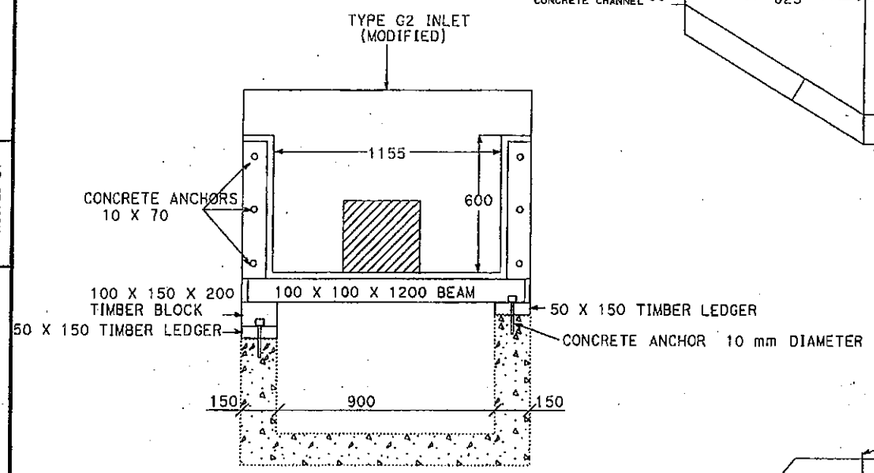

CROSS SECTION

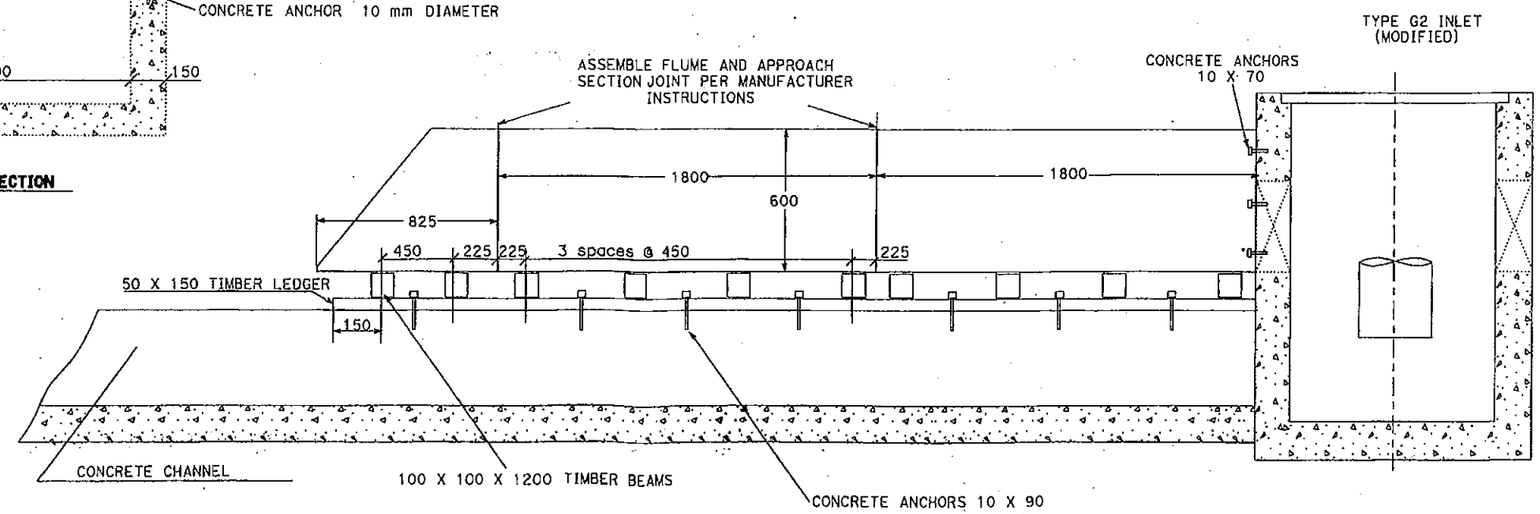

ELEVATION

ALL DIMENSIONS ARE IN MILLIMETERS UNLESS OTHERWISE SHOWN

DRAINAGE DETAIL

NO SCALE

DD-1

REVISED BY | DATE REVISED | CALCULATED-DESIGNED BY | CHECKED BY | FUNCTIONAL SUPERVISOR

STATE OF CALIFORNIA - DEPARTMENT OF TRANSPORTATION

Caltrans

LAST REVISION 00-00-00 | DATE PLOTTED => 26-AUG-2011 | TIME PLOTTED => 11:34

BORDER LAST REVISED 7/2/2010 | USERNAME => s133458 | DGN FILE => Drawings3V8.dgn | RELATIVE BORDER SCALE IS IN INCHES 0 1 2 3 | UNIT 0000 | PROJECT NUMBER & PHASE 00000000001

DI&+	COUNTY	LOCATION CODE	POST MILES TOTAL PROJECT	SHEET No.	TOTAL SHEETS

REGISTERED CIVIL ENGINEER 9-10-11 DATE

PLANS APPROVAL DATE

THE STATE OF CALIFORNIA OR ITS OFFICERS OR AGENTS SHALL NOT BE RESPONSIBLE FOR THE ACCURACY OR COMPLETENESS OF SCANNED COPIES OF THIS PLAN SHEET.

REGISTERED PROFESSIONAL ENGINEER No. C54036 Exp. 12-31-11 CIVIL STATE OF CALIFORNIA

NOTES:

1. CUT/GRIND EXISTING 150/200 MM DISCHARGE PIPE FLUSH WITH THE CONCRETE BACK WALL AS REQUIRED.
2. ASSEMBLE FLUME AND APPROACH SECTIONS INSIDE THE INLET STRUCTUREBY BOLTING THEM TOGETHER WITH STAINLESS HARDWARE PROVIDED BY THE MANUFACTURER AND SEALING ALL JOINTS WITH SILICONE SEALANT.
3. ENSURE THAT THE INSIDE BOTTOM OF DISCHARGE PIPE IS LEVEL WITH BOTTOM OF APPROACH SECTION AND DISCHARGE PIPE IS CENTERED SIDE BY SIDE WITHIN WIDTH OF APPROACH SECTION.
4. USE THREADED RODS TO LEVEL THE FLUME AND APPROACH SECTIONS FRONT TO BACK AND SIDE TO SIDE.
5. SEAL THE JOINT BETWEEN APPROACH SECTION AND CONCRETE BACK WALL WITH EXTERNAL SILICONE SEALANT TO PREVENT WATER LEAKS.

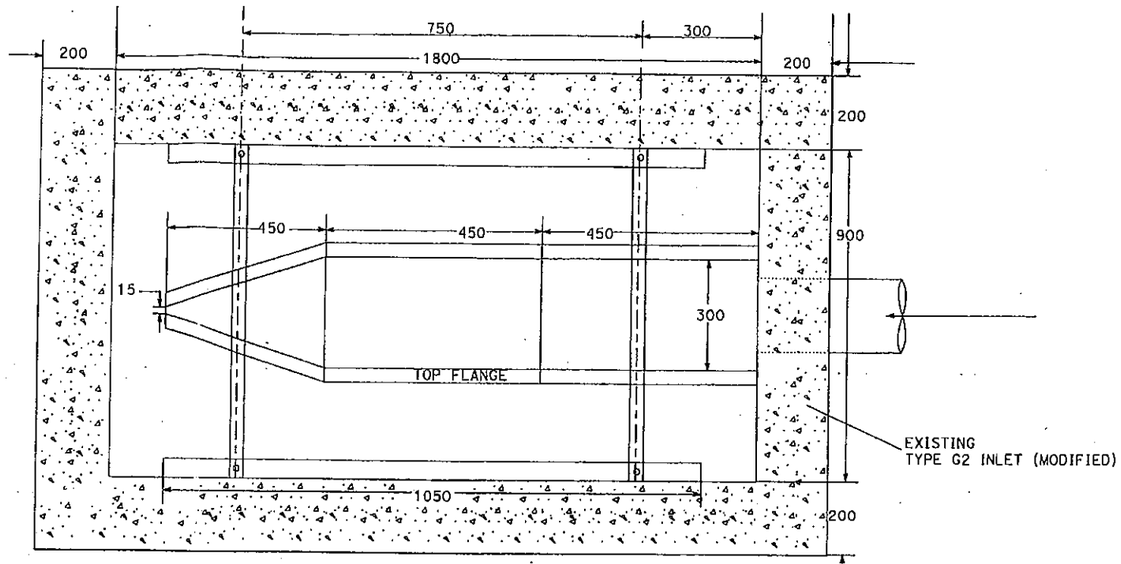

PLAN

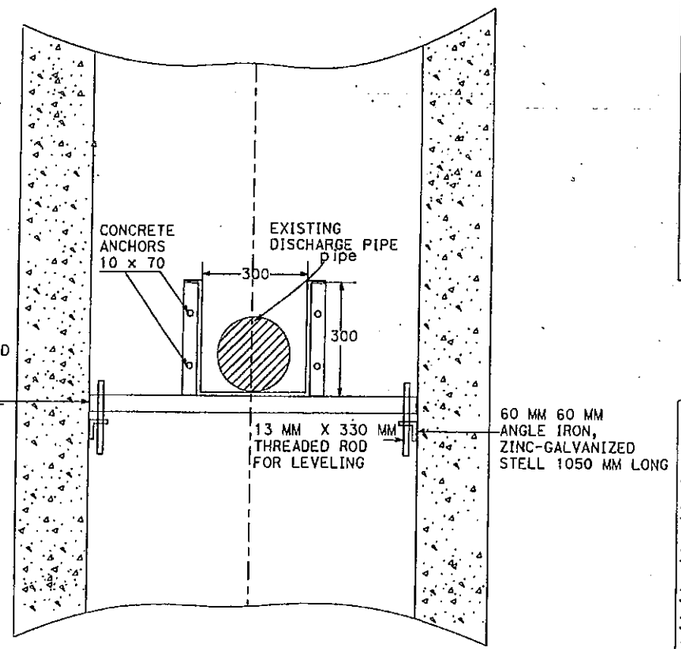

CROSS-SECTION

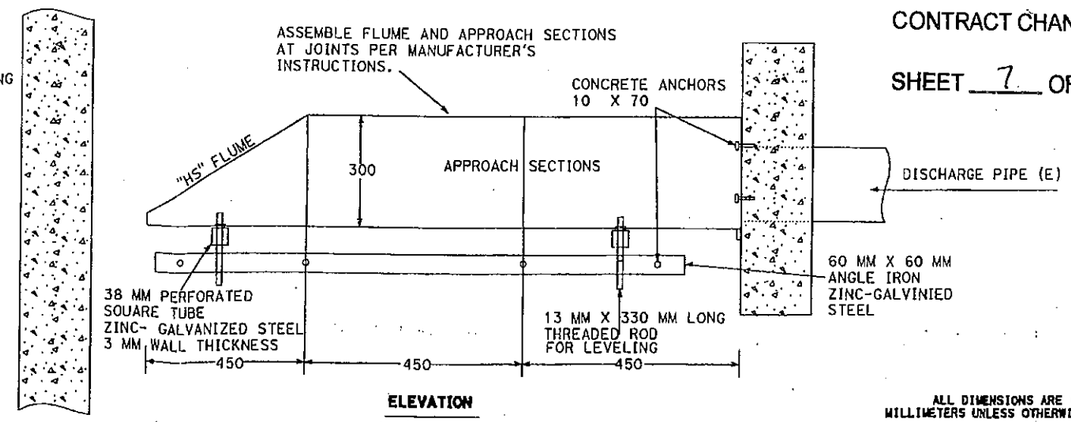

ELEVATION

"HS" FLUME

CONTRACT NO. 04-012054

CONTRACT CHANGE ORDER NO 105 SO

SHEET 7 OF 8

ALL DIMENSIONS ARE IN MILLIMETERS UNLESS OTHERWISE SHOWN

DRAINAGE DETAILS

NO SCALE

DD-2

REVISED BY	DATE REVISED

CALCULATED-DESIGNED BY	CHECKED BY

FUNCTIONAL SUPERVISOR

STATE OF CALIFORNIA - DEPARTMENT OF TRANSPORTATION

Caltrans

LAST REVISION 00-00-00 DATE PLOTTED => 26-AUG-2011 TIME PLOTTED => 11:33

BORDER LAST REVISED 7/2/2010 | USERNAME => s133458 DGN FILE => DrawingsV8.dgn | RELATIVE BORDER SCALE IS IN INCHES 0 1 2 3 | UNIT 0000 | PROJECT NUMBER & PHASE 00000000001

DIST	COUNTY	ROUTE	KILOMETER POST TOTAL PROJECT	SHEET No.	TOTAL SHEETS
04	Ala	80	2.5/5.6	93	260

REGISTERED CIVIL ENGINEER

PLANS APPROVAL DATE

REGISTERED PROFESSIONAL ENGINEER No. C54036 Exp. 12-31-11 CIVIL STATE OF CALIFORNIA

ADH ENVIRONMENTAL
3065 PORTER STREET, SUITE 101
SOQUEL, CALIFORNIA 95073

The State of California or its officers or agents shall not be responsible for the accuracy or completeness of electronic copies of this plan sheet, or completeness of electronic copies of this plan

To get to the Caltrans web site, go to: http://www.dot.ca.gov

Caltrans Metric

CONTRACT NO. 04-012054

CONTRACT CHANGE ORDER NO 105 S0

SHEET 8 OF 8

NOTES:

INSTALLATION OF FORCED MAIN DOWNSPOUT

1. CHIP AWAY CONCRETE TO EXPOSE TERMINAL PIPE SECTION
2. INSTAL NEW 90 DEGREE ELBOW INSIDE OF INLET BOX DISTRIBUTION STRUCTURE SUCH THAT DISCHARGE POINT IS EQUIDISTANT TO THE FRONT AND BACK WALL OF THE INTERIOR INLET BOX.
3. ATTACH A STRAIGHT PIPE DOWNSPOUT EXTENSION (IF REQUIRED) TO ENSURE THAT THE TERMINUS OF DOWNSPOUT IS APPROXIMATELY 460 MILLIMETERS FROM THE FLOOR OF THE INLET STRUCTURE.
4. GROUT AROUND PIPE WITH PORTLAND CEMENT TO SEAL INLET STRUCTURE.

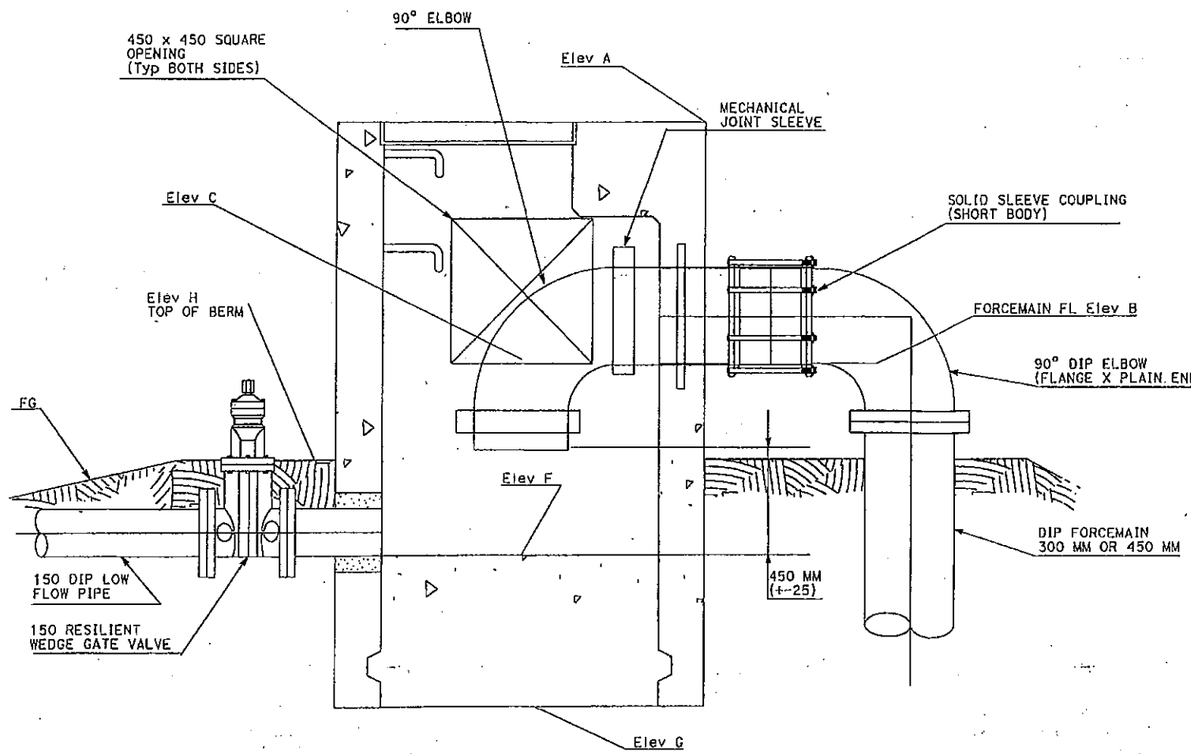

INLET BOX WITH FORCED MAIN DOWNSPOUT

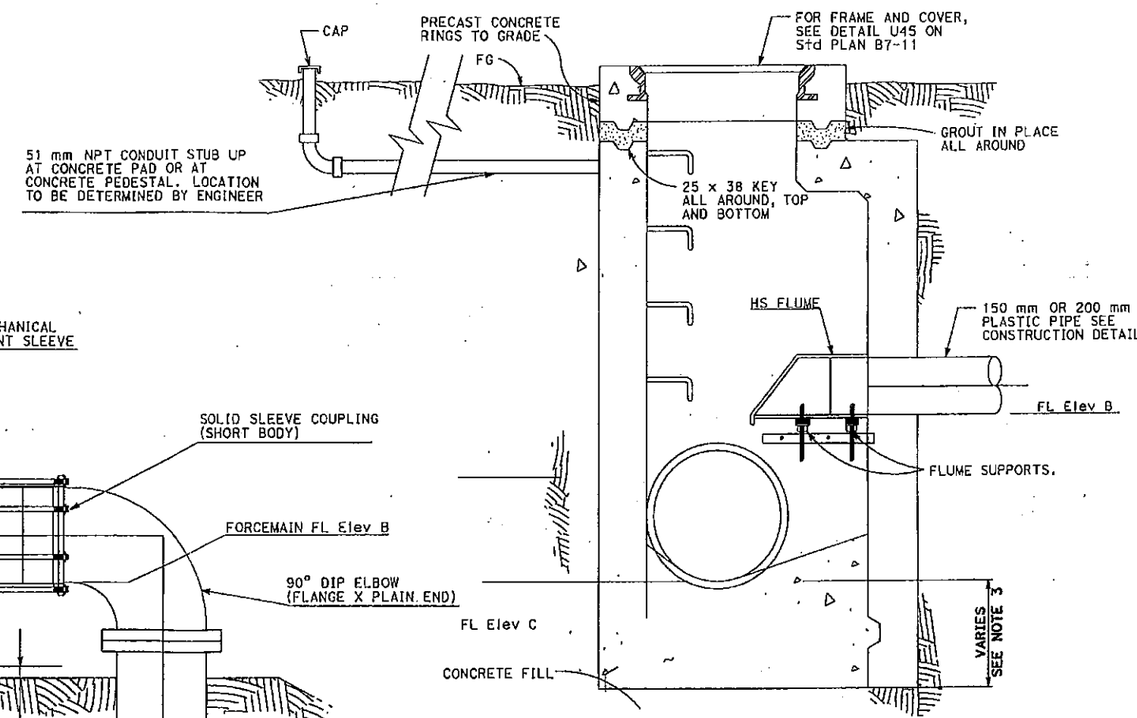

METERING MANHOLE

ALL DIMENSIONS ARE IN METERS UNLESS OTHERWISE SHOWN

DRAINAGE DETAILS

NO SCALE

DD-3

STATE OF CALIFORNIA - DEPARTMENT OF TRANSPORTATION

Caltrans

DESIGN OVERSIGHT: R. PATEL

CALCULATED/DESIGNED BY | CHECKED BY

DATE | REVISED BY | DATE REVISED

LAST REVISION 07-15-05

DATE PLOTTED => 26-AUG-2011
TIME PLOTTED => 12:51

RELATIVE BORDER SCALE IS IN MILLIMETERS 0 20 40 60 80

USERNAME => s133456
DGN FILE => 40120jic005_1.dgn

CU 04274

EA 0120J1

STATE OF CALIFORNIA - DEPARTMENT OF TRANSPORTATION

CONTRACT CHANGE ORDER MEMORANDUM

TO: Deanna Vilcheck, ACM /	FILE: E.A. 04 - 0120S4
	CO-RTE-PM SF-80-12.7/13.2
FROM: William Howe, Senior R.E.	FED. NO. NO FED AID
CCO#: 100 SUPPLEMENT#: 1 Category Code: CHPT	CONTINGENCY BALANCE (incl. this change) $67,230,494.00
COST: $12,859.00 INCREASE ☑ DECREASE ☐	HEADQUARTERS APPROVAL REQUIRED? ☑ YES ☐ NO
SUPPLEMENTAL FUNDS PROVIDED: $0.00	IS THIS REQUEST IN ACCORDANCE WITH ENVIRONMENTAL DOCUMENTS? ☑ YES ☐ NO
CCO DESCRIPTION: Hinge K Barrier Plate Modifications	**PROJECT DESCRIPTION:** YBITS-1 (Yerba Buena Island Transition Structures)

Original Contract Time:	Time Adj. This Change:	Previously Approved CCO Time Adjustments:	Percentage Time Adjusted: (including this change)	Total # of Unreconciled Deferred Time CCO(s): (including this change)
1390 Day(s)	0 Day(s)	0 Day(s)	0 %	9

THIS CHANGE ORDER PROVIDES FOR:
Compensation for additional fabrication costs associated with modifications to the steel barrier plates at the Hinge K Closure.

This project, the Yerba Buena Island Transition Structure (YBITS), provides for the construction of two bridges which will connect eastbound and westbound traffic on the new east span of the San Francisco Oakland Bay Bridge (SFOBB) to the existing Yerba Buena Island (YBI) tunnel. The structures are comprised of concrete box girder bridges each approximately 26 meters wide, 40 meters high and 450 meters in length.

At the eastern end of the structures, the contract provides for the installation of two separate seismic expansion joints at Hinge K which connects the YBITS structure to the adjacent Self-Anchored Suspension Bridge (SAS). The original Change Order No. 100 provided modifications to the planned seismic joint as requested by Mike Whiteside the YBI Coordination Engineer. Compensation for the added fabrication cost of the joints was provided under that change order.

The original change order also provided modifications to the steel barrier plates which span the seismic joint and cover the concrete barrier at the gap between the joint. The costs of the modifications to the steel plates were deferred under that change order. This change order provides compensation for these deferred costs.

The modifications to the barrier plates extended the length of the plates by approximately 1.2 meters on the westbound structure and 1.5 meters on the eastbound structure. The added costs include fabricating the additional plate length for the 12 mm thick barrier plates which include both the exterior bent plate and the interior bent plate for each of the 4 barriers. The additional plate length will also require a total of 64 additional steel studs to be furnished and welded onto the inside of the interior plates.

Compensation for these costs will be paid as Extra Work at Agreed Lump Sum of $12,859.00, which shall be financed from the contract's contingency funds. A detailed cost analysis is on file.

The Toll Bridge program Oversight Committee approved costs not to exceed $500,000.00 pertaining to the barrier plate fabrication costs and the installation of the barrier plate and seismic joint at their September 8, 2011 meeting. This change order falls within that approved cost.

No adjustment of contract time is warranted as the work does not affect the controlling operation.

Maintenance concurrence is required as this change will affect permanent Caltrans' owned features.

ADA Notice: For individuals with sensory disabilities, this document is available in alternate formats. For information call: (916) 654-6410 or TDD (916) 654-3880 or write Records and Forms Management, 1120 N Street, MS-89, Sacramento, CA 95814.

CONCURRED BY:		
Construction Engineer:	William Howe	Date 12-23-11
Bridge Engineer:	Mehran Ardakanian	Date 1-11-12
Project Engineer:	Bob Zandipour, Design	Date 12-27-11
Project Manager:	Ken Terpstra	Date 12-27-11
FHWA Rep.:		Date
Environmental:		Date
Other (specify):	Lina Ellis, Str. Maintenance	Date 12-27-11
Other (specify):		Date
District Prior Approval By:		Date
HQ (Issue Approve) By:	Sey Hossnieh	Date 12-27-11
Resident Engineer's Signature: William Howe		Date 12-23-11

ESTIMATE OF COST

	THIS REQUEST	TOTAL TO DATE
ITEMS	$0.00	($500,000.00)
FORCE ACCOUNT	$0.00	$0.00
AGREED PRICE	$12,859.00	$2,280,472.00
ADJUSTMENT	$0.00	$0.00
TOTAL	$12,859.00	$1,780,472.00

FEDERAL PARTICIPATION

☐ PARTICIPATING ☐ PARTICIPATING IN PART ☑ NONE
☐ NON-PARTICIPATING (MAINTENANCE) ☐ NON-PARTICIPATING

FEDERAL SEGREGATION (if more than one Funding Source or P.I.P. type)
CCO FUNDED PER CONTRACT ☐ CCO FUNDED AS FOLLOWS

FEDERAL FUNDING SOURCE	PERCENT

ADA Notice: For individuals with sensory disabilities, this document is available in alternate formats. For information call: (916) 654-6410 or TDD (916) 654-3880 or write Records and Forms Management, 1120 N Street, MS-89, Sacramento, CA 95814.

STATE OF CALIFORNIA - DEPARTMENT OF TRANSPORTATION

CONTRACT CHANGE ORDER MEMORANDUM

TO: Deanna Vilcheck, ACM / DV	FILE: E.A. 04 - 0120S4
FROM: William Howe, Senior R.E.	CO-RTE-PM SF-80-12.7/13.2
	FED. NO. NO FED AID
CCO#: 105 SUPPLEMENT#: 0 Category Code: AXZZ	CONTINGENCY BALANCE (incl. this change) $54,782,704.80
COST: $140,000.00 INCREASE ☑ DECREASE ☐	HEADQUARTERS APPROVAL REQUIRED? ☐ YES ☑ NO
SUPPLEMENTAL FUNDS PROVIDED: $0.00	IS THIS REQUEST IN ACCORDANCE WITH ENVIRONMENTAL DOCUMENTS? ☑ YES ☐ NO
CCO DESCRIPTION: flumes for stormwater basins near burma	**PROJECT DESCRIPTION:** YBITS-1 (Yerba Buena Island Transition Structures)

Original Contract Time:	Time Adj. This Change:	Previously Approved CCO Time Adjustments:	Percentage Time Adjusted: (including this change)	Total # of Unreconciled Deferred Time CCO(s): (including this change)
1390 Day(s)	0 Day(s)	0 Day(s)	0 %	9

THIS CHANGE ORDER PROVIDES FOR:

This change order provides for installing flumes and related apparatus inside the bioretention basin system of the San Francisco-Oakland Bay Bridge (SFOBB) storm water treatment facilities located west of the SFOBB Toll Plaza.

The installation of the flumes and related apparatus is needed to monitor the incoming and outgoing water flow inside the basins. Without the flumes, it would not be possible to determine whether the bioretention basins meet the storm water treatment requirements for the SFOBB East Span Seismic Safety Project as set by California Regional Water Quality Control Board's Waste Discharge Requirements Order No. R2-2002-0011.

Work associated with this change includes the removal of existing flumes, the fabrication and installation of H flumes, HS flumes in existing manholes, and downspouts, and other work as directed by the Engineer. This work will be done per the plans and specifications attached to the Contract Change Order.

This change was requested by Mimy Ma, Toll Bridge Structures Design, in a memo dated August 26, 2011.

Compensation for this work shall be paid as extra work at force account in the amount of $140,000.00, which shall be financed from the contract's contingency funds. A detailed cost analysis is on file.

No adjustment of contract time is warranted, as this change will not affect the controlling operation.

CONCURRED BY:		
Construction Engineer:	William Howe	Date 12-6-11
Bridge Engineer:		Date
Project Engineer:	Bob Zandipour, Design	Date 12-6-11
Project Manager:	Ken Terpstra	Date 12-6-11
FHWA Rep.:		Date
Environmental:		Date
Other (specify):	Lina Ellis, Str. Maintenance	Date 12-6-11
Other (specify):		Date
District Prior Approval By:		Date
HQ (Issue Approve) By:		Date
Resident Engineer's Signature: William Howe		Date 12-06-11

ESTIMATE OF COST

	THIS REQUEST	TOTAL TO DATE
ITEMS	$0.00	$0.00
FORCE ACCOUNT	$140,000.00	$140,000.00
AGREED PRICE	$0.00	$0.00
ADJUSTMENT	$0.00	$0.00
TOTAL	$140,000.00	$140,000.00

FEDERAL PARTICIPATION

☐ PARTICIPATING ☐ PARTICIPATING IN PART ☑ NONE
☐ NON-PARTICIPATING (MAINTENANCE) ☐ NON-PARTICIPATING

FEDERAL SEGREGATION (if more than one Funding Source or P.I.P. type)
☐ CCO FUNDED PER CONTRACT ☐ CCO FUNDED AS FOLLOWS

FEDERAL FUNDING SOURCE	PERCENT

ADA Notice: For individuals with sensory disabilities, this document is available in alternate formats. For information call: (916) 654-6410 or TDD (916) 654-3880 or write Records and Forms Management, 1120 N Street, MS-89, Sacramento, CA 95814.

STATE OF CALIFORNIA - DEPARTMENT OF TRANSPORTATION

CONTRACT CHANGE ORDER MEMORANDUM

TO: Deanna Vilcheck, ACM / DV	FILE: E.A. 04 - 0120S4
FROM: William Howe, Senior R.E.	CO-RTE-PM SF-80-12.7/13.2
	FED. NO. NO FED AID
CCO#: 107 SUPPLEMENT#: 0 Category Code: CHPT	CONTINGENCY BALANCE (incl. this change) $66,882,526.00
COST: $966,782.00 INCREASE ☑ DECREASE ☐	HEADQUARTERS APPROVAL REQUIRED? ☑ YES ☐ NO
SUPPLEMENTAL FUNDS PROVIDED: $0.00	IS THIS REQUEST IN ACCORDANCE WITH ENVIRONMENTAL DOCUMENTS? ☑ YES ☐ NO
CCO DESCRIPTION: furnish and install seismic joints	**PROJECT DESCRIPTION:** YBITS-1 (Yerba Buena Island Transition Structures)

Original Contract Time:	Time Adj. This Change:	Previously Approved CCO Time Adjustments:	Percentage Time Adjusted: (including this change)	Total # of Unreconciled Deferred Time CCO(s): (including this change)
1390 Day(s)	0 Day(s)	0 Day(s)	0 %	9

THIS CHANGE ORDER PROVIDES FOR:

This change order provides for furnishing seismic joints for Abutment 23L and Abutment 23R, and the installation of the seismic joint at Abutment 23L. This work shall be performed in accordance with revised contract plan sheets issued with this change order and also in accordance with the requirements prescribed in Specification Section 10-1.33 issued with Contract Change Order No. 76, Supplement No. 1.

This project, the Yerba Buena Island Transition Structure (YBITS), provides for the construction of two bridges which will connect eastbound and westbound traffic on the new east span of the San Francisco Oakland Bay Bridge (SFOBB) to the existing Yerba Buena Island (YBI) tunnel.

In association with the seismic safety opening of the Bay Bridge Eastbound Corridor, the completion of seismic deck joints at the eastern end of the bridge are required. The Project Management Team (PMT) has determined that the purchase of these specialized joints and installation of the westbound (Abutment 23L) joint be accomplished as a contract change order on this contract; the installation of the eastbound (Abutment 23R) joint will be done under the Oakland Touchdown 2 contract.

This change provides for compensating the Contractor an agreed lump sum amount for furnishing seismic joints for Abutments E23L/R for a cost of $866,782. This agreed lump sum amount has been revised from the previous request of $788,486 as the Contractor's markup was omitted. In addition, this change provides compensating the Contractor extra work at force account to install the seismic joint at Abutment E23L for a cost of $100,000. This change will result in a total cost increase of $966,782.00, which can be financed from the project's contingency fund. A detailed cost analysis is available on file in the project records.

Any costs pertaining to the backer and silicon seal material, coating touch-up due to handling, shipping, and installation, third party inspection, and self-consolidating concrete shall be deferred and shall be provided under a supplement to this change order.

This change was requested by Mike Whiteside, Toll Bridge Structures Design, on a memo dated September 22, 2011.

Maintenance concurrence is required.

As this change does not affect the controlling operations, no adjustment of contract time is warranted.

ADA Notice: For individuals with sensory disabilities, this document is available in alternate formats. For information call: (916) 654-6410 or TDD (916) 654-3880 or write Records and Forms Management, 1120 N Street, MS-89, Sacramento, CA 95814.

CONCURRED BY:		
Construction Engineer:	William Howe	Date 12-28-11
Bridge Engineer:	Mehran Ardakanian	Date 1-11-12
Project Engineer:	Bob Zandipour, Design	Date 12-28-11
Project Manager:	Ken Terpstra	Date 12-29-11
FHWA Rep.:		Date
Environmental:		Date
Other (specify):	Lina Ellis, Str. Maintenance	Date 12-28-11
Other (specify):		Date
District Prior Approval By:		Date
HQ (Issue Approve) By:	Larry Salhaney	Date 12-29-11
Resident Engineer's Signature: William Howe		Date 12-28-11

ESTIMATE OF COST

	THIS REQUEST	TOTAL TO DATE
ITEMS	$0.00	$0.00
FORCE ACCOUNT	$100,000.00	$100,000.00
AGREED PRICE	$866,782.00	$866,782.00
ADJUSTMENT	$0.00	$0.00
TOTAL	$966,782.00	$966,782.00

FEDERAL PARTICIPATION

☐ PARTICIPATING ☐ PARTICIPATING IN PART ☑ NONE
☐ NON-PARTICIPATING (MAINTENANCE) ☐ NON-PARTICIPATING

FEDERAL SEGREGATION (if more than one Funding Source or P.I.P. type)
☐ CCO FUNDED PER CONTRACT ☐ CCO FUNDED AS FOLLOWS

FEDERAL FUNDING SOURCE	PERCENT

ADA Notice: For individuals with sensory disabilities, this document is available in alternate formats. For information call: (916) 654-6410 or TDD (916) 654-3880 or write Records and Forms Management, 1120 N Street, MS-89, Sacramento, CA 95814.

STATE OF CALIFORNIA - DEPARTMENT OF TRANSPORTATION

CONTRACT CHANGE ORDER MEMORANDUM

DATE: 12/7/2011

TO: Deanna Vilcheck, ACM / DV	FILE: E.A. 04 - 0120S4
FROM: William Howe, Senior R.E.	CO-RTE-PM SF-80-12.7/13.2
	FED. NO. NO FED AID
CCO#: 110 SUPPLEMENT#: 0 Category Code: CHMX	CONTINGENCY BALANCE (incl. this change) $86,604,021.49
COST: $50,000.00 INCREASE ☑ DECREASE ☐	HEADQUARTERS APPROVAL REQUIRED? ☐ YES ☑ NO
SUPPLEMENTAL FUNDS PROVIDED: $0.00	IS THIS REQUEST IN ACCORDANCE WITH ENVIRONMENTAL DOCUMENTS? ☑ YES ☐ NO
CCO DESCRIPTION: Mockup concrete pour for steep slopes	**PROJECT DESCRIPTION:** YBITS-1 (Yerba Buena Island Transition Structures)

Original Contract Time:	Time Adj. This Change:	Previously Approved CCO Time Adjustments:	Percentage Time Adjusted: (including this change)	Total # of Unreconciled Deferred Time CCO(s): (including this change)
1390 Day(s)	0 Day(s)	0 Day(s)	0 %	9

THIS CHANGE ORDER PROVIDES FOR:

This change order provides for the contractor to perform concrete pour mockups for the steep sloped sidewalls of the superstructure and the piles as directed by the Engineer.

This contract provides for the construction of the Yerba Buena Island Transition Structures for the east span of the new San Francisco Oakland Bay Bridge (SFOBB).

The superstructure of the new bridge has several locations that have steep sidewalls (up to a 1:1 Horizontal: Vertical grade) and are congested.The concrete mix design to be used for this superstructure has to be very fluid (have a high slump) in order to fill all the congested rebar locations.Due to an existing problem at the cement plant used in the concrete mixes, all previously approved concrete mixes are being revised. The engineer has concerns about a fluid concrete mix staying in place while it sets up at the steep sidewalls and has directed the contractor to demonstrate that a mix can be designed to handle the competing necessities of flowing into the voids, and still being able to stand sufficiently on the steep side slopes. Under this change order, the Contractor will conduct tests on the concrete, as directed by the Engineer. In addition to the above mentioned work there are existing piles that the engineer is concerned about.The engineer has determined that it will be useful to demonstrate that these piles were designed to handle the geology and geometry of the existing condition by attempting to install a similar mock pile under controlled conditions.

Gilel Klebanov, CT Senior Structures representative, requested this change on October 6, 2011.

Compensation for this work shall be paid as extra work at force account in the amount of $50,000.00, which shall be financed from the contract's contingency funds. A cost analysis is on file.

Maintenance concurrence is not required, as this does not affect any permanent features of the bridge.

No adjustment of contract time is warranted, as this change will not affect the controlling operation.

ADA Notice: For individuals with sensory disabilities, this document is available in alternate formats. For information call: (916) 654-6410 or TDD (916) 654-3880 or write Records and Forms Management, 1120 N Street, MS-89, Sacramento, CA 95814.

CONCURRED BY:		
Construction Engineer:	William Howe	Date 12-08-11
Bridge Engineer:	Mehran Ardakanian	Date 12-8-11
Project Engineer:	Bob Zandipour, Design	Date 12-9-11
Project Manager:	Ken Terpstra KT	Date 12-20-11
FHWA Rep.:		Date
Environmental:		Date
Other (specify):		Date
Other (specify):		Date
District Prior Approval By:		Date
HQ (Issue Approve) By:		Date
Resident Engineer's Signature: William Howe		Date 12-08-11

ESTIMATE OF COST

	THIS REQUEST	TOTAL TO DATE
ITEMS	$0.00	$0.00
FORCE ACCOUNT	$50,000.00	$50,000.00
AGREED PRICE	$0.00	$0.00
ADJUSTMENT	$0.00	$0.00
TOTAL	$50,000.00	$50,000.00

FEDERAL PARTICIPATION

PARTICIPATING ☐ PARTICIPATING IN PART ☑ NONE
☐ NON-PARTICIPATING (MAINTENANCE) ☐ NON-PARTICIPATING

FEDERAL SEGREGATION (if more than one Funding Source or P.I.P. type)
CCO FUNDED PER CONTRACT ☐ CCO FUNDED AS FOLLOWS

FEDERAL FUNDING SOURCE	PERCENT

ADA Notice: For individuals with sensory disabilities, this document is available in alternate formats. For information call: (916) 654-6410 or TDD (916) 654-3880 or write Records and Forms Management, 1120 N Street, MS-89, Sacramento, CA 95814.

STATE OF CALIFORNIA - DEPARTMENT OF TRANSPORTATION

Change Requested by: Engineer

CONTRACT CHANGE ORDER

CCO 107	Suppl. No. 0	Contract No. 04 - 0120S4	Road SF-80-12.7/13.2	FED. AID LOC.: NO FED AID

To: **M C M CONSTRUCTION INC**

You are directed to make the following changes from the plans and specifications or do the following described work not included in the plans and specifications for this contract. ***NOTE: This change order is not effective until approved by the Engineer.***

Description of work to be done, estimate of quantities and prices to be paid. (Segregate between additional work at contract price, agreed price and force account.) Unless otherwise stated, rates for rental of equipment cover only such time as equipment is actually used and no allowance will be made for idle time. This last percentage shown is the net accumulated increase or decrease from the original quantity in the Engineer's Estimate.

Furnish seismic joints for Abutment 23L and Abutment 23R for the San Francisco-Oakland Seismic Safety Project Yerba Buena Island Transition Structures Bridge Nos. 34-0006 L/R as shown on Sheets No. 3 through 9 of this change order, and in accordance with the requirements prescribed in Specification Section 10-1.33, "Modular Joint Seal Assemblies," issued with Contract Change Order No. 76 Supplement No. 1, and install the seismic joint at Abutment 23L.

The revised contract plan sheets reflecting this change are 790GS, 790HS, 790IS, 790JS, 790KS, 790LS, and 790MS of 806.

Extra Work at Force Account:

As authorized by the Engineer and in accordance with Section 4-1.03D "Extra Work" and Section 9-1.03 "Force Account Payment" of the Standard Specifications and Section 5-1.17 "Force Account Payment" of the Special Provisions, furnish all labor, equipment, and materials required to install the seismic joint at Abutment 23L. This includes the cost of furnishing al backer and silicon seal material, coating touch-up due to handling, shipping, and installation, third party inspection, bar reinforcing steel couplers, and self consolidating concrete.

Estimated cost of Extra Work at Force Account $100,000.00

Extra Work at Lump Sum:

Provide compensation to the Contractor for all costs associated with furnishing the seismic joints for Abutment 23L and Abutment 23R as specified under this change order.

For this work, the Contractor shall be compensated an agreed lump sum of $866,782.00, which constitutes full and final compensation, including all markups, for all additional costs incurred in furnishing the seismic joints as defined by this change order.

Compensation provided under this change order includes all costs associated with the fabrication of the seismic joints for Abutments 23L and 23R including all appurtenances associated with these items. Compensation also includes all costs associated with the transportation of the seismic joints to the project site.

Extra Work at Lump Sum $866,782.00

CONTRACT CHANGE ORDER

Change Requested by: Engineer

CCO 107	Suppl. No. 0	Contract No. 04 - 0120S4	Road SF-80-12.7/13.2	FED. AID LOC.: NO FED AID

Estimated Cost: Increase ☑ Decrease ☐ $966,782.00

By reason of this order the time of completion will be adjusted as follows: 0 days

Submitted by

Signature William Howe	Resident Engineer William Howe, Senior R.E.	Date 12-28-11

Approval Recommended by

Signature Mike Foran FOR	Area Construction Manager Deanna Vilcheck	Date 12-28-11

Engineer Approval by

Signature Deanna Vilcheck	Area Construction Manager Deanna Vilcheck	Date 1/12/12

We the undersigned contractor, have given careful consideration to the change proposed and agree, if this proposal is approved, that we will provide all equipment, furnish the materials, except as may otherwise be noted above, and perform all services necessary for the work above specified, and will accept as full payment therefor the prices shown above.

NOTE: If you, the contractor, do not sign acceptance of this order, your attention is directed to the requirements of the specifications as to proceeding with the ordered work and filing a written protest within the time therein specified.

Contractor Acceptance by

Signature	(Print name and title) Edmund A. Puchi Treasurer	Date 1-9-2012

DIST	COUNTY	ROUTE	KILOMETER POST TOTAL PROJECT	SHEET No.	TOTAL SHEETS
04	SF	80	12.7/13.2	79005	806

REGISTERED CIVIL ENGINEER DATE

PLANS APPROVAL DATE

The State of California or its officers or agents shall not be responsible for the accuracy or completeness of electronic copies of this plan sheet.

To get to the Caltrans web site, go to: http://www.dot.ca.gov

REGISTERED PROFESSIONAL ENGINEER — EFTYMIOS CELIS No. 61431 Exp. 8-30-12 CIVIL STATE OF CALIFORNIA

REGISTERED PROFESSIONAL ENGINEER — DENNIS M. MACCOTTA No. 49830 Exp. 6/30/11 CIVIL STATE OF CALIFORNIA

FOR REVISION ⟨1⟩ ONLY

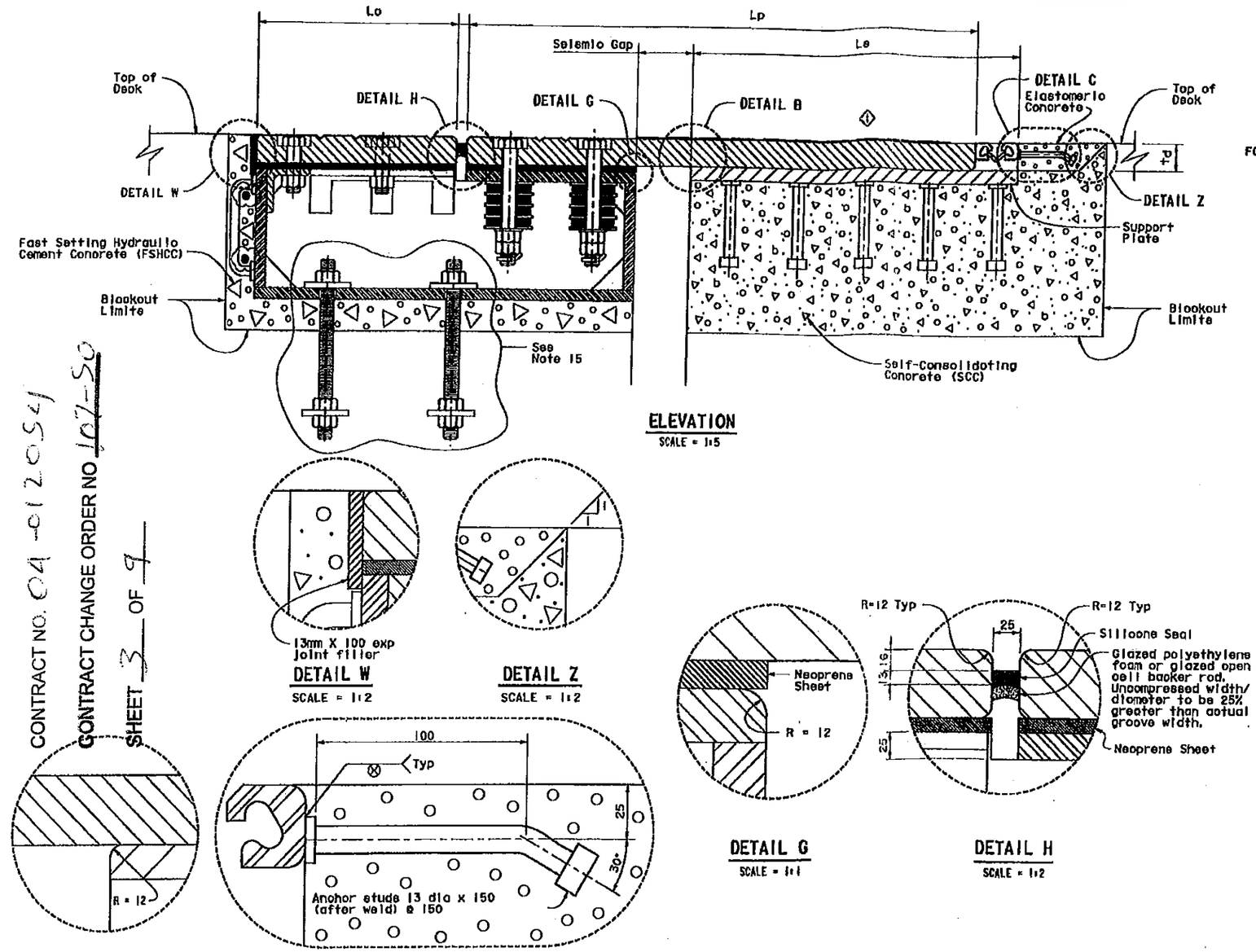

JOINT INFORMATION			
LOCATION		ABUT E23L	ABUT E23R
SKEW (°)		0	0
DECK PLATE	Thickness td (mm)	64	64
	Length Lp (mm)	1210	1210
SUPPORT PLATE	Thickness ts (mm)	32	32
	Length Ls (mm)	780	780
COVER PLATE	Thickness to (mm)	64	64
	Length Lo (mm)	475	475
SEISMIC GAP @ 20°	(mm)	130	130

NOTES:

1. Install Seismic Joint after erecting bike path, placing deck overlay up to the limit of the blockout if needed, utilities and barrier.
2. Top of deck plate, elastomeric and FSHCC concrete shall match top of deck profile.
3. For deck plate details see ' DECK PLATE DETAILS NO. 1' and ' DECK PLATE DETAILS NO. 2' sheets for TYPE I joint.
4. For mild reinforcement in blockout areas, see 'REINFORCMENT DETAILS' sheet for TYPE I joint Not all mild reinforcement is shown for clarity.
5. For channel assembly details, see 'CHANNEL ASSEMBLY DETAILS NO 1' and 'CHANNEL ASSEMBLY DETAILS NO 2' for TYPE I joint.
6. Place deck plate, support plate and channel assembly so that full bearing is achieved between i) deck, support plates and ii)deck plate and channel assembly.
7. Self-consolidating concrete shall be used in support plate blockout.
8. Fast setting hydraulic cement concrete shall be used in channel assembly blockout.
9. Maximum depth of edge beam in strip steel shall be 40 mm.
10. Strip seal shall be one continuous piece. No field splice shall be permitted.
11. Strip seal shall have a movement rating of 100mm, manufactured specifically for highway bridges.
12. The V-Grooves of the deck plates shall receive a nonskid surface consisting of epoxy mixed with grit.
13. For support plate details see 'SUPPORT PLATE DETAILS' sheet for TYPE I joint.
14. Deck plate and elastomeric concrete have the same thickness (td = to).
15. For ABUT E23L, anchor bolts installed field verify location before fabrication.

Note:
Seismic joint at Abut 23L to be furnished and installed by Contractor (anchor bolts exist at this location), seismic joint at Abut 23R to be furnished by Contractor (incl anchor bolts) and installed by others.

SUPPLEMENTAL SHEET

CONTRACT CHANGE ORDER NO. 107

SHEET 3 OF 9

THE CONTRACTOR SHALL VERIFY ALL CONTROLLING FIELD DIMENSIONS BEFORE ORDERING OR FABRICATING ANY MATERIAL.

CONTRACT NO. 04-012054

CONTRACT CHANGE ORDER NO 107-SC

SHEET 3 OF 9

Sept 20, 2011

YBITS 1 CONTRACT

⟨1⟩ Revised some V-Grooves to traction ribs - 3/4/11

DESIGN	BY E DEUS	CHECKED A KARTOUM	
DETAILS	BY A R DUDSAK	CHECKED A KARTOUM	
QUANTITIES	BY E DEUS	CHECKED A KARTOUM	

STATE OF CALIFORNIA
DEPARTMENT OF TRANSPORTATION

DIVISION OF ENGINEERING SERVICES
STRUCTURE DESIGN
SPECIAL DESIGNS BRANCH

BRIDGE NO. 34-0006 L/R
KILOMETER POST 1.6

CU 04251
EA 012051

ORIGINAL SCALE IN MILLIMETERS FOR RECORD PLANS 0 10 20 30 40 50 60 70 80 90 100

ALL DIMENSIONS ARE IN MILLIMETERS UNLESS OTHERWISE SHOWN

SAN FRANCISCO OAKLAND BAY BRIDGE
EAST SPAN SEISMIC SAFETY PROJECT

OAKLAND APPROACH STRUCTURES
HINGES EW, EE, FW, FE AND ABUT 23 L&R

SEISMIC JOINT (TYPE I)

CROSS SECTION

SHEET 4 OF 10

DATE PLOTTED => 9/20/2011
TIME PLOTTED => 2:48:40 PM

DIST	COUNTY	ROUTE	KILOMETER POST TOTAL PROJECT	SHEET NO	TOTAL SHEETS
04	SF	80	12.7/13.2	790HS	806

REGISTERED CIVIL ENGINEER DATE

PLANS APPROVAL DATE

The State of California or its officers or agents shall not be responsible for the accuracy or completeness of electronic copies of this plan sheet.

To get to the Caltrans web site, go to: http://www.dot.ca.gov

FOR REVISION ◇1 ONLY

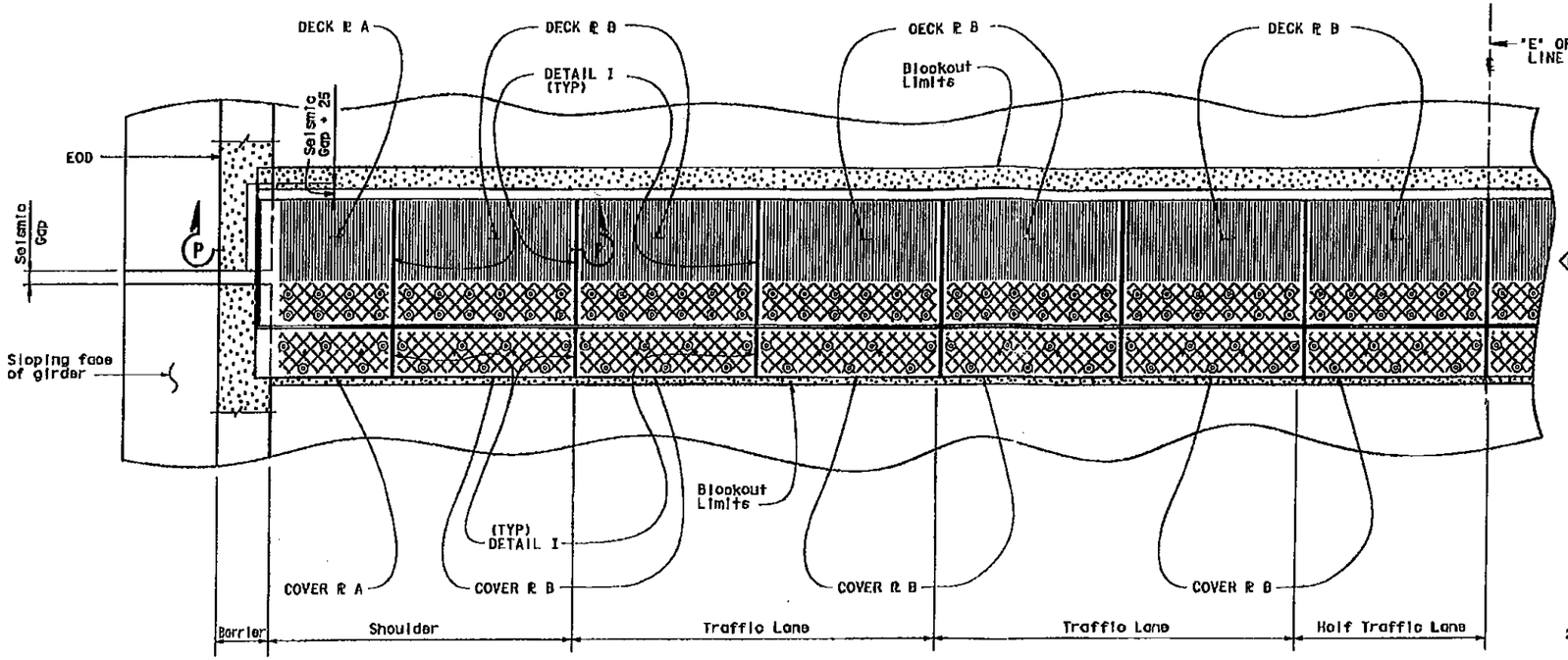

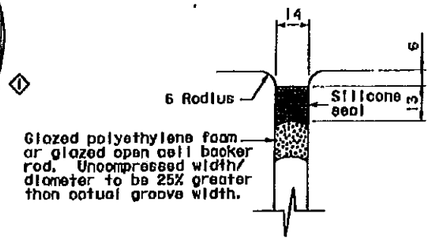

DETAIL I

SCALE = 1:1

EASTBOUND/WESTBOUND EXPANSION JOINT (HALF) PLAN

SCALE 1:25

CONTRACT NO. 04-0120S4

CONTRACT CHANGE ORDER NO 107-50

SHEET 4 OF 9

NOTES:

1. For Plates A and B see 'DECK PLATE DETAILS NO 2' sheet.
2. Denotes deck Steel Plate with V-grooves at 45°.

   ◇1 Denotes traction ribs.
3. Deck Plate A matches with Support Plate A and the Channel Assembly A (Module A) Likewise for Module B. Channel assemblies are 14 mm wider than their corresponding deck plates.
4. One Module B is placed per half traffic lane.
5. Portions of barriers are not shown for clarity.
6. For SECTION P-P see 'DECK PLATE DETAILS NO 2' sheet for TYPE I joint.

Note:
Seismic joint at Abut 23L to be furnished and installed by Contractor (anchor bolts exist at this location), seismic joint at Abut 23R to be furnished by Contractor (final anchor bolts) and installed by others.

SUPPLEMENTAL SHEET

CONTRACT CHANGE ORDER NO. 107

SHEET 4 OF 9

THE CONTRACTOR SHALL VERIFY ALL CONTROLLING FIELD DIMENSIONS BEFORE ORDERING OR FABRICATING ANY MATERIAL.

◇1 Revised some V-Grooves to traction ribs - 3/4/11

	BY	CHECKED
DESIGN	E DEUS	A KARTOUM
DETAILS	A R DUDSAK	A KARTOUM
QUANTITIES	E DEUS	A KARTOUM

STATE OF CALIFORNIA
DEPARTMENT OF TRANSPORTATION

DIVISION OF ENGINEERING SERVICES
STRUCTURE DESIGN
SPECIAL DESIGNS BRANCH

BRIDGE NO. 34-0006 L/R
KILOMETER POST 1.6

CU 04251
EA 0120S1

SAN FRANCISCO OAKLAND BAY BRIDGE
EAST SPAN SEISMIC SAFETY PROJECT
OAKLAND APPROACH STRUCTURES
HINGES EW, EE, FW, FE AND ABUT 23 L&R
SEISMIC JOINT (TYPE I)
DECK PLATE DETAILS NO 1

SHEET 5 OF 10

ALL DIMENSIONS ARE IN MILLIMETERS UNLESS OTHERWISE OTHERWISE

ORIGINAL SCALE IN MILLIMETERS FOR REDUCED PLANS

DISCARD PRINTS BEARING EARLIER REVISION DATES

YBITS 1 CONTRACT

Sept 20, 2011

DATE PLOTTED => 9/20/2011
TIME PLOTTED => 2:48:49 PM

FILE => epoo_dss_br_proj\20093d\04-0120U1\Pr\4141-DS\CADD\TS\Checked Plans\YB1TS1CONTRACT\Struct_Det\Hinge Det\Hinge Det\092011 Modified Jo

DIST	COUNTY	ROUTE	KILOMETER POST TOTAL PROJECT	SHEET NO	TOTAL SHEETS
04	SF	80	12.7/13.2	79015	806

REGISTERED CIVIL ENGINEER DATE

PLANS APPROVAL DATE

The State of California or its officers or agents shall not be responsible for the accuracy or completeness of electronic copies of this plan sheet.

To get to the Caltrans web site, go to http://www.dot.ca.gov

FOR REVISION ⟨1⟩ ONLY

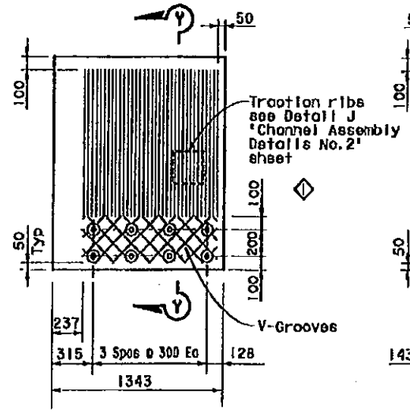

DECK PLATE A

SCALE = 1:20

Note: Barrier not shown for clarity

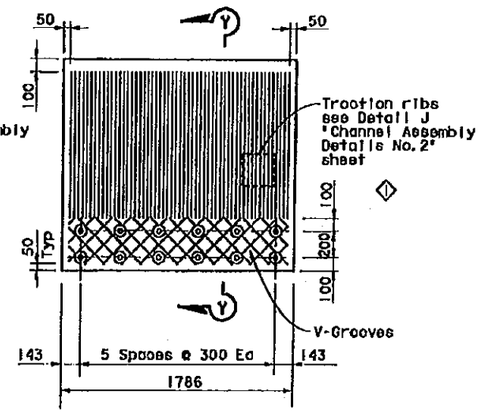

DECK PLATE B

SCALE = 1:20

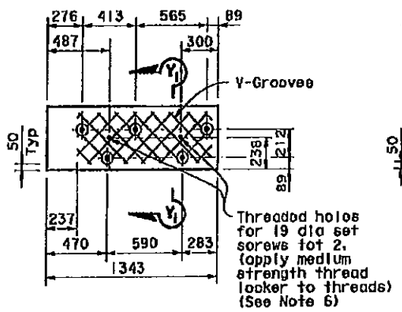

COVER PLATE A

SCALE = 1:20

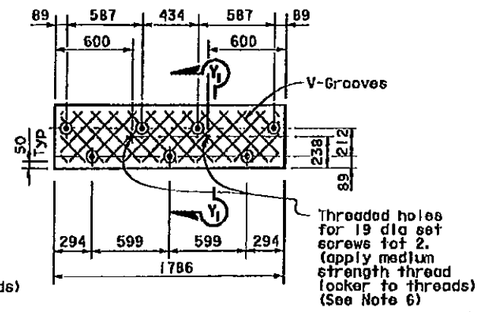

COVER PLATE B

SCALE = 1:20

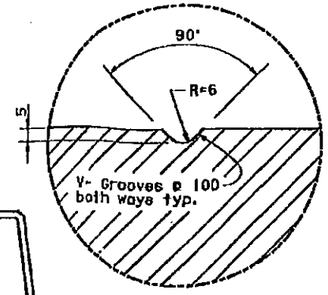

DETAIL K

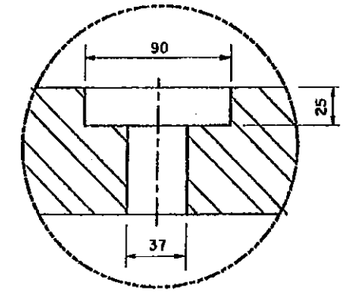

DETAIL L

NOTES:

1. V-Groove pattern is similar for all Plates
2. For deck plate plan see 'DECK PLATE DETAILS NO 1' sheet for TYPE II joint.
3. In Section P-P, Y may vary from 10 mm (min) to 20 mm (max) at the thickest end of the deck ℞ (td). ⟨1⟩
4. Traction ribs to be machined.
5. For td, Lp, Lo, to and Ls values see 'CROSS SECTION' sheet for TYPE I joint.
6. Eye bolts can be used at set screw locations for lifting of cover plates.

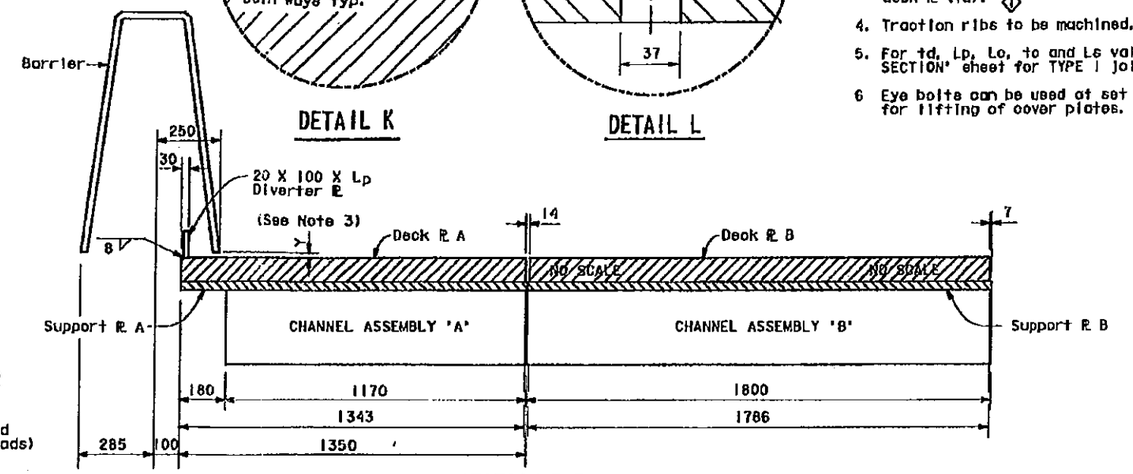

SECTION P-P

SCALE = 1:10

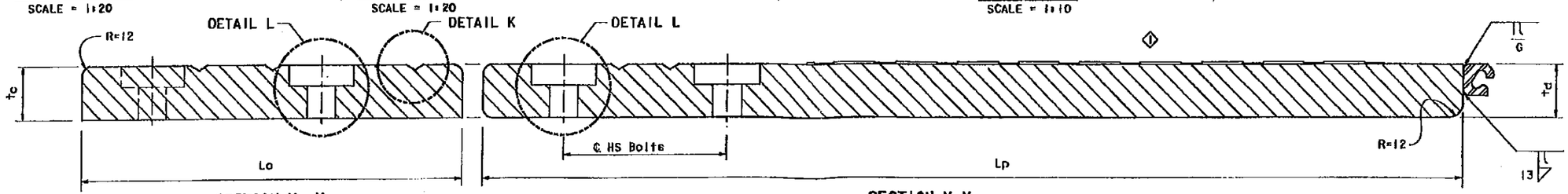

SECTION Y_1-Y_1

SCALE = 1:2.5

SECTION Y-Y

SCALE = 1:2.5

Note:
Seismic joint at Abut 23L to be furnished and installed by Contractor (anchor bolts exist at this location), seismic joint at Abut 23R to be furnished by Contractor (incl anchor bolts) and installed by others.

SUPPLEMENTAL SHEET

CONTRACT CHANGE ORDER NO. 107

SHEET 5 OF 9

THE CONTRACTOR SHALL VERIFY ALL CONTROLLING FIELD DIMENSIONS BEFORE ORDERING OR FABRICATING ANY MATERIAL.

⟨1⟩ Revised some V-Grooves to traction ribs - 3/4/11

	BY	CHECKED
DESIGN	E DEUS	A KARTOUH
DETAILS	A R DUDSAK	A KARTOUH
QUANTITIES	E DEUS	A KARTOUH

ALL DIMENSIONS ARE IN MILLIMETERS UNLESS OTHERWISE SHOWN

ORIGINAL SCALE IN MILLIMETERS FOR REDUCED PLANS 0 10 20 30 40 50 60 70 80 90 100

STATE OF CALIFORNIA DEPARTMENT OF TRANSPORTATION

DIVISION OF ENGINEERING SERVICES STRUCTURE DESIGN

SPECIAL DESIGNS BRANCH

CU 04251
EA 012051

BRIDGE NO. 34-0006 L/R

KILOMETER POST 1.6

STANDARD PRINTS BEARING EARLIER REVISION DATES

REVISION DATES

SHEET 6 OF 10

SAN FRANCISCO OAKLAND BAY BRIDGE
EAST SPAN SEISMIC SAFETY PROJECT

OAKLAND APPROACH STRUCTURES
HINGES EW, EE, FW, FE AND ABUT 23 L&R

SEISMIC JOINT (TYPE I)

DECK PLATE DETAILS NO 2

FILE => spao_dgs.br_proj/2005sd/04-0120U1/P:\141-06\CADD\TS\Checked Plans\YBITS\Structure\Seismic\Joint\Details\Deck\Plate\Details\Sheet\1\1092011 Modular Jo

DATE PLOTTED => 9/20/2011
TIME PLOTTED => 21:48:58 PM

Sept 20, 2011

YBITS 1 CONTRACT

CONTRACT NO. 04-0120S4

CONTRACT CHANGE ORDER NO 107-50

SHEET 5 OF 9

DIST	COUNTY	ROUTE	KILOMETER POST TOTAL PROJECT	SHEET NO	TOTAL SHEETS
04	SF	80	12.7/13.2	790JS	806

REGISTERED CIVIL ENGINEER DATE

PLANS APPROVAL DATE

The State of California or its officers or agents shall not be responsible for the accuracy or completeness of electronic copies of this plan sheet.

To get to the Caltrans web site, go to: http://www.dot.ca.gov

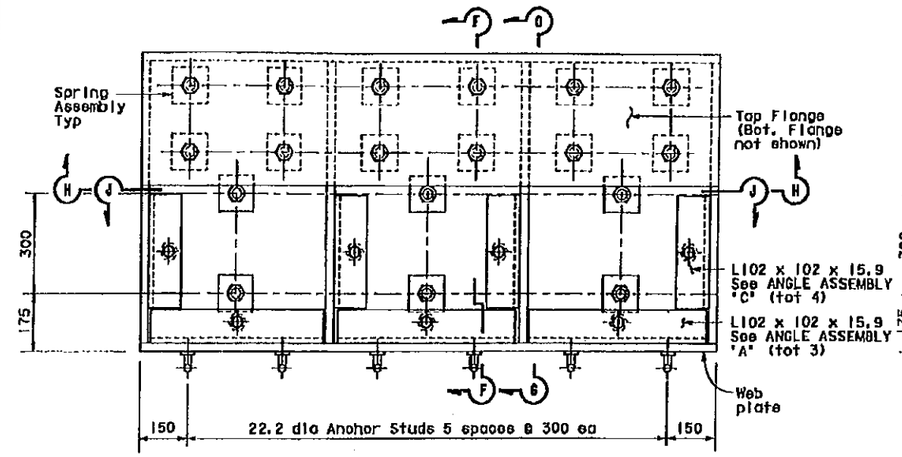

PLAN - BUILT UP CHANNEL ASSEMBLY 'B' (TYP)

NO SCALE

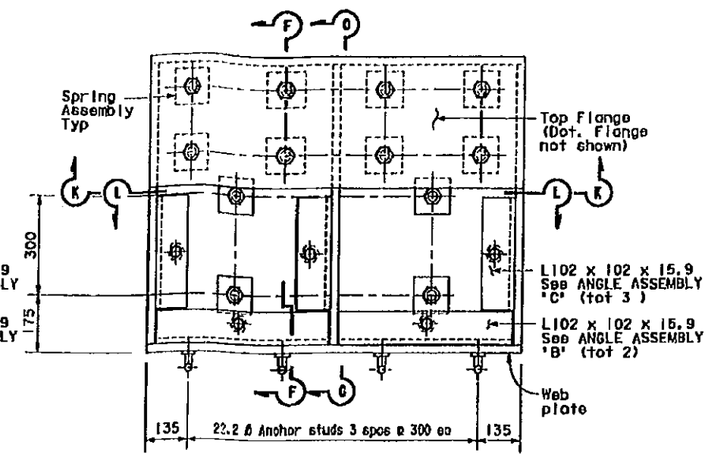

PLAN - BUILT UP CHANNEL ASSEMBLY 'A' (TYP)

NO SCALE

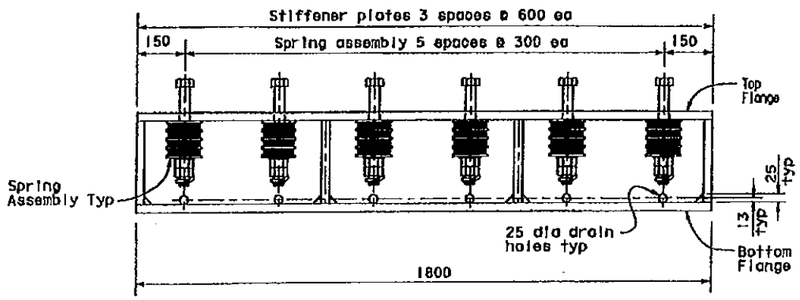

SECTION H-H - BUILT UP CHANNEL ASSEMBLY 'B' (TYP)

NO SCALE

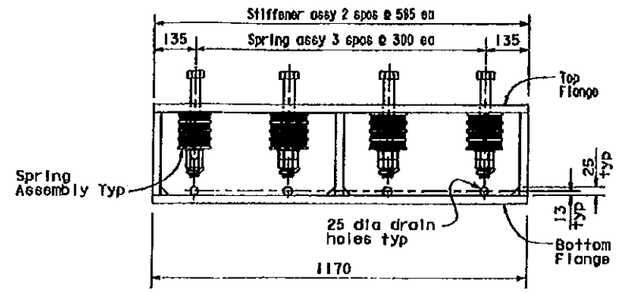

SECTION K-K - BUILT UP CHANNEL ASSEMBLY 'A' (TYP)

NO SCALE

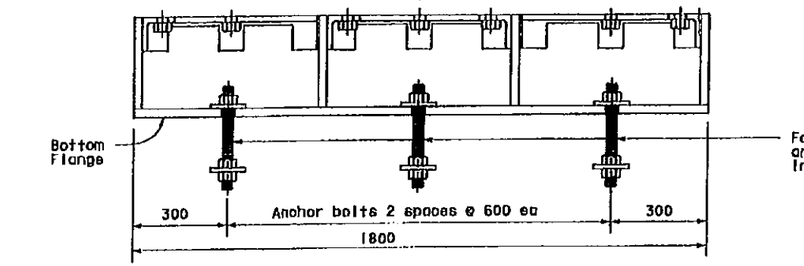

SECTION J-J - BUILT UP CHANNEL ASSEMBLY 'B' (TYP)

NO SCALE

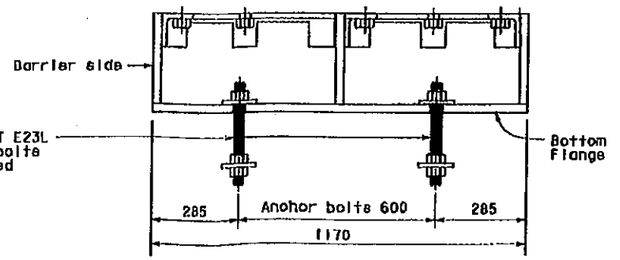

SECTION L-L - BUILT UP CHANNEL ASSEMBLY 'A' (TYP)

NO SCALE

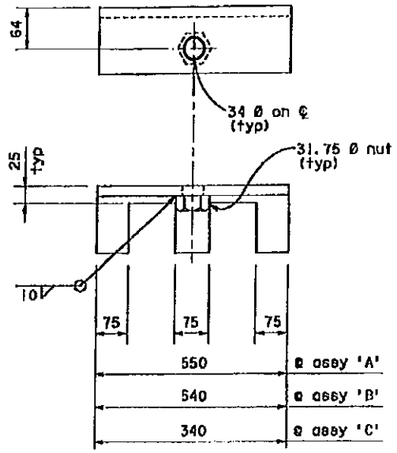

ANGLE ASSEMBLY (TYP)

NO SCALE

NOTES:

1. For SECTIONS F-F and G-G See "CHANNEL ASSEMBLY DETAILS NO. 2" sheet for TYPE I Joint.
2. Top surfaces of L 102 X 102 X 15.9 angles and 25mm steel ℞ shall be on same level.

Note:
Seismic joint at Abut 23L to be furnished and installed by Contractor (anchor bolts exist at this location), seismic joint at Abut 23R to be furnished by Contractor (incl anchor bolts) and installed by others.

SUPPLEMENTAL SHEET

CONTRACT CHANGE ORDER NO. 107

SHEET 6 OF 9

CONTRACT NO. 04-012054

CONTRACT CHANGE ORDER NO 107-S0

SHEET 6 OF 9

Sept 20, 2011

YBITS 1 CONTRACT

THE CONTRACTOR SHALL VERIFY ALL CONTROLLING FIELD DIMENSIONS BEFORE ORDERING OR FABRICATING ANY MATERIAL.

	BY	CHECKED
DESIGN	E DEUS	A KARTOUM
DETAILS	A R DUDSAK	A KARTOUM
QUANTITIES	E DEUS	A KARTOUM

STATE OF CALIFORNIA
DEPARTMENT OF TRANSPORTATION

DIVISION OF ENGINEERING SERVICES
STRUCTURE DESIGN
SPECIAL DESIGNS BRANCH

BRIDGE NO. 34-0006 L/R
KILOMETER POST 1.6

SAN FRANCISCO OAKLAND BAY BRIDGE
EAST SPAN SEISMIC SAFETY PROJECT

OAKLAND APPROACH STRUCTURES
HINGES EW, EE, FW, FE AND ABUT 23 L&R

SEISMIC JOINT (TYPE I)

CHANNEL ASSEMBLY DETAILS NO 1

ALL DIMENSIONS ARE IN MILLIMETERS UNLESS OTHERWISE SHOWN

ORIGINAL SCALE IN MILLIMETERS FOR REDUCED PLANS

CU 04251
EA 012051

STANDARD PRINTS BEARING EARLIER REVISION DATES

REVISION DATES

SHEET 7 OF 10

FILE => spec_des.br_proj/200Sed/04-012051/P:\4141-06\CADD\TS\Checked Plans\TS1Anchors-Seismic-Joints-Details.dgn 09/09/11 09:49:06 AM

DATE PLOTTED => 9/20/2011
TIME PLOTTED => 2:49:08 PM

DIST	COUNTY	ROUTE	KILOMETER POST TOTAL PROJECT	SHEET No.	TOTAL SHEETS
04	SF	80	12.7/13.2	780XS	806

REGISTERED CIVIL ENGINEER DATE

PLANS APPROVAL DATE

The State of California or its officers or agents shall not be responsible for the accuracy or completeness of electronic copies of this plan sheet.

To get to the Caltrans web site, go to: http://www.dot.ca.gov

FOR REVISION ⟨1⟩ ONLY

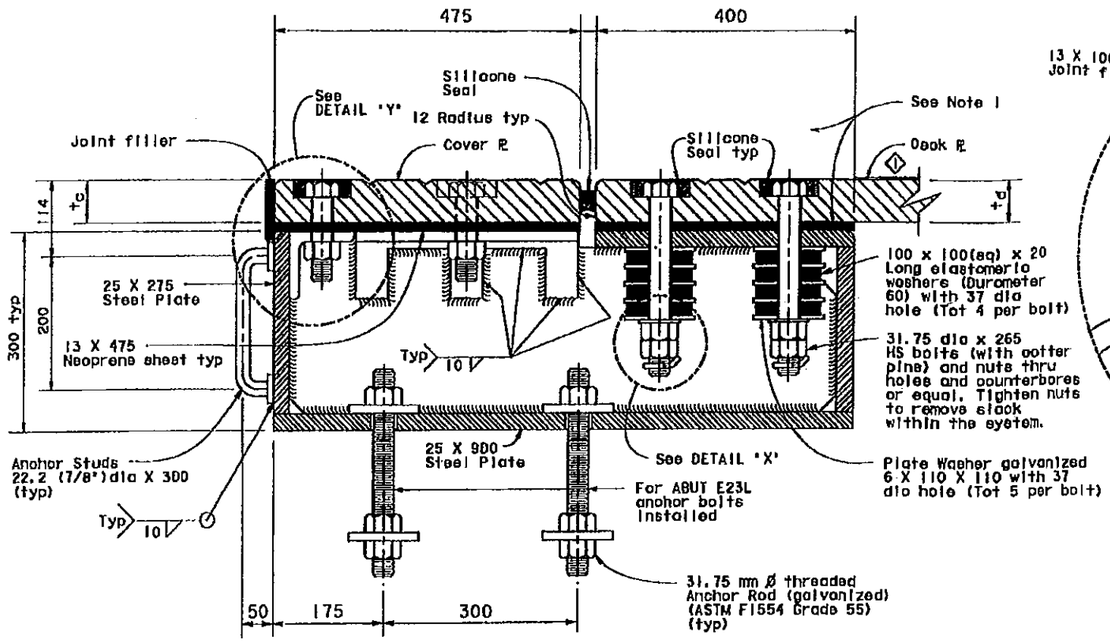

See DETAIL 'X'

SECTION F-F

NO SCALE

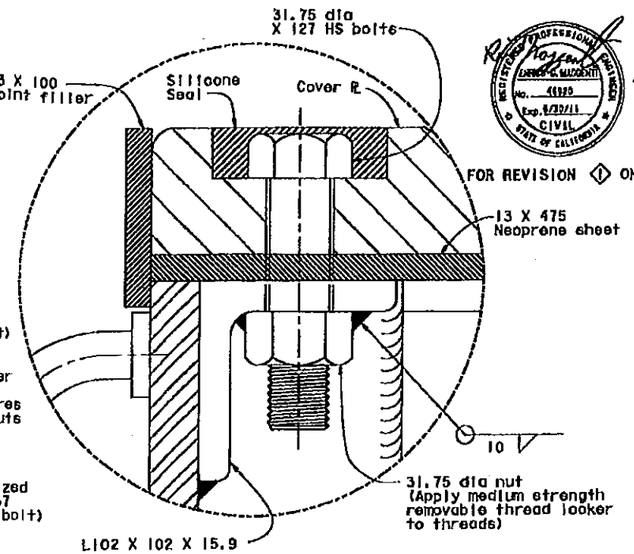

DETAIL Y

NO SCALE

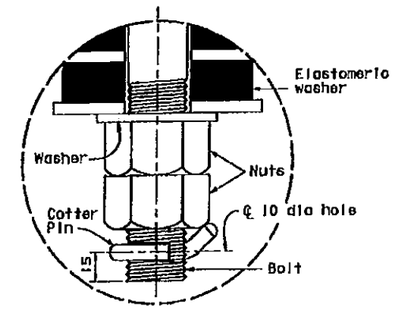

DETAIL X

NO SCALE

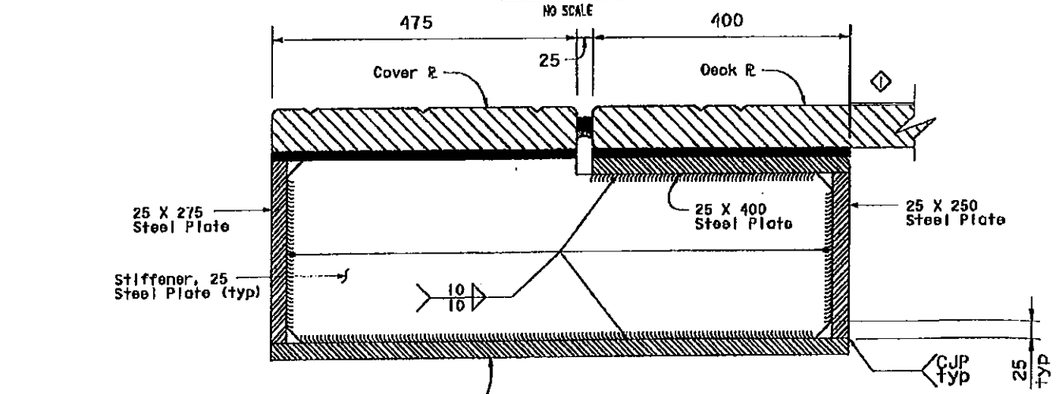

SECTION G-G

NO SCALE

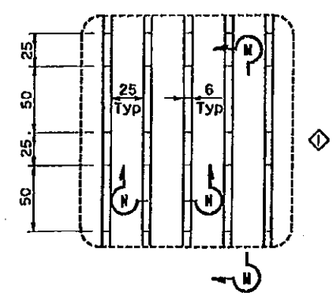

DETAIL J
TRACTION RIBS

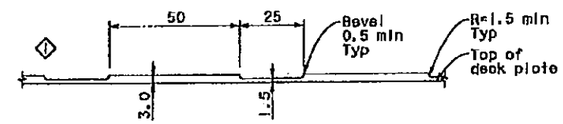

SECTION M-M

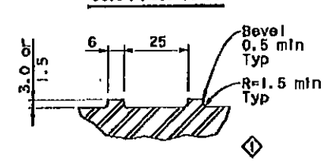

SECTION N-N

NOTES:

1. Thirty-seven mm holes in neoprene sheets shall be drilled or punched so that the neoprene is not distorted at the time of installation.
2. For to and td values see 'CROSS SECTION' sheet for TYPE I joint.

Note:
Seismic joint at Abut 23L to be furnished and installed by Contractor (anchor bolts exist at this location), seismic joint at Abut 23R to be furnished by Contractor (incl anchor bolts) and installed by others.

SUPPLEMENTAL SHEET

CONTRACT CHANGE ORDER NO. 107

SHEET 7 OF 9

THE CONTRACTOR SHALL VERIFY ALL CONTROLLING FIELD DIMENSIONS BEFORE ORDERING OR FABRICATING ANY MATERIAL.

⟨1⟩ Revised some V-Grooves to traction ribs - 3/4/11

	BY	CHECKED
DESIGN	E DEUS	A KARTOUM
DETAILS	A R DUDSAK	A KARTOUM
QUANTITIES	E DEUS	A KARTOUM

STATE OF CALIFORNIA
DEPARTMENT OF TRANSPORTATION

DIVISION OF ENGINEERING SERVICES
STRUCTURE DESIGN
SPECIAL DESIGNS BRANCH

BRIDGE NO. 34-0006 L/R
KILOMETER POST 1.6

SAN FRANCISCO OAKLAND BAY BRIDGE
EAST SPAN SEISMIC SAFETY PROJECT
OAKLAND APPROACH STRUCTURES
HINGES EW, EE, FW, FE AND ABUT 23 L&R
SEISMIC JOINT (TYPE I)
CHANNEL ASSEMBLY DETAILS NO 2

ALL DIMENSIONS ARE IN MILLIMETERS UNLESS OTHERWISE SHOWN

ORIGINAL SCALE IN MILLIMETERS FOR REDUCED PLANS 0 10 20 30 40 50 60 70 80 90 100

CU 04251
EA 012051

SHEET 8 OF 10

YBITS 1 CONTRACT

Sept 20, 2011

CONTRACT NO. 04-012054
CONTRACT CHANGE ORDER NO 107-50
SHEET 7 OF 9

DIST	COUNTY	ROUTE	KILOMETER POST TOTAL PROJECT	SHEET NO	TOTAL SHEETS
04	SF	80	12.7/13.2	790L9	806

REGISTERED CIVIL ENGINEER DATE

PLANS APPROVAL DATE

The State of California or its officers or agents shall not be responsible for the accuracy or completeness of electronic copies of this plan sheet.

REGISTERED PROFESSIONAL ENGINEER EFTYMIOS DELIS No. 61434 Exp. 6-30-12 CIVIL STATE OF CALIFORNIA

To get to the Caltrans web site, go to: http://www.dot.ca.gov

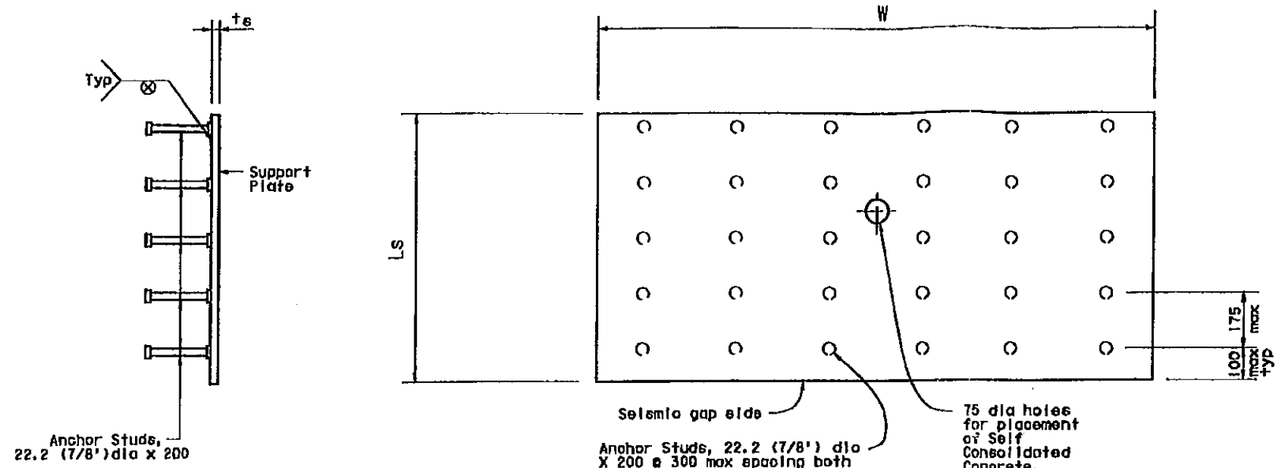

SIDE VIEW

PLAN VIEW

SUPPORT PLATE DETAIL

NO SCALE

CONTRACT NO. 04-012054

CONTRACT CHANGE ORDER NO 107-S0

SHEET 8 OF 9

SUPPORT PLATE WIDTH
MODULE A, W = 1350
MODULE B, W = 1800

NOTES:

1. For Ls and ts values see 'CROSS SECTION' sheet for TYPE I joint.
2. Support Plate A shown, Support Plate B similar.
3. For V-Groove details see 'DECK PLATE DETAILS NO 2' sheet for TYPE I joint.
4. Exact location of 75 dia holes to be determined prior to support plate fabrication.

Note:
Seismic joint at Abut 23L to be furnished and installed by Contractor (anchor bolts exist at this location), seismic joint at Abut 23R to be furnished by Contractor (incl anchor bolts) and installed by others.

SUPPLEMENTAL SHEET

CONTRACT CHANGE ORDER NO. 107

SHEET 8 OF 9

THE CONTRACTOR SHALL VERIFY ALL CONTROLLING FIELD DIMENSIONS BEFORE ORDERING OR FABRICATING ANY MATERIAL.

	BY	CHECKED
DESIGN	E DELIS	A KARTOUH
DETAILS	A R DUDSAK	A KARTOUH
QUANTITIES	E DELIS	A KARTOUH

STATE OF CALIFORNIA
DEPARTMENT OF TRANSPORTATION

DIVISION OF ENGINEERING SERVICES
STRUCTURE DESIGN
SPECIAL DESIGNS BRANCH

BRIDGE NO. 34-0006 L/R
KILOMETER POST 1.6

CU 04251
EA 012051

ALL DIMENSIONS ARE IN MILLIMETERS UNLESS OTHERWISE SHOWN

ORIGINAL SCALE IN MILLIMETERS FOR REDUCED PLANS 0 10 20 30 40 50 60 70 80 90 100

DISREGARD PRINTS DATED BEFORE REVISION DATES

REVISION DATES

SHEET 9 OF 10

SAN FRANCISCO OAKLAND BAY BRIDGE
EAST SPAN SEISMIC SAFETY PROJECT

OAKLAND APPROACH STRUCTURES
HINGES EW, EE, FW, FE AND ABUT 23 L&R

SEISMIC JOINT (TYPE I)

SUPPORT PLATE DETAILS

YBITS 1 CONTRACT

Sept 20, 2011

DATE PLOTTED => 9/20/2011
TIME PLOTTED => 2:49:29 PM

FILE => epeo_des_br_proj\200930704-0120M1\Pr\4141-06\CADD\YS\Checked Plans\YB1\Modular Jo

DIST	COUNTY	ROUTE	KILOMETER POST TOTAL PROJECT	SHEET NO.	TOTAL SHEETS
04	SF	80	12.7/13.2	790WS	806

REGISTERED CIVIL ENGINEER DATE

PLANS APPROVAL DATE

The State of California or its officers or agents shall not be responsible for the accuracy or completeness of electronic copies of this plan sheet.

To get to the Caltrans web site, go to: http://www.dot.ca.gov

FOR REVISION ⟨1⟩ ONLY

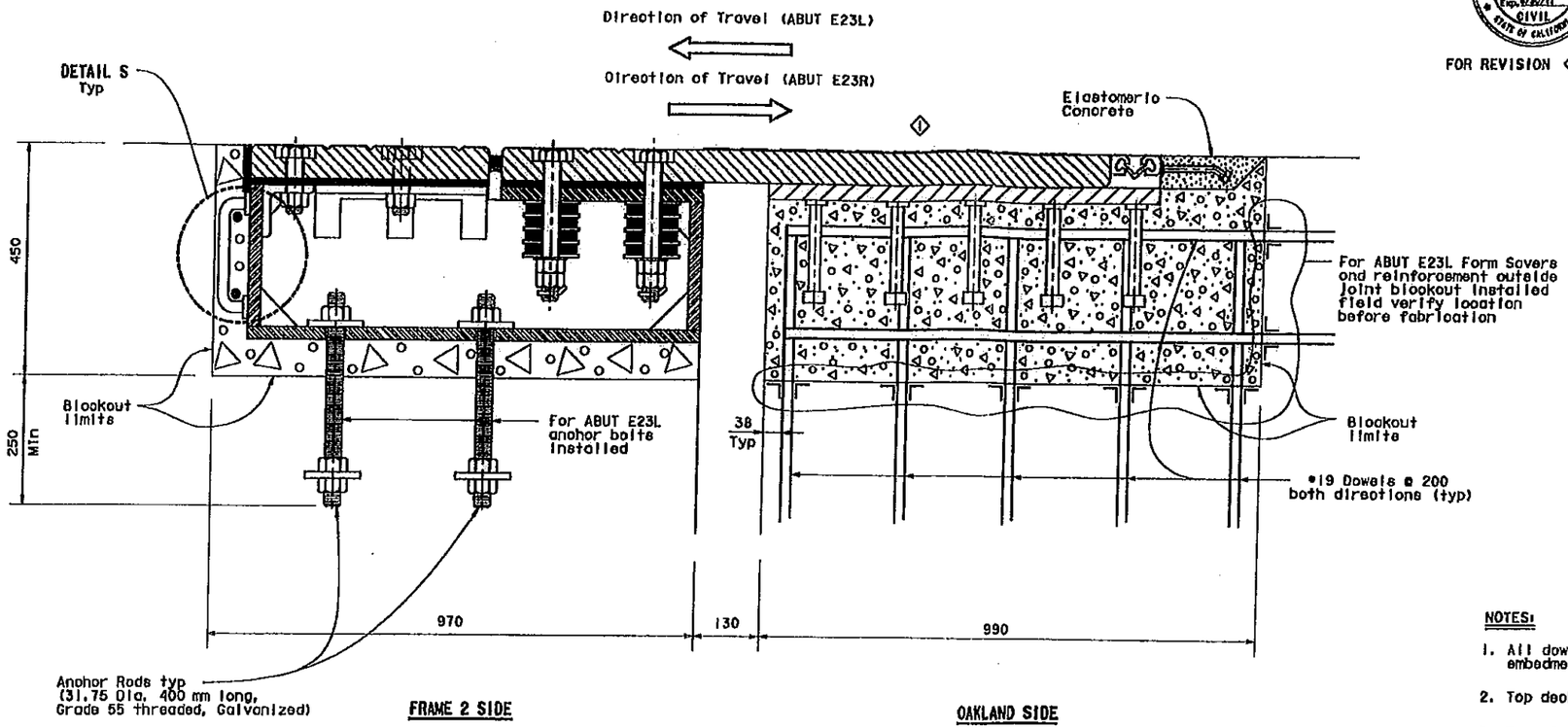

EASTBOUND / WESTBOUND ELEVATION

SCALE 1:5

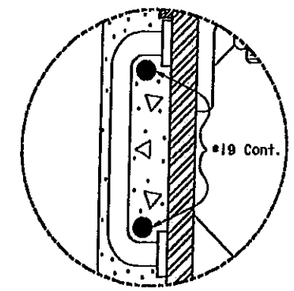

DETAIL S

NOTES:

1. All dowels are drill and bond with minimum embedment length of 200 mm.
2. Top deck plate placed at deck profile.
3. Top of support plate parallel to top deck plate.
4. For Frame 2 limits see "GENERAL NOTES NO. 1" sheet.
5. Seismic joint shown position at 20°C.

CONTRACT NO. 04-0120S4

CONTRACT CHANGE ORDER NO 107-S0

SHEET 9 OF 9

Note:
Seismic joint at Abut 23L to be furnished and installed by Contractor (anchor bolts exist at this location), seismic joint at Abut 23R to be furnished by Contractor (incl anchor bolts) and installed by others.

SUPPLEMENTAL SHEET

CONTRACT CHANGE ORDER NO. 107

SHEET 9 OF 9

THE CONTRACTOR SHALL VERIFY ALL CONTROLLING FIELD DIMENSIONS BEFORE ORDERING OR FABRICATING ANY MATERIAL.

⟨1⟩ Revised some V-Grooves to traction ribs - 3/4/11

	BY	CHECKED
DESIGN	E DEUS	A KARTOUM
DETAILS	A R DUDSAK	A KARTOUM
QUANTITIES	E DEUS	A KARTOUM

ALL DIMENSIONS ARE IN MILLIMETERS UNLESS OTHERWISE SHOWN

ORIGINAL SCALE IN MILLIMETERS FOR REDUCED PLANS 0 10 20 30 40 50 60 70 80 90 100

STATE OF CALIFORNIA DEPARTMENT OF TRANSPORTATION

DIVISION OF ENGINEERING SERVICES STRUCTURE DESIGN

SPECIAL DESIGNS BRANCH

CU 04251
EA 0120S1

BRIDGE NO. 34-0006 L/R
KILOMETER POST 1.6

DIMENSIONS PRINTED BEARING DATE OF REVISION DATES

REVISION DATES

SHEET 10 OF 10

SAN FRANCISCO OAKLAND BAY BRIDGE
EAST SPAN SEISMIC SAFETY PROJECT

OAKLAND APPROACH STRUCTURES
HINGES EW, EE, FW, FE AND ABUT 23 L&R

SEISMIC JOINT (TYPE I)

REINFORCEMENT DETAILS

FILE => apoo_dea_br_proj72009sd/04-01E0M1/Pt\4141-05\CADD\TS\Chooked Plans\VBITS\Structures\Hinges\Hinge\Hinge\Hinge

STATE OF CALIFORNIA - DEPARTMENT OF TRANSPORTATION

CONTRACT CHANGE ORDER

Change Requested by: Engineer

CCO 107	Suppl. No. 1	Contract No. 04 - 0120S4	Road SF-80-12.7/13.2	FED. AID LOC.: NO FED AID

To: M C M CONSTRUCTION INC

You are directed to make the following changes from the plans and specifications or do the following described work not included in the plans and specifications for this contract. ***NOTE: This change order is not effective until approved by the Engineer.***

Description of work to be done, estimate of quantities and prices to be paid. (Segregate between additional work at contract price, agreed price and force account.) Unless otherwise stated, rates for rental of equipment cover only such time as equipment is actually used and no allowance will be made for idle time. This last percentage shown is the net accumulated increase or decrease from the original quantity in the Engineer's Estimate.

Revision 1 dated 2/20/13

Adjustment of Compensation at Lump Sum:

Compensate the Contractor for the following fabrication changes associated with seismic joints at Abutments 23L and 23R

1) Machine faying surfaces between the cover plates and support plates, cover plates and channel assemblies, and abutting ends of the channel assemblies for mill to bear contact.

2) Substitute the V-groove pattern of the riding surface profile with the traction-rib pattern on the cover plates. Extend the surface profile to the edges of the plates, cover plates and channel plates.

3) Provide a non-skid surface coating for the riding surface in accordance with specifications included in Contract Change Oder No. 100S2.

4) Provide anchor bolt templates for seismic joints E23L and E23R.

The Contractor shall be compensated an Agreed Lump Sum of $173,534.00, which constitutes full compensation, including all markups, for the work of this change.

Adjustment of Compensation at Lump Sum = $173,534.00

4/17/2013

Estimated Cost: Increase ☑ Decrease ☐ $173,534.00

By reason of this order the time of completion will be adjusted as follows: 0 days

Submitted by

Signature William Howe	Resident Engineer William Howe, Senior R.E.	Date 02-21-13

Approval Recommended by

Signature	Region Construction Division Chief Tony Anziano	Date 2/21/13

Engineer Approval by

Signature	Region Construction Division Chief Tony Anziano	Date 4/18/13

We the undersigned contractor, have given careful consideration to the change proposed and agree, if this proposal is approved, that we will provide all equipment, furnish the materials, except as may otherwise be noted above, and perform all services necessary for the work above specified, and will accept as full payment therefor the prices shown above.

NOTE: If you, the contractor, do not sign acceptance of this order, your attention is directed to the requirements of the specifications as to proceeding with the ordered work and filing a written protest within the time therein specified.

Contractor Acceptance by

Signature	(Print name and title) EDMUND A. PUCHI, TREASURER	Date 4/16/13

STATE OF CALIFORNIA - DEPARTMENT OF TRANSPORTATION

CONTRACT CHANGE ORDER MEMORANDUM

DATE: 4/30/2012 Page 1 of 1

TO: Deanna Vilcheck, ACM

FROM: William Howe, Senior R.E.

FILE: E.A. 04 - 0120S4
CO-RTE-PM SF-80-12.7/13.2
FED. NO. NO FED AID

CCO#: 107 | SUPPLEMENT#: 1 | Category Code: CHPT

CONTINGENCY BALANCE (incl. this change) $29,360,984.15

COST: $173,534.00 INCREASE ☑ DECREASE ☐

HEADQUARTERS APPROVAL REQUIRED? ☑ YES ☐ NO

SUPPLEMENTAL FUNDS PROVIDED: $0.00

IS THIS REQUEST IN ACCORDANCE WITH ENVIRONMENTAL DOCUMENTS? ☑ YES ☐ NO

CCO DESCRIPTION:
Seismic Joints Fab.Rev.Abut.E23L & E23R

PROJECT DESCRIPTION:
YBITS-1 (Yerba Buena Island Transition Structures)

Original Contract Time:	Time Adj. This Change:	Previously Approved CCO Time Adjustments:	Percentage Time Adjusted: (including this change)	Total # of Unreconciled Deferred Time CCO(s): (including this change)
1390 Day(s)	0 Day(s)	0 Day(s)	0 %	9

THIS CHANGE ORDER PROVIDES FOR:

Changes to fabrication for seismic joints at Abutments 23L and 23R.

The Engineer made changes to fabrication and erection of the seismic joint including machining surfaces to improve the fitup of adjoining surfaces (thus reducing fabrication tolerances); added an anchor bolt template for a future joint (abutment 23R) and verification templates for anchor bolts installed under a previous contract; changes to the profile of the riding surface; requirements for the non-skid coating; and connections for the erection frame so that the seismic joints can be erected as a bolted up unit.

The Contractor shall be compensated an Agreed Lump Sum of $173,534.00, which constitutes full and final compensation, including all markups, for all costs incurred for fabrication and delivery of these seismic joints.

The changes associated with the field installation of the joint at Abutment E23L are considered minor cost changes. That portion of the work is already a force account item, so no cost change for installation is included in this supplement.

Payment for this work will be an Adjustment in Compensation at Agreed Lump Sum of $173,534.00, which can be financed from the contingency fund. A detailed cost analysis is on file.

The original Contract Change Order No. 107 S0 and this supplemental total $1,119,764.00. This supplemental was approved by the TBPOC at their August 21, 2012, meeting for a Not to Exceed (NTE) $250,000.00; total NTE $1,216,782.00.

Maintenance concurrence will be obtained from Lina Ellis, Structures Maintenance.

CONCURRED BY:

Construction Engineer:	William Howe	Date 02-21-13
Bridge Engineer:	Mehran Ardakanian	Date 02/17/2013
Project Engineer:	Bob Zandipour, Design	Date 2-22-13
Project Manager:	Ken Terpstra	Date 2/28/13
FHWA Rep.:		Date
Environmental:		Date
Other (specify):	Lina Ellis, Str. Maintenance	Date 2-21-13
Other (specify):		Date
District Prior Approval By:		Date
HQ (Issue Approve) By:	Sey Hossnieh	Date 2-22-13
Resident Engineer's Signature:	William Howe	Date 02-21-13

ESTIMATE OF COST

	THIS REQUEST	TOTAL TO DATE
ITEMS	$0.00	$0.00
FORCE ACCOUNT	$0.00	$100,000.00
AGREED PRICE	$0.00	$866,782.00
ADJUSTMENT	$173,534.00	$173,534.00
TOTAL	$173,534.00	$1,140,316.00

FEDERAL PARTICIPATION

☐ PARTICIPATING ☐ PARTICIPATING IN PART ☑ NONE
☐ NON-PARTICIPATING (MAINTENANCE) ☐ NON-PARTICIPATING

FEDERAL SEGREGATION (if more than one Funding Source or P.I.P. type)
☐ CCO FUNDED PER CONTRACT ☐ CCO FUNDED AS FOLLOWS

FEDERAL FUNDING SOURCE	PERCENT

ADA Notice: For individuals with sensory disabilities, this document is available in alternate formats. For information call: (916) 654-6410 or TDD (916) 654-3880 or write Records and Forms Management, 1120 N Street, MS-89, Sacramento, CA 95814.

STATE OF CALIFORNIA - DEPARTMENT OF TRANSPORTATION

CONTRACT CHANGE ORDER

Change Requested by: Engineer

CCO 108	Suppl. No. 0	Contract No. 04 - 0120S4	Road SF-80-12.7/13.2	FED. AID LOC.: NO FED AID

To: **M C M CONSTRUCTION INC**

You are directed to make the following changes from the plans and specifications or do the following described work not included in the plans and specifications for this contract. ***NOTE: This change order is not effective until approved by the Engineer.***

Description of work to be done, estimate of quantities and prices to be paid. (Segregate between additional work at contract price, agreed price and force account.) Unless otherwise stated, rates for rental of equipment cover only such time as equipment is actually used and no allowance will be made for idle time. This last percentage shown is the net accumulated increase or decrease from the original quantity in the Engineer's Estimate.

Extra Work at Force Account:

Clean and paint structural steel on existing I-80 bridge structure at locations as directed by the engineer.

Cleaning shall be in accordance with Contract Change Order No. 533 sheets 6 through 13, which includes specifications for cleaning and debris containment, debris handing, and disposal.

Painting shall include the application of 90 micrometers to 150 micrometers of inorganic zinc primer in two or more applications to the surfaces of the existing structural steel after lead or other coating has been abated per the direction of the engineer.

This work shall include but is not limited to
1) Preparing amendments to existing debris handling plan to address the work of this change order.
2) Preparing updates or amendments to the contractor's (or any subcontractor's) existing Project Health and Safety plan to include the work of this change order.
3) Providing access platform or platforms as required (such as manlifts) for the work.
4) Making provisions for containment of dust and debris.
5) Accomplishing all cleaning and painting as directed by the engineer and providing clean and safe access for the engineer to conduct examinations on the existing bridge at the cleaned and painted areas.
6) Providing all required health and safety measures, including air monitoring as detailed in the specifications. Air monitoring lab test results shall be provided to the Engineer at an expedited turnaround times as directed by the Engineer.
7) Providing any required testing and legal disposal of rinse water and blasting debris materials generated during the work.

Any traffic control or lane closure operations required for this change will be covered under Contract Change Order No. 001, Maintain Traffic. For this work, the State will pay the entire cost of furnishing all flaggers, including transporting flaggers, in lieu of the division of costs as described in Section 12-2.02 of the Standard Specifications.

This work will be paid for in accordance with Section 5-1.17 "Force Account Payment" of the Special Provisions and Section 4-1.03D "Extra Work" of the Standard Specifications.

Estimated cost of Extra Work at Force Account $100,000.00

RECEIVED OCT 2 5 2011

STATE OF CALIFORNIA - DEPARTMENT OF TRANSPORTATION

CONTRACT CHANGE ORDER

Change Requested by: Engineer

CCO 108	Suppl. No. 0	Contract No. 04 - 0120S4	Road SF-80-12.7/13.2	FED. AID LOC.: NO FED AID

Estimated Cost: Increase ☑ Decrease ☐ $100,000.00

By reason of this order the time of completion will be adjusted as follows: 0 days

Submitted by

Signature William Howe	Resident Engineer William Howe, Senior R.E.	Date 10-11-11

Approval Recommended by

Signature Deanna Vilcheck	Area Construction Manager Deanna Vilcheck	Date 10/12/11

Engineer Approval by

Signature Deanna Vilcheck	Area Construction Manager Deanna Vilcheck	Date 10/26/11

We the undersigned contractor, have given careful consideration to the change proposed and agree, if this proposal is approved, that we will provide all equipment, furnish the materials, except as may otherwise be noted above, and perform all services necessary for the work above specified, and will accept as full payment therefor the prices shown above.

NOTE: If you, the contractor, do not sign acceptance of this order, your attention is directed to the requirements of the specifications as to proceeding with the ordered work and filing a written protest within the time therein specified.

Contractor Acceptance by

Signature	Print name and title Edmundo A. Pucchi - Treasurer	Date 10-21-2011

10-11-2011

STATE OF CALIFORNIA - DEPARTMENT OF TRANSPORTATION

CONTRACT CHANGE ORDER

Change Requested by: Engineer

CCO 109	Suppl. No. 0	Contract No. 04 - 0120S4	Road SF-80-12.7/13.2	FED. AID LOC.: NO FED AID

To: **M C M CONSTRUCTION INC**

You are directed to make the following changes from the plans and specifications or do the following described work not included in the plans and specifications for this contract. ***NOTE: This change order is not effective until approved by the Engineer.***

Description of work to be done, estimate of quantities and prices to be paid. (Segregate between additional work at contract price, agreed price and force account.) Unless otherwise stated, rates for rental of equipment cover only such time as equipment is actually used and no allowance will be made for idle time. This last percentage shown is the net accumulated increase or decrease from the original quantity in the Engineer's Estimate.

Extra Work at Force Account:

In accordance with Section 4-1.03D, "Extra Work" and Section 9-1.03, "Force Account Payment" of the Standard Specifications, and Section 5-1.17, "Force Account Payment" of the Special Provisions, provide all labor, equipment and materials as directed by the Engineer in and near the cantilever span of Hinge K, including constructing blockouts for tiedowns and other work for the San Francisco-Oakland Bay Bridge East Span Seismic Safety Project Yerba Buena Island Transition Structures, Bridge Nos. 340006L/R.

Estimated cost of Extra Work at Force Account $50,000.00

Estimated Cost: Increase ☑ Decrease ☐ **$50,000.00**

By reason of this order the time of completion will be adjusted as follows: 0 days

Submitted by

Signature	Resident Engineer	Date
William Howe	William Howe, Senior R.E.	12-23-11

Approval Recommended by

Signature	Senior Resident Engineer	Date
William Howe	William Howe	12-23-11

Engineer Approval by

Signature	Senior Resident Engineer	Date
William Howe	William Howe	01-30-12

GR 1-31-12

We the undersigned contractor, have given careful consideration to the change proposed and agree, if this proposal is approved, that we will provide all equipment, furnish the materials, except as may otherwise be noted above, and perform all services necessary for the work above specified, and will accept as full payment therefor the prices shown above.

NOTE: If you, the contractor, do not sign acceptance of this order, your attention is directed to the requirements of the specifications as to proceeding with the ordered work and filing a written protest within the time therein specified.

Contractor Acceptance by

Signature	(Print name and title)	Date
[illegible]	Lamund A. Ruchi - Treasurer	1-26-2012

STATE OF CALIFORNIA - DEPARTMENT OF TRANSPORTATION

CONTRACT CHANGE ORDER

Change Requested by: Engineer

CCO 110	Suppl. No. 0	Contract No. 04 - 0120S4	Road SF-80-12.7/13.2	FED. AID LOC.: NO FED AID

To: **M C M CONSTRUCTION INC**

You are directed to make the following changes from the plans and specifications or do the following described work not included in the plans and specifications for this contract. ***NOTE: This change order is not effective until approved by the Engineer.***

Description of work to be done, estimate of quantities and prices to be paid. (Segregate between additional work at contract price, agreed price and force account.) Unless otherwise stated, rates for rental of equipment cover only such time as equipment is actually used and no allowance will be made for idle time. This last percentage shown is the net accumulated increase or decrease from the original quantity in the Engineer's Estimate.

Extra Work at Force Account:

Provide labor, equipment and all materials necessary to perform concrete pour mockups for the steep sloped sidewalls of the superstructure and the piles as directed by the Engineer.

Work shall include any required testing, removal and legal disposal of the mockups and any concrete washouts and debris after completion of evaluations.

This work will be paid for in accordance with Section 5-1.17 "Force Account Payment" of the Special Provisions and Section 4-1.03D "Extra Work" of the Standard Specifications.

Estimated cost of Extra Work at Force Account $50,000.00

Estimated Cost: Increase ☑ Decrease ☐ **$50,000.00**

By reason of this order the time of completion will be adjusted as follows: 0 days

Submitted by

Signature	Resident Engineer	Date
William Howe	William Howe, Senior R.E.	12-08-11

Approval Recommended by

Signature	Senior Resident Engineer	Date
William Howe	William Howe	12-08-11

Engineer Approval by

Signature	Senior Resident Engineer	Date
Deanna Vilchek	for William Howe	1/13/12

We the undersigned contractor, have given careful consideration to the change proposed and agree, if this proposal is approved, that we will provide all equipment, furnish the materials, except as may otherwise be noted above, and perform all services necessary for the work above specified, and will accept as full payment therefor the prices shown above.

NOTE: If you, the contractor, do not sign acceptance of this order, your attention is directed to the requirements of the specifications as to proceeding with the ordered work and filing a written protest within the time therein specified.

Contractor Acceptance by

Signature	(Print name and title)	Date
[signature]	Edmund A. Pucci - Treasurer	1-10-2012

STATE OF CALIFORNIA - DEPARTMENT OF TRANSPORTATION

CONTRACT CHANGE ORDER MEMORANDUM

DATE: 12/7/2011

TO: Deanna Vilcheck, ACM / DV	FILE: E.A. 04 - 0120S4
FROM: William Howe, Senior R.E.	CO-RTE-PM SF-80-12.7/13.2
	FED. NO. NO FED AID
CCO#: 110 SUPPLEMENT#: 0 Category Code: CHMX	CONTINGENCY BALANCE (incl. this change) $86,604,021.49
COST: $50,000.00 INCREASE ☑ DECREASE ☐	HEADQUARTERS APPROVAL REQUIRED? ☐ YES ☑ NO
SUPPLEMENTAL FUNDS PROVIDED: $0.00	IS THIS REQUEST IN ACCORDANCE WITH ENVIRONMENTAL DOCUMENTS? ☑ YES ☐ NO
CCO DESCRIPTION: Mockup concrete pour for steep slopes	**PROJECT DESCRIPTION:** YBITS-1 (Yerba Buena Island Transition Structures)

Original Contract Time:	Time Adj. This Change:	Previously Approved CCO Time Adjustments:	Percentage Time Adjusted: (including this change)	Total # of Unreconciled Deferred Time CCO(s): (including this change)
1390 Day(s)	0 Day(s)	0 Day(s)	0 %	9

THIS CHANGE ORDER PROVIDES FOR:

This change order provides for the contractor to perform concrete pour mockups for the steep sloped sidewalls of the superstructure and the piles as directed by the Engineer.

This contract provides for the construction of the Yerba Buena Island Transition Structures for the east span of the new San Francisco Oakland Bay Bridge (SFOBB).

The superstructure of the new bridge has several locations that have steep sidewalls (up to a 1:1 Horizontal: Vertical grade) and are congested.The concrete mix design to be used for this superstructure has to be very fluid (have a high slump) in order to fill all the congested rebar locations.Due to an existing problem at the cement plant used in the concrete mixes, all previously approved concrete mixes are being revised. The engineer has concerns about a fluid concrete mix staying in place while it sets up at the steep sidewalls and has directed the contractor to demonstrate that a mix can be designed to handle the competing necessities of flowing into the voids, and still being able to stand sufficiently on the steep side slopes. Under this change order, the Contractor will conduct tests on the concrete, as directed by the Engineer. In addition to the above mentioned work there are existing piles that the engineer is concerned about.The engineer has determined that it will be useful to demonstrate that these piles were designed to handle the geology and geometry of the existing condition by attempting to install a similar mock pile under controlled conditions.

Gilel Klebanov, CT Senior Structures representative, requested this change on October 6, 2011.

Compensation for this work shall be paid as extra work at force account in the amount of $50,000.00, which shall be financed from the contract's contingency funds. A cost analysis is on file.

Maintenance concurrence is not required, as this does not affect any permanent features of the bridge.

No adjustment of contract time is warranted, as this change will not affect the controlling operation.

ADA Notice: For individuals with sensory disabilities, this document is available in alternate formats. For information call: (916) 654-6410 or TDD (916) 654-3880 or write Records and Forms Management, 1120 N Street, MS-89, Sacramento, CA 95814.

CONCURRED BY:		
Construction Engineer:	William Howe	Date 12-08-11
Bridge Engineer:	Mehran Ardakanian	Date 12-8-11
Project Engineer:	Bob Zandipour, Design	Date 12-9-11
Project Manager:	Ken Terpstra KT	Date 12-20-11
FHWA Rep.:		Date
Environmental:		Date
Other (specify):		Date
Other (specify):		Date
District Prior Approval By:		Date
HQ (Issue Approve) By:		Date
Resident Engineer's Signature: William Howe		Date 12-08-11

ESTIMATE OF COST

	THIS REQUEST	TOTAL TO DATE
ITEMS	$0.00	$0.00
FORCE ACCOUNT	$50,000.00	$50,000.00
AGREED PRICE	$0.00	$0.00
ADJUSTMENT	$0.00	$0.00
TOTAL	$50,000.00	$50,000.00

FEDERAL PARTICIPATION

PARTICIPATING ☐ PARTICIPATING IN PART ☑ NONE
☐ NON-PARTICIPATING (MAINTENANCE) ☐ NON-PARTICIPATING

FEDERAL SEGREGATION (if more than one Funding Source or P.I.P. type)
CCO FUNDED PER CONTRACT ☐ CCO FUNDED AS FOLLOWS

FEDERAL FUNDING SOURCE	PERCENT

ADA Notice: For individuals with sensory disabilities, this document is available in alternate formats. For information call: (916) 654-6410 or TDD (916) 654-3880 or write Records and Forms Management, 1120 N Street, MS-89, Sacramento, CA 95814.

STATE OF CALIFORNIA - DEPARTMENT OF TRANSPORTATION

CONTRACT CHANGE ORDER MEMORANDUM

TO: Deanna Vilcheck, ACM / DV	FILE: E.A. 04 - 0120S4
FROM: William Howe, Senior R.E.	CO-RTE-PM SF-80-12.7/13.2
	FED. NO. NO FED AID
CCO#: 107 SUPPLEMENT#: 0 Category Code: CHPT	CONTINGENCY BALANCE (incl. this change) $66,882,526.00
COST: $966,782.00 INCREASE ☑ DECREASE ☐	HEADQUARTERS APPROVAL REQUIRED? ☑ YES ☐ NO
SUPPLEMENTAL FUNDS PROVIDED: $0.00	IS THIS REQUEST IN ACCORDANCE WITH ENVIRONMENTAL DOCUMENTS? ☑ YES ☐ NO
CCO DESCRIPTION: furnish and install seismic joints	**PROJECT DESCRIPTION:** YBITS-1 (Yerba Buena Island Transition Structures)

Original Contract Time:	Time Adj. This Change:	Previously Approved CCO Time Adjustments:	Percentage Time Adjusted: (including this change)	Total # of Unreconciled Deferred Time CCO(s): (including this change)
1390 Day(s)	0 Day(s)	0 Day(s)	0 %	9

THIS CHANGE ORDER PROVIDES FOR:

This change order provides for furnishing seismic joints for Abutment 23L and Abutment 23R, and the installation of the seismic joint at Abutment 23L. This work shall be performed in accordance with revised contract plan sheets issued with this change order and also in accordance with the requirements prescribed in Specification Section 10-1.33 issued with Contract Change Order No. 76, Supplement No. 1.

This project, the Yerba Buena Island Transition Structure (YBITS), provides for the construction of two bridges which will connect eastbound and westbound traffic on the new east span of the San Francisco Oakland Bay Bridge (SFOBB) to the existing Yerba Buena Island (YBI) tunnel.

In association with the seismic safety opening of the Bay Bridge Eastbound Corridor, the completion of seismic deck joints at the eastern end of the bridge are required. The Project Management Team (PMT) has determined that the purchase of these specialized joints and installation of the westbound (Abutment 23L) joint be accomplished as a contract change order on this contract; the installation of the eastbound (Abutment 23R) joint will be done under the Oakland Touchdown 2 contract.

This change provides for compensating the Contractor an agreed lump sum amount for furnishing seismic joints for Abutments E23L/R for a cost of $866,782. This agreed lump sum amount has been revised from the previous request of $788,486 as the Contractor's markup was omitted. In addition, this change provides compensating the Contractor extra work at force account to install the seismic joint at Abutment E23L for a cost of $100,000. This change will result in a total cost increase of $966,782.00, which can be financed from the project's contingency fund. A detailed cost analysis is available on file in the project records.

Any costs pertaining to the backer and silicon seal material, coating touch-up due to handling, shipping, and installation, third party inspection, and self-consolidating concrete shall be deferred and shall be provided under a supplement to this change order.

This change was requested by Mike Whiteside, Toll Bridge Structures Design, on a memo dated September 22, 2011.

Maintenance concurrence is required.

As this change does not affect the controlling operations, no adjustment of contract time is warranted.

ADA Notice: For individuals with sensory disabilities, this document is available in alternate formats. For information call: (916) 654-6410 or TDD (916) 654-3880 or write Records and Forms Management, 1120 N Street, MS-89, Sacramento, CA 95814.

CONCURRED BY:		
Construction Engineer:	William Howe	Date 12-28-11
Bridge Engineer:	Mehran Ardakanian	Date 1-11-12
Project Engineer:	Bob Zandipour, Design	Date 12-28-11
Project Manager:	Ken Terpstra	Date 12-29-11
FHWA Rep.:		Date
Environmental:		Date
Other (specify):	Lina Ellis, Str. Maintenance	Date 12-28-11
Other (specify):		Date
District Prior Approval By:		Date
HQ (Issue Approve) By:	Larry Salhaney	Date 12-29-11
Resident Engineer's Signature: William Howe		Date 12-28-11

ESTIMATE OF COST

	THIS REQUEST	TOTAL TO DATE
ITEMS	$0.00	$0.00
FORCE ACCOUNT	$100,000.00	$100,000.00
AGREED PRICE	$866,782.00	$866,782.00
ADJUSTMENT	$0.00	$0.00
TOTAL	$966,782.00	$966,782.00

FEDERAL PARTICIPATION

☐ PARTICIPATING ☐ PARTICIPATING IN PART ☑ NONE
☐ NON-PARTICIPATING (MAINTENANCE) ☐ NON-PARTICIPATING

FEDERAL SEGREGATION (if more than one Funding Source or P.I.P. type)
☐ CCO FUNDED PER CONTRACT ☐ CCO FUNDED AS FOLLOWS

FEDERAL FUNDING SOURCE	PERCENT

ADA Notice: For individuals with sensory disabilities, this document is available in alternate formats. For information call: (916) 654-6410 or TDD (916) 654-3880 or write Records and Forms Management, 1120 N Street, MS-89, Sacramento, CA 95814.

STATE OF CALIFORNIA - DEPARTMENT OF TRANSPORTATION

CONTRACT CHANGE ORDER MEMORANDUM

TO: Deanna Vilcheck, ACM / DV	FILE: E.A. 04 - 0120S4
FROM: William Howe, Senior R.E.	CO-RTE-PM SF-80-12.7/13.2
	FED. NO. NO FED AID
CCO#: 105 SUPPLEMENT#: 0 Category Code: AXZZ	CONTINGENCY BALANCE (incl. this change) $54,782,704.80
COST: $140,000.00 INCREASE ☑ DECREASE ☐	HEADQUARTERS APPROVAL REQUIRED? ☐ YES ☑ NO
SUPPLEMENTAL FUNDS PROVIDED: $0.00	IS THIS REQUEST IN ACCORDANCE WITH ENVIRONMENTAL DOCUMENTS? ☑ YES ☐ NO
CCO DESCRIPTION: flumes for stormwater basins near burma	**PROJECT DESCRIPTION:** YBITS-1 (Yerba Buena Island Transition Structures)

Original Contract Time:	Time Adj. This Change:	Previously Approved CCO Time Adjustments:	Percentage Time Adjusted: (including this change)	Total # of Unreconciled Deferred Time CCO(s): (including this change)
1390 Day(s)	0 Day(s)	0 Day(s)	0 %	9

THIS CHANGE ORDER PROVIDES FOR:

This change order provides for installing flumes and related apparatus inside the bioretention basin system of the San Francisco-Oakland Bay Bridge (SFOBB) storm water treatment facilities located west of the SFOBB Toll Plaza.

The installation of the flumes and related apparatus is needed to monitor the incoming and outgoing water flow inside the basins. Without the flumes, it would not be possible to determine whether the bioretention basins meet the storm water treatment requirements for the SFOBB East Span Seismic Safety Project as set by California Regional Water Quality Control Board's Waste Discharge Requirements Order No. R2-2002-0011.

Work associated with this change includes the removal of existing flumes, the fabrication and installation of H flumes, HS flumes in existing manholes, and downspouts, and other work as directed by the Engineer. This work will be done per the plans and specifications attached to the Contract Change Order.

This change was requested by Mimy Ma, Toll Bridge Structures Design, in a memo dated August 26, 2011.

Compensation for this work shall be paid as extra work at force account in the amount of $140,000.00, which shall be financed from the contract's contingency funds. A detailed cost analysis is on file.

No adjustment of contract time is warranted, as this change will not affect the controlling operation.

CONCURRED BY:		
Construction Engineer:	William Howe	Date 12-6-11
Bridge Engineer:		Date
Project Engineer:	Bob Zandipour, Design	Date 12-6-11
Project Manager:	Ken Terpstra	Date 12-6-11
FHWA Rep.:		Date
Environmental:		Date
Other (specify):	Lina Ellis, Str. Maintenance	Date 12-6-11
Other (specify):		Date
District Prior Approval By:		Date
HQ (Issue Approve) By:		Date
Resident Engineer's Signature: William Howe		Date 12-06-11

ESTIMATE OF COST

	THIS REQUEST	TOTAL TO DATE
ITEMS	$0.00	$0.00
FORCE ACCOUNT	$140,000.00	$140,000.00
AGREED PRICE	$0.00	$0.00
ADJUSTMENT	$0.00	$0.00
TOTAL	$140,000.00	$140,000.00

FEDERAL PARTICIPATION

☐ PARTICIPATING ☐ PARTICIPATING IN PART ☑ NONE
☐ NON-PARTICIPATING (MAINTENANCE) ☐ NON-PARTICIPATING

FEDERAL SEGREGATION (if more than one Funding Source or P.I.P. type)
☐ CCO FUNDED PER CONTRACT ☐ CCO FUNDED AS FOLLOWS

FEDERAL FUNDING SOURCE	PERCENT

ADA Notice: For individuals with sensory disabilities, this document is available in alternate formats. For information call: (916) 654-6410 or TDD (916) 654-3880 or write Records and Forms Management, 1120 N Street, MS-89, Sacramento, CA 95814.

STATE OF CALIFORNIA - DEPARTMENT OF TRANSPORTATION

CONTRACT CHANGE ORDER MEMORANDUM

TO: Deanna Vilcheck, ACM /	FILE: E.A. 04 - 0120S4
	CO-RTE-PM SF-80-12.7/13.2
FROM: William Howe, Senior R.E.	FED. NO. NO FED AID
CCO#: 100 SUPPLEMENT#: 1 Category Code: CHPT	CONTINGENCY BALANCE (incl. this change) $67,230,494.00
COST: $12,859.00 INCREASE ☑ DECREASE ☐	HEADQUARTERS APPROVAL REQUIRED? ☑ YES ☐ NO
SUPPLEMENTAL FUNDS PROVIDED: $0.00	IS THIS REQUEST IN ACCORDANCE WITH ENVIRONMENTAL DOCUMENTS? ☑ YES ☐ NO
CCO DESCRIPTION: Hinge K Barrier Plate Modifications	**PROJECT DESCRIPTION:** YBITS-1 (Yerba Buena Island Transition Structures)

Original Contract Time:	Time Adj. This Change:	Previously Approved CCO Time Adjustments:	Percentage Time Adjusted: (including this change)	Total # of Unreconciled Deferred Time CCO(s): (including this change)
1390 Day(s)	0 Day(s)	0 Day(s)	0 %	9

THIS CHANGE ORDER PROVIDES FOR:
Compensation for additional fabrication costs associated with modifications to the steel barrier plates at the Hinge K Closure.

This project, the Yerba Buena Island Transition Structure (YBITS), provides for the construction of two bridges which will connect eastbound and westbound traffic on the new east span of the San Francisco Oakland Bay Bridge (SFOBB) to the existing Yerba Buena Island (YBI) tunnel. The structures are comprised of concrete box girder bridges each approximately 26 meters wide, 40 meters high and 450 meters in length.

At the eastern end of the structures, the contract provides for the installation of two separate seismic expansion joints at Hinge K which connects the YBITS structure to the adjacent Self-Anchored Suspension Bridge (SAS). The original Change Order No. 100 provided modifications to the planned seismic joint as requested by Mike Whiteside the YBI Coordination Engineer. Compensation for the added fabrication cost of the joints was provided under that change order.

The original change order also provided modifications to the steel barrier plates which span the seismic joint and cover the concrete barrier at the gap between the joint. The costs of the modifications to the steel plates were deferred under that change order. This change order provides compensation for these deferred costs.

The modifications to the barrier plates extended the length of the plates by approximately 1.2 meters on the westbound structure and 1.5 meters on the eastbound structure. The added costs include fabricating the additional plate length for the 12 mm thick barrier plates which include both the exterior bent plate and the interior bent plate for each of the 4 barriers. The additional plate length will also require a total of 64 additional steel studs to be furnished and welded onto the inside of the interior plates.

Compensation for these costs will be paid as Extra Work at Agreed Lump Sum of $12,859.00, which shall be financed from the contract's contingency funds. A detailed cost analysis is on file.

The Toll Bridge program Oversight Committee approved costs not to exceed $500,000.00 pertaining to the barrier plate fabrication costs and the installation of the barrier plate and seismic joint at their September 8, 2011 meeting. This change order falls within that approved cost.

No adjustment of contract time is warranted as the work does not affect the controlling operation.

Maintenance concurrence is required as this change will affect permanent Caltrans' owned features.

ADA Notice: For individuals with sensory disabilities, this document is available in alternate formats. For information call: (916) 654-6410 or TDD (916) 654-3880 or write Records and Forms Management, 1120 N Street, MS-89, Sacramento, CA 95814.

CONCURRED BY:		
Construction Engineer:	William Howe	Date 12-23-11
Bridge Engineer:	Mehran Ardakanian	Date 1-11-12
Project Engineer:	Bob Zandipour, Design	Date 12-27-11
Project Manager:	Ken Terpstra	Date 12-27-11
FHWA Rep.:		Date
Environmental:		Date
Other (specify):	Lina Ellis, Str. Maintenance	Date 12-27-11
Other (specify):		Date
District Prior Approval By:		Date
HQ (Issue Approve) By:	Sey Hossnieh	Date 12-27-11
Resident Engineer's Signature: William Howe		Date 12-23-11

ESTIMATE OF COST

	THIS REQUEST	TOTAL TO DATE
ITEMS	$0.00	($500,000.00)
FORCE ACCOUNT	$0.00	$0.00
AGREED PRICE	$12,859.00	$2,280,472.00
ADJUSTMENT	$0.00	$0.00
TOTAL	$12,859.00	$1,780,472.00

FEDERAL PARTICIPATION

☐ PARTICIPATING ☐ PARTICIPATING IN PART ☑ NONE
☐ NON-PARTICIPATING (MAINTENANCE) ☐ NON-PARTICIPATING

FEDERAL SEGREGATION (if more than one Funding Source or P.I.P. type)
CCO FUNDED PER CONTRACT ☐ CCO FUNDED AS FOLLOWS

FEDERAL FUNDING SOURCE	PERCENT

ADA Notice: For individuals with sensory disabilities, this document is available in alternate formats. For information call: (916) 654-6410 or TDD (916) 654-3880 or write Records and Forms Management, 1120 N Street, MS-89, Sacramento, CA 95814.

STATE OF CALIFORNIA - DEPARTMENT OF TRANSPORTATION

CONTRACT CHANGE ORDER

Change Requested by: Engineer

CCO 110	Suppl. No. 1	Contract No. 04 - 0120S4	Road SF-80-12.7/13.2	FED. AID LOC.: NO FED AID

To: **M C M CONSTRUCTION INC**

You are directed to make the following changes from the plans and specifications or do the following described work not included in the plans and specifications for this contract. ***NOTE: This change order is not effective until approved by the Engineer.***

Description of work to be done, estimate of quantities and prices to be paid. (Segregate between additional work at contract price, agreed price and force account.) Unless otherwise stated, rates for rental of equipment cover only such time as equipment is actually used and no allowance will be made for idle time. This last percentage shown is the net accumulated increase or decrease from the original quantity in the Engineer's Estimate.

Extra Work at Force Account:

Provide additional funds.

Estimated Cost of Extra Work at Force Account = $100,000.00

Estimated Cost: Increase ☑ Decrease ☐ $100,000.00

By reason of this order the time of completion will be adjusted as follows: 0 days

Submitted by		
Signature William Howe	Resident Engineer William Howe, Senior R.E.	Date 10-04-12
Approval Recommended by		
Signature Deanna Vilcheck	Area Construction Manager Deanna Vilcheck	Date 10/4/12
Engineer Approval by		
Signature Deanna Vilcheck	Area Construction Manager Deanna Vilcheck	Date 10/5/12

We the undersigned contractor, have given careful consideration to the change proposed and agree, if this proposal is approved, that we will provide all equipment, furnish the materials, except as may otherwise be noted above, and perform all services necessary for the work above specified, and will accept as full payment therefor the prices shown above.

NOTE: If you, the contractor, do not sign acceptance of this order, your attention is directed to the requirements of the specifications as to proceeding with the ordered work and filing a written protest within the time therein specified.

Contractor Acceptance by		
Signature Not Required	(Print name and title)	Date

STATE OF CALIFORNIA - DEPARTMENT OF TRANSPORTATION

CONTRACT CHANGE ORDER MEMORANDUM

DATE: 9/24/2012

TO: Deanna Vilcheck, ACM / DV	FILE: E.A. 04 - 0120S4
	CO-RTE-PM SF-80-12.7/13.2
FROM: William Howe, Senior R.E.	FED. NO. NO FED AID
CCO#: 110 SUPPLEMENT#: 1 Category Code: CHMX	CONTINGENCY BALANCE (incl. this change) $41,991,592.15
COST: $100,000.00 INCREASE ☑ DECREASE ☐	HEADQUARTERS APPROVAL REQUIRED? ☐ YES ☑ NO
SUPPLEMENTAL FUNDS PROVIDED: $0.00	IS THIS REQUEST IN ACCORDANCE WITH ENVIRONMENTAL DOCUMENTS? ☑ YES ☐ NO
CCO DESCRIPTION: Additional Funds	**PROJECT DESCRIPTION:** YBITS-1 (Yerba Buena Island Transition Structures)

Original Contract Time:	Time Adj. This Change:	Previously Approved CCO Time Adjustments:	Percentage Time Adjusted: (including this change)	Total # of Unreconciled Deferred Time CCO(s): (including this change)
1390 Day(s)	0 Day(s)	0 Day(s)	0 %	1

THIS CHANGE ORDER PROVIDES FOR:
additional funds for the Contractor to perform concrete pour mockups for the steep sloped sidewalls of the superstructure and the piles as directed by the Engineer.

This contract provides for the construction of the Yerba Buena Island Transition Structures for the east span of the new San Francisco Oakland Bay Bridge (SFOBB).

The superstructure of the new bridge has several locations that have steep sidewalls (up to a 1:1 Horizontal: Vertical grade) and are congested.The concrete mix design to be used for this superstructure has to be very fluid (have a high slump) in order to fill all the congested rebar locations.Due to an existing problem at the cement plant used in the concrete mixes, all previously approved concrete mixes are being revised. The engineer has concerns about a fluid concrete mix staying in place while it sets up at the steep sidewalls and has directed the contractor to demonstrate that a mix can be designed to handle the competing necessities of flowing into the voids, and still being able to stand sufficiently on the steep side slopes. Under this change order, the Contractor will conduct tests on the concrete, as directed by the Engineer. In addition to the above mentioned work there are existing piles that the engineer is concerned about.The engineer has determined that it will be useful to demonstrate that these piles were designed to handle the geology and geometry of the existing condition by attempting to install a similar mock pile under controlled conditions.

Gilel Klebanov, CT Senior Structures representative, requested this change on October 6, 2011.

Compensation for the additional funds for this work shall be paid as Extra Work at Force Account in the amount of $100,000.00, which shall be financed from the contract's contingency funds. Total cost for this change order is $150,000.00. A cost analysis is on file.

Maintenance concurrence is not required, as this does not affect any permanent features of the bridge.

No adjustment of contract time is warranted, as this change will not affect the controlling operation.

ADA Notice: For individuals with sensory disabilities, this document is available in alternate formats. For information call: (916) 654-6410 or TDD (916) 654-3880 or write Records and Forms Management, 1120 N Street, MS-89, Sacramento, CA 95814.

CONCURRED BY:		
Construction Engineer:	William Howe	Date 10-04-12
Bridge Engineer:	Mehran Ardakanian	Date
Project Engineer:	Bob Zandipour, Design	Date 10-03-12
Project Manager:	Ken Terpstra	Date 10/5/12
FHWA Rep.:		Date
Environmental:		Date
Other (specify):	Deanna Vilcheck SUPBE	Date 10/5/12
Other (specify):		Date
District Prior Approval By:		Date
HQ (Issue Approve) By:		Date
Resident Engineer's Signature:	William Howe	Date 10-04-12

ESTIMATE OF COST

	THIS REQUEST	TOTAL TO DATE
ITEMS	$0.00	$0.00
FORCE ACCOUNT	$100,000.00	$150,000.00
AGREED PRICE	$0.00	$0.00
ADJUSTMENT	$0.00	$0.00
TOTAL	$100,000.00	$150,000.00

FEDERAL PARTICIPATION

☐ PARTICIPATING ☐ PARTICIPATING IN PART ☑ NONE
☐ NON-PARTICIPATING (MAINTENANCE) ☐ NON-PARTICIPATING

FEDERAL SEGREGATION (if more than one Funding Source or P.I.P. type)
☐ CCO FUNDED PER CONTRACT ☐ CCO FUNDED AS FOLLOWS

FEDERAL FUNDING SOURCE	PERCENT

ADA Notice: For individuals with sensory disabilities, this document is available in alternate formats. For information call (916) 654-6410 or TDD (916) 654-3880 or write Records and Forms Management, 1120 N Street, MS-89, Sacramento, CA 95814.

CONTRACT CHANGE ORDER

Change Requested by: Engineer

CCO: 111	Suppl. No. 0	Contract No. 04 - 0120S4	Road SF-80-12.7/13.2	FED. AID LOC.: NO FED AID

To: **M C M CONSTRUCTION INC**

You are directed to make the following changes from the plans and specifications or do the following described work not included in the plans and specifications for this contract. ***NOTE: This change order is not effective until approved by the Engineer.***

Description of work to be done, estimate of quantities and prices to be paid. (Segregate between additional work at contract price, agreed price and force account.) Unless otherwise stated, rates for rental of equipment cover only such time as equipment is actually used and no allowance will be made for idle time. This last percentage shown is the net accumulated increase or decrease from the original quantity in the Engineer's Estimate.

Furnish modular seismic deck joints at Hinges W6RB (EBOR) and W8B for the future east bound on-ramp as specified on Sheets No. 3 through 4 of this change order and as directed by the Engineer for the San Francisco-Oakland East Span Seismic Safety Project Yerba Buena Island Transition Structures, Bridge Nos. 34-172S.

Extra Work at Force Account:

As authorized by the Engineer and in accordance with Section 4-1.03D "Extra Work" and Section 9-1.03 "Force Account Payment" of the Standard Specifications and Section 5-1.17 "Force Account Payment" of the Special Provisions, furnish all labor, equipment, and materials necessary to unload and store the modular seismic deck joints specified herein at a location within or nearby the project limits authorized by the Engineer. Coordinate all work with the Engineer prior to delivery of the material.

Estimated cost of Extra Work at Force Account $25,000.00

Extra Work at Lump Sum:

Compensate the Contractor for all costs associated with furnishing the modular seismic deck joints for Hinges W6RB (EBOR) and W8B.

The contract plan sheets reflecting the changes to the modular seismic deck joint seal assemblies are 773R1(revised) and 777AS (added).

For this work, the Contractor shall be compensated an agreed lump sum of $503,642.00, which constitutes full and final compensation, including all markups, for all costs to furnish the modular seismic deck joints.

Compensation provided in this change order includes all costs associated with the design and fabrication of the modular seismic deck joints including the submittal of working drawings, proof testing of assemblies (including components of assemblies), and quality control for final products. Compensation also includes transporting the modular seismic deck joints to the project site.

All costs pertaining to the installation of the modular seismic deck joints shall be provided for under a separate contract.

There shall be no reduction in compensation, as defined under Section 55-4.02 "Payment" of the Contract Standard Specifications, for additional shop inspection expenses sustained by the State should any modular joint fabrication shop be located more than 480 air line kilometers or 4,800 air line kilometers from Sacramento and Los Angeles.

Extra Work at Lump Sum $503,642.00

Total Estimated Cost of This Change Order $528,642.00

CONTRACT CHANGE ORDER

Change Requested by: Engineer

CCO: 111	Suppl. No. 0	Contract No. 04 - 0120S4	Road SF-80-12.7/13.2	FED. AID LOC.: NO FED AID

11.29.11

Estimated Cost: Increase ☑ Decrease ☐ $528,642.00

By reason of this order the time of completion will be adjusted as follows: 0 days

Submitted by

Signature	Resident Engineer	Date
William Howe	William Howe, Senior R.E.	11-23-11

Approval Recommended by

Signature	Area Construction Manager	Date
Deanna Vilcheck	Deanna Vilcheck	12-1-11

Engineer Approval by

Signature	Area Construction Manager	Date
Deanna Vilcheck	Deanna Vilcheck	1/4/12

We the undersigned contractor, have given careful consideration to the change proposed and agree, if this proposal is approved, that we will provide all equipment, furnish the materials, except as may otherwise be noted above, and perform all services necessary for the work above specified, and will accept as full payment therefor the prices shown above.

NOTE: If you, the contractor, do not sign acceptance of this order, your attention is directed to the requirements of the specifications as to proceeding with the ordered work and filing a written protest within the time therein specified.

Contractor Acceptance by

Signature	(Print name and title)	Date
	Edmundo Arluchi-Treasurer	12-22-2011

DIST.	COUNTY	ROUTE	KILOMETER POST TOTAL PROJECT	SHEET NO.	TOTAL SHEETS
04	SF	80	12.7/13.2	773R1	806

REGISTERED ENGINEER - CIVIL

6-23-08
PLANS APPROVAL DATE

REGISTERED PROFESSIONAL ENGINEER — A.L. ELY — No. 18880 — Exp. 6-30-09 — CIVIL — STATE OF CALIFORNIA

The State of California or its officers or agents shall not be responsible for the accuracy or completeness of electronic copies of this plan sheet.

T.Y. LIN / MOFFATT & NICHOL
TWO HARRISON STREET
SAN FRANCISCO, CA 94105

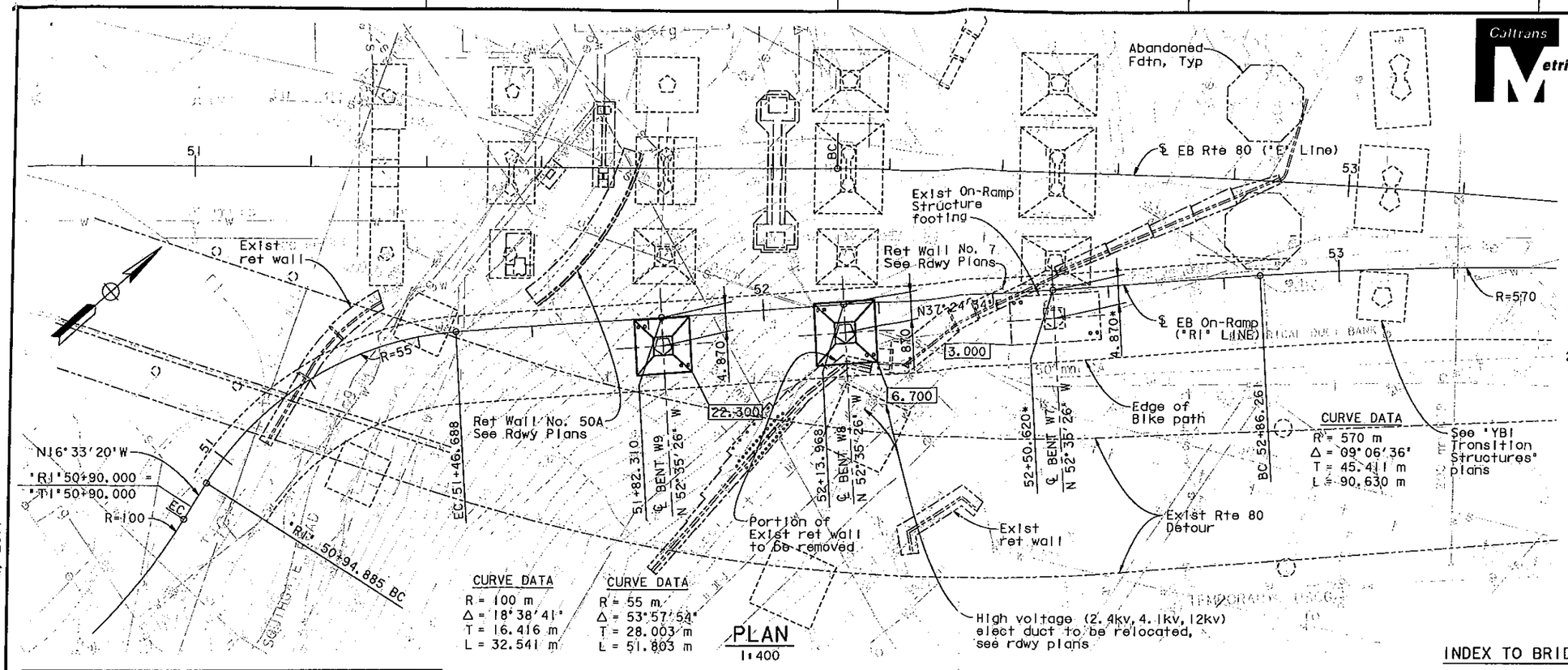

Notes:

1. For limits of payment for structure excavation and backfill see "Bent W8 Details No. 2" sheet.
2. Utility locations shown are approximate, See rdwy plans for utility relocations and abandonments.

LEGEND

- ○ Indicates pile (All piles not shown)
- Denotes bottom of footing elevation
- Denotes existing structure

MARK	DATE	DESCRIPTIONS	BY	CH'D
1	XX-XX-11	Added Modular Joints	TL	JB

REVISIONS

CONTRACT CHANGE ORDER NO. 111
SHEET 3 OF 4

TECHNICAL PROFESSIONAL — JAL BIRDY — No. 41547 — Exp. 12-31-11 — CIVIL — STATE OF CALIFORNIA

FOR REVISION 1 ONLY

QUANTITIES

	LUMP SUM	
BRIDGE REMOVAL (PORTION), LOCATION B		
STRUCTURE EXCAVATION (BRIDGE)	1 380	m^3
STRUCTURE EXCAVATION (TYPE H)	38	m^3
STRUCTURE BACKFILL (BRIDGE)	116	m^3
STRUCTURE BACKFILL (BRIDGE) (CEMENT MODIFIED)	840	m^3
FURNISH STEEL PILING (HP 360 X 132)	1 657	m
DRIVE STEEL PILE (HP 360 X 132)	145	EA
STRUCTURAL CONCRETE, BRIDGE FOOTING	416	m^3
1 STRUCTURAL CONCRETE, BRIDGE	438	m^3
FURNISH MODULAR JOINT (HINGE W8B)	8	m
FURNISH MODULAR JOINT (HINGE W6RB)	8	m
BAR REINFORCING STEEL (BRIDGE)	118 950	Kg
COLUMN ISOLATION SLEEVE	1 991	Kg
BRIDGE DECK DRAINAGE SYSTEM	832	Kg

2 REVISED PER ADDENDUM NO. 2 DATED JANUARY 22, 2009

GENERAL NOTES

Load Factor Design

Design: Caltrans Design Specifications - April 2000 (LFD)
(1996 AASHTO with Interims and revisions by Caltrans)
Dead Load: Includes 1675 N/m2 for future wearing surface on roadbed
Live Load: HS20-44 and alternative and permit design load
Bike Path Live Load: 4000 N/m2

Seismic Loading: Refer to project specific seismic design criteria for San Francisco Oakland Bay Bridge. East Span Seismic Safety Project Dated 01-08-00. See "Site Specific Response Spectra"

Reinforced Concrete: Fy = 420 MPa
F'c = 25 MPa
N = 8

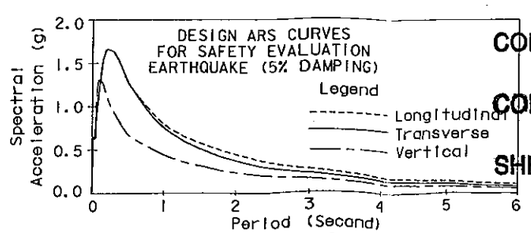

SITE SPECIFIC RESPONSE SPECTRA

CONTRACT NO. 04-0120S4
CONTRACT CHANGE ORDER NO 111-S0
SHEET 3 OF 4

ALL DIMENSIONS ARE IN METERS UNLESS OTHERWISE SHOWN

INDEX TO BRIDGE PLANS

1. GENERAL PLAN
2. FOUNDATION PLAN
3. BENT W9 DETAILS NO. 1
4. BENT W9 DETAILS NO. 2
5. BENT W8 DETAILS NO. 1
6. BENT W8 DETAILS NO. 2
6A. MODULAR DECK JOINT DETAILS 2
7-12C. LOG OF TEST BORINGS NO. 1 TO NO. ~~8~~ 9
13-17. "AS BUILT" LOG OF TEST BORINGS NO. 1 TO NO. 5

APPLICABLE STANDARD PLANS (DATED JULY 2004)

A10A	ACRONYMS AND ABBREVIATIONS (A-L)
A10B	ACRONYMS AND ABBREVIATIONS (M-Z)
A10C	SYMBOLS (SHEET 1 OF 2)
A10D	SYMBOLS (SHEET 2 OF 2)
A62B	LIMITS OF PAYMENT FOR EXCAVATION AND BACKFILL - BRIDGE SURCHARGE AND WALL
A62C	LIMITS OF PAYMENT FOR EXCAVATION AND BACKFILL - BRIDGE
B0-1	BRIDGE DETAILS
B3-9	RETAINING WALL DETAILS NO. 2
B7-6	DECK DRAINS TYPES D-1 AND D-2

GEOTECHNICAL PROFESSIONAL — APPROVAL DATE 3/3/08

Oct 12, 2011

TIME PLOTTED => 14:22:53 PM
DATE PLOTTED => 10/11/2011
USERNAME => PZucchi

SAN FRANCISCO OAKLAND BAY BRIDGE
EAST SPAN SEISMIC SAFETY PROJECT

YBI EB ON-RAMP STRUCTURE (INITIAL)

FOUNDATION PLAN

DESIGN OVERSIGHT	SCALE:	VERT. DATUM NGVD 29	HORZ. DATUM NAD 83	DESIGN	BY Chou	CHECKED Jain
JOHN MOOR, BERNARD CHAN, JUAN F. CARPIO, HASAN EL-KATUN	PHOTOGRAMMETRY AS OF:		ALIGNMENT TIES	DETAILS	BY Van Ryn	CHECKED Jain
	SURVEYED BY		DRAFTED BY	QUANTITIES	BY Chou	CHECKED Liao
SIGN OFF DATE	FIELD CHECKED BY		CHECKED BY			

Rev. Date: 5-18-98

ORIGINAL SCALE IN MILLIMETERS FOR REDUCED PLANS 0 10 20 30 40 50 60 70 80 90 100

PREPARED FOR THE STATE OF CALIFORNIA DEPARTMENT OF TRANSPORTATION

Jal Birdy
PROJECT ENGINEER

CU 04251
EA 0120S1

BRIDGE NO. 34-172S
KILOMETER POST 12.8

DISREGARD PRINTS BEARING EARLIER REVISION DATES

REVISION DATES (PRELIMINARY STAGE ONLY): 5/23/07 12/17/08 3/24/08 10/12/11 5/16/08 2/11/08 7/2/08 10/17/08 12/4/08 6/23/08

SHEET 2 OF 17

FILE => \\mmjdfs\LB_Projects\4141-06\CADD\TS\Checked Plans\YBITS #1-100% No. 2_03-03-08 (Final Renamed)\101211 Modular Joint T12 C0

STATE OF CALIFORNIA - DEPARTMENT OF TRANSPORTATION

CONTRACT CHANGE ORDER MEMORANDUM

DATE: 11/22/2011 Page 1 of 1

TO: Deanna Vilcheck, ACM /	FILE: E.A. 04 - 0120S4
FROM: William Howe, Senior R.E.	CO-RTE-PM SF-80-12.7/13.2
	FED. NO. NO FED AID
CCO#: 111 SUPPLEMENT#: 0 Category Code: BZZZ	CONTINGENCY BALANCE (incl. this change) $52,338,924.80
COST: $528,642.00 INCREASE ☑ DECREASE ☐	HEADQUARTERS APPROVAL REQUIRED? ☑ YES ☐ NO
SUPPLEMENTAL FUNDS PROVIDED: $0.00	IS THIS REQUEST IN ACCORDANCE WITH ENVIRONMENTAL DOCUMENTS? ☑ YES ☐ NO
CCO DESCRIPTION: Hinge W6RB (EBOR) and W8B Seismic joints	**PROJECT DESCRIPTION:** YBITS-1 (Yerba Buena Island Transition Structures)

Original Contract Time:	Time Adj. This Change:	Previously Approved CCO Time Adjustments:	Percentage Time Adjusted: (including this change)	Total # of Unreconciled Deferred Time CCO(s): (including this change)
1390 Day(s)	0 Day(s)	0 Day(s)	0 %	0

THIS CHANGE ORDER PROVIDES FOR:

This change order provides for furnishing modular seismic deck joints for Hinges W6RB (EBOR) and W8B for the future eastbound onramp.

This project, the Yerba Buena Island Transition Structure (YBITS), provides for the construction of two bridges which will connect eastbound and westbound traffic on the new east span of the San Francisco Oakland Bay Bridge (SFOBB) to the existing Yerba Buena Island (YBI) tunnel. The structures are comprised of concrete box girder bridges each approximately 26 meters wide, 40 meters high and 450 meters in length.

The modular seismic deck joints will consist of seal separation beams each spanning the 8.5 meter width of the bridge onramp with the gaps between these beams sealed with a continuous advanced neoprene or similar material. Fabrication costs include the design of the joint which will be based on the plans and specification provided and approved by the engineer through the shop drawing process.

Compensation for furnishing the two (2) modular seismic deck joints for the future project will be paid as extra work at an agreed lump sum of $503,642. In addition, all costs associated with unloading and storage of the modular seismic deck joints at a location within the project limits will be paid as extra work at force account for an estimated cost of $25,000. All costs associated with the installation of the modular seismic deck joints shall be paid for under a separate contract. The total cost of this change is $528,642, which can be financed from the contract's contingency funds. A detailed cost analysis is on file.

This change order was requested by Mike Whiteside, Toll Bridge Structure Design, on October 17, 2011.

No adjustment of contract time is warranted as the work will not affect the controlling operation.

Maintenance concurrence is not required as this is an administrative change.

CONCURRED BY:		
Construction Engineer:	William Howe	Date 11-23-11
Bridge Engineer:	Mehran Ardakanian	Date 11/23/11
Project Engineer:	Bob Zandipour, Design	Date 12-9-11
Project Manager:	Ken Terpstra	Date 1-5-12
FHWA Rep.:		Date
Environmental:		Date
Other (specify):		Date
Other (specify):		Date
District Prior Approval By:		Date
HQ (Issue Approve) By:	Larry Salhaney	Date 12-5-11
Resident Engineer's Signature: William Howe		Date 11-23-11

ESTIMATE OF COST	THIS REQUEST	TOTAL TO DATE
ITEMS	$0.00	$0.00
FORCE ACCOUNT	$25,000.00	$25,000.00
AGREED PRICE	$503,642.00	$503,642.00
ADJUSTMENT	$0.00	$0.00
TOTAL	$528,642.00	$528,642.00

FEDERAL PARTICIPATION

☐ PARTICIPATING ☐ PARTICIPATING IN PART ☑ NONE
☐ NON-PARTICIPATING (MAINTENANCE) ☐ NON-PARTICIPATING

FEDERAL SEGREGATION (if more than one Funding Source or P.I.P. type)
☐ CCO FUNDED PER CONTRACT ☐ CCO FUNDED AS FOLLOWS

FEDERAL FUNDING SOURCE	PERCENT

ADA Notice: For individuals with sensory disabilities, this document is available in alternate formats. For information call: (916) 654-6410 or TDD (916) 654-3880 or write Records and Forms Management, 1120 N Street, MS-89, Sacramento, CA 95814.

STATE OF CALIFORNIA - DEPARTMENT OF TRANSPORTATION

CONTRACT CHANGE ORDER

Change Requested by: Engineer

CCO 112	Suppl. No. 0	Contract No. 04 - 0120S4	Road SF-80-12.7/13.2	FED. AID LOC.: NO FED AID

To: **M C M CONSTRUCTION INC**

You are directed to make the following changes from the plans and specifications or do the following described work not included in the plans and specifications for this contract. ***NOTE: This change order is not effective until approved by the Engineer.***

Description of work to be done, estimate of quantities and prices to be paid. (Segregate between additional work at contract price, agreed price and force account.) Unless otherwise stated, rates for rental of equipment cover only such time as equipment is actually used and no allowance will be made for idle time. This last percentage shown is the net accumulated increase or decrease from the original quantity in the Engineer's Estimate.

Adjustment of Compensation at Lump Sum:

Refer to Sheet No. 2 of 2 of this contract change order, (Sheet No. 646R2), for clarification of the stem wall stirrup spacing at Section B-B.

There shall be no cost or credit to the State by reason of this change.

Adjustment of Compensation @ Agreed Lump Sum = $0.00

Estimated Cost: Increase ☐ Decrease ☐ $0.00

By reason of this order the time of completion will be adjusted as follows: 0 days

Submitted by		
Signature William Howe	Resident Engineer William Howe, Senior R.E.	Date 05.10.12
Approval Recommended by		
Signature William Howe	Senior Resident Engineer William Howe	Date 05.10.12
Engineer Approval by		
Signature William Howe	Senior Resident Engineer William Howe	Date 06-06-12

We the undersigned contractor, have given careful consideration to the change proposed and agree, if this proposal is approved, that we will provide all equipment, furnish the materials, except as may otherwise be noted above, and perform all services necessary for the work above specified, and will accept as full payment therefor the prices shown above.

NOTE: If you, the contractor, do not sign acceptance of this order, your attention is directed to the requirements of the specifications as to proceeding with the ordered work and filing a written protest within the time therein specified.

Contractor Acceptance by		
Signature [signature]	(Print name and title) JAMES A. CARTER, PRESIDENT	Date 6/4/12

7-11-12

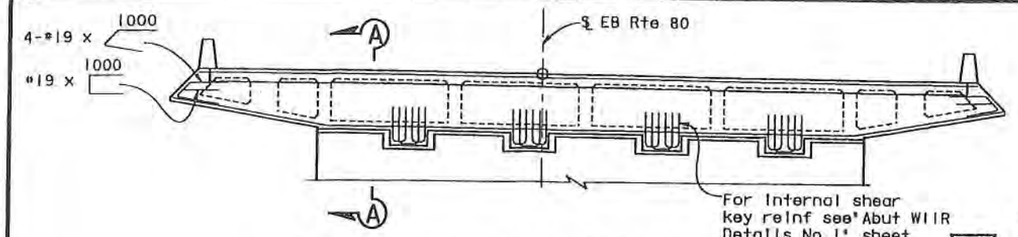

END DIAPHRAGM ELEVATION - ABUT W11R

1:80

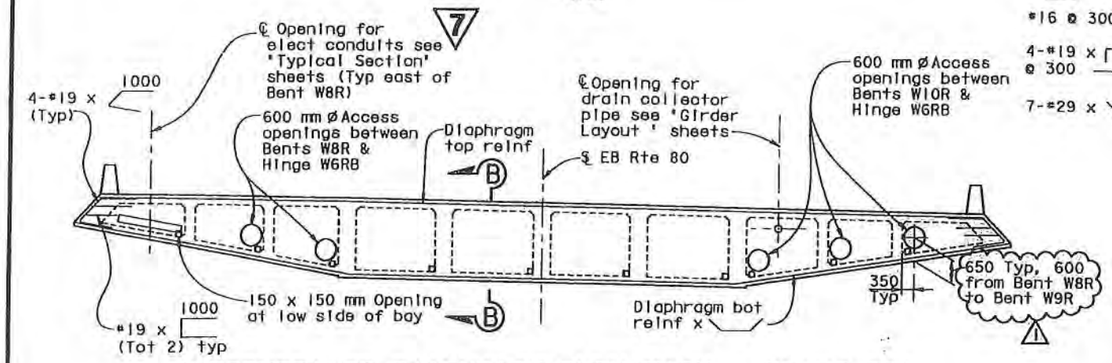

INTERMEDIATE DIAPHRAGM ELEVATION - FRAME EB1

1:80

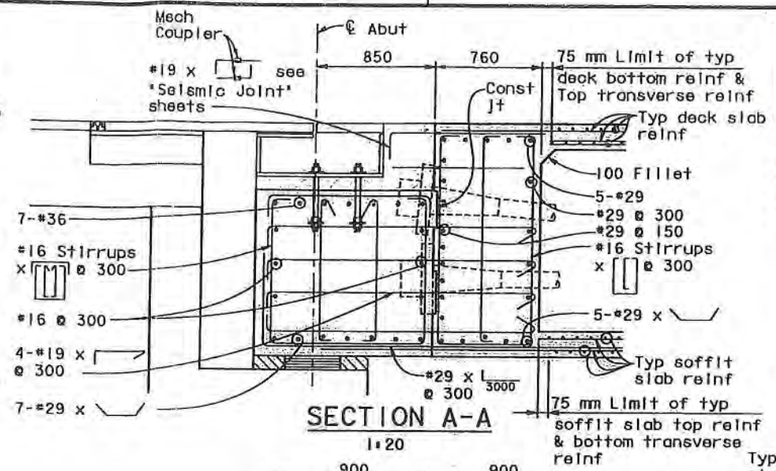

SECTION A-A

1:20

Note: For grillage at prestress anchorage see B8-5

DIST.	COUNTY	ROUTE	KILOMETER POST TOTAL PROJECT	SHEET NO.	TOTAL SHEETS
04	SF	80	12.7/13.2	646R2	806

REGISTERED ENGINEER - CIVIL

6-23-08

PLANS APPROVAL DATE

REGISTERED PROFESSIONAL ENGINEER A.L. ELY No. 18880 Exp. 6-30-09 CIVIL STATE OF CALIFORNIA

The State of California or its officers or agents shall not be responsible for the accuracy or completeness of electronic copies of this plan sheet.

T.Y. LIN / MOFFATT & NICHOL
TWO HARRISON STREET
SAN FRANCISCO, CA 94105

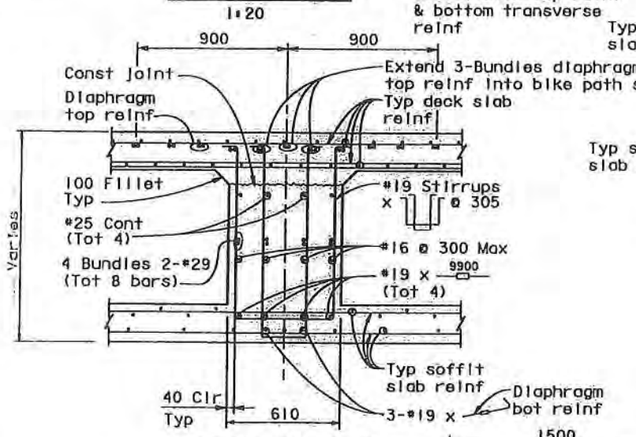

SECTION D-D

1:15

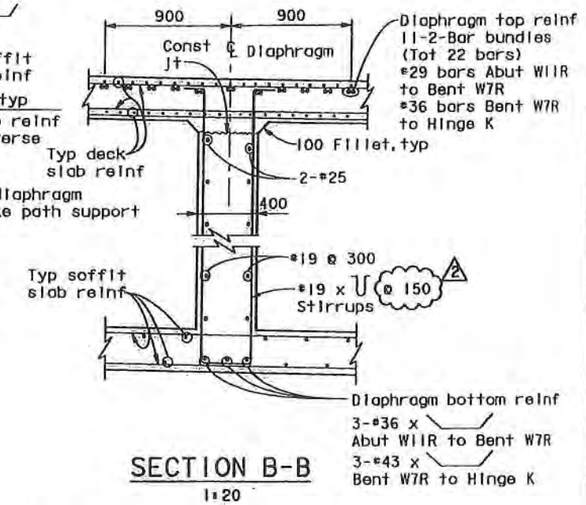

SECTION B-B

1:20

MARK	DATE	DESCRIPTIONS	BY	CH'D
2	10-12-11	Added Stirrup spacing Sect B-B	TL	JB
1	9-1-10	Rev access opening dims. Rev Bike Path Railing.	TL	JB

REVISIONS

REGISTERED PROFESSIONAL ENGINEER JAL BIRDY No. 41547 Exp. 12-31-11 CIVIL STATE OF CALIFORNIA

FOR REVISION 1 & 2 ONLY

CONTRACT CHANGE ORDER NO. 112
SHEET 2 OF 2

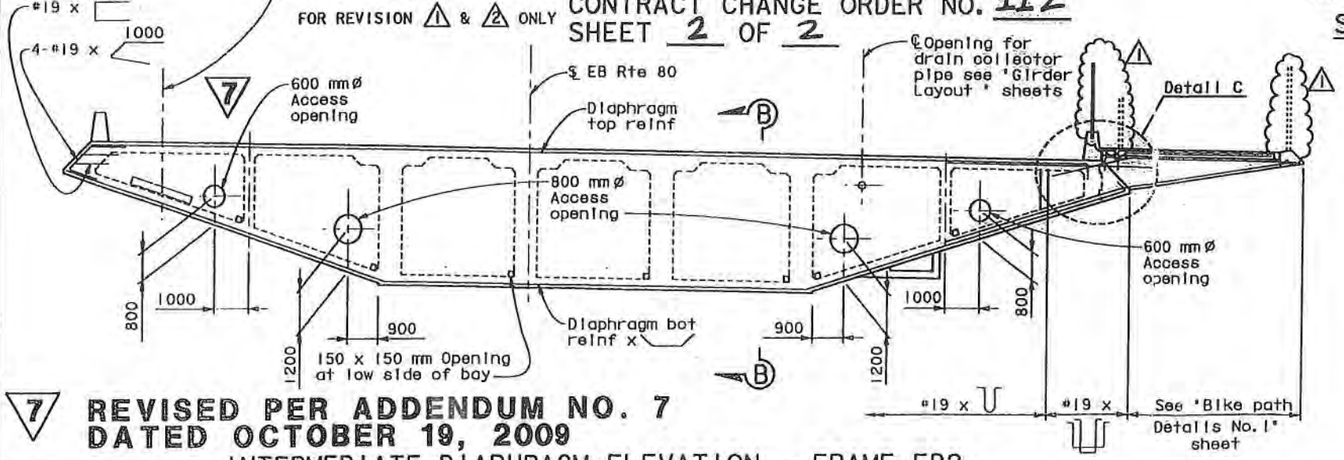

7 REVISED PER ADDENDUM NO. 7 DATED OCTOBER 19, 2009

INTERMEDIATE DIAPHRAGM ELEVATION - FRAME EB2

1:80

8 REVISED PER ADDENDUM NO. 8 DATED NOVEMBER 12, 2009

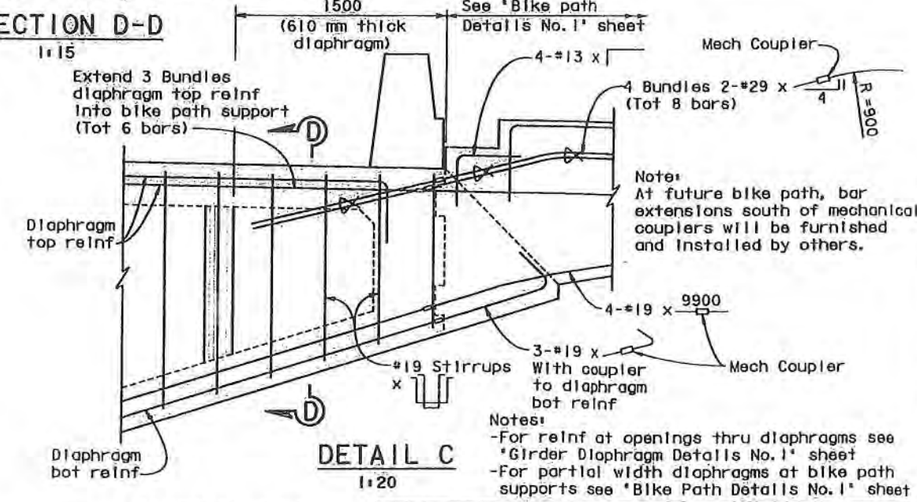

DETAIL C

1:20

Notes:
- For reinf at openings thru diaphragms see 'Girder Diaphragm Details No. 1' sheet
- For partial width diaphragms at bike path supports see 'Bike Path Details No. 1' sheet

ALL DIMENSIONS ARE IN MILLIMETERS UNLESS OTHERWISE SHOWN

SAN FRANCISCO OAKLAND BAY BRIDGE
EAST SPAN SEISMIC SAFETY PROJECT

YBI TRANSITION STRUCTURES

GIRDER DIAPHRAGM DETAILS NO. 2

DESIGN OVERSIGHT: JOHN LOOK, BERNARD CHAN, JUAN F. CARPIO, HASAN EL-NATUR
SIGN OFF DATE: 10/21/11

	BY	CHECKED
DESIGN	Wang	Greer
DETAILS	van Ryn/Zuachl/Wal	Jain
QUANTITIES	Liao	E. Nichol

PREPARED FOR THE STATE OF CALIFORNIA DEPARTMENT OF TRANSPORTATION

Jal Birdy, PROJECT ENGINEER

BRIDGE NO. 34-0006 L/R
KILOMETER POST 12.8

CU 04251
EA 0120S1

DISREGARD PRINTS BEARING EARLIER REVISION DATES

REVISION DATES (PRELIMINARY STAGE ONLY)

SHEET 97 OF 209

Rev. Date: 5-15-58

ORIGINAL SCALE IN MILLIMETERS FOR REDUCED PLANS 0 10 20 30 40 50 60 70 80 90 100

(FILE => \\tmlfs\LB_Projects\4141-06\CADD\IS\Checked Plans\YBIIS #1-100% No. 2_03-03-08 (Final Renamed)\101211 Modular Joint

DATE PLOTTED => 10/20/2011 TIME PLOTTED => 10:48:04 AM

USERNAME => fsanson

OCT 12, 2011

STATE OF CALIFORNIA - DEPARTMENT OF TRANSPORTATION

CONTRACT CHANGE ORDER MEMORANDUM

DATE: 5/4/2012

TO: Deanna Vilcheck, ACM /

FROM: William Howe, Senior R.E.

FILE: E.A. 04 - 0120S4
CO-RTE-PM SF-80-12.7/13.2
FED. NO. NO FED AID

CCO#: 112 | SUPPLEMENT#: 0 | Category Code: CHPT

CONTINGENCY BALANCE (incl. this change) $70,685,316.00

COST: $0.00 INCREASE ☐ DECREASE ☐

HEADQUARTERS APPROVAL REQUIRED? ☐ YES ☑ NO

SUPPLEMENTAL FUNDS PROVIDED: $0.00

IS THIS REQUEST IN ACCORDANCE WITH ENVIRONMENTAL DOCUMENTS? ☑ YES ☐ NO

CCO DESCRIPTION:
Stirrup Spacing @ Intermediate Diaphragm

PROJECT DESCRIPTION:
YBITS-1 (Yerba Buena Island Transition Structures)

Original Contract Time:	Time Adj. This Change:	Previously Approved CCO Time Adjustments:	Percentage Time Adjusted: (including this change)	Total # of Unreconciled Deferred Time CCO(s): (including this change)
1390 Day(s)	0 Day(s)	0 Day(s)	0 %	9

THIS CHANGE ORDER PROVIDES FOR:
Clarification of the stem wall stirrup spacing at Section B-B; refer to Sheet No. 2 of 2 of this CCO (Sheet No. 646R2).

This change will result in a no cost or credit to the State by reason of this change.

Structure Maintenance concurrence is not required as this change does not affect any controlling items.

No adjustment to contract time is required due to these changes as they do not affect controlling operations.

CONCURRED BY:

Construction Engineer:	William Howe	Date 05·10·12
for Bridge Engineer:	Mehran Ardakanian	Date 05-11-12
Project Engineer:	Bob Zandipour, Design	Date 5-14-12
Project Manager:	Ken Terpstra	Date 5-11-12
FHWA Rep.:		Date
Environmental:		Date
Other (specify):		Date
Other (specify):		Date
District Prior Approval By:		Date
HQ (Issue Approve) By:		Date
Resident Engineer's Signature:	William Howe	Date 05·10·12

ESTIMATE OF COST

	THIS REQUEST	TOTAL TO DATE
ITEMS	$0.00	$0.00
FORCE ACCOUNT	$0.00	$0.00
AGREED PRICE	$0.00	$0.00
ADJUSTMENT	$0.00	$0.00
TOTAL	$0.00	$0.00

FEDERAL PARTICIPATION

☐ PARTICIPATING ☐ PARTICIPATING IN PART ☑ NONE
☐ NON-PARTICIPATING (MAINTENANCE) ☐ NON-PARTICIPATING

FEDERAL SEGREGATION (if more than one Funding Source or P.I.P. type)
☐ CCO FUNDED PER CONTRACT ☐ CCO FUNDED AS FOLLOWS

FEDERAL FUNDING SOURCE	PERCENT

ADA Notice: For individuals with sensory disabilities, this document is available in alternate formats. For information call: (916) 654-6410 or TDD (916) 654-3880 or write Records and Forms Management, 1120 N Street, MS-89, Sacramento, CA 95814.

STATE OF CALIFORNIA - DEPARTMENT OF TRANSPORTATION

CONTRACT CHANGE ORDER MEMORANDUM

DATE: 3/5/2012

TO: Deanna Vilcheck, ACM /	FILE: E.A. 04 - 0120S4
FROM: William Howe, Senior R.E.	CO-RTE-PM SF-80-12.7/13.2
	FED. NO. NO FED AID
CCO#: 121 SUPPLEMENT#: 0 Category Code: BZZZ	CONTINGENCY BALANCE (incl. this change) $51,298,523.00
COST: $444,010.00 INCREASE ☑ DECREASE ☐	HEADQUARTERS APPROVAL REQUIRED? ☑ YES ☐ NO
SUPPLEMENTAL FUNDS PROVIDED: $0.00	IS THIS REQUEST IN ACCORDANCE WITH ENVIRONMENTAL DOCUMENTS? ☑ YES ☐ NO
CCO DESCRIPTION: WB W2 to W3 Falsework Removal	**PROJECT DESCRIPTION:** YBITS-1 (Yerba Buena Island Transition Structures)

Original Contract Time:	Time Adj. This Change:	Previously Approved CCO Time Adjustments:	Percentage Time Adjusted: (including this change)	Total # of Unreconciled Deferred Time CCO(s): (including this change)
1390 Day(s)	0 Day(s)	0 Day(s)	0 %	9

THIS CHANGE ORDER PROVIDES FOR:
The out of sequence removal of the eastern end of the westbound Frame 2 falsework.

This project, the Yerba Buena Island Transition Structure (YBITS), provides for the construction of two bridges which will connect eastbound and westbound traffic on the new east span of the San Francisco Oakland Bay Bridge (SFOBB) to the existing Yerba Buena Island (YBI) tunnel. The structures are comprised of concrete box girder bridges each approximately 26 meters wide, 40 meters high and 450 meters in length.

The construction of the westbound bridge requires the placement of falsework that abuts against the Self-Anchored Suspension (SAS) Bridge Contract (04-0120F4). Change Order No. 72, Supplement No. 1, established 3 milestones with Milestone 1 requiring the Contractor to complete the construction of the westbound structure by May 1, 2012, and vacate the 60 meter long area between Bent W2L and Bent W3L to allow for the SAS contract to perform the construction of the Hinge K closure, which connects YBITS to the SAS structure. Under the above-noted change order, the falsework in this area was to remain in place. It has now been determined that the falsework needs to be removed prior to the area being vacated in order to facilitate the Hinge K closure construction. This change order provides for this falsework removal.

The work includes striping the falsework wing walls, soffit deck and steel bents, which stand approximately 30 meters in height in the W2L to W3L area out of sequence. The Contractor will be required to suspend their falsework erection activities on the eastbound structure, mobilize to the westbound Bents W2L/W3L area, remove that falsework, demobilize the falsework removal operation and remobilize back to the eastbound falsework erection activity.

In order to mitigate delays to the milestones established under Change Order 72, the Contractor will be required to work 12 hour shifts, including weekends, with multiple crews resulting in considerable premium time for labor costs and inefficiencies. Access constraints associated with removing the falsework out of sequence will also negatively affect the work. This change order provides compensation for the additional premium time labor cost and the inefficiencies associated with the work along with the multiple mobilizations required in suspending their falsework erection on the eastbound structure.

Compensation for these costs shall be paid as an Adjustment of Compensation at an Agreed Sump sum of $444,010.00, which shall be financed from the contract's contingency funds. A cost analysis is on file.

This change order defers any time extension to the milestones established under the original Change Order No. 72, Supplement No. 0, and Supplement No. 1.

No adjustment of contract time is warranted as the delay to the contract completion will be absorbed by the Department's owned float created under Change Order No. 72.

Maintenance concurrence is not required as the change does not affect any permanent roadway features.

ADA Notice: For individuals with sensory disabilities, this document is available in alternate formats. For information call: (916) 654-6410 or TDD (916) 654-3880 or write Records and Forms Management, 1120 N Street, MS-89, Sacramento, CA 95814.

CONCURRED BY:		
Construction Engineer:	William Howe	Date 03-09-12
Bridge Engineer:	Mehran Ardakanian	Date 3/12/12
Project Engineer:	Bob Zandipour, Design	Date 3/13/12
Project Manager:	Ken Terpstra	Date 3/12/12
FHWA Rep.:		Date
Environmental:		Date
Other (specify):		Date
Other (specify):		Date
District Prior Approval By:		Date
HQ (Issue Approve) By:	Larry Salhaney	Date 3-13-12
Resident Engineer's Signature:	William Howe	Date 03-09-12

ESTIMATE OF COST

	THIS REQUEST	TOTAL TO DATE
ITEMS	$0.00	$0.00
FORCE ACCOUNT	$0.00	$0.00
AGREED PRICE	$0.00	$0.00
ADJUSTMENT	$444,010.00	$444,010.00
TOTAL	$444,010.00	$444,010.00

FEDERAL PARTICIPATION

☐ PARTICIPATING ☐ PARTICIPATING IN PART ☑ NONE
☐ NON-PARTICIPATING (MAINTENANCE) ☐ NON-PARTICIPATING

FEDERAL SEGREGATION (if more than one Funding Source or P.I.P. type)
☐ CCO FUNDED PER CONTRACT ☐ CCO FUNDED AS FOLLOWS

FEDERAL FUNDING SOURCE	PERCENT

ADA Notice: For individuals with sensory disabilities, this document is available in alternate formats. For information call: (916) 654-6410 or TDD (916) 654-3880 or write Records and Forms Management, 1120 N Street, MS-89, Sacramento, CA 95814.

STATE OF CALIFORNIA - DEPARTMENT OF TRANSPORTATION

CONTRACT CHANGE ORDER MEMORANDUM

DATE: 5/29/2012 Page 1 of 1

TO: Deanna Vilcheck, ACM /	FILE: E.A. 04 - 0120S4
FROM: William Howe, Senior R.E.	CO-RTE-PM SF-80-12.7/13.2
	FED. NO. NO FED AID
CCO#: 140 SUPPLEMENT#: 0 Category Code: CXXX	CONTINGENCY BALANCE (incl. this change) $68,543,820.00
COST: $50,000.00 INCREASE ☑ DECREASE ☐	HEADQUARTERS APPROVAL REQUIRED? ☐ YES ☑ NO
SUPPLEMENTAL FUNDS PROVIDED: $0.00	IS THIS REQUEST IN ACCORDANCE WITH ENVIRONMENTAL DOCUMENTS? ☑ YES ☐ NO
CCO DESCRIPTION: Cormorant Nesting Platform Enticements	**PROJECT DESCRIPTION:** YBITS-1 (Yerba Buena Island Transition Structures)

Original Contract Time:	Time Adj. This Change:	Previously Approved CCO Time Adjustments:	Percentage Time Adjusted: (including this change)	Total # of Unreconciled Deferred Time CCO(s): (including this change)
1390 Day(s)	0 Day(s)	0 Day(s)	0 %	9

THIS CHANGE ORDER PROVIDES FOR:

Provide labor, equipment and materials to provide measures to encourage cormorant nesting at the platforms located at the Bay Bridge East Span Skyway (Eastbound and Westbound).

This project, the Yerba Buena Island Transition Structure (YBITS), provides for the construction of two bridges which will connect eastbound and westbound traffic on the new east span of the San Francisco Oakland Bay Bridge (SFOBB) to the existing Yerba Buena Island (YBI) tunnel. The structures are comprised of concrete box girder bridges each approximately 50 meters high and 450 meters in length. As part of the permit requirements for construction of the new East Span, steel platforms have been constructed as a nesting site for the cormorant colony population which currently nests on the exiting East Span, which is to be demolished upon the completion of the new bridge. Cormorants are a migratory fish-eating bird. To date (the Skyway construction contract was accepted in 2008), none of the cormorants have moved to their new home, they still nest on the old bridge. In order to encourage some of the cormorants to relocate prior to the demolition of the old bridge, the Department's environmental group has determined that it would be beneficial to implement a number of measures to attract the cormorants to the new location. Potential measures will include building nesting boxes that will be set on the platforms; filling the nesting boxes with nest building materials; putting attractive scents and using recorded bird calls at the platform locations.

The work shall be performed as Extra Work at Force Account at an estimated cost of $50,000.00 which will be financed from the contract's contingency funds. A cost analysis is on file.

This CCO was requested by Brian Maroney, Chief Toll Design, on May 21,2012.

No adjustment of contract time is warranted as the work will not affect the controlling operation.

Maintenance concurrence will be obtained as this will be a part of the permanent structure.

CONCURRED BY:		
Construction Engineer:	William Howe	Date 05-29-12
Bridge Engineer:	Mehran Ardakanian	Date
Project Engineer:	Bob Zandipour, Design	Date 5-31-12
Project Manager:	Ken Terpstra	Date 5-30-12
FHWA Rep.:		Date
Environmental:		Date
Other (specify):	Brian Maroney, Chief, Toll Design	Date 5/21/12
Other (specify):	Lina Ellis, Mtce.	Date 6-6-12
District Prior Approval By:		Date
HQ (Issue Approve) By:		Date
Resident Engineer's Signature:	William Howe	Date 05-29-12

ESTIMATE OF COST

	THIS REQUEST	TOTAL TO DATE
ITEMS	$0.00	$0.00
FORCE ACCOUNT	$50,000.00	$50,000.00
AGREED PRICE	$0.00	$0.00
ADJUSTMENT	$0.00	$0.00
TOTAL	$50,000.00	$50,000.00

FEDERAL PARTICIPATION

☐ PARTICIPATING ☐ PARTICIPATING IN PART ☑ NONE
☐ NON-PARTICIPATING (MAINTENANCE) ☐ NON-PARTICIPATING

FEDERAL SEGREGATION (if more than one Funding Source or P.I.P. type)
☐ CCO FUNDED PER CONTRACT ☐ CCO FUNDED AS FOLLOWS

FEDERAL FUNDING SOURCE	PERCENT

ADA Notice: For individuals with sensory disabilities, this document is available in alternate formats. For information call (916) 654-6410 or TDD (916) 651-6880 or write Records and Forms Management, 1120 N Street, MS-89, Sacramento, CA 95814.

STATE OF CALIFORNIA - DEPARTMENT OF TRANSPORTATION

CONTRACT CHANGE ORDER MEMORANDUM

DATE: 1/11/2012 Page 1 of 1

TO: Deanna Vilcheck, ACM / DV	FILE: E.A. 04 - 0120S4
FROM: William Howe, Senior R.E.	CO-RTE-PM SF-80-12.7/13.2
	FED. NO. NO FED AID
CCO#: 114 SUPPLEMENT#: 0 Category Code: CBPC	CONTINGENCY BALANCE (incl. this change) $51,057,947.00
COST: $39,436.00 INCREASE ☑ DECREASE ☐	HEADQUARTERS APPROVAL REQUIRED? ☐ YES ☑ NO
SUPPLEMENTAL FUNDS PROVIDED: $0.00	IS THIS REQUEST IN ACCORDANCE WITH ENVIRONMENTAL DOCUMENTS? ☑ YES ☐ NO
CCO DESCRIPTION: addit. electrical conduit & pull boxes	**PROJECT DESCRIPTION:** YBITS-1 (Yerba Buena Island Transition Structures)

Original Contract Time:	Time Adj. This Change:	Previously Approved CCO Time Adjustments:	Percentage Time Adjusted: (including this change)	Total # of Unreconciled Deferred Time CCO(s): (including this change)
1390 Day(s)	0 Day(s)	0 Day(s)	0 %	9

THIS CHANGE ORDER PROVIDES FOR:

This change order provides for furnishing and installing additional electrical conduit and pull boxes at Bent W5L, Platform 3W, and Hinge W7LA.

This change order is needed to resolve conflicts and ambiguities in the contract plans associated with furnishing and installing conduits and pull boxes at the locations identified herein.

This change order provides for compensating the Contractor as Extra Work at an Agreed Lump Sum amount of $39,436.00 for furnishing additional electrical conduit and pull boxes as shown on Sheet Nos. 2 through 15 of this change order. This change will result in a cost increase of $39,436.00, which can be financed from the project's contingency fund. A detailed cost analysis is available on file in the project records.

No adjustment of contract time is warranted, as this change will not affect the controlling operation.

Design concurrence will be obtained for this change order.

Maintenance concurrence will be required for this change.

CONCURRED BY:		
Construction Engineer:	William Howe	Date 03-22-12
Bridge Engineer:	Mehran Ardakanian	Date
Project Engineer:	Bob Zandipour, Design	Date 3-28-12
Project Manager:	Ken Terpstra	Date 3/21/12
FHWA Rep.:		Date
Environmental:		Date
Other (specify): Mtce. - Lina Ellis		Date 3-26-12
Other (specify):		Date
District Prior Approval By:		Date
HQ (Issue Approve) By:		Date
Resident Engineer's Signature: William Howe		Date 03-22-12

ESTIMATE OF COST	THIS REQUEST	TOTAL TO DATE
ITEMS	$0.00	$0.00
FORCE ACCOUNT	$0.00	$0.00
AGREED PRICE	$39,436.00	$39,436.00
ADJUSTMENT	$0.00	$0.00
TOTAL	$39,436.00	$39,436.00

FEDERAL PARTICIPATION

☐ PARTICIPATING ☐ PARTICIPATING IN PART ☑ NONE
☐ NON-PARTICIPATING (MAINTENANCE) ☐ NON-PARTICIPATING

FEDERAL SEGREGATION (if more than one Funding Source or P.I.P. type)
☐ CCO FUNDED PER CONTRACT ☐ CCO FUNDED AS FOLLOWS

FEDERAL FUNDING SOURCE	PERCENT

ADA Notice: For individuals with sensory disabilities, this document is available in alternate formats. For information call: (916) 654-6410 or TDD (916) 654-3880 or write Records and Forms Management, 1120 N Street, MS-89, Sacramento, CA 95814.

STATE OF CALIFORNIA - DEPARTMENT OF TRANSPORTATION

CONTRACT CHANGE ORDER MEMORANDUM

DATE: 3/16/2012 Page 1 of 1

TO: Deanna Vilcheck, ACM / DV	FILE: E.A. 04 - 0120S4
FROM: William Howe, Senior R.E.	CO-RTE-PM SF-80-12.7/13.2
	FED. NO. NO FED AID
CCO#: 79 SUPPLEMENT#: 1 Category Code: CGXX	CONTINGENCY BALANCE (incl. this change) $51,017,947.00
COST: $40,000.00 INCREASE ☑ DECREASE ☐	HEADQUARTERS APPROVAL REQUIRED? ☐ YES ☑ NO
SUPPLEMENTAL FUNDS PROVIDED: $0.00	IS THIS REQUEST IN ACCORDANCE WITH ENVIRONMENTAL DOCUMENTS? ☑ YES ☐ NO
CCO DESCRIPTION: Barrier @ WB Route 80	**PROJECT DESCRIPTION:** YBITS-1 (Yerba Buena Island Transition Structures)

Original Contract Time:	Time Adj. This Change:	Previously Approved CCO Time Adjustments:	Percentage Time Adjusted: (including this change)	Total # of Unreconciled Deferred Time CCO(s): (including this change)
1390 Day(s)	0 Day(s)	0 Day(s)	0 %	9

THIS CHANGE ORDER PROVIDES FOR:

This change order provides funds to compensate the Contractor to install and maintain barriers at existing Westbound Route 80 in vicinity of Station 51+00 as directed by the Engineer.

This contract calls for the construction of the Yerba Buena Island Transition structures of the east span of the new San Francisco Oakland Bay Bridge (SFOBB). A section of I-80 Westbound bridge deck structure has been temporarily bypassed by the South South Detour, and will remain unused during construction of the YBITS. Contract Drawing Sht. 18 of 806 (C-6) includes this area as part of the Areas for Contractor Use. The Contractor requested that this area be made available for storage of rebar cages and staging for some of the construction operations. Discussion with CT design has indicated that the structure should not carry significant loads in the middle portion of the deck, but that some of the outer portions of the structure can be used for limited storage. Under Contract Change Order No. 79, Caltrans directed the Contractor to fence off this area during construction. This supplement will allow the installation of more secure barriers for the area.

This work will be paid for as Extra Work at Force Account for an estimated cost of $40,000.00, which will be financed from the project's contingency fund. A cost estimate is on file.

This Change Order received concurrence from Deanna Vilcheck, Area Construction Manager.

No adjustment of contract time is warranted, as this change will not affect the controlling operation.

Design concurrence is not required, as this CCO does not affect any feature of the work.

Maintenance concurrence is not required, as this work does not affect any permanent features.

CONCURRED BY:		
Construction Engineer:	William Howe	Date 03-16-12
Bridge Engineer:	for Mehran Ardakanian	Date 3-23-12
Project Engineer:	Bob Zandipour, Design	Date 3-20-12
Project Manager:	Ken Terpstra	Date 3/19/12
FHWA Rep.:		Date
Environmental:		Date
Other (specify):		Date
Other (specify):		Date
District Prior Approval By:		Date
HQ (Issue Approve) By:		Date
Resident Engineer's Signature: William Howe		Date 03-16-12

ESTIMATE OF COST

	THIS REQUEST	TOTAL TO DATE
ITEMS	$0.00	$0.00
FORCE ACCOUNT	$40,000.00	$40,000.00
AGREED PRICE	$0.00	$6,517.00
ADJUSTMENT	$0.00	$0.00
TOTAL	$40,000.00	$46,517.00

FEDERAL PARTICIPATION

☐ PARTICIPATING ☐ PARTICIPATING IN PART ☑ NONE
☐ NON-PARTICIPATING (MAINTENANCE) ☐ NON-PARTICIPATING

FEDERAL SEGREGATION (if more than one Funding Source or P.I.P. type)
☐ CCO FUNDED PER CONTRACT ☐ CCO FUNDED AS FOLLOWS

FEDERAL FUNDING SOURCE	PERCENT

ADA Notice: For individuals with sensory disabilities, this document is available in alternate formats. For information call: (916) 654-6410 or TDD (916) 654-3880 or write Records and Forms Management, 1120 N Street, MS-89, Sacramento, CA 95814.

STATE OF CALIFORNIA - DEPARTMENT OF TRANSPORTATION

CONTRACT CHANGE ORDER

Change Requested by: Engineer

CCO 115	Suppl. No. 0	Contract No. 04 - 0120S4	Road SF-80-12.7/13.2	FED. AID LOC.: NO FED AID

To: **M C M CONSTRUCTION INC**

You are directed to make the following changes from the plans and specifications or do the following described work not included in the plans and specifications for this contract. ***NOTE: This change order is not effective until approved by the Engineer.***

Description of work to be done, estimate of quantities and prices to be paid. (Segregate between additional work at contract price, agreed price and force account.) Unless otherwise stated, rates for rental of equipment cover only such time as equipment is actually used and no allowance will be made for idle time. This last percentage shown is the net accumulated increase or decrease from the original quantity in the Engineer's Estimate.

Adjustment of Compensation at Lump Sum:

Provide additional resources for the pre-stressing work at Frame 2 of the eastbound structure as outlined below in order to mitigate potential delays to the project milestones established under Change Order No 72, Supplement No. 0 and No. 1:

1) Perform additional pre-installation inspection to ensure all ducts are clear, to verify all vents are accessible and functional and to verify all drains are properly sealed. Mandrels shall be pulled through the ducts to verify proper clearance and inline camera inspection shall be performed if necessary.

2) Pre-fabricate all stressing tendons off-site.

3) The prestressing subcontractor shall work two 10-hour shifts per day for 7 days each week with a minimum of 16 trade laborers each day through the completion of the Frame 2 stressing work. Additional equipment shall be mobilized to the project site to support the increased crew size.

For all additional cost resulting from the mitigation efforts described above, the Contractor shall be compensated an agreed lump sum $1,090,090.00 which constitutes full and final compensation, including all markups, for all additional costs complete in place.

In accordance with Change Order No. 72, Supplement No. 1, there shall be no time adjustment to the milestone dates established under that change order as a result of this change.

Estimated cost of Adjustment of Compensation at Lump Sum $1,090,090.00

RECEIVED
JUL 16 2012
MCM MAIN OFFICE

Estimated Cost: Increase ☑ Decrease ☐ **$1,090,090.00**

By reason of this order the time of completion will be adjusted as follows: 0 days

Submitted by

Signature William Howe	Resident Engineer William Howe, Senior R.E.	Date 07-11-12

Approval Recommended by

Signature Mike Forner	Principal T.E. Mike Forner	Date 7-11-12

Engineer Approval by

Signature	Principal T.E. TONY ANZIANO ~~Mike Forner~~	Date 7/30/12

We the undersigned contractor, have given careful consideration to the change proposed and agree, if this proposal is approved, that we will provide all equipment, furnish the materials, except as may otherwise be noted above, and perform all services necessary for the work above specified, and will accept as full payment therefor the prices shown above.

NOTE: If you, the contractor, do not sign acceptance of this order, your attention is directed to the requirements of the specifications as to proceeding with the ordered work and filing a written protest within the time therein specified.

Contractor Acceptance by

Signature	(Print name and title) Edmundo R. Rubio - Treasurer	Date 7-24-2012

STATE OF CALIFORNIA - DEPARTMENT OF TRANSPORTATION

CONTRACT CHANGE ORDER MEMORANDUM

TO: Deanna Vilcheck, ACM /	FILE: E.A. 04 - 0120S4
FROM: William Howe, Senior R.E.	CO-RTE-PM SF-80-12.7/13.2
	FED. NO. NO FED AID
CCO#: 115 SUPPLEMENT#: 0 Category Code: CHMX	CONTINGENCY BALANCE (incl. this change) $58,252,430.40
COST: $1,090,090.00 INCREASE ☑ DECREASE ☐	HEADQUARTERS APPROVAL REQUIRED? ☑ YES ☐ NO
SUPPLEMENTAL FUNDS PROVIDED: $0.00	IS THIS REQUEST IN ACCORDANCE WITH ENVIRONMENTAL DOCUMENTS? ☑ YES ☐ NO
CCO DESCRIPTION: EB Prestressing Delay Mitigation	**PROJECT DESCRIPTION:** YBITS-1 (Yerba Buena Island Transition Structures)

Original Contract Time:	Time Adj. This Change:	Previously Approved CCO Time Adjustments:	Percentage Time Adjusted: (including this change)	Total # of Unreconciled Deferred Time CCO(s): (including this change)
1390 Day(s)	0 Day(s)	0 Day(s)	0 %	9

THIS CHANGE ORDER PROVIDES FOR:
Mitigating potential delays to the pre-stressing of Frame 2 of the eastbound structure.

This project, the Yerba Buena Island Transition Structure (YBITS), provides for the construction of two bridges which will connect eastbound and westbound traffic on the new east span of the San Francisco Oakland Bay Bridge (SFOBB) to the existing Yerba Buena Island (YBI) tunnel. The structures are comprised of concrete box girder bridges each approximately 50 meters high and 450 meters in length.

The Toll Bridge Program Oversight Committee (TBPOC) has established a goal of the Seismic Safety Opening (SSO) of the new SFOBB east span by 2013. In order to achieve this SSO, the completion of the main portions of the YBITS structure has been set for November of 2012 with Change Order No. 72, Supplement No. 1 establishing a milestone for this completion date. The prestressing of the eastbound structure currently falls on the critical path for this completion date. As a condition of Change Order No. 72, Supplement No. 1, which was approved by the TBPOC on December 1, 2011, the Department committed to mitigate any potential delays to the prestressing operation. Change Order No. 113 was issued in February of 2012 to mitigate the pre-stressing work on the westbound structure. This change order provides for the mitigation of the pre-stressing on the eastbound structure.

The eastbound structure is comprised of 2 separate pre-stressed concrete box girder frames. Frame 1 spans approximately 160 meters with Frame 2 spanning approximately 290 meters. Under this change order, Frame 1 will be pre-stressed per plan as the work doesn't affect the controlling operation.

The Frame 2 prestressing includes installing and stressing 92 separate longitudinal tendons. Due to the risk of installing these tendons over the 290 meter length, this change order provides for the contractor to take the following measures in order to mitigate potential risks to the completion milestones:

1) Perform additional pre-inspection measures in order to identify any blockages or access issues prior to the installation of the tendons.

2) Pre-fabricate the 92 tendons off-site to enable the tendons to be pulled through the stressing ducts as one unit in lieu of multiply strands being pushed.

3) Provide additional labor and equipment resources to expedite the prestressing operations.

This mitigating work has been reviewed and approved by Brian Maroney, Toll Bridge Program Manager.

The major costs associated with this work pertain to the Frame 2 tendon pre-fabrication and the additional labor and equipment resources being provided. The contractor will have to provide a warehouse facility to in order to fabricate the 290 meter long tendons and will have to double handle each of the 92 tendons. Additional labor and equipment will be provided to ensure the stressing ducts are clear prior to installing the tendons. The contractor will also provide added crews and work double shifts 7 days per week over a 5-week period during the actual pre-stressing work and mobilize several sets of equipment to the jobsite to support the increased crews. Premium time labor costs and inefficiencies will be compensated as part of this change.

Compensation shall be paid as an Adjustment of Compensation at an Agreed Lump Sum of $1,090,090.00 which shall be

ADA Notice: For individuals with sensory disabilities, this document is available in alternate formats. For information call: (916) 654-6410 or TDD (916) 654-3880 or write Records and Forms Management, 1120 N Street, MS-89, Sacramento, CA 95814.

financed from the contract's contingency funds. A detailed cost analysis is on file.

This change order has been approved by the TBPOC on 7/10/12, copy attached.

In accordance with the provisions of Change Order No. 72, Supplement No. 1, there shall be no adjustment of contract time as a result of this change.

Maintenance concurrence is not required as this change doesn't affect any permanent roadway features.

CONCURRED BY:		
Construction Engineer:	William Howe WBH	Date 07.11.12
Bridge Engineer:	for Mehran Ardakanian	Date 7-31-12
Project Engineer:	Bob Zandipour, Design	Date 7-13-12
Project Manager:	Ken Terpstra	Date 7-13-12
FHWA Rep.:		Date
Environmental:		Date
Other (specify):		Date
Other (specify):		Date
District Prior Approval By:		Date
HQ (Issue Approve) By:	Sey Hossnich	Date 7-12-12
Resident Engineer's Signature:	William Howe	Date 07.11.12

ESTIMATE OF COST

	THIS REQUEST	TOTAL TO DATE
ITEMS	$0.00	$0.00
FORCE ACCOUNT	$0.00	$0.00
AGREED PRICE	$0.00	$0.00
ADJUSTMENT	$1,090,090.00	$1,090,090.00
TOTAL	$1,090,090.00	$1,090,090.00

FEDERAL PARTICIPATION

☐ PARTICIPATING ☐ PARTICIPATING IN PART ☑ NONE
☐ NON-PARTICIPATING (MAINTENANCE) ☐ NON-PARTICIPATING

FEDERAL SEGREGATION (if more than one Funding Source or P.I.P. type)
☐ CCO FUNDED PER CONTRACT ☐ CCO FUNDED AS FOLLOWS

FEDERAL FUNDING SOURCE	PERCENT

ADA Notice: For individuals with sensory disabilities, this document is available in alternate formats. For information call: (916) 654-6410 or TDD (916) 654-3880 or write Records and Forms Management, 1120 N Street, MS-89, Sacramento, CA 95814.

STATE OF CALIFORNIA - DEPARTMENT OF TRANSPORTATION

CONTRACT CHANGE ORDER MEMORANDUM

DATE: 4/25/2012

TO: Deanna Vilcheck, ACM /	FILE: E.A. 04 - 0120S4
FROM: William Howe, Senior R.E.	CO-RTE-PM SF-80-12.7/13.2
	FED. NO. NO FED AID
CCO#: 120 SUPPLEMENT#: 0 Category Code: CJTX	CONTINGENCY BALANCE (incl. this change) $70,747,357.00
COST: $51,620.00 INCREASE ☑ DECREASE ☐	HEADQUARTERS APPROVAL REQUIRED? ☐ YES ☑ NO
SUPPLEMENTAL FUNDS PROVIDED: $0.00	IS THIS REQUEST IN ACCORDANCE WITH ENVIRONMENTAL DOCUMENTS? ☑ YES ☐ NO
CCO DESCRIPTION: emergency access modif. to Southgate Rd.	**PROJECT DESCRIPTION:** YBITS-1 (Yerba Buena Island Transition Structures)

Original Contract Time:	Time Adj. This Change:	Previously Approved CCO Time Adjustments:	Percentage Time Adjusted: (including this change)	Total # of Unreconciled Deferred Time CCO(s): (including this change)
1390 Day(s)	0 Day(s)	0 Day(s)	0 %	9

THIS CHANGE ORDER PROVIDES FOR:

This change order provides for constructing a temporary emergency access roadway for the underpass of Southgate Road at Interstate 80.

This change order is needed to provide emergency vehicle access during the expedited construction of the project, which has been impacted by performing selected activities concurrently and not sequentially. In order to maintain the required emergency vehicle access to the Coast Guard base, which is a condition for the construction imposed by the Coast Guard, while conducting the accelerated construction of the eastbound structure, including falsework bents, and duct bank in the vicinity of the superstructure spans between Bent Nos. 7 and 10, the Engineer has determined that adding a paved undercrossing access road is necessary. This change order provides for the construction of the required temporary access road.

Compensation for this additional work shall be paid as Extra Work at an Agreed Lump Sum of $51,620.00, which can be financed from the Contract's contingency fund. The detailed cost analysis for this change order is on file in the project records.

No adjustment in contract time of completion is warranted as this change does not affect the controlling operation.

Maintenance concurrence is not required, as this does not affect any permanent feature of the bridge.

CONCURRED BY:		
Construction Engineer:	William Howe	Date 05.02.12
Bridge Engineer:	Mehran Ardakanian	Date
Project Engineer:	Bob Zandipour, Design	Date 5-2-12
Project Manager:	Ken Terpstra	Date 5/2/12
FHWA Rep.:		Date
Environmental:		Date
Other (specify):		Date
Other (specify):		Date
District Prior Approval By:		Date
HQ (Issue Approve) By:		Date
Resident Engineer's Signature: William Howe		Date 05.02.12

ESTIMATE OF COST

	THIS REQUEST	TOTAL TO DATE
ITEMS	$0.00	$0.00
FORCE ACCOUNT	$0.00	$0.00
AGREED PRICE	$51,620.00	$51,620.00
ADJUSTMENT	$0.00	$0.00
TOTAL	$51,620.00	$51,620.00

FEDERAL PARTICIPATION

☐ PARTICIPATING ☐ PARTICIPATING IN PART ☑ NONE
☐ NON-PARTICIPATING (MAINTENANCE) ☐ NON-PARTICIPATING

FEDERAL SEGREGATION (if more than one Funding Source or P.I.P. type)
☐ CCO FUNDED PER CONTRACT ☐ CCO FUNDED AS FOLLOWS

FEDERAL FUNDING SOURCE	PERCENT

ADA Notice: For individuals with sensory disabilities, this document is available in alternate formats. For information call: (916) 654-6410 or TDD (916) 654-3880 or write Records and Forms Management, 1120 N Street, MS-89, Sacramento, CA 95814.

STATE OF CALIFORNIA - DEPARTMENT OF TRANSPORTATION

CONTRACT CHANGE ORDER MEMORANDUM

DATE: 6/20/2012 Page 1 of 1

TO: Deanna Vilcheck, ACM /	FILE: E.A. 04 - 0120S4
FROM: William Howe, Senior R.E.	CO-RTE-PM SF-80-12.7/13.2
	FED. NO. NO FED AID
CCO#: 143 SUPPLEMENT#: 0 Category Code: CHPT	CONTINGENCY BALANCE (incl. this change) $61,453,168.40
COST: $20,000.00 INCREASE ☑ DECREASE ☐	HEADQUARTERS APPROVAL REQUIRED? ☐ YES ☑ NO
SUPPLEMENTAL FUNDS PROVIDED: $0.00	IS THIS REQUEST IN ACCORDANCE WITH ENVIRONMENTAL DOCUMENTS? ☑ YES ☐ NO
CCO DESCRIPTION: Embeds for Falsework for Future Bikpath	**PROJECT DESCRIPTION:** YBITS-1 (Yerba Buena Island Transition Structures)

Original Contract Time:	Time Adj. This Change:	Previously Approved CCO Time Adjustments:	Percentage Time Adjusted: (including this change)	Total # of Unreconciled Deferred Time CCO(s): (including this change)
1390 Day(s)	0 Day(s)	0 Day(s)	0 %	9

THIS CHANGE ORDER PROVIDES FOR:

This change order provides compensation to the Contractor for costs to provide labor, equipment and materials to install embeds in the YBITS Eastbound Structure for future bikepath falsework, as directed by the Engineer.

This contract calls for the construction of the Yerba Buena Island Transition structures of the east span of the new San Francisco Oakland Bay Bridge (SFOBB). During the next phase of the overall corridor construction, the YBITS2 contract will install a bikepath that cantilevers off the eastbound bridge (that is currently being constructed). The future construction of the bikepath will require falsework that must be supported by the eastbound bridge; the Engineer is directing the Contractor to install embeds to utilize as part of the future falsework system.

Due to the short lead time for this work and several unknown field variables, it is difficult to provide an accurate cost estimate, so compensation for this work shall be paid for on a Force Account basis for the actual costs. This CCO provides funding for an estimated cost of $20,000.00, which will be funded from the project's contingency fund. A cost analysis is on file in the project records.

No adjustment of contract time is warranted, as this change will not affect the controlling operation.

This change was requested by Deanna Vilcheck, Toll Bridge Construction, on June 18, 2012.

Maintenance concurrence will be obtained from Lina Ellis, Str. Maintenance.

CONCURRED BY:		
Construction Engineer:	William Howe	Date 06.22.12
Bridge Engineer:	Mehran Ardakanian	Date 7.18.12
Project Engineer:	Bob Zandipour, Design	Date 6-25-12
Project Manager:	Ken Terpstra	Date 6-23-12
FHWA Rep.:		Date
Environmental:		Date
Other (specify):	Lina Ellis, Str. Maintenance	Date 6-26-12
Other (specify):		Date
District Prior Approval By:		Date
HQ (Issue Approve) By:		Date
Resident Engineer's Signature: William Howe		Date 06.22.12

ESTIMATE OF COST	THIS REQUEST	TOTAL TO DATE
ITEMS	$0.00	$0.00
FORCE ACCOUNT	$20,000.00	$20,000.00
AGREED PRICE	$0.00	$0.00
ADJUSTMENT	$0.00	$0.00
TOTAL	$20,000.00	$20,000.00

FEDERAL PARTICIPATION

☐ PARTICIPATING ☐ PARTICIPATING IN PART ☑ NONE
☐ NON-PARTICIPATING (MAINTENANCE) ☐ NON-PARTICIPATING

FEDERAL SEGREGATION (if more than one Funding Source or P.I.P. type)
☐ CCO FUNDED PER CONTRACT ☐ CCO FUNDED AS FOLLOWS

FEDERAL FUNDING SOURCE	PERCENT

ADA Notice: For individuals with sensory disabilities, this document is available in alternate formats. For information call: (916) 654-6410 or TDD (916) 654-3880 or write Records and Forms Management, 1120 N Street, MS-89, Sacramento, CA 95814.

CONTRACT CHANGE ORDER

Change Requested by: Engineer

CCO 117	Suppl. No. 0	Contract No. 04 - 0120S4	Road SF-80-12.7/13.2	FED. AID LOC.: NO FED AID

To: M C M CONSTRUCTION INC

You are directed to make the following changes from the plans and specifications or do the following described work not included in the plans and specifications for this contract. ***NOTE: This change order is not effective until approved by the Engineer.***

Description of work to be done, estimate of quantities and prices to be paid. (Segregate between additional work at contract price, agreed price and force account.) Unless otherwise stated, rates for rental of equipment cover only such time as equipment is actually used and no allowance will be made for idle time. This last percentage shown is the net accumulated increase or decrease from the original quantity in the Engineer's Estimate.

Adjustment of Compensation at Lump Sum:

Compensate the Contractor for the additional costs required to construct the call box system, per revised drawings 260R1, 261R1, 287R1, 288R1, 289R1 and 290R1 (attached Sheets 2 through 7 of this change order).

For this work, the Contractor will be paid the sum of $2,072.00. This sum constitutes full and complete compensation, including all markups for this change.

Adjustment of Compensation at Agreed Lump Sum = $2,072.00

Estimated Cost: Increase ☑ Decrease ☐ **$2,072.00**

By reason of this order the time of completion will be adjusted as follows: 0 days

Submitted by

Signature	Resident Engineer	Date
William Howe	William Howe, Senior R.E.	05-29-12

Approval Recommended by

Signature	Senior Resident Engineer	Date
William Howe	William Howe	05-29-12

Engineer Approval by

Signature	Senior Resident Engineer	Date
William Howe	William Howe	07-17-12

We the undersigned contractor, have given careful consideration to the change proposed and agree, if this proposal is approved, that we will provide all equipment, furnish the materials, except as may otherwise be noted above, and perform all services necessary for the work above specified, and will accept as full payment therefor the prices shown above.

NOTE: If you, the contractor, do not sign acceptance of this order, your attention is directed to the requirements of the specifications as to proceeding with the ordered work and filing a written protest within the time therein specified.

Contractor Acceptance by

Signature	(Print name and title)	Date
	EDMUNDO A. PUCHI, TREASURER	9/12/12

Dist	COUNTY	ROUTE	KILOMETER POST TOTAL PROJECT	SHEET No.	TOTAL SHEETS
04	SF	80	12.7/13.2	260 R1	806

REGISTERED ELECTRICAL ENGINEER 2/14/08

6-23-08
PLANS APPROVAL DATE

REGISTERED PROFESSIONAL ENGINEER FADI WALIEDDINE No. 11465 Exp. 12/31/09 ELECTRICAL STATE OF CALIFORNIA

THE STATE OF CALIFORNIA OR ITS OFFICERS OR AGENTS SHALL NOT BE RESPONSIBLE FOR THE ACCURACY OR COMPLETENESS OF ELECTRONIC COPIES OF THIS PLAN SHEET.

PB AMERICAS, Inc.
A Parsons Brinckerhoff Company
303 Second St., Suite 700N
San Francisco, CA 94107-1317

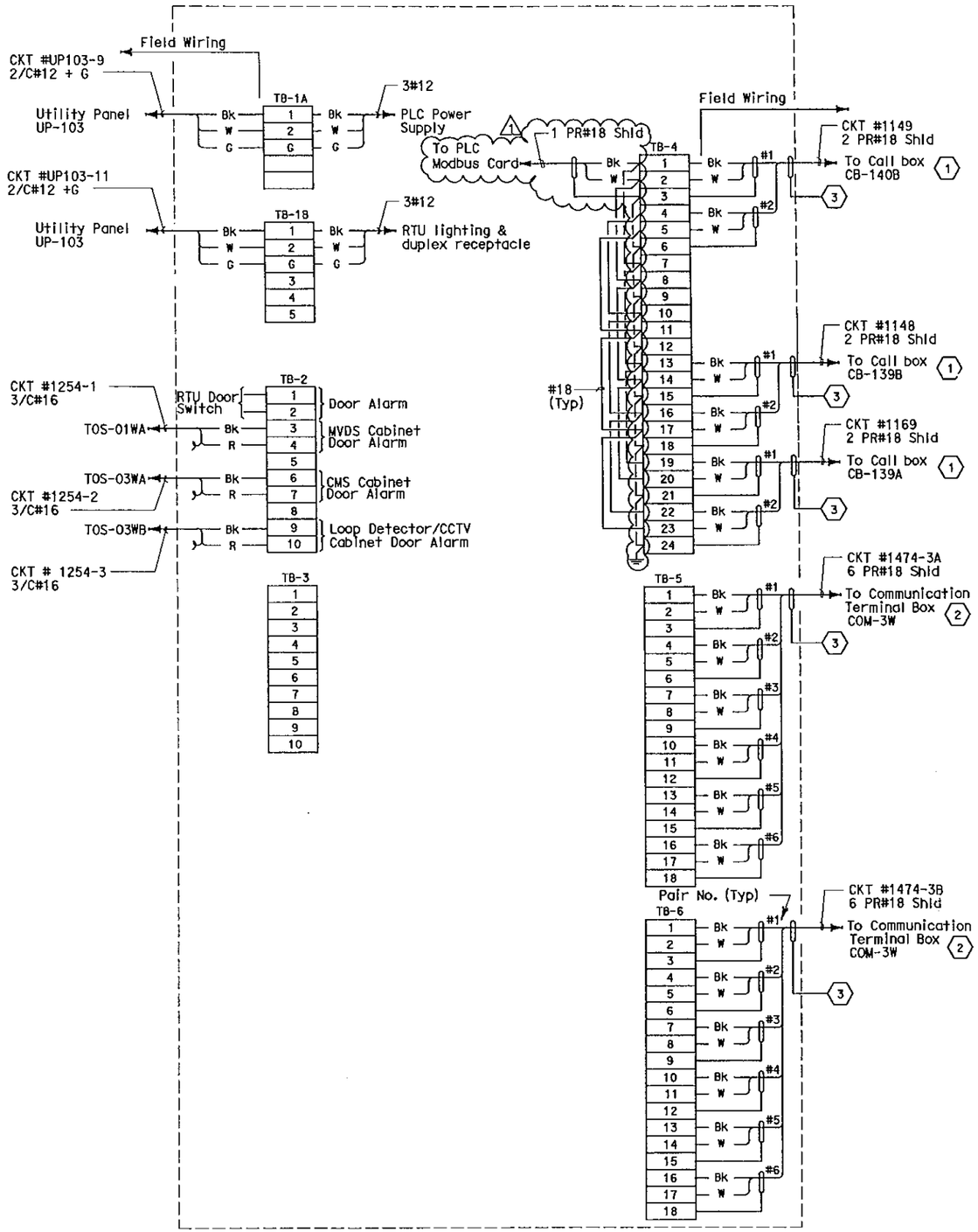

CONNECTION DIAGRAM - RTU-9W

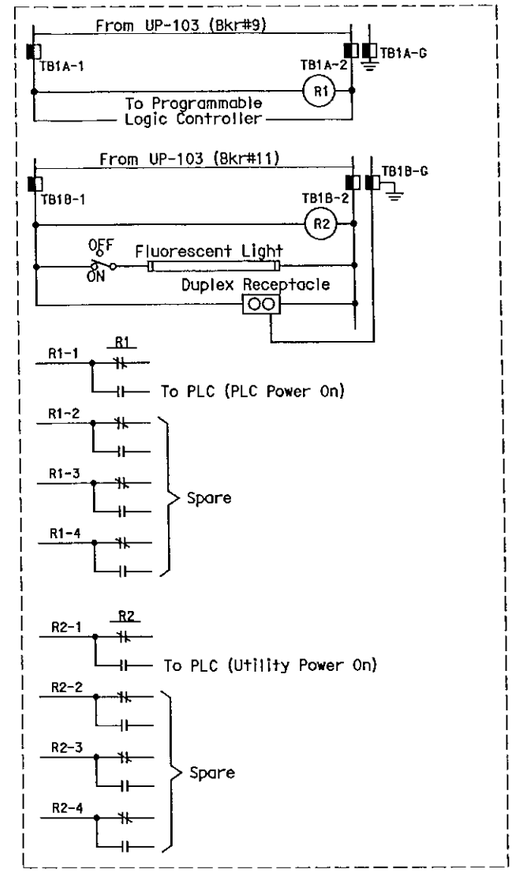

ELEMENTARY DIAGRAM - RTU-9W

SHEET NOTES:

1. For connection to call boxes, see sheet E-170.
2. For connection diagram to scada system, see sheet E-143.
3. Field to tape cable overall shield wire.
4. Add wiring inside LVCC-A line up.

NOTES:

1. All spare conductors shall be coiled and taped at conductor ends unless terminated.
2. Terminate cable shields to low level ground bus.
3. References:
   - For UP-103 panel schedule, see sheet E-71.
   - For RTU-9W panel layout, see sheet E-139.

MARK	DATE	DESCRIPTIONS	BY	CH'D
1	02/10/12	Revised Call Box wiring/Delete Call Box	RSB	EJL

REVISIONS

CONTRACT CHANGE ORDER NO. 117
SHEET 2 OF 7

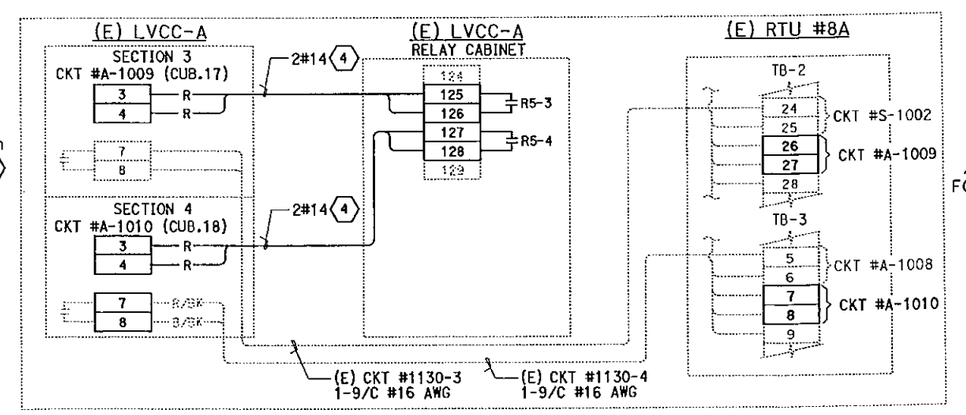

CONNECTION DIAGRAM

INSIDE EXISTING YBI SUBSTATION

REGISTERED PROFESSIONAL ENGINEER SYN YEE CHIN No. 18188 Exp. 09/30/2013 ELECTRICAL STATE OF CALIFORNIA

Syn Yee Chin
FOR REVISION ONLY
1

5

DETAILS
SCADA REMOTE TERMINAL UNIT SYSTEM
(RTU-9W ELEMENTARY AND CONNECTION DIAGRAM)

NO SCALE

E-141

5 REVISED PER ADDENDUM No. 5 DATED JULY 30, 2009

THIS PLAN ACCURATE FOR ELECTRICAL WORK ONLY.

STATE OF CALIFORNIA - DEPARTMENT OF TRANSPORTATION
Caltrans

CONSULTANT FUNCTIONAL SUPERVISOR: BEHZAD GOLEMOHAMMADI
CALCULATED-DESIGNED BY: EDC
CHECKED BY: CYF
REVISED BY
DATE REVISED

LAST REVISION 01-31-12
DATE PLOTTED => 20-FEB-2012
TIME PLOTTED => 15:58

Dist	COUNTY	ROUTE	KILOMETER POST TOTAL PROJECT	SHEET No.	TOTAL SHEETS
04	SF	80	12.7/13.2	261 R1	806

REGISTERED ELECTRICAL ENGINEER 2/14/08

6-23-08
PLANS APPROVAL DATE

REGISTERED PROFESSIONAL ENGINEER FADI WALIEDDINE No. 11365 Exp. 12/31/09 ELECTRICAL STATE OF CALIFORNIA

THE STATE OF CALIFORNIA OR ITS OFFICERS OR AGENTS SHALL NOT BE RESPONSIBLE FOR THE ACCURACY OR COMPLETENESS OF ELECTRONIC COPIES OF THIS PLAN SHEET.

PB AMERICAS, Inc.
A Parsons Brinckerhoff Company
303 Second St., Suite 700N
San Francisco, CA 94107-1317

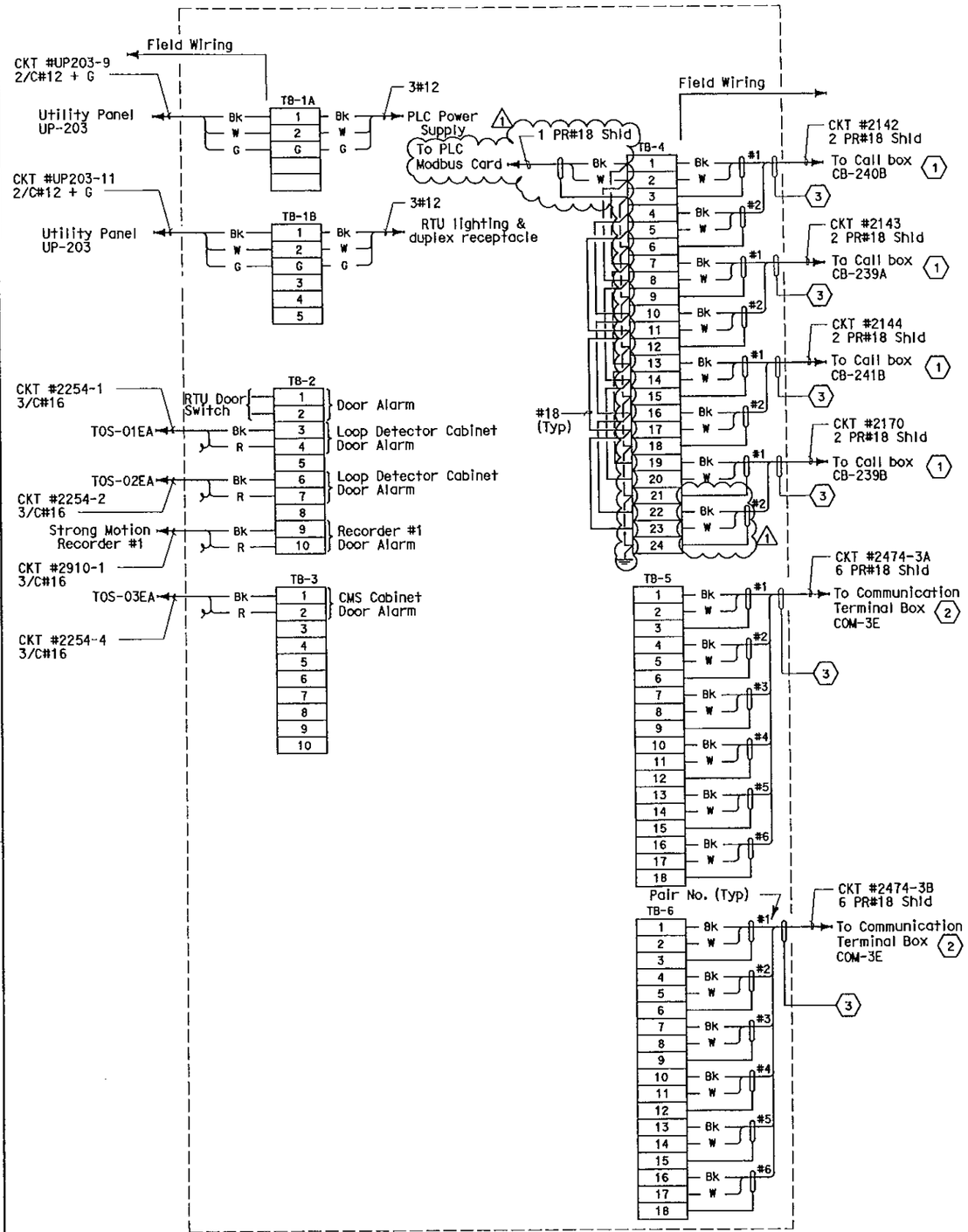

CONNECTION DIAGRAM - RTU-9E

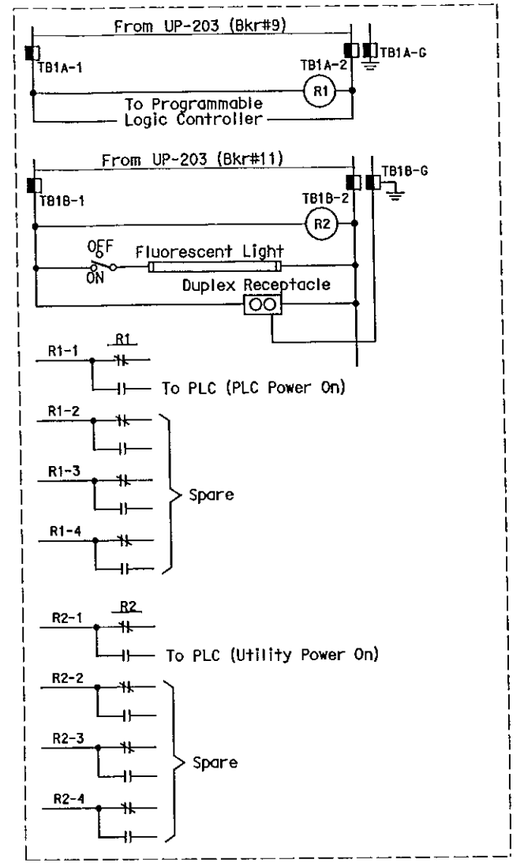

ELEMENTARY DIAGRAM - RTU-9E

SHEET NOTES:

1. For connection diagram to call boxes, see sheet E-171.
2. For connection to scada communication terminal box, see sheet E-143.
3. Field to tape cable overall shield wire.
4. Add wiring inside LVCC-B line up.

NOTES:

1. All spare conductors shall be coiled and taped at conductor ends unless terminated.
2. Terminate cable shields to low level ground bus.
3. References:
   - For UP-203 panel schedule, see sheet E-112.
   - For RTU #9E panel layout, see sheet E-139.

MARK	DATE	DESCRIPTIONS	BY	CH'D
1	02/10/12	Revised Call Box wiring/Delete Call Box	RSB	EJL

REVISIONS

CONTRACT CHANGE ORDER NO. 117
SHEET 3 OF 7

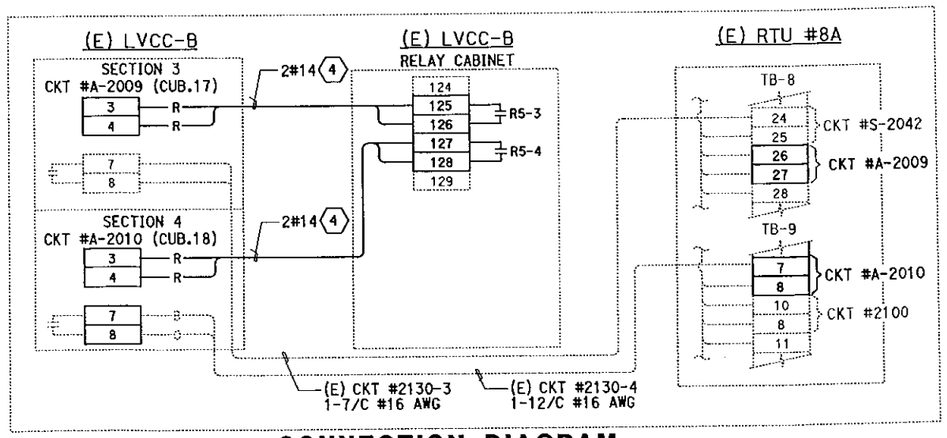

CONNECTION DIAGRAM

INSIDE EXISTING YBI SUBSTATION

REGISTERED PROFESSIONAL ENGINEER SYN YEE CHIN No. 18184 Exp. 06/30/2013 ELECTRICAL STATE OF CALIFORNIA

Syn Yee Chin
FOR REVISION ONLY
1 -

5

DETAILS
SCADA REMOTE TERMINAL UNIT SYSTEM
(RTU-9E ELECTRICAL AND CONNECTION DIAGRAM)

NO SCALE

E-142

5 REVISED PER ADDENDUM No. 5 DATED JULY 30, 2009

THIS PLAN ACCURATE FOR ELECTRICAL WORK ONLY.

STATE OF CALIFORNIA - DEPARTMENT OF TRANSPORTATION
Caltrans
CONSULTANT FUNCTIONAL SUPERVISOR: BEHZAD GOLEMOHAMMADI
CALCULATED-DESIGNED BY: EDC
CHECKED BY: CYF
REVISED BY
DATE REVISED

LAST REVISION 01-31-12
DATE PLOTTED => 20-FEB-2012
TIME PLOTTED => 15:59

Dist	COUNTY	ROUTE	KILOMETER POST TOTAL PROJECT	SHEET No.	TOTAL SHEETS
04	SF	80	12.7/13.2	289 R1	806

2/14/08
REGISTERED ELECTRICAL ENGINEER

6-23-08
PLANS APPROVAL DATE

REGISTERED PROFESSIONAL ENGINEER FADI WALIEDDINE No. 11365 Exp. 12/31/09 ELECTRICAL STATE OF CALIFORNIA

THE STATE OF CALIFORNIA OR ITS OFFICERS OR AGENTS SHALL NOT BE RESPONSIBLE FOR THE ACCURACY OR COMPLETENESS OF ELECTRONIC COPIES OF THIS PLAN SHEET.

PB AMERICAS, Inc.
A Parsons Brinckerhoff Company
303 Second St., Suite 700N
San Francisco, CA 94107-1317

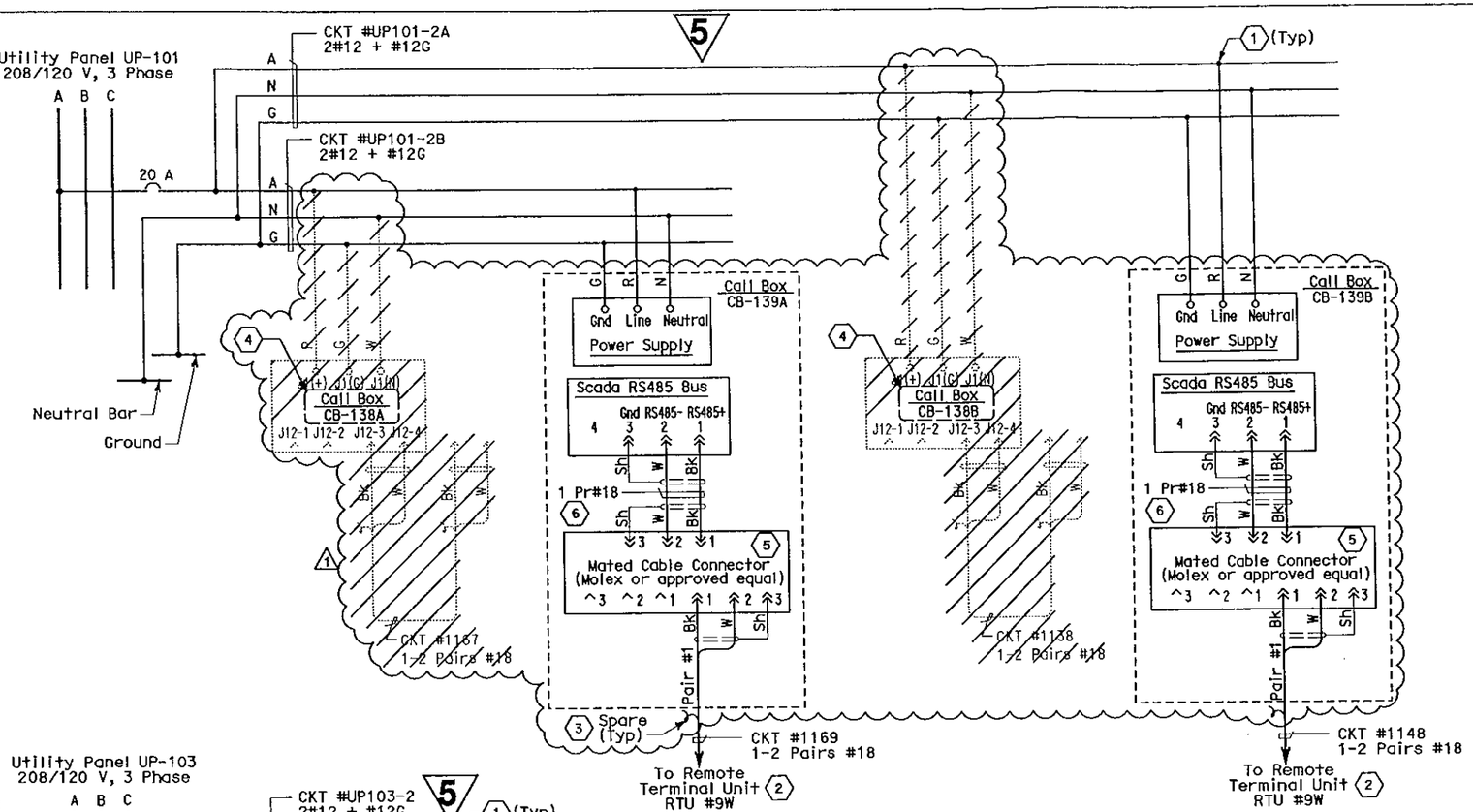

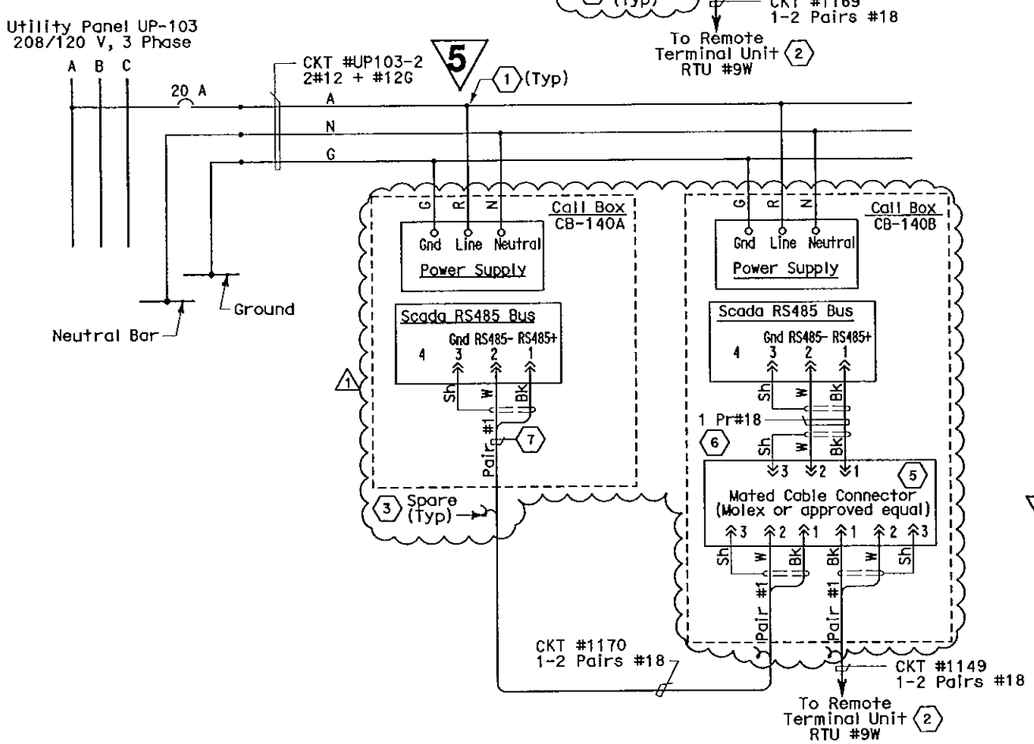

SHEET NOTES:

1. ~~Conductors spliced inside PB-LTG.~~ The Contractor to coil a sufficient length of power conductors inside PB-LTG for connection to Call Box. Cable termination at Call Box by Contractor.
2. For continuation, see RTU #9W connection diagram sheet E-141.
3. ~~Data cable 1-2 pairs #18 shielded with overall shield. Coil and tape end of pair #2.~~ The spare (pair #2) shall be coiled and taped inside PB-COM.
4. Call Box ~~(NIC).~~ DELETED.
5. Provide cable and conductor connectors. Locate connectors inside Call Box enclosure.
6. Field cable, 1 pr #18, shielded. Terminate cables with mated male connectors.
7. The Contractor shall install resistor approximately equal to the impedance (Zo) of the twisted pair #1 at the extreme ends of each multidrop network.

NOTES:

1. References:
   - For panel UP-101, UP-103 schedules, see sheets E-70 and E-71.
   - For call box westbound schedule, see sheet E-172.

REGISTERED PROFESSIONAL ENGINEER SYN YEE CHIN No. 18186 Exp. 09/30/2013 ELECTRICAL STATE OF CALIFORNIA

Syn Yee Chin
FOR REVISION ONLY
1 -

MARK	DATE	DESCRIPTIONS	BY	CH'D
1	02/10/12	Revised Call Box Wiring/Delete Call Box	RSB	EJL

REVISIONS

CONTRACT CHANGE ORDER NO. 117
SHEET 6 OF 7

5 REVISED PER ADDENDUM No. 5 DATED JULY 30, 2009

CALL BOX SYSTEM
(CALL BOX WIRING DIAGRAM)
NO SCALE

WESTBOUND YBI TRANSITION STRUCTURES

E-170

STATE OF CALIFORNIA - DEPARTMENT OF TRANSPORTATION
CONSULTANT FUNCTIONAL SUPERVISOR: BEHZAD GOLEMOHAMMADI
CALCULATED-DESIGNED BY: EDC
CHECKED BY: CYF
REVISED BY / DATE REVISED

THIS PLAN ACCURATE FOR ELECTRICAL WORK ONLY.

LAST REVISION 01-31-12 DATE PLOTTED => 20-FEB-2012 TIME PLOTTED => 15:59

BORDER LAST REVISED 3/1/2007
RELATIVE BORDER SCALE IS IN MILLIMETERS 0 20 40 60 80
USERNAME => llorico
DGN FILE => 40120sua170r01.dgn
CU 04251
EA 0120S1

District	COUNTY	ROUTE	KILOMETER POST TOTAL PROJECT	SHEET No.	TOTAL SHEETS
04	SF	80	12.7/13.2	290 R1	806

REGISTERED ELECTRICAL ENGINEER 2/14/08

6-23-08
PLANS APPROVAL DATE

REGISTERED PROFESSIONAL ENGINEER FADI WALIEDDINE No. 11465 Exp. 12/31/09 ELECTRICAL STATE OF CALIFORNIA

THE STATE OF CALIFORNIA OR ITS OFFICERS OR AGENTS SHALL NOT BE RESPONSIBLE FOR THE ACCURACY OR COMPLETENESS OF ELECTRONIC COPIES OF THIS PLAN SHEET.

PB AMERICAS, Inc.
A Parsons Brinckerhoff Company
303 Second St., Suite 700N
San Francisco, CA 94107-1317

REGISTERED PROFESSIONAL ENGINEER SYN YEE CHIN No. 18186 Exp. 09/30/2013 ELECTRICAL STATE OF CALIFORNIA

Synyee Chin
FOR REVISION ONLY
1 -

MARK	DATE	DESCRIPTIONS	BY	CH'D
1	02/10/12	Revised Call Box wiring/Delete Call Box	RSB	EJL

REVISIONS

CONTRACT CHANGE ORDER NO. 117
SHEET 7 OF 7

NOTES:

1. References:
   - For panel UP-201, UP-202 and UP-203 schedules, see sheets E-111 and E-112.
   - For call box eastbound schedule, see sheet E-172.

SHEET NOTES:

1. Conductors spliced inside PB-LTG. The Contractor to coil a sufficient length of power conductors inside PB-LTG for connection to Call Box. Cable termination at Call Box by Contractor.
2. For continuation, see RTU #9E connection diagram sheet E-142.
3. ~~Data cable 1-2 pairs #18 shielded with overall shield. Coil and tape end of pair #2.~~ The spare (pair #2) shall be coiled and taped inside PB-COM.
4. Call Box (NIC).
5. Call Box deleted.
6. Provide cable and conductor connectors. Locate connectors inside Call Box enclosure.
7. Field cable, 1 pr #18, shielded. Terminate cables with mated male connectors.
8. The Contractor shall install resistor approximately equal to the impedance (Zo) of the twisted pair #1 at the extreme ends of each multidrop network.

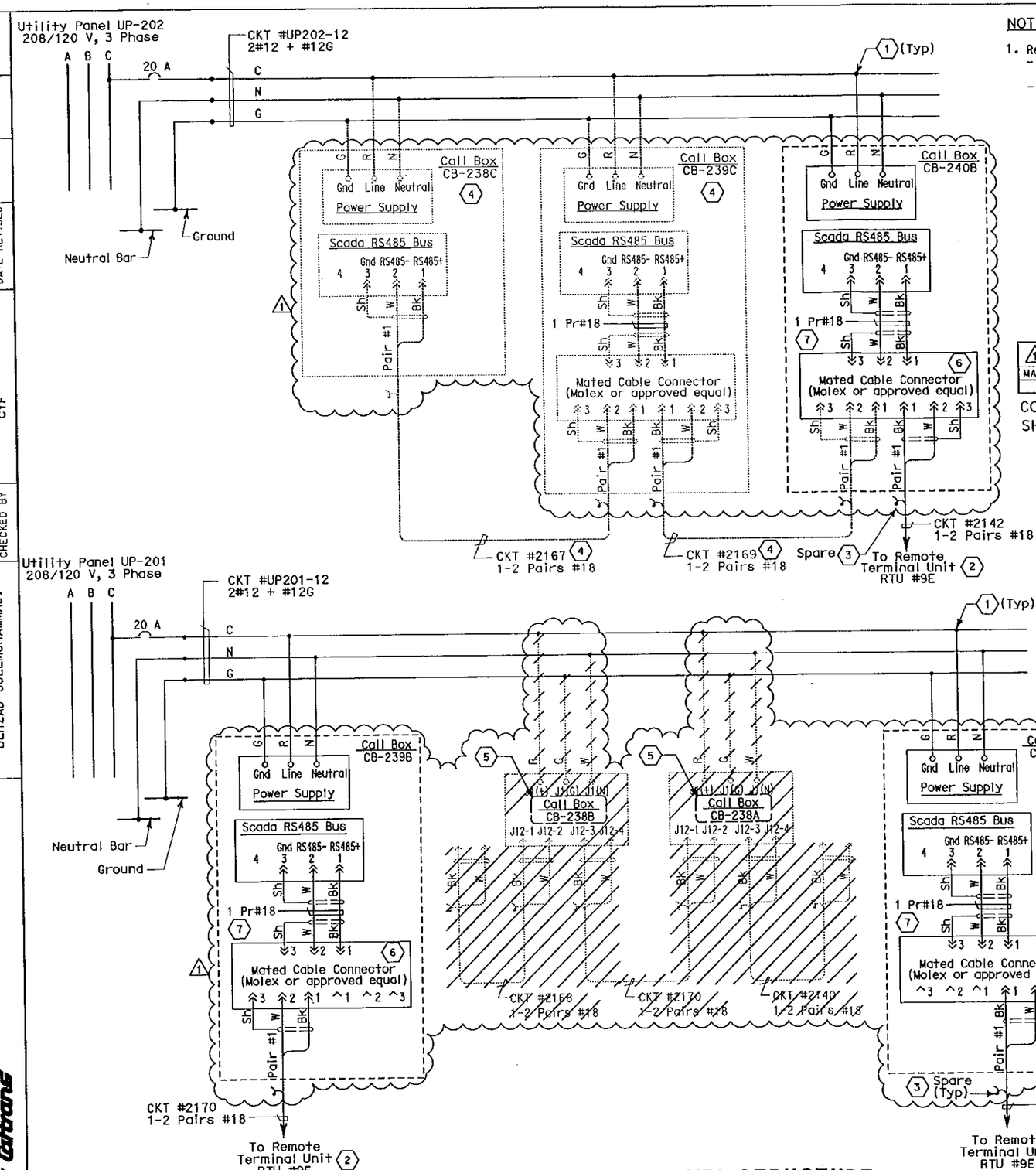

EASTBOUND YBI STRUCTURE

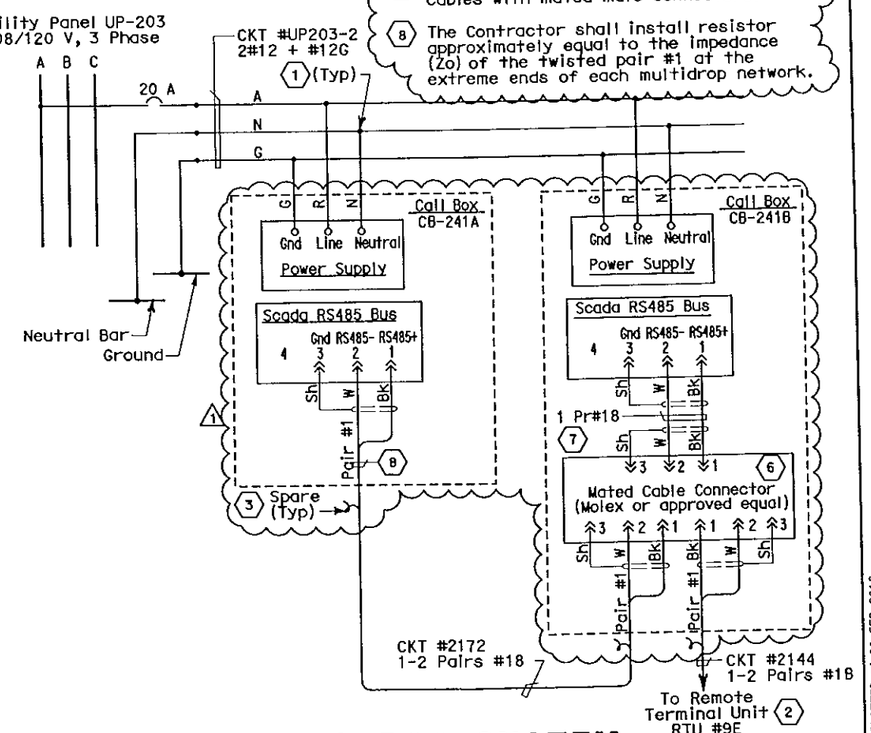

CALL BOX SYSTEM
(CALL BOX WIRING DIAGRAM)
NO SCALE

E-171

STATE OF CALIFORNIA - DEPARTMENT OF TRANSPORTATION
Caltrans
CONSULTANT FUNCTIONAL SUPERVISOR: BEHZAD GOLEMOHAMMADI
CALCULATED-DESIGNED BY: EDC
CHECKED BY: CYF
REVISED BY
DATE REVISED

LAST REVISION 01-31-12
DATE PLOTTED => 20-FEB-2012
TIME PLOTTED => 15:59

THIS PLAN ACCURATE FOR ELECTRICAL WORK ONLY.

BORDER LAST REVISED 3/1/2007

RELATIVE BORDER SCALE IS IN MILLIMETERS 0 20 40 60 80

USERNAME => llorico
DGN FILE => 40120sua171r01.dgn

CU 04251

EA 0120S1

STATE OF CALIFORNIA - DEPARTMENT OF TRANSPORTATION

CONTRACT CHANGE ORDER MEMORANDUM

DATE: 1/12/2012

TO: Deanna Vilcheck, ACM / DV	FILE: E.A. 04 - 0120S4
FROM: William Howe, Senior R.E.	CO-RTE-PM SF-80-12.7/13.2
	FED. NO. NO FED AID
CCO#: 92 SUPPLEMENT#: 0 Category Code: CBPC	CONTINGENCY BALANCE (incl. this change) $60,705,877.20
COST: $0.00 INCREASE ☐ DECREASE ☐	HEADQUARTERS APPROVAL REQUIRED? ☐ YES ☑ NO
SUPPLEMENTAL FUNOS PROVIDED: $0.00	IS THIS REQUEST IN ACCORDANCE WITH ENVIRONMENTAL DOCUMENTS? ☑ YES ☐ NO
CCO DESCRIPTION: Light Pole Foundations	**PROJECT DESCRIPTION:** YBITS-1 (Yerba Buena Island Transition Structures)

Original Contract Time:	Time Adj. This Change:	Previously Approved CCO Time Adjustments:	Percentage Time Adjusted: (including this change)	Total # of Unreconciled Deferred Time CCO(s): (including this change)
1390 Day(s)	0 Day(s)	0 Day(s)	0 %	9

THIS CHANGE ORDER PROVIDES FOR:

This change order provides for modifying the base plates detail and anchor bolt layout for the roadway lighting pole anchorages.

Modification of base plate details is requested by the Engineer. This change simplifies material requirements for the lighting pole anchorages.

Anchor bolt layout revision is requested by the Engineer. This change rotates the lighting poles 90° and is recommended by Caltrans' Traffic Safety and the Architect. This change shall prevent light glare to on-coming traffic.

The modifications to the base plates required in this change do not cause additional costs for the Contractor; therefore, there shall be no cost or credit to the State as a result of this change.

Caltrans' Traffic Safety concurs with this change.

Maintenance concurrence will be obtained for this change.

CONCURRED BY:		
Construction Engineer:	William Howe DV	Date 4/13/12
Bridge Engineer:	Mehran Ardakanian	Date
Project Engineer:	Bob Zandipour, Design	Date 4-16-12
Project Manager:	Ken Terpstra KT	Date 5/2/12
FHWA Rep.:		Date
Environmental:		Date
Other (specify):	Lina Ellis, Str. Maintenance	Date 4-16-12
Other (specify):		Date
District Prior Approval By:		Date
HQ (Issue Approve) By:		Date
Resident Engineer's Signature:	Deanna Vilcheck 4/13/12	Date

ESTIMATE OF COST

	THIS REQUEST	TOTAL TO DATE
ITEMS	$0.00	$0.00
FORCE ACCOUNT	$0.00	$0.00
AGREED PRICE	$0.00	$0.00
ADJUSTMENT	$0.00	$0.00
TOTAL	$0.00	$0.00

FEDERAL PARTICIPATION

☐ PARTICIPATING ☐ PARTICIPATING IN PART ☑ NONE
☐ NON-PARTICIPATING (MAINTENANCE) ☐ NON-PARTICIPATING

FEDERAL SEGREGATION (if more than one Funding Source or P.I.P. type)
☐ CCO FUNDED PER CONTRACT ☐ CCO FUNDED AS FOLLOWS

FEDERAL FUNDING SOURCE	PERCENT

ADA Notice: For individuals with sensory disabilities, this document is available in alternate formats. For information call: (916) 654-6410 or TDD (916) 654-3880 or write Records and Forms Management, 1120 N Street, MS-89, Sacramento, CA 95814.

STATE OF CALIFORNIA - DEPARTMENT OF TRANSPORTATION

CONTRACT CHANGE ORDER MEMORANDUM

TO: Deanna Vilcheck, ACM / DV

FROM: William Howe, Senior R.E.

FILE: E.A. 04 - 0120S4
CO-RTE-PM SF-80-12.7/13.2
FED. NO. NO FED AID

CCO#: 117 | SUPPLEMENT#: 0 | Category Code: CBPC

CONTINGENCY BALANCE (incl. this change) $68,633,244.00

COST: $2,072.00 INCREASE ☑ DECREASE ☐

HEADQUARTERS APPROVAL REQUIRED? ☐ YES ☑ NO

SUPPLEMENTAL FUNDS PROVIDED: $0.00

IS THIS REQUEST IN ACCORDANCE WITH ENVIRONMENTAL DOCUMENTS? ☑ YES ☐ NO

CCO DESCRIPTION:
Call Box Wiring

PROJECT DESCRIPTION:
YBITS-1 (Yerba Buena Island Transition Structures)

Original Contract Time:	Time Adj. This Change:	Previously Approved CCO Time Adjustments:	Percentage Time Adjusted: (including this change)	Total # of Unreconciled Deferred Time CCO(s): (including this change)
1390 Day(s)	0 Day(s)	0 Day(s)	0 %	9

THIS CHANGE ORDER PROVIDES FOR:

This change order provides compensation to the Contractor for costs to revise the installation of call box wiring, per drawings prepared by Caltrans Design (Sheets 2 through 7 of the change order). The work includes revisions that the Engineer has determined are required to the call box system design.

Compensation for this work shall be paid at an Agreed Lump Sum of $2,072.00, which will be funded from the project's contingency fund. A cost analysis is on file.

No adjustment of contract time is warranted, as this change will not affect the controlling operation.

This change was requested by and concurred with Bob Zandipour, Design.

Maintenance concurrence will be obtained from Lina Ellis.

CONCURRED BY:

Construction Engineer:	William Howe	Date 05-29-12
Bridge Engineer:	Mehran Ardakanian	Date
Project Engineer:	Bob Zandipour, Design	Date 5-31-12
Project Manager:	Ken Terpstra	Date 5-30-12
FHWA Rep.:		Date
Environmental:		Date
Other (specify):	Lina Ellis, Str. Maintenance	Date 6-13-12
Other (specify):		Date
District Prior Approval By:		Date
HQ (Issue Approve) By:		Date
Resident Engineer's Signature:	William Howe	Date 05-25-12

ESTIMATE OF COST

	THIS REQUEST	TOTAL TO DATE
ITEMS	$0.00	$0.00
FORCE ACCOUNT	$0.00	$0.00
AGREED PRICE	$0.00	$0.00
ADJUSTMENT	$2,072.00	$2,072.00
TOTAL	$2,072.00	$2,072.00

FEDERAL PARTICIPATION

☐ PARTICIPATING ☐ PARTICIPATING IN PART ☑ NONE
☐ NON-PARTICIPATING (MAINTENANCE) ☐ NON-PARTICIPATING

FEDERAL SEGREGATION (if more than one Funding Source or P.I.P. type)
☐ CCO FUNDED PER CONTRACT ☐ CCO FUNDED AS FOLLOWS

FEDERAL FUNDING SOURCE	PERCENT

ADA Notice: For individuals with sensory disabilities, this document is available in alternate formats. For information call: (916) 654-6410 or TDD (916) 654-3880 or write Records and Forms Management, 1120 N Street, MS-89, Sacramento, CA 95814.

STATE OF CALIFORNIA - DEPARTMENT OF TRANSPORTATION

CONTRACT CHANGE ORDER

Change Requested by: Engineer

CCO 120	Suppl. No. 0	Contract No. 04 - 0120S4	Road SF-80-12.7/13.2	FED. AID LOC.: NO FED AID

To: **M C M CONSTRUCTION INC**

You are directed to make the following changes from the plans and specifications or do the following described work not included in the plans and specifications for this contract. ***NOTE: This change order is not effective until approved by the Engineer.***

Description of work to be done, estimate of quantities and prices to be paid. (Segregate between additional work at contract price, agreed price and force account.) Unless otherwise stated, rates for rental of equipment cover only such time as equipment is actually used and no allowance will be made for idle time. This last percentage shown is the net accumulated increase or decrease from the original quantity in the Engineer's Estimate.

Extra Work at Lump Sum:

Build temporary emergency access roadway for the underpass of Southgate Road at Interstate 80 and include the work described below as directed by the Engineer.

1) Mobilization for this portion of the work.

2) Remove and dispose of approximately 10 tonnes of existing asphaltic concrete (AC) pavement and base.

3) Grade roadway to allow clearance of approximately 3.3 meters to the bottom of falsework, to allow for emergency vehicles to pass under the falsework.

4) Provide and place approximately 72 tonnes of aggregate base and approximately 110 tonnes of Hot Mix Asphalt (HMA Type A) at locations as directed by the Engineer.

5) Provide and place approximately 7 tonnes of Hot Mix Asphalt (HMA) dike mix for dikes as directed by the Engineer.

6) Stripe the above-mentioned roadway: approximately 1,200 lineal meters of Detail 27B striping, 300 lineal meters of Detail 21 striping, 1 each Type III Arrow, 4 each Type I (24) Arrows, and 1 each "Stop" legend with limit line.

7) Paint approximately 1 meter wide by 3 meters high of the 900 mm diameter steel casing east side of the emergency access road to make it more visible in low light.

For this work, the Contractor will be paid the sum of $51,620.00. This sum constitutes full and complete compensation, including all markups for this change.

Extra Work at Agreed Lump Sum = $51,620.00

This Contract Change Order excludes the following:

1) This agreed price excludes the cost of flagging and traffic control for this work, which will be paid for under a separate change order.

2) This agreed price excludes the identification, handling, removal or testing of any hazardous or contaminated material.

3) Hot mix asphalt (Type A and dike mix) prices for the work performed under this change order will not be increased or decreased in conformance with the provisions of Section 5-1.06, "Compensation Adjustments for Price Index Fluctuations" of the Special Provisions. The price included in this contract change order remains firm for all work.

CONTRACT CHANGE ORDER

Change Requested by: Engineer

CCO 120	Suppl. No. 0	Contract No. 04 - 0120S4	Road SF-80-12.7/13.2	FED. AID LOC.: NO FED AID

Estimated Cost: Increase ☑ Decrease ☐ $51,620.00

By reason of this order the time of completion will be adjusted as follows: 0 days

Submitted by

Signature William Howe	Resident Engineer William Howe, Senior R.E.	Date 05-02-12

Approval Recommended by

Signature Deanna Vilcheck	Area Construction Manager Deanna Vilcheck	Date 5/2/12

Engineer Approval by

Signature Deanna Vilcheck	Area Construction Manager Deanna Vilcheck	Date 7/18/12

We the undersigned contractor, have given careful consideration to the change proposed and agree, if this proposal is approved, that we will provide all equipment, furnish the materials, except as may otherwise be noted above, and perform all services necessary for the work above specified, and will accept as full payment therefor the prices shown above.

NOTE: If you, the contractor, do not sign acceptance of this order, your attention is directed to the requirements of the specifications as to proceeding with the ordered work and filing a written protest within the time therein specified.

Contractor Acceptance by

Signature	(Print name and title) EDMUNDO A. PUCHI, TREASURER	Date 7/12/12

STATE OF CALIFORNIA - DEPARTMENT OF TRANSPORTATION

CONTRACT CHANGE ORDER MEMORANDUM

DATE: 4/25/2012

TO: Deanna Vilcheck, ACM /	FILE: E.A. 04 - 0120S4
FROM: William Howe, Senior R.E.	CO-RTE-PM SF-80-12.7/13.2
	FED. NO. NO FED AID
CCO#: 120 SUPPLEMENT#: 0 Category Code: CJTX	CONTINGENCY BALANCE (incl. this change) $70,747,357.00
COST: $51,620.00 INCREASE ☑ DECREASE ☐	HEADQUARTERS APPROVAL REQUIRED? ☐ YES ☑ NO
SUPPLEMENTAL FUNDS PROVIDED: $0.00	IS THIS REQUEST IN ACCORDANCE WITH ENVIRONMENTAL DOCUMENTS? ☑ YES ☐ NO
CCO DESCRIPTION: emergency access modif. to Southgate Rd.	**PROJECT DESCRIPTION:** YBITS-1 (Yerba Buena Island Transition Structures)

Original Contract Time:	Time Adj. This Change:	Previously Approved CCO Time Adjustments:	Percentage Time Adjusted: (including this change)	Total # of Unreconciled Deferred Time CCO(s): (including this change)
1390 Day(s)	0 Day(s)	0 Day(s)	0 %	9

THIS CHANGE ORDER PROVIDES FOR:

This change order provides for constructing a temporary emergency access roadway for the underpass of Southgate Road at Interstate 80.

This change order is needed to provide emergency vehicle access during the expedited construction of the project, which has been impacted by performing selected activities concurrently and not sequentially. In order to maintain the required emergency vehicle access to the Coast Guard base, which is a condition for the construction imposed by the Coast Guard, while conducting the accelerated construction of the eastbound structure, including falsework bents, and duct bank in the vicinity of the superstructure spans between Bent Nos. 7 and 10, the Engineer has determined that adding a paved undercrossing access road is necessary. This change order provides for the construction of the required temporary access road.

Compensation for this additional work shall be paid as Extra Work at an Agreed Lump Sum of $51,620.00, which can be financed from the Contract's contingency fund. The detailed cost analysis for this change order is on file in the project records.

No adjustment in contract time of completion is warranted as this change does not affect the controlling operation.

Maintenance concurrence is not required, as this does not affect any permanent feature of the bridge.

CONCURRED BY:		
Construction Engineer:	William Howe	Date 05.02.12
Bridge Engineer:	Mehran Ardakanian	Date
Project Engineer:	Bob Zandipour, Design	Date 5-2-12
Project Manager:	Ken Terpstra	Date 5/2/12
FHWA Rep.:		Date
Environmental:		Date
Other (specify):		Date
Other (specify):		Date
District Prior Approval By:		Date
HQ (Issue Approve) By:		Date
Resident Engineer's Signature: William Howe		Date 05.02.12

ESTIMATE OF COST

	THIS REQUEST	TOTAL TO DATE
ITEMS	$0.00	$0.00
FORCE ACCOUNT	$0.00	$0.00
AGREED PRICE	$51,620.00	$51,620.00
ADJUSTMENT	$0.00	$0.00
TOTAL	$51,620.00	$51,620.00

FEDERAL PARTICIPATION

☐ PARTICIPATING ☐ PARTICIPATING IN PART ☑ NONE
☐ NON-PARTICIPATING (MAINTENANCE) ☐ NON-PARTICIPATING

FEDERAL SEGREGATION (if more than one Funding Source or P.I.P. type)
☐ CCO FUNDED PER CONTRACT ☐ CCO FUNDED AS FOLLOWS

FEDERAL FUNDING SOURCE	PERCENT

ADA Notice: For individuals with sensory disabilities, this document is available in alternate formats. For information call: (916) 654-6410 or TDD (916) 654-3880 or write Records and Forms Management, 1120 N Street, MS-89, Sacramento, CA 95814.

STATE OF CALIFORNIA - DEPARTMENT OF TRANSPORTATION

CONTRACT CHANGE ORDER MEMORANDUM

TO: Deanna Vilcheck, ACM /	FILE: E.A. 04 - 0120S4
FROM: William Howe, Senior R.E.	CO-RTE-PM SF-80-12.7/13.2
	FED. NO. NO FED AID
CCO#: 115 SUPPLEMENT#: 0 Category Code: CHMX	CONTINGENCY BALANCE (incl. this change) $58,252,430.40
COST: $1,090,090.00 INCREASE ☑ DECREASE ☐	HEADQUARTERS APPROVAL REQUIRED? ☑ YES ☐ NO
SUPPLEMENTAL FUNDS PROVIDED: $0.00	IS THIS REQUEST IN ACCORDANCE WITH ENVIRONMENTAL DOCUMENTS? ☑ YES ☐ NO
CCO DESCRIPTION: EB Prestressing Delay Mitigation	**PROJECT DESCRIPTION:** YBITS-1 (Yerba Buena Island Transition Structures)

Original Contract Time:	Time Adj. This Change:	Previously Approved CCO Time Adjustments:	Percentage Time Adjusted: (including this change)	Total # of Unreconciled Deferred Time CCO(s): (including this change)
1390 Day(s)	0 Day(s)	0 Day(s)	0 %	9

THIS CHANGE ORDER PROVIDES FOR:
Mitigating potential delays to the pre-stressing of Frame 2 of the eastbound structure.

This project, the Yerba Buena Island Transition Structure (YBITS), provides for the construction of two bridges which will connect eastbound and westbound traffic on the new east span of the San Francisco Oakland Bay Bridge (SFOBB) to the existing Yerba Buena Island (YBI) tunnel. The structures are comprised of concrete box girder bridges each approximately 50 meters high and 450 meters in length.

The Toll Bridge Program Oversight Committee (TBPOC) has established a goal of the Seismic Safety Opening (SSO) of the new SFOBB east span by 2013. In order to achieve this SSO, the completion of the main portions of the YBITS structure has been set for November of 2012 with Change Order No. 72, Supplement No. 1 establishing a milestone for this completion date. The prestressing of the eastbound structure currently falls on the critical path for this completion date. As a condition of Change Order No. 72, Supplement No. 1, which was approved by the TBPOC on December 1, 2011, the Department committed to mitigate any potential delays to the prestressing operation. Change Order No. 113 was issued in February of 2012 to mitigate the pre-stressing work on the westbound structure. This change order provides for the mitigation of the pre-stressing on the eastbound structure.

The eastbound structure is comprised of 2 separate pre-stressed concrete box girder frames. Frame 1 spans approximately 160 meters with Frame 2 spanning approximately 290 meters. Under this change order, Frame 1 will be pre-stressed per plan as the work doesn't affect the controlling operation.

The Frame 2 prestressing includes installing and stressing 92 separate longitudinal tendons. Due to the risk of installing these tendons over the 290 meter length, this change order provides for the contractor to take the following measures in order to mitigate potential risks to the completion milestones:

1) Perform additional pre-inspection measures in order to identify any blockages or access issues prior to the installation of the tendons.

2) Pre-fabricate the 92 tendons off-site to enable the tendons to be pulled through the stressing ducts as one unit in lieu of multiply strands being pushed.

3) Provide additional labor and equipment resources to expedite the prestressing operations.

This mitigating work has been reviewed and approved by Brian Maroney, Toll Bridge Program Manager.

The major costs associated with this work pertain to the Frame 2 tendon pre-fabrication and the additional labor and equipment resources being provided. The contractor will have to provide a warehouse facility to in order to fabricate the 290 meter long tendons and will have to double handle each of the 92 tendons. Additional labor and equipment will be provided to ensure the stressing ducts are clear prior to installing the tendons. The contractor will also provide added crews and work double shifts 7 days per week over a 5-week period during the actual pre-stressing work and mobilize several sets of equipment to the jobsite to support the increased crews. Premium time labor costs and inefficiencies will be compensated as part of this change.

Compensation shall be paid as an Adjustment of Compensation at an Agreed Lump Sum of $1,090,090.00 which shall be

ADA Notice: For individuals with sensory disabilities, this document is available in alternate formats. For information call: (916) 654-6410 or TDD (916) 654-3880 or write Records and Forms Management, 1120 N Street, MS-89, Sacramento, CA 95814.

financed from the contract's contingency funds. A detailed cost analysis is on file.

This change order has been approved by the TBPOC on 7/10/12, copy attached.

In accordance with the provisions of Change Order No. 72, Supplement No. 1, there shall be no adjustment of contract time as a result of this change.

Maintenance concurrence is not required as this change doesn't affect any permanent roadway features.

CONCURRED BY:		
Construction Engineer:	William Howe WBH	Date 07.11.12
Bridge Engineer:	for Mehran Ardakanian	Date 7-31-12
Project Engineer:	Bob Zandipour, Design	Date 7-13-12
Project Manager:	Ken Terpstra	Date 7-13-12
FHWA Rep.:		Date
Environmental:		Date
Other (specify):		Date
Other (specify):		Date
District Prior Approval By:		Date
HQ (Issue Approve) By:	Sey Hossnich	Date 7-12-12
Resident Engineer's Signature:	William Howe	Date 07.11.12

ESTIMATE OF COST

	THIS REQUEST	TOTAL TO DATE
ITEMS	$0.00	$0.00
FORCE ACCOUNT	$0.00	$0.00
AGREED PRICE	$0.00	$0.00
ADJUSTMENT	$1,090,090.00	$1,090,090.00
TOTAL	$1,090,090.00	$1,090,090.00

FEDERAL PARTICIPATION

☐ PARTICIPATING ☐ PARTICIPATING IN PART ☑ NONE
☐ NON-PARTICIPATING (MAINTENANCE) ☐ NON-PARTICIPATING

FEDERAL SEGREGATION (if more than one Funding Source or P.I.P. type)
☐ CCO FUNDED PER CONTRACT ☐ CCO FUNDED AS FOLLOWS

FEDERAL FUNDING SOURCE	PERCENT

ADA Notice: For individuals with sensory disabilities, this document is available in alternate formats. For information call: (916) 654-6410 or TDD (916) 654-3880 or write Records and Forms Management, 1120 N Street, MS-89, Sacramento, CA 95814.

STATE OF CALIFORNIA - DEPARTMENT OF TRANSPORTATION

CONTRACT CHANGE ORDER MEMORANDUM

DATE: 6/20/2012 Page 1 of 1

TO: Deanna Vilcheck, ACM /	FILE: E.A. 04 - 0120S4
FROM: William Howe, Senior R.E.	CO-RTE-PM SF-80-12.7/13.2
	FED. NO. NO FED AID
CCO#: 143 SUPPLEMENT#: 0 Category Code: CHPT	CONTINGENCY BALANCE (incl. this change) $61,453,168.40
COST: $20,000.00 INCREASE ☑ DECREASE ☐	HEADQUARTERS APPROVAL REQUIRED? ☐ YES ☑ NO
SUPPLEMENTAL FUNDS PROVIDED: $0.00	IS THIS REQUEST IN ACCORDANCE WITH ENVIRONMENTAL DOCUMENTS? ☑ YES ☐ NO
CCO DESCRIPTION: Embeds for Falsework for Future Bikpath	**PROJECT DESCRIPTION:** YBITS-1 (Yerba Buena Island Transition Structures)

Original Contract Time:	Time Adj. This Change:	Previously Approved CCO Time Adjustments:	Percentage Time Adjusted: (including this change)	Total # of Unreconciled Deferred Time CCO(s): (including this change)
1390 Day(s)	0 Day(s)	0 Day(s)	0 %	9

THIS CHANGE ORDER PROVIDES FOR:

This change order provides compensation to the Contractor for costs to provide labor, equipment and materials to install embeds in the YBITS Eastbound Structure for future bikepath falsework, as directed by the Engineer.

This contract calls for the construction of the Yerba Buena Island Transition structures of the east span of the new San Francisco Oakland Bay Bridge (SFOBB). During the next phase of the overall corridor construction, the YBITS2 contract will install a bikepath that cantilevers off the eastbound bridge (that is currently being constructed). The future construction of the bikepath will require falsework that must be supported by the eastbound bridge; the Engineer is directing the Contractor to install embeds to utilize as part of the future falsework system.

Due to the short lead time for this work and several unknown field variables, it is difficult to provide an accurate cost estimate, so compensation for this work shall be paid for on a Force Account basis for the actual costs. This CCO provides funding for an estimated cost of $20,000.00, which will be funded from the project's contingency fund. A cost analysis is on file in the project records.

No adjustment of contract time is warranted, as this change will not affect the controlling operation.

This change was requested by Deanna Vilcheck, Toll Bridge Construction, on June 18, 2012.

Maintenance concurrence will be obtained from Lina Ellis, Str. Maintenance.

CONCURRED BY:		
Construction Engineer:	William Howe	Date 06.22.12
Bridge Engineer:	Mehran Ardakanian	Date 7.18.12
Project Engineer:	Bob Zandipour, Design	Date 6-25-12
Project Manager:	Ken Terpstra	Date 6-23-12
FHWA Rep.:		Date
Environmental:		Date
Other (specify):	Lina Ellis, Str. Maintenance	Date 6-26-12
Other (specify):		Date
District Prior Approval By:		Date
HQ (Issue Approve) By:		Date
Resident Engineer's Signature: William Howe		Date 06.22.12

ESTIMATE OF COST	THIS REQUEST	TOTAL TO DATE
ITEMS	$0.00	$0.00
FORCE ACCOUNT	$20,000.00	$20,000.00
AGREED PRICE	$0.00	$0.00
ADJUSTMENT	$0.00	$0.00
TOTAL	$20,000.00	$20,000.00

FEDERAL PARTICIPATION

☐ PARTICIPATING ☐ PARTICIPATING IN PART ☑ NONE
☐ NON-PARTICIPATING (MAINTENANCE) ☐ NON-PARTICIPATING

FEDERAL SEGREGATION (if more than one Funding Source or P.I.P. type)
☐ CCO FUNDED PER CONTRACT ☐ CCO FUNDED AS FOLLOWS

FEDERAL FUNDING SOURCE	PERCENT

ADA Notice: For individuals with sensory disabilities, this document is available in alternate formats. For information call: (916) 654-6410 or TDD (916) 654-3880 or write Records and Forms Management, 1120 N Street, MS-89, Sacramento, CA 95814.

STATE OF CALIFORNIA - DEPARTMENT OF TRANSPORTATION

CONTRACT CHANGE ORDER

Change Requested by: Engineer

CCO 121	Suppl. No. 0	Contract No. 04 - 0120S4	Road SF-80-12.7/13.2	FED. AID LOC.: NO FED AID

To: **M C M CONSTRUCTION INC**

You are directed to make the following changes from the plans and specifications or do the following described work not included in the plans and specifications for this contract. ***NOTE: This change order is not effective until approved by the Engineer.***

Description of work to be done, estimate of quantities and prices to be paid. (Segregate between additional work at contract price, agreed price and force account.) Unless otherwise stated, rates for rental of equipment cover only such time as equipment is actually used and no allowance will be made for idle time. This last percentage shown is the net accumulated increase or decrease from the original quantity in the Engineer's Estimate.

REVISION NO. 1:

Adjustment of Compensation at Lump Sum:

Compensate the Contractor for all additional costs associated with removing the westbound Frame 2 falsework between Bents W2L and W3L out of sequence in order to allow for the installation of tie-down anchors at the eastern edge of Frame 2. This falsework removal shall be performed prior to the Contractor vacating the westbound Frame 2 area for Milestone 1 of Change Order No. 72, Supplement No. 1, in lieu of the falsework remaining in place as defined for Milestone 1 under the above-noted change order.

For this work, the Contractor shall be compensated an Agreed Lump Sum of $444,010.00, which constitutes full and final compensation, including all markups, for all additional costs incurred.

The actual installation of the tie-down anchors shall be performed by others outside of this Contract.

Adjustment of Compensation at Agreed Lump Sum = $444,010.00

Consideration of a time adjustment pertaining to any delays to the milestones established under Change Order No. 72, Supplement No. 0 and Supplement No. 1, along with any delays to the Designated Portion of the Work 2 and Designated Portion of the Work 3 as defined under Section 4 of the Contract Special Provisions, is deferred. Determination of a commensurate time extension will be made in accordance with Section 8-1.07, "Liquidated Damages", of the Standard Specifications and Section 10-1.22, "Progress Schedule (Critical Path Method)", of the Special Provisions.

There shall be no time extension to the completion of the Contract as a result of this change.

03/12/2012

Estimated Cost: Increase ☑ Decrease ☐ $444,010.00

By reason of this order the time of completion will be adjusted as follows: 0 days

Submitted by

Signature	Resident Engineer	Date
William Howe	William Howe, Senior R.E.	03-09-12

Approval Recommended by

Signature	Area Construction Manager	Date
Deanna Vilcheck	Deanna Vilcheck	3/12/12

Engineer Approval by

Signature	Area Construction Manager	Date
Michael Fraum	for Deanna Vilcheck	5/30/12

We the undersigned contractor, have given careful consideration to the change proposed and agree, if this proposal is approved, that we will provide all equipment, furnish the materials, except as may otherwise be noted above, and perform all services necessary for the work above specified, and will accept as full payment therefor the prices shown above.

NOTE: If you, the contractor, do not sign acceptance of this order, your attention is directed to the requirements of the specifications as to proceeding with the ordered work and filing a written protest within the time therein specified.

Contractor Acceptance by

Signature	(Print name and title)	Date
	JAMES A. CARTER, PRESIDENT	5/25/12

STATE OF CALIFORNIA - DEPARTMENT OF TRANSPORTATION

CONTRACT CHANGE ORDER MEMORANDUM

DATE: 3/5/2012

TO: Deanna Vilcheck, ACM /	FILE: E.A. 04 - 0120S4
FROM: William Howe, Senior R.E.	CO-RTE-PM SF-80-12.7/13.2
	FED. NO. NO FED AID
CCO#: 121 SUPPLEMENT#: 0 Category Code: BZZZ	CONTINGENCY BALANCE (incl. this change) $51,298,523.00
COST: $444,010.00 INCREASE ☑ DECREASE ☐	HEADQUARTERS APPROVAL REQUIRED? ☑ YES ☐ NO
SUPPLEMENTAL FUNDS PROVIDED: $0.00	IS THIS REQUEST IN ACCORDANCE WITH ENVIRONMENTAL DOCUMENTS? ☑ YES ☐ NO
CCO DESCRIPTION: WB W2 to W3 Falsework Removal	**PROJECT DESCRIPTION:** YBITS-1 (Yerba Buena Island Transition Structures)

Original Contract Time:	Time Adj. This Change:	Previously Approved CCO Time Adjustments:	Percentage Time Adjusted: (including this change)	Total # of Unreconciled Deferred Time CCO(s): (including this change)
1390 Day(s)	0 Day(s)	0 Day(s)	0 %	9

THIS CHANGE ORDER PROVIDES FOR:
The out of sequence removal of the eastern end of the westbound Frame 2 falsework.

This project, the Yerba Buena Island Transition Structure (YBITS), provides for the construction of two bridges which will connect eastbound and westbound traffic on the new east span of the San Francisco Oakland Bay Bridge (SFOBB) to the existing Yerba Buena Island (YBI) tunnel. The structures are comprised of concrete box girder bridges each approximately 26 meters wide, 40 meters high and 450 meters in length.

The construction of the westbound bridge requires the placement of falsework that abuts against the Self-Anchored Suspension (SAS) Bridge Contract (04-0120F4). Change Order No. 72, Supplement No. 1, established 3 milestones with Milestone 1 requiring the Contractor to complete the construction of the westbound structure by May 1, 2012, and vacate the 60 meter long area between Bent W2L and Bent W3L to allow for the SAS contract to perform the construction of the Hinge K closure, which connects YBITS to the SAS structure. Under the above-noted change order, the falsework in this area was to remain in place. It has now been determined that the falsework needs to be removed prior to the area being vacated in order to facilitate the Hinge K closure construction. This change order provides for this falsework removal.

The work includes striping the falsework wing walls, soffit deck and steel bents, which stand approximately 30 meters in height in the W2L to W3L area out of sequence. The Contractor will be required to suspend their falsework erection activities on the eastbound structure, mobilize to the westbound Bents W2L/W3L area, remove that falsework, demobilize the falsework removal operation and remobilize back to the eastbound falsework erection activity.

In order to mitigate delays to the milestones established under Change Order 72, the Contractor will be required to work 12 hour shifts, including weekends, with multiple crews resulting in considerable premium time for labor costs and inefficiencies. Access constraints associated with removing the falsework out of sequence will also negatively affect the work. This change order provides compensation for the additional premium time labor cost and the inefficiencies associated with the work along with the multiple mobilizations required in suspending their falsework erection on the eastbound structure.

Compensation for these costs shall be paid as an Adjustment of Compensation at an Agreed Sump sum of $444,010.00, which shall be financed from the contract's contingency funds. A cost analysis is on file.

This change order defers any time extension to the milestones established under the original Change Order No. 72, Supplement No. 0, and Supplement No. 1.

No adjustment of contract time is warranted as the delay to the contract completion will be absorbed by the Department's owned float created under Change Order No. 72.

Maintenance concurrence is not required as the change does not affect any permanent roadway features.

ADA Notice: For individuals with sensory disabilities, this document is available in alternate formats. For information call: (916) 654-6410 or TDD (916) 654-3880 or write Records and Forms Management, 1120 N Street, MS-89, Sacramento, CA 95814.

CONCURRED BY:		
Construction Engineer:	William Howe	Date 03-09-12
Bridge Engineer:	Mehran Ardakanian	Date 3/12/12
Project Engineer:	Bob Zandipour, Design	Date 3/13/12
Project Manager:	Ken Terpstra	Date 3/12/12
FHWA Rep.:		Date
Environmental:		Date
Other (specify):		Date
Other (specify):		Date
District Prior Approval By:		Date
HQ (Issue Approve) By:	Larry Salhaney	Date 3-13-12
Resident Engineer's Signature:	William Howe	Date 03-09-12

ESTIMATE OF COST

	THIS REQUEST	TOTAL TO DATE
ITEMS	$0.00	$0.00
FORCE ACCOUNT	$0.00	$0.00
AGREED PRICE	$0.00	$0.00
ADJUSTMENT	$444,010.00	$444,010.00
TOTAL	$444,010.00	$444,010.00

FEDERAL PARTICIPATION

☐ PARTICIPATING ☐ PARTICIPATING IN PART ☑ NONE
☐ NON-PARTICIPATING (MAINTENANCE) ☐ NON-PARTICIPATING

FEDERAL SEGREGATION (if more than one Funding Source or P.I.P. type)
☐ CCO FUNDED PER CONTRACT ☐ CCO FUNDED AS FOLLOWS

FEDERAL FUNDING SOURCE	PERCENT

ADA Notice: For individuals with sensory disabilities, this document is available in alternate formats. For information call: (916) 654-6410 or TDD (916) 654-3880 or write Records and Forms Management, 1120 N Street, MS-89, Sacramento, CA 95814.

STATE OF CALIFORNIA - DEPARTMENT OF TRANSPORTATION

CONTRACT CHANGE ORDER MEMORANDUM

DATE: 5/4/2012

TO: Deanna Vilcheck, ACM /

FROM: William Howe, Senior R.E.

FILE: E.A. 04 - 0120S4
CO-RTE-PM SF-80-12.7/13.2
FED. NO. NO FED AID

CCO#: 112 | SUPPLEMENT#: 0 | Category Code: CHPT

CONTINGENCY BALANCE (incl. this change) $70,685,316.00

COST: $0.00 INCREASE ☐ DECREASE ☐

HEADQUARTERS APPROVAL REQUIRED? ☐ YES ☑ NO

SUPPLEMENTAL FUNDS PROVIDED: $0.00

IS THIS REQUEST IN ACCORDANCE WITH ENVIRONMENTAL DOCUMENTS? ☑ YES ☐ NO

CCO DESCRIPTION:
Stirrup Spacing @ Intermediate Diaphragm

PROJECT DESCRIPTION:
YBITS-1 (Yerba Buena Island Transition Structures)

Original Contract Time:	Time Adj. This Change:	Previously Approved CCO Time Adjustments:	Percentage Time Adjusted: (including this change)	Total # of Unreconciled Deferred Time CCO(s): (including this change)
1390 Day(s)	0 Day(s)	0 Day(s)	0 %	9

THIS CHANGE ORDER PROVIDES FOR:
Clarification of the stem wall stirrup spacing at Section B-B; refer to Sheet No. 2 of 2 of this CCO (Sheet No. 646R2).

This change will result in a no cost or credit to the State by reason of this change.

Structure Maintenance concurrence is not required as this change does not affect any controlling items.

No adjustment to contract time is required due to these changes as they do not affect controlling operations.

CONCURRED BY:

Construction Engineer:	William Howe	Date 05·10·12
for Bridge Engineer:	Mehran Ardakanian	Date 05-11-12
Project Engineer:	Bob Zandipour, Design	Date 5-14-12
Project Manager:	Ken Terpstra	Date 5-11-12
FHWA Rep.:		Date
Environmental:		Date
Other (specify):		Date
Other (specify):		Date
District Prior Approval By:		Date
HQ (Issue Approve) By:		Date
Resident Engineer's Signature:	William Howe	Date 05·10·12

ESTIMATE OF COST

	THIS REQUEST	TOTAL TO DATE
ITEMS	$0.00	$0.00
FORCE ACCOUNT	$0.00	$0.00
AGREED PRICE	$0.00	$0.00
ADJUSTMENT	$0.00	$0.00
TOTAL	$0.00	$0.00

FEDERAL PARTICIPATION

☐ PARTICIPATING ☐ PARTICIPATING IN PART ☑ NONE
☐ NON-PARTICIPATING (MAINTENANCE) ☐ NON-PARTICIPATING

FEDERAL SEGREGATION (if more than one Funding Source or P.I.P. type)
☐ CCO FUNDED PER CONTRACT ☐ CCO FUNDED AS FOLLOWS

FEDERAL FUNDING SOURCE	PERCENT

ADA Notice: For individuals with sensory disabilities, this document is available in alternate formats. For information call: (916) 654-6410 or TDD (916) 654-3880 or write Records and Forms Management, 1120 N Street, MS-89, Sacramento, CA 95814.

STATE OF CALIFORNIA - DEPARTMENT OF TRANSPORTATION

CONTRACT CHANGE ORDER MEMORANDUM

DATE: 5/29/2012 Page 1 of 1

TO: Deanna Vilcheck, ACM /	FILE: E.A. 04 - 0120S4
FROM: William Howe, Senior R.E.	CO-RTE-PM SF-80-12.7/13.2
	FED. NO. NO FED AID
CCO#: 140 SUPPLEMENT#: 0 Category Code: CXXX	CONTINGENCY BALANCE (incl. this change) $68,543,820.00
COST: $50,000.00 INCREASE ☑ DECREASE ☐	HEADQUARTERS APPROVAL REQUIRED? ☐ YES ☑ NO
SUPPLEMENTAL FUNDS PROVIDED: $0.00	IS THIS REQUEST IN ACCORDANCE WITH ENVIRONMENTAL DOCUMENTS? ☑ YES ☐ NO
CCO DESCRIPTION: Cormorant Nesting Platform Enticements	**PROJECT DESCRIPTION:** YBITS-1 (Yerba Buena Island Transition Structures)

Original Contract Time:	Time Adj. This Change:	Previously Approved CCO Time Adjustments:	Percentage Time Adjusted: (including this change)	Total # of Unreconciled Deferred Time CCO(s): (including this change)
1390 Day(s)	0 Day(s)	0 Day(s)	0 %	9

THIS CHANGE ORDER PROVIDES FOR:

Provide labor, equipment and materials to provide measures to encourage cormorant nesting at the platforms located at the Bay Bridge East Span Skyway (Eastbound and Westbound).

This project, the Yerba Buena Island Transition Structure (YBITS), provides for the construction of two bridges which will connect eastbound and westbound traffic on the new east span of the San Francisco Oakland Bay Bridge (SFOBB) to the existing Yerba Buena Island (YBI) tunnel. The structures are comprised of concrete box girder bridges each approximately 50 meters high and 450 meters in length. As part of the permit requirements for construction of the new East Span, steel platforms have been constructed as a nesting site for the cormorant colony population which currently nests on the exiting East Span, which is to be demolished upon the completion of the new bridge. Cormorants are a migratory fish-eating bird. To date (the Skyway construction contract was accepted in 2008), none of the cormorants have moved to their new home, they still nest on the old bridge. In order to encourage some of the cormorants to relocate prior to the demolition of the old bridge, the Department's environmental group has determined that it would be beneficial to implement a number of measures to attract the cormorants to the new location. Potential measures will include building nesting boxes that will be set on the platforms; filling the nesting boxes with nest building materials; putting attractive scents and using recorded bird calls at the platform locations.

The work shall be performed as Extra Work at Force Account at an estimated cost of $50,000.00 which will be financed from the contract's contingency funds. A cost analysis is on file.

This CCO was requested by Brian Maroney, Chief Toll Design, on May 21,2012.

No adjustment of contract time is warranted as the work will not affect the controlling operation.

Maintenance concurrence will be obtained as this will be a part of the permanent structure.

CONCURRED BY:		
Construction Engineer:	William Howe	Date 05-29-12
Bridge Engineer:	Mehran Ardakanian	Date
Project Engineer:	Bob Zandipour, Design	Date 5-31-12
Project Manager:	Ken Terpstra	Date 5-30-12
FHWA Rep.:		Date
Environmental:		Date
Other (specify):	Brian Maroney, Chief, Toll Design	Date 5/21/12
Other (specify):	Lina Ellis, Mtce.	Date 6-6-12
District Prior Approval By:		Date
HQ (Issue Approve) By:		Date
Resident Engineer's Signature:	William Howe	Date 05-29-12

ESTIMATE OF COST

	THIS REQUEST	TOTAL TO DATE
ITEMS	$0.00	$0.00
FORCE ACCOUNT	$50,000.00	$50,000.00
AGREED PRICE	$0.00	$0.00
ADJUSTMENT	$0.00	$0.00
TOTAL	$50,000.00	$50,000.00

FEDERAL PARTICIPATION

☐ PARTICIPATING ☐ PARTICIPATING IN PART ☑ NONE
☐ NON-PARTICIPATING (MAINTENANCE) ☐ NON-PARTICIPATING

FEDERAL SEGREGATION (if more than one Funding Source or P.I.P. type)
☐ CCO FUNDED PER CONTRACT ☐ CCO FUNDED AS FOLLOWS

FEDERAL FUNDING SOURCE	PERCENT

ADA Notice: For individuals with sensory disabilities, this document is available in alternate formats. For information call (916) 654-6410 or TDD (916) 651-6880 or write Records and Forms Management, 1120 N Street, MS-89, Sacramento, CA 95814.

STATE OF CALIFORNIA - DEPARTMENT OF TRANSPORTATION

CONTRACT CHANGE ORDER

Change Requested by: Engineer

CCO 122	Suppl. No. 0	Contract No. 04 - 0120S4	Road SF-80-12.7/13.2	FED. AID LOC.: NO FED AID

To: **M C M CONSTRUCTION INC**

You are directed to make the following changes from the plans and specifications or do the following described work not included in the plans and specifications for this contract. ***NOTE: This change order is not effective until approved by the Engineer.***

Description of work to be done, estimate of quantities and prices to be paid. (Segregate between additional work at contract price, agreed price and force account.) Unless otherwise stated, rates for rental of equipment cover only such time as equipment is actually used and no allowance will be made for idle time. This last percentage shown is the net accumulated increase or decrease from the original quantity in the Engineer's Estimate.

Extra Work at Force Account:

As directed by the Engineer, maintain the temporary crossover bridge (Acrow bridge) spanning between the eastbound and westbound Skyway structures (Bridges No. 34-0006 R/L) and perform other work on the Skyway.

Maintaining the temporary crossover bridge (Acrow bridge) will include placing high visibility markers, perform work to secure it in place, and other work as directed by the Engineer.

Work on the Skyway will be directed by the Engineer and may include maintaining the cables on top of the barrier rail, maintaining the water-filled barriers, and other work as directed by the Engineer.

This work will be paid for in accordance with Section 5-1.17, "Force Account Payment", of the Special Provisions, and Section 4-1.03D, "Extra Work", of the Standard Specifications.

Estimated Cost of Extra Work at Force Account = $80,000.00

Estimated Cost: **Increase** ☑ **Decrease** ☐ **$80,000.00**

By reason of this order the time of completion will be adjusted as follows: 0 days

Submitted by		
Signature William Howe	**Resident Engineer** William Howe, Senior R.E.	**Date** 03-06-12
Approval Recommended by		
Signature Deanna Vilcheck	**Area Construction Manager** Deanna Vilcheck	**Date** 3/6/12
Engineer Approval by		
Signature Michael Fouss FOR	**Area Construction Manager** Deanna Vilcheck	**Date** 3/15/12

We the undersigned contractor, have given careful consideration to the change proposed and agree, if this proposal is approved, that we will provide all equipment, furnish the materials, except as may otherwise be noted above, and perform all services necessary for the work above specified, and will accept as full payment therefor the prices shown above.

NOTE: If you, the contractor, do not sign acceptance of this order, your attention is directed to the requirements of the specifications as to proceeding with the ordered work and filing a written protest within the time therein specified.

Contractor Acceptance by		
Signature	**(Print name and title)** Edmundo A. Ruchi - Treasurer	**Date** 3-12-2012

RECEIVED MAR 15 2012

DEPARTMENT OF TRANSPORTATION - District 4

Department of Transportation
325 Burma Road
Oakland, CA 94607
Telephone (510) 622-4200 Facsimile (510)622-4266

Caltrans

LETTER OF TRANSMITTAL No. 485

TO: MCM CONSTRUCTION INC. 6413 32nd St. North Highlands, Ca. 95660 ATTN: Richard McCall	DATE: 10/5/2012 EA #: 04-0120S4 04-SF-80-12.7/13.2 YBITS-1

Enclosed please find the following items:

- [X] CONTRACT CHANGE ORDER
- [ ] PROGRESS PAYMENT
- [ ] PLANS
- [ ] SHOP DRAWINGS
- [ ] OTHER
- [ ] COPY OF LETTER
- [ ] SPECIFICATIONS
- [ ] CERTIFIED PAYROLL
- [ ] SUBMITTALS
- [ ] OTHERS - SURVEY STAKING REQUEST
- [ ] WEEKLY STATEMENT OF WORKING DAYS WEEK ENDING:
- [ ] DAILY EXTRA WORK REPORT(S) CCO #: REPORT #:

COPIES	DATE	NO.	DESCRIPTION
1	10/5/2012	123 SO	ELECTRICAL - EB SERVICE PLATFORM

These are transmitted as checked below:

- [ ] FOR APPROVAL OR ACTION
- [ ] FOR YOUR FILES
- [ ] FOR REVIEW & COMMENT
- [ ] SIGN & RETURN BOTH COPIES
- [ ] SIGN & RETURN SIGNED COPY
- [ ] RETURNED SIGNED AS REQUESTED
- [ ] RETURNED FOR CORRECTIONS
- [X] APPROVED AS NOTED
- [ ] SEE REMARKS BELOW

REMARKS:

FROM:
- [ ] WILLIAM HOWE, (510) 385-7084
- [ ]
- [X] LINDA TRUDELL, (510) 622-4210
- [ ] BHALINDER PANDHER, (510) 867-6010

COPY TO: 05.21, 49.123 SO

SIGNED: Linda Trudell

TITLE: Office Engineer

COPY

STATE OF CALIFORNIA - DEPARTMENT OF TRANSPORTATION

CONTRACT CHANGE ORDER

Change Requested by: Engineer

CCO 123	Suppl. No. 0	Contract No. 04 - 0120S4	Road SF-80-12.7/13.2	FED. AID LOC.: NO FED AID

To: M C M CONSTRUCTION INC

You are directed to make the following changes from the plans and specifications or do the following described work not included in the plans and specifications for this contract. ***NOTE: This change order is not effective until approved by the Engineer.***

Description of work to be done, estimate of quantities and prices to be paid. (Segregate between additional work at contract price, agreed price and force account.) Unless otherwise stated, rates for rental of equipment cover only such time as equipment is actually used and no allowance will be made for idle time. This last percentage shown is the net accumulated increase or decrease from the original quantity in the Engineer's Estimate.

Adjustment of Compensation at Lump Sum:

Compensate the Contractor for the additional costs required to construct revisions to the YBITS electrical system, including eastbound service platform 1E revisions, Hinge W10AL and W11R revisions, SCADA termination and wiring revisions at the Yerba Buena Island Substation, conduit routing revisions at eastbound Bent W4R, and other changes, per revised and new drawings 131R2, 159R2, 162R1, 185R3, 209R2, 224R1, 226R1, 236R2, 237R3, 249R2, 251R1, 257A, 261A, 261B, 262A, 262B, 262C, 401R2, 402R2, 432R1, 436R1, 437R1 and 449R1 (attached Sheets 2 through 24 of this change order).

For this work, the Contractor will be paid the sum of $47,880.00. This sum constitutes full and complete compensation, including all markups for this change.

Adjustment of Compensation at Agreed Lump Sum = $47,880.00

Estimated Cost: Increase ☑ Decrease ☐ **$47,880.00**

By reason of this order the time of completion will be adjusted as follows: 0 days

Submitted by		
Signature William Howe	Resident Engineer William Howe, Senior R.E.	Date 08-27-12
Approval Recommended by		
Signature William Howe	Senior Resident Engineer William Howe	Date 08-27-12
Engineer Approval by		
Signature William Howe	Senior Resident Engineer William Howe	Date 09-18-12

We the undersigned contractor, have given careful consideration to the change proposed and agree, if this proposal is approved, that we will provide all equipment, furnish the materials, except as may otherwise be noted above, and perform all services necessary for the work above specified, and will accept as full payment therefor the prices shown above.

NOTE: If you, the contractor, do not sign acceptance of this order, your attention is directed to the requirements of the specifications as to proceeding with the ordered work and filing a written protest within the time therein specified.

Contractor Acceptance by		
Signature	(Print name and title) JAMES A. CARTER, PRESIDENT	Date 9/11/12

Dist	COUNTY	ROUTE	KILOMETER POST TOTAL PROJECT	SHEET No.	TOTAL SHEETS
04	SF	80	12.7/13.2	131 R2	806

REGISTERED ELECTRICAL ENGINEER — DATE 2/14/08

6-23-08
PLANS APPROVAL DATE

REGISTERED PROFESSIONAL ENGINEER — FADI WALIEDDINE — No. 11466 — Exp. 12/31/09 — ELECTRICAL — STATE OF CALIFORNIA

THE STATE OF CALIFORNIA OR ITS OFFICERS OR AGENTS SHALL NOT BE RESPONSIBLE FOR THE ACCURACY OR COMPLETENESS OF ELECTRONIC COPIES OF THIS PLAN SHEET.

PB AMERICAS, Inc.
A Parsons Brinckerhoff Company
303 Second St., Suite 700N
San Francisco, CA 94107-1317

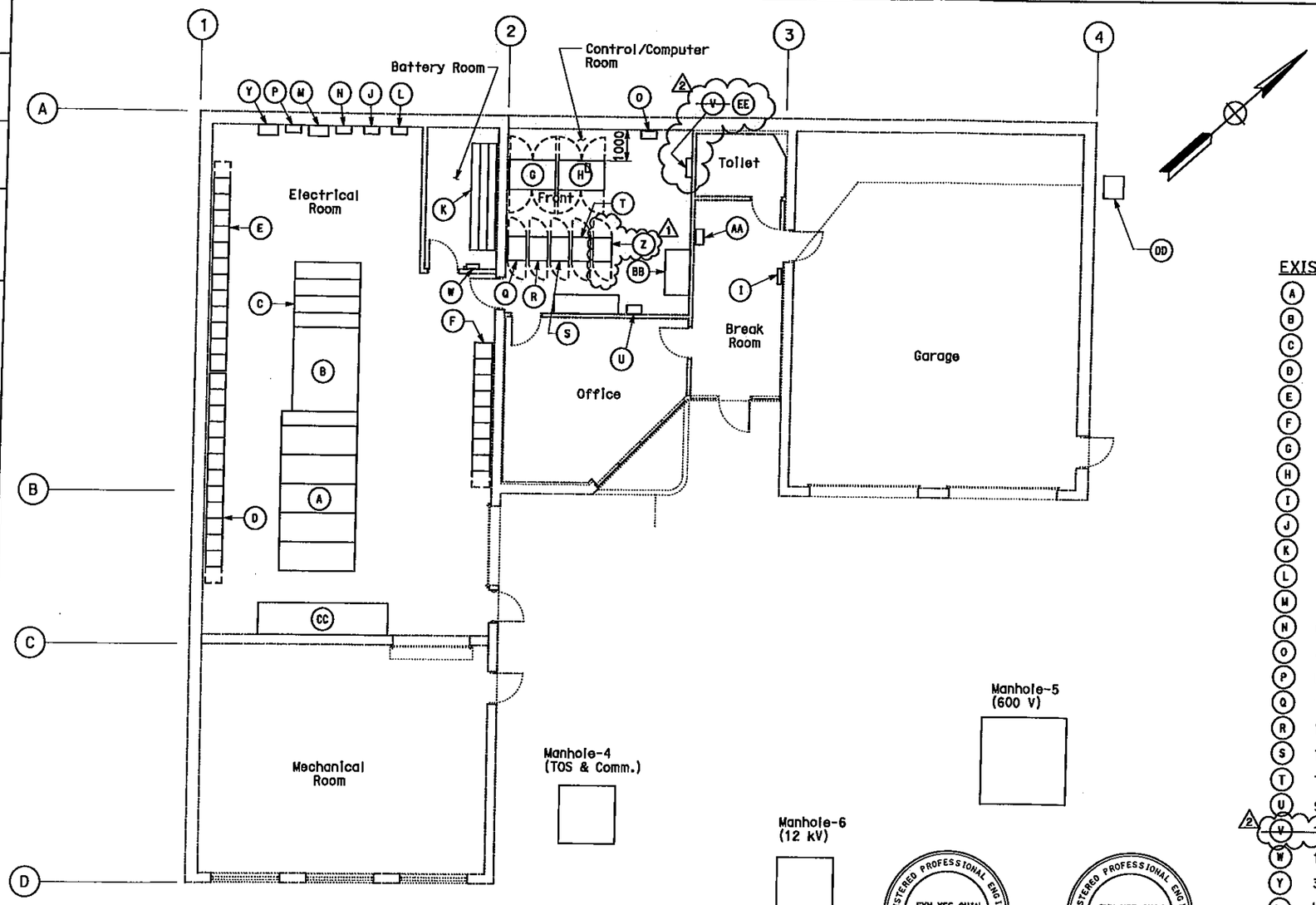

PLAN

EXISTING EQUIPMENT SCHEDULE (FOR INFORMATION ONLY):

- (A) 12.47 kV Metalclad Switchgear, 1200 A Bus, 500 MVA.
- (B) 1000 kVA Power Transformer, Dry Type 12.47 kV - 480 V, 3-phase, 3-wire.
- (C) 480 V Switchgear. 2000 A Bus, 3-phase, 3-wire.
- (D) 480 V Low Voltage Control Center (LVCC-A).
- (E) 480 V Low Voltage Control Center (LVCC-B).
- (F) 480 V Low Voltage Control Center (LVCC-C).
- (G) Remote Terminal Unit RTU #7A.
- (H) Remote Terminal Unit RTU #8A.
- (I) Security Control Panel.
- (J) Battery Charger.
- (K) 125 VDC Batteries.
- (L) 125 VDC Panel "DP-A".
- (M) 45 kVA Dry Type Transformer, 480 V - 208Y/120 V, 3-phase, 4-wire.
- (N) Lighting Panel LP-A, 208Y/120 V, 3-phase, 4-wire.
- (O) West Span Coil Box Relay Cabinet.
- (P) Utility Panel "UP-001", 208Y/120 V, 3-phase, 4-wire.
- (Q) TOS-Y01.
- (R) TOS-Y02.
- (S) TOS-Y03S (Interface Splice Cabinet).
- (T) TOS-Y04.
- (U) SCADA Communication Terminal Box #COM-YBI.
- 2 (V) ~~Telephone Backboard #TEL-YBI.~~ Replace (V) with (EE)
- (W) 125 VDC Battery Safety Switch.
- (Y) 30 kVA Dry Type Transformer, 480 V-208Y/120 V, 3-phase, 4-wire.
- (AA) Heat Pump (HP-1) Control Panel.
- (BB) Remote Terminal Unit RTU #7 (Relocated from existing YBI Substation).
- (CC) 600 V Pull Box.

NEW EQUIPMENT SCHEDULE:

- (DD) Irrigation controller. Installed on this contract.
- 1 (Z) BASE Communication Panel, BCP-YBI (990D x 597W x 1995H).
- 2 (EE) Telephone Terminal Box #TEL-YBI (refer to drawings E-143A, E-143B and E-143C).

NOTES:

1. References:
   - For substation conduit stub-ups, see sheet E-30.
   - For manhole plans and sections, see sheets E-14 and E-15.
   - For typical manhole and duct bank details, see sheet E-35.

REGISTERED PROFESSIONAL ENGINEER — SYN YEE CHIN — No. 18186 — Exp. 09/30/2011 — ELECTRICAL — STATE OF CALIFORNIA
Syn Yee Chin
FOR REVISION ONLY 1

REGISTERED PROFESSIONAL ENGINEER — SYN YEE CHIN — No. 18186 — Exp. 09/30/2013 — ELECTRICAL — STATE OF CALIFORNIA
Syn Yee Chin
FOR REVISION ONLY 2

MARK	DATE	DESCRIPTIONS	BY	CH'D
2	05/02/12	TEL-YBI Replacement	JE	SYC
1	07/15/11	B.A.S.E. Trunkline	RB	WB

REVISIONS

CONTRACT CHANGE ORDER NO. 123
SHEET 2 OF 24

DETAILS
UNDERGROUND
YBI SUBSTATION EQUIPMENT ARRANGEMENT
SCALE: 1:75

E-12

STATE OF CALIFORNIA - DEPARTMENT OF TRANSPORTATION — Caltrans
CONSULTANT FUNCTIONAL SUPERVISOR: BEHZAD GOLEMOHAMMADI
CALCULATED-DESIGNED BY: AB — CHECKED BY: FK — REVISED BY — DATE REVISED

THIS PLAN ACCURATE FOR ELECTRICAL WORK ONLY.

ALL DIMENSIONS ARE IN MILLIMETERS UNLESS OTHERWISE SHOWN

BORDER LAST REVISED 7/1/2007 — RELATIVE BORDER SCALE IS IN MILLIMETERS 0 20 40 60 80 — USERNAME => lloriga — DGN FILE => 40120sug012R02.dgn — CU 04251 — EA 012051

LAST REVISION 00-00-00 — DATE PLOTTED => 03-MAY-2012 — TIME PLOTTED => 13:38

Dist	COUNTY	ROUTE	KILOMETER POST TOTAL PROJECT	SHEET No.	TOTAL SHEETS
04	SF	80	12.7/13.2	159 R2	806

REGISTERED ELECTRICAL ENGINEER 2/14/08 DATE

6-23-08
PLANS APPROVAL DATE

REGISTERED PROFESSIONAL ENGINEER FADI WALIEDDINE No. 11865 Exp. 12/31/09 ELECTRICAL STATE OF CALIFORNIA

THE STATE OF CALIFORNIA OR ITS OFFICERS OR AGENTS SHALL NOT BE RESPONSIBLE FOR THE ACCURACY OR COMPLETENESS OF ELECTRONIC COPIES OF THIS PLAN SHEET.

PB AMERICAS, Inc.
A Parsons Brinckerhoff Company
303 Second St., Suite 700N
San Francisco, CA 94107-1317

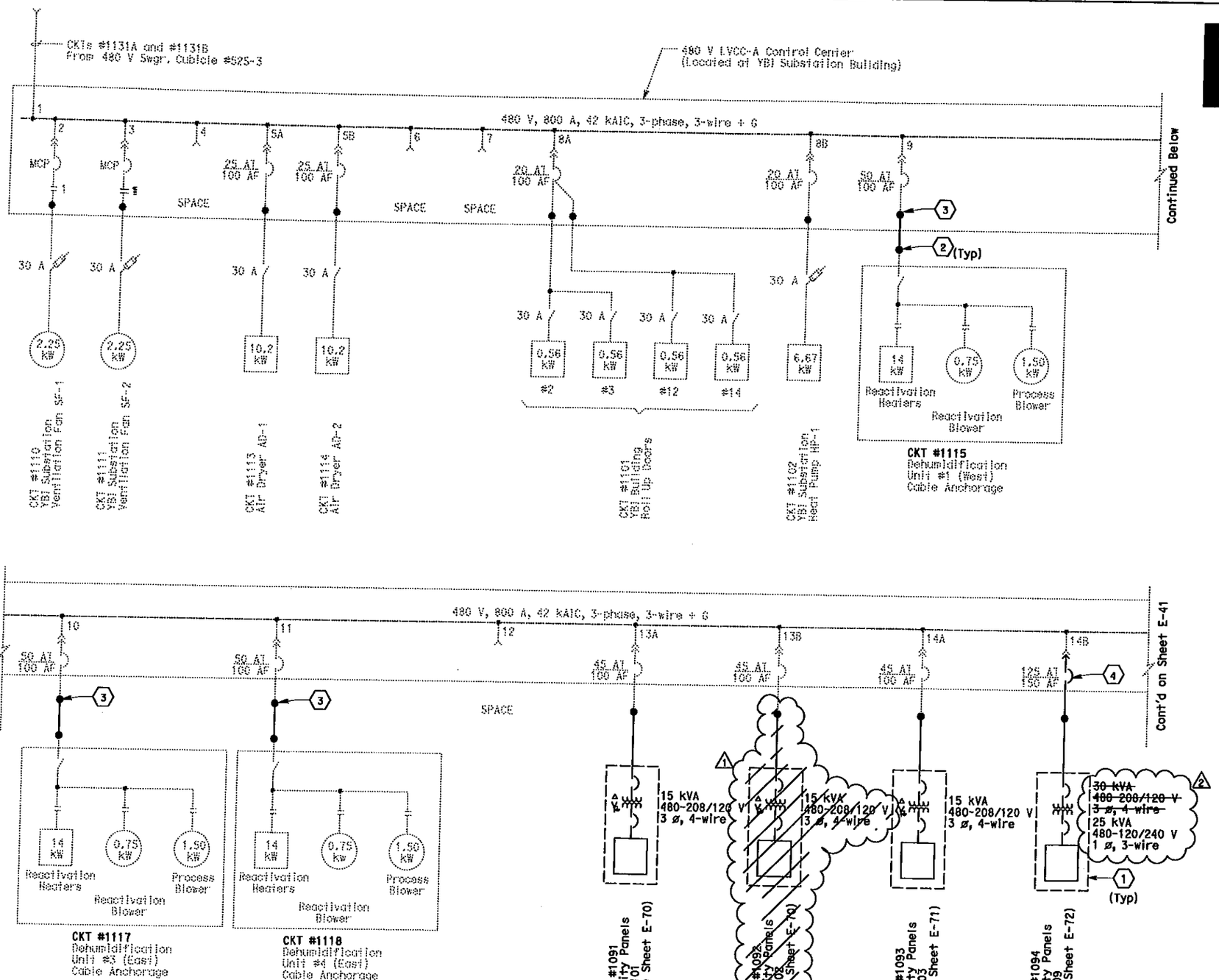

SHEET NOTES:

1. Enclosed in three stainless steel enclosures located on the service platform.
2. Conductors spliced inside Manhole-25, shall be moisture and water tight.
3. Provide appropriate connections for oversize feeder conductors.
4. Change to a three pole breaker.

NOTES:

1. Only heavy lines are part of this contract (04-0120S4).

REGISTERED PROFESSIONAL ENGINEER SYN YEE CHIN No. 18185 Exp. 09/30/2011 ELECTRICAL STATE OF CALIFORNIA

Syn Yee Chin
FOR REVISION ONLY 1

REGISTERED PROFESSIONAL ENGINEER SYN YEE CHIN No. 18185 Exp. 09/30/2013 ELECTRICAL STATE OF CALIFORNIA

Syn Yee Chin
FOR REVISION ONLY 2

MARK	DATE	DESCRIPTIONS	BY	CH'D
2	06/28/12	CHANGE TRANSFORMER TYPE AND RELOCATE	LB	EJL
1	11/22/10	ELIMINATION OF SERVICE PLATFORM AT W5L	RR	RG

REVISIONS

CONTRACT CHANGE ORDER NO. 123
SHEET 3 OF 24

DETAILS
UNDERGROUND (ELECTRICAL DUCT BANK)
(480 V LVCC-A SINGLE LINE DIAGRAM)

NO SCALE

E-40

THIS PLAN ACCURATE FOR ELECTRICAL WORK ONLY.

STATE OF CALIFORNIA - DEPARTMENT OF TRANSPORTATION
Caltrans

CONSULTANT FUNCTIONAL SUPERVISOR: BEHZAD GOLEMOHAMMADI
CALCULATED-DESIGNED BY: AB
CHECKED BY: FK
REVISED BY
DATE REVISED

LAST REVISION 06-28-12
DATE PLOTTED => 28-JUN-2012
TIME PLOTTED => 16:46

Dist	COUNTY	ROUTE	KILOMETER POST TOTAL PROJECT	SHEET No.	TOTAL SHEETS
04	SF	80	12.7/13.2	162 R1	806

REGISTERED ELECTRICAL ENGINEER — DATE 2/14/08

6-23-08
PLANS APPROVAL DATE

REGISTERED PROFESSIONAL ENGINEER — FADI WALIEDDINE — No. 11365 — Exp. 12/31/09 — ELECTRICAL — STATE OF CALIFORNIA

THE STATE OF CALIFORNIA OR ITS OFFICERS OR AGENTS SHALL NOT BE RESPONSIBLE FOR THE ACCURACY OR COMPLETENESS OF ELECTRONIC COPIES OF THIS PLAN SHEET.

PB AMERICAS, Inc.
A Parsons Brinckerhoff Company
303 Second St., Suite 700N
San Francisco, CA 94107-1317

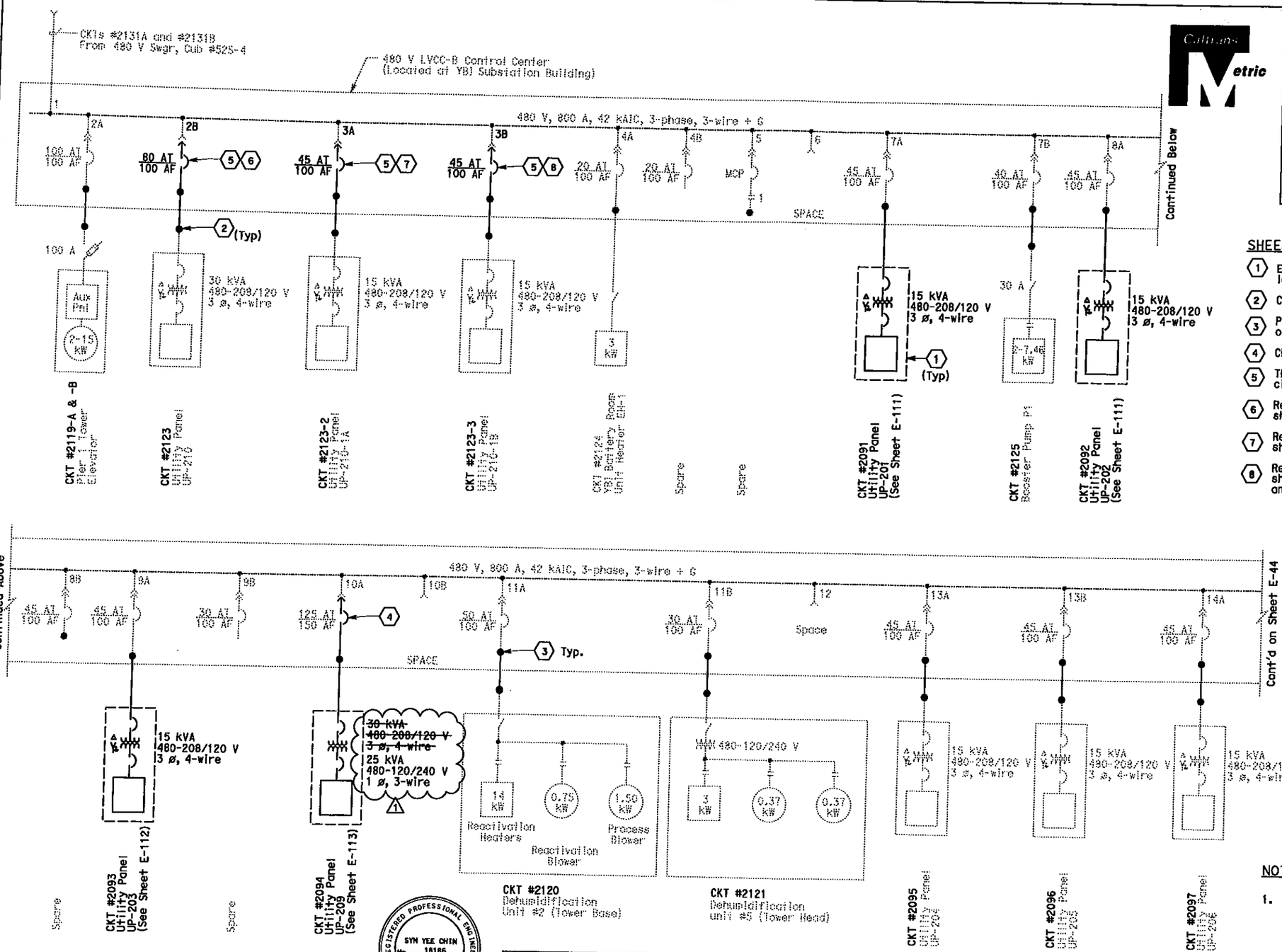

SHEET NOTES:

1. Enclosed in three stainless steel enclosures located on the service platform.
2. Conductors spliced inside Manhole-25.
3. Provide appropriate connections for oversize feeder conductors.
4. Change to a three pole breaker.
5. The Contractor to remove existing circuit breaker at cubicle 2B, 3A and 3B.
6. Removed circuit breaker at cubicle 3A shall be re-installed at cubicle 2B.
7. Removed circuit breaker at cubicle 2B shall be re-installed at cubicle 3A.
8. Removed circuit breaker at cubicle 3B shall be spare. The Contractor shall purchase and install new circuit breaker as indicated.

NOTES:

1. Only heavy lines are part of this contract (04-0120S4).

REGISTERED PROFESSIONAL ENGINEER — SYN YEE CHIN — No. 18186 — Exp. 09/30/2013 — ELECTRICAL — STATE OF CALIFORNIA

Syn Yee Chin
FOR REVISION ONLY
1

MARK	DATE	DESCRIPTIONS	BY	CH'D
1	06/28/12	CHANGE TRANSFORMER TYPE AND RELOCATE	LB	EJL

REVISIONS

CONTRACT CHANGE ORDER NO. 123
SHEET 4 OF 24

DETAILS
UNDERGROUND (ELECTRICAL DUCT BANK)
(480 V LVCC-B SINGLE LINE DIAGRAM)

NO SCALE

E-43

STATE OF CALIFORNIA - DEPARTMENT OF TRANSPORTATION
Caltrans

CONSULTANT FUNCTIONAL SUPERVISOR: BEHZAD GOLEMOHAMMADI
CALCULATED-DESIGNED BY: AB
CHECKED BY: FK
REVISED BY
DATE REVISED

THIS PLAN ACCURATE FOR ELECTRICAL WORK ONLY.

BORDER LAST REVISED 7/4/2007
IS IN MILLIMETERS
USERNAME => florico
DGN FILE => 40120sua043R01.dgn
CU 04251
EA 0120S1

LAST REVISION 06-28-12
DATE PLOTTED => 28-JUN-2012
TIME PLOTTED => 16:46

Dist	COUNTY	ROUTE	KILOMETER POST TOTAL PROJECT	SHEET No.	TOTAL SHEETS
04	SF	80	12.7/13.2	185 R3	806

REGISTERED ELECTRICAL ENGINEER 2/14/08

6-23-08
PLANS APPROVAL DATE

THE STATE OF CALIFORNIA OR ITS OFFICERS OR AGENTS SHALL NOT BE RESPONSIBLE FOR THE ACCURACY OR COMPLETENESS OF ELECTRONIC COPIES OF THIS PLAN SHEET.

REGISTERED PROFESSIONAL ENGINEER FADI WALIEDDINE No. 11465 Exp. 12/31/09 ELECTRICAL STATE OF CALIFORNIA

PB AMERICAS, Inc.
A Parsons Brinckerhoff Company
303 Second St., Suite 700N
San Francisco, CA 94107-1317

REGISTERED PROFESSIONAL ENGINEER DAVID H. OTO No. 10699 Exp. 06/30/2013 ELECTRICAL STATE OF CALIFORNIA

MARK	DATE	DESCRIPTIONS	BY	CH'D
3	06/28/12	CHANGE TRANSFORMER TYPE AND RELOCATE	LB	EJL
2	01/17/12	ADDITIONAL ELECTRICAL CONDUIT & PULL BOXES @ BENT W5L, PLATFORM 3W & HINGE W7LA	RG	DO
1	03/30/11	YBITS WB FRAME 2 CITY RAMP REVISION	TW RR	RG

REVISIONS

CONTRACT CHANGE ORDER NO. 123
SHEET 5 OF 24

SHEET NOTES:

1. The contractor to locate to suit site conditions.
2. Equipment dimensions and sizes shown shall be verified by the contractor prior to installation.
3. For conduit routing in electrical vault and TOS/COM vault see Sheet E-83.
4. Install 610 mm solid bottom tray with cover for routing TOS/COM cables.
5. Install 610 mm ladder type tray for routing 600 V rated cables.
6. Install pull irons in all vaults, cast in each end wall.
7. Install 41 mm (F) conduit from (PB-F) to Pole 1023-3 for future CCTV (C#16).
8. Connect to transformer neutral. See panel schedule.

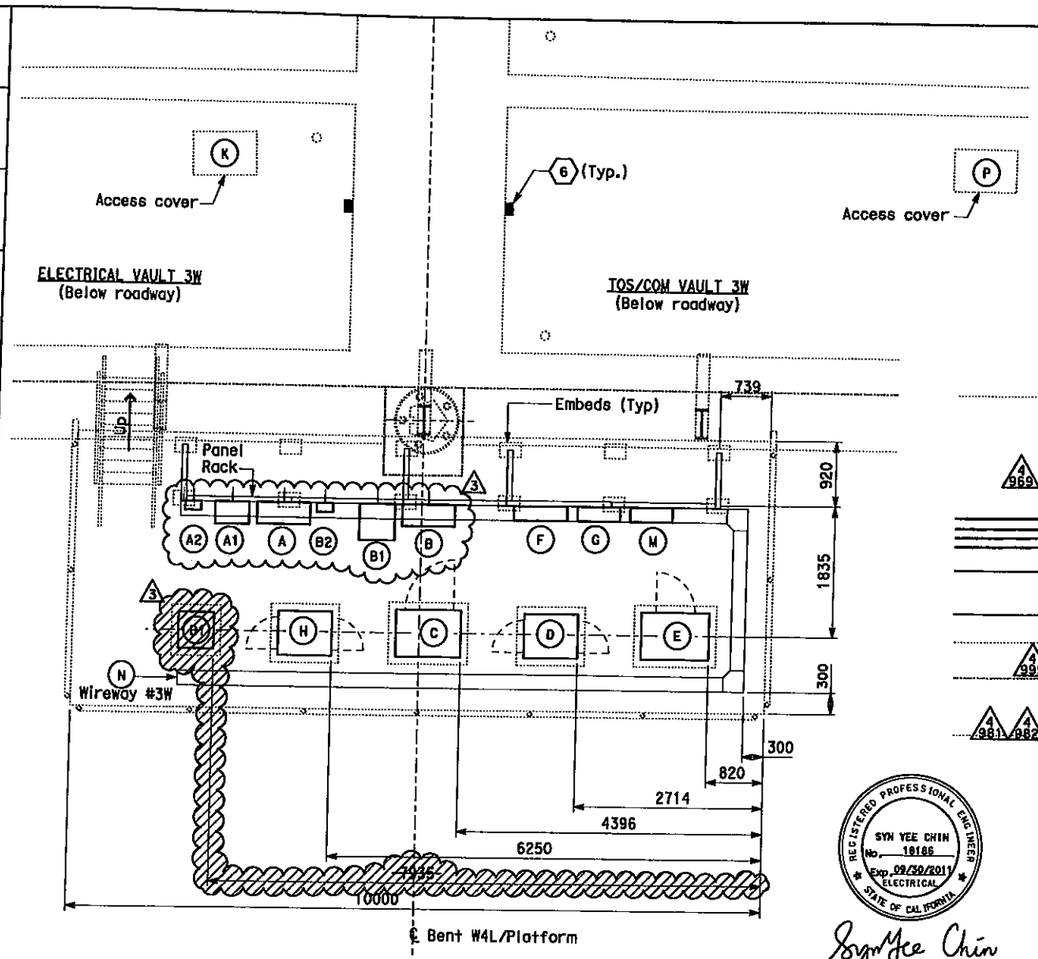

SERVICE PLATFORM #3W EQUIPMENT ARRANGEMENT PLAN (2)

SCALE: 1:40

SYN YEE CHIN REGISTERED PROFESSIONAL ENGINEER No. 19186 Exp. 09/30/2011 ELECTRICAL STATE OF CALIFORNIA

Syn Yee Chin
FOR REVISION ONLY (1)

FOR REVISION ONLY (2)(3)

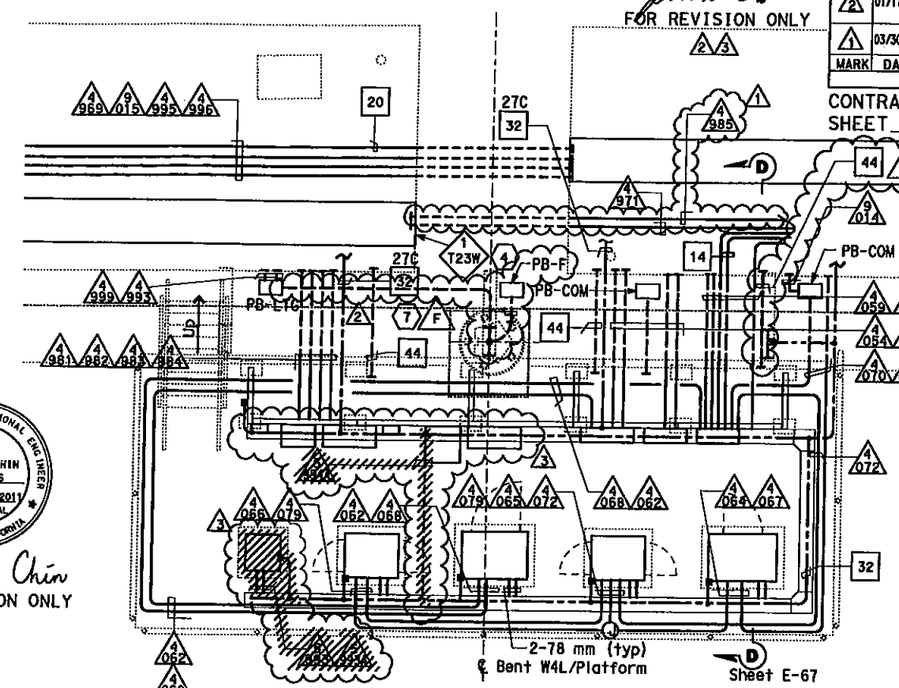

CONDUIT AND GROUNDING PLAN - WB (3)

SCALE: 1:40

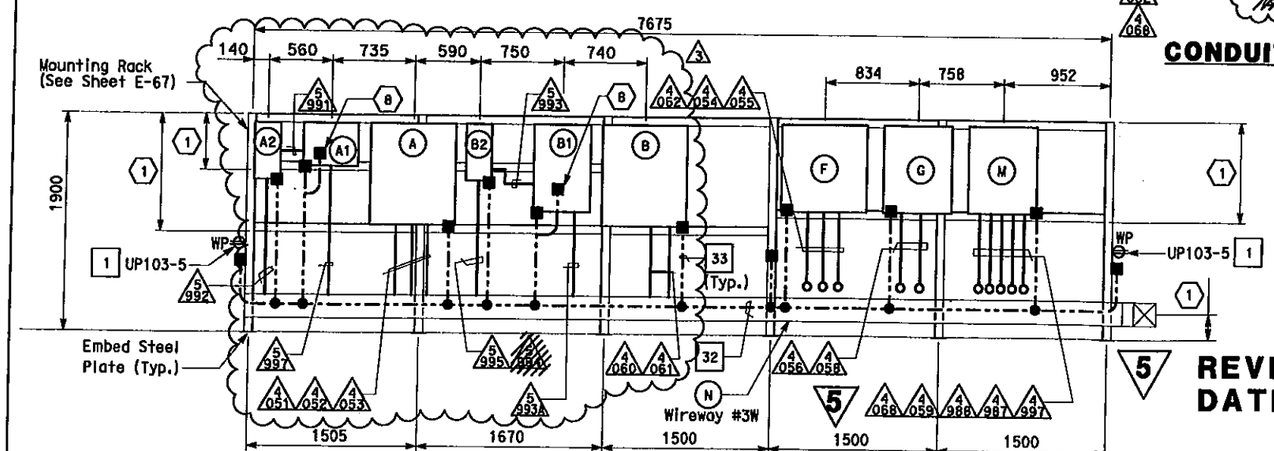

PANEL RACK - ELEVATION

SCALE: 1:25

NOTES:

1. For pull box schedule, refer to sheet E-69.
2. Conduit openings and locations through diaphragm, refer to structures sheets.
3. For details of embedd steel plates, refer to AS sheets.
4. Ground conductor routed outside or exposed shall be green insulated.
5. Conduits terminating inside vaults shall be provided with ground insulated bushing connected to ground bar.

EQUIPMENT SCHEDULE: (2)

- (A) Utility Panel UP-103, 208/120 V, (PB-8A).
- (A1) 15 kVA Transformer, 480 V (Nema 4X) Size: 375 H x 485 W x 311 D.
- (A2) ~~480 V, Enclosed Molded Case Ckt. Bkr. Size: 495 H x 232 W x 124 D.~~ (3)
- (B) Utility Panel. UP-109, 120/240 V (PB-8A).
- (B1) 25 kVA Transformer, 480 V (Nema 4X) Size: 762 H x 508 W x 508 D.
- (B2) ~~480 V, Enclosed Molded Case Ckt. Bkr. Size: 495 H x 232 W x 124 D.~~ (3)
- (C) Remote Terminal Unit RTU #09W Size: 1830 H x 940 W x 610 D.
- (D) Controller Cabinet #TOS-03WA Size: 1625 H x 615 W x 768 D.
- (E) TOS Splice Cabinet #TOS-03WS Size: 1400 H x 980 W x 660 D.
- (F) Scada Communication Terminal Box #COM-03W (PB-7B).
- (G) Telephone Terminal Box #TEL-03W (PB-7C).
- (H) Controller Cabinet #TOS-03WB Size: 1625 H x 615 W x 768 D.
- (M) PB-2B Mounted on panel rack.
- (N) 600 V, Wireway #3W (Nema 4X) 203 H x 203 W.

MISCELLANEOUS

- (K) Deck Utility access opening and cover. Engraving "ELECTRICAL VAULT 3W". Refer to structures plan sheets, miscellaneous superstructure details No. 2.
- (P) Deck Utility access opening and cover. Engraving "TOS/COM VAULT 3W". Refer to structures plan sheets, miscellaneous superstructure details No. 2.

(5) REVISED PER ADDENDUM No. 5 DATED JULY 30, 2009

DETAILS
YBI TRANSITION STRUCTURES ROADWAY WESTBOUND (PLATFORM 3W ARRANGEMENT AND PLAN)

SCALE AS NOTED

E-66

STATE OF CALIFORNIA - DEPARTMENT OF TRANSPORTATION
Caltrans

CONSULTANT FUNCTIONAL SUPERVISOR: BEHZAD GOLEMOHAMMADI
CALCULATED-DESIGNED BY: FK
CHECKED BY: AB
REVISED BY
DATE REVISED

THIS PLAN IS ACCURATE FOR ELECTRICAL WORK ONLY.

ALL DIMENSIONS ARE IN MILLIMETERS UNLESS OTHERWISE SHOWN

BORDER LAST REVISED 7/1/2007
RELATIVE BORDER SCALE IS IN MILLIMETERS 0 20 40 60 80
USERNAME => tlarrier
DGN FILE => 40120sua066r03.dgn
CU 04251
EA 0120S1
LAST REVISION 06-28-12
DATE PLOTTED => 28-JUN-2012
TIME PLOTTED => 16:46

Dist	COUNTY	ROUTE	KILOMETER POST TOTAL PROJECT	SHEET No.	TOTAL SHEETS
04	SF	80	12.7/13.2	209 R2	806

REGISTERED ELECTRICAL ENGINEER 2/14/08

6-23-08
PLANS APPROVAL DATE

REGISTERED PROFESSIONAL ENGINEER FADI WALIEDDINE No. 11465 Exp. 12/31/09 ELECTRICAL STATE OF CALIFORNIA

THE STATE OF CALIFORNIA OR ITS OFFICERS OR AGENTS SHALL NOT BE RESPONSIBLE FOR THE ACCURACY OR COMPLETENESS OF ELECTRONIC COPIES OF THIS PLAN SHEET.

PB AMERICAS, Inc.
A Parsons Brinckerhoff Company
303 Second St., Suite 700N
San Francisco, CA 94107-1317

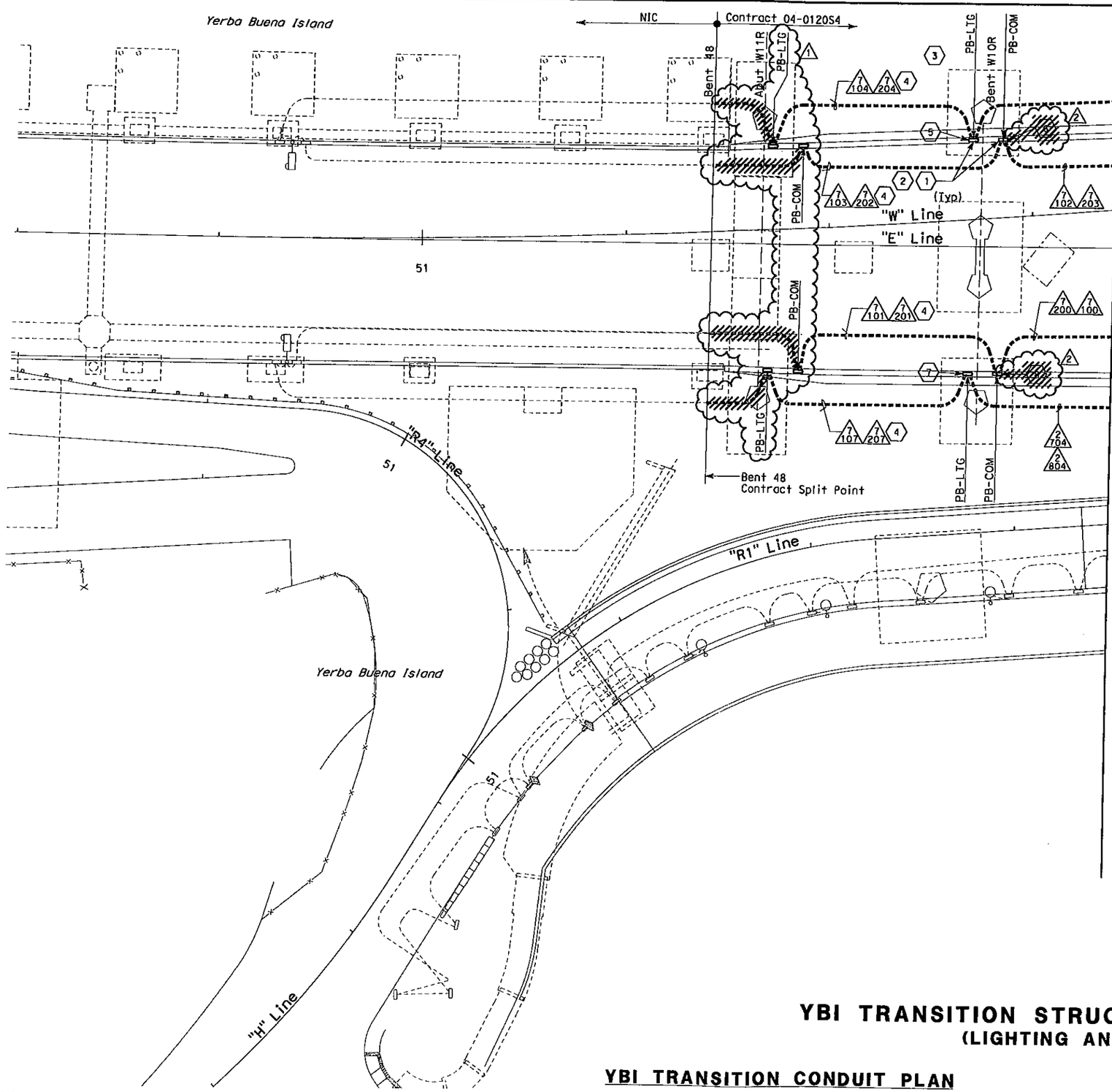

SHEET NOTES:

1. For routing of conduit in girder and crossing of roadway, see sheet E-117.
2. For conduit routing inside barriers and pole bases, see sheets E-98 thru E-100.
3. For 480 V roadway lighting wiring diagrams, see sheets E-94 and E-95.
4. Stub out of barrier conduits 7104, 7204, 7103, 7202, 7101, 7201, 7107 and 7207.
5. Coil 2 m for Circuit UP201-12 in PB-LTG for future splicing.
6. [illegible]
7. Coil 2 m for Circuit UP201-12 in PB-LTG for future splicing.
8. [illegible]

NOTES:

1. References:
   - For pull box schedule, see sheet E-109.

REGISTERED PROFESSIONAL ENGINEER SYN YEE CHIN No. 18186 Exp. 09/30/2013 ELECTRICAL STATE OF CALIFORNIA
FOR REVISION ONLY 1

REGISTERED PROFESSIONAL ENGINEER DAVID H. OTO No. 10699 Exp. 06/30/2013 ELECTRICAL STATE OF CALIFORNIA
FOR REVISION ONLY 2

MARK	DATE	DESCRIPTIONS	BY	CH'D
2	07/13/12	Deleted Circuits 2140 and 2168	RG	DO
1	03/30/12	Conduit Route Revision	SYC	RG

REVISIONS

CONTRACT CHANGE ORDER NO. 123
SHEET 6 OF 24

YBI TRANSITION STRUCTURES ROADWAY EASTBOUND
(LIGHTING AND ELECTRICAL SYSTEMS)

SCALE: 1:200

YBI TRANSITION CONDUIT PLAN

THIS PLAN ACCURATE FOR ELECTRICAL WORK ONLY.

ALL DIMENSIONS ARE IN METERS UNLESS OTHERWISE SHOWN

E-90

STATE OF CALIFORNIA - DEPARTMENT OF TRANSPORTATION
Caltrans

CONSULTANT FUNCTIONAL SUPERVISOR: BEHZAD GOLEMOHAMMADI
CALCULATED-DESIGNED BY: FK
CHECKED BY: AB
REVISED BY
DATE REVISED

ISL REVISION (10-00-00) DATE PLOTTED => 7/13/2012 TIME PLOTTED => 9:59:27 AM

BORDER LAST REVISED 7/1/2007
RELATIVE BORDER SCALE IS IN MILLIMETERS 0 20 40 60 80
USERNAME => [illegible]
DGN FILE => I:\13103\MS\pse\YBI Struc-Contract 1\CCO\Electrical\CCO 123 Electrical Items YBITS\40120sd09ard2.dgn

MARK	DATE	DESCRIPTIONS	BY	CH'D
1	03/21/12	Conduit and Cabinet Label Change	SYC	RG

REVISIONS

CONTRACT CHANGE ORDER NO. 123
SHEET 7 OF 24

Dist	COUNTY	ROUTE	KILOMETER POST TOTAL PROJECT	SHEET No.	TOTAL SHEETS
04	SF	80	12.7/13.2	224 R1	806

REGISTERED ELECTRICAL ENGINEER 2/14/08

6-23-08
PLANS APPROVAL DATE

REGISTERED PROFESSIONAL ENGINEER FADI WALIEDDINE No. 11868 Exp. 12/31/09 ELECTRICAL STATE OF CALIFORNIA

THE STATE OF CALIFORNIA OR ITS OFFICERS OR AGENTS SHALL NOT BE RESPONSIBLE FOR THE ACCURACY OR COMPLETENESS OF ELECTRONIC COPIES OF THIS PLAN SHEET.

PB AMERICAS, Inc.
A Parsons Brinckerhoff Company
303 Second St., Suite 700N
San Francisco, CA 94107-1317

REGISTERED PROFESSIONAL ENGINEER SYN YEE CHIN No. 18186 Exp. 09/30/2013 ELECTRICAL STATE OF CALIFORNIA

Syn Yee Chin
FOR REVISION ONLY 1

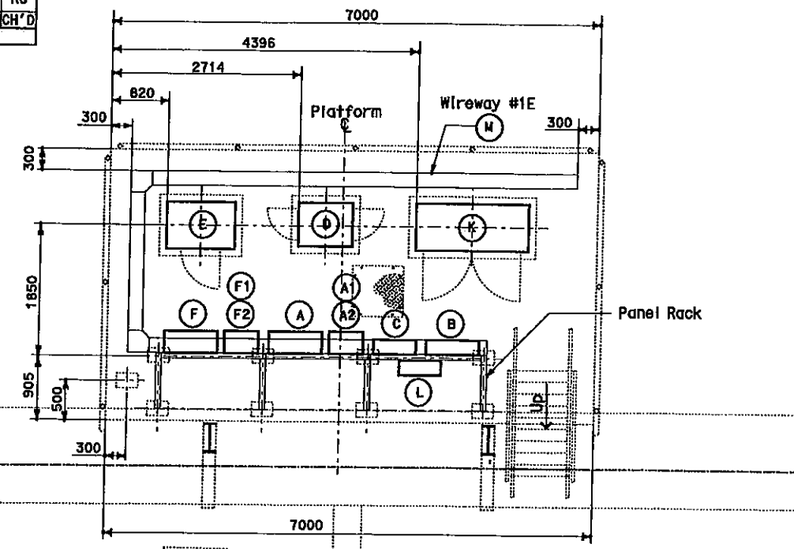

SERVICE PLATFORM #1E EQUIPMENT ARRANGEMENT PLAN 2

SCALE 1:40

5 REVISED PER ADDENDUM No. 5 DATED JULY 30, 2009

EQUIPMENT SCHEDULE: 2

- A — Utility Panel UP-201, 100 A 208/120 V, 3 Phase, 4 Wires (PB-8A).
- A1 — 15 kVA Transformer, 3 Phase, 4 Wires 480 V-208/120 V, 60 HZ. (Nema 4x) Size: 375 H x 232 W x 311 D.
- A2 — Enclosed molded case circuit braker Size: 495 H x 232 W x 124 D.
- B — Scada Communication Terminal Box #COM-01E (PB-7B).
- C — Telephone Terminal Box #TEL-01E (PB-7C).
- D — Controller Cabinet #TOS-01EA Size: 1625 H x 615 W x 768 D.
- E — TOS Splice Cabinet ~~TOS-01EW~~ TOS-01ES 1 Size: 1400 H x 980 ~~W x 660 D.~~
- F — Lighting Panel LP-216, 100 A 208/120 V, 3 Phase, 4 Wires (PB-8A).
- F1 — 15 kVA Transformer, 3 Phase, 4 Wires 480 V-208/120 V, 60 HZ. (Nema 4x) Size: 375 H x 485 W x 311 D.
- F2 — Enclosed molded case circuit breaker Size: 495 H x 232 W x 124 D.
- K — Strong Motion Recorder #1 Size: 1900 H x 1620 W x 660 D.
- L — PB-2B mounted on panel rack.
- M — 600 V Wireway #1E, (Nema 4X) 203 H x 203 W.

MISCELLANEOUS:

- G — Deck utility access opening and cover. Engraving "Electrical Vault 1E". Refer to Structures plan sheets, misc. superstructure Details No. 2".
- H — Deck utility access opening and cover. Engraving "TOS/COM 1E". Refer to Structures plan sheets, misc. superstructure Details No. 2".

SHEET NOTES:

1. The Contractor to locate to suit site conditions.
2. Equipment dimensions and sizes shown shall be verified by the Contractor prior to installation.
3. Install pull irons in all vaults, cast in each wall.
4. For conduit routing in electrical vault and TOS/COM vault, see sheet E-130.
5. Connect to transformer neutral. See panel schedule.

NOTES:

1. For pull box schedule, refer to sheet E-109.
2. Conduit openings and locations through diaphragm, refer to structures sheets.
3. For details of embedd steel plates, refer to AS sheets.
4. Ground conductor routed outside or exposed shall be green insulated.
5. Conduits terminating inside vaults shall be provided with ground insuloted bushing connected to ground bar.

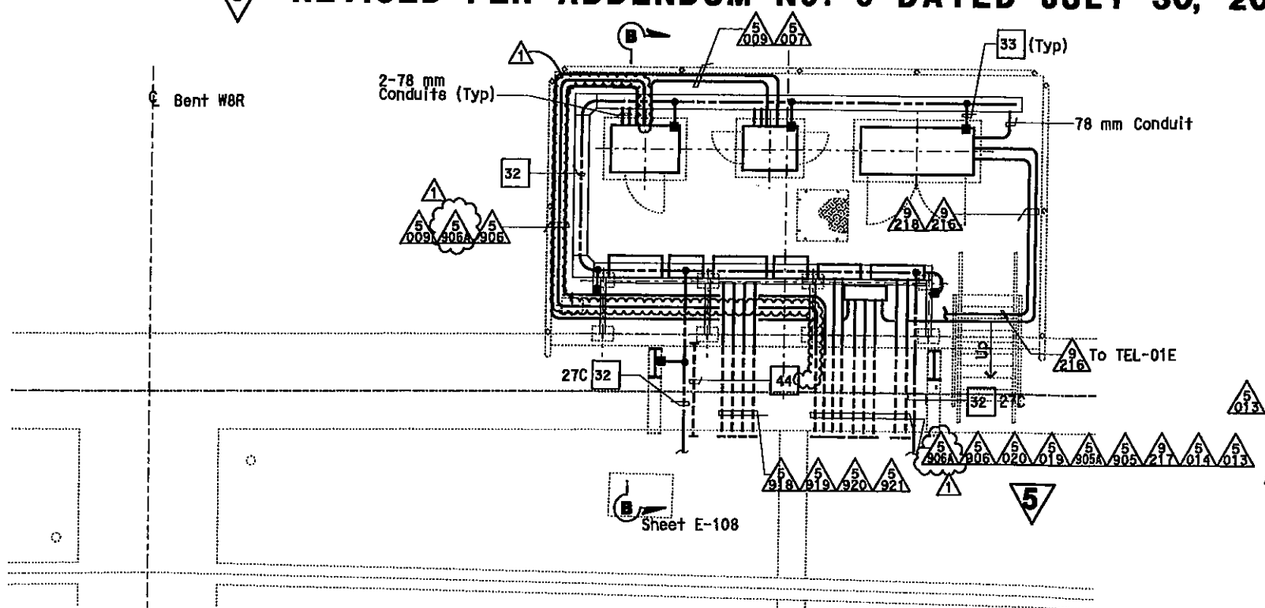

CONDUIT AND GROUNDING PLAN - EB 4

SCALE 1:40

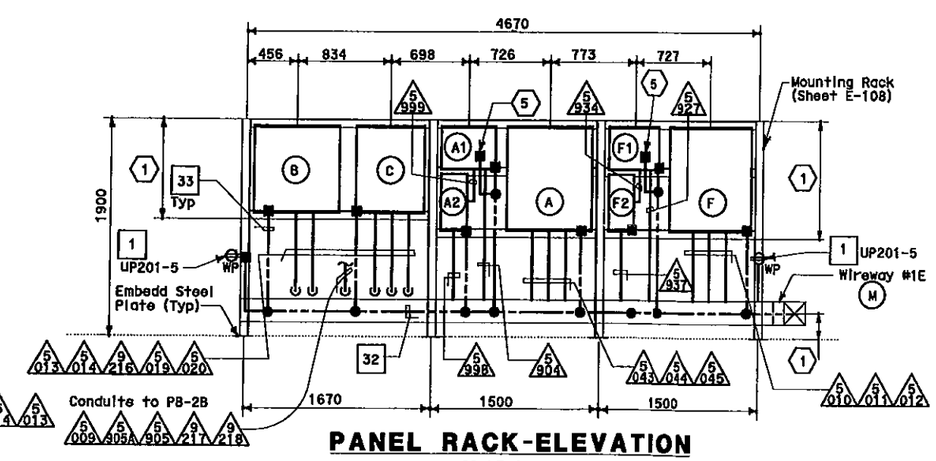

PANEL RACK-ELEVATION

SCALE 1:25

DETAILS

YBI TRANSITION STRUCTURES ROADWAY EASTBOUND (PLATFORM 1E ARRANGEMENT AND PLAN)

SCALE AS NOTED

E-105

STATE OF CALIFORNIA - DEPARTMENT OF TRANSPORTATION
Caltrans

CONSULTANT FUNCTIONAL SUPERVISOR: BEHZAD GOLEMOHAMMADI
CALCULATED-DESIGNED BY: AB
CHECKED BY: FK
REVISED BY
DATE REVISED

THIS PLAN IS ACCURATE FOR ELECTRICAL WORK ONLY.

ALL DIMENSIONS ARE IN MILLIMETERS UNLESS OTHERWISE SHOWN

BORDER LAST REVISED 01/1/2007

RELATIVE BORDER SCALE IS IN MILLIMETERS 0 20 40 60 80

USERNAME => florico
DGN FILE => 40120sua105R01.dgn

CU 04251

EA 312051

LAST REVISION 00-00-00
DATE PLOTTED => 03-APR-2012
TIME PLOTTED => 16:26

Dist	COUNTY	ROUTE	KILOMETER POST TOTAL PROJECT	SHEET No.	TOTAL SHEETS
04	SF	80	12.7/13.2	226 R1	806

REGISTERED ELECTRICAL ENGINEER 2/14/08

6-23-08
PLANS APPROVAL DATE

REGISTERED PROFESSIONAL ENGINEER FADI WALIEDDINE No. 11465 Exp. 12/31/09 ELECTRICAL STATE OF CALIFORNIA

THE STATE OF CALIFORNIA OR ITS OFFICERS OR AGENTS SHALL NOT BE RESPONSIBLE FOR THE ACCURACY OR COMPLETENESS OF ELECTRONIC COPIES OF THIS PLAN SHEET.

PB AMERICAS Inc.
A Parsons Brinckerhoff Company
303 Second St., Suite 700N
San Francisco, CA 94107-1317

SHEET NOTES:

1. The Contractor to locate to suit site conditions
2. Equipment dimensions and sizes shown shall be verified by the Contractor prior to installation.
3. Install pull irons in all vaults, cast in each wall.
4. For conduit routing in electrical vault and TOS/COM vault, see sheet E-132.
5. Connect to transformer neutral. See panel schedule.
6. Install pull irons in all vaults, cast in each end wall.
7. Install 610 mm solid bottom tray with cover for routing to TOS/COM cables.
8. Install 610 mm ladder type for routing 600 V rated cable.

NOTES:

1. For pull box schedule, refer to sheet E-109.
2. Conduit openings and locations through diaphragm, refer to structures sheets.
3. For details of embedd steel plates, refer to AS sheets.
4. Ground conductor routed outside or exposed shall be green insulated.
5. Conduits terminating inside vaults shall be provided with ground insulated bushing connected to ground bar.

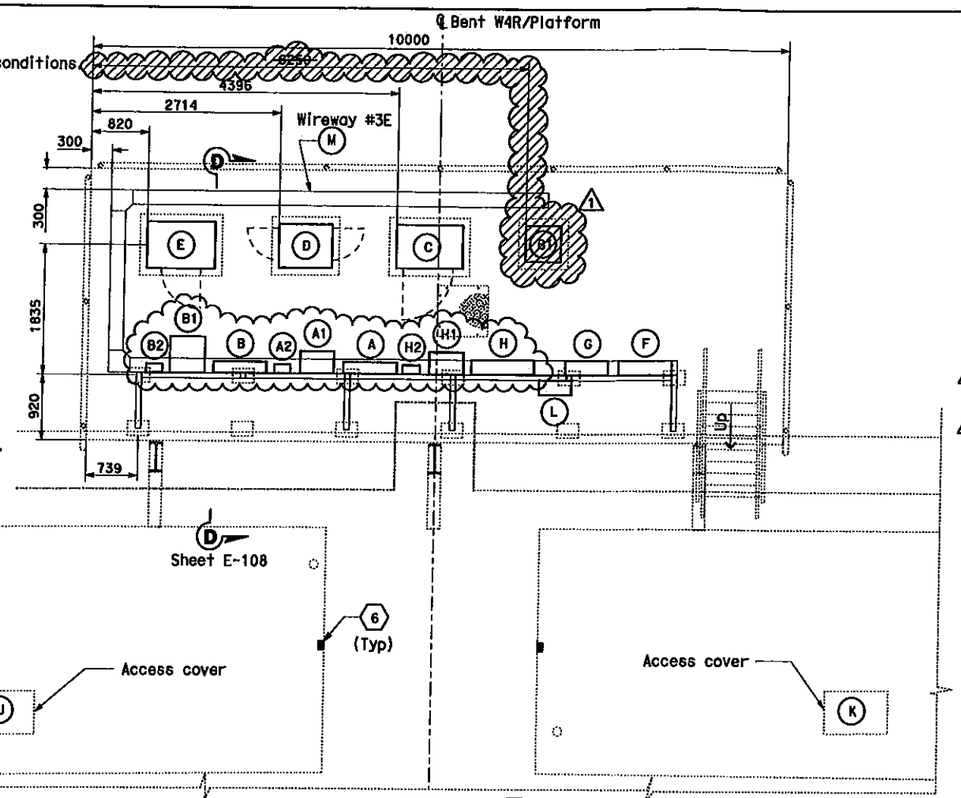

SERVICE PLATFORM #3E (2)
EQUIPMENT ARRANGEMENT PLAN
SCALE: 1:40

EQUIPMENT SCHEDULE: (2)

- (A) Utility Panel UP-203, 100 A 208/120 V, 3 Phase, (PB-8A).
- (A1) 15 kVA Transformer, 3 Phase, 4 Wires 480 V-208/120 V, 60 Hz: (Nema 4X) Size: 375 H x 485 W x 311 D.
- (A2) Enclosed molded case circuit breaker Size: 495 H x 232 W x 124 D.
- (B) Utility Panel UP-209, 100 A 120/240 V, 1 Phase, 3 Wires (PB-8A). (1)
- (B1) 25 kVA Transformer, 1 Phase, 480 V-120/240 V, 60 Hz: (Nema 4X) Size: 762 H x 508 W x 508 D. (1)
- (B2) Enclosed molded case circuit breaker Size: 495 H x 232 W x 124 D.
- (C) Remote Terminal Unit RTU #09E Size: 1830 H x 940 W x 610 D.
- (D) Controller Cabinet #TOS-03EA Size: 1625 H x 615 W x 768 D.
- (E) TOS Splice Cabinet TOS-03ES Size: 1400 H x 980 W x 660 D.
- (F) Scada Communication Terminal Box #COM-03E (PB-7B).
- (G) Telephone Terminal Box #TEL=03E (PB-7C).
- (H) Lighting Panel LP-218, 100 A 208/120 V, 3 Phase, 4 Wires (PB-8A).
- (H1) 15 kVA Transformer, 3 Phase, 4 Wires 480 V-208/120 V, 60 Hz: (Nema 4X) Size: 375 H x 485 W x 311 D.
- (H2) Enclosed molded case circuit breaker Size: 495 H x 232 W x 124 D.
- (L) PB-2B, mounted on panel rack.
- (M) 600 V, Wireway #3E, (Nema 4X) 203 H X 203 W.

MISCELLANEOUS:

- (J) Deck utility access opening and cover. Engraving "ELECTRICAL VAULT 3E". Refer to Structures plan sheet, miscellaneous superstucture details No. 2.
- (K) Deck utility access opening and cover. Engraving "TOS/COM VAULT 3E". Refer to Structures plan sheet, miscellaneous superstucture details No. 2.

MARK	DATE	DESCRIPTIONS	BY	CH'D
1	06/28/12	CHANGE TRANSFORMER TYPE AND RELOCATE	LB	EJL

REVISIONS

CONTRACT CHANGE ORDER NO. 123
SHEET 8 OF 24

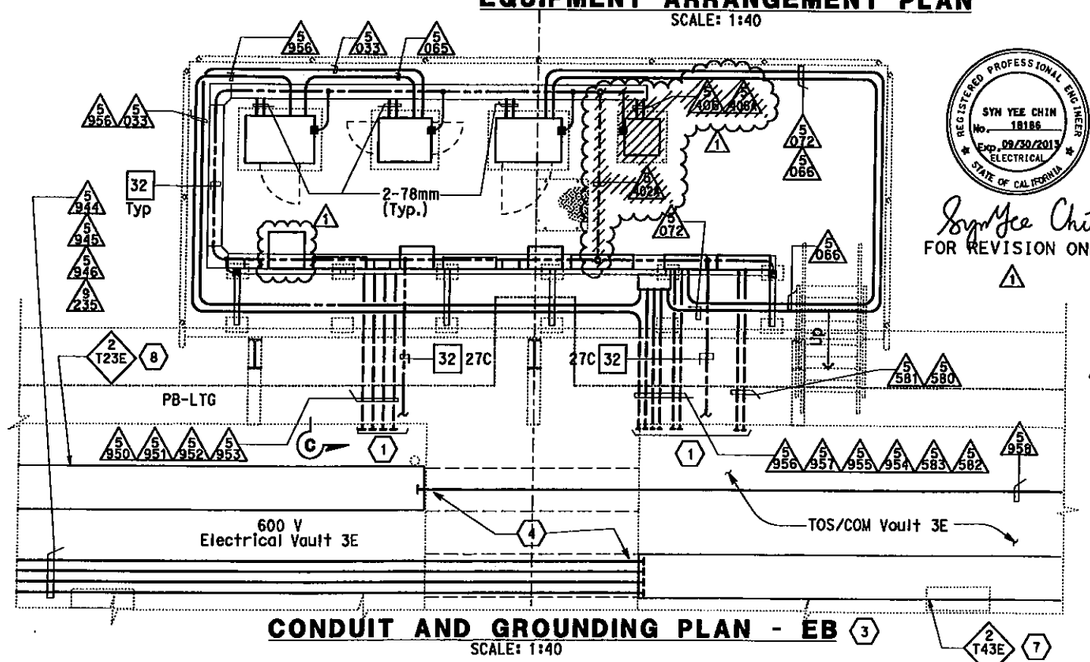

REGISTERED PROFESSIONAL ENGINEER SYN YEE CHIN No. 18186 Exp. 09/30/2013 ELECTRICAL STATE OF CALIFORNIA

Syn Yee Chin
FOR REVISION ONLY
1

CONDUIT AND GROUNDING PLAN - EB (3)
SCALE: 1:40

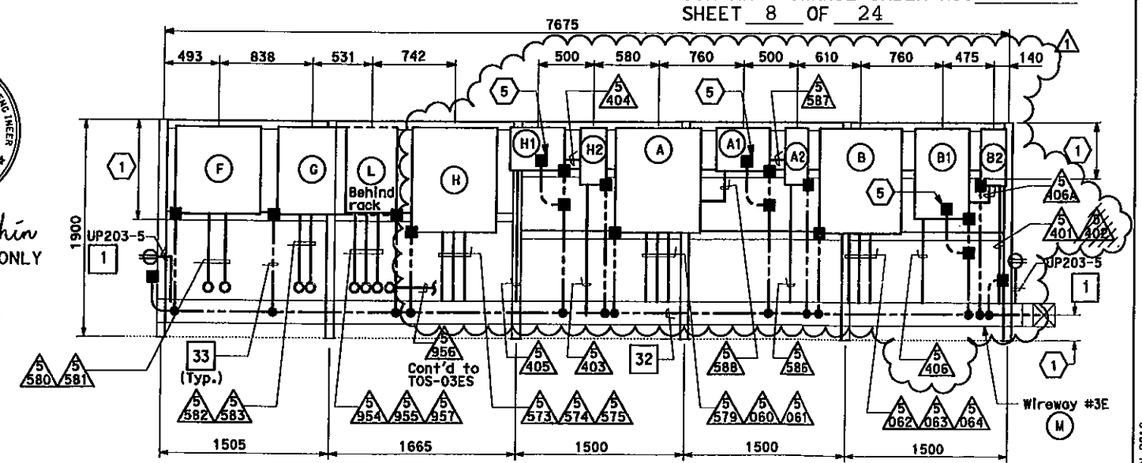

PANEL RACK-ELEVATION
SCALE: 1:25

DETAILS
YBI TRANSITION STRUCTURES ROADWAY EASTBOUND (PLATFORM 3E ARRANGEMENT AND PLAN)
SCALE AS NOTED

E-107

THIS PLAN IS ACCURATE FOR ELECTRICAL WORK ONLY.

ALL DIMENSIONS ARE IN MILLIMETERS UNLESS OTHERWISE SHOWN

STATE OF CALIFORNIA - DEPARTMENT OF TRANSPORTATION
CONSULTANT FUNCTIONAL SUPERVISOR: BEHZAD GOLEMOHAMMADI
CALCULATED-DESIGNED BY: EJL
CHECKED BY: PF
REVISED BY / DATE REVISED

DATE PLOTTED => 28-JUN-2012
TIME PLOTTED => 16:46
SST REVISION (6-28-12)

RELATIVE BORDER SCALE IS IN MILLIMETERS 0 20 40 60 80
USERNAME => lberlas
DGN FILE => 40120sua107r01.dgn
CU 04251
EA 0120S1

Dist	COUNTY	ROUTE	KILOMETER POST TOTAL PROJECT	SHEET No.	TOTAL SHEETS
04	SF	80	12.7/13.2	236 R2	806

REGISTERED ELECTRICAL ENGINEER 2/14/08

6-23-08
PLANS APPROVAL DATE

REGISTERED PROFESSIONAL ENGINEER FADI WALIEDDINE No. 11X65 Exp. 12/31/09 ELECTRICAL STATE OF CALIFORNIA

THE STATE OF CALIFORNIA OR ITS OFFICERS OR AGENTS SHALL NOT BE RESPONSIBLE FOR THE ACCURACY OR COMPLETENESS OF ELECTRONIC COPIES OF THIS PLAN SHEET.

PB AMERICAS, Inc.
A Parsons Brinckerhoff Company
303 Second St., Suite 700N
San Francisco, CA 94107-1317

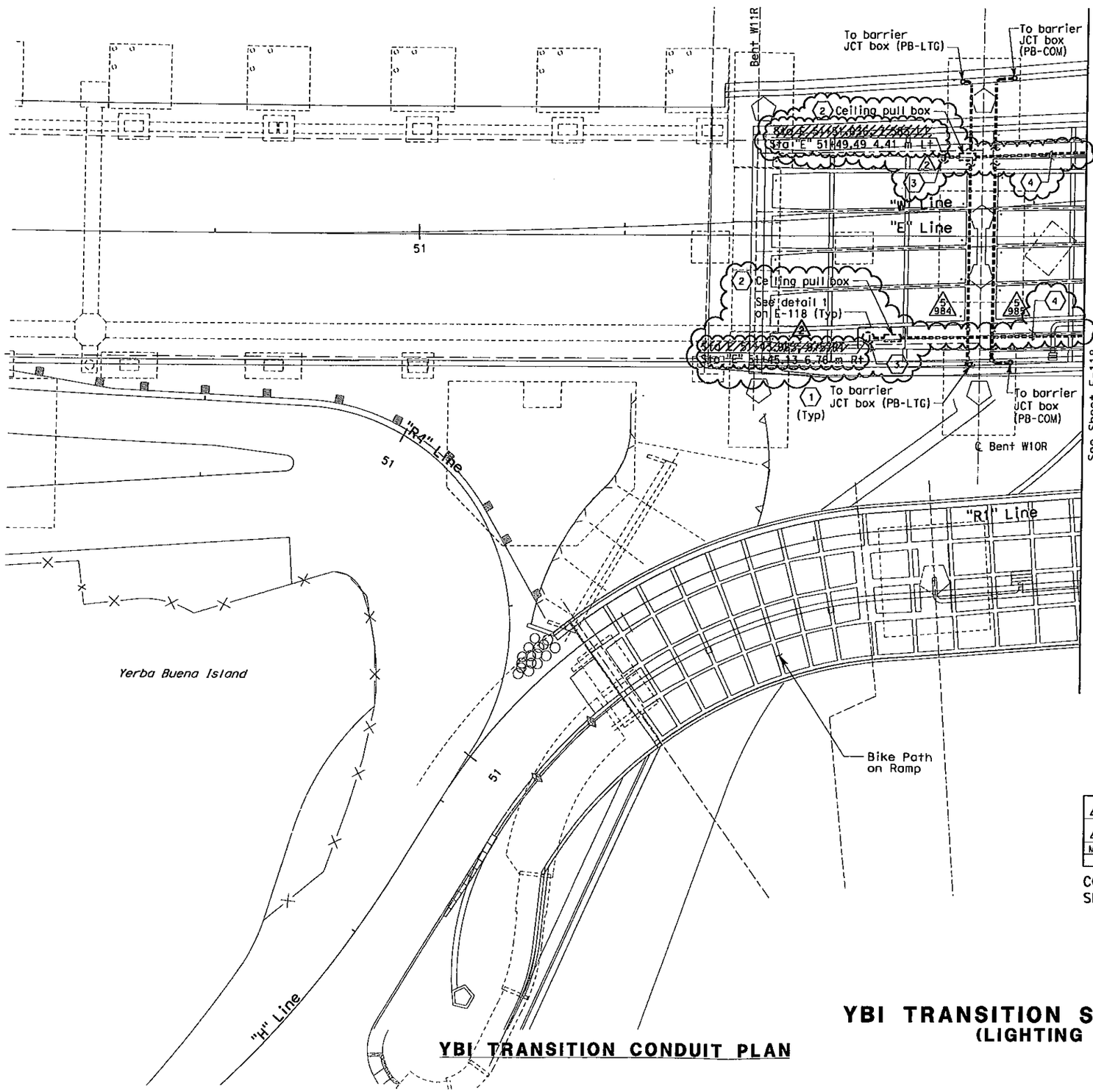

YBI TRANSITION CONDUIT PLAN

Caltrans Metric

SHEET NOTES:

1. For conduit up to PB-LTG and PB-COM location in barrier, see sheet E-90.
2. Install No. 7 ceiling pull box in concrete structure per Caltrans standard ES-9E.
3. Soffit luminaires and conductors shall be furnished and installed by others.
4. Install 27C in concrete structure.

REGISTERED PROFESSIONAL ENGINEER DAVID H. OTO No. 10699 Exp. 06/30/2013 ELECTRICAL STATE OF CALIFORNIA

FOR REVISION ONLY 2

REGISTERED PROFESSIONAL ENGINEER SYN YEE CHIN No. 18186 Exp. 09/30/2011 ELECTRICAL STATE OF CALIFORNIA

FOR REVISION ONLY 1

MARK	DATE	DESCRIPTIONS	BY	CH'D
2	03/15/12	Soffit Light Station Changes	RR	RG
1	11/22/10	Bike Path Railing Elimination and Soffit Light Addition	RR	RG

REVISIONS

CONTRACT CHANGE ORDER NO. 123
SHEET 9 OF 24

YBI TRANSITION STRUCTURES GIRDER EASTBOUND
(LIGHTING AND ELECTRICAL SYSTEMS)

SCALE: 1:200

E-117

STATE OF CALIFORNIA - DEPARTMENT OF TRANSPORTATION
Caltrans

CONSULTANT FUNCTIONAL SUPERVISOR: BEHZAD GOLEMOHAMMADI
CALCULATED-DESIGNED BY: FK
CHECKED BY: AB
REVISED BY
DATE REVISED

LAST REVISION 00-00-00
DATE PLOTTED => 3/20/2012
TIME PLOTTED => 12:07:33 PM

THIS PLAN IS ACCURATE FOR ELECTRICAL WORK ONLY.

ALL DIMENSIONS ARE IN METERS UNLESS OTHERWISE SHOWN.

BORDER LAST REVISED 3/1/2007

RELATIVE BORDER SIZES IS IN MILLIMETERS

USERNAME
DGN FILE => T:\13103\MS\base\YBI Struc-Contract 1\CCO\Electrical\CCO-123\Soffit Light Station Changes\30120su0117R02.dgn

Dist	COUNTY	ROUTE	KILOMETER POST TOTAL PROJECT	SHEET No.	TOTAL SHEETS
04	SF	80	12.7/13.2	237 R3	806

REGISTERED ELECTRICAL ENGINEER 2/14/08

6-23-08
PLANS APPROVAL DATE

REGISTERED PROFESSIONAL ENGINEER FADI WALIEDDINE No. 11465 Exp. 12/31/09 ELECTRICAL STATE OF CALIFORNIA

THE STATE OF CALIFORNIA OR ITS OFFICERS OR AGENTS SHALL NOT BE RESPONSIBLE FOR THE ACCURACY OR COMPLETENESS OF ELECTRONIC COPIES OF THIS PLAN SHEET.

PB AMERICAS, Inc.
A Parsons Brinckerhoff Company
303 Second St., Suite 700N
San Francisco, CA 94107-1317

Caltrans Metric

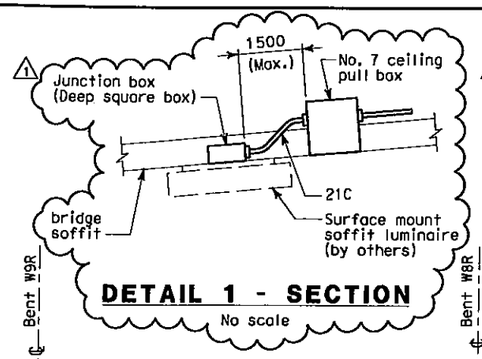

DETAIL 1 - SECTION
No scale

NOTES:

1. Furnish and install 4-25.4 mm innerducts inside TOS/COM conduit (5924).
2. Furnish and install BASE fiber optic cable in innerduct inside TOS/COM conduit (5924). See sheets E-1102 and E-1103.
3. For Conduit and Tray Schedules, Cable and Circuit Schedules, refer to sheets starting at E-182.

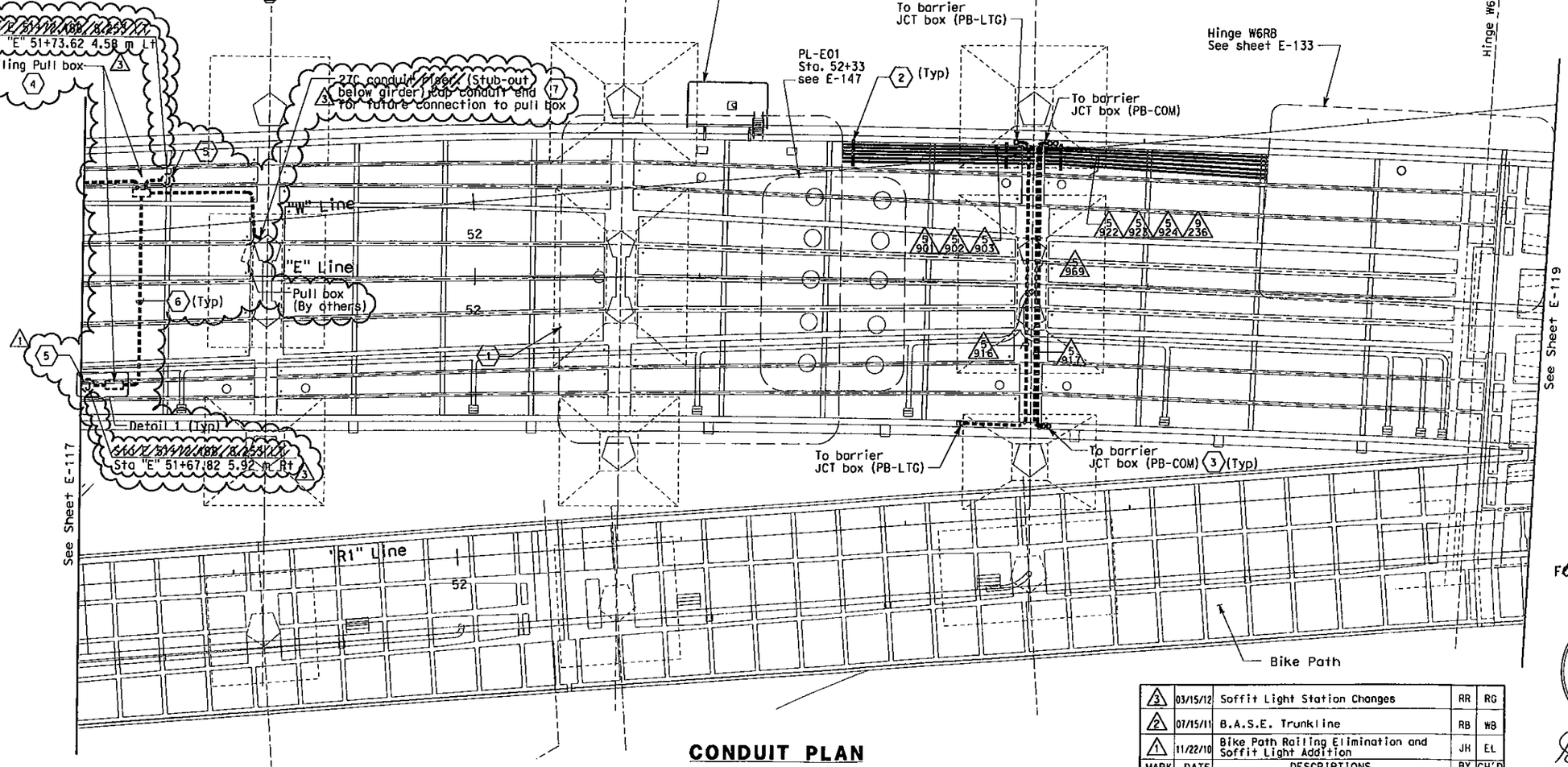

CONDUIT PLAN

SHEET NOTES:

(1) For vault section & details, see sheet E-130.

(2) For typical details of conduit & pull box support, see sheet E-124.

(3) For conduit up to PB-LTG and PB-COM located in barrier, see sheet E-91.

(4) Install No. 7 ceiling pull box in concrete structure per Caltrans standard ES-9E.

(5) Soffit luminaires and conductors shall be furnished and installed by others.

(6) Install 27C in concrete structure.

(7) Use PVC coated RGS conduit where installation of exposed conduit is required.

MARK	DATE	DESCRIPTIONS	BY	CH'D
3	03/15/12	Soffit Light Station Changes	RR	RG
2	07/15/11	B.A.S.E. Trunkline	RB	WB
1	11/22/10	Bike Path Railing Elimination and Soffit Light Addition	JH	EL

REVISIONS

REGISTERED PROFESSIONAL ENGINEER DAVID H. OTO No. 10699 Exp. 06/30/2013 ELECTRICAL STATE OF CALIFORNIA 3

FOR REVISION ONLY

REGISTERED PROFESSIONAL ENGINEER SYN YEE CHIN No. 18186 Exp. 09/30/2011 ELECTRICAL STATE OF CALIFORNIA

FOR REVISION ONLY 1 2

CONTRACT CHANGE ORDER NO. 123
SHEET 10 OF 24

YBI TRANSITION STRUCTURES GIRDER EASTBOUND
(LIGHTING AND ELECTRICAL SYSTEMS)

SCALE: 1:200

E-118

STATE OF CALIFORNIA - DEPARTMENT OF TRANSPORTATION
Caltrans

CONSULTANT FUNCTIONAL SUPERVISOR: BEHZAD GOLEMOHAMMADI
CALCULATED-DESIGNED BY: AB
CHECKED BY: FK
REVISED BY
DATE REVISED

THIS PLAN IS ACCURATE FOR ELECTRICAL WORK ONLY.

ALL DIMENSIONS ARE IN METERS UNLESS OTHERWISE SHOWN

LAST REVISION 00-00-00
DATE PLOTTED => 3/20/2012
TIME PLOTTED => 12:40:25 PM

BORDER LAST REVISED 3/1/2007
IS IN MILLIMETERS
USERNAME => [illegible]
DGN FILE => T:\13103\MS\pse\YBI Struc-Contract 1\CCO\Electrical\CCO 123 Soffit Light Station Changes\40120SU011BR03.dgn

Dist	COUNTY	ROUTE	KILOMETER POST TOTAL PROJECT	SHEET No.	TOTAL SHEETS
04	SF	80	12.7/13.2	249 R2	806

REGISTERED ELECTRICAL ENGINEER 2/14/08

6-23-08
PLANS APPROVAL DATE

REGISTERED PROFESSIONAL ENGINEER FADI WALIEDDINE No. 11985 Exp. 12/31/09 ELECTRICAL STATE OF CALIFORNIA

THE STATE OF CALIFORNIA OR ITS OFFICERS OR AGENTS SHALL NOT BE RESPONSIBLE FOR THE ACCURACY OR COMPLETENESS OF ELECTRONIC COPIES OF THIS PLAN SHEET.

PB AMERICAS, Inc.
A Parsons Brinckerhoff Company
303 Second St., Suite 700N
San Francisco, CA 94107-1317

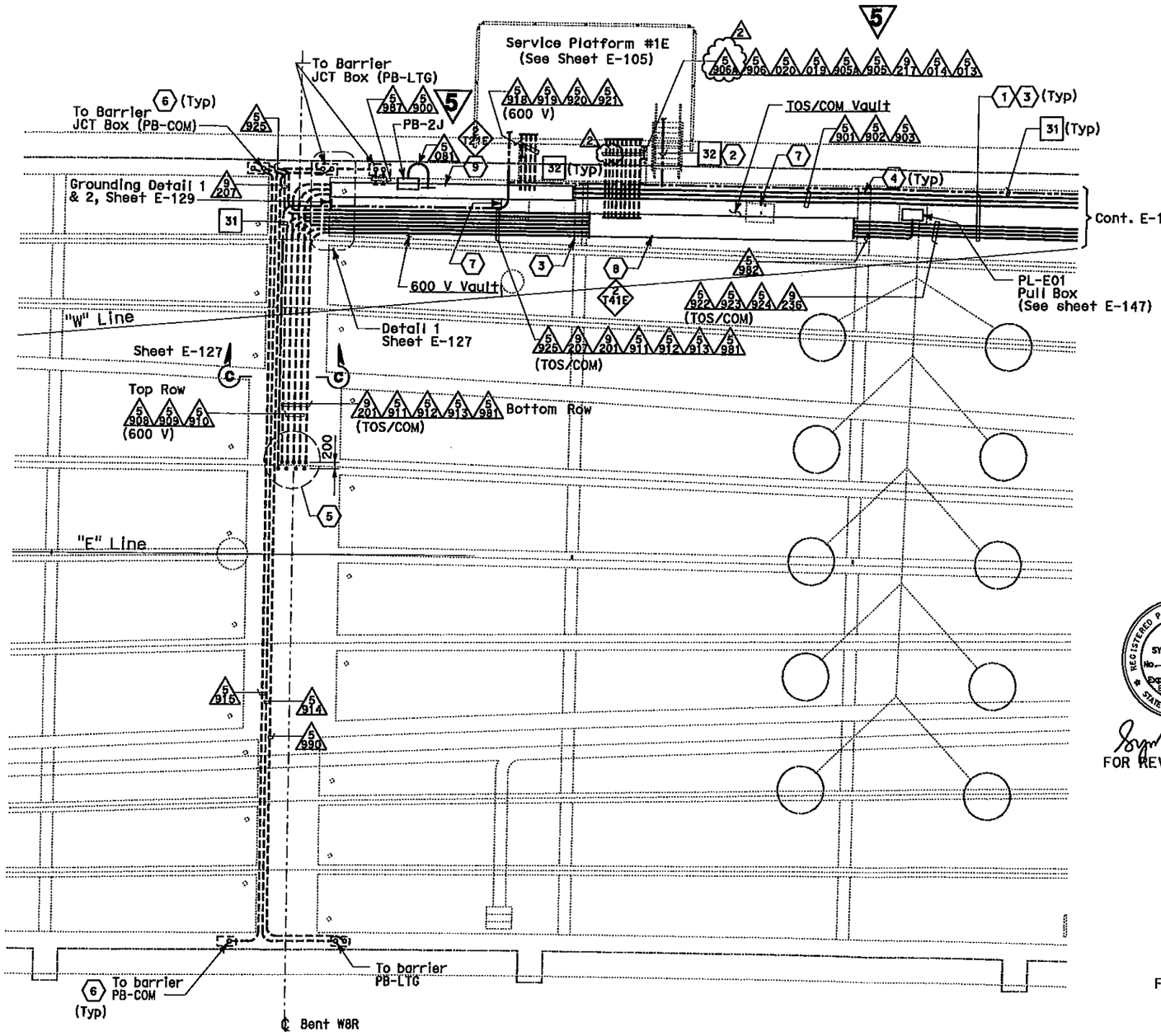

PLAN 7

SHEET NOTES:

1. For conduit routing in girder see sheet E-118.
2. For Typical Grounding Installation, see sheet E-129.
3. For conduit support, see sheet E-124.
4. Opening for conduits, refer to Structures sheets.
5. For embedded conduits in column, see sheet E-127.
6. For conduit up to PB-LTG & PB-COM, see sheet E-91.
7. Roadway deck access (vault) opening required. See structures sheets. Access cover engraving "ELECTRICAL" and "TOS/COM".
8. Install 610 mm solid bottom tray with cover for routing TOS/COM cables, see E-124, Detail 1.
9. Install 610 mm ladder type tray for routing 600 V rated cable, see E-124, Detail 1.

7 NOTE:
~~NOTES:~~

1. References:
   - For embedded conduit layout, see sheets E-121 thru E-123.
   - For Conduit and Tray Schedules, Cable and Circuit Schedules, refer to sheets starting at E-182.
2. Furnish and install 4-25.4 mm innerducts inside TOS/COM conduits (5913, 5924) and 1-25.4 mm innerduct per BASE fiber optic cable in TOS/COM cable tray.
3. Furnish and install BASE fiber optic cables in innerduct inside TOS/COM conduits and in cable tray. See sheets E-1102 and E-1103.

REGISTERED PROFESSIONAL ENGINEER SYN YEE CHIN No. 18166 Exp. 09/30/2013 ELECTRICAL STATE OF CALIFORNIA
Syn Yee Chin
FOR REVISION ONLY 2

REGISTERED PROFESSIONAL ENGINEER SYN YEE CHIN No. 18166 Exp. 09/30/2011 ELECTRICAL STATE OF CALIFORNIA
Syn Yee Chin
FOR REVISION ONLY 1

MARK	DATE	DESCRIPTIONS	BY	CH'D
2	03/21/12	Label Conduit	SYC	RG
1	07/15/11	B.A.S.E. Trunkline	RB	WB

REVISIONS

CONTRACT CHANGE ORDER NO. 123
SHEET 11 OF 24

DETAILS
YBI TRANSITION STRUCTURES GIRDER EASTBOUND (VAULT SECTIONS AND DETAILS)
SCALE: 1:75

7 REVISED PER ADDENDUM No. 7 DATED OCTOBER 19, 2009
5 REVISED PER ADDENDUM No. 5 DATED JULY 30, 2009

THIS PLAN ACCURATE FOR ELECTRICAL WORK ONLY.

ALL DIMENSIONS ARE IN MILLIMETERS UNLESS OTHERWISE SHOWN

E-130

STATE OF CALIFORNIA - DEPARTMENT OF TRANSPORTATION
Caltrans
CONSULTANT FUNCTIONAL SUPERVISOR: BEHZAD GOLEMOHAMMADI
CALCULATED-DESIGNED BY: FK
CHECKED BY: AB
REVISED BY
DATE REVISED

LAST REVISION 00-00-00
DATE PLOTTED => 03-APR-2012
TIME PLOTTED => 16:27

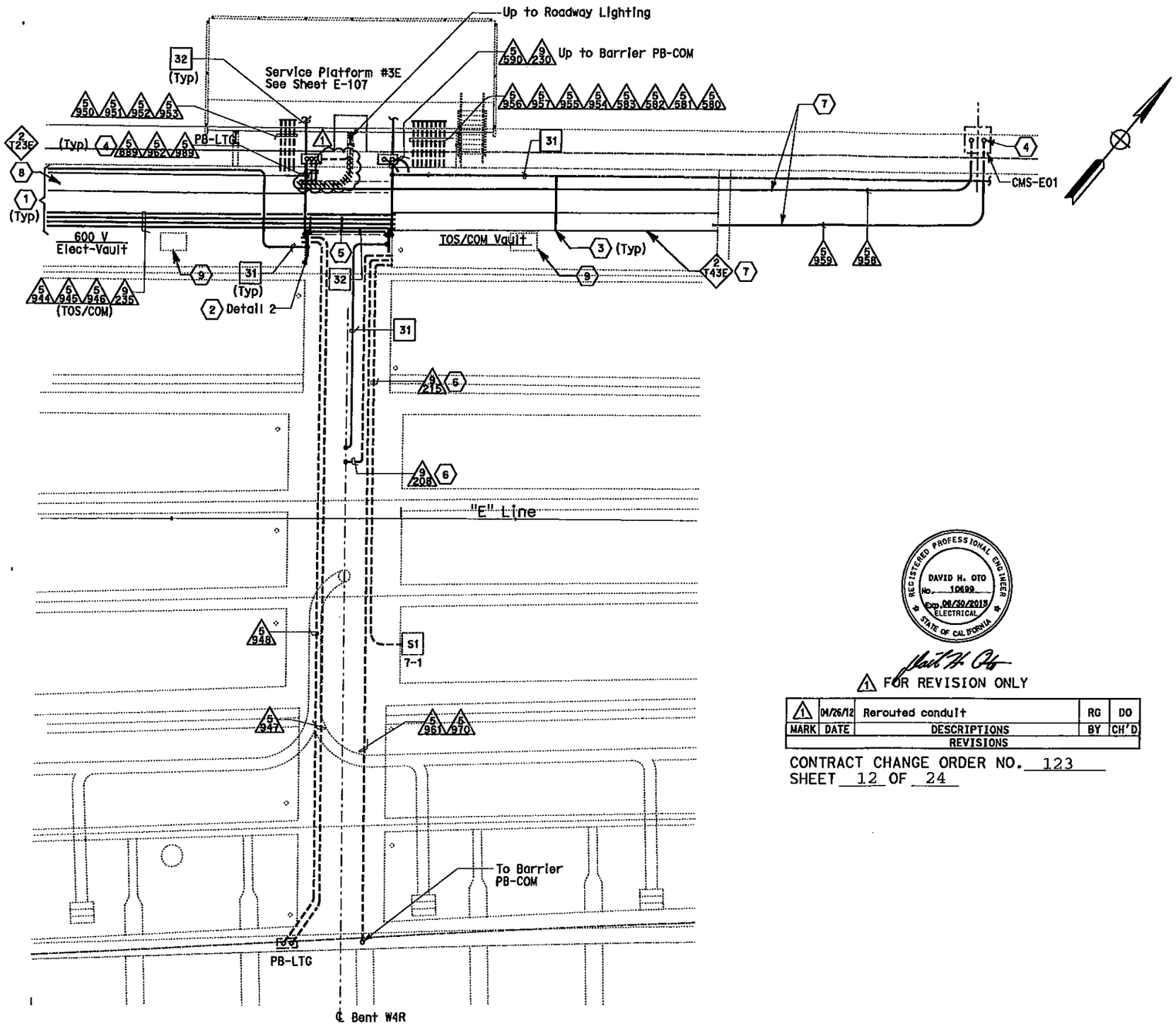

Dist	COUNTY	ROUTE	KILOMETER POST TOTAL PROJECT	SHEET No.	TOTAL SHEETS
04	SF	80	12.7/13.2	251 R1	806

2/14/08
REGISTERED ELECTRICAL ENGINEER

6-23-08
PLANS APPROVAL DATE

REGISTERED PROFESSIONAL ENGINEER FADI WALIEDDINE No. 11368 Exp. 12/31/09 ELECTRICAL STATE OF CALIFORNIA

THE STATE OF CALIFORNIA OR ITS OFFICERS OR AGENTS SHALL NOT BE RESPONSIBLE FOR THE ACCURACY OR COMPLETENESS OF ELECTRONIC COPIES OF THIS PLAN SHEET.

PB AMERICAS, Inc.
A Parsons Brinckerhoff Company
303 Second St., Suite 700N
San Francisco, CA 94107-1317

NOTES:

1. References:
   - For embedded conduits layout, see sheets E-121 thru E-123.

SHEET NOTES:

1. For conduit routing, see sheet E-120.
2. For Typical Grounding Installation, see sheet E-129.
3. For conduit support, see sheet E-124.
4. For conduit stub up plan, see sheet E-120.
5. For utility openinge refer to Structures sheets.
6. Conduits to be installed in this contract but are reserved for SMD.
7. Install 610 mm solid bottom tray with cover for routing TOS/COM cable, See E-124, Detail 1.
8. Install 610 mm ladder type tray for routing 600 V rated cable, See E-124, Detail 1.
9. Roadway deck access (vault) opening required. See Structures sheets. Access cover engraving "ELECTRICAL" and "TOS/COM".

REGISTERED PROFESSIONAL ENGINEER DAVID H. OTO No. 10699 Exp. 06/30/2013 ELECTRICAL STATE OF CALIFORNIA

△1 FOR REVISION ONLY

MARK	DATE	DESCRIPTIONS	BY	CH'D
△1	04/26/12	Rerouted conduit	RG	DO

REVISIONS

CONTRACT CHANGE ORDER NO. 123
SHEET 12 OF 24

DETAILS
YBI TRANSITION STRUCTURES GIRDER EASTBOUND (VAULT SECTIONS AND DETAILS)
SCALE: 1:75

E-132

STATE OF CALIFORNIA - DEPARTMENT OF TRANSPORTATION
Caltrans

CONSULTANT FUNCTIONAL SUPERVISOR: BEHZAD GOLEMOHAMMADI
CALCULATED-DESIGNED BY: RK
CHECKED BY: AB
REVISED BY
DATE REVISED

THIS PLAN ACCURATE FOR ELECTRICAL WORK ONLY

ALL DIMENSIONS ARE IN MILLIMETERS UNLESS OTHERWISE SHOWN

1ST REVISION DATE PLOTTED => 30-APR-2012
04-26-12 TIME PLOTTED => 11:00

BORDER LAST REVISED 3/1/2007 | RELATIVE BORDER SCALE IS IN MILLIMETERS | USERNAME => | DGN FILE => 40120sua132R01.dgn | CU 04251 | EA 0120S1

Dist	COUNTY	ROUTE	KILOMETER POST TOTAL PROJECT	SHEET No.	TOTAL SHEETS
04	SF,ALA	80	12.2/14.3 0.0/4.0	257A	806

REGISTERED ELECTRICAL ENGINEER — Syn Yee Chin 4/30/12

PLANS APPROVAL DATE

REGISTERED PROFESSIONAL ENGINEER — SYN YEE CHIN No. 18188 Exp. 09/30/2013 ELECTRICAL — STATE OF CALIFORNIA

THE STATE OF CALIFORNIA OR ITS OFFICERS OR AGENTS SHALL NOT BE RESPONSIBLE FOR THE ACCURACY OR COMPLETENESS OF ELECTRONIC COPIES OF THIS PLAN SHEET.

PB AMERICAS, Inc.
A Parsons Brinckerhoff Company
303 Second St., Suite 700N
San Francisco, CA 94107-1317

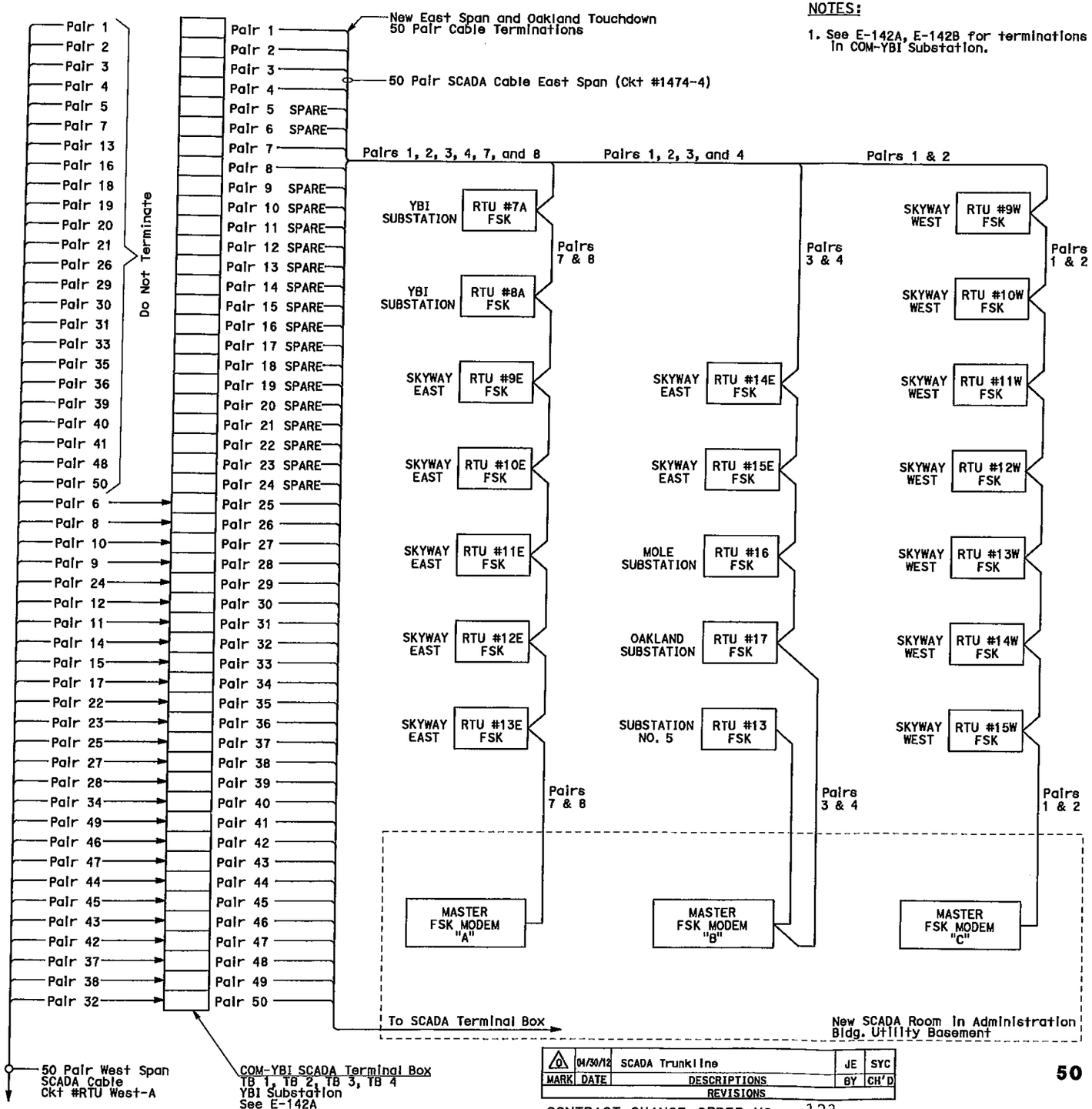

NOTES:

1. See E-142A, E-142B for terminations in COM-YBI Substation.

50 PAIR SCADA (EAST AND WEST) TABLE

West 50 PR SCADA Cable		East 50 PR SCADA Cable	
Spare	Pair 1	Pair 1	RTU #9W, RTU #10W, RTU #11W, RTU #12W,
Spare	Pair 2	Pair 2	RTU #13W, RTU #14W, RTU #15W
Spare	Pair 3	Pair 3	RTU #14E, RTU #15E, RTU #16, RTU #17,
Spare	Pair 4	Pair 4	RTU #13
Spare	Pair 5	Pair 5	Spare
Bad	Pair 7	Pair 6	Spare
Bad	Pair 13	Pair 7	RTU #7A, RTU #8A, RTU #9E, RTU #10E,
Bad	Pair 16	Pair 8	RTU #11E, RTU #12E, RTU #13E
Spare	Pair 18	Pair 9	Spare
Bad	Pair 19	Pair 10	Spare
Spare	Pair 20	Pair 11	Spare
Spare	Pair 21	Pair 12	Spare
Bad	Pair 26	Pair 13	Spare
Spare	Pair 29	Pair 14	Spare
Spare	Pair 30	Pair 15	Spare
Bad	Pair 31	Pair 16	Spare
Bad	Pair 33	Pair 17	Spare
Bad	Pair 35	Pair 18	Spare
Bad	Pair 36	Pair 19	Spare
Bad	Pair 39	Pair 20	Spare
Bad	Pair 40	Pair 21	Spare
PLC-6 To PLC-7	Pair 41	Pair 22	Spare
Bad	Pair 48	Pair 23	Spare
Bad	Pair 50	Pair 24	Spare
	Pair 6	Pair 25	Racon N (510) 286-0417
	Pair 8	Pair 26	Racon Y (510) 286-0414
	Pair 10	Pair 27	Racon B (510) 286-0412
	Pair 9	Pair 28	(510) 286-0309 for electric office at YBI Sub.
	Pair 24	Pair 29	(510) 286-3782 for YBI TOW Service, Bad
Spare	Pair 12	Pair 30	Spare
	Pair 11	Pair 31	PAX 498 in Sub 2 at W-1, Bad
	Pair 14	Pair 32	PAX 463 for TOW Service at YBI Sub.
	Pair 15	Pair 33	PAX 469 in Sterling Sub.
	Pair 17	Pair 34	PAX 468 for TTT at San Francisco
	Pair 22	Pair 35	PAX 460 in W-4 Sub.
	Pair 23	Pair 36	PAX 493 in YBI Sub. Bad
	Pair 25	Pair 37	96 VDC PEC Bridge Lighting
Spare	Pair 27	Pair 38	Spare
Spare	Pair 28	Pair 39	Spare
	Pair 34	Pair 40	PLC-01
	Pair 49	Pair 41	PLC-01
	Pair 46	Pair 42	PLC-02 Tx
	Pair 47	Pair 43	PLC-02 Rx
	Pair 44	Pair 44	PLC-03
	Pair 45	Pair 45	PLC-03
	Pair 43	Pair 46	PLC-05 Tx
	Pair 42	Pair 47	PLC-05 Rx
	Pair 37	Pair 48	PLC-07
	Pair 38	Pair 49	PLC-07
Spare	Pair 32	Pair 50	Spare

MARK	DATE	DESCRIPTIONS	BY	CH'D
0	04/30/12	SCADA Trunkline	JE	SYC

REVISIONS

CONTRACT CHANGE ORDER NO. 123
SHEET 13 OF 24

DETAILS
SCADA REMOTE TERMINAL UNIT SYSTEM
50 PAIR SCADA CABLE EAST AND WEST SCHEMATIC
NO SCALE

E-138A

STATE OF CALIFORNIA - DEPARTMENT OF TRANSPORTATION
CONSULTANT FUNCTIONAL SUPERVISOR: BEHZAD GOLEMOHAMMADI
CALCULATED-DESIGNED BY / CHECKED BY
JENS ERLINGSSON / SYN YEE CHIN
REVISED BY / DATE REVISED

THIS PLAN ACCURATE FOR ELECTRICAL WORK ONLY.

1ST REVISION DATE PLOTTED => 03-MAY-2012 TIME PLOTTED => 13:38
00-00-00

Dist	COUNTY	ROUTE	KILOMETER POST TOTAL PROJECT	SHEET No.	TOTAL SHEETS
04	SF,ALA	80	12.2/14.3 0.0/4.0	261A	806

Syn Yee Chin 4/30/12
REGISTERED ELECTRICAL ENGINEER

PLANS APPROVAL DATE

REGISTERED PROFESSIONAL ENGINEER SYN YEE CHIN No. 18188 Exp. 09/30/2013 ELECTRICAL STATE OF CALIFORNIA

THE STATE OF CALIFORNIA OR ITS OFFICERS OR AGENTS SHALL NOT BE RESPONSIBLE FOR THE ACCURACY OR COMPLETENESS OF ELECTRONIC COPIES OF THIS PLAN SHEET.

PB AMERICAS, Inc.
A Parsons Brinckerhoff Company
303 Second St., Suite 700N
San Francisco, CA 94107-1317

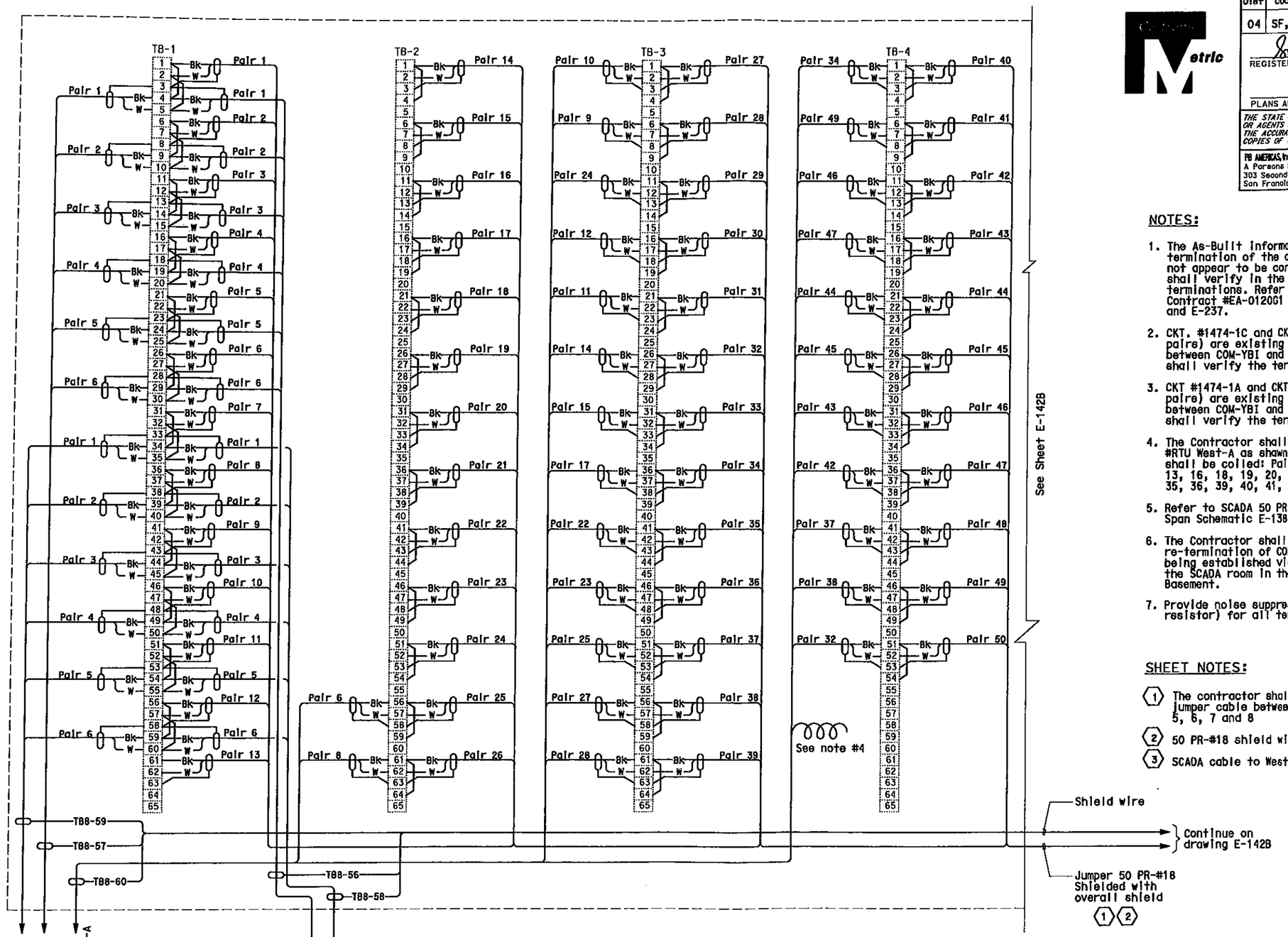

COM-YBI COMMUNICATION TERMINAL BOX

MARK	DATE	DESCRIPTIONS	BY	CH'D
0	04/30/12	SCADA COM-YBI Terminations	JE	SYC

REVISIONS

CONTRACT CHANGE ORDER NO. 123
SHEET 14 OF 24

THIS PLAN ACCURATE FOR ELECTRICAL WORK ONLY.

NOTES:

1. The As-Built Information provided for the termination of the cables in COM-YBI does not appear to be correct. The contractor shall verify in the field the existing terminations. Refer to YBI Substation Contract #EA-012061 drawings E-232, E-236 and E-237.
2. CKT. #1474-1C and CKT. #1474-1D (each 1-6 pairs) are existing circuits installed between COM-YBI and RTU #8A. The contractor shall verify the terminations.
3. CKT #1474-1A and CKT #1474-1B (each 1-6 pairs) are existing circuits installed between COM-YBI and RTU #7A. The contractor shall verify the termination.
4. The Contractor shall re-terminate CKT #RTU West-A as shown. The following pairs shall be coiled: Pairs 1, 2, 3, 4, 5, 7, 13, 16, 18, 19, 20, 21, 26, 29, 30, 31, 33, 35, 36, 39, 40, 41, 48 and 50.
5. Refer to SCADA 50 PR East Span and West Span Schematic E-138A.
6. The Contractor shall not commence re-termination of COM-YBI before connectivity being established via the new East Span to the SCADA room in the Admin Bldg Utility Basement.
7. Provide noise suppressor (termination resistor) for all terminations.

SHEET NOTES:

1. The contractor shall install a 50 PR-#18 jumper cable between TB 1, 2, 3, 4 and TB 5, 6, 7 and 8
2. 50 PR-#18 shield with overall shield
3. SCADA cable to West Span

DETAILS
SCADA REMOTE TERMINAL UNIT SYSTEM (COM-YBI TERMINAL BOX WIRING DIAGRAM)
NO SCALE

E-142A

STATE OF CALIFORNIA - DEPARTMENT OF TRANSPORTATION
Caltrans
CONSULTANT FUNCTIONAL SUPERVISOR: BEHZAD GOLEMOHAMMADI
CALCULATED-DESIGNED BY: JENS ERLINGSSON
CHECKED BY: SYN YEE CHIN
REVISED BY
DATE REVISED

LAST REVISION 00-00-00
DATE PLOTTED => 03-MAY-2012
TIME PLOTTED => 13:38

Dist	COUNTY	ROUTE	KILOMETER POST TOTAL PROJECT	SHEET No.	TOTAL SHEETS
04	SF,ALA	80	12.2/14.3 0.0/4.0	261B	806

REGISTERED ELECTRICAL ENGINEER Syn Yee Chin 4/30/12

PLANS APPROVAL DATE

REGISTERED PROFESSIONAL ENGINEER SYN YEE CHIN No. 18188 Exp. 09/30/2013 ELECTRICAL STATE OF CALIFORNIA

THE STATE OF CALIFORNIA OR ITS OFFICERS OR AGENTS SHALL NOT BE RESPONSIBLE FOR THE ACCURACY OR COMPLETENESS OF ELECTRONIC COPIES OF THIS PLAN SHEET.

PB AMERICAS, Inc.
A Parsons Brinckerhoff Company
303 Second St., Suite 700N
San Francisco, CA 94107-1317

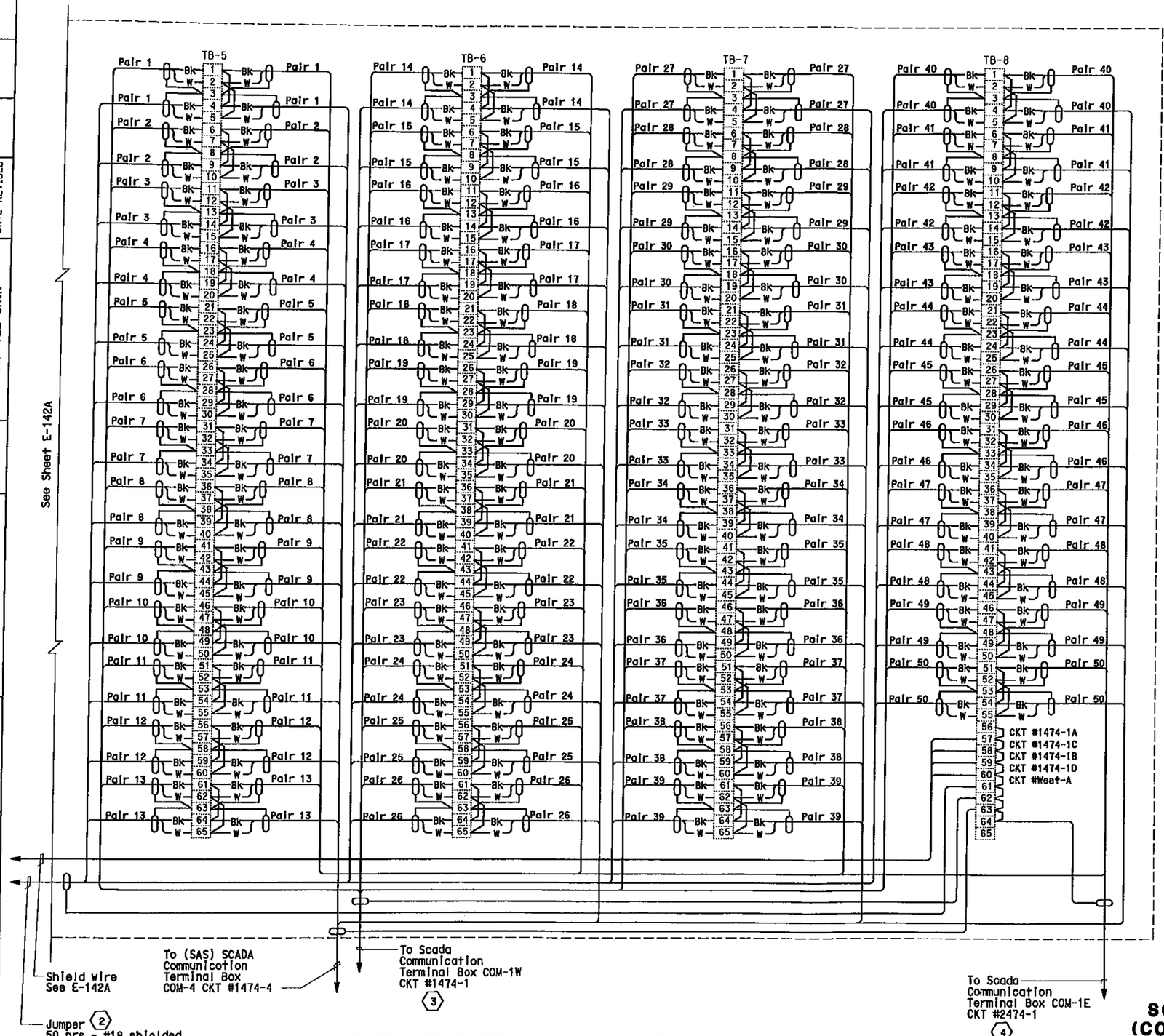

COM-YBI COMMUNICATION TERMINAL BOX

NOTES:

1. The As-Built information provided for the termination of the cables in COM-YBI does not appear to be correct. The contractor shall verify in the field the existing terminations. Refer to YBI Substation Contract #EA-0120G1 drawings E-232, E-236 and E-237.
2. The As-Built drawings for the YBI Substation show that circuit CKT #RTU East A (refer to YBI Substation Contract #EA-0120G1 drawing E-237) is connected to COM-YBI terminal blocks 5, 6, 7 and 8. CKT #RTU East-A is connected to the existing west side 50 PR cable CKT #RTU West-A. The contractor shall disconnect, cut and remove CKT #RTU East-A.
3. Refer to SCADA 50 PR East Span and West Span Schematic E-138A.
4. The contractor shall not commence re-termination of COM-YBI before connectivity being established via the new East Span to the SCADA room in the Admin Bldg Utility Basement.
5. Provide noise suppressor (termination resistor) for all terminations.

SHEET NOTES:

1. The contractor shall install a 50 PR-#18 jumper cable between TB 1, 2, 3, 4 and TB 5, 6, 7 and 8
2. 50 PR-#18 shield with overall shield
3. SCADA cable to YBI Transition Structure Westbound
4. SCADA cable to YBI Transition Structure Eastbound

MARK	DATE	DESCRIPTIONS	BY	CH'D
0	04/30/12	SCADA COM-YBI Terminations	JE	SYC

REVISIONS

CONTRACT CHANGE ORDER NO. 123
SHEET 15 OF 24

DETAILS
SCADA REMOTE TERMINAL UNIT SYSTEM (COM-YBI TERMINAL BOX WIRING DIAGRAM)
NO SCALE

E-142B

STATE OF CALIFORNIA - DEPARTMENT OF TRANSPORTATION

CONSULTANT FUNCTIONAL SUPERVISOR: BEHZAD GOLEMOHAMMADI

CALCULATED-DESIGNED BY: JENS ERLINGSSON

CHECKED BY: SYN YEE CHIN

REVISED BY / DATE REVISED

THIS PLAN ACCURATE FOR ELECTRICAL WORK ONLY.

LAST REVISION 00-00-00 DATE PLOTTED => 03-MAY-2012 TIME PLOTTED => 13:38

Dist	COUNTY	ROUTE	KILOMETER POST TOTAL PROJECT	SHEET No.	TOTAL SHEETS
04	SF,ALA	80	12.2/14.3 0.0/4.0	262A	806

Syn Yee Chin 4/30/12
REGISTERED ELECTRICAL ENGINEER

PLANS APPROVAL DATE

REGISTERED PROFESSIONAL ENGINEER SYN YEE CHIN No. 18168 Exp. 09/30/2013 ELECTRICAL STATE OF CALIFORNIA

THE STATE OF CALIFORNIA OR ITS OFFICERS OR AGENTS SHALL NOT BE RESPONSIBLE FOR THE ACCURACY OR COMPLETENESS OF ELECTRONIC COPIES OF THIS PLAN SHEET.

PB AMERICAS, Inc.
A Parsons Brinckerhoff Company
303 Second St., Suite 700N
San Francisco, CA 94107-1317

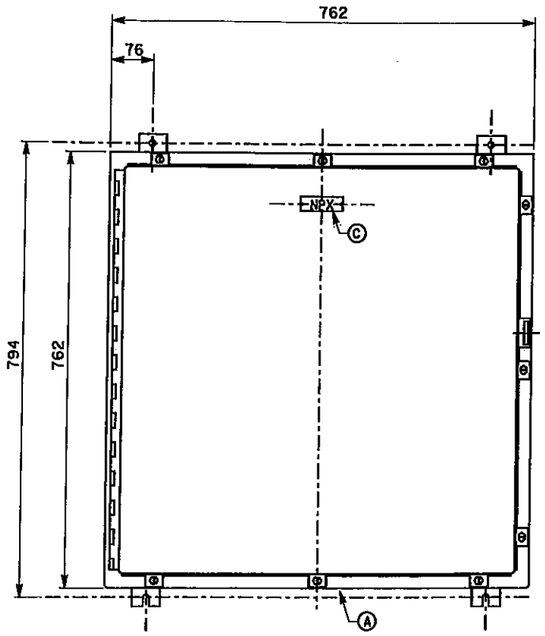

FRONT VIEW

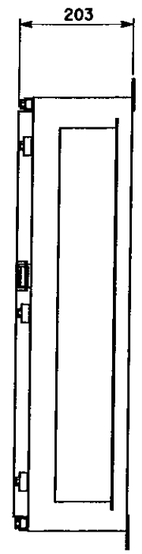

SIDE VIEW

FRONT PANEL

MATERIAL LIST		
ITEM	DESCRIPTION	QTY
Ⓐ	Enclosure, Nema type 12, with interior panel	1
Ⓑ	Terminal blocks, rated 300 V, barrier type with stop screw terminals	(8) 65 pt
Ⓒ	Nameplate to be white lamicoid with black core, size 20 mm x 75 mm, lettering to be 3 mm condensed gothic. Refer to Nameplate Schedule below for engraving.	1
Ⓓ	Noise suppressor, termination resistor	200
Ⓔ	Plastic wireway	9

NAMEPLATE SCHEDULE				WIRING DIAGRAM
ITEM	QTY	LINE No. 1	LINE No. 2	
NP1	1	Telephone Communication	Term. Box TEL-YBI	E-143B, E-143C

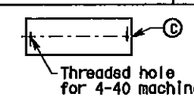

NOTE: Nameplates shall be mounted to the front panel with 4-40 stainless steel machine screws. The front panel to be drilled and tapped. (no self-tapping screws)

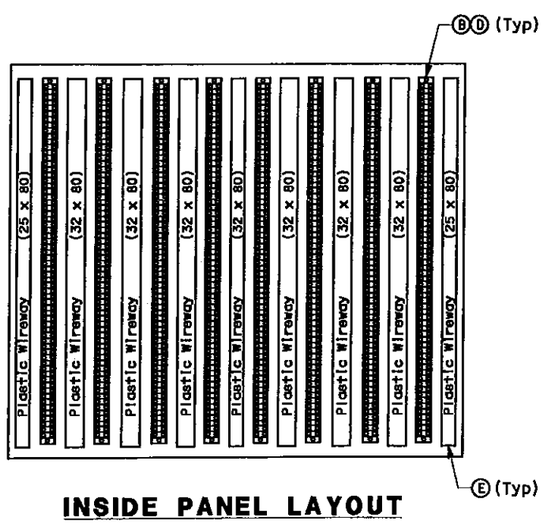

INSIDE PANEL LAYOUT

MARK	DATE	DESCRIPTIONS	BY	CH'D
0	04/30/12	TEL-YBI Assembly	JE	SYC

REVISIONS

CONTRACT CHANGE ORDER NO. 123
SHEET 16 OF 24

DETAILS
SCADA REMOTE TERMINAL UNIT SYSTEM
(TELEPHONE COMMUNICATION TERMINAL BOX LAYOUT)
NO SCALE

E-143A

REVISED BY	DATE REVISED

JENS ERLINGSSON — SYN YEE CHIN — CALCULATED-DESIGNED BY — CHECKED BY

CONSULTANT FUNCTIONAL SUPERVISOR: BEHZAD GOLEMOHAMMADI

STATE OF CALIFORNIA - DEPARTMENT OF TRANSPORTATION — Caltrans

THIS PLAN ACCURATE FOR ELECTRICAL WORK ONLY.

ALL DIMENSIONS ARE IN MILLIMETERS UNLESS OTHERWISE SHOWN

AST REVISION 00-00-00 — DATE PLOTTED => 03-MAY-2012 TIME PLOTTED => 13:38

Dist	COUNTY	ROUTE	KILOMETER POST TOTAL PROJECT	SHEET No.	TOTAL SHEETS
04	SF,ALA	80	12.2/14.3 0.0/4.0	262B	806

REGISTERED ELECTRICAL ENGINEER 4/30/12

PLANS APPROVAL DATE

THE STATE OF CALIFORNIA OR ITS OFFICERS OR AGENTS SHALL NOT BE RESPONSIBLE FOR THE ACCURACY OR COMPLETENESS OF ELECTRONIC COPIES OF THIS PLAN SHEET.

REGISTERED PROFESSIONAL ENGINEER SYN YEE CHIN No. 18188 Exp. 09/30/2013 ELECTRICAL STATE OF CALIFORNIA

PB AMERICAS, Inc.
A Parsons Brinckerhoff Company
303 Second St., Suite 700N
San Francisco, CA 94107-1317

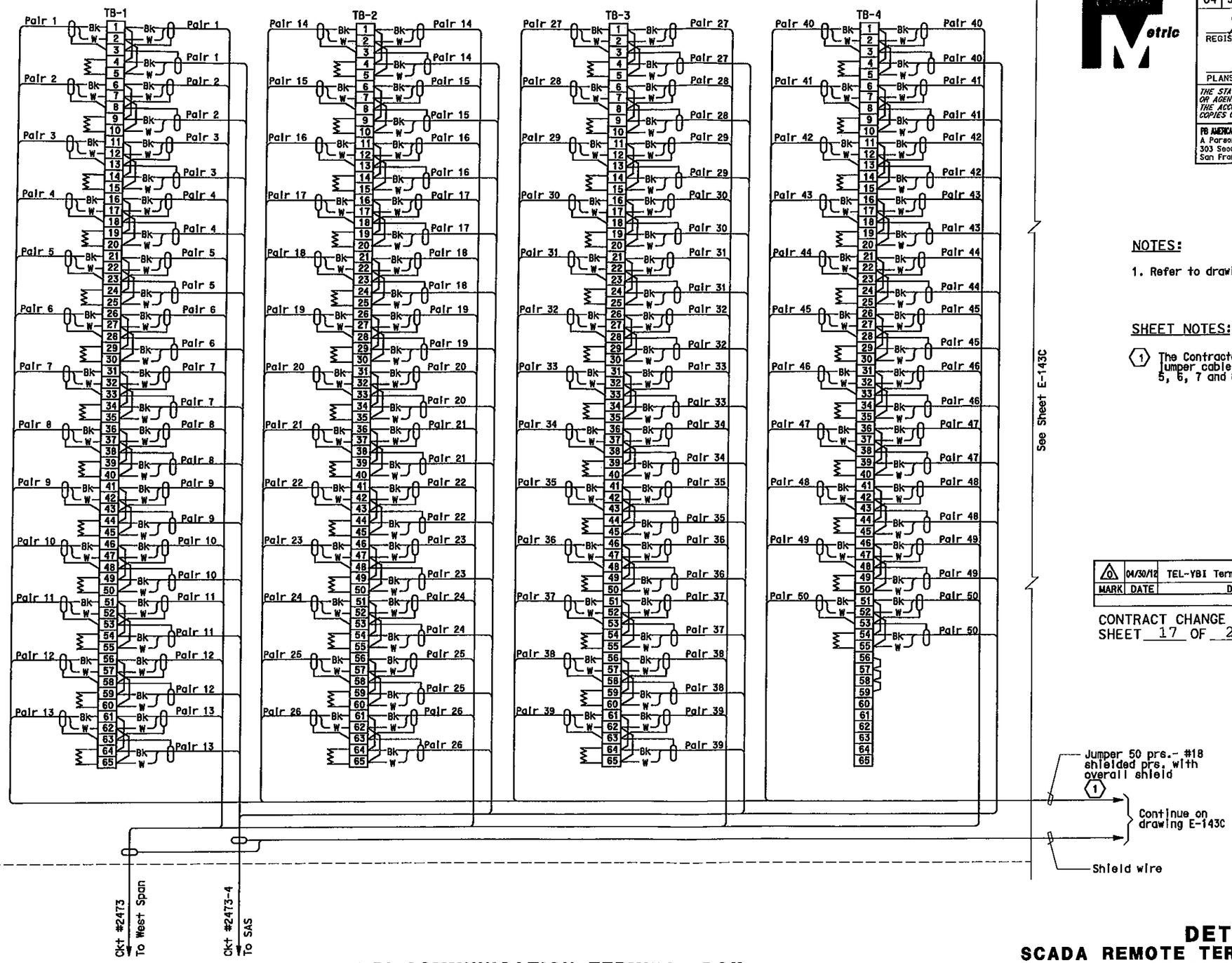

TEL-YBI COMMUNICATION TERMINAL BOX

NOTES:

1. Refer to drawing E-138.

SHEET NOTES:

(1) The Contractor shall install a 50 PR-#18 jumper cable between TB 1, 2, 3, 4 and TB 5, 6, 7 and 8

MARK	DATE	DESCRIPTIONS	BY	CH'D
0	04/30/12	TEL-YBI Terminations	JE	SYC

REVISIONS

CONTRACT CHANGE ORDER NO. 123
SHEET 17 OF 24

DETAILS
SCADA REMOTE TERMINAL UNIT SYSTEM (TEL-YBI TERMINAL BOX WIRING DIAGRAM)
NO SCALE

E-143B

STATE OF CALIFORNIA - DEPARTMENT OF TRANSPORTATION
Caltrans

CONSULTANT FUNCTIONAL SUPERVISOR: BEHZAD GOLEMOHAMMADI
CALCULATED-DESIGNED BY: JENS ERLINGSSON
CHECKED BY: SYN YEE CHIN
REVISED BY
DATE REVISED

THIS PLAN ACCURATE FOR ELECTRICAL WORK ONLY.

LAST REVISION 00-00-00 DATE PLOTTED => 03-MAY-2012 TIME PLOTTED => 13:38

BORDER LAST REVISED 3/1/2007 | RELATIVE BORDER SCALE IS IN MILLIMETERS | DGN FILE => | USERNAME => llarico | CU 04251 | EA 012031

Dist	COUNTY	ROUTE	KILOMETER POST TOTAL PROJECT	SHEET No.	TOTAL SHEETS
04	SF,ALA	80	12.2/14.3 0.0/4.0	262C	806

Syn Yee Chin 4/30/12
REGISTERED ELECTRICAL ENGINEER

PLANS APPROVAL DATE

REGISTERED PROFESSIONAL ENGINEER SYN YEE CHIN No. 18186 Exp. 09/30/2013 ELECTRICAL STATE OF CALIFORNIA

THE STATE OF CALIFORNIA OR ITS OFFICERS OR AGENTS SHALL NOT BE RESPONSIBLE FOR THE ACCURACY OR COMPLETENESS OF ELECTRONIC COPIES OF THIS PLAN SHEET.

PB AMERICAS, Inc.
A Parsons Brinckerhoff Company
303 Second St., Suite 700N
San Francisco, CA 94107-1317

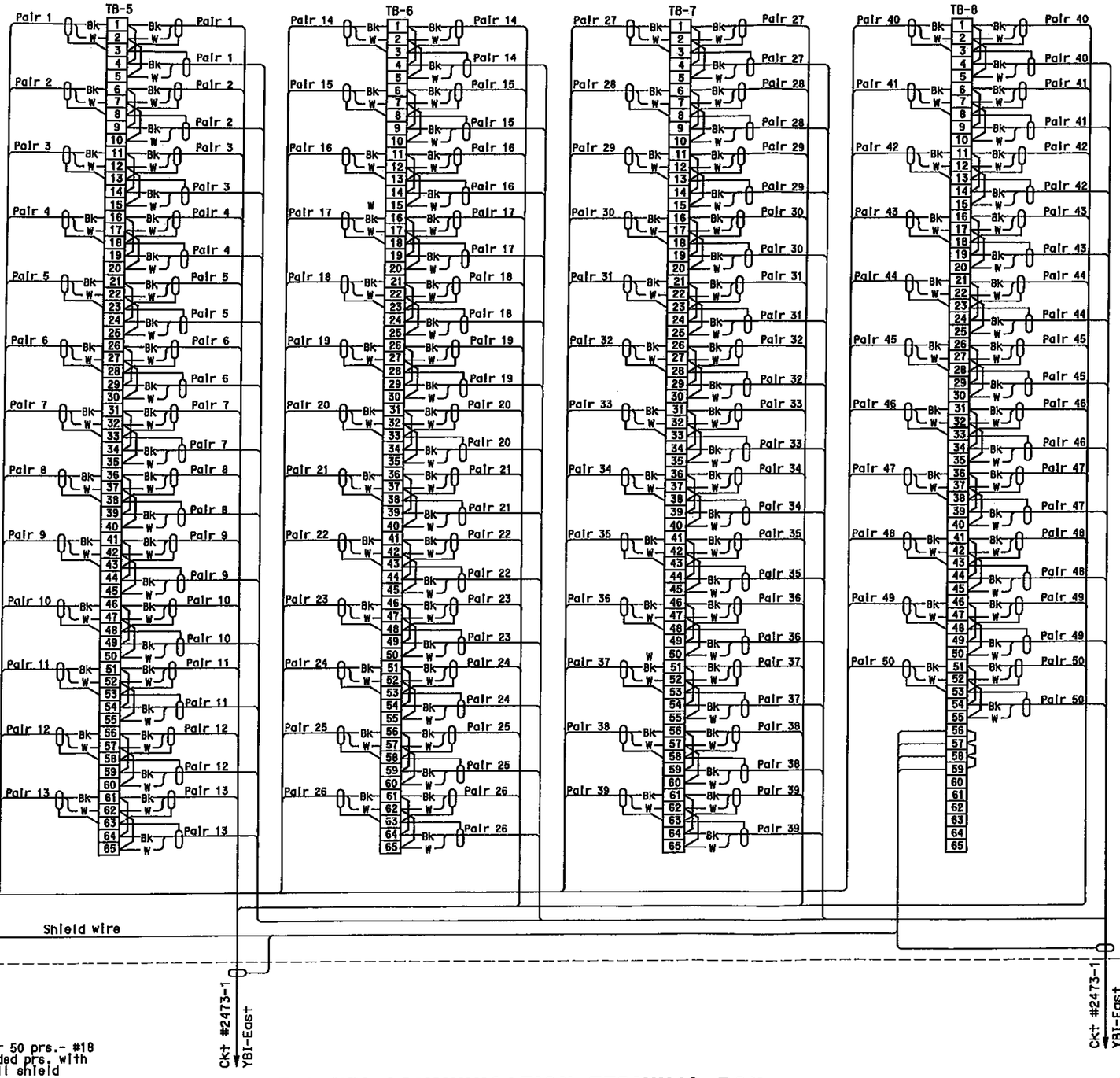

TEL-YBI COMMUNICATION TERMINAL BOX

NOTES:

1. Refer to drawing E-138.

SHEET NOTES:

(1) The Contractor shall install a 50 PR-#18 jumper cable between TB 1, 2, 3, 4 and TB 5, 6, 7 and 8.

MARK	DATE	DESCRIPTIONS	BY	CH'D
0	04/30/12	TEL-YBI Terminations	JE	SYC

REVISIONS

CONTRACT CHANGE ORDER NO. 123
SHEET 18 OF 24

DETAILS
SCADA REMOTE TERMINAL UNIT SYSTEM (TEL-YBI TERMINAL BOX WIRING DIAGRAM)

NO SCALE

E-143C

STATE OF CALIFORNIA - DEPARTMENT OF TRANSPORTATION
Caltrans

CONSULTANT FUNCTIONAL SUPERVISOR: BEHZAD GOLEMOHAMMADI
CALCULATED-DESIGNED BY: JENS ERLINGSSON
CHECKED BY: SYN YEE CHIN
REVISED BY
DATE REVISED

THIS PLAN ACCURATE FOR ELECTRICAL WORK ONLY.

AST REVISION 00-00-00
DATE PLOTTED => 03-MAY-2012
TIME PLOTTED => 13:38

Dist	COUNTY	ROUTE	KILOMETER POST TOTAL PROJECT	SHEET No.	TOTAL SHEETS
04	SF	80	12.7/13.2	401 R2	806

REGISTERED ELECTRICAL ENGINEER 2/14/08

6-23-08
PLANS APPROVAL DATE

THE STATE OF CALIFORNIA OR ITS OFFICERS OR AGENTS SHALL NOT BE RESPONSIBLE FOR THE ACCURACY OR COMPLETENESS OF ELECTRONIC COPIES OF THIS PLAN SHEET.

REGISTERED PROFESSIONAL ENGINEER FADI WALTEDDINE No. 11465 Exp. 12/31/09 ELECTRICAL STATE OF CALIFORNIA

PB AMERICAS, Inc.
A Parsons Brinckerhoff Company
303 Second St., Suite 700N
San Francisco, CA 94107-1317

REGISTERED PROFESSIONAL ENGINEER SYN YEE CHIN No. 18186 Exp. 09/30/2011 ELECTRICAL STATE OF CALIFORNIA
Syn Yee Chin
FOR REVISION ONLY 1

REGISTERED PROFESSIONAL ENGINEER SYN YEE CHIN No. 18186 Exp. 09/30/2013 ELECTRICAL STATE OF CALIFORNIA
Syn Yee Chin
FOR REVISION ONLY 2

5

Caltrans Metric

~~Conduit/Tray No: 5907 Reference: E-64~~
~~Size: 41 Type: RGS-PVC coated conduit~~
~~From: 480 V Breaker for UP-101 To: 15 kVA Transformer for UP-101~~
~~Total Fill (mm2): 262.68 Remarks:~~
~~Allowable Fill (mm2): 702.80~~
~~Description of Changes:~~

~~Included Cable No.~~	~~Conductor Type~~	~~Area (mm2)~~
~~1091-1~~	~~1-3/C + Gnd, #8, 600 V, EPR Insulation~~	~~262.68~~
~~Pull Rope~~	~~Soft-Fiber Polyester~~	~~0.00~~

Conduit/Tray No: 5971 Reference: E-64
Size: 41 Type: RGS-PVC coated conduit
From: Wireway #1W To: 480 V Breaker for UP-101
Total Fill (mm2): 324.29 Remarks:
Allowable Fill (mm2): 702.80
Description of Changes:

Included Cable No.	Conductor Type	Area (mm2)
1091	1-3/C + Gnd, #6, 600 V, EPR Insulation	324.29
Pull Rope	Soft-Fiber Polyester	0.00

~~Conduit/Tray No: 5972 Reference: E-65~~
~~Size: 41 Type: RGS-PVC coated conduit~~
~~From: 15 kVA Transformer for UP-102 To: 480 V Breaker for UP-102~~
~~Total Fill (mm2): 262.68 Remarks:~~
~~Allowable Fill (mm2): 702.80~~
~~Description of Changes:~~

~~Included Cable No.~~	~~Conductor Type~~	~~Area (mm2)~~
~~1092-1~~	~~1-3/C + Gnd, #8, 600 V, EPR Insulation~~	~~262.68~~
~~Pull Rope~~	~~Soft-Fiber Polyester~~	~~0.00~~

1

~~Conduit/Tray No: 5973 Reference: E-65~~
~~Size: 41 Type: RGS-PVC coated conduit~~
~~From: 15 kVA Transformer for UP-102 To: Wireway #2W~~
~~Total Fill (mm2): 476.76 Remarks:~~
~~Allowable Fill (mm2): 702.80~~
~~Description of Changes: Delete due to elimination of platform #2W~~

~~Included Cable No.~~	~~Conductor Type~~	~~Area (mm2)~~
~~1092-2~~	~~1-4/C + Gnd, #4, 600 V, EPR Insulation~~	~~476.76~~
~~Pull Rope~~	~~Soft-Fiber Polyester~~	~~0.00~~

~~Conduit/Tray No: 5974 Reference: E-65~~
~~Size: 41 Type: RGS-PVC coated conduit~~
~~From: Wireway #2W To: 480 V Breaker for UP-102~~
~~Total Fill (mm2): 366.10 Remarks:~~
~~Allowable Fill (mm2): 702.80~~
~~Description of Changes:~~

~~Included Cable No.~~	~~Conductor Type~~	~~Area (mm2)~~
~~1092~~	~~1-3/C + Gnd, #4, 600 V, EPR Insulation~~	~~366.10~~
~~Pull Rope~~	~~Soft-Fiber Polyester~~	~~0.00~~

Conduit/Tray No: 5991 Reference: E-66
Size: 41 2 Type: RGS-PVC coated conduit
From: ~~15 KVA Transformer for UP-103~~ 480 V Breaker for UP-103 To: ~~480 V Breaker for UP-103~~ 15 KVA Transformer for UP-103 2
Total Fill (mm2): 262.68 Remarks:
Allowable Fill (mm2): 702.80
Description of Changes:

Included Cable No.	Conductor Type	Area (mm2)
1093-1	1-3/C + Gnd, #8, 600 V, EPR Insulation	262.68
Pull Rope	Soft-Fiber Polyester	0.00

Conduit/Tray No: 5992 Reference: E-66
Size: 41 Type: RGS-PVC coated conduit
From: Wireway #3W To: 480 V Breaker for UP-103
Total Fill (mm2): 366.10 Remarks:
Allowable Fill (mm2): 702.80
Description of Changes:

Included Cable No.	Conductor Type	Area (mm2)
1093	1-3/C + Gnd, #4, 600 V, EPR Insulation	366.10
Pull Rope	Soft-Fiber Polyester	0.00

Conduit/Tray No: 5993 Reference: E-66
Size: 53 2 Type: RGS-PVC coated conduit
From: ~~25 kVA Transformer for UP-109~~ 480V Circuit Breaker disconnect for 25 kVA Transformer To: ~~Wireway #3W~~ 25 kVa Transformer for UP-109 2
Total Fill (mm2): 527.18 Remarks:
Allowable Fill (mm2): 1165.23
Description of Changes:

Included Cable No.	Conductor Type	Area (mm2)
1094-1	1-3/C + Gnd, #2, 600 V, EPR Insulation	527.18
Pull Rope	Soft-Fiber Polyester	0.00

MARK	DATE	DESCRIPTIONS	BY	CH'D
2	06/28/12	CHANGE TRANSFORMER TYPE AND RELOCATE	LB	EJL
1	11/22/10	ELIMINATION OF SERVICE PLATFORM AT WSL	RR	RG

REVISIONS

CONTRACT CHANGE ORDER NO. 123
SHEET 19 OF 24

CONDUIT AND TRAY SCHEDULE
YBI TRANSITION STRUCTURES ROADWAY WB

5 REVISED PER ADDENDUM No. 5 DATED JULY 30, 2009

E-282

REVISED BY | DATE REVISED
CARMELO RIVERA | ELLERY LUCAS
CALCULATED-DESIGNED BY | CHECKED BY
CONSULTANT FUNCTIONAL SUPERVISOR | BEHZAD GOLEMOHAMMADI
STATE OF CALIFORNIA - DEPARTMENT OF TRANSPORTATION
Caltrans

LAST REVISION 06-28-12 | DATE PLOTTED => 28-JUN-2012 | TIME PLOTTED => 16:46

Dist	COUNTY	ROUTE	KILOMETER POST TOTAL PROJECT	SHEET No.	TOTAL SHEETS
04	SF	80	12.7/13.2	402 R2	806

REGISTERED ELECTRICAL ENGINEER 2/14/08

6-23-08
PLANS APPROVAL DATE

REGISTERED PROFESSIONAL ENGINEER FADI WALIEDDINE No. 11465 Exp. 12/31/09 ELECTRICAL STATE OF CALIFORNIA

THE STATE OF CALIFORNIA OR ITS OFFICERS OR AGENTS SHALL NOT BE RESPONSIBLE FOR THE ACCURACY OR COMPLETENESS OF ELECTRONIC COPIES OF THIS PLAN SHEET.

PB AMERICAS, Inc.
A Parsons Brinckerhoff Company
303 Second St., Suite 700N
San Francisco, CA 94107-1317

REGISTERED PROFESSIONAL ENGINEER SYN YEE CHIN No. 18186 Exp. 09/30/2013 ELECTRICAL STATE OF CALIFORNIA

Syn Yee Chin
FOR REVISION ONLY
1 2

Caltrans Metric

MARK	DATE	DESCRIPTIONS	BY	CH'D
2	06/28/12	CHANGE TRANSFORMER TYPE AND RELOCATE	LB	EJL
1	07/15/11	B.A.S.E. Trunkline	RB	WB

REVISIONS

CONTRACT CHANGE ORDER NO. 123
SHEET 20 OF 24

Conduit/Tray No:	5993A	Reference:	E-66
Size:	53	Type:	RGS-PVC coated conduit
From:	25 kVA Transformer for UP-109	To:	Wireway #3W
Total Fill (mm2):	754.18	Remarks:	
Allowable Fill (mm2):	1165.23		
Description of Changes:			

Included Cable No.	Conductor Type	Area (mm2)
1094-2	1-3/C + Gnd, #1/0, 600 V, EPR insulation	754.18
Pull Rope	Soft-Fiber Polyester	0.00

5

Conduit/Tray No:	5994	Reference:	E-66
Size:	41	Type:	RGS-PVC coated conduit
From:	25 KVA Transformer for UP-109	To:	480 V Breaker for UP-109
Total Fill (mm2):	527.18	Remarks:	
Allowable Fill (mm2):	702.80		
Description of Changes:			

Included Cable No.	Conductor Type	Area (mm2)
1094-1	1-3/C + Gnd, #2, 600 V, EPR insulation	527.18
Pull Rope	Soft-Fiber Polyester	0.00

2

Conduit/Tray No:	5994A	Reference:	E-66
Size:	53	Type:	RGS-PVC coated conduit
From:	Wireway #3W	To:	Wireway #3W
Total Fill (mm2):	527.18	Remarks:	
Allowable Fill (mm2):	1165.23		
Description of Changes:			

Included Cable No.	Conductor Type	Area (mm2)
1094-1	1-3/C + Gnd, #2, 600 V, EPR insulation	527.18
Pull Rope	Soft-Fiber Polyester	0.00

Conduit/Tray No:	5995	Reference:	E-66
Size:	53	Type:	RGS-PVC coated conduit
From:	Wireway #3W	To:	480 V Breaker for UP-109
Total Fill (mm2):	527.18	Remarks:	
Allowable Fill (mm2):	1165.23		
Description of Changes:			

Included Cable No.	Conductor Type	Area (mm2)
1094	1-3/C + Gnd, #2, 600 V, EPR insulation	527.18
Pull Rope	Soft-Fiber Polyester	0.00

Conduit/Tray No:	5996	Reference:	E-64
Size:	41	Type:	RGS-PVC coated conduit
From:	15 kVA Transformer for UP-101	To:	Wireway #1W
Total Fill (mm2):	476.76	Remarks:	
Allowable Fill (mm2):	702.80		
Description of Changes:			

Included Cable No.	Conductor Type	Area (mm2)
1091-2	1-4/C + Gnd, #4, 600 V, EPR insulation	476.76
Pull Rope	Soft-Fiber Polyester	0.00

Conduit/Tray No:	5997	Reference:	E-66
Size:	41	Type:	RGS-PVC coated conduit
From:	15 KVA Transformer for UP-103	To:	Wireway #3W
Total Fill (mm2):	476.76	Remarks:	
Allowable Fill (mm2):	702.80		
Description of Changes:			

Included Cable No.	Conductor Type	Area (mm2)
1093-2	1-4/C + Gnd, #4, 600 V, EPR insulation	476.76
Pull Rope	Soft-Fiber Polyester	0.00

Conduit/Tray No:	Wireway #1W	Reference:	E-64, E-67
Size:	203.2	Type:	8" x 8" wireway, Nema 4X
From:	Platform #1W	To:	Platform #1W
Total Fill (mm2):	1178.52 1	Remarks:	
Allowable Fill (mm2):	8258.05		
Description of Changes:	Added BASE cables 1		

Included Cable No.	Conductor Type	Area (mm2)
1091	1-3/C + Gnd, #6, 600 V, EPR insulation	324.29
1091-2	1-4/C + Gnd, #4, 600 V, EPR insulation	476.76
1254-1	1-3/C #16, 600 V, EPR insulation	62.07
1481-1	12 Fiber, single mode fiber optic cable	30.19
1481-2	12 Fiber, single mode fiber optic cable	30.19
2481-1	12 Fiber, single mode fiber optic cable	30.19
UP101-1	2 + 1 Gnd, #12, #12, 600 V, RHH/RHW insulation	49.21
UP101-10	2 + 1 Gnd, #10, #10, 600 V, RHH/RHW insulation	60.80
UP101-2A	3 + 1 Gnd, #12, #12, 600 V, RHH/RHW insulation	65.61
UP101-5	2 + 1 Gnd, #12, #12, 600 V, RHH/RHW insulation	49.21

1

5

Conduit/Tray No:	Wireway #2W	Reference:	E-65, E-67
Size:	155	Type:	6" x 6" wireway, Nema 4X
From:	Platform #2W	To:	Platform #2W
Total Fill (mm2):	941.28	Remarks:	
Allowable Fill (mm2):	3548.00		
Description of Changes:			

Included Cable No.	Conductor Type	Area (mm2)
1092	1-3/C + Gnd, #4, 600 V, EPR insulation	366.10
1092-2	1-4/C + Gnd, #4, 600 V, EPR insulation	476.76
UP102-3	2 + 1 Gnd, #12, #12, 600 V, RHH/RHW insulation	49.21
UP102-5	2 + 1 Gnd, #12, #12, 600 V, RHH/RHW insulation	49.21

CONDUIT AND TRAY SCHEDULE
YBI TRANSITION STRUCTURES ROADWAY WB

5 **REVISED PER ADDENDUM No. 5 DATED JULY 30, 2009**

E-283

REVISED BY | DATE REVISED
CARMELO RIVERA | ELLERY LUCAS
CALCULATED-DESIGNED BY | CHECKED BY
SUPERVISOR BEHZAD GOLEMOHAMMADI
CONSULTANT FUNCTIONAL SUPERVISOR
STATE OF CALIFORNIA - DEPARTMENT OF TRANSPORTATION
Caltrans

LAST REVISION 06-28-12
DATE PLOTTED => 28-JUN-2012
TIME PLOTTED => 16:46

Dist	COUNTY	ROUTE	KILOMETER POST TOTAL PROJECT	SHEET No.	TOTAL SHEETS
04	SF	80	12.7/13.2	432 R1	806

REGISTERED ELECTRICAL ENGINEER 2/14/08

6-23-08
PLANS APPROVAL DATE

REGISTERED PROFESSIONAL ENGINEER FADI WALIEDDINE No. 11985 Exp. 12/31/09 ELECTRICAL STATE OF CALIFORNIA

THE STATE OF CALIFORNIA OR ITS OFFICERS OR AGENTS SHALL NOT BE RESPONSIBLE FOR THE ACCURACY OR COMPLETENESS OF ELECTRONIC COPIES OF THIS PLAN SHEET.

PB AMERICAS, Inc.
A Parsons Brinckerhoff Company
303 Second St., Suite 700N
San Francisco, CA 94107-1317

REGISTERED PROFESSIONAL ENGINEER SYN YEE CHIN No. 18188 Exp. 09/30/2015 ELECTRICAL STATE OF CALIFORNIA

Syn Yee Chin
FOR REVISION ONLY
1

MARK	DATE	DESCRIPTIONS	BY	CH'D
1	03/21/12	Cabinet Label Change	SYC	RG

REVISIONS

CONTRACT CHANGE ORDER NO. 123
SHEET 21 OF 24

Conduit/Tray No: 2T42E
Size: 610
From: TOS/COM Vault #2E
Total Fill (mm2): 6767.69
Allowable Fill (mm2): 16774.16
Reference: E-106, E-131
Type: 6" siderail solid bottom tray
To: TOS/COM Vault #2E
Remarks:
Description of Changes:

Included Cable No.	Conductor Type	Area (mm2)
2142	1 - 2 pair, shielded #18 with IS/OA, 600 V, PVC jacket	98.10
2143	1 - 2 pair, shielded #18 with IS/OA, 600 V, PVC jacket	98.10
2170	1 - 2 pair, shielded #18 with IS/OA, 600 V, PVC jacket	98.10
2473-2	50 pair #18, shielded pairs, IS/OS shield 600 V, XLPE insul., PVC jacket	1201.71
2473-3	50 pair #18, shielded pairs, IS/OS shield 600 V, XLPE insul., PVC jacket	1201.71
2474-2	50 pair #18, shielded pairs, IS/OS shield 600 V, XLPE insul., PVC jacket	1201.71
2474-3	50 pair #18, shielded pairs, IS/OS shield 600 V, XLPE insul., PVC jacket	1201.71
2475-2	72 Fiber, single mode fiber optic riser cable	323.65
2475-3	72 Fiber, single mode fiber optic riser cable	323.65
2475-4	72 Fiber, single mode fiber optic riser cable	323.65
2900-101A	4 pair #22, shielded pairs, FEP insulation (Type SSC)	47.42
2900-101B	4 pair #22, shielded pairs, FEP insulation (Type SSC)	47.42
2900-131A	4 pair #22, shielded pairs, FEP insulation (Type SSC)	47.42
2900-61A	4 pair #22, shielded pairs, FEP insulation (Type SSC)	47.42
2900-71A	4 pair #22, shielded pairs, FEP insulation (Type SSC)	47.42
2900-91A	4 pair #22, shielded pairs, FEP insulation (Type SSC)	47.42
2900-91B	4 pair #22, shielded pairs, FEP insulation (Type SSC)	47.42
2900-91C	4 pair #22, shielded pairs, FEP insulation (Type SSC)	47.42
PLE02A	10 DLC	316.24

Conduit/Tray No: 2T43E
Size: 610
From: TOS/COM Vault #3E
Total Fill (mm2): 3822.48
Allowable Fill (mm2): 16774.16
Reference: E-107, E-132
Type: 6" siderail solid bottom tray
To: TOS/COM Vault #3E
Remarks:
Description of Changes:

Included Cable No.	Conductor Type	Area (mm2)
2142	1 - 2 pair, shielded #18 with IS/OA, 600 V, PVC jacket	98.10
2143	1 - 2 pair, shielded #18 with IS/OA, 600 V, PVC jacket	98.10
2144	1 - 2 pair, shielded #18 with IS/OA, 600 V, PVC jacket	98.10
2170	1 - 2 pair, shielded #18 with IS/OA, 600 V, PVC jacket	98.10
2473-3	50 pair #18, shielded pairs, IS/OS shield 600 V, XLPE insul., PVC jacket	1201.71
2474-3	50 pair #18, shielded pairs, IS/OS shield 600 V, XLPE insul., PVC jacket	1201.71
2475-3	72 Fiber, single mode fiber optic riser cable	323.65
2475-4	72 Fiber, single mode fiber optic riser cable	323.65
2900-101A	4 pair #22, shielded pairs, FEP insulation (Type SSC)	47.42
2900-101B	4 pair #22, shielded pairs, FEP insulation (Type SSC)	47.42
2900-131A	4 pair #22, shielded pairs, FEP insulation (Type SSC)	47.42
2900-61A	4 pair #22, shielded pairs, FEP insulation (Type SSC)	47.42
2900-71A	4 pair #22, shielded pairs, FEP insulation (Type SSC)	47.42
2900-91A	4 pair #22, shielded pairs, FEP insulation (Type SSC)	47.42
2900-91B	4 pair #22, shielded pairs, FEP insulation (Type SSC)	47.42
2900-91C	4 pair #22, shielded pairs, FEP insulation (Type SSC)	47.42

5

Conduit/Tray No: 5007
Size: 27
From: ~~Controller~~ Splice Cabinet TOS-01ES 1
Total Fill (mm2): 30.19 1
Allowable Fill (mm2): 303.46
Reference: E-106
Type: RGS-PVC coated conduit
To: Controller Cabinet TOS-01EA 1
Remarks:
Description of Changes:

Included Cable No.	Conductor Type	Area (mm2)
2475-1C	12 Fiber, single mode fiber optic cable	30.19
Pull Rope	Soft-Fiber Polyester	0.00

Conduit/Tray No: 5008
Size: 41
From: Control Cabinet TOS-02EA
Total Fill (mm2): 316.24
Allowable Fill (mm2): 534.55
Reference: E-106
Type: RGS conduit
To: PB-2B (TOS/COM)
Remarks:
Description of Changes:

Included Cable No.	Conductor Type	Area (mm2)
PLE02A	10 DLC	316.24
Pull Rope	Soft-Fiber Polyester	0.00

Conduit/Tray No: 5009
Size: 41
From: Controller Cabinet TOS-01EA
Total Fill (mm2): 0.00
Allowable Fill (mm2): 534.55
Reference: E-105
Type: RGS conduit
To: PB-2B (TOS-COM)
Remarks:
Description of Changes:

Included Cable No.	Conductor Type	Area (mm2)
Pull Rope	Soft-Fiber Polyester	0.00

CONDUIT AND TRAY SCHEDULE
YBI TRANSITION STRUCTURES ROADWAY EB

5 REVISED PER ADDENDUM No. 5 DATED JULY 30, 2009

E-313

STATE OF CALIFORNIA - DEPARTMENT OF TRANSPORTATION
Caltrans
CONSULTANT FUNCTIONAL SUPERVISOR: BEHZAD GOLEMOHAMMADI
CALCULATED-DESIGNED BY: ELLERY LUCAS
CHECKED BY: CARMELO RIVERA
REVISED BY / DATE REVISED

LAST REVISION 00-00-00
DATE PLOTTED => 03-APR-2012
TIME PLOTTED => 16:27

Dist	COUNTY	ROUTE	KILOMETER POST TOTAL PROJECT	SHEET No.	TOTAL SHEETS
04	SF	80	12.7/13.2	436 R1	806

REGISTERED ELECTRICAL ENGINEER 2/14/08

6-23-08
PLANS APPROVAL DATE

REGISTERED PROFESSIONAL ENGINEER FADI WALIEDDINE No. 11465 Exp. 12/31/09 ELECTRICAL STATE OF CALIFORNIA

THE STATE OF CALIFORNIA OR ITS OFFICERS OR AGENTS SHALL NOT BE RESPONSIBLE FOR THE ACCURACY OR COMPLETENESS OF ELECTRONIC COPIES OF THIS PLAN SHEET.

PB AMERICAS, Inc.
A Parsons Brinckerhoff Company
303 Second St., Suite 700N
San Francisco, CA 94107-1317

REGISTERED PROFESSIONAL ENGINEER SYN YEE CHIN No. 18186 Exp. 09/30/2013 ELECTRICAL STATE OF CALIFORNIA

Syn Yee Chin
FOR REVISION ONLY
1

Caltrans Metric

MARK	DATE	DESCRIPTIONS	BY	CH'D
1	06/28/12	CHANGE TRANSFORMER TYPE AND RELOCATE	LB	EJL

REVISIONS

CONTRACT CHANGE ORDER NO. 123
SHEET 22 OF 24

Conduit/Tray No: 5063 | Reference: E-107
Size: 78 | Type: RGS-PVC coated conduit
From: Panel UP-209 | To: Wireway #3E
Total Fill (mm2): 0.00 | Remarks:
Allowable Fill (mm2): 1935.24
Description of Changes:

Included Cable No.	Conductor Type	Area (mm2)
Pull Rope	Soft-Fiber Polyester	0.00

Conduit/Tray No: 5064 | Reference: E-107
Size: 78 | Type: RGS-PVC coated conduit
From: Panel UP-209 | To: Wireway #3E
Total Fill (mm2): 0.00 | Remarks:
Allowable Fill (mm2): 1935.24
Description of Changes:

Included Cable No.	Conductor Type	Area (mm2)
Pull Rope	Soft-Fiber Polyester	0.00

Conduit/Tray No: 5065 | Reference: E-107
Size: 27 | Type: RGS-PVC coated conduit
From: Splice Cabinet TOS-03ES | To: Controller Cabinet TOS-03EA
Total Fill (mm2): 30.19 | Remarks:
Allowable Fill (mm2): 303.46
Description of Changes:

Included Cable No.	Conductor Type	Area (mm2)
2475-1A	12 Fiber, single mode fiber optic cable	30.19
Pull Rope	Soft-Fiber Polyester	0.00

Conduit/Tray No: 5066 | Reference: E-107
Size: 53 | Type: RGS-PVC coated conduit
From: Remote Terminal Unit RTU #9E | To: COM-03E
Total Fill (mm2): 317.80 | Remarks:
Allowable Fill (mm2): 684.55
Description of Changes:

Included Cable No.	Conductor Type	Area (mm2)
2474-3A	1 - 6 pair, shielded #18 with overall shield , 600 V, PVC jacket	158.90
2474-3B	1 - 6 pair, shielded #18 with overall shield , 600 V, PVC jacket	158.90
Pull Rope	Soft-Fiber Polyester	0.00

Conduit/Tray No: 5072 | Reference: E-107
Size: 53 | Type: RGS-PVC coated conduit
From: Remote Terminal Unit RTU #9E | To: PB-2B
Total Fill (mm2): 392.40 | Remarks:
Allowable Fill (mm2): 879.42
Description of Changes:

Included Cable No.	Conductor Type	Area (mm2)
2142	1 - 2 pair, shielded #18 with IS/OA, 600 V, PVC jacket	98.10
2143	1 - 2 pair, shielded #18 with IS/OA, 600 V, PVC jacket	98.10
2144	1 - 2 pair, shielded #18 with IS/OA, 600 V, PVC jacket	98.10
2170	1 - 2 pair, shielded #18 with IS/OA, 600 V, PVC jacket	98.10
Pull Rope	Soft-Fiber Polyester	0.00

Conduit/Tray No: 5081 | Reference: E-130
Size: 53 | Type: RGS conduit
From: 2T21E | To: PB-2J
Total Fill (mm2): 849.65 | Remarks:
Allowable Fill (mm2): 879.42
Description of Changes:

Included Cable No.	Conductor Type	Area (mm2)
Pull Rope	Soft-Fiber Polyester	0.00
S-2041-1	1-3/C + Gnd, #6, 600 V, EPR Insulation	324.29
S-2041-2	1-3/C + Gnd, #8, 600 V, EPR Insulation	262.68
S-2041-3	1-3/C + Gnd, #8, 600 V, EPR Insulation	262.68

Conduit/Tray No: 5401 | Reference: E-107
Size: 53 1 | Type: RGS-PVC coated conduit
From: ~~480 V Breaker for UP-209~~ Wireway #3E | To: ~~Wireway #3E~~ 480 V Breaker for UP-209 1
Total Fill (mm2): 527.18 | Remarks:
Allowable Fill (mm2): 1165.23
Description of Changes:

Included Cable No.	Conductor Type	Area (mm2)
2094	1-3/C + Gnd, #2, 600 V, EPR Insulation	527.18
Pull Rope	Soft-Fiber Polyester	0.00

~~Conduit/Tray No: 5402 | Reference: E-107~~
~~Size: 41 | Type: RGS-PVC coated conduit~~
~~From: 25 KVA Transformer for UP-209 | To: 480 V Breaker for UP-209~~
~~Total Fill (mm2): 527.18 | Remarks:~~
~~Allowable Fill (mm2): 702.80~~
~~Description of Changes:~~

Included Cable No.	Conductor Type	Area (mm2)
~~2094-1~~	~~1-3/C + Gnd, #2, 600 V, EPR Insulation~~	~~527.18~~
~~Pull Rope~~	~~Soft-Fiber Polyester~~	~~0.00~~

5

5 **REVISED PER ADDENDUM No. 5 DATED JULY 30, 2009**

CONDUIT AND TRAY SCHEDULE
YBI TRANSITION STRUCTURES ROADWAY EB

E-317

STATE OF CALIFORNIA - DEPARTMENT OF TRANSPORTATION
Caltrans
CONSULTANT FUNCTIONAL SUPERVISOR: BEHZAD GOLEMOHAMMADI
CALCULATED-DESIGNED BY: CARMELO RIVERA
CHECKED BY: ELLERY LUCAS
REVISED BY | DATE REVISED

LAST REVISION 06-28-12 | DATE PLOTTED => 28-JUN-2012 | TIME PLOTTED => 16:46

Dist	COUNTY	ROUTE	KILOMETER POST TOTAL PROJECT	SHEET No.	TOTAL SHEETS
04	SF	80	12.7/13.2	437 R1	806

REGISTERED ELECTRICAL ENGINEER 2/14/08

6-23-08
PLANS APPROVAL DATE

REGISTERED PROFESSIONAL ENGINEER FADI WALIEDDINE No. 11965 Exp. 12/31/09 ELECTRICAL STATE OF CALIFORNIA

THE STATE OF CALIFORNIA OR ITS OFFICERS OR AGENTS SHALL NOT BE RESPONSIBLE FOR THE ACCURACY OR COMPLETENESS OF ELECTRONIC COPIES OF THIS PLAN SHEET.

PB AMERICAS, Inc.
A Parsons Brinckerhoff Company
303 Second St., Suite 700N
San Francisco, CA 94107-1317

REGISTERED PROFESSIONAL ENGINEER SYN YEE CHIN No. 18188 Exp. 09/30/2013 ELECTRICAL STATE OF CALIFORNIA

Syn Yee Chin
FOR REVISION ONLY
1

MARK	DATE	DESCRIPTIONS	BY	CH'D
1	06/28/12	CHANGE TRANSFORMER TYPE AND RELOCATE	LB	EJL

REVISIONS

CONTRACT CHANGE ORDER NO. 123
SHEET 23 OF 24

~~Conduit/Tray No: 5402A~~ ~~Reference: E-107~~
~~Size: 53~~ ~~Type: RGS-PVC coated conduit~~
~~From: Wireway #3E~~ ~~To: Wireway #3E~~
~~Total Fill (mm2): 527.18~~ ~~Remarks:~~
~~Allowable Fill (mm2): 1165.23~~
~~Description of Changes:~~

~~Included Cable No.~~	~~Conductor Type~~	~~Area (mm2)~~
~~2094-1~~	~~1-3/C + Gnd, #2, 600 V, EPR insulation~~	~~527.18~~
~~Pull Rope~~	~~Soft-Fiber Polyester~~	~~0.00~~

Conduit/Tray No: 5403 Reference: E-107
Size: 41 Type: RGS-PVC coated conduit
From: ~~480 V Breaker for LP-218~~ Wireway #3E To: ~~Wireway #3E~~ 480 V Breaker for LP-218
Total Fill (mm2): 366.10 Remarks:
Allowable Fill (mm2): 702.80
Description of Changes:

Included Cable No.	Conductor Type	Area (mm2)
2102	1-3/C + Gnd, #4, 600 V, EPR insulation	366.10
Pull Rope	Soft-Fiber Polyester	0.00

Conduit/Tray No: 5404 Reference: E-107
Size: 41 Type: RGS-PVC coated conduit
From: 480 V Breaker for LP-218 To: 15 KVA Transformer for LP-218
Total Fill (mm2): 262.68 Remarks:
Allowable Fill (mm2): 702.80
Description of Changes:

Included Cable No.	Conductor Type	Area (mm2)
2102-1	1-3/C + Gnd, #8, 600 V, EPR insulation	262.68
Pull Rope	Soft-Fiber Polyester	0.00

Conduit/Tray No: 5405 Reference: E-107
Size: 41 Type: RGS-PVC coated conduit
From: 15 KVA Transformer for LP-218 To: Wireway #3E
Total Fill (mm2): 476.76 Remarks:
Allowable Fill (mm2): 702.80
Description of Changes:

Included Cable No.	Conductor Type	Area (mm2)
2102-2	1-4/C + Gnd, #4, 600 V, EPR insulation	476.76
Pull Rope	Soft-Fiber Polyester	0.00

Conduit/Tray No: 5406 Reference: E-107
Size: 53 RGS-PVC coated conduit
From: 25 kVA Transformer for UP-209 To: Wireway #3E
Total Fill (mm2): 527.18 Remarks:
Allowable Fill (mm2): 1165.23
Description of Changes:

Included Cable No.	Conductor Type	Area (mm2)
~~2094-1~~	~~1-3/C + Gnd, #2, 600 V, EPR insulation~~	527.18
2094-2	1-3/C + Gnd, #1/0, 600 V, EPR insulation	
Pull Rope	Soft-Fiber Polyester	0.00

Conduit/Tray No: 5406A Reference: E-107
Size: 53 Type: RGS-PVC coated conduit
From: ~~25 kVA Transformer for UP-209~~ Circuit Breaker for UP-209 To: ~~Wireway #3E~~ 25 kVA Transformer for UP-209
Total Fill (mm2): 754.18 Remarks:
Allowable Fill (mm2): 1165.23
Description of Changes:

Included Cable No.	Conductor Type	Area (mm2)
~~2094-2~~	~~1-3/C + Gnd, #1/0, 600 V, EPR insulation~~	754.18
2094-1	1-3/C + Gnd, #2, 600 V, EPR insulation	
Pull Rope	Soft-Fiber Polyester	0.00

Conduit/Tray No: 5561 Reference: E-106
Size: 27 Type: RGS-PVC coated conduit
From: Control Cabinet TOS-02EA To: Splice Cabinet TOS-02ES
Total Fill (mm2): 30.19 Remarks:
Allowable Fill (mm2): 229.03
Description of Changes:

Included Cable No.	Conductor Type	Area (mm2)
2475-1B	12 Fiber, single mode fiber optic cable	30.19
Pull Rope	Soft-Fiber Polyester	0.00

Conduit/Tray No: 5564 Reference: E-106
Size: 78 Type: RGS-PVC coated conduit
From: Splice Cabinet TOS-02ES To: TOS/COM Vault #2E
Total Fill (mm2): 647.30 Remarks:
Allowable Fill (mm2): 1499.81
Description of Changes:

Included Cable No.	Conductor Type	Area (mm2)
2475-2	72 Fiber, single mode fiber optic riser cable	323.65
2475-3	72 Fiber, single mode fiber optic riser cable	323.65
Pull Rope	Soft-Fiber Polyester	0.00

CONDUIT AND TRAY SCHEDULE
YBI TRANSITION STRUCTURES ROADWAY EB

E-318

REVISED BY | DATE REVISED
CARMELO RIVERA | ELLERY LUCAS
CALCULATED-DESIGNED BY | CHECKED BY
CONSULTANT FUNCTIONAL SUPERVISOR
BEHZAD GOLEMOHAMMADI

STATE OF CALIFORNIA - DEPARTMENT OF TRANSPORTATION
Caltrans

LAST REVISION 06-28-12 | DATE PLOTTED => 28-JUN-2012 | TIME PLOTTED => 16:46

Dist	COUNTY	ROUTE	KILOMETER POST TOTAL PROJECT	SHEET No.	TOTAL SHEETS
04	SF	80	12.7/13.2	449 R1	806

REGISTERED ELECTRICAL ENGINEER 2/14/08

6-23-08
PLANS APPROVAL DATE

REGISTERED PROFESSIONAL ENGINEER FADI WALIEDDINE No. 11865 Exp. 12/31/09 ELECTRICAL STATE OF CALIFORNIA

THE STATE OF CALIFORNIA OR ITS OFFICERS OR AGENTS SHALL NOT BE RESPONSIBLE FOR THE ACCURACY OR COMPLETENESS OF ELECTRONIC COPIES OF THIS PLAN SHEET.

PB AMERICAS, Inc.
A Parsons Brinckerhoff Company
303 Second St., Suite 700N
San Francisco, CA 94107-1317

REGISTERED PROFESSIONAL ENGINEER SYN YEE CHIN No. 19186 Exp. 09/30/2013 ELECTRICAL STATE OF CALIFORNIA

Syn Yee Chin
FOR REVISION ONLY
1

Metric

MARK	DATE	DESCRIPTIONS	BY	CH'D
1	03/21/12	Conduit and Cabinet Label Change	SYC	RG

REVISIONS

CONTRACT CHANGE ORDER NO. 123
SHEET 24 OF 24

5

~~Conduit/Tray No: 5901A | Reference: E-119, E-131, E-133~~
~~Size: 103 | Type: RGS conduit~~
~~From: PB-2A | To: Electrical Vault #2E~~
~~Total Fill (mm2): 3067.52 | Remarks:~~
~~Allowable Fill (mm2): 3324.51~~
~~Description of Changes:~~

Included Cable No.	Conductor Type	Area (mm2)
2092	1-3/C + Gnd, #4, 600 V, EPR Insulation	366.10
2093	1-3/C + Gnd, #4, 600 V, EPR Insulation	366.10
2094	1-3/C + Gnd, #2, 600 V, EPR Insulation	527.18
2101	1-3/C + Gnd, #4, 600 V, EPR Insulation	366.10
2102	1-3/C + Gnd, #4, 600 V, EPR Insulation	366.10
2254-1	1-3/C #16, 600 V, EPR Insulation	62.07
A-2005-1	1-3/C + Gnd, #8, 600 V, EPR Insulation	262.68
A-2008-1	1-3/C + Gnd, #4, 600 V, EPR Insulation	366.10
A-2009-1	1-3/C + Gnd, #6, 600 V, EPR Insulation	324.29
Pull Rope	Soft-Fiber Polyester	0.00
UP202-8	2 + 1 Gnd, #10, #10, 600 V, RHH/RHW Insulation	60.80

Conduit/Tray No: 5902 | Reference: E-118, E-130, E-133
Size: 103 | Type: RGS conduit
From: Electrical Vault #1E | To: PB-2A
Total Fill (mm2): 1621.91 | Remarks:
Allowable Fill (mm2): 3324.51
Description of Changes:

Included Cable No.	Conductor Type	Area (mm2)
2910-1	1-3/C #16, 600 V, EPR Insulation	62.07
A-2007-1	1-3/C + Gnd, #6, 600 V, EPR Insulation	324.29
Pull Rope	Soft-Fiber Polyester	0.00
S-2023-1	1-3/C + Gnd, #6, 600 V, EPR Insulation	324.29
S-2024-1	1-3/C + Gnd, #6, 600 V, EPR Insulation	324.29
S-2041-2	1-3/C + Gnd, #8, 600 V, EPR Insulation	262.68
S-2042-1	1-3/C + Gnd, #6, 600 V, EPR Insulation	324.29

Conduit/Tray No: 5902A | Reference: E-119, E-131, E-133
Size: 103 | Type: RGS conduit
From: PB-2A | To: Electrical Vault #2E
Total Fill (mm2): 1621.91 | Remarks:
Allowable Fill (mm2): 3324.51
Description of Changes:

Included Cable No.	Conductor Type	Area (mm2)
2910-1	1-3/C #16, 600 V, EPR Insulation	62.07
A-2007-1	1-3/C + Gnd, #6, 600 V, EPR Insulation	324.29
Pull Rope	Soft-Fiber Polyester	0.00
S-2023-1	1-3/C + Gnd, #6, 600 V, EPR Insulation	324.29
S-2024-1	1-3/C + Gnd, #6, 600 V, EPR Insulation	324.29
S-2041-2	1-3/C + Gnd, #8, 600 V, EPR Insulation	262.68
S-2042-1	1-3/C + Gnd, #6, 600 V, EPR Insulation	324.29

Conduit/Tray No: 5903A | Reference: E-119, E-131, E-133
Size: 103 | Type: RGS conduit
From: PB-2A | To: Electrical Vault #2E
Total Fill (mm2): 0.00 | Remarks:
Allowable Fill (mm2): 3324.51
Description of Changes:

Included Cable No.	Conductor Type	Area (mm2)
Pull Rope	Soft-Fiber Polyester	0.00

5 **REVISED PER ADDENDUM No. 5 DATED JULY 30, 2009**

Conduit/Tray No: 5906 | Reference: E-105, E-130
Size: 78 | Type: RGS-PVC coated conduit
From: TOS/COM Vault #1E | To: ~~Controller~~ Splice Cabinet TOS-01ES 1 1
Total Fill (mm2): 647.30 | Remarks:
Allowable Fill (mm2): 1499.81
Description of Changes:

Included Cable No.	Conductor Type	Area (mm2)
2475-1	72 Fiber, single mode fiber optic riser cable	323.65
2475-2	72 Fiber, single mode fiber optic riser cable	323.65
Pull Rope	Soft-Fiber Polyester	0.00

1

Conduit/Tray No: 5906A | Reference: E-105, E-130
Size: 78 | Type: RGS-PVC coated conduit
From: TOS/COM Vault #1E | To: Splice Cabinet #TOS-01ES
Total Fill (mm2): 0.00 | Remarks:
Allowable Fill (mm2): 1935.24
Description of Changes:

Included Cable No.	Conductor Type	Area (mm2)
Pull Rope	Soft-Fiber Polyester	0.00

~~Conduit/Tray No: 5908 | Reference: E-28, E-33, E-127, E-130~~
~~Size: 103 | Type: RGS conduit~~
~~From: Electrical Vault #1E | To: Manhole-29~~
~~Total Fill (mm2): 2372.64 | Remarks:~~
~~Allowable Fill (mm2): 3324.51~~
~~Description of Changes:~~

Included Cable No.	Conductor Type	Area (mm2)
A-2007-1	1-3/C + Gnd, #6, 600 V, EPR Insulation	324.29
A-2008-1	1-3/C + Gnd, #4, 600 V, EPR Insulation	366.10
A-2009-1	1-3/C + Gnd, #6, 600 V, EPR Insulation	324.29
Pull Rope	Soft-Fiber Polyester	0.00
S-2023-1	1-3/C + Gnd, #6, 600 V, EPR Insulation	324.29
S-2024-1	1-3/C + Gnd, #6, 600 V, EPR Insulation	324.29
S-2041-1	1-3/C + Gnd, #6, 600 V, EPR Insulation	324.29
S-2042-1	1-3/C + Gnd, #6, 600 V, EPR Insulation	324.29
UP202-8	2 + 1 Gnd, #10, #10, 600 V, RHH/RHW Insulation	60.80

5

CONDUIT AND TRAY SCHEDULE
YBI TRANSITION STRUCTURES GIRDER EB

E-330

STATE OF CALIFORNIA - DEPARTMENT OF TRANSPORTATION
Caltrans
CONSULTANT FUNCTIONAL SUPERVISOR: BEHZAD GOLEMOHAMMADI
CALCULATED-DESIGNED BY: CARMELO RIVERA | CHECKED BY: ELLERY LUCAS
REVISED BY | DATE REVISED

LAST REVISION 00-00-00 | DATE PLOTTED => 03-APR-2012 | TIME PLOTTED => 16:27

STATE OF CALIFORNIA - DEPARTMENT OF TRANSPORTATION

CONTRACT CHANGE ORDER MEMORANDUM

DATE: 5/21/2012 Page 1 of 1

TO: Deanna Vilcheck, ACM / DV	FILE: E.A. 04 - 0120S4
FROM: William Howe, Senior R.E.	CO-RTE-PM SF-80-12.7/13.2
	FED. NO. NO FED AID
CCO#: 123 SUPPLEMENT#: 0 Category Code: CBPC	CONTINGENCY BALANCE (incl. this change) $55,641,094.15
COST: $47,880.00 INCREASE ☑ DECREASE ☐	HEADQUARTERS APPROVAL REQUIRED? ☐ YES ☑ NO
SUPPLEMENTAL FUNDS PROVIDED: $0.00	IS THIS REQUEST IN ACCORDANCE WITH ENVIRONMENTAL DOCUMENTS? ☑ YES ☐ NO
CCO DESCRIPTION: Electrical - EB Service Platform	**PROJECT DESCRIPTION:** YBITS-1 (Yerba Buena Island Transition Structures)

Original Contract Time:	Time Adj. This Change:	Previously Approved CCO Time Adjustments:	Percentage Time Adjusted: (including this change)	Total # of Unreconciled Deferred Time CCO(s): (including this change)
1390 Day(s)	0 Day(s)	0 Day(s)	0 %	9

THIS CHANGE ORDER PROVIDES FOR:

This change order provides compensation to the Contractor for costs to revise the installation of electrical conduits and wiring, per drawings prepared by Caltrans' Design (Sheets 2 through 24 of the change order). The work includes revisions that the Engineer has determined are required to the Service Platform, Hinge W10AL and W11R, and SCADA feed from the Yerba Buena Island electrical substation design.

Compensation for this work shall be paid at an Agreed Lump Sum of $47,880.00, which will be funded from the project's contingency fund. A cost analysis is on file.

No adjustment of contract time is warranted, as this change will not affect the controlling operation.

This change was requested by Bob Zandipour, Design, per memorandums dated 4/4/12 and 5/7/12.

Concurrence will be obtained from Lina Ellis, Structure Maintenance.

CONCURRED BY:		
Construction Engineer:	William Howe	Date 08-27-12
Bridge Engineer:	Mehran Ardakanian	Date
Project Engineer:	Bob Zandipour, Design	Date 8-28-12
Project Manager:	Ken Terpstra KT	Date 9-4-12
FHWA Rep.:		Date
Environmental:		Date
Other (specify):	Lina Ellis, Str. Maintenance	Date 9-4-12
Other (specify):		Date
District Prior Approval By:		Date
HQ (Issue Approve) By:		Date
Resident Engineer's Signature: William Howe		Date 08-27-12

ESTIMATE OF COST

	THIS REQUEST	TOTAL TO DATE
ITEMS	$0.00	$0.00
FORCE ACCOUNT	$0.00	$0.00
AGREED PRICE	$0.00	$0.00
ADJUSTMENT	$47,880.00	$47,880.00
TOTAL	$47,880.00	$47,880.00

FEDERAL PARTICIPATION

☐ PARTICIPATING ☐ PARTICIPATING IN PART ☑ NONE
☐ NON-PARTICIPATING (MAINTENANCE) ☐ NON-PARTICIPATING

FEDERAL SEGREGATION (if more than one Funding Source or P.I.P. type)
☐ CCO FUNDED PER CONTRACT ☐ CCO FUNDED AS FOLLOWS

FEDERAL FUNDING SOURCE	PERCENT

ADA Notice: For individuals with sensory disabilities, this document is available in alternate formats. For information call: (916) 654-6410 or TDD (916) 654-3880 or write Records and Forms Management, 1120 N Street, MS-89, Sacramento, CA 95814.

STATE OF CALIFORNIA - DEPARTMENT OF TRANSPORTATION

CONTRACT CHANGE ORDER

Change Requested by: Engineer

CCO 125	Suppl. No. 0	Contract No. 04 - 0120S4	Road SF-80-12.7/13.2	FED. AID LOC.: NO FED AID

To: M C M CONSTRUCTION INC

You are directed to make the following changes from the plans and specifications or do the following described work not included in the plans and specifications for this contract. ***NOTE: This change order is not effective until approved by the Engineer.***

Description of work to be done, estimate of quantities and prices to be paid. (Segregate between additional work at contract price, agreed price and force account.) Unless otherwise stated, rates for rental of equipment cover only such time as equipment is actually used and no allowance will be made for idle time. This last percentage shown is the net accumulated increase or decrease from the original quantity in the Engineer's Estimate.

Adjustment of Compensation at Lump Sum:

Furnish and install electrical conduits, headed bar reinforcement, bar reinforcing steel and accessories, and perform rework at Hinge W6RB as directed by the Engineer as a result of conflicts discovered during the Integrated Shop Drawing (ISD) process.

Compensate the Contractor for all additional costs for furnishing, detailing, testing and erecting all Department ordered adjustments to the formwork, reinforcing steel, anchor heads, wedges and couplers; and for additional or revised electrical conduit to be installed, in the area of Hinge W6RB.

For this work, the Contractor shall be compensated at an Agreed Lump Sum of $313,787.00, which constitutes full and final compensation, including all markups, for all additional costs incurred.

Adjustment of Compensation at Agreed Lump Sum = $313,787.00

6/10/13

Estimated Cost: Increase ☑ Decrease ☐ **$313,787.00**

By reason of this order the time of completion will be adjusted as follows: 0 days

Signature William Howe	Resident Engineer William Howe, Senior R.E.	Date 06.07.13
Signature	Area Construction Manager for Deanna Vilcheck	Date 6-7-13
Signature Deanna Vilcheck	Area Construction Manager Deanna Vilcheck	Date 8/28/13

We the undersigned contractor, have given careful consideration to the change proposed and agree, if this proposal is approved, that we will provide all equipment, furnish the materials, except as may otherwise be noted above, and perform all services necessary for the work above specified, and will accept as full payment therefor the prices shown above.

NOTE: If you, the contractor, do not sign acceptance of this order, your attention is directed to the requirements of the specifications as to proceeding with the ordered work and filing a written protest within the time therein specified.

Signature	(Print name and title) Edmundo M Avila - Treasurer	Date 8-26-2013

STATE OF CALIFORNIA - DEPARTMENT OF TRANSPORTATION

CONTRACT CHANGE ORDER MEMORANDUM

DATE: 6/6/2013 Page 1 of 1

TO: Deanna Vilcheck, ACM DBL	FILE: E.A. 04 - 0120S4
FROM: William Howe, Senior R.E.	CO-RTE-PM SF-80-12.7/13.2
	FED. NO. NO FED AID
CCO#: 125 SUPPLEMENT#: 0 Category Code: CHPT	CONTINGENCY BALANCE (incl. this change) $30,162,248.15
COST: $313,787.00 INCREASE ☑ DECREASE ☐	HEADQUARTERS APPROVAL REQUIRED? ☑ YES ☐ NO
SUPPLEMENTAL FUNDS PROVIDED: $0.00	IS THIS REQUEST IN ACCORDANCE WITH ENVIRONMENTAL DOCUMENTS? ☑ YES ☐ NO
CCO DESCRIPTION: Hinge W6RB Modifications	**PROJECT DESCRIPTION:** YBITS-1 (Yerba Buena Island Transition Structures)

Original Contract Time:	Time Adj. This Change:	Previously Approved CCO Time Adjustments:	Percentage Time Adjusted: (Including this change)	Total # of Unreconciled Deferred Time CCO(s): (Including this change)
1390 Day(s)	0 Day(s)	0 Day(s)	0 %	9

THIS CHANGE ORDER PROVIDES FOR:
Hinge W6RB modifications.

This project, the Yerba Buena Island Transition Structure (YBITS), provides for the construction of two bridges, which will connect eastbound and westbound traffic on the new east span of the San Francisco Oakland Bay Bridge (SFOBB) to the existing Yerba Buena Island (YBI) tunnel. The structures are comprised of concrete box girder bridges each approximately 50 meters high and 450 meters in length.

This change compensates the Contractor for all additional costs for furnishing, detailing, testing and erecting all Department ordered adjustments to the formwork, reinforcing steel, anchor heads, wedges and couplers; and for additional or revised electrical conduit to be installed, in the area of Hinge W6RB as follows:

Reinforcing bar placement at Hinge W6RB was revised by the Engineer to resolve the IDS generated placement conflict issues. The changes include switching from seismic hook reinforcing bars to headed reinforcing bars and providing supporting bars and accessories for the precise placement of the reinforcing bars. These changes were accepted and formalized by the Department with the approval of reinforcing bar shop drawings. Rework was also necessary to resolve placement conflicts encountered during erection and electrical conduit installation.

For this work the Contractor shall be compensated an Agreed Lump Sum of $313,787.00, which constitutes full and final compensation, including all markups, for all additional costs incurred. A cost analysis is on file. The funding for this CCO will come from the contingency funds for the project.

No adjustment of contract time is warranted, as the work will not affect the controlling operation.

Maintenance concurrence will be obtained from Lina Ellis, Structures Maintenance.

CONCURRED BY:		
Construction Engineer:	William Howe WBH	Date 06.06.13
Bridge Engineer:	Mehran Ardakanian	Date 06.10.13
Project Engineer:	Bob Zandipour, Design	Date 6-7-13
Project Manager:	Ken Terpstra	Date 6-11-13
FHWA Rep.:		Date
Environmental:		Date
Other (specify):	Lina Ellis, Str. Maintenance	Date 6-11-13
Other (specify):		Date
District Prior Approval By:		Date
HQ (Issue Approve) By:	Larry Salhaney	Date 6-10-13
Resident Engineer's Signature:	William Howe	Date 06.06.13

ESTIMATE OF COST	THIS REQUEST	TOTAL TO DATE
ITEMS	$0.00	$0.00
FORCE ACCOUNT	$0.00	$0.00
AGREED PRICE	$0.00	$0.00
ADJUSTMENT	$313,787.00	$313,787.00
TOTAL	$313,787.00	$313,787.00

FEDERAL PARTICIPATION

☐ PARTICIPATING ☐ PARTICIPATING IN PART ☑ NONE
☐ NON-PARTICIPATING (MAINTENANCE) ☐ NON-PARTICIPATING

FEDERAL SEGREGATION (if more than one Funding Source or P.I.P. type)
☐ CCO FUNDED PER CONTRACT ☐ CCO FUNDED AS FOLLOWS

FEDERAL FUNDING SOURCE	PERCENT

ADA Notice: For individuals with sensory disabilities, this document is available in alternate formats. For information call: (916) 654-6410 or TDD (916) 654-3880 or write

CONTRACT CHANGE ORDER

Change Requested by: Engineer

CCO 129	Suppl. No. 0	Contract No 04 - 0120S4	Road SF-80-12.7/13.2	FED. AID LOC.: NO FED AID

To: M C M CONSTRUCTION INC

You are directed to make the following changes from the plans and specifications or do the following described work not included in the plans and specifications for this contract. ***NOTE: This change order is not effective until approved by the Engineer.***

Description of work to be done, estimate of quantities and prices to be paid. (Segregate between additional work at contract price, agreed price and force account.) Unless otherwise stated, rates for rental of equipment cover only such time as equipment is actually used and no allowance will be made for idle time. This last percentage shown is the net accumulated increase or decrease from the original quantity in the Engineer's Estimate.

Adjustment of Compensation at Lump Sum:

Provide reinforcement bar changes for the stressing diaphragms, west of the construction joints, at Hinges KE and KW. All work east of the construction joint at Hinge KE and KW stressing diaphragms including furnishing and erection of reinforcement bars has been deleted from the contract by Contract Change Order No. 72 S1. Threading of reinforcement bars that are east of the construction joints and installed by others but connect to couplers installed under this contract is also compensated by this Contract Change Order.

Provide all reinforcement bar changes for both sides of the construction joint for the bikepath support beam and the added bikebath edge beam at Hinge KE.

The reinforcement bar changes described above are shown on revised Contract Plan Sheets 551R7, 552R6, 554R4, 556R2, 560R1, 620R3, 627R2, 635R4, 636R2, 637R2, 642R2, 643R1, 667R3, 668R4, 669R4, 670R4, 671R2, 672R3, 673R2, 674R1, 675R1, 676R1, 677R1, 678R1, 679R2, 680R2, 681R2, 697R3, 698R3, 704R3, 705R3, 705ASR1, 705BSR1, 708R5, 709R1, and 710R3 of 806, Sheet Nos. 2 to 37 of this Contract Change Order.

For these changes the Contractor will be paid an Adjustment in Compensation at an Agreed Lump Sum of $314,380.00. This sum constitutes full and complete compensation, including all markups, for this change.

Adjustment in Compensation at Agreed Lump Sum = $314,380.00

Estimated Cost: Increase ☑ Decrease ☐ **$314,380.00**

By reason of this order the time of completion will be adjusted as follows: 0 days

Submitted by

Signature	Resident Engineer	Date
William Howe	William Howe, Senior R.E.	02-12-13

Approval Recommended by

Signature	Area Construction Manager	Date
Deanna Vilcheck	Deanna Vilcheck	2/12/13

Engineer Approval by

Signature	Area Construction Manager	Date
Deanna Vilcheck	Deanna Vilcheck	4/19/13

We the undersigned contractor, have given careful consideration to the change proposed and agree, if this proposal is approved, that we will provide all equipment, furnish the materials, except as may otherwise be noted above, and perform all services necessary for the work above specified, and will accept as full payment therefor the prices shown above.

NOTE: If you, the contractor, do not sign acceptance of this order, your attention is directed to the requirements of the specifications as to proceeding with the ordered work and filing a written protest within the time therein specified.

Contractor Acceptance by

Signature	(Print name and title)	Date
	EDMUNDO A. PUCHI, TREASURER	4/18/13

INDEX TO BRIDGE PLANS

SHEET NO.	TITLE
1	GENERAL PLAN
2	INDEX TO BRIDGE PLANS
3	GENERAL NOTES
4	WESTBOUND STRUCTURE PLAN NO. 1
5	WESTBOUND STRUCTURE PLAN NO. 2
6	EASTBOUND STRUCTURE PLAN NO. 1
7	EASTBOUND STRUCTURE PLAN NO. 2
8	WESTBOUND DECK CONTOURS PLAN NO. 1
9	WESTBOUND DECK CONTOURS PLAN NO. 2
10	EASTBOUND DECK CONTOURS PLAN NO. 1
11	EASTBOUND DECK CONTOURS PLAN NO. 2
12	FOUNDATION PLAN NO. 1
13	FOUNDATION PLAN NO. 2
14	PILE DETAILS
15	ABUTMENT W1IR DETAILS NO. 1
16	ABUTMENT W1IR DETAILS NO. 2
17	ABUTMENT W1IR DETAILS NO. 3
18	BENT ELEVATIONS W10AL TO W9
19	BENT ELEVATIONS W8 TO W7
20	BENT ELEVATIONS W6 TO W5
21	BENT ELEVATIONS W4 TO W3
22	BENT W10AL DETAILS NO. 1
23	BENT W10AL DETAILS NO. 2
24	BENT W10AL DETAILS NO. 3
25	BENT W10AL DETAILS NO. 4
25A	BENT W10AL DETAILS NO. 5
26	BENT W10L DETAILS NO. 1
27	BENT W10L DETAILS NO. 2
28	BENT W10L DETAILS NO. 3
29	BENT W9L DETAILS NO. 1
30	BENT W9L DETAILS NO. 2
31	BENT W9L DETAILS NO. 3
32	BENT W9L DETAILS NO. 4
32A	BENT W9L DETAILS NO. 5
33	BENT W8L DETAILS NO. 1
34	BENT W8L DETAILS NO. 2
35	BENT W8L DETAILS NO. 3
36	BENT W8L DETAILS NO. 4
37	BENT W7L DETAILS NO. 1
38	BENT W7L DETAILS NO. 2
39	BENT W7L DETAILS NO. 3
40	PRESTRESS DETAILS - BENTS W10AL TO W9L
41	PRESTRESS DETAILS - BENTS W8L & W7L
42	BENT W6L DETAILS NO. 1
42A	BENT W6L DETAILS NO. 2
43	BENT W5L DETAILS NO. 1
44	BENT W5L DETAILS NO. 2
44A	BENT W5L DETAILS NO. 3
45	BENT W4L DETAILS NO. 1
45A	BENT W4L DETAILS NO. 2
45B	BENT W4L DETAILS NO. 3
46	BENT W3L DETAILS NO. 1
47	BENT W3L DETAILS NO. 2
48	BENT W1OR DETAILS NO. 1
49	BENT W1OR DETAILS NO. 2
50	BENT W1OR DETAILS NO. 3
51	BENT W9R DETAILS NO. 1
52	BENT W9R DETAILS NO. 2
53	BENT W8R DETAILS NO. 1
54	BENT W8R DETAILS NO. 2
55	BENT W7R DETAILS NO. 1
56	BENT W7R DETAILS NO. 2
57	BENT W6R DETAILS NO. 1
58	BENT W6R DETAILS NO. 2
59	BENT W6R DETAILS NO. 3
60	BENT W5R DETAILS NO. 1
61	BENT W5R DETAILS NO. 2
62	BENT W4R DETAILS
63	BENT W3R DETAILS
64	COLUMN ISOLATION SLEEVE DETAILS
65	WESTBOUND TYPICAL SECTION NO. 1
66	WESTBOUND TYPICAL SECTION NO. 2
67	WESTBOUND TYPICAL SECTION NO. 3
68	WESTBOUND TYPICAL SECTION NO. 4
69	WESTBOUND TYPICAL SECTION NO. 5
70	WESTBOUND TYPICAL SECTION NO. 6
71	WESTBOUND TYPICAL SECTION NO. 7
72	WESTBOUND TYPICAL SECTION NO. 8
72A	WESTBOUND TYPICAL SECTION NO. 9
72B	ADDED REINF AT WB GIRDER HAUNCH AT BENT W3L
73	EASTBOUND TYPICAL SECTION NO. 1
74	EASTBOUND TYPICAL SECTION NO. 2
75	EASTBOUND TYPICAL SECTION NO. 3
76	EASTBOUND TYPICAL SECTION NO. 4
77	EASTBOUND TYPICAL SECTION NO. 5
78	EASTBOUND TYPICAL SECTION NO. 6
79	EASTBOUND TYPICAL SECTION NO. 7
79A	ADDED REINF AT EB GIRDER HAUNCH AT BENT W3R
80	ON-RAMP SPINE EXTENSION DETAILS NO. 1
81	ON-RAMP SPINE EXTENSION DETAILS NO. 2
81A	FRAME WB2 SOFFIT PROJECTIONS NO. 1
81B	FRAME WB2 SOFFIT PROJECTIONS NO. 2
81C	FRAME WB2 SOFFIT PROJECTIONS NO. 3
82	WESTBOUND GIRDER LAYOUT GEOMETRICS
83	WESTBOUND GIRDER LAYOUT NO. 1
84	WESTBOUND GIRDER LAYOUT NO. 2
85	WESTBOUND GIRDER LAYOUT NO. 3
86	WESTBOUND GIRDER LAYOUT NO. 4
87	WESTBOUND GIRDER LAYOUT NO. 5
88	EASTBOUND GIRDER LAYOUT GEOMETRICS
89	EASTBOUND GIRDER LAYOUT NO. 1
90	EASTBOUND GIRDER LAYOUT NO. 2
91	EASTBOUND GIRDER LAYOUT NO. 3
92	EASTBOUND GIRDER LAYOUT NO. 4
93	EASTBOUND GIRDER LAYOUT NO. 5
94	EASTBOUND GIRDER LAYOUT NO. 6
95	GIRDER PRESTRESS DETAILS
96	GIRDER DIAPHRAGM DETAILS NO. 1
97	GIRDER DIAPHRAGM DETAILS NO. 2
97A	GIRDER DIAPHRAGM DETAILS NO. 3
97B	GIRDER DIAPHRAGM DETAILS NO. 4
98	MISC SUPERSTRUCTURE DETAILS NO. 1
99	MISC SUPERSTRUCTURE DETAILS NO. 2
100	WESTBOUND GIRDER TOP REINFORCEMENT NO. 1
101	WESTBOUND GIRDER TOP REINFORCEMENT NO. 2
102	WESTBOUND GIRDER TOP REINFORCEMENT NO. 3
103	WESTBOUND GIRDER TOP REINFORCEMENT NO. 4
104	WESTBOUND GIRDER TOP REINFORCEMENT NO. 5
105	WESTBOUND GIRDER BOTTOM REINFORCEMENT NO. 1
106	WESTBOUND GIRDER BOTTOM REINFORCEMENT NO. 2
107	WESTBOUND GIRDER BOTTOM REINFORCEMENT NO. 3
108	EASTBOUND GIRDER TOP REINFORCEMENT NO. 1
109	EASTBOUND GIRDER TOP REINFORCEMENT NO. 2
110	EASTBOUND GIRDER BOTTOM REINFORCEMENT NO. 1
111	HINGE W7LA DETAILS NO. 1
112	HINGE W7LA DETAILS NO. 2
113	HINGE W7LA DETAILS NO. 3
114	HINGE W6RB DETAILS NO. 1
115	HINGE W6RB DETAILS NO. 2
116	HINGE W6RB DETAILS NO. 3
117	HINGE W6RB DETAILS NO. 4
118	HINGE K CLOSURE DETAILS NO. 1
119	HINGE K CLOSURE DETAILS NO. 2
120	HINGE K CLOSURE DETAILS NO. 3
121	HINGE K CLOSURE DETAILS NO. 4
122	DELETED
123	DELETED
124	DELETED
125	DELETED
126	DELETED
127	DELETED
128	DELETED
129	DELETED
130	DELETED
131	HINGE K CLOSURE DETAILS NO. 14
132	HINGE K CLOSURE DETAILS NO. 15
133	CABLE RESTRAINER UNIT - TYPE 2
134	CABLE RESTRAINER UNIT - TYPE 2 DETAILS
135	SPHERICAL BEARING DETAILS
136	DECK JOINT DETAILS
137	SEISMIC JOINT
137A	SEISMIC JOINT
138	SEISMIC JOINT
139	SEISMIC JOINT
140	SEISMIC JOINT
141	SEISMIC JOINT
142	SEISMIC JOINT
143	SEISMIC JOINT
144	SEISMIC JOINT
145	SEISMIC JOINT
146	MODULAR DECK JOINT DETAILS NO. 1
147	MODULAR DECK JOINT DETAILS NO. 2
148	HINGE KE & KW EXPANSION JOINT DETAILS NO. 1
149	HINGE KE & KW EXPANSION JOINT DETAILS NO. 2
150	HINGE KE & KW EXPANSION JOINT DETAILS NO. 3
151	HINGE KE & KW EXPANSION JOINT DETAILS NO. 4
152	HINGE KE & KW EXPANSION JOINT DETAILS NO. 5
153	HINGE KE & KW EXPANSION JOINT DETAILS NO. 6
154	HINGE KE & KW EXPANSION JOINT DETAILS NO. 7
155	DELETED
156	DELETED
156A	DELETED
156B	DELETED
157	BIKE PATH DETAILS NO. 1
158	BIKE PATH DETAILS NO. 2
159	FUTURE BIKE PATH DETAILS NO. 1
160	FUTURE BIKE PATH DETAILS NO. 2
161	FUTURE BIKE PATH DETAILS NO. 3
162	BIKE PATH RAILING DETAILS NO. 1
163	BIKE PATH RAILING DETAILS NO. 2
164	BIKE PATH RAILING DETAILS NO. 3
165	BIKE PATH RAILING DETAILS NO. 4
165A	BIKE PATH FENCE DETAILS NO. 1
165B	BIKE PATH FENCE DETAILS NO. 2
166	CONCRETE BARRIER TYPE 732 (MOD)
167	STRUCTURE APPROACH TYPE EQ (3) - MOD
168	STRUCTURE APPROACH DRAINAGE DETAILS
169-189C	LOG OF TEST BORINGS (NO. 1 TO NO. ~~21~~ 24)
190-209	AS-BUILT LOG OF TEST BORINGS (NO. 1 TO NO. 20)

FOR REVISION 1, 2, 2A, 4, 5, 6 AND 7 ONLY

FOR REVISION 3 ONLY

CCO No. 129

APPLICABLE STANDARD PLANS (DATED JULY 2004)

A10A	ACRONYMS AND ABBREVIATIONS (A-L)
A10B	ACRONYMS AND ABBREVIATIONS (M-Z)
A10C	SYMBOLS (1 OF 2)
A10D	SYMBOLS (2 OF 2)
A62B	LIMITS OF PAYMENT FOR EXCAVATION AND BACKFILL - BRIDGE SURCHARGE AND WALL
A62C	LIMITS OF PAYMENT FOR EXCAVATION AND BACKFILL - BRIDGE
B0-1	BRIDGE DETAILS
B0-3	BRIDGE DETAILS
B0-5	BRIDGE DETAILS
B0-13	BRIDGE DETAILS
B3-1	RETAINING WALL TYPE 1 H=1200 THROUGH 9100
B3-8	RETAINING WALL DETAILS NO. 1
B7-1	BOX GIRDER DETAILS
B7-5	DECK DRAINS
B7-6	DECK DRAINS TYPES D-1 AND D-2
B7-10	UTILITY OPENING BOX GIRDER
B7-11	UTILITY DETAILS
B8-5	CAST-IN-PLACE PRESTRESSED GIRDER DETAILS
B14-3	COMMUNICATION AND SPRINKLER CONTROL CONDUITS (CONDUIT LESS THAN SIZE 103)
B14-4	WATER SUPPLY LINE (BRIDGE) (PIPE SIZES LESS THAN NPS 4)
B14-5	WATER SUPPLY LINE (DETAILS) (PIPE SIZES LESS THAN NPS 4)

MARK	DATE	DESCRIPTIONS	BY	CH'D
7	5-18-12	Deleted sheets 122-130 & 155-156B	TL	JB
6	3-29-12	Added Seismic Joint Layouts	TL	JB
5	10-5-11	Added Reinf at EB Girder Haunch	TL	JB
4	5-16-11	Added Reinf at WB Girder Haunch	TL	JB
2A	2-4-11	Revised Exp Jt at Hinge K	TL	JB
3	10-15-10	WB Ramp Revisions	TL	AE
2	10-14-10	Deleted Seismic Jt sheets for Hinges W7LA & W6RB, added Modular Jt sheets	TL	JB
1	9-1-10	Added Bike Path Fence Sheets	TL	JB

REVISIONS

CONTRACT CHANGE ORDER NO. 129
SHEET 2 OF 37

2 REVISED PER ADDENDUM NO. 2 DATED JANUARY 22, 2009

8 REVISED PER ADDENDUM NO. 8 DATED NOVEMBER 12, 2009

DIST.	COUNTY	ROUTE	KILOMETER POST TOTAL PROJECT	SHEET NO.	TOTAL SHEETS
04	SF	80	12.7/13.2	051R7	806

REGISTERED ENGINEER - CIVIL
6-23-08
PLANS APPROVAL DATE
The State of California or its officers or agents shall not be responsible for the accuracy or completeness of electronic copies of this plan sheet.

T.Y. LIN / MOFFATT & NICHOL
TWO HARRISON STREET
SAN FRANCISCO, CA 94105

DESIGN OVERSIGHT
Peter Mooi, Bernard Chan, Juan F. Carpio
March 3, 2008
SIGN OFF DATE
Hilan El-Hatow
5/30/12
Rev. Date: 8-18-08

DESIGN	BY Desai	CHECKED Jain	
DETAILS	BY Van Ryn/Zucchi/Mal	CHECKED Jain	
QUANTITIES	BY Liao	CHECKED E. Nichol	

PREPARED FOR THE STATE OF CALIFORNIA DEPARTMENT OF TRANSPORTATION

Jal Birdy
PROJECT ENGINEER

BRIDGE NO. 34-0006 L/R
KILOMETER POST 12.8

CU 04251
EA 012051

SAN FRANCISCO OAKLAND BAY BRIDGE
EAST SPAN SEISMIC SAFETY PROJECT

YBI TRANSITION STRUCTURES

INDEX TO BRIDGE PLANS

SHEET 2 OF 209

ORIGINAL SCALE IN MILLIMETERS FOR REDUCED PLANS 0 10 20 30 40 50 60 70 80 90 100

FILE => \\mnlbfs\LB_Projects\4141-06\CADD\TS\Checked Plans\YBITS #1 100% No. 2_03-03-08 (Final Renamed)\051812 CCO 121\04-0120a1-34-0006r1-a-ttp.dgn

USERNAME => fadamson DATE PLOTTED => 5/18/2012 TIME PLOTTED => 11:00:48 PM

May 18, 2012

DIST.	COUNTY	ROUTE	KILOMETER POST TOTAL PROJECT	SHEET NO.	TOTAL SHEETS
04	SF	80	12.7/13.2	552R6	806

REGISTERED ENGINEER - CIVIL
6-23-08
PLANS APPROVAL DATE

The State of California or its officers or agents shall not be responsible for the accuracy or completeness of electronic copies of this plan sheet.

T.Y. LIN / MOFFATT & NICHOL
TWO HARRISON STREET
SAN FRANCISCO, CA 94105

QUANTITIES

PREPARE CONCRETE BRIDGE DECK SURFACE	1022 ~~765~~	m^2	2
BRIDGE REMOVAL (PORTION), LOCATION A	LUMP	SUM	
STRUCTURE EXCAVATION (BRIDGE)	9 105	m^3	
STRUCTURE EXCAVATION (TYPE H)	228	m^3	
STRUCTURE EXCAVATION (RETAINING WALL)	443	m^3	
STRUCTURE BACKFILL (BRIDGE)	2 800	m^3	
STRUCTURE BACKFILL (BRIDGE)(CEMENT MODIFIED)	3 770	m^3	
STRUCTURE BACKFILL (RETAINING WALL)	428	m^3	
FURNISH STEEL PILING (HP 360 X 132)	7 585	m	1
DRIVE STEEL PILE (HP 360 X 132)	615	EA	
FURNISH STEEL PILING (W 360 X 196)	1 558	m	
DRIVE STEEL PILE (W 360 X 196)	96	EA	
PRESTRESSING CAST-IN-PLACE CONCRETE (LONGITUDINAL)	LUMP	SUM	
PRESTRESSING CAST-IN-PLACE CONCRETE (TRANSVERSE)	LUMP	SUM	
STRUCTURAL CONCRETE, BRIDGE FOOTING	6,4 2 460	m^3	
STRUCTURAL CONCRETE, BRIDGE	38 540	m^3	8
STRUCTURAL CONCRETE, RETAINING WALL	45	m^3	
STRUCTURAL CONCRETE, APPROACH SLAB, (TYPE EQ (3) MOD)	27	m^3	
MINOR CONCRETE (CONCRETE BALLAST)	36	m^3	
FURNISH PRECAST CONCRETE SLAB(BIKEPATH)	34	EA	2
ERECT PRECAST CONCRETE SLAB(BIKEPATH)	34	EA	
FURNISH POLYESTER CONCRETE OVERLAY (50MM)	38	m^3	
PLACE POLYESTER CONCRETE OVERLAY (50MM)	765	m^2	
PTFE SPHERICAL BEARING	10	EA	
INSTALL HINGE K BEARING ASSEMBLY	4	EA	
4 SEISMIC JOINT (BENT W10AL)	LUMP	SUM	
MODULAR JOINT (HINGE W7LA)	LUMP	SUM	
EXPANSION JOINT (HINGE K) 5	LUMP	SUM	
5 SEISMIC JOINT (BENT W10R)	LUMP	SUM	
MODULAR JOINT (HINGE W6RB)	LUMP	SUM	
SEISMIC JOINT (HINGE K)	5,4 LUMP	SUM	
BAR REINFORCING STEEL (BRIDGE)	6 320 000	Kg	8
BAR REINFORCING STEEL (RETAINING WALL)	8 212	Kg	
HEADED BAR REINFORCEMENT	224	EA	
CLEAN AND PAINT STRUCTURAL STEEL (MISCELLANEOUS FACILITIES)	LUMP	SUM	
COLUMN ISOLATION SLEEVE	18 786	Kg	
MISCELLANEOUS METAL (RESTRAINER - CABLE TYPE)	1 647	Kg	
4 MISCELLANEOUS METAL (BRIDGE)	15 900	Kg	
BRIDGE DECK DRAINAGE SYSTEM 2	18 750	Kg	
BIKEPATH RAILING(ANCHORAGE ONLY)	275	m	
REMOVABLE CONCRETE COUNTERWEIGHT(BIKEPATH)	5,4 LUMP	SUM	
CONCRETE BARRIER (TYPE 732 MODIFIED)	1 364	m	
CHAIN LINK RAILING TYPE 7 (TEMPORARY)	137	m	4

MARK	DATE	DESCRIPTIONS	BY	CH'D
6	5-10-12	Denoted Hinge K Closure Pour by others	TL	JB
5	2-8-11	Rev earth edge EB Trans Struct & exp jt at Hinge K	TL	JB
4	10-15-10	WB Ramp Revisions	TL	AE
3	10-14-10	Rev Joints at Hinges W7LA & W6RB to Modular Joints	TL	JB
2	9-1-10	Rev Bike Path Railing	TL	JB
1	6-14-10	Rev Pile lengths at north column W10AL & W10L	TL	JB

REVISIONS

CONTRACT CHANGE ORDER NO. 129
SHEET 3 OF 37

FURNISH POLYESTER CONCRETE OVERLAY (19MM)	5	m^3
PLACE POLYESTER CONCRETE OVERLAY (19MM)	257	m^2

FOR REVISION 1 2 3 5 & 6 ONLY

FOR REVISION 4 ONLY

8 REVISED PER ADDENDUM NO. 8 DATED NOVEMBER 12, 2009

2 REVISED PER ADDENDUM NO. 2 DATED JANUARY 22, 2009

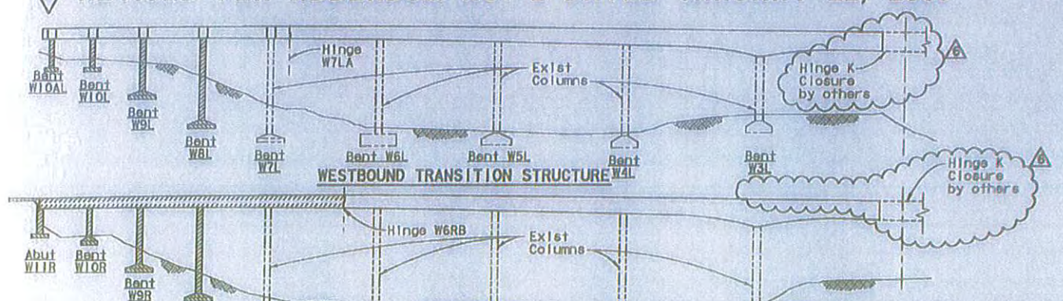

WESTBOUND TRANSITION STRUCTURE

EASTBOUND TRANSITION STRUCTURE

NOTE:
Piles not shown for clarity.

CONCRETE STRENGTH & TYPE LIMITS

- Structural concrete, bridge (46 MPa at 28 days)
- Structural concrete, bridge (41 MPa at 28 days)
- Structural concrete, bridge (25 MPa at 28 days)
- Structural concrete, bridge footing (25 MPa at 28 days)
- Structural concrete, approach slab (25 MPa at 28 days)

GENERAL NOTES

Load Factor Design

Design: Caltrans Design Specifications-April 2000 (LFD)
(1996 AASHTO with Interims and revisions by Caltrans)
Dead Load: Includes 1675 N/m2 for future wearing surface on roadbed
Live Load: HS20-44 and alternative and permit design load
Bike Path Live Load: 4000 N/m2
Future Mass Transit Loading:

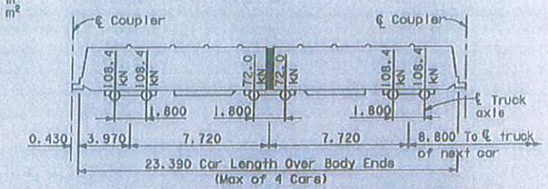

Seismic Loading: Refer to project specific seismic design criteria for San Francisco Oakland Bay Bridge East Span Seismic Safety Project Dated 01-08-00
See 'Site Specific Response Spectra'

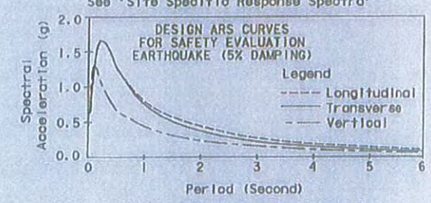

SITE SPECIFIC RESPONSE SPECTRA

Reinforced Concrete: Fy = 420 MPa
F'c = 25 MPa
N = 8

Transverse Deck Slabs
(Working Stress Design)
Fs = 140 MPa
Fc = 8 MPa
N = 10

Prestressed Concrete: See 'Prestressing Notes' on 'Girder Layout' & 'Prestress Details - Bents W8L & W7L' sheets

ALL DIMENSIONS ARE IN METERS UNLESS OTHERWISE SHOWN

DESIGN OVERSIGHT
JOHN MOOR, BERNARD CHAN, JUAN F. CARPIO, HASAN EL-HATLIN
March 3, 2008
SIGN OFF DATE
5/30/12
Rev. Date: 5-15-08

DESIGN	BY Desai	CHECKED Jain	
DETAILS	BY van Ryn/Zuschl/Wal	CHECKED Jain	
QUANTITIES	BY Liao	CHECKED E. Nichol	

ORIGINAL SCALE IN MILLIMETERS FOR REDUCED PLANS 0 10 20 30 40 50 60 70 80 90 100

PREPARED FOR THE STATE OF CALIFORNIA DEPARTMENT OF TRANSPORTATION

Jai Birdy
PROJECT ENGINEER

CU 04251
EA 012051

BRIDGE NO. 34-0006 L/R
KILOMETER POST 12.8

SAN FRANCISCO OAKLAND BAY BRIDGE
EAST SPAN SEISMIC SAFETY PROJECT

YBI TRANSITION STRUCTURES

GENERAL NOTES

DISCARD PRIOR REDLINE
EARLIER REVISION DATES

REVISION DATES (PRELIMINARY STAGE ONLY)

SHEET 3 OF 209

FILE => \\anlbfs\LB_Projects\4141-06\CADD\TS\Checked Plans\YBITS #1-1DOX No. 2_03-03-08 (Final Renamed)\051812 CCO T21\04-012041-3

DATE PLOTTED => 5/18/2012 TIME PLOTTED => 11:04:15 PM

USERNAME => fsanchez

May 18, 2012

DIST	COUNTY	ROUTE	KILOMETER POST TOTAL PROJECT	SHEET NO.	TOTAL SHEETS
04	SF	80	12.7/13.2	554R4	806

REGISTERED ENGINEER - CIVIL
6-23-08
PLANS APPROVAL DATE
The State of California or its officers or agents shall not be responsible for the accuracy or completeness of electronic copies of this plan sheet.

T.Y. LIN / MOFFATT & NICHOL
TWO HARRISON STREET
SAN FRANCISCO, CA 94105

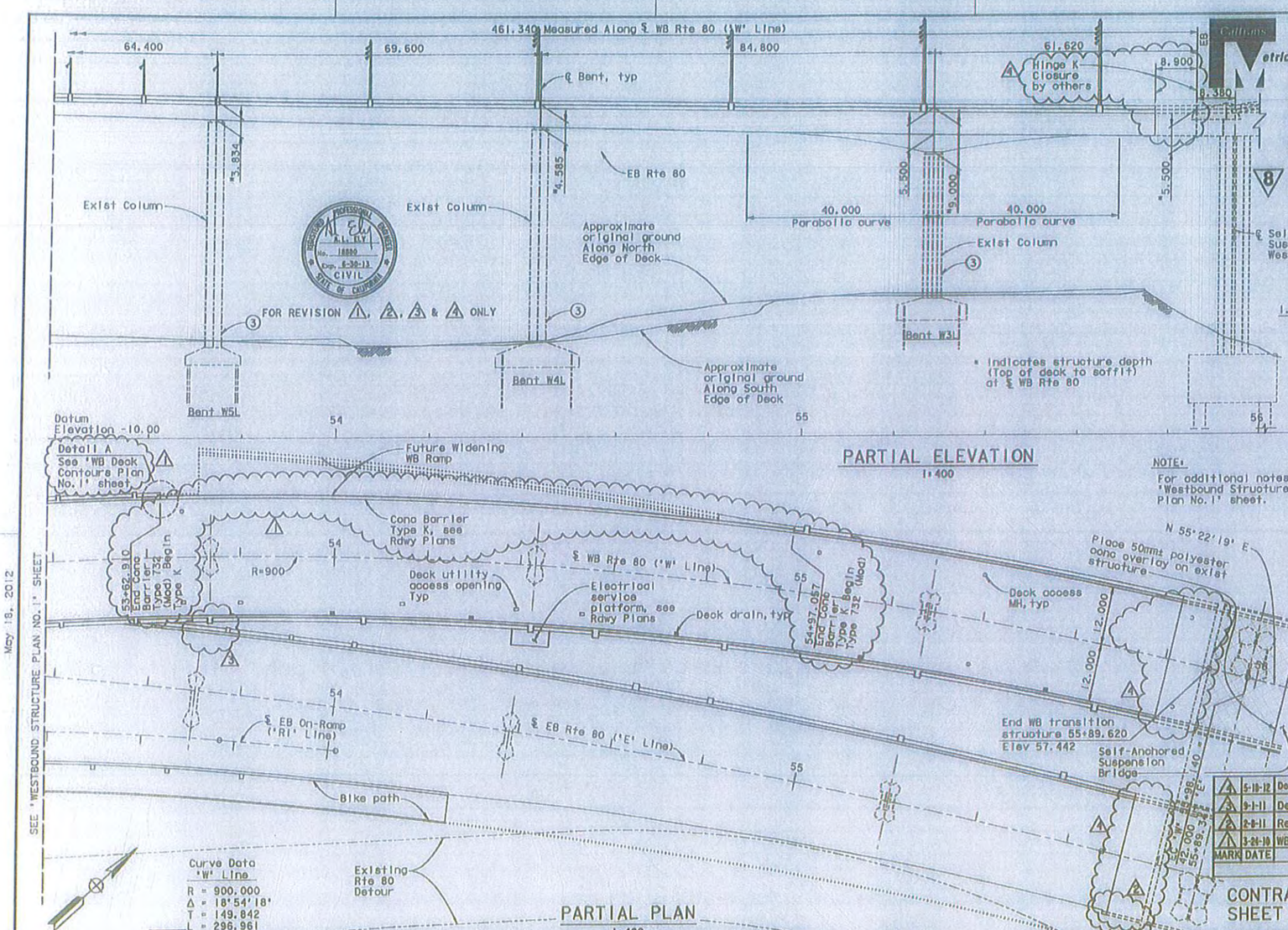

PARTIAL ELEVATION
1:400

NOTE:
For additional notes see 'Westbound Structure Plan No.1' sheet.

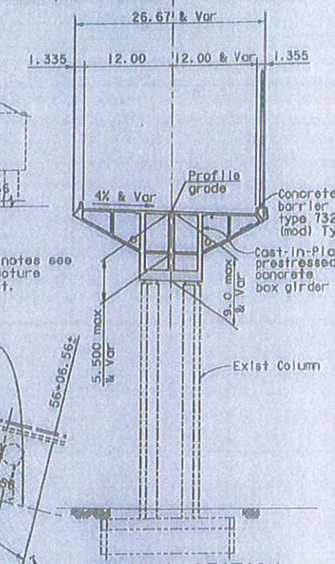

TYPICAL SECTION
(Bent W3L shown)
1:300

PARTIAL PLAN
1:400

MARK	DATE	DESCRIPTIONS	BY	CH'D
4	5-19-12	Denoted Hinge K Closure Pour by others	JB	AE
3	9-1-11	Deleted Elec Service Platform	JB	AE
2	2-8-11	Rev south edge EB Trans Struct	TL	AE
1	3-24-10	WB Ramp Revisions	TL	AE

REVISIONS

CONTRACT CHANGE ORDER NO. 129
SHEET 4 OF 37

8 REVISED PER ADDENDUM NO. 8 DATED NOVEMBER 12, 2009

ALL DIMENSIONS ARE IN METERS UNLESS OTHERWISE SHOWN

SAN FRANCISCO OAKLAND BAY BRIDGE
EAST SPAN SEISMIC SAFETY PROJECT

YBI TRANSITION STRUCTURES
WESTBOUND STRUCTURE PLAN NO. 2

DESIGN OVERSIGHT: JOHN MOOK, BERNARD CHAN, JUAN F. CARPIO — March 3, 2008
HASAN EL-HATUB — 5/30/12
SIGN OFF DATE
Rev. Date: 5-18-99

DESIGN BY Bassi — CHECKED Jain
DETAILS BY von Ryn/Zucchi/Mal — CHECKED Jain
QUANTITIES BY Liao — CHECKED E. Nichol

PREPARED FOR THE STATE OF CALIFORNIA DEPARTMENT OF TRANSPORTATION

Jal Birdy
PROJECT ENGINEER

BRIDGE NO. 34-0006 L/R
KILOMETER POST 12.8

CU 04251
EA 012051

ORIGINAL SCALE IN MILLIMETERS FOR MEASURE PLANS: 0 10 20 30 40 50 60 70 80 90 100

DIMENSIONS PRINTS BEARING EARLIER REVISION DATES: 1/2/97 1/2/98 1/2/99 1/2/00 1/2/01 1/2/02 1/2/03 1/2/04 1/2/05 1/2/06

REVISION DATES (PRELIMINARY BRIDGE ONLY)

SHEET 5 OF 209

FILE => \\mlbfs\LB_Projects\4141-06\CADD\TS\Checked Plans\YBITS #1100X No. 2.03-03-08 (Final Renamed)\051812 CCO T2\04-0120s1-34-006r1-o-sp02.dgn

USERNAME => fecmoon DATE PLOTTED => 5/18/2012 TIME PLOTTED => 11:04:25 PM

May 18, 2012

DIST.	COUNTY	ROUTE	KILOMETER POST TOTAL PROJECT	SHEET NO.	TOTAL SHEETS
04	SF	80	12.7/13.2	556R2	806

REGISTERED ENGINEER - CIVIL

6-23-08

PLANS APPROVAL DATE

The State of California or its officers or agents shall not be responsible for the accuracy or completeness of electronic copies of this plan sheet.

T.Y. LIN / MOFFATT & NICHOL
TWO HARRISON STREET
SAN FRANCISCO, CA 94105

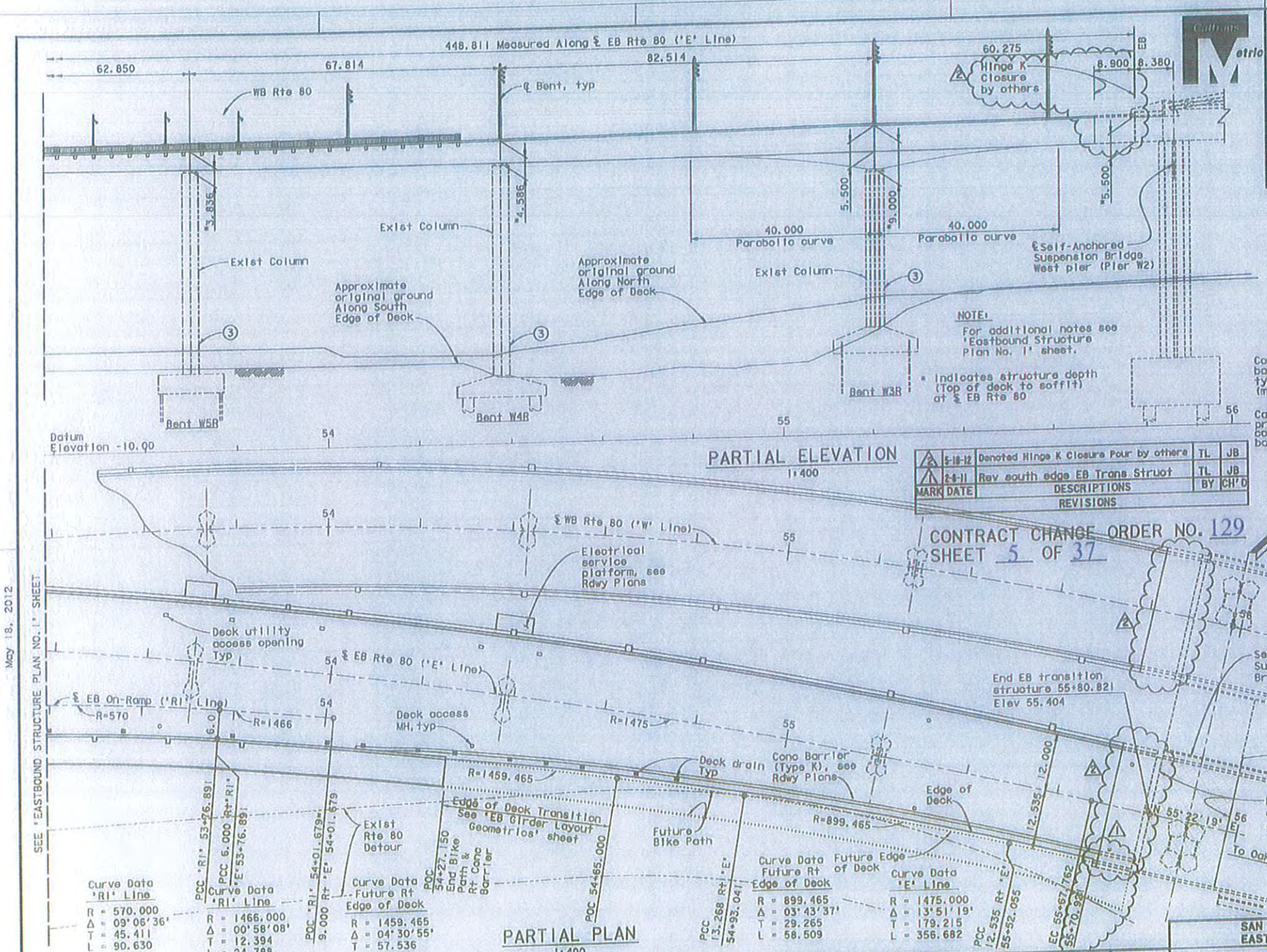

MARK	DATE	DESCRIPTIONS	BY	CH'D
2	5-18-12	Denoted Hinge K Closure Pour by others	TL	JB
1	2-8-11	Rev south edge EB Trans Struct	TL	JB

REVISIONS

CONTRACT CHANGE ORDER NO. 129
SHEET 5 OF 37

FOR REVISION 1 & 2 ONLY

ALL DIMENSIONS ARE IN METERS UNLESS OTHERWISE SHOWN

SEE 'EASTBOUND STRUCTURE PLAN NO. 1' SHEET

May 18, 2012

DESIGN OVERSIGHT
JOHN MOOR, BERNARD CHAN, JUAN F. CARPIO
HASAN EL-HATUR
5/30/12
SIGN OFF DATE

DESIGN	BY Desai	CHECKED Jain
DETAILS	BY Van Ryn/Zuoshi/Mal	CHECKED Jain
QUANTITIES	BY Liao	CHECKED E. Michel

PREPARED FOR THE STATE OF CALIFORNIA DEPARTMENT OF TRANSPORTATION

Jal Birdy
PROJECT ENGINEER

CU 04251
EA 012051

BRIDGE NO. 34-0006 L/R
KILOMETER POST 12.8

SAN FRANCISCO OAKLAND BAY BRIDGE
EAST SPAN SEISMIC SAFETY PROJECT

YBI TRANSITION STRUCTURES
EASTBOUND STRUCTURE PLAN NO. 2

SHEET 7 OF 209

FILE -> \\nmbfs\LB_Projects\4141-06\CADD\TS\Checked Plans\YBITS #1-100% No. 2.03-03-08 (Final Renamed) \051812 CCO 721\04-012051-3

DATE PLOTTED -> 5/18/2012 TIME PLOTTED -> 11:04:35 PM USERNAME -> fsamson

Rev. Date: 5-18-98

DIST.	COUNTY	ROUTE	KILOMETER POST TOTAL PROJECT	SHEET NO.	TOTAL SHEETS
04	SF	80	12.7/13.2	560R	806

REGISTERED ENGINEER - CIVIL

6-23-08
PLANS APPROVAL DATE

The State of California or its officers or agents shall not be responsible for the accuracy or completeness of electronic copies of this plan sheet.

T.Y. LIN / MOFFATT & NICHOL
TWO HARRISON STREET
SAN FRANCISCO, CA 94105

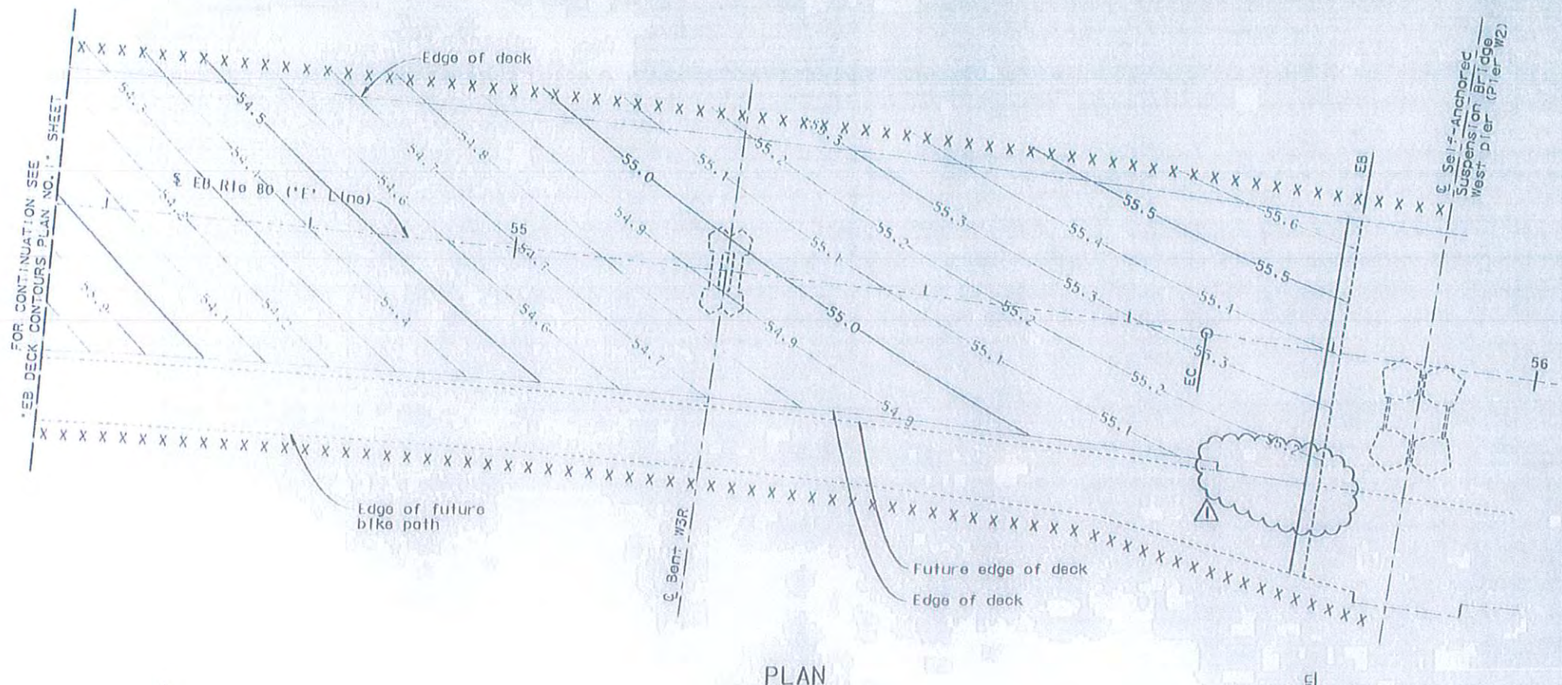

PLAN
1:250

NOTES:
Contours shown do not include camber.
X Indicates 2 meter interval along 'E Line'
Contour interval shown is 0.1 m.

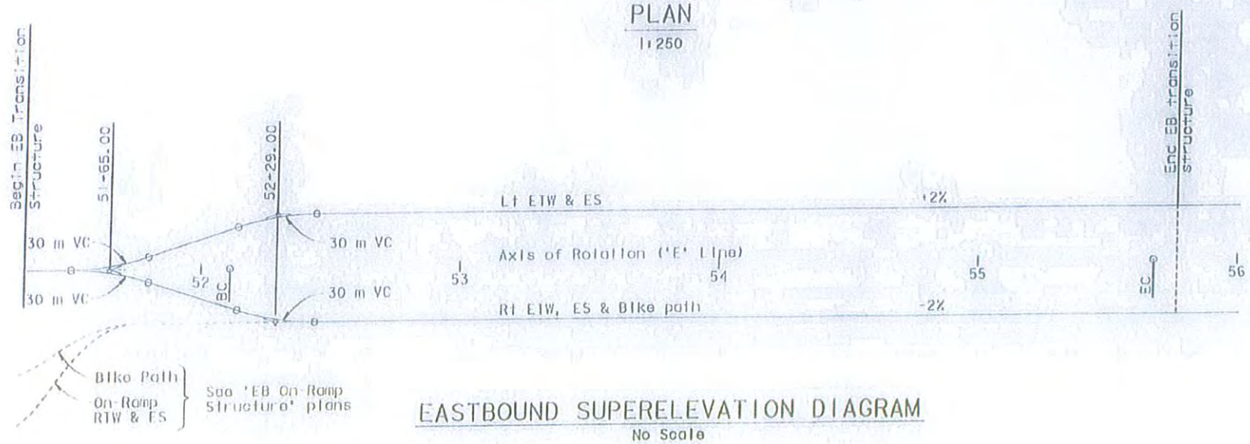

EASTBOUND SUPERELEVATION DIAGRAM
No Scale

FOR REVISION ⚠ ONLY

MARK	DATE	DESCRIPTIONS	BY	CH'D
⚠				
⚠	2-8-11	Rev south edge EB Trans Struct	TL	JG

REVISIONS

CONTRACT CHANGE ORDER NO. 129
SHEET 6 OF 37

DESIGN OVERSIGHT
JOHN LOCH, BERNARD CHAN, JUAN F. CARPIO
JESSAN EL-HATAM
2/24/11
Sign off date
Rev. Date: 5-12-23

DESIGN	BY Alcaraz	CHECKED Dasal
DETAILS	BY van Ryn/Zucchi/Mal	CHECKED Jain
QUANTITIES	BY Liao	CHECKED E. Nichol

ORIGINAL SCALE IN MILLIMETERS FOR REDUCED PLANS 0 10 20 30 40 50 60 70 80 90 100

PREPARED FOR THE STATE OF CALIFORNIA DEPARTMENT OF TRANSPORTATION

Jal Birdy
PROJECT ENGINEER

CU 04251
EA 012051

BRIDGE NO. 34-0006 L/R
KILOMETER POST 12.8

SAN FRANCISCO OAKLAND BAY BRIDGE
EAST SPAN SEISMIC SAFETY PROJECT

YBI TRANSITION STRUCTURES

EASTBOUND DECK CONTOURS PLAN NO. 2

DISREGARD PRINTS DATED
EARLIER REVISION DATES

REVISION DATES (PRELIMINARY STAGE ONLY)

SHEET 11 OF 209

FILE = S:\Structures\Projects\4141-06\CADD\TS\Checkoil Plans\YBITS #1-100% No. 2 03-03-08 (Final Review)(1)\020811.dgn

DIST.	COUNTY	ROUTE	KILOMETER POST TOTAL PROJECT	SHEET NO.	TOTAL SHEETS
04	SF	80	12.7/13.2	520R3	806

REGISTERED ENGINEER - CIVIL

6-23-08
PLANS APPROVAL DATE

The State of California or its officers or agents shall not be responsible for the accuracy or completeness of electronic copies of this plan sheet.

T.Y. LIN / MOFFATT & NICHOL
TWO HARRISON STREET
SAN FRANCISCO, CA 94105

8 REVISED PER ADDENDUM NO. 8 DATED NOVEMBER 12, 2009

2 REVISED PER ADDENDUM NO. 2 DATED JANUARY 22, 2009

FOR REVISION 1, 2 & 3 ONLY

MARK	DATE	DESCRIPTIONS	BY	CH'D
3	5-18-12	Denoted Hinge K Closure Pour by others	TL	AE
2	3-30-11	Added Elec Openings	TL	AE
1	12-23-09	WB Ramp Revisions	TL	AE

REVISIONS

CONTRACT CHANGE ORDER NO. 129
SHEET 7 OF 37

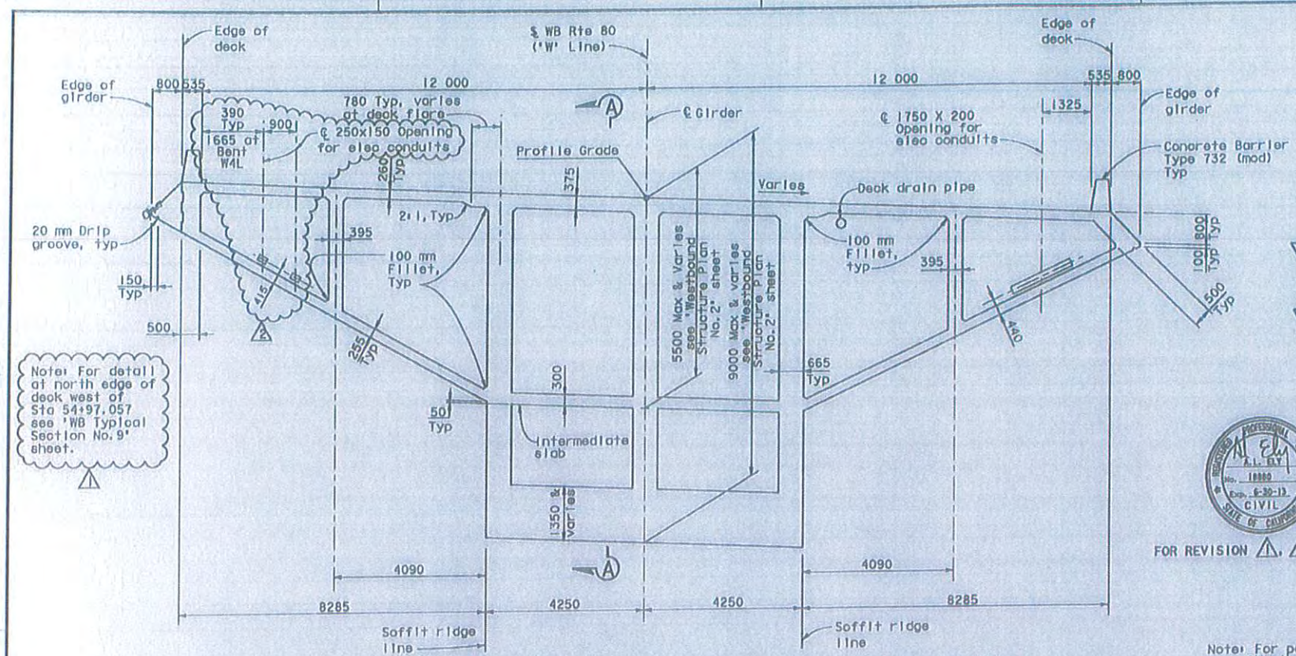

TYPICAL SECTION - 25 m WEST OF BENT W4L TO HINGE K CLOSURE

1:60

Note: For partial typical section see 'Westbound Typical Section No. 8' sheet

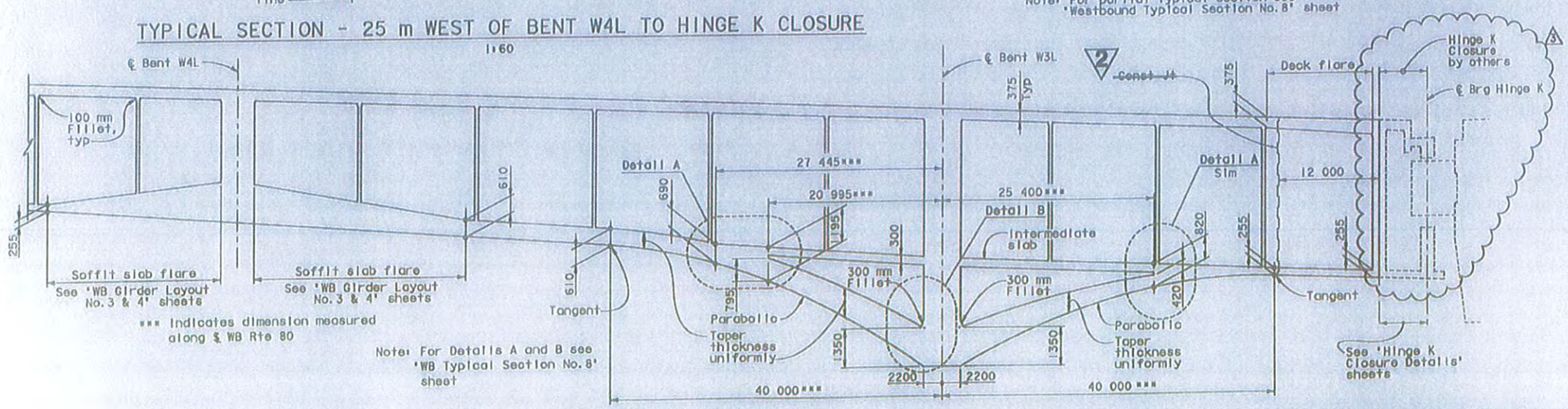

LONGITUDINAL SECTION A-A

No Scale

ALL DIMENSIONS ARE IN MILLIMETERS UNLESS OTHERWISE SHOWN

DESIGN OVERSIGHT: John Moor, Bernard Chan, Juan F. Carpio, Hasan Ez-Hatur
March 3, 2008
SIGN OFF DATE
Rev. Date: 5-18-98

5/30/12

DESIGN	BY Dodd	CHECKED Jain
DETAILS	BY Van Ryn/Zucchi/Mal	CHECKED Jain
QUANTITIES	BY Liao	CHECKED E. Nichol

PREPARED FOR THE STATE OF CALIFORNIA DEPARTMENT OF TRANSPORTATION

Jal Birdy
PROJECT ENGINEER

BRIDGE NO. 34-0006 L/R
KILOMETER POST 12.8

CU 04251
EA 012051

SAN FRANCISCO OAKLAND BAY BRIDGE
EAST SPAN SEISMIC SAFETY PROJECT

YBI TRANSITION STRUCTURES

WESTBOUND TYPICAL SECTION NO. 7

SHEET 71 OF 209

ORIGINAL SCALE IN MILLIMETERS FOR REDUCED PLANS 0 10 20 30 40 50 60 70 80 90 100

FILE => \\mnlbfs\LB_Projects\4141-06\CADD\TS\Checked Plans\YBITS #1(100% No. 2.03-03-08 (Final Renamed)\051812 CCO T21\04-0120e1-34-006r1-k-1607.dgn

USERNAME => fermson DATE PLOTTED => 5/18/2012 TIME PLOTTED => 11:00:58 PM

May 18, 2012

DIST.	COUNTY	ROUTE	KILOMETER POST TOTAL PROJECT	SHEET NO.	TOTAL SHEETS
04	SF	80	12.7/13.2	627R2	806

REGISTERED ENGINEER - CIVIL
6-23-08
PLANS APPROVAL DATE
The State of California or its officers or agents shall not be responsible for the accuracy or completeness of electronic copies of this plan sheet.

T.Y. LIN / MOFFATT & NICHOL
TWO HARRISON STREET
SAN FRANCISCO, CA 94105

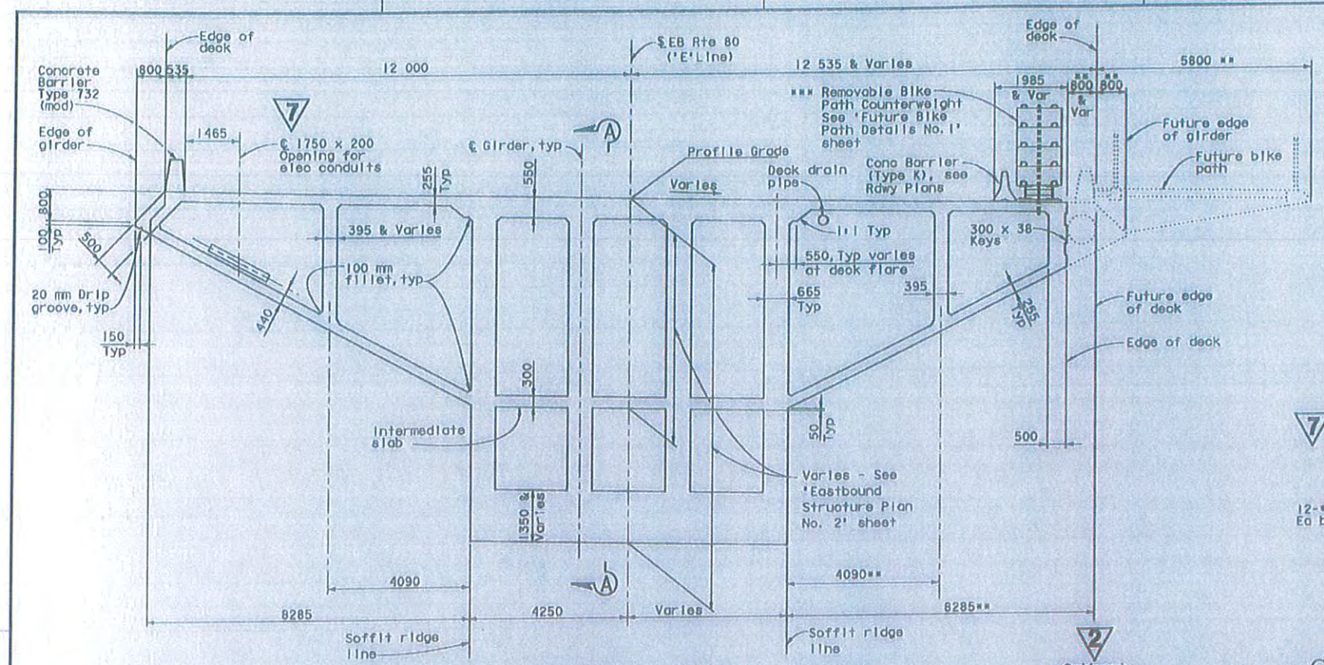

** Dimension shown is perpendicular to future edge of deck.

*** Removable Bike Path Counterweight to extend from Sta 55+43 to Sta 55+72.

SECTION - BENT W4R TO HINGE K CLOSURE
1:60

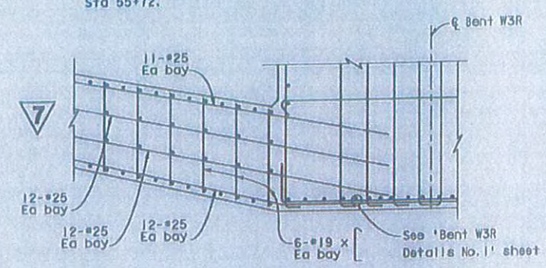

DETAIL B
1:30

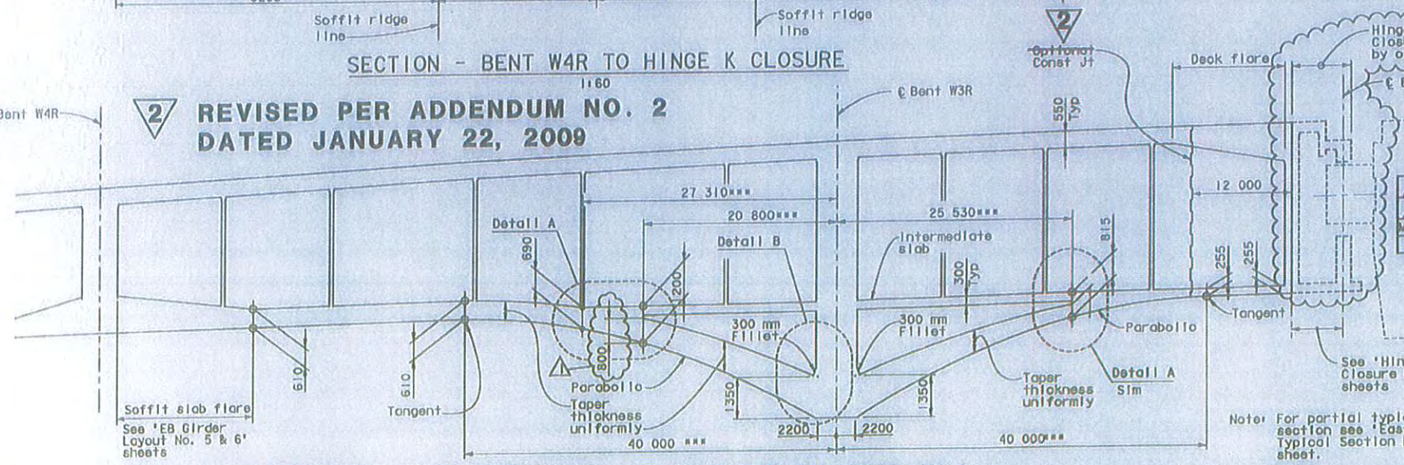

REVISED PER ADDENDUM NO. 2
DATED JANUARY 22, 2009

REVISED PER ADDENDUM NO. 7
DATED OCTOBER 19, 2009

*** Indicates dimension measured along ℄ EB

Note: For Detail A see 'EB Typical Section No. 7' sheet

Note: For partial typical section see 'Eastbound Typical Section No. 7' sheet.

LONGITUDINAL SECTION A-A
NO SCALE

ALL DIMENSIONS ARE IN MILLIMETERS UNLESS OTHERWISE SHOWN

FOR REVISION 1 & 2 ONLY

MARK	DATE	DESCRIPTIONS	BY	CH'D
2	5-18-12	Denoted Hinge K Closure Pour by others	TL	JB
1	3-29-12	Clarified dimension	TL	JB

REVISIONS

CONTRACT CHANGE ORDER NO. 129
SHEET 8 OF 37

DESIGN OVERSIGHT
JOHN MOOK, BERNARD CHAN, JUAN F. CARPIO — HOSAM EL-HATAW
March 3, 2008 — 5/30/12
SIGN OFF DATE

DESIGN	BY Dodd	CHECKED Jain	
DETAILS	BY van Ryn/Zucchi/Mal	CHECKED Jain	
QUANTITIES	BY Liao	CHECKED E. Nichol	

PREPARED FOR THE STATE OF CALIFORNIA DEPARTMENT OF TRANSPORTATION

Jal Birdy
PROJECT ENGINEER

BRIDGE NO. 34-0006 L/R
CU 04251
EA 0120S1

SAN FRANCISCO OAKLAND BAY BRIDGE
EAST SPAN SEISMIC SAFETY PROJECT

YBI TRANSITION STRUCTURES

EASTBOUND TYPICAL SECTION NO. 6

SHEET 78 OF 209

FILE => \\unibfs\LB_Projects\4141-06\CADD\TS\Checked Plans\YBITS #1-1800% No. 2.03-03-08 (Final Renamed)\051812 CCO T21\04-0120s1-3

May 18, 2012

DIST.	COUNTY	ROUTE	KILOMETER POST TOTAL PROJECT	SHEET NO.	TOTAL SHEETS
04	SF	80	12.7/13.2	535R4	806

REGISTERED ENGINEER - CIVIL

6-23-08
PLANS APPROVAL DATE

The State of California or its officers or agents shall not be responsible for the accuracy or completeness of electronic copies of this plan sheet.

T.Y. LIN / MOFFATT & NICHOL
TWO HARRISON STREET
SAN FRANCISCO, CA 94105

FOR REVISION 1, 2, 3 & 4 ONLY

CONTRACT CHANGE ORDER NO. 129
SHEET 9 OF 37

MARK	DATE	DESCRIPTIONS	BY	CH'D
1	5-18-12	Removed Hinge K Closure Pour by others	TL	AE
2	3-30-11	Rev Girder Access Openings	TL	AE
3	2-9-11	Rev stem flares & stirrups	TL	AE
4	12-24-08	WB Ramp Revisions	TL	AE

REVISIONS

LEGEND

500 Indicates girder stem width in mm

PARTIAL GIRDER LAYOUT - FRAME WB2

1:250

PARTIAL LONGITUDINAL SECTION - FRAME WB2
GIRDERS BETWEEN SOFFIT RIDGE LINES

No Scale

Note: Soffit slab flares are between soffit ridge lines only.

ALL DIMENSIONS ARE IN MILLIMETERS UNLESS OTHERWISE SHOWN

SAN FRANCISCO OAKLAND BAY BRIDGE
EAST SPAN SEISMIC SAFETY PROJECT

YBI TRANSITION STRUCTURES

WESTBOUND GIRDER LAYOUT NO. 4

DESIGN OVERSIGHT: JIN MOOK, BERNARD CHAN, JUAN F. CARPIO — March 3, 2008
HABAN EL-HATUB — 5/30/12
SIGN OFF DATE

DESIGN: Cavafian — CHECKED: Shangkuan
DETAILS: van Ryn/Zuschl/Mal — CHECKED: Jain
QUANTITIES: Liao — CHECKED: E. Nichol

PREPARED FOR THE STATE OF CALIFORNIA DEPARTMENT OF TRANSPORTATION

Jal Birdy
PROJECT ENGINEER

BRIDGE NO. 34-0006 L/R
KILOMETER POST 12.8

CU 04251
EA 012051

SHEET 86 OF 209

FILE => \\mnlbfs\LB_Projects\4141-06\CADD\TS\Checked Plans\YBITS #1-100X No. 2_03-03-08 (Final Renamed)\051812 CCO T21\04-012051-3

USERNAME => fsaunson DATE PLOTTED => 5/18/2012 TIME PLOTTED => 11:01:08 PM

May 18, 2012

DIST.	COUNTY	ROUTE	KILOMETER POST TOTAL PROJECT	SHEET NO.	TOTAL SHEETS
04	SF	80	12.7/13.2	536R2	806

REGISTERED ENGINEER - CIVIL
6-23-08
PLANS APPROVAL DATE
The State of California or its officers or agents shall not be responsible for the accuracy or completeness of electronic copies of this plan sheet.

T.Y. LIN / MOFFATT & NICHOL
TWO HARRISON STREET
SAN FRANCISCO, CA 94105

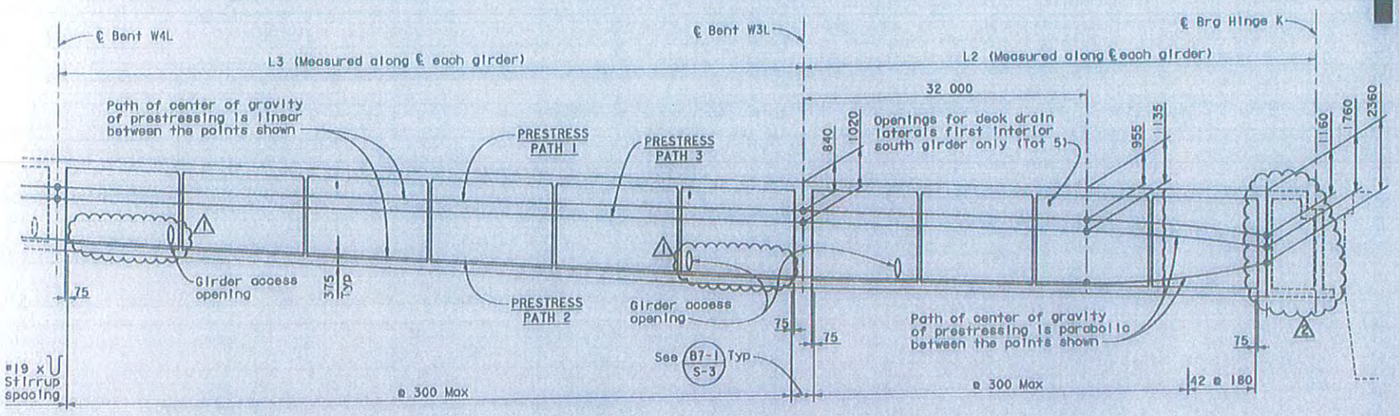

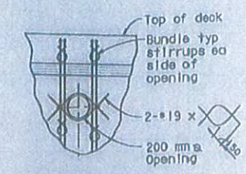

AT DECK DRAIN PIPE LATERALS

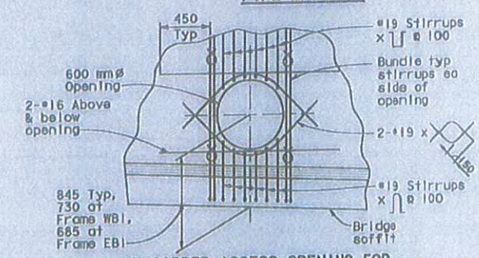

AT GIRDER ACCESS OPENING FOR GIRDER OUTSIDE SOFFIT RIDGE LINES

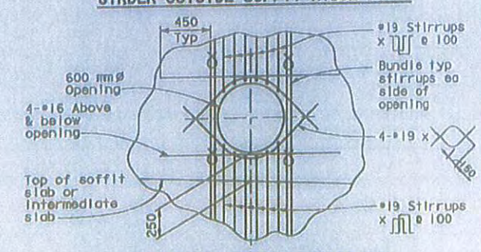

AT GIRDER ACCESS OPENING FOR GIRDER BETWEEN SOFFIT RIDGE LINES

OPENINGS THRU GIRDER STEM

MARK	DATE	DESCRIPTIONS	BY	CH'D
2	5-18-12	Denoted Hinge K Closure Pour by others	TL	AE
1	3-30-11	Rev Girder Access Openings	TL	AE

REVISIONS

PARTIAL LONGITUDINAL SECTION - FRAME WB2 GIRDERS OUTSIDE SOFFIT RIDGE LINES

No Scale

CONTRACT CHANGE ORDER NO. 129
SHEET 10 OF 37

PRESTRESSING NOTES

1860 mpa LOW RELAXATION STRAND

PJACK = SEE PRESTRESSING TABLE

ANCHOR SET = 10 mm

CONCRETE: SEE PRESTRESSING TABLE

FOR REVISION 1 & 2 ONLY

CONTRACTOR SHALL SUBMIT ELONGATION CALCULATIONS BASED ON AN INITIAL STRESS AT ☒ EQUAL TO THE INITIAL STRESS COEFFICIENT GIVEN IN THE PRESTRESSING TABLE TIMES THE JACKING STRESS

STRESSING SHALL BE PERFORMED FROM BOTH ENDS EXCEPT ONE END STRESSING FROM HINGE K ANCHORAGE FOR PATH 3.

FOR GIRDERS OUTSIDE SOFFIT RIDGE LINES AND FOR DECK EDGE BEAMS PRESTRESS FORCE (Pjack)) SHALL BE EQUALLY DISTRIBUTED BETWEEN GIRDERS, FOR GIRDERS BETWEEN SOFFIT RIDGE LINES DISTRIBUTION OF PRESTRESS FORCE (Pjack) BETWEEN GIRDERS SHALL NOT EXCEED THE RATIO OF 3:2. MAXIMUM FINAL FORCE VARIATION BETWEEN GIRDERS SHALL NOT EXCEED 3000 kN SEE 'GIRDER PRESTRESS DETAILS' SHEET.

DESIGN BASED ON FRICTION CURVATURE COEFFICIENT (U) = 0.20 AND FRICTION WOBBLE COEFFICIENT (K) = 0.0007/m

PRESTRESSING TABLE

	Location		PJACK	Number of girders	Initial stress coefficient	f'c @ 28 days	f'ci @ time of stressing
Frame WB2	Girders between soffit ridge lines	Path 1	107 050 kN	3	0.897	46 MPa	42 MPa
		Path 2	137 650 kN		0.805		
		Path 3	91 750 kN		0.615		
	Girders outside soffit ridge lines	Path 1	20 400 kN	2	0.894		
		Path 2	20 400 kN		0.889		
		Path 3	20 400 kN		0.852		
	Deck edge beams		11 600 kN	2	0.899		

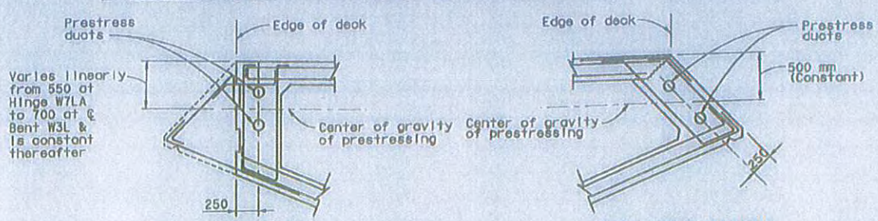

NORTH EDGE OF DECK

SOUTH EDGE OF DECK

DECK EDGE BEAM DETAIL

No Scale

8 REVISED PER ADDENDUM NO. 8 DATED NOVEMBER 12, 2009

ALL DIMENSIONS ARE IN MILLIMETERS UNLESS OTHERWISE SHOWN

SAN FRANCISCO OAKLAND BAY BRIDGE
EAST SPAN SEISMIC SAFETY PROJECT

YBI TRANSITION STRUCTURES

WESTBOUND GIRDER LAYOUT NO. 5

DESIGN OVERSIGHT: John Mook, Bernard Chan, Juan F. Carpio — March 3, 2008
HAKAN AL-HATUN — 5/30/12
SIGN OFF DATE

DESIGN: Cavafian — CHECKED: Shangkuan
DETAILS: van Ryn/Zuccahi/Mal — CHECKED: Jain
QUANTITIES: Liao — CHECKED: L. Nichol

PREPARED FOR THE STATE OF CALIFORNIA DEPARTMENT OF TRANSPORTATION

Joi Birdy, PROJECT ENGINEER

BRIDGE NO. 34-0006 L/R
KILOMETER POST 12.8

CU 04251
EA 01205

DIRECTORY POINTS DEADLINE / FINAL REVISION DATES

SHEET 87 OF 209

FILE => \\mnlbfs\LB_Projects\4141-06\CADD\TS\Checked Plans\YBITS-T1-1000X No. 2_03-03-08 (Final Renamed)\051812 CCO 121\04-0120s1-34-0006r1-1-g_1006.dgn

USERNAME => fazamson DATE PLOTTED => 5/18/2012 TIME PLOTTED => 11:04:57 PM

May 18, 2012

MARK	DATE	DESCRIPTIONS	BY	CH'D
2	2-8-11	Rev south edge EB Trans Struct	TL	JB
1	9-1-10	Rev Dim	TL	JB

REVISIONS

CONTRACT CHANGE ORDER NO. 129
SHEET 11 OF 37

FOR REVISION 1 & 2 ONLY

DIST.	COUNTY	ROUTE	KILOMETER POST TOTAL PROJECT	SHEET NO.	TOTAL SHEETS
04	SF	80	12.7/13.2	37R2	806

Caltrans Metric

Al Ely
REGISTERED ENGINEER - CIVIL
6-23-08
PLANS APPROVAL DATE

The State of California or its officers or agents shall not be responsible for the accuracy or completeness of electronic copies of this plan sheet.

T.Y. LIN / MOFFATT & NICHOL
TWO HARRISON STREET
SAN FRANCISCO, CA 94105

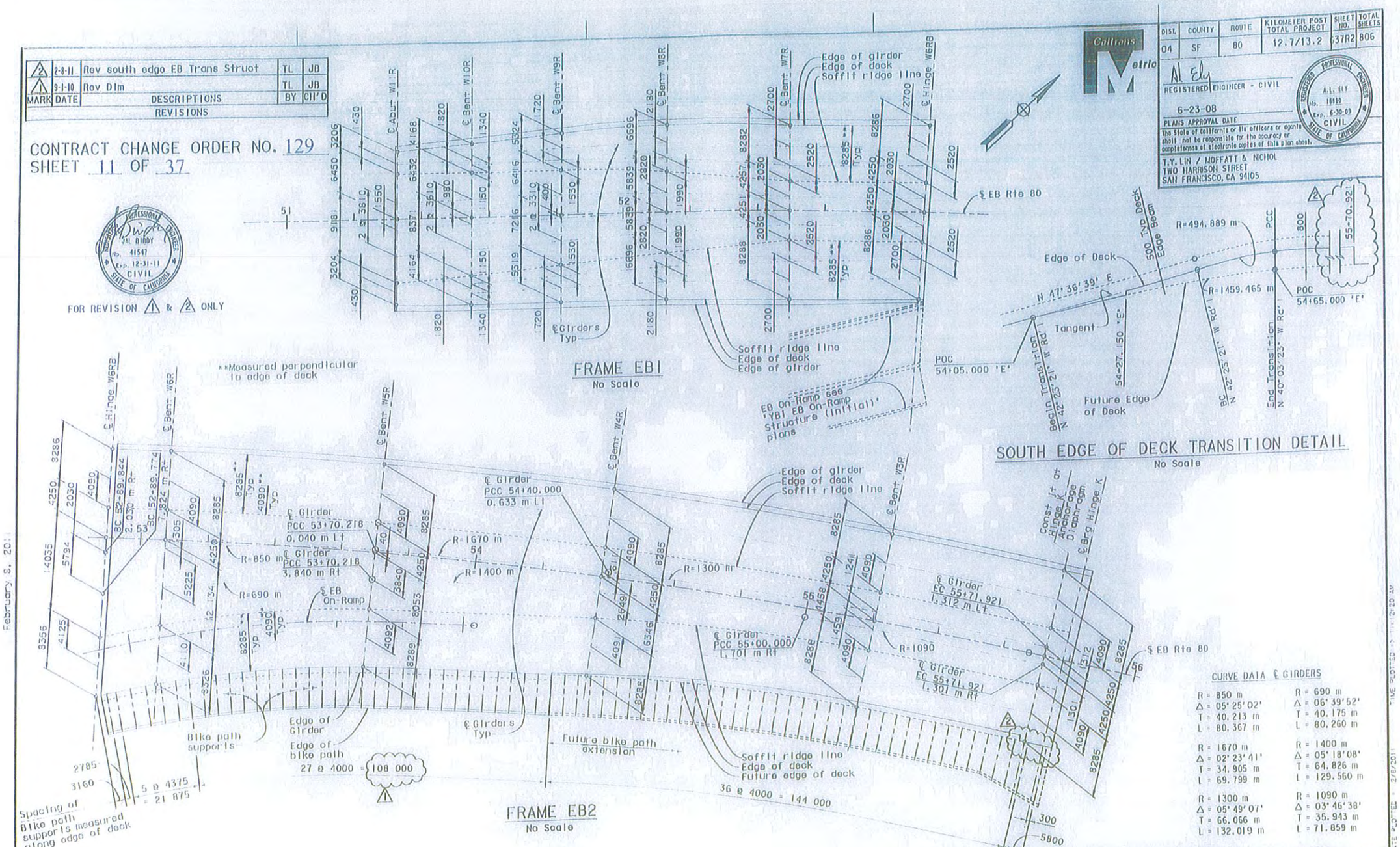

CURVE DATA ℄ GIRDERS

R = 850 m	R = 690 m
Δ = 05°25'02"	Δ = 06°39'52"
T = 40.213 m	T = 40.175 m
L = 80.367 m	L = 80.260 m
R = 1670 m	R = 1400 m
Δ = 02°23'41"	Δ = 05°18'08"
T = 34.905 m	T = 64.826 m
L = 69.799 m	L = 129.560 m
R = 1300 m	R = 1090 m
Δ = 05°49'07"	Δ = 03°46'38"
T = 66.066 m	T = 35.943 m
L = 132.019 m	L = 71.859 m

ALL DIMENSIONS ARE IN MILLIMETERS UNLESS OTHERWISE SHOWN

SAN FRANCISCO OAKLAND BAY BRIDGE
EAST SPAN SEISMIC SAFETY PROJECT

YBI TRANSITION STRUCTURES

EASTBOUND GIRDER LAYOUT GEOMETRICS

DESIGN OVERSIGHT: Yoder Wook, Bernard Chen, Juan F. Carrio
March 3, 2008
SIGN OFF DATE

DESIGN BY Dasal — CHECKED Jain
DETAILS BY Van Ryn/Zucchi/Mal — CHECKED Jain
QUANTITIES BY Liao — CHECKED E. Nichol

PREPARED FOR THE STATE OF CALIFORNIA DEPARTMENT OF TRANSPORTATION

Jal Birdy
PROJECT ENGINEER

BRIDGE NO. 34-0006 L/R
KILOMETER POST 12.8

CU 04251
EA 0120S1

DASHBOARD DRIVES DRAWING EARLIER REVISION DATES

REVISION DATES (IF REVISED, INDICATE CHANGE)

SHEET 88 OF 209

ORIGINAL SCALE IN MILLIMETERS FOR REDUCED PLANS 0 10 20 30 40 50 60 70 80 90 100

FILE ---

February 8, 2011

DIST.	COUNTY	ROUTE	KILOMETER POST TOTAL PROJECT	SHEET NO.	TOTAL SHEETS
04	SF	80	12.7/13.2	542R2	806

REGISTERED ENGINEER - CIVIL

6-23-08

PLANS APPROVAL DATE

The State of California or its officers or agents shall not be responsible for the accuracy or completeness of electronic copies of this plan sheet.

T.Y. LIN / MOFFATT & NICHOL
TWO HARRISON STREET
SAN FRANCISCO, CA 94105

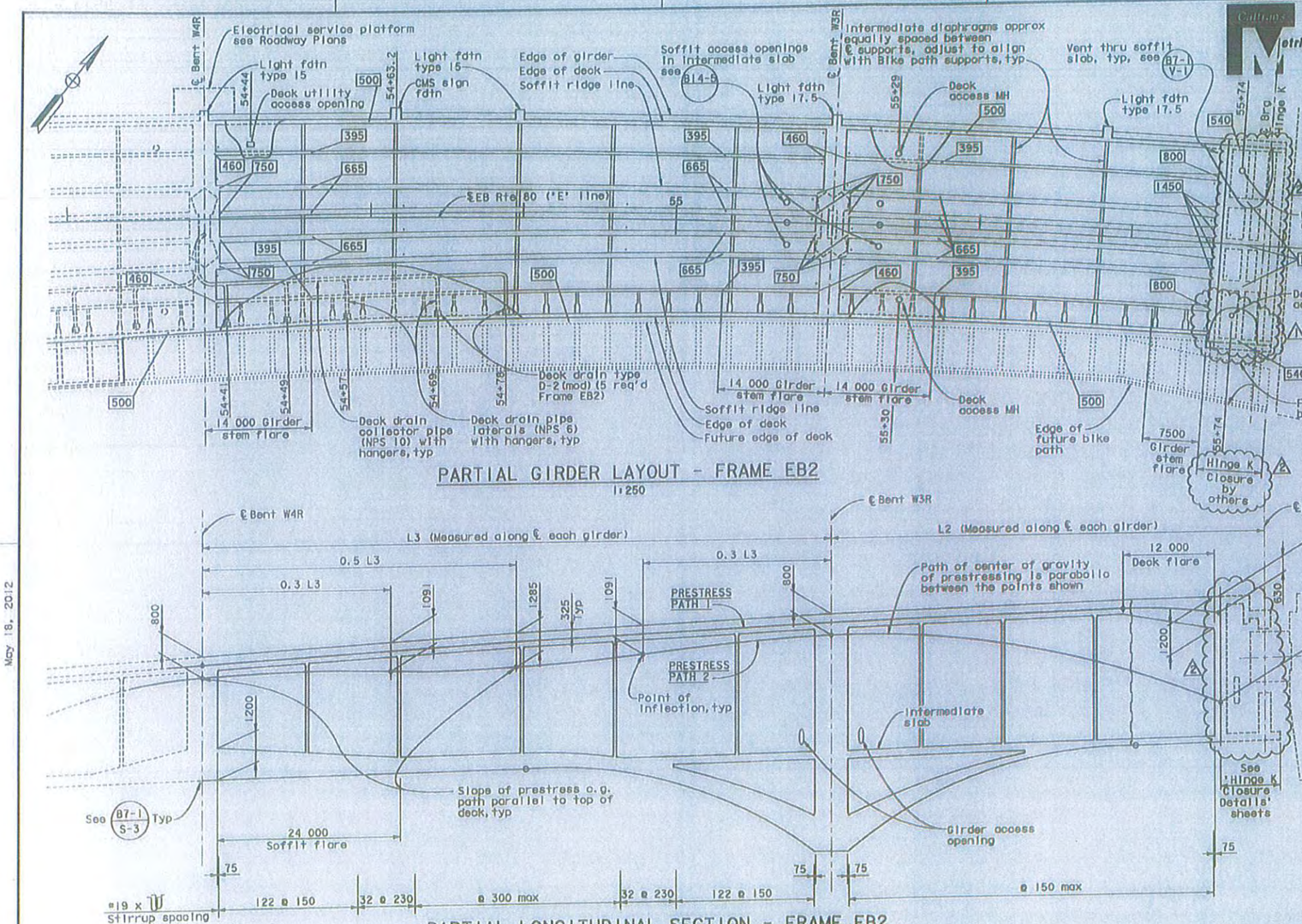

PARTIAL GIRDER LAYOUT - FRAME EB2

1:250

PARTIAL LONGITUDINAL SECTION - FRAME EB2
GIRDERS BETWEEN SOFFIT RIDGE LINES

No Scale

ALL DIMENSIONS ARE IN MILLIMETERS UNLESS OTHERWISE SHOWN

MARK	DATE	DESCRIPTIONS	BY	CHK'D
3	5-18-12	Demarked Hinge K Closure Pour by others	TL	JB
2	2-11	Rev south edge EB Trans Struct	TL	JB
1			BY	CHK'D

REVISIONS

CONTRACT CHANGE ORDER NO. 129
SHEET 12 OF 37

DESIGN OVERSIGHT: JOHN UDOK, BERNARD CHAN, JUAN F. CARPIO, HASAN EL-HAYUR — 5/30/12
SIGN OFF DATE
Rev. Date: 5-8-98

DESIGN	BY Davafian	CHECKED Shanghavan	
DETAILS	BY Van Ryn/Zupahl/Mal	CHECKED Jain	
QUANTITIES	BY Liao	CHECKED E. Nichol	

ORIGINAL SCALE IN MILLIMETERS FOR REDUCED PLANS 0 10 20 30 40 50 60 70 80 90 100

PREPARED FOR THE STATE OF CALIFORNIA DEPARTMENT OF TRANSPORTATION

Jai Birdy
PROJECT ENGINEER

CU 04251
EA 012051

BRIDGE NO. 34-0006 L/R
KILOMETER POST 12.8

SAN FRANCISCO OAKLAND BAY BRIDGE
EAST SPAN SEISMIC SAFETY PROJECT

YBI TRANSITION STRUCTURES

EASTBOUND GIRDER LAYOUT NO. 5

EASTBOUND PRINTS REQUIRED AFTER REVISION DATES

REVISION DATES (PRELIMINARY STAGE ONLY)

SHEET 93 OF 209

FILE -> \\mnlbfs\LB_Projects\4141-06\CADD\TS\Checked Plans\YBITS #1-1DOX No. 2.03-03-08 (Final Renamed)\051812 CCO T21\04-012051-3

USERNAME -> T.Hassman DATE PLOTTED -> 5/18/2012 TIME PLOTTED -> 1:01:17 PM

May 18, 2012

DIST.	COUNTY	ROUTE	KILOMETER POST TOTAL PROJECT	SHEET NO.	TOTAL SHEETS
04	SF	80	12.7/13.2	643R1	806

REGISTERED ENGINEER - CIVIL

6-23-08

PLANS APPROVAL DATE

The State of California or its officers or agents shall not be responsible for the accuracy or completeness of electronic copies of this plan sheet.

REGISTERED PROFESSIONAL ENGINEER A.L. ELY No. 18884 Exp. 6-30-09 CIVIL STATE OF CALIFORNIA

T.Y. LIN / MOFFATT & NICHOL
TWO HARRISON STREET
SAN FRANCISCO, CA 94105

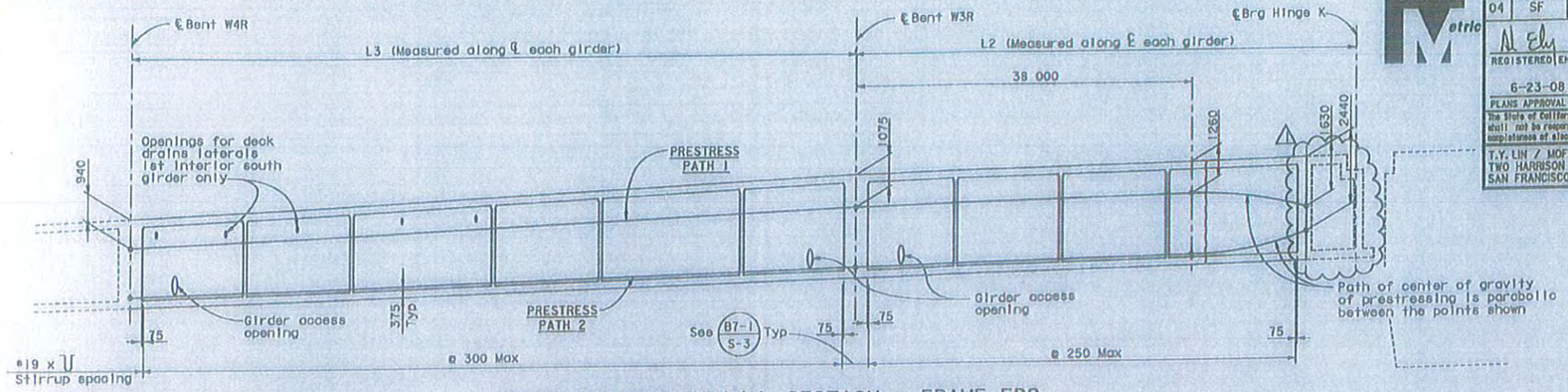

PARTIAL LONGITUDINAL SECTION - FRAME EB2
GIRDERS OUTSIDE SOFFIT RIDGE LINES

No Scale

MARK	DATE	DESCRIPTIONS	BY	CH'D
1	5-18-12	Denoted Hinge K Closure Pour by others	TL	JB

REVISIONS

CONTRACT CHANGE ORDER NO. 129
SHEET 13 OF 37

JAL BIRDY No. 41547 Exp. 12-31-13 CIVIL STATE OF CALIFORNIA

FOR REVISION 1 ONLY

PRESTRESSING NOTES

1860 mpa LOW RELAXATION STRAND

PJACK = SEE PRESTRESSING TABLE

ANCHOR SET = 10 mm

CONCRETE: SEE PRESTRESSING TABLE

CONTRACTOR SHALL SUBMIT ELONGATION CALCULATIONS BASED ON AN INITIAL STRESS AT ☒ EQUAL TO THE INITIAL STRESS COEFFICIENT GIVEN IN THE PRESTRESSING TABLE TIMES THE JACKING STRESS

STRESSING SHALL BE PERFORMED FROM BOTH ENDS.

FOR GIRDERS OUTSIDE SOFFIT RIDGE LINES AND FOR DECK EDGE BEAMS PRESTRESS FORCE (Pjack)) SHALL BE EQUALLY DISTRIBUTED BETWEEN GIRDERS, FOR GIRDERS BETWEEN SOFFIT RIDGE LINES DISTRIBUTION OF PRESTRESS FORCE (Pjack) BETWEEN GIRDERS SHALL NOT EXCEED THE RATIO OF 3:2. MAXIMUM FINAL FORCE VARIATION BETWEEN GIRDERS SHALL NOT EXCEED 3000 kN SEE 'GIRDER PRESTRESS DETAILS' SHEET.

DESIGN BASED ON FRICTION CURVATURE COEFFICIENT (U) = 0.20 AND FRICTION WOBBLE COEFFICIENT (K) = 0.0007/m

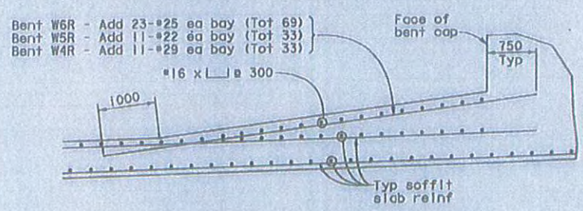

SOFFIT SLAB FLARE DETAIL

No Scale

PRESTRESSING TABLE

	Location		PJACK	Number of girders	Initial stress coefficient	f'c @ 28 days	f'ci @ time of stressing
Frame EB1	Girders between soffit ridge lines		101 950 kN	5	0.794	41 MPa	29 MPa
	2nd interior girders	Path 1	10 200 kN	2	0.944		
		Path 2	10 200 kN				
	1st interior girders	Path 1	10 200 kN	2	0.947		
		Path 2	10 200 kN				
	Deck edge beams		6900 kN	2	0.950		
Frame EB2	Girders between soffit ridge lines	Path 1	203 900 kN	4	0.906	46 MPa	40 MPa
		Path 2	183 550 kN		0.814		
	Girders outside soffit ridge lines	Path 1	40 800 kN	2	0.905		
		Path 2	20 400 kN				
	Deck edge beams		11 600 kN	2	0.896		

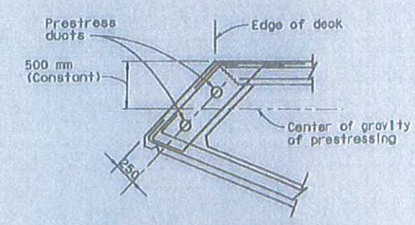

TYP NORTH & SOUTH EDGE OF DECK EXCEPT AT BIKE PATH

℄ Hinge W6RB	520 mm
℄ Bent W6R	535 mm
℄ Bent W5R	585 mm
℄ Bent W4R	640 mm
℄ Bent W3R	705 mm
Hinge K Anchorage	750 mm

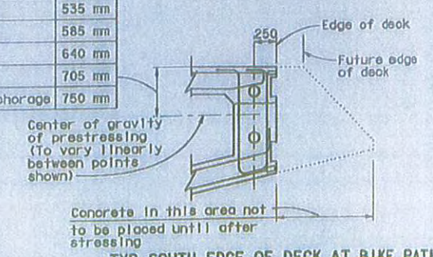

TYP SOUTH EDGE OF DECK AT BIKE PATH

Note: For stirrup spacing at deck edge beams see 'Typical Section' sheets

DECK EDGE BEAM DETAILS

No Scale

ALL DIMENSIONS ARE IN MILLIMETERS UNLESS OTHERWISE SHOWN

SAN FRANCISCO OAKLAND BAY BRIDGE
EAST SPAN SEISMIC SAFETY PROJECT

YBI TRANSITION STRUCTURES

EASTBOUND GIRDER LAYOUT NO. 6

DESIGN OVERSIGHT: JOHN MOOR, BERNARD CHAN, JUAN F. CARPIO, HASAN EL-NAYIR
March 3, 2008
5/30/12
SIGN OFF DATE

Rev. Date: 8-18-99

DESIGN	BY Cavafian	ENGINEER Shangkuan	
DETAILS	BY van Ryn/Zuoahl/Mal	ENGINEER Jain	
QUANTITIES	BY Liao	ENGINEER E. Nichol	

PREPARED FOR THE STATE OF CALIFORNIA DEPARTMENT OF TRANSPORTATION

Jal Birdy
PROJECT ENGINEER

BRIDGE NO. 34-0006 L/R
KILOMETER POST 12.8

CU 04251
EA 012051

BLUEPRINT PRINTS DEADLINE ELECTRIC REVISION DATES

REVISION DATES (PRELIMINARY STAGE ONLY)

SHEET 94 OF 209

FILE => \\mnlbfs\LB_Projects\4141-06\CADD\TS\Checked Plans\YBITS #1-1COX No. 2.03-03-08 (Final Renamed)\051812 CCO T21\04-012041-3

USERNAME => fleemsn DATE PLOTTED => 5/18/2012 TIME PLOTTED => 11:01:25 PM

May 18, 2012

This sheet replaces 667R2 of 806
of plan approved 6/23/08

CONTRACT CHANGE ORDER NO. 129
SHEET 14 OF 37

DIST.	COUNTY	ROUTE	KILOMETER POST TOTAL PROJECT	SHEET NO.	TOTAL SHEETS
04	SF	80	12.7/13.2	667R3	806

REGISTERED ENGINEER - CIVIL
5-11-12
PLANS APPROVAL DATE

The State of California or its officers or agents shall not be responsible for the accuracy or completeness of electronic copies of this plan sheet.

T.Y. LIN / MOFFATT & NICHOL
TWO HARRISON STREET
SAN FRANCISCO, CA 94105

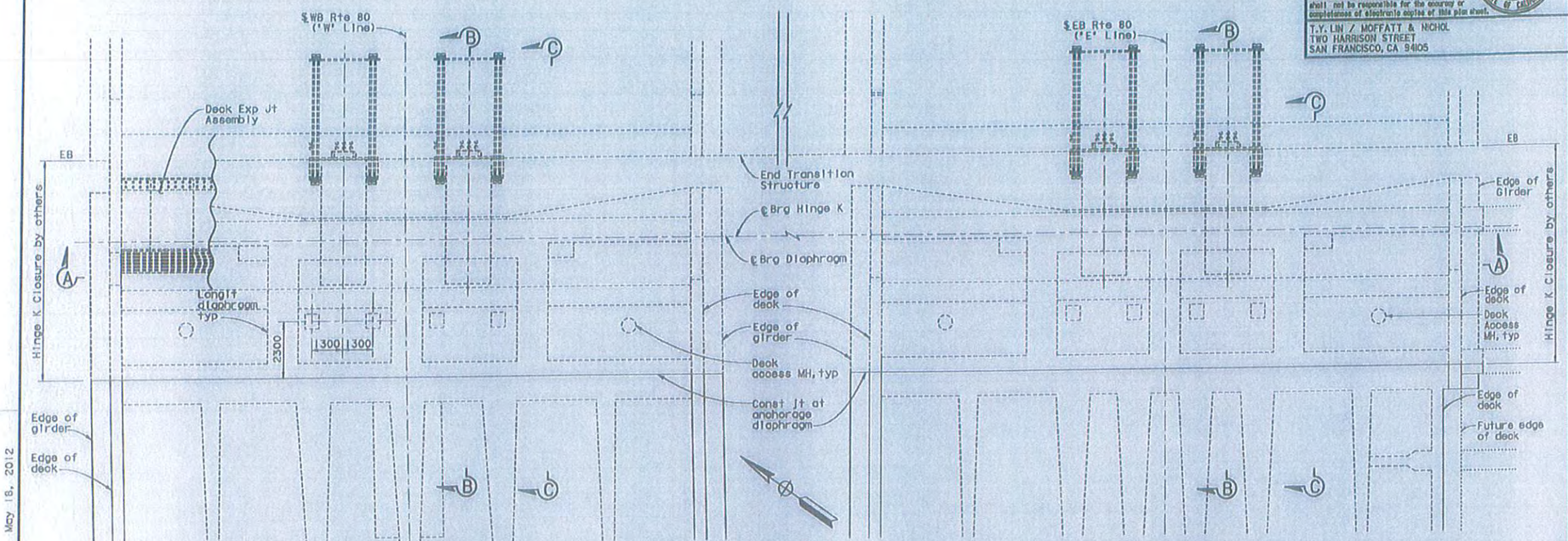

PLAN
1:80

Note: For Sections B-B & C-C see 'Hinge K Closure Details No. 2' sheet.

** Indicates dimension measured at ℄ Brg Hinge K

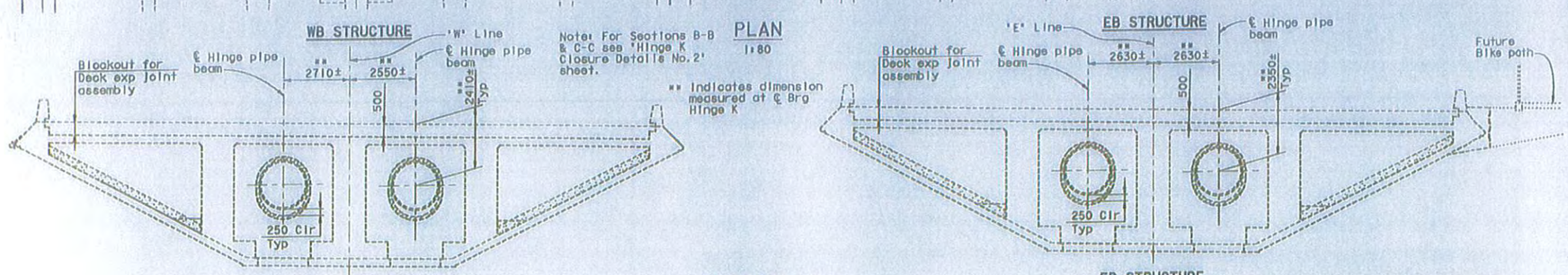

WB STRUCTURE

EB STRUCTURE

SECTION A-A
1:80

ALL DIMENSIONS ARE IN MILLIMETERS UNLESS OTHERWISE SHOWN

DESIGN OVERSIGHT
JOHN MOOR, BERNARD CHAN, JOAN F. CARPIO
HASAN EX-NATUR
5/30/12
SIGN OFF DATE

DESIGN	BY Lee	DRAWN Wang	
DETAILS	BY van Ryn/Zucchi/Mol	CHECKED Jain	
QUANTITIES	BY Liao	CHECKED E. Nichol	

PREPARED FOR THE STATE OF CALIFORNIA DEPARTMENT OF TRANSPORTATION

Jal Birdy
PROJECT ENGINEER

BRIDGE NO. 34-0006 L/R
KILOMETER POST 12.8

CU 04251
EA 012051

SAN FRANCISCO OAKLAND BAY BRIDGE
EAST SPAN SEISMIC SAFETY PROJECT

YBI TRANSITION STRUCTURES
HINGE K CLOSURE DETAILS NO. 1

SHEET 118 OF 209

ORIGINAL SCALE IN MILLIMETERS FOR REDUCED PLANS 0 10 20 30 40 50 60 70 80 90 100

FILE => \\anlbfs\LB_Projects\4141-06\CADD\TS\Checked Plans\YBITS R1-100K No. 2_03-03-08 (Final Renamed)\051812 CCO T21\04-0120s1-3

USERNAME => Tessmann DATE PLOTTED => 5/18/2012 TIME PLOTTED => 14:01:32 PM

Rev. Date: 5-15-99

MARK	DATE	DESCRIPTIONS	BY	CH'D
7	5-18-12	Denoted Hinge K Closure Pour by others	TL	JB
6	9-29-11	Clarified pipe beam location & rev stirrup	TL	JB
5	6-29-11	Rev Section to agree with Brg Diaph Elev	TL	JB
4	2-9-11	Rev exp jt at Hinge K & Diaph	TL	JB

REVISIONS

CONTRACT CHANGE ORDER NO. 129
SHEET 15 OF 37

FOR REVISION 1, 2, 3 & 4 ONLY

DIST.	COUNTY	ROUTE	KILOMETER POST TOTAL PROJECT	SHEET NO.	TOTAL SHEETS
04	SF	80	12.7/13.2	66BR4	806

REGISTERED ENGINEER - CIVIL
6-23-08
PLANS APPROVAL DATE
A.L. ELY No. 18880 Exp. 6-30-09 CIVIL STATE OF CALIFORNIA
The State of California or its officers or agents shall not be responsible for the accuracy or completeness of electronic copies of this plan sheet.

T.Y. LIN / MOFFATT & NICHOL
TWO HARRISON STREET
SAN FRANCISCO, CA 94105

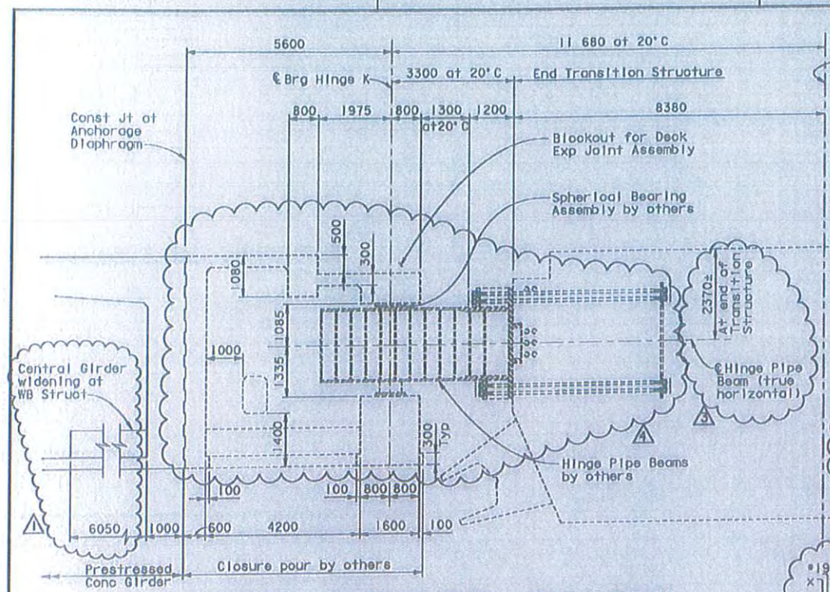

SECTION B-B - ADJACENT TO CENTRAL LONGIT DIAPHRAGM

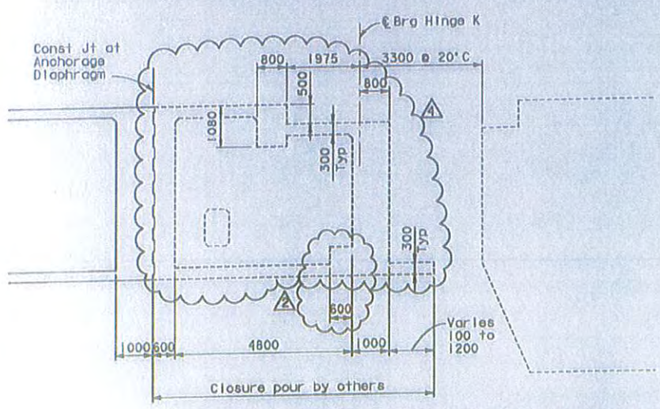

SECTION C-C - ADJACENT TO OUTER LONGIT DIAPHRAGM

LONGITUDINAL SECTIONS AT HINGE K CLOSURE
1:60

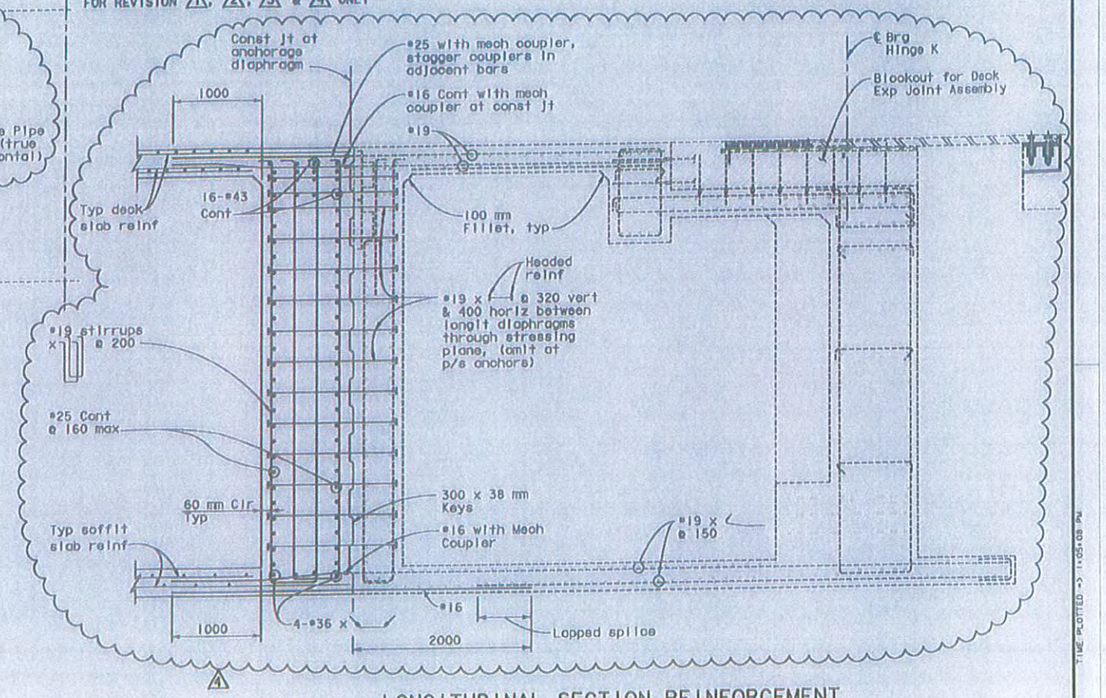

LONGITUDINAL SECTION REINFORCEMENT
(Shown adjacent to outer longit diaphragm)
1:25

7 REVISED PER ADDENDUM NO. 7 DATED OCTOBER 19, 2009

Note: For locations of Sections B-B & C-C see 'Hinge K Closure Details No. 1' sheet

ALL DIMENSIONS ARE IN MILLIMETERS UNLESS OTHERWISE SHOWN

SAN FRANCISCO OAKLAND BAY BRIDGE
EAST SPAN SEISMIC SAFETY PROJECT

YBI TRANSITION STRUCTURES

HINGE K CLOSURE DETAILS NO. 2

DESIGN OVERSIGHT: Jose Moor, Bernard Chan, Juan F. Campo, Hasan El-Natur
SIGN OFF DATE 5/30/12

DESIGN	BY Lee	CHECKED Wang
DETAILS	BY Van Ryn/Zucchi/Mal	CHECKED Jain
QUANTITIES	BY Liao	CHECKED E. Nichol

PREPARED FOR THE STATE OF CALIFORNIA DEPARTMENT OF TRANSPORTATION

Jol Birdy
PROJECT ENGINEER

BRIDGE NO. 34-0006 L/R
KILOMETER POST 12.8

CU 04251
EA 012051

ORIGINAL SCALE IN MILLIMETERS FOR REDUCED PLANS 0 10 20 30 40 50 60 70 80 90 100

DIRECTOR'S PRIVER DESIGN
EARLIER REVISION DATES

REVISION DATES (PRELIMINARY STAGE ONLY)

SHEET 119 OF 209

FILE => \\sanlbfs\LB_Projects\4141-06\CADD\TS\Checked Plans\YBITS #1-100X No. 2.03-03-08 (Final Renamed)\051812 CCO T21\04-0120s1-3

May 18, 2012

LICENSNAME => Fiemsen DATE PLOTTED => 5/18/2012 TIME PLOTTED => 11:05:08 PM

Rev. Date: 5-18-09

DIST	COUNTY	ROUTE	KILOMETER POST TOTAL PROJECT	SHEET NO.	TOTAL SHEETS
04	SF	80	12.7/13.2	569R4	806

REGISTERED ENGINEER - CIVIL

6-23-08

PLANS APPROVAL DATE

The State of California or its officers or agents shall not be responsible for the accuracy or completeness of electronic copies of this plan sheet.

A. L. ELY No. 18880 Exp. 6-30-09 CIVIL STATE OF CALIFORNIA

T.Y. LIN / MOFFATT & NICHOL
TWO HARRISON STREET
SAN FRANCISCO, CA 94105

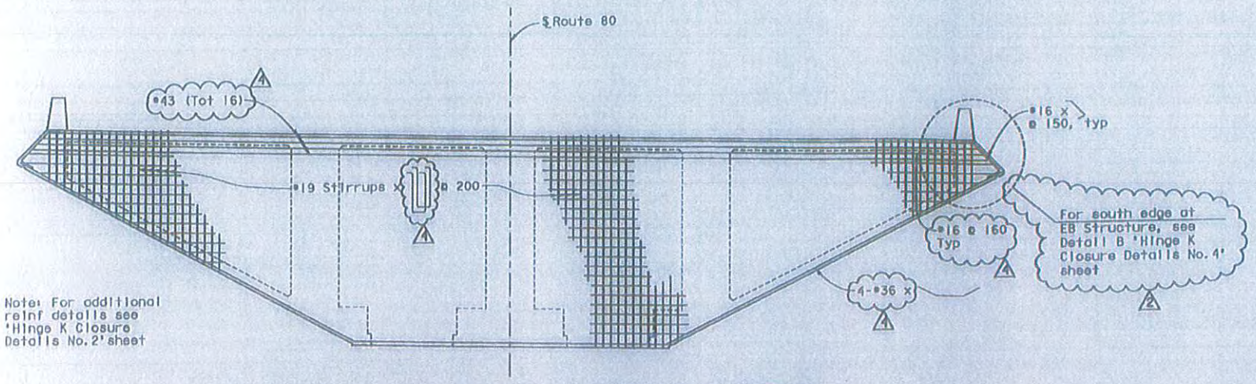

ELEVATION HINGE K CLOSURE ANCHORAGE DIAPHRAGM

(WB Structure shown, EB Structure similar except as noted)

1:60

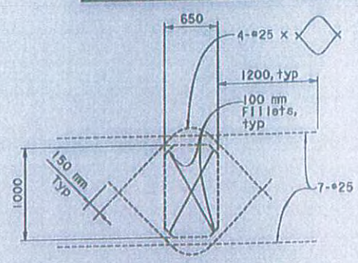

LONGIT DIAPHRAGM ACCESS OPENING

1:25

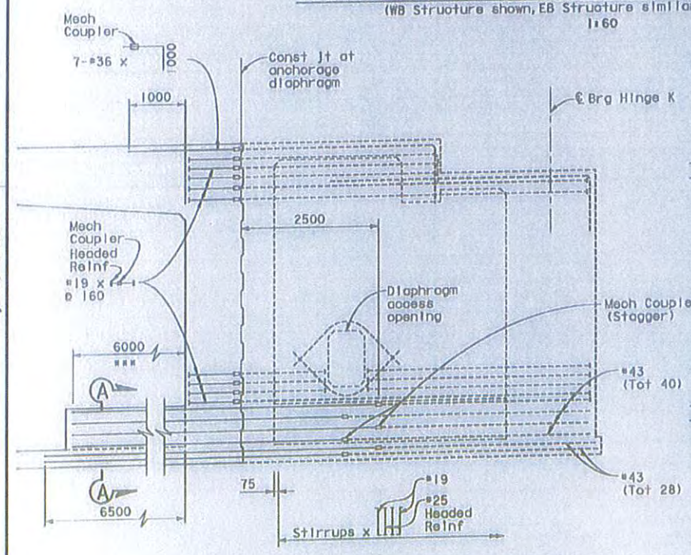

ELEVATION - CENTRAL LONGIT DIAPHRAGM

1:40

*** At EB Structure bend #43 bars as required to align bars with girder web.

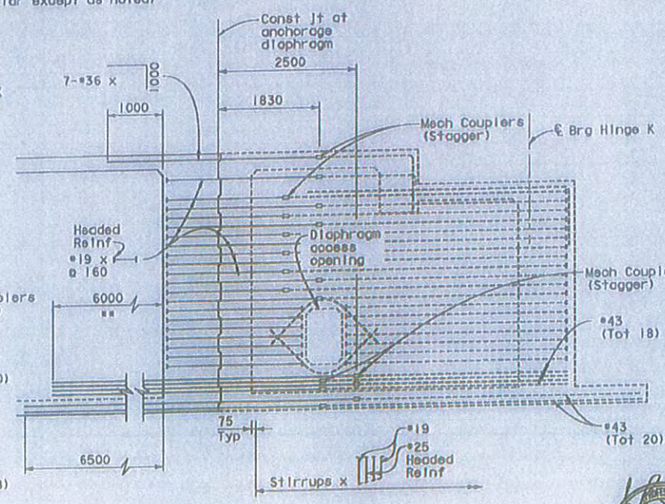

ELEVATION - OUTER LONGIT DIAPHRAGM

1:40

** Bend #43 bars as required to align bars with girder web.

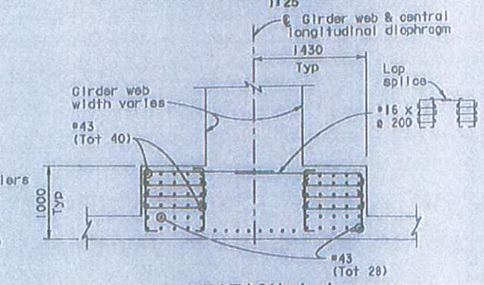

SECTION A-A

(Applicable at central longitudinal diaphragm for WB Structure only)

1:30

FOR REVISION 1, 2, 3 & 4 ONLY

ALL DIMENSIONS ARE IN MILLIMETERS UNLESS OTHERWISE SHOWN

MARK	DATE	DESCRIPTIONS	BY	CH'D
4	5-18-12	Denoted Hinge K Closure Pour by others	TL	JB
3	9-29-11	Rev Stirrups	TL	JB
2	2-8-11	Rev south edge EB Trans Struct and Diaph Reinf	TL	JB
1	3-29-10	ISD REVISIONS	AE	JB

REVISIONS

JAL BIRDY No. 41547 Exp. 12-31-13 CIVIL STATE OF CALIFORNIA

CONTRACT CHANGE ORDER NO. 129
SHEET 16 OF 37

SAN FRANCISCO OAKLAND BAY BRIDGE
EAST SPAN SEISMIC SAFETY PROJECT

YBI TRANSITION STRUCTURES

HINGE K CLOSURE DETAILS NO. 3

DESIGN OVERSIGHT: JOHN MOOR, BERNARD CHAN, JUAN F. CARPIO — HASAN EL-HATUR — 5/30/12

SIGN OFF DATE

Rev. Date: 5-18-99

	BY	CHECKED
DESIGN	Lee	Wang
DETAILS	van Ryn/Zuschl/Mol	Jain
QUANTITIES	Liao	E. Nichol

PREPARED FOR THE STATE OF CALIFORNIA DEPARTMENT OF TRANSPORTATION

Jal Birdy
PROJECT ENGINEER

CU 04251
EA 012051

BRIDGE NO. 34-0006 L/R
KILOMETER POST 12.8

DIMENSIONS PRINTED DEARING ELECTRIC REVISION DATES

REVISION DATES (PRELIMINARY STAGE ONLY)

SHEET 120 OF 209

ORIGINAL SCALE IN MILLIMETERS FOR METRIC PLANS

FILE => \\snlbfs\LB_Projects\4141-06\CADD\TS\Checked Plans\YBITS #1-100K No. 2_03-03-08 (Final Renamed)\051812 CCO 121\04-0120s1-3

May 18, 2012

TIME PLOTTED => 14:05:18 PM

DATE PLOTTED => 5/18/2012

USERNAME => fosmson

DIST.	COUNTY	ROUTE	KILOMETER POST TOTAL PROJECT	SHEET NO.	TOTAL SHEETS
04	SF	80	12.7/13.2	570R4	806

REGISTERED ENGINEER - CIVIL

6-23-08

PLANS APPROVAL DATE

The State of California or its officers or agents shall not be responsible for the accuracy or completeness of electronic copies of this plan sheet.

T.Y. LIN / MOFFATT & NICHOL
TWO HARRISON STREET
SAN FRANCISCO, CA 94105

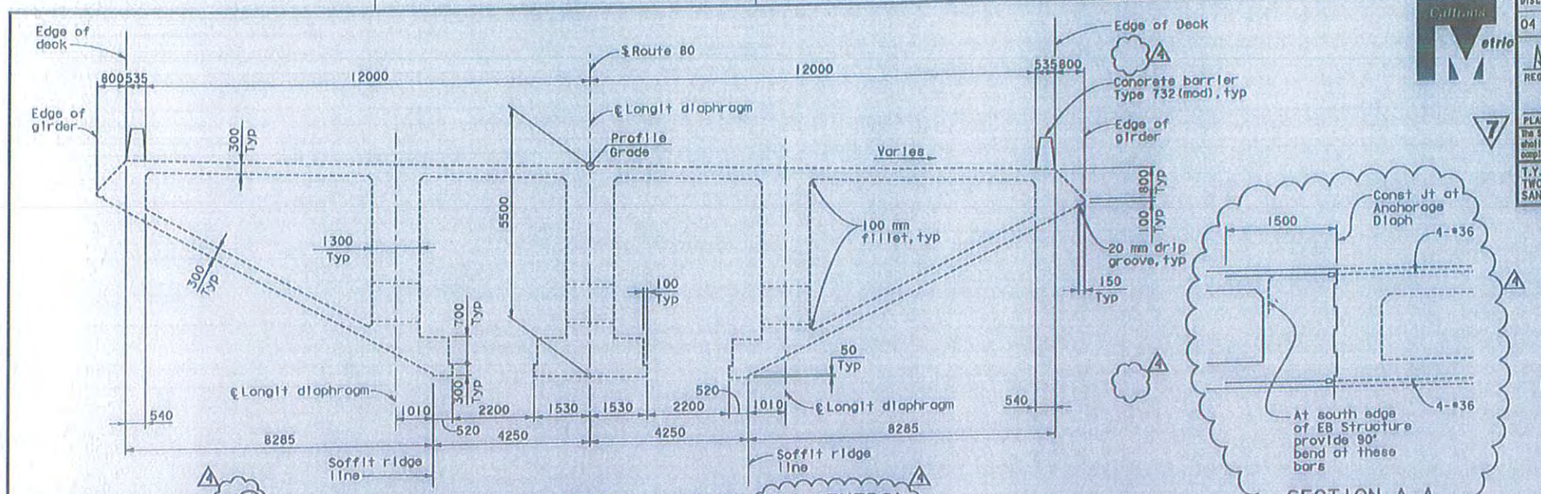

TYPICAL SECTION AT HINGE K CLOSURE (BY OTHERS)

(WB Structure shown, EB Structure similar except as noted)

1:60

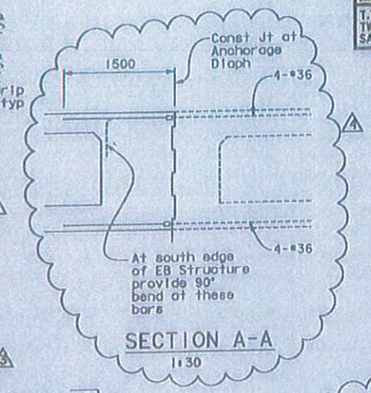

SECTION A-A

1:30

FOR REVISION 1, 2, 3 & 4 ONLY

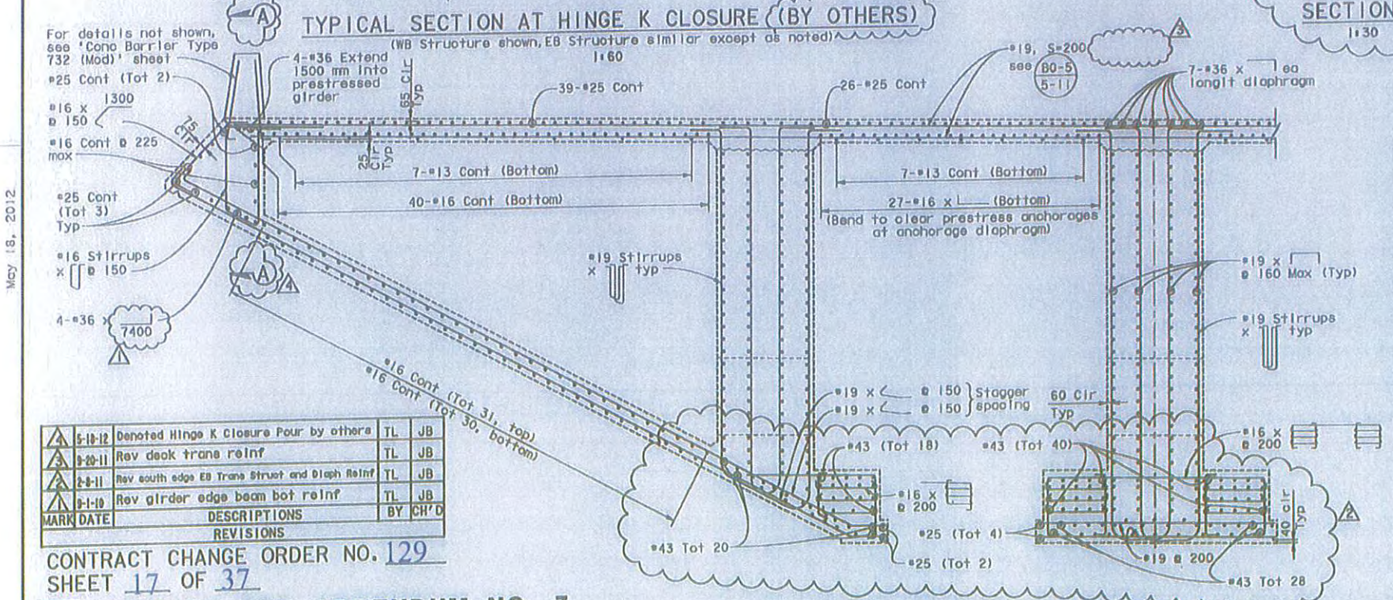

PARTIAL TYPICAL SECTION

1:30

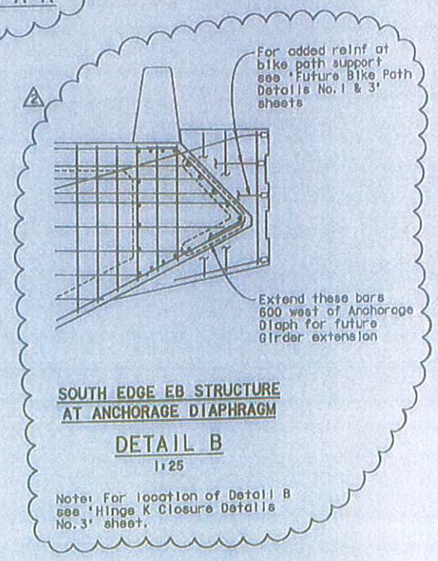

SOUTH EDGE EB STRUCTURE AT ANCHORAGE DIAPHRAGM

DETAIL B

1:25

Note: For location of Detail B see 'Hinge K Closure Details No.3' sheet.

MARK	DATE	DESCRIPTIONS	BY	CH'D
4	5-10-12	Denoted Hinge K Closure Pour by others	TL	JB
3	9-20-11	Rev deck trans reinf	TL	JB
2	2-8-11	Rev south edge EB Trans Struct and Diaph Reinf	TL	JB
1	9-1-10	Rev girder edge beam bot reinf	TL	JB

REVISIONS

CONTRACT CHANGE ORDER NO. 129
SHEET 17 OF 37

7 REVISED PER ADDENDUM NO. 7
DATED OCTOBER 19, 2009

ALL DIMENSIONS ARE IN MILLIMETERS UNLESS OTHERWISE SHOWN

DESIGN OVERSIGHT: Mark Ruhm, Jennifer Lee, Hani Matar
MARK MOOR, BERNARD CHAN, JUAN F. CARPO, HANY EL-HAYAK

5/30/12

SIGN OFF DATE

Rev. Date: 5-13-98

DESIGN	BY Lee	CHECKED Wang	
DETAILS	BY van Ryn/Zucchi/Mal	CHECKED Jain	
QUANTITIES	BY Liao	CHECKED E. Nichol	

PREPARED FOR THE STATE OF CALIFORNIA DEPARTMENT OF TRANSPORTATION

Jai Birdy
PROJECT ENGINEER

CU 04251
EA 012051

ORIGINAL SCALE IN MILLIMETERS FOR REDUCED PLANS 0 10 20 30 40 50 60 70 80 90 100

SAN FRANCISCO OAKLAND BAY BRIDGE
EAST SPAN SEISMIC SAFETY PROJECT

YBI TRANSITION STRUCTURES

HINGE K CLOSURE DETAILS NO. 4

BRIDGE NO. 34-0006 L/R
KILOMETER POST 12.8

DIRECTORY PRINTS READING EARLIER REVISION DATES — REVISION DATES (PRELIMINARY PLANS ONLY)

SHEET 121 OF 209

FILE => \\mnlbfs\LB_Projects\4141-06\CADD\TS\Checked Plans\YBITS #1-1000 No. 2.03-03-08 (Final Renamed)\051812 CCO T21\04-012041-3

USERNAME => T.Freeman DATE PLOTTED => 5/18/2012 TIME PLOTTED => 14:04:28 PM

May 18, 2012

DIST.	COUNTY	ROUTE	KILOMETER POST TOTAL PROJECT	SHEET NO.	TOTAL SHEETS
04	SF	80	12.7/13.2	571R2	806

REGISTERED ENGINEER - CIVIL

6-23-08

PLANS APPROVAL DATE

The State of California or its officers or agents shall not be responsible for the accuracy or completeness of electronic copies of this plan sheet.

A. L. ELY
No. 18880
Exp. 6-30-09
CIVIL
STATE OF CALIFORNIA
REGISTERED PROFESSIONAL ENGINEER

T.Y. LIN / MOFFATT & NICHOL
TWO HARRISON STREET
SAN FRANCISCO, CA 94105

JAL BIRDY
No. 41647
Exp. 12-31-12
CIVIL
STATE OF CALIFORNIA
REGISTERED PROFESSIONAL ENGINEER

FOR REVISION 1 & 2 ONLY

MARK	DATE	DESCRIPTIONS	BY	CH'D
2	5-18-12	Contents of sheet deleted	TL	JB
1	2-8-11	Rev exp jt blockout and south edge EB Trans Struct	TL	JB

REVISIONS

CONTRACT CHANGE ORDER NO. 129
SHEET 18 OF 37

ALL DIMENSIONS ARE IN MILLIMETERS UNLESS OTHERWISE SHOWN

SAN FRANCISCO OAKLAND BAY BRIDGE
EAST SPAN SEISMIC SAFETY PROJECT

YBI TRANSITION STRUCTURES

HINGE K CLOSURE DETAILS NO. 5

DESIGN OVERSIGHT
JOHN LOCK, BERNARD CHIAN, JUAN F. CARPIO
HASSAN EL-HATLIK
5/30/12
SIGN OFF DATE
Rev. Date: 5-18-99

DESIGN	BY Lee	CHECKED Wong
DETAILS	BY van Ryn/Zuccht/Mol	CHECKED Jotn
QUANTITIES	BY Liao	CHECKED E. Nichol

ORIGINAL SCALE IN MILLIMETERS FOR REDUCED PLANS 0 10 20 30 40 50 60 70 80 90 100

PREPARED FOR THE
STATE OF CALIFORNIA
DEPARTMENT OF TRANSPORTATION

Jal Birdy
PROJECT ENGINEER

CU 04251
EA 012051

BRIDGE NO. 34-0006 L/R
KILOMETER POST 12.8

STANDARD CRVTR DEADING
BJ&K7EN REVISION DATES

REVISION DATES (PRELIMINARY STAGE ONLY)

SHEET 122 OF 209

FILE => \\mnlbfs\LB_Projects\4141-06\CADD\TS\Checked Plans\YBITS #1-100% No. 2_03-03-08 (Final Renamed)\051812 CCO T21\04-0120a1-3

USERNAME => tecmson DATE PLOTTED => 5/18/2012 TIME PLOTTED => 14:06:37 PM

May 18, 2012

DIST.	COUNTY	ROUTE	KILOMETER POST TOTAL PROJECT	SHEET NO.	TOTAL SHEETS
04	SF	80	12.7/13.2	572R3	806

REGISTERED ENGINEER - CIVIL

6-23-08

PLANS APPROVAL DATE

The State of California or its officers or agents shall not be responsible for the accuracy or completeness of electronic copies of this plan sheet.

REGISTERED PROFESSIONAL ENGINEER
A.L. ELY
No. 18889
Exp. 6-30-09
CIVIL
STATE OF CALIFORNIA

T.Y. LIN / MOFFATT & NICHOL
TWO HARRISON STREET
SAN FRANCISCO, CA 94105

REGISTERED PROFESSIONAL ENGINEER
JAL BIRDY
No. 41547
Exp. 12-31-13
CIVIL
STATE OF CALIFORNIA

FOR REVISION 1, 2 & 3 ONLY

MARK	DATE	DESCRIPTIONS	BY	CH'D
3	5-18-12	Contents of sheet deleted	TL	JB
2	9-20-11	Rev Longit Diaph Stirrups	TL	JB
1	2-8-11	Rev exp jt blockout, south edge EB Trans Struct and Diaph reinf	TL	JB

REVISIONS

CONTRACT CHANGE ORDER NO. 129
SHEET 19 OF 37

7 REVISED PER ADDENDUM NO. 7 DATED OCTOBER 19, 2009

ALL DIMENSIONS ARE IN MILLIMETERS UNLESS OTHERWISE SHOWN

DESIGN OVERSIGHT
JOHN MOOK, BERNARD CHAN, JUAN F. CARPIO HASAN EL-HATAW
5/30/12
SIGN OFF DATE

DESIGN	BY Lee	CHECKED Wang	
DETAILS	BY von Ryn/Zuccht/Mol	CHECKED Jain	
QUANTITIES	BY Liao	CHECKED E. Nichol	

ORIGINAL SCALE IN MILLIMETERS FOR REDUCED PLANS 0 10 20 30 40 50 60 70 80 90 100

PREPARED FOR THE STATE OF CALIFORNIA DEPARTMENT OF TRANSPORTATION

Jal Birdy
PROJECT ENGINEER

CU 04251
EA 012051

BRIDGE NO. 34-0006 L/R
KILOMETER POST 12.8

DIRECTIONAL PRINTER BEARING
MINIMUM RADIUS FOR PLOTTER ——

REVISION DATES (PRELIMINARY STAGE ONLY)

SHEET 123 OF 209

SAN FRANCISCO OAKLAND BAY BRIDGE
EAST SPAN SEISMIC SAFETY PROJECT

YBI TRANSITION STRUCTURES

HINGE K CLOSURE DETAILS NO. 6

Rev. Date: 5-18-95

FILE => \\mnlbfs\LB_Projects\4141-06\CADD\TS\Checked Plans\YBITS #1-100X No. 2.03-03-08 (Final Renamed) \051812 CCO 121\04-012051-3

USERNAME => T.Feamster DATE PLOTTED => 5/18/2012 TIME PLOTTED => 10:05:46 PM

May 18, 2012

DIST.	COUNTY	ROUTE	KILOMETER POST TOTAL PROJECT	SHEET NO.	TOTAL SHEETS
04	SF	80	12.7/13.2	573R2	806

REGISTERED ENGINEER - CIVIL

6-23-08

PLANS APPROVAL DATE

The State of California or its officers or agents shall not be responsible for the accuracy or completeness of electronic copies of this plan sheet.

A.L. ELY No. 18840 Exp. 6-30-09 CIVIL STATE OF CALIFORNIA

T.Y. LIN / MOFFATT & NICHOL
TWO HARRISON STREET
SAN FRANCISCO, CA 94105

May 18, 2012

Jal Birdy No. 41541 Exp. 12-31-12 CIVIL STATE OF CALIFORNIA

FOR REVISION 1 & 2 ONLY

MARK	DATE	DESCRIPTIONS	BY	CH'D
2	5-18-12	Contents of sheet deleted	TL	JB
1	2-8-11	Rev exp jt blockout and south edge EB Trans Struct	TL	JB

REVISIONS

CONTRACT CHANGE ORDER NO. 129
SHEET 20 OF 37

7 REVISED PER ADDENDUM NO. 7 DATED OCTOBER 19, 2009

ALL DIMENSIONS ARE IN MILLIMETERS UNLESS OTHERWISE SHOWN

DESIGN OVERSIGHT
JOHN MOOK, BERNARD CHAN, JUAN F. CARPIO HASAN EL-HATUN
5/30/12
SIGN OFF DATE

DESIGN	BY Lee	CHECKED Wang	
DETAILS	BY Van Ryn/Zucchi/Mol	CHECKED Jain	
QUANTITIES	BY Liao	CHECKED E. Nichol	

ORIGINAL SCALE IN MILLIMETERS FOR REDUCED PLANS 0 10 20 30 40 50 60 70 80 90 100

PREPARED FOR THE STATE OF CALIFORNIA DEPARTMENT OF TRANSPORTATION

Jal Birdy
PROJECT ENGINEER

CU 04251
EA 01205I

BRIDGE NO. 34-0006 L/R
EA/KILOMETER POST 12.8
DISTRICT/DIVISION BOARD

SAN FRANCISCO OAKLAND BAY BRIDGE
EAST SPAN SEISMIC SAFETY PROJECT

YBI TRANSITION STRUCTURES

HINGE K CLOSURE DETAILS NO. 7

REVISION DATES (PRELIMINARY STAGE ONLY) SHEET 124 OF 209

FILE => \\mnlbfs\LB_Projects\4141-06\CADD\TS\Checked Plans\YBITS 01-100% No. 2.03-03-08 (Final Renamed)\05IB12 CCO T21\04-01205I-3

USERNAME => fasmason DATE PLOTTED => 5/18/2012 TIME PLOTTED => 11:05:55 PM

Rev. Date: 5-18-98

DIST.	COUNTY	ROUTE	KILOMETER POST TOTAL PROJECT	SHEET NO.	TOTAL SHEETS
04	SF	80	12.7/13.2	674R1	806

REGISTERED ENGINEER - CIVIL

6-23-08
PLANS APPROVAL DATE

REGISTERED PROFESSIONAL ENGINEER
A.L. ELY
No. 18880
Exp. 6-30-09
CIVIL
STATE OF CALIFORNIA

The State of California or its officers or agents shall not be responsible for the accuracy or completeness of electronic copies of this plan sheet.

T.Y. LIN / MOFFATT & NICHOL
TWO HARRISON STREET
SAN FRANCISCO, CA 94105

REGISTERED PROFESSIONAL ENGINEER
JAL BIRDY
No. 41847
Exp. 12-31-13
CIVIL
STATE OF CALIFORNIA

FOR REVISION ⚠ ONLY

MARK	DATE	DESCRIPTIONS	BY	CH'D
1	5-18-12	Contents of sheet deleted	TL	JB

REVISIONS

CONTRACT CHANGE ORDER NO. 129
SHEET 21 OF 37

DESIGN OVERSIGHT
JOHN MOOR, BERNARD CHAN, JUAN F. CARPIO, HASAN EL-HATUR
March 3, 2008
SIGN OFF DATE
5/30/12
Rev. Date: 5-18-88

DESIGN	BY NA	CHECKED NA	
DETAILS	BY van Ryn/Zucchi/Mal	CHECKED Jain	
QUANTITIES	BY Liao	CHECKED E. Nichol	

DRAWING SCALE IN MILLIMETERS FOR RECORD PLANS 0 10 20 30 40 50 60 70 80 90 100

PREPARED FOR THE
STATE OF CALIFORNIA
DEPARTMENT OF TRANSPORTATION

Jal Birdy
PROJECT ENGINEER

CU 04251
EA 012051

BRIDGE NO. 34-0006 L/R
KILOMETER POST 12.8

SAN FRANCISCO OAKLAND BAY BRIDGE
EAST SPAN SEISMIC SAFETY PROJECT

YBI TRANSITION STRUCTURES
HINGE K CLOSURE DETAILS NO. 8

PLANNED PRIVATE DEADING
PLANNED REVISION DATES

REVISION DATES (PRELIMINARY STAGE ONLY)
MM/DD/YY MM/DD/YY MM/DD/YY MM/DD/YY MM/DD/YY MM/DD/YY MM/DD/YY MM/DD/YY MM/DD/YY

SHEET 125 OF 209

FILE => \\mnlbfs\LB_Projects\4141-06\CADD\TS\Checked Plans\YBITS #1-100X No. 2.03-03-08 (Final Renamed)\051812 CCO 721\04-012051-3

USERNAME => fasmcan DATE_PLOTTED => 5/18/2012 TIME_PLOTTED => 3:57:59 PM

May 18, 2012

DIST.	COUNTY	ROUTE	KILOMETER POST TOTAL PROJECT	SHEET NO.	TOTAL SHEETS
04	SF	80	12.7/13.2	675R1	806

A. Ely
REGISTERED ENGINEER - CIVIL

6-23-08
PLANS APPROVAL DATE

The State of California or its officers or agents shall not be responsible for the accuracy or completeness of electronic copies of this plan sheet.

PROFESSIONAL ENGINEER A.L. ELY No. 18880 Exp. 6-30-09 CIVIL STATE OF CALIFORNIA

T.Y. LIN / MOFFATT & NICHOL
TWO HARRISON STREET
SAN FRANCISCO, CA 94105

PROFESSIONAL ENGINEER JOL BIRDY No. 41847 Exp. 12-31-12 CIVIL STATE OF CALIFORNIA

FOR REVISION △1 ONLY

MARK	DATE	DESCRIPTIONS	BY	CH'D
△1	5-18-12	Contents of sheet deleted	TL	JB

REVISIONS

CONTRACT CHANGE ORDER NO. 129
SHEET 22 OF 37

May 18, 2012

DESIGN OVERSIGHT
JOHN MOOR, BERNARD CHAN, JUAN F. CARPIO HASAN EL-HAYME
March 3, 2008 5/30/12
SIGN OFF DATE
Rev. Date: 5-18-99

DESIGN	BY NA	CHECKED NA	
DETAILS	BY Van Ryn/Zuoshi/Mai	CHECKED Jain	
QUANTITIES	BY Liao	CHECKED E. Nichol	

ORIGINAL SCALE IN MILLIMETERS FOR REDUCED PLANS 0 10 20 30 40 50 60 70 80 90 100

PREPARED FOR THE STATE OF CALIFORNIA DEPARTMENT OF TRANSPORTATION

Jol Birdy
PROJECT ENGINEER

CU 04251
EA 012051

BRIDGE NO. 34-0006 L/R
KILOMETER POST 12.8

STANDARD PLANS REFERENCE NUMBER AND VERSION DATE ——— ⇒

REVISION DATES (PRELIMINARY STAGE ONLY)
SHEET 126 OF 209

SAN FRANCISCO OAKLAND BAY BRIDGE
EAST SPAN SEISMIC SAFETY PROJECT

YBI TRANSITION STRUCTURES
HINGE K CLOSURE DETAILS NO. 9

FILE => \\mnlbfs\LB_Projects\4141-06\CADD\TS\Checked Plans\YBITS *1-100K No. 2.03-03-08 (Final Renamed)\051812 CCO T21\04-012061-3

USERNAME => fleemsen DATE PLOTTED => 5/18/2012 TIME PLOTTED => 3:58:08 PM

DIST.	COUNTY	ROUTE	KILOMETER POST TOTAL PROJECT	SHEET NO.	TOTAL SHEETS
04	SF	80	12.7/13.2	576R1	806

REGISTERED ENGINEER - CIVIL

6-23-08

PLANS APPROVAL DATE

The State of California or its officers or agents shall not be responsible for the accuracy or completeness of electronic copies of this plan sheet.

PROFESSIONAL ENGINEER — AL ELY — No. 18880 — Exp. 6-30-09 — CIVIL — STATE OF CALIFORNIA

T.Y. LIN / MOFFATT & NICHOL
TWO HARRISON STREET
SAN FRANCISCO, CA 94105

PROFESSIONAL ENGINEER — JAL BIRDY — No. 41847 — Exp. 12-31-13 — CIVIL — STATE OF CALIFORNIA

FOR REVISION ⚠ ONLY

MARK	DATE	DESCRIPTIONS	BY	CH'D
⚠				
⚠	5-18-12	Contents of sheet deleted	TL	JB

REVISIONS

CONTRACT CHANGE ORDER NO. 129
SHEET 23 OF 37

DESIGN OVERSIGHT
JOHN MOOK, BERNARD CHAM, JUAN F. CARPIO HASAN EL-HAYIR
March 3, 2008 5/30/12
SIGN OFF DATE

Rev. Date: 5-18-98

	BY	CHECKED
DESIGN	NA	NA
DETAILS	Van Ryn/Zuoehl/Mol	John
QUANTITIES	Liao	E. Nichol

ORIGINAL SCALE IN MILLIMETERS FOR REDUCED PLANS 0 10 20 30 40 50 60 70 80 90 100

PREPARED FOR THE STATE OF CALIFORNIA DEPARTMENT OF TRANSPORTATION

Jal Birdy
PROJECT ENGINEER

CU 04251
EA 012051

BRIDGE NO. 34-0006 L/R
KILOMETER POST 12.8
DIRECTORS DECISION DATE
STANDARD PLAN DATE
STANDARD PLAN NO.

REVISION DATES (PRELIMINARY STAGE ONLY)

SHEET 127 OF 209

SAN FRANCISCO OAKLAND BAY BRIDGE
EAST SPAN SEISMIC SAFETY PROJECT

YBI TRANSITION STRUCTURES

HINGE K CLOSURE DETAILS NO. 10

FILE => \\mnlbfs\LB_Projects\4141-06\CADD\TS\Checked Plans\YBITS *1-100X No. 2.03-03-08 (Final Renamed)\051812 CCO T21\04-012051-3

USERNAME => fasmon DATE PLOTTED => 5/18/2012 TIME PLOTTED => 3:58:18 PM

May 18, 2012

DIST.	COUNTY	ROUTE	KILOMETER POST TOTAL PROJECT	SHEET NO.	TOTAL SHEETS
04	SF	80	12.7/13.2	577R1	806

REGISTERED ENGINEER - CIVIL

6-23-08

PLANS APPROVAL DATE

REGISTERED PROFESSIONAL ENGINEER
A.L. ELY
No. 18880
Exp. 6-30-09
CIVIL
STATE OF CALIFORNIA

The State of California or its officers or agents shall not be responsible for the accuracy or completeness of electronic copies of this plan sheet.

T.Y. LIN / MOFFATT & NICHOL
TWO HARRISON STREET
SAN FRANCISCO, CA 94105

REGISTERED PROFESSIONAL ENGINEER
JAL BIRDY
No. 41847
Exp. 12-31-13
CIVIL
STATE OF CALIFORNIA

FOR REVISION △1 ONLY

MARK	DATE	DESCRIPTIONS	BY	CH'D
△1	5-18-12	Contents of sheet deleted	TL	JB

REVISIONS

CONTRACT CHANGE ORDER NO. 129
SHEET 24 OF 37

DESIGN OVERSIGHT
JOHN MOOK, BERNARD CHAM, JUAN F. CARPIO IOSAM EL-HATIR
March 3, 2008 5/30/12
SIGN OFF DATE

Rev. Date: 5-15-99

DESIGN	BY NA	CHECKED NA	
DETAILS	BY van Ryn/Zucchi/Mal	CHECKED Jain	
QUANTITIES	BY Liao	CHECKED E. Nichol	

ORIGINAL SCALE IN MILLIMETERS FOR REDUCED PLANS 0 10 20 30 40 50 60 70 80 90 100

PREPARED FOR THE
STATE OF CALIFORNIA
DEPARTMENT OF TRANSPORTATION

Jal Birdy
PROJECT ENGINEER

CU 04251
EA 0120S1

BRIDGE NO. 34-0006 L/R
KILOMETER POST 12.8

SAN FRANCISCO OAKLAND BAY BRIDGE
EAST SPAN SEISMIC SAFETY PROJECT

YBI TRANSITION STRUCTURES

HINGE K CLOSURE DETAILS NO. 11

DIRECTORY DRIVER DESIGNING
DIRECTOR REVISION DATES

REVISION DATES (PRELIMINARY STAGE ONLY)

SHEET 128 OF 209

FILE -> \\mnlbfs\LB_Projects\141-06\CADD\TS\Checked Plans\YBITS #1-100% No. 2_03-03-08 (Final Renamed)\051812 CCO T21\04-0120s1-3

USERNAME -> Yasmin DATE PLOTTED -> 5/18/2012 TIME PLOTTED -> 3:58:27 PM

May 18, 2012

DIST.	COUNTY	ROUTE	KILOMETER POST TOTAL PROJECT	SHEET NO.	TOTAL SHEETS
04	SF	80	12.7/13.2	578R1	806

Al Ely
REGISTERED ENGINEER - CIVIL

6-23-08
PLANS APPROVAL DATE

AL ELY
No. 11880
Exp. 6-30-09
CIVIL
STATE OF CALIFORNIA
REGISTERED PROFESSIONAL ENGINEER

The State of California or its officers or agents shall not be responsible for the accuracy or completeness of electronic copies of this plan sheet.

T.Y. LIN / MOFFATT & NICHOL
TWO HARRISON STREET
SAN FRANCISCO, CA 94105

Jal Birdy
No. 41547
Exp. 12-31-13
CIVIL
STATE OF CALIFORNIA
REGISTERED PROFESSIONAL ENGINEER

FOR REVISION ⚠ ONLY

MARK	DATE	DESCRIPTIONS	BY	CH'D
1	5-18-12	Contents of sheet deleted	TL	JB

REVISIONS

CONTRACT CHANGE ORDER NO. 129
SHEET 25 OF 37

DESIGN OVERSIGHT
John Moor, Bernard Chan, Juan F. Carpio, Hasan El-Hatlani
March 3, 2008
SIGN OFF DATE
Rev. Date: 5-18-99

5/30/12

DESIGN	BY NA	CHECKED NA	
DETAILS	BY van Ryn/Zuoehl/Wal	CHECKED Jain	
QUANTITIES	BY Liao	CHECKED E. Nichol	

ORIGINAL SCALE IN MILLIMETERS FOR REDUCED PLANS 0 10 20 30 40 50 60 70 80 90 100

PREPARED FOR THE
STATE OF CALIFORNIA
DEPARTMENT OF TRANSPORTATION

Jal Birdy
PROJECT ENGINEER

CU 04251
EA 012051

BRIDGE NO. 34-0006 L/R
KILOMETER POST 12.8

STANDARD PRINTS BEARING EARLIER REVISION DATES ——→

SAN FRANCISCO OAKLAND BAY BRIDGE
EAST SPAN SEISMIC SAFETY PROJECT

YBI TRANSITION STRUCTURES

HINGE K CLOSURE DETAILS NO. 12

REVISION DATES (PRELIMINARY STAGE ONLY)
5/1/98 5/1/99 1/1/00 1/1/01 1/1/02 1/1/03 1/1/04 1/1/05 1/1/06

SHEET 129 OF 209

FILE => \\mnlbfs\LB.Projects\4141-06\CADD\TS\Checked Plans\YBITS #1-100K No. 2.03-03-08 (Final Renamed)\051812 CCO T21\04-012051-3-

May 18, 2012

USERNAME => Tasmson DATE PLOTTED => 5/18/2012 TIME PLOTTED => 3:58:38 PM

DIST.	COUNTY	ROUTE	KILOMETER POST TOTAL PROJECT	SHEET NO.	TOTAL SHEETS
04	SF	80	12.7/13.2	679R2	806

REGISTERED ENGINEER - CIVIL

6-23-08
PLANS APPROVAL DATE

REGISTERED PROFESSIONAL ENGINEER
A.L. ELY
No. 18980
Exp. 6-30-09
CIVIL
STATE OF CALIFORNIA

The State of California or its officers or agents shall not be responsible for the accuracy or completeness of electronic copies of this plan sheet.

T.Y. LIN / MOFFATT & NICHOL
TWO HARRISON STREET
SAN FRANCISCO, CA 94105

REGISTERED PROFESSIONAL ENGINEER
JAL BIRDY
No. 41547
Exp. 12-31-13
CIVIL
STATE OF CALIFORNIA

FOR REVISION 2 ONLY

CONTRACT CHANGE ORDER NO. 129
SHEET 26 OF 37

ALL DIMENSIONS ARE IN MILLIMETERS UNLESS OTHERWISE SHOWN

DESIGN OVERSIGHT
5/30/12
RAMAN EL-NATUR
SIGN OFF DATE

MARK	DATE	DESCRIPTIONS	BY	CH'D	COOR
2	05/18/12	CONTENTS OF SHEET DELETED	TL	JB	
1	02/01/11	SEISMIC JOINT MODIFICATIONS HINGE K	CR	MN	

REVISIONS

DESIGN	BY Lee	CHECKED Hong
DETAILS	BY van Ryn/Zuschl/Wal	CHECKED Jain
QUANTITIES	BY Liao	CHECKED E. Nichol

ORIGINAL SCALE IN MILLIMETERS FOR REDUCED PLANS 0 10 20 30 40 50 60 70 80 90 100

PREPARED FOR THE STATE OF CALIFORNIA DEPARTMENT OF TRANSPORTATION

Jal Birdy
PROJECT ENGINEER

CU 04251
EA 012051

BRIDGE NO. 34-0006L/R
KILOMETER POST 12.8

SAN FRANCISCO OAKLAND BAY BRIDGE
EAST SPAN SEISMIC SAFETY PROJECT

YBI TRANSITION STRUCTURES

HINGE K CLOSURE DETAILS NO. 13

DIMENSIONS PRINTED ON THIS SHEET ARE ——— mm

REVISION DATES (PRELIMINARY STAGE ONLY) 10/08 10/08 10/08 10/08 10/08 10/08 10/08 10/08 10/08 10/08

SHEET 130 OF 209

Rev. Date: 5-8-98

FILE => \\mnlbfs\LB_Projects\4141-06\CADD\TS\Checked Plans\YBITS *1-100% No. 2.03-03-09 (Final Renamed)\051812 CCO T21\04-012051-3

USERNAME => fessman DATE PLOTTED => 5/18/2012 TIME PLOTTED => 11:02:31 PM

May 18, 2012

DIST.	COUNTY	ROUTE	KILOMETER POST TOTAL PROJECT	SHEET NO.	TOTAL SHEETS
04	SF	80	12.7/13.2	680R2	806

REGISTERED ENGINEER - CIVIL
6-23-08
PLANS APPROVAL DATE

A.L. FLY, No. 18119, Exp. 6-30-11, CIVIL, STATE OF CALIFORNIA, REGISTERED PROFESSIONAL ENGINEER

The State of California or its officers or agents shall not be responsible for the accuracy or completeness of electronic copies of this plan sheet.

T.Y. LIN / MOFFATT & NICHOL
TWO HARRISON STREET
SAN FRANCISCO, CA 94105

California now has a web site! To get to the web site, go to: http://www.dot.ca.gov

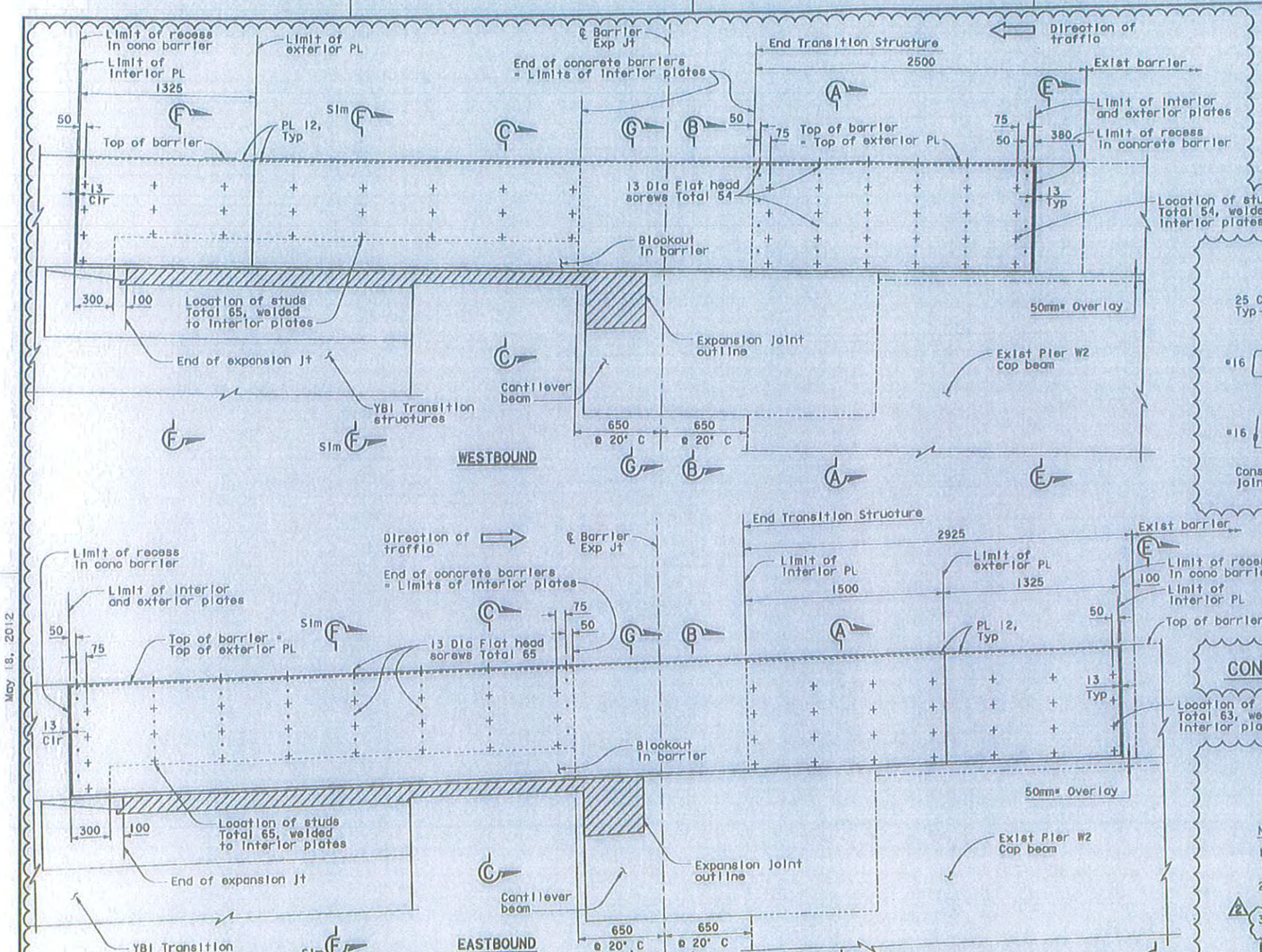

BARRIER AT HINGE K - ELEVATION
1:15

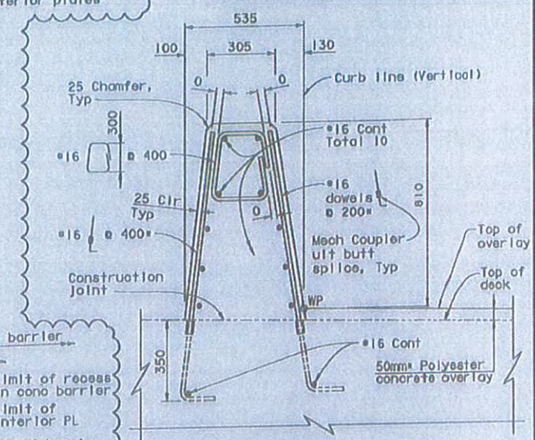

SECTION E-E

CONCRETE BARRIER TYPE 732 (MODIFIED)
For Pier W2 Cap beam only
1:10

Marvin K. Hoover, No. C 051426, Exp. 12/31/13, CIVIL, STATE OF CALIFORNIA, REGISTERED PROFESSIONAL ENGINEER

FOR REVISION ⚠1 & ⚠2 ONLY

NOTES:

1. For Sections A-A, B-B, C-C, F-F and G-G, see 'Hinge K Closure Details No. 15' sheet.
2. All reinforcement in concrete barrier shall be epoxy coated.
3. Steel barrier cover plates to be furnished by contractor and installed by others.

CONTRACT CHANGE ORDER NO. 129
SHEET 27 OF 37

ALL DIMENSIONS ARE IN MILLIMETERS UNLESS OTHERWISE SHOWN

HINGE K EXPANSION JOINT DETAILS

SAN FRANCISCO OAKLAND BAY BRIDGE
EAST SPAN SEISMIC SAFETY PROJECT

YBI TRANSITION STRUCTURES

HINGE K CLOSURE DETAILS NO. 14

DESIGN OVERSIGHT: John Cook / Bernard Kuan / Mark F. Garrido
NUCLEAR QC-NATUR: 5/30/12
SIGN OFF DATE
Rev. Dates 5-18-98

MARK	DATE	DESCRIPTIONS	BY	CH'D	CCO#
⚠2	05/30/12	NOTED BARRIER PLATES INSTALLED BY OTHERS	AE	MN	
⚠1	02/01/11	SEISMIC JOINT MODIFICATIONS HINGE K	CR	MN	

REVISIONS

DESIGN: BY Lee, CHECKED Wong
DETAILS: BY van Ryn/Zuzohl/Mal, CHECKED Jain
QUANTITIES: BY Liao, CHECKED E. Nichol

PREPARED FOR THE STATE OF CALIFORNIA DEPARTMENT OF TRANSPORTATION

Joi Birdy
PROJECT ENGINEER

BRIDGE NO. 34-0006L/R
CLOSURE POST 12.8

CU 04251
EA 012051

STANDARD PLANS DESIGNATION: N/A

REVISION DATES (PRELIMINARY STAMP ONLY): 10/07 | 10/07 | 10/07 | 10/07 | 10/07 | 10/07 | 10/07 | 10/07

SHEET 131 OF 209

ORIGINAL SCALE IN MILLIMETERS FOR REDUCED PLANS: 0 10 20 30 40 50 60 70 80 90 100

FILE => \\anlbfs\LB_Projects\4141-06\CADD\TS\Checked Plans\YBITS #1-100X No. 2_03-03-08 (Final Renamed)\051812 CCO T21\04-012051-3

USERNAME => Tecmson DATE PLOTTED => 5/18/2012 TIME PLOTTED => 11:02:41 PM

May 18, 2012

DIST	COUNTY	ROUTE	KILOMETER POST TOTAL PROJECT	SHEET NO.	TOTAL SHEETS
04	SF	80	12.7/13.2	681R2	806

REGISTERED ENGINEER - CIVIL

6-23-08

PLANS APPROVAL DATE

The State of California or its officers or agents shall not be responsible for the accuracy or completeness of electronic copies of this plan sheet.

T.Y. LIN / MOFFATT & NICHOL
TWO HARRISON STREET
SAN FRANCISCO, CA 94105

Caltrans now has a web site! To get to the web site, go to: http://www.dot.ca.gov

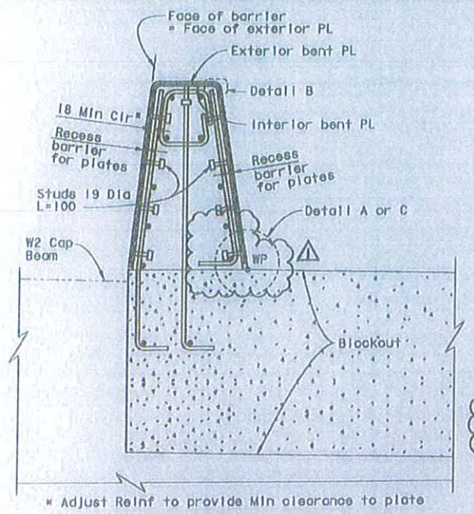

* Adjust Reinf to provide Min clearance to plate

SECTION A-A
1:10

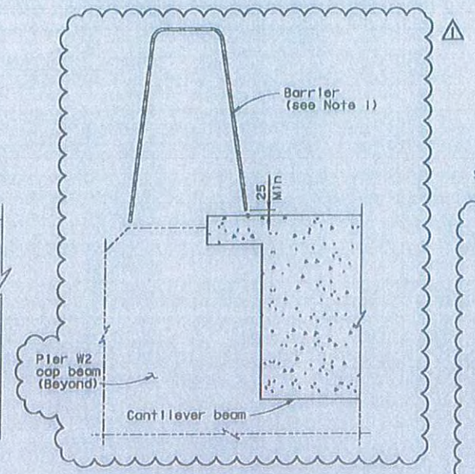

SECTION B-B
1:10

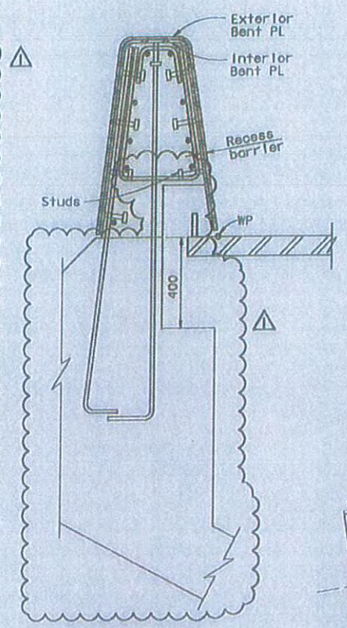

SECTION C-C
1:10

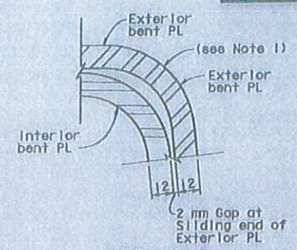

DETAIL B
NTS

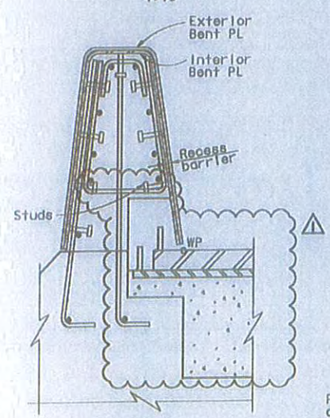

SECTION F-F
1:10

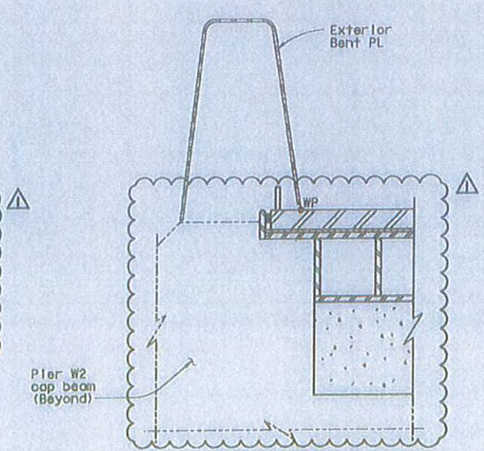

SECTION G-G
1:10

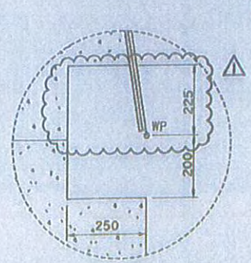

TYPICAL BARRIER BLOCKOUT
NTS

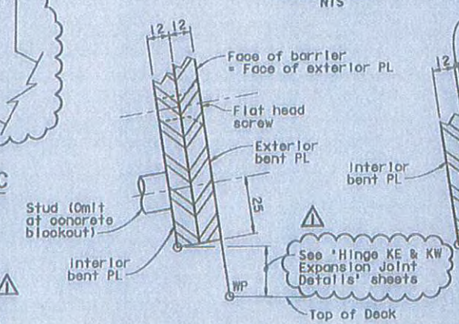

DETAIL TYPICAL AT FIXED END OF EXTERIOR PL
DETAIL A
NTS

DETAIL TYPICAL AT SLIDING END OF EXTERIOR PL
DETAIL C
NTS

NOTES:

1. Bend steel plates to conform to shape of concrete barrier.
2. Galvanize all metal hardware after fabrication.
3. Steel barrier cover plates to be furnished by contractor and installed by others.

FOR REVISION 1 & 2 ONLY

ALL DIMENSIONS ARE IN MILLIMETERS UNLESS OTHERWISE SHOWN

HINGE K EXPANSION JOINT DETAILS

SAN FRANCISCO OAKLAND BAY BRIDGE
EAST SPAN SEISMIC SAFETY PROJECT

YBI TRANSITION STRUCTURES

HINGE K CLOSURE DETAILS NO. 15

CONTRACT CHANGE ORDER NO. 129
SHEET 28 OF 37

DESIGN OVERSIGHT
HASAN EL-HATUR 5/30/12
SIGN OFF DATE
Rev. Date: 5-8-98

MARK	DATE	DESCRIPTIONS	BY	CH'D	CCO#
2	06/18/12	NOTED BARRIER PLATES INSTALLED BY OTHERS	AE	MN	
1	02/01/11	SEISMIC JOINT MODIFICATIONS HINGE K	CR	MN	

REVISIONS

DESIGN BY Lee CHECKED Wang
DETAILS BY van Ryn/Zucchi/Mol CHECKED Jain
QUANTITIES BY Liao CHECKED E. Nichol

PREPARED FOR THE STATE OF CALIFORNIA DEPARTMENT OF TRANSPORTATION

J. Birdy
PROJECT ENGINEER

BRIDGE NO. 34-0006L/R
KILOMETER POST 12.8

CU 04251
EA 01205I

ELECTRICAL REVISION DATES — REVISION DATES (PRELIMINARY STAGE ONLY)

SHEET 132 OF 209

FILE => \\nnlbfs\LB_Projects\4141-06\CADD\TS\Checked Plans\YBITS #1-100X No. 2.03-03-08 (Final Renamed\051812 CCO 121\04-01205I-34

USERNAME => fagnmon DATE PLOTTED => 5/18/2012 TIME PLOTTED => 11:02:51 PM

May 18, 2012

DIST.	COUNTY	ROUTE	KILOMETER POST TOTAL PROJECT	SHEET NO.	TOTAL SHEETS
04	SF	80	12.7/13.2	697R3	806

REGISTERED ENGINEER - CIVIL

02-01-11

PLANS APPROVAL DATE

The State of California or its officers or agents shall not be responsible for the accuracy or completeness of electronic copies of this plan sheet.

T.Y. LIN / MOFFATT & NICHOL
TWO HARRISON STREET
SAN FRANCISCO, CA 94105

Caltrans now has a web site! To get to the web site, go to: http://www.dot.ca.gov

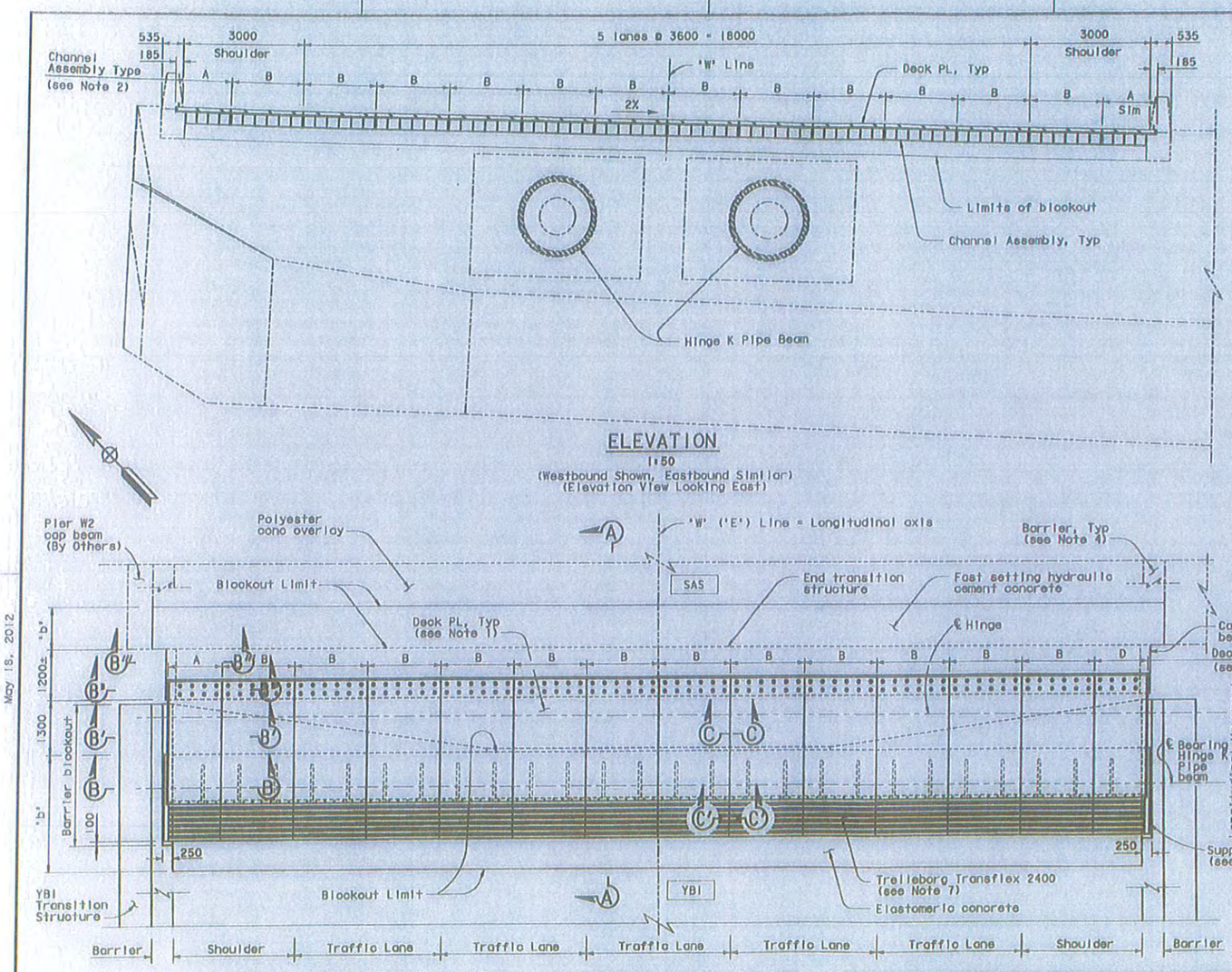

Note: Hinge KE & KW Expansion Joints to be furnished by Contractor and Installed by others.

FOR REVISION 3 ONLY

NOTES:

1. For Deck Plates A, B and D, see 'Hinge KE & KW Expansion Joint Details No.3' sheet.
2. Deck Plate A and D matches with Support Plate A and the Channel Assembly A (Module A). Deck Plate B matches with Support Plate B and the Channel Assembly B (Module B). For details, see 'Hinge KE & KW Expansion Joint Details No.3' and 'Hinge KE & KW Expansion Joint Details No.5' sheets.
3. One module 'B' is placed per half traffic lane.
4. Portions of barriers are not shown for clarity. For barrier details at expansion joint, see 'Hinge K Closure Details No.14' sheet.
5. For Section A-A, see 'Hinge KE & KW Expansion Joint Details No.2' sheet.
6. For Sections B-B, B'-B', B''-B'', B'''-B''', C-C and C'-C', see 'Hinge KE & KW Expansion Joint Details No.3' sheet.
7. The expansion joint shall be 1800 wide Transflex 2400 module with movement rating of 600. The joint between the Transflex modules shall be water tight.
8. For General Notes, see 'General Notes' sheets.

CONTRACT CHANGE ORDER NO. 129
SHEET 29 OF 37

PLAN-EXPANSION JOINT
1:50
(Westbound Shown, Eastbound Similar)

THIS SHEET REPLACES SHEET NO. 697R1/806

ALL DIMENSIONS ARE IN MILLIMETERS UNLESS OTHERWISE SHOWN

MARK	DATE	DESCRIPTIONS	BY	CH'D	CCO#
3	10/11/12	NOTED SEISMIC JOINT INSTALLED BY OTHERS	TL	JB	
2	10/04/11	SEISMIC JOINT MODIFICATIONS HINGE K	CR	MN	

REVISIONS

DESIGN OVERSIGHT
JOHN BOOS, DESIGNER CHAIR, SAM F. CARPIO
HASAN EL-HATIR 5/30/12
SIGN OFF DATE
Rev. Date: 6-19-99

DESIGN BY C. Redfield CHECKED M. Noder
DETAILS BY H. Patel CHECKED J. Duxbury
QUANTITIES BY H. Patel CHECKED J. Duxbury

ORIGINAL SCALE IN MILLIMETERS FOR REDUCED PLANS 0 10 20 30 40 50 60 70 80 90 100

PREPARED FOR THE STATE OF CALIFORNIA DEPARTMENT OF TRANSPORTATION

Jai Birdy
PROJECT ENGINEER

CU 04251
EA 012051

BRIDGE NO. 34-0006 L/R
KILOMETER POST 12.8

DIRECTORY PRINTS DENOTES LATEST REVISION DATES

REVISION DATES (PRELIMINARY STAGE ONLY)

SHEET 148 OF 209

SAN FRANCISCO OAKLAND BAY BRIDGE
EAST SPAN SEISMIC SAFETY PROJECT

YBI TRANSITION STRUCTURES

HINGE KE & KW EXPANSION JOINT DETAILS NO.1

FILE => \\mnbrs\LB_Projects\414I-06\CADD\TS\Checked Plans\YBITS #1-100% No. 2.03-03-08 (Final Renamed)\051812 CCO 129\ckjeb03.dgn

May 18, 2012

100 % PS&E

TIME PLOTTED => 11:03:19 PM
DATE PLOTTED => 5/18/2012
USERNAME => Thomson

DIST.	COUNTY	ROUTE	KILOMETER POST TOTAL PROJECT	SHEET NO.	TOTAL SHEETS
04	SF	80	12.7/13.2	698R3	806

REGISTERED ENGINEER - CIVIL

02-01-11

PLANS APPROVAL DATE

The State of California or its officers or agents shall not be responsible for the accuracy or completeness of electronic copies of this plan sheet.

T.Y. LIN / MOFFATT & NICHOL
TWO HARRISON STREET
SAN FRANCISCO, CA 94105

Caltrans now has a web site! To get to the web site, go to: http://www.dot.ca.gov

FOR REVISION 3 ONLY

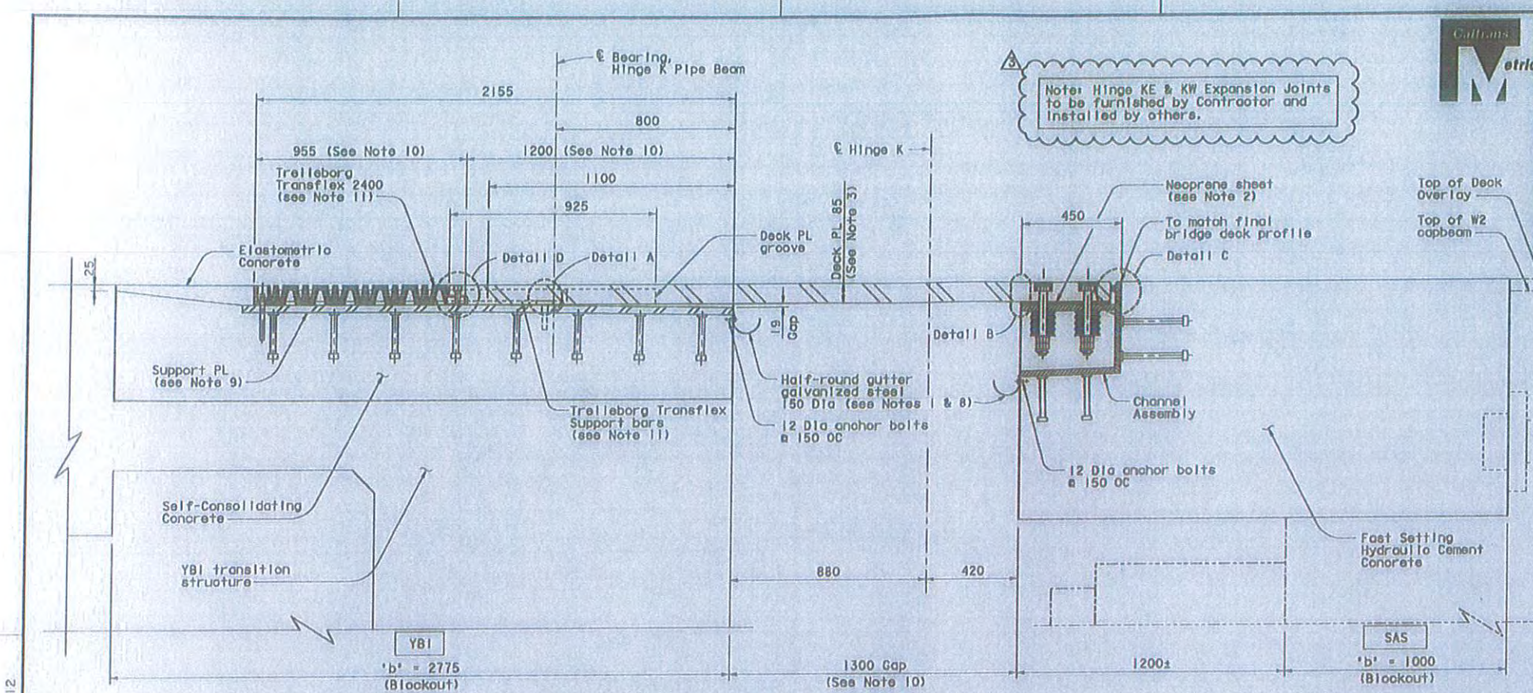

SECTION A-A
1:10

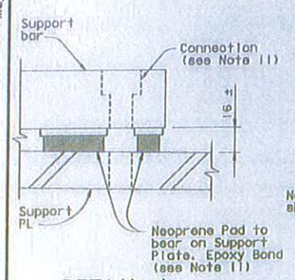

DETAIL A
1:2

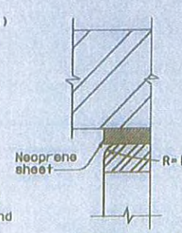

DETAIL B
1:2

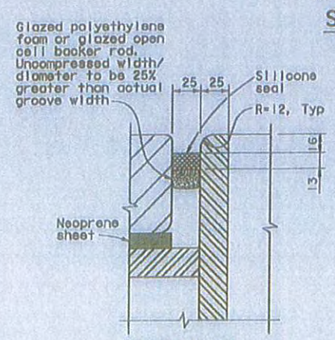

DETAIL C
1:2

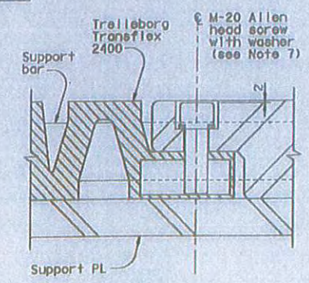

DETAIL D
1:2

NOTES:

1. Use caulking or sealant between gutter and concrete.
2. 40 mm holes in neoprene sheets shall be drilled or punched so that the neoprene is not distorted at the time of installation. See 'Hinge KE & KW Expansion Joint Details No.6' sheet.
3. For deck plate layout and details, see 'Hinge KE & KW Expansion Joint Details No.1' sheet. For deck plate friction groove pattern, see 'Hinge KE & KW Expansion Joint Details No.4' sheet.
4. For mild steel reinforcement in blockout areas, see 'Hinge KE & KW Expansion Joint Details No.8' sheet.
5. For channel assembly details, see 'Hinge KE & KW Expansion Joint Details No.5' and 'Hinge KE & KW Expansion Joint Details No.6' sheets.
6. Place deck plate, support plate and channel assembly so that full bearing is achieved between 1) deck plate and channel assembly and 11) deck plate and support plates as shown in Section A-A.
7. M-20 Allen head screw shall be stainless steel.
8. Gutter shall be placed 75 mm minimum clear from the deck plate and shall be parallel to deck cross slope.
9. For support plate details see 'Hinge KE & KW Expansion Joint Details No.7' sheet.
10. Values are for mean temperature of 20°C.
11. All the connection hardware shall be supplied with Trelleborg Transflex 2400. The connection of Transflex 2400 and that of the support bar to the blockout concrete shall be drill and bond dowels.

CONTRACT CHANGE ORDER NO. 129
SHEET 30 OF 37

THIS SHEET REPLACES SHEET NO. 698R1/806

ALL DIMENSIONS ARE IN MILLIMETERS UNLESS OTHERWISE SHOWN

DESIGN OVERSIGHT
Kaveh Kaviani
Design Engineer (Structures) Chief, Div. of Engineering Services
KASAN-EL-KATUR
5/30/12
SIGN OFF DATE
Rev. Date: 5-18-98

MARK	DATE	DESCRIPTIONS	BY	CH'D	CCO#
3	05/16/12	NOTED SEISMIC JOINT INSTALLED BY OTHERS	TL	JB	
2	02/01/11	SEISMIC JOINT MODIFICATIONS HINGE K	CR	MN	

REVISIONS

DESIGN	BY C. Redfield	CHECKED M. Nader	
DETAILS	BY H. Patel	CHECKED J. Duxbury	
QUANTITIES	BY H. Patel	CHECKED J. Duxbury	

ORIGINAL SCALE IN MILLIMETERS FOR ARCHIVED PLANS 0 10 20 30 40 50 60 70 80 90 100

PREPARED FOR THE STATE OF CALIFORNIA DEPARTMENT OF TRANSPORTATION

Jai Birdy
PROJECT ENGINEER

CU 04251
EA 012051

BRIDGE NO. 34-0006 L/R
KILOMETER POST 12.8

SAN FRANCISCO OAKLAND BAY BRIDGE
EAST SPAN SEISMIC SAFETY PROJECT

YBI TRANSITION STRUCTURES

HINGE KE & KW EXPANSION JOINT DETAILS NO.2

DISPLAYED POINTS REGRID EXACTLY REVISION DATES → 05/16/11

REVISION DATES (PRELIMINARY STAGE ONLY)

SHEET 149 OF 209

FILE => \\anlbfs\LB_Projects\4141-06\CADD\TS\Checked Plans\YBITS #1-100% No. 2_03-03-08 (Final Renamed)\05181 2 CCO T21ckjab04.dgn

USERNAME => fanman DATE PLOTTED => 5/18/2012 TIME PLOTTED => 11:03:28 PM

100 % PS&E

May 18, 2012

DIST.	COUNTY	ROUTE	KILOMETER POST TOTAL PROJECT	SHEET NO.	TOTAL SHEETS
04	SF	80	12.7/13.2	104R3	806

REGISTERED ENGINEER - CIVIL

02-01-11

PLANS APPROVAL DATE

The State of California or its officers or agents shall not be responsible for the accuracy or completeness of electronic copies of this plan sheet.

REGISTERED PROFESSIONAL ENGINEER
Jagrwan M. Hoder
No. C 054426
Exp. 12/31/13
CIVIL
STATE OF CALIFORNIA

T.Y. LIN / MOFFATT & NICHOL
TWO HARRISON STREET
SAN FRANCISCO, CA 94105

REGISTERED PROFESSIONAL ENGINEER
JAL BIRDY
No. 41547
Exp. 12-31-13
CIVIL
STATE OF CALIFORNIA

FOR REVISION 3 ONLY

CONTRACT CHANGE ORDER NO. 129
SHEET 31 OF 37

ALL DIMENSIONS ARE IN MILLIMETERS UNLESS OTHERWISE SHOWN

DESIGN OVERSIGHT
Peter Loos / Bernard Kuan / Juan F. Garcia
HASAN EL-BATUR 5/30/12
SIGN OFF DATE

MARK	DATE	DESCRIPTIONS	BY	CH'D	CCO#
3	05/31/12	CONTENTS OF SHEET DELETED	TL	JB	
2	04/04/11	SEISMIC JOINT MODIFICATIONS HINGE K	CR	MN	

REVISIONS

DESIGN	BY C. Redfield	CHECKED M. Hoder	
DETAILS	BY H. Patel	CHECKED J. Duxbury	
QUANTITIES	BY H. Patel	CHECKED J. Duxbury	

PREPARED FOR THE STATE OF CALIFORNIA DEPARTMENT OF TRANSPORTATION

Jal Birdy
PROJECT ENGINEER

CU 04251
EA 012051

BRIDGE NO. 34-0006 L/R
KILOMETER POST 12.8

ELECTRONIC PLANS BEARING EARLIER REVISION DATES →

ORIGINAL SCALE IN MILLIMETERS FOR REDUCED PLANS 0 10 20 30 40 50 60 70 80 90 100

SAN FRANCISCO OAKLAND BAY BRIDGE
EAST SPAN SEISMIC SAFETY PROJECT

YBI TRANSITION STRUCTURES

HINGE KE & KW EXPANSION JOINT DETAILS NO. 8

REVISION DATES (PRELIMINARY STAGE ONLY) 05/31/11

SHEET 155 OF 209

Rev. Date: 5-18-99

FILE => \\mnlbfs\LB_Projects\414-06\CADD\TS\Checked Plans\YBITS #1-100X No. 2.03-03-08 (Final Renamed)\051812 CCO T21\ak|ab12.dgn

USERNAME => tsaunoun DATE PLOTTED => 5/18/2012 TIME PLOTTED => 1:03:38 PM

May 18, 2012

DIST.	COUNTY	ROUTE	KILOMETER POST TOTAL PROJECT	SHEET NO.	TOTAL SHEETS
04	SF	80	12.7/13.2	705R3	806

REGISTERED ENGINEER - CIVIL

02-01-11

PLANS APPROVAL DATE

The State of California or its officers or agents shall not be responsible for the accuracy or completeness of electronic copies of this plan sheet.

REGISTERED PROFESSIONAL ENGINEER Marwan N. Nader No. C 054426 Exp. 12/31/11 CIVIL STATE OF CALIFORNIA

T.Y. LIN / MOFFATT & NICHOL
TWO HARRISON STREET
SAN FRANCISCO, CA 94105

REGISTERED PROFESSIONAL ENGINEER Jal Birdy No. 41847 Exp. 12-31-12 CIVIL STATE OF CALIFORNIA

FOR REVISION 3 ONLY

CONTRACT CHANGE ORDER NO. 129
SHEET 32 OF 37

THIS SHEET REPLACES SHEET NO. 705R1/806

ALL DIMENSIONS ARE IN MILLIMETERS UNLESS OTHERWISE SHOWN

DESIGN OVERSIGHT
JOHN MOOR, BERNARD PARKS AND H. EL-HAYEK

HASAN EL-HAYEK 5/30/12

SIGN OFF DATE

MARK	DATE	DESCRIPTIONS	BY	CH'D	CCO#
3	05/30/12	CONTENTS OF SHEET DELETED	TL	JB	
2	02/01/11	SEISMIC JOINT MODIFICATIONS HINGE K	CR	MN	

REVISIONS

DESIGN	BY C. Redfield	CHECKED M. Nader	
DETAILS	BY H. Patel	CHECKED J. Duxbury	
QUANTITIES	BY H. Patel	CHECKED J. Duxbury	

PREPARED FOR THE STATE OF CALIFORNIA DEPARTMENT OF TRANSPORTATION

Jal Birdy
PROJECT ENGINEER

CU 04251
EA 012051

BRIDGE NO. 34-0006 L/R
KILOMETER POST 12.8

SAN FRANCISCO OAKLAND BAY BRIDGE
EAST SPAN SEISMIC SAFETY PROJECT

YBI TRANSITION STRUCTURES

HINGE KE & KW EXPANSION JOINT DETAILS NO. 9

Rev. Date: 5-18-98

ORIGINAL SCALE IN MILLIMETERS FOR REDUCED PLANS 0 10 20 30 40 50 60 70 80 90 100

DISREGARD PRIOR DRAWING DATED EARLIER REVISION DATES

REVISION DATES (PRELIMINARY STAGE ONLY) 05/05/11

SHEET 156 OF 209

FILE => \\mnlbfs\LB_Projects\4141-06\CADD\TS\Checked Plans\YBITS #1-100X No. 2.03-03-08 (Final Renamed)\051812 CCO 121\ckjeb13.dgn

USERNAME => thomson DATE PLOTTED => 5/18/2012 TIME PLOTTED => 11:03:47 PM

May 18, 2012

DIST.	COUNTY	ROUTE	KILOMETER POST TOTAL PROJECT	SHEET NO.	TOTAL SHEETS
04	SF	80	12.7/13.2	705ASR1	806

REGISTERED ENGINEER - CIVIL

02-01-11

PLANS APPROVAL DATE

The State of California or its officers or agents shall not be responsible for the accuracy or completeness of electronic copies of this plan sheet.

REGISTERED PROFESSIONAL ENGINEER
Marwan N. Nader
No. C 054426
Exp. 12/31/11
CIVIL
STATE OF CALIFORNIA

T.Y. LIN / MOFFATT & NICHOL
TWO HARRISON STREET
SAN FRANCISCO, CA 94105

REGISTERED PROFESSIONAL ENGINEER
JAI BIRDY
No. 41547
Exp. 12-31-13
CIVIL
STATE OF CALIFORNIA

FOR REVISION ⚠1 ONLY

CONTRACT CHANGE ORDER NO. 129
SHEET 33 OF 37

DESIGN OVERSIGHT
JOHN LOOS, BERNARD CHAN, JUAN F. CARPIO
HASAN EL-HATUR
6/4/12
SIGN OFF DATE

Rev. Date: 5-18-98

MARK	DATE	DESCRIPTIONS	BY	CH'D	CCO#
1	06/01/12	CONTENTS OF SHEET DELETED	TL	JB	
0	02/01/11	SEISMIC JOINT MODIFICATIONS HINGE K	CR	MN	

REVISIONS

	BY	CHECKED
DESIGN	C. Redfield	M. Nader
DETAILS	H. Patel	J. Duxbury
QUANTITIES	H. Patel	J. Duxbury

ORIGINAL SCALE IN MILLIMETERS FOR REDUCED PLANS 0 10 20 30 40 50 60 70 80 90 100

PREPARED FOR THE
STATE OF CALIFORNIA
DEPARTMENT OF TRANSPORTATION

ALL DIMENSIONS ARE IN MILLIMETERS UNLESS OTHERWISE SHOWN

Jai Birdy
PROJECT ENGINEER

CU 04251
EA 0120S1

BRIDGE NO. 34-0006 L/R
KILOMETER POST 12.8

DISREGARD PRINTS BEARING EARLIER REVISION DATES → 02/01/11

SAN FRANCISCO OAKLAND BAY BRIDGE
EAST SPAN SEISMIC SAFETY PROJECT

YBI TRANSITION STRUCTURES

HINGE KE & KW EXPANSION JOINT DETAILS NO. 10

REVISION DATES (PRELIMINARY STAGE ONLY)

SHEET 156A OF 209

FILE => \\mnlbfs\LB_Projects\4141-06\CADD\TS\Checked Plans\YBITS #1-100% No. 2.03-03-08 (Final Renamed)\051812 CCO T21\ckjsb13a.dgn

USERNAME => fcamson DATE PLOTTED => 5/30/2012 TIME PLOTTED => 11:32:39 AM

May 18, 2012

DIST.	COUNTY	ROUTE	KILOMETER POST TOTAL PROJECT	SHEET NO.	TOTAL SHEETS
04	SF	80	12.7/13.2	705BSR	806

REGISTERED ENGINEER - CIVIL

02-01-11
PLANS APPROVAL DATE

REGISTERED PROFESSIONAL ENGINEER
Marwan N. Nader
No. C 054426
Exp. 12/31/11
CIVIL
STATE OF CALIFORNIA

The State of California or its officers or agents shall not be responsible for the accuracy or completeness of electronic copies of this plan sheet.

T.Y. LIN / MOFFATT & NICHOL
TWO HARRISON STREET
SAN FRANCISCO, CA 94105

REGISTERED PROFESSIONAL ENGINEER
JAL BIRDY
No. 41547
Exp. 12-31-13
CIVIL
STATE OF CALIFORNIA

FOR REVISION ⚠ ONLY

CONTRACT CHANGE ORDER NO. 129
SHEET 34 OF 37

DESIGN OVERSIGHT
JOHN COOK, BERNARD CHAU, JUAN F. CARRILLO
HASAN AL-NATUR
6/4/12
SIGN OFF DATE

Rev. Date: 5-18-98

MARK	DATE	DESCRIPTIONS	BY	CH'D	CCO#
5	05/11/12	CONTENTS OF SHEET DELETED	TL	JB	
4	02/01/11	HINGE K PIPE BEAM DUST COVER	NV	MN	

REVISIONS

DESIGN	BY N. Vo	CHECKED	M. Nader
DETAILS	BY H. Patel	CHECKED	J. Duxbury
QUANTITIES	BY H. Patel	CHECKED	J. Duxbury

ORIGINAL SCALE IN MILLIMETERS FOR REDUCED PLANS 0 10 20 30 40 50 60 70 80 90 100

PREPARED FOR THE
STATE OF CALIFORNIA
DEPARTMENT OF TRANSPORTATION

Jal Birdy
PROJECT ENGINEER

CU 04251
EA 0120S1

BRIDGE NO. 34-0006 L/R
KILOMETER POST 12.8

DISREGARD PRINTS BEARING EARLIER REVISION DATES 02/01/11

SAN FRANCISCO OAKLAND BAY BRIDGE
EAST SPAN SEISMIC SAFETY PROJECT

YBI TRANSITION STRUCTURES
HINGE K PIPE BEAM DUST COVER DETAILS

REVISION DATES (PRELIMINARY STAGE ONLY)

SHEET 156B OF 209

FILE => \\mnlbfs\LB_Projects\4141-06\CADD\TS\Checked Plans\YBITS *1=100% No. 2.03-03-08 (Final Renamed)\051812 CCO T21\akjeb13b.dgn

May 18, 2012

USERNAME => fcamson DATE PLOTTED => 5/30/2012 TIME PLOTTED => 11:33:09 AM

DIST.	COUNTY	ROUTE	KILOMETER POST TOTAL PROJECT	SHEET NO.	TOTAL SHEETS
04	SF	80	12.7/13.2	708R5	806

REGISTERED ENGINEER - CIVIL

6-23-08
PLANS APPROVAL DATE

REGISTERED PROFESSIONAL ENGINEER A.L. ELY No. 18880 Exp. 6-30-09 CIVIL STATE OF CALIFORNIA

The State of California or its officers or agents shall not be responsible for the accuracy or completeness of electronic copies of this plan sheet.

T.Y. LIN / MOFFATT & NICHOL
TWO HARRISON STREET
SAN FRANCISCO, CA 94105

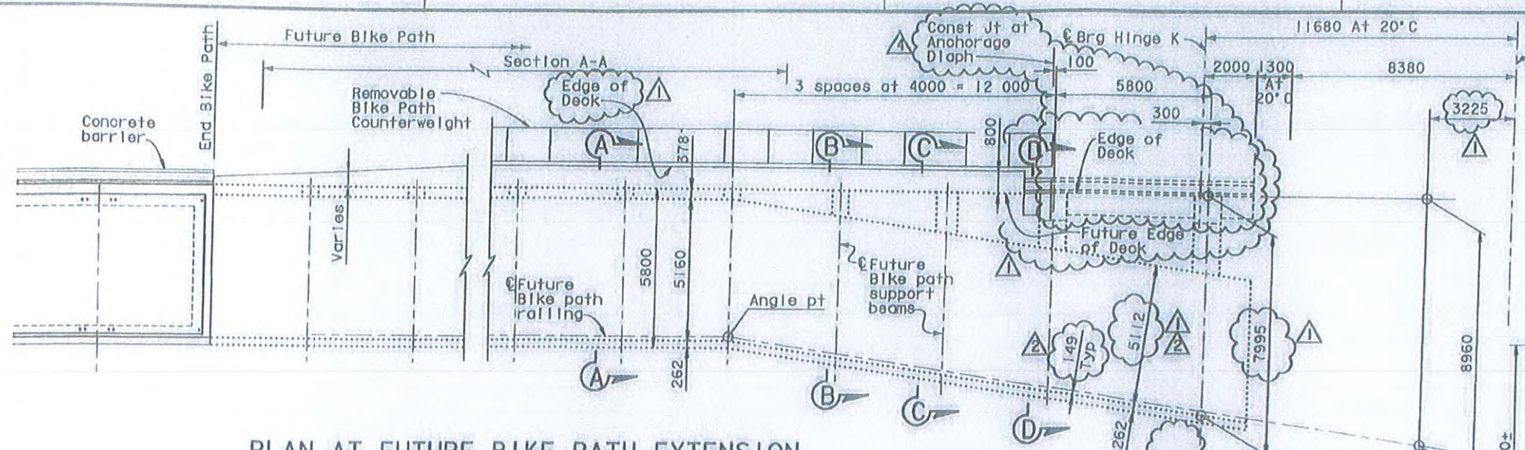

PLAN AT FUTURE BIKE PATH EXTENSION
1:100

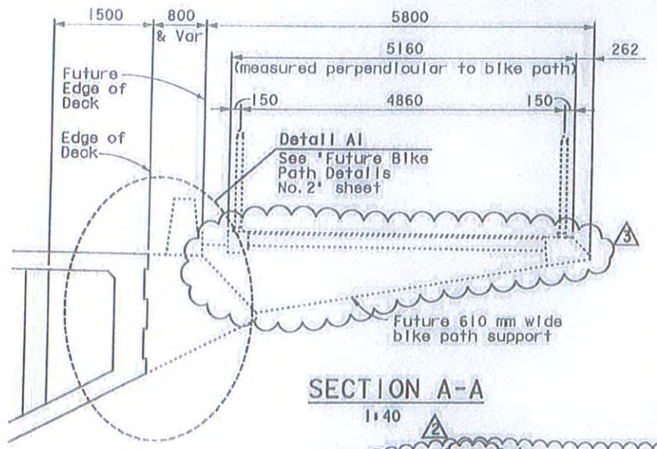

SECTION A-A
1:40

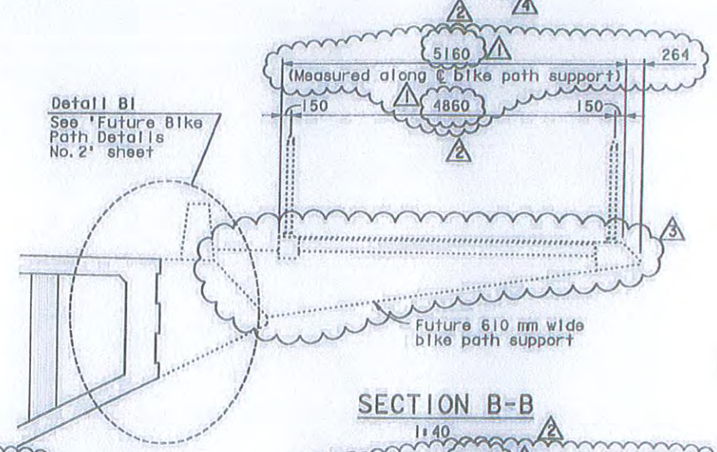

SECTION B-B
1:40

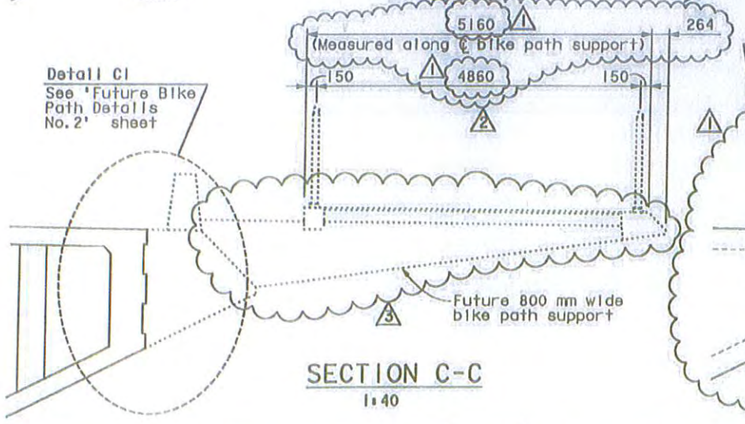

SECTION C-C
1:40

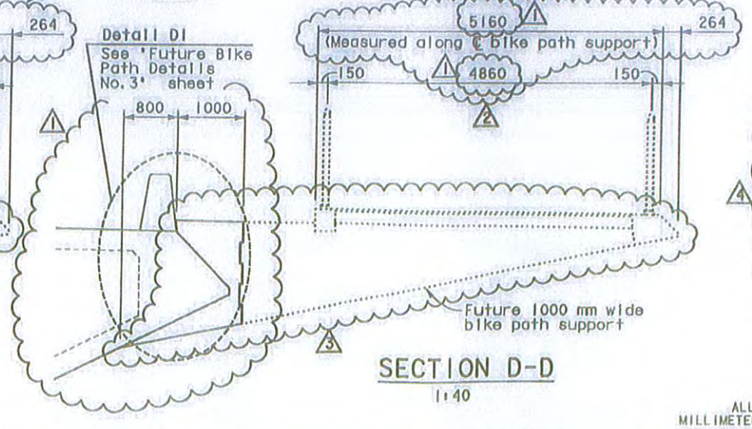

SECTION D-D
1:40

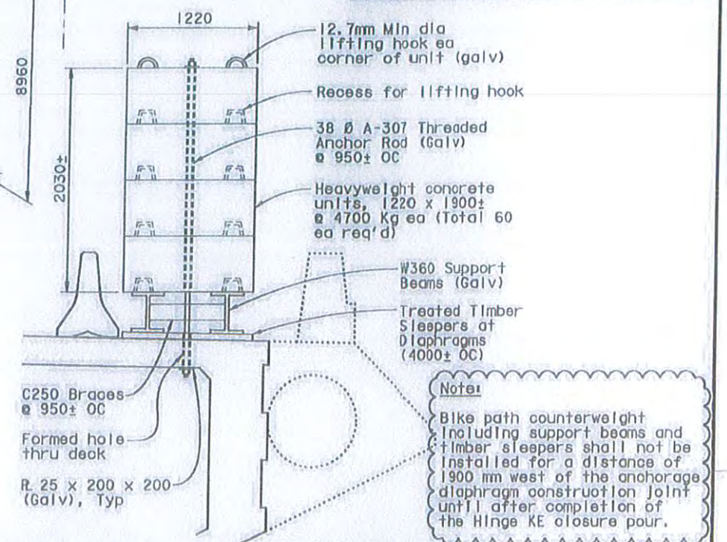

Note:
Bike path counterweight including support beams and timber sleepers shall not be installed for a distance of 1900 mm west of the anchorage diaphragm construction joint until after completion of the Hinge KE closure pour.

REMOVABLE BIKE PATH COUNTERWEIGHT
1:25

REGISTERED PROFESSIONAL ENGINEER JAL BIRDY No. 41547 Exp. 12-31-13 CIVIL STATE OF CALIFORNIA

CCO No. 129

FOR REVISION 1, 2, 3, 4 & 5 ONLY

MARK	DATE	DESCRIPTIONS	BY	CH'D
5	7-26-12	Curtailed counterweight installation	TL	JB
4	5-18-12	Denoted Hinge K Closure Pour by others	TL	JB
3	3-29-12	Rev bike path cross slope	TL	JB
2	6-29-11	Rev misc dimensions	TL	JB
1	2-8-11	Rev south edge EB Trans Struct	TL	JB

REVISIONS

CONTRACT CHANGE ORDER NO. 129
SHEET 35 OF 37

ALL DIMENSIONS ARE IN MILLIMETERS UNLESS OTHERWISE SHOWN

DESIGN OVERSIGHT
JOHN LOOK, BERNARD CHAN, JUAN F. CARPIO, HASAN EL-NATUR, HASAN EL-NATUR
SIGN OFF DATE 7/26/12
Rev. Date: 5-18-98

	BY	CHECKED
DESIGN	Atiqullah	Ahn
DETAILS	Van Ryn/Zucchi/Mal	Jain
QUANTITIES	Liao	E. Nichol

PREPARED FOR THE STATE OF CALIFORNIA DEPARTMENT OF TRANSPORTATION

Jal Birdy
PROJECT ENGINEER

BRIDGE NO. 34-0006 L/R
KILOMETER POST 12.8

SAN FRANCISCO OAKLAND BAY BRIDGE
EAST SPAN SEISMIC SAFETY PROJECT

YBI TRANSITION STRUCTURES
FUTURE BIKE PATH DETAILS NO. 1

ORIGINAL SCALE IN MILLIMETERS FOR REDUCED PLANS 0 10 20 30 40 50 60 70 80 90 100

CU 04251
EA 0120S1

DISREGARD PRINTS BEARING EARLIER REVISION DATES

REVISION DATES (PRELIMINARY STAGE ONLY)

SHEET 159 OF 209

FILE => P:\4141-06\CADD\TS\Checked Plans\YBITS #1-100% No. 2_03-03-08 (Final Renamed)\072512 T25 CCO\04-0120s1-34-0006r1-u-fbikpdt01.dgn

USERNAME => fsamson DATE PLOTTED => 7/25/2012 TIME PLOTTED => 3:48:06 PM

July 26, 2012

DIST.	COUNTY	ROUTE	KILOMETER POST TOTAL PROJECT	SHEET NO.	TOTAL SHEETS
04	SF	80	12.7/13.2	709R1	806

REGISTERED ENGINEER - CIVIL
6-23-08
PLANS APPROVAL DATE
The State of California or its officers or agents shall not be responsible for the accuracy or completeness of electronic copies of this plan sheet.

REGISTERED PROFESSIONAL ENGINEER A.L. ELY No. 18880 Exp. 6-30-09 CIVIL STATE OF CALIFORNIA

T.Y. LIN / MOFFATT & NICHOL
TWO HARRISON STREET
SAN FRANCISCO, CA 94105

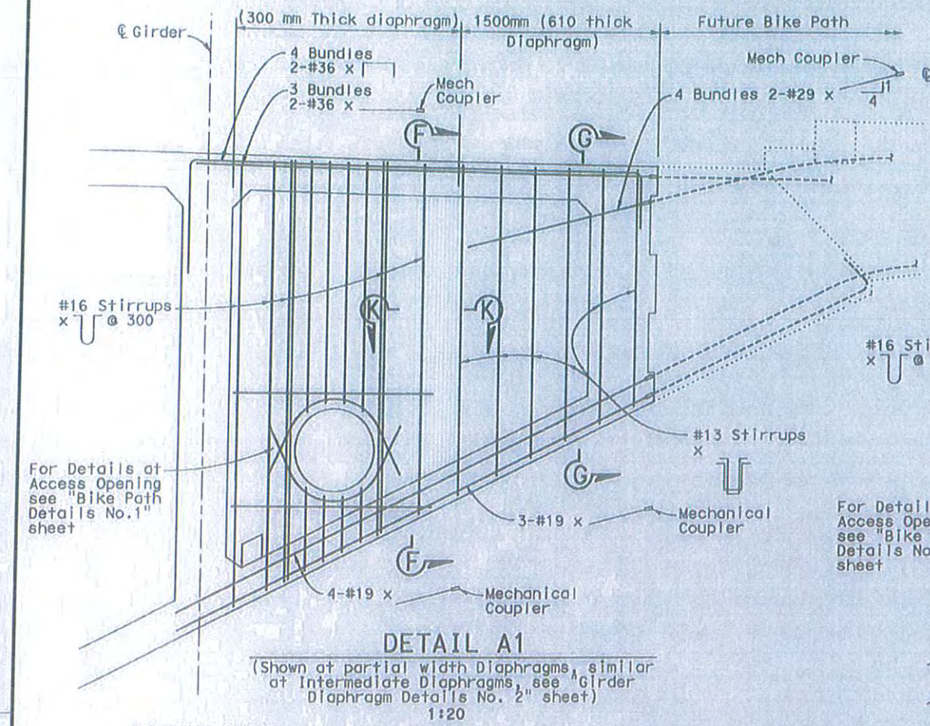

DETAIL A1
(Shown at partial width Diaphragms, similar at Intermediate Diaphragms, see "Girder Diaphragm Details No. 2" sheet)
1:20

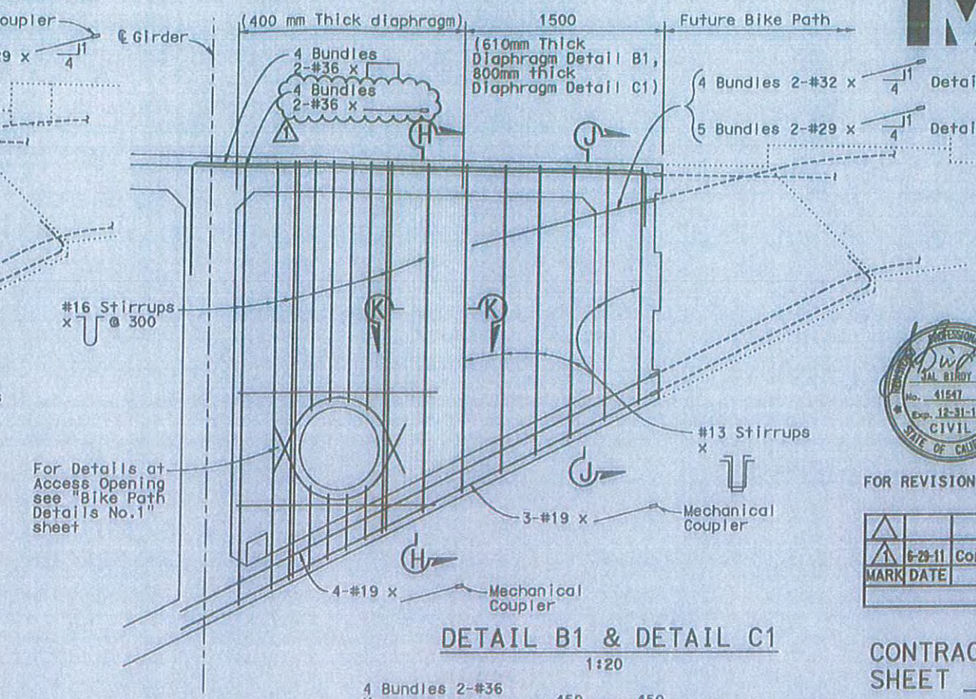

DETAIL B1 & DETAIL C1
1:20

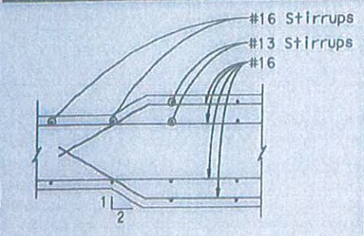

SECTION K-K
1:15

REGISTERED PROFESSIONAL ENGINEER JAI BIRDY No. 41547 Exp. 12-31-11 CIVIL STATE OF CALIFORNIA

FOR REVISION 1 ONLY

MARK	DATE	DESCRIPTIONS	BY	CH'D
1	6-29-11	Corrected callout	TL	JB

REVISIONS

CONTRACT CHANGE ORDER NO. 129
SHEET 36 OF 37

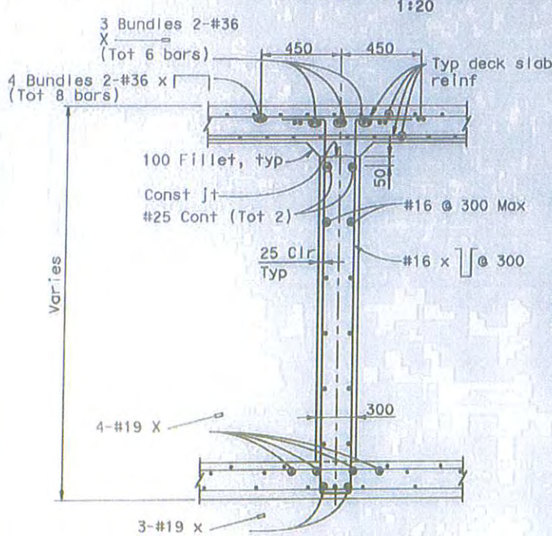

SECTION F-F
1:15

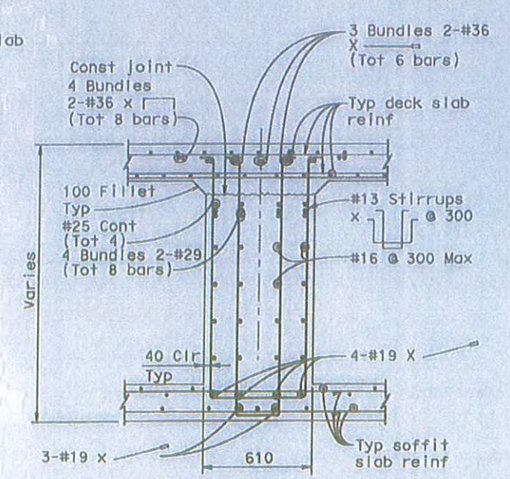

SECTION G-G
1:15

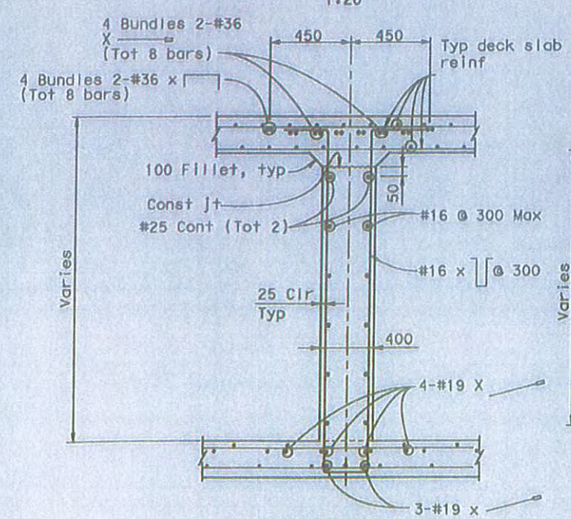

SECTION H-H
1:15

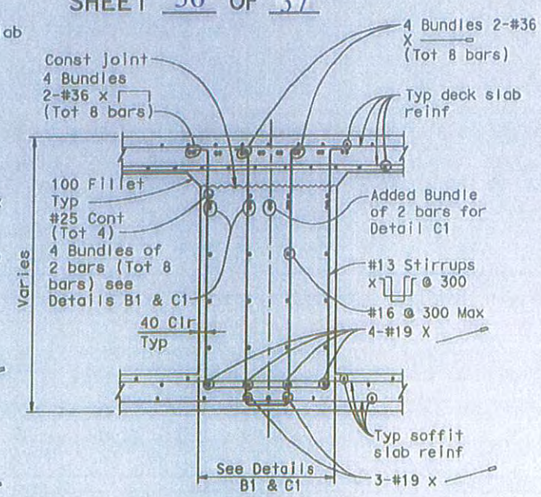

SECTION J-J
1:15

Note: For location of Details A1, B1 & C1, see "Future Bike Path Details No. 1" sheet.

ALL DIMENSIONS ARE IN MILLIMETERS UNLESS OTHERWISE SHOWN

SAN FRANCISCO OAKLAND BAY BRIDGE
EAST SPAN SEISMIC SAFETY PROJECT

YBI TRANSITION STRUCTURES

FUTURE BIKE PATH DETAILS NO.2

DESIGN OVERSIGHT
JOHN MOOK, BERNARD CHAN, JUAN F. CARPIO
HASAN EL-NATUR
7/1/2011
SIGN OFF DATE

	BY	CHECKED
DESIGN	Atiquiloh	Ahn
DETAILS	van Ryn/Zucchi/Mal	Jain
QUANTITIES	Liao	E. Nichol

PREPARED FOR THE STATE OF CALIFORNIA DEPARTMENT OF TRANSPORTATION

Jai Birdy
PROJECT ENGINEER

BRIDGE NO. 34-0006 L/R
KILOMETER POST 12.8

CU 04251
EA 0120S1

DISREGARD PRINTS BEARING EARLIER REVISION DATES

REVISION DATES (PRELIMINARY STAGE ONLY)

SHEET 160 OF 209

Rev. Date: 5-18-99

ORIGINAL SCALE IN MILLIMETERS FOR REDUCED PLANS 0 10 20 30 40 50 60 70 80 90 100

FILE => p:\4141-06\cadd\TS\Checked Plans\YBITS #1-100% No. 2_03-03-08 (Final Renamed)\062911 T13 CCO\04-0120s1-34-006rl-u-fblkpdt02

USERNAME => fsamson DATE PLOTTED => 6/29/2011 TIME PLOTTED => 21:13:46 PM

June 29, 2011

DIST.	COUNTY	ROUTE	KILOMETER POST TOTAL PROJECT	SHEET NO.	TOTAL SHEETS
04	SF	80	12.7/13.2	710R3	806

REGISTERED ENGINEER - CIVIL

6-23-08
PLANS APPROVAL DATE

The State of California or its officers or agents shall not be responsible for the accuracy or completeness of electronic copies of this plan sheet.

T.Y. LIN / MOFFATT & NICHOL
TWO HARRISON STREET
SAN FRANCISCO, CA 94105

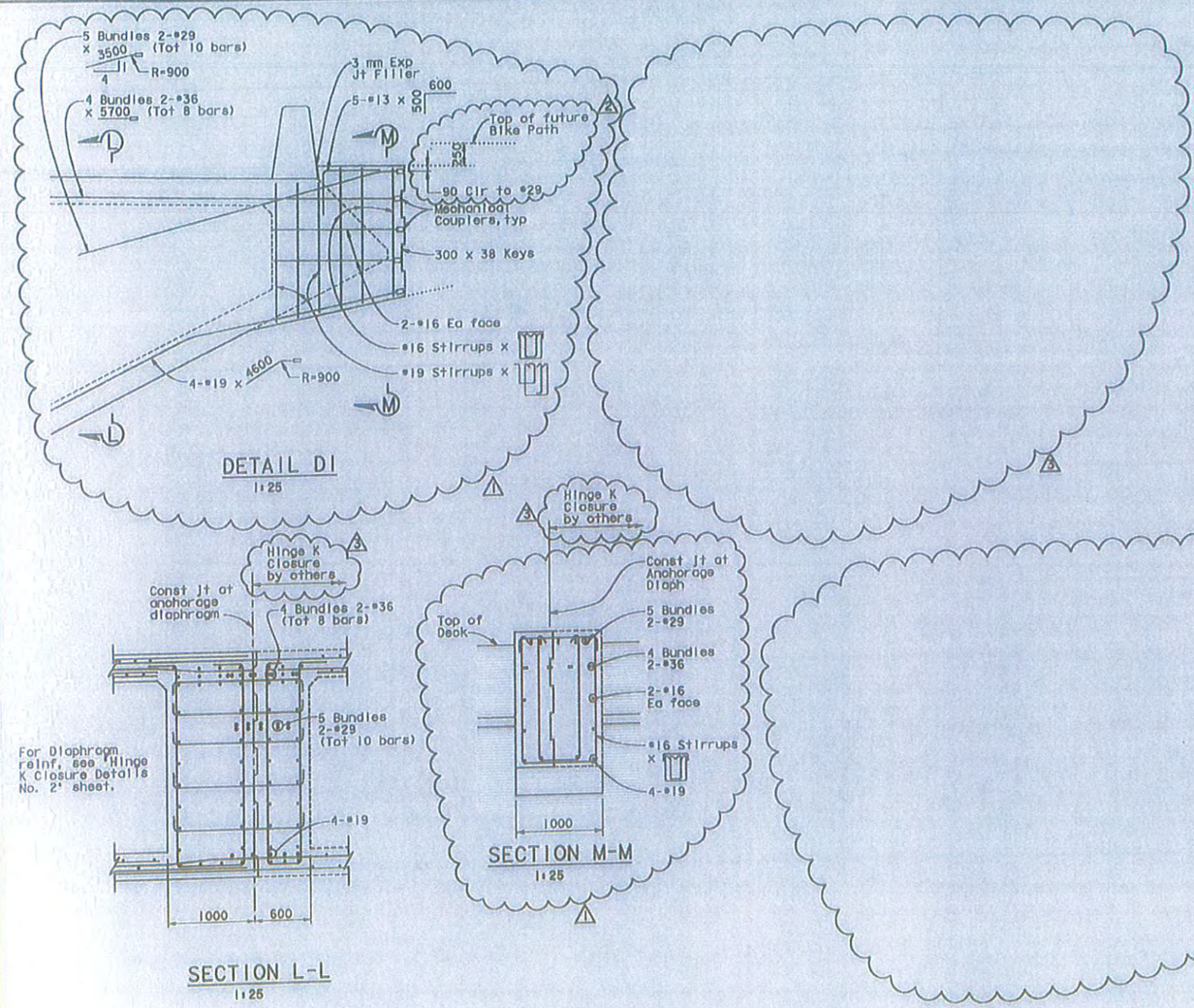

Note: For location of Detail D1, see 'Future Bike Path Details No. 1' sheet.

FOR REVISION 1, 2 & 3 ONLY

MARK	DATE	DESCRIPTIONS	BY	CH'D
3	5-18-12	Denoted Hinge K Closure Pour by others	TL	JB
2	6-29-11	Added dimensions	TL	JB
1	2-4-11	Rev south edge EB Trans Struct	TL	JB

REVISIONS

CONTRACT CHANGE ORDER NO. 129
SHEET 37 OF 37

ALL DIMENSIONS ARE IN MILLIMETERS UNLESS OTHERWISE SHOWN

SAN FRANCISCO OAKLAND BAY BRIDGE
EAST SPAN SEISMIC SAFETY PROJECT

YBI TRANSITION STRUCTURES

FUTURE BIKE PATH DETAILS NO. 3

DESIGN OVERSIGHT: JOHN MOOR, BERNARD CHAN, JUAN F. CARPIO
HASAN EL-HATUN 5/30/12
SIGN OFF DATE

DESIGN: Atiquiah — CHECKED: Ahn
DETAILS: von Ryn/Zuschl/Mal — CHECKED: Jain
QUANTITIES: Lido — CHECKED: E. Nichol

PREPARED FOR THE STATE OF CALIFORNIA DEPARTMENT OF TRANSPORTATION

Jai Birdy
PROJECT ENGINEER

CU 04251
EA 01205i

BRIDGE NO. 34-0006 L/R
KILOMETER POST 12.8

SHEET 161 OF 209

Rev. Date: 6-8-98

FILE => \\wnlbfs\LB_Projects\4141-06\CADD\TS\Checked Plans\YBITS #1100% No. 2.03-03-08 (Final Renamed)\051812 CCO T21\04-0120s1-34-0006r1-u-fbikpdt03.dgn

USERNAME => f.ramsson DATE_PLOTTED => 5/18/2012 TIME_PLOTTED => 14:03:06 PM

May 18, 2012

STATE OF CALIFORNIA - DEPARTMENT OF TRANSPORTATION

CONTRACT CHANGE ORDER MEMORANDUM

TO: Deanna Vilcheck, ACM /	FILE: E.A. 04 - 0120S4
FROM: William Howe, Senior R.E.	CO-RTE-PM SF-80-12.7/13.2
	FED. NO. NO FED AID
CCO#: 129 SUPPLEMENT#: 0 Category Code: CHPT	CONTINGENCY BALANCE (incl. this change) $30,279,857.15
COST: $314,380.00 INCREASE ☑ DECREASE ☐	HEADQUARTERS APPROVAL REQUIRED? ☑ YES ☐ NO
SUPPLEMENTAL FUNDS PROVIDED: $0.00	IS THIS REQUEST IN ACCORDANCE WITH ENVIRONMENTAL DOCUMENTS? ☑ YES ☐ NO
CCO DESCRIPTION: Rebar Couplers &T Heads @ E.Constr. Jt.	**PROJECT DESCRIPTION:** YBITS-1 (Yerba Buena Island Transition Structures)

Original Contract Time:	Time Adj. This Change:	Previously Approved CCO Time Adjustments:	Percentage Time Adjusted: (including this change)	Total # of Unreconciled Deferred Time CCO(s): (including this change)
1390 Day(s)	0 Day(s)	0 Day(s)	0 %	9

THIS CHANGE ORDER PROVIDES FOR:

Revision to reinforcement bars that are west of the construction joints at the stressing diaphragm of Hinges KE and KW, threading of reinforcement bars that are east of the construction joints but are installed by others and shall connect to the couplers installed under this contract, reinforcement bar changes for the bikepath support beam at Hinge KE, and reinforcement bars for the added bikepath edge beam at Hinge KE.

Contract Change Order No. 72S1 deleted Hinge K closure work from this contract, which includes deletion of furnish and install of all reinforcement bars that are west of the stressing diaphragm construction joints. However, threading of reinforcement bars that connect to couplers installed under this contract, reinforcement bars for bikepath support beam at Hinge KE, and reinforcement bars for the added bikepath edge beam are compensated by this contract change order.

Reinforcement bar placement conflicts were identified during the Integrated Shop Drawing (ISD) process for the Hinge K stressing diaphragm. The Engineer issued revised contract plan sheets that resolve this issue. The Engineer also issued revised contract plan sheets for reinforcement bar changes for the bikepath support beam at Hinge KE, and added a bikepath edge beam at Hinge KE.

This CCO compensates the Contractor for furnish and install of reinforcement bars only, all other work shall be compensated by Contract Change Order No. 116.

Payment for this work will be an Adjustment in Compensation at Agreed Lump Sum of $314,380.00, which will be financed from the Contract's contingency fund. A detailed cost analysis is on file.

No adjustment to contract time is required due to these changes as they do not affect controlling operations.

Design concurrence for this change is on file.

Maintenance concurrence will be obtained from Lina Ellis, Structures Maintenance.

CONCURRED BY:		
Construction Engineer:	William Howe	Date 12-12-13
Bridge Engineer:	Mehran Ardakanian	Date 02-14-13
Project Engineer:	Bob Zandipour, Design	Date 2-13-13
Project Manager:	Ken Terpstra	Date 2/12/13
FHWA Rep.:		Date
Environmental:		Date
Other (specify):	Lina Ellis, Str. Maintenance	Date 2-14-13
Other (specify):		Date
District Prior Approval By:		Date
HQ (Issue Approve) By:	Larry Salhaney	Date 2-13-13
Resident Engineer's Signature:	William Howe	Date 02-12-13

ESTIMATE OF COST

	THIS REQUEST	TOTAL TO DATE
ITEMS	$0.00	$0.00
FORCE ACCOUNT	$0.00	$0.00
AGREED PRICE	$0.00	$0.00
ADJUSTMENT	$314,380.00	$314,380.00
TOTAL	$314,380.00	$314,380.00

FEDERAL PARTICIPATION

☐ PARTICIPATING ☐ PARTICIPATING IN PART ☑ NONE
☐ NON-PARTICIPATING (MAINTENANCE) ☐ NON-PARTICIPATING

FEDERAL SEGREGATION (If more than one Funding Source or P.I.P. type)
☐ CCO FUNDED PER CONTRACT ☐ CCO FUNDED AS FOLLOWS

FEDERAL FUNDING SOURCE	PERCENT

STATE OF CALIFORNIA - DEPARTMENT OF TRANSPORTATION

CONTRACT CHANGE ORDER

Change Requested by: Engineer

CCO 130	Suppl. No. 0	Contract No. 04 - 0120S4	Road SF-80-12.7/13.2	FED. AID LOC.: NO FED AID

To: **M C M CONSTRUCTION INC**

You are directed to make the following changes from the plans and specifications or do the following described work not included in the plans and specifications for this contract. ***NOTE: This change order is not effective until approved by the Engineer.***

Description of work to be done, estimate of quantities and prices to be paid. (Segregate between additional work at contract price, agreed price and force account.) Unless otherwise stated, rates for rental of equipment cover only such time as equipment is actually used and no allowance will be made for idle time. This last percentage shown is the net accumulated increase or decrease from the original quantity in the Engineer's Estimate.

Extra Work at Force Account:

As authorized by the Engineer, enter into a lease with the Treasure Island Development Authority for the parcel of land at the corner of Avenue N and 4th Street in order to provide a laydown area for reinforcing steel to be used in the contract work.

Provide for the rental of flatbed trailers to facilitate the storage and transportation of the reinforcing steel at the storage site as determined by the Engineer.

All cost associated with storm water pollution prevention at the storage site provided under this change order shall be compensated under Change Order No. 21.

Estimated Cost of Extra Work at Force Account = $180,000.00

Estimated Cost: Increase ☑ Decrease ☐ **$180,000.00**

By reason of this order the time of completion will be adjusted as follows: 0 days

Submitted by		
Signature Deanna Vilcheck	Resident Engineer for William Howe, Senior R.E.	Date 4/13/12
Approval Recommended by		
Signature Deanna Vilcheck	Area Construction Manager Deanna Vilcheck	Date 4/13/12
Engineer Approval by		
Signature Deanna Vilcheck	Area Construction Manager Deanna Vilcheck	Date 4/25/12

We the undersigned contractor, have given careful consideration to the change proposed and agree, if this proposal is approved, that we will provide all equipment, furnish the materials, except as may otherwise be noted above, and perform all services necessary for the work above specified, and will accept as full payment therefor the prices shown above.

NOTE: If you, the contractor, do not sign acceptance of this order, your attention is directed to the requirements of the specifications as to proceeding with the ordered work and filing a written protest within the time therein specified.

Contractor Acceptance by		
Signature	(Print name and title) Edmundo A. Pucci Treasurer	Date 4-20-2012

STATE OF CALIFORNIA - DEPARTMENT OF TRANSPORTATION

CONTRACT CHANGE ORDER MEMORANDUM

TO: Deanna Vilcheck, ACM /	FILE: E.A. 04 - 0120S4
	CO-RTE-PM SF-80-12.7/13.2
FROM: William Howe, Senior R.E.	FED. NO. NO FED AID
CCO#: 130 SUPPLEMENT#: 0 Category Code: CXAX	CONTINGENCY BALANCE (incl. this change) $49,818,061.04
COST: $180,000.00 INCREASE ☑ DECREASE ☐	HEADQUARTERS APPROVAL REQUIRED? ☐ YES ☑ NO
SUPPLEMENTAL FUNDS PROVIDED: $0.00	IS THIS REQUEST IN ACCORDANCE WITH ENVIRONMENTAL DOCUMENTS? ☑ YES ☐ NO
CCO DESCRIPTION: Treasure Island Rebar Laydown Yard	**PROJECT DESCRIPTION:** YBITS-1 (Yerba Buena Island Transition Structures)

Original Contract Time:	Time Adj. This Change:	Previously Approved CCO Time Adjustments:	Percentage Time Adjusted: (including this change)	Total # of Unreconciled Deferred Time CCO(s): (including this change)
1390 Day(s)	0 Day(s)	0 Day(s)	0 %	9

THIS CHANGE ORDER PROVIDES FOR:

The lease of a site adjacent to the project to provide a laydown yard for reinforcing steel.

This project, the Yerba Buena Island Transition Structure (YBITS), provides for the construction of two bridges which will connect eastbound and westbound traffic on the new east span of the San Francisco Oakland Bay Bridge (SFOBB) to the existing Yerba Buena Island (YBI) tunnel. The structures are comprised of concrete box girder bridges each approximately 50 meters high and 450 meters in length.

The western third of the jobsite is encompassed by a steep sandy slope, the middle third has the primary and secondary access roads to the adjacent U.S. Coast Guard (USCG) base running through it and the eastern third is on a slope and is a shared area with the abutting Self-Anchored Suspension (SAS) contract.

The Toll Bridge Program Oversight Committee (TBPOC) has established a goal of the Seismic Safety Opening (SSO) of the new SFOBB east span by 2013. As part of this goal, this project has issued Change Order No. 72, Supplement No. 0, and Supplement No. 1, to mitigate project delays and set milestones for the completion of the YBITS structure consistent with the SSO schedule. These change orders have resulted in increased labor forces and equipment along with working extended and double shifts on this project, which has created increased disruptions to both the USCG station's access through the jobsite and to the abutting SAS contract.

In order to mitigate these disruptions, this change order provides for the Contractor to lease a parcel of land adjacent to the project site in order to provide a laydown area for reinforcing steel, which would otherwise have to be stored on the jobsite. The storage area will reduce the congestion within the project site.

The parcel shall provide approximately one (1) acre of storage area and is anticipated to be leased through the Spring of 2013. The quoted monthly lease price has been determined to be in line with typical leased properties in the area. In addition to the cost of leasing the parcel, the change order shall provide for the rental of flatbed trailers to facilitate the storage and transportation of the steel and pay for any double handling of the material as determined by the Engineer.

This work shall be performed as Extra Work at Force Account at an estimated cost of $180,000.00 and shall be financed from the Contract's contingency funds. A cost analysis is on file.

No adjustment of contract time is warranted as the work will not affect the controlling operation.

Maintenance concurrence is not required as this change order will not affect any permanent roadway features.

ADA Notice: For individuals with sensory disabilities, this document is available in alternate formats. For information call (916) 654-6410 or TDD (916) 654-3880 or write Records and Forms Management, 1120 N Street, MS-89, Sacramento, CA 95814

CONCURRED BY:		
Construction Engineer:	for William Howe	Date 4/13/12
Bridge Engineer:	Mehran Ardakanian	Date
Project Engineer:	Bob Zandipour, Design	Date 4-16-12
Project Manager:	for Pochana Chongchaikit Ken Terpstra	Date 4-16-12
FHWA Rep.:		Date
Environmental:		Date
Other (specify):		Date
Other (specify):		Date
District Prior Approval By:		Date
HQ (Issue Approve) By:		Date
Resident Engineer's Signature:	Deanne Vilchen	Date 4/13/12

ESTIMATE OF COST

	THIS REQUEST	TOTAL TO DATE
ITEMS	$0.00	$0.00
FORCE ACCOUNT	$180,000.00	$180,000.00
AGREED PRICE	$0.00	$0.00
ADJUSTMENT	$0.00	$0.00
TOTAL	$180,000.00	$180,000.00

FEDERAL PARTICIPATION

☐ PARTICIPATING ☐ PARTICIPATING IN PART ☑ NONE
☐ NON-PARTICIPATING (MAINTENANCE) ☐ NON-PARTICIPATING

FEDERAL SEGREGATION (if more than one Funding Source or P.I.P. type)
☐ CCO FUNDED PER CONTRACT ☐ CCO FUNDED AS FOLLOWS

FEDERAL FUNDING SOURCE	PERCENT

ADA Notice: For individuals with sensory disabilities, this document is available in alternate formats. For information call (916) 654-6410 or TDD (916) 654-3880 or write Records and Forms Management, 1120 N Street, MS-89, Sacramento, CA 95814.

STATE OF CALIFORNIA - DEPARTMENT OF TRANSPORTATION

CONTRACT CHANGE ORDER MEMORANDUM

TO: Deanna Vilcheck, ACM /	FILE: E.A. 04 - 0120S4
FROM: William Howe, Senior R.E.	CO-RTE-PM SF-80-12.7/13.2
	FED. NO. NO FED AID
CCO#: 131 SUPPLEMENT#: 0 Category Code: CHPT	CONTINGENCY BALANCE (incl. this change) $70,830,738.00
COST: $60,000.00 INCREASE ☑ DECREASE ☐	HEADQUARTERS APPROVAL REQUIRED? ☐ YES ☑ NO
SUPPLEMENTAL FUNDS PROVIDED: $0.00	IS THIS REQUEST IN ACCORDANCE WITH ENVIRONMENTAL DOCUMENTS? ☑ YES ☐ NO
CCO DESCRIPTION: Protect SAS Cable from Prestressing Work	**PROJECT DESCRIPTION:** YBITS-1 (Yerba Buena Island Transition Structures)

Original Contract Time:	Time Adj. This Change:	Previously Approved CCO Time Adjustments:	Percentage Time Adjusted: (including this change)	Total # of Unreconciled Deferred Time CCO(s): (including this change)
1390 Day(s)	0 Day(s)	0 Day(s)	0 %	9

THIS CHANGE ORDER PROVIDES FOR:

Placing temporary steel plates to protect an adjacent structure during the stressing of the prestressing strands.

This project, the Yerba Buena Island Transition Structure (YBITS), provides for the construction of two bridges which will connect eastbound and westbound traffic on the new east span of the San Francisco Oakland Bay Bridge (SFOBB) to the existing Yerba Buena Island (YBI) tunnel. The structures are comprised of concrete box girder bridges each approximately 50 meters high and 450 meters in length.

The eastern end of the structure abuts directly against the Self-Anchored Suspension Bridge (SAS) project. At this end, the Contractor is required to stress the prestressing stands at the anchorage diaphragm for Frame 2 for both the westbound and eastbound structure. The prestressed strands within Frame 2 span up to the entire length of the 320 meter long frame with over 80 strands per frame. In the event a strand was to fail during the stressing operation, the resulting projectile steel could potentially damage the abutting main cable of the SAS structure, which is in the process of being constructed and could lead to extensive delays and costs to the SAS project.

In order to mitigate the risk of damaging the main cable, this change order will provide for the Contractor to furnish and install temporary steel plates between the stressing operation and the SAS project. These plates will act to deflect any projectiles in the unlikely case of a strand failure. The plates will be installed at both the eastbound and westbound structures during the time when the stressing operations are taking place. The work includes furnishing the plates and their support beams, rigging the plates and installing and removing the plates for each frame.

This work shall be performed as Extra Work at Force Account at an estimated cost of $60,000.00, which shall be financed from the Contract's contingency funds. A cost analysis is on file.

No adjustment of contract time is warranted as the work will not affect the controlling operation.

Maintenance concurrence is not required as this change order will not affect any permanent roadway features.

ADA Notice: For individuals with sensory disabilities, this document is available in alternate formats. For information call (916) 654-6410 or TDD (916) 654-3880 or write Records and Forms Management, 1120 N Street, MS-89, Sacramento, CA 95814.

CONCURRED BY:		
Construction Engineer:	William Howe	Date 04.24.12
Bridge Engineer:	Mehran Ardakanian	Date 4/25/12
Project Engineer:	Bob Zandipour, Design	Date 4-26-12
Project Manager:	Ken Terpstra	Date 4-27-12
FHWA Rep.:		Date
Environmental:		Date
Other (specify):		Date
Other (specify):		Date
District Prior Approval By:		Date
HQ (Issue Approve) By:		Date
Resident Engineer's Signature: William Howe		Date 04.24.12

ESTIMATE OF COST

	THIS REQUEST	TOTAL TO DATE
ITEMS	$0.00	$0.00
FORCE ACCOUNT	$60,000.00	$60,000.00
AGREED PRICE	$0.00	$0.00
ADJUSTMENT	$0.00	$0.00
TOTAL	$60,000.00	$60,000.00

FEDERAL PARTICIPATION

☐ PARTICIPATING ☐ PARTICIPATING IN PART ☑ NONE
☐ NON-PARTICIPATING (MAINTENANCE) ☐ NON-PARTICIPATING

FEDERAL SEGREGATION (if more than one Funding Source or P.I.P. type)
☐ CCO FUNDED PER CONTRACT ☐ CCO FUNDED AS FOLLOWS

FEDERAL FUNDING SOURCE	PERCENT

ADA Notice: For individuals with sensory disabilities, this document is available in alternate formats. For information call: (916) 654-6410 or TDD (916) 654-3880 or write Records and Forms Management, 1120 N Street, MS-89, Sacramento, CA 95814.

STATE OF CALIFORNIA - DEPARTMENT OF TRANSPORTATION

CONTRACT CHANGE ORDER

Change Requested by: Engineer

CCO 130	Suppl. No. 1	Contract No 04 - 0120S4	Road SF-80-12.7/13.2	FED. AID LOC.: NO FED AID

To: **M C M CONSTRUCTION INC**

You are directed to make the following changes from the plans and specifications or do the following described work not included in the plans and specifications for this contract. ***NOTE: This change order is not effective until approved by the Engineer.***

Description of work to be done, estimate of quantities and prices to be paid. (Segregate between additional work at contract price, agreed price and force account.) Unless otherwise stated, rates for rental of equipment cover only such time as equipment is actually used and no allowance will be made for idle time. This last percentage shown is the net accumulated increase or decrease from the original quantity in the Engineer's Estimate

Extra Work at Force Account:

Provide additional funds = $150,000.00

Estimated Cost: Increase ✓ Decrease $150,000.00

By reason of this order the time of completion will be adjusted as follows: 0 days

Submitted by

Signature William Howe	Resident Engineer William Howe, Senior R.E.	Date 03-07-13

Approval Recommended by

Signature Deanna Vilcheck	Area Construction Manager Deanna Vilcheck	Date 3/11/13

Engineer Approval by

Signature Deanna Vilcheck	Area Construction Manager Deanna Vilcheck	Date 3/12/13

We the undersigned contractor, have given careful consideration to the change proposed and agree, if this proposal is approved, that we will provide all equipment, furnish the materials, except as may otherwise be noted above, and perform all services necessary for the work above specified, and will accept as full payment therefor the prices shown above

NOTE: If you, the contractor, do not sign acceptance of this order, your attention is directed to the requirements of the specifications as to proceeding with the ordered work and filing a written protest within the time therein specified

Contractor Acceptance by

Signature Not Required	(Print name and title)	Date

STATE OF CALIFORNIA - DEPARTMENT OF TRANSPORTATION

CONTRACT CHANGE ORDER MEMORANDUM

DATE: 3/6/2013

TO: Deanna Vilcheck, ACM /

FROM: William Howe, Senior R.E.

FILE: E.A. 04 - 0120S4
CO-RTE-PM SF-80-12.7/13.2
FED. NO. NO FED AID

CCO#: 130 | SUPPLEMENT#: 1 | Category Code: CXAX

CONTINGENCY BALANCE (incl. this change) $28,582,837.15

COST: $150,000.00 INCREASE ☑ DECREASE ☐

HEADQUARTERS APPROVAL REQUIRED? ☑ YES ☐ NO

SUPPLEMENTAL FUNDS PROVIDED: $0.00

IS THIS REQUEST IN ACCORDANCE WITH ENVIRONMENTAL DOCUMENTS? ☑ YES ☐ NO

CCO DESCRIPTION:
additional funds off-site matl.storage

PROJECT DESCRIPTION:
YBITS-1 (Yerba Buena Island Transition Structures)

Original Contract Time:	Time Adj. This Change:	Previously Approved CCO Time Adjustments:	Percentage Time Adjusted: (including this change)	Total # of Unreconciled Deferred Time CCO(s): (including this change)
1390 Day(s)	0 Day(s)	0 Day(s)	0 %	9

THIS CHANGE ORDER PROVIDES FOR:

Additional funds for the lease of a site adjacent to the project to provide a laydown yard for reinforcing steel.

This project, the Yerba Buena Island Transition Structure (YBITS), provides for the construction of two bridges which will connect eastbound and westbound traffic on the new east span of the San Francisco Oakland Bay Bridge (SFOBB) to the existing Yerba Buena Island (YBI) tunnel. The structures are comprised of concrete box girder bridges each approximately 50 meters high and 450 meters in length.

The western third of the jobsite is encompassed by a steep sandy slope, the middle third has the primary and secondary access roads to the adjacent U.S. Coast Guard (USCG) base running through it and the eastern third is on a slope and is a shared area with the abutting Self-Anchored Suspension (SAS) contract.

The Toll Bridge Program Oversight Committee (TBPOC) has established a goal of the Seismic Safety Opening (SSO) of the new SFOBB east span by 2013. As part of this goal, this project has issued Change Order No. 72, Supplement No. 0, and Supplement No. 1, to mitigate project delays and set milestones for the completion of the YBITS structure consistent with the SSO schedule. These change orders have resulted in increased labor forces and equipment along with working extended and double shifts on this project, which has created increased disruptions to both the USCG station's access through the jobsite and to the abutting SAS contract.

In order to mitigate these disruptions, this change order provides for the Contractor to lease a parcel of land adjacent to the project site in order to provide a laydown area for materials, which would otherwise have to be stored on the jobsite. The storage area will reduce the congestion within the project site.

The original funds for this CCO have been exhausted, but the storage and office areas are anticipated to be leased through the end of 2013. The quoted monthly lease prices have been determined to be in line with typical leased properties in the area. In addition to the cost of leasing the parcel, the change order shall provide for the rental of flatbed trailers to facilitate the storage and transportation of materials, as determined by the Engineer.

This CCO provides for additional funds and paid as Extra Work at Force Account at an estimated cost of $150,000.00, which will be financed from the contract's contingency fund. The original CCO No. 130 S0 provided for $180,000.00, for a total cost for this CCO at $330,000.00. A cost analysis is on file.

No adjustment of contract time is warranted as the work will not affect the controlling operation.

Maintenance concurrence is not required as this change order will not affect any permanent roadway features.

ADA Notice For individuals with sensory disabilities, this document is available in alternate formats. For information call: (916) 654-6410 or TDD (916) 654-3880 or write Records and Forms Management, 1120 N Street, MS-89, Sacramento, CA 95814

CONCURRED BY:

Construction Engineer	William Howe	Date 03-07-13
Bridge Engineer:	Mehran Ardakanian	Date
Project Engineer:	Bob Zandipour, Design	Date 3-12-13
Project Manager	Ken Terpstra	Date 3-11-13
FHWA Rep		Date
Environmental:		Date
Other (specify):		Date
Other (specify):		Date
District Prior Approval By		Date
HQ (Issue Approve) By:	Larry Salhaney	Date 3-14-13
Resident Engineer's Signature		Date
	William Howe	03-07-13

ESTIMATE OF COST

	THIS REQUEST	TOTAL TO DATE
ITEMS	$0.00	$0.00
FORCE ACCOUNT	$150,000.00	$330,000.00
AGREED PRICE	$0.00	$0.00
ADJUSTMENT	$0.00	$0.00
TOTAL	$150,000.00	$330,000.00

FEDERAL PARTICIPATION

☐ PARTICIPATING ☐ PARTICIPATING IN PART ☑ NONE
☐ NON-PARTICIPATING (MAINTENANCE) ☐ NON-PARTICIPATING

FEDERAL SEGREGATION (if more than one Funding Source or P.I.P. type)
☐ CCO FUNDED PER CONTRACT ☐ CCO FUNDED AS FOLLOWS

FEDERAL FUNDING SOURCE PERCENT

ADA Notice: For individuals with sensory disabilities, this document is available in alternate formats. For information call: (916) 654-6410 or TDD (916) 654-3880 or write Records and Forms Management, 1120 N Street, MS-89, Sacramento, CA 95814.

STATE OF CALIFORNIA - DEPARTMENT OF TRANSPORTATION

CONTRACT CHANGE ORDER

Change Requested by: Engineer

CCO 130	Suppl. No. 2	Contract No. 04 - 0120S4	Road SF-80-12.7/13.2	FED. AID LOC.: NO FED AID

To: **M C M CONSTRUCTION INC**

You are directed to make the following changes from the plans and specifications or do the following described work not included in the plans and specifications for this contract. ***NOTE: This change order is not effective until approved by the Engineer.***

Description of work to be done, estimate of quantities and prices to be paid. (Segregate between additional work at contract price, agreed price and force account.) Unless otherwise stated, rates for rental of equipment cover only such time as equipment is actually used and no allowance will be made for idle time. This last percentage shown is the net accumulated increase or decrease from the original quantity in the Engineer's Estimate.

Extra Work at Force Account:

Provide additional funds = $270,000.00

Estimated Cost: Increase ☑ Decrease ☐ **$270,000.00**

By reason of this order the time of completion will be adjusted as follows: 0 days

Signature	Resident Engineer	Date
William Howe	William Howe, Senior R.E.	09-29-13
Signature: Deanna Vilcheck	Area Construction Manager Deanna Vilcheck	Date: 8/29/13
Signature: Deanna Vilcheck	Area Construction Manager Deanna Vilcheck	Date: 8/30/13

We the undersigned contractor, have given careful consideration to the change proposed and agree, if this proposal is approved, that we will provide all equipment, furnish the materials, except as may otherwise be noted above, and perform all services necessary for the work above specified, and will accept as full payment therefor the prices shown above.

NOTE: If you, the contractor, do not sign acceptance of this order, your attention is directed to the requirements of the specifications as to proceeding with the ordered work and filing a written protest within the time therein specified.

Signature	(Print name and title)	Date
Not Required		

STATE OF CALIFORNIA - DEPARTMENT OF TRANSPORTATION

CONTRACT CHANGE ORDER MEMORANDUM

DATE: 8/29/2013 Page 1 of 2

TO: Deanna Vilcheck, ACM /	FILE: E.A. 04 - 0120S4
FROM: William Howe, Senior R.E.	CO-RTE-PM SF-80-12.7/13.2
	FED. NO. NO FED AID
CCO#: 130 SUPPLEMENT#: 2 Category Code: CXAX	CONTINGENCY BALANCE (incl. this change) $20,140,380.15
COST: $270,000.00 INCREASE ☑ DECREASE ☐	HEADQUARTERS APPROVAL REQUIRED? ☑ YES ☐ NO
SUPPLEMENTAL FUNDS PROVIDED: $0.00	IS THIS REQUEST IN ACCORDANCE WITH ENVIRONMENTAL DOCUMENTS? ☑ YES ☐ NO
CCO DESCRIPTION: additional funds off-site matl.storage	PROJECT DESCRIPTION: YBITS-1 (Yerba Buena Island Transition Structures)

Original Contract Time:	Time Adj. This Change:	Previously Approved CCO Time Adjustments:	Percentage Time Adjusted: (including this change)	Total # of Unreconciled Deferred Time CCO(s): (including this change)
1390 Day(s)	0 Day(s)	0 Day(s)	0 %	9

THIS CHANGE ORDER PROVIDES FOR:
Additional funds for the lease of a site adjacent to the project to provide a laydown yard for reinforcing steel.

This project, the Yerba Buena Island Transition Structure (YBITS), provides for the construction of two bridges which will connect eastbound and westbound traffic on the new east span of the San Francisco Oakland Bay Bridge (SFOBB) to the existing Yerba Buena Island (YBI) tunnel. The structures are comprised of concrete box girder bridges each approximately 50 meters high and 450 meters in length.

The western third of the jobsite is encompassed by a steep sandy slope, the middle third has the primary and secondary access roads to the adjacent U.S. Coast Guard (USCG) base running through it and the eastern third is on a slope and is a shared area with the abutting Self-Anchored Suspension (SAS) contract.

The Toll Bridge Program Oversight Committee (TBPOC) has established a goal of the Seismic Safety Opening (SSO) of the new SFOBB east span by 2013. As part of this goal, this project has issued Change Order No. 72, Supplement No. 0, and Supplement No. 1, to mitigate project delays and set milestones for the completion of the YBITS structure consistent with the SSO schedule. These change orders have resulted in increased labor forces and equipment along with working extended and double shifts on this project, which has created increased disruptions to both the USCG station's access through the jobsite and to the abutting SAS contract.

In order to mitigate these disruptions, this change order provides for the Contractor to lease a parcel of land adjacent to the project site in order to provide a laydown area for materials, which would otherwise have to be stored on the jobsite. The storage area will reduce the congestion within the project site.

The original funds for this CCO have been exhausted, but the storage and office areas are anticipated to be leased through the end of 2013. The quoted monthly lease prices have been determined to be in line with typical leased properties in the area. In addition to the cost of leasing the parcel, the change order shall provide for the rental of flatbed trailers to facilitate the storage, and transportation of materials, as determined by the Engineer.

This CCO provides for additional funds and paid as Extra Work at Force Account at an estimated cost of $270,000.00, which will be financed from the contract's contingency fund. The original CCO Nos. 130 S0 and 130 S1 provided for $330,000.00, for a total cost for this CCO at $600,000.00. A cost analysis is on file.

No adjustment of contract time is warranted as the work will not affect the controlling operation.

Maintenance concurrence is not required as this change order will not affect any permanent roadway features.

ADA Notice: For individuals with sensory disabilities, this document is available in alternate formats. For information call: (916) 654-6410 or TDD (916) 654-3880 or write

CONCURRED BY:		
Construction Engineer:	William Howe	Date 08.29.13
Bridge Engineer:	Mehran Ardakanian	Date
Project Engineer:	Bob Zandipour, Design	Date 8-29-13
Project Manager:	Ken Terpstra	Date 9/12/13
FHWA Rep.:		Date
Environmental:		Date
Other (specify):		Date
Other (specify):		Date
District Prior Approval By:		Date
HQ (Issue Approve) By:	Larry Salhaney	Date 8-30-13
Resident Engineer's Signature:	William Howe	Date 08.29.13

ESTIMATE OF COST

	THIS REQUEST	TOTAL TO DATE
ITEMS	$0.00	$0.00
FORCE ACCOUNT	$270,000.00	$600,000.00
AGREED PRICE	$0.00	$0.00
ADJUSTMENT	$0.00	$0.00
TOTAL	$270,000.00	$600,000.00

FEDERAL PARTICIPATION

☐ PARTICIPATING ☐ PARTICIPATING IN PART ☑ NONE
☐ NON-PARTICIPATING (MAINTENANCE) ☐ NON-PARTICIPATING

FEDERAL SEGREGATION (if more than one Funding Source or P.I.P. type)
☐ CCO FUNDED PER CONTRACT ☐ CCO FUNDED AS FOLLOWS

FEDERAL FUNDING SOURCE	PERCENT

ADA Notice: For individuals with sensory disabilities, this document is available in alternate formats. For information call: (916) 654-6410 or TDD (916) 654-3880 or write

STATE OF CALIFORNIA - DEPARTMENT OF TRANSPORTATION

CONTRACT CHANGE ORDER

Change Requested by: Engineer

CCO 131	Suppl. No. 0	Contract No. 04 - 0120S4	Road SF-80-12.7/13.2	FED. AID LOC.: NO FED AID

To: **M C M CONSTRUCTION INC**

You are directed to make the following changes from the plans and specifications or do the following described work not included in the plans and specifications for this contract. ***NOTE: This change order is not effective until approved by the Engineer.***

Description of work to be done, estimate of quantities and prices to be paid. (Segregate between additional work at contract price, agreed price and force account.) Unless otherwise stated, rates for rental of equipment cover only such time as equipment is actually used and no allowance will be made for idle time. This last percentage shown is the net accumulated increase or decrease from the original quantity in the Engineer's Estimate.

Extra Work at Force Account:

Furnish and install temporary steel plates to protect the main cable on the adjacent project, Self-Anchored Suspension Bridge (SAS), during the stressing operations of the prestressing strands at the Frame 2 anchorage diaphragm as determined by the Engineer. The temporary plates shall be placed for both the westbound and eastbound structures during the stressing operations.

Estimated Extra Work at Force Account = $60,000.00

Estimated Cost: Increase ☑ **Decrease** ☐ **$60,000.00**

By reason of this order the time of completion will be adjusted as follows: 0 days

Submitted by Signature William Howe	Resident Engineer William Howe, Senior R.E.	Date 04.24.12
Approval Recommended by Signature Deanna Vilcheck	Area Construction Manager Deanna Vilcheck	Date 4/25/12
Engineer Approval by Signature Michael Brown	Area Construction Manager for Deanna Vilcheck	Date 5/8/12

We the undersigned contractor, have given careful consideration to the change proposed and agree, if this proposal is approved, that we will provide all equipment, furnish the materials, except as may otherwise be noted above, and perform all services necessary for the work above specified, and will accept as full payment therefor the prices shown above.

NOTE: If you, the contractor, do not sign acceptance of this order, your attention is directed to the requirements of the specifications as to proceeding with the ordered work and filing a written protest within the time therein specified.

Contractor Acceptance by Signature	(Print name and title) EDMUNDO A. PUCHI, TREASURER	Date 5/4/12

Weekly Statistics 4/25/12

STATE OF CALIFORNIA - DEPARTMENT OF TRANSPORTATION

CONTRACT CHANGE ORDER MEMORANDUM

TO: Deanna Vilcheck, ACM /	FILE: E.A. 04 - 0120S4
FROM: William Howe, Senior R.E.	CO-RTE-PM SF-80-12.7/13.2
	FED. NO. NO FED AID
CCO#: 131 SUPPLEMENT#: 0 Category Code: CHPT	CONTINGENCY BALANCE (incl. this change) $70,830,738.00
COST: $60,000.00 INCREASE ☑ DECREASE ☐	HEADQUARTERS APPROVAL REQUIRED? ☐ YES ☑ NO
SUPPLEMENTAL FUNDS PROVIDED: $0.00	IS THIS REQUEST IN ACCORDANCE WITH ENVIRONMENTAL DOCUMENTS? ☑ YES ☐ NO
CCO DESCRIPTION: Protect SAS Cable from Prestressing Work	**PROJECT DESCRIPTION:** YBITS-1 (Yerba Buena Island Transition Structures)

Original Contract Time:	Time Adj. This Change:	Previously Approved CCO Time Adjustments:	Percentage Time Adjusted: (including this change)	Total # of Unreconciled Deferred Time CCO(s): (including this change)
1390 Day(s)	0 Day(s)	0 Day(s)	0 %	9

THIS CHANGE ORDER PROVIDES FOR:

Placing temporary steel plates to protect an adjacent structure during the stressing of the prestressing strands.

This project, the Yerba Buena Island Transition Structure (YBITS), provides for the construction of two bridges which will connect eastbound and westbound traffic on the new east span of the San Francisco Oakland Bay Bridge (SFOBB) to the existing Yerba Buena Island (YBI) tunnel. The structures are comprised of concrete box girder bridges each approximately 50 meters high and 450 meters in length.

The eastern end of the structure abuts directly against the Self-Anchored Suspension Bridge (SAS) project. At this end, the Contractor is required to stress the prestressing stands at the anchorage diaphragm for Frame 2 for both the westbound and eastbound structure. The prestressed strands within Frame 2 span up to the entire length of the 320 meter long frame with over 80 strands per frame. In the event a strand was to fail during the stressing operation, the resulting projectile steel could potentially damage the abutting main cable of the SAS structure, which is in the process of being constructed and could lead to extensive delays and costs to the SAS project.

In order to mitigate the risk of damaging the main cable, this change order will provide for the Contractor to furnish and install temporary steel plates between the stressing operation and the SAS project. These plates will act to deflect any projectiles in the unlikely case of a strand failure. The plates will be installed at both the eastbound and westbound structures during the time when the stressing operations are taking place. The work includes furnishing the plates and their support beams, rigging the plates and installing and removing the plates for each frame.

This work shall be performed as Extra Work at Force Account at an estimated cost of $60,000.00, which shall be financed from the Contract's contingency funds. A cost analysis is on file.

No adjustment of contract time is warranted as the work will not affect the controlling operation.

Maintenance concurrence is not required as this change order will not affect any permanent roadway features.

ADA Notice: For individuals with sensory disabilities, this document is available in alternate formats. For information call (916) 654-6410 or TDD (916) 654-3880 or write Records and Forms Management, 1120 N Street, MS-89, Sacramento, CA 95814.

CONCURRED BY:		
Construction Engineer:	William Howe	Date 04.24.12
Bridge Engineer:	Mehran Ardakanian	Date 4/25/12
Project Engineer:	Bob Zandipour, Design	Date 4-26-12
Project Manager:	Ken Terpstra	Date 4-27-12
FHWA Rep.:		Date
Environmental:		Date
Other (specify):		Date
Other (specify):		Date
District Prior Approval By:		Date
HQ (Issue Approve) By:		Date
Resident Engineer's Signature: William Howe		Date 04.24.12

ESTIMATE OF COST

	THIS REQUEST	TOTAL TO DATE
ITEMS	$0.00	$0.00
FORCE ACCOUNT	$60,000.00	$60,000.00
AGREED PRICE	$0.00	$0.00
ADJUSTMENT	$0.00	$0.00
TOTAL	$60,000.00	$60,000.00

FEDERAL PARTICIPATION

☐ PARTICIPATING ☐ PARTICIPATING IN PART ☑ NONE
☐ NON-PARTICIPATING (MAINTENANCE) ☐ NON-PARTICIPATING

FEDERAL SEGREGATION (if more than one Funding Source or P.I.P. type)
☐ CCO FUNDED PER CONTRACT ☐ CCO FUNDED AS FOLLOWS

FEDERAL FUNDING SOURCE	PERCENT

ADA Notice: For individuals with sensory disabilities, this document is available in alternate formats. For information call: (916) 654-6410 or TDD (916) 654-3880 or write Records and Forms Management, 1120 N Street, MS-89, Sacramento, CA 95814.

STATE OF CALIFORNIA - DEPARTMENT OF TRANSPORTATION

CONTRACT CHANGE ORDER MEMORANDUM

TO: Deanna Vilcheck, ACM /	FILE: E.A. 04 - 0120S4
	CO-RTE-PM SF-80-12.7/13.2
FROM: William Howe, Senior R.E.	FED. NO. NO FED AID
CCO#: 130 SUPPLEMENT#: 0 Category Code: CXAX	CONTINGENCY BALANCE (incl. this change) $49,818,061.04
COST: $180,000.00 INCREASE ☑ DECREASE ☐	HEADQUARTERS APPROVAL REQUIRED? ☐ YES ☑ NO
SUPPLEMENTAL FUNDS PROVIDED: $0.00	IS THIS REQUEST IN ACCORDANCE WITH ENVIRONMENTAL DOCUMENTS? ☑ YES ☐ NO
CCO DESCRIPTION: Treasure Island Rebar Laydown Yard	**PROJECT DESCRIPTION:** YBITS-1 (Yerba Buena Island Transition Structures)

Original Contract Time:	Time Adj. This Change:	Previously Approved CCO Time Adjustments:	Percentage Time Adjusted: (including this change)	Total # of Unreconciled Deferred Time CCO(s): (including this change)
1390 Day(s)	0 Day(s)	0 Day(s)	0 %	9

THIS CHANGE ORDER PROVIDES FOR:

The lease of a site adjacent to the project to provide a laydown yard for reinforcing steel.

This project, the Yerba Buena Island Transition Structure (YBITS), provides for the construction of two bridges which will connect eastbound and westbound traffic on the new east span of the San Francisco Oakland Bay Bridge (SFOBB) to the existing Yerba Buena Island (YBI) tunnel. The structures are comprised of concrete box girder bridges each approximately 50 meters high and 450 meters in length.

The western third of the jobsite is encompassed by a steep sandy slope, the middle third has the primary and secondary access roads to the adjacent U.S. Coast Guard (USCG) base running through it and the eastern third is on a slope and is a shared area with the abutting Self-Anchored Suspension (SAS) contract.

The Toll Bridge Program Oversight Committee (TBPOC) has established a goal of the Seismic Safety Opening (SSO) of the new SFOBB east span by 2013. As part of this goal, this project has issued Change Order No. 72, Supplement No. 0, and Supplement No. 1, to mitigate project delays and set milestones for the completion of the YBITS structure consistent with the SSO schedule. These change orders have resulted in increased labor forces and equipment along with working extended and double shifts on this project, which has created increased disruptions to both the USCG station's access through the jobsite and to the abutting SAS contract.

In order to mitigate these disruptions, this change order provides for the Contractor to lease a parcel of land adjacent to the project site in order to provide a laydown area for reinforcing steel, which would otherwise have to be stored on the jobsite. The storage area will reduce the congestion within the project site.

The parcel shall provide approximately one (1) acre of storage area and is anticipated to be leased through the Spring of 2013. The quoted monthly lease price has been determined to be in line with typical leased properties in the area. In addition to the cost of leasing the parcel, the change order shall provide for the rental of flatbed trailers to facilitate the storage and transportation of the steel and pay for any double handling of the material as determined by the Engineer.

This work shall be performed as Extra Work at Force Account at an estimated cost of $180,000.00 and shall be financed from the Contract's contingency funds. A cost analysis is on file.

No adjustment of contract time is warranted as the work will not affect the controlling operation.

Maintenance concurrence is not required as this change order will not affect any permanent roadway features.

ADA Notice: For individuals with sensory disabilities, this document is available in alternate formats. For information call (916) 654-6410 or TDD (916) 654-3880 or write Records and Forms Management, 1120 N Street, MS-89, Sacramento, CA 95814

CONCURRED BY:		
Construction Engineer:	for William Howe	Date 4/13/12
Bridge Engineer:	Mehran Ardakanian	Date
Project Engineer:	Bob Zandipour, Design	Date 4-16-12
Project Manager:	for Pochana Chongchaikit Ken Terpstra	Date 4-16-12
FHWA Rep.:		Date
Environmental:		Date
Other (specify):		Date
Other (specify):		Date
District Prior Approval By:		Date
HQ (Issue Approve) By:		Date
Resident Engineer's Signature:	Deanne Vilchen	Date 4/13/12

ESTIMATE OF COST

	THIS REQUEST	TOTAL TO DATE
ITEMS	$0.00	$0.00
FORCE ACCOUNT	$180,000.00	$180,000.00
AGREED PRICE	$0.00	$0.00
ADJUSTMENT	$0.00	$0.00
TOTAL	$180,000.00	$180,000.00

FEDERAL PARTICIPATION

☐ PARTICIPATING ☐ PARTICIPATING IN PART ☑ NONE
☐ NON-PARTICIPATING (MAINTENANCE) ☐ NON-PARTICIPATING

FEDERAL SEGREGATION (if more than one Funding Source or P.I.P. type)
☐ CCO FUNDED PER CONTRACT ☐ CCO FUNDED AS FOLLOWS

FEDERAL FUNDING SOURCE	PERCENT

ADA Notice: For individuals with sensory disabilities, this document is available in alternate formats. For information call (916) 654-6410 or TDD (916) 654-3880 or write Records and Forms Management, 1120 N Street, MS-89, Sacramento, CA 95814.

CONTRACT CHANGE ORDER

Change Requested by: Engineer

CCO 133	Suppl. No. 0	Contract No. 04 - 0120S4	Road SF-80-12.7/13.2	FED. AID LOC.: NO FED AID

To: **M C M CONSTRUCTION INC**

You are directed to make the following changes from the plans and specifications or do the following described work not included in the plans and specifications for this contract. ***NOTE: This change order is not effective until approved by the Engineer.***

Description of work to be done, estimate of quantities and prices to be paid. (Segregate between additional work at contract price, agreed price and force account.) Unless otherwise stated, rates for rental of equipment cover only such time as equipment is actually used and no allowance will be made for idle time. This last percentage shown is the net accumulated increase or decrease from the original quantity in the Engineer's Estimate.

Adjustment of Compensation at Lump Sum:

Incorporate revised drawings, Sheet Nos. 2 through 9 of this contract change order, (Sheet Nos. 607R1, 614R2, 624R1, 625R4, 627R1, 628R2, 652R2 and 685R2), for clarifications for deck bottom rebar concrete cover; exterior bay electrical utility blockout locations; parabolic girder haunch at Bent W3R; revised girder dimensions at Bent W5L; and clarification to reinforce barrier rails at Bent W10AL, Abutment 11R, Hinge W7LA and Hinge W6RB.

There shall be no cost or credit to the State by reason of this change.

Adjustment of Compensation @ Agreed Lump Sum = $0.00

6/6/13

Estimated Cost: Increase ☐ **Decrease** ☐ **$0.00**

By reason of this order the time of completion will be adjusted as follows: 0 days

Signature William Howe	**Resident Engineer** William Howe, Senior R.E.	**Date** 04.17.13
Signature William Howe	**Senior Resident Engineer** William Howe	**Date** 04.17.13
Signature William Howe	**Senior Resident Engineer** William Howe	**Date** 06.06.13

We the undersigned contractor, have given careful consideration to the change proposed and agree, if this proposal is approved, that we will provide all equipment, furnish the materials, except as may otherwise be noted above, and perform all services necessary for the work above specified, and will accept as full payment therefor the prices shown above.

NOTE: If you, the contractor, do not sign acceptance of this order, your attention is directed to the requirements of the specifications as to proceeding with the ordered work and filing a written protest within the time therein specified.

Signature	**(Print name and title)** Edmundo R Pachi - Treasurer	**Date** 6-4-2013

DIST.	COUNTY	ROUTE	KILOMETER POST TOTAL PROJECT	SHEET NO.	TOTAL SHEETS
04	SF	80	12.7/13.2	607R1	806

REGISTERED ENGINEER - CIVIL
6-23-08
PLANS APPROVAL DATE
The State of California or the officers or agents shall not be responsible for the accuracy or completeness of electronic copies of this plan sheet.

T.Y. LIN / MOFFATT & NICHOL
TWO HARRISON STREET
SAN FRANCISCO, CA 94105

Note: For Section C-C see 'Bent W6R Details No.3' sheet.

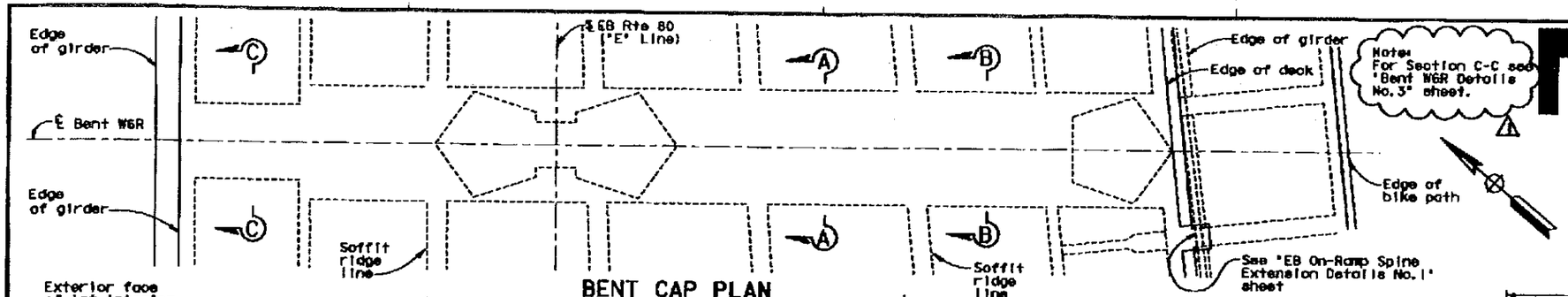

BENT CAP PLAN
1:80

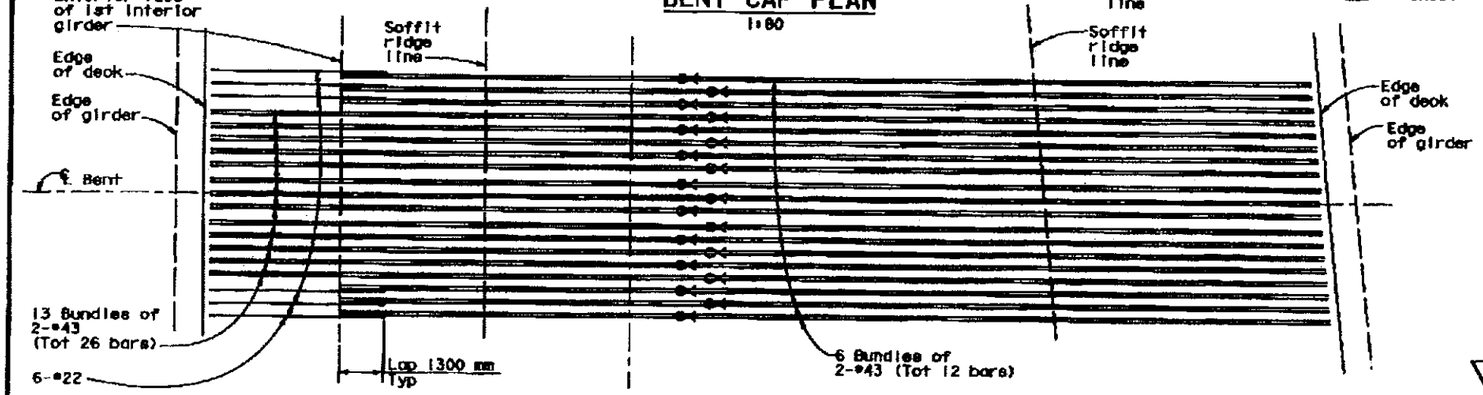

SCHEMATIC PLAN - CAP TOP UPPER LAYER REINFORCEMENT
No scale

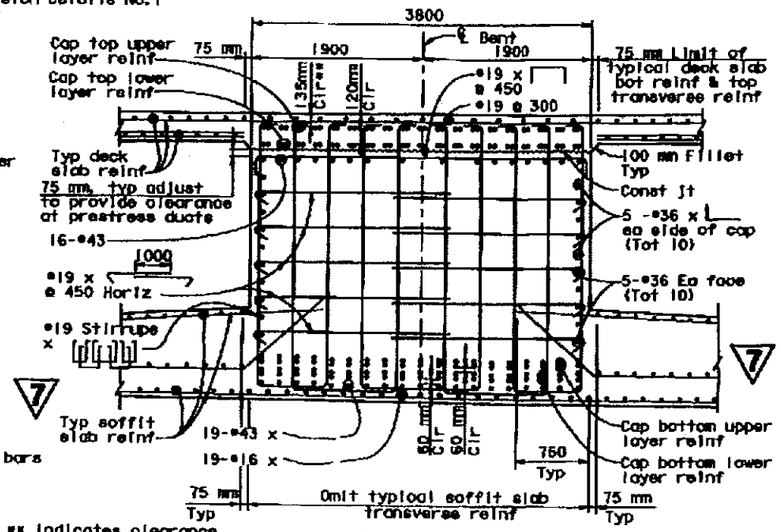

SECTION A-A
1:30

Note: ▭ indicates bundled bars

** indicates clearance to main reinf

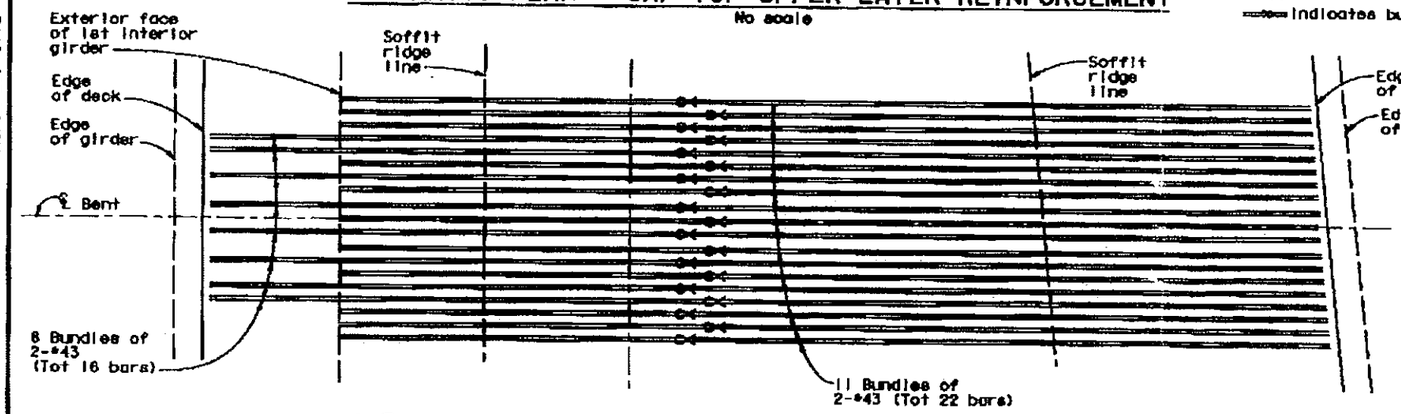

SCHEMATIC PLAN - CAP TOP LOWER LAYER REINFORCEMENT
No scale

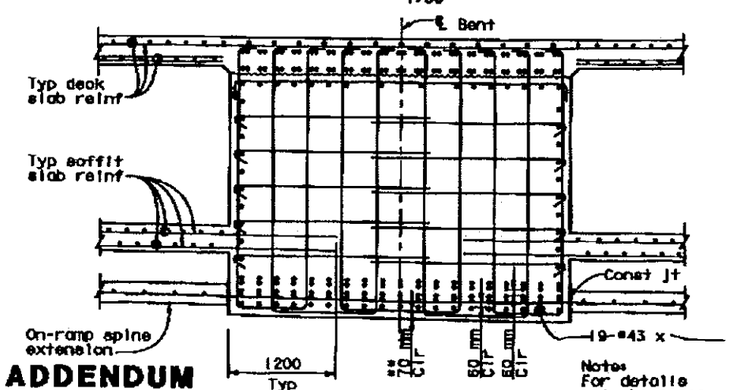

SECTION B-B
1:30

Notes: For details not shown see 'Section A-A'

Note: Lap splices not permitted in bent cap main top and bottom reinf

FOR REVISION ⚠ ONLY

MARK	DATE	DESCRIPTIONS	BY	CH'D
1	3-29-12	Rev Section C-C reference	TL	JB

REVISIONS

CONTRACT CHANGE ORDER NO. 133
SHEET 2 OF 9

7 REVISED PER ADDENDUM NO. 7 DATED OCTOBER 19, 2009

ALL DIMENSIONS ARE IN MILLIMETERS UNLESS OTHERWISE SHOWN

DESIGN OVERSIGHT: JOHN DEMIC, DEPARTMENT CHAIR; ANN F. DAVIES; KAMAL EL-SATER
March 3, 2008
SIGN OFF DATE
4/13/2012

DESIGN	BY Wang	DESIGNED Greer	
DETAILS	BY van Ryn/Zuschl/Mal	DETAILED Jain	
QUANTITIES	BY Liao	CHECKED L. Nichol	

PREPARED FOR THE STATE OF CALIFORNIA DEPARTMENT OF TRANSPORTATION

Jai Birdy
PROJECT ENGINEER

CU 04251
EA 0120S1

SAN FRANCISCO OAKLAND BAY BRIDGE
EAST SPAN SEISMIC SAFETY PROJECT

YBI TRANSITION STRUCTURES

BENT W6R DETAILS NO. 2

34-0006 L/R
12.8

SHEET 58 OF 209

FILE => \\ventura\LB_Projects\4141-06\CADD\TS\Checked Plans\YBITS =1-1002 No. 2_03-03-08 (Final Renamed)\032912 CCO T20\04-0120S1-3-

March 29, 2012

CCO NO. 133

MARK	DATE	DESCRIPTIONS	BY	CH'D
2	3-13-12	Clarified cone cover dimension	TL	AE
1	12-23-08	WB Ramp Revisions	TL	AE

REVISIONS

FOR REVISION 1 & 2 ONLY

CONTRACT CHANGE ORDER NO. 133
SHEET 3 OF 9

DIST.	COUNTY	ROUTE	KILOMETER POST TOTAL PROJECT	SHEET NO.	TOTAL SHEETS
04	SF	80	12.7/13.2	614R2	806

REGISTERED ENGINEER - CIVIL
6-23-08
PLANS APPROVAL DATE

The State of California or its officers or agents shall not be responsible for the accuracy or completeness of electronic copies of this plan sheet.

T.Y. LIN / MOFFATT & NICHOL
TWO HARRISON STREET
SAN FRANCISCO, CA 94105

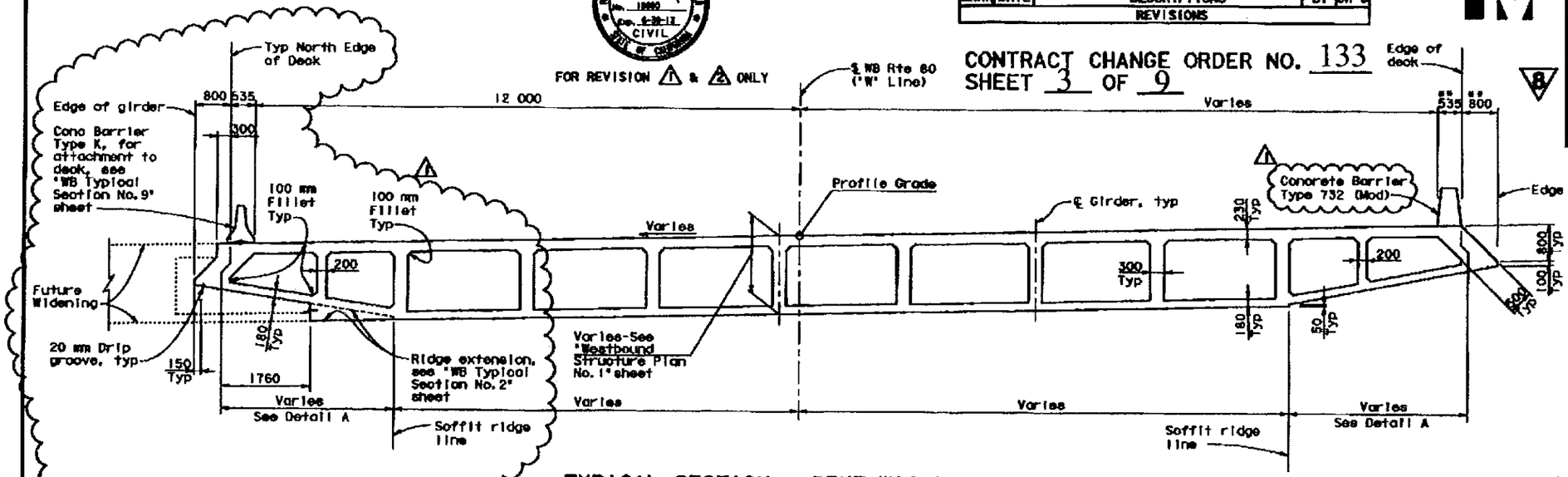

TYPICAL SECTION - BENT W10AL TO BENT W10L

1:50

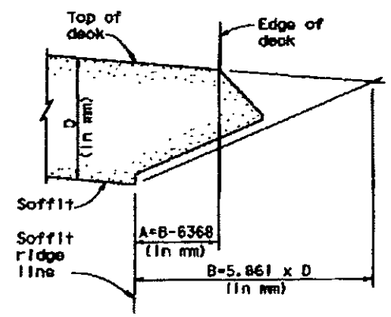

Note: Dimensions A & B are measured perpendicular to edge of deck

DETAIL A

(Typ bent W10AL to W7L)
NO SCALE

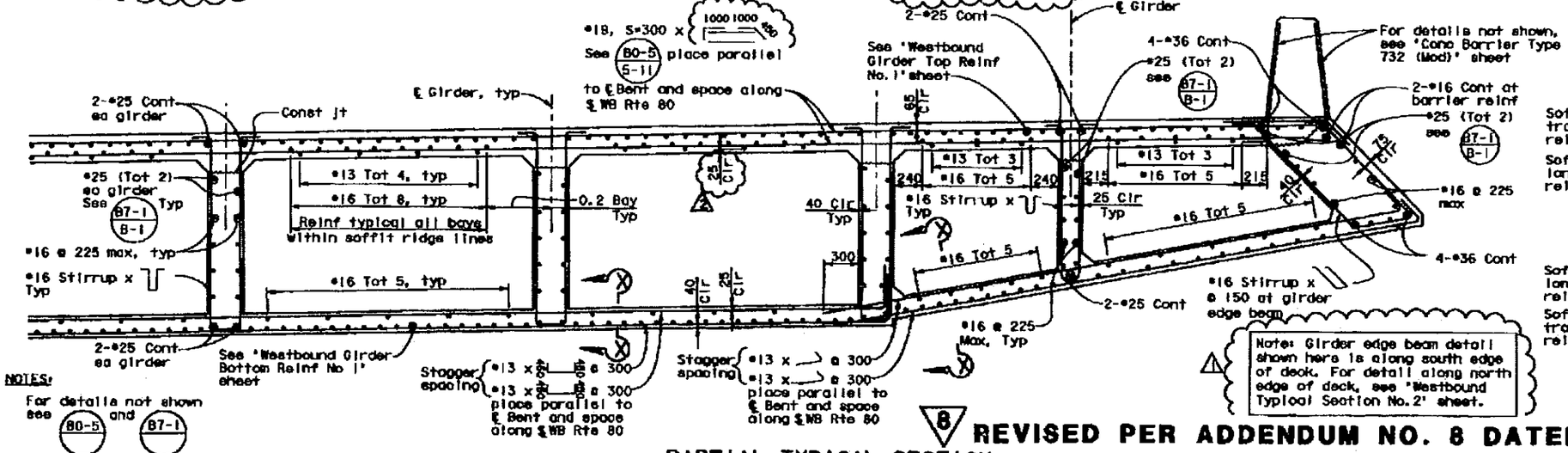

NOTES:
For details not shown see B0-5 and B7-1

Note: Girder edge beam detail shown here is along south edge of deck. For detail along north edge of deck, see "Westbound Typical Section No.2" sheet.

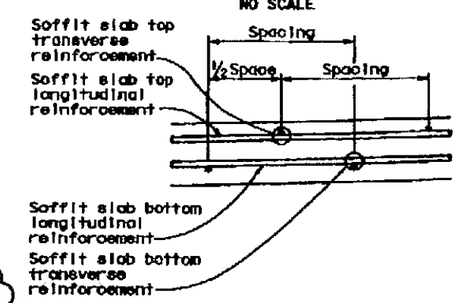

SECTION X-X

NO SCALE

8 REVISED PER ADDENDUM NO. 8 DATED NOVEMBER 12, 2009

PARTIAL TYPICAL SECTION

1:20

ALL DIMENSIONS ARE IN MILLIMETERS UNLESS OTHERWISE SHOWN

DESIGN OVERSIGHT
MARK MEMI, RICHARD DIAN, JUAN F. CAMPO, HAMAN EL-SHIMI
March 3, 2008
SIGN OFF DATE 4/13/2012

DESIGN	Jolin	DANGI
DETAILS	von Ryn/Zucchi/Mel	Jolin
QUANTITIES	Liao	E. Nichol

PREPARED FOR THE STATE OF CALIFORNIA DEPARTMENT OF TRANSPORTATION

Jol Birdy
PROJECT ENGINEER

CU 04251
EA 0120S1

34-0006 L/R
KILOMETER POST 12.8

SAN FRANCISCO OAKLAND BAY BRIDGE
EAST SPAN SEISMIC SAFETY PROJECT

YBI TRANSITION STRUCTURES

WESTBOUND TYPICAL SECTION NO. 1

SHEET 65 OF 209

March 29, 2012

FILE -> \\mnlbfs\LB_Projects\4141-DES\CADD\TS\Checked Plans\YBITS #1-1002 No. 2_03-03-08 (Final Remodel\0329\2 CCO T20\04-0120s1-34-006r1-k-ts01.dgn

DIST.	COUNTY	ROUTE	KILOMETER POST TOTAL PROJECT	SHEET NO.	TOTAL SHEETS
04	SF	80	12.7/13.2	624R1	806

REGISTERED ENGINEER - CIVIL

6-23-08
PLANS APPROVAL DATE

The State of California or its officers or agents shall not be responsible for the accuracy or completeness of electronic copies of this plan sheet.

T.Y. LIN / HOFFATT & NICHOL
TWO HARRISON STREET
SAN FRANCISCO, CA 94105

FOR REVISION 7 ONLY

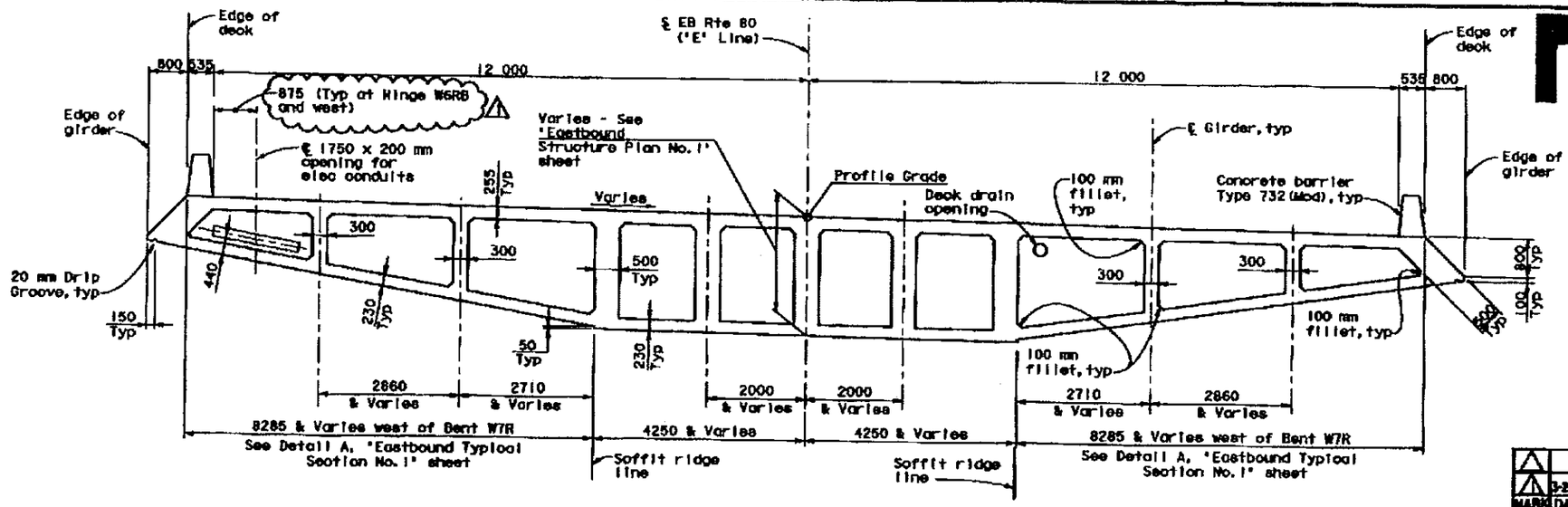

TYPICAL SECTION - BENT W8R TO HINGE W6RB

1:50

MARK	DATE	DESCRIPTIONS	BY	CH'D
7	3-28-12	Rev elec blockout limits	TL	JB

REVISIONS

CONTRACT CHANGE ORDER NO. 133
SHEET 4 OF 9

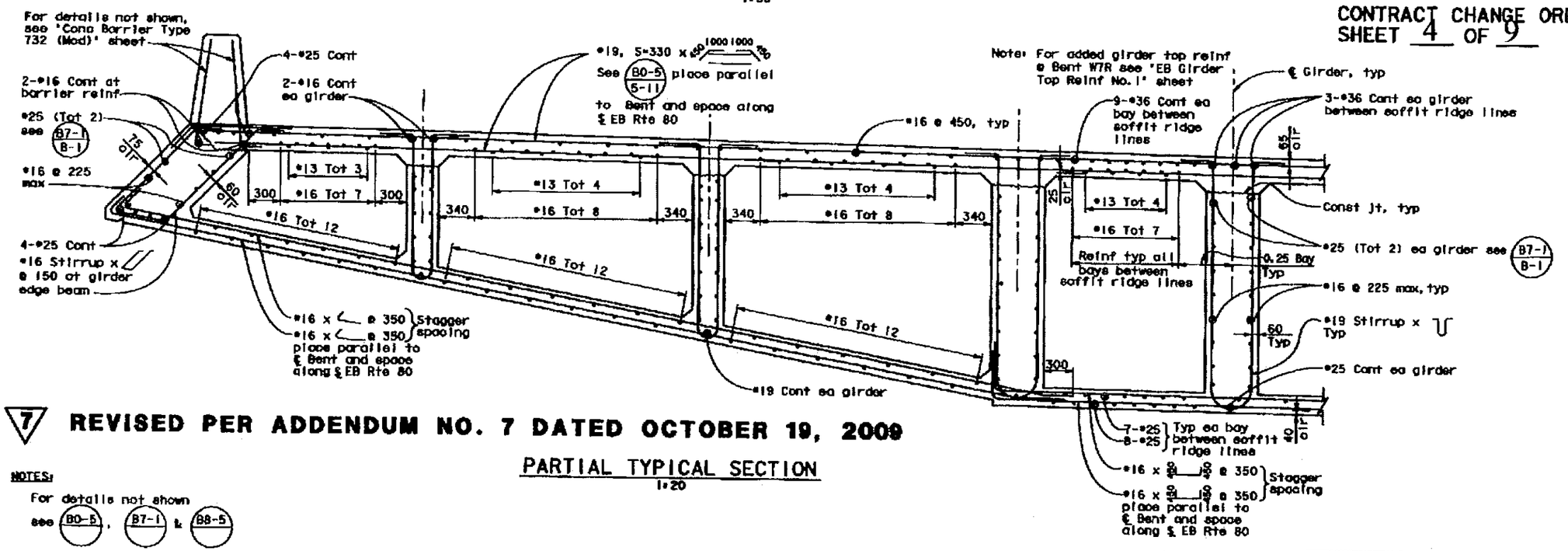

7 REVISED PER ADDENDUM NO. 7 DATED OCTOBER 19, 2009

PARTIAL TYPICAL SECTION

1:20

NOTES:

For details not shown see B0-5, B7-1 & B8-5

ALL DIMENSIONS ARE IN MILLIMETERS UNLESS OTHERWISE SHOWN

March 29, 2012

DESIGN OVERSIGHT
March 3, 2008
4/13/2012

DESIGN	BY Dodd	DESIGNED Jain	
DETAILS	BY van Ryn/Zuoshi/Mol	CHECKED Jain	
QUANTITIES	BY Liao	DRAWN E. Nichol	

PREPARED FOR THE STATE OF CALIFORNIA DEPARTMENT OF TRANSPORTATION

Jal Birdy
PROJECT ENGINEER

CU 04251
EA 0120S1

BRIDGE NO. 34-0006 L/R
RE-CALCULATED FEET 12.8

SAN FRANCISCO OAKLAND BAY BRIDGE
EAST SPAN SEISMIC SAFETY PROJECT

YBI TRANSITION STRUCTURES

EASTBOUND TYPICAL SECTION NO. 3

SHEET 75 OF 209

FILE => \\mnlbfs\LB_Projects\4141-06\CADD\TS\Checked Plans\YBITS #1-100% No. 2_03-03-08 (Final Renamed)\032812 CCO 120\04-0120s1-3

7 REVISED PER ADDENDUM NO. 7
DATED OCTOBER 19, 2009

CCO NO. 133

MARK	DATE	DESCRIPTIONS	BY	CH'D
3	3-29-12	Rev Elec Blockout Limits	TL	JB
2	10-10-10	Rev Bike Path Railing, Rev Girder Conc Cover, Relocated Girder top reinf bars.	TL	JB
1	5-15-10	Added Chain Link Railing	JB	AE

REVISIONS

FOR REVISION 1, 2, AND 3 ONLY

CONTRACT CHANGE ORDER NO. 133
SHEET 5 OF 9

DIST.	COUNTY	ROUTE	KILOMETER POST TOTAL PROJECT	SHEET NO.	TOTAL SHEETS
04	SF	80	12.7/13.2	625R4	808

REGISTERED ENGINEER - CIVIL
6-23-08
PLANS APPROVAL DATE

T.Y. LIN / MOFFATT & NICHOL
TWO HARRISON STREET
SAN FRANCISCO, CA 94105

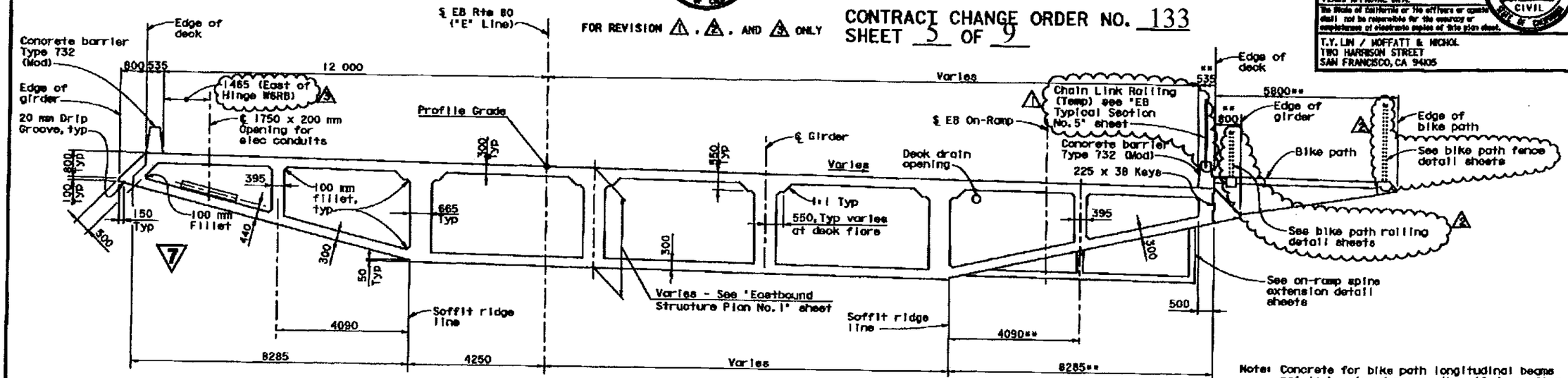

Note: Concrete for bike path longitudinal beams not to be placed sooner than 10 days after stressing main girders.

TYPICAL SECTION - HINGE W6RB TO BENT W5R

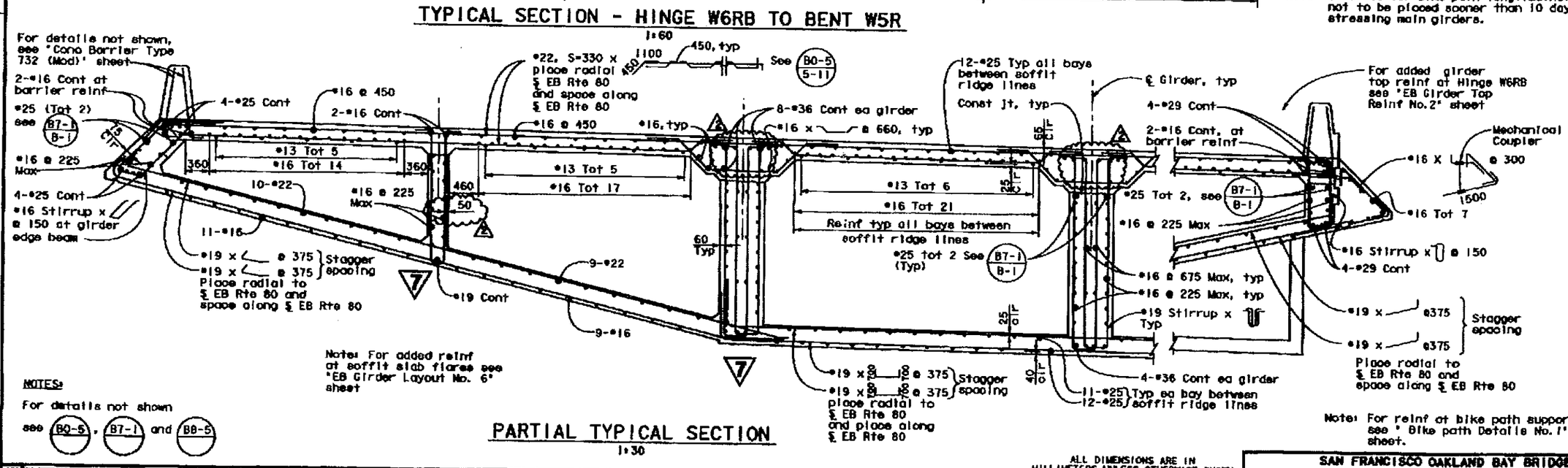

Note: For added reinf at soffit slab flares see 'EB Girder Layout No. 6' sheet

Note: For reinf at bike path supports, see 'Bike path Details No.1' sheet.

NOTES:

For details not shown see B0-5, B7-1 and B8-5

PARTIAL TYPICAL SECTION

1:30

March 29, 2012

DESIGN OVERSIGHT
March 3, 2008
SIGN OFF DATE
4/13/2012

DESIGN	BY Dodd	CHECKED Jain
DETAILS	BY van Ryn/Zuzelski/Mol	CHECKED Jain
QUANTITIES	BY Liao	CHECKED E. Mohol

PREPARED FOR THE STATE OF CALIFORNIA DEPARTMENT OF TRANSPORTATION

ALL DIMENSIONS ARE IN MILLIMETERS UNLESS OTHERWISE SHOWN

Jal Birdy
PROJECT ENGINEER

CU 04251
EA 012051

CONTRACT NO. 34-0806 L/R
KILOMETER POST 12.8

SAN FRANCISCO OAKLAND BAY BRIDGE
EAST SPAN SEISMIC SAFETY PROJECT

YBI TRANSITION STRUCTURES

EASTBOUND TYPICAL SECTION NO. 4

SHEET 76 OF 209

FILE => \\mnlbfs\LB_Projects\4141-06\CADD\TS\Checked Plans\18135 #1-100% No. 2.03-03-08 (Final Renamed)\032912 CCO T20\04-01Post-3

DIST.	COUNTY	ROUTE	KILOMETER POST TOTAL PROJECT	SHEET NO.	TOTAL SHEETS
04	SF	80	12.7/13.2	627R1	806

REGISTERED ENGINEER - CIVIL

6-23-08
PLANS APPROVAL DATE

The State of California or its officers or agents shall not be responsible for the accuracy or completeness of electronic copies of this plan sheet.

T.Y. LIN / MOFFATT & NICHOL
TWO HARRISON STREET
SAN FRANCISCO, CA 94105

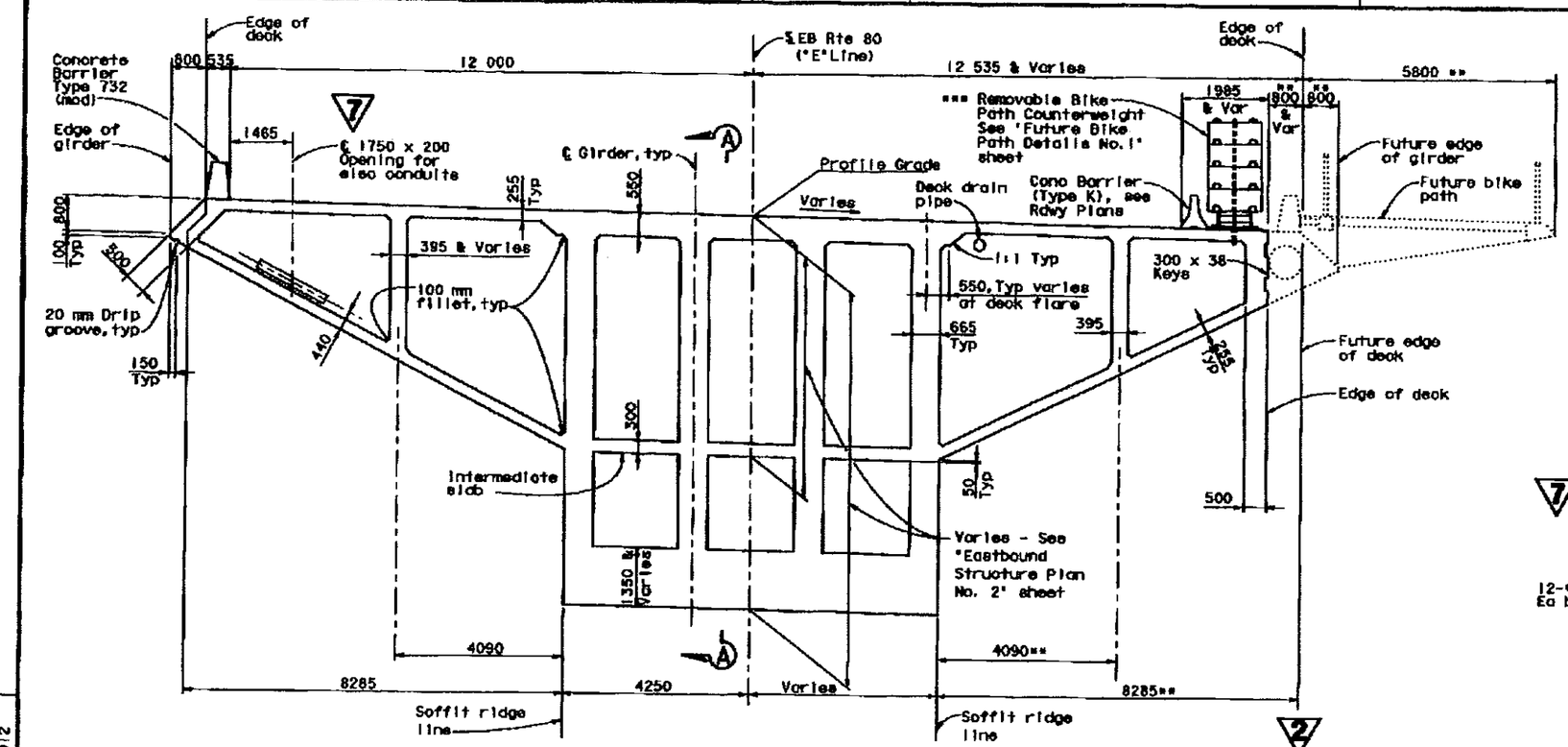

** Dimension shown is perpendicular to future edge of deck.

*** Removable Bike Path Counterweight to extend from Sta 55+43 to Sta 55+72.

SECTION - BENT W4R TO HINGE K CLOSURE
1:80

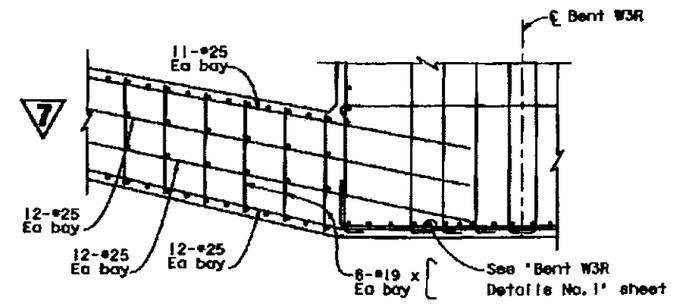

DETAIL B
1:30

FOR REVISION 1 ONLY

2 REVISED PER ADDENDUM NO. 2 DATED JANUARY 22, 2009

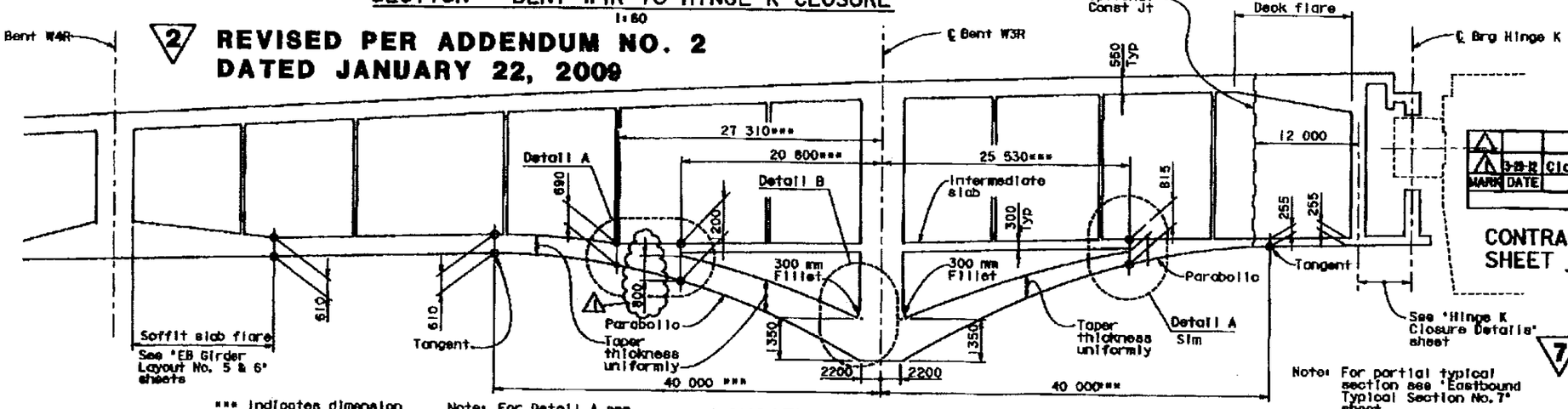

*** Indicates dimension measured along ℄ EB Rte 80

Note: For Detail A see 'EB Typical Section No. 7' sheet

Note: For partial typical section see 'Eastbound Typical Section No. 7' sheet.

LONGITUDINAL SECTION A-A
NO SCALE

MARK	DATE	DESCRIPTIONS	BY	CH'D
1	3-19-12	Clarified dimension	TL	JB
		REVISIONS		

CONTRACT CHANGE ORDER NO. 133
SHEET 6 OF 9

7 REVISED PER ADDENDUM NO. 7 DATED OCTOBER 19, 2009

ALL DIMENSIONS ARE IN MILLIMETERS UNLESS OTHERWISE SHOWN

March 3, 2008
DESIGN OFF DATE

4/13/2012

DESIGN	BY David	DRAWN	Jain
DETAILS	BY van Ryn/Zuschl/Mol	CHECKED	Jain
QUANTITIES	BY Liao	APPROVED	E. Nichol

PREPARED FOR THE STATE OF CALIFORNIA DEPARTMENT OF TRANSPORTATION

Jal Birdy
PROJECT ENGINEER

CU 04251
EA 0120S1

PROJ. NO. 34-0006 L/R
KILOMETER POST 12.8

SAN FRANCISCO OAKLAND BAY BRIDGE
EAST SPAN SEISMIC SAFETY PROJECT

YBI TRANSITION STRUCTURES

EASTBOUND TYPICAL SECTION NO. 6

SHEET 76 OF 209

FILE => \\wnlbfs\LB_Projects\141-06\CADD\TS\Checked Plans\YBITS *1-1002 No. 2_03-05-08 (Final Renamed)\032912 CCO T20\04-0120s1-3

March 29, 2012

DIST.	COUNTY	ROUTE	KILOMETER POST TOTAL PROJECT	SHEET NO.	TOTAL SHEETS
04	SF	80	12.7/13.2	528R2	806

REGISTERED ENGINEER - CIVIL

6-23-08
PLANS APPROVAL DATE

The State of California or its officers or agents shall not be responsible for the accuracy or completeness of electronic copies of this plan sheet.

A.L. ELY
No. 18889
Exp. 6-30-08
CIVIL
STATE OF CALIFORNIA

T.Y. LIN / MOFFATT & NICHOL
TWO HARRISON STREET
SAN FRANCISCO, CA 94105

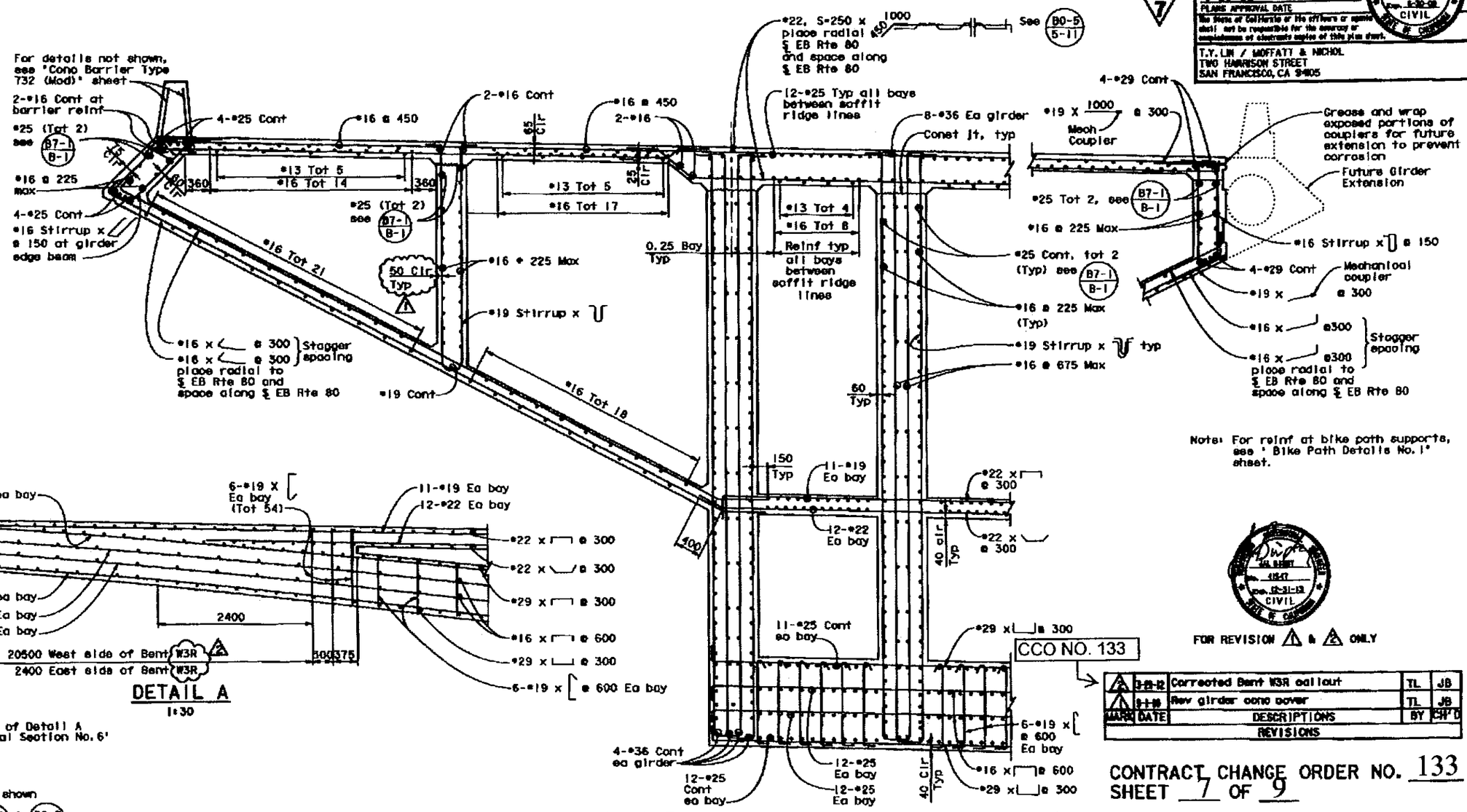

FOR REVISION 1 & 2 ONLY

CCO NO. 133

MARK	DATE	DESCRIPTIONS	BY	CH'D
2	3-29-12	Corrected Bent W3R callout	TL	JB
1	8-1-10	Rev girder cone cover	TL	JB

REVISIONS

CONTRACT CHANGE ORDER NO. 133
SHEET 7 OF 9

7 REVISED PER ADDENDUM NO. 7 DATED OCTOBER 19, 2009

ALL DIMENSIONS ARE IN MILLIMETERS UNLESS OTHERWISE SHOWN

DESIGN CHECKED: JOHN SEIDL, RICHARD CHUNG, JOHN F. CAMPIN — MARK EL-HATAB
SIGN OFF DATE 4/13/2012

DESIGN	Dodd	DRAWING	Jain
DETAILS	van Ryn/Zuzahl/Wat	CHECKED	Jain
QUANTITIES	Liao	SUPERVISED	E. Mahal

PREPARED FOR THE STATE OF CALIFORNIA DEPARTMENT OF TRANSPORTATION

Jal Birdy
PROJECT ENGINEER

CU 04251
EA 012051

BRIDGE NO. 34-0006 L/R
ALIGNMENT POST 12.8

SAN FRANCISCO OAKLAND BAY BRIDGE
EAST SPAN SEISMIC SAFETY PROJECT

YBI TRANSITION STRUCTURES

EASTBOUND TYPICAL SECTION NO. 7

SHEET 79 OF 209

FILE => \\wmlbfs\LB_Projects\4141-06\CADD\TS\Checked Plans\TB1TS #1-100% No. 2_03-03-08 (Final Removed)\032912 CCO T20\04-0120e1-3

March 29, 2012

DIST.	COUNTY	ROUTE	KILOMETER POST TOTAL PROJECT	SHEET NO.	TOTAL SHEETS
04	SF	80	12.7/13.2	652R2	806

REGISTERED ENGINEER - CIVIL

6-23-08
PLANS APPROVAL DATE

The State of California or its officers or agents shall not be responsible for the accuracy or completeness of electronic copies of this plan sheet.

T.Y. LIN / MOFFATT & NICHOL
TWO HARRISON STREET
SAN FRANCISCO, CA 94105

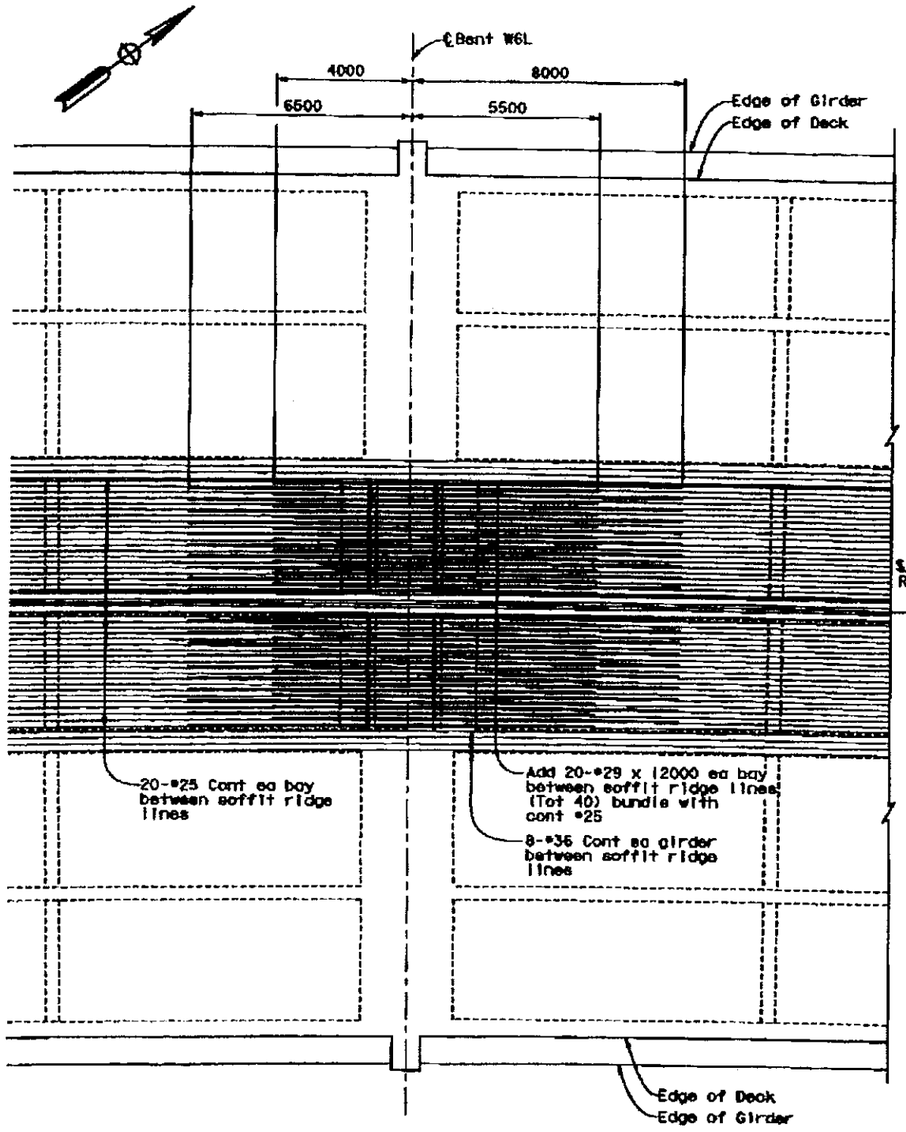

PLAN - WB GIRDER TOP REINFORCEMENT
AT BENT W6L
1:80

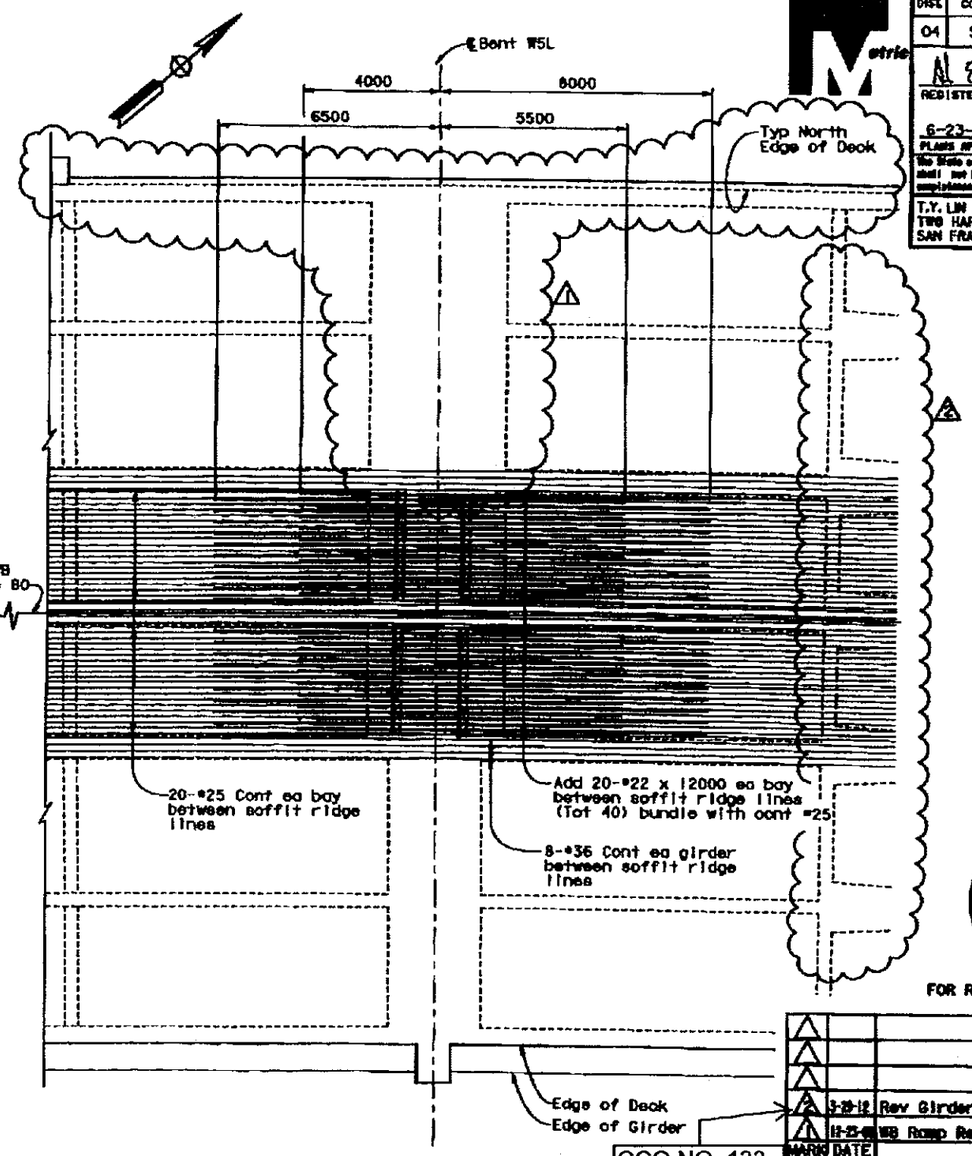

PLAN - WB GIRDER TOP REINFORCEMENT
AT BENT W5L
1:80

FOR REVISION 1 & 2 ONLY

CCO NO. 133

MARK	DATE	DESCRIPTIONS	BY	CH'D
2	3-28-12	Rev Girder flares	TL	AE
1	11-23-08	WB Ramp Revisions	TL	AE

REVISIONS

CONTRACT CHANGE ORDER NO. 133
SHEET 8 OF 9

ALL DIMENSIONS ARE IN MILLIMETERS UNLESS OTHERWISE SHOWN

March 3, 2008
4/13/2012

DESIGN — DETAILS — QUANTITIES
von Ryr/Zuschl/Mol — Jain — E. Nichol

PREPARED FOR THE STATE OF CALIFORNIA DEPARTMENT OF TRANSPORTATION

Joi Birdy
PROJECT ENGINEER

CU 04251
EA 0120S1

34-0006 L/R
12.8

SAN FRANCISCO OAKLAND BAY BRIDGE
EAST SPAN SEISMIC SAFETY PROJECT

YBI TRANSITION STRUCTURES

WB GIRDER TOP REINFORCEMENT NO. 4

SHEET 103 OF 209

FILE => \\mnlbfs\YBI_Projects\4141-06\CADD\TS\Checked Plans\YBITS #1-100X Mon. 2.03-03-08 (Final Renumbered)\032912 CCO T20\04-012081-3

March 29, 2012

DATE PLOTTED => 4/11/2012 TIME PLOTTED => 8:25:03 AM

DIST.	COUNTY	ROUTE	KILOMETER POST TOTAL PROJECT	SHEET NO.	TOTAL SHEETS
04	SF	80	12.7/13.2	585R2	806

REGISTERED ENGINEER - CIVIL

6-23-08
PLANS APPROVAL DATE

The State of California or its officers or agents shall not be responsible for the accuracy or completeness of electronic copies of this plan sheet.

T.Y. LIN / MOFFATT & NICHOL
TWO HARRISON STREET
SAN FRANCISCO, CA 94105

MARK	DATE	DESCRIPTIONS	BY	CH'D
2	3-25-12	Added Barrier Relief	TL	JB
1	10-14-11	Changed Joints at Hinges W7LA & W8RB to Modular Jts	TL	JB

REVISIONS

CONTRACT CHANGE ORDER NO. 133
SHEET 9 OF 9

FOR REVISION 1 & 2 ONLY

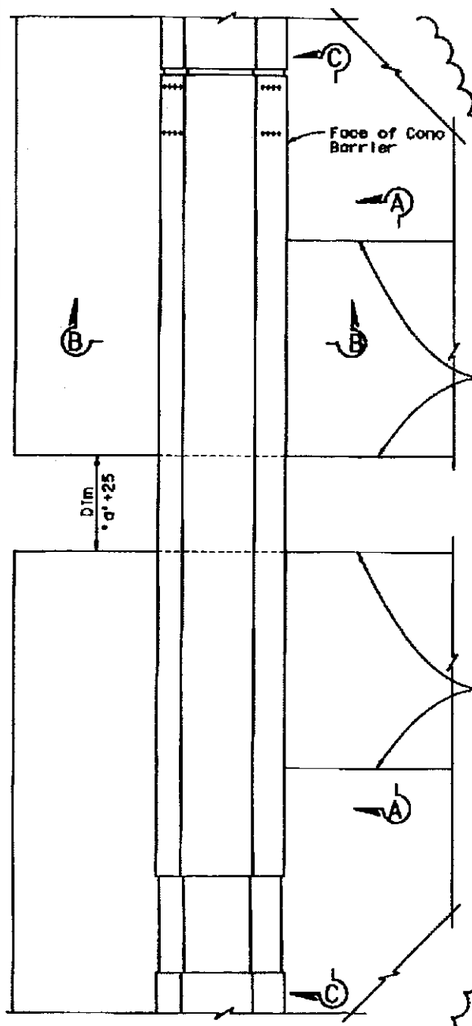

PARTIAL PLAN
No Scale

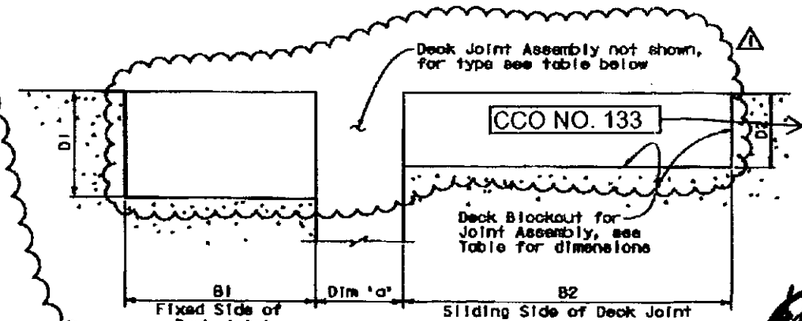

SECTION A-A
No Scale

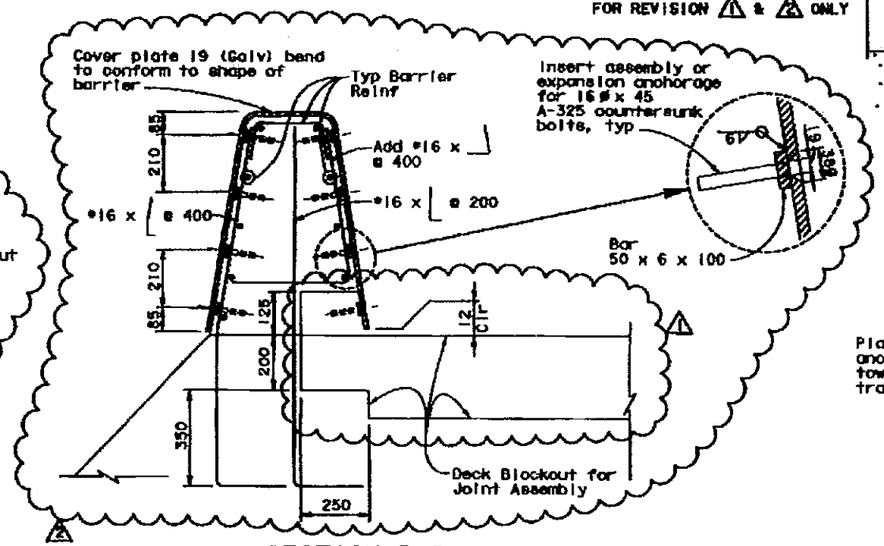

SECTION B-B
(Shown at typ concrete barrier, similar at concrete barrier adjacent to bike path)
No Scale

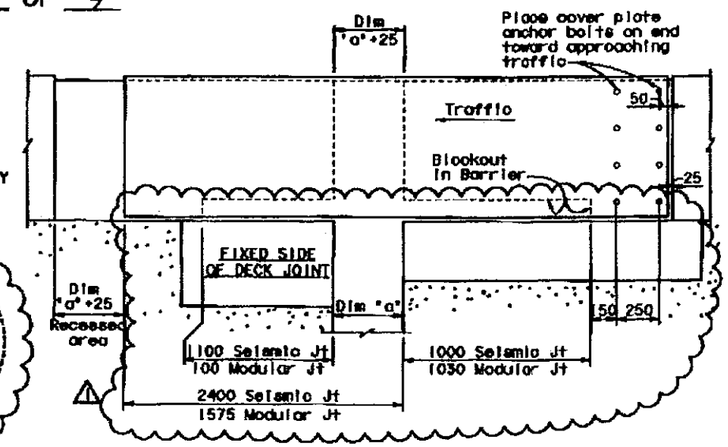

SECTION C-C, TRAFFIC FROM RIGHT
No Scale

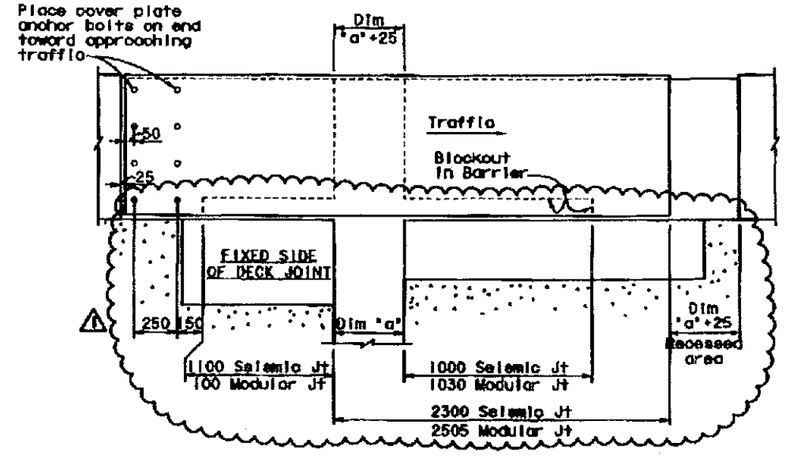

SECTION C-C, TRAFFIC FROM LEFT
No Scale

Deck Joint Information									"a" Dimension *		
Location		Joint Type	Deck Blockout Dimensions (mm)				Movement Rating (MR)	Skew	Winter	Summer	Spring & Fall
			D1	B1	D2	B2					
Westbound	Bent W10AL	Seismic	470	1100	**	**	1000	02°41'32"	356	344	350
	Hinge W7LA	Modular	470	1100	505	1790	1175	05°03'00"	430	380	405
Eastbound	Abut W11R	Seismic	470	1270	300	820	915	0	388	372	380
	Hinge W6RB	Modular	470	1250	505	1790	1140	00°40'47"	381	339	360

NOTE:
For Deck Joint Details at Hinge K, see "Hinge K Closure Details No. 13" sheet.

* Under SEE Seismic conditions, the maximum "a" dimension is expected to be the same as the Movement Rating (MR).

** Varies, see "Seismic Joint" sheets.

ALL DIMENSIONS ARE IN MILLIMETERS UNLESS OTHERWISE SHOWN

DESIGN CHECKED: JOHN DEAL, BERNARD CHAN, JAMES F. CAMPBELL
SIGN OFF DATE 4/13/2012

DESIGN	BY Dodd	CHECKED Am	
DETAILS	BY von Rye/Zuschl/Hol	CHECKED Jain	
QUANTITIES	BY Liao	CHECKED E. Nichol	

PREPARED FOR THE STATE OF CALIFORNIA DEPARTMENT OF TRANSPORTATION

Joi Birdy
PROJECT ENGINEER

DRAWING NO. 34-0806 L/B
KILOMETER POST 12.8

SAN FRANCISCO OAKLAND BAY BRIDGE
EAST SPAN SEISMIC SAFETY PROJECT

YBI TRANSITION STRUCTURES
DECK JOINT DETAILS

CU 04251
EA 012051

SHEET 136 OF 209

March 29, 2012

FILE -> \\mnlbfs\LB_Projects\4141-06\CADD\TS\Checked Plans\YBITS *1-100X No. 2.03-03-08 (Final Renamed)\032912 CCO 120\04-012051-3*

STATE OF CALIFORNIA - DEPARTMENT OF TRANSPORTATION

CONTRACT CHANGE ORDER/MEMORANDUM

DATE: 5/4/2012 Page 1 of 1

TO: Deanna Vilcheck, ACM /	FILE: E.A. 04 - 0120S4
FROM: William Howe, Senior R.E.	CO-RTE-PM SF-80-12.7/13.2
	FED. NO. NO FED AID
CCO#: 133 SUPPLEMENT#: 0 Category Code: CHPT	CONTINGENCY BALANCE (incl. this change) $39,555,854.15
COST: $0.00 INCREASE ☐ DECREASE ☐	HEADQUARTERS APPROVAL REQUIRED? ☐ YES ☑ NO
SUPPLEMENTAL FUNDS PROVIDED: $0.00	IS THIS REQUEST IN ACCORDANCE WITH ENVIRONMENTAL DOCUMENTS? ☑ YES ☐ NO
CCO DESCRIPTION: Reinf.barrier rails @W10AL,11R,W7LA,W6RB	**PROJECT DESCRIPTION:** YBITS-1 (Yerba Buena Island Transition Structures)

Original Contract Time:	Time Adj. This Change:	Previously Approved CCO Time Adjustments:	Percentage Time Adjusted: (including this change)	Total # of Unreconciled Deferred Time CCO(s): (including this change)
1390 Day(s)	0 Day(s)	0 Day(s)	0 %	9

THIS CHANGE ORDER PROVIDES FOR:

Miscellaneous clarifications for deck bottom rebar concrete cover; exterior bay electrical utility blockout locations; parabolic girder haunch at Bent W3R; revised girder dimensions at Bent W5L; and clarification to reinforce barrier rails at Bent W10AL, Abutment 11R, Hinge W7LA and Hinge W6RB.

This change will result in a no cost or credit to the State by reason of this change.

Structure Maintenance concurrence is not required as this change does not affect any controlling items.

No adjustment to contract time is required due to these changes as they do not affect controlling operations.

CONCURRED BY:		
Construction Engineer:	William Howe WBH	Date 04.17.13
Bridge Engineer:	Mehran Ardakanian MA	Date 6.6.13
Project Engineer:	Bob Zandipour, Design	Date 4-18-13
Project Manager:	Ken Terpstra KT	Date 4/25/13
FHWA Rep.:		Date
Environmental:		Date
Other (specify):		Date
Other (specify):		Date
District Prior Approval By:		Date
HQ (Issue Approve) By:		Date
Resident Engineer's Signature: William Howe		Date 04.17.13

ESTIMATE OF COST

	THIS REQUEST	TOTAL TO DATE
ITEMS	$0.00	$0.00
FORCE ACCOUNT	$0.00	$0.00
AGREED PRICE	$0.00	$0.00
ADJUSTMENT	$0.00	$0.00
TOTAL	$0.00	$0.00

FEDERAL PARTICIPATION

☐ PARTICIPATING ☐ PARTICIPATING IN PART ☑ NONE
☐ NON-PARTICIPATING (MAINTENANCE) ☐ NON-PARTICIPATING

FEDERAL SEGREGATION (if more than one Funding Source or P.I.P. type)
☐ CCO FUNDED PER CONTRACT ☐ CCO FUNDED AS FOLLOWS

FEDERAL FUNDING SOURCE	PERCENT

ADA Notice: For individuals with sensory disabilities, this document is available in alternate formats. For information call: (916) 654-6410 or TDD (916) 654-3880 or write Records and Forms Management, 1120 N Street, MS-89, Sacramento, CA 95814.

STATE OF CALIFORNIA - DEPARTMENT OF TRANSPORTATION

CONTRACT CHANGE ORDER

Change Requested by: Engineer

CCO 135	Suppl. No. 0	Contract No. 04 - 0120S4	Road SF-80-12.7/13.2	FED. AID LOC.: NO FED AID

To: **M C M CONSTRUCTION INC**

You are directed to make the following changes from the plans and specifications or do the following described work not included in the plans and specifications for this contract. ***NOTE: This change order is not effective until approved by the Engineer.***

Description of work to be done, estimate of quantities and prices to be paid. (Segregate between additional work at contract price, agreed price and force account.) Unless otherwise stated, rates for rental of equipment cover only such time as equipment is actually used and no allowance will be made for idle time. This last percentage shown is the net accumulated increase or decrease from the original quantity in the Engineer's Estimate.

Extra Work at Lump Sum:

Provide all labor, equipment and materials necessary to clean and paint three each overhead sign structures located at Sta. "W" 66+16, Sta. "W" 69+36, and Sta. "E" 69+63 for the Skyway portion of the new Bay Bridge East Span, as shown on Sheet Nos. 2 and 3 of this change order, in accordance with contract Special Provision Section 10-1.82 , Clean and Paint (Miscellaneous Facilities). The structures have previously been galvanized.

Extra Work at Agreed Lump Sum = $31,698.00

8/14/12

Estimated Cost: Increase ☑ Decrease ☐ **$31,698.00**

By reason of this order the time of completion will be adjusted as follows: 0 days

Submitted by

Signature	Resident Engineer	Date
William Howe	William Howe, Senior R.E.	06-21-12

Approval Recommended by

Signature	Senior Resident Engineer	Date
William Howe	William Howe	06-21-12

Engineer Approval by

Signature	Senior Resident Engineer	Date
William Howe	William Howe	08-14-12

We the undersigned contractor, have given careful consideration to the change proposed and agree, if this proposal is approved, that we will provide all equipment, furnish the materials, except as may otherwise be noted above, and perform all services necessary for the work above specified, and will accept as full payment therefor the prices shown above.

NOTE: If you, the contractor, do not sign acceptance of this order, your attention is directed to the requirements of the specifications as to proceeding with the ordered work and filing a written protest within the time therein specified.

Contractor Acceptance by

Signature	(Print name and title)	Date
	Edmund A. Pucki - Treasurer	8-10-2012

DIST	COUNTY	ROUTE	KILOMETER POST TOTAL PROJECT	SHEET No	TOTAL SHEETS
04	SF, Ala	80	13.9/14.3, 0.0/1.6	~~30~~	~~978~~

Chyi Kang Lu 3-19-01
REGISTERED CIVIL ENGINEER DATE

6-4-01
PLANS APPROVAL DATE

REGISTERED PROFESSIONAL ENG. Chyi Kang Lu No. 18697 Exp. 6/30/01 STATE OF CALIFORNIA

PARSONS BRINCKERHOFF QUADE & DOUGLAS, INC.
1000 BROADWAY, SUITE 250
OAKLAND, CA 94607-4040

The State of California or its officers or agents shall not be responsible for the accuracy or completeness of electronic copies of this plan sheet.

Caltrans now has a web site! To get to the web site, go to: http://www.dot.ca.gov

Caltrans Metric

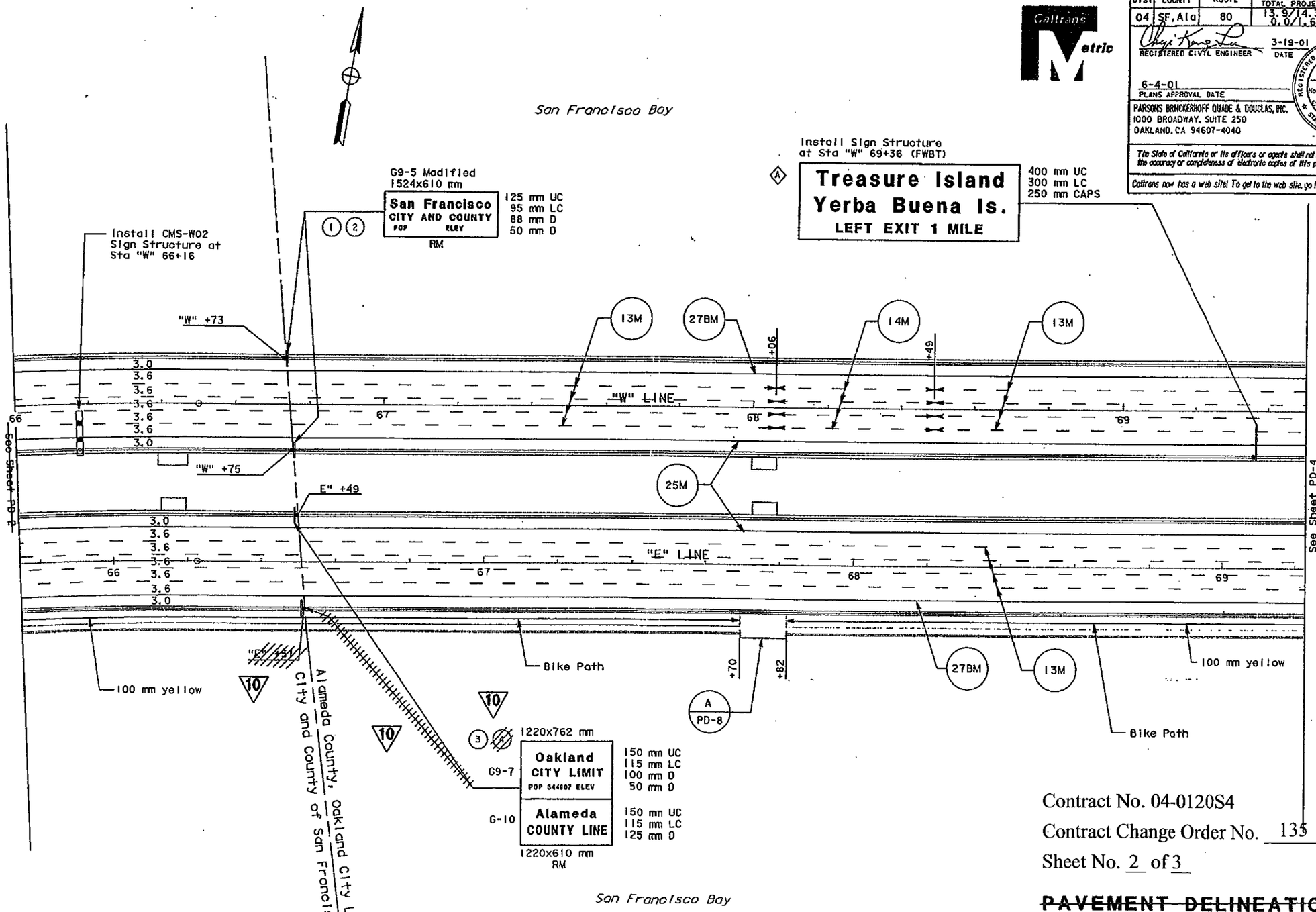

Contract No. 04-0120S4

Contract Change Order No. 135

Sheet No. 2 of 3

~~PAVEMENT DELINEATION AND~~ SIGN PLAN

SCALE: 1:500

~~For Notes, Legend and Abbreviation See Sheet PD-1~~

10 REVISED PER ADDENDUM NO. 10 DATED DECEMBER 5, 2001

This plan is accurate for pavement delineation and signing only.

ALL DIMENSIONS ARE IN METERS UNLESS OTHERWISE SHOWN

S-3A
~~PD-3~~

STATE OF CALIFORNIA - DEPARTMENT OF TRANSPORTATION
Caltrans

DESIGN OVERSIGHT: Bob Zandipour

CALCULATED/DESIGNED BY: RRM
CHECKED BY: CKL

DATE	REVISED BY	DATE	REVISED
1/00		1/00	

PLOTTED => 03-DEC-2001
LAST REVISION 00-00-00

FOR REDUCED PLANS ORIGINAL SCALE IS IN MILLIMETERS 0 20 40 60 80

USERNAME => frkathy
DGN FILE => 0120S4N3.dgn

CO 04251 EA 072021

98B 806

DIST	COUNTY	ROUTE	KILOMETER POST TOTAL PROJECT	SHEET No	TOTAL SHEETS
04	SF, Ala	80	13.9/14.3, 0.0/1.6	~~31~~	~~978~~

REGISTERED CIVIL ENGINEER — DATE 3-19-01

6-4-01
PLANS APPROVAL DATE

REGISTERED PROFESSIONAL ENGINEER — Chyi Kang Lu — No. 18697 — Exp. 6/30/01 — STATE OF CALIFORNIA

PARSONS BRINCKERHOFF QUADE & DOUGLAS, INC.
1000 BROADWAY, SUITE 250
OAKLAND, CA 94607-4040

The State of California or its officers or agents shall not be responsible for the accuracy or completeness of electronic copies of this plan sheet.

Caltrans now has a web site! To get to the web site, go to: http://www.dot.ca.gov

Caltrans Metric

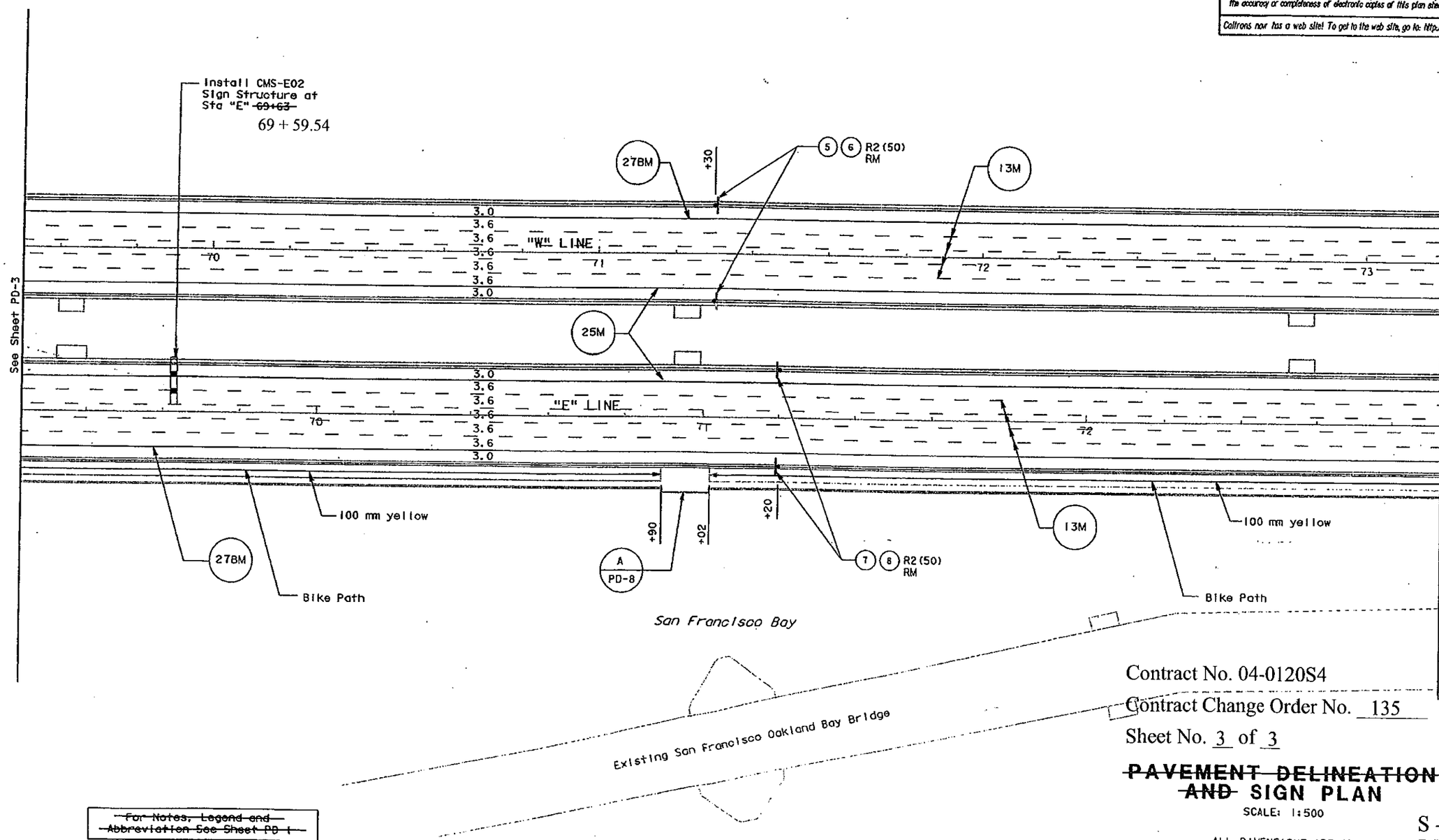

Contract No. 04-0120S4

Contract Change Order No. 135

Sheet No. 3 of 3

~~PAVEMENT DELINEATION AND~~ SIGN PLAN

SCALE: 1:500

~~For Notes, Legend and Abbreviation See Sheet PD 1~~

This plan is accurate for pavement delineation and signing only.

ALL DIMENSIONS ARE IN METERS UNLESS OTHERWISE SHOWN

S - 3B ~~PD 4~~

FOR REDUCED PLANS ORIGINAL SCALE IS IN MILLIMETERS 0 20 40 60 80

USERNAME => trrens

STATE OF CALIFORNIA - DEPARTMENT OF TRANSPORTATION — Caltrans

DESIGN OV Bob Zandipour

CALCULATED/DESIGNED BY | RRM | DATE 1/00 | REVISED BY
CHECKED BY | CKL | DATE 1/00 | DATE REVISED

LAST REVISION 00-00-00 | DATE PLOTTED => 09-JUN-2001 | TIME PLOTTED => 10:34

STATE OF CALIFORNIA - DEPARTMENT OF TRANSPORTATION

CONTRACT CHANGE ORDER MEMORANDUM

DATE: 6/12/2012 Page 1 of 1

TO: Deanna Vilcheck, ACM /	FILE: E.A. 04 - 0120S4
FROM: William Howe, Senior R.E.	CO-RTE-PM SF-80-12.7/13.2
	FED. NO. NO FED AID
CCO#: 135 SUPPLEMENT#: 0 Category Code: CHPP	CONTINGENCY BALANCE (incl. this change) $63,046,388.00
COST: $31,698.00 INCREASE ☑ DECREASE ☐	HEADQUARTERS APPROVAL REQUIRED? ☐ YES ☑ NO
SUPPLEMENTAL FUNDS PROVIDED: $0.00	IS THIS REQUEST IN ACCORDANCE WITH ENVIRONMENTAL DOCUMENTS? ☑ YES ☐ NO
CCO DESCRIPTION: Paint Skyway Overhead Sign Structures	**PROJECT DESCRIPTION:** YBITS-1 (Yerba Buena Island Transition Structures)

Original Contract Time:	Time Adj. This Change:	Previously Approved CCO Time Adjustments:	Percentage Time Adjusted: (including this change)	Total # of Unreconciled Deferred Time CCO(s): (including this change)
1390 Day(s)	0 Day(s)	0 Day(s)	0 %	9

THIS CHANGE ORDER PROVIDES FOR:

This change order will provide to clean and paint three each overhead sign structures for the Skyway portion of the new Bay Bridge East Span. During construction of the Skyway portion of the Bay Bridge East Span (Contract 04-012024, from 2002 through 2008), 3 overhead sign structures were erected using galvanized steel, but were not painted. Subsequently, the architect has determined that these should be painted as well, in order to match the other structural steel on the new bridge span.

Compensation for this additional work shall be paid as Extra Work at Agreed Lump Sum of $31,698.00, which can be financed from the project's contingency fund. The detailed cost analysis for this change order s is on file in the project records.

No adjustment in contract time of completion is warranted as this change does not affect the controlling operation.

This change was requested by Bob Zandipour, Toll Bridge Design, on May 8, 2012.

Maintenance concurrence from Lina Ellis will be obtained.

CONCURRED BY:		
Construction Engineer:	William Howe	Date 06·21·12
Bridge Engineer:	Mehran Ardakanian MA	Date 6·14·12
Project Engineer:	Bob Zandipour, Design	Date 6/25/12
Project Manager:	Ken Terpstra	Date 6/21/12
FHWA Rep.:		Date
Environmental:		Date
Other (specify):	Lina Ellis, Str. Mtce.	Date 6-26-12
Other (specify):		Date
District Prior Approval By:		Date
HQ (Issue Approve) By:		Date
Resident Engineer's Signature:	William Howe	Date 06·21·12

ESTIMATE OF COST

	THIS REQUEST	TOTAL TO DATE
ITEMS	$0.00	$0.00
FORCE ACCOUNT	$0.00	$0.00
AGREED PRICE	$31,698.00	$31,698.00
ADJUSTMENT	$0.00	$0.00
TOTAL	$31,698.00	$31,698.00

FEDERAL PARTICIPATION

☐ PARTICIPATING ☐ PARTICIPATING IN PART ☑ NONE
☐ NON-PARTICIPATING (MAINTENANCE) ☐ NON-PARTICIPATING

FEDERAL SEGREGATION (if more than one Funding Source or P.I.P. type)
☐ CCO FUNDED PER CONTRACT ☐ CCO FUNDED AS FOLLOWS

FEDERAL FUNDING SOURCE PERCENT

ADA Notice: For individuals with sensory disabilities, this document is available in alternate formats. For information call: (916) 654-6410 or TDD (916) 654-3880 or write Records and Forms Management, 1120 N Street, MS-89, Sacramento, CA 95814.

STATE OF CALIFORNIA - DEPARTMENT OF TRANSPORTATION

CONTRACT CHANGE ORDER

Change Requested by: Engineer

CCO 135	Suppl. No. 1	Contract No. 04 - 0120S4	Road SF-80-12.7/13.2	FED. AID LOC.: NO FED AID

To: **M C M CONSTRUCTION INC**

You are directed to make the following changes from the plans and specifications or do the following described work not included in the plans and specifications for this contract. ***NOTE: This change order is not effective until approved by the Engineer.***

Description of work to be done, estimate of quantities and prices to be paid. (Segregate between additional work at contract price, agreed price and force account.) Unless otherwise stated, rates for rental of equipment cover only such time as equipment is actually used and no allowance will be made for idle time. This last percentage shown is the net accumulated increase or decrease from the original quantity in the Engineer's Estimate.

Provide the following additional work to the scope of cleaning and painting sign structures of Contract Change Order No. 135 S0 as follows:

Extra Work at Force Account:

As directed by the Engineer, provide labor, equipment and materials to clean and repair the existing zinc coating at rusted or unevenly coated areas, and other additional work as directed.

This work will be paid for in accordance with Section 5-1.17, "Force Account Payment", of the Special Provisions and Section 4-1.03D, "Extra Work", of the Standard Specifications.

Extra Work at Force Account = $10,000.00

Extra Work at Lump Sum:

Provide all labor, equipment and materials necessary to:

1) Demobilize crew and remobilize operation one time.

2) Update the Paint Quality Control Plan (PQCP) to incorporate the mitigation (including removal and repair) of zinc salts and rusted or unevenly coated areas; and the adhesion tests specified in paragraph 3 below.

3) Prior to performing the work, apply a minimum of three test patches (approximately 230 mm x 230 mm each) at locations on the signs as designated by the Engineer. The test patches will then be tested by the Engineer according to ASTM D 3359.

Extra Work at Agreed Lump Sum = $4,494.00

Estimated Cost: Increase ☑ Decrease ☐ **$14,494.00**

By reason of this order the time of completion will be adjusted as follows: 0 days

Submitted by

Signature	Resident Engineer	Date
William Howe	William Howe, Senior R.E.	09-05-12

Approval Recommended by

Signature	Senior Resident Engineer	Date
William Howe	William Howe	09-05-12

Engineer Approval by

Signature	Senior Resident Engineer	Date
William Howe	William Howe	12-04-12

We the undersigned contractor, have given careful consideration to the change proposed and agree, if this proposal is approved, that we will provide all equipment, furnish the materials, except as may otherwise be noted above, and perform all services necessary for the work above specified, and will accept as full payment therefor the prices shown above.

NOTE: If you, the contractor, do not sign acceptance of this order, your attention is directed to the requirements of the specifications as to proceeding with the ordered work and filing a written protest within the time therein specified.

Contractor Acceptance by

Signature	(Print name and title)	Date
	EDMUNDO A. VUCHI, TREASURER	11/30/12

9/5/12

STATE OF CALIFORNIA - DEPARTMENT OF TRANSPORTATION

CONTRACT CHANGE ORDER MEMORANDUM

DATE: 9/4/2012 Page 1 of 1

TO: Deanna Vilcheck, ACM / DV	FILE: E.A. 04 - 0120S4
FROM: William Howe, Senior R.E.	CO-RTE-PM SF-80-12.7/13.2
	FED. NO. NO FED AID
CCO#: 135 SUPPLEMENT#: 1 Category Code: CHPP	CONTINGENCY BALANCE (incl. this change) $55,067,546.15
COST: $14,494.00 INCREASE ☑ DECREASE ☐	HEADQUARTERS APPROVAL REQUIRED? ☐ YES ☑ NO
SUPPLEMENTAL FUNDS PROVIDED: $0.00	IS THIS REQUEST IN ACCORDANCE WITH ENVIRONMENTAL DOCUMENTS? ☑ YES ☐ NO
CCO DESCRIPTION: Paint Skyway OH Sign Structures	**PROJECT DESCRIPTION:** YBITS-1 (Yerba Buena Island Transition Structures)

Original Contract Time:	Time Adj. This Change:	Previously Approved CCO Time Adjustments:	Percentage Time Adjusted: (including this change)	Total # of Unreconciled Deferred Time CCO(s): (including this change)
1390 Day(s)	0 Day(s)	0 Day(s)	0 %	9

THIS CHANGE ORDER PROVIDES FOR:

CCO 135 S0 provided for cleaning and painting three each overhead sign structures for the Skyway portion of the new Bay Bridge East Span. The Contractor sent a crew out to start the work, but the existing surfaces were discovered to have some areas that were showing rust through the galvanized surface. The Engineer has determined that the Paint Quality Control Plan (PQCP) should be amended to address this problem by providing for cleaning and the repair of the existing coated surface. This CCO supplement will include the amendment to the PQCP, and the field cost to clean and repair the existing zinc coating at rusted or unevenly coated areas.

Compensation for this additional work shall be paid as Extra Work at Agreed Lump Sum of $4,494.00 for the scope that is clearly delineated; and $10,000.00 at Extra Work at Force Account for the field cleaning and repair as directed by the Engineer, for a total CCO cost of $14,494.00, which can be financed from the project's contingency fund. The detailed cost analysis for this change order is on file in the project records.

No adjustment in contract time of completion is warranted as this change does not affect the controlling operation.

This change was requested by Bob Zandipour, Toll Bridge Design, on May 8, 2012.

Maintenance concurrence will be obtained from Lina Ellis, Structures Maintenance.

CONCURRED BY:		
Construction Engineer:	William Howe	Date 09-05-12
Bridge Engineer:	Mehran Ardakanian MA.	Date 9/5/12
Project Engineer:	Bob Zandipour, Design	Date 9-5-12
Project Manager:	Ken Terpstra KT	Date 9/6/12
FHWA Rep.:		Date
Environmental:		Date
Other (specify):	Lina Ellis, Str. Maintenance	Date 9-5-12
Other (specify):		Date
District Prior Approval By:		Date
HQ (Issue Approve) By:		Date
Resident Engineer's Signature: William Howe		Date 09.05-12

ESTIMATE OF COST

	THIS REQUEST	TOTAL TO DATE
ITEMS	$0.00	$0.00
FORCE ACCOUNT	$10,000.00	$10,000.00
AGREED PRICE	$4,494.00	$36,192.00
ADJUSTMENT	$0.00	$0.00
TOTAL	$14,494.00	$46,192.00

FEDERAL PARTICIPATION

☐ PARTICIPATING ☐ PARTICIPATING IN PART ☑ NONE
☐ NON-PARTICIPATING (MAINTENANCE) ☐ NON-PARTICIPATING

FEDERAL SEGREGATION (if more than one Funding Source or P.I.P. type)
☐ CCO FUNDED PER CONTRACT ☐ CCO FUNDED AS FOLLOWS

FEDERAL FUNDING SOURCE	PERCENT

ADA Notice: For individuals with sensory disabilities, this document is available in alternate formats. For information call (916) 654-6410 or TDD (916) 654-3880 or write Records and Forms Management, 1120 N Street, MS-69, Sacramento, CA 95814.

CONTRACT CHANGE ORDER

Change Requested by: Engineer

CCO 137	Suppl. No. 0	Contract No 04 - 0120S4	Road SF-80-12.7/13.2	FED. AID LOC.: NO FED AID

To: **M C M CONSTRUCTION INC**

You are directed to make the following changes from the plans and specifications or do the following described work not included in the plans and specifications for this contract. ***NOTE: This change order is not effective until approved by the Engineer.***

Description of work to be done, estimate of quantities and prices to be paid. (Segregate between additional work at contract price, agreed price and force account.) Unless otherwise stated, rates for rental of equipment cover only such time as equipment is actually used and no allowance will be made for idle time. This last percentage shown is the net accumulated increase or decrease from the original quantity in the Engineer's Estimate.

Adjustment of Compensation at Lump Sum:

Make the following revisions to Eastbound Structure:

1) Drainage Line Interferences:

Furnish and install additional reinforcement, steel sleeves and other materials for blockout placement adjustments in the reinforced concrete stems and diaphragms to accommodate drainage lines rerouted to avoid field discovered interferences as directed by the Engineer.

This added work includes labor, equipment and materials required to adjust drainage line placement, revise rebar placement, install steel sleeves and other formwork at blockouts as specified by Engineer.

2) Stem to Deck Rebar:

In area of Bent Cap W4R, furnish and install additional lap-spliced L-bar reinforcement at stem to deck reinforcement to meet required reinforcement length in locations specified by Engineer.

This added work includes labor, equipment and materials to expose and prepare reinforcement for lap splicing L-shaped bent bars including drilling and chipping back concrete, straightening and cleaning existing reinforcement, and lap-splicing additional reinforcement.

3) Cut and Coupling Rebar:

Cut and coupling of rebar as required to allow the Bidwell to proceed smoothly through the light pole foundation area.

This added work includes all labor, equipment and materials to cut rebar and install couplers at light pole foundation areas or other similar locations specified by Engineer.

For this work, the Contractor shall be compensated at an Agreed Lump Sum of $48,189.00, which constitutes full and final compensation, including all markups, for all additional costs incurred.

Adjustment of Compensations at Agreed Lump Sum = $48,189.00

STATE OF CALIFORNIA - DEPARTMENT OF TRANSPORTATION

CONTRACT CHANGE ORDER

Change Requested by: Engineer

CCO 137	Suppl. No. 0	Contract No. 04 - 0120S4	Road SF-80-12.7/13.2	FED. AID LOC.: NO FED AID

Gill Kellogg 2-1-13

Estimated Cost: Increase ☑ Decrease ☐ $48,189.00

By reason of this order the time of completion will be adjusted as follows: 0 days

Submitted by

Signature	Resident Engineer	Date
William Howe	William Howe, Senior R.E.	01·31·13

Approval Recommended by

Signature	Senior Resident Engineer	Date
William Howe	William Howe	01·31·13

Engineer Approval

Signature	Senior Resident Engineer	Date
William Howe	William Howe	06-26-13

We the undersigned contractor, have given careful consideration to the change proposed and agree, if this proposal is approved, that we will provide all equipment, furnish the materials, except as may otherwise be noted above, and perform all services necessary for the work above specified, and will accept as full payment therefor the prices shown above.

NOTE: If you, the contractor, do not sign acceptance of this order, your attention is directed to the requirements of the specifications as to proceeding with the ordered work and filing a written protest within the time therein specified.

Contractor Acceptance

Signature	(Print name and title)	Date
	Edmund A Pucci - Treasurer	6-25-2013

STATE OF CALIFORNIA - DEPARTMENT OF TRANSPORTATION

CONTRACT CHANGE ORDER MEMORANDUM

TO: Deanna Vilcheck, ACM / DV	FILE: E.A. 04 - 0120S4 CO-RTE-PM SF-80-12.7/13.2 FED. NO. NO FED AID
FROM: William Howe, Senior R.E.	
CCO#: 137 SUPPLEMENT#: 0 Category Code: CHPT	CONTINGENCY BALANCE (incl. this change) $30,270,396.15
COST: $48,189.00 INCREASE ☑ DECREASE ☐	HEADQUARTERS APPROVAL REQUIRED? ☐ YES ☑ NO
SUPPLEMENTAL FUNDS PROVIDED: $0.00	IS THIS REQUEST IN ACCORDANCE WITH ENVIRONMENTAL DOCUMENTS? ☑ YES ☐ NO
CCO DESCRIPTION: EB Frame 2 Rebar & Wall Reinf.	**PROJECT DESCRIPTION:** YBITS-1 (Yerba Buena Island Transition Structures)

Original Contract Time:	Time Adj. This Change:	Previously Approved CCO Time Adjustments:	Percentage Time Adjusted: (including this change)	Total # of Unreconciled Deferred Time CCO(s): (including this change)
1390 Day(s)	0 Day(s)	0 Day(s)	0 %	9

THIS CHANGE ORDER PROVIDES FOR:

Three reinforcement situations were encountered and resolution was determined as follows:

1) Drainage Line Interferences:

During field installation, several interferences were discovered between the drainage pipes and steel reinforcement. To resolve the interferences, the Engineer directed the Contractor to reroute the drainage lines and to add or move blockouts in the reinforced concrete stems and diaphragms. The blockout revisions required additional and revised rebar placement in some locations, and the addition of steel sleeves at the blockouts in other locations.

This change compensates the Contractor for all additional costs incurred to adjust drain lines, place forms and blockouts for drain line penetration as required in the locations specified by Engineer.

2) Stem to Deck Rebar:

During the construction staging of rebar and concrete installation for the superstructure, Caltrans provided survey grades to the Contractor.

After the stem rebar was placed and concrete poured, Caltrans surveyors found that the protruding horizontal legs of several L-shaped bent bars in the area of Bent Cap 4 were too low for the deck grade. In order to fix this problem, the Engineer directed the Contractor to re-bend the bars to vertical (so the horizontal bend was eliminated), then add a lap-spliced L-bar at each location. To meet the required splice lap length for the added reinforcement, drilling and chipping of concrete in the respective area was required.

This change compensates the Contractor for all additional costs incurred to chip and drill concrete, procure and splice additional reinforcement as required to meet required reinforcement length in the locations specified by Engineer.

3) Cut and Coupling Rebar:

Cut and coupling of rebar as required to allow the Bidwell to proceed smoothly through the light pole foundation area.

This change compensates the Contractor for all additional costs incurred to cut bars and install couplers at light pole foundation areas or other similar locations specified by Engineer.

For these three items above, the Contractor shall be compensated an Agreed Lump Sum of $48,189.00, which constitutes full and final compensation, including all markups, for all additional costs incurred.

A cost analysis is on file. The funding for this CCO will come from the contingency funds for the project.

No adjustment of contract time is warranted, as the work will not affect the controlling operation.

Maintenance concurrence will be obtained from Lina Ellis, Structures Maintenance.

ADA Notice: For individuals with sensory disabilities, this document is available in alternate formats. For information call: (916) 654-6410 or TDD (916) 654-3880 or write Records and Forms Management, 1120 N Street, MS-89, Sacramento, CA 95814.

CONCURRED BY:		
Construction Engineer:	William Howe	Date 01.31.13
Bridge Engineer:	Mehran Ardakanian	Date 2-1-13
Project Engineer:	Bob Zandipour, Design	Date 1-31-13
Project Manager:	Ken Terpstra	Date 2/1/13
FHWA Rep.:		Date
Environmental:		Date
Other (specify):	Lina Ellis, Str. Maintenance	Date 2-1-13
Other (specify):		Date
District Prior Approval By:		Date
HQ (Issue Approve) By:		Date
Resident Engineer's Signature: William Howe		Date 01.31.13

ESTIMATE OF COST

	THIS REQUEST	TOTAL TO DATE
ITEMS	$0.00	$0.00
FORCE ACCOUNT	$0.00	$0.00
AGREED PRICE	$0.00	$0.00
ADJUSTMENT	$48,189.00	$48,189.00
TOTAL	$48,189.00	$48,189.00

FEDERAL PARTICIPATION

☐ PARTICIPATING ☐ PARTICIPATING IN PART ☑ NONE
☐ NON-PARTICIPATING (MAINTENANCE) ☐ NON-PARTICIPATING

FEDERAL SEGREGATION (if more than one Funding Source or P.I.P. type)
☐ CCO FUNDED PER CONTRACT ☐ CCO FUNDED AS FOLLOWS

FEDERAL FUNDING SOURCE	PERCENT

ADA Notice: For individuals with sensory disabilities, this document is available in alternate formats. For information call: (916) 654-6410 or TDD (916) 654-3880 or write Records and Forms Management, 1120 N Street, MS-89, Sacramento, CA 95814.

CONTRACT CHANGE ORDER

Change Requested by: Engineer

CCO 138	Suppl. No. 0	Contract No 04 - 0120S4	Road SF-80-12.7/13.2	FED. AID LOC.: NO FED AID

To: **M C M CONSTRUCTION INC**

You are directed to make the following changes from the plans and specifications or do the following described work not included in the plans and specifications for this contract. ***NOTE: This change order is not effective until approved by the Engineer.***

Description of work to be done, estimate of quantities and prices to be paid. (Segregate between additional work at contract price, agreed price and force account.) Unless otherwise stated, rates for rental of equipment cover only such time as equipment is actually used and no allowance will be made for idle time. This last percentage shown is the net accumulated increase or decrease from the original quantity in the Engineer's Estimate.

Construct modifications to the Bay Bridge YBI Transition Structure Skyway Service Platforms per attached drawings (Sheets 3 through 6 of this change order, Sheet Nos. 790YSR1, 790ZSR1, 790AARS1 and 790ABS, as directed by the Engineer. Work includes installing two (2) each turnbuckle, cable and bracket systems and one (1) each chain and sign system per platform at each of the existing Type I platforms at Skyway Piers E3W, E4W, E6W, E7W, E8W, E9W, E10W, E11W, E12W, E13W, E14W, E15W, E3E, E4E, E5E, E6E, E8E, E9E, E10E, E11E, E12E, E13E, E14E, E15E and Type II platforms at Skyway Piers E5W and E7E. Work also includes handrail repairs at 12 each platforms as shown on drawing No. 790ABS (Sheet No. 6 of 6 of this change order).

Extra Work at Force Account:

Perform any additional work not already included in the scope, including any patching of concrete, and as described under extra work at lump sum, as directed by the Engineer.

This work will be paid for as extra work as provided in Section 5-1.17, Force Account Payment, of the Special Provisions, and Section 4-1.03D, Extra Work, of the Standard Specifications.

Estimated Cost of Extra Work at Force Account = $20,000.00

Extra Work at Lump Sum:

Provide labor, equipment, materials to provide and install platform modifications as shown on the drawings and described herein. Work will include fabrication, installation of turnbuckle and cable system, including all parts shown and any necessary bolts and hardware to complete the entire assembly at each location. The chains shown on Detail 5 of Sheet No. 790AASR1 shall be secured to guardrail posts by a 12 mm snap hook connected to a 13 x 58 weldless drop forged eyebolt with integral shank, hex nut, 2 flat washers and lock washer-peen threads at each point of connection to the railing (4 per platform). The Contractor shall drill a 15 mm diameter hole in the guardrail post to allow installation of each eyebolt set. For the sign detail, Note 1 should be deleted on the view "Looking from the platform"; this side of the sign should only say "BEFORE LEAVING: LOCK THIS SIGN BACK IN PLACE".

For this work, the Contractor will be paid the sum of $809,270.00. This sum constitutes full and complete compensation, including all markups for this change.

Extra Work at Agreed Lump Sum = $809,270.00

The cost of patching the concrete as required at locations shown on Detail 4 on Sheet No. 5 of 6 of this change order, is included in the Agreed Lump Sum price.

Detail 1 on attached drawings shows a bolted connection to the existing framing. The bolt holes exist, but locations and sizes should be verified.

Detail 2 on attached drawings shows drilling holes through the concrete barrier rail; the Contractor is cautioned that there are electrical conduits (with wires) in the barrier rail that must be avoided. The Contractor shall scan the existing concrete barrier for existing conduit and rebar interference prior to coring holes.

Detail 4 shows galvanized steel cable with ultimate tensile strength capacity of 125 KN; the Contractor shall submit cable details for approval prior to procurement. After galvanizing, the cable shall be coated with a white plastic coating of polypropelene, polyethylene or polyvinyl chloride with nominal thickness of 1.5 mm. An additional layer of plastic, such as a boot or heat-shrink tape, shall be applied to the cable at any location where it bears or rubs against a fitting, such as a thimble or clamp. The boot or tape shall extend past the fitting at least 25 mm.

CONTRACT CHANGE ORDER

Change Requested by: Engineer

CCO 138	Suppl. No. 0	Contract No. 04 - 0120S4	Road SF-80-12.7/13.2	FED. AID LOC.: NO FED AID

All steel pieces are to be hot dipped galvanized. This agreed price includes removing galvanzied finish where required to complete cutting and welding, and installing cold galvanizing spray coating of all areas where galvanized finish has been disturbed or removed after completion of welding.

The price excludes the cost of any Stormwater Pollution Prevention (SWPP) measures, such as SWPPP amendments and reports, and appropriate Best Management Practices (BMPs), which will be paid for under a separate change order.

The Department will provide one (1) lock and key set for each location to secure the galvanized steel coil chain, as shown on Detail 5 of the Platform Modification Details No. 3 sheet, for each pier.

04/01/2013

Estimated Cost: Increase ☑ Decrease ☐ $829,270.00

By reason of this order the time of completion will be adjusted as follows: 0 days

Submitted by:

Signature	Resident Engineer	Date
William Howe	William Howe, Senior R.E.	03-28-13

Approval Recommended by:

Signature	Area Construction Manager	Date
Deanna Vilcheck	Deanna Vilcheck	3/28/13

Engineer Approval:

Signature	Area Construction Manager	Date
Deanna Vilcheck	Deanna Vilcheck	5/13/13

We the undersigned contractor, have given careful consideration to the change proposed and agree, if this proposal is approved, that we will provide all equipment, furnish the materials, except as may otherwise be noted above, and perform all services necessary for the work above specified, and will accept as full payment therefor the prices shown above.

NOTE: If you, the contractor, do not sign acceptance of this order, your attention is directed to the requirements of the specifications as to proceeding with the ordered work and filing a written protest within the time therein specified.

Contractor Acceptance by:

Signature	(Print name and title)	Date
[illegible]	Edmundo A. Ruch - Treasurer	5-9-2013

DIST	COUNTY	ROUTE	KILOMETER POST TOTAL PROJECT	SHEET NO	TOTAL SHEETS
04	SF/Ala	80	12.7/13.2	790 YSR1	806

REGISTERED CIVIL ENGINEER DATE

PLANS APPROVAL DATE

The State of California or its officers or agents shall not be responsible for the accuracy or completeness of electronic copies of this plan sheet.

REGISTERED PROFESSIONAL ENGINEER Muthanna S. Omran No. 61637 Exp. 06-30-13 CIVIL STATE OF CALIFORNIA

MARK	DATE		DES	CHK	DET
4		DETAILS OF NEW CONNECTIONS			
3		COMBINED ALL CABLES TO EDGES OF PLATFORM			
2		INSTALL NEW WEIGHT LIMIT SIGN			
1		FOR EACH SERVICE PLATFORM: INSTALL NEW 25 DIA "U" BAR AT 4 LOCATIONS			

REGISTERED CIVIL ENGINEER: Muthanna S. Omran DATE: 05-10-2012

CONTRACT CHANGE ORDER NO. 138
SHEET 3 OF 6

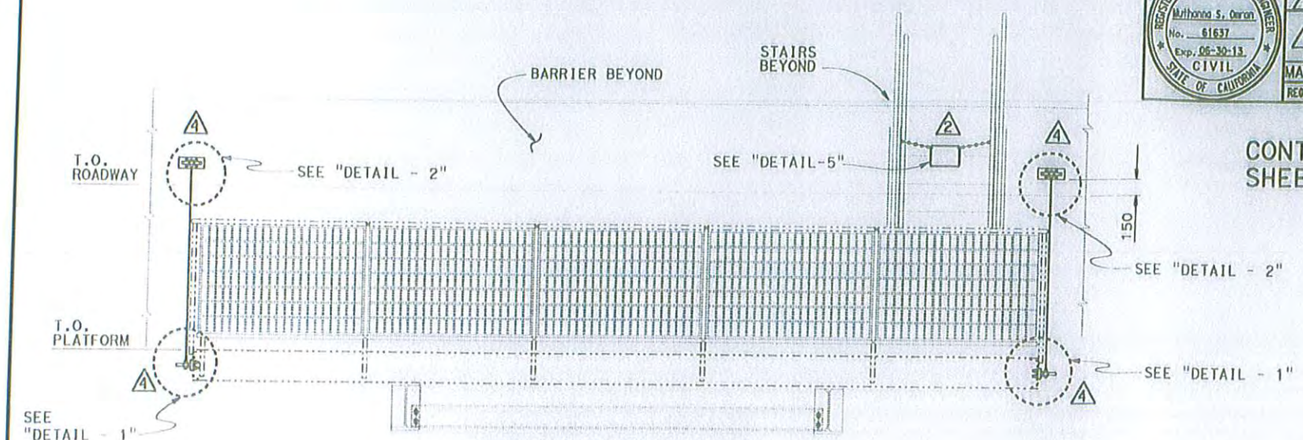

MIRROR ELEVATION
1:25

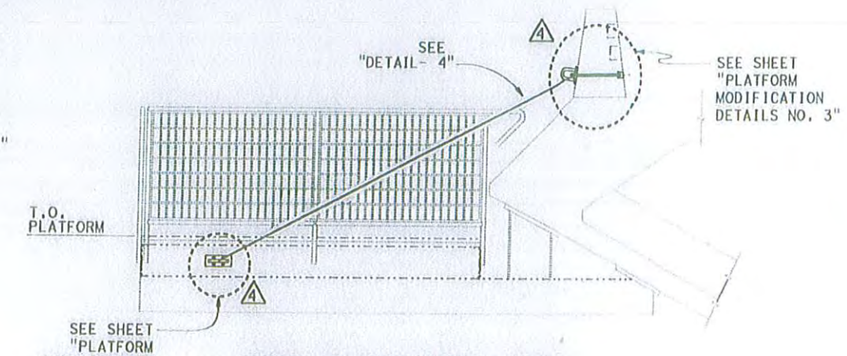

SIDE ELEVATION VIEW LOOKING AT LEFT SIDE
1:25

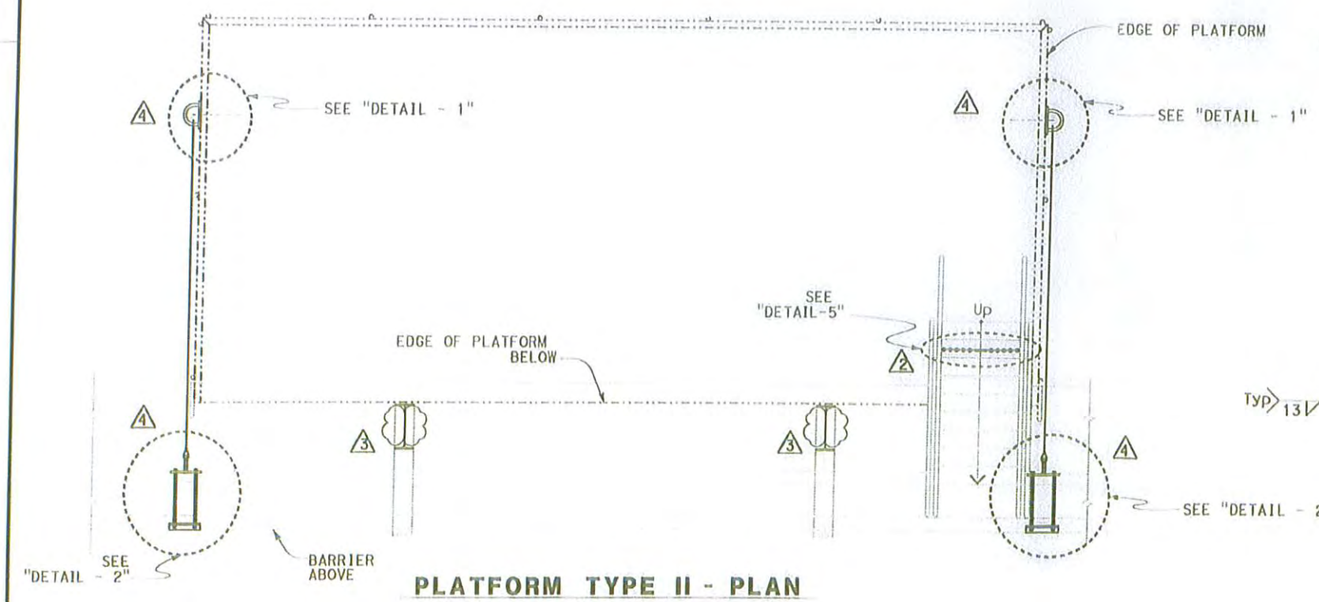

PLATFORM TYPE II - PLAN
1:25

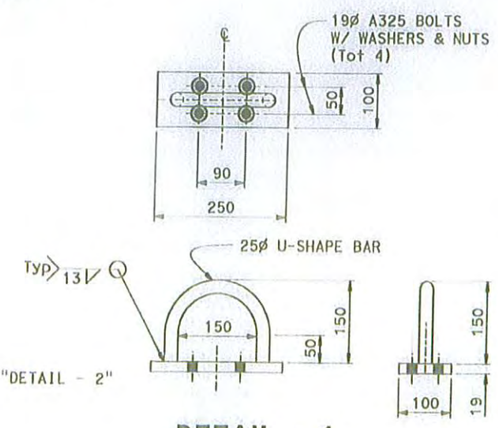

DETAIL - 1
1:5

LEGEND:

Existing
New

NOTES:

1. The contractor shall verify all controlling field dimensions before ordering or fabricating any material
2. All Service Platforms of the SKYWAY structure of SFOBB are included in this work
3. See "PLATFORM MODIFICATION DETAILS NO. 2" sheet for "DETAIL-2"
4. See "PLATFORM MODIFICATION DETAILS NO. 3" sheet for details not shown

Caltrans Metric

ALL DIMENSIONS ARE IN MILLIMETERS UNLESS OTHERWISE SHOWN

ORIGINAL SCALE IN MILLIMETERS FOR REDUCED PLANS 0 10 20 30 40 50 60 70 80 90 100

	BY	CHECKED
DESIGN	Muthanna Omran	John Peterson
DETAILS	Min Yu	John Peterson
QUANTITIES		

STATE OF CALIFORNIA
DEPARTMENT OF TRANSPORTATION

DIVISION OF ENGINEERING SERVICES
STRUCTURE DESIGN
DESIGN BRANCH 16

BRIDGE NO. 34-0006
KILOMETER POST 13.9/14.3, 0.0/1.6

CU 04251
EA 0120S1

DISREGARD PRINTS BEARING EARLIER REVISION DATES

REVISION DATES

SHEET 1 OF 3

FILE => REV(4)_m_platforms_01.dgn

STRUCTURES DESIGN DETAIL SHEET (METRIC) (REV.03-17-04)

YBI TRANSITION STRUCTURE
SKYWAY SERVICE PLATFORMS
PLATFORM MODIFICATION DETAILS NO. 1

USERNAME => 613499 DATE PLOTTED => 14-NOV-2012 TIME PLOTTED => 14:19

DIST	COUNTY	ROUTE	KILOMETER POST TOTAL PROJECT	SHEET No.	TOTAL SHEETS
04	SF/Ala	80	12.7/13.2	790 2SR1	806

REGISTERED CIVIL ENGINEER DATE

PLANS APPROVAL DATE

The State of California or its officers or agents shall not be responsible for the accuracy or completeness of electronic copies of this plan sheet.

REGISTERED PROFESSIONAL ENGINEER Muthanna S. Omran No. 61637 Exp. 06-30-13 CIVIL STATE OF CALIFORNIA

MARK	DATE	REVISION(S) DESCRIPTIONS	DES	CHK	DET
4		DETAILS OF NEW CONNECTIONS			
3		COMBINED ALL CABLES TO EDGES OF PLATFORM			
2		INSTALL NEW WEIGHT LIMIT SIGN			
1		FOR EACH SERVICE PLATFORM: INSTALL NEW 25 DIA "U" BAR AT 4 LOCATIONS			

REGISTERED CIVIL ENGINEER: Muthanna S. Omran DATE: 05-10-2012

CONTRACT CHANGE ORDER NO. 138
SHEET 4 OF 6

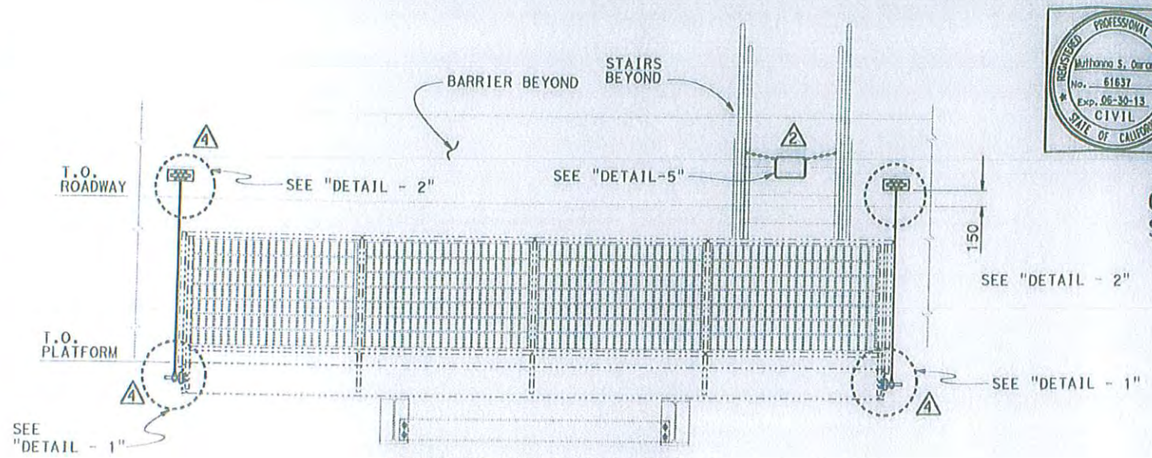

MIRROR ELEVATION
1:25

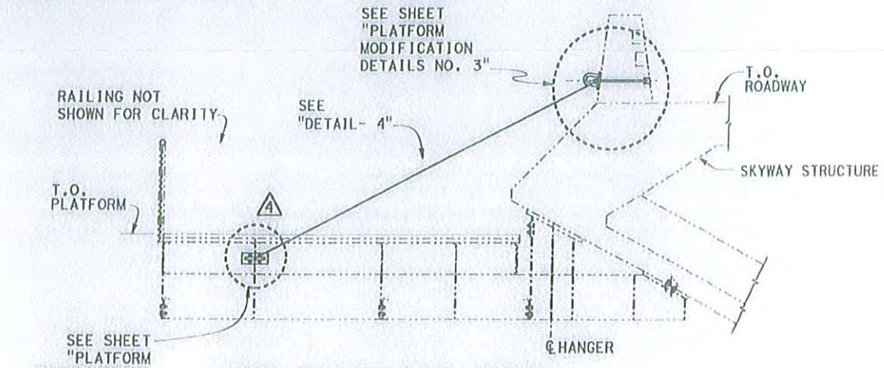

SIDE ELEVATION VIEW LOOKING AT LEFT SIDE
1:25

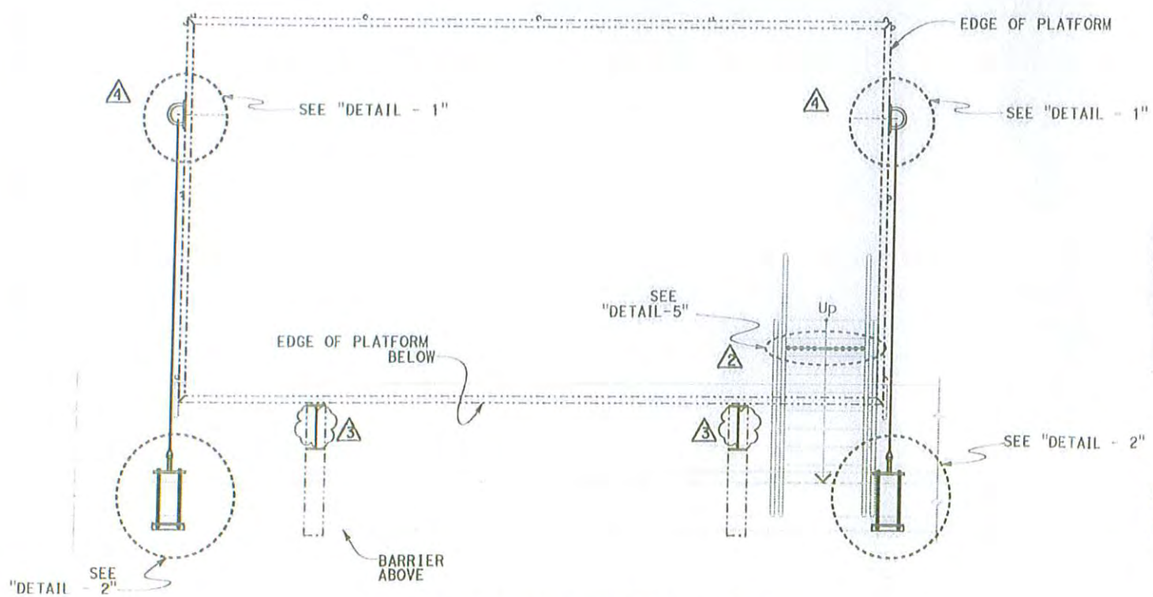

PLATFORM TYPE I - PLAN
1:25

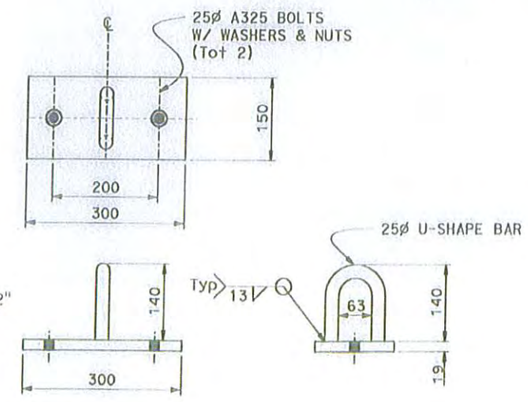

DETAIL - 2
1:5

LEGEND:

Existing

New

NOTES:

1. The contractor shall verify all controlling field dimensions before ordering or fabricating any material
2. All Service Platforms of the SKYWAY structure of SFOBB are included in this work
3. Location to be decided onsite by the Engineer
4. See "PLATFORM MODIFICATION DETAILS NO. 1" sheet for "DETAIL-1"
5. See "PLATFORM MODIFICATION DETAILS NO. 3" sheet for details not shown

Caltrans Metric

	BY	CHECKED
DESIGN	Muthanna Omran	John Peterson
DETAILS	Min Yu	John Peterson
QUANTITIES		

STATE OF CALIFORNIA
DEPARTMENT OF TRANSPORTATION

DIVISION OF ENGINEERING SERVICES
STRUCTURE DESIGN
DESIGN BRANCH 16

BRIDGE NO. 34-0006
KILOMETER POST 13.9/14.3, 0.0/1.6

YBI TRANSITION STRUCTURE
SKYWAY SERVICE PLATFORMS
PLATFORM MODIFICATION DETAILS NO. 2

ALL DIMENSIONS ARE IN MILLIMETERS UNLESS OTHERWISE SHOWN

ORIGINAL SCALE IN MILLIMETERS FOR REDUCED PLANS 0 10 20 30 40 50 60 70 80 90 100

CU 04251
EA 0120S1

DISREGARD PRINTS BEARING EARLIER REVISION DATES

REVISION DATES

SHEET 2 OF 3

FILE => REV(4)_m_platforms_02.dgn

STRUCTURES DESIGN DETAIL SHEET (METRIC) (REV.03-17-04)

USERNAME => s134959 DATE PLOTTED => 14-NOV-2012 TIME PLOTTED => 14:20

MARK	DATE	REVISION(S) DESCRIPTIONS	DES	CHK	DET
4		DETAILS OF NEW CONNECTIONS			
3		COMBINED ALL CABLES TO EDGES OF PLATFORM			
2		INSTALL NEW WEIGHT LIMIT SIGN			
1		FOR EACH SERVICE PLATFORM: INSTALL NEW 25 DIA "U" BAR AT 4 LOCATIONS			

REGISTERED CIVIL ENGINEER: Muthanna S. Omran DATE: 05-10-2012

REGISTERED PROFESSIONAL ENGINEER Muthanna S. Omran No. 61637 Exp. 06-30-13 CIVIL STATE OF CALIFORNIA

DIST	COUNTY	ROUTE	KILOMETER POST TOTAL PROJECT	SHEET No	TOTAL SHEETS
04	SF/Ala	80	12.7/13.2	290 AASHTO	806

REGISTERED CIVIL ENGINEER DATE

PLANS APPROVAL DATE

The State of California or its officers or agents shall not be responsible for the accuracy or completeness of electronic copies of this plan sheet.

REGISTERED PROFESSIONAL ENGINEER No. Exp. CIVIL STATE OF CALIFORNIA

CONTRACT CHANGE ORDER NO. 138
SHEET 5 OF 6

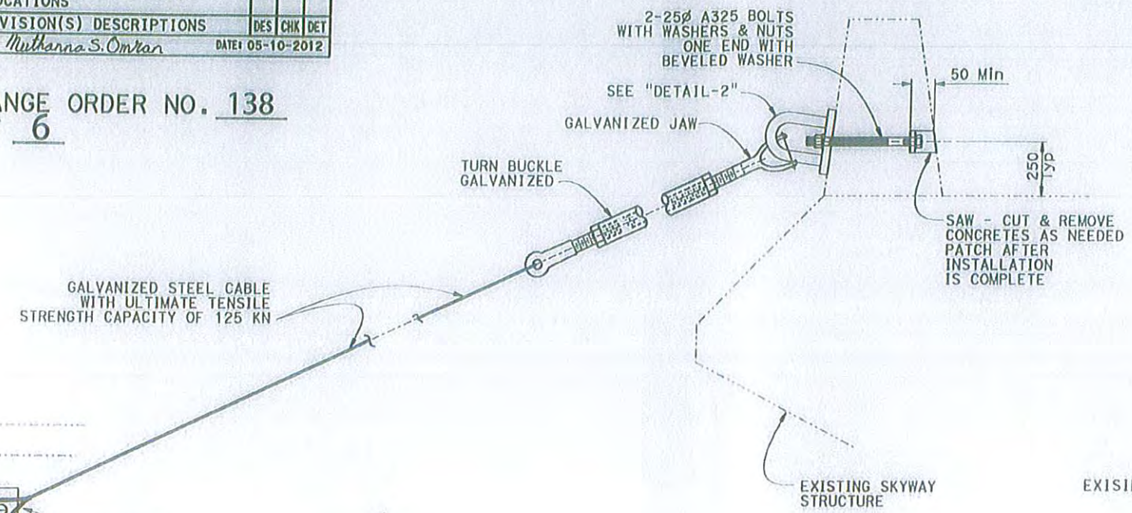

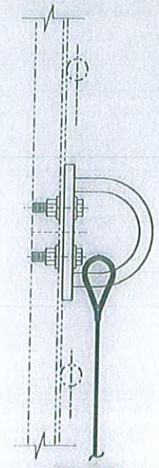

PLAN

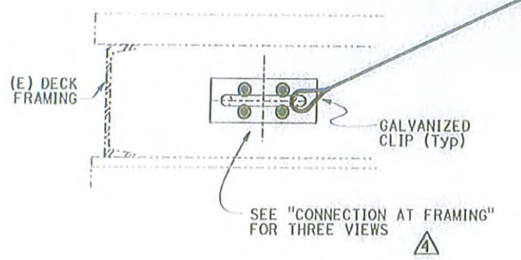

DETAIL - 4
N. T. S

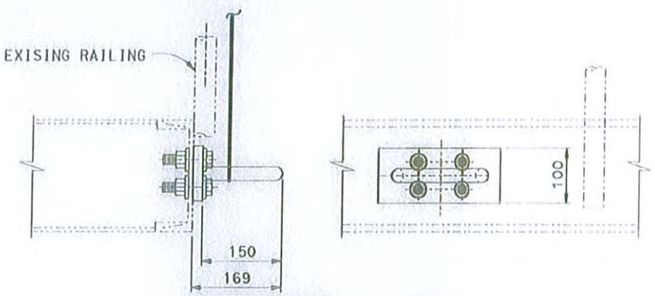

ELEVATION SIDE VIEW

CONNECTION AT FRAMING
1:5

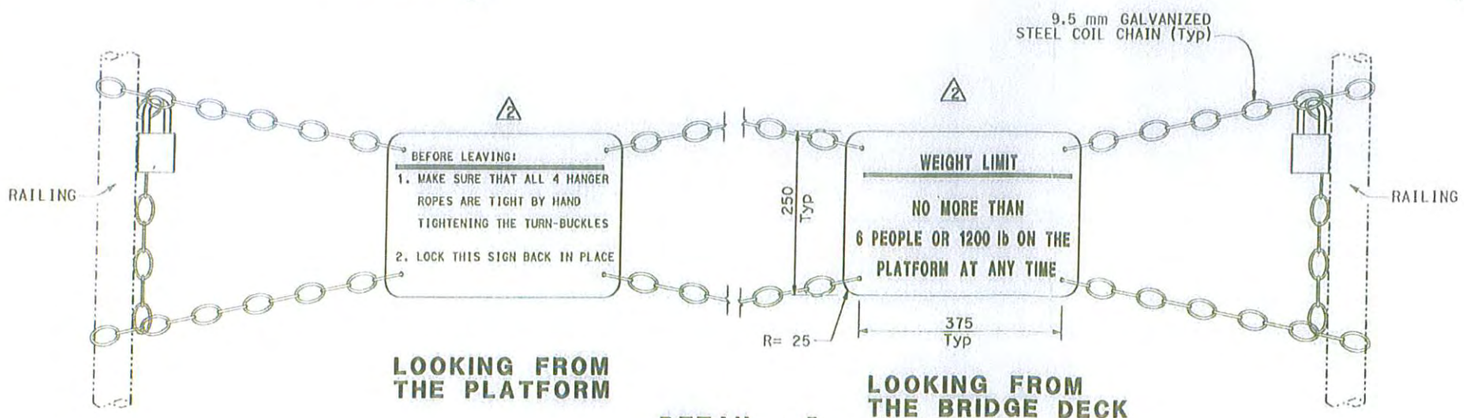

LOOKING FROM THE PLATFORM

LOOKING FROM THE BRIDGE DECK

DETAIL - 5
N. T. S

NOTE:

All new steel to be Hot-dipped Galvanized after fabrication

DESIGN	BY Muthanna Omran	CHECKED John Peterson	
DETAILS	BY Min Yu	CHECKED John Peterson	
QUANTITIES	BY	CHECKED	

STATE OF CALIFORNIA
DEPARTMENT OF TRANSPORTATION

DIVISION OF ENGINEERING SERVICES
STRUCTURE DESIGN
DESIGN BRANCH 16

BRIDGE NO. 34-0006
KILOMETER POST 13.9/14.3, 0.0/1.6

YBI TRANSITION STRUCTURE
SKYWAY SERVICE PLATFORMS
PLATFORM MODIFICATION DETAILS NO. 3

ALL DIMENSIONS ARE IN MILLIMETERS UNLESS OTHERWISE SHOWN

ORIGINAL SCALE IN MILLIMETERS FOR REDUCED PLANS 0 10 20 30 40 50 60 70 80 90 100

CU 04251
EA 0120S1

DISREGARD PRINTS BEARING EARLIER REVISION DATES

REVISION DATES

SHEET 3 OF 3

FILE => REV(4)_m_platforms_03.dgn

STRUCTURES DESIGN DETAIL SHEET (METRIC) (REV.03-17-04)

USERNAME => s134959 DATE PLOTTED => 14-NOV-2012 TIME PLOTTED => 14:20

DIST	COUNTY	ROUTE	KILOMETER POST TOTAL PROJECT	SHEET No	TOTAL SHEETS
04	SF/Alo	80	12.7/13.2	790ABS	806

Muthanna S. Omran 10-31-11
REGISTERED CIVIL ENGINEER DATE

PLANS APPROVAL DATE

The State of California or its officers or agents shall not be responsible for the accuracy or completeness of electronic copies of this plan sheet.

REGISTERED PROFESSIONAL ENGINEER
MUTHANNA S. OMRAN
No. 61637
Exp. 06-30-13
CIVIL
STATE OF CALIFORNIA

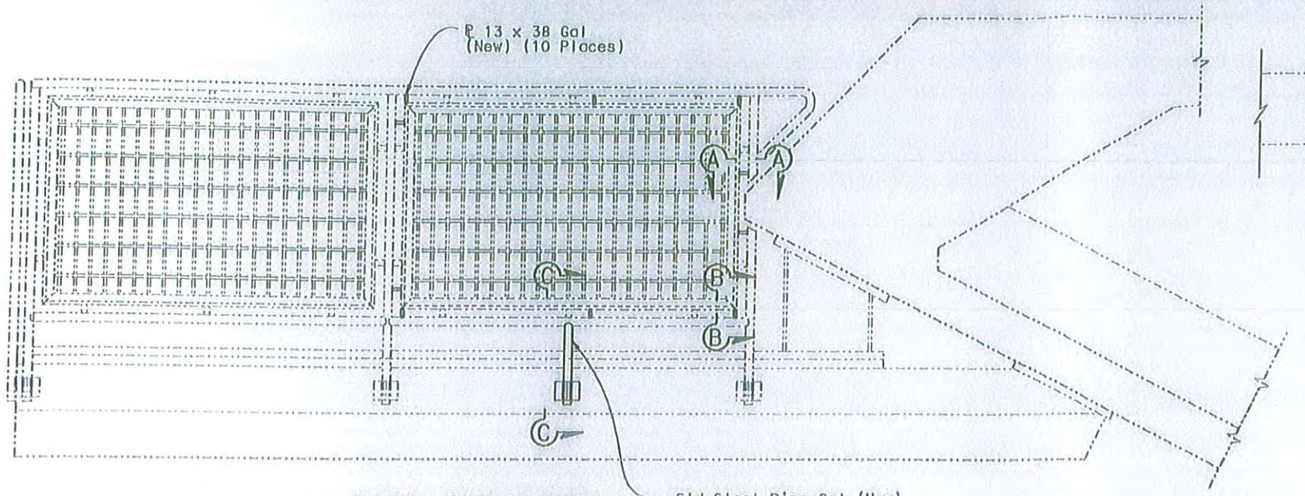

PART ELEVATION
NTS

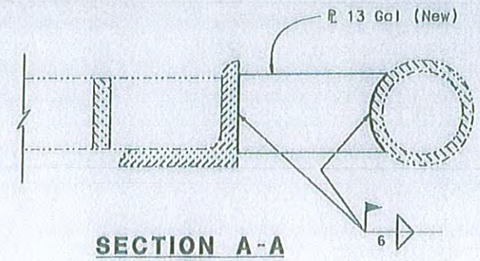

SECTION A-A
NTS

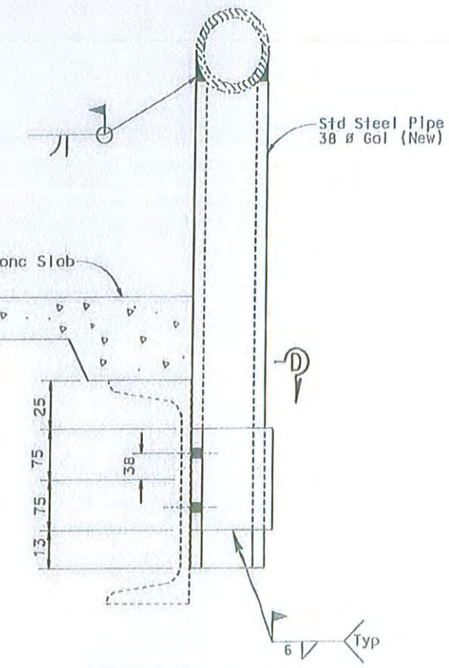

SECTION C-C
NTS

NOTES:

Perform this repair on the following service platforms:

- 9E (Pier E3E)-both posts
- 10E (Pier E4E)-East post only
- 12E (Pier E6E)-both posts
- 12W (Pier E6W)-both posts
- 13E (Pier E7E)-both posts
- 13W (Pier E7W)-both posts
- 14E (Pier E8E)-both posts
- 14W (Pier E8W)-both posts
- 15W (Pier E9W)-both posts
- 16W (Pier E10W)-both posts
- 17W (Pier E11W)-West post only
- 20W (Pier E14W)-both posts

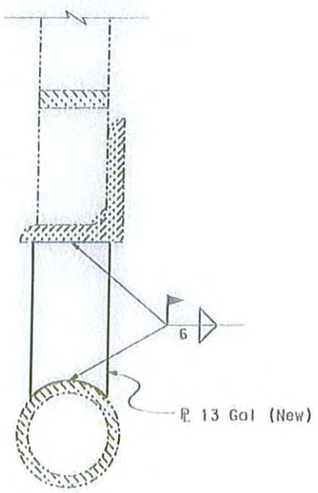

SECTION B-B
NTS

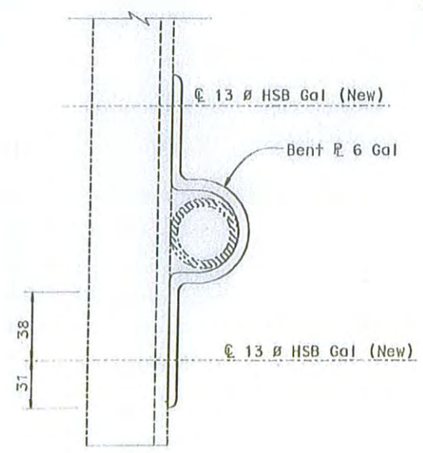

SECTION D-D
NTS

CONTRACT CHANGE ORDER NO. 138
SHEET 6 OF 6

Caltrans Metric	DESIGN	BY Pao Tsan Wang	CHECKED Muthanna Omran	STATE OF CALIFORNIA DEPARTMENT OF TRANSPORTATION	DIVISION OF ENGINEERING SERVICES STRUCTURE DESIGN DESIGN BRANCH 16	BRIDGE NO. 34-0006L/R; KILOMETER POST 12.8	STRUCTURE - EASTBOUND SERVICE PLATFORM HAND RAIL REPAIR
	DETAILS	BY Pao Tsan Wang	CHECKED Muthanna Omran				
	QUANTITIES	BY	CHECKED				
ALL DIMENSIONS ARE IN MILLIMETERS UNLESS OTHERWISE SHOWN	ORIGINAL SCALE IN MILLIMETERS FOR REDUCED PLANS 0 10 20 30 40 50 60 70 80 90 100				CU 04251 EA 0120F1 FILE => Service platforms 04.cco	DISREGARD PRINTS BEARING EARLIER REVISION DATES	REVISION DATES; SHEET 4 OF 4

STRUCTURES DESIGN DETAIL SHEET (METRIC) (REV.03-17-04)

TIME PLOTTED => 16:11
DATE PLOTTED => 22-AUG-2012

STATE OF CALIFORNIA - DEPARTMENT OF TRANSPORTATION

CONTRACT CHANGE ORDER MEMORANDUM

TO: Deanna Vilcheck, ACM / DV for DV	FILE: E.A. 04 - 0120S4 CO-RTE-PM SF-80-12.7/13.2 FED. NO. NO FED AID
FROM: William Howe, Senior R.E.	
CCO#: 138 SUPPLEMENT#: 0 Category Code: CHPT	CONTINGENCY BALANCE (incl. this change) $43,186,950.15
COST: $829,270.00 INCREASE ☑ DECREASE ☐	HEADQUARTERS APPROVAL REQUIRED? ☑ YES ☐ NO
SUPPLEMENTAL FUNDS PROVIDED: $0.00	IS THIS REQUEST IN ACCORDANCE WITH ENVIRONMENTAL DOCUMENTS? ☑ YES ☐ NO
CCO DESCRIPTION: Skyway Service Platform Bracing	**PROJECT DESCRIPTION:** YBITS-1 (Yerba Buena Island Transition Structures)

Original Contract Time:	Time Adj. This Change:	Previously Approved CCO Time Adjustments:	Percentage Time Adjusted: (including this change)	Total # of Unreconciled Deferred Time CCO(s): (including this change)
1390 Day(s)	0 Day(s)	0 Day(s)	0 %	9

THIS CHANGE ORDER PROVIDES FOR:

This change order provides funds to compensate the Contractor for fabrication and installation of cable support systems for each of the 26 Skyway service platforms.

The service platforms were installed as part of the Bay Bridge East span Skyway (Contract 04-012024, completed in 2008). The Skyway consists of two parallel 2.1 km long superstructures (Eastbound and Westbound), made up of precast segmental concrete box girders supported by 28 piers. As part of the electrical system, at 24 of the piers, there are service platforms that cantilever out from the superstructure to hold electrical equipment. The platforms each consist of a fabricated steel framework that supports a reinforced concrete deck, and range from approximately 3 to 4 meters long x 1.5 m wide. The Engineer has determined that the design should be enhanced by adding cable supports that attach the deck of the service platforms to embeds in the reinforced concrete superstructure, and requested that this work be performed as a CCO to the YBITS contract. The design also includes security enhancements, including a chain with sign for each of the service platforms.

Most, but not all, of the steel embeds required for the bracing systems were installed during the construction of the Skyway; there will be an additional $50,000.00 in force account funds for completing any missing embeds. This work will be paid for on an actual cost basis as provided in Section 5-1.17, Force Account Payment, of the Special Provisions, and Section 4-1.03D, Extra Work, of the Standard Specifications.

This CCO provides funding for an Agreed Price of $809,270.00, plus an estimated force account cost of $20,000.00, for a total CCO cost of $829,270.00. This will be funded from the project's contingency fund. A cost analysis is on file.

No adjustment of contract time is warranted, as this change will not affect the controlling operation.

This Change Order was requested by Bob Zandipour, Senior Transportation Engineer, Toll Bridge Design, on May 17, 2012.

Maintenance concurrence will be obtained from Lina Ellis, Structures Maintenance.

/A Notice: For individuals with sensory disabilities, this document is available in alternate formats. For information call: (916) 654-6410 or TDD (916) 654-3880 or write ecords and Forms Management, 1120 N Street, MS-89, Sacramento, CA 95814.

CONCURRED BY:		
Construction Engineer:	William Howe	Date 03-26-13
Bridge Engineer:	Mehran Ardakanian	Date 04/01/13
Project Engineer:	Bob Zandipour, Design	Date 3/27/13
Project Manager:	Ken Terpstra	Date 3/27/13
FHWA Rep.:		Date
Environmental:		Date
Other (specify):	Lina Ellis, Str. Maintenance	Date 3-29-13
Other (specify):	Clive Endress, Architect	Date 9/6/12
District Prior Approval By:		Date
HQ (Issue Approve) By:	Larry Salhaney	Date 4-2-13
Resident Engineer's Signature:		Date
William Howe		03-26-13

ESTIMATE OF COST

	THIS REQUEST	TOTAL TO DATE
ITEMS	$0.00	$0.00
FORCE ACCOUNT	$20,000.00	$20,000.00
AGREED PRICE	$809,270.00	$809,270.00
ADJUSTMENT	$0.00	$0.00
TOTAL	$829,270.00	$829,270.00

FEDERAL PARTICIPATION

☐ PARTICIPATING ☐ PARTICIPATING IN PART ☑ NONE
☐ NON-PARTICIPATING (MAINTENANCE) ☐ NON-PARTICIPATING

FEDERAL SEGREGATION (if more than one Funding Source or P.I.P. type)
☐ CCO FUNDED PER CONTRACT ☐ CCO FUNDED AS FOLLOWS

FEDERAL FUNDING SOURCE	PERCENT

ADA Notice: For individuals with sensory disabilities, this document is available in alternate formats. For information call: (916) 654-6410 or TDD (916) 654-3880 or write Records and Forms Management, 1120 N Street, MS-89, Sacramento, CA 95814.

STATE OF CALIFORNIA - DEPARTMENT OF TRANSPORTATION

CONTRACT CHANGE ORDER

Change Requested by: Engineer

CCO 140	Suppl. No. 0	Contract No 04 - 0120S4	Road SF-80-12.7/13.2	FED. AID LOC.: NO FED AID

To: **M C M CONSTRUCTION INC**

You are directed to make the following changes from the plans and specifications or do the following described work not included in the plans and specifications for this contract. ***NOTE: This change order is not effective until approved by the Engineer.***

Description of work to be done, estimate of quantities and prices to be paid. (Segregate between additional work at contract price, agreed price and force account.) Unless otherwise stated, rates for rental of equipment cover only such time as equipment is actually used and no allowance will be made for idle time. This last percentage shown is the net accumulated increase or decrease from the original quantity in the Engineer's Estimate.

Extra Work at Force Account:

As directed by the Engineer, provide labor, equipment and materials to provide measures to encourage cormorant nesting on the platforms located at the Bay Bridge East Span Skyway (Eastbound and Westbound).

This work will be paid for in accordance with Section 5-1.17, "Force Account Payment", of the Special Provisions and Section 4-1.03D, "Extra Work", of the Standard Specifications.

Estimated Cost of Extra Work at Force Account = $50,000.00

Estimated Cost: Increase ☑ Decrease ☐ **$50,000.00**

By reason of this order the time of completion will be adjusted as follows: 0 days

Submitted by

Signature	Resident Engineer	Date
William Howe	William Howe, Senior R.E.	05.29.12

Approval Recommended by

Signature	Senior Resident Engineer	Date
William Howe	William Howe	05.29.12

Engineer Approval by

Signature	Senior Resident Engineer	Date
William Howe	William Howe	06-06-12

We the undersigned contractor, have given careful consideration to the change proposed and agree, if this proposal is approved, that we will provide all equipment, furnish the materials, except as may otherwise be noted above, and perform all services necessary for the work above specified, and will accept as full payment therefor the prices shown above.

NOTE: If you, the contractor, do not sign acceptance of this order, your attention is directed to the requirements of the specifications as to proceeding with the ordered work and filing a written protest within the time therein specified.

Contractor Acceptance by

Signature	(Print name and title)	Date
[signature]	JAMES A. CARTER, PRESIDENT	6/4/12

STATE OF CALIFORNIA - DEPARTMENT OF TRANSPORTATION

CONTRACT CHANGE ORDER MEMORANDUM

DATE: 5/29/2012 Page 1 of 1

TO: Deanna Vilcheck, ACM /	FILE: E.A. 04 - 0120S4
FROM: William Howe, Senior R.E.	CO-RTE-PM SF-80-12.7/13.2
	FED. NO. NO FED AID
CCO#: 140 SUPPLEMENT#: 0 Category Code: CXXX	CONTINGENCY BALANCE (incl. this change) $68,543,820.00
COST: $50,000.00 INCREASE ☑ DECREASE ☐	HEADQUARTERS APPROVAL REQUIRED? ☐ YES ☑ NO
SUPPLEMENTAL FUNDS PROVIDED: $0.00	IS THIS REQUEST IN ACCORDANCE WITH ENVIRONMENTAL DOCUMENTS? ☑ YES ☐ NO
CCO DESCRIPTION: Cormorant Nesting Platform Enticements	**PROJECT DESCRIPTION:** YBITS-1 (Yerba Buena Island Transition Structures)

Original Contract Time:	Time Adj. This Change:	Previously Approved CCO Time Adjustments:	Percentage Time Adjusted: (including this change)	Total # of Unreconciled Deferred Time CCO(s): (including this change)
1390 Day(s)	0 Day(s)	0 Day(s)	0 %	9

THIS CHANGE ORDER PROVIDES FOR:

Provide labor, equipment and materials to provide measures to encourage cormorant nesting at the platforms located at the Bay Bridge East Span Skyway (Eastbound and Westbound).

This project, the Yerba Buena Island Transition Structure (YBITS), provides for the construction of two bridges which will connect eastbound and westbound traffic on the new east span of the San Francisco Oakland Bay Bridge (SFOBB) to the existing Yerba Buena Island (YBI) tunnel. The structures are comprised of concrete box girder bridges each approximately 50 meters high and 450 meters in length. As part of the permit requirements for construction of the new East Span, steel platforms have been constructed as a nesting site for the cormorant colony population which currently nests on the exiting East Span, which is to be demolished upon the completion of the new bridge. Cormorants are a migratory fish-eating bird. To date (the Skyway construction contract was accepted in 2008), none of the cormorants have moved to their new home, they still nest on the old bridge. In order to encourage some of the cormorants to relocate prior to the demolition of the old bridge, the Department's environmental group has determined that it would be beneficial to implement a number of measures to attract the cormorants to the new location. Potential measures will include building nesting boxes that will be set on the platforms; filling the nesting boxes with nest building materials; putting attractive scents and using recorded bird calls at the platform locations.

The work shall be performed as Extra Work at Force Account at an estimated cost of $50,000.00 which will be financed from the contract's contingency funds. A cost analysis is on file.

This CCO was requested by Brian Maroney, Chief Toll Design, on May 21,2012.

No adjustment of contract time is warranted as the work will not affect the controlling operation.

Maintenance concurrence will be obtained as this will be a part of the permanent structure.

CONCURRED BY:		
Construction Engineer:	William Howe	Date 05-29-12
Bridge Engineer:	Mehran Ardakanian	Date
Project Engineer:	Bob Zandipour, Design	Date 5-31-12
Project Manager:	Ken Terpstra	Date 5-30-12
FHWA Rep.:		Date
Environmental:		Date
Other (specify):	Brian Maroney, Chief, Toll Design	Date 5/21/12
Other (specify):	Lina Ellis, Mtce.	Date 6-6-12
District Prior Approval By:		Date
HQ (Issue Approve) By:		Date
Resident Engineer's Signature:	William Howe	Date 05-29-12

ESTIMATE OF COST

	THIS REQUEST	TOTAL TO DATE
ITEMS	$0.00	$0.00
FORCE ACCOUNT	$50,000.00	$50,000.00
AGREED PRICE	$0.00	$0.00
ADJUSTMENT	$0.00	$0.00
TOTAL	$50,000.00	$50,000.00

FEDERAL PARTICIPATION

☐ PARTICIPATING ☐ PARTICIPATING IN PART ☑ NONE
☐ NON-PARTICIPATING (MAINTENANCE) ☐ NON-PARTICIPATING

FEDERAL SEGREGATION (if more than one Funding Source or P.I.P. type)
☐ CCO FUNDED PER CONTRACT ☐ CCO FUNDED AS FOLLOWS

FEDERAL FUNDING SOURCE	PERCENT

ADA Notice: For individuals with sensory disabilities, this document is available in alternate formats. For information call (916) 654-6410 or TDD (916) 651-6880 or write Records and Forms Management, 1120 N Street, MS-89, Sacramento, CA 95814.

STATE OF CALIFORNIA - DEPARTMENT OF TRANSPORTATION

CONTRACT CHANGE ORDER

Change Requested by: Engineer

CCO 140	Suppl. No. 1	Contract No. 04 - 012084	Road SF-80-12.7/13.2	FED. AID LOC.: NO FED AID

To: M C M CONSTRUCTION INC

You are directed to make the following changes from the plans and specifications or do the following described work not included in the plans and specifications for this contract. ***NOTE: This change order is not effective until approved by the Engineer.***

Description of work to be done, estimate of quantities and prices to be paid. (Segregate between additional work at contract price, agreed price and force account.) Unless otherwise stated, rates for rental of equipment cover only such time as equipment is actually used and no allowance will be made for idle time. This last percentage shown is the net accumulated increase or decrease from the original quantity in the Engineer's Estimate.

Extra Work at Force Account:

Provide additional funds.

Estimate of Extra Work at Force Account = $140,000.00

Estimated Cost: Increase ☑ Decrease ☐ $140,000.00

By reason of this order the time of completion will be adjusted as follows: 0 days

Signature William Howe	Resident Engineer William Howe, Senior R.E.	Date 07-11-13
Signature Deanna Vilcheck	Area Construction Manager Deanna Vilcheck	Date 7/11/13
Signature Deanna Vilcheck	Area Construction Manager Deanna Vilcheck	Date 7/24/13

We the undersigned contractor, have given careful consideration to the change proposed and agree, if this proposal is approved, that we will provide all equipment, furnish the materials, except as may otherwise be noted above, and perform all services necessary for the work above specified, and will accept as full payment therefor the prices shown above.

NOTE: If you, the contractor, do not sign acceptance of this order, your attention is directed to the requirements of the specifications as to proceeding with the ordered work and filing a written protest within the time therein specified.

Signature Not Required	(Print name and title)	Date

STATE OF CALIFORNIA - DEPARTMENT OF TRANSPORTATION

CONTRACT CHANGE ORDER MEMORANDUM

DATE: 7/11/2013 Page 1 of 1

TO: Deanna Vilcheck, ACM /	FILE: E.A. 04 - 0120S4
	CO-RTE-PM SF-80-12.7/13.2
FROM: William Howe, Senior R.E.	FED. NO. NO FED AID
CCO#: 140 SUPPLEMENT#: 1 Category Code: CXXX	CONTINGENCY BALANCE (incl. this change) $27,181,212.15
COST: $140,000.00 INCREASE ☑ DECREASE ☐	HEADQUARTERS APPROVAL REQUIRED? ☐ YES ☑ NO
SUPPLEMENTAL FUNDS PROVIDED: $0.00	IS THIS REQUEST IN ACCORDANCE WITH ENVIRONMENTAL DOCUMENTS? ☑ YES ☐ NO
CCO DESCRIPTION: additional funds-cormorant nesting	PROJECT DESCRIPTION: YBITS-1 (Yerba Buena Island Transition Structures)

Original Contract Time:	Time Adj. This Change:	Previously Approved CCO Time Adjustments:	Percentage Time Adjusted: (including this change)	Total # of Unreconciled Deferred Time CCO(s): (including this change)
1390 Day(s)	0 Day(s)	0 Day(s)	0 %	9

THIS CHANGE ORDER PROVIDES FOR:
Additional funds to provide measures to encourage cormorant nesting at the platforms located at the Bay Bridge East Span Skyway (Eastbound and Westbound).

This project, the Yerba Buena Island Transition Structure (YBITS) provides for the construction of two bridges, which will connect eastbound and westbound traffic on the new east span of the San Francisco Oakland Bay Bridge (SFOBB) to the existing Yerba Buena Island (YBI) tunnel. The structures are comprised of concrete box girder bridges each approximately 50 meters high and 450 meters in length. As part of the permit requirements for construction of the new East Span, steel platforms have been constructed as a nesting site for the cormorant colony population, which currently nests on the exiting East Span, which is to be demolished upon the completion of the new bridge. Cormorants are a migratory fish-eating bird. To date (the Skyway construction contract was accepted in 2008), none of the cormorants have moved to their new home, they still nest on the old bridge. In order to encourage some of the cormorants to relocate prior to the demolition of the old bridge, the Department's environmental group has determined that it would be beneficial to implement a number of measures to attract the cormorants to the new location. Potential measures will include building nesting boxes that will be set on the platforms; filling the nesting boxes with nest building materials; putting attractive scents and using recorded bird calls at the platform locations.

The work shall be performed as Extra Work at Force Account for an additional estimated cost of $140,000.00, which will be financed from the contract's contingency funds. A cost analysis is on file. The original CCO was written for $50,000.00 for a total authorized amount of $190,000.00.

This CCO was requested by Brian Maroney, Chief Toll Design, on May 21,2012.

No adjustment of contract time is warranted as the work will not affect the controlling operation.

Concurrence will be obtained from Lina Ellis, Structures Maintenance, as this will be a part of the permanent structure.

CONCURRED BY:		
Construction Engineer:	William Howe WBH	Date 07-11-13
Bridge Engineer:	Mehran Ardakanian	Date
Project Engineer:	Bob Zandipour, Design	Date 7-12-13
Project Manager:	Ken Terpstra KT	Date 7/24/13
FHWA Rep.:		Date
Environmental:		Date
Other (specify):	Lina Ellis, Str. Maintenance	Date 7-19-13
Other (specify):	Brian Maroney, Chief, Toll Design	Date 5/21/12
District Prior Approval By:		Date
HQ (Issue Approve) By:		Date
Resident Engineer's Signature: William Howe		Date 07-11-13

ESTIMATE OF COST	THIS REQUEST	TOTAL TO DATE
ITEMS	$0.00	$0.00
FORCE ACCOUNT	$140,000.00	$190,000.00
AGREED PRICE	$0.00	$0.00
ADJUSTMENT	$0.00	$0.00
TOTAL	$140,000.00	$190,000.00

FEDERAL PARTICIPATION

☐ PARTICIPATING ☐ PARTICIPATING IN PART ☑ NONE
☐ NON-PARTICIPATING (MAINTENANCE) ☐ NON-PARTICIPATING

FEDERAL SEGREGATION (if more than one Funding Source or P.I.P. type)
☐ CCO FUNDED PER CONTRACT ☐ CCO FUNDED AS FOLLOWS

FEDERAL FUNDING SOURCE	PERCENT

ADA Notice. For individuals with sensory disabilities, this document is available in alternate formats. For information call. (916) 654-6410 or TDD (916) 654-3880 or write Records and Forms Management, 1120 N Street, MS-89, Sacramento, CA 95814.

STATE OF CALIFORNIA - DEPARTMENT OF TRANSPORTATION

CONTRACT CHANGE ORDER

Change Requested by: Engineer

CCO 141	Suppl. No. 0	Contract No. 04 - 0120S4	Road SF-80-12.7/13.2	FED. AID LOC.: NO FED AID

To: M C M CONSTRUCTION INC

You are directed to make the following changes from the plans and specifications or do the following described work not included in the plans and specifications for this contract. ***NOTE: This change order is not effective until approved by the Engineer.***

Description of work to be done, estimate of quantities and prices to be paid. (Segregate between additional work at contract price, agreed price and force account.) Unless otherwise stated, rates for rental of equipment cover only such time as equipment is actually used and no allowance will be made for idle time. This last percentage shown is the net accumulated increase or decrease from the original quantity in the Engineer's Estimate.

Revision 2 dated 1/10/13:

Construct modifications to the Bay Bridge YBI Transition Structure - Skyway and Oakland Touchdown 1 (OTD1) Security Enhancements per attached drawings (Sheets 3 through 21 of this change order) as follows:

Extra Work at Force Account:

Perform required touch up painting, or any other additional work not already included in the scope for the agreed price as directed by the Engineer.

This work will be paid for as Extra Work as provided in Section 5-1.17, "Force Account Payment", of the Special Provisions and Section 4-1.03D, "Extra Work", of the Standard Specifications.

Estimated Cost of Extra Work at Force Account = $100,000.00

Extra Work at Lump Sum:

Provide labor, equipment and materials to provide and install modifications as shown on the drawings and described hereir as follows:

1. Provide and install "No Trespassing" and "Danger High Voltage" signs per Sign Detail drawing (sheet 11 of 21) at each of the 29 existing platforms at Skyway and OTD1, and at the five (5) each new platforms for YBITS1.

2 Provide and install security enhancements at each of the two (2) existing Skyway substations per drawing details (sheets 18 through 21).

3. Make guardrail improvements at three (3) existing OTD1 service platforms per drawing details (sheet 12).

4. Provide and install safety chains at each of the 29 existing platforms at Skyway and OTD1 (sheet 13).

5. Make platform drain hole improvements at each of the three (3) existing OTD1 service platforms per drawing details (sheet 12 section B).

6. Provide and install security gates at each of the two (2) existing Skyway substations (2 gates per substation) per drawing details (sheets 14 through 17).

7. Provide and install fender ladder covers at existing piers E2 (2 covers), E3 (4 covers), E4 (4 covers) and E5 (4 covers) per drawing details (sheet 3).

8. Provide and install "No Trespassing" signs at fender ladders and columns at existing piers E2 and E7 through E16 (116 total signs) per drawing details (sheet 4).

9. Provide and install stenciled "No Trespassing" signs at Skyway stairway access locations (30 total) per drawing details (sheet 5).

10. Provide and install "No Trespassing" sign posted on railing and stenciled "No Trespassing" sign on deck at each of the two (2) Skyway bikepath travelers (2 total signs and 2 total stencils) per drawing details (sheet 6).

11. Provide and install bird screen improvements at Skyway hinge locations (6 total) per drawing details (sheets 7 through 9).

CONTRACT CHANGE ORDER

Change Requested by: Engineer

CCO 141	Suppl. No. 0	Contract No. 04 - 0120S4	Road SF-80-12.7/13.2	FED. AID LOC.: NO FED AID

12. Provide and install stenciled "No Trespassing" signs at OTD1 stairway access locations (3 total stencils) per drawing details (sheet 10).

For this work, the Contractor shall receive and accept the Agreed Lump Sum of $1,099,340.00. This sum constitutes full and complete compensation, including all markups for this change.

Extra Work at Agreed Lump Sum = $1,099,340.00

This price excludes the cost of any Stormwater Pollution Prevention (SWPP) measures, such as SWPPP amendments and reports, and appropriate Best Management Practices (BMPs), which will be paid for under a separate change order.

The Department will provide one (1) State lock and key set for each location where required. Locks are to be installed by the Contractor.

Estimated Cost: Increase ☑ Decrease ☐ $1,199,340.00

By reason of this order the time of completion will be adjusted as follows: 0 days

Submitted by

Signature	Resident Engineer	Date
William Howe	William Howe, Senior R.E.	01-10-13

Approval Recommended by

Signature	Region Construction Division Chief	Date
[signature]	Tony Anziano	1/14/13

Engineer Approval By

Signature	Region Construction Division Chief	Date
[signature]	Tony Anziano	2/15/13

We the undersigned contractor, have given careful consideration to the change proposed and agree, if this proposal is approved, that we will provide all equipment, furnish the materials, except as may otherwise be noted above, and perform all services necessary for the work above specified, and will accept as full payment therefor the prices shown above.

NOTE: If you, the contractor, do not sign acceptance of this order, your attention is directed to the requirements of the specifications as to proceeding with the ordered work and filing a written protest within the time therein specified.

Contractor Acceptance by

Signature	(Print name and title)	Date
[signature]	EDMUNDO A. PUCHI, TREASURER	2/13/13

DIST.	COUNTY	ROUTE	KILOMETER POST TOTAL PROJECT	SHEET NO.	TOTAL SHEETS
04	SF, Ala	80	13.9/14.3, 0.0/2.7	79005	806

REGISTERED ENGINEER - CIVIL
07-12-11
PLANS APPROVAL DATE
The State of California or its officers or agents shall not be responsible for the accuracy or completeness of electronic copies of this plan sheet.
REGISTERED PROFESSIONAL ENGINEER James P. Duxbury No. C 64677 Exp. 06/30/13 CIVIL STATE OF CALIFORNIA

T.Y. LIN / MOFFATT & NICHOL
TWO HARRISON STREET
SAN FRANCISCO, CA 94105

Caltrans Metric

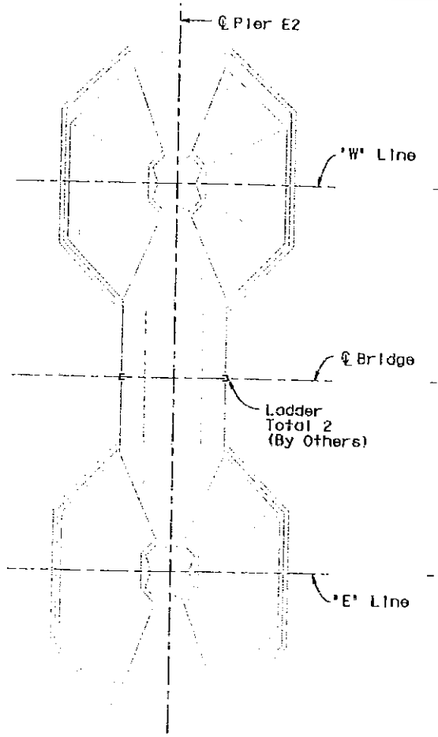

PIER E2

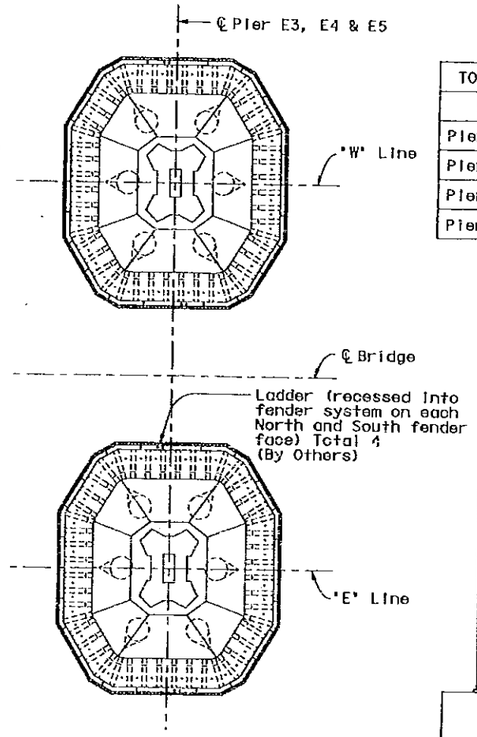

PIER E3, E4 & E5

KEY PLAN
1:300

TOP OF CONCRETE (See Note 2)	
LOCATION	ELEVATION (M)
Pier E2	+ 2.700
Pier E3	+ 3.000
Pier E4	+ 3.000
Pier E5	+ 3.000

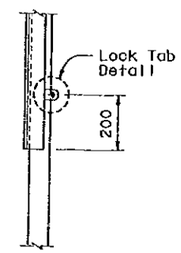

VIEW B-B
1:10

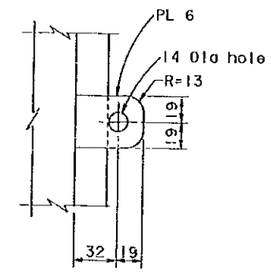

LOCK TAB DETAIL
1:2

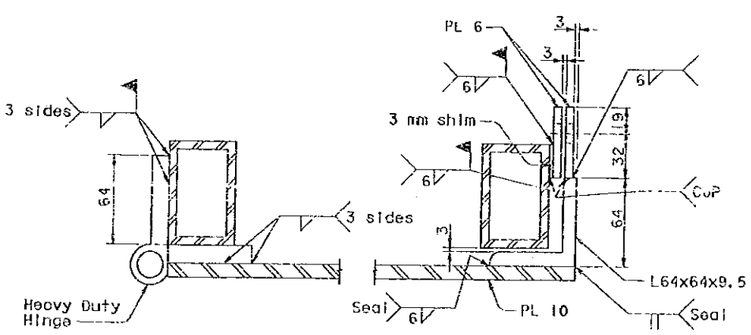

Height = 127
Thickness = 13
Pin Dia = 19

SECTION A-A
1:2

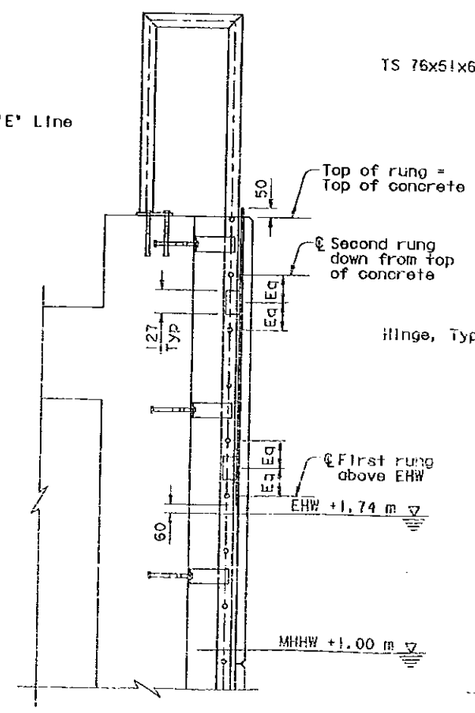

LADDER SECTION
1:15

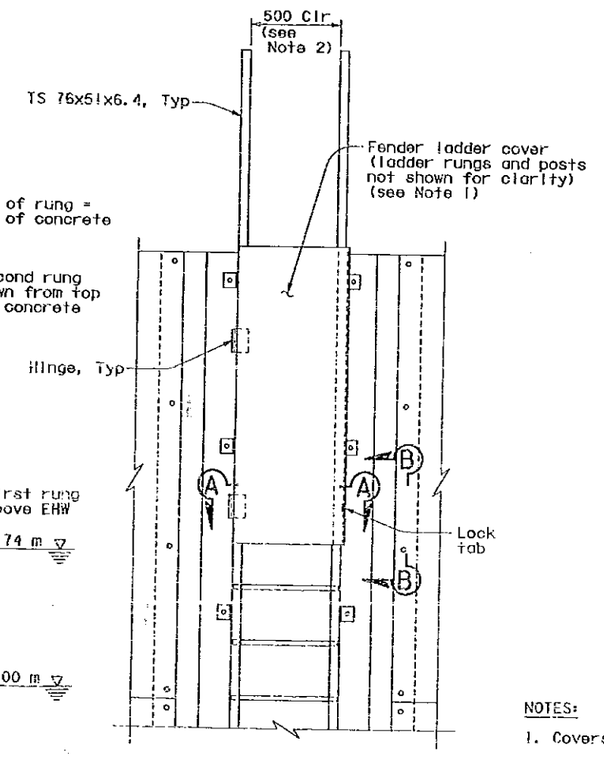

LADDER ELEVATION
1:15

NOTES:

1. Covers shall be installed on all fender ladders.
2. The Contractor shall verify the top of concrete elevation and the existing fender ladder dimensions prior to fabrication.
3. Steel shall be ASTM A709M Grade 345, galvanized.

SUPPLEMENTAL SHEET
CONTRACT CHANGE ORDER NO. 141
SHEET 3 OF 21

ALL DIMENSIONS ARE IN MILLIMETERS UNLESS OTHERWISE SHOWN

DESIGN OVERSIGHT
W. Long, Y. Liu
Wengi Long / Y Liu
SIGN OFF DATE 06/30/11
Rev. Date: 5-18-98

	BY	CHECKED
DESIGN	J. Duxbury	T. Ho
DETAILS	A. Baumberger	T. Ho
QUANTITIES	A. Baumberger	T. Ho

PREPARED FOR THE STATE OF CALIFORNIA DEPARTMENT OF TRANSPORTATION

R. Manzanarez
PROJECT ENGINEER

BRIDGE NO. 34-0006 L/R
KILOMETER POST 13.9/14.3, 0.0/2.7

SAN FRANCISCO OAKLAND BAY BRIDGE
EAST SPAN SEISMIC SAFETY PROJECT

SKYWAY CLEANUP ITEMS

FENDER LADDER COVER

ORIGINAL SCALE IN MILLIMETERS

CU 04251
EA 012051

DISREGARD PRINTS BEARING EARLIER REVISION DATES

REVISION DATES (PRELIMINARY STAGE ONLY)

SHEET 1 OF 8

USER NAME => fsamson DATE PLOTTED => 8/17/2012 TIME PLOTTED => 10:29:24 AM

July 18, 2012

DIST.	COUNTY	ROUTE	KILOMETER POST TOTAL PROJECT	SHEET NO.	TOTAL SHEETS
04	SF, Ala	80	13.9/14.3, 0.0/2.7	790RS	806

REGISTERED ENGINEER - CIVIL

07-12-11
PLANS APPROVAL DATE

REGISTERED PROFESSIONAL ENGINEER James P. Duxbury No. C 64677 Exp. 06/30/13 CIVIL STATE OF CALIFORNIA

The State of California or its officers or agents shall not be responsible for the accuracy or completeness of electronic copies of this plan sheet.

T.Y. LIN / MOFFATT & NICHOL
TWO HARRISON STREET
SAN FRANCISCO, CA 94105

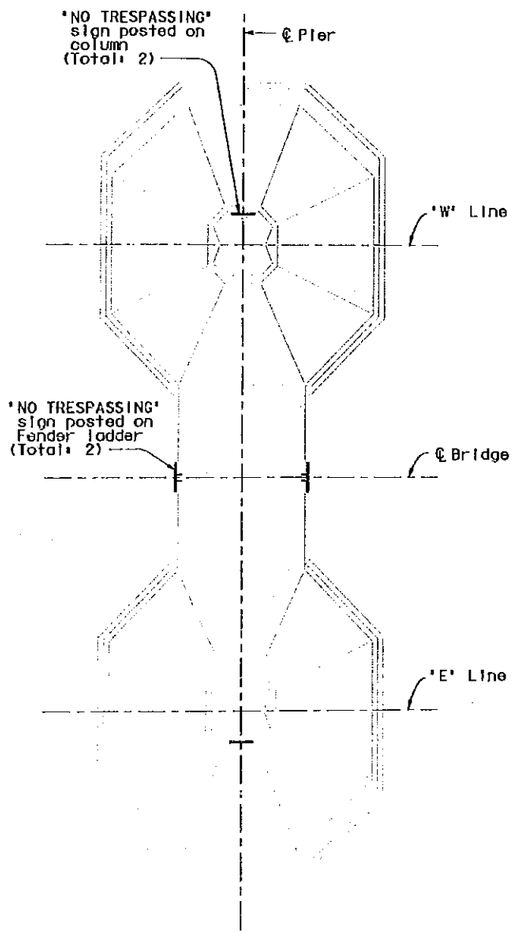

PIER E2

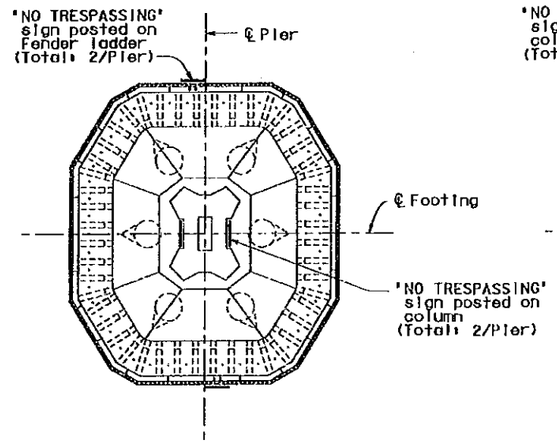

PIER E3 TO E5

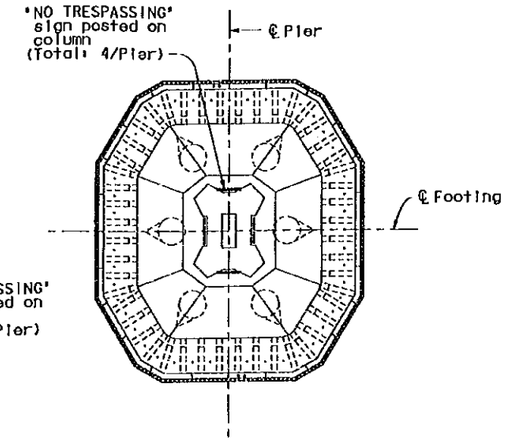

PIER E6

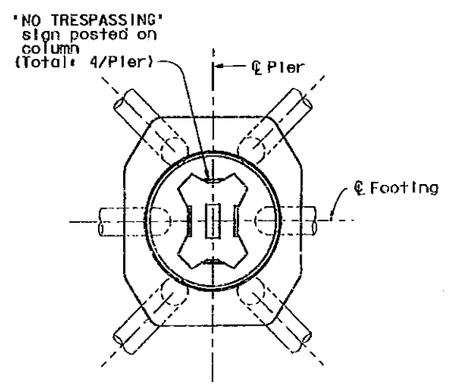

PIER E7 TO E14

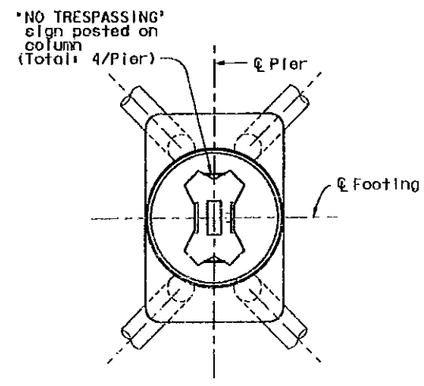

PIER E15 TO E16

FOUNDATIONS
1:250

NOTES:

1. For sign details, see 'Road Plans'.
2. Signs shall be placed such that the centerline of the sign is at least 1.5 m (~5.0 ft) from the top of the foundation, or as otherwise approved by the Engineer.
3. Fender Ladder Cover signs shall be mounted using 6 mm (1/4 in) Dia galvanized cap screws with lock washers drilled in tapped holes, or as otherwise approved by the Engineer.
4. Column signs shall be mounted to concrete surfaces using 12 mm (1/2 in) Dia wedge anchors, or as otherwise approved by the Engineer.

SUPPLEMENTAL SHEET
CONTRACT CHANGE ORDER NO. 141
SHEET 4 OF 21

ALL DIMENSIONS ARE IN MILLIMETERS UNLESS OTHERWISE SHOWN

SAN FRANCISCO OAKLAND BAY BRIDGE
EAST SPAN SEISMIC SAFETY PROJECT

SKYWAY CLEANUP ITEMS

NO TRESPASSING SIGN DETAILS NO. 1

DESIGN OVERSIGHT
W. Long, Y. Liu
SIGN OFF DATE 06/30/11

	BY	CHECKED
DESIGN	J. Duxbury	T. Ho
DETAILS	A. Baumberger	T. Ho
QUANTITIES	A. Baumberger	T. Ho

PREPARED FOR THE STATE OF CALIFORNIA DEPARTMENT OF TRANSPORTATION

R. Manzanarez
PROJECT ENGINEER

BRIDGE NO. 34-0006 L/R
KILOMETER POST 13.9/14.3, 0.0/2.7

CU 04251
EA 012051

DISREGARD PRINTS BEARING EARLIER REVISION DATES

REVISION DATES (PRELIMINARY BASIS ONLY)

SHEET 2 OF 9

Rev. Date 5-18-99

ORIGINAL SCALE IN MILLIMETERS FOR REDUCED PLANS 0 10 20 30 40 50 60 70 80 90 100

July 18, 2012

USERNAME => fcamson DATE PLOTTED => 8/17/2012 TIME PLOTTED => 10:29:54 AM

DIST.	COUNTY	ROUTE	KILOMETER POST TOTAL PROJECT	SHEET NO.	TOTAL SHEETS
04	SF, Ala	80	13.9/14.3, 0.0/2.7	790SS	806

REGISTERED ENGINEER - CIVIL

07-12-11

PLANS APPROVAL DATE

The State of California or its officers or agents shall not be responsible for the accuracy or completeness of electronic copies of this plan sheet.

REGISTERED PROFESSIONAL ENGINEER James P. Duxbury No. C 64677 Exp. 06/30/13 CIVIL STATE OF CALIFORNIA

T.Y. LIN / MOFFATT & NICHOL
TWO HARRISON STREET
SAN FRANCISCO, CA 94105

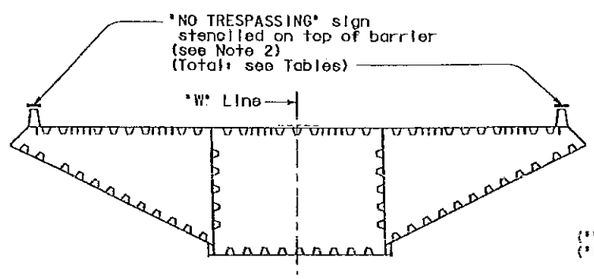

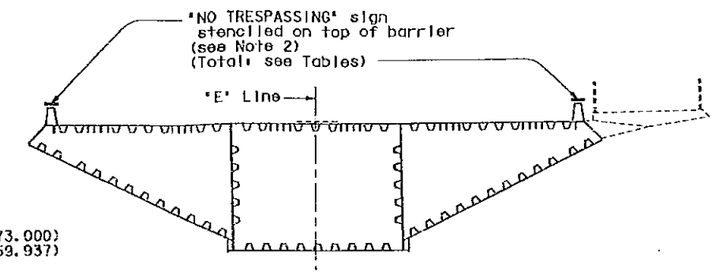

SKYWAY

('W' 62+12.385 to 'W' 62+73.000)
('E' 62+01.688 to 'E' 62+59.937)

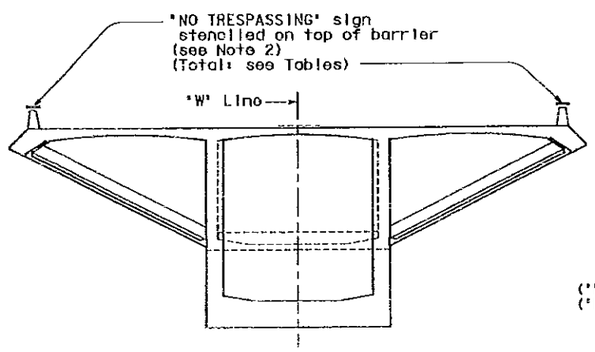

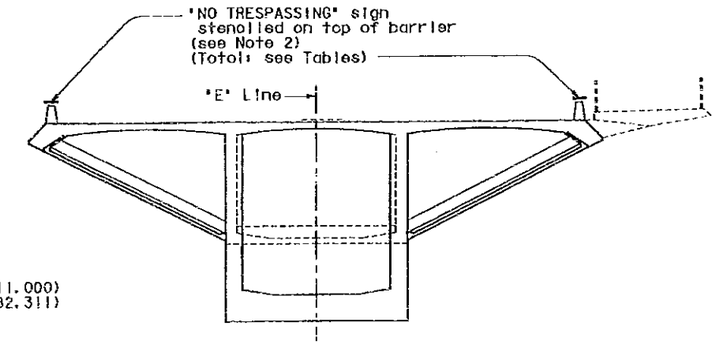

SKYWAY

('W' 62+73.000 to 'W' 83+11.000)
('E' 62+59.937 to 'E' 82+82.311)

BOX GIRDERS

1:125

SKYWAY	
SERVICE PLATFORM LOCATIONS (1 EACH)	
9W	9E
10W	10E
11W	11E
12W	12E
13W	13E
14W	14E
15W	15E
16W	16E
17W	17E
18W	18E
19W	19E
20W	20E
21W	21E

SKYWAY	
SUBSTATION ACCESS STAIR LOCATIONS	
Substation 'W' 70+45.000 (2 each)	Substation 'E' 70+17.649 (2 each)

NOTES:

1. Stencils shall be 76 mm (3 in) standard black lettering and shall be applied with commercial quality exterior black paint or as otherwise directed by the Engineer.
2. 'NO TRESPASSING' signs shall be stencilled on barrier at the top of the stairs of every service platform and substation access.

SUPPLEMENTAL SHEET
CONTRACT CHANGE ORDER NO. 141
SHEET 5 OF 21

ALL DIMENSIONS ARE IN MILLIMETERS UNLESS OTHERWISE SHOWN

SAN FRANCISCO OAKLAND BAY BRIDGE
EAST SPAN SEISMIC SAFETY PROJECT

SKYWAY CLEANUP ITEMS

NO TRESPASSING SIGN DETAILS NO. 2

DESIGN OVERSIGHT
W. Long, Y. Liu
Wenji Long / Y Liu
SIGN OFF DATE 06/30/11

	BY	CHECKED
DESIGN	J. Duxbury	T. Ho
DETAILS	A. Baumberger	T. Ho
QUANTITIES	A. Baumberger	T. Ho

PREPARED FOR THE STATE OF CALIFORNIA DEPARTMENT OF TRANSPORTATION

R. Manzanarez
PROJECT ENGINEER

BRIDGE NO. 34-0006 L/R
KILOMETER POST 13.9/14.3, 0.0/2.7

CU 04251
EA 012051

DISREGARD PRINTS BEARING EARLIER REVISION DATES

REVISION DATES (PRELIMINARY STAGE ONLY) 07/12/11

SHEET 3 OF 8

Rev Date: 5-15-98

ORIGINAL SCALE IN MILLIMETERS FOR REDUCED PLANS 0 10 20 30 40 50 60 70 80 90 100

July 18, 2012

USERNAME => fsamson DATE PLOTTED => 3/17/2012 TIME PLOTTED => 10:30:02 AM

DIST.	COUNTY	ROUTE	KILOMETER POST TOTAL PROJECT	SHEET NO.	TOTAL SHEETS
04	SF, Ala	80	13.9/14.3, 0.0/2.7	790TS	806

REGISTERED ENGINEER - CIVIL

07-12-11
PLANS APPROVAL DATE

REGISTERED PROFESSIONAL ENGINEER James P. Duxbury No. C 54677 Exp. 06/30/13 CIVIL STATE OF CALIFORNIA

The State of California or its officers or agents shall not be responsible for the accuracy or completeness of electronic copies of this plan sheet.

T.Y. LIN / MOFFATT & NICHOL
TWO HARRISON STREET
SAN FRANCISCO, CA 94105

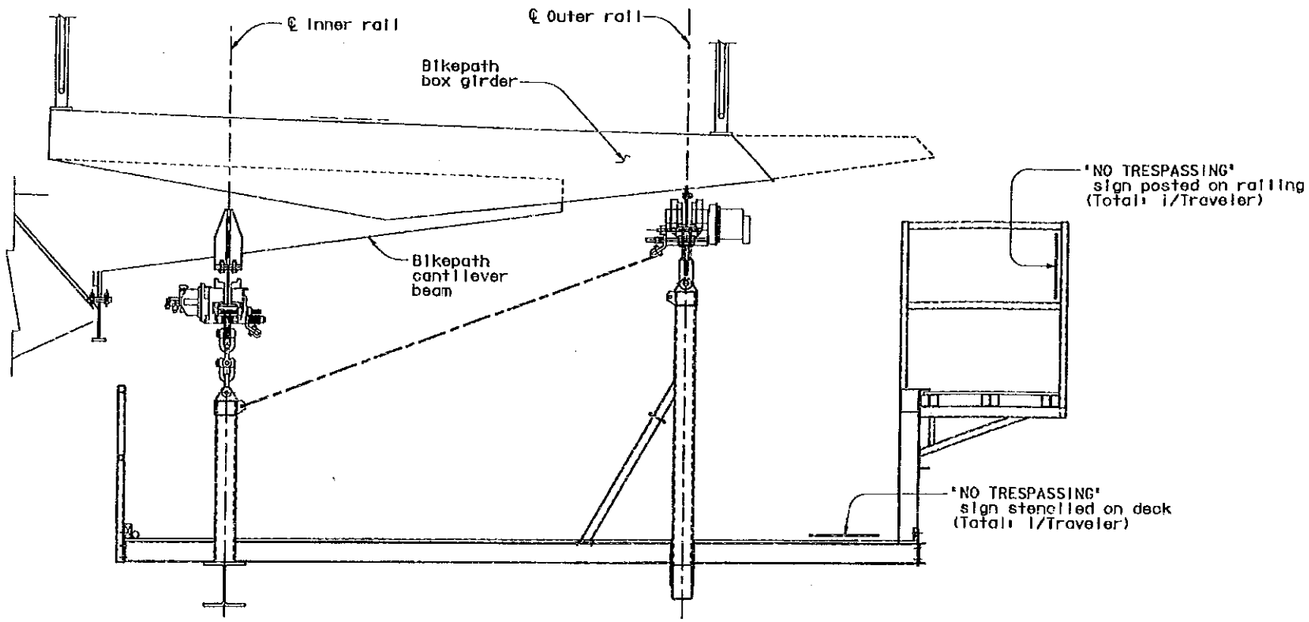

SKYWAY BIKEPATH TRAVELER
1:20

NOTES:

1. For sign details, see 'Road Plans'.
2. Signs shall be mounted with clamps onto traveler tubing, or as otherwise approved by the Engineer.
3. Stencils shall be 76 mm (3 in) standard black lettering and shall be applied with commercial quality exterior black paint or as otherwise directed by the Engineer.

SUPPLEMENTAL SHEET
CONTRACT CHANGE ORDER NO. 141
SHEET 6 OF 21

ALL DIMENSIONS ARE IN MILLIMETERS UNLESS OTHERWISE SHOWN

SAN FRANCISCO OAKLAND BAY BRIDGE
EAST SPAN SEISMIC SAFETY PROJECT

SKYWAY CLEANUP ITEMS

NO TRESPASSING SIGN DETAILS NO. 3

DESIGN OVERSIGHT
W. Long, Y. Liu
Wenji Long / Y Liu
SIGN OFF DATE 08/30/11

	BY	CHECKED
DESIGN	J. Duxbury	T. Ho
DETAILS	A. Baumberger	T. Ho
QUANTITIES	A. Baumberger	T. Ho

PREPARED FOR THE STATE OF CALIFORNIA DEPARTMENT OF TRANSPORTATION

R. Manzanarez
PROJECT ENGINEER

BRIDGE NO. 34-0006 L/R
KILOMETER POST 13.9/14.3, 0.0/2.7

CU 04251
EA 01205

Rev. Date: 5-18-55

ORIGINAL SCALE IN MILLIMETERS FOR RECORD PLANS 0 10 20 30 40 50 60 70 80 90 100

DISREGARD PRINTS BEARING EARLIER REVISION DATES → 07/12/11

REVISION DATES (PRELIMINARY STAGE ONLY)

SHEET 4 OF 8

FILE => P:\141-05\CADD\TS\Checked Plans\YBITS #1-100% No. 2_03-08 (Final Renamed)\071912 SAS Transfer 724 CCO\oksig03.dgn

USERNAME => rsamson DATE PLOTTED => 8/17/2012 TIME PLOTTED => 10:30:11 AM

July 18, 2012

DIST.	COUNTY	ROUTE	KILOMETER POST TOTAL PROJECT	SHEET NO.	TOTAL SHEETS
04	SF, Ala	80	13.9/14.3, 0.0/2.7	790US	806

REGISTERED ENGINEER - CIVIL

06-30-11

PLANS APPROVAL DATE

REGISTERED PROFESSIONAL ENGINEER James P. Duxbury No. C 64677 Exp. 06/30/13 CIVIL STATE OF CALIFORNIA

The State of California or its officers or agents shall not be responsible for the accuracy or completeness of electronic copies of this plan sheet.

T.Y. LIN / MOFFATT & NICHOL
TWO HARRISON STREET
SAN FRANCISCO, CA 94105

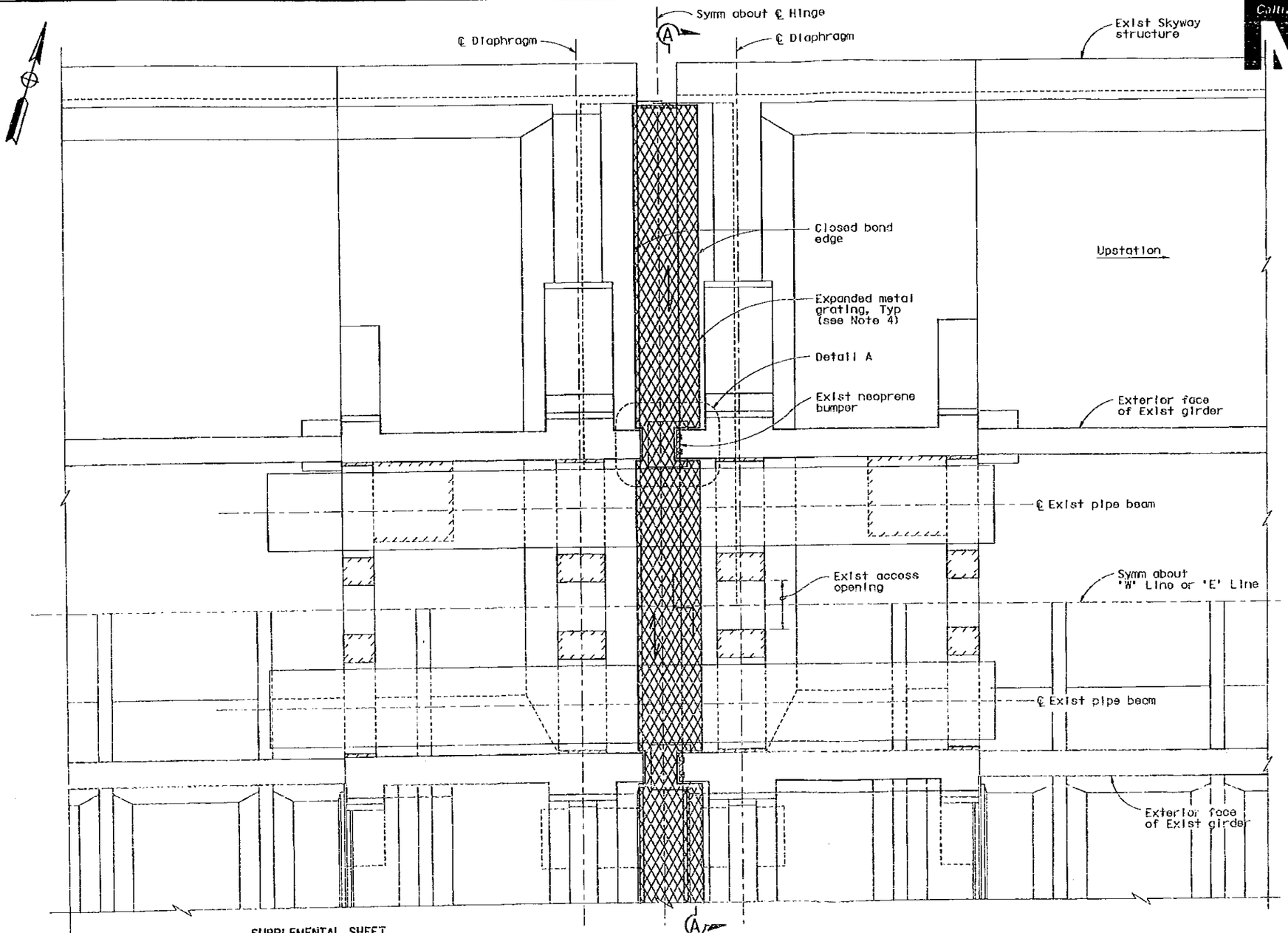

SUPPLEMENTAL SHEET
CONTRACT CHANGE ORDER NO. 141
SHEET 7 OF 21

PLAN-BIRD SCREENING (HINGES B, C & D) (Hinge B shown, Hinges C & D similar)
1:50

ALL DIMENSIONS ARE IN MILLIMETERS UNLESS OTHERWISE SHOWN

LEGEND:

Indicates long orientation of diamond

NOTES:

1. For Section A-A, see 'Bird Screen Details No.2' sheet.
2. For Detail A, see 'Bird Screen Details No.3' sheet.
3. STAY OFF EXPANDED METAL GRATING AT ALL TIMES

   The expanded metal grating shall not be used as a maintenance platform or as a walkway.
   Post this information on a stainless steel plaque (200x300 minimum) on the backside of the diaphragm (4 total, 2 per diaphragm).
   Plaques shall be mounted using 6 mm (1/4 inch) Dia expandable concrete anchors.
4. Expanded metal grating shall be ASTM A1011 5# carbon steel, hot dipped galvanized. All edges of the grating shall have closed bend.
5. All structural steel and threaded rods shall be galvanized.
6. The Contractor shall verify all controlling field dimensions.

SAN FRANCISCO OAKLAND BAY BRIDGE
EAST SPAN SEISMIC SAFETY PROJECT

SKYWAY CLEANUP ITEMS

BIRD SCREEN DETAILS NO. 1

DESIGN OVERSIGHT W. Long, Y. Liu			
Wenji Long / Y Liu			
SIGN OFF DATE 06/30/11			
Rev. Date: 5-18-96			

	BY	CHECKED
DESIGN	J. Duxbury	T. Ho
DETAILS	A. Baumberger	T. Ho
QUANTITIES	A. Baumberger	T. Ho

PREPARED FOR THE STATE OF CALIFORNIA DEPARTMENT OF TRANSPORTATION

R. Manzanarez
PROJECT ENGINEER

BRIDGE NO. 34-0006 L/R
KILOMETER POST 13.9/14.3, 0.0/2.7

CU 04251
EA 012051

DISREGARD PRINTS BEARING EARLIER REVISION DATES

REVISION DATES (PRELIMINARY STAGE ONLY) 06/30/11

SHEET 5 OF 8

ORIGINAL SCALE IN MILLIMETERS FOR REDUCED PLANS 0 10 20 30 40 50 60 70 80 90 100

FILE = \\Pw\al-pw\PROJECTS\Checked Plans\YBITS #1-1002 No. 2_03-03-08 (Final Renamed)\071912 SAS Transfer T24 CO\ahbrs01.dgn

USERNAME => hsumson DATE PLOTTED => 07/17/2012 TIME PLOTTED => 10:29:10 AM

July 18, 2012

DIST.	COUNTY	ROUTE	KILOMETER POST TOTAL PROJECT	SHEET NO.	TOTAL SHEETS
04	SF.Ala	80	13.9/14.3, 0.0/2.7	790VS	806

REGISTERED ENGINEER - CIVIL

06-30-11
PLANS APPROVAL DATE

REGISTERED PROFESSIONAL ENGINEER James P. Duxbury No. C 64677 Exp. 06/30/13 CIVIL STATE OF CALIFORNIA

The State of California or its officers or agents shall not be responsible for the accuracy or completeness of electronic copies of this plan sheet.

T.Y. LIN / MOFFATT & NICHOL
TWO HARRISON STREET
SAN FRANCISCO, CA 94105

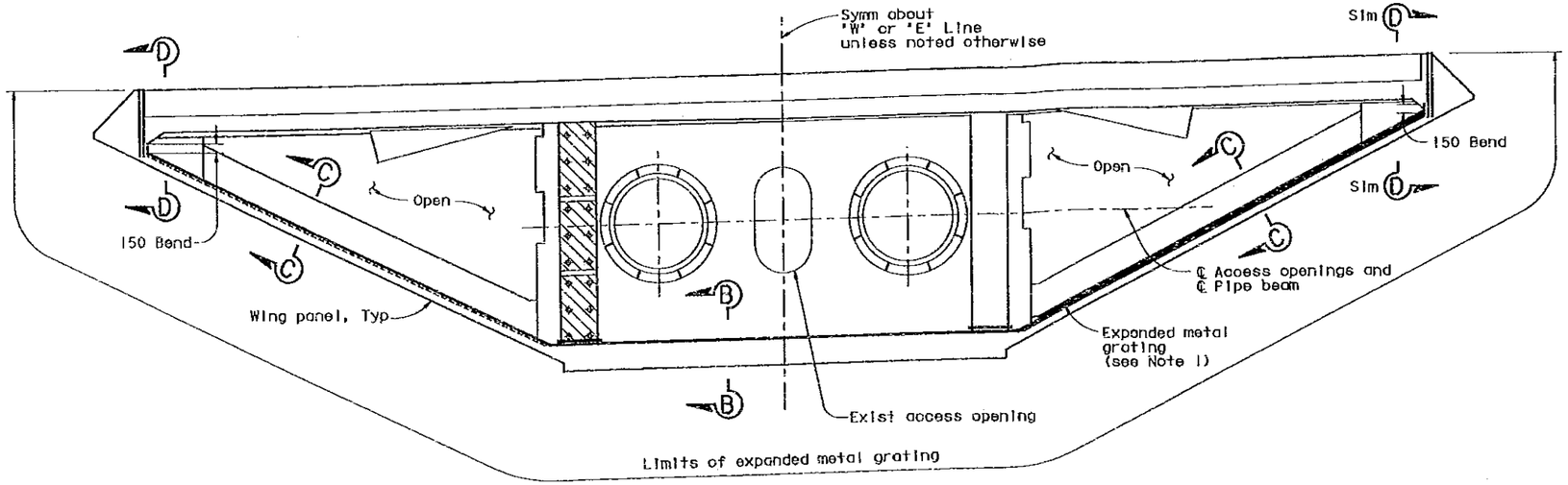

SECTION A-A
1:50

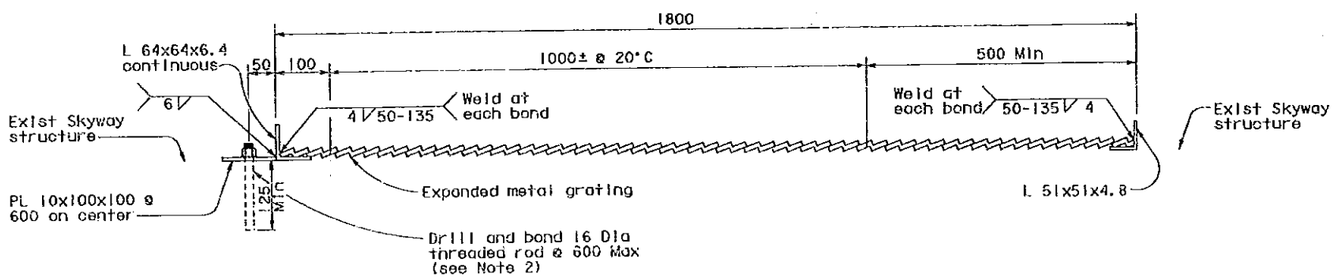

SECTION B-B
1:5

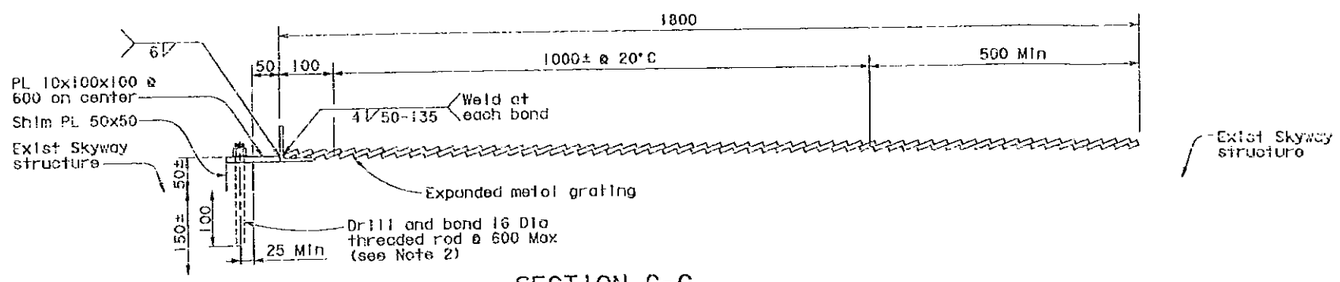

SECTION C-C
1:5

NOTES:

1. Expanded metal grating may be installed in modules of 3 m. The maximum gap between individual modules shall not be greater than 25 mm. The grating shall be field trimmed or bent as required to compensate for misalignment between the Skyway box girders at the hinges. The field trimming or bending shall be such that the grating remains intact due to movement of bridge under service conditions.
2. Locations of drill and bond threaded rod may be varied to avoid interferences. Maintain maximum spacing and minimum edge distance as shown.
3. For Section D-D, see 'Bird Screen Details No.3' sheet.

SUPPLEMENTAL SHEET
CONTRACT CHANGE ORDER NO. 141
SHEET 8 OF 21

ALL DIMENSIONS ARE IN MILLIMETERS UNLESS OTHERWISE SHOWN

SAN FRANCISCO OAKLAND BAY BRIDGE
EAST SPAN SEISMIC SAFETY PROJECT

SKYWAY CLEANUP ITEMS

BIRD SCREEN DETAILS NO. 2

DESIGN OVERSIGHT
W. Long, Y. Liu
SIGN OFF DATE 06/30/11

	BY	CHECKED
DESIGN	J. Duxbury	T. Ho
DETAILS	A. Baumberger	T. Ho
QUANTITIES	A. Baumberger	T. Ho

PREPARED FOR THE STATE OF CALIFORNIA DEPARTMENT OF TRANSPORTATION

R. Manzanarez
PROJECT ENGINEER

BRIDGE NO. 34-0006 L/R
KILOMETER POST 13.9/14.3, 0.0/2.7

CU 04251
EA 012051

DISREGARD PRINTS BEARING EARLIER REVISION DATES 06/30/11

REVISION DATES (PRELIMINARY STAGE ONLY)

SHEET 6 OF 8

ORIGINAL SCALE IN MILLIMETERS FOR REDUCED PLANS 0 10 20 30 40 50 60 70 80 90 100

Rev. Date: 5-13-38

FILE => P:\4141-06\CADD\TS\Checked Plans\YBITS #1-100% No. 2.03-03-08 (Final Renamed)\071912 SAS Transfer T24 CCO\ybrs02.dgn

USERNAME => rscmbch DATE PLOTTED => 8/17/2012 TIME PLOTTED => 10:29:25 AM

July 18, 2012

DIST.	COUNTY	ROUTE	KILOMETER POST TOTAL PROJECT	SHEET NO.	TOTAL SHEETS
04	SF, Ala	80	13.9/14.3, 0.0/2.7	790WS	806

REGISTERED ENGINEER - CIVIL

06-30-11

PLANS APPROVAL DATE

The State of California or its officers or agents shall not be responsible for the accuracy or completeness of electronic copies of this plan sheet.

REGISTERED PROFESSIONAL ENGINEER James P. Duxbury No. C 64677 Exp. 06/30/13 CIVIL STATE OF CALIFORNIA

T.Y. LIN / MOFFATT & NICHOL
TWO HARRISON STREET
SAN FRANCISCO, CA 94105

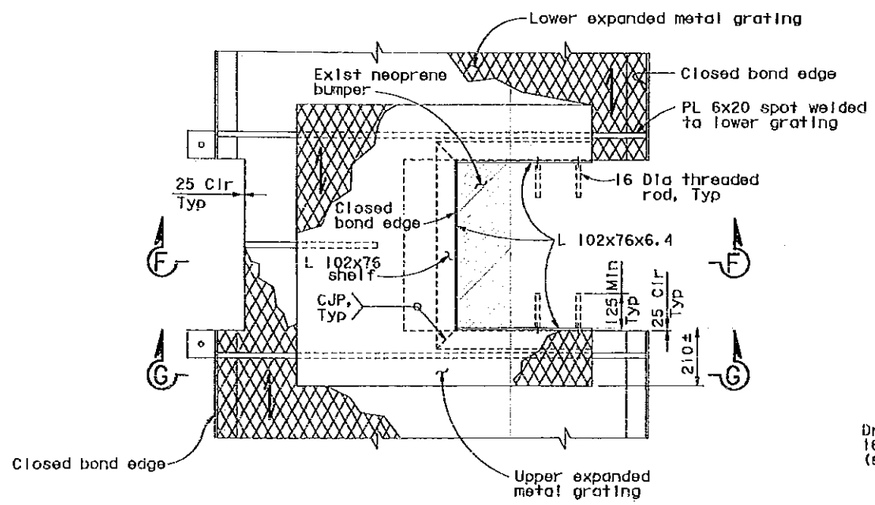

DETAIL A
1:10

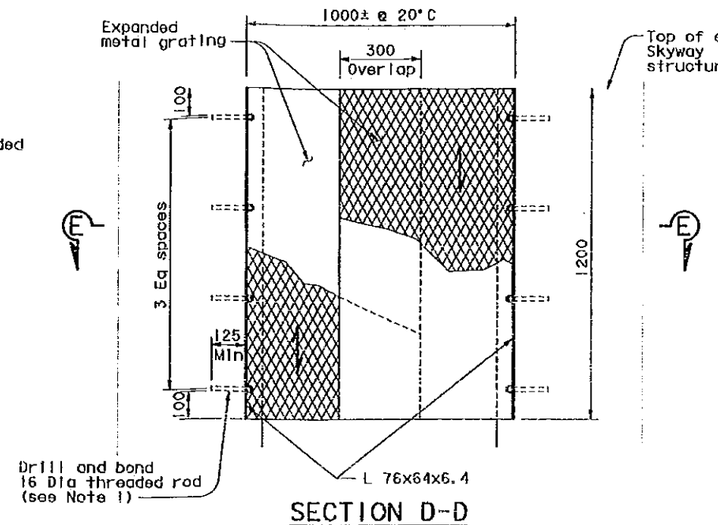

SECTION D-D
1:10

LEGEND:

Indicates long orientation of diamond

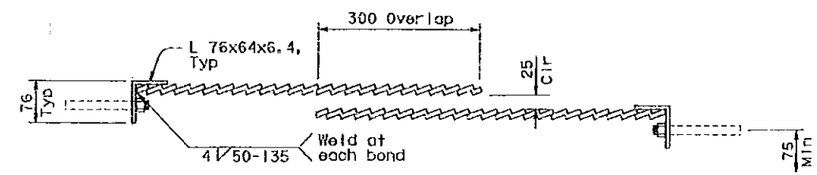

SECTION E-E
1:5

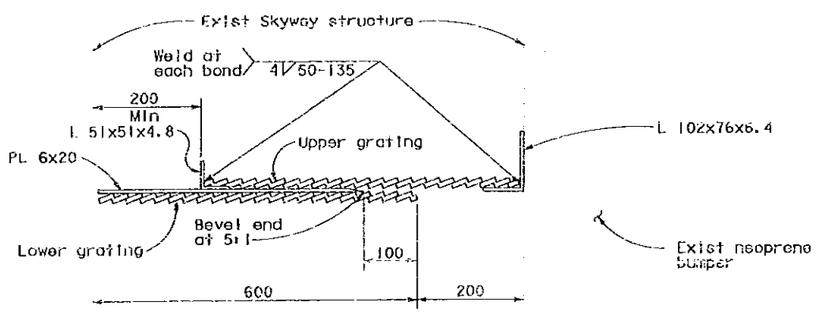

SECTION F-F
1:5

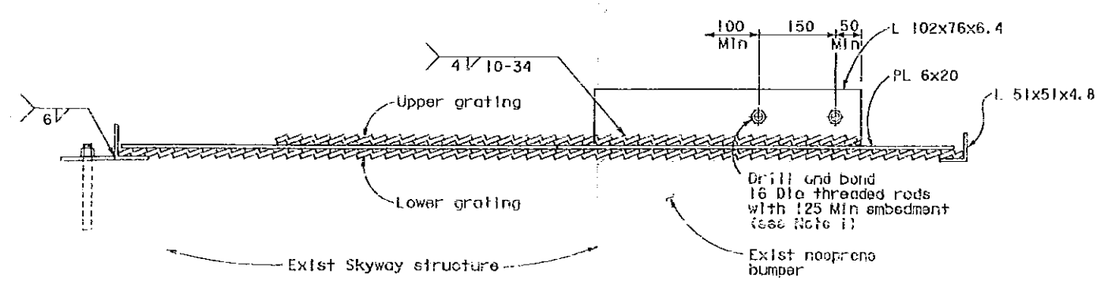

SECTION G-G
1:5

NOTES:

1. Locations of drill and bond threaded rod may be varied to avoid interferences. Maintain maximum spacing and minimum edge distance as shown.

SUPPLEMENTAL SHEET
CONTRACT CHANGE ORDER NO. 141
SHEET 9 OF 21

ALL DIMENSIONS ARE IN MILLIMETERS UNLESS OTHERWISE SHOWN

SAN FRANCISCO OAKLAND BAY BRIDGE
EAST SPAN SEISMIC SAFETY PROJECT

SKYWAY CLEANUP ITEMS

BIRD SCREEN DETAILS NO. 3

DESIGN OVERSIGHT W. Long, Y. Liu
SIGN OFF DATE 06/30/11

	BY	CHECKED
DESIGN	J. Duxbury	T. Ho
DETAILS	A. Baumberger	T. Ho
QUANTITIES	A. Baumberger	T. Ho

PREPARED FOR THE STATE OF CALIFORNIA DEPARTMENT OF TRANSPORTATION

R. Manzanarez
PROJECT ENGINEER

BRIDGE NO. 34-0006 L/R
KILOMETER POST 13.9/14.3, 0.0/2.7

CU 04251
EA 012051

DISREGARD PRINTS BEARING EARLIER REVISION DATES

REVISION DATES (PRELIMINARY STAGE ONLY)

SHEET 7 OF 8

ORIGINAL SCALE IN MILLIMETERS FOR REDUCED PLANS 0 10 20 30 40 50 60 70 80 90 100

Rev. Date: 5-12-99

USERNAME => fgonson DATE PLOTTED => 8/17/2012 TIME PLOTTED => 10:29:34 AM

July 18, 2012

DIST.	COUNTY	ROUTE	KILOMETER POST TOTAL PROJECT	SHEET NO.	TOTAL SHEETS
04	SF, Alo	80	13.9/14.3, 0.0/2.7	790XS	806

REGISTERED ENGINEER - CIVIL

07-12-11
PLANS APPROVAL DATE

REGISTERED PROFESSIONAL ENGINEER
James P. Duxbury
No. C 64677
Exp. 06/30/13
CIVIL
STATE OF CALIFORNIA

The State of California or its officers or agents shall not be responsible for the accuracy or completeness of electronic copies of this plan sheet.

T.Y. LIN / MOFFATT & NICHOL
TWO HARRISON STREET
SAN FRANCISCO, CA 94105

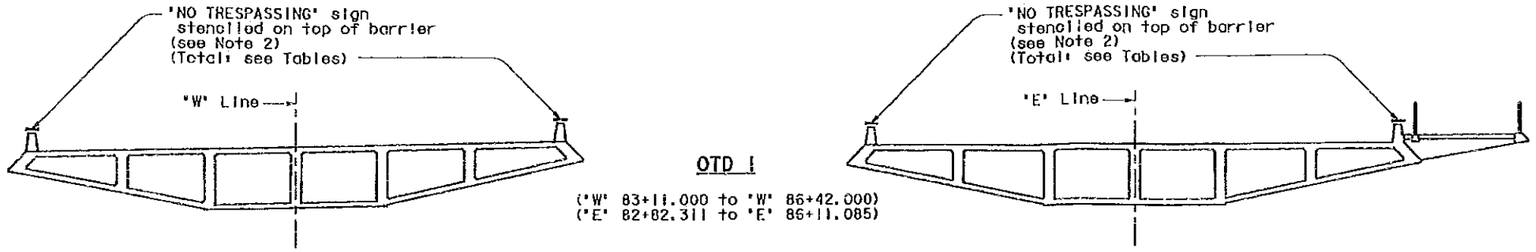

OTD 1

('W' 83+11.000 to 'W' 86+42.000)
('E' 82+82.311 to 'E' 86+11.085)

BOX GIRDERS
1:125

OTD 1	
SERVICE PLATFORM PIER LOCATIONS (1 EA)	
E18L	E18R
E21L	(By Others)

NOTES:

1. Stencils shall be 76 mm (3 in) standard black lettering and shall be applied with commercial quality exterior black paint or as otherwise directed by the Engineer.
2. 'NO TRESPASSING' signs shall be stenciled on barrier at the top of the stairs of every service platform and substation access.

SUPPLEMENTAL SHEET
CONTRACT CHANGE ORDER NO. 141
SHEET 10 OF 21

ALL DIMENSIONS ARE IN MILLIMETERS UNLESS OTHERWISE SHOWN

SAN FRANCISCO OAKLAND BAY BRIDGE
EAST SPAN SEISMIC SAFETY PROJECT

OAKLAND APPROACH STRUCTURES CLEANUP ITEMS

NO TRESPASSING SIGN DETAILS

DESIGN OVERSIGHT
W. Long, Y. Liu
Wengi Long / Y Liu
SIGN OFF DATE 06/30/11

	BY	CHECKED
DESIGN	J. Duxbury	T. Ho
DETAILS	A. Baumberger	T. Ho
QUANTITIES	A. Baumberger	T. Ho

PREPARED FOR THE STATE OF CALIFORNIA DEPARTMENT OF TRANSPORTATION

R. Manzanarez
PROJECT ENGINEER

BRIDGE NO. 34-0006 L/R
KILOMETER POST 13.9/14.3, 0.0/2.7

CU 04251
EA 0120S1

DISREGARD PRINTS BEARING EARLIER REVISION DATES 07/12/11

REVISION DATES (PRELIMINARY STAGE ONLY)

SHEET B OF B

Rev. Date: 5-18-06

ORIGINAL SCALE IN MILLIMETERS FOR REDUCED PLANS 0 10 20 30 40 50 60 70 80 90 100

July 18, 2012

USERNAME => tsomson DATE PLOTTED => 8/17/2012 TIME PLOTTED => 10:30:20 AM

DIST	COUNTY	ROUTE	KILOMETER POST TOTAL PROJECT	SHEET No	TOTAL SHEETS
04	SF, ALA	80	12.2/14.3 0.0/4.0	791A R1	806

Scott L. Danielson 8/17/12
REGISTERED CIVIL ENGINEER

PLANS APPROVAL DATE

STATE OF CALIFORNIA — SCOTT L. DANIELSON — 6/30/2012 — CERTIFICATE NO. C 039 — REGISTERED ARCHITECT

The State of California or its officers or agents shall not be responsible for the accuracy or completeness of electronic copies of this plan sheet.

Parsons Brinckerhoff Quade & Douglas, Inc.
303 Second Street, Suite 700N
San Francisco, CA 94107

Caltrans now has a web site! To get to the web site, go to: http://www.dot.ca.gov

Caltrans Metric

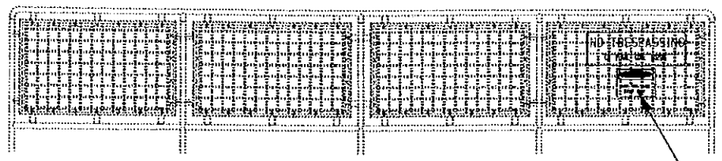

A SECTION
No Scale

"NO TRESPASSING" and "DANGER HIGH VOLTAGE" signs (Typ. for Service Platforms 9W-23W, 9E-22E, 1W-3W and 1E-3E). See SIGN Detail this sheet.

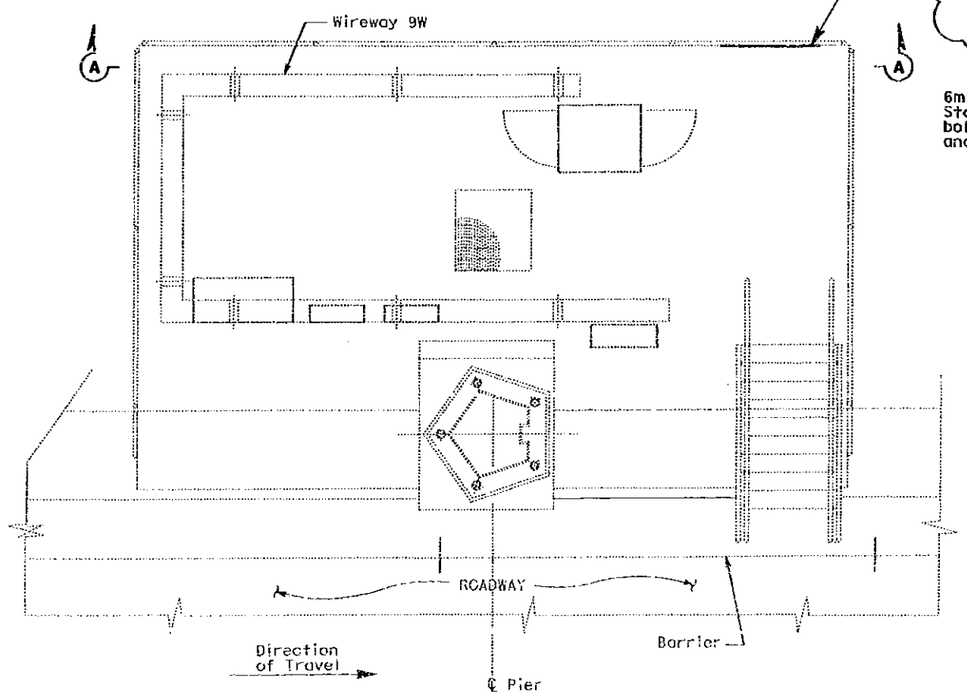

TYPICAL SERVICE PLATFORM PLAN
No Scale

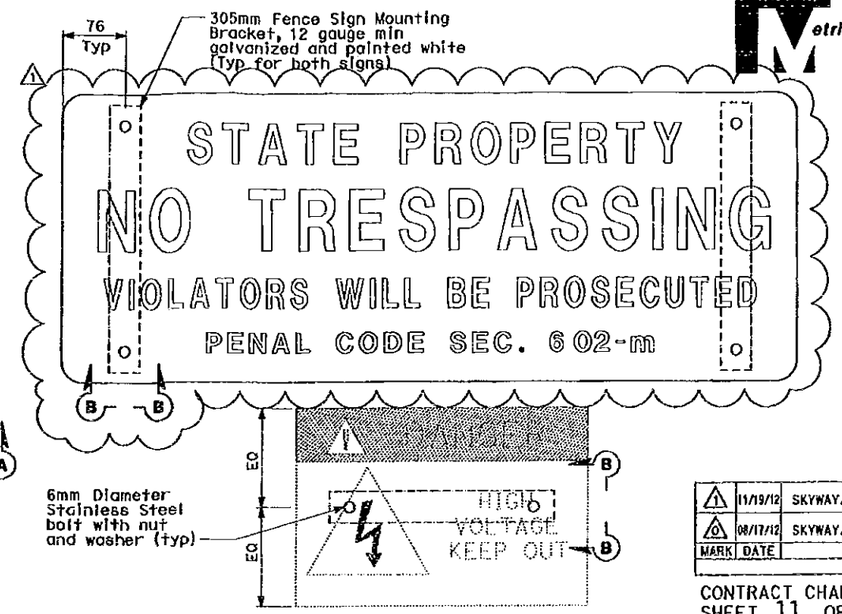

SIGN MOUNTING DETAIL
No Scale

SHEET NOTES:

1. Panel shall be 0.040 aluminum, or approved by Engineer.
2. Black on white with 13mm border.
3. ANSI Z535.2 compliant, or as approved by Engineer.
4. Back of sign shall be white.

MARK	DATE	DESCRIPTIONS	BY	CH'D
1	11/19/12	SKYWAY/OTD SECURITY ENHANCEMENT	NK	SD
0	08/17/12	SKYWAY/OTD SECURITY ENHANCEMENT	NK	SD

REVISIONS

CONTRACT CHANGE ORDER NO. 141
SHEET 11 OF 21

STATE OF CALIFORNIA — SCOTT L. DANIELSON — 6/30/2014 — CERTIFICATE NO. C 039 — REGISTERED ARCHITECT

Scott L. Danielson
FOR REVISION ONLY 1

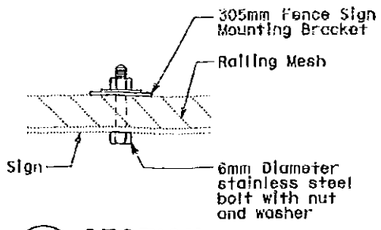

B SECTION
No Scale

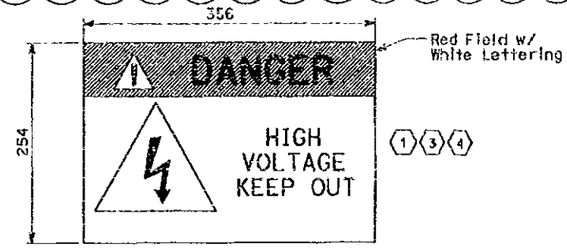

SIGN DETAIL
No Scale

ALL DIMENSIONS ARE IN MILLIMETERS UNLESS OTHERWISE SHOWN

Yongxin Liu *Y. Liu* DESIGN OVERSIGHT	DESIGN BY N. King	CHECKED S. L. Danielson	PREPARED FOR THE STATE OF CALIFORNIA DEPARTMENT OF TRANSPORTATION
SIGN OFF DATE	DETAILS BY C. Koon	CHECKED N. King	Brady Nadell PROJECT ENGINEER
DESIGN DETAIL SHEET (METRIC) (REV. 3/1/08)	QUANTITIES BY N. King	CHECKED S. L. Danielson	CU 04251 EA 0120S1

ORIGINAL SCALE IN MILLIMETERS FOR REDUCED PLANS 0 10 20 30 40 50 60 70 80 90 100

BRIDGE NO. 34-0006
KILOMETER POST 12.2/14.3 0.0/4.0
DISREGARD PRINTS BEARING EARLIER REVISION DATES

SERVICE PLATFORM ARCHITECTURAL
SIGN DETAIL
AS-1A

REVISION DATES (PRELIMINARY STAGE ONLY) SHEET OF 17

USERNAME => LianFco DATE PLOTTED => 19-NOV-2012 TIME PLOTTED => 09:08

N:\3103WS\pse\V8I Struc-Contract 1\CCO\Structures\CCO.141\4C120SWC001A-01.dgn

DIST	COUNTY	ROUTE	KILOMETER POST TOTAL PROJECT	SHEET No	TOTAL SHEETS
04	SF, ALA	80	12.2/14.3 0.0/4.0	791B	806

Gregory Bankovich 8/17/12
REGISTERED CIVIL ENGINEER

PLANS APPROVAL DATE

Gregory Bankovich No. C40518 Exp. 3/31/13 CIVIL — REGISTERED PROFESSIONAL ENGINEER — STATE OF CALIFORNIA

The State of California or its officers or agents shall not be responsible for the accuracy or completeness of electronic copies of this plan sheet.

Parsons Brinckerhoff Quade & Douglas, Inc.
303 Second Street, Suite 700N
San Francisco, CA 94107

Caltrans nav has a web site! To get to the web site, go to: http://www.dot.ca.gov

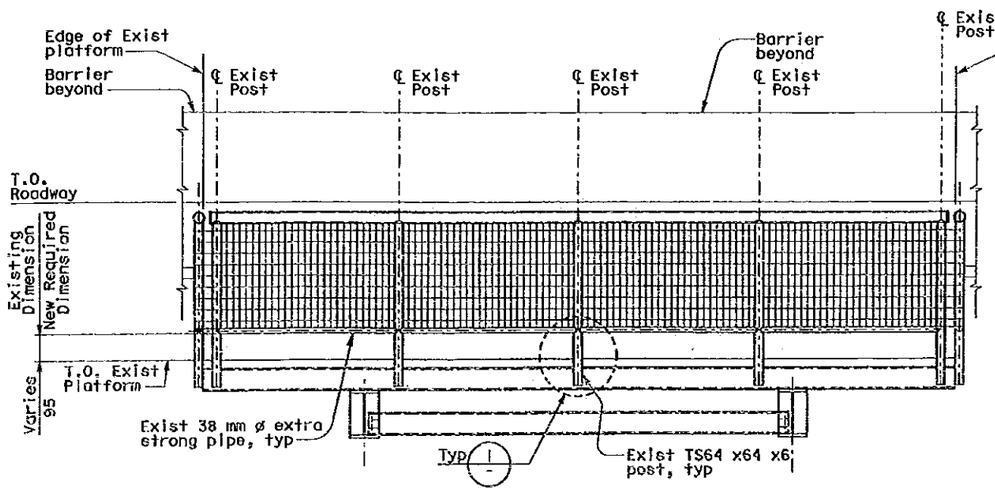

FRONT ELEVATION
SCALE: 1:25

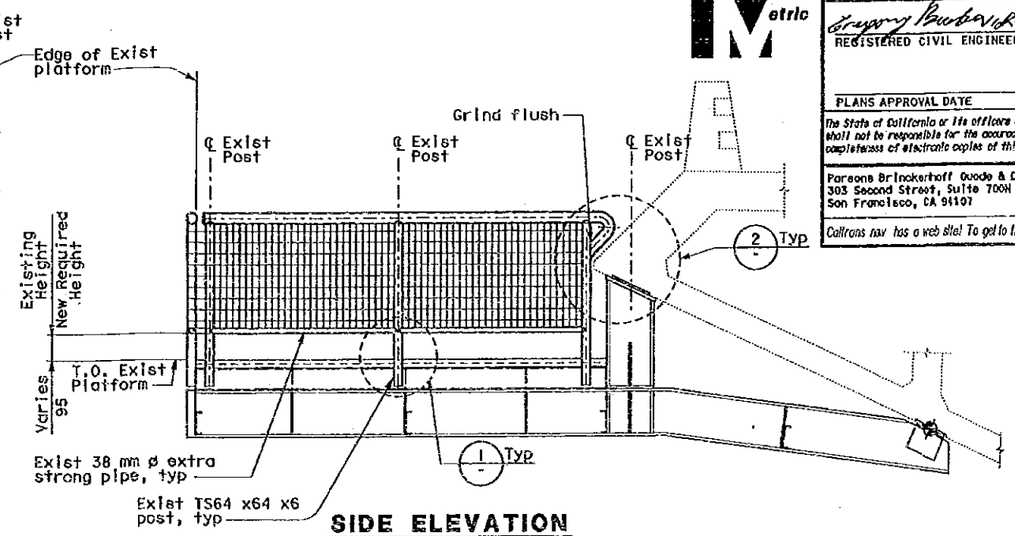

SIDE ELEVATION
SCALE: 1:25

MARK	DATE	DESCRIPTIONS	BY	CH'D
0	08/17/12	Skyway/OTD Security Enhancement	GB	MSO

REVISIONS

CONTRACT CHANGE ORDER NO. 141
SHEET 12 OF 21

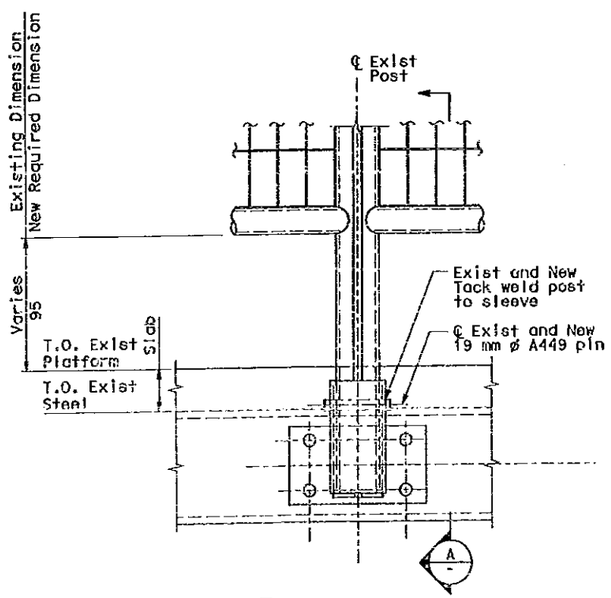

1 DETAIL
SCALE: 1:5

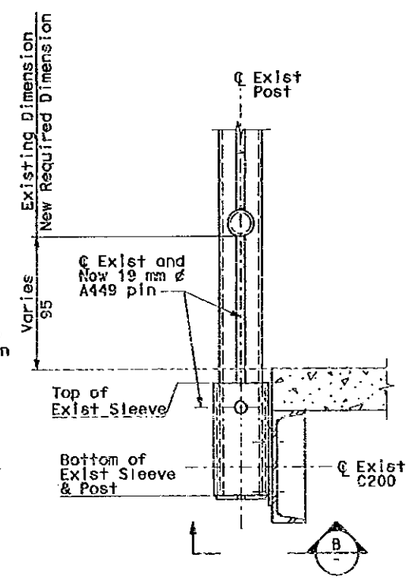

A SECTION
SCALE: 1:5

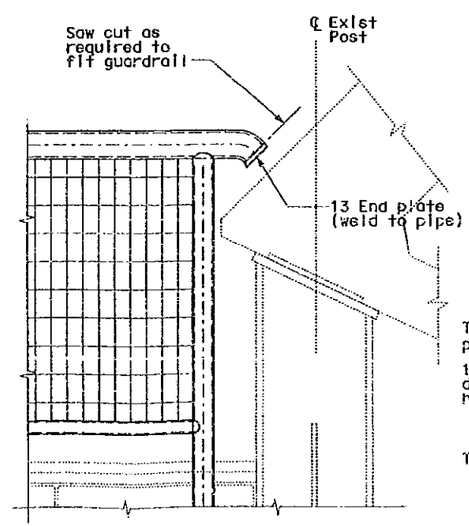

2 DETAIL
SCALE: 1:10

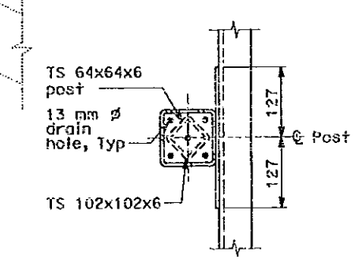

B SECTION
SCALE: 1:5

NOTES:

1. The contractor shall verify all controlling field dimensions before ordering or fabricating any material.
2. At service platform 22W and 23W, the Contractor shall remove existing handrail from existing sleeve, cut TS 64x64x6 posts to required dimension, drill new hole for new pin, drill 4-13mm dia holes in sleeve bottom plate as shown in "Section B", place post back in existing sleeve, tack weld at top of sleeve and new pin to the existing sleeve.
3. All new structural steel parts shall be hot-dipped galvanized. Clean, prime paint, and finish paint all modified and new steel in accordance with the special provisions.
4. "Section B" to be applied to platforms 22E, 22W and 23W.

ALL DIMENSIONS ARE IN MILLIMETERS UNLESS OTHERWISE SHOWN

Yongxin Liu Y. Liu
DESIGN OVERSIGHT

SIGN OFF DATE

DESIGN DETAIL SHEET SHEET01(REV. 3/1/99)

DESIGN	BY G. Bankovich	CHECKED M.S. Owyang	
DETAILS	BY O. Kurnovskaya	CHECKED G. Bankovich	
QUANTITIES	BY G. Bankovich	CHECKED M.S. Owyang	

PREPARED FOR THE STATE OF CALIFORNIA DEPARTMENT OF TRANSPORTATION

Brady Nadoll
PROJECT ENGINEER

CU 04251
EA 0120S1

BRIDGE NO. 34-0006
KILOMETER POST 12.2/14.3 0.0/4.0

SERVICE PLATFORM ARCHITECTURAL
22W AND 23W SERVICE PLATFORMS GUARDRAIL REPAIR

AS-1B

DISREGARD PRINTS BEARING EARLIER REVISION DATES

REVISION DATES (PRELIMINARY STAGE ONLY)

SHEET OF

ORIGINAL SCALE IN MILLIMETERS FOR REDUCED PLANS 0 10 20 30 40 50 60 70 80 90 100

\\13103\MS\pse\VB1 Strua-Contract 1\CCO\Structures\CCO_141\10129sv001B.dgn

USERNAME => L.lorico DATE PLOTTED => 24-AUG-2012 TIME PLOTTED => 17:06

DIST	COUNTY	ROUTE	KILOMETER POST TOTAL PROJECT	SHEET No	TOTAL SHEETS
04	SF, ALA	80	12.2/14.3 0.0/4.0	791C	806

Gregory Benkovich 8/17/12
REGISTERED CIVIL ENGINEER

PLANS APPROVAL DATE

REGISTERED PROFESSIONAL ENGINEER Gregory Benkovich No. C40518 Exp. 3/31/13 CIVIL STATE OF CALIFORNIA

The State of California or its officers or agents shall not be responsible for the accuracy or completeness of electronic copies of this plan sheet.

Parsons Brinckerhoff Quade & Douglas, Inc.
303 Second Street, Suite 700N
San Francisco, CA 94107

Caltrans now has a web site! To get to the web site, go to: http://www.dot.ca.gov

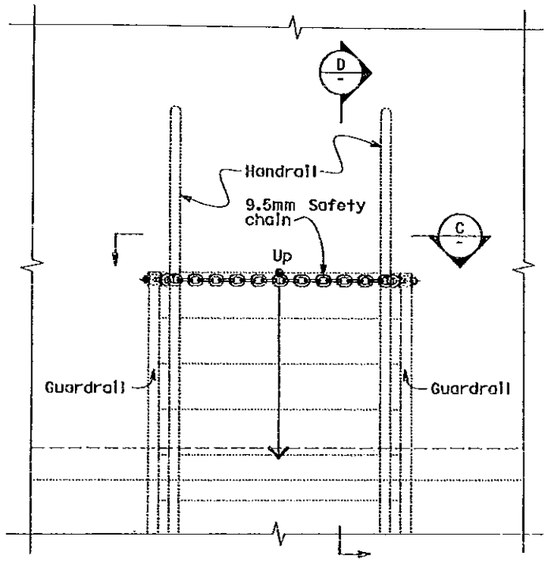

PLAN
SCALE: 1:20

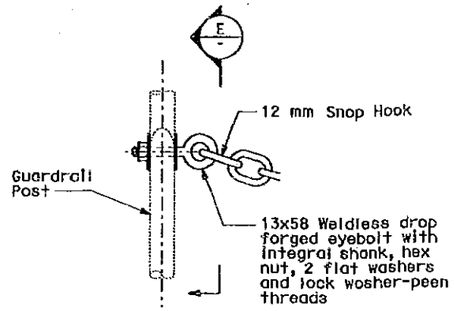

DETAIL 1
No Scale

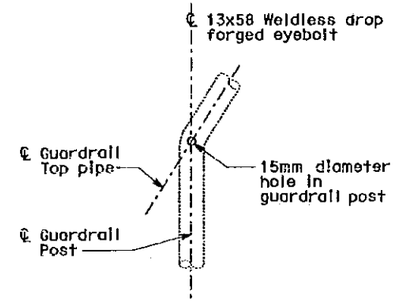

SECTION E
No Scale

NOTES:

1. The contractor shall verify all controlling field dimensions before ordering or fabricating any material.
2. At all existing YBI and OTD service platforms install safety chain at the bottom of the access stairs (Platforms 1E, 1W, 2E, 3W, 22E, 22W, and 23W) per details this sheet. Safety chain shall be 9.5 mm galvanized steel coil chain, approximately 39.4 links per meter. Length shall be minimum which allows lockup of safety railing. Material shall be Grade 43 high test chain ASTM A413.
3. Clean, Prime paint, & finish paint all exposed & new steel in accordance with th special provisions.

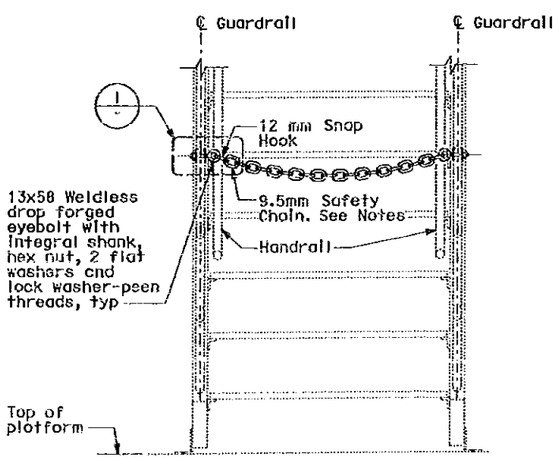

SECTION C
SCALE: 1:20

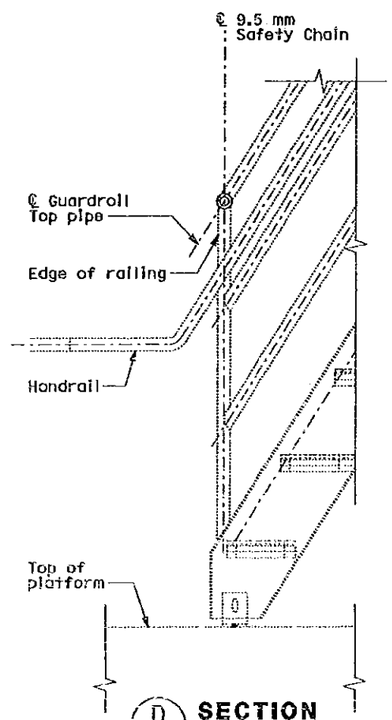

SECTION D
SCALE: 1:20

MARK	DATE	DESCRIPTIONS	BY	CH'D
0	08/17/12	Skyway/OTD Security Enhancement	GB	MSO

REVISIONS

CONTRACT CHANGE ORDER NO. 141
SHEET 13 OF 21

ALL DIMENSIONS ARE IN MILLIMETERS UNLESS OTHERWISE SHOWN

Yongxin Liu Y. Liu
DESIGN OVERSIGHT

SIGN OFF DATE

DESIGN DETAIL SHEET (METRIC) (REV. 3/1/95)

	BY	CHECKED
DESIGN	C. Koon	G. Benkovich
DETAILS	J. Fusco	G. Benkovich
QUANTITIES	C. Koon	G. Benkovich

PREPARED FOR THE STATE OF CALIFORNIA DEPARTMENT OF TRANSPORTATION

Brody Nadell
PROJECT ENGINEER

BRIDGE NO. 34-0006
KILOMETER POST 12.2/14.3 0.0/4.0

CU 04251
EA 0120S1

DISREGARD PRINTS BEARING EARLIER REVISION DATES

REVISION DATES (PRELIMINARY STAGE ONLY)

SHEET OF

SERVICE PLATFORM ARCHITECTURAL
MISCELLANEOUS DETAILS

AS-1C

DESIGNED SCALE IN MILLIMETERS FOR REDUCED PLANS 0 10 20 30 40 50 60 70 80 90 100

USERNAME => LIONCOD DATE PLOTTED => 24-AUG-2012 TIME PLOTTED => 17:06

\\13103\WS\pgeYBI Structure-Contract 1\CCO\Structures\CCO_141\v01-20swc001c.dgn

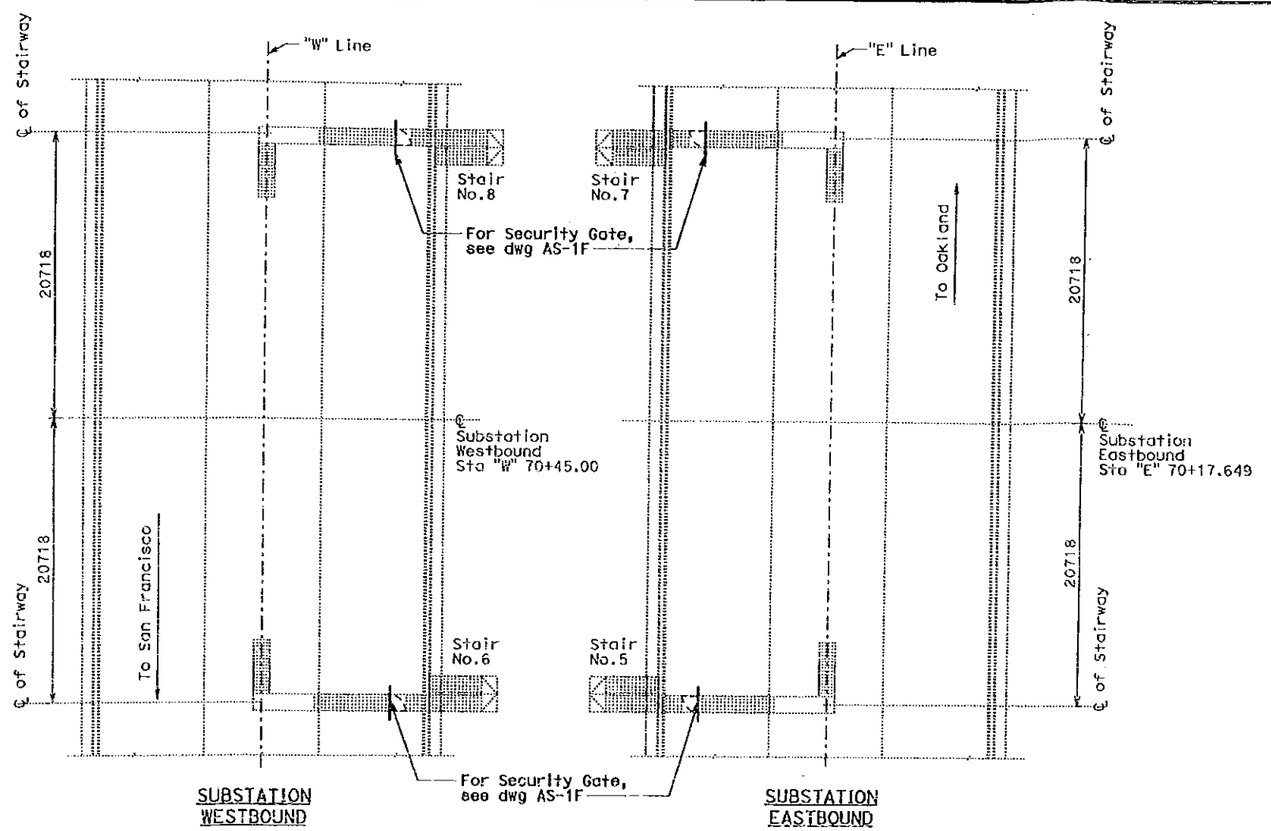

PLAN
SCALE: 1:200

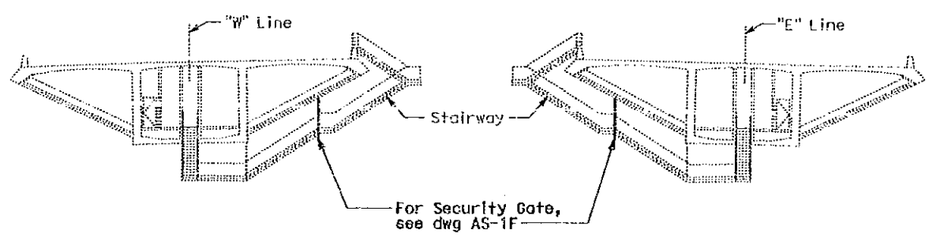

ELEVATION
SCALE: 1:200

Caltrans Metric

DIST	COUNTY	ROUTE	KILOMETER POST TOTAL PROJECT	SHEET No	TOTAL SHEETS
04	SF, ALA	80	12.2/14.3 0.0/4.0	791D	806

REGISTERED CIVIL ENGINEER 8/17/12

REGISTERED PROFESSIONAL ENGINEER SAFJUDDIN A. MOHAMMED No. 71894 CIVIL STATE OF CALIFORNIA

PLANS APPROVAL DATE

The State of California or its officers or agents shall not be responsible for the accuracy or completeness of electronic copies of this plan sheet.

Parsons Brinckerhoff Quade & Douglas, Inc.
303 Second Street, Suite 700N
San Francisco, CA 94107

Caltrans now has a web site! To get to the web site, go to: http://www.dot.ca.gov

NOTES:

1. The contractor shall verify all controlling field dimensions before ordering or fabricating any material.
2. Clean, Prime paint, & finish paint all exposed & new steel in accordance with the special provisions.

MARK	DATE	DESCRIPTIONS	BY	CH'D
0	08/17/12	Skyway/OTD Security Enhancement	CK	SM

REVISIONS

CONTRACT CHANGE ORDER NO. 141
SHEET 14 OF 21

ALL DIMENSIONS ARE IN MILLIMETERS UNLESS OTHERWISE SHOWN

Yongxin Liu Y. Liu
DESIGN OVERSIGHT
SIGN OFF DATE

DESIGN	BY G. Benkovich	CHECKED W.S. Ovyang	
DETAILS	BY O. Kurnovskaya	CHECKED G. Benkovich	
QUANTITIES	BY G. Benkovich	CHECKED W.S. Ovyang	

PREPARED FOR THE STATE OF CALIFORNIA DEPARTMENT OF TRANSPORTATION

Brody Nodell
PROJECT ENGINEER

BRIDGE NO. 34-0006
KILOMETER POST 12.2/14.3 0.0/4.0

SKYWAY SUBSTATIONS ARCHITECTURAL
GENERAL PLAN STAIRWAY
AS-1D

CU 04251
EA 0120S1

DISREGARD PRINTS BEARING EARLIER REVISION DATES
REVISION DATES (PRELIMINARY STAGE ONLY)
SHEET OF

DESIGN DETAIL SHEET (METRIC) (REV. 1/1/98)

ORIGINAL SCALE IN MILLIMETERS FOR REDUCED PLANS 0 10 20 30 40 50 60 70 80 90 100

USERNAME => liuyongxin
DATE PLOTTED => 24-AUG-2012 TIME PLOTTED => 17:06

DIST	COUNTY	ROUTE	KILOMETER POST TOTAL PROJECT	SHEET No	TOTAL SHEETS
04	SF, ALA	80	12.2/14.3 0.0/4.0	791E	806

REGISTERED CIVIL ENGINEER 8/17/12

REGISTERED PROFESSIONAL ENGINEER SAFIUDDIN A. MOHAMMED No. 71894 CIVIL STATE OF CALIFORNIA

PLANS APPROVAL DATE

The State of California or its officers or agents shall not be responsible for the accuracy or completeness of electronic copies of this plan sheet.

Parsons Brinckerhoff Quade & Douglas, Inc.
303 Second Street, Suite 700N
San Francisco, CA 94107

Caltrans now has a web site! To get to the web site, go to http://www.dot.ca.gov

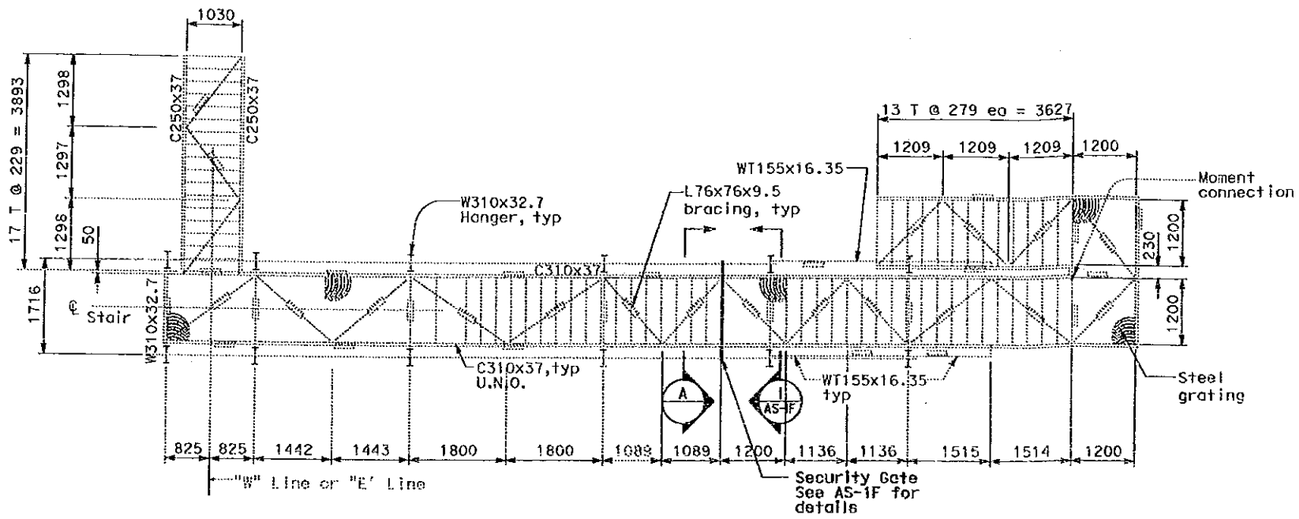

TYPICAL STAIRWAY PLAN

Stair No. 6 as shown, Stair No. 5 opposite hand

SCALE: 1:50

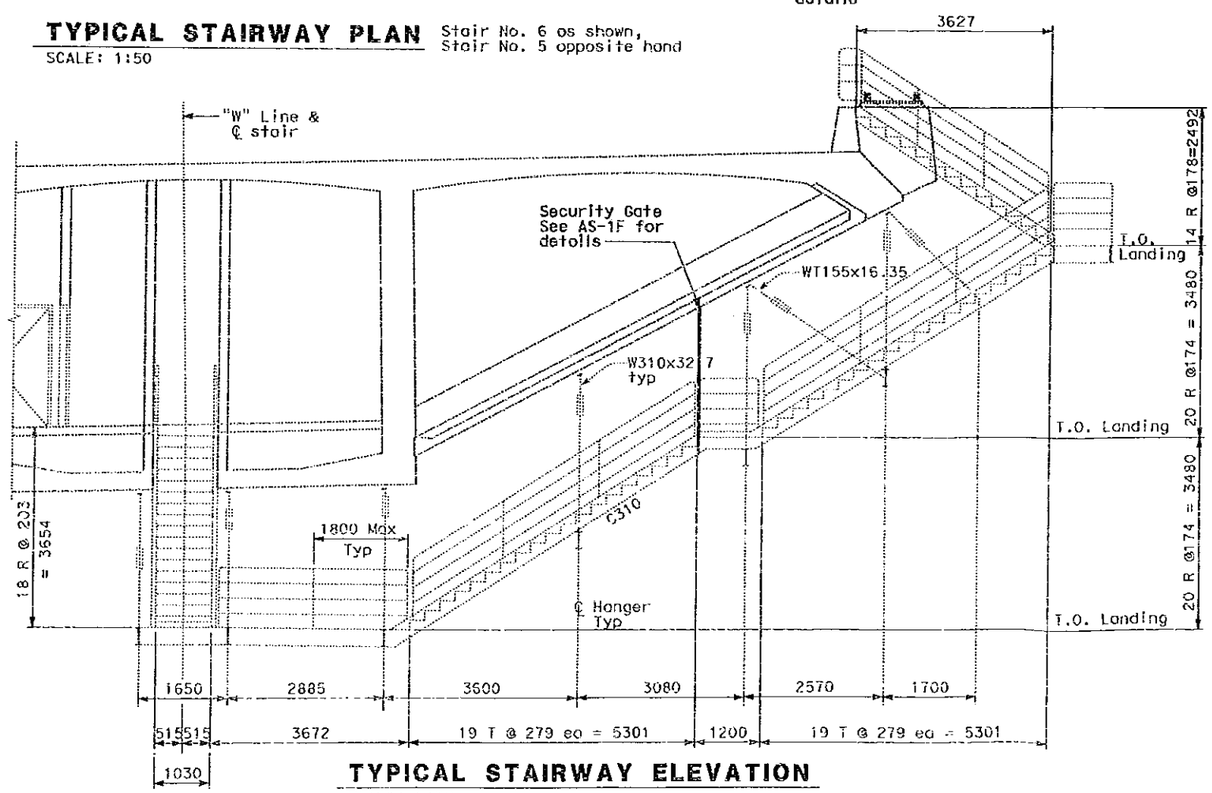

TYPICAL STAIRWAY ELEVATION

SCALE: 1:50

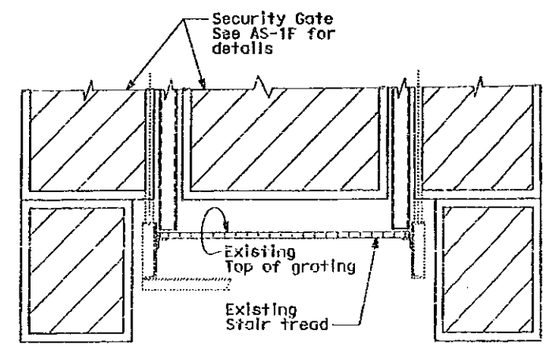

A SECTION

SCALE: 1:10

NOTES:

1. For Notes, see sheet AS-1.
2. Midspan Substation - EB, similar.
3. The Contractor shall verify all controlling field dimensions before ordering or fabricating any materials.

MARK	DATE	DESCRIPTIONS	BY	CH'D
0	08/17/12	Skyway/OTO Security Enhancement	CK	SM

REVISIONS

CONTRACT CHANGE ORDER NO. 141
SHEET 15 OF 21

ALL DIMENSIONS ARE IN MILLIMETERS UNLESS OTHERWISE SHOWN

Yongxin Liu Y. Liu
DESIGN OVERSIGHT

SIGN OFF DATE

DESIGN	BY G. Benkovich	CHECKED M.S. Ouyang	
DETAILS	BY O. Kurnovskaya	CHECKED G. Benkovich	
QUANTITIES	BY G. Benkovich	CHECKED M.S. Ouyang	

PREPARED FOR THE STATE OF CALIFORNIA DEPARTMENT OF TRANSPORTATION

Brady Nadell
PROJECT ENGINEER

BRIDGE NO. 34-0006
KILOMETER POST 12.2/14.3 0.0/4.0

SKYWAY SUBSTATION - WB

STAIRWAY LAYOUT AND SECTIONS

AS-1E

CU 04251
EA 0120S1

DISREGARD PRINTS BEARING EARLIER REVISION DATES

REVISION DATES (PRELIMINARY STAGE ONLY)

SHEET OF

DESIGN DETAIL SHEET (METRIC) REV. 3/1/98

ORIGINAL SCALE IN MILLIMETERS FOR REDUCED PLANS 0 10 20 30 40 50 60 70 80 90 100

13103\MS\psaV8: Struc-Contract 1\CCO\Structures\CCO_141\A0120awc001E.dgn

USERNAME => L'orfeo DATE PLOTTED => 24-AUG-2012 TIME PLOTTED => 17:06

DIST	COUNTY	ROUTE	KILOMETER POST TOTAL PROJECT	SHEET No	TOTAL SHEETS
04	SF, ALA	80	12.2/14.3 0.0/4.0	791F	806

REGISTERED CIVIL ENGINEER 8/17/12

PLANS APPROVAL DATE

REGISTERED PROFESSIONAL ENGINEER SAIFUDDIN A. MOHAMMED No. 71854 CIVIL STATE OF CALIFORNIA

The State of California or its officers or agents shall not be responsible for the accuracy or completeness of electronic copies of this plan sheet.

Parsons Brinckerhoff Quade & Douglas, Inc.
303 Second Street, Suite 700N
San Francisco, CA 94107

Caltrans now has a web site! To get to the web site, go to: http://www.dot.ca.gov

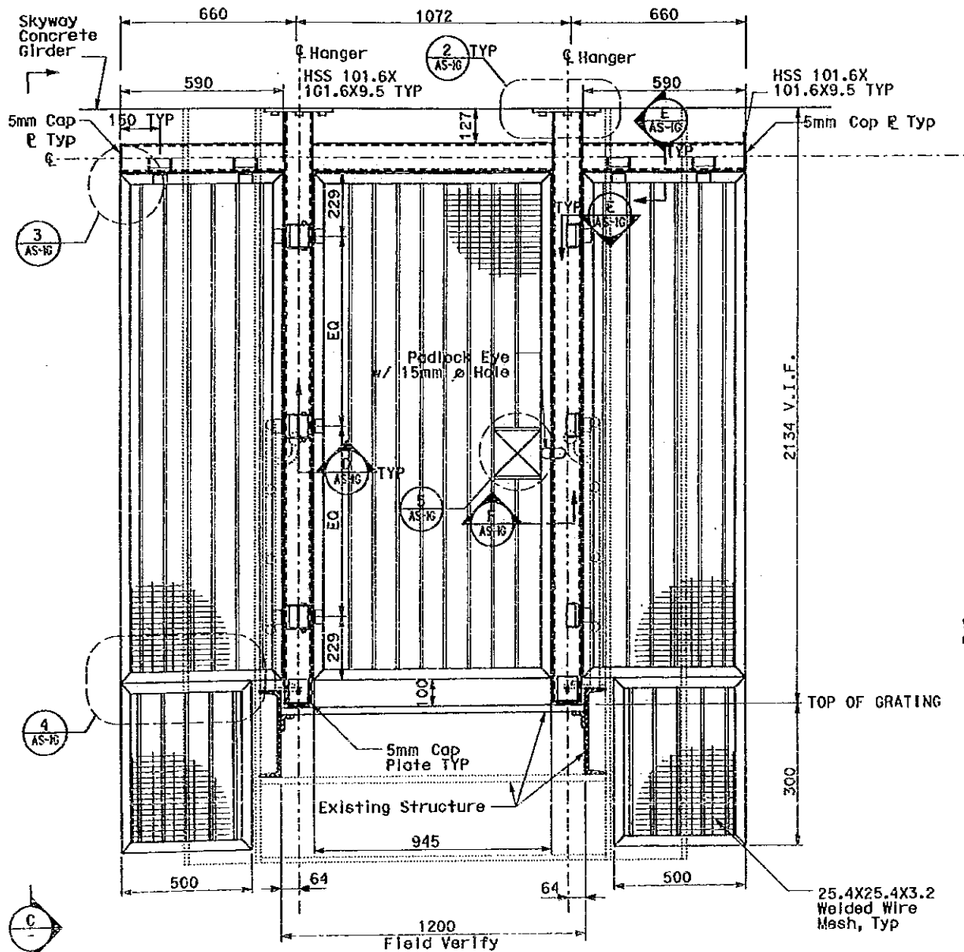

1 AS-1E **HANGER DETAIL**
NTS

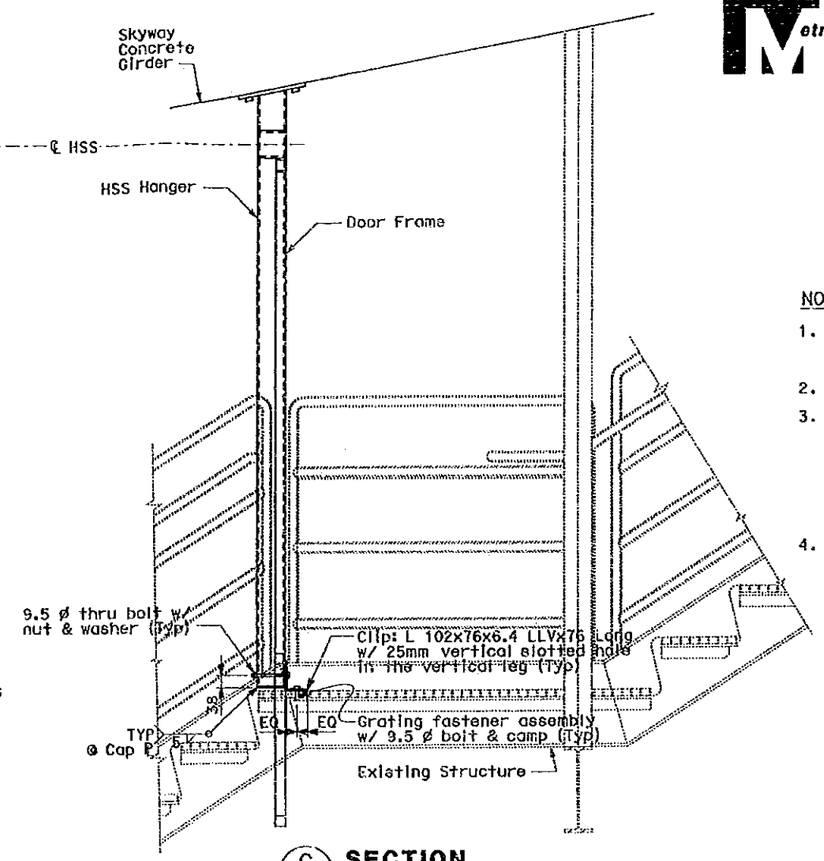

C **SECTION**
NTS

NOTES:

1. The contractor shall verify all controlling field dimensions before ordering or fabricating any material.
2. For structural notes, see sheet AS-1.
3. The contractor shall ensure no reinforcement is cut nor any embedded items are damaged during anchor installation. Coordinate with structural drawings for location of reinforcement & post-tensioning tendons. Adjust anchor spacing to avoid drilling into embedded items
4. Concrete anchors shall be installed per manufacturer's specifications.

MARK	DATE	DESCRIPTIONS	BY	CH'D
0	08/17/12	Skyway/OTD Security Enhancement	CK	SM

REVISIONS

CONTRACT CHANGE ORDER NO. 141
SHEET 16 OF 21

ALL DIMENSIONS ARE IN MILLIMETERS UNLESS OTHERWISE SHOWN

Yongxin Liu
DESIGN OVERSIGHT

SIGN OFF DATE

DESIGN DETAIL SHEET (LETSCI) (REV. 5/1/98)

	BY		CHECKED	
DESIGN	BY	G. Benkovich	CHECKED	M.S. Ouyang
DETAILS	BY	O. Kurnevskaya	CHECKED	G. Benkovich
QUANTITIES	BY	G. Benkovich	CHECKED	M.S. Ouyang

ORIGINAL SCALE IN MILLIMETERS FOR REDUCED PLANS 0 10 20 30 40 50 60 70 80 90 100

PREPARED FOR THE STATE OF CALIFORNIA DEPARTMENT OF TRANSPORTATION

Brady Nadoll
PROJECT ENGINEER

CU 04251
EA 0120S1

BRIDGE NO. 34-0006
KILOMETER POST 12.2/14.3 0.0/4.0

SKYWAY SUBSTATIONS ARCHITECTURAL
SECURITY GATE DETAILS
AS-1F

DISPLAY PRINTS BEARING EARLIER REVISION DATES

REVISION DATES (PRELIMINARY STAGE ONLY)

SHEET OF

USERNAME => LIOFICO DATE PLOTTED => 24-AUG-2012 TIME PLOTTED => 17:06

T:\13103\MS\bscVB1 Strug-Contract 1\GCO\Structures\CCO_141\401208wrc001f.dgn

DIST	COUNTY	ROUTE	KILOMETER POST TOTAL PROJECT	SHEET No	TOTAL SHEETS
04	SF, ALA	80	12.2/14.3 0.0/4.0	7916	806

REGISTERED CIVIL ENGINEER 8/17/12

PLANS APPROVAL DATE

REGISTERED PROFESSIONAL ENGINEER SAFIUDDIN A. MOHAMMED No. 71894 CIVIL STATE OF CALIFORNIA

The State of California or its officers or agents shall not be responsible for the accuracy or completeness of electronic copies of this plan sheet.

Parsons Brinckerhoff Quade & Douglas, Inc.
303 Second Street, Suite 700N
San Francisco, CA 94107

Caltrans now has a web site! To get to the web site, go to: http://www.dot.ca.gov

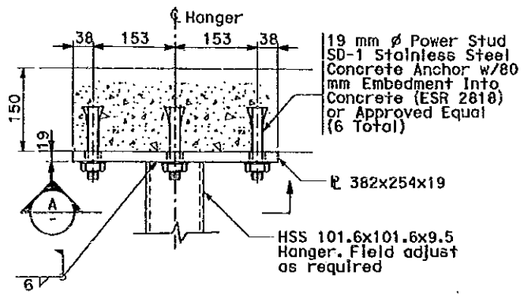

2 HANGER DETAIL
AS-1F NTS

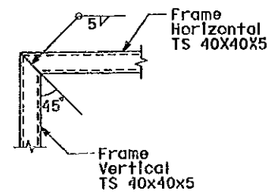

3 TYP DOOR FRAME CORNER DETAIL
AS-1F NTS

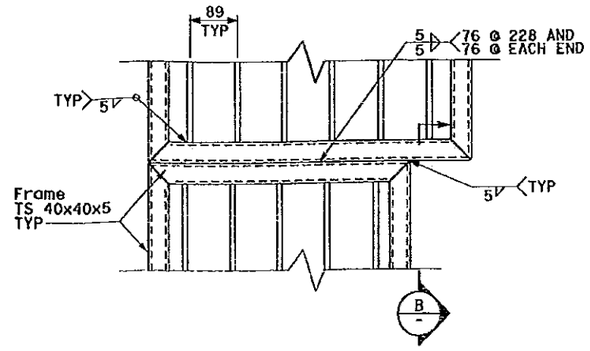

4 ATTACHMENT DETAIL
AS-1F NTS

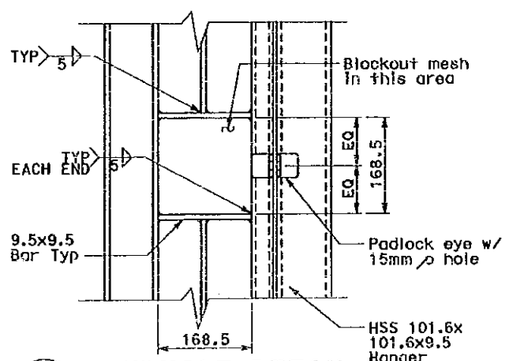

5 HANDHOLE DETAIL
AS-1F NTS

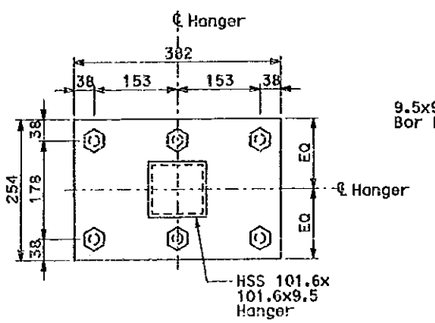

A SECTION
NTS

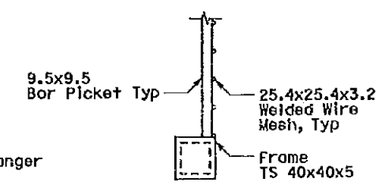

B SECTION
NTS

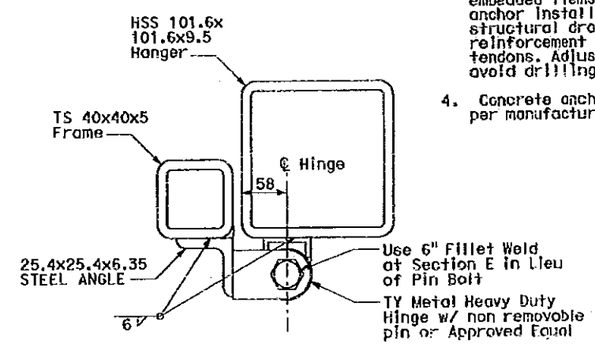

D/E HINGE AND BRACKET DETAIL
AS-1F NTS

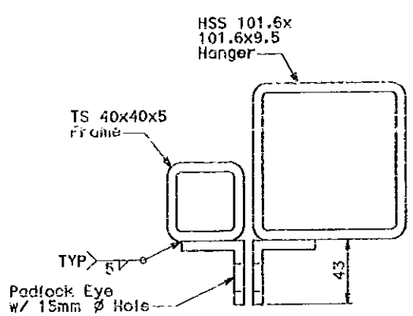

F PADLOCK EYE
AS-1F NTS

NOTES:

1. The contractor shall verify all controlling field dimensions before ordering or fabricating any material.
2. For structural notes, see sheet AS-1.
3. The contractor shall ensure no reinforcement is cut nor any embedded items are damaged during anchor installation. Coordinate with structural drawings for location of reinforcement & post-tensioning tendons. Adjust anchor spacing to avoid drilling into embedded items.
4. Concrete anchors shall be installed per manufacturer's specifications.

MARK	DATE	DESCRIPTIONS	BY	CH'D
0	08/17/12	Skyway/OTD Security Enhancement	CK	SM
		REVISIONS		

CONTRACT CHANGE ORDER NO. 141
SHEET 17 OF 21

ALL DIMENSIONS ARE IN MILLIMETERS UNLESS OTHERWISE SHOWN

Yongxin Liu Y. Liu
DESIGN OVERSIGHT

SIGN OFF DATE

DESIGN DETAIL SHEET (METRIC) REV. 3/1/98

	BY	CHECKED	
DESIGN	G. Benkovich	W.S. Ovyang	
DETAILS	O. Kurnovskaya	G. Benkovich	
QUANTITIES	G. Benkovich	W.S. Ovyang	

ORIGINAL SCALE IN MILLIMETERS FOR REDUCED PLANS 0 10 20 30 40 50 60 70 80 90 100

PREPARED FOR THE STATE OF CALIFORNIA DEPARTMENT OF TRANSPORTATION

Brady Nadell
PROJECT ENGINEER

BRIDGE NO. 34-0006
KILOMETER POST 12.2/14.3 0.0/4.0
CU 04251
EA 0120S1

DIRECTIONS POINTS REGARDING EARLIER REVISION DATES

SKYWAY SUBSTATIONS ARCHITECTURAL
SECURITY GATE DETAILS

AS-1G

REVISION DATES (PRELIMINARY STAGE ONLY) SHEET OF

USERNAME => LIOFICO DATE PLOTTED => 24-AUG-2012 TIME PLOTTED => 17:06

FILE => 40120SWC001C.dgn

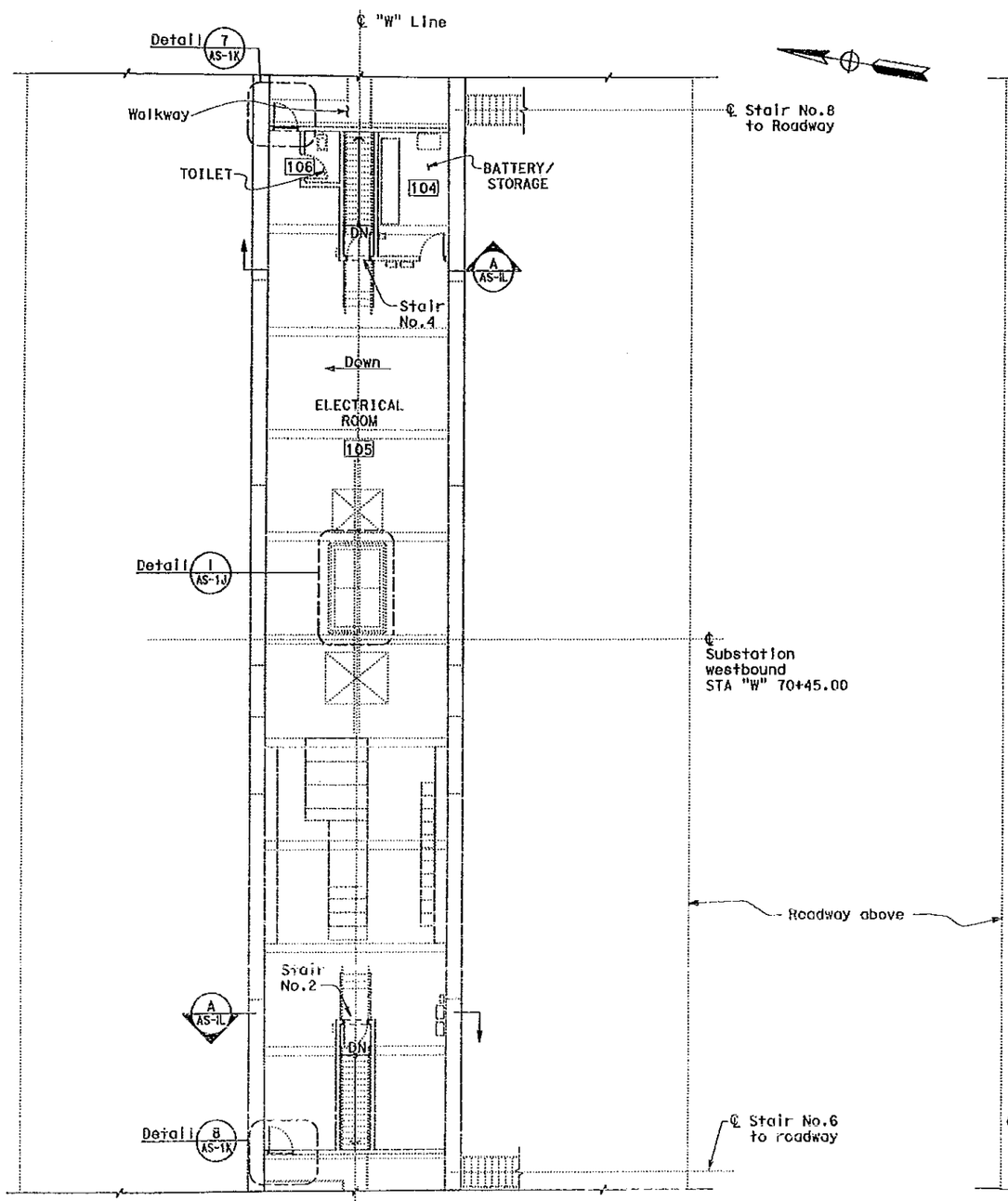

SUBSTATION WESTBOUND

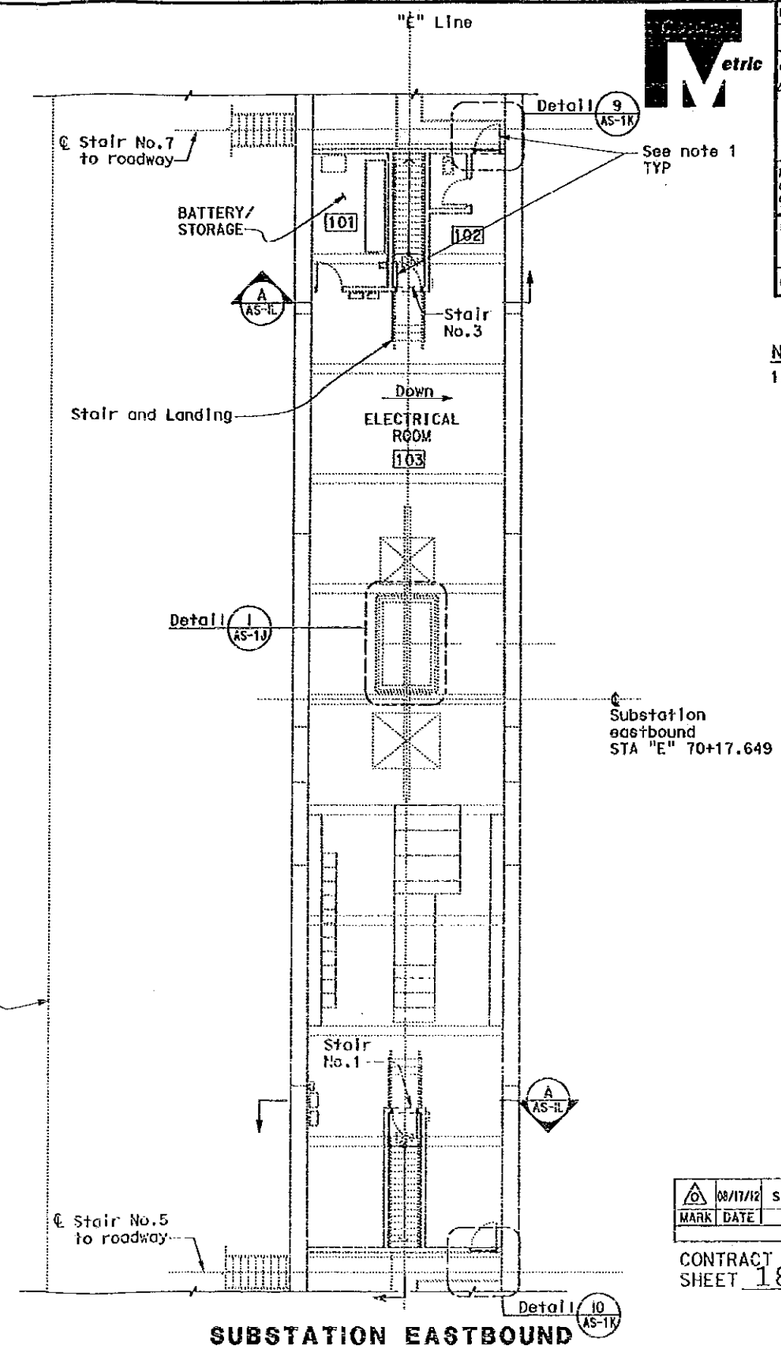

SUBSTATION EASTBOUND

DIST	COUNTY	ROUTE	KILOMETER POST TOTAL PROJECT	SHEET No	TOTAL SHEETS
04	SF, ALA	80	12.2/14.3 0.0/4.0	791H	806

Scott L. Danielson 8/17/12
REGISTERED CIVIL ENGINEER

STATE OF CALIFORNIA — SCOTT L. DANIELSON — CERTIFICATE NO. C 61198 — REGISTERED ARCHITECT

PLANS APPROVAL DATE

The State of California or its officers or agents shall not be responsible for the accuracy or completeness of electronic copies of this plan sheet.

Parsons Brinckerhoff Quade & Douglas, Inc.
303 Second Street, Suite 700N
San Francisco, CA 94107

Caltrans now has a web site! To get to the web site, go to: http://www.dot.ca.gov

NOTES:

1. Install deadbolt knob on interior of existing lock fixture. (Typ, 8).

MARK	DATE	DESCRIPTIONS	BY	CH'D
0	08/17/12	Skyway/OTD Security Enhancement	CK	SD

REVISIONS

CONTRACT CHANGE ORDER NO. 141
SHEET 18 OF 21

ALL DIMENSIONS ARE IN MILLIMETERS UNLESS OTHERWISE SHOWN

Yongxin Liu Y. Liu
DESIGN OVERSIGHT

SIGN OFF DATE

DESIGN DETAIL SHEET (SETRC) (REV. 5/1/98)

	BY	CHECKED	
DESIGN	G. Benkovich	W.S. Ouyang	
DETAILS	O. Kurnovskaya	G. Benkovich	
QUANTITIES	G. Benkovich	W.S. Ouyang	

PREPARED FOR THE STATE OF CALIFORNIA DEPARTMENT OF TRANSPORTATION

Brady Nadell
PROJECT ENGINEER

ORIGINAL SCALE IN MILLIMETERS FOR REDUCED PLANS 0 10 20 30 40 50 60 70 80 90 100

CU 04251
EA 0120S1

BRIDGE NO. 34-0006
KILOMETER POST 12.2/14.3 0.0/4.0

DISREGARD PRINTS BEARING EARLIER REVISION DATES

REVISION DATES (PRELIMINARY STAGE ONLY)

SKYWAY SUBSTATIONS ARCHITECTURAL
MISCELLANEOUS DETAILS

AS-1H

SHEET OF 17

USERNAME => L.Liu-CO DATE PLOTTED => 24-AUG-2012 TIME PLOTTED => 17:06

T:\13'02\MS\pes\Y01 Struc-Contract 1\CCO\Structures\CCO_141\4012dsw301H.dgn

DIST	COUNTY	ROUTE	KILOMETER POST TOTAL PROJECT	SHEET No	TOTAL SHEETS
04	SF, ALA	80	12.2/14.3 0.0/4.0	791J	806

Scott L. Danielson 8/17/12
REGISTERED CIVIL ENGINEER

STATE OF CALIFORNIA — SCOTT L. DANIELSON — 8/30/2012 — CERTIFICATE NO. C-18 — REGISTERED ARCHITECT

PLANS APPROVAL DATE

The State of California or its officers or agents shall not be responsible for the accuracy or completeness of electronic copies of this plan sheet.

Parsons Brinckerhoff Quade & Douglas, Inc.
303 Second Street, Suite 700N
San Francisco, CA 94107

Caltrans now has a web site! To get to the web site, go to: http://www.dot.ca.gov

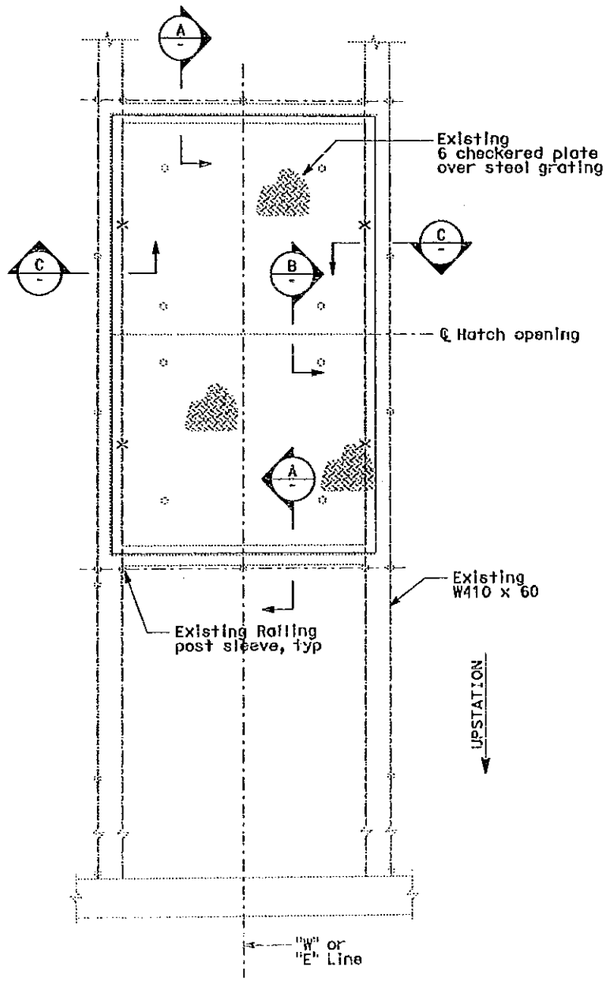

DETAIL 1 / AS-1H
SCALE: 1:5

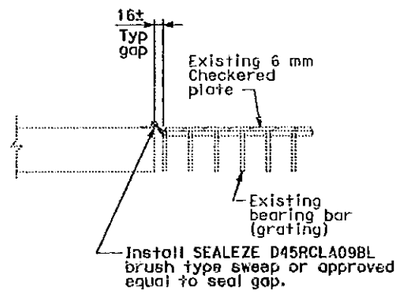

SECTION A
SCALE: 1:5

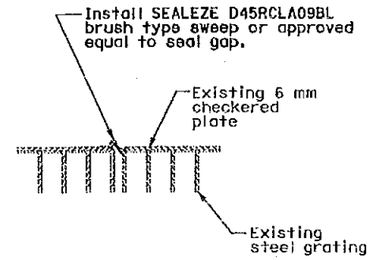

SECTION B
SCALE: 1:5

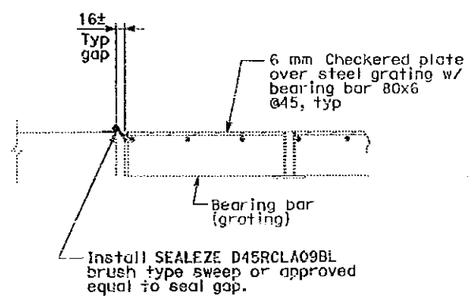

SECTION C
SCALE: 1:5

NOTES:

1. The Contractor shall verify all controlling field dimensions before ordering or fabricating any material.

MARK	DATE	DESCRIPTIONS	BY	CH'D
0	08/17/12	SKYWAY/OYD SECURITY ENHANCEMENT	CK	SD

REVISIONS

CONTRACT CHANGE ORDER NO. 141
SHEET 19 OF 21

ALL DIMENSIONS ARE IN MILLIMETERS UNLESS OTHERWISE SHOWN

Yongxin Liu Y. Liu
DESIGN OVERSIGHT
SIGN OFF DATE

	BY	CHECKED	
DESIGN	G. Benkovich	M.S. Ovyang	
DETAILS	O. Kurnovskaya	G. Benkovich	
QUANTITIES	G. Benkovich	M.S. Ovyang	

PREPARED FOR THE STATE OF CALIFORNIA DEPARTMENT OF TRANSPORTATION

Brady Nadell
PROJECT ENGINEER

BRIDGE NO. 34-0005
KILOMETER POST 12.2/14.3 0.0/4.0

CU 04251
EA 0120S1

SKYWAY SUBSTATIONS ARCHITECTURAL
MISCELLANEOUS DETAILS

AS-1J

DESIGN DETAIL SHEET (METRIC) REV. 3/1/95

ORIGINAL SCALE IN MILLIMETERS FOR REDUCED PLANS 0 10 20 30 40 50 60 70 80 90 100

DISREGARD PRINTS BEARING EARLIER REVISION DATES

REVISION DATES (PRELIMINARY STAGE ONLY) SHEET OF

USERNAME => LIOYCO DATE PLOTTED => 24-AUG-2012 TIME PLOTTED => 17:06

13:03 MS/pbw V81 Struc-Contract 1\CCO\Structures\CCO_141\A0120swcD01J.dgn

DIST	COUNTY	ROUTE	KILOMETER POST TOTAL PROJECT	SHEET No	TOTAL SHEETS
04	SF, ALA	80	12.2/14.3 0.0/4.0	791K	806

Scott L. Danielson 8/17/12
REGISTERED CIVIL ENGINEER

PLANS APPROVAL DATE

The State of California or its officers or agents shall not be responsible for the accuracy or completeness of electronic copies of this plan sheet.

STATE OF CALIFORNIA SCOTT L. DANIELSON 8/30/2012 CERTIFICATE NO. C-6189 REGISTERED ARCHITECT

Parsons Brinckerhoff Quade & Douglas, Inc.
303 Second Street, Suite 700N
San Francisco, CA 94107

Caltrans now has a web site! To get to the web site, go to: http://www.dot.ca.gov

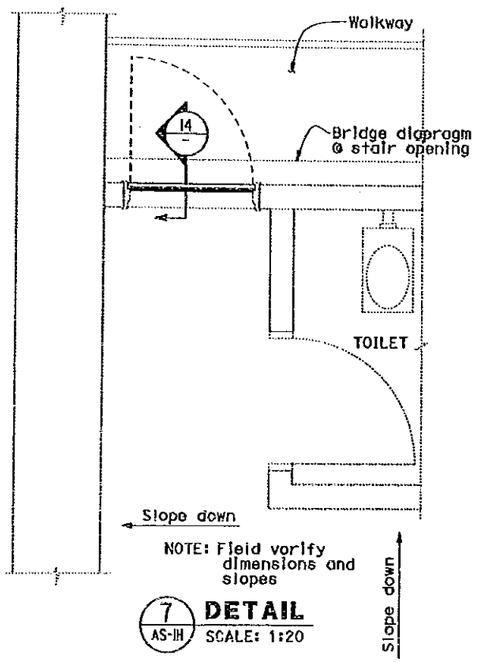

NOTE: Field verify dimensions and slopes

7 AS-1H **DETAIL** SCALE: 1:20

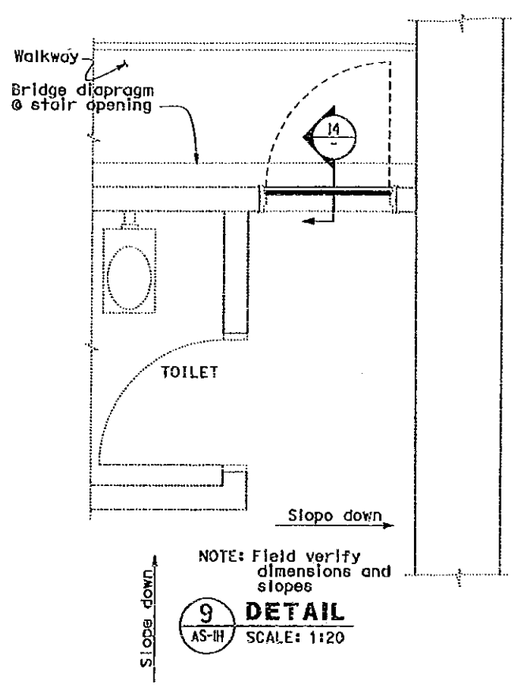

NOTE: Field verify dimensions and slopes

9 AS-1H **DETAIL** SCALE: 1:20

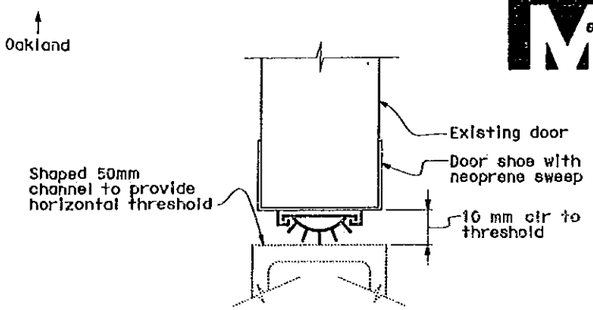

12 **DETAIL** NO SCALE

NOTES:

1. Contractor to verify site conditions, clearances, etc. to provide proper seal between doors and landings to exterior or unconditioned volumes.
2. Contractor to trim door to allow 10 mm from top of grating to door shoe when fully open to allow sufficient space for neoprene sweep.

MARK	DATE	DESCRIPTIONS	BY	CH'D
0	08/17/12	SKYWAY/OTD SECURITY ENHANCEMENT	CK	SD

REVISIONS

CONTRACT CHANGE ORDER NO. 141
SHEET 20 OF 21

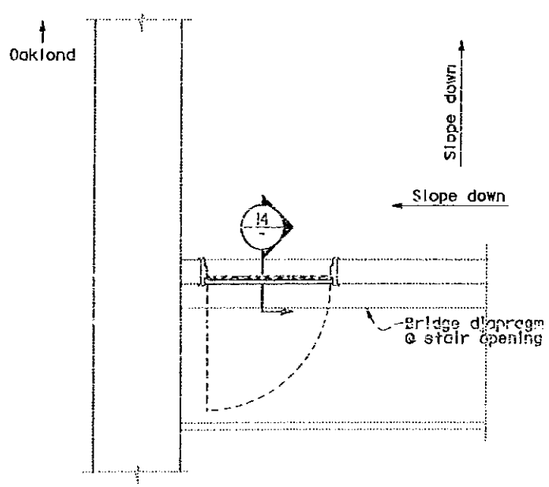

NOTE: Field verify dimensions and slopes

8 AS-1H **DETAIL** SCALE: 1:20

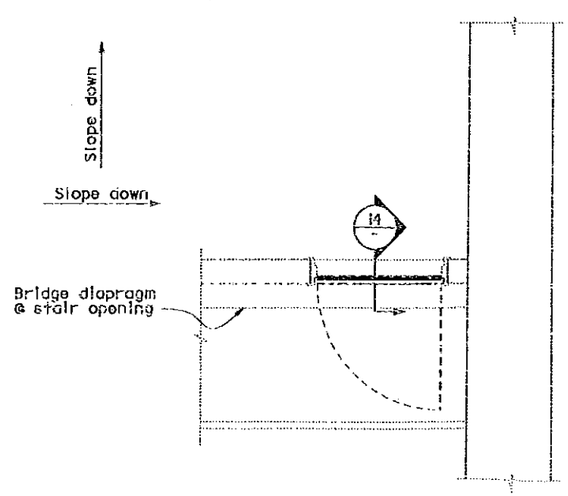

NOTE: Field verify dimensions and slopes

10 AS-1H **DETAIL** SCALE: 1:20

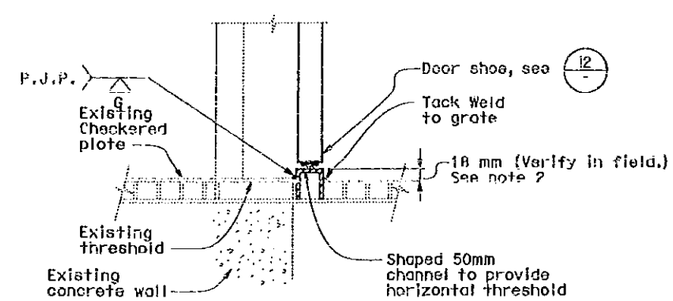

14 **DETAIL** SCALE: 1:5

ALL DIMENSIONS ARE IN MILLIMETERS UNLESS OTHERWISE SHOWN

Yongxin Liu Y. Liu
DESIGN OVERSIGHT
SIGN OFF DATE

DESIGN	BY G. Benkovich	CHECKED M.S. Owyang	
DETAILS	BY O. Kurnovskaya	CHECKED G. Benkovich	
QUANTITIES	BY G. Benkovich	CHECKED M.S. Owyang	

PREPARED FOR THE STATE OF CALIFORNIA DEPARTMENT OF TRANSPORTATION

Binsfeld Nadoll
PROJECT ENGINEER

BRIDGE NO. 34-0006
KILOMETER POST 12.2/14.3 0.0/4.0

SKYWAY SUBSTATIONS ARCHITECTURAL
MISCELLANEOUS DETAILS

AS-1K
SHEET OF 17

DESIGN DETAIL SHEET (METRIC) (REV. 3/1/98)

ORIGINAL SCALE IN MILLIMETERS FOR REDUCED PLANS 0 10 20 30 40 50 60 70 80 90 100

CU 04251
EA 0120S1

DESIGNED POINTS BEARING EARLIER REVISION DATES

REVISION DATES (PRELIMINARY STAGE ONLY)

FILE => 40120sccu01k.dgn

USERNAME => cltorico DATE PLOTTED => 24-AUG-2012 TIME PLOTTED => 17:06

T: 13103WS\pse\YR1 Sruc-Contract 1\CC01\Structures\CCO_141\40120swc001K.dgn

DIST	COUNTY	ROUTE	KILOMETER POST TOTAL PROJECT	SHEET No	TOTAL SHEETS
04	SF, ALA	80	12.2/14.3 0.0/4.0	791L	805

REGISTERED CIVIL ENGINEER 8/17/12

PLANS APPROVAL DATE

REGISTERED PROFESSIONAL ENGINEER SAFIUDDIN A. MOHAMMED No. 71694 CIVIL STATE OF CALIFORNIA

The State of California or its officers or agents shall not be responsible for the accuracy or completeness of electronic copies of this plan sheet.

Parsons Brinckerhoff Quade & Douglas, Inc.
303 Second Street, Suite 700H
San Francisco, CA 94107

Caltrans now has a web site! To get to the web site, go to: http://www.dot.ca.gov

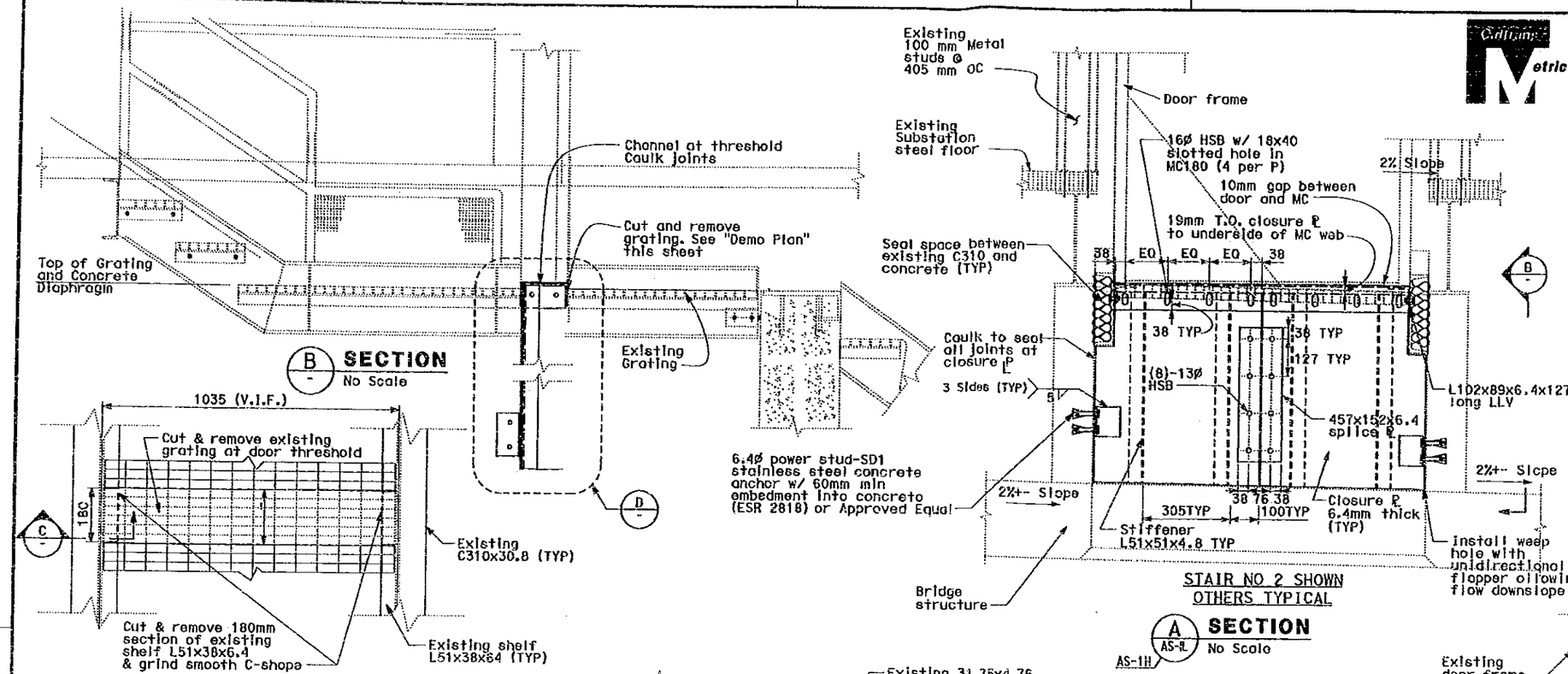

NOTES:

1. Contractor shall verify all dimensions in field prior to construction.
2. For structural notes, see sheet AS-1.
3. Contractor to verify shape and extent of openings.
4. Seal joints around closure plate.
5. All structural steel shall be hot dipped galvanized.
6. Contractor shall ensure no reinforcement is cut or damaged during anchor installation. Coordinate w/ structural drawings for location of reinforcement & post-tension tendons. Concrete anchors shall be installed per manufacturer's specifications.

MARK	DATE	DESCRIPTIONS	BY	CH'D
0	08/17/12	SKYWAY/OTD SECURITY ENHANCEMENT	CK	SM

REVISIONS

CONTRACT CHANGE ORDER NO. 141
SHEET 21 OF 21

ALL DIMENSIONS ARE IN MILLIMETERS UNLESS OTHERWISE SHOWN

Yongxin Liu Y. Liu
DESIGN OVERSIGHT

SIGN OFF DATE

	BY	CHECKED
DESIGN	G. Benkovich	M.S. Oayong
DETAILS	O. Kurnovskaya	G. Benkovich
QUANTITIES	G. Benkovich	M.S. Oayong

PREPARED FOR THE STATE OF CALIFORNIA DEPARTMENT OF TRANSPORTATION

Brady Nadell
PROJECT ENGINEER

BRIDGE NO. 34-0006
KILOMETER POST 12.2/14.3 0.0/4.0

SKYWAY SUBSTATIONS ARCHITECTURAL
MISCELLANEOUS DETAILS
AS-1L

CU 04251

ORIGINAL SCALE IN MILLIMETERS

DISREGARD PRINTS BEARING EARLIER REVISION DATES

REVISION DATES (PRECEDING STAGE ONLY)

SHEETS OF

FILE => 40120swc001l.dgn

DATE PLOTTED => 24-AUG-2012 TIME PLOTTED => 17:08

SER.NAME => LIOFICO

3103\MS\pex\91 Struc-Contract 1\CCO\Structures\CCO_141\40120swc001L.dgn

STATE OF CALIFORNIA - DEPARTMENT OF TRANSPORTATION

CONTRACT CHANGE ORDER MEMORANDUM

DATE: 6/6/2012

TO: Deanna Vilcheck, ACM / DV	FILE: E.A. 04 - 0120S4
FROM: William Howe, Senior R.E.	CO-RTE-PM SF-80-12.7/13.2
	FED. NO. NO FED AID
CCO#: 141 SUPPLEMENT#: 0 Category Code: CXXX	CONTINGENCY BALANCE (incl. this change) $31,489,586.15
COST: $1,199,340.00 INCREASE ☑ DECREASE ☐	HEADQUARTERS APPROVAL REQUIRED? ☑ YES ☐ NO
SUPPLEMENTAL FUNDS PROVIDED: $0.00	IS THIS REQUEST IN ACCORDANCE WITH ENVIRONMENTAL DOCUMENTS? ☑ YES ☐ NO
CCO DESCRIPTION: Skyway & Oakland Touchdown 1 Security	**PROJECT DESCRIPTION:** YBITS-1 (Yerba Buena Island Transition Structures)

Original Contract Time:	Time Adj. This Change:	Previously Approved CCO Time Adjustments:	Percentage Time Adjusted: (including this change)	Total # of Unreconciled Deferred Time CCO(s): (including this change)
1390 Day(s)	0 Day(s)	0 Day(s)	0 %	9

THIS CHANGE ORDER PROVIDES FOR:

This change order provides funds to compensate the Contractor for fabrication and installation of security enhancements for each of the Skyway and Oakland Touchdown 1 (OTD1) service platforms, electrical substations, piers and hinge gaps.

Previously, the Bay Bridge Eastspan Skyway (Contract 04-012024, completed in 2008) and OTD1 (Contract 04-0120L4, completed in 2010) were constructed. The Skyway consists of two parallel 2.1 km long superstructures (eastbound and westbound), made up of precast segmental concrete box girders supported by 28 piers; and OTD1 consists of a pair of cast-in-place box girders (approximately 1.2 km long) that connect to the Skyway structures.

The Engineer has determined that the design should incorporate security enhancements that had not been previously considered for the Skyway and OTD1.

At 27 of the piers, there are service platforms that cantilever out from the superstructure to hold electrical equipment; there are two (2) electrical substations that are accessed through stairways on the exterior of the superstructure; there are numerous boat access points that include ladders to the piers; and there are six (6) expansion joints (hinges) that have a one (1) meter wide gap completely across the soffit of the superstructure. The Engineer's design includes security enhancements, such as installing steel security access gates at each of the 14 pier ladder locations and each of the four (4) substation staircases; installing 159 each "No Trespassing" signs at pier, substation traveler, and service platform locations; installing locking chain systems at 31 service platform and substation staircases; installing a complete metal grating system to prevent access through the one (1) meter wide gap that extends the full width of the soffit at each of the six (6) Skyway hinges; and other security enhancements.

This CCO provides funding for an Agreed Lump Sum of $1,099,340.00, plus there will be an additional $100,000.00 in force account funds for completing paint touchup and other work. The force account work will be paid for on an actual cost basis as provided in Section 5-1.17, "Force Account Payment", of the Special Provisions, and Section 4-1.03D, Extra Work, of the Standard Specifications. The total CCO cost is $1,199,340.00. This will be funded from the project's contingency fund. A cost analysis is on file.

This change order has been approved by the TBPOC on 7/10/12, copy attached.

No adjustment of contract time is warranted, as this change will not affect the controlling operation.

This change order was requested by Bob Zandipour, Senior Transportation Engineer, Toll Bridge Design.

Maintenance concurrence will be obtained from Lina Ellis, HQ Maintenance.

ADA Notice: For individuals with sensory disabilities, this document is available in alternate formats. For information call: (916) 654-6410 or TDD (916) 654-3880 or write Records and Forms Management, 1120 N Street, MS-89, Sacramento, CA 95814.

STATE OF CALIFORNIA - DEPARTMENT OF TRANSPORTATION

CONTRACT CHANGE ORDER

Change Requested by: Engineer

CCO 142	Suppl. No. 0	Contract No. 04 - 0120S4	Road SF-80-12.7/13.2	FED. AID LOC.: NO FED AID

To: **M C M CONSTRUCTION INC**

You are directed to make the following changes from the plans and specifications or do the following described work not included in the plans and specifications for this contract. ***NOTE: This change order is not effective until approved by the Engineer.***

Description of work to be done, estimate of quantities and prices to be paid. (Segregate between additional work at contract price, agreed price and force account.) Unless otherwise stated, rates for rental of equipment cover only such time as equipment is actually used and no allowance will be made for idle time. This last percentage shown is the net accumulated increase or decrease from the original quantity in the Engineer's Estimate.

Extra Work at Force Account:

Construct the Oakland Touchdown Temporary Lighting, as directed by the Engineer.

This work will be paid for in accordance with Section 5-1.17, "Force Account Payment", of the Special Provisions, and Section 4-1.03D, "Extra Work", of the Standard Specifications.

Estimated Cost of Extra Work at Force Account = $40,000.00

Any soil to be excavated that is identified as potentially contaminated soil shall be stockpiled by the Contractor at a location adjacent to the site. Any further work with such stockpile(s), (including identification, handling, removal or testing of any hazardous or contaminated material), will be paid for under a separate change order; or be performed under a separate contract.

The cost of dewatering the excavation, or storage, treatment, testing or disposal of any water generated from a dewatering operation, shall be handled under a separate change order.

Relocating, removing or installation of barrier rails (Type K or other), will be paid for under a separate change order.

The cost for lane closures, traffic control or flagging, will be paid for under a separate change order.

Storm Water Pollution Prevention (SWPP) measures, such as appropriate Best Management Practices (BMPs), will be paid for under a separate change order.

Estimated Cost: Increase ☑ Decrease ☐ **$40,000.00**

By reason of this order the time of completion will be adjusted as follows: 0 days

Submitted by

Signature	Resident Engineer	Date
William Howe	William Howe, Senior R.E.	07-27-12

Approval Recommended by

Signature	Senior Resident Engineer	Date
William Howe	William Howe	07-27-12

Engineer Approval by

Signature	Senior Resident Engineer	Date
Deanna Vecchio	William Howe	8/10/12

We the undersigned contractor, have given careful consideration to the change proposed and agree, if this proposal is approved, that we will provide all equipment, furnish the materials, except as may otherwise be noted above, and perform all services necessary for the work above specified, and will accept as full payment therefor the prices shown above.

NOTE: If you, the contractor, do not sign acceptance of this order, your attention is directed to the requirements of the specifications as to proceeding with the ordered work and filing a written protest within the time therein specified.

Contractor Acceptance by

Signature	(Print name and title)	Date
[signature]	Edmundo R Pucci Treasurer	8-6-2012

STATE OF CALIFORNIA - DEPARTMENT OF TRANSPORTATION

CONTRACT CHANGE ORDER MEMORANDUM

TO: Deanna Vilcheck, ACM /	FILE: E.A. 04 - 0120S4
FROM: William Howe, Senior R.E.	CO-RTE-PM SF-80-12.7/13.2
	FED. NO. NO FED AID
CCO#: 142 SUPPLEMENT#: 0 Category Code: CBPC	CONTINGENCY BALANCE (incl. this change) $57,161,725.40
COST: $40,000.00 INCREASE ☑ DECREASE ☐	HEADQUARTERS APPROVAL REQUIRED? ☐ YES ☑ NO
SUPPLEMENTAL FUNDS PROVIDED: $0.00	IS THIS REQUEST IN ACCORDANCE WITH ENVIRONMENTAL DOCUMENTS? ☑ YES ☐ NO
CCO DESCRIPTION: Oakland Touchdown WB Temporary Lighting	**PROJECT DESCRIPTION:** YBITS-1 (Yerba Buena Island Transition Structures)

Original Contract Time:	Time Adj. This Change:	Previously Approved CCO Time Adjustments:	Percentage Time Adjusted: (including this change)	Total # of Unreconciled Deferred Time CCO(s): (including this change)
1390 Day(s)	0 Day(s)	0 Day(s)	0 %	9

THIS CHANGE ORDER PROVIDES FOR:

This change order provides compensation to the Contractor for costs to construct the Oakland Touchdown Westbound Temporary Lighting, per Caltrans' Design. The work includes installing underground conduits and temporary street lighting, as well as removing one (1) existing high mast lighting tower.

This contract calls for the construction of the Yerba Buena Island Transition structures of the east span of the new San Francisco Oakland Bay Bridge (SFOBB). During the next phase of the overall corridor construction, the OTD2 contract falsework will impede upon the current access route to the Skyway. In order to maintain access to the Westbound Skyway (which in turn provides access to the SAS structure), Caltrans' Design is planning an alternate access route utilizing the right lane and shoulder of existing I-80. Lighting for this area is currently provided by an existing high mast light tower; this high mast structure is in the way of the proposed alternate route. Caltrans' Design has prepared a plan to install an alternate temporary lighting system for the area. Any work in the area requires site protection procedures in accordance with an approved Stormwater Pollution Prevention Plan (SWPPP). The OTD2 Contractor does not yet have their SWPPP approved. The YBITS contract does have an approved SWPPP for this area (this was implemented for the earlier OTDD work), so this work will be done as a CCO under the YBITS contract.

Due to the short lead time for this work and several unknown field variables, it is difficult to provide an accurate cost estimate, so compensation for this work shall be paid for on a force account basis for the actual costs. This CCO provides funding for an estimated cost of $40,000.00, which will be funded from the project's contingency fund. A cost analysis is on file.

The following items are excluded from the scope of this change order:
- Identification, handling, removal or testing of any hazardous or contaminated material, which will be paid for under a separate change order; or be performed under separate contract.

- Relocating, removing or installation of barrier rails (Type K or other), which will be paid for under a separate change order.

- Lane closures (eastbound or westbound Interstate 80), traffic control or flagging, which will be paid for under separate change orders.

- Storm Water Pollution Prevention (SWPP) measures, such as appropriate Best Management Practices (BMPs), which will be paid for under a separate change order.

No adjustment of contract time is warranted, as this change will not affect the controlling operation.

This change was requested by Jaime Gutierrez, Branch Chief, Office of Toll Bridge design.

Maintenance concurrence will be obtained from Lina Ellis, Structure Maintenance.

ADA Notice: For individuals with sensory disabilities, this document is available in alternate formats. For information [illegible]
Records and Forms Management, 1120 N Street, MS-89, Sacramento, CA 95814

CONCURRED BY:		
Construction Engineer:	William Howe	Date 07.27.12
Bridge Engineer:	Mehran Ardakanian	Date
Project Engineer:	Bob Zandipour, Design	Date 7-30-12
Project Manager:	Ken Terpstra	Date 7-28-12
FHWA Rep.:		Date
Environmental:		Date
Other (specify):	Lina Ellis, Str. Maintenance	Date 8-7-12
Other (specify):		Date
District Prior Approval By:		Date
HQ (Issue Approve) By:		Date
Resident Engineer's Signature:		Date
William Howe		07.27.12

ESTIMATE OF COST

	THIS REQUEST	TOTAL TO DATE
ITEMS	$0.00	$0.00
FORCE ACCOUNT	$40,000.00	$40,000.00
AGREED PRICE	$0.00	$0.00
ADJUSTMENT	$0.00	$0.00
TOTAL	$40,000.00	$40,000.00

FEDERAL PARTICIPATION

☐ PARTICIPATING ☐ PARTICIPATING IN PART ☑ NONE
☐ NON-PARTICIPATING (MAINTENANCE) ☐ NON-PARTICIPATING

FEDERAL SEGREGATION (if more than one Funding Source or P.I.P. type)
☐ CCO FUNDED PER CONTRACT ☐ CCO FUNDED AS FOLLOWS

FEDERAL FUNDING SOURCE	PERCENT

508 Notice: For individuals with sensory disabilities, this document is available in alternate formats. For information call (916) 654-6410 or TDD (916) 654-3880 or write Records and Forms Management 1120 N Street, MS-89 Sacramento CA 95814

STATE OF CALIFORNIA - DEPARTMENT OF TRANSPORTATION

CONTRACT CHANGE ORDER

Change Requested by: Engineer

CCO 143	Suppl. No. 0	Contract No. 04 - 0120S4	Road SF-80-12.7/13.2	FED. AID LOC.: NO FED AID

To: M C M CONSTRUCTION INC

You are directed to make the following changes from the plans and specifications or do the following described work not included in the plans and specifications for this contract. ***NOTE: This change order is not effective until approved by the Engineer.***

Description of work to be done, estimate of quantities and prices to be paid. (Segregate between additional work at contract price, agreed price and force account.) Unless otherwise stated, rates for rental of equipment cover only such time as equipment is actually used and no allowance will be made for idle time. This last percentage shown is the net accumulated increase or decrease from the original quantity in the Engineer's Estimate.

Extra Work at Force Account:

Provide labor, equipment and materials to install embeds in the YBITS Eastbound Structure for future bikepath falsework, as directed by the Engineer.

This work will be paid for in accordance with Section 5-1.17, "Force Account Payment", of the Special Provisions, and Section 4-1.03D, "Extra Work", of the Standard Specifications.

Estimated Cost of Extra Work at Force Account = $20,000.00

Estimated Cost: Increase ☑ Decrease ☐ **$20,000.00**

By reason of this order the time of completion will be adjusted as follows: 0 days

Submitted by

Signature	Resident Engineer	Date
William Howe	William Howe, Senior R.E.	06-22-12

Approval Recommended by

Signature	Senior Resident Engineer	Date
William Howe	William Howe	06-22-12

Engineer Approval by

Signature	Senior Resident Engineer	Date
William Howe	William Howe	07-17-12

We the undersigned contractor, have given careful consideration to the change proposed and agree, if this proposal is approved, that we will provide all equipment, furnish the materials, except as may otherwise be noted above, and perform all services necessary for the work above specified, and will accept as full payment therefor the prices shown above.

NOTE: If you, the contractor, do not sign acceptance of this order, your attention is directed to the requirements of the specifications as to proceeding with the ordered work and filing a written protest within the time therein specified.

Contractor Acceptance by

Signature	(Print name and title)	Date
	EDMUNDO A. PUCHI, TREASURER	7/12/12

STATE OF CALIFORNIA - DEPARTMENT OF TRANSPORTATION

CONTRACT CHANGE ORDER MEMORANDUM

DATE: 6/20/2012 Page 1 of 1

TO: Deanna Vilcheck, ACM /	FILE: E.A. 04 - 0120S4
FROM: William Howe, Senior R.E.	CO-RTE-PM SF-80-12.7/13.2
	FED. NO. NO FED AID
CCO#: 143 SUPPLEMENT#: 0 Category Code: CHPT	CONTINGENCY BALANCE (incl. this change) $61,453,168.40
COST: $20,000.00 INCREASE ☑ DECREASE ☐	HEADQUARTERS APPROVAL REQUIRED? ☐ YES ☑ NO
SUPPLEMENTAL FUNDS PROVIDED: $0.00	IS THIS REQUEST IN ACCORDANCE WITH ENVIRONMENTAL DOCUMENTS? ☑ YES ☐ NO
CCO DESCRIPTION: Embeds for Falsework for Future Bikpath	**PROJECT DESCRIPTION:** YBITS-1 (Yerba Buena Island Transition Structures)

Original Contract Time:	Time Adj. This Change:	Previously Approved CCO Time Adjustments:	Percentage Time Adjusted: (including this change)	Total # of Unreconciled Deferred Time CCO(s): (including this change)
1390 Day(s)	0 Day(s)	0 Day(s)	0 %	9

THIS CHANGE ORDER PROVIDES FOR:

This change order provides compensation to the Contractor for costs to provide labor, equipment and materials to install embeds in the YBITS Eastbound Structure for future bikepath falsework, as directed by the Engineer.

This contract calls for the construction of the Yerba Buena Island Transition structures of the east span of the new San Francisco Oakland Bay Bridge (SFOBB). During the next phase of the overall corridor construction, the YBITS2 contract will install a bikepath that cantilevers off the eastbound bridge (that is currently being constructed). The future construction of the bikepath will require falsework that must be supported by the eastbound bridge; the Engineer is directing the Contractor to install embeds to utilize as part of the future falsework system.

Due to the short lead time for this work and several unknown field variables, it is difficult to provide an accurate cost estimate, so compensation for this work shall be paid for on a Force Account basis for the actual costs. This CCO provides funding for an estimated cost of $20,000.00, which will be funded from the project's contingency fund. A cost analysis is on file in the project records.

No adjustment of contract time is warranted, as this change will not affect the controlling operation.

This change was requested by Deanna Vilcheck, Toll Bridge Construction, on June 18, 2012.

Maintenance concurrence will be obtained from Lina Ellis, Str. Maintenance.

CONCURRED BY:		
Construction Engineer:	William Howe	Date 06.22.12
Bridge Engineer:	Mehran Ardakanian	Date 7.18.12
Project Engineer:	Bob Zandipour, Design	Date 6-25-12
Project Manager:	Ken Terpstra	Date 6-23-12
FHWA Rep.:		Date
Environmental:		Date
Other (specify):	Lina Ellis, Str. Maintenance	Date 6-26-12
Other (specify):		Date
District Prior Approval By:		Date
HQ (Issue Approve) By:		Date
Resident Engineer's Signature: William Howe		Date 06.22.12

ESTIMATE OF COST	THIS REQUEST	TOTAL TO DATE
ITEMS	$0.00	$0.00
FORCE ACCOUNT	$20,000.00	$20,000.00
AGREED PRICE	$0.00	$0.00
ADJUSTMENT	$0.00	$0.00
TOTAL	$20,000.00	$20,000.00

FEDERAL PARTICIPATION

☐ PARTICIPATING ☐ PARTICIPATING IN PART ☑ NONE
☐ NON-PARTICIPATING (MAINTENANCE) ☐ NON-PARTICIPATING

FEDERAL SEGREGATION (if more than one Funding Source or P.I.P. type)
☐ CCO FUNDED PER CONTRACT ☐ CCO FUNDED AS FOLLOWS

FEDERAL FUNDING SOURCE	PERCENT

ADA Notice: For individuals with sensory disabilities, this document is available in alternate formats. For information call: (916) 654-6410 or TDD (916) 654-3880 or write Records and Forms Management, 1120 N Street, MS-89, Sacramento, CA 95814.

STATE OF CALIFORNIA - DEPARTMENT OF TRANSPORTATION

CONTRACT CHANGE ORDER

Change Requested by: Engineer

CCO 143	Suppl. No. 1	Contract No. 04 - 0120S4	Road SF-80-12.7/13.2	FED. AID LOC.: NO FED AID

To: **M C M CONSTRUCTION INC**

You are directed to make the following changes from the plans and specifications or do the following described work not included in the plans and specifications for this contract. ***NOTE: This change order is not effective until approved by the Engineer.***

Description of work to be done, estimate of quantities and prices to be paid. (Segregate between additional work at contract price, agreed price and force account.) Unless otherwise stated, rates for rental of equipment cover only such time as equipment is actually used and no allowance will be made for idle time. This last percentage shown is the net accumulated increase or decrease from the original quantity in the Engineer's Estimate.

Extra Work at Force Account:

Provide labor, equipment and materials to install embeds in the YBITS Eastbound Structure for future bikepath falsework, per attached drawings (Sheets Nos, 2, 3, 4 and 5 of this change order) and as directed by the Engineer.

This work will be paid for in accordance with Section 5-1.17, "Force Account Payment", of the Special Provisions, and Section 4-1.03D, "Extra Work", of the Standard Specifications.

Estimated Cost of Extra Work at Force Account = $30,000.00

Estimated Cost: Increase ☑ Decrease ☐ **$30,000.00**

By reason of this order the time of completion will be adjusted as follows: 0 days

Submitted by		
Signature William Howe	Resident Engineer William Howe, Senior R.E.	Date 07.17.12
Approval Recommended by		
Signature William Howe	Senior Resident Engineer William Howe	Date 07.17.12
Engineer Approval by		
Signature William Howe	Senior Resident Engineer William Howe	Date 09.04.12

We the undersigned contractor, have given careful consideration to the change proposed and agree, if this proposal is approved, that we will provide all equipment, furnish the materials, except as may otherwise be noted above, and perform all services necessary for the work above specified, and will accept as full payment therefor the prices shown above.

NOTE: If you, the contractor, do not sign acceptance of this order, your attention is directed to the requirements of the specifications as to proceeding with the ordered work and filing a written protest within the time therein specified.

Contractor Acceptance by		
Signature	(Print name and title) Edmund A. Ruchi - Treasurer	Date 8-30-2012

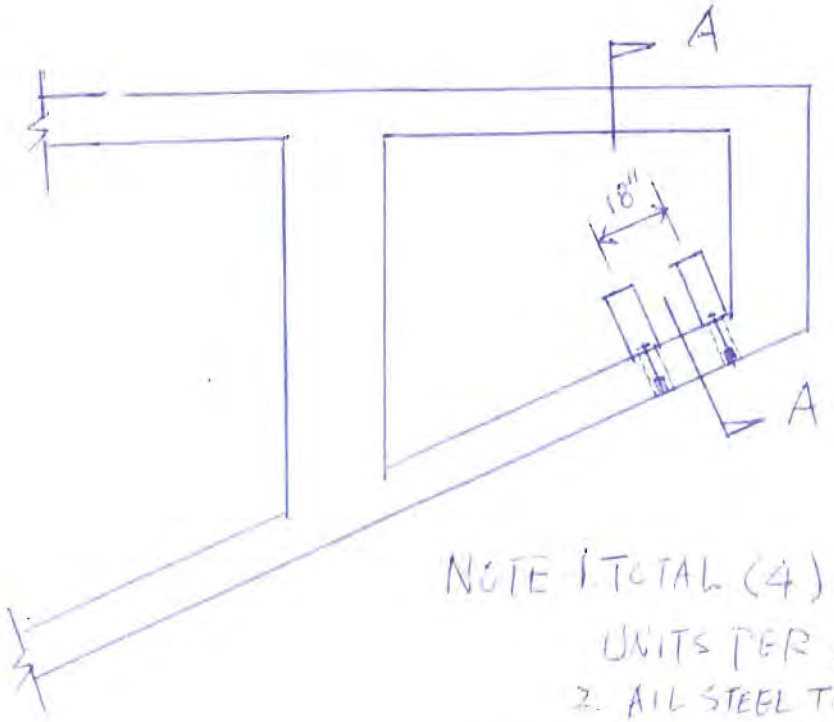

NOTE 1. TOTAL (4) BRACKET UNITS PER ASSEMBLY
2. ALL STEEL TO BE GALVANIZED

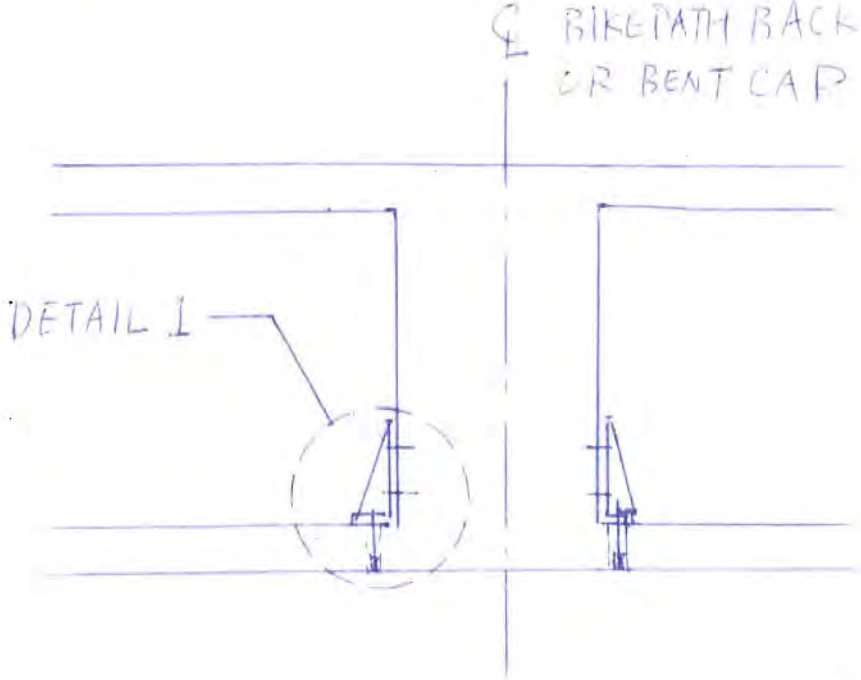

SEC A-A

REGISTERED PROFESSIONAL ENGINEER
RICHARD I. CHANG
№ 2922
EXP 12/31/2012
STRUCTURAL
STATE OF CALIFORNIA
6/29/12

CONTRACT NO. 04-012054

CONTRACT CHANGE ORDER NO 143 S1

SHEET 2 OF 4

Department of Transportation
04-012054
04-SF-80-12.7/13.2
YBITS-1

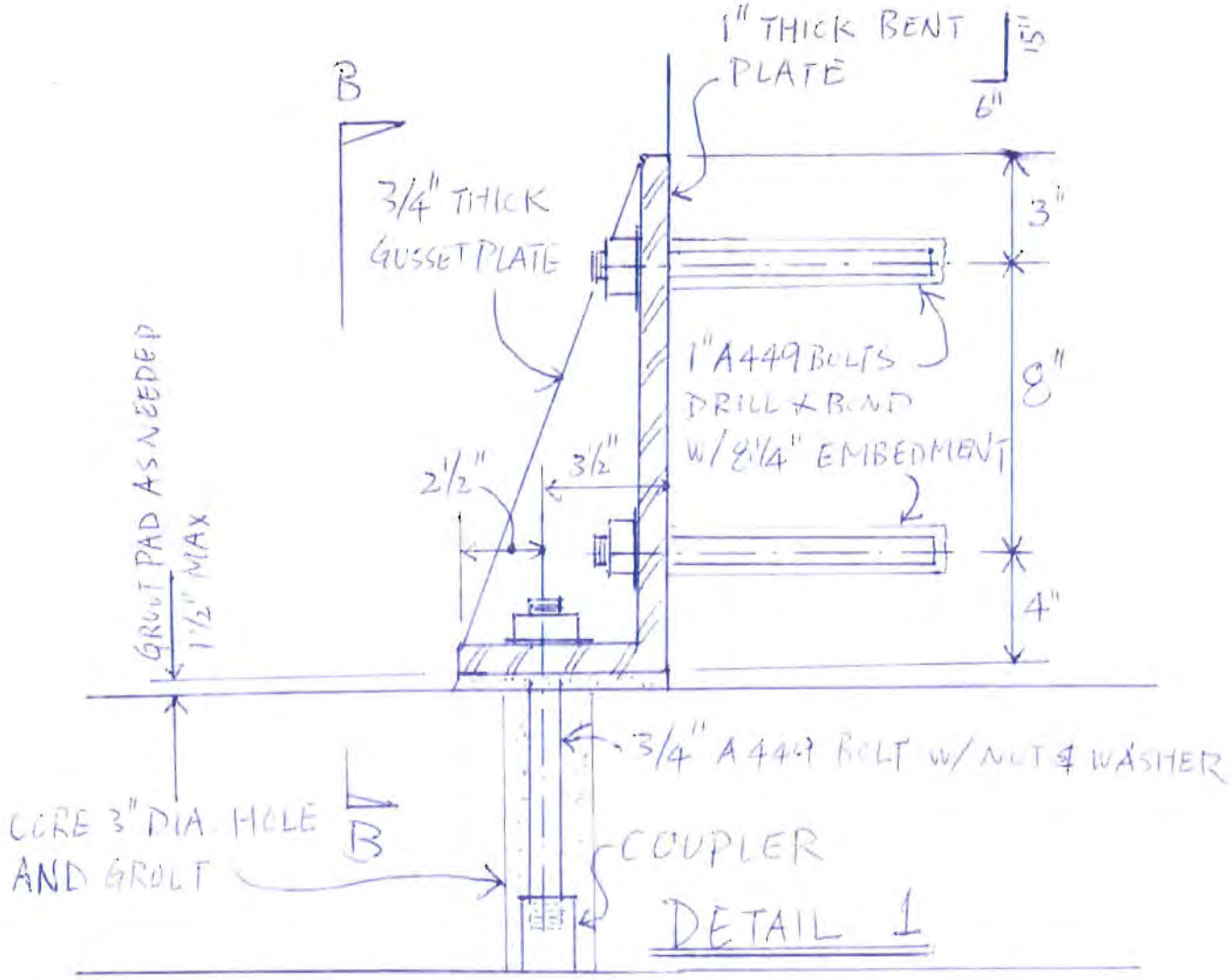

DETAIL 1

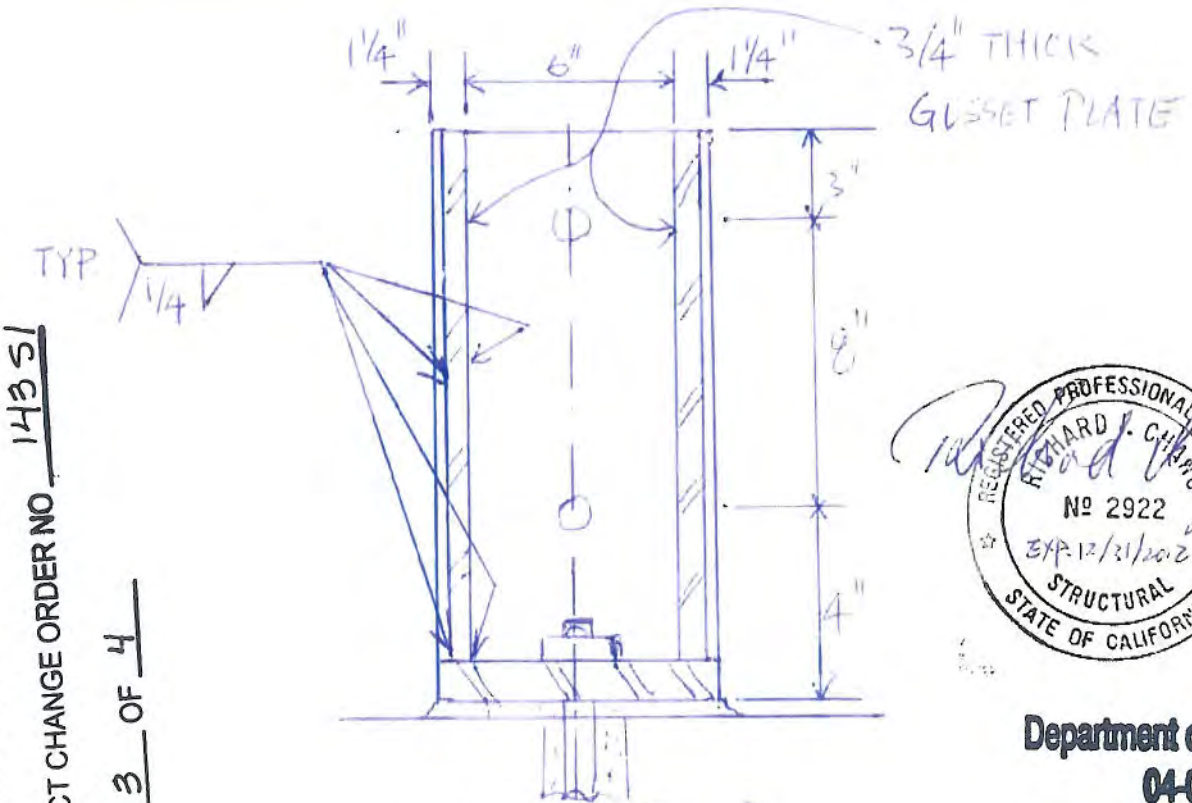

SECTION B-B

REGISTERED PROFESSIONAL ENGINEER
RICHARD J. CHANG
№ 2922
EXP. 12/31/2012
STRUCTURAL
STATE OF CALIFORNIA
6/29/12

Department of Transportation
04-0120S4
04-SF-80-12.7/13.2
YBITS-1

CONTRACT NO. 04-0120S4
CONTRACT CHANGE ORDER NO 14351
SHEET 3 OF 4

TYPICAL EMBEDMENT DETAIL FOR YBITS2 BIKEPATH FALSEWORK

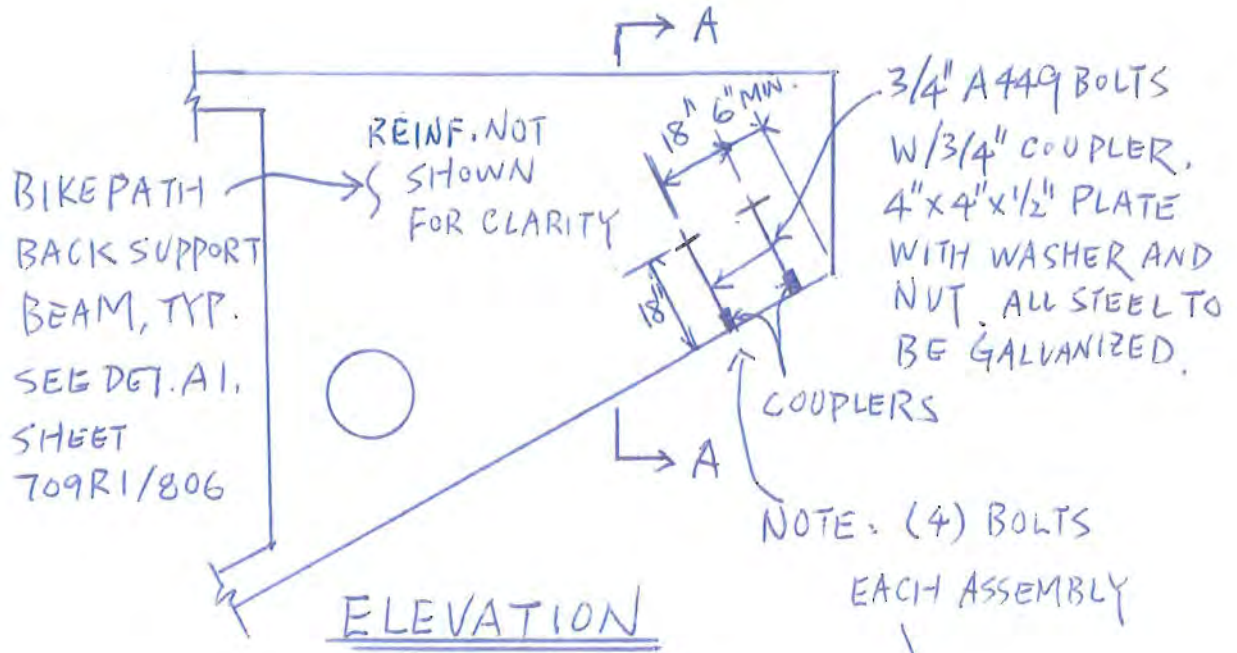

ELEVATION

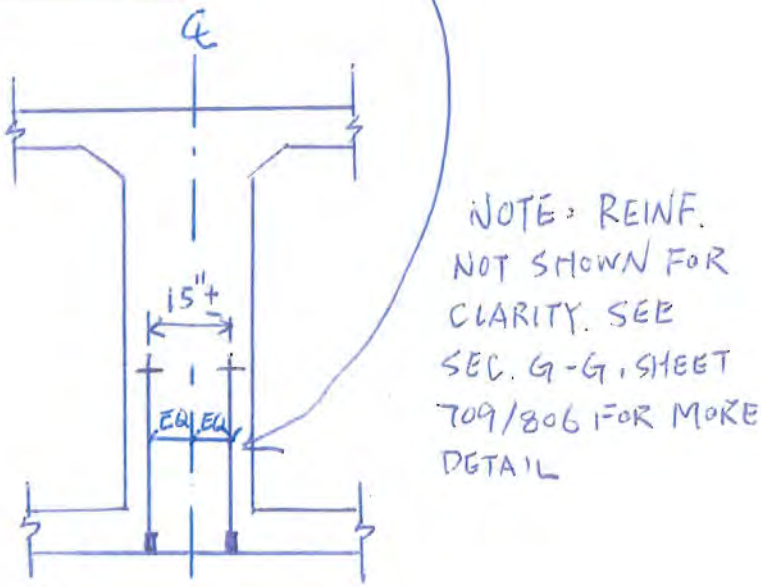

SECTION A-A

REGISTERED PROFESSIONAL ENGINEER
RICHARD J. OLIVA
No 31534
EXP. 12/31/12
CIVIL
STATE OF CALIFORNIA

7/17/2012

CONTRACT NO. 04-012054

CONTRACT CHANGE ORDER NO 14351

SHEET 4 OF 4

Department of Transportation
04-0120S4
04-SF-80-12.7/13.2
YBITS-1

STATE OF CALIFORNIA - DEPARTMENT OF TRANSPORTATION

CONTRACT CHANGE ORDER MEMORANDUM

DATE: 7/12/2012 Page 1 of 1

TO: Deanna Vilcheck, ACM /	FILE: E.A. 04 - 0120S4
	CO-RTE-PM SF-80-12.7/13.2
FROM: William Howe, Senior R.E.	FED. NO. NO FED AID
CCO#: 143 SUPPLEMENT#: 1 Category Code: CHPT	CONTINGENCY BALANCE (incl. this change) $57,985,988.40
COST: $30,000.00 INCREASE ☑ DECREASE ☐	HEADQUARTERS APPROVAL REQUIRED? ☐ YES ☑ NO
SUPPLEMENTAL FUNDS PROVIDED: $0.00	IS THIS REQUEST IN ACCORDANCE WITH ENVIRONMENTAL DOCUMENTS? ☑ YES ☐ NO
CCO DESCRIPTION: Embeds for Falsework for Future Bikepath	**PROJECT DESCRIPTION:** YBITS-1 (Yerba Buena Island Transition Structures)

Original Contract Time:	Time Adj. This Change:	Previously Approved CCO Time Adjustments:	Percentage Time Adjusted: (including this change)	Total # of Unreconciled Deferred Time CCO(s): (including this change)
1390 Day(s)	0 Day(s)	0 Day(s)	0 %	9

THIS CHANGE ORDER PROVIDES FOR:

This change order provides compensation to the Contractor for costs to provide labor, equipment and materials to install embeds in the YBITS Eastbound Structure for future bikepath falsework, as directed by the Engineer.

This contract calls for the construction of the Yerba Buena Island Transition structures of the east span of the new San Francisco Oakland Bay Bridge (SFOBB). During the next phase of the overall corridor construction, the YBITS2 contract will install a bikepath that cantilevers off the eastbound bridge (that is currently being constructed). The future construction of the bikepath will require falsework that must be supported by the eastbound bridge, so the Engineer is directing the Contractor to install embeds to utilize as part of the future falsework system. Contract Change Order No. 143 was issued for $20,000.00, anticipating embeds for only the portion of the bridge where the soffit has not been poured. This CCO supplement will include installing the additional embeds for the portion of the bridge where the soffit has already been poured. This additional work will be done by drilling through the concrete and installing embeds, per design drawings.
Due to the short lead time for this work and several unknown field variables, it is difficult to provide an accurate cost estimate, so compensation for this work shall be paid for on a Force Account basis for the actual costs incurred. This CCO supplement provides additional funding for an estimated cost of $30,000.00 for a total cost of $50,000.00 (including this supplement). This will be funded from the project's contingency fund. A cost analysis is on file.

No adjustment of contract time is warranted, as this change will not affect the controlling operation.

This change was requested by Deanna Vilcheck, Toll Bridge Construction, on June 18, 2012.

Maintenance concurrence will be obtained from Lina Ellis, Str. Maintenance.

CONCURRED BY:		
Construction Engineer:	William Howe	Date 07-17-12
Bridge Engineer:	Mehran Ardakanian	Date 7-18-12
Project Engineer:	Bob Zandipour, Design	Date 7-19-12
Project Manager:	Ken Terpstra	Date 7-25-12
FHWA Rep.:		Date
Environmental:		Date
Other (specify):	Lina Ellis, Str. Maintenance	Date 7-19-12
Other (specify):		Date
District Prior Approval By:		Date
HQ (Issue Approve) By:		Date
Resident Engineer's Signature: William Howe		Date 07-17-12

ESTIMATE OF COST

	THIS REQUEST	TOTAL TO DATE
ITEMS	$0.00	$0.00
FORCE ACCOUNT	$30,000.00	$50,000.00
AGREED PRICE	$0.00	$0.00
ADJUSTMENT	$0.00	$0.00
TOTAL	$30,000.00	$50,000.00

FEDERAL PARTICIPATION

☐ PARTICIPATING ☐ PARTICIPATING IN PART ☑ NONE
☐ NON-PARTICIPATING (MAINTENANCE) ☐ NON-PARTICIPATING

FEDERAL SEGREGATION (if more than one Funding Source or P.I.P. type)
☐ CCO FUNDED PER CONTRACT ☐ CCO FUNDED AS FOLLOWS

FEDERAL FUNDING SOURCE	PERCENT

ADA Notice: For individuals with sensory disabilities, this document is available in alternate formats. For information call (916) 654-6410 or TDD (916) 654-3880 or [illegible]
Records and Forms Management, 1120 N Street, MS-89, Sacramento, CA 95814.

STATE OF CALIFORNIA - DEPARTMENT OF TRANSPORTATION

CONTRACT CHANGE ORDER

Change Requested by: Engineer

CCO 144	Suppl. No. 0	Contract No. 04 - 0120S4	Road SF-80-12.7/13.2	FED. AID LOC.: NO FED AID

To: **M C M CONSTRUCTION INC**

You are directed to make the following changes from the plans and specifications or do the following described work not included in the plans and specifications for this contract. ***NOTE: This change order is not effective until approved by the Engineer.***

Description of work to be done, estimate of quantities and prices to be paid. (Segregate between additional work at contract price, agreed price and force account.) Unless otherwise stated, rates for rental of equipment cover only such time as equipment is actually used and no allowance will be made for idle time. This last percentage shown is the net accumulated increase or decrease from the original quantity in the Engineer's Estimate.

Extra Work at Force Account:

Provide labor, equipment and materials to install five (5) each falsework piles for the future YBITS 2 on-ramp foundations of the Yerba Buena Island Transition Structure as shown on attached drawings, Sheet Nos. 2 through 3 of this change order, and as directed by the Engineer. Work will include fabrication and installation of steel piles.

This work will be paid for as Extra Work as provided in Section 5-1.17, "Force Account Payment", of the Special Provisions and Section 4-1.03D, "Extra Work", of the Standard Specifications.

Estimated Cost of Extra Work at Force Account = $60,000.00

2-8-13

Estimated Cost: Increase ☑ Decrease ☐ $60,000.00

By reason of this order the time of completion will be adjusted as follows: 0 days

Submitted by

Signature	Resident Engineer	Date
William Howe	William Howe, Senior R.E	02-07-13

Approval Recommended by

Signature	Area Construction Manager	Date
Deanna Vilcheck	Deanna Vilcheck	2/8/13

Engineer Approval by

Signature	Area Construction Manager	Date
Deanna Vilcheck	Deanna Vilcheck	2/15/13

We the undersigned contractor, have given careful consideration to the change proposed and agree, if this proposal is approved, that we will provide all equipment, furnish the materials, except as may otherwise be noted above, and perform all services necessary for the work above specified, and will accept as full payment therefor the prices shown above.

NOTE: If you, the contractor, do not sign acceptance of this order, your attention is directed to the requirements of the specifications as to proceeding with the ordered work and filing a written protest within the time therein specified.

Contractor Acceptance by

Signature	(Print name and title)	Date
	EDMUNDO A. PUCHI, TREASURER	2/13/13

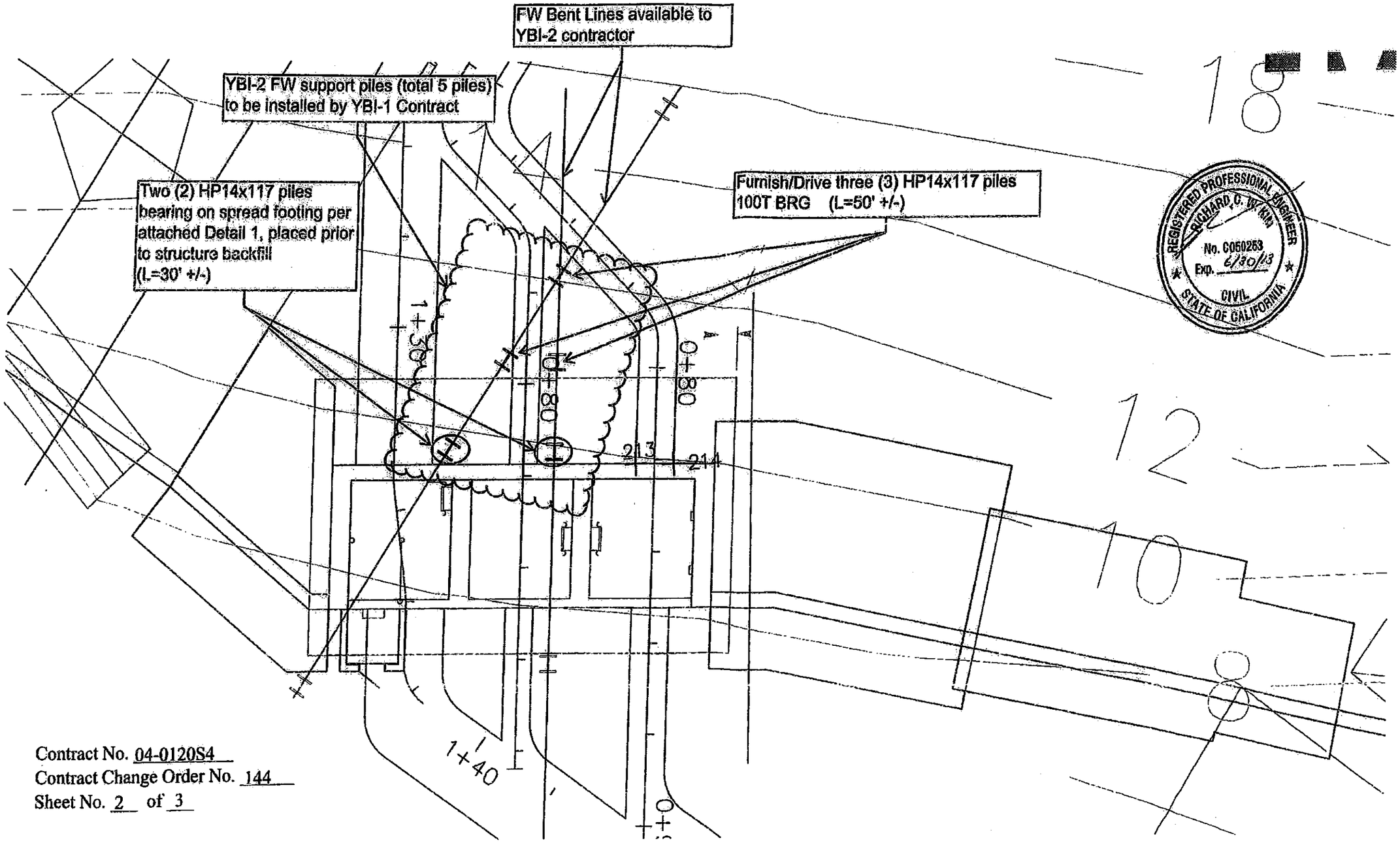

Contract No. 04-0120S4
Contract Change Order No. 144
Sheet No. 2 of 3

Retaining Wall No. 7 / Duct Bank

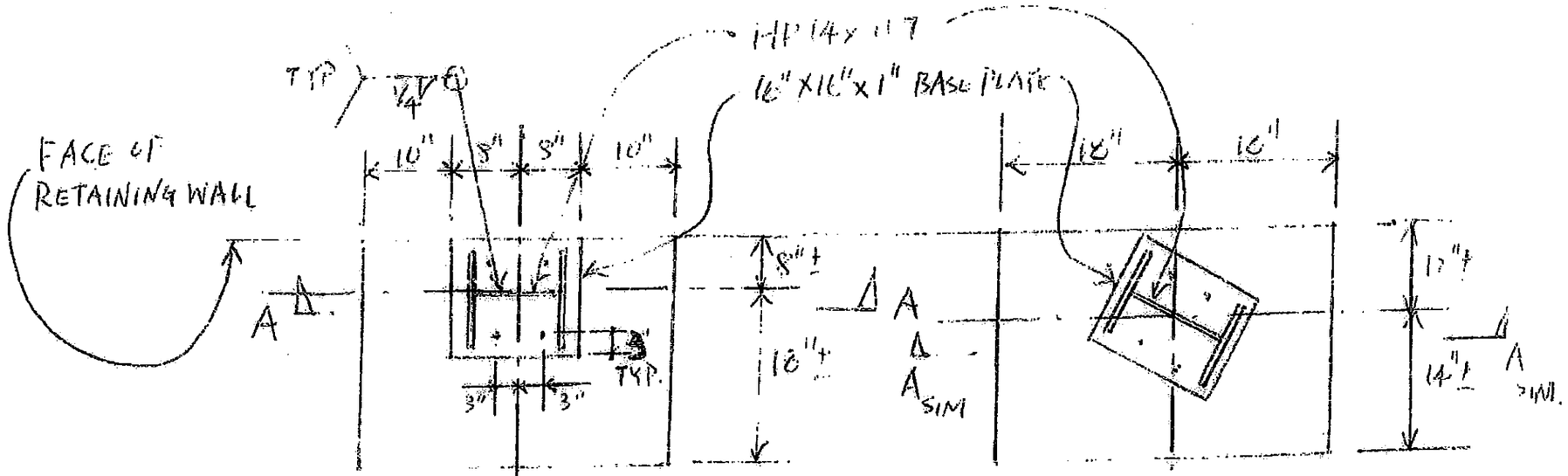

PLAN VIEW

NO SCALE

Contract No. 04-0120S4
Contract Change Order No. 144
Sheet No. 3 of 3

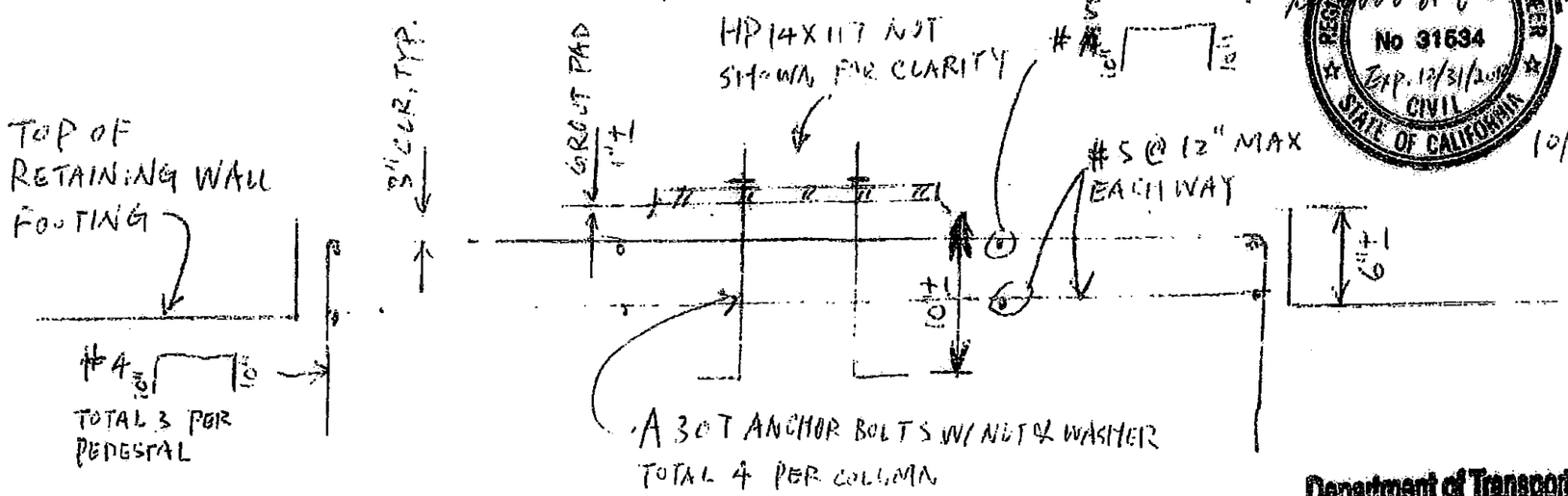

SECTION A-A

REGISTERED PROFESSIONAL ENGINEER
RICHARD Y. CHING
No 31534
Exp. 12/31/2012
CIVIL
STATE OF CALIFORNIA

10/8/2012

Department of Transportation
04-0120S4
04-SF-80-12.7/13.2
YBITS-1

STATE OF CALIFORNIA - DEPARTMENT OF TRANSPORTATION

CONTRACT CHANGE ORDER MEMORANDUM

DATE: 6/26/2012 Page 1 of 1

TO: Deanna Vilcheck, ACM /	FILE: E.A. 04 - 0120S4
FROM: William Howe, Senior R.E.	CO-RTE-PM SF-80-12.7/13.2
	FED. NO. NO FED AID
CCO#: 144 SUPPLEMENT#: 0 Category Code: CHPT	CONTINGENCY BALANCE (incl. this change) $29,974,898.15
COST: $60,000.00 INCREASE ☑ DECREASE ☐	HEADQUARTERS APPROVAL REQUIRED? ☐ YES ☑ NO
SUPPLEMENTAL FUNDS PROVIDED: $0.00	IS THIS REQUEST IN ACCORDANCE WITH ENVIRONMENTAL DOCUMENTS? ☑ YES ☐ NO
CCO DESCRIPTION: Pile Driving for Future YBITS On-Ramp FW	**PROJECT DESCRIPTION:** YBITS-1 (Yerba Buena Island Transition Structures)

Original Contract Time:	Time Adj. This Change:	Previously Approved CCO Time Adjustments:	Percentage Time Adjusted: (including this change)	Total # of Unreconciled Deferred Time CCO(s): (including this change)
1390 Day(s)	0 Day(s)	0 Day(s)	0 %	9

THIS CHANGE ORDER PROVIDES FOR:

This change order provides funds to compensate the Contractor to furnish and drive steel pilings for the future Yerba Buena Island Transition Structure (YBITS) Eastbound On-Ramp Falsework.

This contract calls for the construction of the Yerba Buena Island Transition structures of the east span of the new San Francisco Oakland Bay Bridge (SFOBB). A part of the current contract work includes construction of the foundation and substructures for the YBITS eastbound on-ramp; the completion of the superstructure for this work will be done under the subsequent YBITS2 contract. The future contract will require significant falsework structures that must be supported in a steep slope area; the current work underway already includes driving of numerous piles on the same steep hillsides. Since the pile driving operation requires working on a slope that is a Risk Level II Stormwater Protection (SWPP) location, as well as significant mobilization costs, it makes sense to drive piles now and avoid repeating this operation during the future contract.

This CCO will provide the Contractor to procure and drive piles that will be used in the future falsework foundations, based on a Caltrans' design.

This will be paid for as Extra Work at Force Account for an estimated cost of $60,000.00, which will be financed from the project's contingency fund. A cost estimate is on file.

This Change Order was requested by Deanna Vilcheck, Area Construction Manager.

No adjustment of contract time is warranted, as this change will not affect the controlling operation.

Maintenance concurrence is not required, as this work does not affect any permanent features.

CONCURRED BY:		
Construction Engineer:	William Howe	Date 02-07-13
Bridge Engineer:	GC for Mehran Ardakanian	Date 02-08-13
Project Engineer:	Bob Zandipour, Design	Date 2/8/13
Project Manager:	Ken Terpstra	Date 2/8/13
FHWA Rep.:		Date
Environmental:		Date
Other (specify):		Date
Other (specify):		Date
District Prior Approval By:		Date
HQ (Issue Approve) By:		Date
Resident Engineer's Signature:	William Howe	Date 02-07-13

ESTIMATE OF COST

	THIS REQUEST	TOTAL TO DATE
ITEMS	$0.00	$0.00
FORCE ACCOUNT	$60,000.00	$60,000.00
AGREED PRICE	$0.00	$0.00
ADJUSTMENT	$0.00	$0.00
TOTAL	$60,000.00	$60,000.00

FEDERAL PARTICIPATION

☐ PARTICIPATING ☐ PARTICIPATING IN PART ☑ NONE
☐ NON-PARTICIPATING (MAINTENANCE) ☐ NON-PARTICIPATING

FEDERAL SEGREGATION (if more than one Funding Source or P.I.P. type)
☐ CCO FUNDED PER CONTRACT ☐ CCO FUNDED AS FOLLOWS

FEDERAL FUNDING SOURCE	PERCENT

STATE OF CALIFORNIA - DEPARTMENT OF TRANSPORTATION

CONTRACT CHANGE ORDER

Change Requested by: Engineer

CCO 145	Suppl. No. 0	Contract No 04 - 0120S4	Road SF-80-12.7/13.2	FED. AID LOC.: NO FED AID

To: M C M CONSTRUCTION INC

You are directed to make the following changes from the plans and specifications or do the following described work not included in the plans and specifications for this contract. ***NOTE: This change order is not effective until approved by the Engineer.***

Description of work to be done, estimate of quantities and prices to be paid. (Segregate between additional work at contract price, agreed price and force account.) Unless otherwise stated, rates for rental of equipment cover only such time as equipment is actually used and no allowance will be made for idle time. This last percentage shown is the net accumulated increase or decrease from the original quantity in the Engineer's Estimate.

Adjustment of Compensation at Lump Sum:

Compensate the Contractor for all additional costs incurred to modify and add deck utility access openings and TOS pull boxes and to resolve constructability conflicts as shown on revised drawings 638R4 of 806 and 640R2 of 806, (Sheet Nos. 2 & 3 of this change order). The changes to the deck utility access openings and TOS pull boxes are as follows:

Deck Utility Access Openings:

Add Deck Utility Access Opening at Sta. 52+38
Add Deck Utility Access Opening at Sta. 53+92

TOS Pull Boxes:

Convert Deck Utility Access Opening at Sta. E 52+33 to a TOS Pull Box (PL-E01) and adjust location to Sta. E 52+35
Convert installed Deck Utility Access Opening at Sta. 53+97 to TOS Pull Box (PL-E02)

For this work, the Contractor shall be compensated at an Agreed Lump Sum of $18,745.00, which constitutes full and final compensation, including all markups, for all additional costs incurred.

Adjustment of Compensation at Agreed Lump Sum = $18,745.00

Estimated Cost: Increase ☑ Decrease ☐ $18,745.00

By reason of this order the time of completion will be adjusted as follows: 0 days

Submitted by

Signature	Resident Engineer	Date
William Howe	William Howe, Senior R.E.	10.31.12

Approval Recommended by

Signature	Senior Resident Engineer	Date
William Howe	William Howe	10.31.12

Engineer Approval by

Signature	Senior Resident Engineer	Date
William Howe	William Howe	06.06.13

We the undersigned contractor, have given careful consideration to the change proposed and agree, if this proposal is approved, that we will provide all equipment, furnish the materials, except as may otherwise be noted above, and perform all services necessary for the work above specified, and will accept as full payment therefor the prices shown above.

NOTE: If you, the contractor, do not sign acceptance of this order, your attention is directed to the requirements of the specifications as to proceeding with the ordered work and filing a written protest within the time therein specified.

Contractor Acceptance by

Signature	(Print name and title)	Date
	Esmeralda A. Rucki - Treasurer	4-2-13

CCO No. 145 →

MARK	DATE	DESCRIPTIONS	DY	CH'D
4	7-16-12	Relocated TOS pull box, added utility opening.	TL	JD
3	6-29-11	Rev deck drain locations	TL	JD
1	10-13-10	Rev deck drain locations and added soffit lights.	TL	JD

REVISIONS

CONTRACT CHANGE ORDER NO. 145
SHEET 2 OF 3

DIST.	COUNTY	ROUTE	KILOMETER POST TOTAL PROJECT	SHEET NO.	TOTAL SHEETS
04	SF	80	12.7/13.2	530R4	006

REGISTERED ENGINEER - CIVIL
6-23-00
PLANS APPROVAL DATE
The State of California or its officers or agents shall not be responsible for the accuracy or completeness of electronic copies of this plan sheet.

T.Y. LIN / MOFFATT & NICHOL
TWO HARRISON STREET
SAN FRANCISCO, CA 94105

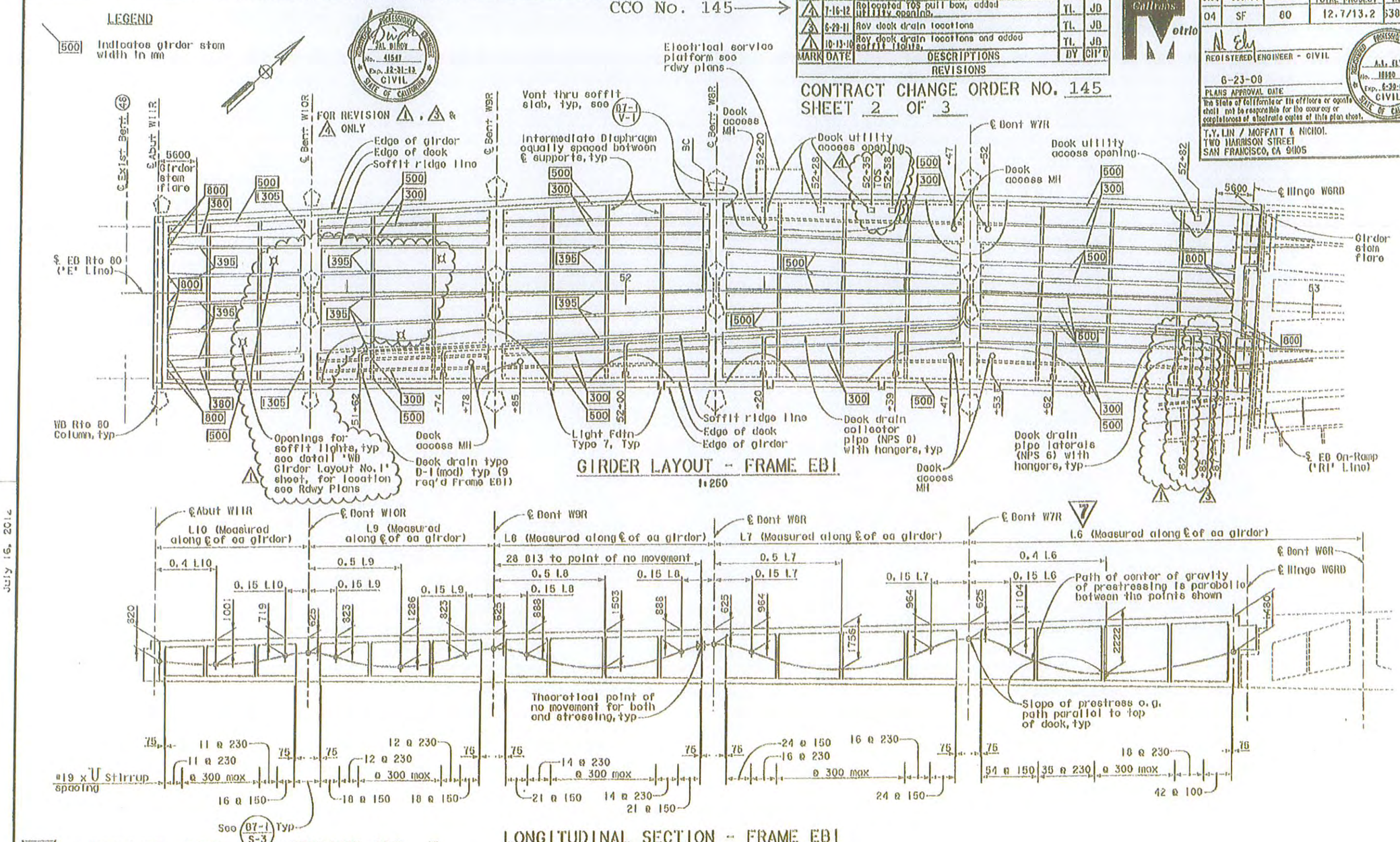

GIRDER LAYOUT - FRAME EB1
1:250

LONGITUDINAL SECTION - FRAME EB1
GIRDERS BETWEEN SOFFIT RIDGE LINES
No Scale

7 REVISED PER ADDENDUM NO. 7
DATED OCTOBER 19, 2009

ALL DIMENSIONS ARE IN MILLIMETERS UNLESS OTHERWISE SHOWN

DESIGN OVERSIGHT: JOHN HOOK, BERNARD CHAN, JOAN F. CARPIO, HASAN EL-NATUR, HASAN EL-NATUR 7/18/2012

DESIGN	BY Cavalian	CHECKED Shangkuan
DETAILS	BY Von Ryn/Zucchi/Kol	CHECKED Jain
QUANTITIES	BY Lido	CHECKED E. Nichol

PREPARED FOR THE STATE OF CALIFORNIA DEPARTMENT OF TRANSPORTATION

Jal Birdy
PROJECT ENGINEER

BRIDGE NO. 34-0006 L/R
KILOMETER POST 12.8

SAN FRANCISCO OAKLAND BAY BRIDGE
EAST SPAN SEISMIC SAFETY PROJECT
YBI TRANSITION STRUCTURES
EASTBOUND GIRDER LAYOUT NO. 1

SIGN OFF DATE
Rev. Date: 5-16-08

COLORED SCALE IN MILLIMETERS FOR REDUCED PLANS

CU 04251
EA 0120S1

STANDARD PLANS SCALE
EARLIER REVISION DATES

SHEET 89 OF 209

FILE → P:\4141-06\CADD\TS\Checked Plans\YBITS #1,100% No. 2_03-03-08 (Final Renored)\071612 CCO 123\04-0120s1-34-0006r1-1-g.tb08.dgn

July 16, 2012

TIME PLOTTED → 9:27:05 AM
DATE PLOTTED → 7/16/2012
USERNAME → rasmson

DIST.	COUNTY	ROUTE	KILOMETER POST TOTAL PROJECT	SHEET No.	TOTAL SHEETS
04	SF	80	12.7/13.2	340R2	806

REGISTERED ENGINEER - CIVIL

6-23-08
PLANS APPROVAL DATE

The state of California or its officers or agents shall not be responsible for the accuracy or completeness of electronic copies of this plan sheet.

T.Y. LIN / MOFFATT & NICHOL
780 HARRISON STREET
SAN FRANCISCO, CA 94105

REGISTERED PROFESSIONAL ENGINEER — A.L. ELY — No. 18840 — Exp. 6-30-09 — CIVIL — STATE OF CALIFORNIA

REVISED PER ADDENDUM NO. 7
DATED OCTOBER 19, 2009

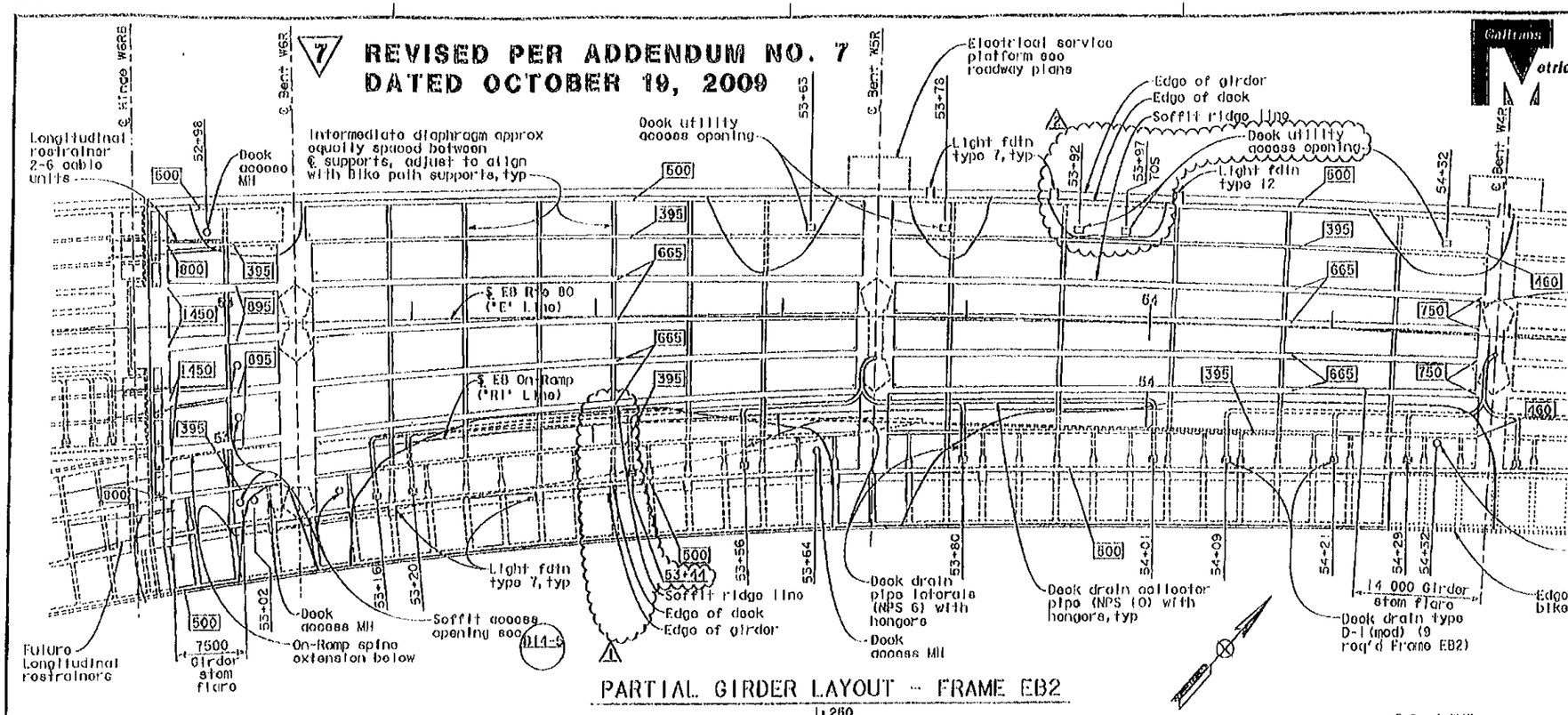

PARTIAL GIRDER LAYOUT - FRAME EB2

1:250

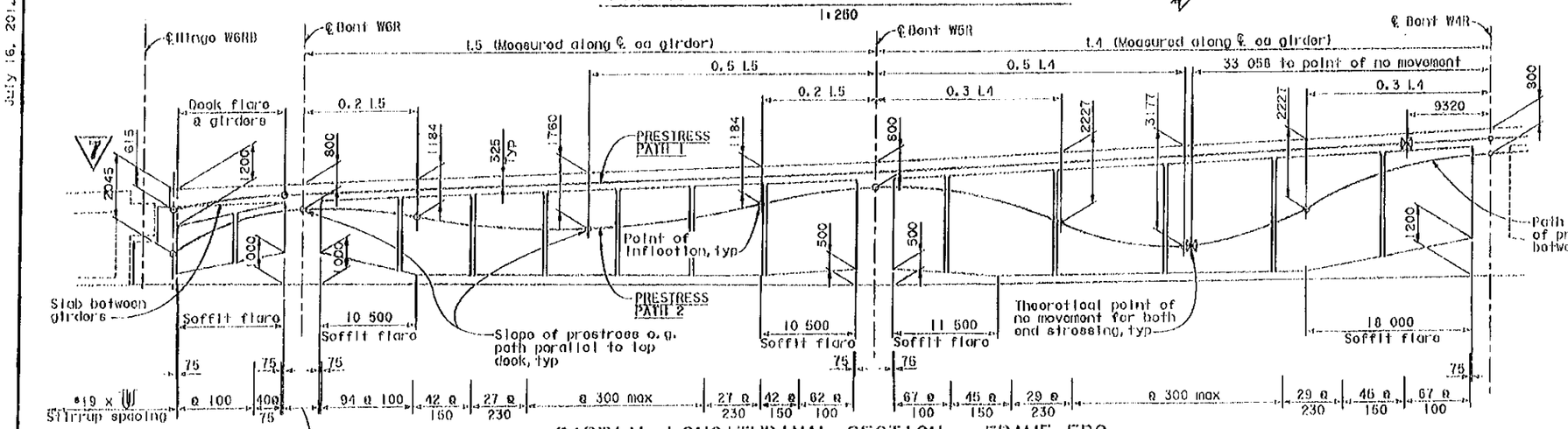

PARTIAL LONGITUDINAL SECTION - FRAME EB2
GIRDERS BETWEEN SOFFIT RIDGE LINES

No Scale

LEGEND

500 Indicates girder stem width in mm

Note:
Soffit slab flares are between soffit ridge lines only.

CCO No. 145

ALL DIMENSIONS ARE IN MILLIMETERS UNLESS OTHERWISE SHOWN

BARR DATE	DESCRIPTIONS	BY	CHK'D
1-18-12	Add utility conduit identified	TL	JB
12-22-11	Rev deck drain location	TL	JB
	REVISIONS		

CONTRACT CHANGE ORDER NO. 145
SHEET 3 OF 3

DESIGN OVERSIGHT: JOHN FOOK, GERHARD CHAN, JUAN P. CARRIO, HASAN EL-NATUR — HASAN EL-NATUR — 7/18/2012

SIGN OFF DATE
Rev. Dates 6-18-53

DESIGN	BY Cavallon	CHECKED Shangkuan	
DETAILS	BY van Ryn/Zucchi/Nol	CHECKED Jain	
QUANTITIES	BY Liao	CHECKED E. Nichol	

PREPARED FOR THE STATE OF CALIFORNIA DEPARTMENT OF TRANSPORTATION

Jal Birdy
PROJECT ENGINEER

BRIDGE NO. 34-0006 L/R
KILOMETER POST 12.0

SAN FRANCISCO OAKLAND BAY BRIDGE
EAST SPAN SEISMIC SAFETY PROJECT

YBI TRANSITION STRUCTURES

EASTBOUND GIRDER LAYOUT NO. 3

CU 04251
EA 012051

DISPLAY PRINTER RESOLUTION
EARLIEST REVISION DATES

REVISION DATES (MILLIMETER SHEET ONLY)

SHEET 91 OF 209

FILE => P:\4141 oa\CADD\15\Checked Plans\YBI15 *1-100% No. 2.03-03-08 (Final Honored)\071612 CCO 123\C4-012051-34-0006L-1-0.tif

July 16, 2012

STATE OF CALIFORNIA - DEPARTMENT OF TRANSPORTATION

CONTRACT CHANGE ORDER MEMORANDUM

TO: Deanna Vilcheck, ACM /	FILE: E.A. 04 - 0120S4
FROM: William Howe, Senior R.E.	CO-RTE-PM SF-80-12.7/13.2
	FED. NO. NO FED AID
CCO#: 145 SUPPLEMENT#: 0 Category Code: CHPV	CONTINGENCY BALANCE (Incl. this change) $41,539,126.15
COST: $18,745.00 INCREASE ☑ DECREASE ☐	HEADQUARTERS APPROVAL REQUIRED? ☐ YES ☑ NO
SUPPLEMENTAL FUNDS PROVIDED: $0.00	IS THIS REQUEST IN ACCORDANCE WITH ENVIRONMENTAL DOCUMENTS? ☑ YES ☐ NO
CCO DESCRIPTION: Deck Utility Openings & PB EB Structure	**PROJECT DESCRIPTION:** YBITS-1 (Yerba Buena Island Transition Structures)

Original Contract Time:	Time Adj. This Change:	Previously Approved CCO Time Adjustments:	Percentage Time Adjusted: (including this change)	Total # of Unreconciled Deferred Time CCO(s): (including this change)
1390 Day(s)	0 Day(s)	0 Day(s)	0 %	9

THIS CHANGE ORDER PROVIDES FOR:

This Change Order Provides for: Add Deck Utility Access Openings and Modify TOS Pull Box Locations.

This project, the Yerba Buena Island Transition Structure (YBITS), provides for the construction of two bridges which will connect eastbound and westbound traffic on the new east span of the San Francisco Oakland Bay Bridge (SFOBB) to the existing Yerba Buena Island (YBI) tunnel. The structures are comprised of concrete box girder bridges each approximately 50 meters high and 450 meters in length.

Electrical plan sheet E-147 called for Preformed Loop Detector Station PL-E01 and PL-E02, with corresponding Pull Boxes, to be established at Sta. E 52+33 and Sta. E 52+97, respectively. However, Sheet 638R4 and 640R2 of 806, of the YBI Transition Structure drawings called out these locations as Deck Utility Access Openings. To better facilitate access to sensor loops and to resolve constructability conflicts discovered in the field, CT Design Engineer has provided drawings to revise Deck Utility Access Openings and TOS Pull Box locations as follows:

Deck Utility Access Openings:

Add Deck Utility Access Opening at Sta. 52+38
Add Deck Utility Access Opening at Sta. 53+92

TOS Pull Boxes:

Convert Deck Utility Access Opening at Sta. E 52+33 to a TOS Pull Box (PL-E01) and adjust location to Sta. E 52+35
Convert installed Deck Utility Access Opening at Sta. 53+97 to TOS Pull Box (PL-E02)

For this work, the Contractor shall be compensated an Agreed Lump Sum of $18,745.00, which constitutes full and final compensation, including all markups, for all additional costs incurred. A cost analysis is on file. The funding for this CCO will como from the contingency funds for the project.

No adjustment of contract time is warranted, as the work will not affect the controlling operation.

Maintenance concurrence will be obtained from Lina Ellis, Structures Maintenance

ADA Notice: For individuals with sensory disabilities, this document is available in alternate formats. For information call (916) 654-6410 or TDD (916) 654-3880 or write Records and Forms Management, 1120 N Street, MS-89, Sacramento, CA 95814.

CONCURRED BY:		
Construction Engineer:	William Howe	Date 10.31.12
Bridge Engineer:	Mehran Ardakanian	Date 6/10/13
Project Engineer:	Bob Zandipour, Design	Date 11-1-12
Project Manager:	Ken Terpstra	Date 11-1-12
FHWA Rep.:		Date
Environmental:		Date
Other (specify):	Lina Ellis, Str. Maintenance	Date 1-10-13
Other (specify):		Date
District Prior Approval By:		Date
HQ (Issue Approve) By:		Date
Resident Engineer's Signature:	William Howe	Date 10.31.12

ESTIMATE OF COST

	THIS REQUEST	TOTAL TO DATE
ITEMS	$0.00	$0.00
FORCE ACCOUNT	$0.00	$0.00
AGREED PRICE	$0.00	$0.00
ADJUSTMENT	$18,745.00	$18,745.00
TOTAL	$18,745.00	$18,745.00

FEDERAL PARTICIPATION

☐ PARTICIPATING ☐ PARTICIPATING IN PART ☑ NONE
☐ NON-PARTICIPATING (MAINTENANCE) ☐ NON-PARTICIPATING

FEDERAL SEGREGATION (if more than one Funding Source or P.I.P. type)
☐ CCO FUNDED PER CONTRACT ☐ CCO FUNDED AS FOLLOWS

FEDERAL FUNDING SOURCE	PERCENT

ADA Notice: For individuals with sensory disabilities, this document is available in alternate formats. For information call: (916) 654-6410 or TDD (916) 654-3880 or write Records and Forms Management, 1120 N Street, MS-89, Sacramento, CA 95814.

STATE OF CALIFORNIA - DEPARTMENT OF TRANSPORTATION

CONTRACT CHANGE ORDER

Change Requested by: Engineer

CCO 146	Suppl. No. 0	Contract No. 04 - 0120S4	Road SF-80-12.7/13.2	FED. AID LOC.: NO FED AID

To: **M C M CONSTRUCTION INC**

You are directed to make the following changes from the plans and specifications or do the following described work not included in the plans and specifications for this contract. ***NOTE: This change order is not effective until approved by the Engineer.***

Description of work to be done, estimate of quantities and prices to be paid. (Segregate between additional work at contract price, agreed price and force account.) Unless otherwise stated, rates for rental of equipment cover only such time as equipment is actually used and no allowance will be made for idle time. This last percentage shown is the net accumulated increase or decrease from the original quantity in the Engineer's Estimate.

Adjustment of Compensation at Lump Sum:

Compensate the Contractor for all additional costs incurred by the Contractor's subcontractor, Harris Salinas Rebar Inc., for all Department ordered adjustments to the reinforcing steel within Frames 1 and 2 of the westbound YBI Transition Structure due to grade changes or conflicts with the placement of the reinforcing steel. All work was performed from the period starting on October 13, 2011, and ending on January 5, 2012.

For this work, the Contractor shall be compensated an Agreed Lump Sum of $119,560.00, which constitutes full and final compensation, including all markups, for all additional costs incurred.

Adjustment of Compensation at Agreed Lump Sum = $119,560.00

Estimated Cost: Increase ☑ Decrease ☐ $119,560.00

By reason of this order the time of completion will be adjusted as follows: 0 days

Submitted by

Signature	Resident Engineer	Date
William Howe	William Howe, Senior R.E.	07-23-12

Approval Recommended by

Signature	Area Construction Manager	Date
Deanna Vilcheck	Deanna Vilcheck	7/24/12

Engineer Approval by

Signature	Area Construction Manager	Date
Deanna Vilcheck	Deanna Vilcheck	2/15/13

We the undersigned contractor, have given careful consideration to the change proposed and agree, if this proposal is approved, that we will provide all equipment, furnish the materials, except as may otherwise be noted above, and perform all services necessary for the work above specified, and will accept as full payment therefor the prices shown above.

NOTE: If you, the contractor, do not sign acceptance of this order, your attention is directed to the requirements of the specifications as to proceeding with the ordered work and filing a written protest within the time therein specified.

Contractor Acceptance by

Signature	(Print name and title)	Date
	EDMUNDO A. PUCHI TREASURER	2/13/13

2-15-13

STATE OF CALIFORNIA - DEPARTMENT OF TRANSPORTATION

CONTRACT CHANGE ORDER MEMORANDUM

DATE: 7/20/2012 Page 1 of 1

TO: Deanna Vilcheck, ACM	FILE: E.A. 04 - 0120S4
FROM: William Howe, Senior R.E.	CO-RTE-PM SF-80-12.7/13.2
	FED. NO. NO FED AID
CCO#: 146 SUPPLEMENT#: 0 Category Code: CHPT	CONTINGENCY BALANCE (incl. this change) $57,455,723.40
COST: $119,560.00 INCREASE ☑ DECREASE ☐	HEADQUARTERS APPROVAL REQUIRED? ☐ YES ☑ NO
SUPPLEMENTAL FUNDS PROVIDED: $0.00	IS THIS REQUEST IN ACCORDANCE WITH ENVIRONMENTAL DOCUMENTS? ☑ YES ☐ NO
CCO DESCRIPTION: Grade Adjustments to Rebar WB Structure	**PROJECT DESCRIPTION:** YBITS-1 (Yerba Buena Island Transition Structures)

Original Contract Time:	Time Adj. This Change:	Previously Approved CCO Time Adjustments:	Percentage Time Adjusted: (including this change)	Total # of Unreconciled Deferred Time CCO(s): (including this change)
1390 Day(s)	0 Day(s)	0 Day(s)	0 %	9

THIS CHANGE ORDER PROVIDES FOR:

Compensation to the Contractor for ordered adjustments to the reinforcing steel within Frames 1 and 2 of the westbound YBI Transition Structure.

This project, the Yerba Buena Island Transition Structure (YBITS), provides for the construction of two bridges which will connect eastbound and westbound traffic on the new east span of the San Francisco Oakland Bay Bridge (SFOBB) to the existing Yerba Buena Island (YBI) tunnel. The structures are comprised of concrete box girder bridges each approximately 26 meters wide, 40 meters high and 450 meters in length.

During the construction of the westbound bridge, numerous adjustments had to be ordered by the Department to the reinforcing steel that had already been installed due to grade changes made to the falsework. These adjustments were made across much of the 450 foot length of the westbound structure over a 3 month period. Additional adjustments to the reinforcing steel had to be made in the field to resolve miscellaneous conflicts between both different steel bars and the concrete formwork. This change order provides compensation for the labor and equipment cost incurred by the reinforcing steel subcontractor as ordered.

Compensation for these costs shall be paid as an Adjustment of Compensation at an Agreed Lump Sum of $119,560.00, which shall be financed from the contract's contingency funds. A cost analysis is on file.

No adjustment of contract time is warranted as the work does not affect the controlling operation.

Maintenance concurrence is not required as the change does not affect any permanent roadway features.

CONCURRED BY:		
Construction Engineer:	William Howe	Date 07-23-12
Bridge Engineer: for	Mehran Ardakanian G.K.	Date 2-15-13
Project Engineer:	Bob Zandipour, Design	Date 7-24-12
Project Manager:	Ken Terpstra	Date 7-25-12
FHWA Rep.:		Date
Environmental:		Date
Other (specify):		Date
Other (specify):		Date
District Prior Approval By:		Date
HQ (Issue Approve) By:		Date
Resident Engineer's Signature: William Howe		Date 07-23-12

ESTIMATE OF COST

	THIS REQUEST	TOTAL TO DATE
ITEMS	$0.00	$0.00
FORCE ACCOUNT	$0.00	$0.00
AGREED PRICE	$0.00	$0.00
ADJUSTMENT	$119,560.00	$119,560.00
TOTAL	$119,560.00	$119,560.00

FEDERAL PARTICIPATION

☐ PARTICIPATING ☐ PARTICIPATING IN PART ☑ NONE
☐ NON-PARTICIPATING (MAINTENANCE) ☐ NON-PARTICIPATING

FEDERAL SEGREGATION (if more than one Funding Source or P.I.P. type)
☐ CCO FUNDED PER CONTRACT ☐ CCO FUNDED AS FOLLOWS

FEDERAL FUNDING SOURCE	PERCENT

ADA Notice: For individuals with sensory disabilities, this document is available in alternate formats. For information call: (916) 654-6410 or TDD (916) 654-3880 or write Records and Forms Management, 1120 N Street, MS-89, Sacramento, CA 95814.

STATE OF CALIFORNIA - DEPARTMENT OF TRANSPORTATION

CONTRACT CHANGE ORDER

Change Requested by: Engineer

CCO 148	Suppl. No. 0	Contract No. 04 - 0120S4	Road SF-80-12.7/13.2	FED. AID LOC.: NO FED AID

To: **M C M CONSTRUCTION INC**

You are directed to make the following changes from the plans and specifications or do the following described work not included in the plans and specifications for this contract. ***NOTE: This change order is not effective until approved by the Engineer.***

Description of work to be done, estimate of quantities and prices to be paid. (Segregate between additional work at contract price, agreed price and force account.) Unless otherwise stated, rates for rental of equipment cover only such time as equipment is actually used and no allowance will be made for idle time. This last percentage shown is the net accumulated increase or decrease from the original quantity in the Engineer's Estimate.

Extra Work at Force Account:

Provide the necessary access control measures in accordance with Section 5-1.21, "Photo Identification System", of the Special Provisions as authorized by the Engineer.

Labor, equipment and material approved by the Engineer, as necessary, will be paid in accordance with the provisions of Section 4-1.03D, "Extra Work", of the Standard Specifications, and Section 5.1.17, "Force Account Payment", of the Special Provisions.

Estimated Extra Work at Force Account = $400,000.00

Estimated Cost: Increase ☑ Decrease ☐ **$400,000.00**

By reason of this order the time of completion will be adjusted as follows: 0 days

Submitted by

Signature William Howe	Resident Engineer William Howe, Senior R.E.	Date 07.20.12

Approval Recommended by

Signature Deanna Vilcheck	Area Construction Manager Deanna Vilcheck	Date 7/24/12

Engineer Approval by

Signature Deanna Vilcheck	Area Construction Manager Deanna Vilcheck	Date 8/3/12

We the undersigned contractor, have given careful consideration to the change proposed and agree, if this proposal is approved, that we will provide all equipment, furnish the materials, except as may otherwise be noted above, and perform all services necessary for the work above specified, and will accept as full payment therefor the prices shown above.

NOTE: If you, the contractor, do not sign acceptance of this order, your attention is directed to the requirements of the specifications as to proceeding with the ordered work and filing a written protest within the time therein specified.

Contractor Acceptance by

Signature	(Print name and title) EDMUNDO A. PUCHI, TREASURER	Date 8/1/12

RECEIVED AUG 03 2012

STATE OF CALIFORNIA - DEPARTMENT OF TRANSPORTATION

CONTRACT CHANGE ORDER MEMORANDUM

DATE: 7/18/2012 Page 1 of 1

TO: Deanna Vilcheck, ACM / DV	FILE: E.A. 04 - 0120S4
FROM: William Howe, Senior R.E.	CO-RTE-PM SF-80-12.7/13.2
	FED. NO. NO FED AID
CCO#: 148 SUPPLEMENT#: 0 Category Code: AXZZ	CONTINGENCY BALANCE (incl. this change) $57,575,283.40
COST: $400,000.00 INCREASE ☑ DECREASE ☐	HEADQUARTERS APPROVAL REQUIRED? ☑ YES ☐ NO
SUPPLEMENTAL FUNDS PROVIDED: $0.00	IS THIS REQUEST IN ACCORDANCE WITH ENVIRONMENTAL DOCUMENTS? ☑ YES ☐ NO
CCO DESCRIPTION: Access Control & Site Security Measures	**PROJECT DESCRIPTION:** YBITS-1 (Yerba Buena Island Transition Structures)

Original Contract Time:	Time Adj. This Change:	Previously Approved CCO Time Adjustments:	Percentage Time Adjusted: (including this change)	Total # of Unreconciled Deferred Time CCO(s): (including this change)
1390 Day(s)	0 Day(s)	0 Day(s)	0 %	9

THIS CHANGE ORDER PROVIDES FOR:

Access control measures as shown in Section 5-1.21, "Photo Identification System", of the Special Provisions and as authorized by the Engineer. The Contractor will provide 24-hour security, including weekends and holidays at the west tie-in end of the job site, which is not part of the original contract documents. This change order is also written to include any additional security measures as the Engineer deems necessary.

This change is necessary to provide security measures to control access to the new bridge site. Only personnel with proper photo identification will be allowed to enter the job site. The Contractor will coordinate with the other on-going projects. Posting of additional security guards and measures to monitor the job site are due to the heightened homeland security measures since September 11, 2001.

Labor, equipment and material approved by the Engineer for the above work will be paid in accordance with the provisions of Section 5.1.17, "Force Account Payment", of the Special Provisions and Section 4-1.03D, "Extra Work", of the Standard Specifications.

This work is not covered by any contract items; therefore, payment for this work will be at Extra Work at Force Account for an estimated cost of $400,000.00, which can be financed from the contract's contingency fund. A cost analysis is on file.

No time adjustment is warranted as this change order does not affect the controlling operation.

Maintenance concurrence is not required for this change order since it does not affect any permanent features.

CONCURRED BY:		
Construction Engineer:	William Howe	Date 07-26-12
Bridge Engineer:	Mehran Ardakanian	Date
Project Engineer:	Bob Zandipour, Design	Date 8-6-12
Project Manager:	Ken Terpstra	Date 7-25-12
FHWA Rep.:		Date
Environmental:		Date
Other (specify):		Date
Other (specify):		Date
District Prior Approval By:		Date
HQ (Issue Approve) By:	Bob Molera	Date 7-25-12
Resident Engineer's Signature:	William Howe	Date 07.26.12

ESTIMATE OF COST

	THIS REQUEST	TOTAL TO DATE
ITEMS	$0.00	$0.00
FORCE ACCOUNT	$400,000.00	$400,000.00
AGREED PRICE	$0.00	$0.00
ADJUSTMENT	$0.00	$0.00
TOTAL	$400,000.00	$400,000.00

FEDERAL PARTICIPATION

☐ PARTICIPATING ☐ PARTICIPATING IN PART ☑ NONE
☐ NON-PARTICIPATING (MAINTENANCE) ☐ NON-PARTICIPATING

FEDERAL SEGREGATION (if more than one Funding Source or P.I.P. type)
☐ CCO FUNDED PER CONTRACT ☐ CCO FUNDED AS FOLLOWS

FEDERAL FUNDING SOURCE	PERCENT

ADA Notice: For individuals with sensory disabilities, this document is available in alternate formats. For information call: (916) 654-6410 or TDD (916) 654-3880 or write Records and Forms Management, 1120 N Street, MS-89, Sacramento, CA 95814.

STATE OF CALIFORNIA - DEPARTMENT OF TRANSPORTATION

CONTRACT CHANGE ORDER

Change Requested by: Engineer

CCO 149	Suppl. No. 0	Contract No. 04 - 0120S4	Road SF-80-12.7/13.2	FED. AID LOC.: NO FED AID

To: M C M CONSTRUCTION INC

You are directed to make the following changes from the plans and specifications or do the following described work not included in the plans and specifications for this contract. ***NOTE: This change order is not effective until approved by the Engineer.***

Description of work to be done, estimate of quantities and prices to be paid. (Segregate between additional work at contract price, agreed price and force account.) Unless otherwise stated, rates for rental of equipment cover only such time as equipment is actually used and no allowance will be made for idle time. This last percentage shown is the net accumulated increase or decrease from the original quantity in the Engineer's Estimate.

Construct the following modifications to the Bay Bridge YBI Transition Structure - Skyway Bikepath Handrails, located on the Bay Bridge Skyway Bikepath between Hinge AE and Hinge EE:

Extra Work at Force Account:

Perform painting or touch up painting, and caulking, or any other work needed for handrail base plate bolt cap removal work as directed by the Engineer.

This work will be paid for as Extra Work as provided in Section 5-1.17, "Force Account Payment", of the Special Provisions and Section 4-1.03D, "Extra Work", of the Standard Specifications.

Extra Work at Force Account = $50,000.00

Extra Work at Lump Sum:

Provide labor, equipment, materials to make the following modifications:

Remove approximately 6,300 each handrail base plate bolt caps which are tack welded in place, including grinding weld flush. Cost includes taking necessary measures to properly dispose of the removed material.

Extra Work at Agreed Lump Sum = $697,180.00

The agreed price excludes the cost of any Stormwater Pollution Prevention (SWPP) measures, such as SWPPP amendments and reports, and appropriate Best Management Practices (BMPs), which will be paid for under a separate change order.

The agreed price excludes the cost of repairing any bolts or nuts.

Estimated Cost: Increase ☑ Decrease ☐ $747,180.00

By reason of this order the time of completion will be adjusted as follows: 0 days

Submitted by Signature William Howe	Resident Engineer William Howe, Senior R.E.	Date 12-27-12
Approval Recommended by Signature Deanna Vilcheck	Area Construction Manager Deanna Vilcheck	Date 1/7/13
Engineer Approval by Signature [illegible] for D.V.	Area Construction Manager Deanna Vilcheck	Date 1-18-13

We the undersigned contractor, have given careful consideration to the change proposed and agree, if this proposal is approved, that we will provide all equipment, furnish the materials, except as may otherwise be noted above, and perform all services necessary for the work above specified, and will accept as full payment therefor the prices shown above.

NOTE: If you, the contractor, do not sign acceptance of this order, your attention is directed to the requirements of the specifications as to proceeding with the ordered work and filing a written protest within the time therein specified.

Contractor Acceptance by Signature [illegible]	(Print name and title) JAMES A CARTER PRESIDENT	Date 1/15/13

STATE OF CALIFORNIA - DEPARTMENT OF TRANSPORTATION

CONTRACT CHANGE ORDER MEMORANDUM

DATE: 9/7/2012

TO: Deanna Vilcheck, ACM	FILE: E.A. 04 - 0120S4
FROM: William Howe, Senior R.E.	CO-RTE-PM SF-80-12.7/13.2
	FED. NO. NO FED AID
CCO#: 149 SUPPLEMENT#: 0 Category Code: CHPT	CONTINGENCY BALANCE (incl. this change) $31,652,973.15
COST: $747,180.00 INCREASE ☑ DECREASE ☐	HEADQUARTERS APPROVAL REQUIRED? ☑ YES ☐ NO
SUPPLEMENTAL FUNDS PROVIDED: $0.00	IS THIS REQUEST IN ACCORDANCE WITH ENVIRONMENTAL DOCUMENTS? ☑ YES ☐ NO
CCO DESCRIPTION: Skyway Bikepath Handrail Bolt Caps	**PROJECT DESCRIPTION:** YBITS-1 (Yerba Buena Island Transition Structures)

Original Contract Time:	Time Adj. This Change:	Previously Approved CCO Time Adjustments:	Percentage Time Adjusted: (including this change)	Total # of Unreconciled Deferred Time CCO(s): (including this change)
1390 Day(s)	0 Day(s)	0 Day(s)	0 %	9

THIS CHANGE ORDER PROVIDES FOR:

This change order provides funds to compensate the Contractor for removing approximately 6,300 each handrail base plate bolt caps which are tack welded in place on the Skyway bikepath.

The bikepath railing was installed as part of the Bay Bridge Eastspan Skyway (Contract 04-012024, completed in 2008). The Skyway consists of two parallel 2.1 km long superstructures (eastbound and westbound), made up of precast segmental concrete box girders supported by 28 piers. The eastbound bridge has a steel pedestrian / bicycle path attached for the entire length.

There are approximately 6,300 bolts that attach base plates for the bikepath railing to the deck of the bikepath. The Engineer has determined that the design should be modified by removing bolt caps that were initially placed over the bolts, and requested that this work be performed as a CCO to the YBITS contract. This CCO provides funding for an agreed price of $697,180.00 to remove these bolt caps. There will be an additional $50,000.00 in force account funds for touch up or other painting, since the scope of the painting required has yet to be finalized. This painting work will be paid for on an actual cost basis as provided in Section 5-1.17, "Force Account Payment", of the Special Provisions, and Section 4-1.03D, "Extra Work", of the Standard Specifications.

The total CCO cost is $747,180.00, which will be funded from the project's contingency fund. A cost analysis is on file.

No adjustment of contract time is warranted, as this change will not affect the controlling operation.

This change order was requested by Ken Brown, Office Chief, Office of Toll Bridge, on 11/17/11.

Maintenance concurrence will be obtained from Lina Ellis, Structures Maintenance.

CONCURRED BY:		
Construction Engineer:	William Howe	Date 12-27-12
Bridge Engineer:	Mehran Ardakanian	Date
Project Engineer:	Bob Zandipour, Design	Date 1-15-13
Project Manager:	Ken Terpstra	Date 1/9/13
FHWA Rep.:		Date
Environmental:		Date
Other (specify):	Lina Ellis, Str. Maintenance	Date 1-9-13
Other (specify):	Ken Brown	Date 11/17/11
District Prior Approval By:		Date
HQ (Issue Approve) By:	Larry Salhaney	Date 1-8-13
Resident Engineer's Signature: William Howe		Date 12-27-12

ESTIMATE OF COST

	THIS REQUEST	TOTAL TO DATE
ITEMS	$0.00	$0.00
FORCE ACCOUNT	$50,000.00	$50,000.00
AGREED PRICE	$697,180.00	$697,180.00
ADJUSTMENT	$0.00	$0.00
TOTAL	$747,180.00	$747,180.00

FEDERAL PARTICIPATION

☐ PARTICIPATING ☐ PARTICIPATING IN PART ☑ NONE
☐ NON-PARTICIPATING (MAINTENANCE) ☐ NON-PARTICIPATING

FEDERAL SEGREGATION (if more than one Funding Source or P.I.P. type)
☐ CCO FUNDED PER CONTRACT ☐ CCO FUNDED AS FOLLOWS

FEDERAL FUNDING SOURCE	PERCENT

ADA Notice: For individuals with sensory disabilities, this document is available in alternate formats. For information call: (916) 654-6410 or TDD (916) 654-3880 or write Records and Forms Management, 1120 N Street, MS-89, Sacramento, CA 95814.

STATE OF CALIFORNIA - DEPARTMENT OF TRANSPORTATION

CONTRACT CHANGE ORDER

Change Requested by: Engineer

CCO 150	Suppl. No. 0	Contract No. 04 - 0120S4	Road SF-80-12.7/13.2	FED. AID LOC.: NO FED AID

To: **M C M CONSTRUCTION INC**

You are directed to make the following changes from the plans and specifications or do the following described work not included in the plans and specifications for this contract. ***NOTE: This change order is not effective until approved by the Engineer.***

Description of work to be done, estimate of quantities and prices to be paid. (Segregate between additional work at contract price, agreed price and force account.) Unless otherwise stated, rates for rental of equipment cover only such time as equipment is actually used and no allowance will be made for idle time. This last percentage shown is the net accumulated increase or decrease from the original quantity in the Engineer's Estimate.

Revision 1 dated 1/10/13:

Adjustment of Compensation at Lump Sum:

Compensate the Contractor for all additional costs incurred to procure and install 300 mm (12 inch) flexible pipe expansion loop at Hinge E, as shown on the attached plan Sheet No. 67AS of 806, (sheet 2 of 2 of this change order), and to provide two spare gasket sets.

In addition to the above, this work includes dismantle, removal and disposal of the existing expansion loop.

For this work, the Contractor shall be compensated an Agreed Lump Sum of $32,803.10, which constitutes full and final compensation, including all markups, for all additional costs incurred.

Adjustment of Compensation at Agreed Lump Sum = $32,803.10

Estimated Cost: Increase ☑ Decrease ☐ $32,803.10

By reason of this order the time of completion will be adjusted as follows: 0 days

Submitted by

Signature	Resident Engineer	Date
William Howe	William Howe, Senior R.E.	01-10-13

Approval Recommended by

Signature	Senior Resident Engineer	Date
William Howe	William Howe	01.10.13

Engineer Approval by

Signature	Senior Resident Engineer	Date
William Howe	William Howe	02.15.13

We the undersigned contractor, have given careful consideration to the change proposed and agree, if this proposal is approved, that we will provide all equipment, furnish the materials, except as may otherwise be noted above, and perform all services necessary for the work above specified, and will accept as full payment therefor the prices shown above.

NOTE: If you, the contractor, do not sign acceptance of this order, your attention is directed to the requirements of the specifications as to proceeding with the ordered work and filing a written protest within the time therein specified.

Contractor Acceptance by

Signature	(Print name and title)	Date
[signature]	EDMUNDO A. PUCHI, TREASURER	2/13/13

DIST.	COUNTY	ROUTE	KILOMETER POST TOTAL PROJECT	SHEET NO.	TOTAL SHEETS
04	Ala	80	12.7/13.2	67AS	806

REGISTERED ENGINEER-MECHANICAL — DATE 07/20/2012

PLANS APPROVAL DATE

REGISTERED PROFESSIONAL ENGINEER — Michael R. White — No. M29108 — Exp. 6/30/14 — MECH — STATE OF CALIFORNIA

The State of California or its officers or agents shall not be responsible for the accuracy or completeness of electronic copies of this plan sheet.

Caltrans now has a web site! To get to the web site, go to: http://www.dot.ca.gov

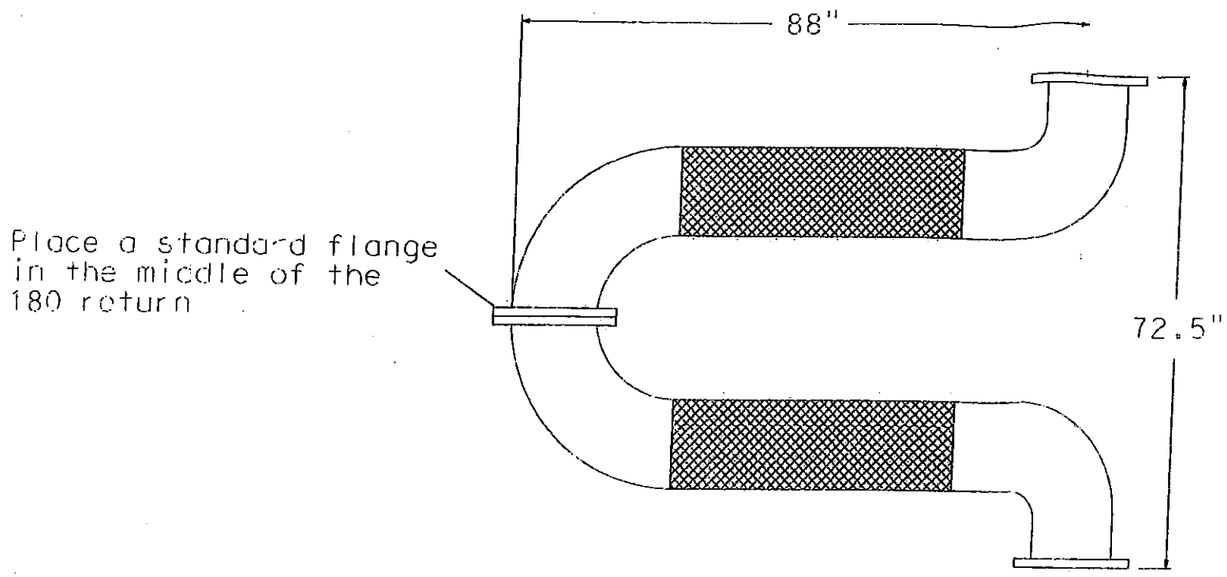

Notes:

Axial Compression 8.7'
Axial Extension 8.7"
Pipe Size - Loop I.D. 12"
Both sides 150# PL FLG
Pressure rating 225 psi
Temperature rating 250 F

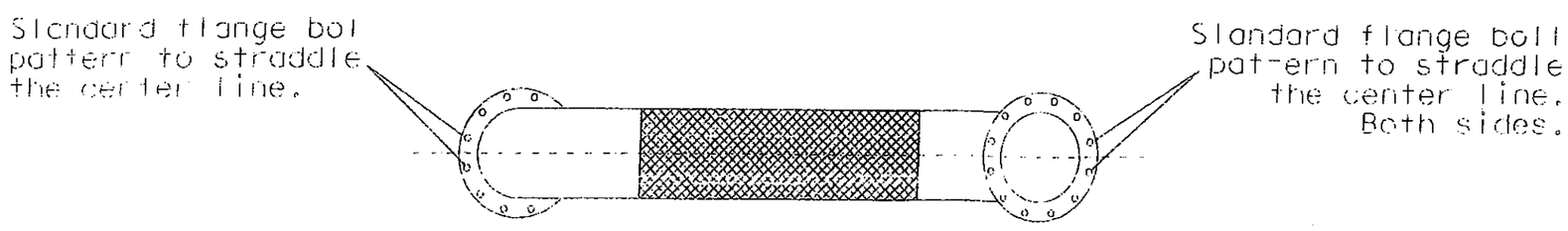

1 REPLACEMENT EXPANSION LOOP FOR 12" WATER LINE

No Scale

CONTRACT NO. 04-0120S4

CONTRACT CHANGE ORDER NO 150

SHEET 2 OF 2

ALL DIMENSIONS SHOWN IN MILLIMETERS, EXCEPT AS NOTED

DESIGN	BY Michael R. White	CHECKED	
DETAILS	BY Michael R. White	CHECKED	
QUANTITIES	BY	CHECKED	

STATE OF CALIFORNIA DEPARTMENT OF TRANSPORTATION

DIVISION OF ENGINEERING SERVICES ELECTRICAL-MECHANICAL-WATER AND WASTEWATER DESIGN

BRIDGE NO. 34-0006L/R — KM POST 1.6

SKYWAY-TO-OTD CONNECTIONS

12" WATER LINE EXPANSION LOOP

SHEET

DOS ELEC (10/98) — FILE = Flexiforms (Main_02.dgn — ORIGINAL SCALE IN MILLIMETERS — REVISION DATES

TIME PLOTTED => 13:00 — DATE PLOTTED => 20-JUL-2012 — TIME = 01:06:40

STATE OF CALIFORNIA - DEPARTMENT OF TRANSPORTATION

CONTRACT CHANGE ORDER MEMORANDUM

DATE: 11/1/2012 Page 1 of 1

TO: Deanna Vilcheck, ACM / DV	FILE: E.A. 04 - 0120S4
FROM: William Howe, Senior R.E.	CO-RTE-PM SF-80-12.7/13.2
	FED. NO. NO FED AID
CCO#: 150 SUPPLEMENT#: 0 Category Code: CHPT	CONTINGENCY BALANCE (incl. this change) $31,488,095.15
COST: $32,803.10 INCREASE ☑ DECREASE ☐	HEADQUARTERS APPROVAL REQUIRED? ☐ YES ☑ NO
SUPPLEMENTAL FUNDS PROVIDED: $0.00	IS THIS REQUEST IN ACCORDANCE WITH ENVIRONMENTAL DOCUMENTS? ☑ YES ☐ NO
CCO DESCRIPTION: Procure & Install 300 mm (12") Flex.Pipe	**PROJECT DESCRIPTION:** YBITS-1 (Yerba Buena Island Transition Structures)

Original Contract Time:	Time Adj. This Change:	Previously Approved CCO Time Adjustments:	Percentage Time Adjusted: (including this change)	Total # of Unreconciled Deferred Time CCO(s): (including this change)
1390 Day(s)	0 Day(s)	0 Day(s)	0 %	9

THIS CHANGE ORDER PROVIDES FOR:

Procurement and installation of 300 mm (12 inch) flexible expansion pipe loop at Hinge E.

This project, the Yerba Buena Island Transition Structure (YBITS), provides for the construction of two bridges, which will connect eastbound and westbound traffic on the new east span of the San Francisco Oakland Bay Bridge (SFOBB) to the existing Yerba Buena Island (YBI) tunnel. The structures are comprised of concrete box girder bridges each approximately 50 meters high and 450 meters in length.

This work will include the purchase and replacement of a flexible pipe expansion loop on the 300 mm (12 inch) ductile iron pipe waterline that runs inside the Westbound Skyway and Oakland Touchdown 1 Structure. The Contractor is to provide and install an EBAA Iron Series 2100 Megaflange restrained flange adaptor or equal at each end of the expansion loop, provide and install a U.S. Pipe full face flange-type gasket or equal, and provide two spare gasket sets in case the flexible loop needs to be repaired or reinstalled during testing. The work will first require dismantle, removal and disposal of the existing expansion loop.

For this work, the Contractor shall be compensated an Agreed Lump Sum of $32,803.10, which constitutes full and final compensation, including all markups, for all additional costs incurred. A cost analysis is on file. The funding for this CCO will come from the contingency funds for the project.

No adjustment of contract time is warranted, as the work will not affect the controlling operation.

This change was requested by Michael White, CT Mechanical Engineer, on November 16, 2012.

Maintenance concurrence is required from Lina Ellis, Structures Maintenance.

CONCURRED BY:		
Construction Engineer:	William Howe	Date 01-10-13
Bridge Engineer:	Mehran Ardakanian	Date
Project Engineer:	Bob Zandipour, Design	Date 1-11-13
Project Manager:	Ken Terpstra	Date 1-16-13
FHWA Rep.:		Date
Environmental:		Date
Other (specify):	Lina Ellis, Str. Maintenance	Date 1-11-13
Other (specify):	Michael White, Mech.Engr.	Date 11/16/12
District Prior Approval By:		Date
HQ (Issue Approve) By:		Date
Resident Engineer's Signature: William Howe		Date 01-10-13

ESTIMATE OF COST

	THIS REQUEST	TOTAL TO DATE
ITEMS	$0.00	$0.00
FORCE ACCOUNT	$0.00	$0.00
AGREED PRICE	$0.00	$0.00
ADJUSTMENT	$32,803.10	$32,803.10
TOTAL	$32,803.10	$32,803.10

FEDERAL PARTICIPATION

☐ PARTICIPATING ☐ PARTICIPATING IN PART ☑ NONE
☐ NON-PARTICIPATING (MAINTENANCE) ☐ NON-PARTICIPATING

FEDERAL SEGREGATION (if more than one Funding Source or P.I.P. type)
☐ CCO FUNDED PER CONTRACT ☐ CCO FUNDED AS FOLLOWS

FEDERAL FUNDING SOURCE	PERCENT

ADA Notice: For individuals with sensory disabilities this document is available in alternate formats. For information call: (916) 654-6410 or TDD (916) 654-3880 or write Records and Forms Management, 1120 N Street, MS-89, Sacramento, CA 95814.

STATE OF CALIFORNIA - DEPARTMENT OF TRANSPORTATION

CONTRACT CHANGE ORDER MEMORANDUM

DATE: 10/3/2012 Page 1 of 1

TO: Deanna Vilcheck, ACM / DV	FILE: E.A. 04 - 0120S4
FROM: William Howe, Senior R.E.	CO-RTE-PM SF-80-12.7/13.2
	FED. NO. NO FED AID
CCO#: 151 SUPPLEMENT#: 0 Category Code: CHPT	CONTINGENCY BALANCE (incl. this change) $30,230,396.15
COST: $40,000.00 INCREASE ☑ DECREASE ☐	HEADQUARTERS APPROVAL REQUIRED? ☐ YES ☑ NO
SUPPLEMENTAL FUNDS PROVIDED: $0.00	IS THIS REQUEST IN ACCORDANCE WITH ENVIRONMENTAL DOCUMENTS? ☑ YES ☐ NO
CCO DESCRIPTION: Temporary EB On-Ramp Abutment 1	**PROJECT DESCRIPTION:** YBITS-1 (Yerba Buena Island Transition Structures)

Original Contract Time:	Time Adj. This Change:	Previously Approved CCO Time Adjustments:	Percentage Time Adjusted: (including this change)	Total # of Unreconciled Deferred Time CCO(s): (including this change)
1390 Day(s)	0 Day(s)	0 Day(s)	0 %	9

THIS CHANGE ORDER PROVIDES FOR:

Construction of the concrete abutment for the eastbound on-ramp, which had initially been planned under the prior South South Detour contract, but was not constructed. As part of the construction, a temporary eastbound on-ramp will be constructed.

Yerba Buena Island Transition Structure (YBITS) contract consists of the construction of two bridges, which will connect eastbound and westbound traffic on the new east span of the San Francisco Oakland Bay Bridge (SFOBB) to the existing Yerba Buena Island (YBI) tunnel.

The work will include all additional costs incurred to construct the Temporary EB On-Ramp Abutment 1 Structure.

For this work, the Contractor will be paid Extra Work at Force Account up to an estimated value of $40,000.00, which will be financed from the contract contingency fund. A cost analysus is on file.

No adjustment of contract time is warranted, as the work will not affect the controlling operation.

Maintenance concurrence will be obtained from Lina Ellis, Structures Maintenance.

CONCURRED BY:

Construction Engineer:	William Howe	Date 02-01-13
Bridge Engineer:	Mehran Ardakanian	Date 2-1-13
Project Engineer:	Bob Zandipour, Design	Date 2-4-13
Project Manager:	Ken Terpstra	Date 2/1/13
FHWA Rep.:		Date
Environmental:		Date
Other (specify):	Lina Ellis, Str. Maintenance	Date 2-1-13
Other (specify):		Date
District Prior Approval By:		Date
HQ (Issue Approve) By:		Date
Resident Engineer's Signature:	William Howe	Date 02-01-13

ESTIMATE OF COST

	THIS REQUEST	TOTAL TO DATE
ITEMS	$0.00	$0.00
FORCE ACCOUNT	$40,000.00	$40,000.00
AGREED PRICE	$0.00	$0.00
ADJUSTMENT	$0.00	$0.00
TOTAL	$40,000.00	$40,000.00

FEDERAL PARTICIPATION

☐ PARTICIPATING ☐ PARTICIPATING IN PART ☑ NONE
☐ NON-PARTICIPATING (MAINTENANCE) ☐ NON-PARTICIPATING

FEDERAL SEGREGATION (if more than one Funding Source or P.I.P. type)
☐ CCO FUNDED PER CONTRACT ☐ CCO FUNDED AS FOLLOWS

FEDERAL FUNDING SOURCE	PERCENT

ADA Notice: For individuals with sensory disabilities, this document is available in alternate formats. For information call: (916) 654-6410 or TDD (916) 654-3880 or write Records and Forms Management, 1120 N Street, MS-89, Sacramento, CA 95814.

STATE OF CALIFORNIA - DEPARTMENT OF TRANSPORTATION

CONTRACT CHANGE ORDER

Change Requested by: Engineer

CCO 151	Suppl. No. 0	Contract No 04 - 0120S4	Road SF-80-12.7/13.2	FED. AID LOC.: NO FED AID

To: **M C M CONSTRUCTION INC**

You are directed to make the following changes from the plans and specifications or do the following described work not included in the plans and specifications for this contract. ***NOTE: This change order is not effective until approved by the Engineer.***

Description of work to be done, estimate of quantities and prices to be paid. (Segregate between additional work at contract price, agreed price and force account.) Unless otherwise stated, rates for rental of equipment cover only such time as equipment is actually used and no allowance will be made for idle time. This last percentage shown is the net accumulated increase or decrease from the original quantity in the Engineer's Estimate.

Extra Work at Force Account:

As authorized by the Engineer, and in accordance with the provisions of Section 4-1.03D, "Extra Work", of the Standard Specifications, and Section 5-1.17, "Force Account Payment", of the Special Provisions, provide all labor, equipment and materials necessary to construct the Temporary EB On-Ramp Abutment 1 Structure, as shown on the attached Plan Sheet Nos. 761A, 761B and 761C of 806, Sheet Nos. 2 through 4 of this change order.

The work includes chipping and disposal of the lean concrete cover previously placed over the top portion of the existing CIDH piles; placing of the abutment formwork, rebar and concrete; formwork removal and cleanup; and any excavation and shoring for this work.

Estimated Extra Work at Force Account = $40,000.00

GEN KELLOGG 2-1-13

Estimated Cost: Increase ☑ Decrease ☐ $40,000.00

By reason of this order the time of completion will be adjusted as follows: 0 days

Submitted by

Signature	Resident Engineer	Date
William Howe	William Howe, Senior R E	02·01·13

Approval Recommended by

Signature	Senior Resident Engineer	Date
William Howe	William Howe	02·01·13

Engineer Approval by

Signature	Senior Resident Engineer	Date
Deanne Vilchien	for William Howe	4/12/13

We the undersigned contractor, have given careful consideration to the change proposed and agree, if this proposal is approved, that we will provide all equipment, furnish the materials, except as may otherwise be noted above, and perform all services necessary for the work above specified, and will accept as full payment therefor the prices shown above.

NOTE: If you, the contractor, do not sign acceptance of this order, your attention is directed to the requirements of the specifications as to proceeding with the ordered work and filing a written protest within the time therein specified.

Contractor Acceptance by

Signature	(Print name and title)	Date
Jeff Carter	JAMES A. CARTER, PRESIDENT	4/10/13

NOTES:

1. For limits of payment for structure excavation and backfill, see A62C
2. For utility locations, see roadway plans.

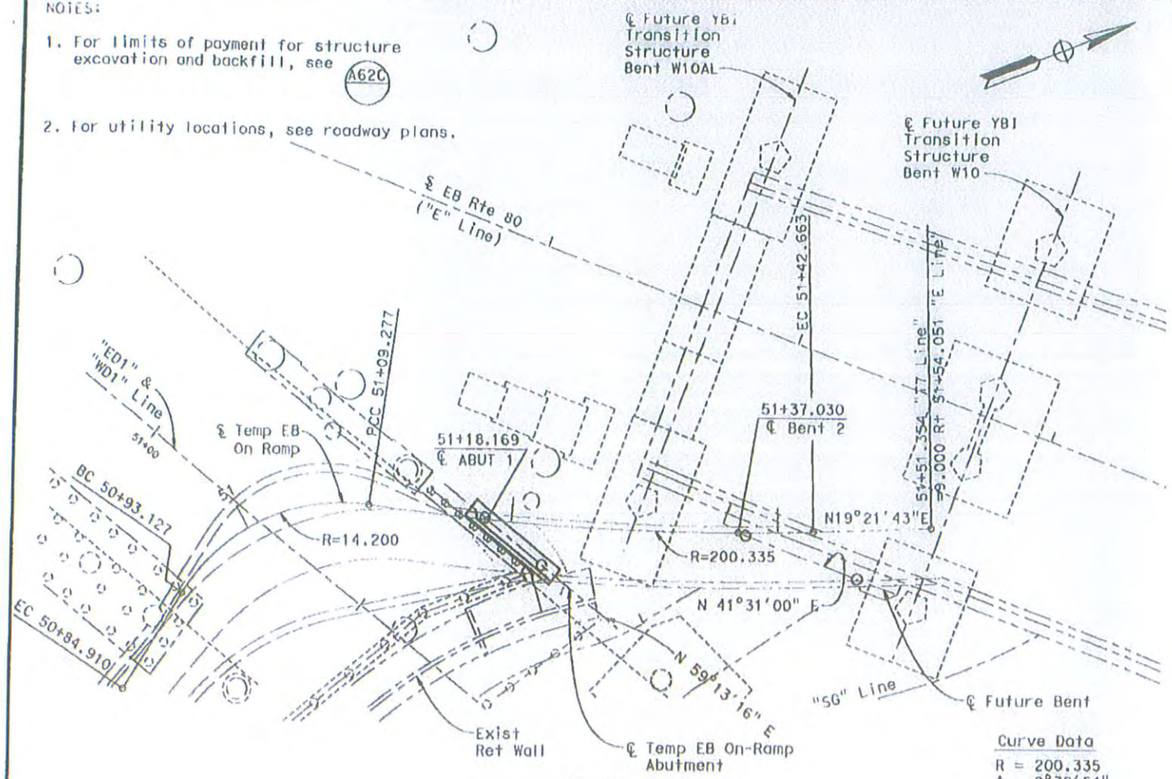

PLAN
1:200

Curve Data
R = 200.335
Δ = 9°32'54"
T = 16.732
L = 33.386

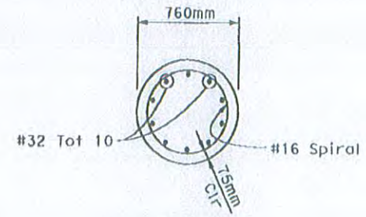

SECTION A-A
NO SCALE

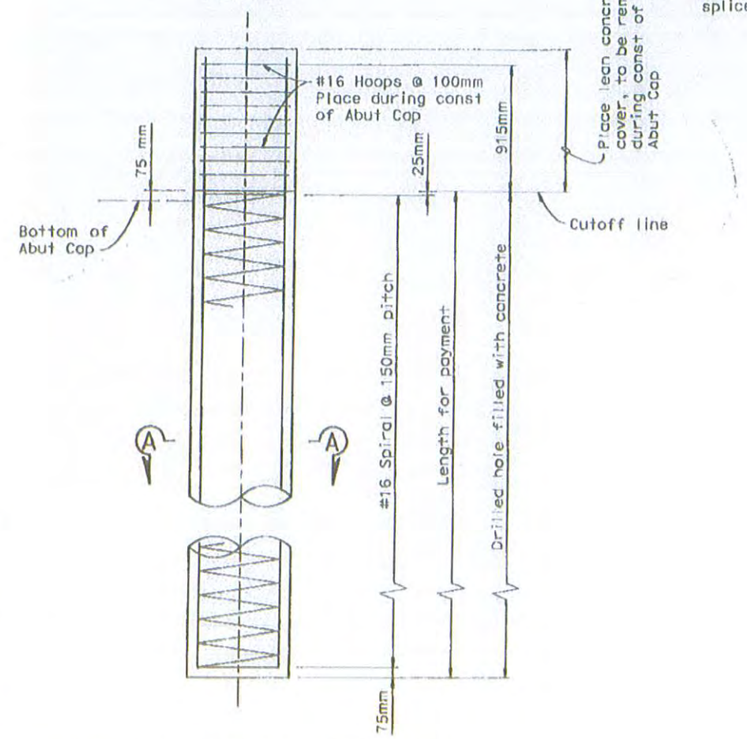

Note:
Hoops shall be continuous, hoop splices shall be ultimate butt splices, see Special Provisions.

760 DIA CIDH CONCRETE PILE
For details not shown, see B2-3
NO SCALE

GENERAL NOTES

Load Factor Design

Design: Caltrans Design Specifications - April 2000 (LFD) (1996 AASHTO with interims and revision by Caltrans)

Dead load: No allowance for future wearing surface

Live load: HS20-44. No allowance for alternative or permit loads

Seismic loading:
See Site Specific Response Spectra and refer to Fugro - EMI SFOBB Ground Motion Report dated 2001.

Reinforced concrete:
Fy = 420 MPa
F'c = 25 MPa
N = 8

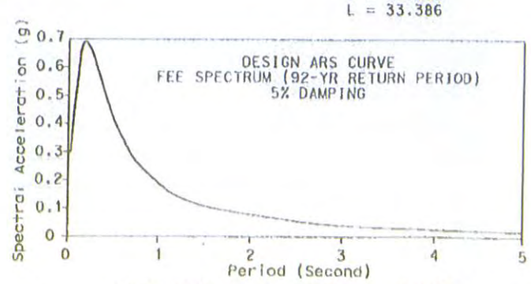

SITE SPECIFIC RESPONSE SPECTRA

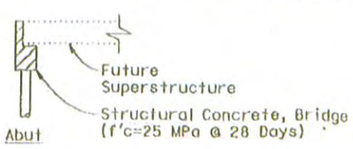

CONCRETE STRENGTH AND TYPE LIMITS
NO SCALE

NOTE:
The Contractor shall verify all controlling field dimensions before ordering or fabricating any material or performing any work that might thereby be affected.

ALL DIMENSIONS ARE IN METERS UNLESS OTHERWISE SHOWN

DIST.	COUNTY	ROUTE	KILOMETER POST TOTAL PROJECT	SHEET NO.	TOTAL SHEETS
04	SF	80		761A	806

REGISTERED ENGINEER - CIVIL
PLANS APPROVAL DATE
The State of California or its officers or agents shall not be responsible for the accuracy or completeness of electronic copies of this plan sheet.
REGISTERED PROFESSIONAL ENGINEER A.L. ELY No. 18880 Exp. 6-30-09 CIVIL STATE OF CALIFORNIA

T.Y. LIN / MOFFATT & NICHOL
TWO HARRISON STREET
SAN FRANCISCO, CA 94105

SUPPLEMENTAL SHEET
CONTRACT CHANGE ORDER NO. 151
SHEET 2 OF 4

SAN FRANCISCO OAKLAND BAY BRIDGE
EAST SPAN SEISMIC SAFETY PROJECT
CCO 151
TEMPORARY EASTBOUND ON-RAMP STRUCTURE
FOUNDATION PLAN

DESIGN OVERSIGHT	SCALE:	VERT. DATUM	HORZ. DATUM	DESIGN BY Dabal	CHECKED Lee	PREPARED FOR THE STATE OF CALIFORNIA DEPARTMENT OF TRANSPORTATION	Jal Birdy PROJECT ENGINEER	BRIDGE NO. 34-006 L/R	TEMPORARY EASTBOUND ON-RAMP STRUCTURE
JUAN F. CARPIO	PHOTOGRAMMETRY AS OF:	ALIGNMENT TIES		DETAILS BY Sanson	CHECKED Dabal			KILOMETER POST 12.8	FOUNDATION PLAN
SIGN OFF DATE	SURVEYED BY	DRAFTED BY		QUANTITIES BY Dabal	CHECKED Lee		CU 04251 EA 012051		
	FIELD CHECKED BY	CHECKED BY						DISREGARD PRINTS BEARING EARLIER REVISION DATES	REVISION DATES (PRELIMINARY STAGE ONLY) 10/08/07 10/08/07 10/08/07 10/08/07 10/08/07 10/08/07 10/08/07 10/08/07 8/7/08

SHEET 3A OF 13

Rev. Date: 8-18-98

ORIGINAL SCALE IN MILLIMETERS FOR REDUCED PLANS 0 10 20 30 40 50 60 70 80 90 100

FILE => p:\4141-06\CADD\Temp EB On Ramp\Adv Const Pkg 3B0\Checked Plans\8-8-08\foundation plan.dgn

Aug 8, 2008

GEOTECHNICAL PROFESSIONAL APPROVAL DATE

USERNAME => s-SOMSOP DATE PLOTTED => 8/8/2008 TIME PLOTTED => 9:17:56 AM

DIST.	COUNTY	ROUTE	KILOMETER POST TOTAL PROJECT	SHEET NO.	TOTAL SHEETS
04	SF	80		761B	806

REGISTERED ENGINEER - CIVIL

PLANS APPROVAL DATE

The State of California or its officers or agents shall not be responsible for the accuracy or completeness of electronic copies of this plan sheet.

REGISTERED PROFESSIONAL ENGINEER A.L. ELY No. 18880 Exp. 6-30-09 CIVIL STATE OF CALIFORNIA

T.Y. LIN / MOFFATT & NICHOL
TWO HARRISON STREET
SAN FRANCISCO, CA 94105

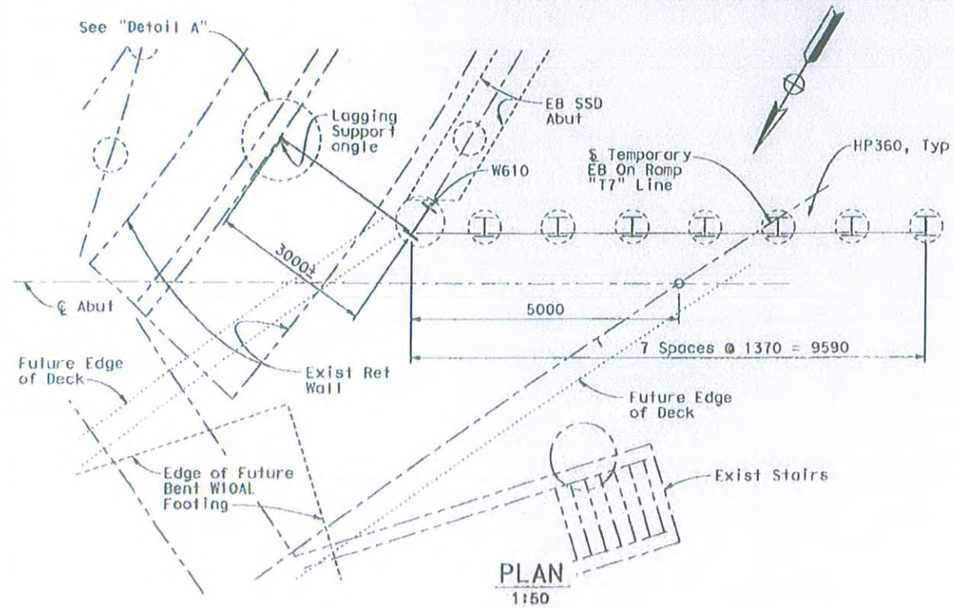

PLAN
1:50

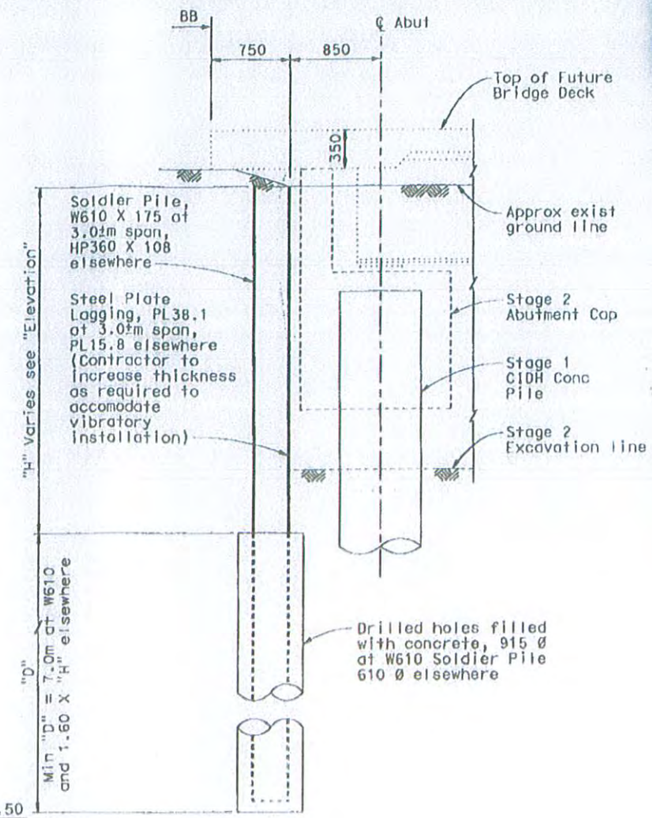

TYPICAL SECTION
1:25

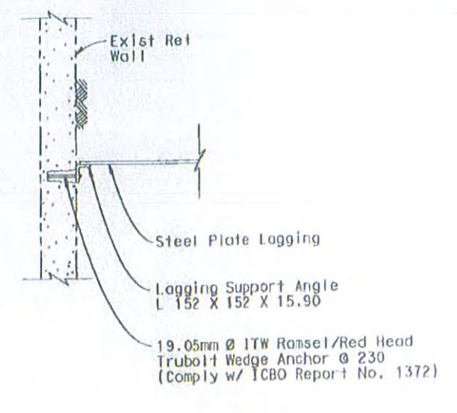

DETAIL A
1:25

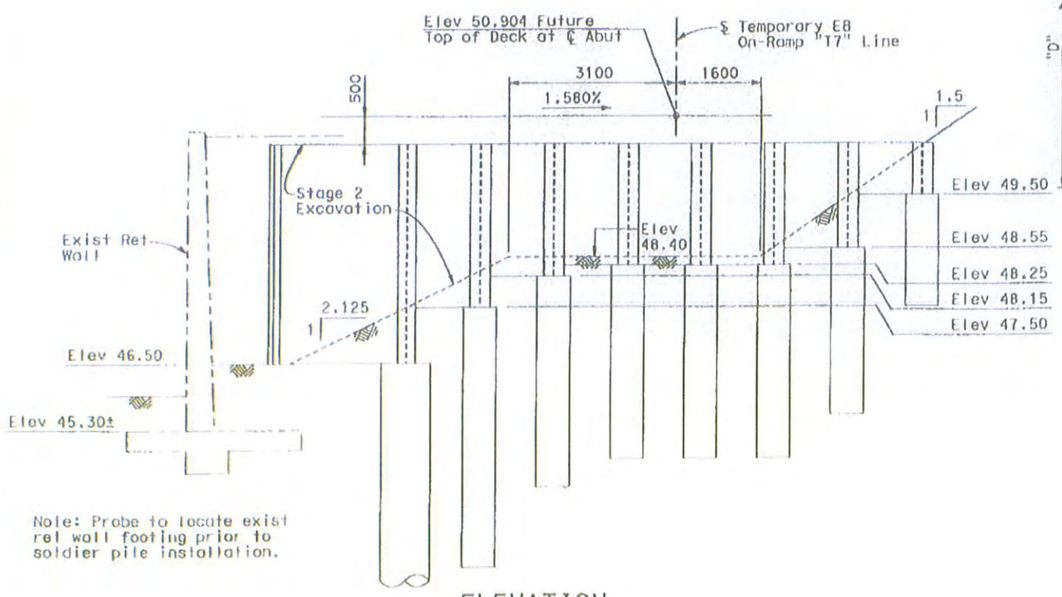

Note: Probe to locate exist ret wall footing prior to soldier pile installation.

ELEVATION
1:50

NOTE:
The Contractor shall verify all controlling field dimensions before ordering or fabricating any material or performing any work that might thereby be affected.

ALL DIMENSIONS ARE IN MILLIMETERS UNLESS OTHERWISE SHOWN

SUPPLEMENTAL SHEET

CONTRACT CHANGE ORDER NO. 151
SHEET 3 OF 4

SAN FRANCISCO OAKLAND BAY BRIDGE
EAST SPAN SEISMIC SAFETY PROJECT

CCO 151

TEMPORARY EASTBOUND ON-RAMP STRUCTURE

SOLDIER PILE WALL DETAILS

DESIGN OVERSIGHT		DESIGN	BY Desai	CHECKED Lee	PREPARED FOR THE STATE OF CALIFORNIA DEPARTMENT OF TRANSPORTATION	Jal Birdy PROJECT ENGINEER	BRIDGE NO. 34-006 L/R	
JUAN F. CARPIO		DETAILS	BY Samson	CHECKED Desai			KILOMETER POST 12.8	
SIGN OFF DATE		QUANTITIES	BY Desai	CHECKED Lee		CU 04251 EA 012051	DIRECTORY PRINTS BEARING EARLIER REVISION DATES	REVISION DATES (PRELIMINARY STAGE ONLY)

Rev. Date: 5-15-98

ORIGINAL SCALE IN MILLIMETERS FOR REDUCED PLANS 0 10 20 30 40 50 60 70 80 90 100

FILE => p:\4141-06\CADD\Temp EB On Ramp\Adv Const Pkg 3B0\Checked Plans\8-8-08\soldier pile wall det.dgn

SHEET 3B OF 13

Aug 8, 2008

USERNAME => fsamson DATE PLOTTED => 8/8/2008 TIME PLOTTED => 9:17:30 AM

DIST	COUNTY	ROUTE	KILOMETER POST TOTAL PROJECT	SHEET NO.	TOTAL SHEETS
04	SF	80		761C	806

REGISTERED ENGINEER - CIVIL

PLANS APPROVAL DATE

The State of California or its officers or agents shall not be responsible for the accuracy or completeness of electronic copies of this plan sheet.

REGISTERED PROFESSIONAL ENGINEER A.L. ELY No. 18889 Exp. 6-30-09 CIVIL STATE OF CALIFORNIA

T.Y. LIN / MOFFATT & NICHOL
TWO HARRISON STREET
SAN FRANCISCO, CA 94105

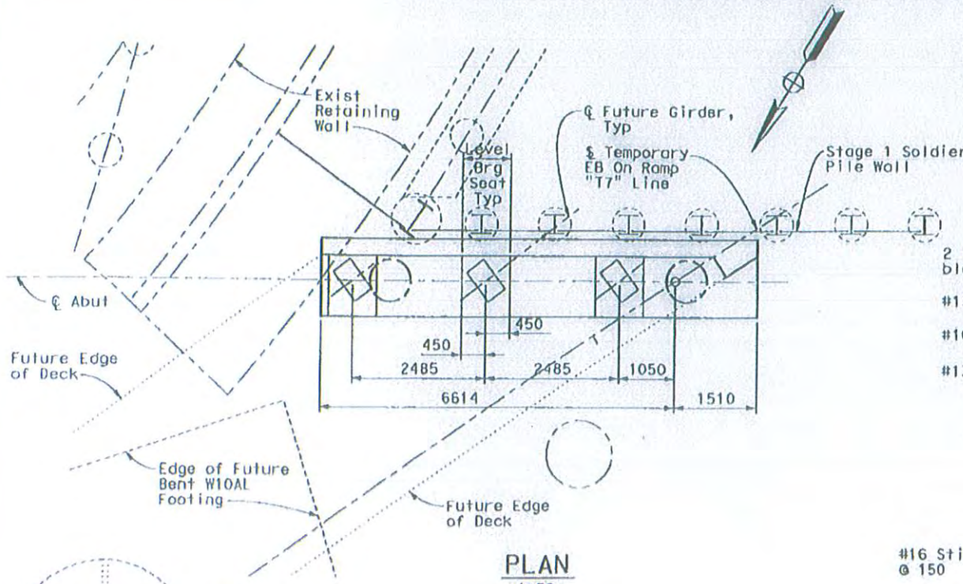

PLAN
1:50

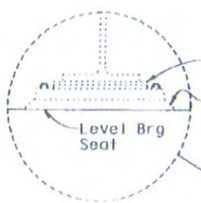

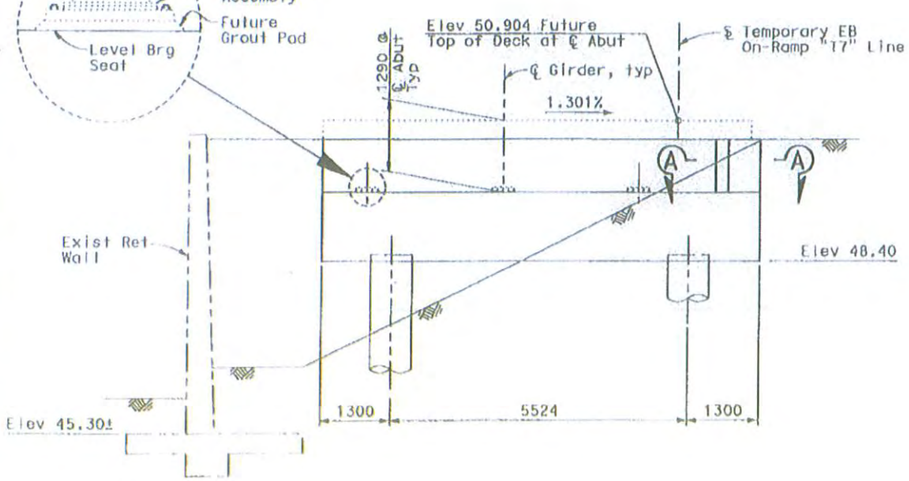

Note: Probe to locate exist ret wall footing prior to pile installation.

ELEVATION
1:50

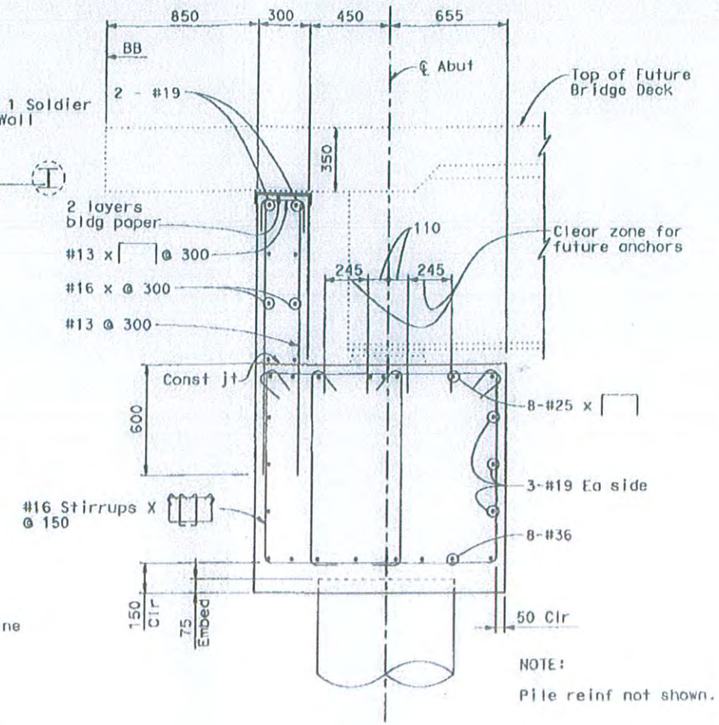

NOTE:
Pile reinf not shown.

TYPICAL ABUTMENT SECTION
1:15

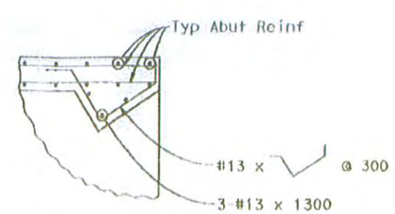

SECTION A-A
1:25

NOTE:
The Contractor shall verify all controlling field dimensions before ordering or fabricating any material or performing any work that might thereby be affected.

ALL DIMENSIONS ARE IN MILLIMETERS UNLESS OTHERWISE SHOWN

SUPPLEMENTAL SHEET

CONTRACT CHANGE ORDER NO. 151
SHEET 4 OF 4

SAN FRANCISCO OAKLAND BAY BRIDGE
EAST SPAN SEISMIC SAFETY PROJECT

CCO 151

TEMPORARY EASTBOUND ON-RAMP STRUCTURE

ABUTMENT DETAILS

DESIGN OVERSIGHT			
JUAN F. CARPIO			
SIGN OFF DATE			
Rev. Date: 5-16-98			

	BY	CHECKED
DESIGN	Desai	Lee
DETAILS	Samson	Desai
QUANTITIES	Desai	Lee

PREPARED FOR THE STATE OF CALIFORNIA DEPARTMENT OF TRANSPORTATION

Jal Birdy
PROJECT ENGINEER

BRIDGE NO. 34-006 L/R
KILOMETER POST 12.8

ORIGINAL SCALE IN MILLIMETERS FOR REDUCED PLANS 0 10 20 30 40 50 60 70 80 90 100

CU 04251
EA 0120S1

DISREGARD PRIOR READING EARLIER REVISION DATES

REVISION DATES (PRELIMINARY STAGE ONLY) — DATE

SHEET 3C OF 13

FILE => p:\4141-06\CADD\Temp EB On Ramp\Adv Const Pkg 3R0\Checked Plans\8-8-08\abt det.dgn

USERNAME => samson DATE PLOTTED => 8/8/2008 TIME PLOTTED => 9:18:09 AM

Aug 8, 2008

STATE OF CALIFORNIA - DEPARTMENT OF TRANSPORTATION

CONTRACT CHANGE ORDER

Change Requested by: Engineer

CCO 152	Suppl. No. 0	Contract No 04 - 0120S4	Road SF-80-12.7/13.2	FED. AID LOC.: NO FED AID

To: M C M CONSTRUCTION INC

You are directed to make the following changes from the plans and specifications or do the following described work not included in the plans and specifications for this contract. ***NOTE: This change order is not effective until approved by the Engineer.***

Description of work to be done, estimate of quantities and prices to be paid. (Segregate between additional work at contract price, agreed price and force account.) Unless otherwise stated, rates for rental of equipment cover only such time as equipment is actually used and no allowance will be made for idle time. This last percentage shown is the net accumulated increase or decrease from the original quantity in the Engineer's Estimate.

Adjustment of Compensation at Lump Sum:

Compensate the Contractor for all additional costs incurred by the Contractor's subcontractor, Harris Salinas Rebar, Inc., for all Department ordered adjustments to the reinforcing steel within Frames 1 and 2 of the Eastbound YBI Transition Structure due to grade changes or conflicts with the placement of the reinforcing steel. This change order covers work performed starting January 5, 2012, and ending October 1, 2012.

For this work, the Contractor shall be compensated at an Agreed Lump Sum of $116,445.00, which constitutes full and fina compensation, including all markups, for all additional costs incurred.

Adjustment of Compensations at Agreed Lump Sum = $116,445.00

Meghan Dullamine 03/20/2013

Estimated Cost: Increase ☑ Decrease ☐ $116,445.00

By reason of this order the time of completion will be adjusted as follows: 0 days

Submitted by		
Signature William Howe	Resident Engineer William Howe, Senior R E	Date 03-21-13
Approval Recommended by		
Signature Deanna Vilcheck	Area Construction Manager Deanna Vilcheck	Date 3/25/13
Engineer Approval by		
Signature Deanna Vilcheck	Area Construction Manager Deanna Vilcheck	Date 4/16/13

We the undersigned contractor, have given careful consideration to the change proposed and agree, if this proposal is approved, that we will provide all equipment, furnish the materials, except as may otherwise be noted above, and perform all services necessary for the work above specified, and will accept as full payment therefor the prices shown above.

NOTE: If you, the contractor, do not sign acceptance of this order, your attention is directed to the requirements of the specifications as to proceeding with the ordered work and filing a written protest within the time therein specified.

Contractor Acceptance by		
Signature	(Print name and title) Edmundo A. Ruiz - Treasurer	Date 4-12-2013

STATE OF CALIFORNIA - DEPARTMENT OF TRANSPORTATION

CONTRACT CHANGE ORDER MEMORANDUM

DATE: 3/21/2013 Page 1 of 1

TO: Deanna Vilcheck, ACM / DV	FILE: E.A. 04 - 0120S4
	CO-RTE-PM SF-80-12.7/13.2
FROM: William Howe, Senior R.E.	FED. NO. NO FED AID
CCO#: 152 SUPPLEMENT#: 0 Category Code: CHPT	CONTINGENCY BALANCE (incl. this change) $27,679,356.15
COST: $116,445.00 INCREASE ☑ DECREASE ☐	HEADQUARTERS APPROVAL REQUIRED? ☐ YES ☑ NO
SUPPLEMENTAL FUNDS PROVIDED: $0.00	IS THIS REQUEST IN ACCORDANCE WITH ENVIRONMENTAL DOCUMENTS? ☑ YES ☐ NO
CCO DESCRIPTION: Rebar Grade Adjustments-EB Structure	**PROJECT DESCRIPTION:** YBITS-1 (Yerba Buena Island Transition Structures)

Original Contract Time:	Time Adj. This Change:	Previously Approved CCO Time Adjustments:	Percentage Time Adjusted: (including this change)	Total # of Unreconciled Deferred Time CCO(s): (including this change)
1390 Day(s)	0 Day(s)	0 Day(s)	0 %	9

THIS CHANGE ORDER PROVIDES FOR:
Rebar grade adjustments on the Eastbound Structure.

This project, the Yerba Buena Island Transition Structure (YBITS), provides for the construction of two bridges, which will connect eastbound and westbound traffic on the new east span of the San Francisco Oakland Bay Bridge (SFOBB) to the existing Yerba Buena Island (YBI) tunnel. The structures are comprised of concrete box girder bridges each approximately 50 meters high and 450 meters in length.

During the construction of the eastbound bridge, the Department directed several adjustments be made to reinforcing steel that had already been installed, due to grade changes made to the falsework. These adjustments were made across much of the length of the eastbound structure over a period of several months. Additional adjustments to the reinforcing steel had to be made in the field to resolve miscellaneous conflicts between both different steel bars and the concrete formwork.

This change compensates the Contractor for all additional costs incurred by the Contractor's subcontractor, Harris Salinas Rebar, Inc., for all Department ordered adjustments to the reinforcing steel within Frames 1 and 2 of the Eastbound YBI Transition Structure due to grade changes or conflicts with the placement of the reinforcing steel. Work included in this change order was performed after January 5, 2012, through completion of the stressing of the superstructure October 1, 2012.

For this work the Contractor shall be compensated an Agreed Lump Sum of $116,445.00, which constitutes full and final compensation, including all markups, for all additional costs incurred.

A cost analysis is on file. The funding for this CCO will come from the contingency funds for the project.

No adjustment of contract time is warranted, as the work will not affect the controlling operation.

Maintenance concurrence is not required as this now pertains to the administrative costs for previous changes.

CONCURRED BY:

Construction Engineer:	William Howe	Date 03-21-13
Bridge Engineer:	Mehran Ardakanian	Date 03/26/2013
Project Engineer:	Bob Zandipour, Design	Date 3-27-13
Project Manager:	Ken Terpstra	Date 3/27/13
FHWA Rep.:		Date
Environmental:		Date
Other (specify):		Date
Other (specify):		Date
District Prior Approval By:		Date
HQ (Issue Approve) By:		Date
Resident Engineer's Signature:	William Howe	Date 03-21-13

ESTIMATE OF COST

	THIS REQUEST	TOTAL TO DATE
ITEMS	$0.00	$0.00
FORCE ACCOUNT	$0.00	$0.00
AGREED PRICE	$0.00	$0.00
ADJUSTMENT	$116,445.00	$116,445.00
TOTAL	$116,445.00	$116,445.00

FEDERAL PARTICIPATION

☐ PARTICIPATING ☐ PARTICIPATING IN PART ☑ NONE
☐ NON-PARTICIPATING (MAINTENANCE) ☐ NON-PARTICIPATING

FEDERAL SEGREGATION (if more than one Funding Source or P.I.P. type)
☐ CCO FUNDED PER CONTRACT ☐ CCO FUNDED AS FOLLOWS

FEDERAL FUNDING SOURCE	PERCENT

ADA Notice: For individuals with sensory disabilities, this document is available in alternate formats. For information call: (916) 654-6410 or TDD (916) 654-3880 or write Records and Forms Management, 1120 N Street, MS-89, Sacramento, CA 95814.

STATE OF CALIFORNIA - DEPARTMENT OF TRANSPORTATION

CONTRACT CHANGE ORDER

Change Requested by: Engineer

CCO 153	Suppl. No. 0	Contract No. 04 - 0120S4	Road SF-80-12.7/13.2	FED. AID LOC.: NO FED AID

To: **M C M CONSTRUCTION INC**

You are directed to make the following changes from the plans and specifications or do the following described work not included in the plans and specifications for this contract. ***NOTE: This change order is not effective until approved by the Engineer.***

Description of work to be done, estimate of quantities and prices to be paid. (Segregate between additional work at contract price, agreed price and force account.) Unless otherwise stated, rates for rental of equipment cover only such time as equipment is actually used and no allowance will be made for idle time. This last percentage shown is the net accumulated increase or decrease from the original quantity in the Engineer's Estimate.

Adjustment of Compensation at Lump Sum:

The Contractor shall allocate all necessary labor and equipment resources to provide for the removal of the eastbound Frame 2 falsework between Bents W2R and W3R to be completed within 10 calendar days after the prestressing tendons on the eastbound Frame 2 structure have been stressed to their final load. Resources shall also be allocated to provide for the release of the eastbound Frame 2 falsework between Bents W3R and W4R to be completed within 20 calendar days after the prestressing tendons on the eastbound Frame 2 structure have been stressed to their final load. The removal of the Bents W3R to W4R falsework is not required to be performed within the 20 calendar day period.

For this work, the Contractor shall be compensated an Agreed Lump Sum of $450,000.00, which constitutes full and final compensation, including all markups, for all additional costs incurred.

This falsework removal shall be performed prior to the Contractor vacating the eastbound Frame 2 area for the achievement of Milestone 2 of Change Order No. 72, Supplement No. 1, in lieu of the falsework remaining in place as defined for Milestone 2 under that change order.

Adjustment of Compensation at Agreed Lump Sum = $450,000.00

Consideration of a time adjustment pertaining to any delays to Milestones 2 and 3 as established under Change Order No. 72, Supplement No. 1, along with any delays to the Designated Portion of Work 3 as defined under Section 4, "Beginning of Work, Time of Completion and Liquidated Damages", of the Contract Special Provisions is deferred. Determination of a commensurate time extension will be made in accordance with Section 8-1.07, "Liquidated Damages", of the Standard Specifications, and Section 10-1.22, "Progress Schedule (Critical Path Method)", of the Special Provisions.

There shall be no time extension to the Designated Portion of Work 2 as defined under Section 4, "Beginning of Work, Time of Completion and Liquidated Damages", of the Contract Special Provisions as a result of this change.

There shall be no time extension to the completion of the Contract as a result of this change.

STATE OF CALIFORNIA - DEPARTMENT OF TRANSPORTATION

CONTRACT CHANGE ORDER

Change Requested by: Engineer

CCO 153	Suppl. No. 0	Contract No. 04 - 0120S4	Road SF-80-12.7/13.2	FED. AID LOC.: NO FED AID

10.03.12

Estimated Cost: Increase ☑ Decrease ☐ $450,000.00

By reason of this order the time of completion will be adjusted as follows: 0 days

Submitted by

Signature	Resident Engineer	Date
William Howe	William Howe, Senior R.E.	10.03.12

Approval Recommended by

Signature	Area Construction Manager	Date
Deanna Vilcheck	Deanna Vilcheck	10/3/12

Engineer Approval by

Signature	Area Construction Manager	Date
Deanna Vilcheck	Deanna Vilcheck	11/14/12

We the undersigned contractor, have given careful consideration to the change proposed and agree, if this proposal is approved, that we will provide all equipment, furnish the materials, except as may otherwise be noted above, and perform all services necessary for the work above specified, and will accept as full payment therefor the prices shown above.

NOTE: If you, the contractor, do not sign acceptance of this order, your attention is directed to the requirements of the specifications as to proceeding with the ordered work and filing a written protest within the time therein specified.

Contractor Acceptance by

Signature	(Print name and title)	Date
	EDMUNDO A. PUCHI, TREASURER	11/8/12

STATE OF CALIFORNIA - DEPARTMENT OF TRANSPORTATION

CONTRACT CHANGE ORDER MEMORANDUM

TO: Deanna Vilcheck, ACM / DV	FILE: E.A. 04 - 0120S4
FROM: William Howe, Senior R.E.	CO-RTE-PM SF-80-12.7/13.2
	FED. NO. NO FED AID
CCO#: 153 SUPPLEMENT#: 0 Category Code: CHPT	CONTINGENCY BALANCE (incl. this change) $36,370,905.15
COST: $450,000.00 INCREASE ☑ DECREASE ☐	HEADQUARTERS APPROVAL REQUIRED? ☑ YES ☐ NO
SUPPLEMENTAL FUNDS PROVIDED: $0.00	IS THIS REQUEST IN ACCORDANCE WITH ENVIRONMENTAL DOCUMENTS? ☑ YES ☐ NO
CCO DESCRIPTION: EB W2 to W3 Falsework Removal	**PROJECT DESCRIPTION:** YBITS-1 (Yerba Buena Island Transition Structures)

Original Contract Time:	Time Adj. This Change:	Previously Approved CCO Time Adjustments:	Percentage Time Adjusted: (including this change)	Total # of Unreconciled Deferred Time CCO(s): (including this change)
1390 Day(s)	0 Day(s)	0 Day(s)	0 %	9

THIS CHANGE ORDER PROVIDES FOR:

The out of sequence removal of the eastern span of the eastbound Frame 2 falsework.

The construction of the eastbound bridge requires the placement of falsework that abuts against the Self-Anchored Suspension (SAS) Bridge Contract (04-0120F4). Contract Change Order No. 72, Supplement No. 1, established 3 milestones with Milestone 2 requiring the Contractor to complete the construction of the eastbound structure and vacate the 60 meter long area between Bent W3R and Bent W2R to allow for the SAS contract to perform the construction of the Hinge K closure, which connects YBITS to the SAS structure. Under that change order, the falsework in this area was to remain in place. It has now been determined that the falsework needs to be removed prior to the area being vacated in order to facilitate the Hinge K closure construction. This change order provides for this falsework removal.

In addition, the Office of Structures Design has requested that the Bent W3R to W2R falsework be removed in the most expeditious manner possibly. This is being done to limit the period between Frame 2 stressing and the stressing of the SAS tie-down anchors at the Hinge K cantilever. This change order will provide for the Contractor to remove the falsework between this span within a 10 calendar day period.

The work includes striping the falsework wingwalls, soffit deck and steel bents, which stand approximately 30 meters in height in the W3R to W2R area out of sequence. The Contractor will be required to suspend their other falsework removal activities on the Frame 1 structure, mobilize to the Bent W3R/W2R area, remove that falsework, demobilize the falsework removal operation and remobilize back to the Frame 1 falsework removal activity. Additional labor crews shall also be mobilized onto the jobsite from other projects.

The Contractor will be required to work 2 separate 12 hours shifts, including weekends, with multiple crews resulting in considerable premium time labor costs and inefficiencies. Access constraints associated with removing the falsework out of sequence will also negatively affect the work. This change order provides compensation for the additional premium time labor cost and the inefficiencies associated with the work along with multiple mobilizations required.

Compensation for these costs shall be paid as an Adjustment of Compensation at an Agreed Lump Sum of $450,000.00; which shall be financed from the contract's contingency funds. A cost analysis is on file.

No adjustment of contract time is warranted as the change does not affect the controlling operation.

Maintenance concurrence is not required as the change does not affect any permanent roadway features.

ADA Notice: For individuals with sensory disabilities, this document is available in alternate formats. For information call: (916) 654-6410 or TDD (916) 654-3880 or write Records and Forms Management, 1120 N Street, MS-89, Sacramento, CA 95814.

CONCURRED BY:		
Construction Engineer:	William Howe	Date 10-3-12
Bridge Engineer:	Mehran Ardakanian	Date 10.03.12
Project Engineer:	Bob Zandipour, Design	Date 10-3-12
Project Manager:	Ken Terpstra	Date 10/5/12
FHWA Rep.:		Date
Environmental:		Date
Other (specify):		Date
Other (specify):		Date
District Prior Approval By:		Date
HQ (Issue Approve) By:	Larry Salhaney	Date 10-3-12
Resident Engineer's Signature: William Howe		Date 10.3.12

ESTIMATE OF COST

	THIS REQUEST	TOTAL TO DATE
ITEMS	$0.00	$0.00
FORCE ACCOUNT	$0.00	$0.00
AGREED PRICE	$0.00	$0.00
ADJUSTMENT	$450,000.00	$450,000.00
TOTAL	$450,000.00	$450,000.00

FEDERAL PARTICIPATION

☐ PARTICIPATING ☐ PARTICIPATING IN PART ☑ NONE
☐ NON-PARTICIPATING (MAINTENANCE) ☐ NON-PARTICIPATING

FEDERAL SEGREGATION (if more than one Funding Source or P.I.P. type)
☐ CCO FUNDED PER CONTRACT ☐ CCO FUNDED AS FOLLOWS

FEDERAL FUNDING SOURCE	PERCENT

ADA Notice: For individuals with sensory disabilities, this document is available in alternate formats. For information call (916) 654-6410 or TDD (916) 654-3880 or write Records and Forms Management, 1120 N Street, MS-89, Sacramento, CA 95814.

STATE OF CALIFORNIA - DEPARTMENT OF TRANSPORTATION

CONTRACT CHANGE ORDER

Change Requested by: Engineer

CCO 156	Suppl. No. 0	Contract No. 04 - 0120S4	Road SF-80-12.7/13.2	FED. AID LOC.: NO FED AID

To: **M C M CONSTRUCTION INC**

You are directed to make the following changes from the plans and specifications or do the following described work not included in the plans and specifications for this contract. ***NOTE: This change order is not effective until approved by the Engineer.***

Description of work to be done, estimate of quantities and prices to be paid. (Segregate between additional work at contract price, agreed price and force account.) Unless otherwise stated, rates for rental of equipment cover only such time as equipment is actually used and no allowance will be made for idle time. This last percentage shown is the net accumulated increase or decrease from the original quantity in the Engineer's Estimate.

Extra Work at Force Account:

As directed by the Engineer, and in accordance with the provisions of Section 4-1.03D, "Extra Work", of the Standard Specifications, and Section 5-1.17, "Force Account Payment", of the Special Provisions, provide all labor, equipment and materials necessary to remove lost deck formwork material from bridge utility vaults and access ways.

Estimated Extra Work at Force Account = $17,000.00

The Contractor is responsible for removing sufficient forms to meet the criteria and limits as specified in Standard Specification Section 51 1.05, "Concrete Structures-Forms", paragraph 16 (page 360). This change order will only provide for payment for removal beyond these limits.

Given R.E. Howe 8/31/12

Estimated Cost: **Increase** ☑ **Decrease** ☐ **$17,000.00**

By reason of this order the time of completion will be adjusted as follows: 0 days

Submitted by

Signature	Resident Engineer	Date
William Howe	William Howe, Senior R.E.	08-15-12

Approval Recommended by

Signature	Senior Resident Engineer	Date
William Howe	William Howe	08-15-12

Engineer Approval by

Signature	Senior Resident Engineer	Date
William Howe	William Howe	08.30.12

We the undersigned contractor, have given careful consideration to the change proposed and agree, if this proposal is approved, that we will provide all equipment, furnish the materials, except as may otherwise be noted above, and perform all services necessary for the work above specified, and will accept as full payment therefor the prices shown above.

NOTE: If you, the contractor, do not sign acceptance of this order, your attention is directed to the requirements of the specifications as to proceeding with the ordered work and filing a written protest within the time therein specified.

Contractor Acceptance by

Signature	(Print name and title)	Date
[signature]	JAMES A. CARTER, PRESIDENT	8/29/12

STATE OF CALIFORNIA - DEPARTMENT OF TRANSPORTATION

CONTRACT CHANGE ORDER MEMORANDUM

TO: Deanna Vilcheck, ACM / DBC	FILE: E.A. 04 - 0120S4
	CO-RTE-PM SF-80-12.7/13.2
FROM: William Howe, Senior R.E.	FED. NO. NO FED AID
CCO#: 156 SUPPLEMENT#: 0 Category Code: CHPT	CONTINGENCY BALANCE (incl. this change) $55,959,128.40
COST: $17,000.00 INCREASE ☑ DECREASE ☐	HEADQUARTERS APPROVAL REQUIRED? ☐ YES ☑ NO
SUPPLEMENTAL FUNDS PROVIDED: $0.00	IS THIS REQUEST IN ACCORDANCE WITH ENVIRONMENTAL DOCUMENTS? ☑ YES ☐ NO
CCO DESCRIPTION: Remove Lost Deck Formwork from Vaults	**PROJECT DESCRIPTION:** YBITS-1 (Yerba Buena Island Transition Structures)

Original Contract Time:	Time Adj. This Change:	Previously Approved CCO Time Adjustments:	Percentage Time Adjusted: (including this change)	Total # of Unreconciled Deferred Time CCO(s): (including this change)
1390 Day(s)	0 Day(s)	0 Day(s)	0 %	9

THIS CHANGE ORDER PROVIDES FOR:

The removal of lost deck formwork (plywood and framing material) from utility vaults, eastbound and westbound bridges. The Contractor is responsible for removing sufficient forms to meet the criteria and limits as specified in Standard Specification Section 51 1.05, "Concrete Structures-Forms", paragraph 16 (page 360). This change order will only provide for payment for removal beyond these limits.

The lost deck formwork in utility vaults are permitted to be left in place by the Caltrans Standard Specifications, July 1999, Section 51-1.05, "Concrete Structures-Forms", paragraph 16 (page 360), which states, "When permanent access is available into the cells or voids, or when utility facilities other than those in preplaced casings are to be installed in cells or voids, forms used to support the deck of cast-in-place box girders or to form the void of a precast member shall be removed except that, when the dimensions of the structure or member permit, the forms may remain in place providing the following conditions are met:

1. Any portions of the forms which obstruct access openings or conflict with utility facilities are removed;
2. A longitudinal crawl space not less than 0.9 m high and 0.6 m wide is provided throughout the length of all such cells or voids;
3. The forming system employed leaves no sharp projections into the cells or voids; and
4. All forms shall be removed between the hinge and 1.5 m past the access openings in cells of cast-in-place box girder bridges that have access openings near hinges.

Due to the 150 year extended design life of the bridge structure, the degradation of the remaining lost deck formwork may present a potential hazard to utility facilities within the box girder utility vaults. To mitigate this hazard, lost deck formwork jeopardizing the utility facilities will be removed.

Labor, equipment and material approved by the Engineer, as necessary, will be paid in accordance with the provisions of Section 4-1.03D, "Extra Work", of the Standard Specifications, and Section 5-1.17, "Force Account Payment", of the Special Provisions.

For this work, the Contractor will be paid Extra Work at Force Account up to an estimated value of $17,000.00, which will be funded from the contract's contingency fund. A cost analysis is on file.

No adjustment of contract time is warranted, as the work will not affect the controlling operation.

Maintenance concurrence will not be necessary as this work does not affect any permanent features.

ADA Notice: For individuals with sensory disabilities, this document is available in alternate formats. For [illegible]
Records and Forms Management, 1120 N Street, MS-89, Sacramento, CA 95814.

CONCURRED BY:		
Construction Engineer:	William Howe	Date 08-15-12
Bridge Engineer:	Mehran Ardakanian GR	Date 08/31/12
Project Engineer:	Bob Zandipour, Design	Date 8-16-12
Project Manager:	Ken Terpstra	Date 8-15-12
FHWA Rep.:		Date
Environmental:		Date
Other (specify):		Date
Other (specify):		Date
District Prior Approval By:		Date
HQ (Issue Approve) By:		Date
Resident Engineer's Signature: William Howe		Date 08-15-12

ESTIMATE OF COST

	THIS REQUEST	TOTAL TO DATE
ITEMS	$0.00	$0.00
FORCE ACCOUNT	$17,000.00	$17,000.00
AGREED PRICE	$0.00	$0.00
ADJUSTMENT	$0.00	$0.00
TOTAL	$17,000.00	$17,000.00

FEDERAL PARTICIPATION

☐ PARTICIPATING ☐ PARTICIPATING IN PART ☑ NONE
☐ NON-PARTICIPATING (MAINTENANCE) ☐ NON-PARTICIPATING

FEDERAL SEGREGATION (if more than one Funding Source or P.I.P. type)
☐ CCO FUNDED PER CONTRACT ☐ CCO FUNDED AS FOLLOWS

FEDERAL FUNDING SOURCE	PERCENT

ADA Notice: For individuals with sensory disabilities, this document is available [illegible]
Records and Forms Management, 1120 N Street, MS-89, Sacramento, CA 95814

CONTRACT CHANGE ORDER

Change Requested by: Engineer

CCO 157	Suppl. No. 0	Contract No 04 - 0120S4	Road SF-80-12.7/13.2	FED. AID LOC.: NO FED AID

To: M C M CONSTRUCTION INC

You are directed to make the following changes from the plans and specifications or do the following described work not included in the plans and specifications for this contract. ***NOTE: This change order is not effective until approved by the Engineer.***

Description of work to be done, estimate of quantities and prices to be paid. (Segregate between additional work at contract price, agreed price and force account.) Unless otherwise stated, rates for rental of equipment cover only such time as equipment is actually used and no allowance will be made for idle time. This last percentage shown is the net accumulated increase or decrease from the original quantity in the Engineer's Estimate.

Revision No. 1 dated 1/4/13

Adjustment of Compensation at Lump Sum:

Re-route seismic sensor conduits and plug and abandon existing conduits as required in the vicinity of Hinge KW, per attached revised and added contract drawings 195R5, 280R1, 280A, 460R1, 460A, 484R3, 485R2 and 486R2 (Sheet Nos. 2 through 9 of this change order).

For this work, the Contractor shall be compensated an Agreed Lump Sum of $16,920.00, which constitutes full and final compensation, including all markups, for all additional costs incurred.

Adjustment of Compensations at Agreed Lump Sum = $16,920.00

01/09/13

Estimated Cost: Increase ☑ Decrease ☐ **$16,920.00**

By reason of this order the time of completion will be adjusted as follows: 0 days

Submitted by

Signature	Resident Engineer	Date
William Howe	William Howe, Senior R.E.	01.04.13

Approval Recommended by

Signature	Senior Resident Engineer	Date
William Howe	William Howe	01.04.13

Engineer Approval by

Signature	Senior Resident Engineer	Date
William Howe	William Howe	02-19-13

We the undersigned contractor, have given careful consideration to the change proposed and agree, if this proposal is approved, that we will provide all equipment, furnish the materials, except as may otherwise be noted above, and perform all services necessary for the work above specified, and will accept as full payment therefor the prices shown above.

NOTE: If you, the contractor, do not sign acceptance of this order, your attention is directed to the requirements of the specifications as to proceeding with the ordered work and filing a written protest within the time therein specified.

Contractor Acceptance by

Signature	(Print name and title)	Date
	EDMUNDO A. PUCHI, TREASURER	2/13/13

Dist	COUNTY	ROUTE	KILOMETER POST TOTAL PROJECT	SHEET No.	TOTAL SHEETS
04	SF	80	12.7/13.2	195 R5	806

REGISTERED ELECTRICAL ENGINEER 2/14/09

6-23-08
PLANS APPROVAL DATE

REGISTERED PROFESSIONAL ENGINEER FADI WALIEDDINE No. 11465 Exp. 12/31/09 ELECTRICAL STATE OF CALIFORNIA

THE STATE OF CALIFORNIA OR ITS OFFICERS OR AGENTS SHALL NOT BE RESPONSIBLE FOR THE ACCURACY OR COMPLETENESS OF ELECTRONIC COPIES OF THIS PLAN SHEET.

PB AMERICAS, Inc.
A Parsons Brinckerhoff Company
303 Second St., Suite 700N
San Francisco, CA 94107-1317

REGISTERED PROFESSIONAL ENGINEER SYN YEE CHIN No. 18186 Exp. 09/30/2011 ELECTRICAL STATE OF CALIFORNIA
Syn Yee Chin
FOR REVISION ONLY 1

REGISTERED PROFESSIONAL ENGINEER DAVID H. OTO No. 10699 Exp. 06/30/2013 ELECTRICAL STATE OF CALIFORNIA
FOR REVISION ONLY 2 3 5

REGISTERED PROFESSIONAL ENGINEER SYN YEE CHIN No. 18186 Exp. 09/30/2013 ELECTRICAL STATE OF CALIFORNIA
Syn Yee Chin
FOR REVISION ONLY 4

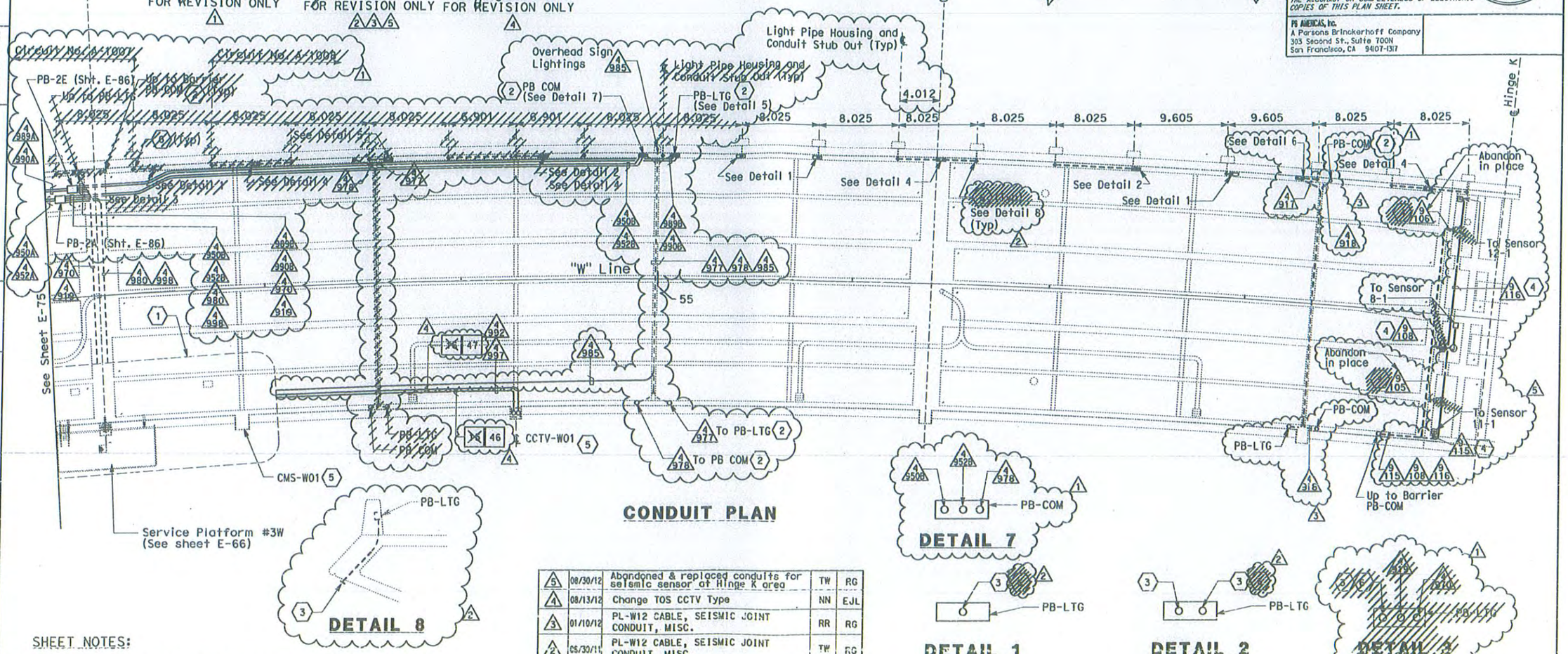

CONDUIT PLAN

DETAIL 8

DETAIL 7

DETAIL 1

DETAIL 2

DETAIL 3

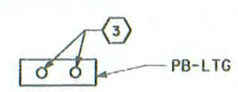

DETAIL 4

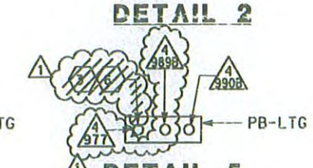

DETAIL 5

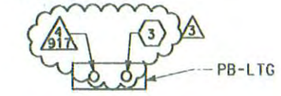

DETAIL 6

SHEET NOTES:

1. For electrical vault section & details see sheet E-83.
2. For conduit up to barrier PB-LTG and PB-COM.
3. ~~Conduit up to barrier PB-LTG for future light pipe.~~ Install 27C RGS conduit from PB-Ltg. Provide cap at end of conduit, see Detail 8.
4. Conduits to be installed in this contract but are reserved for SMD. For concrete insert and conduit installation see E-161 and E-161A.
5. Conduits up, see Sheet E-59.
6. ~~Provide cap at bottom end of conduit. See Section C-1, Sheet E-83.~~

MARK	DATE	DESCRIPTIONS	BY	CH'D
5	08/30/12	Abandoned & replaced conduits for seismic sensor at Hinge K area	TW	RG
4	08/13/12	Change TOS CCTV Type	NN	EJL
3	01/10/12	PL-W12 CABLE, SEISMIC JOINT CONDUIT, MISC.	RR	RG
2	05/30/11	PL-W12 CABLE, SEISMIC JOINT CONDUIT, MISC.	TW	RG
1	03/30/11	YBITS WB FRAME 2 CITY RAMP REVISION	RR	RG

REVISIONS

CONTRACT CHANGE ORDER NO. 157
SHEET 2 OF 9

NOTES:

1. References:
   - For lighting poles, call boxes, outlet boxes and pull boxes schedules, see sheet E-69.
   - Lighting fixture mounted under westbound deck. Conduits routed inside girder box.
   - For service platform plan and details, see sheet E-66.
   - For future light pipe schedule, see sheet E-84.
   - For 480 light pipe wiring diagram, see sheet E-77.

YBI TRANSITION STRUCTURES GIRDER WESTBOUND
(LIGHTING AND ELECTRICAL SYSTEMS)

SCALE: 1:200

5 REVISED PER ADDENDUM No. 5 DATED JULY 30, 2009

THIS PLAN IS ACCURATE FOR ELECTRICAL WORK ONLY.

ALL DIMENSIONS ARE IN METERS UNLESS OTHERWISE SHOWN

E-76

STATE OF CALIFORNIA - DEPARTMENT OF TRANSPORTATION
CONSULTANT FUNCTIONAL SUPERVISOR: BEHZAD GOLEMOHAMMADI
CALCULATED-DESIGNED BY: FK
CHECKED BY: AB
REVISED BY / DATE REVISED

LAST REVISION 08-30-12 | DATE PLOTTED => 30-AUG-2012 | TIME PLOTTED => 08:32

BORDER LAST REVISED 3/1/2007 | RELATIVE BORDER SCALE IS IN MILLIMETERS | USERNAME => LTGFICO | DGN FILE => 40120sua076r05.dgn | CU 04251 | EA 0120S1

Dist	COUNTY	ROUTE	KILOMETER POST TOTAL PROJECT	SHEET No.	TOTAL SHEETS
04	SF	80	12.7/13.2	280 R1	806

REGISTERED ELECTRICAL ENGINEER 2/14/08

6-23-08
PLANS APPROVAL DATE

REGISTERED PROFESSIONAL ENGINEER FADI WALIEDDINE No. 11465 Exp. 12/31/09 ELECTRICAL STATE OF CALIFORNIA

THE STATE OF CALIFORNIA OR ITS OFFICERS OR AGENTS SHALL NOT BE RESPONSIBLE FOR THE ACCURACY OR COMPLETENESS OF ELECTRONIC COPIES OF THIS PLAN SHEET.

PB AMERICAS, Inc.
A Parsons Brinckerhoff Company
303 Second St., Suite 700N
San Francisco, CA 94107-1317

Caltrans Metric

NOTES:

1. References:
   - For Sensors and Recorder Schedules, See sheets E-164 and E-165.
   - For Cable Block Diagram, See sheets E-166 and E-167.
   - For general notes on the Strong Motion Detection System, See sheet E-158.
   - For Conduit and Cable Tray Schedules, See sheets starting at E-182.
   - For Westbound and Eastbound roadway conduits not shown on this drawing, See sheets E-50 through E-52 and E-91 through E-93.
2. Conduit runs are shown diagrammatically. Use additional pull boxes to limit the number of 90 degree bends to 360 degrees, in accordance with NEC.
3. Dimensions may be adjusted to suit field condition.
4. Abandoned conduits shall not protrude beyond finished face of the wall. Plug or cap conduits as needed.
5. Dimension shown from bottom of flat portion of the deck.

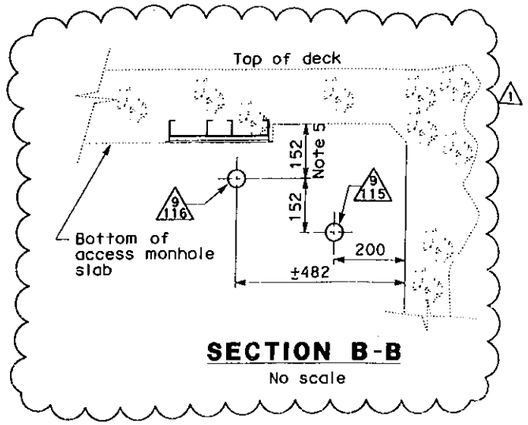

SECTION B-B
No scale

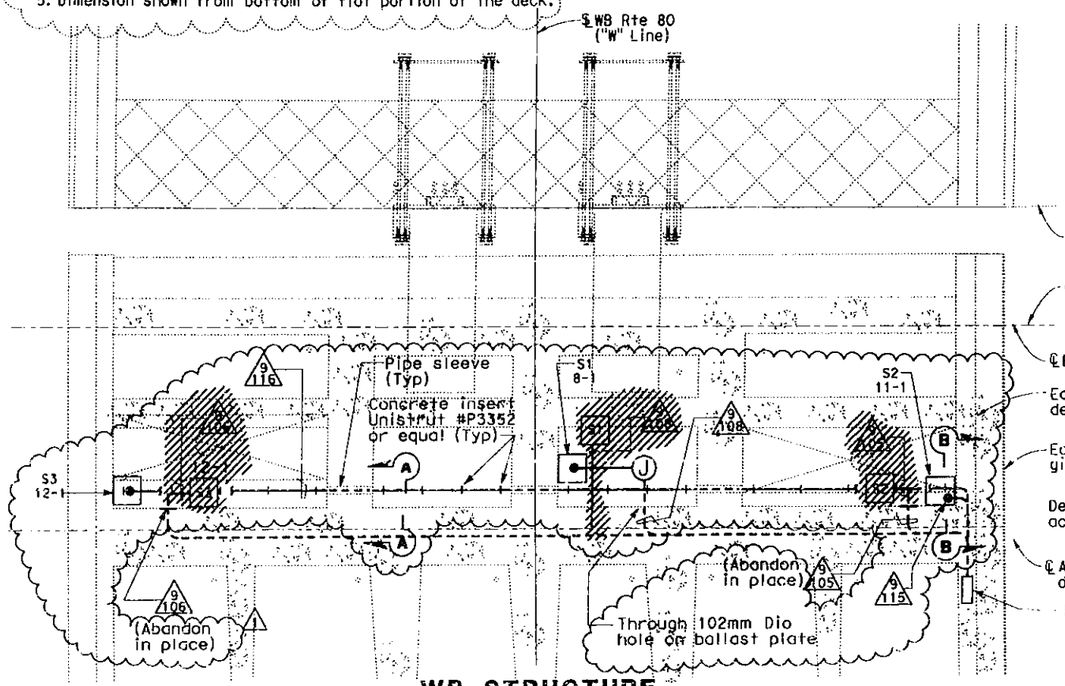

WB STRUCTURE

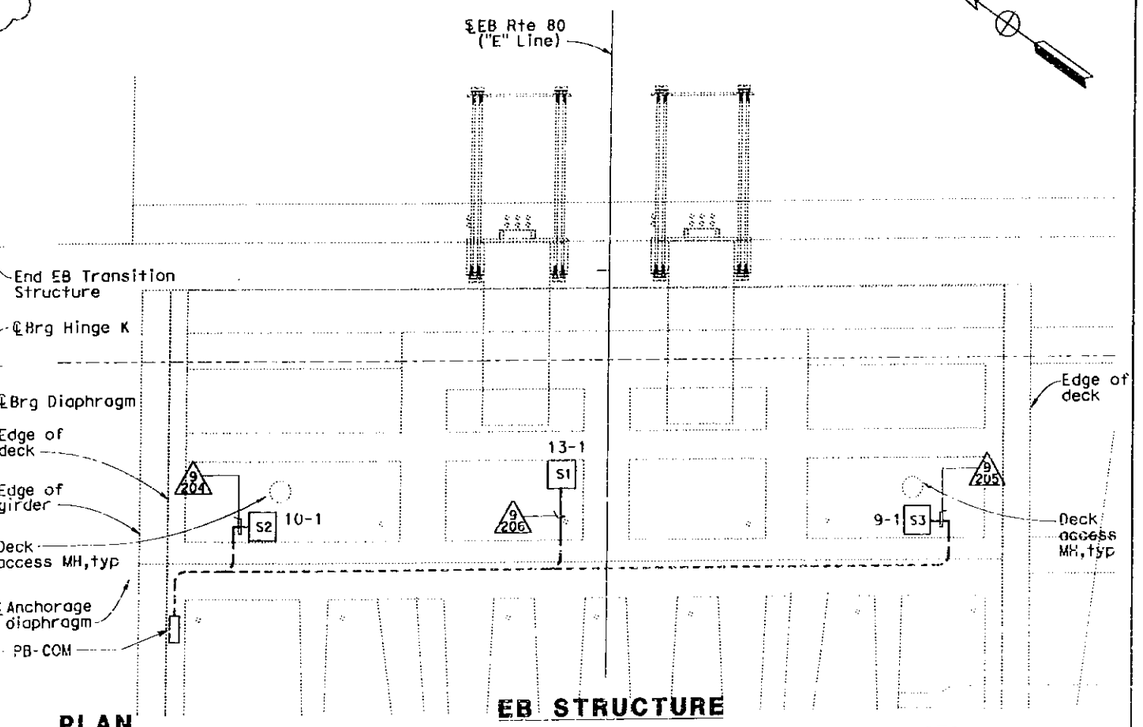

EB STRUCTURE

PLAN
SCALE 1:80

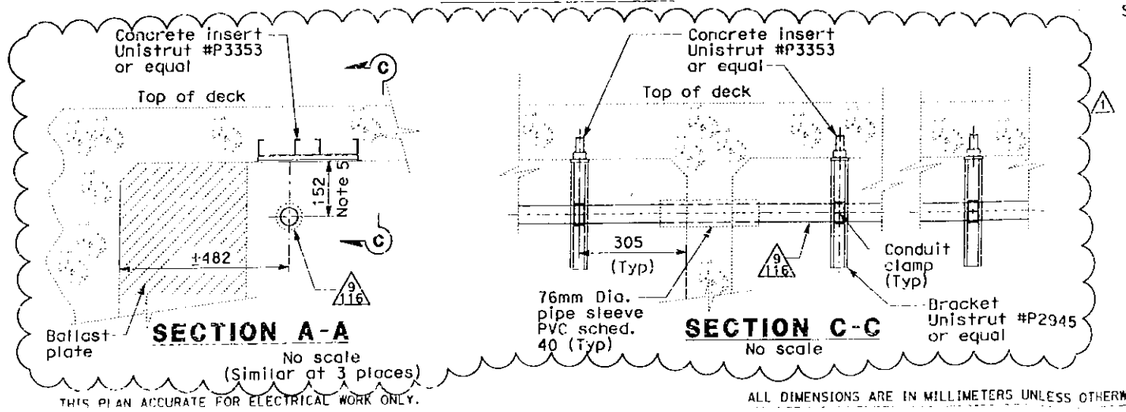

SECTION A-A
No scale
(Similar at 3 places)

SECTION C-C
No scale

MARK	DATE	DESCRIPTIONS	BY	CH'D
1	08/30/12	Abandoned & replaced conduits for seismic sensor at Hinge K area	TW	RG

REVISIONS

CONTRACT CHANGE ORDER NO. 157
SHEET 3 OF 9

REGISTERED PROFESSIONAL ENGINEER DAVID H. OTO No. 10699 Exp. 06/30/2013 ELECTRICAL STATE OF CALIFORNIA

FOR REVISION ONLY 1

STRONG MOTION DETECTION SYSTEM
YBI TRANSITION STRUCTURES
(WB AND EB HINGE K CONDUIT AND SENSOR LOCATION)
SCALE 1:80

E-161

THIS PLAN ACCURATE FOR ELECTRICAL WORK ONLY.

ALL DIMENSIONS ARE IN MILLIMETERS UNLESS OTHERWISE SHOWN

STATE OF CALIFORNIA - DEPARTMENT OF TRANSPORTATION
Caltrans
CONSULTANT FUNCTIONAL SUPERVISOR: BEHZAD GOLEMOHAMMADI
CALCULATED-DESIGNED BY: IAH
CHECKED BY: AB
REVISED BY
DATE REVISED

DATE PLOTTED => 29-AUG-2012
TIME PLOTTED => 11:44
08-30-12

Dist	COUNTY	ROUTE	KILOMETER POST TOTAL PROJECT	SHEET No.	TOTAL SHEETS
04	SF	80	12.7/13.2	280A	806

REGISTERED ELECTRICAL ENGINEER 8/30/12

PLANS APPROVAL DATE

REGISTERED PROFESSIONAL ENGINEER DAVID H. OTO No. 10699 Exp. 06/30/2013 ELECTRICAL STATE OF CALIFORNIA

THE STATE OF CALIFORNIA OR ITS OFFICERS OR AGENTS SHALL NOT BE RESPONSIBLE FOR THE ACCURACY OR COMPLETENESS OF ELECTRONIC COPIES OF THIS PLAN SHEET.

PB AMERICAS, Inc.
A Parsons Brinckerhoff Company
303 Second St., Suite 700N
San Francisco, CA 94107-1317

NOTES:

1. Spacing between concrete inserts as shown may be adjusted to suit field conditions but shall not exceed 1500mm. Concrete inserts shall have a clear edge distance of 152mm Min. from edge of access Manhole openings and 25mm Min. from the edge of thickened deck transition.

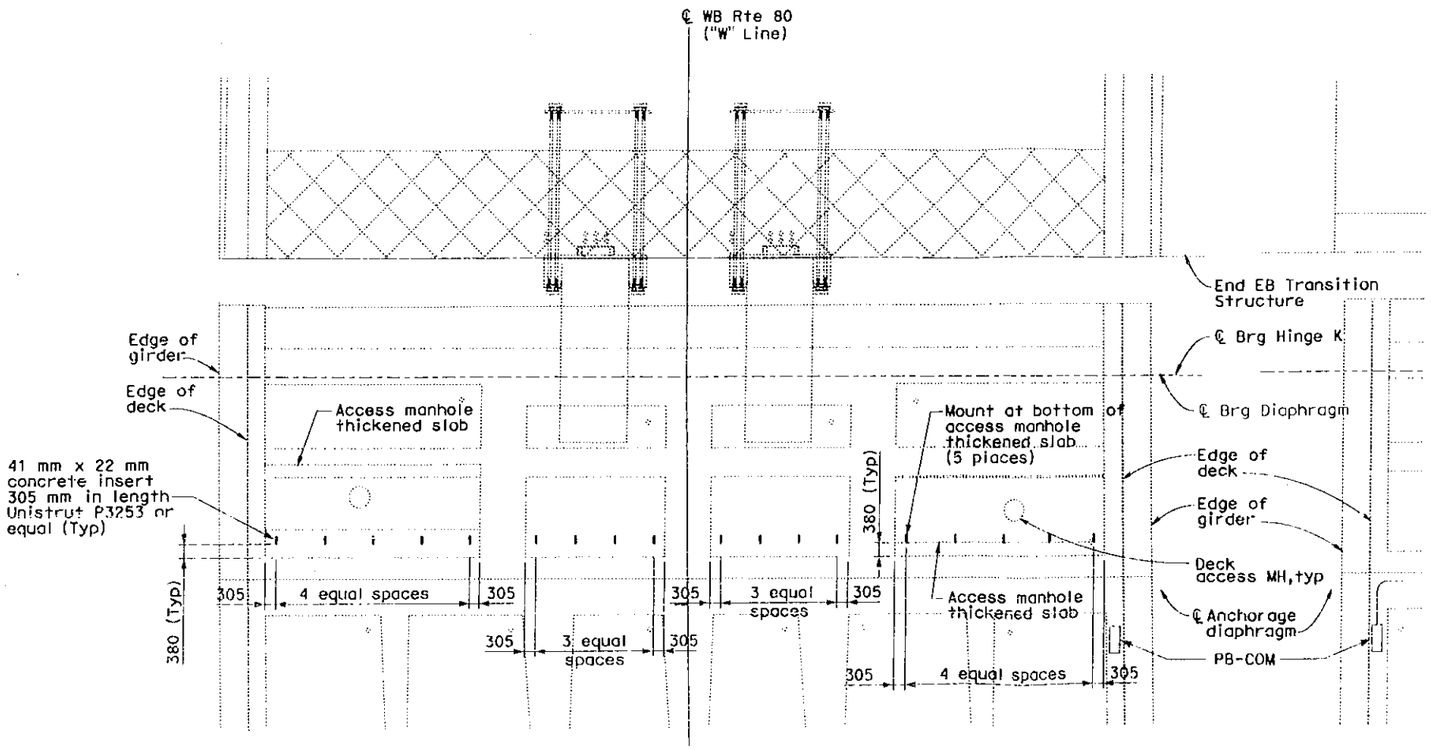

PLAN - WB STRUCTURE
(HINGE K CLOSURE)
No Scale

MARK	DATE	DESCRIPTIONS	BY	CH'D
0	08/30/12	Abandoned & replaced conduits for seismic sensor at Hinge K area	TW	RG
		REVISIONS		

CONTRACT CHANGE ORDER NO. 157
SHEET 4 OF 9

STRONG MOTION DETECTION SYSTEM
YBI TRANSITION STRUCTURES
(WB HINGE K CONDUIT AND SENSOR LOCATION)
SCALE 1:80

E-161A

STATE OF CALIFORNIA - DEPARTMENT OF TRANSPORTATION
Caltrans
CONSULTANT FUNCTIONAL SUPERVISOR: BRADY NADELL
CALCULATED-DESIGNED BY
CHECKED BY
REVISED BY
DATE REVISED

LAST REVISION 00-00-00 DATE PLOTTED => 30-AUG-2012 TIME PLOTTED => 11:54

THIS PLAN ACCURATE FOR ELECTRICAL WORK ONLY

ALL DIMENSIONS ARE IN MILLIMETERS UNLESS OTHERWISE SHOWN

Dist	COUNTY	ROUTE	KILOMETER POST TOTAL PROJECT	SHEET No.	TOTAL SHEETS
04	SF	80	12.7/13.2	460 R1	806

REGISTERED ELECTRICAL ENGINEER 2/14/08

6-23-08
PLANS APPROVAL DATE

REGISTERED PROFESSIONAL ENGINEER FADI WALIEDDINE No. 11465 Exp. 12/31/09 ELECTRICAL STATE OF CALIFORNIA

THE STATE OF CALIFORNIA OR ITS OFFICERS OR AGENTS SHALL NOT BE RESPONSIBLE FOR THE ACCURACY OR COMPLETENESS OF ELECTRONIC COPIES OF THIS PLAN SHEET.

PB AMERICAS, Inc.
A Parsons Brinckerhoff Company
303 Second St., Suite 700N
San Francisco, CA 94107-1317

Caltrans Metric

5

Conduit/Tray No:	9101	Reference:	E-29, E-33, E-38, E-81, E-64, E-78
Size:	78	Type:	RGS conduit
From:	Manhole-9	To:	TOS/COM Vault #1W
Total Fill (mm2):	1043.24	Remarks:	
Allowable Fill (mm2):	1935.24		

Description of Changes:

Included Cable No.	Conductor Type	Area (mm2)
2900-111A	4 pair #22, shielded pairs, FEP insulation (Type SSC)	47.42
2900-111B	4 pair #22, shielded pairs, FEP insulation (Type SSC)	47.42
2900-11A	4 pair #22, shielded pairs, FEP insulation (Type SSC)	47.42
2900-11B	4 pair #22, shielded pairs, FEP insulation (Type SSC)	47.42
2900-11C	4 pair #22, shielded pairs, FEP insulation (Type SSC)	47.42
2900-121A	4 pair #22, shielded pairs, FEP insulation (Type SSC)	47.42
2900-121B	4 pair #22, shielded pairs, FEP insulation (Type SSC)	47.42
2900-121C	4 pair #22, shielded pairs, FEP insulation (Type SSC)	47.42
2900-21A	4 pair #22, shielded pairs, FEP insulation (Type SSC)	47.42
2900-21B	4 pair #22, shielded pairs, FEP insulation (Type SSC)	47.42
2900-21C	4 pair #22, shielded pairs, FEP insulation (Type SSC)	47.42
2900-31A	4 pair #22, shielded pairs, FEP insulation (Type SSC)	47.42
2900-31B	4 pair #22, shielded pairs, FEP insulation (Type SSC)	47.42
2900-31C	4 pair #22, shielded pairs, FEP insulation (Type SSC)	47.42
2900-41A	4 pair #22, shielded pairs, FEP insulation (Type SSC)	47.42
2900-41A	4 pair #22, shielded pairs, FEP insulation (Type SSC)	47.42
2900-41B	4 pair #22, shielded pairs, FEP insulation (Type SSC)	47.42
2900-41B	4 pair #22, shielded pairs, FEP insulation (Type SSC)	47.42
2900-51A	4 pair #22, shielded pairs, FEP insulation (Type SSC)	47.42
2900-51B	4 pair #22, shielded pairs, FEP insulation (Type SSC)	47.42
2900-51C	4 pair #22, shielded pairs, FEP insulation (Type SSC)	47.42
2900-81A	4 pair #22, shielded pairs, FEP insulation (Type SSC)	47.42
Pull Rope	Soft-Fiber Polyester	0.00

Conduit/Tray No:	9103	Reference:	E-81, E-64
Size:	41	Type:	RGS conduit
From:	PB-COM	To:	TOS/COM Vault #1W
Total Fill (mm2):	0.00	Remarks:	
Allowable Fill (mm2):	534.55		

Description of Changes:

Included Cable No.	Conductor Type	Area (mm2)
Pull Rope	Soft-Fiber Polyester	0.00

Conduit/Tray No:	9105	Reference:	E-76, E-161
Size:	27	Type:	RGS conduit
From:	Sensor 11-1	To:	PB-COM
Total Fill (mm2):	94.84	Remarks:	Conduit was replaced with new conduit #9115
Allowable Fill (mm2):	177.49		

Description of Changes: Abandoned in place

Included Cable No.	Conductor Type	Area (mm2)
~~2900-111A~~	~~4 pair #22, shielded pairs, FEP insulation (Type SSC)~~	~~47.42~~
~~2900-111B~~	~~4 pair #22, shielded pairs, FEP insulation (Type SSC)~~	~~47.42~~
~~Pull Rope~~	~~Soft-Fiber Polyester~~	~~0.00~~

1

Conduit/Tray No:	9106	Reference:	E-76, E-161
Size:	27	Type:	RGS conduit
From:	Sensor 12-1	To:	PB-COM
Total Fill (mm2):	142.26	Remarks:	Conduit was replaced with new conduit #9116
Allowable Fill (mm2):	229.03		

Description of Changes: Abandoned in place

Included Cable No.	Conductor Type	Area (mm2)
~~2900-121A~~	~~4 pair #22, shielded pairs, FEP insulation (Type SSC)~~	~~47.42~~
~~2900-121B~~	~~4 pair #22, shielded pairs, FEP insulation (Type SSC)~~	~~47.42~~
~~2900-121C~~	~~4 pair #22, shielded pairs, FEP insulation (Type SSC)~~	~~47.42~~
~~Pull Rope~~	~~Soft-Fiber Polyester~~	~~0.00~~

Conduit/Tray No:	9108	Reference:	E-76, E-161
Size:	27	Type:	RGS conduit
From:	Sensor 8-1	To:	PB-COM
Total Fill (mm2):	47.42	Remarks:	
Allowable Fill (mm2):	303.46		

Description of Changes:

Included Cable No.	Conductor Type	Area (mm2)
2900-81A	4 pair #22, shielded pairs, FEP insulation (Type SSC)	47.42
Pull Rope	Soft-Fiber Polyester	0.00

REGISTERED PROFESSIONAL ENGINEER DAVID H. OTO No. 10692 Exp. 06/30/2013 ELECTRICAL STATE OF CALIFORNIA

1 FOR REVISION ONLY

MARK	DATE	DESCRIPTIONS	BY	CH'D
1	08/30/12	Abandoned & replaced conduits for seismic sensor at Hinge K area	TW	RG

REVISIONS

CONTRACT CHANGE ORDER NO. 157
SHEET 5 OF 9

5 REVISED PER ADDENDUM No. 5 DATED JULY 30, 2009

CONDUIT AND TRAY SCHEDULE
STRONG MOTION DETECTION SYSTEM

E-341

STATE OF CALIFORNIA - DEPARTMENT OF TRANSPORTATION
Caltrans
CONSULTANT FUNCTIONAL SUPERVISOR: BEHZAD GOLEMOHAMMADI
CALCULATED-DESIGNED BY | CHECKED BY
CARMELO RIVERA | ELLERY LUCAS
REVISED BY | DATE REVISED

LAST REVISION 08-30-12 DATE PLOTTED => 05-SEP-2012 TIME PLOTTED => 09:14

Dist	COUNTY	ROUTE	KILOMETER POST TOTAL PROJECT	SHEET No.	TOTAL SHEETS
04	SF	80	12.7/13.2	460A	806

REGISTERED ELECTRICAL ENGINEER 8/30/12

PLANS APPROVAL DATE

REGISTERED PROFESSIONAL ENGINEER DAVID H. OTO No. 10699 Exp. 06/30/2013 ELECTRICAL STATE OF CALIFORNIA

THE STATE OF CALIFORNIA OR ITS OFFICERS OR AGENTS SHALL NOT BE RESPONSIBLE FOR THE ACCURACY OR COMPLETENESS OF ELECTRONIC COPIES OF THIS PLAN SHEET.

PB AMERICAS, Inc.
A Parsons Brinckerhoff Company
303 Second St., Suite 700N
San Francisco, CA 94107-1317

Caltrans Metric

Conduit/Troy No: 9115 | Reference: E-76, E-161
Size: 27 | Type: RGS conduit
From: Sensor 11-1 | To: PB-COM
Total Fill (mm2): 94.84 | Remarks:
Allowable Fill (mm2): 177.49
Description of Changes: Replaced abandon conduit 9105

Included Cable No.	Conductor Type	Area (mm2)
2900-111A	4 pair #22, shielded pairs, FEP insulation (Type SSC)	47.42
2900-111B	4 pair #22, shielded pairs, FEP insulation (Type SSC)	47.42
Pull Rope	Soft-Fiber Polyester	0.00

Conduit/Tray No: 9116 | Reference: E-76, E-161
Size: 27 | Type: RGS conduit
From: Sensor 12-1 | To: PB-COM
Total Fill (mm2): 142.26 | Remarks:
Allowable Fill (mm2): 229.03
Description of Changes: Replaced abandon conduit 9106

Included Cable No.	Conductor Type	Area (mm2)
2900-121A	4 pair #22, shielded pairs, FEP insulation (Type SSC)	47.42
2900-121B	4 pair #22, shielded pairs, FEP insulation (Type SSC)	47.42
2900-121C	4 pair #22, shielded pairs, FEP insulation (Type SSC)	47.42
Pull Rope	Soft-Fiber Polyester	0.00

MARK	DATE	DESCRIPTIONS	BY	CH'D
0	08/30/12	Abandoned & replaced conduits for seismic sensor at Hinge K area	TW	RG

REVISIONS

CONTRACT CHANGE ORDER NO. 157
SHEET 6 OF 9

CONDUIT AND TRAY SCHEDULE
STRONG MOTION DETECTION SYSTEM

E-341A

REVISED BY | DATE REVISED
CALCULATED-DESIGNED BY | CHECKED BY
CONSULTANT FUNCTIONAL SUPERVISOR: BRADY NADELL

STATE OF CALIFORNIA - DEPARTMENT OF TRANSPORTATION
Caltrans

THIS PLAN ACCURATE FOR ELECTRICAL WORK ONLY.

LAST REVISION 00-00-00 | DATE PLOTTED => 05-SEP-2012 | TIME PLOTTED => 09:52

Dist	COUNTY	ROUTE	KILOMETER POST TOTAL PROJECT	SHEET No.	TOTAL SHEETS
04	SF	80	12.7/13.2	484 R3	806

REGISTERED ELECTRICAL ENGINEER 6/25/08

6-23-08
PLANS APPROVAL DATE

THE STATE OF CALIFORNIA OR ITS OFFICERS OR AGENTS SHALL NOT BE RESPONSIBLE FOR THE ACCURACY OR COMPLETENESS OF ELECTRONIC COPIES OF THIS PLAN SHEET.

REGISTERED PROFESSIONAL ENGINEER DAVID H. OTO No. 10639 Exp. 06/30/2013 ELECTRICAL STATE OF CALIFORNIA

REGISTERED PROFESSIONAL ENGINEER FADI WALIEDDINE No. 11461 Exp. 12/31/09 ELECTRICAL STATE OF CALIFORNIA

PB AMERICAS, Inc.
A Parsons Brinckerhoff Company
303 Second St., Suite 700N
San Francisco, CA 94107-1317

Caltrans Metric

FOR REVISION ONLY
1 2 3

5

Cable/Ckt #: 2475-3
Reference: E-153
Function: TOS Data Com
Conductor Type: 72 Fiber, single mode fiber optic riser cable
From: Splice Cabinet TOS-02ES
To: Splice Cabinet TOS-03ES
Remarks:
Description Of Changes:

Route	Conduit No.	Route	Conduit No.	Route	Conduit No.	Route	Conduit No.
1	TOS-02ES	2	5564	3	5936	4	2T42E
5	TC Vault #2E	6	5945	7	TC Vault #3E	8	2T43E
9	5956	10	5071	11	TOS-03ES		

Cable/Ckt #: 2475-4
Reference: E-153
Function: TOS Data Com
Conductor Type: 72 Fiber, single mode fiber optic riser cable
From: Splice Cabinet TOS-03ES
To: Fiber Splice Closure (FSC)
Remarks: Splice cable to (E) cable inside MH. The some circuit number installed on previous contract.
Description Of Changes:

Route	Conduit No.	Route	Conduit No.	Route	Conduit No.	Route	Conduit No.
1	TOS-03ES	2	5071	3	5956	4	2T43E
5	TC Vault 3E	6	5945	7	TC Vault #2E	8	2T42E
9	5923A	10	PB-2E	11	5923	12	TC Vault #1E
13	2T41E	14	5918	15	MH-9	16	0260
17	MH-12	18	0310	19	MH-15	20	0360
21	MH-18	22	0410	23	MH-21	24	0460
25	MH-24	26	0510	27	MH-27		

Cable/Ckt #: 2900-101A
Reference: E-165, E-166
Function: Low Level Signal
Conductor Type: 4 pair #22, shielded pairs, FEP insulation (Type SSC)
From: Sensor 10-1
To: Strong Motion Recorder #1
Remarks:
Description Of Changes:

Route	Conduit No.	Route	Conduit No.	Route	Conduit No.	Route	Conduit No.
1	9204	2	9234	3	9233	4	9232
5	9231	6	9230	7	TC Vault 3E	8	2T43E
9	9235	10	TC Vault #2E	11	2T42E	12	9236A
13	PB-2E	15	TC Vault #1E	15	9236	16	9217
17	PB-2B	18	9218	19	Recorder #1		

Cable/Ckt #: 2900-101B
Reference: E-165, E-166
Function: Low Level Signal
Conductor Type: 4 pair #22, shielded pairs, FEP insulation (Type SSC)
From: Sensor 10-1
To: Strong Motion Recorder #1
Remarks:
Description Of Changes: Rerouted cable. 1

Route	Conduit No.	Route	Conduit No.	Route	Conduit No.	Route	Conduit No.
1	9204	2	9234	3	9233	4	9232
5	9231	6	9230	7	TC Vault 3E	8	2T43E
9	9235	10	TC Vault #2E	11	2T42E	12	9236A
13	PB-2E	14	9236	15	TC Vault #1E	16	2T41E
17	9217	18	PB-2B	19	9218	20	Recorder #1

Cable/Ckt #: 2900-111A
Reference: E-165, E-166
Function: Low Level Signal
Conductor Type: 4 pair #22, shielded pairs, FEP insulation (Type SSC)
From: Sensor 11-1
To: Strong Motion Recorder #1
Remarks:
Description Of Changes: Rerouted cable. 2 Abandoned & replaced conduit 3

Route	Conduit No.	Route	Conduit No.	Route	Conduit No.	Route	Conduit No.
1	~~9105~~ 9115	2	9013	3	9012	4	9011
5	9010	6	9014	7	TC Vault 3W	8	1T43W
9	9015	10	TC Vault #2W	11	1T42W	12	9016
13	PB-2A	14	9017	15	TC Vault #1W	16	1T41W
17	9101	18	MH-9	19	~~9201~~ 9201A	20	~~TC Vault #1E~~ MH-9A
21	~~2T41E~~ 9301	22	~~9217~~ TC Vault #1E	23	~~PB-2B~~ 2T41E	24	~~9218~~ 9217
25	PB-2B	26	9216				

MARK	DATE	DESCRIPTIONS	BY	CH'D
3	08/30/12	Abandoned & replaced conduits for seismic sensor at Hinge K area	TW	RG
2	11/11/11	Relocate U/G Duct Bank at Bent W8	JH	EJL
1	06/30/11	PL-12W CABLE, SEISMIC JOINT CONDUIT, MISC.	TW	RG

REVISIONS

CONTRACT CHANGE ORDER NO. 157
SHEET 7 OF 9

CABLE AND CIRCUIT SCHEDULE

5 REVISED PER ADDENDUM No. 5 DATED JULY 30, 2009

E-365

REVISED BY | DATE REVISED
CARMELO RIVERA | ELLERY LUCAS
CALCULATED-DESIGNED BY | CHECKED BY
CONSULTANT FUNCTIONAL SUPERVISOR: BEHZAD GOLEMOHAMMADI
STATE OF CALIFORNIA - DEPARTMENT OF TRANSPORTATION
Caltrans

LAST REVISION 08-30-12 | DATE PLOTTED => 30-AUG-2012 | TIME PLOTTED => 08:32

Dist	COUNTY	ROUTE	KILOMETER POST TOTAL PROJECT	SHEET No.	TOTAL SHEETS
04	SF	80	12.7/13.2	485 R2	806

REGISTERED ELECTRICAL ENGINEER 6/25/08

6-23-08
PLANS APPROVAL DATE

THE STATE OF CALIFORNIA OR ITS OFFICERS OR AGENTS SHALL NOT BE RESPONSIBLE FOR THE ACCURACY OR COMPLETENESS OF ELECTRONIC COPIES OF THIS PLAN SHEET.

REGISTERED PROFESSIONAL ENGINEER DAVID H. OTO No. 10699 Exp. 06/30/2013 ELECTRICAL STATE OF CALIFORNIA

REGISTERED PROFESSIONAL ENGINEER FADI WALIEDDINE No. 11465 Exp. 12/31/09 ELECTRICAL STATE OF CALIFORNIA

PB AMERICAS, Inc.
A Parsons Brinckerhoff Company
303 Second St., Suite 700N
San Francisco, CA 94107-1317

FOR REVISION ONLY 1 2

Caltrans Metric

Cable/Ckt #: 2900-111B
Reference: E-165, E-166
Function: Low Level Signal
Conductor Type: 4 pair #22, shielded pairs, FEP insulation (Type SSC)
From: Sensor 11-1
To: Strong Motion Recorder #1
Remarks:
Description Of Changes: Rerouted cable. 1 Abandoned & replaced conduit 2

Route	Conduit No.	Route	Conduit No.	Route	Conduit No.	Route	Conduit No.
1	~~9105~~ 9115	2	9013	3	9012	4	9011
5	9010 2	6	9014	7	TC Vault 3W	8	1T43W
9	9015	10	TC Vault #2W	11	1T42W	12	9016
13	PB-2A	14	9017	15	TC Vault #1W	16	1T41W
17	9101	18	MH-9	19	~~9201~~ 9201A	20	~~TC Vault #1E~~ MH-9A 1
21	~~2T41E~~ 9201	22	~~9217~~ TC Vault #1E	23	~~PB-2B~~ 2T41E	24	~~9218~~ 9217
25	PB-2B	26	9218				

Cable/Ckt #: 2900-11A
Reference: E-165, E-166
Function: Low Level Signal
Conductor Type: 4 pair #22, shielded pairs, FEP insulation (Type SSC)
From: Sensor 1-1
To: Strong Motion Recorder #1
Remarks:
Description Of Changes: Rerouted cable. 1

Route	Conduit No.	Route	Conduit No.	Route	Conduit No.	Route	Conduit No.
1	9211	2	*9209	3	9209	4	PB-SMD
5	9100	6	TC Vault #1W	7	1T41W	8	9101
9	MH-9	10	~~9201~~ 9201A	11	~~TC Vault #1E~~ MH-9A	12	~~2T41E~~ 9201 1
13	~~9217~~ TC Vault #1E	14	~~PB-2B~~ 2T41E	15	~~9218~~ 9217	16	~~Recorder #1~~ PB-2B
17	9218	18	Recorder #1				

Cable/Ckt #: 2900-11B
Reference: E-165, E-166
Function: Low Level Signal
Conductor Type: 4 pair #22, shielded pairs, FEP insulation (Type SSC)
From: Sensor 1-1
To: Strong Motion Recorder #1
Remarks:
Description Of Changes: Rerouted cable. 1

Route	Conduit No.	Route	Conduit No.	Route	Conduit No.	Route	Conduit No.
1	9211	2	*9209	3	9209	4	PB-SMD
5	9100	6	TC Vault #1W	7	1T41W	8	9101
9	MH-9	10	~~9201~~ 9201A	11	~~TC Vault #1E~~ MH-9A	12	~~2T41E~~ 9201 1
13	~~9217~~ TC Vault #1E	14	~~PB-2B~~ 2T41E	15	~~9218~~ 9217	16	~~Recorder #1~~ PB-2B
17	9218	18	Recorder #1				

Cable/Ckt #: 2900-11C
Reference: E-165, E-166
Function: Low Level Signal
Conductor Type: 4 pair #22, shielded pairs, FEP insulation (Type SSC)
From: Sensor 1-1
To: Strong Motion Recorder #1
Remarks:
Description Of Changes: Rerouted cable. 1

Route	Conduit No.	Route	Conduit No.	Route	Conduit No.	Route	Conduit No.
1	9211	2	*9209	3	9209	4	PB-SMD
5	9100	6	TC Vault #1W	7	1T41W	8	9101
9	MH-9	10	~~9201~~ 9201A	11	~~TC Vault #1E~~ MH-9A	12	~~2T41E~~ 9201 1
13	~~9217~~ TC Vault #1E	14	~~PB-2B~~ 2T41E	15	~~9218~~ 9217	16	~~Recorder #1~~ PB-2B
17	9218	18	Recorder #1				

Cable/Ckt #: 2900-121A
Reference: E-165, E-166
Function: Low Level Signal
Conductor Type: 4 pair #22, shielded pairs, FEP insulation (Type SSC)
From: Sensor 12-1
To: Strong Motion Recorder #1
Remarks:
Description Of Changes: Rerouted cable. 1 Abandoned & replaced conduit 2

Route	Conduit No.	Route	Conduit No.	Route	Conduit No.	Route	Conduit No.
1	~~9106~~ 9116	2	9013	3	9012	4	9011
5	9010 2	6	9014	7	1T43W	8	TC Vault 3W
9	9015	10	TC Vault #2W	11	1T42W	12	9016
13	PB-2A	14	9017	15	TC Vault #1W	16	1T41W
17	9101	18	MH-9	19	~~9201~~ 9201A	20	~~TC Vault #1E~~ MH-9A 1
21	~~2T41E~~ 9201	22	~~9217~~ TC Vault #1E	23	~~PB-2B~~ 2T41E	24	~~9218~~ 9217
25	~~Recorder #1~~ PB-2B	26	9218	27	Recorder #1		

MARK	DATE	DESCRIPTIONS	BY	CH'D
2	08/30/12	Abandoned & replaced conduits for seismic sensor at Hinge area	TW	RG
1	11/11/11	Relocate U/G Duct Bank at Bent W8	JH	EJL

REVISIONS

CONTRACT CHANGE ORDER NO. 157
SHEET 8 OF 9

CABLE AND CIRCUIT SCHEDULE

E-366

STATE OF CALIFORNIA - DEPARTMENT OF TRANSPORTATION
CONSULTANT FUNCTIONAL SUPERVISOR: BEHZAD GOLEMOHAMMADI
CALCULATED-DESIGNED BY: CARMELO RIVERA
CHECKED BY: ELLERY LUCAS
REVISED BY / DATE REVISED

LAST REVISION 08-30-12
DATE PLOTTED => 30-AUG-2012
TIME PLOTTED => 08:32

Dist	COUNTY	ROUTE	KILOMETER POST TOTAL PROJECT	SHEET No.	TOTAL SHEETS
04	SF	80	12.7/13.2	486 R2	806

REGISTERED ELECTRICAL ENGINEER 6/25/08

6-23-08
PLANS APPROVAL DATE

THE STATE OF CALIFORNIA OR ITS OFFICERS OR AGENTS SHALL NOT BE RESPONSIBLE FOR THE ACCURACY OR COMPLETENESS OF ELECTRONIC COPIES OF THIS PLAN SHEET.

REGISTERED PROFESSIONAL ENGINEER FADI WALIEDDINE No. 11865 Exp. 12/31/09 ELECTRICAL STATE OF CALIFORNIA

PB AMERICAS, Inc.
A Parsons Brinckerhoff Company
303 Second St., Suite 700N
San Francisco, CA 94107-1317

REGISTERED PROFESSIONAL ENGINEER DAVID H. OTO No. 10699 Exp. 06/30/2013 ELECTRICAL STATE OF CALIFORNIA

FOR REVISION ONLY 1 2

Caltrans Metric

Cable/Ckt #: 2900-121B
Reference: E-165, E-166
Function: Low Level Signal
Conductor Type: 4 pair #22, shielded pairs, FEP insulation (Type SSC)
From: Sensor 12-1
To: Strong Motion Recorder #1
Remarks:
Description Of Changes: Rerouted cable. 1 Abandoned & replaced conduit 2

Route	Conduit No.	Route	Conduit No.	Route	Conduit No.	Route	Conduit No.
1	~~9106~~ 9116	2	9013	3	9012	4	9011
5	9010 2	6	9014	7	1T43W	8	TC Vault 3W
9	9015	10	TC Vault #2W	11	1T42W	12	9016
13	PB-2A	14	9017	15	TC Vault #1W	16	1T41W
17	9101	18	MH-9	19	~~9201~~ 9201A	20	~~TC Vault #1E~~ MH-9A
21	~~2T41E~~ 9201	22	~~9217~~ TC Vault #1E	23	~~PB-2B~~ 2T41E	24	~~9218~~ 9217
25	~~Recorder #1~~ PB-2B	26	9218	27	Recorder #1		

1

Cable/Ckt #: 2900-121C
Reference: E-165, E-166
Function: Low Level Signal
Conductor Type: 4 pair #22, shielded pairs, FEP insulation (Type SSC)
From: Sensor 12-1
To: Strong Motion Recorder #1
Remarks:
Description Of Changes: Rerouted cable. 1 Abandoned & replaced conduit 2

Route	Conduit No.	Route	Conduit No.	Route	Conduit No.	Route	Conduit No.
1	~~9106~~ 9116	2	9013	3	9012	4	9011
5	9010 2	6	9014	7	1T43W	8	TC Vault 3W
9	9015	10	TC Vault #2W	11	1T42W	12	9016
13	PB-2A	14	9017	15	TC Vault #1W	16	1T41W
17	9101	18	MH-9	19	~~9201~~ 9201A	20	~~TC Vault #1E~~ MH-9A
21	~~2T41E~~ 9201	22	~~9217~~ TC Vault #1E	23	~~PB-2B~~ 2T41E	24	~~9218~~ 9217
25	~~Recorder #1~~ PB-2B	26	9218	27	Recorder #1		

1

Cable/Ckt #: 2900-131A
Reference: E-165, E-166
Function: Low Level Signal
Conductor Type: 4 pair #22, shielded pairs, FEP insulation (Type SSC)
From: Sensor 13-1
To: Strong Motion Recorder #1
Remarks:
Description Of Changes:

Route	Conduit No.	Route	Conduit No.	Route	Conduit No.	Route	Conduit No.
1	9206	2	9234	3	9233	4	9232
5	9231	6	9230	7	TC Vault 3E	8	2T43E
9	9235	10	TC Vault #2E	11	2T42E	12	9236A
13	PB-2E	14	9236	15	TC Vault #1E	16	2T41E
17	9217	18	PB-2B	19	9218	20	Recorder #1

Cable/Ckt #: 2900-21A
Reference: E-165, E-166
Function: Low Level Signal
Conductor Type: 4 pair #22, shielded pairs, FEP insulation (Type SSC)
From: Sensor 2-1
To: Strong Motion Recorder #1
Remarks:
Description Of Changes: Rerouted cable. 1

Route	Conduit No.	Route	Conduit No.	Route	Conduit No.	Route	Conduit No.
1	9212	2	*9209	3	9209	4	PB-SMD
5	9100	6	TC Vault #1W	7	1T41W	8	9101
9	MH-9	10	~~9201~~ 9201A	11	~~TC Vault #1E~~ MH-9A	12	~~2T41E~~ 9201
13	~~9217~~ TC Vault #1E	14	~~PB-2B~~ 2T41E	15	~~9218~~ 9217	16	~~Recorder #1~~ PB-2B
17	9218	18	Recorder #1				

1

Cable/Ckt #: 2900-21B
Reference: E-165, E-166
Function: Low Level Signal
Conductor Type: 4 pair #22, shielded pairs, FEP insulation (Type SSC)
From: Sensor 2-1
To: Strong Motion Recorder #1
Remarks:
Description Of Changes: Rerouted cable. 1

Route	Conduit No.	Route	Conduit No.	Route	Conduit No.	Route	Conduit No.
1	9212	2	*9209	3	9209	4	PB-SMD
5	9100	6	TC Vault #1W	7	1T41W	8	9101
9	MH-9	10	~~9201~~ 9201A	11	~~TC Vault #1E~~ MH-9A	12	~~2T41E~~ 9201
13	~~9217~~ TC Vault #1E	14	~~PB-2B~~ 2T41E	15	~~9218~~ 9217	16	~~Recorder #1~~ PB-2B
17	9218	18	Recorder #1				

1

Cable/Ckt #: 2900-21C
Reference: E-165, E-166
Function: Low Level Signal
Conductor Type: 4 pair #22, shielded pairs, FEP insulation (Type SSC)
From: Sensor 2-1
To: Strong Motion Recorder #1
Remarks:
Description Of Changes: Rerouted cable. 1

Route	Conduit No.	Route	Conduit No.	Route	Conduit No.	Route	Conduit No.
1	9212	2	*9209	3	9209	4	PB-SMD
5	9100	6	TC Vault #1W	7	1T41W	8	9101
9	MH-9	10	~~9201~~ 9201A	11	~~TC Vault #1E~~ MH-9A	12	~~2T41E~~ 9201
13	~~9217~~ TC Vault #1E	14	~~PB-2B~~ 2T41E	15	~~9218~~ 9217	16	~~Recorder #1~~ PB-2B
17	9218	18	Recorder #1				

1

MARK	DATE	DESCRIPTIONS	BY	CH'D
2	08/30/12	Abandoned & replaced conduits for seismic sensor at Hinge area	TW	RG
1	11/11/11	Relocate U/G Duct Bank at Bent W8	JH	EJL

REVISIONS

CONTRACT CHANGE ORDER NO. 157
SHEET 9 OF 9

CABLE AND CIRCUIT SCHEDULE

E-367

STATE OF CALIFORNIA - DEPARTMENT OF TRANSPORTATION
CONSULTANT FUNCTIONAL SUPERVISOR: BEHZAD GOLEMOHAMMADI
CALCULATED-DESIGNED BY: CARMELO RIVERA
CHECKED BY: ELLERY LUCAS
REVISED BY
DATE REVISED

LAST REVISION 08-30-12
DATE PLOTTED => 30-AUG-2012
TIME PLOTTED => 08:32

STATE OF CALIFORNIA - DEPARTMENT OF TRANSPORTATION

CONTRACT CHANGE ORDER MEMORANDUM

DATE: 8/24/2012 Page 1 of 1

TO: Deanna Vilcheck, ACM	FILE: E.A. 04 - 0120S4
FROM: William Howe, Senior R.E.	CO-RTE-PM SF-80-12.7/13.2
	FED. NO. NO FED AID
CCO#: 157 SUPPLEMENT#: 0 Category Code: CHPC	CONTINGENCY BALANCE (incl. this change) $31,664,556.15
COST: $16,920.00 INCREASE ☑ DECREASE ☐	HEADQUARTERS APPROVAL REQUIRED? ☐ YES ☑ NO
SUPPLEMENTAL FUNDS PROVIDED: $0.00	IS THIS REQUEST IN ACCORDANCE WITH ENVIRONMENTAL DOCUMENTS? ☑ YES ☐ NO
CCO DESCRIPTION: Reroute Electrical Utilities @ Hinge K	**PROJECT DESCRIPTION:** YBITS-1 (Yerba Buena Island Transition Structures)

Original Contract Time:	Time Adj. This Change:	Previously Approved CCO Time Adjustments:	Percentage Time Adjusted: (including this change)	Total # of Unreconciled Deferred Time CCO(s): (including this change)
1390 Day(s)	0 Day(s)	0 Day(s)	0 %	9

THIS CHANGE ORDER PROVIDES FOR:

Re-route seismic sensor conduits at Hinge KW.

Due to design changes, steel counterweights have been added at locations impacting electrical routing at Hinge KW. As a result, impacted seismic sensor conduits in the vicinity of Hinge KW require relocation.

For this work, the Contractor shall be compensated an Agreed Lump Sum of $16,920.00, which constitutes full and final compensation, including all markups, for all additional costs incurred.

A cost analysis is on file. The funding for this CCO will come from the contingency funds for the project.

This CCO was requested by Saeed Shahmirzai, MEP Coordinator for the SFOBB Corridor.

No adjustment of contract time is warranted, as the work will not affect the controlling operation.

Maintenance concurrence will be obtained from Lina Ellis, Structures Maintenance.

CONCURRED BY:

Construction Engineer:	William Howe	Date 01-04-13
Bridge Engineer:	Mehran Ardakanian	Date 1/04/13
Project Engineer:	Bob Zandipour, Design	Date 1-7-13
Project Manager:	Ken Terpstra	Date 1/9/13
FHWA Rep.:		Date
Environmental:		Date
Other (specify):	Lina Ellis, Str. Maintenance	Date 1-9-13
Other (specify):		Date
District Prior Approval By:		Date
HQ (Issue Approve) By:		Date
Resident Engineer's Signature:	William Howe	Date 01.04.13

ESTIMATE OF COST

	THIS REQUEST	TOTAL TO DATE
ITEMS	$0.00	$0.00
FORCE ACCOUNT	$0.00	$0.00
AGREED PRICE	$0.00	$0.00
ADJUSTMENT	$16,920.00	$16,920.00
TOTAL	$16,920.00	$16,920.00

FEDERAL PARTICIPATION

☐ PARTICIPATING ☐ PARTICIPATING IN PART ☑ NONE

☐ NON-PARTICIPATING (MAINTENANCE) ☐ NON-PARTICIPATING

FEDERAL SEGREGATION (if more than one Funding Source or P.I.P. type)

☐ CCO FUNDED PER CONTRACT ☐ CCO FUNDED AS FOLLOWS

FEDERAL FUNDING SOURCE	PERCENT

ADA Notice: For individuals with sensory disabilities, this document is available in alternate formats. For information call: (916) 654-6410 voice or TDD (916) 654-3880 or write Records and Forms Management, 1120 N Street, MS-89, Sacramento, CA 95814.

TATE OF CALIFORNIA - DEPARTMENT OF TRANSPORTATION

:ONTRACT CHANGE ORDER

Change Requested by: Engineer

:CO 158	Suppl. No. 0	Contract No 04 - 0120S4	Road SF-80-12.7/13.2	FED. AID LOC.: NO FED AID

To: M C M CONSTRUCTION INC

You are directed to make the following changes from the plans and specifications or do the following described work not included in the plans and specifications for this contract. ***NOTE: This change order is not effective until approved by the Engineer.***

Description of work to be done, estimate of quantities and prices to be paid. (Segregate between additional work at contract price, agreed price and force account.) Unless otherwise stated, rates for rental of equipment cover only such time as equipment is actually used and no allowance will be made for idle time. This last percentage shown is the net accumulated increase or decrease from the original quantity in the Engineer's Estimate.

Revision 1: Dated 4/19/13

Adjustment of Compensation at Lump Sum:

Compensate the Contractor for all additional costs incurred to drill, clean, prepare and inject epoxy grout at rock pocket areas at Hinge KE and Hinge W6RB as directed by Engineer.

For this work, the Contractor shall be compensated at an Agreed Lump Sum of $15,012.00, which constitutes full and final compensation, including all markups, for all additional costs incurred. This work qualifies as specialty work per Section 9,1.03B, "Work Performed by Special Forces or Other Special Services", of the Standard Specfications.

Adjustment of Compensation at Agreed Lump Sum = $15,012.00

Estimated Cost: Increase ☑ Decrease ☐ **$15,012.00**

By reason of this order the time of completion will be adjusted as follows: 0 days

Submitted by

Signature William Howe	Resident Engineer William Howe, Senior R.E.	Date 04.19.13

Approval Recommended by

Signature William Howe	Senior Resident Engineer William Howe	Date 04.19.13

Engineer Approval by

Signature William Howe	Senior Resident Engineer William Howe	Date 05.13.13

We the undersigned contractor, have given careful consideration to the change proposed and agree, if this proposal is approved, that we will provide all equipment, furnish the materials, except as may otherwise be noted above, and perform all services necessary for the work above specified, and will accept as full payment therefor the prices shown above.

NOTE: If you, the contractor, do not sign acceptance of this order, your attention is directed to the requirements of the specifications as to proceeding with the ordered work and filing a written protest within the time therein specified.

Contractor Acceptance by

Signature	(Print name and title) Edmund A. Reich Treasurer	Date 5-9-2013

STATE OF CALIFORNIA - DEPARTMENT OF TRANSPORTATION

CONTRACT CHANGE ORDER MEMORANDUM

TO: Deanna Vilcheck, ACM	FILE: E.A. 04 - 0120S4
FROM: William Howe, Senior R.E.	CO-RTE-PM SF-80-12.7/13.2
	FED. NO. NO FED AID
CCO#: 158 SUPPLEMENT#: 0 Category Code: CHPT	CONTINGENCY BALANCE (incl. this change) $38,662,549.15
COST: $15,012.00 INCREASE ☑ DECREASE ☐	HEADQUARTERS APPROVAL REQUIRED? ☐ YES ☑ NO
SUPPLEMENTAL FUNDS PROVIDED: $0.00	IS THIS REQUEST IN ACCORDANCE WITH ENVIRONMENTAL DOCUMENTS? ☑ YES ☐ NO
CCO DESCRIPTION: Epoxy Grout Injection	**PROJECT DESCRIPTION:** YBITS-1 (Yerba Buena Island Transition Structures)

Original Contract Time:	Time Adj. This Change:	Previously Approved CCO Time Adjustments:	Percentage Time Adjusted: (including this change)	Total # of Unreconciled Deferred Time CCO(s): (including this change)
1390 Day(s)	0 Day(s)	0 Day(s)	0 %	9

THIS CHANGE ORDER PROVIDES FOR:
Injection of epoxy grout at Hinge KE and Hinge W6RB.

This project, the Yerba Buena Island Transition Structure (YBITS), provides for the construction of two bridges which will connect eastbound and westbound traffic on the new east span of the San Francisco Oakland Bay Bridge (SFOBB) to the existing Yerba Buena Island (YBI) tunnel. The structures are comprised of concrete box girder bridges each approximately 50 meters high and 450 meters in length.

The work includes all additional costs incurred to drill, clean, prepare and inject epoxy grout at rock pocket areas at Hinge KE and Hinge W6RB as directed by Engineer.

The total cost for this work was $30,024.00 and will be split 50/50 between Caltrans and MCM. Caltrans agreed to take responsibility for half of the cost of this work as "consideration" for a design that resulted in difficult areas overly congested with ducts, rebar and other embedded elements that did not permit the concrete to adequately fill voids, despite determined efforts on the part of Contractor to address the situation. In addition, the epoxy "fix" is a stronger repair and more expensive treatment than called out in the plans and specifications, which require only a cement based grout repair product.

Caltrans has agreed to pay $15,012.00, which is 50% of the total cost of $30,024.00 to MCM.

For this work, the Contractor shall be compensated an Agreed Lump Sum of $15,012.00, which constitutes full and final compensation, including all markups, for all additional costs incurred. This work qualifies as specialty work per Section 9,1.03B, "Work Performed by Special Forces or Other Special Services", of the Standard Specfications. A cost analysis is on file. The funding for this CCO will come from the contingency funds for the project.

No adjustment of contract time is warranted, as the work will not affect the controlling operation.

This work was requested by the Caltrans on-site structures representative, Gil Klebanov.

Maintenance concurrence will be obtained from Lina Ellis, Structures Maintenance.

ADA Notice: For individuals with sensory disabilities, this document is available in alternate formats. For information call: (916) 654-6410 or TDD (916) 654-3880 or write Records and Forms Management, 1120 N Street, MS-89, Sacramento, CA 95814.

CONCURRED BY:		
Construction Engineer:	William Howe WBH	Date 04.19.13
Bridge Engineer:	Mehran Ardakanian	Date 05.13.13
Project Engineer:	Bob Zandipour, Design	Date 4-19-13
Project Manager:	Ken Terpstra	Date 4-23-13
FHWA Rep.:		Date
Environmental:		Date
Other (specify):	Lina Ellis, Str. Maintenance	Date 4-29-13
Other (specify):		Date
District Prior Approval By:		Date
HQ (Issue Approve) By:		Date
Resident Engineer's Signature: William Howe		Date 04-19-13

ESTIMATE OF COST

	THIS REQUEST	TOTAL TO DATE
ITEMS	$0.00	$0.00
FORCE ACCOUNT	$0.00	$0.00
AGREED PRICE	$0.00	$0.00
ADJUSTMENT	$15,012.00	$15,012.00
TOTAL	$15,012.00	$15,012.00

FEDERAL PARTICIPATION

☐ PARTICIPATING ☐ PARTICIPATING IN PART ☑ NONE
☐ NON-PARTICIPATING (MAINTENANCE) ☐ NON-PARTICIPATING

FEDERAL SEGREGATION (if more than one Funding Source or P.I.P. type)
☐ CCO FUNDED PER CONTRACT ☐ CCO FUNDED AS FOLLOWS

FEDERAL FUNDING SOURCE	PERCENT

ADA Notice: For individuals with sensory disabilities, this document is available in alternate formats. For information call: (916) 654-6410 or TDD (916) 654-3880 or write Records and Forms Management, 1120 N Street, MS-89, Sacramento, CA 95814.

CONTRACT CHANGE ORDER

Change Requested by: Engineer

CCO 159	Suppl. No. 0	Contract No. 04 - 0120S4	Road SF-80-12.7/13.2	FED. AID LOC.: NO FED AID

To: **M C M CONSTRUCTION INC**

You are directed to make the following changes from the plans and specifications or do the following described work not included in the plans and specifications for this contract. ***NOTE: This change order is not effective until approved by the Engineer.***

Description of work to be done, estimate of quantities and prices to be paid. (Segregate between additional work at contract price, agreed price and force account.) Unless otherwise stated, rates for rental of equipment cover only such time as equipment is actually used and no allowance will be made for idle time. This last percentage shown is the net accumulated increase or decrease from the original quantity in the Engineer's Estimate.

Extra Work at Force Account:

1) Provide traffic control as necessary for performing the work of this change order as determined by the Engineer.

2) Perform corrective work on existing facilities due to unanticipated field conditions or conflicts with existing components pertaining to the installation of the YBI tunnel lighting as shown on Pages 3 through 68 of this change order as determined necessary by the Engineer.

Labor, equipment and material authorized by the Engineer, as necessary, will be paid in accordance with provisions of Section 4-1.03D, "Extra Work", of the Standard Specifications and Section 5-1.17, "Force Account Payment", of the Contract Special Provisions.

Estimated Cost of Extra Work at Force Account = $600,000.00

Extra Work at Lump Sum:

Remove existing luminaires and furnish and install new luminaires in the San Francisco Oakland Bay Bridge Yerba Buena Island (YBI) Tunnel structure and provide for the connection of the luminaires to the YBI substation as specified and shown on Pages 3 through 68 of this change order. The following luminaires shall be furnished and installed for the upper and lower decks of the tunnel:

Upper Deck - Westbound:

446 each 400 watt metal halide luminaires

Lower Deck - Eastbound:

14 each 400 watt metal halide luminaires
462 each 98 watt LED luminaires

This work includes furnishing and installing all hardware pertaining to the luminaires including mounting brackets, conduit, enclosures, junction boxes, power supply, cables and other appurtenances along with performing all power connections for the luminaires at the YBI substation and providing for the removal of all existing luminaires and facilities as specified and shown.

For this work, the Contractor shall be compensated an Agreed Lump Sum of $4,024,200.00, which constitutes full compensation, including all markups, complete in place for this change.

Any corrective work required on existing facilities due to unanticipated field conditions or conflicts with existing components pertaining to the installation of the new luminaires and hardware shall be paid as Extra Work at Force Account as specified herein.

Extra Work at Agreed Lump Sum $4,024,200.00

All materials furnished for this change order shall be approved by the Engineer prior to their purchase order being placed.

CONTRACT CHANGE ORDER

Change Requested by: Engineer

CCO 159	Suppl. No. 0	Contract No. 04 - 0120S4	Road SF-80-12.7/13.2	FED. AID LOC.: NO FED AID

Estimated Cost: Increase ☑ Decrease ☐ $4,624,200.00

By reason of this order the time of completion will be adjusted as follows: 0 days

Submitted by

Signature	Resident Engineer	Date
William Howe	William Howe, Senior R.E.	01.25.13

Approval Recommended by

Signature	Region Construction Division Chief	Date
Tony Cr	Tony Anziano	1/25/13

Engineer Approval by

Signature	Region Construction Division Chief	Date
Tony Cr	Tony Anziano	2/15/13

We the undersigned contractor, have given careful consideration to the change proposed and agree, if this proposal is approved, that we will provide all equipment, furnish the materials, except as may otherwise be noted above, and perform all services necessary for the work above specified, and will accept as full payment therefor the prices shown above.

NOTE: If you, the contractor, do not sign acceptance of this order, your attention is directed to the requirements of the specifications as to proceeding with the ordered work and filing a written protest within the time therein specified.

Contractor Acceptance by

Signature	(Print name and title)	Date
	EDMUND A. PUCHI, TREASURER	2/13/13

SECTION 10-3 YBI TUNNEL LIGHTING AND ELECTRICAL SYSTEMS

10-3.01 DESCRIPTION

YBI Tunnel lighting (modify) involves converting: existing uncontrolled fluorescent lighting system located in the upper deck of YBI into a controlled metal halide lighting system, existing uncontrolled low pressure sodium lighting located in the lower deck of YBI into a controlled LED lighting system. Each tunnel shall consist of the following systems:

1. Lower Deck Luminaire Layout
2. Upper Deck Luminaire Layout
3. Conduit Layout Plan
4. YBI Substation
5. SCADA System Modification
6. Lower Deck Existing Equipment Removal
7. Upper Deck Existing Equipment Removal

10-3.02 CODES AND STANDAREDS

All work performed and material installed on this contract shall be confirmed to Section 86-1.02 " Regulations and Code, " and the following code and standards subject to the modifications and additional in these special provisions:

1. IESNA RP-22-2010 " American National Practice for Tunnel Lighting"
2. California Administrative Code, Title 24, Part 3 Basic Electrical Regulations
3. National Fire Protection Association Standards

Contract No. _____

Contract Change Order No.____

Sheet No.____ of ____

REGISTERED PROFESSIONAL ENGINEER
ROBERT HUNG CHIN HSU
No. 17114
Exp. 9/30/13
ELECTRICAL
STATE OF CALIFORNIA

1-22-13

Submit a schedule of values within 30 days after Contract approval.

10-3.03 SCHEDULE OF VALUES

All quantities to complete work shall be confirmed on the following categories. Within each category, each item of work shall be broken down, as a minimum, to include the following listed items.

1. Lower Deck Luminaire Layout
   - 1.1. Conductors- each size and type
   - 1.2. Conduit - list by each size and installation method
   - 1.3. Conduit bodies and adapters - each size and type
   - 1.4. Concrete anchors - each size and type
   - 1.5. Lighting Junction boxes - each size and type
   - 1.6. Luminaires - each type and wattage
   - 1.7. Equipment rentals
2. Upper Deck Luminaire Layout
   - 2.1. Conductors- each size and type
   - 2.2. Conduit - list by each size and installation method
   - 2.3. Conduit bodies and adapters - each size and type
   - 2.4. Concrete anchors - each size and type
   - 2.5. Lighting Junction boxes - each size and type
   - 2.6. Luminaires - each type and wattage
   - 2.7. Equipment rentals
3. Upper Deck Luminaire Layout
   - 3.1. Conductors- each size and type
   - 3.2. Conduit - list by each size and installation method
   - 3.3. Conduit bodies and adapters - each size and type
   - 3.4. Concrete anchors - each size and type
   - 3.5. Luminaires - each type and wattage
   - 3.6. Equipment rentals
4. Conduit Layout Plan
   - 4.1. Conductors- each size and type
   - 4.2. Conduit - list by each size and installation method
   - 4.3. Conduit bodies and adapters - each size and type
   - 4.4. Concrete anchors - each size and type
   - 4.5. Pull boxes- each size and type
   - 4.6. Photo sensor mounting
5. YBI Substation Work
   - 5.1. Circuit Breakers - each size and type
   - 5.2. Panel Boards - each size and type
   - 5.3. Lighting Controllers- each wire installation, testing
   - 5.4. UPS - each wire installation and testing
   - 5.5. Conductors - each size and type
   - 5.6. Conduits - each size and installation method
   - 5.7. Wireway - each size and type
   - 5.8. Concrete anchors - each size and type
   - 5.9. Photoelectric unit installation
   - 5.10. Communication port installation
   - 5.11. Core drill through the wall method
6. SCADA System Modification
   - 6.1. Hardware delivery
   - 6.2. SCADA and PLCs programming, database, and graphics as required
   - 6.3. Hardware installation and wiring termination
   - 6.4. Testing and startups
   - 6.5. Engineering submittals and Operation &. Maintenance manuals
   - 6.6. PLC system. attention is directed to the "EVALUATION PERIOD" of these Special Provisions for special conditions relating to cost breakdown and payment
   - 6.7. Materials - conduit, conduit fittings, conductors
   - 6.8. Installation - cable pulling mounting and termination
7. Lower Deck Existing Equipment Removal

Contract No. _____

Contract Change Order No.____

Sheet No.____ of ____

7.1. Equipment rentals
7.2. Remove existing equipment - lump sum for all
7.3. Excavation, disposing and hauling - total

8. Upper Deck Existing Equipment Removal
8.1. Equipment rentals
8.2. Remove existing equipment - lump sum for all
8.3. Excavation, disosing and hauling - total

Contract No. _____

Contract Change Order No.____

Sheet No.____ of ____

10-3.04 SCHEDULE OF WORK

The schedule of work shall be complied to Section 86-1.07. In addition, the order of each YBI Tunnel Lighting work shall be on the following schedule:

Upper Deck Luminaire Installation:

1. Provide temporary lighting on the North side of the wall before removing existing fluorescent lighting on North side and breakers
2. Install luminaires, wires, conduits on the North side of the wall, and electrical equipment located at YBI substation. Connect lighting fixtures to circuits 1AN, 2AN, 1BN, 2BN, CN, DN, EN, FN, XN, YN located in the CP#2 control
3. Energize the panel power. Test circuits 1AN, 2AN, 1BN, 2BN, CN, DN, EN, FN, XN, YN by switching circuits to the manual operation
4. Supply a temporary lighting on the North side by switching circuits XN, YN, FN, and EN to the manually on position
5. Remove temporary lighting on the North Side
6. Disconnect the existing breakers and remove all fluorescent luminaires on the South side
7. Install luminaires, wires, conduits on the South side of the wall. Connect lighting fixtures to circuits 1AS, 2AS, 1BS, 2BS, CS, DS, ES, FS, XS, YS located in the CP#2 control
8. Energize the panel power. Test circuits 1AS, 2AS, 1BS, 2BS, CS, DS, ES, FS, XS, YS by switching circuits to the manual operation
9. Supply temporary lighting on the South side by switching circuits XS, YS, FS, and ES to the manually on position
10. Test the PLC automation first before connecting to SCADA system

Lower Deck Luminaire Installation:

Maintain existing low pressure sodium lighting system on both sides of wall in working condition during the construction.

1. Disconnect the existing breakers and prepare to remove existing ceiling mount luminaires
2. Remove existing ceiling mount fixtures on South side with the permission of lane closure, Install conduits, junction boxes, and electrical equipment located in the YBI substation. Connect lighting fixtures to circuits DSA, DSB, XSA, XSB, and LYS located in the CP#1 control
3. Energize the panel power. Test circuits DSA, DSB, XSA, XSB, and LYS by switching to the manual operation
4. Disconnect existing breakers and remove wall mount fixtures on the South side
5. Remove existing ceiling mount fixtures on North side with the permission of lane closure, Install conduits, junction boxes, and electrical equipment Connect lighting fixtures to circuits DNA, DNB, XNA, XNB, and LYN inside the CP#1 control
6. Energize the panel power. Test circuits DNA, DNB, XNA, XNB, and LYN by switching to the manual operation
7. Test the PLC automation first before connecting to SCADA system
8. Disconnect the existing breakers and remove wall mount fixtures on the North side

The order of SCADA Modification shall constructing the project in sequential order as following:

1. The contractor shall submit within 60 days after approval of the contract, a complete list of equipment which the Contractor proposes to install, manufacturer's catalog information of custom fabricated units and such other data as may be required by the Engineer and as shown below. The list shall include all items identified on the plans or in these special provisions by the manufacture's designation. The list shall be complete as to the name of manufacturer, catalog numbers, address, and telephone number. The catalog information shall contain information such as physical size; the

Engineer may deem weight, rating and such additional data as necessary. All data submitted shall be clearly identified by the name of the project and shall be made in quadruplicate. Working drawings showing details of installation of equipment shall be submitted to the Engineer along with the list of equipment. The list of equipment shall include the following items:

1.1. Supervisory Control and Data Acquisition (SCADA System-hardware and Software upgrade

1.2 Tunnel Lighting System –Each controller shall include Programmable Logic Controllers (PLCs) --Hardware and Software upgrade

2. Training of engineering personnel about the theory and operation of the PLCs hardware and software, SCADA software and hardware, and tunnel lighting system
3. Submittal of ladder logic and SCADA software configuration. Ladder logic shall include listing of all input and output with synonyms, circuit and page comments, cross-reference of Input/output (I/O) usage
4. Delivery of upgrading PLCs hardware for remote site
5. PLCs and SCADA programming upgrade
6. Testing—Testing of SCADA work shall consist of sequence procedure. The unit substation shall be completely tested and debugged, and shall allow 30 days run time without any problem before moving the SCADA work to tunnel lighting as final procedure
7. Operation and maintenance training
8. Submittal of drawings, manuals, software documentation, and all final forms of corrected software configuration and corrected ladder logic

Contract No. _____

Contract Change Order No.____

Sheet No.____ of ____

10-3.05A LED CEILING MOUNT LUMINAIRE

In addition to Section 86-6.01 of light emitting diode Luminaire, all ceiling-mount luminaire covers shall have the requirements for the manufacturing of new enclosed and gasket low bay 98 LED luminaires with a source of 116 watts operated by 350 mA driver. The luminaire shall be listed and designed to meet UL1598A for 40 C, outside marine. The luminaire shall comply EMI compliance per FCC Title 47CFR Part 15, Class A, and RoHS compliant as well. The LED light will be in operation 24 hours a day and 365 days a year. Therefore, this fixture is designed to manage the heat to protect both the LED semiconductor material and the driver and to extend the useful life of the light for many years.

ENVIRONMENTAL

The LED luminaire must pass a vibration test withstanding oscillatory motion with a peak acceleration of at least 1.5g for the life of fixture with no structure damage to enclosure and no loosening of fasteners. The LED luminaire will be rated for IP-66. The finished luminaire shall be a polyester powder paint applied after a pretreatment process to ensure maximum durability, passing the 1,000 hour salt fog test per ASTM B117 is strictly enforced. This luminaire must also pass Humidity test per IEC600-28-2-3-1987 and Temperature-Voltage Cycling and Condensing Humidity testing per Acuity Validation Test Specification.

MATERIALS

Materials within the luminaire shall be supplied in accordance with the following requirements:

Housing

1. The luminaire housing, cast of low copper aluminum, allows for corrosion resistance. The isolated electrical assembly must disengage for easy access to wiring surge protection module, LED drivers
2. The luminaire must The luminaire must have an optimized, maintained thermal management system by combining a robust heat sink utilizing both convection and conduction methodology with a mechanical design that promotes maximum airflow through the luminaire ensuring a minimum of 70,000 hours L70 at 55°C operating ambient.
3. The luminaire gasketing shall be of silicone type. The fixture shall be designed to prevent any permanent distortion of the gasket assuring the sealing integrity of the electrical and optical housing after accelerated aging.
4. Luminaire shall have a dedicated electrical assembly. The top cover shall be secured to the electrical housing with stainless steel hardware including a stainless steel insert.

Optical System

1. The optical system shall consist of a highly engineered LED metal core board (light engine), internal specular reflector, a precisely molded prismatic borosilicate glass refractor. and has optional up-light shield guard.
2. The optical system shall have a Luminaire Dirt Depreciation of at least 95%. The light transmitting material that is an integral part of the luminaire enclosure shall not degrade due to temperature or UV exposure. Unit must provide a symmetric distribution or asymmetric and perform at an average CCT of5000+/- 250K. Luminaire shall have a minimum of 10,415 lumens +/- 5% when tested in accordance with LM-79.
3. LED light engine must be protected from elements by prismatic borosilicate glass. The luminaire enclosure shall have an International Protection Rating as defined by IEC 60529 of at least IP 66. The LED metal core board must be integrated to a robust dedicated heat sink.
4. The minimum color rendering index (CR1) is 75 +/- 5%.

ELECTRICAL

1. Surge protection module will protect all downstream internal electronics such as LED drivers, controls and relays for the purpose of protecting electronic devices from electrical disturbances such as nearby lightning strikes. The surge protection device will meet ANSI/IEEEC 62.41-2002 for category C low. This specification requires the device to meet a 6kA, 3kV surge level. Surge protection device will be designed for quick field replacement through modular plug and play wiring.
2. Solid state electronic drivers will be multi volt 347-480 and have a rated life of 70,000 hours
3. The luminaire shall conform to ANSI C82.77:2002 for Maximum Total Harmonic Distortion (THD) -20%. Inrush current complies with NEMA410:2004 table B-2 and line Fluctuations and Ramp input voltage per UL991:2004.

Contract No. _____

Contract Change Order No.____

Sheet No.____ of ____

4. The luminaire shall conform to Electromagnetic compatibility tests for Electrostatic Discharge (ESD) per IEC 61000-4:2001, Level 4.

WIRING

The fixture wires shall be stranded tinned-copper construction, not smaller than No. 16 AWG. The insulation shall be cross linked polyolefin (UL style 3321) rated 150°C or higher or type SEO cable rated at 105°C. Wire ways and wiring channels shall have rounded edges or bushed holes wherever conductors pass through. Insulated Bushings shall be installed at points of entrance and exit of wiring.

DISCONNECT

All electrical components shall have a Molex disconnect plug and shall be hinged or slotted for installation or removal. A quick disconnect terminal block including fuses shall be provided for disconnected power before changing components.

FUSE BLOCK

All luminaires shall have a fuse block installed inside the electrical section of the housing. The fuse block shall comply with UL or CSA standards. Each luminaire shall be fused internally with 2 slow blow type fuses to disconnect the luminaire from the branch circuit in case of LED failure or other electrical problem within the luminaire.

OPTICAL CONTROL/PHOTOMETRIC PERFORMANCE

The luminaries shall have a symmetrical photometric distribution. The Isofootcandle curve of the luminaires shall match those in the plans.

MOUNTING BRACKETS FOR FIXTURE SUPPORTS

If mounting brackets are required; the brackets shall be integral to a bolted metal framing system. The fixture shall fit the mounting bracket without modification. All channel fittings and hardware to be type 316 stainless steel. Luminaire mounting plate shall be of type 3004 stainless steel.

INSTALLATION

The installation of the luminaires shall be according to the plans, the manufacturer's instructions, and adjusted per field conditions with the Engineers approval.

QUALFYING LUMINAIRES

The manufacturer of the luminaires shall have no less than 10 years experience in manufacturing tunnel lighting.

CERTIFICATE OF COMPLIANCE

The Contractor shall provide the Engineer with a Certificate of Compliance from the manufacturer in accordance with the provisions of Section 6-1.07, "Certificates of Compliance," of the Standard Specifications for all of the luminaires furnished for the project.

Contract No. _____

WARRANTY

The entire luminaire shall be having a complete warranty of at least 5 years.

Contract Change Order No.____

10-3.05B METAL HALIDE WALL MOUNT LUMIAIRE

Sheet No.____ of ____

All wall mount luminaires shall have a nominal wattage rating according to the plans. and comply with "Metal Halide Luminaires" of the Standard Specifications with the following:

1. All lighting fixtures shall be complete with autotransformer CWA Pulse Start Ballast. ignitors. lamps. and other equipment and operate from a nominal 480V. 60 Hertz power source and shall be capable of starting and operating the specified lamp within the limits specified by the lamp manufacturer.
2. The luminaries shall be suitable for wet locations per UL 1598. listed for 40°C Ambient at 100% rated lumen output. and comply with IP 55 for dust and water jet. Overall dimensions shall be 16" square x11-5/8" deep

Materials

Materials within the luminaire shall be supplied in accordance within the following requirements:

Housing

1. The housing and door shall be die cast copper free aluminum alloy A360 with a minimum thickness of 1.8 mm.
2. The reflector assembly shall consist of high purity aluminum of minimum 0.8 mm thick sheet. Aluminum used for the reflector shall be #3002 alloy
3. All lighting fixtures shall be. painted. Painted finishes of fixtures and accessories shall be applied such that the entire assembly is rendered completely corrosion resistant.
4. Where aluminum parts come in contact with bronze or stainless steel parts. apply to both surfaces a coating of corrosion protection material.
5. Components and hangers required shall be Type 316 stainless steel.
6. Fasteners shall be Type 316 stainless steel or polymer coated steel of the "TAPTITE" type.
7. Lampholders and lamp sockets shall hold lamps securely.
8. Gasketing shall be extruded silicone Rubber. All shapes used shall be completely cover flange to which gasket is fixed.

Finish

The luminaire housing shall be finished with a polyester powder paint. which shall be electrostatically applied and cured. The paint shall pass the ASTM D522 flexure test.

Lampholders

The lampholders shall be porcelain keyless medium or mógul construction. as required by lamp size. wired with high temperature 16 Gauge wiring minimum. The sockets shall be pulse rated at 4 kV. The screw shell shall be nickel-plated brass and shall incorporate anti-vibration grips.

Ballasts

The ballast shall comply with " Pulse Start Metal Halide Ballast" of the Standard Specifications with the following modifications. Autotransformer CWA Pulse Start power factor +90% , +/- 10% lamp wattage regulation @ +/- 10% line voltage variation. The ballast shall conform to the applicable requirements of UL 1029. The Ballasts and all related electrical components shall be removable and replaceable as a single unit without disturbing the aiming.

Wiring

The fixture wires shall be stranded tinned-copper construction. not smaller than No. 16 A WG. The insulation shall be cross linked polyolefin (UL style 3321) rated 150° C or higher or type SEO cable rated at 105° C. Wireways and wiring channels shall have rounded edges or bushed holes wherever conductors pass through. Insulated Bushings shall be installed at points of entrance and exit of wiring. Each luminaire shall be fused internally with 2 fast-acting type fuses to disconnect the luminaire from the branch circuit in case of ballast failure or other electrical problem within the luminaire.

Fixture hardware

Screws. bolts. or other assembly and mounting parts. shall be Type 316 stainless steel.

Glare Control

All luminaires shall have a factory-installed reflector. The reflector shall have one-piece and shall be made of heat and impact resistant borosilicate prismatic glass. The reflector dimensions shall cover the whole side and face having internal splitting and external dispersing prismatic control high angle glare.

Mechanical construction

The housing shall be heavy-duty die-cast copper free aluminum. All electrical components shall have a Molex disconnect plug and shall be hinged or slotted for installation or removal. A quick disconnect terminal block including fuses shall be provided for disconnected power before changing components. The door shall be provided with single point positive acting latch and locking set screw attached the latch. If the door swings downward, it shall be provided with two safety chains, one on each end of the door, to prevent dropping. The conduit connection shall be National Pipe Thread type typical for conduit, and shall be sized to match the attaching conduit. Note that the attaching conduit is of various sizes so that not all conduit connections will be the same. Field modification is prohibited.

Contract No. _____

Contract Change Order No.____

Sheet No.____ of ____

Lens assembly

The optical assembly-shall be fully enclosed and gasketed. It shall include an anodized reflector. The reflector shall have transverse elliptical fluting to minimize re-direction of light energy through the arc tube and to provide even illumination on the lighted surface. free from streaks or striations. The lens shall be 3.2 mm minimum thickness minimum impact resistant borosilicate prismatic glass. Refractor is 16" square 4" deep with internal splitting prisms for glare control

Optical control/photometric performance

The luminaries shall have assymmetric photometric distribution. The Isofootcandle curve of the luminaires shall match those in the plans.

Mounting brackets for fixture supports

If mounting brackets are required. the brackets shall be integral to a bolted metal framing system. The fixture shall fit the mounting bracket without modification.

Ignitors.-- The device(s) which interface the ballast with the tube. sometimes called the "starter" or "ignitor" shall be called the protective ignitor for the purposes of these Special Provisions, and shall have the following characteristics:

1. Be designed to eliminate stress on the ballast due to a missing or burned out tube by directing the high voltage spike directly to the lamp without being directed to the lamp through the ballast windings. or by stopping the starting cycle.
2. Be capable of being used with the type of ballasts used in this project.
3. Be UL listed or UL Component Recognized and CSA Certified.
4. Be warranted against defective materials and workmanship for a period of at least five years.

Fuse Block

All luminaires shall have a fuse block installed inside the electrical section of the housing. The fuse block shall comply with UL or CSA standards:

1. Fuse block shall have two spaces for fuses.
2. Each terminal lug shall be large enough to accept conductors as depicted on the plans and shall be rated 600 volts.
3. Fuse block shall have fuses installed with the amperage rating as shown on the plans.

Installation

The installation of the luminaires shall be according to the plans. the manufacturer's instructions. and adjusted per field conditions with the Engineers approval.

10-3.05C METAL-HALIDE CEILING MOUNT LUMINAIRE

The fixture shall be UL 595 Marine outdoor and UL 1572 40°C listed, and passed IP65 for Dust-tight and water jet proof construction.

Mechanical Construction

The housing shall be die cast of alloy 360.1 low copper aluminum with a minimum thickness of 3mm. It shall be pre-treated with 100 MG per square inch of phosphate and overcoated with an electrostaticly applied 2 to 4 mil coat polyester powder paint cured at 425°F. The finish shall withstand a 160 inch-pound impact measured with a standard Gardner Impact Tester. It shall have passed a 1000 hour salt spray test as specified by ASTM B-117.It shall exhibit no cracking or loss of adhesion from a 180° bend over a 1/8 inch mandrel diameter per ASTM D522. All external hinges, fasteners and screws shall be Type 316 stainless steel or better. Luminaire shall be designed and suitable for mechanized cleaners. A luminaire mounting plate shall be 10 gauge Type 304 stainless steel.

Water-tight

No water shall enter the fixture when exposed to a solid stream of water from 3 GG40 brass spray nozzles each supplying 12 gallons per minute at 100 PSI. The nozzles shall be 30 inches apart, centered on and 24 inches from the fixture plane. Three tests shall be conducted for 15 minutes each with the vertical distance of the fixture at 6, 12 and 16 inches above the nozzles.

The gasket shall be hollow core. Durometer 60 silicone with a 200°C continuous service temperature. It shall have demonstrated no visible deterioration after artificial aging for 96 hours in oxygen at a pressure of 300 pounds per square inch at a temperature of 156°F per paragraph 43.2 of UL-595.

Dust-tight

The luminaire shall have passed a dust chamber test in which talcum powder is maintained in suspension by an air current. The powder shall be sized between 1 and 75 micrometers with at least 50% by weight less than 5 micrometers. At stable temperature, the luminaire shall be operated for 1 minute and switched off and allowed to cool for three hours while the talcum powder stays in suspension. When the luminaire is opened there shall be no ingress of dust.

Quick Disconnect Electrical

The fixture door shall contain all ballast components and be designed for fast removal as a complete assembly. Access to the inside of the fixture housing shall not be required. Replacement shall take less than 60 seconds.

Optical and Socket Assembly

The reflector shall consist of high purity alloy # 3002 aluminum of minimum 0.08 thick sheet. Lens shall be 4.5 mm minimum thickness tempered glass. The luminaires shall provide symmetrical I photometric distribution as specified. Lamp holders shall be porcelain with high temperature 16 ga. wiring. Sockets shall be pulse rated at 4k volts. The screw shell shall be nickel-plated brass with anti-vibration grips.

Ballast

Ballast Shall be 400 watt pulse start Metal Halide 480 volts CW Auto transformer type copper wound, 90+ high power factor +/-10% lamp wattage regulation @+/-10% line voltage variation Ballasts shall reliably start and operate the lamp in ambient temperatures to minus 40°F. Ballast shall provide 100% wattage to the lamp and have a published Ballast Factor per ANSI C82.2 of 1.0. The fixture shall be UL listed for 40°C. When operated at 25°C ambient temperature, ballast and capacitor life shall be extended approximately 100%.

Warranty

The electrical assembly shall be warranted for a period of five years and the luminaire for a period of two years from date of shipment.

Contract No. _____

Contract Change Order No.____

Sheet No.____ of ____

10-3.06 LIGHTING CONTROLLER

The Contractor shall install any and all devices and equipment required to make the lighting circuits fully functional. All control equipment shall be UL listed.

Enclosure:

Enclosure shall be NEMA 1, metal enclosed type requirements of local, state and county ordinances. All connections shall be front accessible. All hinges and screws shall be stainless steel. Service section and pull section bussing must meet all requirements of the serving utility company.

Labeling & wiring

Wiring shall be neatly bundled or run in plastic wire-ways. Wires shall be color coded per UL standards and shall be standard MTW with 19-strand wire for all hinges wiring. All wires shall be permanently numbered with slip clip wire markers. Terminal strips shall be numbered to match wire numbers. Common wires shall be of common color and number throughout the system. All devices shall be permanently labeled. All door-mounted devices shall be labeled with black and white, screw fastened, engraved, plastic nameplates. Stick on labels, wire fasteners, or wire numbers are not acceptable. All wiring and drawing shall be NEMA Class II C requirements and shall show the complete system including external equipment. All components associated with a particular compartment's function shall be mounted in that compartment; i.e. control relays, lighting contractors shall be mounted in the control section compartment or accordance with the plans. Spacing of components shall be in accordance with UL standards.

Electrically Held Lighting Contactors

All lighting contactors shall be manufactured specifically for the purpose of controlling sodium vapor lighting loads. The contactor amperage shall be rated per the plans 480V, 60 Hz, and have a control circuit voltage of 120V, 60 Hz unless otherwise shown on the plans. They shall be the electrically or magnetically held type, and shall have three poles for controlling lighting power, and two poles for control circuit use unless otherwise shown on the plans. All lighting contactors shall be of the same manufacturer and model number for each size.

Mechanically Held Lighting Contactors

All mechanically held lighting contactors shall be provided with effective control in lighting application. Mechanically held operation shall assure that the contactor will not switch to OFF during control circuit power failure. Contacts shall remain closed during loss of control power and allow load to operation as soon as power is restored. The contactor amperage shall be rated per the plans 480V, 60 Hz, and have a control circuit voltage of 120V, 60 Hz unless otherwise shown on the plans. They shall be the electrically or magnetically held type, and shall have three poles for controlling lighting power, and two poles for control circuit use unless otherwise shown on the plans. All lighting contactors shall be of the same manufacturer and model number for each size.

Auxiliary Contacts

All auxiliary contacts shall be manufactured specifically for the purpose of circuit control. The contactor amperage shall be rated 10 amperes minimum 120V, 60 Hz. They shall be manufactured specifically for attachment to the existing contactor depicted in the plans, and electrical configuration shall be as depicted in the plans. All auxiliary contactor shall be of the same manufacturer and model number for each size.

Control Relays.-120V

All control relays shall be rated 10 amperes or more, 120V 60 Hz. It shall be the electrically or magnetically held type, and shall have contacts as shown on the plans. It shall be the general-purpose plug-in type, life rating 50 million mechanical and 500,000 electrical, minimum. 480V: All control relays shall be rated 10 amperes minimum, 480V 60 Hz. It shall be the electrically or magnetically held type, and shall have contacts as shown on the plans. It shall be the high-speed protective type, average pickup time less than 16 milliseconds. All control relays shall be of the same manufacturer and model number for each voltage rating.

Selector Switches

All selector switches shall be the 30.5 mm heavy-duty type, rated 10 amperes 120V, 60 Hz rated for 1 million operations or more. They shall have poles and interconnections per the plans, and shall have legend plates installed and labeled per the plans. The legend plates shall be an integral part of the switch, and not a separate label.

Indicating Lights

All indicating lights shall be the 30.5 mm heavy-duty full voltage type. The lamps shall be the LED type, color per the plans. All indicating lights shall have lens installed. All indicator lights and lamps shall be of the same manufacturer.

Control circuit transformer

All lighting circuit control transformers shall be complied to section 86-6.12A of the Standard Specifications 2010. The transformer shall be manufactured specifically for the purpose of powering lighting or motor control circuits. In addition, The transformers shall be rated per the plans, 120V, 60 HZ, of the 55° C rise 105° C class, and shall have a fuse block that is an integral part of the unit, and the fuse block shall have all the fuses installed. All control circuit transformers shall be of the same manufacturer and model number, or have identical mounting dimensions.

Control circuit transformer fuses

All lighting circuit control transformer fuses shall be manufactured specifically for the purpose of protecting control transformers. The primary fuse amperage shall be per the plans, and the secondary fuse amperage shall be per the plans - time delay type.

Contract No. _____

Contract Change Order No.____

Sheet No.____ of ____

D.C Power Supply-24 VDC

The power supply shall produce 3.6 amperes minimum at the output of 24 volt (dc). The ripple and noise on the output shall be within 3.0 mv peak to peak plus 0.02 percent. The output voltage adjustments shall be made to ±5 percent of normal voltage. The power supply shall be UL, CSA and IEC listed.

Terminal Blocks

All Terminal Blocks shall be rated minimum 600 volt, 30 amps with compressing type barrel lugs and wire guide tangs for ease of maintenance. All control wires entering and leaving a compartment shall terminate on terminal blocks with wire numbers on terminals and both ends of all wires.

GFCI

GFCI shall be rated 15 Amperes Specification Grade 120V, ivory color, suitable for installation in industrial control equipment as required by UL. The GFCI shall be mounted as depicted in the plans and shall have a suitable receptacle plate installed.

Programmable Logic Controller System (PLC)

The Contractor shall furnish Photo-sensor based lighting Programmable Logic Controller (PLC). The controller shall switch each tunnel direction's portal, threshold and transition zone lighting proportionally to light level conditions. The controller system shall consist of installing and testing, but not limited to enclosures, lighting contactors, switches, lamps, fuses, cables and conductors, transformers, protectors, controllers, input/output modules, DC power supplies, terminal blocks, labels and plates, luminance sensors units (including all associated equipment, mounting, aligning), assembly, programming, delivery, wiring, design and testing, submittals, as-built Engineering, startup, commissioning, warranty, and training. Attention is directed to the "EVALUATION PERIOD" of these Special Provisions for special conditions relating to cost breakdown and payment.

The Programmable Logic Controller System shall be designed with equipment compatible with the existing Caldecott Tunnel Lighting control system. To assure compatibility with the SCADA system the contractor shall procure the Programmable Logic Controller System from the same Tunnel Lighting Control supplier that furnished the Caldecott Tunnel Lighting Control System. The Programmable Logic System controller and all of the corresponding components within the family of controller products shall be offered by a company who regularly manufactures and services this type of equipment. The contractor shall consult the Engineer for recommendation.

The lighting in the tunnel shall be controlled by a microprocessor-based controller called a Programmable Logic Controller (PLC) for these Special Provisions. The PLC shall be located inside a cabinet with all associated control equipment as depicted on the plans. The PLC shall have an Operator Interface Panel where lighting parameters may be entered or reconfigured. The PLC shall be programmable from both the Operator Interface Panel and by serial interface. The PLC shall have a manual override for all of the lighting circuits on the front of the control panel as depicted on the plans.

Microprocessor

CP#2: The microprocessor shall receive inputs from an exterior luminance sensor and other points per the plans. The microprocessor shall have outputs, which control the lighting using lighting contactors. The controller shall be designed for at least 5 levels of outdoor lighting control (called channels). Each channel shall be adjustable from 0 to 99 minute input time delay to prevent intermittent controller switching. Each channel shall have from 0 to 240 minute hold-on timer to prevent short cycling of the lighting. Each channel shall have a separate on and off set point, which can be configured for night or daytime contrast lighting. All configured values shall be saved in memory and battery backed up for a minimum of 2 years. The programming shall be permanently stored in EEPROM.

The photo sensor lighting controls shall be capable of independently switching five levels of lighting circuits in response to the available daylight. The controls shall be capable of utilizing a luminance sensor input, measuring candelas/ft^2.

Contract No. _____

Contract Change Order No.____

Sheet No.____ of ____

Control Setpoint			Switching Level	
CD/ft²	On	Off	Condition	Mode
Level 1	Always	N/A	24 Hours Day/Night	Night
Level 2	4.65	4.18	Sunset or Dawn	Contrast
Level 3	23.3	20.9	Dim Daylight	Contrast
Level 4	69.7	62.7	Foggy Daylight	Contrast
Level 5	185.8	167.2	Brought Daylight	Contrast

CP#1: The microprocessor shall receive an input from an exterior photoelectric unit. The microprocess shall instruct outputs and shall have a ability of manually by pass the automation to control circuits. The schedule of the automation is on the following:

Photoelectric Unit	Status:	Circuits
During the Day	On	DN_ , DS_, XN_, XS_, LY_, LE_
During the Night	On	XN_, XS_, LY_, LE_
	Off	DN_, DS_

Operator Interface Panel

The Operator Interface Panel (OIP) shall allow all adjustable parameters to be viewed and changed. Access to change the operating parameters shall have password protection available. The OIP shall display (as a minimum) the current light level and the output status. The display shall be liquid crystal or light emitting diode type utilizing alphanumeric characters and English language prompts (not symbols). The OIP shall have a numeric keypad and arrow keys for input (as a minimum). All channels shall have the following adjustable parameters: Operation (program, test, run), Mode (night or contrast), Time Delay, Low set point, High Set point, Hold on Timer.

Output Modules

The Output Module (s) shall be manufactured specifically to interface the proposed microprocessor with the intended load. The Output Module shall be the relay type, rated at least 4 amperes at 120/240 volts, with at least 8 points available. The response time shall be 15 milliseconds on and off, maximum.

Input Modules

The Input Module (s) shall be manufactured specifically to interface the proposed microprocessor with the intended inputs. The Input Module (s) shall be capable of both analog and contact closure detection. The Input Module (s) shall be manufactured specifically to interface with the proposed luminance sensor unit. The Input Module (s) shall be capable of detecting contact closures, and response time from contact closure to output to the microprocessor shall be less than 1 millisecond. The Input Module (s) shall have the number and type of inputs as depicted on the plans, minimum.

Modbus Plus to Serial Protocol Converter

The unit shall transfer a specified list of registers between PLC's and Modbus Plus nodes when configured as a Modbus Plus master and shall be configured as master or slave on Modbus plus network.

Special Programming

Special programming shall be required to facilitate the unique features of this application. The special programming shall make use of sensors and devices installed at various points in the system. Load alternating programming shall be utilized to rotate the channels such that the total on time for each channel is approximately the same.

Contract No. _____

Contract Change Order No.____

Sheet No.____ of ____

1. Load alternating programming shall be utilized to rotate the channels such that the total on time for each channel is approximately the same.
2. In the event that normal power is restored from failure (automatically and manually), the controller shall determine which lighting channels shall be energized, and at the same time obey the above programming rules.

Control Switching Level

The final switching levels shall be determined by the manufacturer and programmed by the manufacturer's authorized representative.

Control Switching Delays

The final switching times shall be determined by the manufacturer and programmed by the manufacturer's authorized representative.

Recording Parameters

The final programmed parameters shall be recorded on a typed or computer generated form. The form shall be placed in a rack, pocket, or pouch within the cabinet. The form shall depict the final values of all parameters that can be changed.

Controller Outputs

Each output circuit shall have a 4-ampere inductive load rating; capable of operating electrically held contactors. Interposing relays rated 20 amperes shall drive the lighting contactors.

Control Panel Operators and Indicators

The lighting control cabinet front panel shall include On/Off/Auto switches and indicators according to the plans. All indicators and switches shall have a corresponding legend and indication nameplate.

10-3.07 LUMINANCE SENSOR

The Luminance Sensor shall be a low voltage ambient light sensor. The Luminance Sensor shall supply an analog signal (4-20mA) to the microprocessor that is proportional to the ambient light. The Luminance Sensor shall be located per the plans, and mounting shall be per the manufacturer's specifications. The Luminance Sensor shall contain an eye-corrected silicon cell to measure the luminance in a 20° conical field from 1-20,000 cd/m^2. The probe calibration uncertainty with fixed full scale shall offer within 5% or, if demanded at 95% confidence level.

Luminance Sensor Enclosure

The weatherproof enclosure with mounting hardware shall be constructed from die cast and extruded aluminum and designed to accept Charged Coupled Device (CCD) cameras with either fixed focal length lenses or motorized zoom lenses. The enclosure opens from the rear by unlatching the rear-mount latch. Opening is assisted by a unique gas spring, which securely holds the lid when fully opened. If necessary the lid can be removed. The forward opening lid allows for maximum accessibility during installation and when camera and lens adjustments are necessary. The camera sled is removable and can be inverted to accommodate various camera and lens combinations. The enclosure shall be heated and thermostatically controlled.

1. Luminance Sensor Cable (TSP) shall be 18 gauge 4 wire shielded copper cable unless otherwise specified by the manufacturer.
2. Surge protection shall be provided at the voltage inputs of the luminance sensor. Circuit breakers shall isolate control circuits from the luminance sensor. Contractor shall provide DC power supply if for luminance sensor if it is required.
3. The housing for the luminance sensor shall be sealed to tightness equal to IP55 per IEC publication 529 and NEMA 4. The lens shall be tempered. The mounting bracket shall be a painted steel bracket arm, which shall allow for the aiming of the luminance sensor in at least 90° angles rotation.
4. The sensor transmitter shall be capable of providing a luminance measurement 200meters without signal loss. In the event of a failure of a luminance sensor, the opposite portal luminance meter shall be used as a backup manual transfer from the SCADA workstation
5. All exterior mounting hardware shall be stainless steel access and shall be by means of continuous hinge, with a one-piece compressible neoprene gasket.
6. The luminance sensor shall be capable of field calibration and verification using a reference luminance photometer.

10-3.08 PANEL BOARDS

All panel boards shall be of the power distribution type as described by Article 384 of the NEC. They shall be of the capacity, phase, and type shown on the plans, with adequate spaces for all circuit breakers being installed. Modifications to the panel, if required, shall comply with the plans.

The panelboards shall be mounted in the locations depicted on the plans, and adjusted per field conditions with the Engineer's approval. Attachment to the wall shall be followed per the manufacturer's specifications.

The panelboards shall be UL listed and meet all NEMA standards for panelboards. The main lugs shall be the mechanical solderless type approved for copper conductors. The main lugs shall be secured in line according to UL standards to prevent lugs from turning or loosening when cables are installed.

All panelboard box and covers shall be NEC code gauge galvanized steel, finished for indoor use.

Panelboards YBL UDN and UDS

These panelboard shall be NEMA1 indoors type, surface-mounted, factory assembled, three-phase, three-wire, 480-volt, AC panelboard shall have forty-two branch circuits included spaces. Main breaker and branch breaker ampere are shown on the plans. The short circuit rating of the assembled panel board shall not be less than 65,000A rms symmetrical fully rated. The panels shall be Westinghouse, Siemens, General Electric, Cutter-Hammer, Square D or equal.

Panelboards YBU UPU, PN

These panelboards shall be NEMA 1 indoors type, surface-mounted, factory assembled, three-phase, three-wire, 480-volt, AC panelboard shall have twelve branch circuits included spaces. Main breaker and branch breaker ampere are shown on the plans. The short circuit rating of the assembled panel board shall not be less than 65,000 A rms. Symmetrical fully rated. The panels shall be Westinghouse, Seimens, General Electric, Cutter-Hammer, Square D or equal.

10-3.09 ENCLOSED CIRCUIT BREAKER

The lighting circuit shall be protected with an Enclosed Circuit Breaker as depicted in the plans. The Enclosed Circuit Breaker shall be enclosed in a NEMA 1 enclosure, minimum. The circuit breaker shall be of the three pole molded plastic type unless otherwise shown on the plans, and shall be amperage rated per the plans at the voltage depicted on the plans at 60 Hz. They shall have a UL listing for the interrupting rating (RMS symmetrical amperes) of 65,000 amperes.

10.3.10 MOLDED CASE CIRCUIT BREAKER

This type of circuit breaker is specially applied to the existing low voltage distribution boards located in YBI substation. The frame size of the breaker shall be Square D, 800A followed the factory specification of the existing switch board. The required amperes and voltage of the breaker are indicated on the plan.

10-3.11 SCADA SYSTEM

Existing Supervisory Control and Data Acquisition (SCADA) system, Carbon Monoxide (CO) and Nitric Oxide (N0) sensors, communication system , roadway lighting and cabinets are conformed to the applicable provision in Section in 86, signals, Lighting and Electrical Systems," of the Standard Specifications. Existing SCADA system consists of hardware and software, fan control system, power distribution system, closed circuit television system. The Contractor shall be responsible for compatibility of new and tunnel lighting control system on the existing systems. Each control system function shall be described as the following:

SCADA tunnel lighting system shall have a distinctive graphic representation page on the computer screen and shall provide a real time statues of the elements connected to local PLC system located in YBI substation. It shall provide the operator the ability to manually control each device as shown on the plans using a mouse. Such access shall be password protected.

The graphic presentation shall be color coded to provide a distinction between ON or OFF status. Alarm status, historical information and other notations for each status change shall be displayed, and recorded on hard disk.

Wiring diagrams shown on the plans for input and output modules are diagrammatic only. External network necessary to counteract induced signals on the conductors for proper operation of the input or output modules as recommended by the manufacturer is not shown. The Contractor shall be responsible for including such devices on the circuits as the field conditions dictates.

During the construction, all existing system in the tunnels shall be maintained in operational mode except during off-peak traffic hours at which time some operations per tunnel may be turned off for modification. Consult the Resident Engineer before action taken. The details of off peak traffic hours shall match with lane closure charts. The operation of the existing 12 KV switches gears and emergency telephone and fire alarm system shall not be affected by the construction work. If the schedule of the Contractor should require interruption of the existing power distribution system, control system for an overnight period, manual operation of all the above system shall be conducted with a duty electrician.

As the work progresses, the Contractor shall maintain a record of all deviations in the work from the shown on the plans. Final locations of all underground work shall be recorded by depth from finished grade and by offset distance from permanent surface structures (i.e. buildings, curbs, walks, etc). Under floor conduits and other features within the building shall be recorded by offset distance from building walls.

Earthwork, foundations, sheets metal, painting, mechanical and such other work incidental and necessary to the proper installation and operation of the electrical work shall be done in accordance with the requirements, specified for similar work in the standard specifications and elsewhere in these special provisions.

Hardware

The existing SCADA system requires an added on the serial communications module of IC695CMM004 to existing RX3i system.

Software

The existing SCADA software is GE Fanuc iFIX, 5.0 version. The interfacing software of the YBI Tunnel Operator Workstation shall be compatible with the existing SCADA system located in the maintenance station at the Toll plaza. The program, data files and communications shall use the compatible configuration tools and development software.

The SCADA software and all of the corresponding components within the family of software products shall be offered by a company who regularly programs and services this type of program. The contractor shall consult the Engineer for recommendation.

10.3.12 SCADA WORK STATION COMMUNICATIONS

The SCADA workstation shall be polled at the Electrical Maintenance in the Bay Bridge Toll Plaza. This workstation shall provide lighting status, alarms, trending and reports of YBI tunnel lighting control. The communication between the workstations and YBI tunnel lightings shall be adapted by the Ethernet communication. The communication port shall be matched to the existing hardware which is shown in the plan.

SCADA Work Station General Functions

The exact locations, arrangements, and dimensions of the device symbols, messages, display screen controls and other items on the display screens along with the drawings of the display screens shall be submitted by the Contractor to the Engineer for approval. The SCADA lighting menu shall be mouse driven with the following major functions:

1. Password Screen to enter User ID and password.
2. Overview Screen showing graphically the system's current status using color coded symbols, icons and figures, including:
   - 2.1. Luminance meter sensor values and primary or backup operating mode
   - 2.2. Lighting controller mode of operations Run, Test, Program)
   - 2.3. Lighting contactor panel status (Manual, Auto)
   - 2.4. Lighting output level and feedback from lighting contactors
   - 2.5. Alarm summary window showing latest alarms
   - 2.6. Popup menu symbols to allow for complete level override

Contract No. _____

Contract Change Order No.____

Sheet No.____ of ____

2.7. An arrow indicating the traffic direction entrances and exits of at each tunnel display

3. Alarm Handler/event log screen using color-coded text messages with a date/time stamp, status, priority, description, tag name and value. Alarms shall be latched and logged to disk in a daily alarm file and store detail information along with data, such as tunnel name, portal building, device name and number, date and time. Alarms shall be displayed on the SCADA monitor for a day alarms can be retrieved from the SCADA PC's hard disk drive. A distinct alarm sound shall allow operator to distinguish to the existing alarm sounds. The Alarm Handler/Event log shall show a minimum of the following:
   - 3.1 Alarm summary, segregated by priority
   - 3.2 Event log, showing output status and contactor feedback
   - 3.3 Alarm history showing by date and timestamp, an event sequence and locations
   - 3.4 Alarm state with unacknowledged, acknowledged and return to normal separately colored messages
4. Trend Graph screen showing instantaneous values of the luminance meter sensor, along with controller output response. Each controller output level shall be color-coded. The trend graph shall have a minimum resolution of 1 minute. The time base of the trend graph shall be selectable,
5. Equipment Status screen shows the front panel view of each lighting contactor cabinet. Remote override of individual lighting contactors shall be accomplished when the local panels Manual/Auto selector switch position is in the AUTO position. Indicator light symbols shall show the status of lighting contactors.
6. Report Screen allowing the operator to select between pre-configured reports that are event based (alarm reports), time based (period and accumulated runtime hours) and operator based (operator log). Each operator interface screen shall also be capable of printing to the system printer. The SCADA shall allow the user to edit, print view, delete and create reports and have Pop-up when an alarm is acknowledged
7. Lighting controller-programming screens to provide equipment mode and control settings, and individual light level set point and timing parameter
8. The system shall link to a master Database, to retrieve point details for every point displayed on the screens, this database maybe located remotely at another site if necessary, or locally on the SCADA PC. The database should provide further design and maintenance information for each point in the system, as well as trouble shooting in case of a point failure.

10-3.13 GENERAL LIGHTING SOFTWARE REQUIREMENT

The tunnel geometric and lighting descriptions within this portion of the Special Provisions are consistent with RP-22 (2005) of the Illuminating Engineering Society of North America.

This portion of the Special Provisions described the general requirements for the software as controlling the tunnel is concerned. Where programming requirements described elsewhere in this Special Provisions conflict with portions of this section, this section shall have control and precedence. The Engineer shall make a final decision when a conflict exists.

YBI Upper Deck Lighting

1. Threshold and Transition Zones - Circuits include 1A, 2A, 1B, 2B, C, D, E and F. The total of 18 circuits shall control the metal halide lighting throughout the upper deck of YBI The programming shall control all of these circuits. The programming shall energize the circuits depending upon the ambient lighting conditions outside the tunnel at levels depicted in the plans. The order of energizing shall be started from level 1, and gradually inclined to level 5. The sequence is F, E, D, C, B (both 1 and 2) and A (both 1 and 2). De-energizing shall be performed in the reverse sequence of the order.
2. Interior Zone - Circuits include X and Y circuits. The total of 4 circuits shall control metal halide lighting throughout the upper deck of YBI. The programming shall energize X and Y circuits all time regardless day or night condition exclude the special condition are on the following:
   - 2.1 Maintenance: Maintenance shall have the capability to energize or de-energize circuits at the Lighting Contactor Panel (CP#2).
   - 2.2 UPS: In the event of UPS failure, the program shall continue energize Y circuit which is supplied by utility power, and program shall not be disturbed by any status such as alarming through the SCADA system. The alarm is automatically shut off when the programming determines UPS is operating normally.
   - 2.3 Black Out: In the event of lost utility power, the program shall automatically detect the power failure and without disturbing X circuit.

2.4 X circuitry: The circuit is provided with mechanically held contactor. Therefore, The program shall provide setting the circuit, or re-setting the circuit when the circumstance is permitted.

YBI Lower Deck Lighting

1. Day Light - Circuit include DN, DS. The total of 4 circuits shall control LED lighting throughout the lower deck of YBI.
2. Interior Zone
   - 2.1 Circuits include XN, XS. The total of 4 circuits shall control LED lighting throughout the lower deck of YBI. The programming shall energize these 4 circuits all time regardless day or night condition.
   - 2.2 Circuits include LE. The total of 2 circuits shall control metal halide lighting throughout the transition between lower deck of the bridge structure and the portal of the tunnel. The programming shall energize these 2 circuits all the time regardless day or night condition.
   - 2.3 Circuits include LY. The total of 2 circuits shall control LED lighting throughout the lower deck of YBI. The programming shall energize these 2 circuits all the time regardless day or night condition exclude the special condition are on the following:
     - 2.3.1. Maintenance: Maintenance shall have the capability to energize or de-energize circuits at the Lighting Contactor Panel (CP#1).
     - 2.3.2. UPS: In the event of UPS failure, the program shall continue energize XNA, XNB, XSA and XSB circuits which are supplied by utility power, and program shall not be disturbed by any status such as alarming through the SCADA system. The alarm is automatically shut off when the programming determines UPS is operating normally.
     - 2.3.3. Black Out: In the event of lost utility power, the program shall automatically detect the power failure and without disturbing LY circuits.
     - 2.3.4. LY circuitry: The circuit is provided with mechanically held contactor. Therefore, The program shall provide setting the circuit, or re-setting the circuit when the circumstance is permitted.

10-3.14 COMMUNICATION BREAK DOWN

In case of lost communication between SCADA and local PLC system or failure of Local PLC system, the hardware of relay logic will select certain circuits to maintain some lights in the tunnel. The software on SCADA shall provide warning signal to maintenance person.

10-3.15 SOFTWARE MAINTENANCE

The lighting control system and SCADA system software shall maintained for the SCADA PC. Master program databases and development editors shall be provided, as well as runtime executable programs. Password protection of the source code shall be maintained for the duration of the warranty period.

10-3.16 WARRANTY

The system shall be warranted for a period of two years after commissioning. During this period, owner maintenance personnel and Contractor shall be assisted by the control system manufacturer to diagnose and remedy system problems via telephone modem and dialup remote control. The manufacturer will replace spare parts that are used to effect repairs during the warranty period.

10-3.17 COMMISSIONING

The Engineer shall review complete system test procedures for lighting control hardware, fiber optic and wire communication. Lighting controller sequence software and SCADA operator interface design test forms shall be approved before commissioning. SCADA database and representative operator screens are and reports shall be approved.

Automatic script procedures shall be utilized to test lighting control hardware and software elements, log system response and generate commissioning reports.

10.3.18 TRAINING

Three training courses shall be developed and given to State personnel by the Contractor. First training course shall be on the theory and operation of all systems. It will be designed for Engineer and supervisory personnel. It will be a one day, approximately eight hours, hands-on training on the use of the computer. It will be included setting of point values on PLCs, and parameters on the SCADA system as permitted by the various security levels of the system. Engineers and a Supervisor will attend this course. Each attendee will be given a copy of the approved Operation Manual. The second and third training will be a day each. Employees will attend the each training for dispatchers, maintenance and operation

personnel. The course will be included training on how to obtain data from the computer, how to respond to alarms, the use of SCADA system to monitor and control all the devices, a step by step review and demonstrations of the maintenance, required by the manufacturer of the major components of all systems. In addition, the training will include testing to identify and locate failed components to the circuit board level. The Contractor shall furnish each employee one copy of the approved Operation and Maintenance Manual. Training shall be video recorded and edited to be played as an mpeg on compact disk.

10-3.19 UNINTERRUPTIBLE POWER SUPPLY

The contractor shall supply and install an uninterruptible power supply (UPS) as described in this special provision at each location depicted on the plans, 20 and 30kVA. The UPS shall supply continuous, regulated AC power to HPS lighting-type loads with reliable and precise AC power under normal and abnormal conditions including but not limited to the temporary loss of utility AC power.

The UPS shall always be on-line, conditioning and regulating incoming AC power as required to keep the HPS lighting in continuous operation. It shall provide a reliable source of uninterruptible power with no fluctuations in output AC power during complete or partial interruption of the incoming power. The output of the UPS shall not be affected by the quality of the AC input.

Standards

The UPS shall be designed in accordance with the applicable sections of the current revision of the following documents. Where a conflict arises between these documents and statements made herein, the statements in this specification shall govern.

1. ASME
2. CSA 22.2, No. 107.1
3. FCC Part 15, Class A
4. IEC 1000-4-5
5. ISO 9001
6. National Electrical Code (NFPA-70)
7. NEMA PE-1
8. OSHA
9. UL Standard 1778

Contract No. _____

Contract Change Order No.____

Sheet No.____ of ____

UPS SYSTEM REQUIREMENTS

1. Voltage: Input/output voltage specifications of the UPS system (consisting of the UPS and Maintenance Bypass Cabinet) shall be:
   1.1. System Input – 480VAC, 3 Phase, 3W plus Ground
   1.2. System Output: 480VAC 3 Phase, 4W plus Ground
2. Output Load Capacity: Specified output load capacity of the UPS shall be 30 kVA at 0.8 lagging power factor.

Battery

1. Battery Cells: Sealed, lead-acid, valve-regulated
2. Reserve Time: 9 minutes at full load, 0.8 power factor, with ambient temperature of 25°C
3. Recharge Time: to 95% capacity within ten (10) times discharge time

Modes of Operation

1. Normal: The critical AC load is continuously supplied by the UPS inverter. The rectifier/charger derives power from a utility AC source and supplies DC power to the inverter while simultaneously float-charging the reserve battery.
2. Emergency: Upon failure of utility AC power, the critical AC load is supplied by the inverter, which, without any switching, obtains power from the battery. There shall be no interruption in power to the critical load upon failure or restoration of the utility AC source.
3. Recharge: Upon restoration of utility AC power, after a utility AC power outage, the rectifier/charger shall automatically restart, walk-in, and gradually assume the inverter and battery recharge loads.
4. Bypass: If the UPS must be taken out of service for maintenance or repair, or should the inverter overload capacity be exceeded, the static transfer switch shall perform a reverse transfer of the load from the inverter to the bypass source with no interruption in power to the critical AC load.

Performance Requirements

1. AC Input to UPS

1.1. Voltage Configuration for Standard Units: three-phase, 3-wire plus ground
1.2. Voltage Range: +10%, -20% of nominal
1.3. Frequency: Nominal frequency ±5%.
1.4. Power Factor: Up to 0.99 lagging at nominal input voltage and full rated UPS output load
1.5. Inrush Current: 800% of full load current maximum
1.6. Current Limit: 125% of nominal AC input current maximum
1.7. Input Current Walk-In: 20 seconds to full rated input current maximum. Field selectable 5 through 20 seconds
1.8. Current Distortion: 4% reflected THD maximum at full load
1.9. Surge Protection: Sustains input surges without damage per criteria listed in IEC 1000-4-5

2. AC Output, UPS Inverter
2.1. Voltage Configuration: three-phase, 4-wire plus ground
2.2. Voltage Regulation:
2.3. ±1% three-phase RMS average for a balanced three-phase load for the combined variation effects of input voltage, connected load, battery voltage, ambient temperature, and load power factor.
2.4. ±2% three-phase RMS average for a 100% unbalanced load for the combined variation effects of input voltage, connected load, battery voltage, ambient temperature, and load power factor.
2.5. Frequency: Nominal frequency ±0.1%.
2.6. Frequency Slew Rate: 1.0 Hertz per second maximum. Field selectable from 0.1 to 1.0 Hz per second
2.7. Phase Displacement:
2.8. ±0.5 degree for balanced load
2.9. ±1.0 degrees for 100% unbalanced load
2.10. Bypass Line Sync Range:
2.11. ±0.5 Hertz
2.12 Field selectable ±0.5 to 5.0 Hz
2.13. Voltage Distortion:
2.14 1% total harmonic distortion (THD) for linear loads
2.15 <4% THD for 100% nonlinear loads (3:1 crest factor) without kVA/kW derating
2.16. Load Power Factor Range: 0.7 lagging to 0.95 leading without derating
2.17. Output Power Rating: Rated kVA at 0.8 lagging power factor
2.18. Overload Capability:
2.19. 125% for ten minutes (without bypass source)
2.20. 150% for one minute (without bypass source)
2.21 Inverter Output Voltage Adjustment: ±5% manual adjustment
2.22. Voltage Transient Response:
2.23 100% load step±4.0%
2.24 Loss or return of AC input power ±1.0%.
2.25. Manual transfer of 100% load±3.0%
2.26. Transient Recovery Time: to within 1% of output voltage within one cycle
2.27. Voltage Unbalance: 100% unbalanced load±1%.

Contract No. _____

Contract Change Order No.____

Sheet No.____ of ____

Environmental

The UPS shall have the following environmental specifications:

1. Operating temperature between 0°C and 40°C
2. Operating humidity from 0% to 95%, non-condensing
3. Cooling shall be forced air
4. Noise shall be less than 65 dB 'A' measured at 1.5 Meters

Environmental Conditions

The UPS shall be able to withstand the following environmental conditions without damage or degradation of operating characteristics:

1. Operating Ambient Temperature
2. UPS Module: 32°F to 104°F (0°C to 40°C)
3. Battery: 77°F ±9°F (25°C ±5°C)
4. Storage/Transport Ambient Temperature
5. UPS Module: -4°F to 158°F (-20°C to 70°C)

6. Battery: -4°F to 92°F (-20°C to 33°C)
7. Relative Humidity
8. 0 to 95%, non-condensing
9. Audible Noise
10. Noise generated by the UPS under any condition of normal operation shall not exceed 54 dBA measured 1 meter from surface of the UPS

Modes

Each UPS shall be designed to operate as an on-line system in the following modes:

1. Normal: The UPS inverter shall continuously supply the critical AC load. The rectifier/charger derives power from a utility AC source and supplies DC power to the inverter while simultaneously float-charging a power reserve battery
2. Emergency: Upon failure of utility AC power, the critical AC load is supplied by the inverter, which without any switching obtains power from the battery. There shall be no interruption in power to the critical load upon failure or restoration of the utility AC source
3. Recharge: Upon restoration of utility AC power, after a utility AC power outage, the rectifier/charger shall automatically restart, walk-in, and gradually assume the inverter and battery recharge loads.
4. Bypass: If the UPS must be taken out of service for maintenance or repair, or should the inverter overload capacity be exceeded, the static transfer switch shall perform a reverse transfer of the load from the inverter to the bypass source with no interruption in power to the critical AC load.

Batteries and Battery Charger

The UPS batteries shall have the following specifications:

1. The batteries shall be sealed, maintenance-free, high-rate discharge type
2. The expected life shall be 10 years or 200 complete full load discharge cycles
3. Recharge time shall be less than 13 times discharge time
4. The batteries shall be protected with a DC circuit breaker
5. The batteries shall have a minimum capacity of 10 minutes at full load

UPS Controls

The UPS controls and indicators shall have the following specifications:

1. The UPS shall be microprocessor controlled
2. The UPS shall have a front panel display, with the following minimum displays:
   - 2.1. UPS status
   - 2.2. Battery Status
   - 2.3. Alarm and event queue
   - 2.4. Active alarms
   - 2.5. UPS configurations
   - 2.6. Metering
   - 2,7. Normal/Bypass mode
   - 2.8. Utility/Battery mode
   - 2.9. Load/Overload condition
   - 2.10. Audio alarm control

Contract No. _____

Contract Change Order No.____

Sheet No.____ of ____

Protection

1. The UPS input shall be protected by an input current limiting circuit breaker
2. The UPS input shall be protected from surges such as lightning strikes and switching surges
3. The UPS output shall be protected by a current limiting circuit breaker

Communications

The UPS shall have an EIA-232 serial asynchronous communications port for connection to a remote computer. The port shall be mounted on the exterior of the cabinet. The UPS shall send the following operations to the computer, at the request of the computer:

1. Alarm status and information
2. Utility input data
3. UPS output data
4. Battery status

Static Transfer Switch

1. static transfer switch and bypass circuit shall be provided as an integral part of the UPS. The static switch shall be a naturally commutated high-speed static (SCR-type) device rated to conduct full load current continuously. The switch shall have an overload rating to clear a 20-ampere load branch circuit breaker. The static transfer switch control logic shall contain an automatic transfer control circuit that senses the status of the inverter logic signals, and operating and alarm conditions. This control circuit shall provide an uninterrupted transfer of the load to an alternate bypass source, without exceeding the transient limits specified herein, when an overload or malfunction occurs within the UPS, or for bypassing the UPS for maintenance.
2. Uninterrupted Transfer - The transfer control logic shall automatically turn on the static transfer switch, transferring the critical AC load to the bypass source, after the transfer logic senses any of the following conditions:
   - 2.1. Inverter overload capacity exceeded
   - 2.2. Critical AC load overvoltage or under voltage
   - 2.3. Battery protection period expired
   - 2.4. UPS fault condition
3. Control - The transfer control logic shall inhibit an automatic transfer of the critical load to the bypass source if any of the following conditions are present:
   - 3.1. Inverter/bypass voltage difference exceeding preset limits
   - 3.2. Bypass frequency out of limits
   - 3.3. Bypass out-of-synchronization range with inverter output

Uninterrupted Retransfer

Retransfer of the critical AC load from the bypass source to the inverter output shall be automatically initiated unless inhibited by manual control. The transfer control logic shall inhibit an automatic retransfer of the critical load to the inverter if one of the following conditions exists:

1. Bypass out of synchronization range with inverter output
2. Inverter/bypass voltage difference exceeding preset limits
3. Overload condition exists in excess of inverter full load rating
4. UPS fault condition present

Contract No. _____

Contract Change Order No.____

Sheet No.____ of ____

Maintenance Bypass Switch

General

A manually operated maintenance bypass switch shall be incorporated into the UPS cabinet to directly connect the critical load to the bypass AC input power source, bypassing the rectifier/charger, inverter, and static transfer switch.

Isolation

All energized terminals shall be shielded to ensure that maintenance personnel do not inadvertently come in contact with energized parts or terminals. A means to de-energize the static switch shall be provided when the UPS is in the maintenance bypass mode of operation.

Maintenance Capability

With the critical load powered from the maintenance bypass circuit, it shall be possible to check out the operation of the rectifier/charger, inverter, battery, and static transfer switch. When the application calls for the Maintenance Bypass Switch to be bolted to the UPS cabinet, the interconnecting cables are to be provided, precut and pre lugged.

Internal Battery Power Pack

The battery power pack shall internal to the UPS system and shall include sealed, lead-acid valve regulated battery cells housed in a separate cabinet. Battery cells shall be mounted on slide-out trays for ease of maintenance. The UPS shall automatically be disconnected from the battery when the battery reaches the minimum discharge voltage level.

External Maintenance Bypass Cabinet

A matching external maintenance bypass cabinet shall be provided to enable the UPS module to be completely isolated from the electrical system while the critical load is powered through the external maintenance bypass line. This cabinet shall provide make-before-break operation for transfers to and from the external maintenance bypass line with a single rotary switch. The following components shall be

standard: input and output circuit breakers, input isolation transformer, single rotary switch with auxiliary contacts, inter-cabinet wiring, casters, and leveling feet. This matching cabinet shall bolt to the side of the UPS module with a barrier shield to separate the two cabinets. Only front access shall be required for installation and service.

Installation

The UPS and battery cabinets shall incorporate seismic anchoring methods. The UPS equipment shall be started by a customer support representative from the UPS equipment manufacturer. The UPS installation shall include all conductors, cables, connectors, conduits, and other equipment and materials as required making the UPS fully functional. The UPS installation shall include a load test described elsewhere in these Special Provisions.

Schematics Documentation and Training

The Contractor shall supply detailed circuit schematics, documentation, and system drawings with the UPS. The documentation shall include wiring installation, maintenance, and troubleshooting of the battery unit. All circuit schematics, documentation, and system drawings submitted are subject to the approval of the Engineer.

The Contractor shall provide 8 hours of training not including breaks on the maintenance and operation of the UPS. The training site shall be located at the Caldecott tunnel maintenance office area and UPS location, and shall include hands on training on one UPS. The Contractor shall provide 10 training manuals for the class, however, as many as 20 may participate in the training. The class agenda and schedule shall be approved by the ngineer 10 working days before the class may begin.

The Contractor shall provide the Engineer with a Certificate of Compliance from the manufacturer in accordance with the provisions of Section 6-1.07, "Certificates of Compliance," of the Standard Specifications. The Certificate of Compliance shall contain any and all of the items contained within this Special Provision.

Testing

The Contractor shall test each UPS under full load conditions, during daylight hours. The load shall be the normal HPS lighting load. The tests, methods, and criteria shall be submitted in writing to the engineer for approval 10 days before the test is to begin. The ontractor shall schedule a time when the engineer shall be present for the entire test.

Test #1

The test shall include the removal of the input power for five minutes, then the re-energizing of the input power. The Contractor shall demonstrate by using the manufacturer's published information and submitted criteria, that the UPS is capable of continuing to supply power to the load for an additional 5 minutes.

If any of the HPS luminaires extinguish for any reason during the test period, then the UPS will be rejected. If the contractor cannot demonstrate that the UPS can continue to supply power to the load for an additional 5 minutes using the manufacturer's published information and accepted criteria, then the UPS will be rejected.

Test #2

The test shall include the removal of the input power for five seconds, then the re-energizing of the input power. This cycle shall be repeated 10 times at various intervals, and the entire test completed within 10 minutes of the completion of test #1.

If any of the HPS luminaires extinguish for any reason during the test period, then the UPS will be rejected.

Warranty and Service

The manufacturer shall guarantee the UPS unit to be defect-free in materials and workmanship for 12 months after the project is accepted. The UPS manufacturer shall guarantee the UPS batteries for a minimum of 5 years (full replacement, transportation and labor) and an additional 5 years of pro-rated warranty by the battery manufacturer. The total warranty shall be 10 years or longer, and shall begin following the acceptance of the project.

The manufacturer shall have an established network of service centers capable of servicing the UPS. The service personnel shall be on call 24 hours a day, 365 days a year. Personnel shall be factory trained and certified in the maintenance and repair of the equipment.

UPS #A and #B

These UPS must be able to continue supply the power without being interrupted by collapse of contactors, relays from CP#1 or CP#2, or power outage from the utility supply. The UPS must be applied in nasty environment condition.

10-3.20 WIREWAYS

The wireways shall meet NEMA 1 requirements and be UL listed. The 8"and 12" wireways shall be fabricated from 14 gauge steel, shall have an open side for lay-in of wiring with screw cover, and shall allow for concentric knockouts capable of handling conduits up to 53C. All wireways shall have ANSI 61 gray enamel finish inside and out. Wireways shall be grounded according to the provision of the NEC article 250 and installed according to the provision of NEC article 362 and 376.

10-3.21 CHANNEL STRUTS

The channel strut shall be a 12 gauge hot-dipped galvanized rigid steel strut. The strut shall be coated with zinc after being roll-formed or after all manufacturing operations are completed, conforming to ASTM specification NO.A123 or A 153.

10-3.22 STEEL THREADED RODS

The steel threaded rods shall be 1-5/8" width series channel type. The load carrying capacity of the threaded hot rolled steel shall conform to ASTM 575 and A576.

10-3.23 BRACKETS

The brackets shall be a 12gauge hot dipped galvanized rigid steel bracket. The bracket shall be coated with zinc after being roll-formed or after manufacturing operations are completed, conforming to ASTM specification NO. A123 or A153.

10-3.24 CONCRETE ANCHORS

Concrete anchors shall conform to the provisions in section 75-1.03C, "Miscellaneous Metal," of the Standard Specifications. All concrete anchors shall be of the internally threaded type, made entirely of Type 303 or Type 316 stainless steel.

Concrete anchors securing conduits shall be 1/4" bolt size minimum, and the hole depth shall be 1-1/4"minimum.

Concrete anchors securing luminaires shall be 3/8"bolt size minimum, and the hole depth shall be 2-3/8"minimum. The anchor body must be consisting of an extension sleeve, a compressing ring, an expander sleeve and an expander cone at the end. The anchor shall be designed for vibration resistance. Other anchors shall be as depicted on the plans or manufacturer's specifications or otherwise spelled out in these Special Provisions. Installation shall be per the manufacturer's instructions using tools and equipment recommended by the manufacturer.

10-3.25 METAL JUNCTION BOXES

Metal junction boxes shall be UL listed for indoor or outdoor use as applicable, shall also meet NEC article 370 requirements. Junction boxes shall be fabricated from 16-gauge sheet metal and hot-dip galvanized after fabrication.

If used indoors, junction boxes shall meet NEMA type 1 enclosure requirements, have flat removable covers fastened with stainless steel screws, and have gray enamel finish.

If used outdoors junction boxes shall meet NEMA type 4X enclosure requirements, have coated ANSI 61 gray polyester powder finish inside and out over phosphatized surfaces. Doors are secured to the body with a heavy-duty continuous hinge on one side and easy -to-release stainless steel door clamps mounted to other three sides, and the door has a fixed, oil and water-resistant gasket.

10-3.26 LED FIXTURE HANGERS

The fixture hanger shall be protexted against wind and vibration damage, The cushion type added to enhance the protection from the vibration shall be enclosed and gasketed. The ball shall permit 15° swing cushion type 8° swing from vertical. The material shall be malleable iron with a triple coated - chromate, zinc electroplate and epoxy powder coat treatment. The hanger must comply with class I, division 2 area, NEC501-9(b), UL and CSA listed.

10-3.27 CONSTRUCTION MATERIALS

Pulling Compound

All pulls totaling more than 20 meters, involving cables larger than #1/0, or incorporating bends totaling more than 180° shall have the conduit pre lubricated before pulling.

The pulling compound to be used shall be of the non-petroleum type. It may be factory prepared, or field mixed according to the manufacturer's specifications. The pulling compound shall be one of the ready-to-use types listed below, or the manufacturer's equivalent for field mixing:

1. American Cable Colloid Co. - Sli X-300
2. Cable Associates, Inc. - Gel-Lube 7/5
3. Generam Machine Products Co. - No. 7437-PC
4. Ideal Industries, Inc. - Aqua-Gel II or CW
5. Mac Products, Inc. - MacLube No. CA-51
6. Minerallac Electric Co. - Minerallac H-2B
7. Plymouth Rubber Co. - No. 45 Cable Pulling Lubricant
8. Polywater Corp. - "A", "G", "J", or "WJ"

Contract No. _____

Contract Change Order No.____

Sheet No.____ of ____

Galvanic Inhibiting Compound

A suitable galvanic inhibiting compound shall be applied to the threads of conduits and fittings of devices, which are of dissimilar metals before connections are made.

Anti-Corrosion Compound

All terminations using lugs, terminal blocks, pressure connectors, or where the termination or conductor is exposed, shall be treated with an anti-corrosion compound. The anti-corrosion compound shall be manufactured specifically for use on electrical devices by a manufacturer that specializes in making compounds for electrical applications.

Silicone and Urethane Sealant Compounds

All Silicone and urethane sealant compounds shall comply with the following:

1. Be manufactured specifically for sealing against water or waterproofing
2. Provide a positive seal against water after curing
3. Cures without shrinkage
4. Normal use temperature from at or below -20° F to at or above +200° F
5. Cures at room temperature
6. Remain pliable after curing
7. Completely cure within 72 hours

Insulating Sealant

The Contractor shall install an insulating sealant into all holes, which are bored. The installation shall be between the conduit and the concrete or masonry. The insulation shall be installed per the plans. The insulation shall fill all voids within the bore, which is not taken up by the conduit. The insulation compound shall be the injected foam type, and shall have an expansion ratio of at least 3:1.

Full compensation for sealants and compounds shall be considered as included in the contract lump sum prices paid for the various contract items of work involved and no additional compensation will be allowed therefore.

10-3.28. TEMPORARY LIGHTING

The Contractor shall provide temporary lighting in areas where the existing lighting has been removed or made nonfunctional by the Contractor. The Contractor may use existing fluorescent lights for this purpose with the Engineer's approval. The temporary lighting shall be Engineer approved, and shall be a minimum of 5 Lux throughout the construction zone. The temporary lighting maximum to minimum ratio

shall be less than 7 to 1. The Contractor shall have a calibrated light meter available for measuring lighting levels. The Contractor shall demonstrate to the Engineer upon demand that the light levels are being met. Full compensation for the temporary lighting shall be considered as included in the contract lump sum prices paid for the various contract items of work involved and no additional compensation will be allowed therefore.

Contract No. _____

Contract Change Order No.____

Sheet No.____ of ____

Add to section 86-2.05A:

Conduit installed underground must be Type 1 or Type 3.

Add to section 86-2.05B:

The conduit in a foundation and between a foundation and the nearest pull box must be Type 1 or Type 3.

Add to section 86-2.05C:

If a standard coupling cannot be used for joining Type 1 conduit, use a UL-listed threaded union coupling under section 86-2.05C, a concrete-tight split coupling, or a concrete-tight set screw coupling.

If Type 3 conduit is placed in a trench, not in the pavement or under concrete sidewalk, after the bedding material is placed and the conduit is installed, backfill the trench to not less than 4 inches above the conduit with minor concrete under section 90-2, except the concrete must contain not less than 421 pounds of cementitious material per cubic yard. Backfill the remaining trench to finished grade with backfill material.

After conductors have been installed, the ends of the conduits terminating in pull boxes, service equipment enclosures, and controller cabinets must be sealed with an authorized type of sealing compound.

At those locations where conduit is required to be installed under pavement and underground facilities designated as high priority subsurface installation under Govt Code § 4216 et seq. exist, conduit must be placed by the trenching in pavement method under section 86-2.05C.

At other locations where conduit is required to be installed under pavement and if a delay to vehicles will not exceed 5 minutes, conduit may be installed by the trenching in pavement method.

The final 2 feet of conduit entering a pull box in a reinforced concrete structure may be Type 4.

Contract No. _____

Contract Change Order No.____

Sheet No.____ of ____

Delete items 2–5 in the list in the 2nd paragraph of section 86-2.06A(2).

Add to section 86-2.06A(2):

Do not place grout in the bottom of the pull box.

Replace "Reserved" in section 86-2.06B of the RSS for section 86-2.06 with:

Contract No. _____

Contract Change Order No.____

Sheet No.____ of ____

86-2.06B(1) General

86-2.06B(1)(a) Summary

This work includes installing non-traffic-rated pull boxes.

86-2.06B(1)(b) Submittals

Before shipping pull boxes to the jobsite, submit a list of materials, Contract number, pull box manufacturer, manufacturer's instructions for pull box installation, and your contact information to METS.

Submit reports for pull box from an NRTL-accredited lab.

86-2.06B(1)(c) Quality Control and Assurance

86-2.06B(1)(c)(i) General

Pull boxes may be tested by the Department. Deliver pull boxes and covers to METS and allow 30 days for testing. When testing is complete, you will be notified. You must pick up the boxes and covers from the test site and deliver it to the job site.

Any failure of the pull box or the cover that renders the unit noncompliant with these specifications will be a cause for rejection. If the unit is rejected, you must allow 30 days for retesting. Retesting period starts when the replacement pull box is delivered to the test site. You must pay for all retesting costs. Delays resulting from the submittal of noncompliant materials does not relieve you from executing the Contract within the allotted time.

If the pull box submitted for testing does not comply with the specifications, remove the unit from the test site within 5 business days after notification that it is rejected. If the unit is not removed within that period, it may be shipped to you at your expense.

You must pay for all shipping, handling, and transportation costs related to the testing and retesting.

86-2.06B(1)(c)(ii) Functional Testing

The pull box and cover must be tested under ANSI/SCTE 77, "Specifications for Underground Enclosure Integrity."

86-2.06B(1)(c)(iii) Warranty

Provide a 2-year manufacturer replacement warranty for pull box and cover from the date of installation of the pull box and cover. All warranty documentation must be submitted before installation.

Replacement parts must be provided within 5 business days after receipt of failed pull box, cover, or both at no cost to the Department and must be delivered to the Department's Maintenance Electrical Shop at _____.

86-2.06B(2). Materials

The pull box and cover must comply with ANSI/SCTE 77, "Specifications for Underground Enclosure Integrity," for Tier 22 load rating and must be gray or brown in color.

Each pull box cover must have an electronic marker cast inside.

Extension for the pull box must be of the same material as the pull box and attached to the pull box to maintain the minimum combined depths as shown.

Include recesses for a hanger if a transformer or other device must be placed in a pull box.

The bolts, nuts, and washers must be a captive bolt design.

The captive bolt design must be capable of withstanding a torque range of 55 to 60 ft-lb and a minimum pull out strength of 750 lb. Perform the test with the cover in place and the bolts torqued. The pull box and cover must not be damaged while performing the test to the minimum pull out strength.

Stainless steel hardware must have an 18 percent chromium content and an 8 percent nickel content.

Galvanize ferrous metal parts under section 75-1-.05.

Manufacturer's instructions must provide guidance on:

1. Quantity and size of entries that can be made without degrading the strength of the pull box below Tier 22 load rating
2. Where side entries cannot be made
3. Acceptable method to be used to create the entry

Tier 22 load rating must be labeled or stenciled by the manufacturer on the inside and outside of the pull box and on the underside of the cover.

86-2.06B(3) Construction

Do not install pull box in curb ramps or driveways.

A pull box for a post or a pole standard must be located within 5 feet of the standard. Place a pull box adjacent to the back of the curb or edge of the shoulder. If this is impractical, place the pull box in a suitable, protected, and accessible location.

Bury pull box in soil 6 to 8 inches below grade. Cover the pull box with a plastic sheet before burying it.

Plastic sheets must be 20 mil thick and made of HDPE or PVC virgin compounds.

If only the cover is to be replaced, anchor the cover to the pull box.

Contract No. _____

Contract Change Order No.____

Sheet No.____ of ____

Add to section 86-2.08A:

Wrap conductors around the projecting end of conduit in pull boxes as shown. Secure conductors and cables to the projecting end of the conduit in pull boxes.

Replace the 1st sentence of the 1st paragraph of section 86-2.08E with:

Signal interconnect cable must be the 3-pair 6-pair type with stranded tinned copper no. 20 conductors.

Contract No. _____

Contract Change Order No.____

Sheet No.____ of ____

Replace 1st, 6th, and 7th paragraphs of section 86-2.09E with:

Splices must be insulated by "Method B."

Replace 1st and 8th paragraphs of section 86-2.09E with:

Do not insulate splices by "Method B."

Contract No. _____

Contract Change Order No.____

Sheet No.____ of ____

Replace section 86-2.18 with:

86-2.18 NUMBERING ELECTRICAL EQUIPMENT

The placement of numbers on electrical equipment will be done by others.

Replace 1st paragraph of section 86-2.18 with:

Place numbers on the equipment as ordered.

Contract No. _____

Contract Change Order No.____

Sheet No.____ of ____

Replace section 86-6.01 with:

86-6.01 LED LUMINAIRES

86-6.01A General

86-6.01A(1) Summary

Section 86-6.01 includes specifications for installing LED luminaires.

86-6.01A(2) Definitions

CALIPER: Commercially Available LED Product Evaluation and Reporting. A U.S. DOE program that individually tests and provides unbiased information on the performance of commercially available LED luminaires and lights.

correlated color temperature: Absolute temperature in kelvin of a blackbody whose chromaticity most nearly resembles that of the light source.

house side lumens: Lumens from a luminaire directed to light up areas between the fixture and the pole (e.g., sidewalks at intersection or areas off of the shoulders on freeways).

International Electrotechnical Commission (IEC): Organization that prepares and publishes international standards for all electrical, electronic and related technologies.

junction temperature: Temperature of the electronic junction of the LED device. The junction temperature is critical in determining photometric performance, estimating operational life, and preventing catastrophic failure of the LED.

L70: Extrapolated life in hours of the luminaire when the luminous output depreciates 30 percent from initial values.

LM-79: Test method from the Illumination Engineering Society of North America (IESNA) specifying test conditions, measurements, and report format for testing solid state lighting devices, including LED luminaires.

LM-80: Test method from the IESNA specifying test conditions, measurements, and report format for testing and estimating the long term performance of LEDs for general lighting purposes.

National Voluntary Laboratory Accreditation Program (NVLAP): U.S. DOE program that accredits independent testing laboratories to qualify.

power factor: Ratio of the real power component to the complex power component.

street side lumens: Lumens from a luminaire directed to light up areas between the fixture and the roadway (e.g., traveled ways, freeway lanes).

surge protection device (SPD): Subsystem or component that can protect the unit against short duration voltage and current surges.

total harmonic distortion: Ratio of the rms value of the sum of the squared individual harmonic amplitudes to the rms value of the fundamental frequency of a complex waveform.

86-6.01A(3) Submittals

Submit a sample luminaire to METS for testing after the manufacturer's testing is completed. Include the manufacturer's testing data.

Product submittals must include:

Contract No. _____

Contract Change Order No.____

Sheet No.____ of ____

1. LED luminaire checklist.
2. Product specification sheets, including:
   - 2.1. Maximum power in watts.
   - 2.2. Maximum designed junction temperature.
   - 2.3. Heat sink area in square inches.
   - 2.4. Designed junction to ambient thermal resistance calculation with thermal resistance components clearly defined.
   - 2.5. L70 in hours when extrapolated for the average nighttime operating temperature.

3. IES LM-79 and IES LM-80 compliant test reports from a CALiPER-qualified or NVLAP-approved testing laboratory for the specific model submitted.
4. Photometric file based on LM-79 test report.
5. Initial and depreciated isofootcandle diagrams showing the specified minimum illuminance for the particular application. The diagrams must be calibrated to feet and show a 40 by 40 foot grid. The diagrams must be calibrated to the mounting height specified for that particular application. The depreciated isofootcandle diagrams must be calculated at the minimum operational life.
6. Test report showing SPD performance as tested under ANSI/IEEE C62.41.2 and ANSI/IEEE C62.45.
7. Test report showing mechanical vibration test results as tested under California Test 611 or equal.
8. Data sheets from the LED manufacturer that include information on life expectancy based on junction temperature.
9. Data sheets from the power supply manufacturer that include life expectancy information.

Submit documentation of a production QA performed by the luminaire manufacturer that ensures the minimum performance levels of the modules comply with the section 86-6.01 specifications and includes a documented process for resolving problems. Submit documentation as an informational submittal.

Submit warranty documentation as an informational submittal before installing LED luminaires.

86-6.01A(4) Quality Control and Assurance

86-6.01A(4)(a) General

The Department may perform random sample testing on the shipments. The Department completes testing within 30 days after delivery to METS. Luminaires are tested under California Test 678. All parameters specified in section 86-6.01 specifications may be tested on the shipment sample. When testing is complete, the Department notifies you. Pick up the equipment from the test site and deliver to the job site.

One sample luminaire must be fitted with a thermistor or thermo-couple temperature sensor. A temperature sensor must be mounted on the LED solder pad as close to the LED as possible. A temperature sensor must be mounted on the power supply case. Light bar or modular systems must have 1 sensor for each module mounted as close to the center of the module as possible. Other configurations must have at least 5 sensors per luminaire. Contact METS for advice on sensor location. Thermocouples must be either Type K or C. Thermistors must be a negative temperature coefficient type with a nominal resistance of 20 kΩ. The appropriate thermocouple wire must be used. The leads must be a minimum of 6 feet. Documentation must accompany the test unit that details the type of sensor used.

The sample luminaires must be energized for a minimum of 24 hours, at 100 percent on-time duty cycle, at a temperature of +70 degrees F before performing any testing.

The luminaire lighting performance must be depreciated for the minimum operating life by using the LED manufacturer's data or the data from the LM-80 test report, whichever results in a higher lumen depreciation.

Failure of the luminaire that renders the unit noncompliant with section 86-6.01 specifications is cause for rejection. If a unit is rejected, allow 30 days for retesting. The retesting period starts when the replacement luminaire is delivered to the test site.

If a luminaire submitted for testing does not comply with section 86-6.01, remove the unit from METS within 5 business days after notification the unit is rejected. If the unit is not removed within that period, the Department may ship the unit to you and deduct the cost.

86-6.01A(4)(b) Warranty

Furnish a 7-year replacement warranty from the manufacturer of the luminaires against any defects or failures. The effective date of the warranty is the date of installation. Furnish replacement luminaires within 10 days after receipt of the failed luminaire. The Department does not pay for the replacement. Deliver replacement luminaires to the following department maintenance electrical shop:

86-6.01B Materials

86-6.01B(1) General

The luminaire must include an assembly that uses LEDs as the light source. The assembly must include a housing, an LED array, and an electronic driver. The luminaire must:

1. Be UL listed under UL 1598A for luminaires in wet locations or an equivalent standard from a recognized testing laboratory
2. Have a minimum operational life of 63,000 hours
3. Operate at an average operating time of 11.5 hours per night
4. Be designed to operate at an average nighttime operating temperature of 70 degrees F
5. Have an operating temperature range from -40 to +130 degrees F

The individual LEDs must be connected such that a catastrophic loss or a failure of 1 LED does not result in the loss of more than 20 percent of the luminous output of the luminaire.

86-6.01B(2) Luminaire Identification

Each luminaire must have the following identification permanently marked inside the unit and outside of its packaging box:

1. Manufacturer's name
2. Trademark
3. Model no.
4. Serial no.
5. Date of manufacture (month-year)
6. Lot number
7. Contract number
8. Rated voltage
9. Rated wattage
10. Rated power in VA

Contract No. _____

Contract Change Order No.____

Sheet No.____ of ____

Add to section 86-8.01:

The contract lump sum prices paid for the following items:

1. Lower Deck Luminaire Layout
2. Upper Deck Luminaire Layout
3. Conduit Layout Plan
4. YBI Substation
5. SCADA System Modification
6. Lower Deck Existing Equipment Removal
7. Upper Deck Existing Equipment Removal

Dist	COUNTY	ROUTE	POST MILES TOTAL PROJECT	SHEET No.	TOTAL SHEETS
04	SF	80	7.7/7.8	1	32

STATE OF CALIFORNIA

DEPARTMENT OF TRANSPORTATION

PROJECT PLANS FOR CONSTRUCTION ON

STATE HIGHWAY

IN THE CITY AND COUNTY OF SAN FRANCISCO ON SAN FRANCISCO-OAKLAND BAY BRIDGE AT YERBA BUENA ISLAND TUNNELS

TO BE SUPPLEMENTED BY STANDARD PLANS DATED MAY 2006

Contract No. _____

Contract Change Order No.____

Sheet No.____ of ____

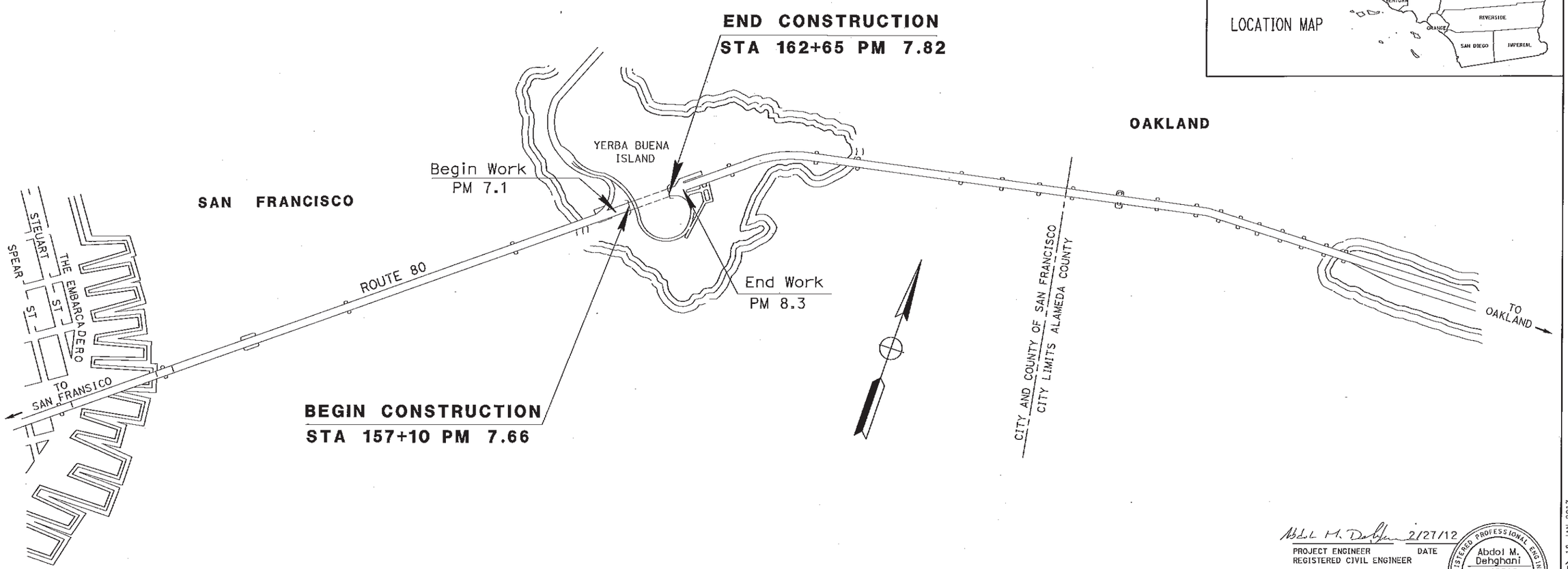

Abdol M. Dehghani 2/27/12

PROJECT ENGINEER DATE
REGISTERED CIVIL ENGINEER

REGISTERED PROFESSIONAL ENGINEER
Abdol M. Dehghani
No. 48216
Exp. 6-30-14
CIVIL
STATE OF CALIFORNIA

FEBRUARY 27,2012
PLANS APPROVAL DATE

THE STATE OF CALIFORNIA OR ITS OFFICERS OR AGENTS SHALL NOT BE RESPONSIBLE FOR THE ACCURACY OR COMPLETENESS OF SCANNED COPIES OF THIS PLAN SHEET.

PROJECT MANAGER: NIDAL TUQAN

DESIGN ENGINEER: ABDOL DEHGHANI

THE CONTRACTOR SHALL POSSESS THE CLASS (OR CLASSES) OF LICENSE AS SPECIFIED IN THE "NOTICE TO BIDDERS."

CONTRACT No.	04-0120S4
PROJECT ID	0400000026

LAST REVISION 01-15-13 | DATE PLOTTED => 18-JAN-2013 TIME PLOTTED => 12:53

Dist	COUNTY	ROUTE	POST MILES TOTAL PROJECT	SHEET No.	TOTAL SHEETS
04	SF	80	7.7/7.8	2	

REGISTERED CIVIL ENGINEER 9/4/12 DATE

PLANS APPROVAL DATE

REGISTERED PROFESSIONAL ENGINEER Jerilyn L. Struven No. 49964 Exp. 12-31-14 CIVIL STATE OF CALIFORNIA

THE STATE OF CALIFORNIA OR ITS OFFICERS OR AGENTS SHALL NOT BE RESPONSIBLE FOR THE ACCURACY OR COMPLETENESS OF SCANNED COPIES OF THIS PLAN SHEET.

NOTES:

1. LOCATION AND POSITION OF CONSTRUCTION AREA SIGNS ARE APPROXIMATE. EXACT LOCATION AND POSITION WILL BE DETERMINED BY THE ENGINEER.
2. CONSTRUCTION AREA SIGNS TO BE STATIONARY MOUNTED.

LEGEND: LEGEND:

[No.] CONSTRUCTION AREA SIGN NUMBER

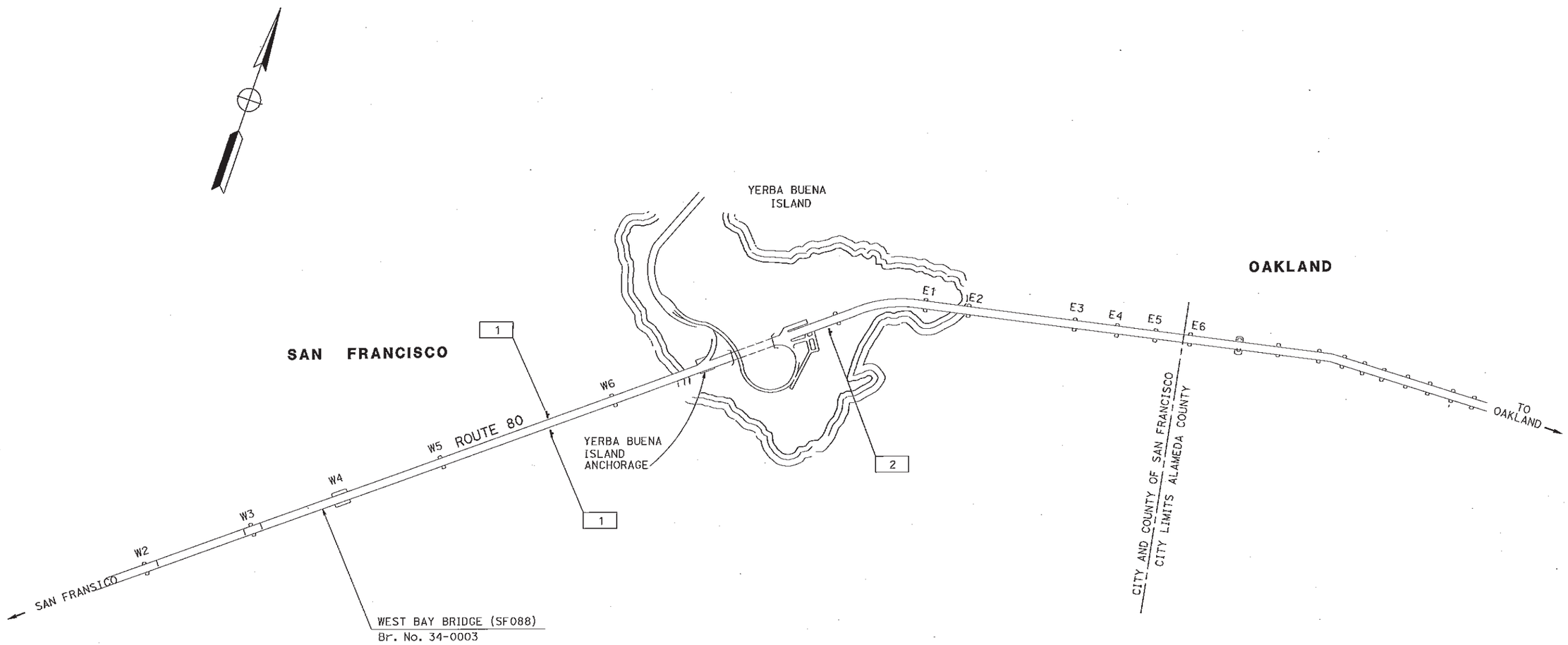

CONSTRUCTION AREA SIGNS

SIGN No.	SIGN CODE	MESSAGE	PANEL SIZE	NUMBER OF POST AND SIZE	QUANTITY
1	W20-1	ROAD WORK AHEAD	36"x 36''	SSBM	2
2	G20-2	END ROAD WORK	36" x 18"	SSBM	1

Contract No. _____

Contract Change Order No.____

Sheet No.____ of ____

CONSTRUCTION AREA SIGNS

NO SCALE

CS-1

STATE OF CALIFORNIA - DEPARTMENT OF TRANSPORTATION

Caltrans®

TRAFFIC

FUNCTIONAL SUPERVISOR: JERILYN L. STRUVEN

CALCULATED-DESIGNED BY: JERILYN L. STRUVEN

CHECKED BY

REVISED BY

DATE REVISED

LAST REVISION 01-18-13

DATE PLOTTED =>

TIME PLOTTED =>

BORDER LAST REVISED 7/2/2010

USERNAME => s135695

DGN FILE => 41g2501o001.dgn

RELATIVE BORDER SCALE IS IN INCHES 0 1 2 3

UNIT 0700

PROJECT NUMBER & PHASE 0400000026

Dist	COUNTY	ROUTE	POST MILES TOTAL PROJECT	SHEET No.	TOTAL SHEETS
04	SF	80	7.7/7.8	3	32

REGISTERED ELECT ENGINEER 8/12/12 DATE

8/12/12
PLANS APPROVAL DATE

REGISTERED PROFESSIONAL ENGINEER R. Hsu No. 17114 Exp. 9-30-07 ELECT STATE OF CALIFORNIA

THE STATE OF CALIFORNIA OR ITS OFFICERS OR AGENTS SHALL NOT BE RESPONSIBLE FOR THE ACCURACY OR COMPLETENESS OF SCANNED COPIES OF THIS PLAN SHEET.

GENERAL NOTES

1. DIMENSIONS SHOWN FOR EXISTING FACILITIES ARE TAKEN FROM CONSTRUCTION DRAWINGS AND MINOR VARIATIONS ARE TO BE ANTICIPATED. THE CONTRACTOR SHALL FIELD VERIFY AND ADJUST ALL DIMENSIONS TO FIT EXISTING CONDITIONS.
2. FOR CLARITY, TWO OR MORE CONDUITS OR CABLES MAY BE SHOWN BY ONE LINE OR RUN. CERTAIN EXISTING CONDUCTORS, EQUIPMENT AND CABLE DETAILS ARE OMITTED FROM THE PLAN FOR CLARITY.
3. ALL CLAMPS, BOXES, FITTINGS AND DEVICES SHALL BE BOLTED TO THE STRUCTURE UNLESS OTHERWISE SPECIFIED OR AS SHOWN ON PLANS.
4. ALL EXPOSED CIRCUIT OR CONDUCTOR CONNECTIONS SHALL BE PROTECTED WITH A CORROSION-INHIBITING COATING.
5. EXACT LOCATIONS OF THE EQUIPMENT MAY BE ADJUSTED TO FIELD CONDITIONS BY THE ENGINEER.
6. THE CONTRACTOR SHALL VERIFY ALL CONTROLLING FIELD DIMENSIONS AND CONDITIONS BEFORE ORDERING OR FABRICATING ANY MATERIALS.
7. ALL HOLES IN CABINETS, CONDUIT BODIES, OR JUNCTION BOXES SHALL BE COVERED WITH THE APPROPRIATE TYPE PLUG FOR THE APPLICATION AFTER ANY CONDUIT, CABLE, OR DEVICE IS REMOVED.
8. WORK SHALL BE STARTING AT THE THRESHOLD ZONE AND ADVANCES TOWARD THE INTERIOR ZONE.

ABBREVIATIONS

AI	ANALOG INPUT MODULE
AIC	AMPERE INTERRUPTING CAPACITY
AI1	ANALOG INPUT 1
ANSI	AMERICAN NATIONAL STANDARDS INSTITUTE
BKR	BREAKER
FL	FOOT-LAMBERTS
CP	CONTROL POWER
DI	DIGITAL INPUT MODULE
DO	DIGITAL OUTPUT MODULE
GFCI	GROUND FAULT CIRCUIT INTERRUPTER
JP-1	JUNCTION BOX NUMBER 1
kVA	KILOVOLT - AMPERES
LC	LUMINANCE SENSOR CABLE
LTF	LIQUID TIGHT FLEXIBLE CONDUIT
Lum	LUMINAIRE
PLC	PROGRAMMABLE LOGIC CONTROLLER
TB	TERMINAL BLOCK
TSP	TWISTED SHIELD PAIR
UPS	UN-INTERRUPTED POWER SUPPLY
DSA,1BN	POWER
112,1F	CONTROL RELAY
BPS	BY-PASS SWITCH
IESN	ILUMINATING ENGINEERING SOCIETY OF NORTH AMERICA
CSA	CANADIAN STANARDS ASSOCIATION

SYMBOLS

- (1) SPECIFIC PROJECT NOTE APPLICABLE TO THAT SHEET ONLY
- 100/3 — 100 A, 3 POLE, CIRCUIT BREAKER
- NORMALLY OPEN CONTACT
- NORMALLY CLOSED CONTACT
- Off / Auto / On — 3 POSITION SELECTOR SWITCH WITH AN AUXILLARY CONTACT GROUND
- 300 — 300 AMPERE FUSE
- CONTROL POWER TRANSFORMER
- (R) — RED PILOT LIGHT
- AS13 — ELECTRICAL CONNECTION OF LIGHTING FIXTURE AS13
- A S — 3 POLE, CONTACTOR LABEL AS
- PULL BOX I (FOR REFERENCE ONLY)
- PROPOSED ELECTRICAL PANEL
- On / Off / Auto — PROPOSED THREE POSITION SELECTOR SWITCH
- (1AN) — PROPOSED CONTACTOR RELAY COIL 1 AN
- On / Off — PROPOSED TWO POSITION SELECTOR SWITCH
- PROPOSED SPST SWITCH
- TRAFFIC DIRECTION
- ● PROPOSED 98 W LED LUMINAIRE
- ○ PROPOSED 98 W LED LUMINAIRE
- ◪ PROPOSED 400 W HID WALL MOUNT METAL HALIDE LUMINAIRE
- □ PROPOSED 400 W HID WALL MOUNT METAL HALIDE LUMINAIRE
- ■ PROPOSED 400 W CEILING MOUNT METAL HALIDE
- [N] NEUTRAL LUG
- □ TERMINATION ON INPUT OR OUTPUT MODULE
- ⊘ TERMINAL BLOCK IN CONTROL PANEL
- [G] GROUND LUG

THIS PLAN IS ACCURATE FOR ELECTRICAL WORK ONLY.

ACRONYM EXPLANATION

EACH ACRONYM DEVIDES INTO THREE SEPARATE SECTIONS

EXAMPLE: D N A

- D → FUNCTION
- N → COMPASS
- A → CIRCUIT NAME OR DEVICE NAME

A,B,C,D = DAY ONLY
X,Y = NIGHT AND DAY
YB = YERBA BUENA
U,UP = UPPER DECK
J = TUNCTION BOX

N = NORTH
S = SOUTH
L = LOWER DECK

A = A CIRCUIT
U = UPS

INDEX

DRAWING No.	TITLE
E-1	GENERAL NOTES ,PROJECT NOTES SYMBOLS ABBREVIATIONS & INDEX
E-2 TO E-4	UPPER DECK LUMINAIRE LAYOUT
E-5 TO E-9	LOWER DECK LUMINAIRE LAYOUT
E-10	CONDUIT LAYOUT PLAN
E-11 TO E-19	LOWER DECK ELECTRICAL DETAILS
E-20 TO E-26	UPPER DECK ELECTRICAL DETAILS
E-27	SUBSTATION WORK
E-28	UPPER DECK EXISTING EQUIPMENT REMOVAL
E-29	LOWER DECK EXISTING EQUIPMENT REMOVAL
E-30	ISOFOOT CANDLE CURVES

PROJECT NOTES:

1. LUMINAIRES SPACING ± 32 FEET TYPICAL
2. LUMINAIRES SPACING ± 16 FEET TYPICAL
3. LUMINAIRES SPACING ± 8 FEET TYPICAL
4. LUMINAIRES SPACING ± 15 FEET TYPICAL
5. LUMINAIRES SPACING ± 7.5 FEET TYPICAL
6. LUMINAIRES SPACING ± 3.75 FEET TYPICAL
7. LUMINAIRES SPACING ± 1.88 FEET TYPICAL

Contract No. _____

Contract Change Order No.____

Sheet No.____ of ____

GENERAL NOTES, PROJECT NOTES, ABBREVIATIONS SYMBOLS AND INDEX

E-1

RT	8/1/12	ROBERT HSU	ROBERT HSU
REVISED BY	DATE REVISED	CALCULATED-DESIGNED BY	CHECKED BY

FUNCTIONAL SUPERVISOR: BEHZAD GOLEMOHAMMADI

STATE OF CALIFORNIA - DEPARTMENT OF TRANSPORTATION

Caltrans ELECTRICAL

LAST REVISION 06-22-11 | DATE PLOTTED => 05-OCT-2012 TIME PLOTTED => 11:12

USERNAME => a134763 | RELATIVE BORDER SCALE 0 1 2 3 | UNIT 0976 | PROJECT NUMBER & PHASE 04000009681

Dist	COUNTY	ROUTE	POST MILES TOTAL PROJECT	SHEET No.	TOTAL SHEETS
04	SF	80	7.7/7.8	4	32

REGISTERED CIVIL ENGINEER 8/12/12 DATE

8/12/12
PLANS APPROVAL DATE

REGISTERED PROFESSIONAL ENGINEER Robert Hsu No. 17114 Exp. 9-30-13 CIVIL STATE OF CALIFORNIA

THE STATE OF CALIFORNIA OR ITS OFFICERS OR AGENTS SHALL NOT BE RESPONSIBLE FOR THE ACCURACY OR COMPLETENESS OF SCANNED COPIES OF THIS PLAN SHEET.

GENERAL NOTES:
(APPLICABLE FROM E-2 TO E-4)

1. SEE E- 26 FOR MOUNTING DETAIL
2. SEE E-20 FOR WIRING DETAIL

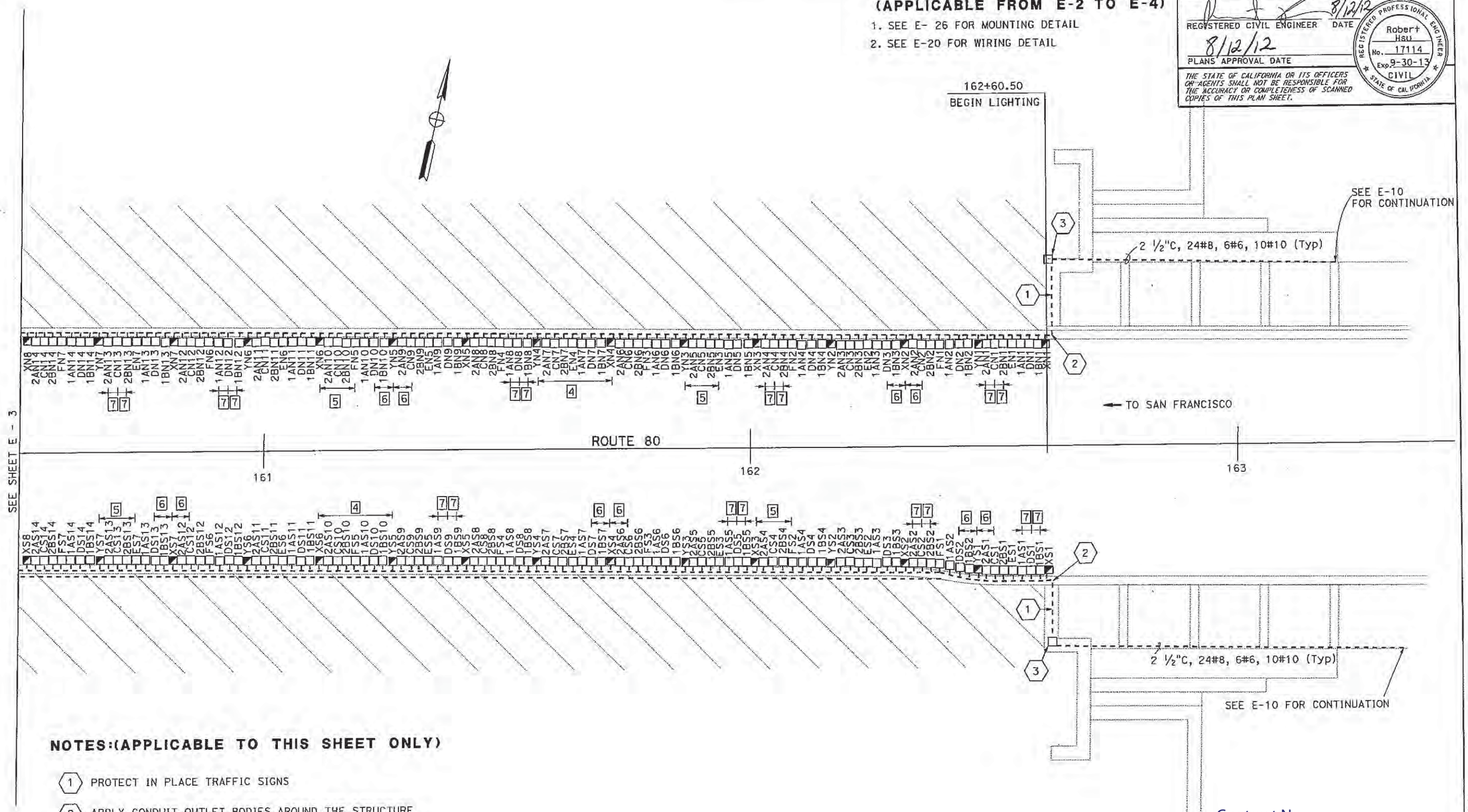

NOTES:(APPLICABLE TO THIS SHEET ONLY)

(1) PROTECT IN PLACE TRAFFIC SIGNS

(2) APPLY CONDUIT OUTLET BODIES AROUND THE STRUCTURE

(3) INSTALL 24" x 24" x 8" JUNCTION BOX

Contract No. _____

Contract Change Order No.____

Sheet No.____ of ____

YBI TUNNEL LIGHTING
UPPER DECK LUMINAIRE LAYOUT

SCALE: 1" = 10'

E-2

APPROVED FOR ELECTRICAL WORK ONLY

FOR NOTES, ABBREVIATIONS AND LEGEND, SEE SHEET E-1

RT	8/1/12	ROBERT HSU	ROBERT HSU
REVISED BY	DATE REVISED	CALCULATED-DESIGNED BY	CHECKED BY

FUNCTIONAL SUPERVISOR: BEHZAD GOLEMOHAMMADI

STATE OF CALIFORNIA - DEPARTMENT OF TRANSPORTATION

Caltrans

ELECTRICAL

LAST REVISION 09-04-12 | DATE PLOTTED => 05-OCT-2012 | TIME PLOTTED => 11:12

USERNAME => s124763 | RELATIVE BORDER SCALE 0 1 2 3 | UNIT 0000 | PROJECT NUMBER & PHASE 04000205941

Dist	COUNTY	ROUTE	POST MILES TOTAL PROJECT	SHEET No.	TOTAL SHEETS
04	SF	80	7.7/7.8	5	32

REGISTERED CIVIL ENGINEER 8/12/12 DATE

8/12/12
PLANS APPROVAL DATE

REGISTERED PROFESSIONAL ENGINEER Robert Hsu No. 17114 Exp. 9-30-13 CIVIL STATE OF CALIFORNIA

THE STATE OF CALIFORNIA OR ITS OFFICERS OR AGENTS SHALL NOT BE RESPONSIBLE FOR THE ACCURACY OR COMPLETENESS OF SCANNED COPIES OF THIS PLAN SHEET.

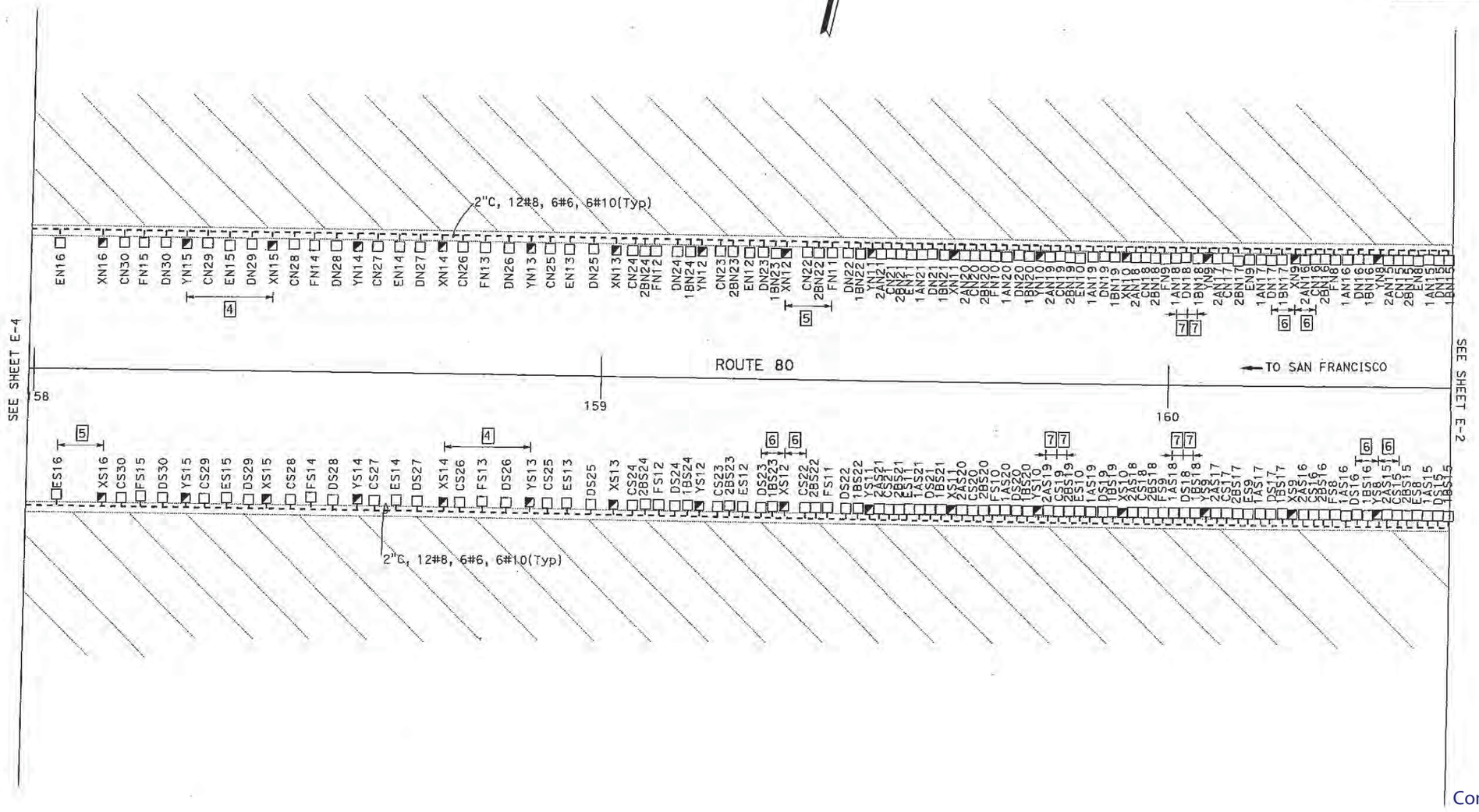

Contract No. _____

Contract Change Order No.____

Sheet No.____ of ____

YBI TUNNEL LIGHTING
UPPER DECK LUMINIRE LAYOUT

SCALE: 1" = 10'

E-3

APPROVED FOR ELECTRICAL WORK ONLY

FOR NOTES, ABBREVIATIONS AND LEGEND, SEE SHEET E-1

CALCULATED-DESIGNED BY	ROBERT HSU	REVISED BY	RT
CHECKED BY	ROBERT HSU	DATE REVISED	8/1/12

FUNCTIONAL SUPERVISOR: BEHZAD GOLEMOHAMMADI

STATE OF CALIFORNIA - DEPARTMENT OF TRANSPORTATION

Caltrans

ELECTRICAL

LAST REVISION 09-04-12 | DATE PLOTTED => 05-OCT-2012 | TIME PLOTTED => 11:13

Dist	COUNTY	ROUTE	POST MILES TOTAL PROJECT	SHEET No.	TOTAL SHEETS
04	SF	80	7.7/7.8	6	32

REGISTERED CIVIL ENGINEER 8/12/12 DATE

8/12/12
PLANS APPROVAL DATE

REGISTERED PROFESSIONAL ENGINEER Robert Hsu No. 17114 Exp. 9-30-13 CIVIL STATE OF CALIFORNIA

THE STATE OF CALIFORNIA OR ITS OFFICERS OR AGENTS SHALL NOT BE RESPONSIBLE FOR THE ACCURACY OR COMPLETENESS OF SCANNED COPIES OF THIS PLAN SHEET.

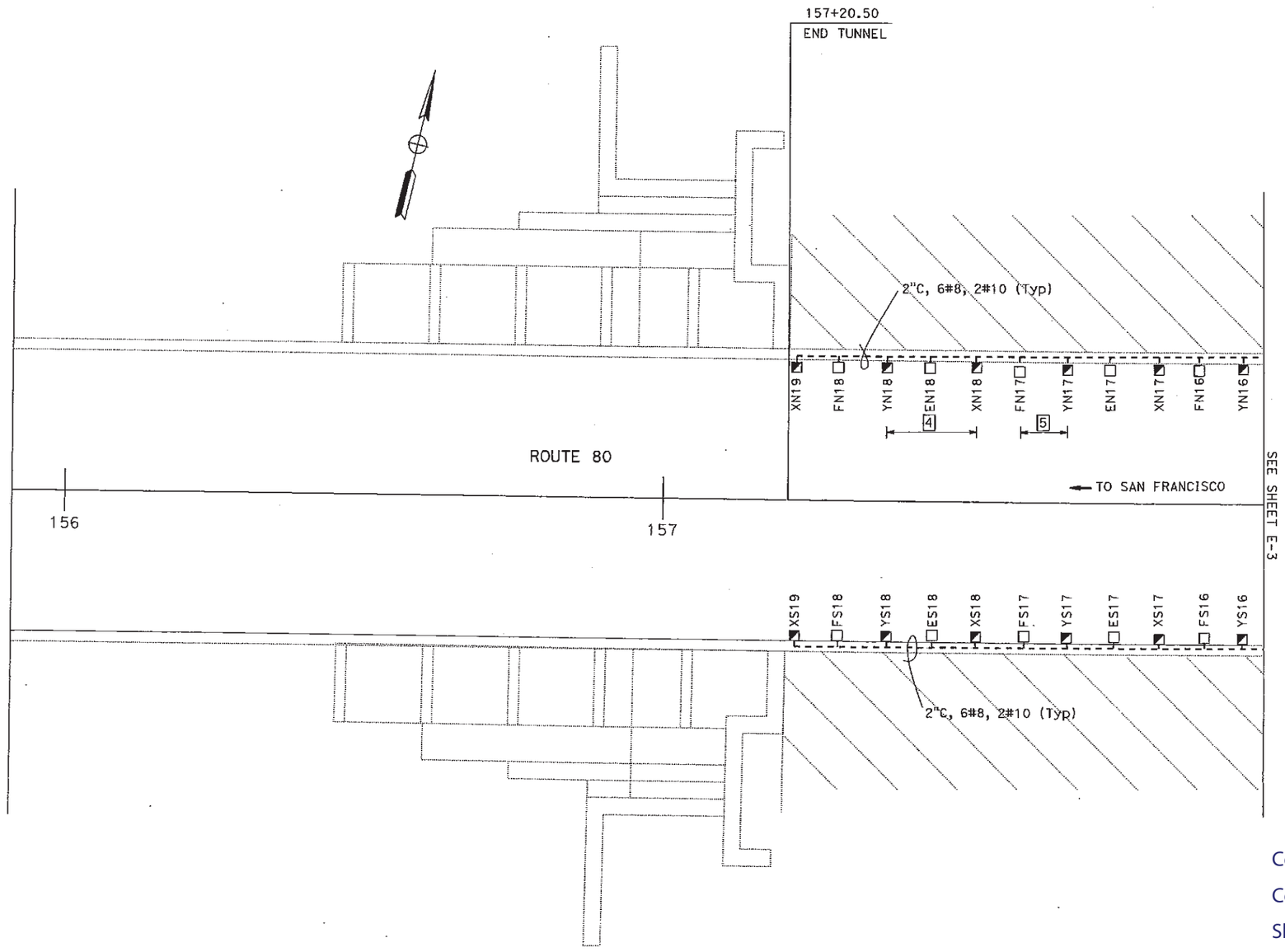

Contract No. _____

Contract Change Order No.____

Sheet No.____ of ____

YBI TUNNEL LIGHTING
UPPER DECK LUMINAIRE LAYOUT

SCALE: 1" = 10'

APPROVED FOR ELECTRICAL WORK ONLY

FOR NOTES, ABBREVIATIONS AND LEGEND, SEE SHEET E-1

E-4

REVISED BY	RT
DATE REVISED	8/1/12
ROBERT HSU	ROBERT HSU
CALCULATED-DESIGNED BY	CHECKED BY
FUNCTIONAL SUPERVISOR	BEHZAD GOLEMOHAMMADI

STATE OF CALIFORNIA - DEPARTMENT OF TRANSPORTATION

Caltrans

ELECTRICAL

LAST REVISION 09-04-12 | DATE PLOTTED => 05-OCT-2012 | TIME PLOTTED => 11:13

Dist	COUNTY	ROUTE	POST MILES TOTAL PROJECT	SHEET No.	TOTAL SHEETS
04	SF	80	7.7/7.8	7	32

REGISTERED CIVIL ENGINEER 8/12/12 DATE

8/12/12
PLANS APPROVAL DATE

REGISTERED PROFESSIONAL ENGINEER Robert Hsu No. 17114 Exp. 9-30-13 CIVIL STATE OF CALIFORNIA

THE STATE OF CALIFORNIA OR ITS OFFICERS OR AGENTS SHALL NOT BE RESPONSIBLE FOR THE ACCURACY OR COMPLETENESS OF SCANNED COPIES OF THIS PLAN SHEET.

GENERAL NOTES:
(APPLICABLE FROM E-5 TO E-9)

1. SEE E- 19 FOR FIXTURE MOUNTING DETAIL
2. SEE E- 11 FOR WIRING DETAIL

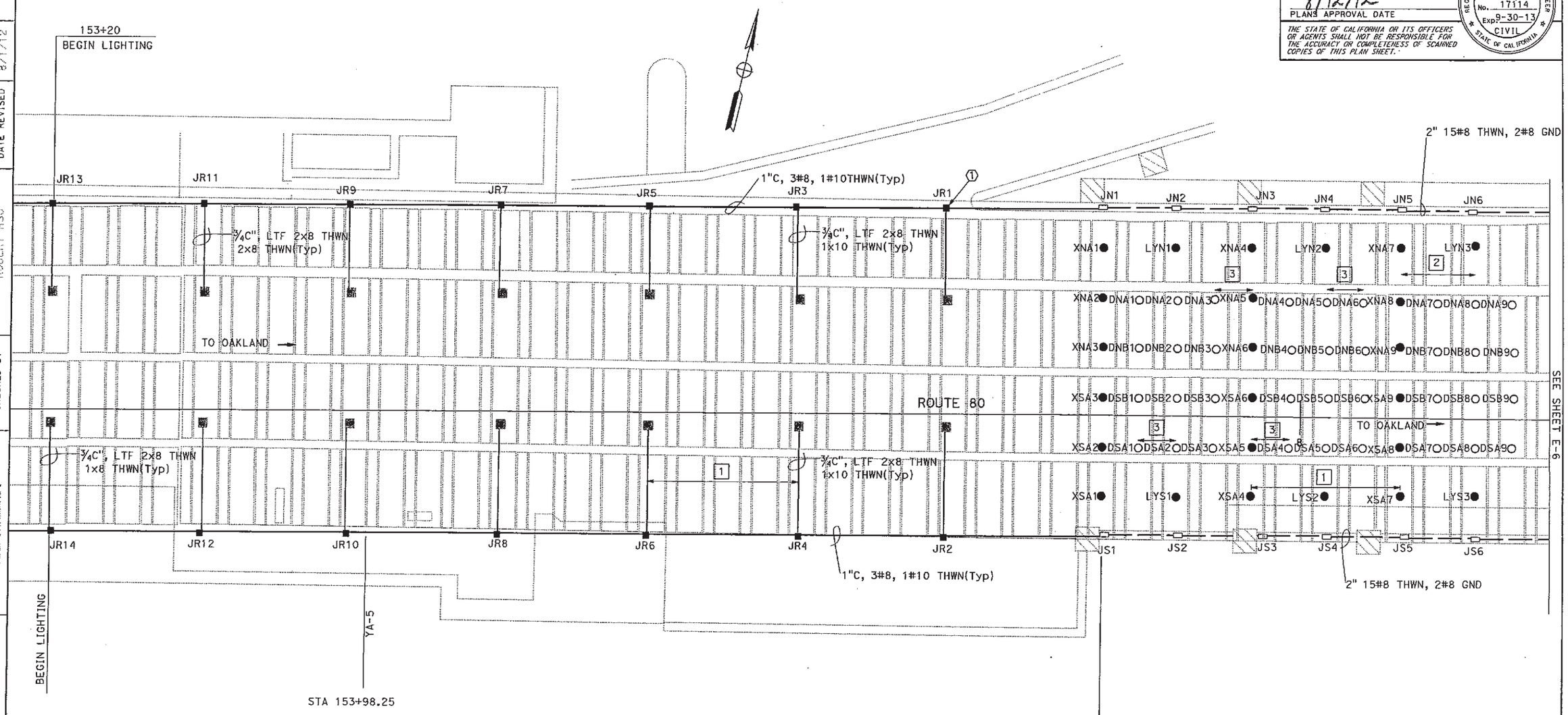

NOTES:(APPLICABLE TO THIS SHEET)

① INSTALL 8"x8"x6" TYPE NEMA 4X JUNCTION BOXES(Typ), FROM JR 1 TO JR14. APPLY TERMINAL BLOCKS FOR WIRE CONNECTION IN EACH BOX.

Contract No. _____

Contract Change Order No.____

Sheet No.____ of ____

YBI TUNNEL LIGHTING
LOWER DECK LUMINAIRE LAYOUT

SCALE: 1" = 10'

APPROVED FOR ELECTRICAL WORK ONLY

FOR NOTES, ABBREVIATIONS AND LEGEND, SEE SHEET E-1

E-5

REVISED BY	DATE REVISED
RT	8/1/12

ROBERT HSU — ROBERT HSU

CALCULATED-DESIGNED BY — CHECKED BY

FUNCTIONAL SUPERVISOR: BEHZAD GOLEMOHAMMADI

STATE OF CALIFORNIA - DEPARTMENT OF TRANSPORTATION

Caltrans

ELECTRICAL

LAST REVISION 09-04-12 — DATE PLOTTED => 05-OCT-2012 TIME PLOTTED => 11:14

BORDER LAST REVISED 7/2/2010 — USERNAME => s124763 — DGN FILE => 41q250ua005.dgn — RELATIVE BORDER SCALE IS IN INCHES 0 1 2 3 — UNIT 0000 — PROJECT NUMBER & PHASE 04000205941

Dist	COUNTY	ROUTE	POST MILES TOTAL PROJECT	SHEET No.	TOTAL SHEETS
04	SF	80	7.7/7.8	8	32

REGISTERED CIVIL ENGINEER DATE 8/12/12

PLANS APPROVAL DATE 8/12/12

REGISTERED PROFESSIONAL ENGINEER Robert Hsu No. 17114 Exp. 9-30-13 CIVIL STATE OF CALIFORNIA

THE STATE OF CALIFORNIA OR ITS OFFICERS OR AGENTS SHALL NOT BE RESPONSIBLE FOR THE ACCURACY OR COMPLETENESS OF SCANNED COPIES OF THIS PLAN SHEET.

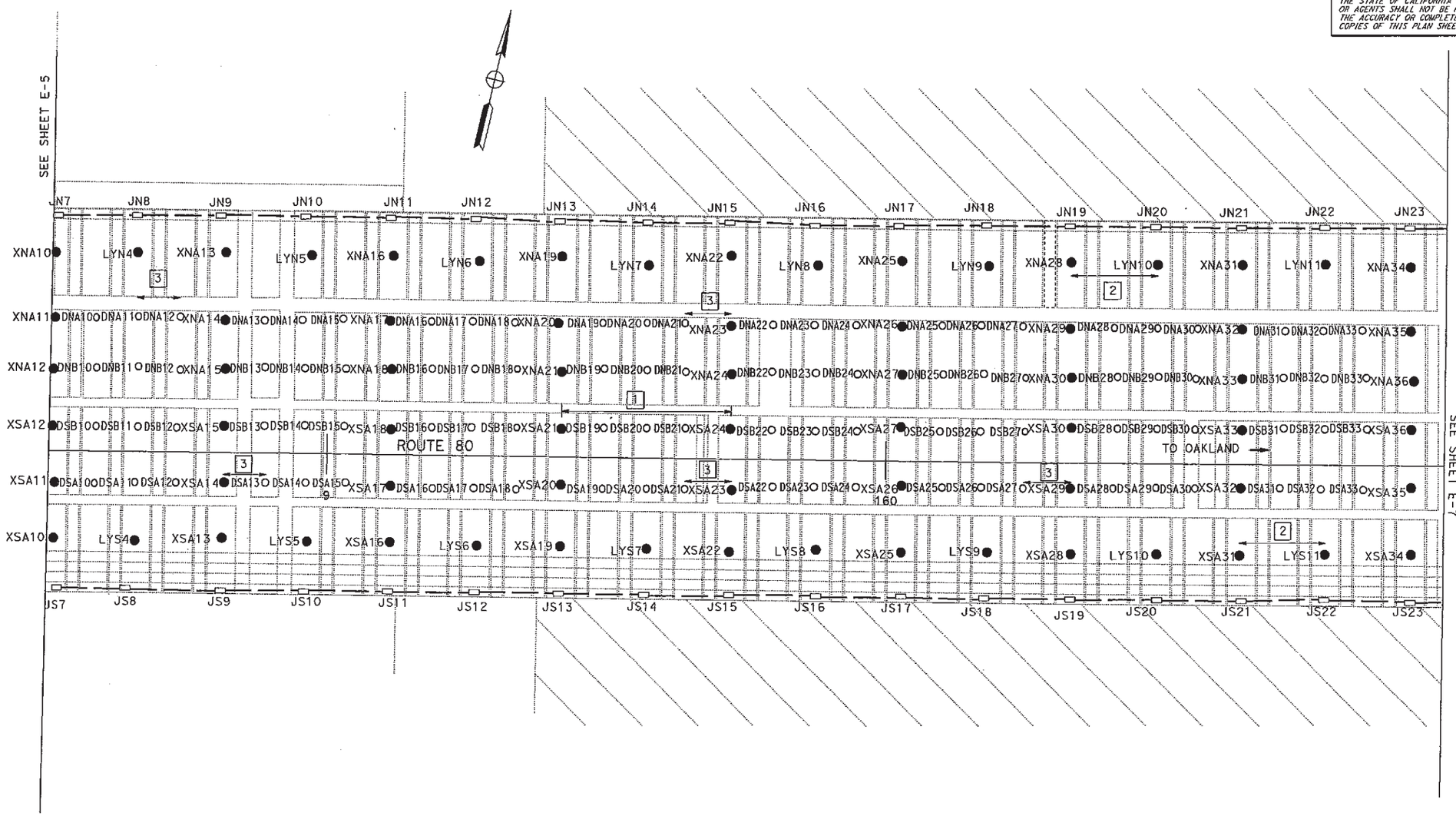

Contract No. _____

Contract Change Order No.____

Sheet No.____ of ____

YBI TUNNEL LIGHTING
LOWER DECK LUMINAIRE LAYOUT

SCALE 1'' = 10'

APPROVED FOR ELECTRICAL WORK ONLY

FOR NOTES, ABBREVIATIONS AND LEGEND, SEE SHEET E-1

E-6

REVISED BY	DATE REVISED
RT	8/1/12

CALCULATED-DESIGNED BY: ROBERT HSU
CHECKED BY: ROBERT HSU

FUNCTIONAL SUPERVISOR: BEHZAD GOLEMOHAMMADI

STATE OF CALIFORNIA - DEPARTMENT OF TRANSPORTATION
Caltrans
ELECTRICAL

LAST REVISION 09-04-12
DATE PLOTTED => 05-OCT-2012
TIME PLOTTED => 11:14

Dist	COUNTY	ROUTE	POST MILES TOTAL PROJECT	SHEET No.	TOTAL SHEETS
04	SF	80	7.7/7.8	9	32

REGISTERED CIVIL ENGINEER 8/12/12 DATE

8/12/12
PLANS APPROVAL DATE

REGISTERED PROFESSIONAL ENGINEER Robert Hsu No. 17114 Exp. 9-30-13 CIVIL STATE OF CALIFORNIA

THE STATE OF CALIFORNIA OR ITS OFFICERS OR AGENTS SHALL NOT BE RESPONSIBLE FOR THE ACCURACY OR COMPLETENESS OF SCANNED COPIES OF THIS PLAN SHEET.

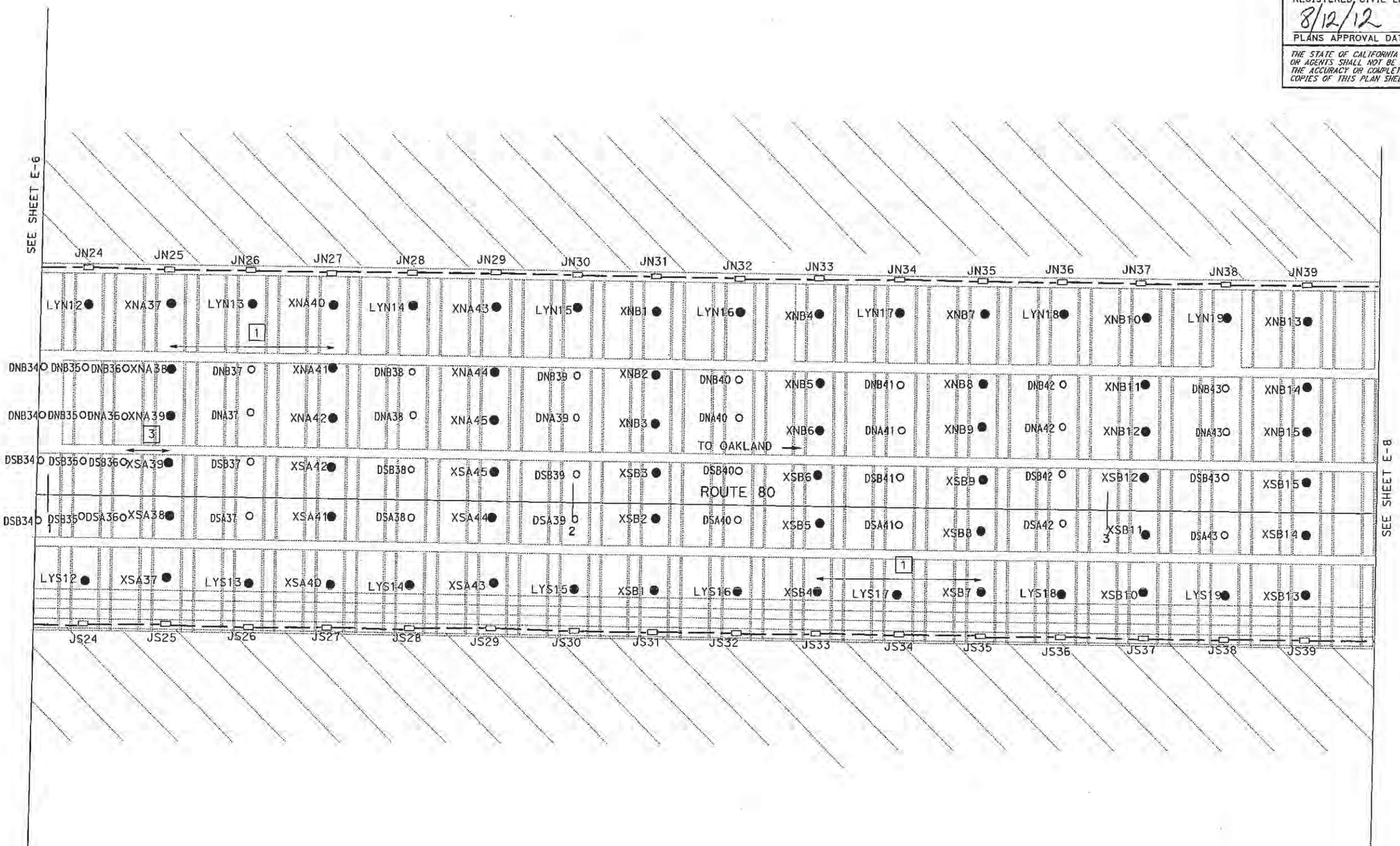

Contract No. _____

Contract Change Order No.____

Sheet No.____ of ____

YBI TUNNEL LIGHTING
LOWER DECK LUMINAIRE LAYOUT

SCALE 1" = 10'

APPROVED FOR ELECTRICAL WORK ONLY

FOR NOTES, ABBREVIATIONS AND LEGEND, SEE SHEET E-1

E-7

		RT	8/1/12
CALCULATED-DESIGNED BY	ROBERT HSU	REVISED BY	DATE REVISED
CHECKED BY	ROBERT HSU		

FUNCTIONAL SUPERVISOR: BEHZAD GOLEMOHAMMADI

STATE OF CALIFORNIA - DEPARTMENT OF TRANSPORTATION

Caltrans

ELECTRICAL

LAST REVISION 09-04-12 | DATE PLOTTED => 05-OCT-2012 | TIME PLOTTED => 11:14

Dist	COUNTY	ROUTE	POST MILES TOTAL PROJECT	SHEET No.	TOTAL SHEETS
04	SF	80	7.7/7.8	10	32

REGISTERED CIVIL ENGINEER 8/12/12 DATE

8/12/12
PLANS APPROVAL DATE

REGISTERED PROFESSIONAL ENGINEER Robert Hsu No. 17114 Exp. 9-30-13 CIVIL STATE OF CALIFORNIA

THE STATE OF CALIFORNIA OR ITS OFFICERS OR AGENTS SHALL NOT BE RESPONSIBLE FOR THE ACCURACY OR COMPLETENESS OF SCANNED COPIES OF THIS PLAN SHEET.

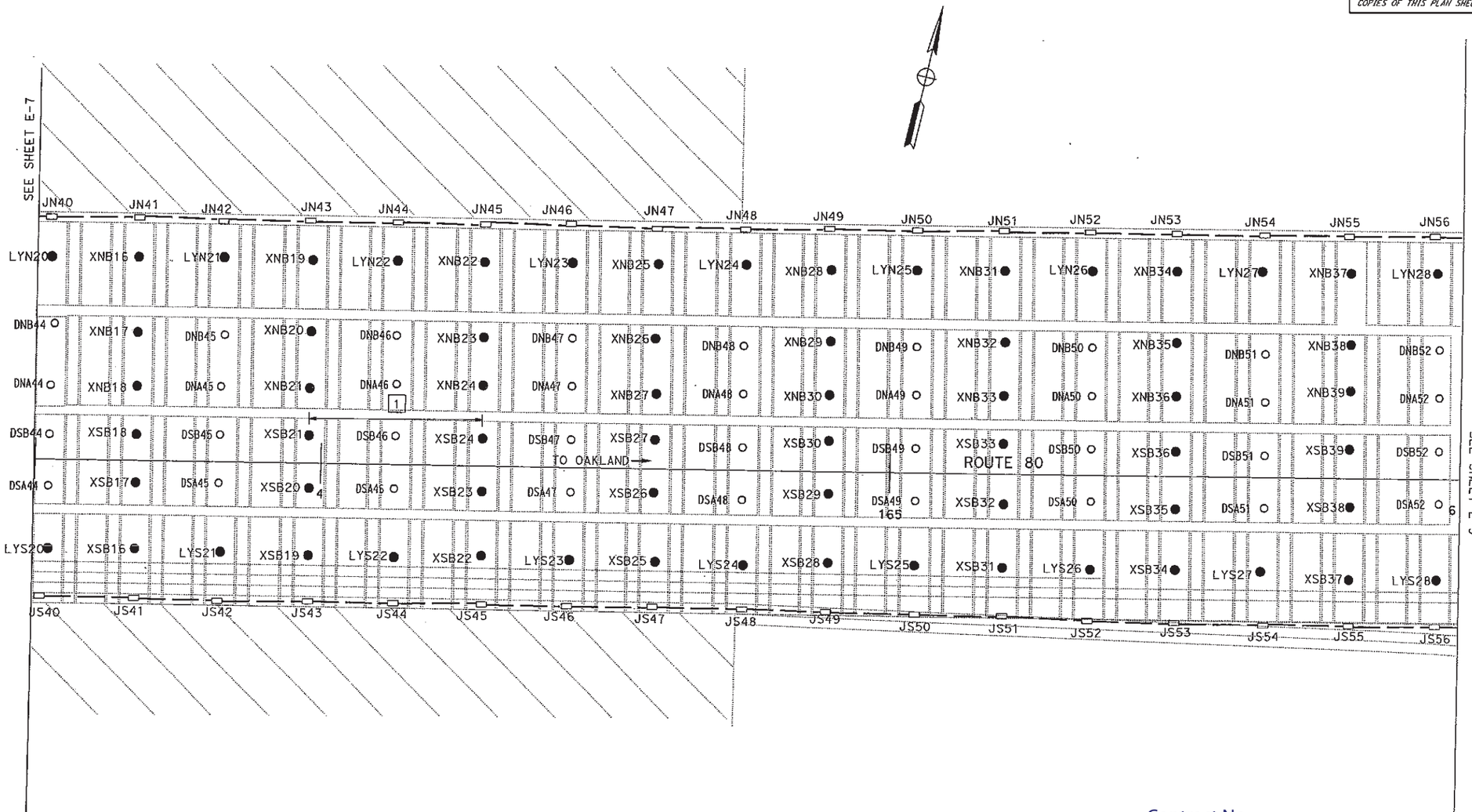

Contract No. _____

Contract Change Order No.____

Sheet No.____ of ____

YBI TUNNEL LIGHTING
LOWER DECK LUMINAIRE LAYOUT

SCALE: 1" = 10'

E-8

FOR NOTES, ABBREVIATIONS AND LEGEND, SEE SHEET E-1

APPROVED FOR ELECTRICAL WORK ONLY

REVISED BY	RT
DATE REVISED	8/1/12
CALCULATED-DESIGNED BY	ROBERT HSU
CHECKED BY	ROBERT HSU
FUNCTIONAL SUPERVISOR	BEHZAD GOLEMOHAMMADI

STATE OF CALIFORNIA - DEPARTMENT OF TRANSPORTATION

Caltrans

ELECTRICAL

LAST REVISION 09-04-12 | DATE PLOTTED => 05-OCT-2012 TIME PLOTTED => 11:15

Dist	COUNTY	ROUTE	POST MILES TOTAL PROJECT	SHEET No.	TOTAL SHEETS
04	SF	80	7.7/7.8	11	32

REGISTERED CIVIL ENGINEER 8/12/12 DATE

8/12/12

PLANS APPROVAL DATE

REGISTERED PROFESSIONAL ENGINEER Robert Hsu No. 17114 Exp. 9-30-13 CIVIL STATE OF CALIFORNIA

THE STATE OF CALIFORNIA OR ITS OFFICERS OR AGENTS SHALL NOT BE RESPONSIBLE FOR THE ACCURACY OR COMPLETENESS OF SCANNED COPIES OF THIS PLAN SHEET.

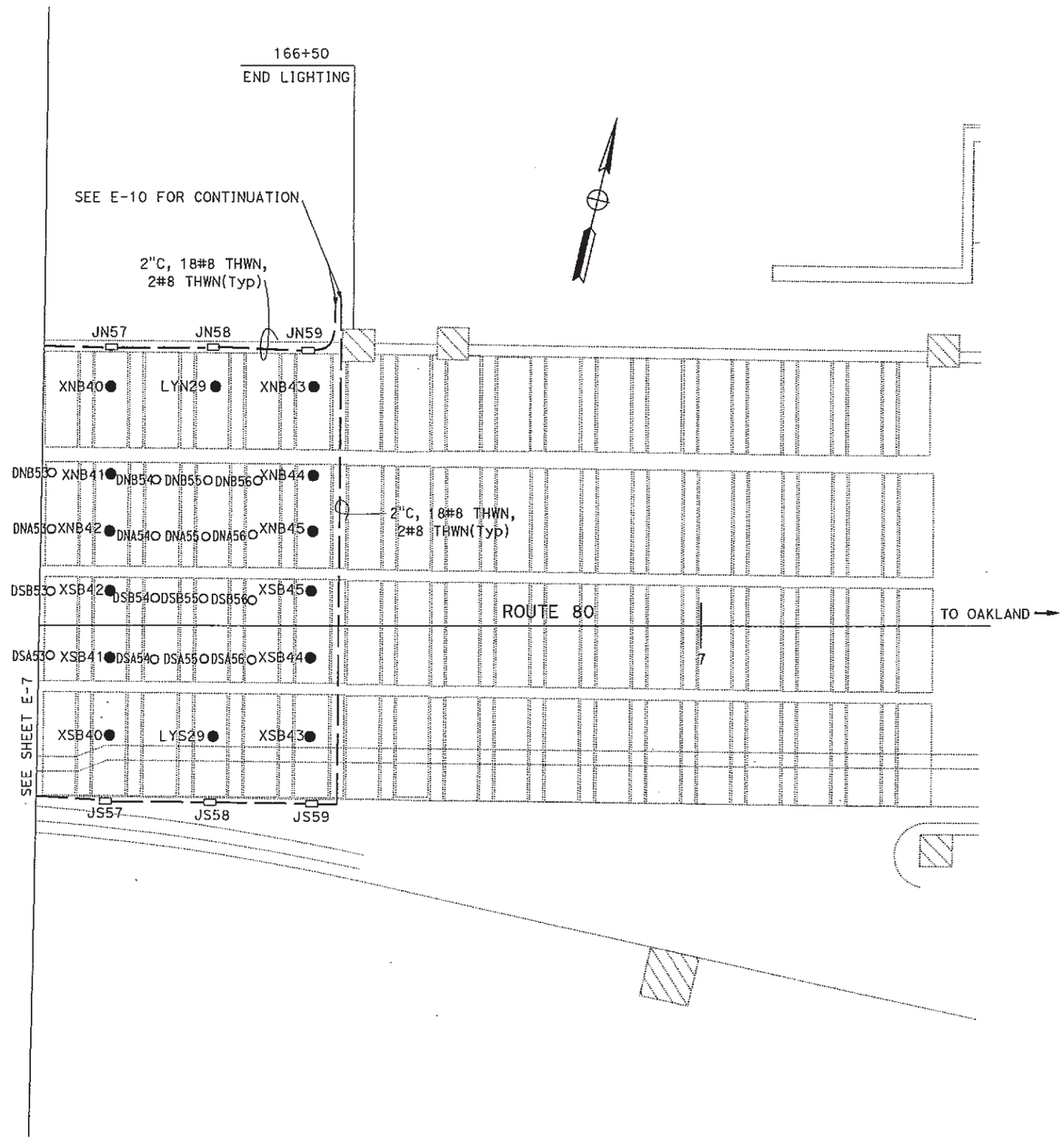

Contract No. _____

Contract Change Order No.____

Sheet No.____ of ____

YBI TUNNEL LIGHTING
LOWER DECK LUMINAIRE LAYOUT

SCALE: 1" = 10'

APPROVED FOR ELECTRICAL WORK ONLY

FOR NOTES, ABBREVIATIONS AND LEGEND, SEE SHEET E-1

E-9

STATE OF CALIFORNIA - DEPARTMENT OF TRANSPORTATION	ELECTRICAL	FUNCTIONAL SUPERVISOR BEHZAD GOLEMOHAMMADI	CALCULATED-DESIGNED BY ROBERT HSU
			CHECKED BY ROBERT HSU
			REVISED BY RT
			DATE REVISED 8/1/12

LAST REVISION 09-04-12 DATE PLOTTED => 05-OCT-2012 TIME PLOTTED => 11:15

Dist	COUNTY	ROUTE	POST MILES TOTAL PROJECT	SHEET No.	TOTAL SHEETS
04	SF	80	7.7/7.8	12	32

REGISTERED CIVIL ENGINEER 8/12/12 DATE

8/12/12
PLANS APPROVAL DATE

REGISTERED PROFESSIONAL ENGINEER Robert Hsu No. 17114 Exp. 9-30-13 CIVIL STATE OF CALIFORNIA

THE STATE OF CALIFORNIA OR ITS OFFICERS OR AGENTS SHALL NOT BE RESPONSIBLE FOR THE ACCURACY OR COMPLETENESS OF SCANNED COPIES OF THIS PLAN SHEET.

GENERAL NOTE:

CONTRACTOR APPLIES PULL BOXES AND SHAPES OF CONDUIT BODIES ACCORDINGLY
TO PULL THROUGH CONDUCTORS WITHOUT DAMAGING WUIRES, SUBMIT THE FINAL WORK TO RESIDENT ENGINEER FOR THE APPROVAL.

NOTES:

1. CORE DRILL 2- 2 ½"C, 2-2C" AND 1¼"C, AND 1" C THROUGH THE WALL.
2. INSTALL 2-2½"C, 2-2"C AND 1¼"C, AND LAID UNDER SOIL.
3. INSTALL PHOTOELECTRIC UNIT ON THE ROOF OF THE SUBSTATION
4. HANG 2-2"C AND 2½"C UNDER THE STRUCTURE.
5. INSTALL LUMINANCE SENSOR ON THE POLE CONSULT RESIDENT ENGINEER FOR THE MOUNTING DETAIL.

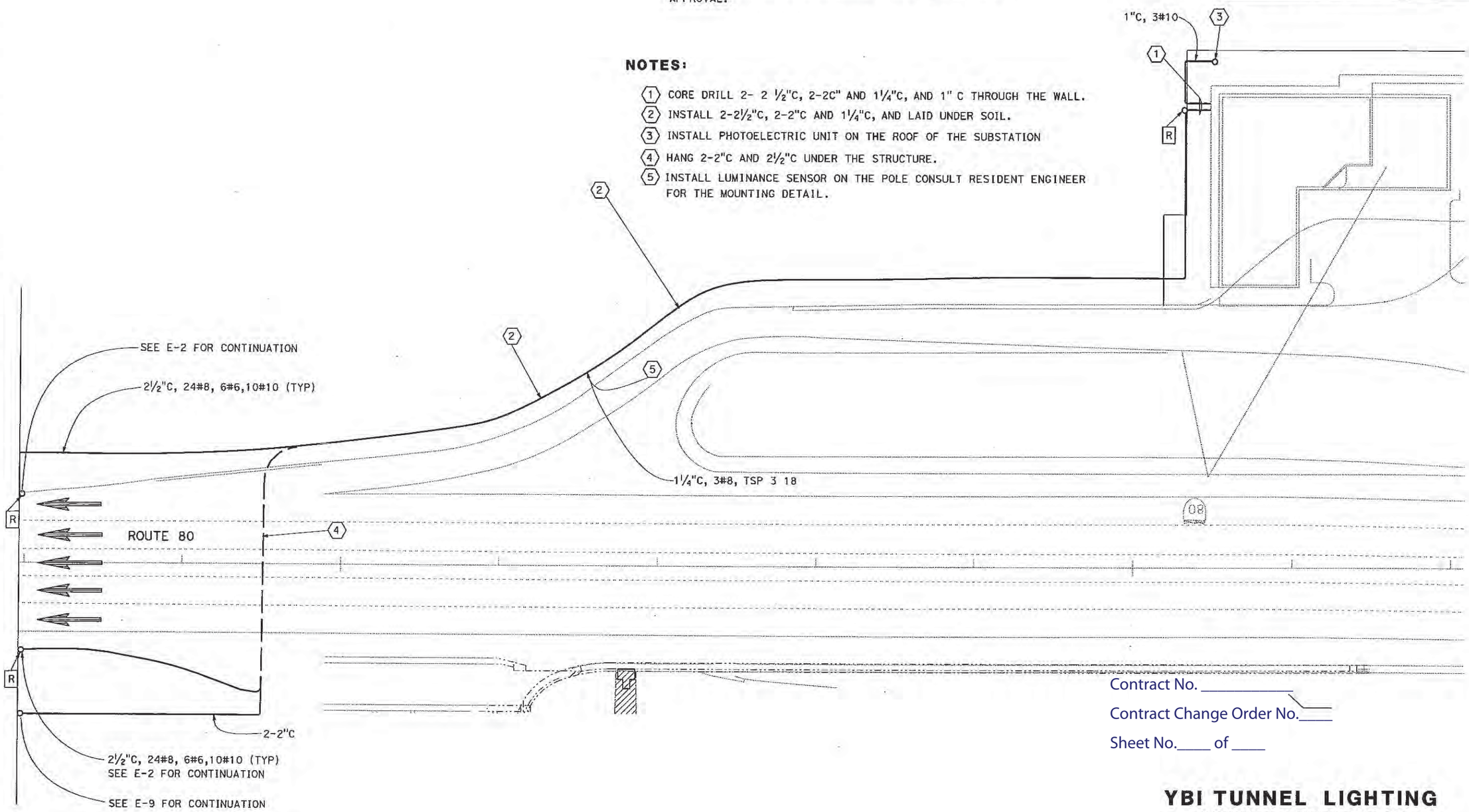

Contract No. _____

Contract Change Order No.____

Sheet No.____ of ____

YBI TUNNEL LIGHTING
CONDUIT LAYOUT PLAN
No. SCALE

E-10

STATE OF CALIFORNIA - DEPARTMENT OF TRANSPORTATION
Caltrans
ELECTRICAL

FUNCTIONAL SUPERVISOR: BEHZAD GOLEMOHAMMADI

CALCULATED-DESIGNED BY: ROBERT HSU
CHECKED BY: ROBERT HSU

REVISED BY: RT
DATE REVISED: 8/1/12

LAST REVISION: 09-25-12
DATE PLOTTED => 05-OCT-2012
TIME PLOTTED => 13:23

Dist	COUNTY	ROUTE	POST MILES TOTAL PROJECT	SHEET No.	TOTAL SHEETS
04	Ala	80	7.72/7.82	13	32

REGISTERED ELECTRICAL ENGINEER 8/12/12 DATE

8/12/12
PLANS APPROVAL DATE

REGISTERED PROFESSIONAL ENGINEER Robert Hsu No. 17114 Exp. 9-30-13 ELECT STATE OF CALIFORNIA

THE STATE OF CALIFORNIA OR ITS OFFICERS OR AGENTS SHALL NOT BE RESPONSIBLE FOR THE ACCURACY OR COMPLETENESS OF SCANNED COPIES OF THIS PLAN SHEET.

NOTES: (APPLICABLE TO THIS SHEET ONLY)

1. FOR NAME PLATE SCHEDULE DETAIL, SEE SHEET E-14
2. FOR PANEL WIRING DETAIL, SEE SHEET E-12
3. FOR PANEL YBU SCHEDULE, SEE SHEET E-16
4. FOR NAME PLATE SCHEDULE, SEE SHEET E-14

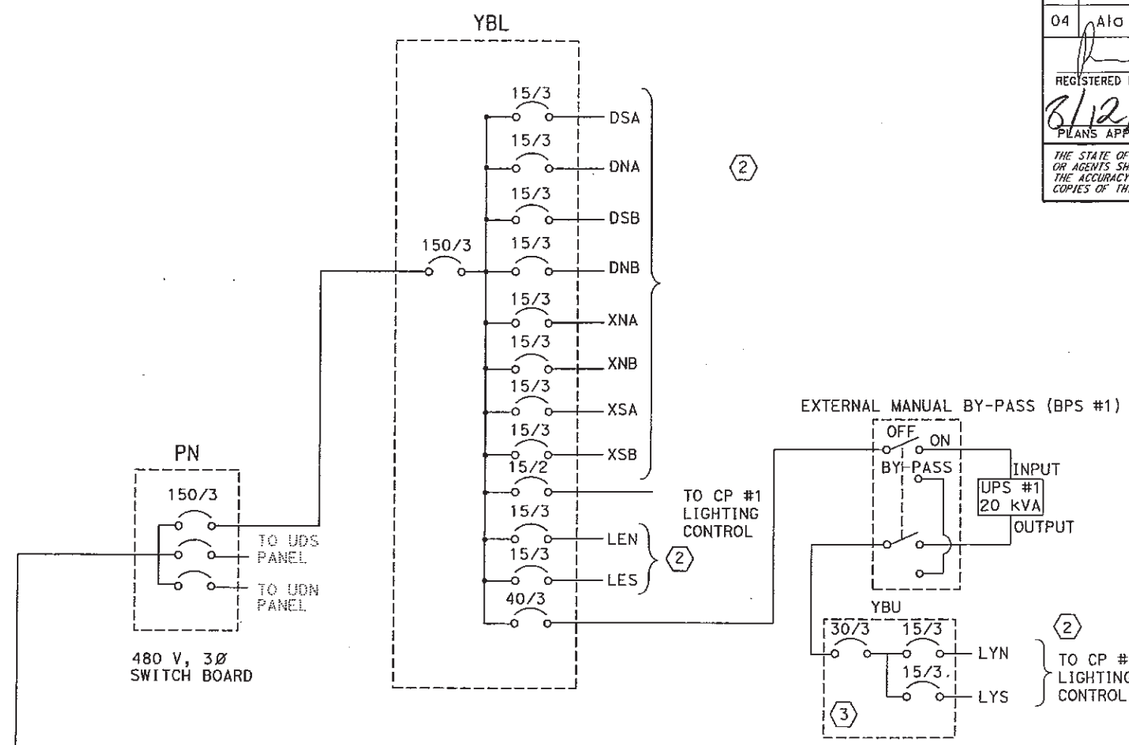

FROM 480 V, 3Ø 600A CIRCUIT BREAKER IN SWITCH BOARD

PANEL YBL		480 VOLT	3 PHASE		
CIRCUIT BREAKER		DESCRIPTION (1)	LOAD		
No.	AMPERE / POLE		AB	AC	BC
1	15 / 3	TUNNEL LIGHTING CIRCUIT DSA	5400		
3		TUNNEL LIGHTING CIRCUIT DSA		5400	
5		TUNNEL LIGHTING CIRCUIT DSA			5200
7	15 / 3	TUNNEL LIGHTING CIRCUIT DSB	5400		
9		TUNNEL LIGHTING CIRCUIT DSB		5400	
11		TUNNEL LIGHTING CIRCUIT DSB			5200
13	15 / 3	TUNNEL LIGHTING CIRCUIT XSA	4338		
15		TUNNEL LIGHTING CIRCUIT XSA		4338	
17		TUNNEL LIGHTING CIRCUIT XSA			4338
19	40 / 3	UPS #1 POWER	12000		
21		UPS #1 POWER		12000	
23		UPS #1 POWER			12000
25	15 / 3	TUNNEL LIGHTING CIRCUIT XSB	4338		
27		TUNNEL LIGHTING CIRCUIT XSB		4338	
29		TUNNEL LIGHTING CIRCUIT XSB			4338
31	15 / 3	TUNNEL LIGHTING CIRCUIT LES	2360		
33		TUNNEL LIGHTING CIRCUIT LES		2360	
35		TUNNEL LIGHTING CIRCUIT LES			2360
2	15 / 3	TUNNEL LIGHTING CIRCUIT DNA	5400		
4		TUNNEL LIGHTING CIRCUIT DNA		5400	
6		TUNNEL LIGHTING CIRCUIT DNA			5200
8	15 / 3	TUNNEL LIGHTING CIRCUIT DNB	5400		
10		TUNNEL LIGHTING CIRCUIT DNB		5400	
12		TUNNEL LIGHTING CIRCUIT DNB			5200
14	15 / 3	TUNNEL LIGHTING CIRCUIT XNA	4338		
16		TUNNEL LIGHTING CIRCUIT XNA		4338	
18		TUNNEL LIGHTING CIRCUIT XNA			4338
20	15 / 3	TUNNEL LIGHTING CIRCUIT XNB	4338		
22		TUNNEL LIGHTING CIRCUIT XNB		4338	
24		TUNNEL LIGHTING CIRCUIT XNB			4338
26	15 / 2	LIGHTING CONTRUL CP#1	1000		
28		LIGHTING CONTRUL CP#1		1000	
30					
32	15 / 3	TUNNEL LIGHTING CIRCUIT LEN	2360		
34		TUNNEL LIGHTING CIRCUIT LEN		2360	
36		TUNNEL LIGHTING CIRCUIT LEN			2360
		TOTAL LINE TO LINE kVA	58	58	56
TOTAL kVA 100		MAIN BREAKER 150 A	TOP		
FEEDER 3/0 THWN			BOTTOM		X
NEMA 1		65 KAIC FULLY LOAD			

PANEL TABLE

PANEL PN		480 VOLT	3 PHASE		
CIRCUIT BREAKER		DESCRIPTION (4)	LOAD		
No.	AMPERE / POLE		AB	AC	BC
1	200 / 3	MAIN DISCONNECT UDS	80K		
3				80K	
5					80K
7	150 / 3	MAIN DISCONNECT YBL	58K		
9				58K	
11					58K
2	200 / 3	MAIN DISCONNECT UDN	64K		
4				64K	
6					64K
		TOTAL LINE TO LINE kVA			
TOTAL kVA			TOP		
FEEDER 1500 kcmil THWN			BOTTOM		X
NEMA 1		65 KAIC FULLY LOAD			

PANEL TABLE PN

Contract No. _____

Contract Change Order No.____

Sheet No.____ of ____

YBI TUNNEL LIGHTING
SINGLE LINE DIAGRAM, PANEL TABLE

NO SCALE

E-11

STATE OF CALIFORNIA - DEPARTMENT OF TRANSPORTATION
Caltrans
ELECTRICAL

FUNCTIONAL SUPERVISOR: BEHZAD GOLEMOHAMMADI

CALCULATED-DESIGNED BY: ROBERT HSU
CHECKED BY: ROBERT HSU

REVISED BY: RT
DATE REVISED: 8/1/12

LAST REVISION 08-08-12
DATE PLOTTED => 05-OCT-2012
TIME PLOTTED => 11:16

Dist	COUNTY	ROUTE	POST MILES TOTAL PROJECT	SHEET No.	TOTAL SHEETS
04	SF	80	7.7/7.8	14	32

REGISTERED ELECTRICAL ENGINEER 8/12/12 DATE

8/12/12
PLANS APPROVAL DATE

REGISTERED PROFESSIONAL ENGINEER Robert Hsu No. 17114 Exp. 9-30-13 ELECT STATE OF CALIFORNIA

THE STATE OF CALIFORNIA OR ITS OFFICERS OR AGENTS SHALL NOT BE RESPONSIBLE FOR THE ACCURACY OR COMPLETENESS OF SCANNED COPIES OF THIS PLAN SHEET.

NOTES: (APPLICABLE TO THIS SHEET ONLY)

1. SCHEMATIC TABLE FOR EACH CIRCUIT, SEE SHEET E-15, E- 17 , AND E-18
2. TYPICAL CONNECTION BETWEEN NEUTRAL AND GROUND ON THE BACKPLATE OF PANEL ENCLOSURE.
3. CONNECT GROUND WIRES TO ALL JUNCTION BOXES, SEE SHEET E-17
4. FOR CP#1 WIRING DETAIL, SEE SHEET E-13

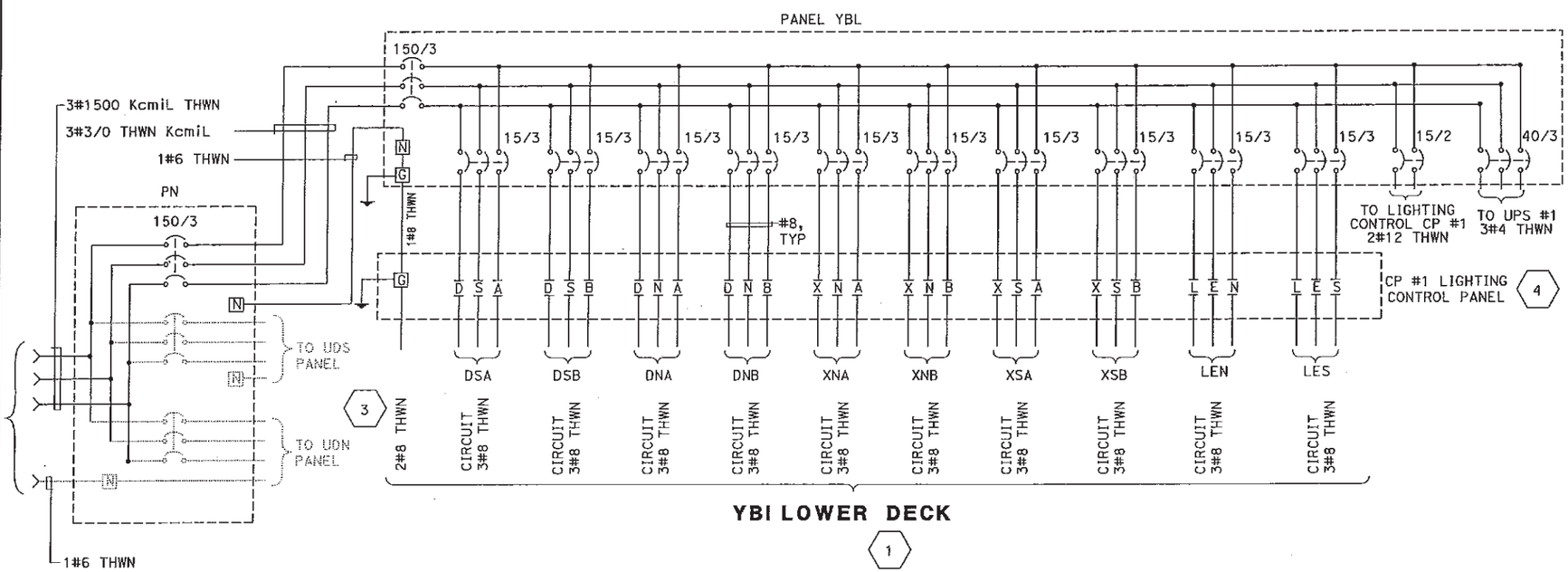

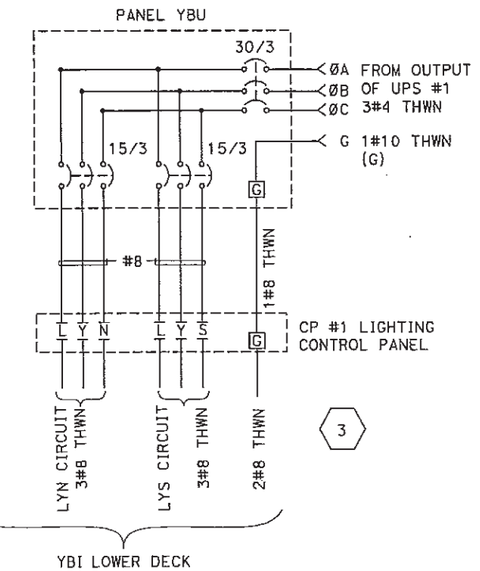

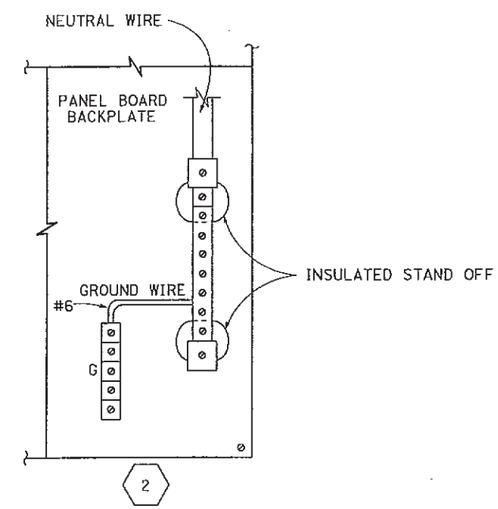

Contract No. _____

Contract Change Order No.____

Sheet No.____ of ____

YBI TUNNEL LIGHTING
WIRING DETAIL
NO SCALE

E-12

STATE OF CALIFORNIA - DEPARTMENT OF TRANSPORTATION
Caltrans
ELECTRICAL

FUNCTIONAL SUPERVISOR BEHZAD GOLEMOHAMMADI
CALCULATED-DESIGNED BY ROBERT HSU
CHECKED BY ROBERT HSU
REVISED BY RT
DATE REVISED 8/1/12

LAST REVISION 08-08-12
DATE PLOTTED => 05-OCT-2012
TIME PLOTTED => 11:16

BORDER LAST REVISED 4/11/2008
RELATIVE BORDER SCALE IS IN INCHES 0 1 2 3
USERNAME => s124763
DGN FILE => 41a250ua012.dgn
CU 04242
EA 163741

Dist	COUNTY	ROUTE	POST MILES TOTAL PROJECT	SHEET No.	TOTAL SHEETS
04	SF	80	7.7/7.8	15	32

REGISTERED ELECTRICAL ENGINEER — DATE 8/12/12

PLANS APPROVAL DATE 8/12/12

REGISTERED PROFESSIONAL ENGINEER — Robert Hsu — No. 17114 — Exp. 9-30-13 — ELECT — STATE OF CALIFORNIA

THE STATE OF CALIFORNIA OR ITS OFFICERS OR AGENTS SHALL NOT BE RESPONSIBLE FOR THE ACCURACY OR COMPLETENESS OF SCANNED COPIES OF THIS PLAN SHEET.

GENERAL NOTE: (APPLICABLE TO THIS SHEET ONLY)

FOR CP#1 ENCLOSURE, SEE E-14

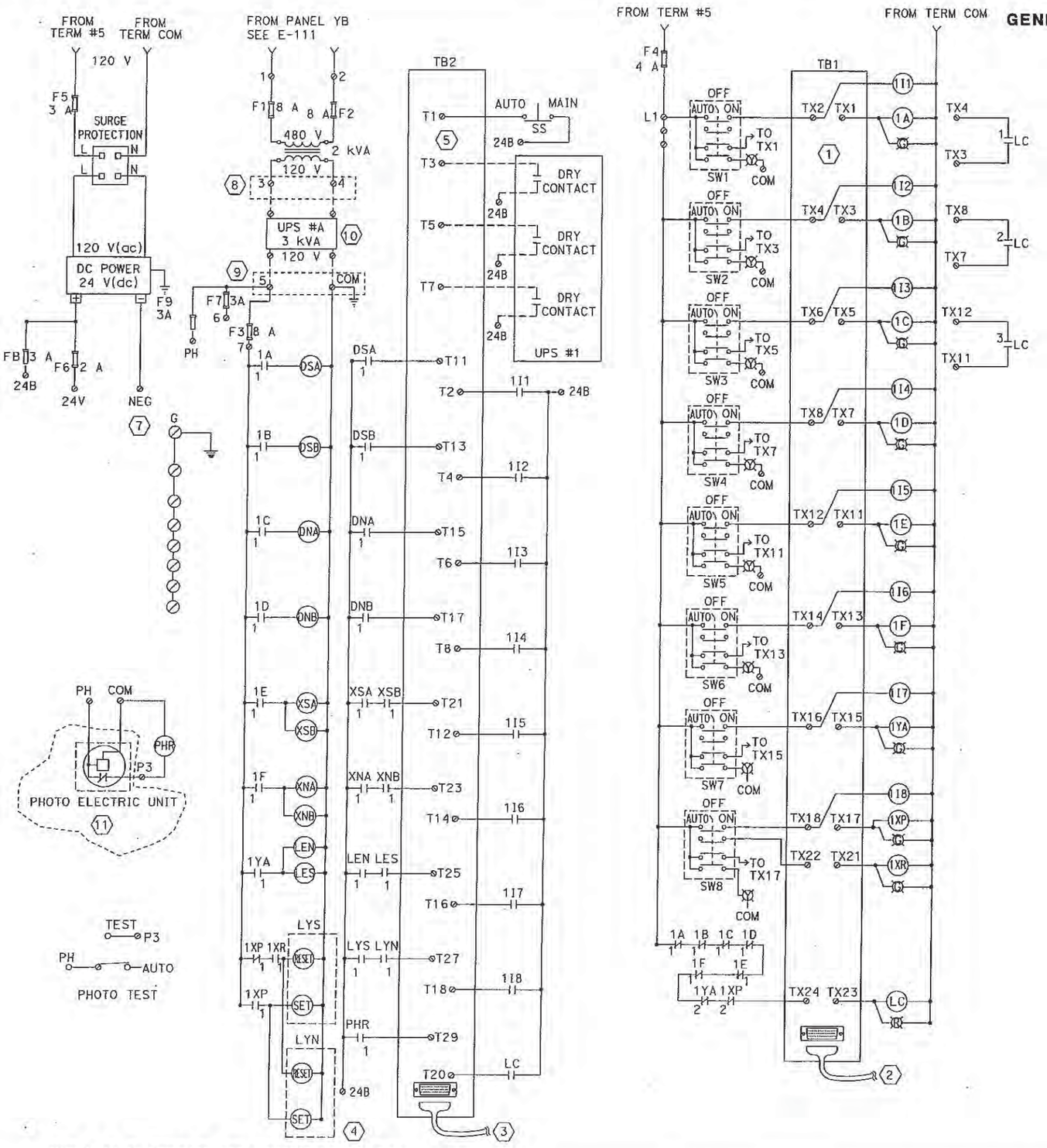

NOTES: (APPLICABLE TO THIS SHEET ONLY)

1. TB1 SHALL BE A DISCRETE 16 POINTS OF OUTPUT BLOCK, INDIVIDUALLY FUSED.
2. APPLY HIGH POWER SYSTEM CABLE AT RATED 2 A PER POINT TO DO MODULE, 12' CABLE LENGTH MINIMUM.
3. APPLY STANDARD POWER SYSTEM CABLE AT RATED 0.5 A PER POINT TO DI MODULE, 12' MINIMUM.
4. MECHANICALLY HELD CONTACTOR IS REQUIRED ADDITIONAL 110 VOLT SIGNAL TO RESET THE CIRCUIT.
5. TB2 SHALL BE A 32 POINTS OF INPUT BLOCK.
6. CONNECT THE CABLE TO AN ETHERNET SWITCH #2 OF THE SCADA CABINET. SEE E-27
7. CONNECT 'NEG' TERMINAL TO GROUP COMMON ON TB2.
8. INSTALL A SINGLE 120 V(ac) RECEPTACLE INSIDE THE ENCLOSURE.
9. INSTALL A 120 Vac POWER CORE, 12' LONG MINIMUM IN LENGTH.
10. UPS SHALL BE PROVIDED WITH A 12' LONG OF 120 V(ac) POWER CORE, AND THE UNIT SHALL BE INSTALLED NEXT TO THE CP #1 UNIT.
11. SEE E-10 FOR PHOTO ELECTRIC UNIT MOUNTING DETAIL

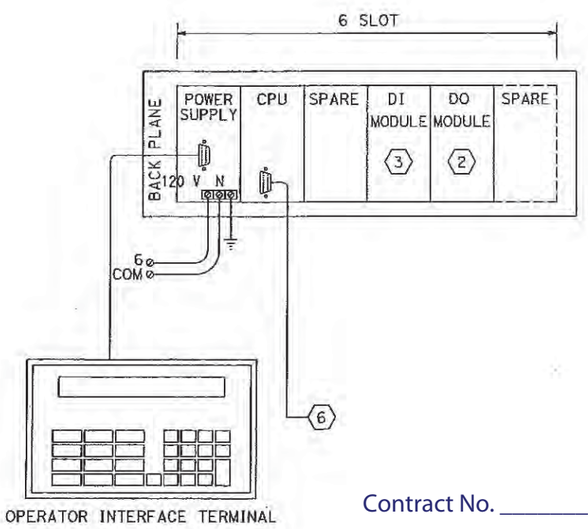

Contract No. _____

Contract Change Order No.____

Sheet No.____ of ____

YBI TUNNEL LIGHTING
CP No. 1 WIRING DETAIL
NO SCALE

E-13

THIS PLAN IS ACCURATE FOR ELECTRICAL WORK ONLY.

STATE OF CALIFORNIA - DEPARTMENT OF TRANSPORTATION — ELECTRICAL

FUNCTIONAL SUPERVISOR: BEHZAD GOLEMOHAMMADI

CALCULATED-DESIGNED BY: ROBERT HSU — CHECKED BY: ROBERT HSU

REVISED BY: RT — DATE REVISED: 8/1/12

LAST REVISION 08-08-12 — DATE PLOTTED => 09-OCT-2012 — TIME PLOTTED => 11:17

BORDER LAST REVISED 4/11/2008 — RELATIVE BORDER SCALE 0 1 2 3 — USERNAME => s124763 — CU 04242 — FA

Dist	COUNTY	ROUTE	POST MILES TOTAL PROJECT	SHEET No.	TOTAL SHEETS
04	SF	80	7.7/7.8	16	32

REGISTERED ELECTRICAL ENGINEER — DATE 8/12/12

8/12/12
PLANS APPROVAL DATE

REGISTERED PROFESSIONAL ENGINEER — Robert Hsu — No. 17114 — Exp. 9-30-13 — ELECT — STATE OF CALIFORNIA

THE STATE OF CALIFORNIA OR ITS OFFICERS OR AGENTS SHALL NOT BE RESPONSIBLE FOR THE ACCURACY OR COMPLETENESS OF SCANNED COPIES OF THIS PLAN SHEET.

NOTES: (APPLICABLE TO THIS SHEET ONLY)

1. A1 TO A16 ARE 30 A, ELECTRICALY HELD, 600/480 V LIGHTING CONTACTORS (TYPICAL).
2. B1 TO B10 AND I1 TO I9 ARE 120 V, 4 PDT, KHAU1711 TYPE. ALL RELAYS SHALL INCLUDE NEON LIGHT INDICATORS. RELAY SOCKETS SHALL BE MOUNTED TO THE RAIL.
3. FOR SWITCHES AND INDICATOR LIGHTS CONFIGURATION DETAIL, SEE NAMEPLATE SCHEDULE
4. D1 AND D2 ARE 30 A, MECHANICALLY HELD, 600/480 V LIGHTING CONDUCTORS.
5. ALL TERMINALS IN LIGHTING CONTACTOR ENCLOSURES SHALL ACCOMODATE #6 OR LARGER CONDUCTORS.
6. THE NAMEPLATE IS LOCATED ON THE FRONT COVER OF THE PANEL.

NAMEPLATE SCHEDULE FOR PANEL YBL

1	CIRCUIT DSA	2	CIRCUIT DNA	SIZE OF NAMEPLATES: 1/4" HIGHT BLACK ON A WHITE BACK GROUND, 5/8" H x 2 1/2" W, LAMINATED PLASTIC
3	CIRCUIT DSB	4	CIRCUIT DNB	
5	CIRCUIT XSA	6	CIRCUIT XNA	
7	UPS # 1	8	CIRCUIT XNB	
9	CIRCUIT XSB	10	CP # 1	
11	CIRCUIT LES	12	CIRCUIT LEN	
13	PANEL MAIN	14	PANEL BEN (6)	
15		16		

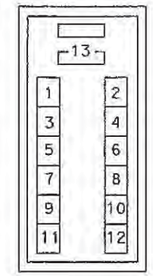

NAMEPLATE SCHEDULE FOR PANEL YBU

1	CIRCUIT LYN	2	CIRCUIT LYS	SIZE OF NAMEPLATES: 1/4" HIGHT BLACK ON A WHITE BACK GROUND, 5/8" H x 2 1/2" W, LAMINATED PLASTIC
3	PANEL MAIN	4	PANEL YBU (6)	
5		6		
7		8		
9		10		
11		12		
13		14		
15		16		

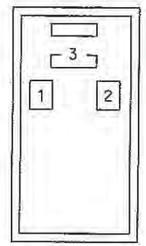

NAMEPLATE SCHEDULE FOR PANEL PN

1	PANEL UDS	2	PANEL UDN	SIZE OF NAMEPLATES: 1/4" HIGHT BLACK ON A WHITE BACK GROUND, 5/8" H x 2 1/2" W, LAMINATED PLASTIC
3	PANEL YBL	4	PANEL PN (6)	
5		6		
7		8		
9		10		
11		12		
13		14		
15		16		

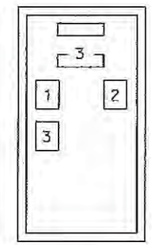

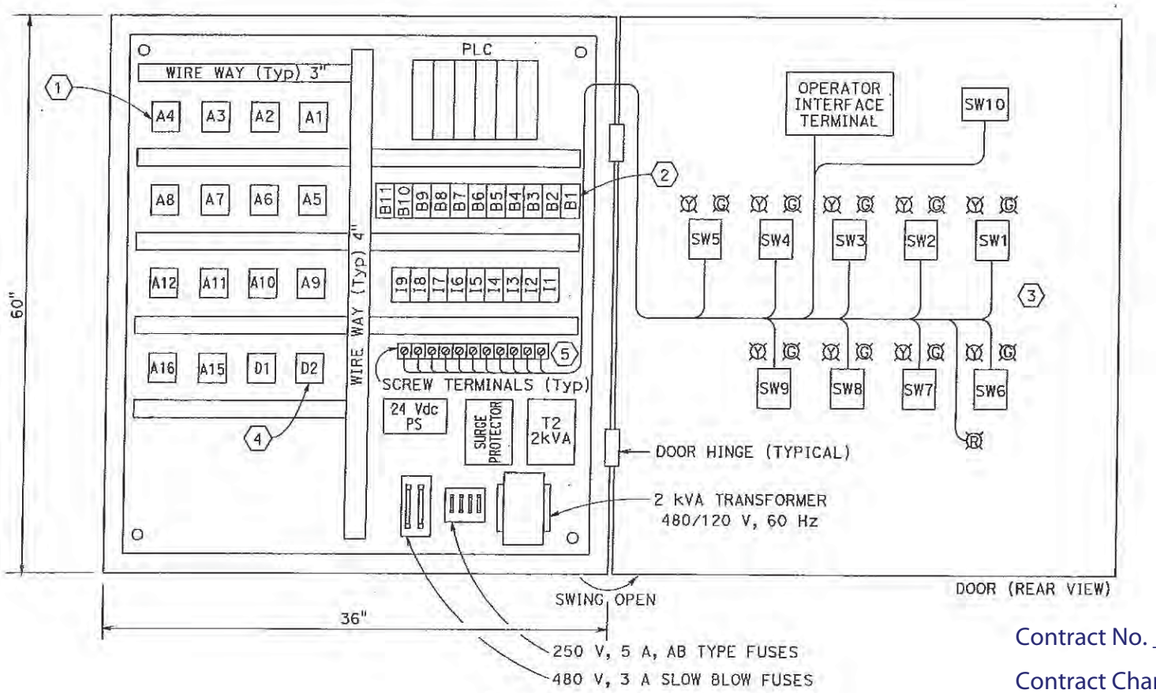

CP #1 ENCLOSURE
NEMA 1
WALL MOUNT, ANSI 61, GRAY

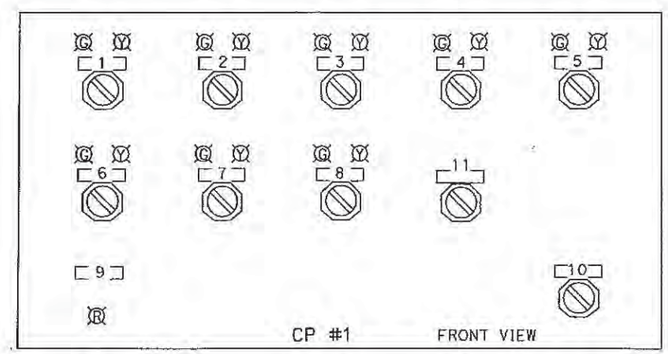

CP #1						SIZE OF NAMEPLATES
1	AUTO OFF MANUAL CIRCUIT DSA		7	AUTO OFF MANUAL CIRCUIT LE		1/4" HIGHT BLACK ON A WHITE BACK GROUND, 5/8" H x 2 1/2" W, LAMINATED PLASTIC
2	AUTO OFF MANUAL CIRCUIT DSB		8	AUTO OFF MANUAL CIRCUIT LY		
3	AUTO OFF MANUAL CIRCUIT DNA		9	COMMUNICATION BREAKDOWN		
4	AUTO OFF MANUAL CIRCUIT DNB		10	AUTO MAIN		
5	AUTO OFF MANUAL CIRCUIT XS		11	AUTO TEST PHOTO		
6	AUTO OFF MANUAL CIRCUIT XN					

Contract No. _____

Contract Change Order No.____

Sheet No.____ of ____

YBI TUNNEL LIGHTING

FRONT PANEL LAYOUT NAMEPLATE SCHEDULE AND LIGHTING CONTACTOR ENCLOSURE

NO SCALE

E-14

STATE OF CALIFORNIA - DEPARTMENT OF TRANSPORTATION — ELECTRICAL — Caltrans

FUNCTIONAL SUPERVISOR: BEHZAD GOLEMOHAMMADI

CALCULATED-DESIGNED BY: ROBERT HSU — CHECKED BY: ROBERT HSU

REVISED BY: RT — DATE REVISED: 8/1/12

LAST REVISION 08-08-12 — DATE PLOTTED => 05-OCT-2012 — TIME PLOTTED => 11:17

Dist	COUNTY	ROUTE	POST MILES TOTAL PROJECT	SHEET No.	TOTAL SHEETS
04	SF	80	7.7/7.8	17	32

REGISTERED ELECTRICAL ENGINEER 8/12/12 DATE

8/12/12
PLANS APPROVAL DATE

REGISTERED PROFESSIONAL ENGINEER Robert Hsu No. 17114 Exp. 9-30-13 ELECT. STATE OF CALIFORNIA

THE STATE OF CALIFORNIA OR ITS OFFICERS OR AGENTS SHALL NOT BE RESPONSIBLE FOR THE ACCURACY OR COMPLETENESS OF SCANNED COPIES OF THIS PLAN SHEET.

Contract No. _____

Contract Change Order No.____

Sheet No.____ of ____

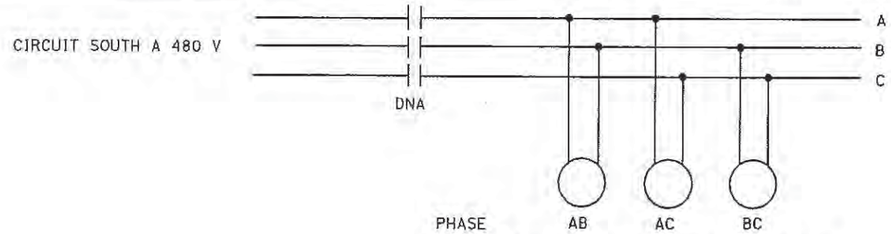

TYPICAL SCHEMATIC DIAGRAM

LUMINAIRE TABLE FOR CONTACTOR DNA

LUMINAIRE NUMBER	PHASE AB	PHASE AC	PHASE BC
	DNA1	DNA2	DNA3
	DNA4	DNA5	DNA6
	DNA7	DNA8	DNA9
	DNA10	DNA11	DNA12
	DNA13	DNA14	DNA15
	DNA16	DNA17	DNA18
	DNA19	DNA20	DNA21
	DNA22	DNA23	DNA24
	DNA25	DNA26	DNA27
	DNA28	DNA29	DNA30
	DNA31	DNA32	DNA33
	DNA34	DNA35	DNA36
	DNA37	DNA38	DNA39
	DNA40	DNA41	DNA42
	DNA43	DNA44	DNA45
	DNA46	DNA47	DNA48
	DNA49	DNA50	DNA51
	DNA52	DNA53	DNA54
	DNA55	DNA56	

LUMINAIRE TABLE FOR CONTACTOR DNB

LUMINAIRE NUMBER	PHASE AB	PHASE AC	PHASE BC
	DNB1	DNB2	DNB3
	DNB4	DNB5	DNB6
	DNB7	DNB8	DNB9
	DNB10	DNB11	DNB12
	DNB13	DNB14	DNB15
	DNB16	DNB17	DNB18
	DNB19	DNB20	DNB21
	DNB22	DNB23	DNB24
	DNB25	DNB26	DNB27
	DNB28	DNB29	DNB30
	DNB31	DNB32	DNB33
	DNB34	DNB35	DNB36
	DNB37	DNB38	DNB39
	DNB40	DNB41	DNB42
	DNB43	DNB44	DNB45
	DNB46	DNB47	DNB48
	DNB49	DNB50	DNB51
	DNB52	DNB53	DNB54
	DNB55	DNB56	

LUMINAIRE TABLE FOR CONTACTOR DSA

LUMINAIRE NUMBER	PHASE AB	PHASE AC	PHASE BC
	DSA1	DSA2	DSA3
	DSA4	DSA5	DSA6
	DSA7	DSA8	DSA9
	DSA10	DSA11	DSA12
	DSA13	DSA14	DSA15
	DSA16	DSA17	DSA18
	DSA19	DSA20	DSA21
	DSA22	DSA23	DSA24
	DSA25	DSA26	DSA27
	DSA28	DSA29	DSA30
	DSA31	DSA32	DSA33
	DSA34	DSA35	DSA36
	DSA37	DSA38	DSA39
	DSA40	DSA41	DSA42
	DSA43	DSA44	DSA45
	DSA46	DSA47	DSA48
	DSA49	DSA50	DSA51
	DSA52	DSA53	DSA54
	DSA55	DSA56	

LUMINAIRE TABLE FOR CONTACTOR DSB

LUMINBIRE NUMBER	PHASE AB	PHASE AC	PHASE BC
	DSB1	DSB2	DSB3
	DSB4	DSB5	DSB6
	DSB7	DSB8	DSB9
	DSB10	DSB11	DSB12
	DSB13	DSB14	DSB15
	DSB16	DSB17	DSB18
	DSB19	DSB20	DSB21
	DSB22	DSB23	DSB24
	DSB25	DSB26	DSB27
	DSB28	DSB29	DSB30
	DSB31	DSB32	DSB33
	DSB34	DSB35	DSB36
	DSB37	DSB38	DSB39
	DSB40	DSB41	DSB42
	DSB43	DSB44	DSB45
	DSB46	DSB47	DSB48
	DSB49	DSB50	DSB51
	DSB52	DSB53	DSB54
	DSB55	DSB56	

LUMINAIRE TABLE FOR CONTACTOR XNA

LUMINAIRE NUMBER	PHASE AB	PHASE AC	PHASE BC
	XNA1	XNA2	XNA3
	XNA4	XNA5	XNA6
	XNA7	XNA8	XNA9
	XNA10	XNA11	XNA12
	XNA13	XNA14	XNA15
	XNA16	XNA17	XNA18
	XAA19	XNA20	XNA21
	XNA22	XNA23	XNA24
	XNA25	XNA26	XNA27
	XNA28	XNA29	XNA30
	XNA31	XNA32	XNA33
	XNA34	XNA35	XNA36
	XNA37	XNA38	XNA39
	XNA40	XNA41	XNA42
	XNA43	XNA44	XNA45

LUMINAIRE TABLE FOR CONTACTOR XNB

LUMINAIRE NUMBER	PHASE AB	PHASE AC	PHASE BC
	XNB1	XNB2	XNB3
	XNB4	XNB5	XNB6
	XNB7	XNB8	XNB9
	XNB10	XNB11	XNB12
	XNB13	XNB14	XNB15
	XNB16	XNB17	XNB18
	XNB19	XNB20	XNB21
	XNB22	XNB23	XNB24
	XNB25	XNB26	XNB27
	XNB28	XNB29	XNB30
	XNB31	XNB32	XNB33
	XNB34	XNB35	XNB36
	XNB37	XNB38	XNB39
	XNB40	XNB41	XNB42
	XNB43	XNB44	XNB45

LUMINAIRE TABLE FOR CONTACTOR XSA

LUMINAIRE NUMBER	PHASE AB	PHASE AC	PHASE BC
	XSA1	XSA2	XSA3
	XSA4	XSA5	XSA6
	XSA7	XSA8	XSA9
	XSA10	XSA11	XSA12
	XSA13	XSA14	XSA15
	XSA16	XSA17	XSA18
	XSA19	XSA20	XSA21
	XSA22	XSA23	XSA24
	XSA25	XSA26	XSA27
	XSA28	XSA29	XSA30
	XSA31	XSA32	XSA33
	XSA34	XSA35	XSA36
	XSA37	XSA38	XSA39
	XSA40	XSA41	XSA42
	XSA43	XSA44	XSA45

LUMINAIRE TABLE FOR CONTACTOR XSB

LUMINAIRE NUMBER	PHASE AB	PHASE AC	PHASE BC
	XSB1	XSB2	XSB3
	XSB4	XSB5	XSB6
	XSB7	XSB8	XSB9
	XSB10	XSB11	XSB12
	XSB13	XSB14	XSB15
	XSB16	XSB17	XSB18
	XSB19	XSB20	XSB21
	XSB22	XSB23	XSB24
	XSB25	XSB26	XSB27
	XSB28	XSB29	XSB30
	XSB31	XSB32	XSB33
	XSB34	XSB35	XSB36
	XSB37	XSB38	XSB39
	XSB40	XSB41	XSB42
	XSB43	XSB44	XSB45

YBI TUNNEL LIGHTING
LUMINAIRE TABLE

NO SCALE

E-15

REVISED BY	DATE REVISED
RT	8/1/12

CALCULATED-DESIGNED BY	CHECKED BY
ROBERT HSU	ROBERT HSU

FUNCTIONAL SUPERVISOR
BEHZAD GOLESMOHAMMADI

STATE OF CALIFORNIA - DEPARTMENT OF TRANSPORTATION
Caltrans
ELECTRICAL

LAST REVISION 08-08-12 | DATE PLOTTED => 05-OCT-2012 TIME PLOTTED => 11:17

Dist	COUNTY	ROUTE	POST MILES TOTAL PROJECT	SHEET No.	TOTAL SHEETS
04	SF	80	7.7/7.8	18	32

REGISTERED ELECTRICAL ENGINEER 8/12/12 DATE

8/12/12
PLANS APPROVAL DATE

REGISTERED PROFESSIONAL ENGINEER Robert Hsu No. 17114 Exp. 9-30-13 ELECT STATE OF CALIFORNIA

THE STATE OF CALIFORNIA OR ITS OFFICERS OR AGENTS SHALL NOT BE RESPONSIBLE FOR THE ACCURACY OR COMPLETENESS OF SCANNED COPIES OF THIS PLAN SHEET.

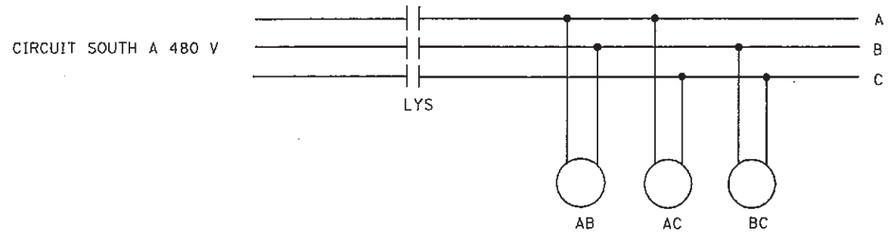

TYPICAL SCHEMATIC DIAGRAM

NOTE: (APPLICABLE TO THIS SHEET ONLY)

(1) FOR NAME PLATE SCHEDULE DETAIL, SEE SHEET E-

LUMINAIRE TABLE FOR CONTACTOR LYS

LUMINAIRE NUMBER	PHASE AB	PHASE AC	PHASE BC
	LYS 1	LYS 2	LYS 3
	LYS 4	LYS 5	LYS 6
	LYS 7	LYS 8	LYS 9
	LYS 10	LYS 11	LYS 12
	LYS 13	LYS 14	LYS 15
	LYS 16	LYS 17	LYS 18
	LYS 19	LYS 20	LYS 21
	LYS 22	LYS 23	LYS 24
	LYS 25	LYS 26	LYS 27
	LYS 28	LYS 29	

LUMINAIRE TABLE FOR CONTACTOR LYN

LUMINAIRE NUMBER	PHASE AB	PHASE AC	PHASE BC
	LYN 1	LYN 2	LYN 3
	LYN 4	LYN 5	LYN 6
	LYN 7	LYN 8	LYN 9
	LYN 10	LYN 11	LYN 12
	LYN 13	LYN 14	LYN 15
	LYN 16	LYN 17	LYN 18
	LYN 19	LYN 20	LYN 21
	LYN 22	LYN 23	LYN 24
	LYN 25	LYN 26	LYN 27
	LYN 28	LYN 29	

LUMINAIRE TABLE FOR CONTACTOR LES

LUMINAIRE NUMBER	PHASE AB	PHASE AC	PHASE BC
	LES1	LES2	LES3
	LES4	LES5	LES6
	LES7	LES8	

LUMINAIRE TABLE FOR CONTACTOR LEN

LUMINAIRE NUMBER	PHASE AB	PHASE AC	PHASE BC
	LEN1	LEN2	LEN3
	LEN4	LEN5	LEN6
	LEN7	LEN8	

PANEL YBU 480 VOLT 3 PHASE

CIRCUIT BREAKER No.	AMPERE	POLE	DESCRIPTION (1)	LOAD,KVA AB	LOAD,KVA AC	LOAD,KVA BC
1	15	3	TUNNEL LIGHTING CIRCUIT LYN	2893		
3			TUNNEL LIGHTING CIRCUIT LYN		2893	
5			TUNNEL LIGHTING CIRCUIT LYN			2893
7						
9						
11						
2	15	3				
4			TUNNEL LIGHTING CIRCUIT LYS	2893		
6			TUNNEL LIGHTING CIRCUIT LYS		2893	
8			TUNNEL LIGHTING CIRCUIT LYS			2893
10						
12						
			TOTAL LINE TO LINE VA	5843	5843	5843
TOTAL kVA 10			MAIN BREAKER 30 A	TOP		X
FEEDER #4 THWN				BOTTOM		
NEMA 1			65 KAIC FULLY LOAD			

PANEL TABLE YBU

PANEL UPU 480 VOLT 3 PHASE

CIRCUIT BREAKER No.	AMPERE	POLE	DESCRIPTION (1)	LOAD,KVA AB	LOAD,KVA AC	LOAD,KVA BC
1	20	3	TUNNEL LIGHTING CIRCUIT XN	6223		
3			TUNNEL LIGHTING CIRCUIT XN		6223	
5			TUNNEL LIGHTING CIRCUIT XN			6223
7						
9						
11						
2	20	3	TUNNEL LIGHTING CIRCUIT XS	6223		
4			TUNNEL LIGHTING CIRCUIT XS		6223	
6			TUNNEL LIGHTING CIRCUIT XS			6223
8						
10						
12						
			TOTAL LINE TO LINE kVA	12.4	12.4	12.4
TOTAL kVA 22			MAIN BREAKER 50 A	TOP		X
FEEDER #4 THWN				BOTTOM		
NEMA 1			65 KAIC FULLY LOAD			

PANEL TABLE UPU

Contract No. _____

Contract Change Order No.____

Sheet No.____ of ____

YBI TUNNEL LIGHTING
LUMINAIRE TABLE
PANEL SCHEDULE

E-16

REVISED BY	RT	ROBERT HSU	CALCULATED-DESIGNED BY
DATE REVISED	8/1/12	ROBERT HSU	CHECKED BY

FUNCTIONAL SUPERVISOR BEHZAD GOLEMOHAMMADI

STATE OF CALIFORNIA - DEPARTMENT OF TRANSPORTATION

Caltrans

ELECTRICAL

LAST REVISION 08-08-12 DATE PLOTTED => 05-OCT-2012 TIME PLOTTED => 11:18

Dist	COUNTY	ROUTE	POST MILES TOTAL PROJECT	SHEET No.	TOTAL SHEETS
04	SF	80	7.7/7.8	19	32

REGISTERED ELECTRICAL ENGINEER — DATE 8/12/12

PLANS APPROVAL DATE 8/12/12

REGISTERED PROFESSIONAL ENGINEER — Robert Hsu — No. 17114 — Exp. 9-30-13 — ELECT — STATE OF CALIFORNIA

THE STATE OF CALIFORNIA OR ITS OFFICERS OR AGENTS SHALL NOT BE RESPONSIBLE FOR THE ACCURACY OR COMPLETENESS OF SCANNED COPIES OF THIS PLAN SHEET.

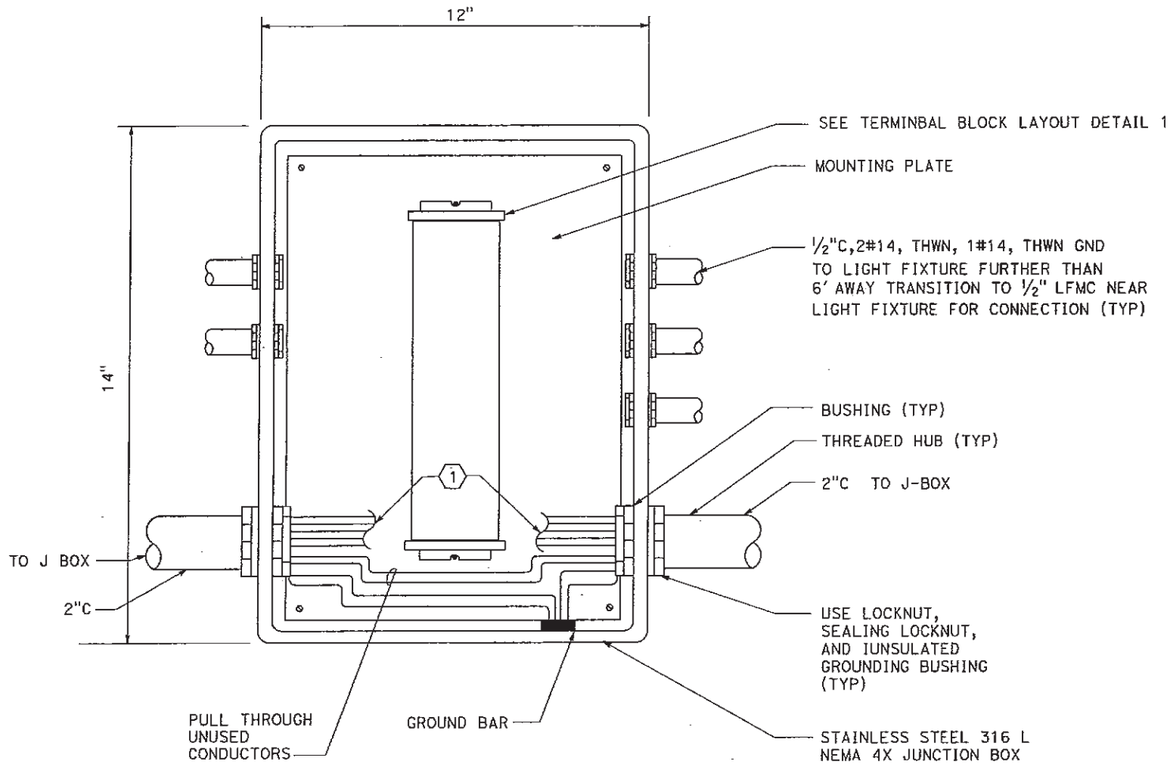

TYPICAL LIGHTING JUNCTION BOX

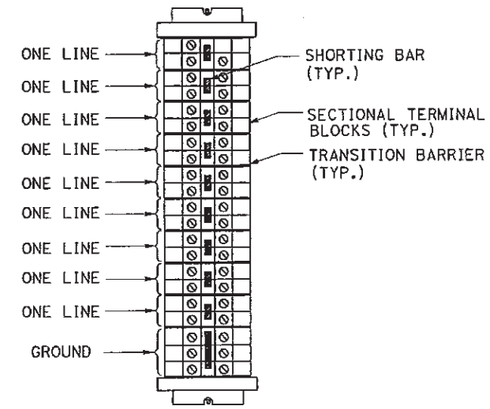

DETAIL 1

TYPICAL TERMINAL BLOCK LAYOUT

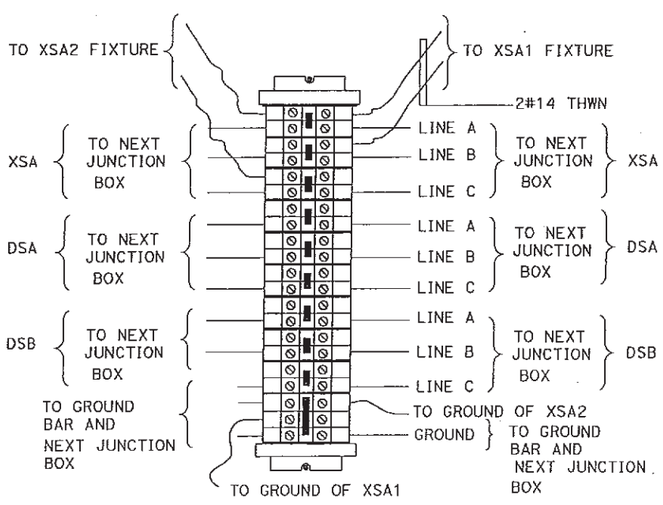

TYPICAL JUNCTION BOX WIRING DETAIL

DETAIL 2

NOTES: (APPLICABLE TO THIS SHEET ONLY)

(1) CONNECT CONDUCTORS TO TERMINAL BLOCKS REFER TO JUNCTION BOXES SCHEDULE E-18 LUMINAIRE TABLE E-15 FOR INSTRUCTION SEE DETAIL 2 OF JUNCTION BOX JS1 AS A TYPICAL EXAMPLE OF WIRING.

Contract No. _____

Contract Change Order No.____

Sheet No.____ of ____

TUNNEL LIGHTING

LIGHTING JUNCTION BOX WIRING DETAIL

NO SCALE

E-17

STATE OF CALIFORNIA - DEPARTMENT OF TRANSPORTATION

Caltrans®

ELECTRICAL

FUNCTIONAL SUPERVISOR: BEHZAD GOLEMOHAMMADI

CALCULATED-DESIGNED BY: ROBERT HSU — CHECKED BY: ROBERT HSU

REVISED BY: RT — DATE REVISED: 8/1/12

LAST REVISION 08-08-12 — DATE PLOTTED => 05-OCT-2012 — TIME PLOTTED => 11:18

Dist	COUNTY	ROUTE	POST MILES TOTAL PROJECT	SHEET No.	TOTAL SHEETS
04	SF	80	7.7/7.8	20	32

REGISTERED ELECTRICAL ENGINEER — DATE 8/12/12

PLANS APPROVAL DATE 8/12/12

REGISTERED PROFESSIONAL ENGINEER — Robert Hsu — No. 17114 — Exp. 9-30-13 — ELECT — STATE OF CALIFORNIA

THE STATE OF CALIFORNIA OR ITS OFFICERS OR AGENTS SHALL NOT BE RESPONSIBLE FOR THE ACCURACY OR COMPLETENESS OF SCANNED COPIES OF THIS PLAN SHEET.

TERMINAL BLOCKS AND LIGHTING FIXTURES SCHEDULE

JS NUMBERS

1	XSA1	XSA2	XSA3	DSA1	DSB1
2	LYS1	DSA1	DSA3	DSB2	DSB3
3	XSA4	XSA5	XSA6	DSA4	DSB4
4	LSY2	DSA5	DSA6	DSB5	DSB6
5	XSA7	XSA8	XSA9	DSA7	DSB7
6	LYS3	DSA8	DSA9	DSB8	DSB9
7	XSA10	XSA11	XSA12	DSA10	DSB10
8	LYS4	DSA11	DSA12	DSB11	DSB12
9	XSA13	XSA14	XSA15	DSA13	DSB13
10	LYS5	DSA14	DSA15	DSB14	DSB15
11	XSA16	XSA17	XSA18	DSA16	DSB16
12	LYS6	DSA17	DSA18	DSB17	DSB18
13	XSA19	XSA20	XSA21	DSA19	DSB19
14	LYS7	DSA20	DSA21	DSB20	DSB21
15	XSA22	XSA23	XSA24	DSA22	DSB22
16	LYS8	DSA23	DSA24	DSB23	DSB24
17	XSA25	XSA26	XSA27	DSA25	DSB25
18	LYS9	DSA26	DSA27	DSB26	DSB27
19	XSA28	XSA29	XSA29	DSA28	DSB28
20	LYS10	DSA29	DSA30	DSB29	DSB30
21	XSA31	XSA32	XSA33	DSA31	DSB31
22	LYS11	DSA32	DSA33	DSB32	DSB33
23	XSA34	XSA35	XSA36	DSA34	DSB34
24	LYS12	DSA35	DSA36	DSB35	DSB36
25	YSA37	XSA38	XSA39		
26	LYS13	DSA37	DSB37		
27	XSA40	XSA41	XSA42		
28	LYS14	DSA38	DSB38		
29	XSA43	XSA44	XSA45		
30	LYS15	DSA39	DSB39		
31	XSB1	XSB2	XSB3		
32	LYS16	DSA40	DSB40		
33	XSB4	XSB5	XSB6		
34	LYS17	DSA41	DSB41		
35	XSB7	XSB8	XSB9		
36	LYS18	DSA42	DSB42		
37	XSB10	XSB11	XSB12		
38	LYS19	DSA43	DSB43		
39	XSB13	XSB14	XSB15		
40	LYS20	DSA44	DSB44		
41	XSB16	XSB17	XSB18		
42	LYS21	DSA45	DSB45		
43	XSB19	XSB20	XSB21		
44	LYS22	DSA46	DSB46		
45	XSB22	XSB23	XSB24		
46	LYS23	DSA47	DSB47		
47	XSB25	DSB26	DSB27		
48	LYS24	DSA48	DSB48		
49	XSB28	XSB29	XSB30		
50	LYS25	DSA49	DSB49		
51	XSB31	XSB32	XSB33		
52	LYS26	DSA50	DSB50		
53	XSB34	XSB35	XSB36		
54	LYS27	DSA51	DSB51		
55	XSB37	XSB38	XSB39		
56	LYS28	DSA52	DSB53	DSB52	DSB53
57	XSB40	XSB41	XSB42	DSR54	DSB54
58	LYS29	DSA55	DSA56	DSR55	DSB56
59	XSB43	XSB44	XSB45		

TERMINAL BLOCKS AND LIGHTING FIXTURES SCHEDULE

JN NUMBERS

1	XNA1	XNA2	XNA3	DNA1	DNB1
2	LYN1	DNA2	DNA3	DNB2	DNB3
3	XNA4	XNA5	XNA6	DNA4	DNB4
4	LYN2	DNA5	DNA6	DNB5	DNB6
5	XNA7	XNA8	XNA9	DNA7	DNB7
6	LYN3	DNA8	DNA9	DNB8	DNB9
7	XNA10	XNA11	XNA12	DNA10	DNB10
8	LYN4	DNA11	DNA12	DNB11	DNB12
9	XNA13	XNA14	XNA15	DNA13	DNB13
10	LYN5	DNA14	DNA15	DNB14	DNB15
11	XNA16	XNA17	XNA18	DNA16	DNB16
12	LYN6	DNA17	DNA18	DNB17	DNB18
13	XNA19	XNA20	XNA21	DNA19	DNB19
14	LYN7	DNA20	DNA21	DNB20	DNB21
15	XNA22	XNA23	XNA24	DNA22	DNB22
16	LYN8	DNA23	DNA24	DNB23	DNB24
17	XNA25	XNA26	XNA27	DNA25	DNB25
18	LYN9	DNA26	DNA27	DNB26	DNB27
19	XNA28	XNA29	XNA30	DNA28	DNB28
20	LYN10	DNA29	DNA30	DNB29	DNB30
21	XNA31	XNA32	XNA33	DNA31	DNB31
22	LYN11	DNA32	DNA33	DNB32	DNB33
23	XNA34	XNA35	XNA36	DNA34	DNB34
24	LYN12	DNA35	DNA36	DNB35	DNB36
25	YNA37	XNA38	XNA39		
26	LYN13	DNA37	DNB37		
27	XNA40	XNA41	XNA42		
28	LYN14	DNA38	DNB38		
29	XNA43	XNA44	XNA45		
30	LYN15	DNA39	DNB39		
31	XNB1	XNB2	XNB3		
32	LYN16	DNA40	DNB40		
33	XNB4	XNB5	XNB6		
34	LYN17	DNA41	DNB41		
35	XNB7	XNB8	XNB9		
36	LYN18	DNA42	DNB42		
37	XNB10	XNB11	XNB12		
38	LYN19	DNA43	DNB43		
39	XNB13	XNB14	XNB15		
49	LYN20	DNA44	DNB44		
41	XNB16	XNB17	XNB18		
42	LYN21	DNA45	DNB45		
43	XNB19	XNB20	XNB21		
44	LYN22	DNA46	DNB46		
45	XNB22	XNB23	XNB24		
46	LYN23	DNA47	DNB47		
47	XNB25	DNB26	DNB27		
48	LYN24	DNA48	DNB48		
49	XNB28	XNB29	XNB30		
50	LYN25	DNA49	DNB49		
51	XNB31	XNB32	XNB33		
52	LYN26	DNA50	DNB50		
53	XNB34	XNB35	XNB36		
54	LYN27	DNA51	DNB51		
55	XNB37	XNB38	XNB39		
56	LYN28	DNA52	DNB53	DNB52	DNB53
57	XNB40	XNB41	XNB42	DNR54	DNB54
58	LYN29	DNA55	DNA56	DNR55	DNB56
59	XNB43	XNB44	XNB45		

Contract No. _____

Contract Change Order No.____

Sheet No.____ of ____

TUNNEL LIGHTING
JUNCTIONS BOXES SCHEDULE

NO SCALE

E-18

REVISED BY	RT
DATE REVISED	8/1/12
CALCULATED-DESIGNED BY	ROBERT HSU
CHECKED BY	ROBERT HSU
FUNCTIONAL SUPERVISOR	BEHZAD GOLEMOHAMMADI

STATE OF CALIFORNIA - DEPARTMENT OF TRANSPORTATION

Caltrans

ELECTRICAL

LAST REVISION 08-08-12

DATE PLOTTED => 05-OCT-2012
TIME PLOTTED => 11:18

Dist	COUNTY	ROUTE	POST MILES TOTAL PROJECT	SHEET No.	TOTAL SHEETS
04	Alo	80	7.72/7.82	21	32

REGISTERED ELECTRICAL ENGINEER — DATE 8/12/12

8/12/12
PLANS APPROVAL DATE

REGISTERED PROFESSIONAL ENGINEER — Robert Hsu — No. 17114 — Exp. 9-30-13 — ELECT — STATE OF CALIFORNIA

THE STATE OF CALIFORNIA OR ITS OFFICERS OR AGENTS SHALL NOT BE RESPONSIBLE FOR THE ACCURACY OR COMPLETENESS OF SCANNED COPIES OF THIS PLAN SHEET.

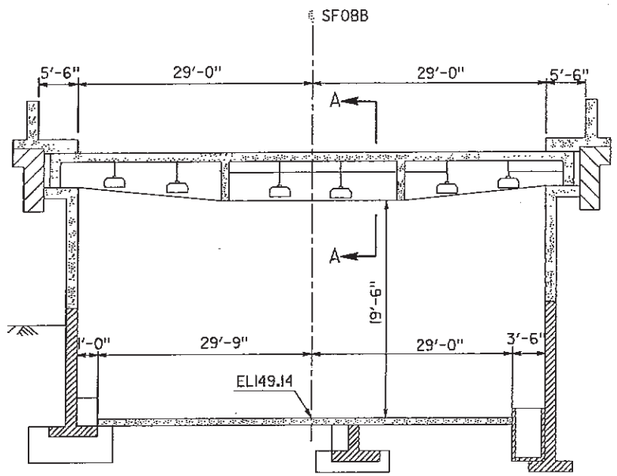

BENT 5
TYPICAL CROSS SECTION
OF YBI LOWER DECK

NO SCALE

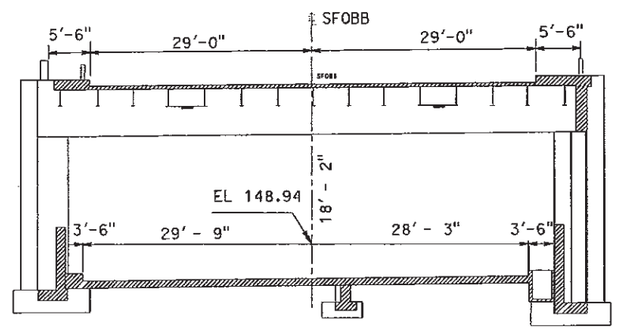

BENT 4
NO SCALE

INSTALL 400W METAL HALIDE
CEILING MOUNT SEE DETAIL 3

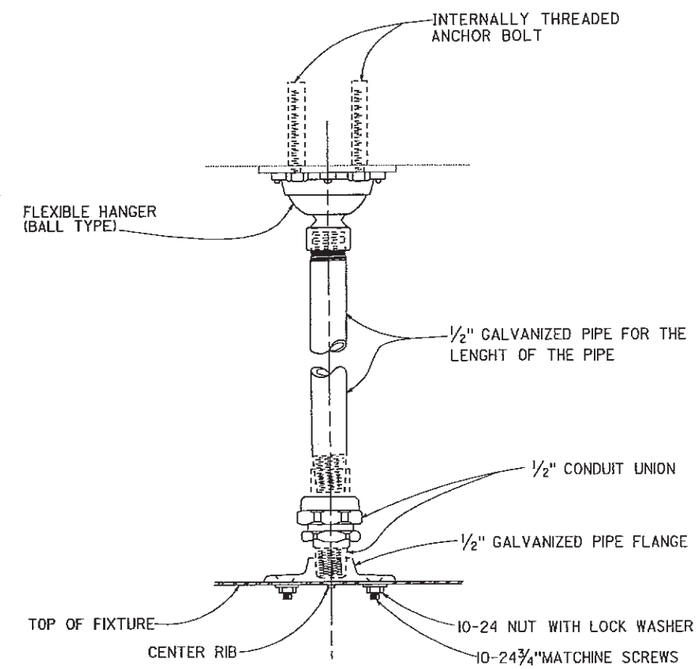

DETAIL 2

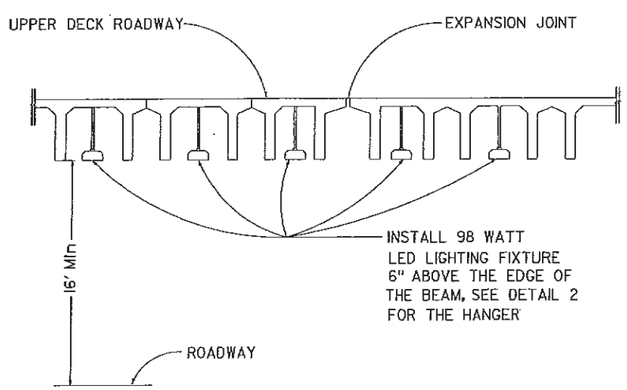

SECTION A-A

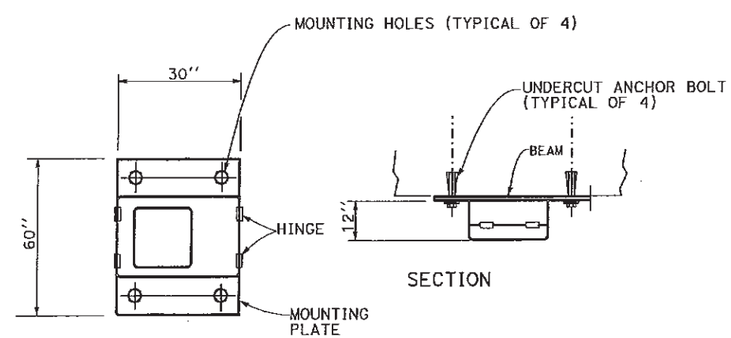

SECTION

PLAN

HPS LUMINAIRES CEILING MOUNT

DETAIL 3

Contract No. _____

Contract Change Order No.____

Sheet No.____ of ____

YBI TUNNEL LIGHTING
LUMINAIRES MOUNTING DETAIL

NO SCALE

E-19

REVISED BY	DATE REVISED
RT	8/1/12

ROBERT HSU — ROBERT HSU

CALCULATED-DESIGNED BY — CHECKED BY

FUNCTIONAL SUPERVISOR: BEHZAD GOLEMOHAMMADI

STATE OF CALIFORNIA - DEPARTMENT OF TRANSPORTATION — Caltrans — ELECTRICAL

LAST REVISION 08-08-12 — DATE PLOTTED => 05-OCT-2012 — TIME PLOTTED => 11:19

Dist	COUNTY	ROUTE	POST MILES TOTAL PROJECT	SHEET No.	TOTAL SHEETS
04	SF	80	7.7/7.8	22	32

REGISTERED ELECTRICAL ENGINEER — DATE 8/12/12

PLANS APPROVAL DATE 8/12/12

REGISTERED PROFESSIONAL ENGINEER — Robert Hsu — No. 17114 — Exp. 9-30-13 — ELECT — STATE OF CALIFORNIA

THE STATE OF CALIFORNIA OR ITS OFFICERS OR AGENTS SHALL NOT BE RESPONSIBLE FOR THE ACCURACY OR COMPLETENESS OF SCANNED COPIES OF THIS PLAN SHEET.

NOTES: (APPLICABLE TO THIS SHEET ONLY)

1. FOR NAME PLATE SCHEDULE DETAIL, SEE SHEET E-23
2. FOR PANEL WIRING DETAIL, SEE SHEET E-21
3. FOR PANEL UPU SCHEDULE, SEE SHEET E-23

PANEL UDN			480 VOLT	3 PHASE		
CIRCUIT BREAKER			DESCRIPTION (1)	LOAD		
No.	AMPERE	POLE		AB	AC	BC
1	20	3	TUNNEL LIGHTING CIRCUIT 1AN	6223		
3			TUNNEL LIGHTING CIRCUIT 1AN		6223	
5			TUNNEL LIGHTING CIRCUIT 1AN			6223
7	20	3	TUNNEL LIGHTING CIRCUIT 2AN	6223		
9			TUNNEL LIGHTING CIRCUIT 2AN		6223	
11			TUNNEL LIGHTING CIRCUIT 2AN			6223
13	25	3	TUNNEL LIGHTING CIRCUIT CN	8853		
15			TUNNEL LIGHTING CIRCUIT CN		8853	
17			TUNNEL LIGHTING CIRCUIT CN			8853
19	20	2	TUNNEL LIGHTING CIRCUIT EN	5312		
21			TUNNEL LIGHTING CIRCUIT EN		5312	
23			TUNNEL LIGHTING CIRCUIT EN			5312
25	15	2	LIGHTING CONTROL CP # 2	1000		
27			LIGHTING CONTROL CP # 2		1000	
29						
2	20	3	TUNNEL LIGHTING CIRCUIT 1BN	7082		
4			TUNNEL LIGHTING CIRCUIT 1BN		7082	
6			TUNNEL LIGHTING CIRCUIT 1BN			7082
8	20	3	TUNNEL LIGHTING CIRCUIT 2BN	7082		
10			TUNNEL LIGHTING CIRCUIT 2BN		7082	
12			TUNNEL LIGHTING CIRCUIT 2BN			7082
14	25	3	TUNNEL LIGHTING CIRCUIT DN	8853		
16			TUNNEL LIGHTING CIRCUIT DN		8853	
18			TUNNEL LIGHTING CIRCUIT DN			8853
20	20	3	TUNNEL LIGHTING CIRCUIT FN	5312		
22			TUNNEL LIGHTING CIRCUIT FN		5312	
24			TUNNEL LIGHTING CIRCUIT FN			5312
26	20	3	TUNNEL LIGHTING CIRCUIT YN	5902		
28			TUNNEL LIGHTING CIRCUIT YN		5902	
30			TUNNEL LIGHTING CIRCUIT YN			5902
			TOTAL LINE TO LINE KVA	63	63	62
TOTAL kVA 110			MAIN BREAKER 200 A	TOP		X
FEEDER 250 Kcmil THWN				BOTTOM		
NEMA 1			65 KAIC FULLY LOAD			

PANEL TABLE UDN

PANEL UDS			480 VOLT	3 PHASE		
CIRCUIT BREAKER			DESCRIPTION (1)	LOAD		
No.	AMPERE	POLE		AB	AC	BC
1	20	3	TUNNEL LIGHTING CIRCUIT 1AS	6223		
3			TUNNEL LIGHTING CIRCUIT 1AS		6223	
5			TUNNEL LIGHTING CIRCUIT 1AS			6223
7	20	3	TUNNEL LIGHTING CIRCUIT 2AS	6223		
9			TUNNEL LIGHTING CIRCUIT 2AS		6223	
11			TUNNEL LIGHTING CIRCUIT 2AS			6223
13	25	3	TUNNEL LIGHTING CIRCUIT CS	8853		
15			TUNNEL LIGHTING CIRCUIT CS		8853	
17			TUNNEL LIGHTING CIRCUIT CS			8853
19	20	3	TUNNEL LIGHTING CIRCUIT ES	5312		
21			TUNNEL LIGHTING CIRCUIT ES		5312	
23			TUNNEL LIGHTING CIRCUIT ES			5312
25	60	3	UPS #2 POWER	17321		
27			UPS #2 POWER		17321	
29			UPS #2 POWER			17321
2	20	3	TUNNEL LIGHTING CIRCUIT 1BS	7082		
4			TUNNEL LIGHTING CIRCUIT 1BS		7082	
6			TUNNEL LIGHTING CIRCUIT 1BS			7082
8	20	3	TUNNEL LIGHTING CIRCUIT 2BS	7082		
10			TUNNEL LIGHTING CIRCUIT 2BS		7082	
12			TUNNEL LIGHTING CIRCUIT 2BS			7082
14	25	3	TUNNEL LIGHTING CIRCUIT DS	8853		
16			TUNNEL LIGHTING CIRCUIT DS		8853	
18			TUNNEL LIGHTING CIRCUIT DS			8853
20	20	3	TUNNEL LIGHTING CIRCUIT FS	5312		
22			TUNNEL LIGHTING CIRCUIT FS		5312	
24			TUNNEL LIGHTING CIRCUIT FS			5312
26	20	3	TUNNEL LIGHTING CIRCUIT YS	5902		
28			TUNNEL LIGHTING CIRCUIT YS		5902	
30			TUNNEL LIGHTING CIRCUIT YS			5902
			TOTAL LINE TO LINE KVA	79	79	79
TOTAL kVA 138			MAIN BREAKER200 A	TOP		X
FEEDER 250 Kcmil THWN				BOTTOM		
NEMA 1			65 KAIC FULLY LOAD			

PANEL TABLE UDS

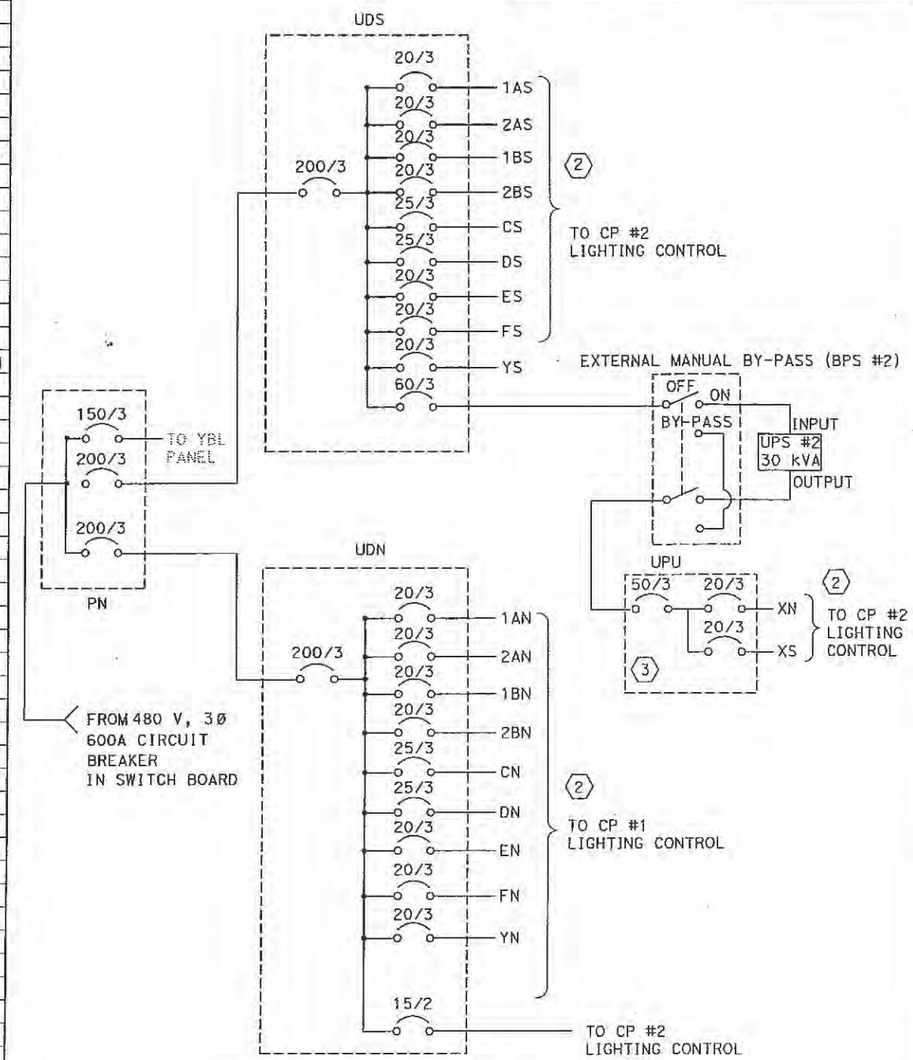

SINGLE LINE DIAGRAM

Contract No. _____

Contract Change Order No.____

Sheet No.____ of ____

YBI TUNNEL LIGHTING

SINGLE LINE DIAGRAM, PANEL TABLE

NO SCALE

E-20

RIT	8/1/12		
REVISED BY	DATE REVISED		
ROBERT HSU	ROBERT HSU		
CALCULATED-DESIGNED BY	CHECKED BY		
FUNCTIONAL SUPERVISOR	BEHZAD GOLENCHAMMADI		
STATE OF CALIFORNIA - DEPARTMENT OF TRANSPORTATION	ELECTRICAL		

Caltrans

LAST REVISION 08-08-12 — DATE PLOTTED => 05-OCT-2012 — TIME PLOTTED => 11:19

Dist	COUNTY	ROUTE	POST MILES TOTAL PROJECT	SHEET No.	TOTAL SHEETS
04	SF	80	7.7/7.8	23	32

REGISTERED ELECTRICAL ENGINEER — DATE 8/12/12

PLANS APPROVAL DATE 8/12/12

REGISTERED PROFESSIONAL ENGINEER — Robert Hsu — No. 17114 — Exp. 9-30-13 — ELECT — STATE OF CALIFORNIA

THE STATE OF CALIFORNIA OR ITS OFFICERS OR AGENTS SHALL NOT BE RESPONSIBLE FOR THE ACCURACY OR COMPLETENESS OF SCANNED COPIES OF THIS PLAN SHEET.

Contract No. _____

Contract Change Order No.____

Sheet No.____ of ____

NOTES: (APPLICABLE TO THIS SHEET ONLY)

1. SCHEMATIC TABLE FOR EACH CIRCUIT, SEE SHEET E-24 AND E-25
2. TYPICAL CONNECTION BETWEEN NEUTRAL AND GROUND ON THE BACKPLATE OF PANEL ENCLOSURE.
3. CONNECT GROUND WIRES TO ALL LUMINAIRE ENCLOSURES AS SHOWN (1) SPLIT GROUND WIRES TO SHARE LOADS EQUALLY BETWEEN 9 CIRCUITS.
4. FOR PC#2 WIRING DETAIL, SEE SHEET E-22

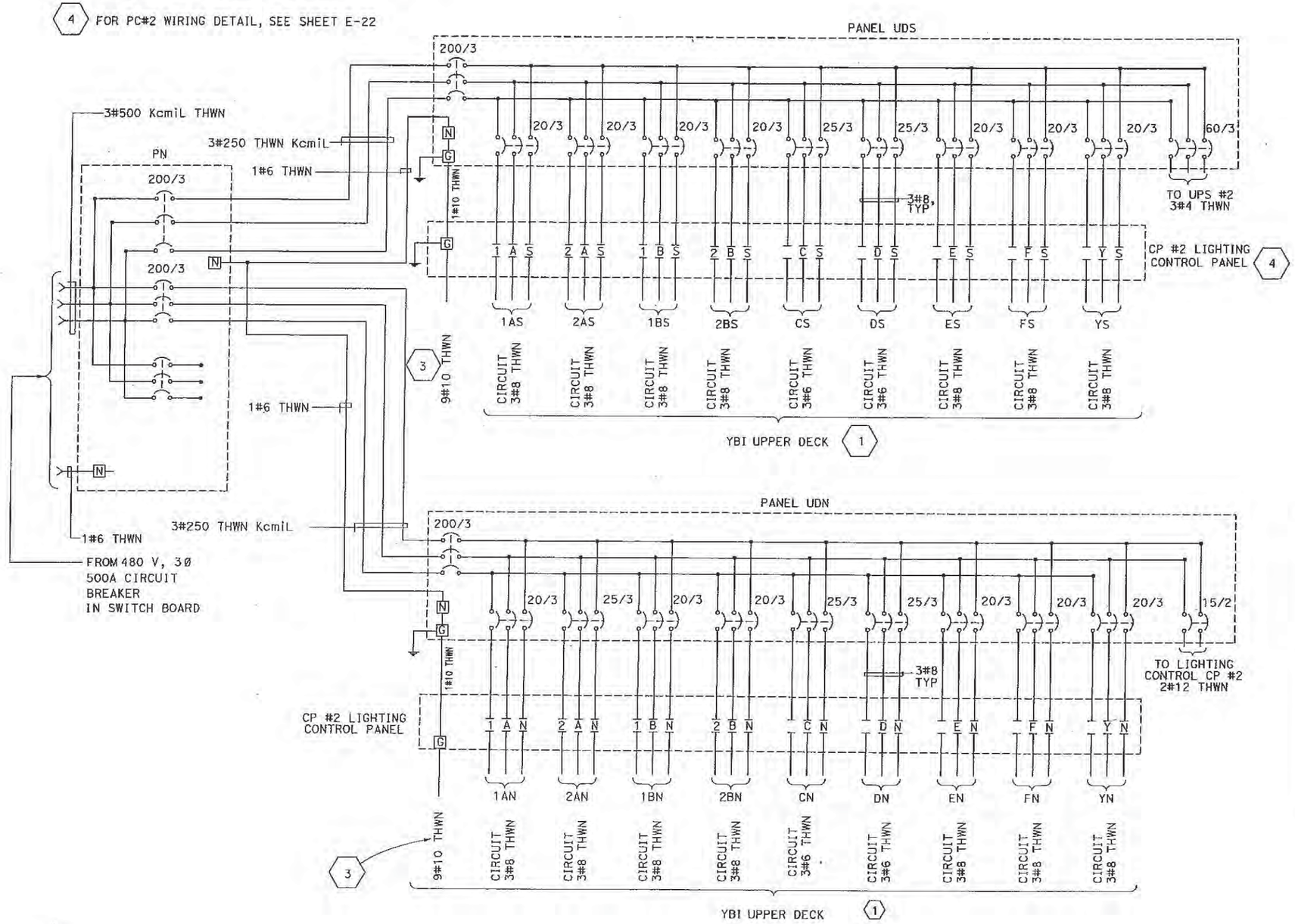

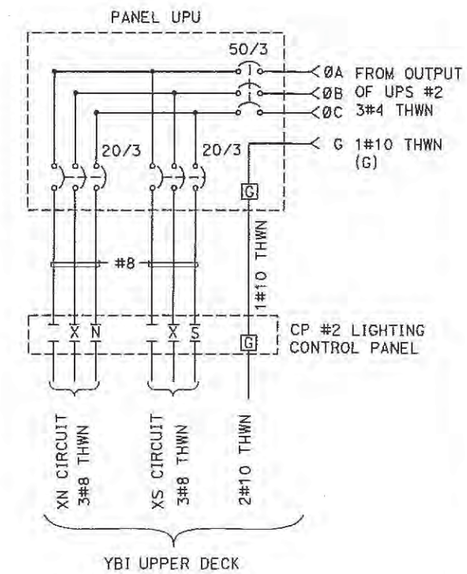

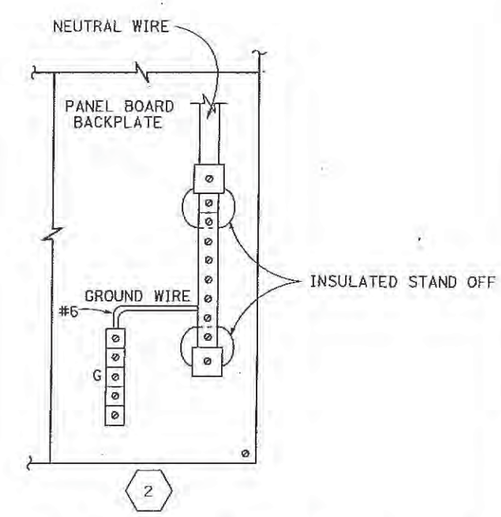

YBI TUNNEL LIGHTING
WIRING DETAIL
NO SCALE

E-21

STATE OF CALIFORNIA – DEPARTMENT OF TRANSPORTATION — ELECTRICAL

FUNCTIONAL SUPERVISOR: BEHZAD GOLEMOHAMMADI

CALCULATED-DESIGNED BY: ROBERT HSU — CHECKED BY: ROBERT HSU

REVISED BY: RT — DATE REVISED: 8/1/12

LAST REVISION 08-08-12 — DATE PLOTTED => 05-OCT-2012 — TIME PLOTTED => 11:20

Dist	COUNTY	ROUTE	POST MILES TOTAL PROJECT	SHEET No.	TOTAL SHEETS
04	SF	80	7.7/7.8	24	32

REGISTERED ELECTRICAL ENGINEER — DATE 8/12/12

PLANS APPROVAL DATE 8/12/12

REGISTERED PROFESSIONAL ENGINEER — Robert Hsu — No. 17114 — Exp. 9-30-13 — ELECT — STATE OF CALIFORNIA

THE STATE OF CALIFORNIA OR ITS OFFICERS OR AGENTS SHALL NOT BE RESPONSIBLE FOR THE ACCURACY OR COMPLETENESS OF SCANNED COPIES OF THIS PLAN SHEET.

GENERAL NOTE: (APPLICABLE TO THIS SHEET ONLY)

FOR CP#2 ENCLOSURE, SEE E-23

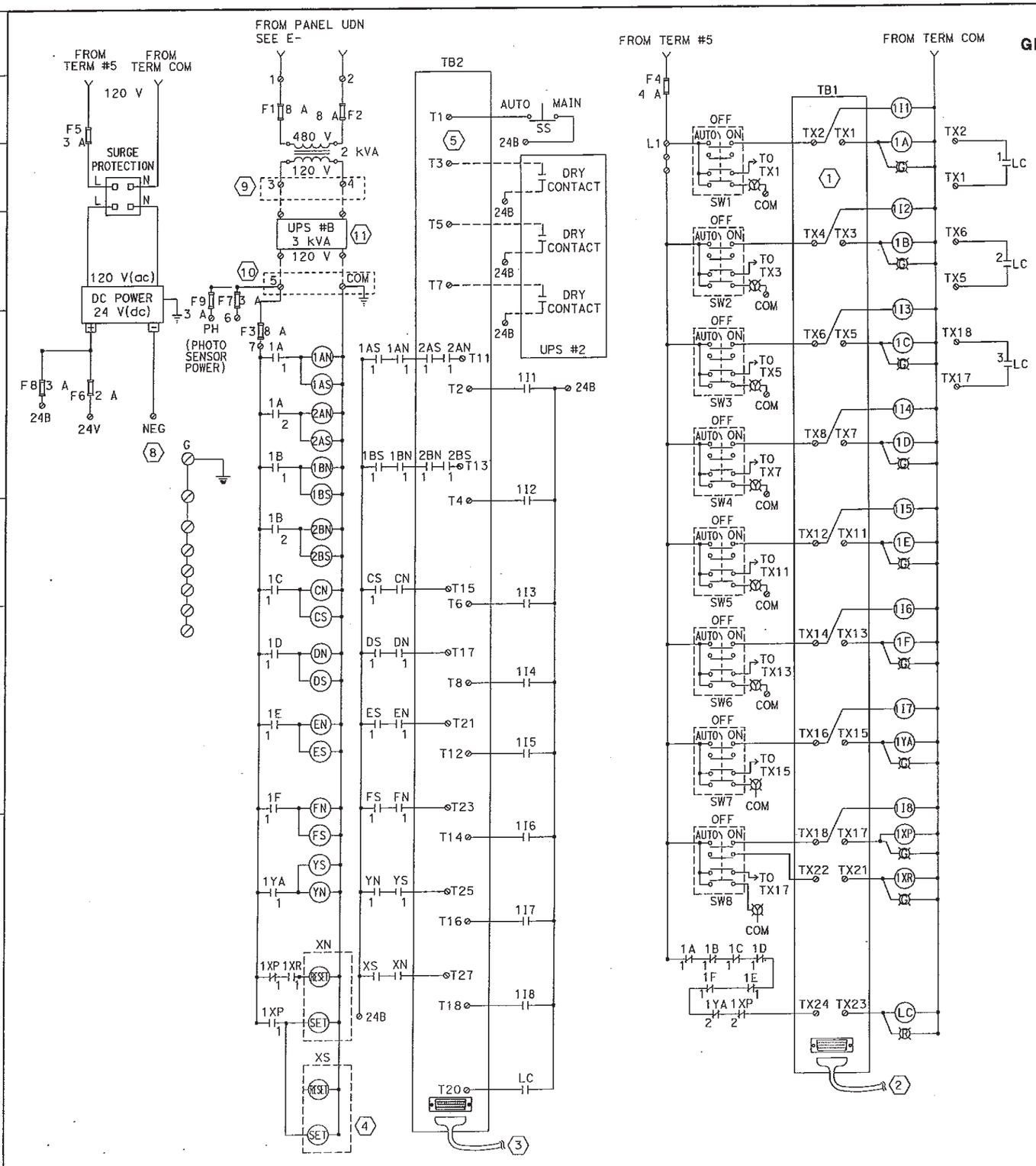

NOTES: (APPLICABLE TO THIS SHEET ONLY)

1. TB1 SHALL BE A DISCRETE 16 POINTS OF OUTPUT BLOCK, INDIVIDUALLY FUSED.
2. APPLY HIGH POWER SYSTEM CABLE AT RATED 2 A PER POINT TO DO MODULE, 12' CABLE LENGTH MINIMUM.
3. APPLY STANDARD POWER SYSTEM CABLE AT RATED 0.5 A PER POINT TO DI MODULE, 12' MINIMUM.
4. MECHANICALLY HELD CONTACTOR IS REQUIRED ADDITIONAL 110 VOLT SIGNAL TO RESET THE CIRCUIT.
5. TB2 SHALL BE A 32 POINTS OF INPUT BLOCK.
6. CONNECT THE CABLE TO AN ETHERNET SWITCH #2 OF THE SCADA CABINET. SEE E-27
7. AI MODULE SHALL BE OPERATED AT CURRENT RANGE OF 4 mA TO 20 mA AND SHALL BE COMPATIBLE WITH PHOTO METER SENSOR, SEE SHEET E- FOR PHOTO METER SENSOR DETAIL.
8. CONNECT 'NEG' TERMINAL TO GROUP COMMON ON TB2.
9. INSTALL A SINGLE 120 V(ac) RECEPTACLE INSIDE THE ENCLOSURE.
10. INSTALL A 120 Vac POWER CORE, 12' LONG MINIMUM IN LENGTH.
11. UPS SHALL BE PROVIDED WITH A 12' LONG OF 120 V(ac) POWER CORE, AND THE UNIT SHALL BE INSTALLED NEXT TO THE CP #1 UNIT.

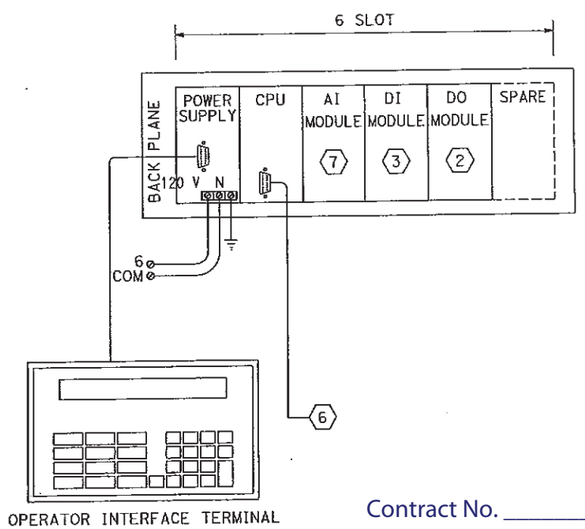

Contract No. _____

Contract Change Order No.____

Sheet No.____ of ____

YBI TUNNEL LIGHTING
CP No. 2 WIRING DETAIL

NO SCALE

E-22

THIS PLAN IS ACCURATE FOR ELECTRICAL WORK ONLY.

STATE OF CALIFORNIA - DEPARTMENT OF TRANSPORTATION — Caltrans — ELECTRICAL

FUNCTIONAL SUPERVISOR: BEHZAD GOLEMOHAMMADI

CALCULATED-DESIGNED BY: ROBERT HSU — CHECKED BY: ROBERT HSU

REVISED BY: RT — DATE REVISED: 8/1/12

LAST REVISION 08-08-12 — DATE PLOTTED => 05-OCT-2012 — TIME PLOTTED => 11:21

BORDER LAST REVISED 4/11/2008 — RELATIVE BORDER SCALE IN INCHES 0 1 2 3 — USERNAME => s124763 — CU 04242 — EA

Dist	COUNTY	ROUTE	POST MILES TOTAL PROJECT	SHEET No.	TOTAL SHEETS
04	SF	80	7.7/7.8	25	32

REGISTERED ELECTRICAL ENGINEER — DATE 8/12/12

PLANS APPROVAL DATE 9/12/12

REGISTERED PROFESSIONAL ENGINEER — Robert Hsu — No. 17114 — Exp. 9-30-13 — ELECT — STATE OF CALIFORNIA

THE STATE OF CALIFORNIA OR ITS OFFICERS OR AGENTS SHALL NOT BE RESPONSIBLE FOR THE ACCURACY OR COMPLETENESS OF SCANNED COPIES OF THIS PLAN SHEET.

NOTES: (APPLICABLE TO THIS SHEET ONLY)

1. A1 TO A16 ARE 30 A, ELECTRICALY HELD, 600/480 V LIGHTING CONTACTORS (TYPICAL).
2. B1 TO B10 AND I1 TO I9 ARE 120 V, 4 PDT, KHAU1711 TYPE. ALL RELAYS SHALL INCLUDE NEON LIGHT INDICATORS. RELAY SOCKETS SHALL BE MOUNTED TO THE RAIL.
3. FOR SWITCHES AND INDICATOR LIGHTS CONFIGURATION DETAIL, SEE NAMEPLATE SCHEDULE
4. D1 AND D2 ARE 30 A, MECHANICALLY HELD, 600/480 V LIGHTING CONDUCTORS.
5. ALL TERMINALS IN LIGHTING CONTACTOR ENCLOSURES SHALL ACCOMODATE #6 OR LARGER CONDUCTORS.
6. THE NAMEPLATE IS LOCATED ON THE FRONT COVER OF THE PANEL.

NAMEPLATE SCHEDULE FOR PANEL UDN

1	CIRCUIT 1AN	2	CIRCUIT 1BN	SIZE OF NAMEPLATES: ¼" HIGHT BLACK ON A WHITE BACK GROUND, ⅝" H x 2½" W, LAMINATED PLASTIC
3	CIRCUIT 2AN	4	CIRCUIT 2BN	
5	CIRCUIT CN	6	CIRCUIT DN	
7	CIRCUIT EN	8	CIRCUIT FN	
9	CP #2 POWER	10	CIRCUIT YN	
11	PANEL MAIN	12	PANEL UDN (6)	
13		14		
15		16		

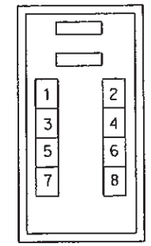

NAMEPLATE SCHEDULE FOR PANEL UPU

1	CIRCUIT XN	2	CIRCUIT XS	SIZE OF NAMEPLATES: ¼" HIGHT BLACK ON A WHITE BACK GROUND, ⅝" H x 2½" W, LAMINATED PLASTIC
3	PANEL MAIN	4	PANEL UPU (6)	
5		6		
7		8		
9		10		
11		12		
13		14		
15		16		

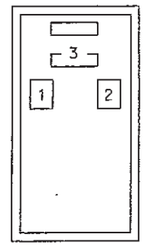

NAMEPLATE SCHEDULE FOR PANEL UDS

1	CIRCUIT 1AS	2	CIRCUIT 1BS	SIZE OF NAMEPLATES: ¼" HIGHT BLACK ON A WHITE BACK GROUND, ⅝" H x 2½" W, LAMINATED PLASTIC
3	CIRCUIT 2AS	4	CIRCUIT 2BS	
5	CIRCUIT CS	6	CIRCUIT DS	
7	CIRCUIT ES	8	CIRCUIT FS	
9	UPS #2 POWER	10	CIRCUIT YS	
11	PANEL MAIN	12	PANEL UDS (6)	
13		14		
15		16		

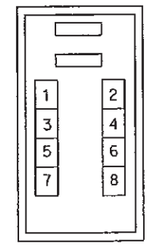

Contract No. _____

Contract Change Order No.____

Sheet No.____ of ____

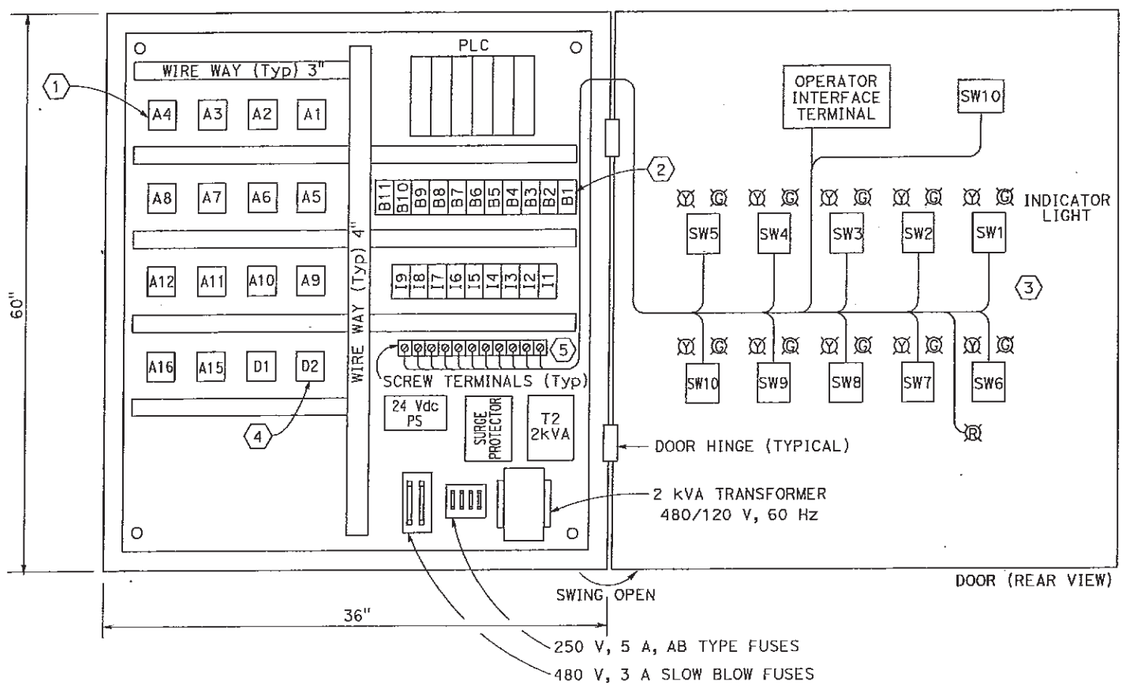

CP #2 ENCLOSURE

NEMA 1
WALL MOUNT, ANSI 61, GRAY

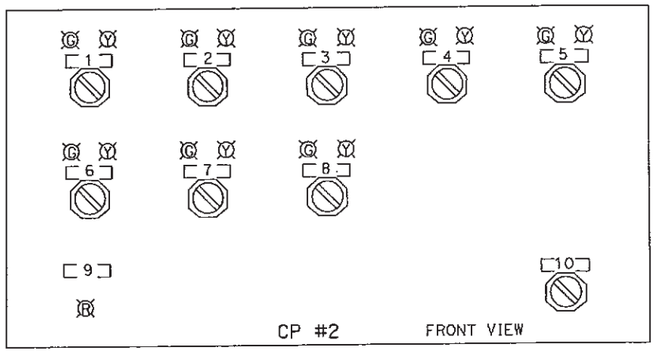

CP #2 FRONT VIEW

	CP #1			SIZE OF NAMEPLATES
1	AUTO OFF MANUAL CIRCUIT A	7	AUTO OFF MANUAL CIRCUIT Y	¼" HIGHT BLACK ON A WHITE BACK GROUND, ⅝" H x 2½" W, LAMINATED PLASTIC
2	AUTO OFF MANUAL CIRCUIT B	8	AUTO OFF MANUAL CIRCUIT X	
3	AUTO OFF MANUAL CIRCUIT C	9	COMMUNICATION BREAKDOWN	
4	AUTO OFF MANUAL CIRCUIT D	10	AUTO MAIN	
5	AUTO OFF MANUAL CIRCUIT E			
6	AUTO OFF MANUAL CIRCUIT F			

YBI TUNNEL LIGHTING

FRONT PANEL LAYOUT NAMEPLATE SCHEDULE AND LIGHTING CONTACTOR ENCLOSURE

NO SCALE

E-23

STATE OF CALIFORNIA - DEPARTMENT OF TRANSPORTATION — Caltrans — ELECTRICAL

FUNCTIONAL SUPERVISOR: BEHZAD GOLEMOHAMMADI

CALCULATED-DESIGNED BY: ROBERT HSU — CHECKED BY: ROBERT HSU

REVISED BY: RT — DATE REVISED: 8/1/12

LAST REVISION 08-08-12 — DATE PLOTTED => 05-OCT-2012 — TIME PLOTTED => 11:21

Dist	COUNTY	ROUTE	POST MILES TOTAL PROJECT	SHEET No.	TOTAL SHEETS
04	SF	80	7.7/7.8	26	32

REGISTERED ELECTRICAL ENGINEER 8/12/12 DATE

PLANS APPROVAL DATE 8/12/12

REGISTERED PROFESSIONAL ENGINEER Robert Hsu No. 17114 Exp. 9-30-13 ELECT STATE OF CALIFORNIA

THE STATE OF CALIFORNIA OR ITS OFFICERS OR AGENTS SHALL NOT BE RESPONSIBLE FOR THE ACCURACY OR COMPLETENESS OF SCANNED COPIES OF THIS PLAN SHEET.

Contract No. _____

Contract Change Order No.____

Sheet No.____ of ____

LUMINAIRE TABLE FOR CONTACTOR 2AS

LUMINAIRE NUMBER	PHASE AB	PHASE AC	PHASE BC
	2AS 1	2AS 2	2AS 3
	2AS 4	2AS 5	2AS 6
	2AS 7	2AS 8	2AS 9
	2AS 10	2AS 11	2AS 12
	2AS 13	2AS 14	2AS 15
	2AS 16	2AS 17	2AS 18
	2AS 19	2AS 20	2AS 21

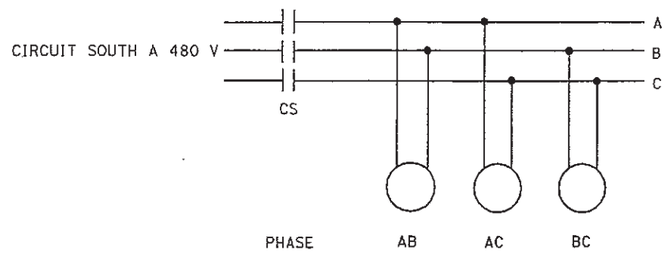

TYPICAL SCHEMATIC DIAGRAM

LUMINAIRE TABLE FOR CONTACTOR 2BS

LUMINAIRE NUMBER	PHASE AB	PHASE AC	PHASE BC
	2BS 1	2BS 2	2BS 3
	2BS 4	2BS 5	2BS 6
	2BS 7	2BS 8	2BS 9
	2BS 10	2BS 11	2BS 12
	2BS 13	2BS 14	2BS 15
	2BS 16	2BS 17	2BS 18
	2BS 19	2BS 20	2BS 21
	2BS 22	2BS 23	2BS 24

LUMINAIRE TABLE FOR CONTACTOR DS

LUMINAIRE NUMBER	PHASE AB	PHASE AC	PHASE BC
	DS 1	DS 2	DS 3
	DS 4	DS 5	DS 6
	DS 7	DS 8	DS 9
	DS 10	DS 11	DS 12
	DS 13	DS 14	DS 15
	DS 16	DS 17	DS 18
	DS 19	DS 20	DS 21
	DS 22	DS 23	DS 24
	DS 25	DS 26	DS 27
	DS 28	DS 29	DS 30

LUMINAIRE TABLE FOR CONTACTOR 1AS

LUMINAIRE NUMBER	PHASE AB	PHASE AC	PHASE BC
	1AS 1	1AS 2	1AS 3
	1AS 4	1AS 5	1AS 6
	1AS 7	1AS 8	1AS 9
	1AS 10	1AS 11	1AS 12
	1AS 13	1AS 14	1AS 15
	1AS 16	1AS 17	1AS 18
	1AS 19	1AS 20	1AS 21

LUMINAIRE TABLE FOR CONTACTOR 1BS

LUMINAIRE NUMBER	PHASE AB	PHASE AC	PHASE BC
	1BS 1	1BS 2	1BS 3
	1BS 4	1BS 5	1BS 6
	1BS 7	1BS 8	1BS 9
	1BS 10	1BS 11	1BS 12
	1BS 13	1BS 14	1BS 15
	1BS 16	1BS 17	1BS 18
	1BS 19	1BS 20	1BS 21
	1BS 22	1BS 23	1BS 24

LUMINAIRE TABLE FOR CONTACTOR CS

LUMINAIRE NUMBER	PHASE AB	PHASE AC	PHASE BC
	CS 1	CS 2	CS 3
	CS 4	CS 5	CS 6
	CS 7	CS 8	CS 9
	CS 10	CS 11	CS 12
	CS 13	CS 14	CS 15
	CS 16	CS 17	CS 18
	CS 19	CS 20	CS 21
	CS 22	CS 23	CS 24
	CS 25	CS 26	CS 27
	CS 28	CS 29	CS 30

LUMINAIRE TABLE FOR CONTACTOR XS

LUMINAIRE NUMBER	PHASE AB	PHASE AC	PHASE BC
	XS 1	XS 2	XS 3
	XS 4	XS 5	XS 6
	XS 7	XS 8	XS 9
	XS 10	XS 11	XS 12
	XS 13	XS 14	XS 15
	XS 16	XS 17	XS 18
	XS 19	XS 20	XS 21

LUMINAIRE TABLE FOR CONTACTOR ES

LUMINAIRE NUMBER	PHASE AB	PHASE AC	PHASE BC
	ES 1	ES 2	ES 3
	ES 4	ES 5	ES 6
	ES 7	ES 8	ES 9
	ES 10	ES 11	ES 12
	ES 13	ES 14	ES 15
	ES 16	ES 17	ES 18

LUMINAIRE TABLE FOR CONTACTOR FS

LUMINAIRE NUMBER	PHASE AB	PHASE AC	PHASE BC
	FS 1	FS 2	FS 3
	FS 4	FS 5	FS 6
	FS 7	FS 8	FS 9
	FS 10	FS 11	FS 12
	FS 13	FS 14	FS 15
	FS 16	FS 17	FS 18

LUMINAIRE TABLE FOR CONTACTOR YS

LUMINAIRE NUMBER	PHASE AB	PHASE AC	PHASE BC
	YS 1	YS 2	YS 3
	YS 4	YS 5	YS 6
	YS 7	YS 8	YS 9
	YS 10	YS 11	YS 12
	YS 13	YS 14	YS 15
	YS 16	YS 17	YS 18
	YS 19	YS 20	

YBI TUNNEL LIGHTING
LUMINAIRE TABLE

NO SCALE

E-24

REVISED BY	DATE REVISED
RT	8/1/12

CALCULATED-DESIGNED BY	CHECKED BY
ROBERT HSU	ROBERT HSU

FUNCTIONAL SUPERVISOR: BEHZAD GOLEMOHAMMADI

STATE OF CALIFORNIA - DEPARTMENT OF TRANSPORTATION

Caltrans

ELECTRICAL

LAST REVISION 08-08-12

DATE PLOTTED => 05-OCT-2012
TIME PLOTTED => 11:22

Dist	COUNTY	ROUTE	POST MILES TOTAL PROJECT	SHEET No.	TOTAL SHEETS
04	SF	80	7.7/7.8	27	32

REGISTERED ELECTRICAL ENGINEER 8/12/12 DATE

PLANS APPROVAL DATE

Robert Hsu No. 17114 Exp. 9-30-13 ELECT STATE OF CALIFORNIA REGISTERED PROFESSIONAL ENGINEER

THE STATE OF CALIFORNIA OR ITS OFFICERS OR AGENTS SHALL NOT BE RESPONSIBLE FOR THE ACCURACY OR COMPLETENESS OF SCANNED COPIES OF THIS PLAN SHEET.

Contract No. _____

Contract Change Order No.____

Sheet No.____ of ____

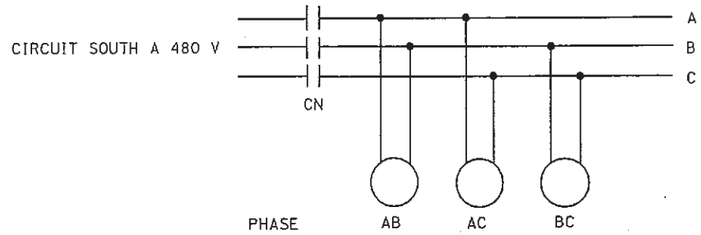

TYPICAL SCHEMATIC DIAGRAM

LUMINAIRE TABLE FOR CONTACTOR 2AN

LUMINAIRE NUMBER	PHASE AB	PHASE AC	PHASE BC
	2AN 1	2AN 2	2AN 3
	2AN 4	2AN 5	2AN 6
	2AN 7	2AN 8	2AN 9
	2AN 10	2AN 11	2AN 12
	2AN 13	2AN 14	2AN 15
	2AN 16	2AN 17	2AN 18
	2AN 19	2AN 20	2AN 21

LUMINAIRE TABLE FOR CONTACTOR 2BN

LUMINAIRE NUMBER	PHASE AB	PHASE AC	PHASE BC
	2BN 1	2BN 2	2BN 3
	2BN 4	2BN 5	2BN 6
	2BN 7	2BN 8	2BN 9
	2BN 10	2BN 11	2BN 12
	2BN 13	2BN 14	2BN 15
	2BN 16	2BN 17	2BN 18
	2BN 19	2BN 20	2BN 21
	2BN 22	2BN 23	2BN 24

LUMINAIRE TABLE FOR CONTACTOR DN

LUMINAIRE NUMBER	PHASE AB	PHASE AC	PHASE BC
	DN 1	DN 2	DN 3
	DN 4	DN 5	DN 6
	DN 7	DN 8	DN 9
	DN 10	DN 11	DN 12
	DN 13	DN 14	DN 15
	DN 16	DN 17	DN 18
	DN 19	DN 20	DN 21
	DN 22	DN 23	DN 24
	DN 25	DN 26	DN 27
	DN 28	DN 29	DN 30

LUMINAIRE TABLE FOR CONTACTOR 1AN

LUMINAIRE NUMBER	PHASE AB	PHASE AC	PHASE BC
	1AN 1	1AN 2	1AN 3
	1AN 4	1AN 5	1AN 6
	1AN 7	1AN 8	1AN 9
	1AN 10	1AN 11	1AN 12
	1AN 13	1AN 14	1AN 15
	1AN 16	1AN 17	1AN 18
	1AN 19	1AN 20	1AN 21

LUMINAIRE TABLE FOR CONTACTOR 1BN

LUMINAIRE NUMBER	PHASE AB	PHASE AC	PHASE BC
	1BN 1	1BN 2	1BN 3
	1BN 4	1BN 5	1BN 6
	1BN 7	1BN 8	1BN 9
	1BN 10	1BN 11	1BN 12
	1BN 13	1BN 14	1BN 15
	1BN 16	1BN 17	1BN 18
	1BN 19	1BN 20	1BN 21
	1BN 22	1BN 23	1BN 24

LUMINAIRE TABLE FOR CONTACTOR CN

LUMINAIRE NUMBER	PHASE AB	PHASE AC	PHASE BC
	CN 1	CN 2	CN 3
	CN 4	CN 5	CN 6
	CN 7	CN 8	CN 9
	CN 10	CN 11	CN 12
	CN 13	CN 14	CN 15
	CN 16	CN 17	CN 18
	CN 19	CN 20	CN 21
	CN 22	CN 23	CN 24
	CN 25	CN 26	CN 27
	CN 28	CN 29	CN 30

LUMINAIRE TABLE FOR CONTACTOR XN

LUMINAIRE NUMBER	PHASE AB	PHASE AC	PHASE BC
	XN 1	XN 2	XN 3
	XN 4	XN 5	XN 6
	XN 7	XN 8	XN 9
	XN 10	XN 11	XN 12
	XN 13	XN 14	XN 15
	XN 16	XN 17	XN 18
	XN 19	XN 20	XN 21

LUMINAIRE TABLE FOR CONTACTOR EN

LUMINAIRE NUMBER	PHASE AB	PHASE AC	PHASE BC
	EN 1	EN 2	EN 3
	EN 4	EN 5	EN 6
	EN 7	EN 8	EN 9
	EN 10	EN 11	EN 12
	EN 13	EN 14	EN 15
	EN 16	EN 17	EN 18

LUMINAIRE TABLE FOR CONTACTOR FN

LUMINAIRE NUMBER	PHASE AB	PHASE AC	PHASE BC
	FN 1	FN 2	FN 3
	FN 4	FN 5	FN 6
	FN 7	FN 8	FN 9
	FN 10	FN 11	FN 12
	FN 13	FN 14	FN 15
	FN 16	FN 17	FN 18

LUMINAIRE TABLE FOR CONTACTOR YN

LUMINAIRE NUMBER	PHASE AB	PHASE AC	PHASE BC
	YN 1	YN 2	YN 3
	YN 4	YN 5	YN 6
	YN 7	YN 8	YN 9
	YN 10	YN 11	YN 12
	YN 13	YN 14	YN 15
	YN 16	YN 17	YN 18
	YN 19	YN 20	

YBI TUNNEL LIGHTING

LUMINAIRE TABLE

NO SCALE

E-25

REVISED BY	DATE REVISED
RT	8/1/12

CALCULATED-DESIGNED BY	CHECKED BY
ROBERT HSU	ROBERT HSU

FUNCTIONAL SUPERVISOR: BEHZAD GOLEMOHAMMADI

STATE OF CALIFORNIA - DEPARTMENT OF TRANSPORTATION

Caltrans® ELECTRICAL

LAST REVISION 08-08-12 | DATE PLOTTED => 05-OCT-2012 | TIME PLOTTED => 11:22

Dist	COUNTY	ROUTE	POST MILES TOTAL PROJECT	SHEET No.	TOTAL SHEETS
04	Ala	80	7.72/7.82	28	32

REGISTERED CIVIL ENGINEER 8/12/12 DATE

PLANS APPROVAL DATE

REGISTERED PROFESSIONAL ENGINEER Robert Hsu No. 17114 Exp. 9-30-13 CIVIL STATE OF CALIFORNIA

THE STATE OF CALIFORNIA OR ITS OFFICERS OR AGENTS SHALL NOT BE RESPONSIBLE FOR THE ACCURACY OR COMPLETENESS OF SCANNED COPIES OF THIS PLAN SHEET.

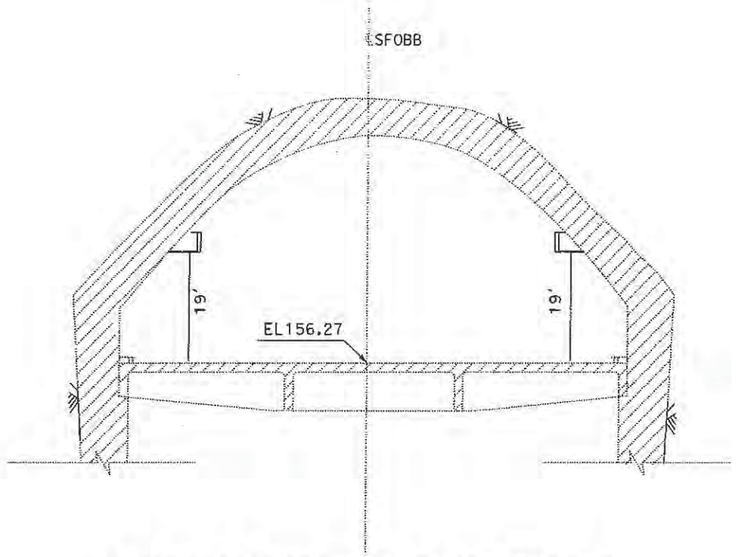

YBI UPPER DECK SEE DETAIL 1 AND 4

CROSS SECTION

NO SCALE

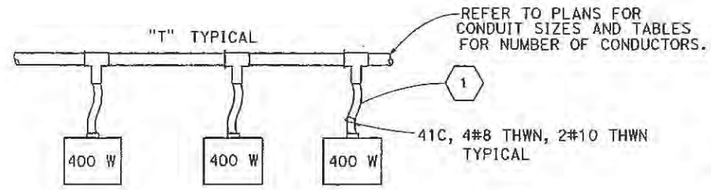

TYPICAL LUMINAIRE CONDUIT CONNECTION SPACING SHALL BE PER PLAN

ELEVATION

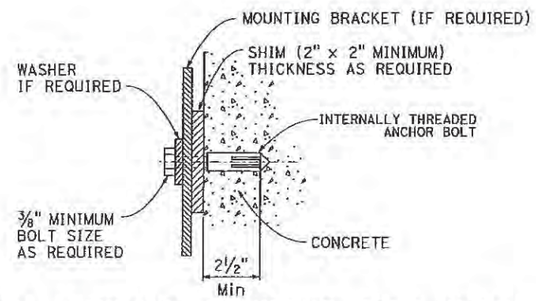

TYPICAL LUMINAIRE MOUNTING BOLT INSTALLATION

DETAIL 4

NOTES: (APPLICABLE TO THIS SHEET ONLY)

1. INSTALL 41C, LTF CONDUIT WITH SEALING GASKETS ON EACH END. LTF CONDUIT SHALL BE A GROUNDED TYPE WITH A CONTINOUS COPER GROUND. LIQUID-TIGHT FLEXIBLE STEEL CONDUIT USED IN THE TUBES SHALL COMPLY WITH NFPA 70 AND SHALL HAVE A JACKET MATERIAL WHICH HAS LIMITED SMOKE, LOW FLAME SPREAD AND LOW TOXIC GAS EMISSION CHARACTERISTICS IN THE EVENT OF THE FIRE.
2. USE MOUNTING HARDWARE PER MANUFACTURER'S RECOMMENDATIONS. INSTALL NYLON WASHER BETWEEN FIXTURE AND MOUNTING BRACKETS.
3. ACTUAL LENGTH SHALL BE DETERMINED BY FIELD MEASUREMENT AND PERFORMED BY CONTRACTORS.
4. EXACT SPACING ARRANGEMENT, CONDUIT KNOCKOUT SIZE AND FIXTURE MOUNTING HOLE SIZES SHALL BE DETERMINED PER MANUFACTURER'S RECOMMENDATIONS.
5. TERMINATED CONDUCTORS ON QUICK DISCONNECT TERMINAL BLOCK SHALL BE INSIDE LUMINAIRE. THE LOCATION OF THE BLOCK SHALL BE AWAY FROMTHE HEAT GENERATED BY LUMINAIRE. GROUNG LUG SHALL BE MOUNTED INSIDE THE FIXTURE ENCLOSURE.

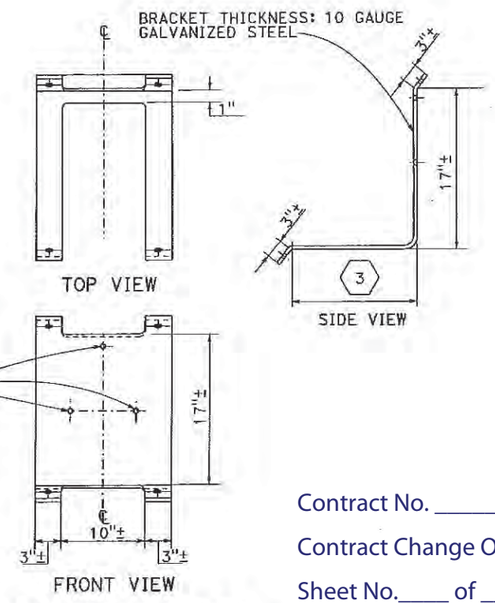

MOUNTING BRACKET

DETAIL 2

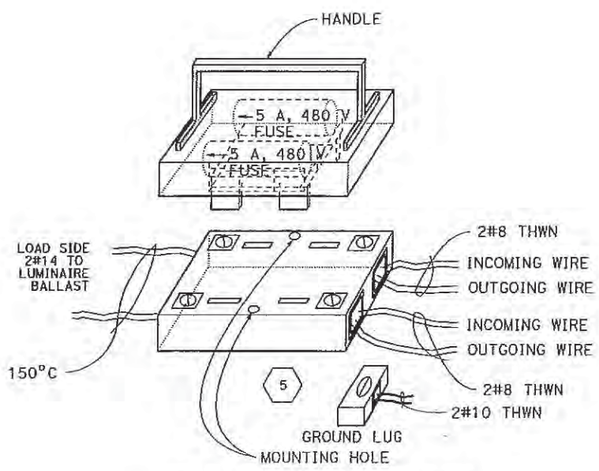

QUICK DISCONNECT TERMINAL BLOCK (INCLUDING FUSES)

DETAIL 3

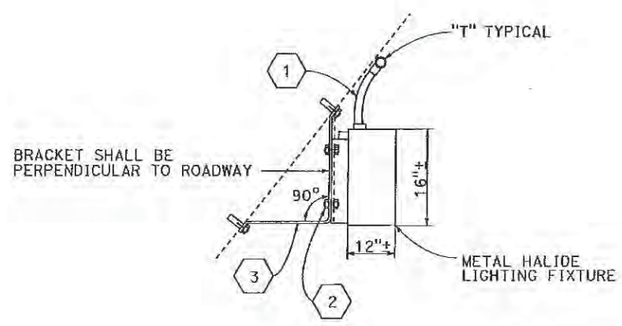

LUMINAIRE MOUNTING

DETAIL 1

Contract No. _____

Contract Change Order No.____

Sheet No.____ of ____

YBT TUNNEL LIGHTING INSTALLATION DETAILS

E-26

REVISED BY	DATE REVISED
RT	8/1/12

ROBERT HSU — ROBERT HSU

CALCULATED-DESIGNED BY — CHECKED BY

FUNCTIONAL SUPERVISOR: BEHZAD GOLEMOHAMMADI

STATE OF CALIFORNIA - DEPARTMENT OF TRANSPORTATION — ELECTRICAL

LAST REVISION 08-08-12 — DATE PLOTTED => 05-OCT-2012 TIME PLOTTED => 11:23

Dist	COUNTY	ROUTE	POST MILES TOTAL PROJECT	SHEET No.	TOTAL SHEETS
04	SF	80	7.7/7.8	29	32

REGISTERED ELECTRICAL ENGINEER DATE 8/12/12

PLANS APPROVAL DATE 8/12/12

REGISTERED PROFESSIONAL ENGINEER Robert Hsu No. 17114 Exp. 9-30-13 ELECT STATE OF CALIFORNIA

THE STATE OF CALIFORNIA OR ITS OFFICERS OR AGENTS SHALL NOT BE RESPONSIBLE FOR THE ACCURACY OR COMPLETENESS OF SCANNED COPIES OF THIS PLAN SHEET.

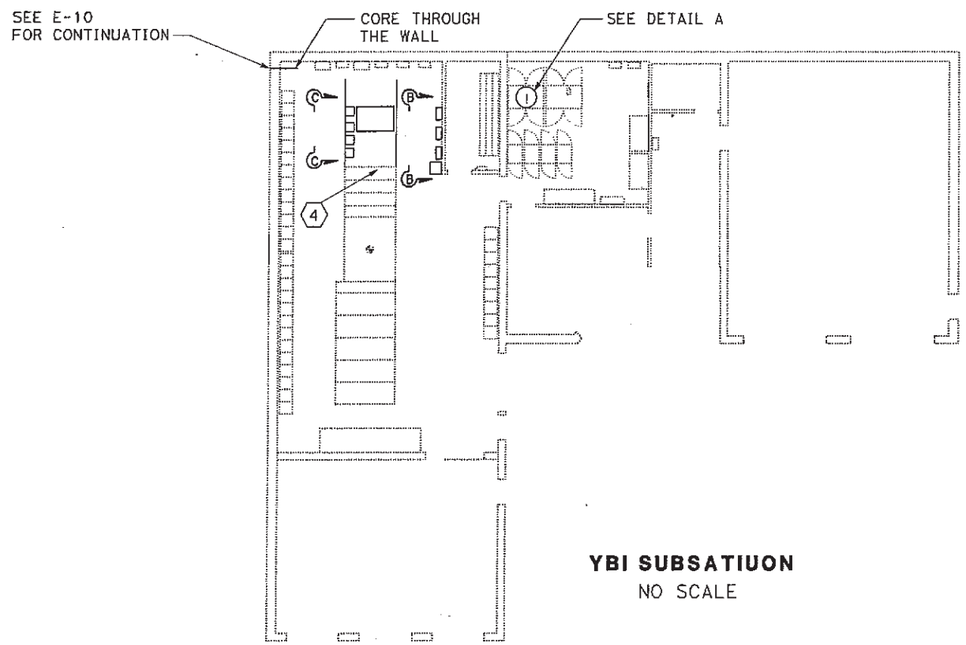

YBI SUBSATIUON
NO SCALE

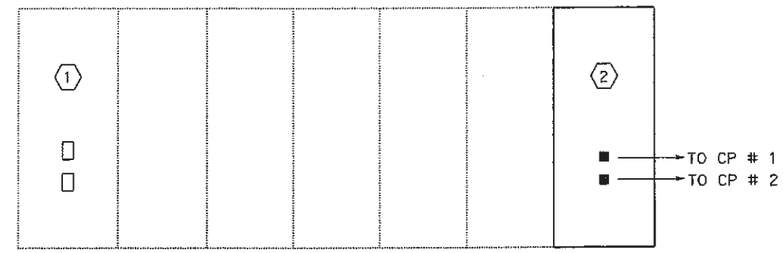

RTU # 7A (1)

DETAIL A

GENERAL NOTE:

1. ALL CONDUCTORS GOING TO YBI LOWER AND UPPER DECK SHALL BE TRANSPORTED BY CABLE TRAY.CONFIRM WITH R.E. (RESIDENT ENGINEER) FOR THE INTERUCTIONS.

NOTES:

1. EXISTING RTU#7A CONSITS OF PAC SYSTEMS OF RX3I, COMMUNICATION PORT, AND OTHERS. THE NEW SYSTEM REPLACED THE OLD RTU#7A, WILL BE INSTALLED BY THE OTHER CONTRACT JOB. INFORM THE R.E.(RESIDENT ENGINEER) FOR THE REVISED UPDATE.
2. INSTALL ETHERNET INTERFACE MODULE TO MATCH WITH THE EXISTING SYSTEM. INSTALL CABLES AND CONNECT TO CP#1 AND CP#2.
3. APPLY 14 GAUGE UNITRUT CHANNELS. ANGULAR FITTINGS AND POST BASES TO BUILD A STRUCTURE TO SUPPORT EQUIPMENT
4. INSTALL NEW 600A MOLDED CASE CIRCUIT BREAKER TO TO EXISTING FRAME OF 480V SWITCH BOARD.

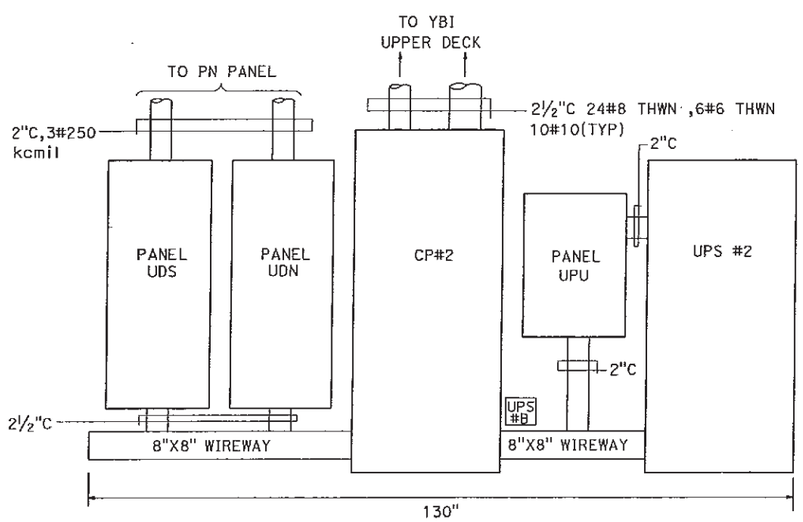

SECTION B-B

DETAIL B

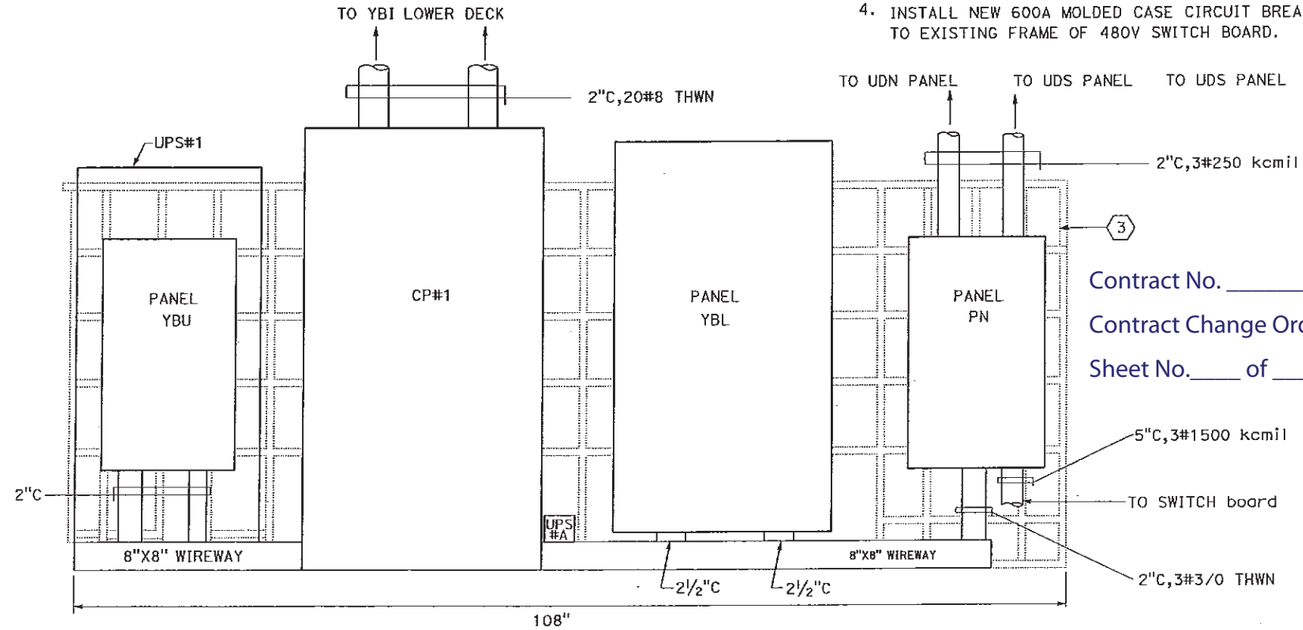

SECTION C-C

DETAIL C

Contract No. _____

Contract Change Order No.____

Sheet No.____ of ____

YBI TUNNEL LIGHTING SUBSTATION WORK

NO SCALE **E-27**

REVISED BY	DATE REVISED
RT	8/1/12

CALCULATED-DESIGNED BY	CHECKED BY
ROBERT HSU	ROBERT HSU

FUNCTIONAL SUPERVISOR: BEHZAD GOLEMOHAMMADI

STATE OF CALIFORNIA - DEPARTMENT OF TRANSPORTATION

Caltrans

ELECTRICAL

LAST REVISION 08-08-12 | DATE PLOTTED => 05-OCT-2012 | TIME PLOTTED => 11:23

Dist	COUNTY	ROUTE	POST MILES TOTAL PROJECT	SHEET No.	TOTAL SHEETS
04	SF	80	7.7/7.8	30	32

REGISTERED ELECTRICAL ENGINEER 8/12/12 DATE

8/12/12
PLANS APPROVAL DATE

REGISTERED PROFESSIONAL ENGINEER Robert Hsu No. 17114 Exp. 9-30-13 ELECT STATE OF CALIFORNIA

THE STATE OF CALIFORNIA OR ITS OFFICERS OR AGENTS SHALL NOT BE RESPONSIBLE FOR THE ACCURACY OR COMPLETENESS OF SCANNED COPIES OF THIS PLAN SHEET.

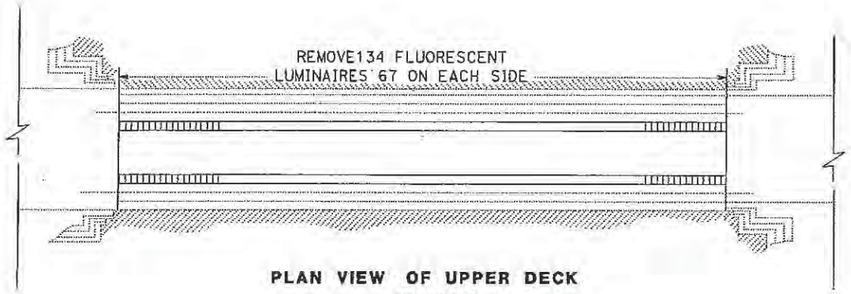

PLAN VIEW OF UPPER DECK
NO SCALE

NOTES (APPLICABLE TO THIS SHEET ONLY)

(1) AFTER NEW LIGHTING IS INSTALLED AND TESTED, [RC] THESE EXISTING EQUIPMENT INCLUDING ALL LUMINAIRES, CONDUITS, CONDUCTORS/CABLES AND HARDWARE.

(2) CUT ANCHOR BOLT TO FLUSH WITH CONCRETE SURFACE.

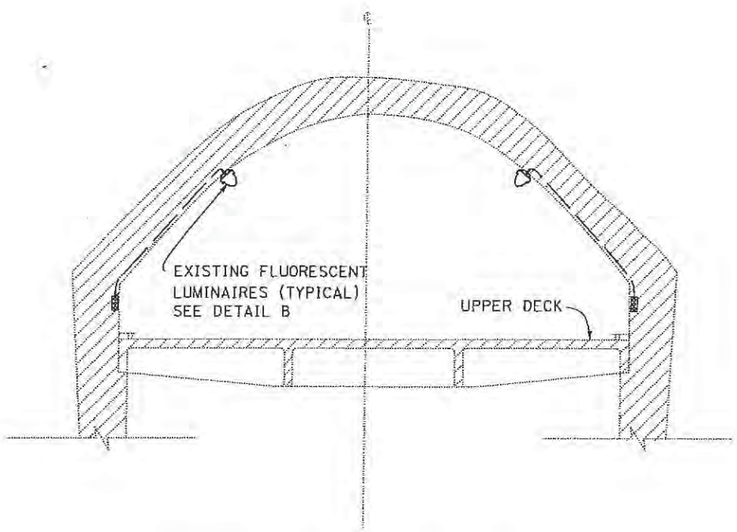

SECTION VIEW OF UPPER DECK
NO SCALE

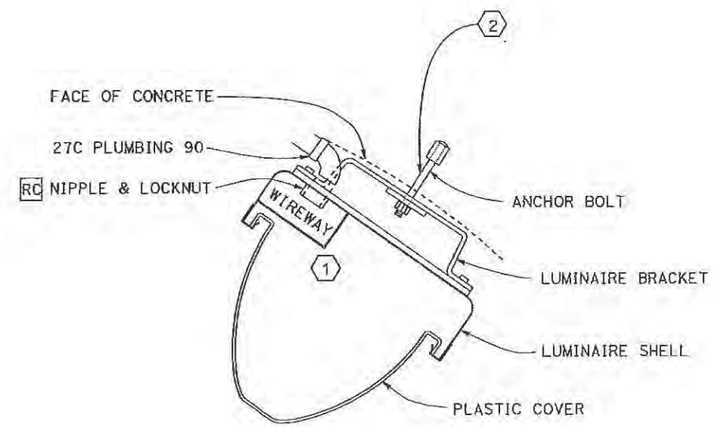

TYPICAL FLUORESCENT LIGHT CROSS SECTION
NO SCALE

DETAIL B

Contract No. _____

Contract Change Order No.____

Sheet No.____ of ____

YBI TUNNEL LIGHTING
UPPER DECK EXISTING EQUIPMENT REMOVAL
NO SCALE

E-28

REVISED BY	DATE REVISED
RT	8/1/12

CALCULATED-DESIGNED BY: ROBERT HSU
CHECKED BY: ROBERT HSU

FUNCTIONAL SUPERVISOR: BEHZAD GOLEMOHAMMADI

STATE OF CALIFORNIA - DEPARTMENT OF TRANSPORTATION
Caltrans
ELECTRICAL

LAST REVISION 08-08-12 | DATE PLOTTED => 05-OCT-2012 TIME PLOTTED => 11:23

Dist	COUNTY	ROUTE	POST MILES TOTAL PROJECT	SHEET No.	TOTAL SHEETS
04	SF	80	7.7/7.8	31	32

REGISTERED ELECTRICAL ENGINEER — DATE 8/12/12

PLANS APPROVAL DATE 8/12/12

REGISTERED PROFESSIONAL ENGINEER Robert Hsu No. 17114 Exp. 9-30-13 ELECT STATE OF CALIFORNIA

THE STATE OF CALIFORNIA OR ITS OFFICERS OR AGENTS SHALL NOT BE RESPONSIBLE FOR THE ACCURACY OR COMPLETENESS OF SCANNED COPIES OF THIS PLAN SHEET.

SYMBOLS AND NOTES (APPLICABLE TO THIS SHEET ONLY)

- EXISTING 180 WATT, TWIN LAMP LOW PRESSURE SODIUM
- EXISTING 180 WATT, TWIN LAMP LOW PRESSURE SODIUM
- EXISTING 90 WATT, SINGLE LAMP LOW PRESSURE SODIUM
- EXISTING 55 WATT LOW PRESSURE SODIUM LUMINAIRE
- EXISTING FLOUORESCENT LIGHT
- SPLICE BOX

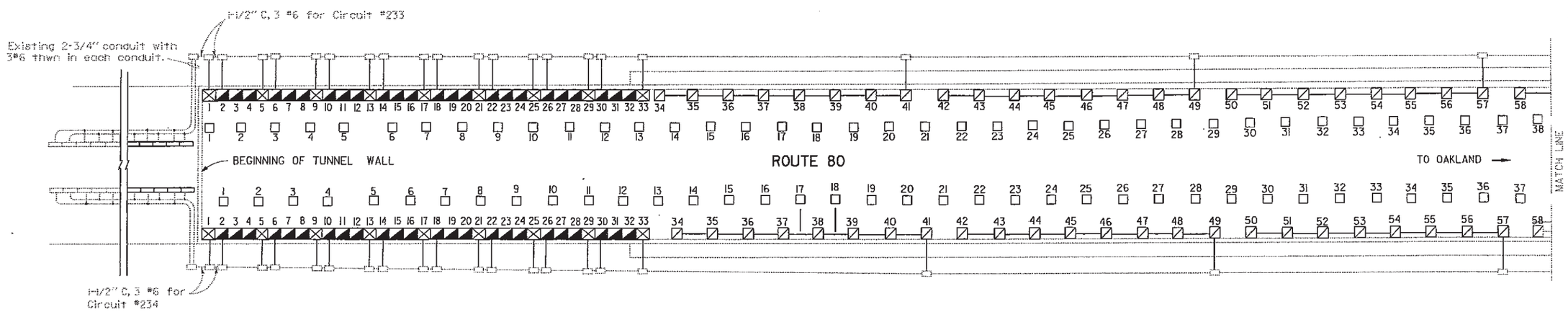

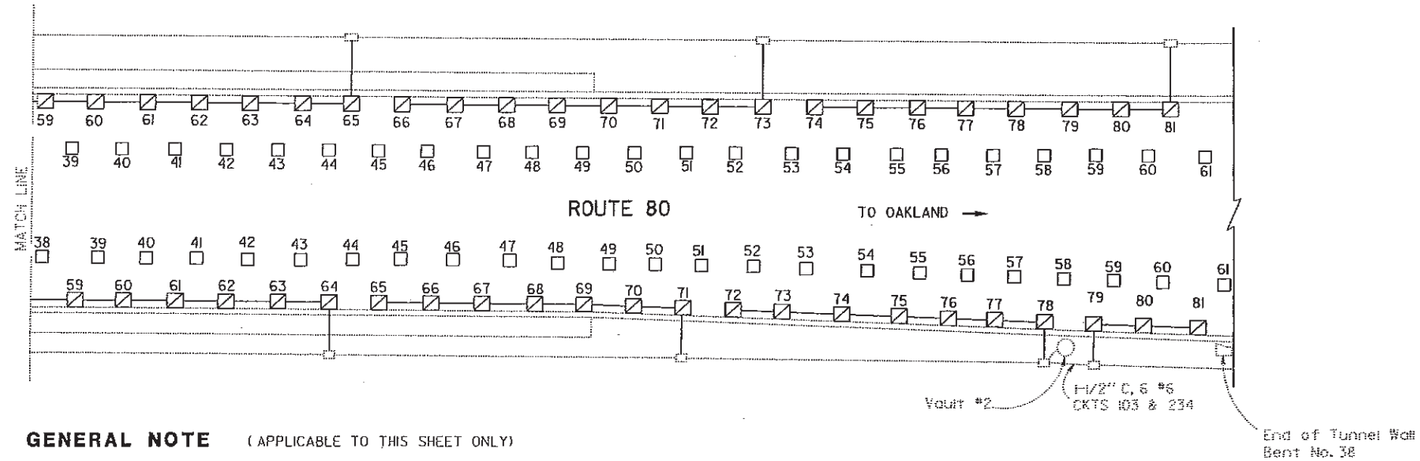

GENERAL NOTE (APPLICABLE TO THIS SHEET ONLY)

1. AFTER NEW LIGHTING IS INSTALLED AND TESTED . TURN OFF CIRCUIT BREAKERS. RC, LUMINAIRS AS INDICATED BY SYMBOLS OF ⊠, ◪, ⊘, AND □, CONDUITS CONDUCTORS / CABLES , HANGERS , AND HARDWARE.
2. CUT ALL ANCHOR BOLTS TO FLUSH WITH CONCRETE SURFACE.

Contract No. _____

Contract Change Order No.____

Sheet No.____ of ____

YBI TUNNEL LIGHTING
LOWER DECK
EXISTING EQUIPMENT REMOVAL

NO SCALE

E-29

REVISED BY	DATE REVISED
RT	8/1/12

ROBERT HSU — ROBERT HSU

CALCULATED-DESIGNED BY — CHECKED BY

FUNCTIONAL SUPERVISOR: BEHZAD GOLEMOHAMMADI

STATE OF CALIFORNIA - DEPARTMENT OF TRANSPORTATION — Caltrans — ELECTRICAL

LAST REVISION 09-12-12 — DATE PLOTTED => 05-OCT-2012 TIME PLOTTED => 11:24

Dist	COUNTY	ROUTE	POST MILES TOTAL PROJECT	SHEET No.	TOTAL SHEETS
04	SF	80	7.7/7.8	32	32

REGISTERED ELECTRICAL ENGINEER DATE 8/12/12

PLANS APPROVAL DATE 8/12/12

REGISTERED PROFESSIONAL ENGINEER Robert Hsu No. 17114 Exp. 9-30-13 ELECT STATE OF CALIFORNIA

THE STATE OF CALIFORNIA OR ITS OFFICERS OR AGENTS SHALL NOT BE RESPONSIBLE FOR THE ACCURACY OR COMPLETENESS OF SCANNED COPIES OF THIS PLAN SHEET.

1SOFOOTCANDLE CURVE

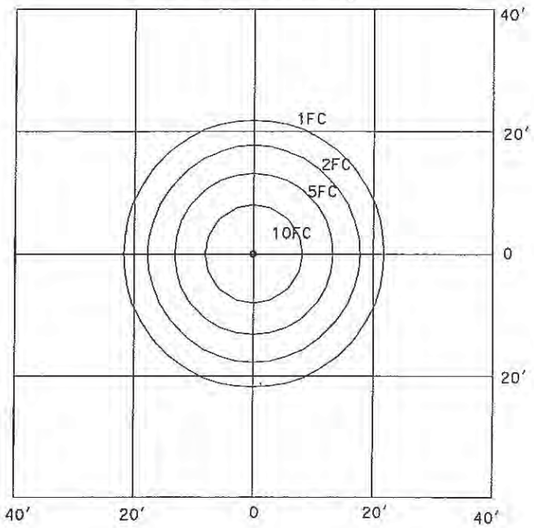

98 WATT LED TUNNEL LUMINAIRE, CELLING MOUNT
16' MOUNTING HEIGHT

PLAN VIEW
SCALE 1"=16'

1SOFOOTCANDLE CURVE

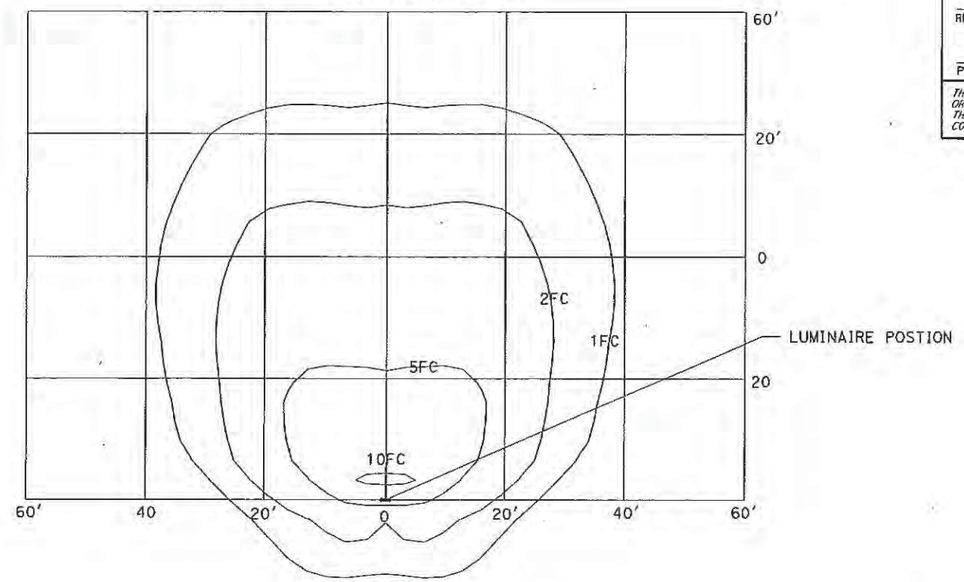

400 WATT METAL HALIDE, WALL MOUNT
19' MOUNTING HEIGHT

PLAN VIEW
SCALE 1"=16'

1SOFOOTCANDLE CURVE

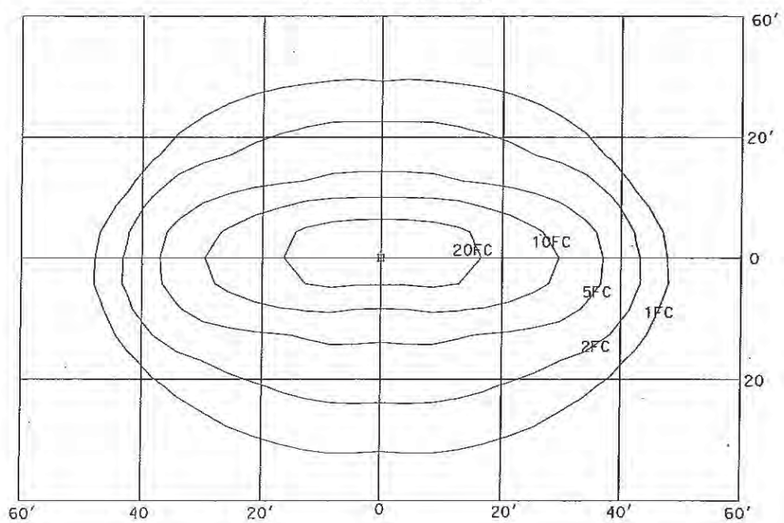

400 WATT METAL HALIDE LOWER DECK
CEILING MOUNT 25'

PLAN VIEW
SCALE 1"=16'

Contract No. _____

Contract Change Order No.____

Sheet No.____ of ____

YBI TUNNEL LIGHTING
ISOFOOTCANDLE CURVES

NO SCALE

E-30

REVISED BY	DATE REVISED
RT	8/1/12

ROBERT HSU — ROBERT HSU

CALCULATED-DESIGNED BY — CHECKED BY

FUNCTIONAL SUPERVISOR: BEHZAD GOLEMOHAMMADI

STATE OF CALIFORNIA - DEPARTMENT OF TRANSPORTATION

Caltrans

ELECTRICAL

LAST REVISION 08-08-12 | DATE PLOTTED => 05-OCT-2012 | TIME PLOTTED => 11:24

STATE OF CALIFORNIA - DEPARTMENT OF TRANSPORTATION

CONTRACT CHANGE ORDER MEMORANDUM

DATE: 12/21/2012 Page 1 of 1

TO: Deanna Vilcheck, ACM /	FILE: E.A. 04 - 0120S4
FROM: William Howe, Senior R.E.	CO-RTE-PM SF-80-12.7/13.2
	FED. NO. NO FED AID
CCO#: 159 SUPPLEMENT#: 0 Category Code: CBPC	CONTINGENCY BALANCE (incl. this change) $31,684,663.15
COST: $4,624,200.00 INCREASE ☑ DECREASE ☐	HEADQUARTERS APPROVAL REQUIRED? ☑ YES ☐ NO
SUPPLEMENTAL FUNDS PROVIDED: $0.00	IS THIS REQUEST IN ACCORDANCE WITH ENVIRONMENTAL DOCUMENTS? ☑ YES ☐ NO
CCO DESCRIPTION: Replace YBI Tunnel Lighting	**PROJECT DESCRIPTION:** YBITS-1 (Yerba Buena Island Transition Structures)

Original Contract Time:	Time Adj. This Change:	Previously Approved CCO Time Adjustments:	Percentage Time Adjusted: (including this change)	Total # of Unreconciled Deferred Time CCO(s): (including this change)
1390 Day(s)	0 Day(s)	0 Day(s)	0 %	9

THIS CHANGE ORDER PROVIDES FOR:

Furnishing and installing new luminaires in the upper and lower decks of the Yerba Buena Island (YBI) tunnel of the San Francisco Oakland Bay Bridge (SFOBB).

The Toll Bridge Program Oversight Committee (TBPOC) approved this change order at their January 3, 2013, meeting to provide for the replacement of the existing YBI tunnel lighting. This approval was granted to advance this work in order to complete the lighting replacement prior to the planned seismic safety opening of the new SFOBB East Span in the latter half of 2013.

Plan sheets and specifications for the new tunnel lighting have been provided by Project Development. The change order will provide for furnishing and installing 460 each 400 watt metal halide luminaires and 462 each light-emitting diode (LED) luminaires along with installing conduit, mounting hardware and other appurtenances and providing for the power connection for the luminaires to the adjacent YBI substation. The upper deck of the tunnel will be comprised of the metal halide luminaires with the lower decking comprised predominately of LED luminaires. The change order also provides for the existing luminaires and appurtenances to be removed.

Compensation for this work shall be paid as Extra Work at an Agreed Lump Sum of $4,024,200.00. Any necessary corrective work required on the existing components on the tunnel or substation facilities and any traffic control required for the work shall be paid as Extra Work at Force Account at an estimated cost $600,000.00. The total estimated change order cost $4,624,200.00 shall be financed from the contract's contingency funds and shall be reimbursed through the Bay Area Toll Authority's Toll Bridge Rehabilitation Program as approved by the TBPOC. A cost estimate is on file.

No adjustment of contract time is required as the work will not affect the controlling operation.

Maintenance concurrence will be obtained from Lina Ellis, Structures Maintenance.

CONCURRED BY:

Construction Engineer:	William Howe	Date 01.25.13
Bridge Engineer:	Mehran Ardakanian	Date
Project Engineer:	Bob Zandipour, Design	Date 1-28-13
Project Manager:	Ken Terpstra	Date 1/28/13
FHWA Rep.:		Date
Environmental:		Date
Other (specify):	Lina Ellis, Str. Maintenance	Date 2-19-13
Other (specify):		Date
District Prior Approval By:		Date
HQ (Issue Approve) By:	Larry Salhaney	Date 1-28-13
Resident Engineer's Signature:	William Howe	Date 01.25.13

ESTIMATE OF COST

	THIS REQUEST	TOTAL TO DATE
ITEMS	$0.00	$0.00
FORCE ACCOUNT	$600,000.00	$600,000.00
AGREED PRICE	$4,024,200.00	$4,024,200.00
ADJUSTMENT	$0.00	$0.00
TOTAL	$4,624,200.00	$4,624,200.00

FEDERAL PARTICIPATION

☐ PARTICIPATING ☐ PARTICIPATING IN PART ☑ NONE
☐ NON-PARTICIPATING (MAINTENANCE) ☐ NON-PARTICIPATING

FEDERAL SEGREGATION (if more than one Funding Source or P.I.P. type)
☐ CCO FUNDED PER CONTRACT ☐ CCO FUNDED AS FOLLOWS

FEDERAL FUNDING SOURCE	PERCENT

ADA Notice: For individuals with sensory disabilities, this document is available in alternate formats. For information call: (916) 654-6410 or TDD (916) 654-3880 or write Records and Forms Management, 1120 N Street, MS-89, Sacramento, CA 95814.

STATE OF CALIFORNIA - DEPARTMENT OF TRANSPORTATION

CONTRACT CHANGE ORDER

Change Requested by: Engineer

CCO 159	Suppl. No. 1	Contract No. 04 - 0120S4	Road SF-80-12.7/13.2	FED. AID LOC.: NO FED AID

To: **M C M CONSTRUCTION INC**

You are directed to make the following changes from the plans and specifications or do the following described work not included in the plans and specifications for this contract. ***NOTE: This change order is not effective until approved by the Engineer.***

Description of work to be done, estimate of quantities and prices to be paid. (Segregate between additional work at contract price, agreed price and force account.) Unless otherwise stated, rates for rental of equipment cover only such time as equipment is actually used and no allowance will be made for idle time. This last percentage shown is the net accumulated increase or decrease from the original quantity in the Engineer's Estimate.

Extra Work at Force Account:

1) Provide traffic control as necessary for performing the work of this change order as determined by the Engineer.

2) Perform corrective work on existing facilities due to unanticipated field conditions or conflicts with existing components pertaining to the installation of the YBI tunnel lighting as determined necessary by the Engineer.

Labor, equipment and material authorized by the Engineer, as necessary, will be paid in accordance with provisions of Section 4-1.03D, "Extra Work", of the Standard Specifications and Section 5-1.17, "Force Account Payment", of the Contract Special Provisions.

Estimate of Extra Work at Force Account = $100,000.00

Extra Work at Lump Sum:

Substitute 98 watt LED luminaires for all the 400 watt Metal Halide luminaires that were specified to be installed under Contract Change Order No.159, Supplement No. 0. This substitution includes 446 each luminaires in the upper deck (westbound) tunnel and 14 each luminaires in the lower deck (eastbound) tunnel.

All LED luminaires to be furnished and installed shall comply with the specifications incorporated into Contract Change Order No. 159, Supplement No. 0, for LED lighting and as approved by the Engineer.

For this work, the Contractor shall be compensated an Agreed Lump Sum of $1,246,090.00, which constitutes full compensation, including all markups, complete in place for this change.

Any corrective work required on existing facilities due to unanticipated field conditions or conflicts with existing components pertaining to the installation of the new luminaires and hardware shall be paid as Extra Work at Force Account as specified herein.

Extra Work at Agreed Lump Sum = $1,246,090.00

All materials furnished for this change order shall be approved by the Engineer prior to the purchase order being placed.

STATE OF CALIFORNIA - DEPARTMENT OF TRANSPORTATION

CONTRACT CHANGE ORDER

Change Requested by: Engineer

CCO 159	Suppl. No. 1	Contract No. 04 - 0120S4	Road SF-80-12.7/13.2	FED. AID LOC.: NO FED AID

Estimated Cost: Increase ☑ Decrease ☐ $1,346,090.00

By reason of this order the time of completion will be adjusted as follows: 0 days

Submitted by		
Signature William Howe	Resident Engineer William Howe, Senior R.E.	Date 05-08-13
Approved Recommended by		
Signature Tony Ca	Region Construction Division Chief Tony Anziano	Date 5-9-13
Engineer Approved by		
Signature	Region Construction Division Chief Tony Anziano	Date

We the undersigned contractor, have given careful consideration to the change proposed and agree, if this proposal is approved, that we will provide all equipment, furnish the materials, except as may otherwise be noted above, and perform all services necessary for the work above specified, and will accept as full payment therefor the prices shown above.

NOTE: If you, the contractor, do not sign acceptance of this order, your attention is directed to the requirements of the specifications as to proceeding with the ordered work and filing a written protest within the time therein specified.

Contractor Acceptance by		
Signature	(Print name and title)	Date

STATE OF CALIFORNIA - DEPARTMENT OF TRANSPORTATION

CONTRACT CHANGE ORDER

Change Requested by: Engineer

CCO 161	Suppl. No. 0	Contract No 04 - 0120S4	Road SF-80-12.7/13.2	FED. AID LOC.: NO FED AID

To: M C M CONSTRUCTION INC

You are directed to make the following changes from the plans and specifications or do the following described work not included in the plans and specifications for this contract. ***NOTE: This change order is not effective until approved by the Engineer.***

Description of work to be done, estimate of quantities and prices to be paid. (Segregate between additional work at contract price, agreed price and force account.) Unless otherwise stated, rates for rental of equipment cover only such time as equipment is actually used and no allowance will be made for idle time. This last percentage shown is the net accumulated increase or decrease from the original quantity in the Engineer's Estimate.

Revision 1 dated 4/3/13.

Adjustment of Compensation at Lump Sum:

This added work includes all labor, equipment and materials to provide and install additional reinforcement bar, couplers and T-heads required as a result of resolution of interferences and constructability issues resolved in the Integrated Shop Drawing process for the architectural spine structure on EB Frame 2 as specified by Engineer.

For this work, the Contractor shall be compensated an Agreed Lump Sum of $93,132.00, which constitutes full and final compensation, including all markups, for all additional costs incurred.

Adjustment of Compensations at Agreed Lump Sum = $93,132.00

4/22/2013

Estimated Cost: Increase ☑ Decrease ☐ $93,132.00

By reason of this order the time of completion will be adjusted as follows: 0 days

Submitted by

Signature William Howe	Resident Engineer William Howe, Senior R.E.	Date 04-03-13

Approval Recommended by

Signature Deanna Vilcheck	Area Construction Manager Deanna Vilcheck	Date 4/3/13

Engineer Approval by

Signature Deanna Vilcheck	Area Construction Manager Deanna Vilcheck	Date 4/19/13

We the undersigned contractor, have given careful consideration to the change proposed and agree, if this proposal is approved, that we will provide all equipment, furnish the materials, except as may otherwise be noted above, and perform all services necessary for the work above specified, and will accept as full payment therefor the prices shown above.

NOTE: If you, the contractor, do not sign acceptance of this order, your attention is directed to the requirements of the specifications as to proceeding with the ordered work and filing a written protest within the time therein specified.

Contractor Acceptance by

Signature	(Print name and title) EDMUNDO A. PUCHI, TREASURER	Date 4/16/13

STATE OF CALIFORNIA - DEPARTMENT OF TRANSPORTATION

CONTRACT CHANGE ORDER MEMORANDUM

DATE: 3/6/2013 Page 1 of 1

TO: Deanna Vilcheck, ACM / DV

FROM: William Howe, Senior R.E.

FILE: E.A. 04 - 0120S4
CO-RTE-PM SF-80-12.7/13.2
FED. NO. NO FED AID

CCO#: 161 SUPPLEMENT#: 0 Category Code: CHPT

CONTINGENCY BALANCE (incl. this change) $41,041,842.15

COST: $93,132.00 INCREASE ☑ DECREASE ☐

HEADQUARTERS APPROVAL REQUIRED? ☐ YES ☑ NO

SUPPLEMENTAL FUNDS PROVIDED: $0.00

IS THIS REQUEST IN ACCORDANCE WITH ENVIRONMENTAL DOCUMENTS? ☑ YES ☐ NO

CCO DESCRIPTION:
Spine Modifications

PROJECT DESCRIPTION:
YBITS-1 (Yerba Buena Island Transition Structures)

Original Contract Time	Time Adj. This Change	Previously Approved CCO Time Adjustments	Percentage Time Adjusted (including this change)	Total # of Unreconciled Deferred Time CCO(s) (including this change)
1390 Day(s)	0 Day(s)	0 Day(s)	0 %	9

THIS CHANGE ORDER PROVIDES FOR:

Additional reinforcing for extension of architectural spine structure on Eastbound Frame 2.

This project, the Yerba Buena Island Transition Structure (YBITS), provides for the construction of two bridges, which will connect eastbound and westbound traffic on the new east span of the San Francisco Oakland Bay Bridge (SFOBB) to the existing Yerba Buena Island (YBI) tunnel. The structures are comprised of concrete box girder bridges each approximately 50 meters high and 450 meters in length.

This change compensates the Contractor for all additional costs incurred to provide and install additional reinforcement bar, couplers and T-heads required as a result of resolution of interferences and constructability issues resolved in the Integrated Shop Drawing process for the architectural spine structure on EB Frame 2 as specified by Engineer.

For this work the Contractor shall be compensated an Agreed Lump Sum of $93,132.00, which constitutes full and final compensation, including all markups, for all additional costs incurred.

A cost analysis is on file. The funding for this CCO will come from the contingency funds for the project.

No adjustment of contract time is warranted, as the work will not affect the controlling operation.

Maintenance concurrence will be required from Lina Ellis, Structures Maintenance.

CONCURRED BY:

Construction Engineer	William Howe	Date 04.03.13
Bridge Engineer	Mehran Ardakanian	Date 4/22/2013
Project Engineer	Bob Zandipour, Design	Date 4-8-13
Project Manager	Ken Terpstra	Date 4-7-13
FHWA Rep		Date
Environmental		Date
Other (specify)	Lina Ellis, Str. Maintenance	Date 4-11-13
Other (specify)		Date
District Prior Approval By		Date
HQ (Issue Approve) By		Date
Resident Engineer's Signature	William Howe	Date 04.03.13

ESTIMATE OF COST

	THIS REQUEST	TOTAL TO DATE
ITEMS	$0.00	$0.00
FORCE ACCOUNT	$0.00	$0.00
AGREED PRICE	$0.00	$0.00
ADJUSTMENT	$93,132.00	$93,132.00
TOTAL	$93,132.00	$93,132.00

FEDERAL PARTICIPATION

☐ PARTICIPATING ☐ PARTICIPATING IN PART ☑ NONE
☐ NON-PARTICIPATING (MAINTENANCE) NON-PARTICIPATING

FEDERAL SEGREGATION (if more than one Funding Source or P.I.P. type)
☐ CCO FUNDED PER CONTRACT CCO FUNDED AS FOLLOWS

FEDERAL FUNDING SOURCE PERCENT

ADA Notice: For individuals with sensory disabilities, this document is available in alternate formats. For information call (916) 654-6410 or TDD (916) 654-3880 or write Records and Forms Management, 1120 N Street, MS 89, Sacramento, CA 95814

ATE OF CALIFORNIA - DEPARTMENT OF TRANSPORTATION

ONTRACT CHANGE ORDER

Change Requested by: Engineer

CO 165	Suppl. No. 0	Contract No. 04 - 0120S4	Road SF-80-12.7/13.2	FED. AID LOC.: NO FED AID

: **M C M CONSTRUCTION INC**

u are directed to make the following changes from the plans and specifications or do the following described work not included in the plans and ecifications for this contract. ***NOTE: This change order is not effective until approved by the Engineer.***

scription of work to be done, estimate of quantities and prices to be paid. (Segregate between additional work at contract price, agreed price and ce account.) Unless otherwise stated, rates for rental of equipment cover only such time as equipment is actually used and no allowance will be ade for idle time. This last percentage shown is the net accumulated increase or decrease from the original quantity in the Engineer's Estimate.

xtra Work at Force Account:

As directed by the Engineer, provide labor, equipment and materials to clean, caulk and paint various elements located at the Bay Bridge East Span Skyway and Oakland Touchdown 1 (Eastbound and Westbound).

This work will be paid for in accordance with Section 5-1.17, "Force Account Payment", of the Special Provisions and Section 4-1.03D, "Extra Work", of the Standard Specifications.

Estimated Cost of Extra Work at Force Account = $190,000.00

Estimated Cost: Increase ✓ Decrease $190,000.00

y reason of this order the time of completion will be adjusted as follows: 0 days

ignature William Howe	Resident Engineer William Howe, Senior R.E.	Date 11.14.12
ignature Deanna Vilcheck	Area Construction Manager Deanna Vilcheck	Date 11/14/12
ignature Deanna Vilcheck	Area Construction Manager Deanna Vilcheck	Date 3/12/13

Ve the undersigned contractor, have given careful consideration to the change proposed and agree, if this proposal is approved, that we will provide all quipment, furnish the materials, except as may otherwise be noted above, and perform all services necessary for the work above specified, and will accept s full payment therefor the prices shown above.

IOTE: If you, the contractor, do not sign acceptance of this order, your attention is directed to the requirements of the specifications as to roceeding with the ordered work and filing a written protest within the time therein specified.

Signature	(Print name and title) EDMUNDO A. PUCHI, TREASURER	Date 3/8/13

ATE OF CALIFORNIA - DEPARTMENT OF TRANSPORTATION

ONTRACT CHANGE ORDER MEMORANDUM

DATE: 11/8/2012 Page 1 of 1

D: Deanna Vilcheck, ACM /

ROM: William Howe, Senior R.E.

FILE: E.A. 04 - 0120S4
CO-RTE-PM SF-80-12.7/13.2
FED. NO. NO FED AID

CO#: 165 SUPPLEMENT#: 0 Category Code: CHPX

CONTINGENCY BALANCE (incl. this change) $41,212,531.15

OST: $190,000.00 INCREASE ✔ DECREASE

HEADQUARTERS APPROVAL REQUIRED? YES ✔ NO

UPPLEMENTAL FUNDS PROVIDED: $0.00

IS THIS REQUEST IN ACCORDANCE WITH ENVIRONMENTAL DOCUMENTS? ✔ YES NO

CO DESCRIPTION:
ainting @ Skyway & Oakland Touchdown 1

PROJECT DESCRIPTION:
YBITS-1 (Yerba Buena Island Transition Structures)

Original Contract Time	Time Adj. This Change	Previously Approved CCO Time Adjustments	Percentage Time Adjusted (including this change)	Total # of Unreconciled Deferred Time CCO(s) (including this change)
1390 Day(s)	0 Day(s)	0 Day(s)	0 %	9

HIS CHANGE ORDER PROVIDES FOR:
rovide labor, equipment and materials to clean, caulk and paint various elements located at the Bay Bridge East Span kyway and Oakland Touchdown 1 (Eastbound and Westbound).

his project, the Yerba Buena Island Transition Structure (YBITS), provides for the construction of two bridges which will onnect eastbound and westbound traffic on the new east span of the San Francisco Oakland Bay Bridge (SFOBB) to the xisting Yerba Buena Island (YBI) tunnel. As part of the earlier construction of the new East Span, a steel bikepath and steel lectrical service platforms have been constructed under the previously completed Skyway (04-01204) and Oakland ouchdown 1 (OTD1) (04-0120L4) contracts.

Since the completion of the earlier contracts (Skyway construction contract was accepted in 2008, OTD1 in 2010), the Department's design group has implemented a number of CCOs (on both the SAS contract and the YBITS contract) that have nade improvement to the Skyway and OTD1 bikepath traveler platform supports and railings. The work done under these CCO's still requires painting repairs to complete the work. In addition, the Department's architect has recommended painting he service platforms for the project. This CCO will be implemented to complete the painting and any associated caulking.

This CCO provides for $190,000.00 in force account work, which will be paid for on an actual cost basis as provided in Section 5-1.17, "Force Account Payment", of the Special Provisions, and Section 4-1.03D, "Extra Work", of the Standard Specifications. This will be funded from the project's contingency fund. A cost analysis is on file.

This CCO was requested by Bob Zandipour, Toll Bridge Design, on November 14, 2012.

No adjustment of contract time is warranted as the work will not affect the controlling operation.

Maintenance concurrence will be obtained from Lina Ellis, Structures Maintenance.

CONCURRED BY:

Construction Engineer	William Howe	Date 11-14-12
Bridge Engineer	Mehran Ardakanian	Date
Project Engineer	Bob Zandipour, Design	Date 11-15-12
Project Manager	Ken Terpstra	Date 11-15-12
FHWA Rep.		Date
Environmental		Date
Other (specify)	Lina Ellis, Str. Maintenance	Date 11-16-12
Other (specify)		Date
District Prior Approval By		Date
HQ (Issue Approve) By		Date
Resident Engineer's Signature	William Howe	Date 11-14-12

ESTIMATE OF COST

	THIS REQUEST	TOTAL TO DATE
ITEMS	$0.00	$0.00
FORCE ACCOUNT	$190,000.00	$190,000.00
AGREED PRICE	$0.00	$0.00
ADJUSTMENT	$0.00	$0.00
TOTAL	$190,000.00	$190,000.00

FEDERAL PARTICIPATION

PARTICIPATING PARTICIPATING IN PART ✔ NONE
NON-PARTICIPATING (MAINTENANCE) NON-PARTICIPATING

FEDERAL SEGREGATION (if more than one Funding Source or P.I.P. type)
CCO FUNDED PER CONTRACT CCO FUNDED AS FOLLOWS
FEDERAL FUNDING SOURCE PERCENT

ADA Notice: For individuals with sensory disabilities, this document is available in alternate formats. For information call (916) 654-6410 or TDD (916) 654-3880 or write Records and Forms Management, 1120 N Street, MS-89, Sacramento, CA 95814.

STATE OF CALIFORNIA - DEPARTMENT OF TRANSPORTATION

CONTRACT CHANGE ORDER

Change Requested by: Engineer

CCO 165	Suppl. No. 1	Contract No 04 - 0120S4	Road SF-80-12.7/13.2	FED. AID LOC.: NO FED AID

To: **M C M CONSTRUCTION INC**

You are directed to make the following changes from the plans and specifications or do the following described work not included in the plans and specifications for this contract. ***NOTE: This change order is not effective until approved by the Engineer.***

Description of work to be done, estimate of quantities and prices to be paid. (Segregate between additional work at contract price, agreed price and force account.) Unless otherwise stated, rates for rental of equipment cover only such time as equipment is actually used and no allowance will be made for idle time. This last percentage shown is the net accumulated increase or decrease from the original quantity in the Engineer's Estimate

Extra Work at Force Account:

Provide additional funds.

Estimated Cost Extra Work at Force Account = $210,000.00

Estimated Cost: Increase ☑ Decrease ☐ **$210,000.00**

By reason of this order the time of completion will be adjusted as follows: 0 days

Submitted by

Signature	Resident Engineer	Date
William Howe	William Howe, Senior R.E.	01.24.13

Approval Recommended by

Signature	Area Construction Manager	Date
Deanna Vilcheck	Deanna Vilcheck	1/24/13

Engineer Approval by

Signature	Area Construction Manager	Date
Deanna Vilcheck	Deanna Vilcheck	1/24/13

We the undersigned contractor, have given careful consideration to the change proposed and agree, if this proposal is approved, that we will provide all equipment, furnish the materials, except as may otherwise be noted above, and perform all services necessary for the work above specified, and will accept as full payment therefor the prices shown above

NOTE: If you, the contractor, do not sign acceptance of this order, your attention is directed to the requirements of the specifications as to proceeding with the ordered work and filing a written protest within the time therein specified.

Contractor Acceptance by

Signature	(Print name and title)	Date
Not Required		

STATE OF CALIFORNIA - DEPARTMENT OF TRANSPORTATION

CONTRACT CHANGE ORDER MEMORANDUM

TO: Deanna Vilcheck, ACM / DV

FROM: William Howe, Senior R.E.

FILE: E.A. 04 - 0120S4
CO-RTE-PM SF-80-12.7/13.2
FED. NO. NO FED AID

CCO#: 165 | SUPPLEMENT#: 1 | Category Code: CHPX

CONTINGENCY BALANCE (incl. this change) $31,236,912.15

COST: $210,000.00 INCREASE ☑ DECREASE ☐

HEADQUARTERS APPROVAL REQUIRED? ☑ YES ☐ NO

SUPPLEMENTAL FUNDS PROVIDED: $0.00

IS THIS REQUEST IN ACCORDANCE WITH ENVIRONMENTAL DOCUMENTS? ☑ YES ☐ NO

CCO DESCRIPTION:
Additional Funds-Painting @ Skyway/OTD1

PROJECT DESCRIPTION:
YBITS-1 (Yerba Buena Island Transition Structures)

Original Contract Time:	Time Adj. This Change:	Previously Approved CCO Time Adjustments:	Percentage Time Adjusted: (including this change)	Total # of Unreconciled Deferred Time CCO(s): (including this change)
1390 Day(s)	0 Day(s)	0 Day(s)	0 %	9

THIS CHANGE ORDER PROVIDES FOR:
additional funds to provide labor, equipment and materials to clean, caulk and paint various elements located at the Bay Bridge East Span Skyway and Oakland Touchdown 1 (Eastbound and Westbound).

This project, the Yerba Buena Island Transition Structure (YBITS), provides for the construction of two bridges which will connect eastbound and westbound traffic on the new east span of the San Francisco Oakland Bay Bridge (SFOBB) to the existing Yerba Buena Island (YBI) tunnel. As part of the earlier construction of the new East Span, a steel bikepath and steel electrical service platforms have been constructed under the previously completed Skyway (04-01204) and Oakland Touchdown 1 (OTD1) (04-0120L4) contracts.

Since the completion of the earlier contracts (Skyway construction contract was accepted in 2008, OTD1 in 2010), the Department's design group has implemented a number of CCOs (on both the SAS contract and the YBITS contract) that have made improvement to the Skyway and OTD1 bikepath traveler platform supports and railings. The work done under these CCO's still requires painting repairs to complete the work. In addition, the Department's architect has recommended painting the service platforms for the project. This CCO will be implemented to complete the painting and any associated caulking.

This CCO provides for additional funds for $210,000.00, for a total cost of $400,000.00, in force account work, which will be paid for on an actual cost basis as provided in Section 5-1.17, "Force Account Payment", of the Special Provisions, and Section 4-1.03D, "Extra Work", of the Standard Specifications. This will be funded from the project's contingency fund. A cost analysis is on file.

This CCO was requested by Bob Zandipour, Toll Bridge Design, on November 14, 2012.

No adjustment of contract time is warranted as the work will not affect the controlling operation.

Maintenance concurrence will be obtained from Lina Ellis, Structures Maintenance.

CONCURRED BY:

Construction Engineer:	William Howe	Date 01.24.13
Bridge Engineer:	Mehran Ardakanian	Date
Project Engineer:	Bob Zandipour, Design	Date 1-25-13
Project Manager:	Ken Terpstra	Date 1-25-13
FHWA Rep.:		Date
Environmental:		Date
Other (specify):	Lina Ellis, Str. Maintenance	Date 1-25-13
Other (specify):		Date
District Prior Approval By:		Date
HQ (Issue Approve) By:	Larry Salhaney	Date 1-25-13
Resident Engineer's Signature:	William Howe	Date 01.24.13

ESTIMATE OF COST

	THIS REQUEST	TOTAL TO DATE
ITEMS	$0.00	$0.00
FORCE ACCOUNT	$210,000.00	$400,000.00
AGREED PRICE	$0.00	$0.00
ADJUSTMENT	$0.00	$0.00
TOTAL	$210,000.00	$400,000.00

FEDERAL PARTICIPATION

☐ PARTICIPATING ☐ PARTICIPATING IN PART ☑ NONE
☐ NON-PARTICIPATING (MAINTENANCE) ☐ NON-PARTICIPATING

FEDERAL SEGREGATION (if more than one Funding Source or P.I.P. type)
☐ CCO FUNDED PER CONTRACT ☐ CCO FUNDED AS FOLLOWS

FEDERAL FUNDING SOURCE PERCENT

STATE OF CALIFORNIA - DEPARTMENT OF TRANSPORTATION

CONTRACT CHANGE ORDER

Change Requested by: Engineer

CCO 165	Suppl. No. 2	Contract No 04 - 0120S4	Road SF-80-12.7/13.2	FED. AID LOC.: NO FED AID

To: M C M CONSTRUCTION INC

You are directed to make the following changes from the plans and specifications or do the following described work not included in the plans and specifications for this contract. ***NOTE: This change order is not effective until approved by the Engineer.***

Description of work to be done, estimate of quantities and prices to be paid. (Segregate between additional work at contract price, agreed price and force account.) Unless otherwise stated, rates for rental of equipment cover only such time as equipment is actually used and no allowance will be made for idle time. This last percentage shown is the net accumulated increase or decrease from the original quantity in the Engineer's Estimate.

Extra Work at Force Account:

Perform the following work on the bike path on the Skyway and Oakland Touchdown 1 structures as determined necessary by the Engineer:

1) Remove any remaining non-skid surfacing on the steel panel joints on the bike path deck and apply a new non-skid surfacing.

2) Remove the existing paint at the interface between the bike path railing base plate and the adjacent concrete deck overlay and apply new paint.

3) Clean, caulk and paint the new bolts and plates at the base plates of the bike path railing divider panels.

4) Remove the existing paint on the couplers connecting the water and air lines from the main roadway structure to the bike path and apply new paint.

5) Apply caulking at the traveler rail/steel deck plate connection under the bike path.

This work will be paid for in accordance with Section 5-1.17, "Force Account Payment", of the Special Provisions and Section 4-1.03D, "Extra Work", of the Standard Specifications.

Extra Work at Force Account = $2,100,000.00

Estimated Cost: Increase ✓ Decrease $2,100,000.00

By reason of this order the time of completion will be adjusted as follows: 0 days

Submitted by

Signature	Resident Engineer	Date
William Howe	William Howe, Senior R.E.	04.15.13

Approval Recommended by

Signature	Region Construction Division Chief	Date
Tony Anziano	Tony Anziano	4/15/13

Engineer Approval by

Signature	Region Construction Division Chief	Date
Tony Anziano	Tony Anziano	5/23/13

We the undersigned contractor, have given careful consideration to the change proposed and agree, if this proposal is approved, that we will provide all equipment, furnish the materials, except as may otherwise be noted above, and perform all services necessary for the work above specified, and will accept as full payment therefor the prices shown above.

NOTE: If you, the contractor, do not sign acceptance of this order, your attention is directed to the requirements of the specifications as to proceeding with the ordered work and filing a written protest within the time therein specified.

Contractor Acceptance by

Signature	(Print name and title)	Date
James A. Carter	JAMES A. CARTER, PRESIDENT	5/17/13

STATE OF CALIFORNIA - DEPARTMENT OF TRANSPORTATION

CONTRACT CHANGE ORDER MEMORANDUM

TO: Deanna Vilcheck, ACM /	FILE: E.A. 04 - 0120S4
	CO-RTE-PM SF-80-12.7/13.2
FROM: William Howe, Senior R.E.	FED. NO. NO FED AID
CCO#: 165 SUPPLEMENT#: 2 Category Code: CHPX	CONTINGENCY BALANCE (incl. this change) $41,042,662.15
COST: $2,100,000.00 INCREASE ☑ DECREASE ☐	HEADQUARTERS APPROVAL REQUIRED? ☑ YES ☐ NO
SUPPLEMENTAL FUNDS PROVIDED: $0.00	IS THIS REQUEST IN ACCORDANCE WITH ENVIRONMENTAL DOCUMENTS? ☑ YES ☐ NO
CCO DESCRIPTION: Bike Path Maintenance	**PROJECT DESCRIPTION:** YBITS-1 (Yerba Buena Island Transition Structures)

Original Contract Time:	Time Adj. This Change:	Previously Approved CCO Time Adjustments:	Percentage Time Adjusted: (including this change)	Total # of Unreconciled Deferred Time CCO(s): (including this change)
1390 Day(s)	0 Day(s)	0 Day(s)	0 %	9

THIS CHANGE ORDER PROVIDES FOR:
Preventive maintenance on the bike path on the Skyway and Oakland Touchdown 1 structures.

The existing bike path on the Skyway and OTD1 structures has now been in place for approximately 7 years as the remaining portions of the new SFOBB east span are being completed. As the new east span planned opening approaches, a review of the structure has shown a number of areas which require preventive maintenance to avert more serious issues in the future. In addition, work performed to improve the path's lighting system under the SAS contract left exposed bolts and base plates, which will be cleaned, caulked and painted under this CCO.

CCO 165 S0 and 165 S1 provided for cleaning, caulking and painting of the bike path where required. As the work has progressed, the anticipated cost and scope of work has increased significantly. A summary of the major scopes of work is listed below:

1) The original non-skid surfacing at the 265 EA steel panel joints on the bike path deck was found to be worn away. The joints will be cleaned and a new non-skid surface will be applied.

2) The existing paint at the interface between the bike path railing steel base plate and the adjacent concrete deck overlay was found to be failing. The plate will be cleaned and repainted on both sides of the path along its entire length (16,000 LF total).

3) The new bolts and plates at the base plates of the bike path railing divider panels were left unpainted by the SAS contract. These bolts and plates will be cleaned, caulked and painted at 530 EA locations.

4) Existing corrosion was found at the couplers connecting the water and air lines from the main roadway structure to the bike path. The couplers will be cleaned and painted.

5) Caulking was found to be required at the traveler rail/steel deck plate connection under the bike path.

All cleaning and painting being performed includes grinding off any existing surfacing, cleaning the ground surface, applying a zinc primer coat and applying 2 coats of the finish paint. All work shall be performed as determined necessary in the field and as ordered by the Department.

This work will be paid for as Extra Work at Force Account at an estimated cost of $2,100,000.00, which will be financed by the contract's contingency funds. A cost estimate is on file

This change order was approved by the Toll Bridge Program Oversight Committee (TBPOC) for an additional $2,100,000.00 on April 11, 2013, copy attached.

No adjustment of contract time is warranted, as this change will not affect the controlling operation.

Maintenance will be obtained from Lina Ellis, Structures Maintenance.

ADA Notice. For individuals with sensory disabilities, this document is available in alternate formats. For information call: (916) 654-6410 or TDD (916) 654-3880 or write Records and Forms Management, 1120 N Street, MS-89, Sacramento, CA 95814.

CONCURRED BY:		
Construction Engineer	William Howe WBH	Date 04.15.13
Bridge Engineer	Mehran Ardakanian	Date
Project Engineer	Bob Zandipour, Design	Date 4-16-13
Project Manager	Ken Terpstra	Date 4-16-13
FHWA Rep		Date
Environmental		Date
Other (specify)	Lina Ellis, Str. Maintenance	Date 4-16-13
Other (specify)		Date
District Prior Approval By		Date
HQ (Issue Approve) By	Larry Salhaney	Date 4-16-13
Resident Engineer's Signature	William Howe	Date 04.15.13

ESTIMATE OF COST

	THIS REQUEST	TOTAL TO DATE
ITEMS	$0.00	$0.00
FORCE ACCOUNT	$2,100,000.00	$2,500,000.00
AGREED PRICE	$0.00	$0.00
ADJUSTMENT	$0.00	$0.00
TOTAL	$2,100,000.00	$2,500,000.00

FEDERAL PARTICIPATION

[ ] PARTICIPATING [ ] PARTICIPATING IN PART [✓] NONE
[ ] NON-PARTICIPATING (MAINTENANCE) NON-PARTICIPATING

FEDERAL SEGREGATION (if more than one Funding Source or P.I.P. type)

[ ] CCO FUNDED PER CONTRACT CCO FUNDED AS FOLLOWS

FEDERAL FUNDING SOURCE PERCENT

ADA Notice: For individuals with sensory disabilities, this document is available in alternate formats. For information call (916) 654-6410 or TDD (916) 654-3880 or write Records and Forms Management, 1120 N Street, MS-89, Sacramento, CA 95814.

CONTRACT CHANGE ORDER

Change Requested by: Engineer

CCO 167 Suppl. No. 0 Contract No 04 - 0120S4 Road SF-80-12.7/13.2 FED. AID LOC.: NO FED AID

To: M C M CONSTRUCTION INC

You are directed to make the following changes from the plans and specifications or do the following described work not included in the plans and specifications for this contract. ***NOTE: This change order is not effective until approved by the Engineer.***

Description of work to be done, estimate of quantities and prices to be paid. (Segregate between additional work at contract price, agreed price and force account.) Unless otherwise stated, rates for rental of equipment cover only such time as equipment is actually used and no allowance will be made for idle time. This last percentage shown is the net accumulated increase or decrease from the original quantity in the Engineer's Estimate

Extra Work at Lump Sum:

Provide labor, equipment and materials to clean, caulk and paint the 25 each service platforms located at Piers E3W, E3E, E4W, E4E, E5W, E5E, E6W, E6E, E7W, E7E, E8W, E8E, E9W, E9E, E10W, E10E, E11W, E11E, E12W, E12E, E13W, E14W, E14E, E15W, and E15E at the Bay Bridge East Span Skyway (Eastbound and Westbound).

The portions of the platforms to be painted are: access stairway and railings (except for stair treads); platform edge channel beams; equipment racks and support frames; exterior portions of electrical fiberglass cabinets and carbon steel cabinets (including repainting the previously painted carbon steel cabinets).

The carbon steel portions of the platforms, including railings and equipment racks, have previously been galvanized. Painting shall be in accordance with Contract Special Provision, Section 10-1.82 CLEAN AND PAINT (MISCELLANEOUS FACILITIES), and shall include the following operations:

1) Solvent clean (SP-1) all surfaces requiring coating.
2) Power tool clean (SP-3) all areas needing galvanic protection touch up.
3) Touch up galvanizing with two coats of organic zinc (Carboline 859 or equal) per Sandard Specification, Section 75-1.05 Galvanizing, and the approved Paint Quality Work Plan (PQWP).
4) Use a wash primer coat (Galoseal WB or equal) over the hot dip galvanizing surfaces per manufacturer recommendations.
5) Apply a penetrating primer (Rustbond FC or equivalent) to the fiberglass cabinet exterior surfaces per manufacturer recommendations.
6) Caulk (Skia-Flex 1A or equivalent) all weep holes and at the seam on top of cabinets.
7) Apply two coats of finish paint using a Modified Siloxane Hybrid (Carboxane 2000 or equivalent) per Special Provisions Section 10-1.82, Clean and Paint (Miscellaneous Facilities), and the approved PQWP.
8) Masking off or otherwise protecting existing labels.

The following items are excluded:
1) Providing weather enclosures, dehumidification, or heating equipment for the painting operation.
2) Removal or reinstallation of mechanical or electrical equipment to facilitate painting.
3) Stenciling and or labeling
4) Coating underside of platforms, bottom face of support beams, and stringers between support beams.
5) Painting or coating of: stainless steel elements; aluminum cabinets; concrete; electrical trays, conduits, and conduit supports and brackets; stair treads; deck plates or access plates.

The agreed price anticipates that the work is done during regular work hours, without overtime premium.
The agreed lump sum constitutes full compensation, including all markups, complete in place, for this change.

Extra Work at Agreed Lump Sum = $642,675.00

CONTRACT CHANGE ORDER

Change Requested by: Engineer

CCO 167	Suppl. No. 0	Contract No 04 - 0120S4	Road SF-80-12.7/13.2	FED. AID LOC.: NO FED AID

Estimated Cost: Increase ☑ Decrease ☐ $642,675.00

By reason of this order the time of completion will be adjusted as follows: 0 days

Submitted by

Signature	Resident Engineer	Date
William Howe	William Howe, Senior R.E.	01-24-13

Approval Recommended by

Signature	Area Construction Manager	Date
Deanna Vilcheck	Deanna Vilcheck	1/24/13

Engineer Approval by

Signature	Area Construction Manager	Date
Deanna Vilcheck	Deanna Vilcheck	3/28/13

We the undersigned contractor, have given careful consideration to the change proposed and agree, if this proposal is approved, that we will provide all equipment, furnish the materials, except as may otherwise be noted above, and perform all services necessary for the work above specified, and will accept as full payment therefor the prices shown above.

NOTE: If you, the contractor, do not sign acceptance of this order, your attention is directed to the requirements of the specifications as to proceeding with the ordered work and filing a written protest within the time therein specified.

Contractor Acceptance by

Signature	(Print name and title)	Date
[signature]	JAMES A. CARTER, PRESIDENT	3/25/13

STATE OF CALIFORNIA - DEPARTMENT OF TRANSPORTATION

CONTRACT CHANGE ORDER MEMORANDUM

DATE: 1/23/2013 Page 1 of 1

TO: Deanna Vilcheck, ACM	FILE: E.A. 04 - 0120S4
FROM: William Howe, Senior R.E.	CO-RTE-PM SF-80-12.7/13.2
	FED. NO. NO FED AID
CCO#: 167 SUPPLEMENT#: 0 Category Code: CHPX	CONTINGENCY BALANCE (incl. this change) $30,594,237.15
COST: $642,675.00 INCREASE ☑ DECREASE ☐	HEADQUARTERS APPROVAL REQUIRED? ☑ YES ☐ NO
SUPPLEMENTAL FUNDS PROVIDED: $0.00	IS THIS REQUEST IN ACCORDANCE WITH ENVIRONMENTAL DOCUMENTS? ☑ YES ☐ NO
CCO DESCRIPTION: Paint Skyway Service Platforms	**PROJECT DESCRIPTION:** YBITS-1 (Yerba Buena Island Transition Structures)

Original Contract Time:	Time Adj. This Change:	Previously Approved CCO Time Adjustments:	Percentage Time Adjusted: (including this change)	Total # of Unreconciled Deferred Time CCO(s): (including this change)
1390 Day(s)	0 Day(s)	0 Day(s)	0 %	9

THIS CHANGE ORDER PROVIDES FOR:

Provide labor, equipment and materials to clean, caulk and paint elements on 25 service platforms located at the Bay Bridge East Span Skyway (Eastbound and Westbound).

This project, the Yerba Buena Island Transition Structure (YBITS), provides for the construction of two bridges, which will connect eastbound and westbound traffic on the new east span of the San Francisco Oakland Bay Bridge (SFOBB) to the existing Yerba Buena Island (YBI) tunnel. As part of the construction of the new East Span, steel framed electrical service platforms have been constructed under the previously completed Skyway (04-01204) contract.

Since the completion of the earlier contract (Skyway construction contract was accepted in 2008), the Department's architect has recommended painting the service platforms. This CCO will be implemented to complete the painting and any associated caulking.

This CCO provides for an Agreed Lump Sum of $642,675.00 for the work. This will be funded from the project's contingency fund. A cost analysis is on file.

This CCO was requested by Clive Endress, Architect.

No adjustment of contract time is warranted as the work will not affect the controlling operation.

Maintenance concurrence will be obtained from Lina Ellis, Structures Maintenance.

CONCURRED BY:		
Construction Engineer:	William Howe	Date 02·01·13
Bridge Engineer:	Mehran Ardakanian	Date
Project Engineer:	Bob Zandipour, Design	Date 2-1-13
Project Manager:	Ken Terpstra	Date 2/1/13
FHWA Rep.:		Date
Environmental:		Date
Other (specify):	Lina Ellis, Str. Maintenance	Date 2-1-13
Other (specify):		Date
District Prior Approval By:		Date
HQ (Issue Approve) By:	Sey Hossnieh	Date 2-1-13
Resident Engineer's Signature:	William Howe	Date 02·01·13

ESTIMATE OF COST

	THIS REQUEST	TOTAL TO DATE
ITEMS	$0.00	$0.00
FORCE ACCOUNT	$0.00	$0.00
AGREED PRICE	$642,675.00	$642,675.00
ADJUSTMENT	$0.00	$0.00
TOTAL	$642,675.00	$642,675.00

FEDERAL PARTICIPATION

☐ PARTICIPATING ☐ PARTICIPATING IN PART ☑ NONE
☐ NON-PARTICIPATING (MAINTENANCE) ☐ NON-PARTICIPATING

FEDERAL SEGREGATION (if more than one Funding Source or P.I.P. type)
☐ CCO FUNDED PER CONTRACT ☐ CCO FUNDED AS FOLLOWS

FEDERAL FUNDING SOURCE PERCENT

ADA Notice: For individuals with sensory disabilities, this document is available in alternate formats. For information call: (916) 654-6410 or TDD (916) 654-3880 or write Records and Forms Management, 1120 N Street, MS-89, Sacramento, CA 95814.

STATE OF CALIFORNIA - DEPARTMENT OF TRANSPORTATION

CONTRACT CHANGE ORDER

Change Requested by: Engineer

CCO 169	Suppl. No. 0	Contract No. 04 - 0120S4	Road SF-80-12.7/13.2	FED. AID LOC.: NO FED AID

To: **M C M CONSTRUCTION INC**

You are directed to make the following changes from the plans and specifications or do the following described work not included in the plans and specifications for this contract. ***NOTE: This change order is not effective until approved by the Engineer.***

Description of work to be done, estimate of quantities and prices to be paid. (Segregate between additional work at contract price, agreed price and force account.) Unless otherwise stated, rates for rental of equipment cover only such time as equipment is actually used and no allowance will be made for idle time. This last percentage shown is the net accumulated increase or decrease from the original quantity in the Engineer's Estimate.

Extra Work at Force Account:

Perform all work necessary at the Skyway, Oakland Touchdown 1 (OTD1) and Toll Plaza for the San Francisco Oakland Bay Bridge (SFOBB) in order to comply with the Department's current statewide general permit issued by the State Water Resources Control Board (SWRCB) titled "Order No. 2009-0009-DWQ, National Pollutant Discharge Elimination System (NPDES) General Permit No. CAS000002, Waste Discharge Requirements for Discharges of Storm Water Runoff Associated with Construction and Land Disturbance Activities" as specified herein and as determined by the Engineer. Work performed under this change order shall pertain to the worksite areas affected by construction activities at the Skyway, OTD1 and Toll Plaza.

All work shall comply with the following Sections of the Contract Special Provisions including the revisions of these provisions incorporated under Contract Change Order No. 21:

Section 5-1.26 Relations with California Regional Water Quality Control Board
Section 10-1.04 Water Pollution Control
Section 10-1.05 Construction Site Management
Section 10-1.06 Temporary Active Treatment System
Section 10-1.07 Sweeping
Section 10-1.08 Turbidity Control
Section 10-1.09 Temporary Hydraulic Mulch (Bonded Fiber Matrix)
Section 10-1.10 Temporary Cover
Section 10-1.11 Temporary Concrete Washout
Section 10-1.12 Temporary Check Dam
Section 10-1.13 Temporary Silt Fence
Section 10-1.15 Temporary Gravel Bag Berm
Section 10-1.16 Temporary Construction Entrance
Section 10-1.17 Move In/Move Out (Temporary Erosion Control)
Section 10-1.18 Temporary Drainage Inlet Protection

This work will be paid for in accordance with Section 5-1.17, "Force Account Payment", of the Special Provisions and Section 4-1.03D, "Extra Work", of the Standard Specifications.

Estimated Cost of Extra Work at Force Account = $125,000.00

STATE OF CALIFORNIA - DEPARTMENT OF TRANSPORTATION

CONTRACT CHANGE ORDER

Change Requested by: Engineer

CCO 169	Suppl. No. 0	Contract No. 04 - 0120S4	Road SF-80-12.7/13.2	FED. AID LOC.: NO FED AID

Estimated Cost: Increase ☑ Decrease ☐ $125,000.00

By reason of this order the time of completion will be adjusted as follows: 0 days

Submitted by

Signature	Resident Engineer	Date
William Howe	William Howe, Senior R.E.	01-10-13

Approval Recommended by

Signature	Area Construction Manager	Date
Deanna Vilcheck	Deanna Vilcheck	1/15/13

Engineer Approval by

Signature	Area Construction Manager	Date
Deanna Vilcheck	Deanna Vilcheck	2/5/13

We the undersigned contractor, have given careful consideration to the change proposed and agree, if this proposal is approved, that we will provide all equipment, furnish the materials, except as may otherwise be noted above, and perform all services necessary for the work above specified, and will accept as full payment therefor the prices shown above.

NOTE: If you, the contractor, do not sign acceptance of this order, your attention is directed to the requirements of the specifications as to proceeding with the ordered work and filing a written protest within the time therein specified.

Contractor Acceptance by

Signature	(Print name and title)	Date
[illegible]	Edmundo R Rodriguez Treasurer	1-31-2013

STATE OF CALIFORNIA - DEPARTMENT OF TRANSPORTATION

CONTRACT CHANGE ORDER MEMORANDUM

TO: Deanna Vilcheck, ACM / DV	FILE: E.A. 04 - 0120S4
FROM: William Howe, Senior R.E.	CO-RTE-PM SF-80-12.7/13.2
	FED. NO. NO FED AID
CCO#: 169 SUPPLEMENT#: 0 Category Code: CXXX	CONTINGENCY BALANCE (incl. this change) $31,539,556.15
COST: $125,000.00 INCREASE ☑ DECREASE ☐	HEADQUARTERS APPROVAL REQUIRED? ☐ YES ☑ NO
SUPPLEMENTAL FUNDS PROVIDED: $0.00	IS THIS REQUEST IN ACCORDANCE WITH ENVIRONMENTAL DOCUMENTS? ☑ YES ☐ NO
CCO DESCRIPTION: Skyway, OTD1 & Toll Plaza SWPP Measures	**PROJECT DESCRIPTION:** YBITS-1 (Yerba Buena Island Transition Structures)

Original Contract Time:	Time Adj. This Change:	Previously Approved CCO Time Adjustments:	Percentage Time Adjusted: (including this change)	Total # of Unreconciled Deferred Time CCO(s): (including this change)
1390 Day(s)	0 Day(s)	0 Day(s)	0 %	9

THIS CHANGE ORDER PROVIDES FOR:

Storm water pollution prevention (SWPP) work to be performed, pertaining to the YBITS1 contract construction activities on the previously constructed Skyway and the Oakland Touchdown 1 sites, as well as at Toll Plaza sites, in order to comply with the Department's new National Pollutant Discharge Elimination System (NPDES) General Permit for Storm Water Discharges Associated with Construction and Land Disturbance.

This project, the Yerba Buena Island Transition Structure (YBITS), provides for the construction of two bridges, which will connect eastbound and westbound traffic on the new east span of the San Francisco Oakland Bay Bridge (SFOBB) from the signature Self-Anchored Suspension Bridge to the existing Yerba Buena Island tunnel. The structures are comprised of concrete box girder bridges each approximately 40 meters high and 450 meters in length.

The Toll Bridge Program Oversight Committee (TBPOC) has approved several specific CCO's be performed under the YBITS contract to complete Skyway and OTD1 work. These approvals include: an amount not to exceed $1.3 million for CCO 141, Security Enhancements, (TBPOC meeting 7/10/2012); an amount not to exceed $5.4 million for CCO 901 and supplements, Bay Area Security Enhancements (BASE) (TBPOC meeting 9/20/2012); $13.2 million for CCO 902, Install Light Poles and Fixtures (TBPOC meeting 5/5/2011). In addition, several other smaller CCO's (less than the $1.0 Million threshold for specific TBPOC approval), have been approved to complete other work at the Skyway and the OTD1 sites; as well as CCO's for Electrical and Traffic Operations Systems at the Toll Plaza. This work is necessary to allow for the planned Seismic Safety Opening (SSO) of the SFOBB.

This change order will provide for the SWPP efforts necessary to support this and future work. The YBITS contract is a Risk Level 2 project, which requires additional measures to be implemented beyond the standard permit requirements.

All costs associated with implementing the detour SWPP measures will be paid as Extra Work at Force Account at an estimated cost of $125,000.00, which shall be financed from the contract's contingency fund.

No adjustment of contract time is warranted as the work will not affect the controlling operation.

Maintenance concurrence is not required as the change does not affect any permanent roadway features.

ADA Notice: For individuals with sensory disabilities, this document is available in alternate formats. For information call (916) 654-6410 or TDD (916) 654-3880 or write Records and Forms Management, 1120 N Street, MS-89, Sacramento, CA 95814.

CONCURRED BY:		
Construction Engineer:	William Howe	Date 01-10-13
Bridge Engineer:	Mehran Ardakanian	Date
Project Engineer:	Bob Zandipour, Design	Date 1-25-13
Project Manager:	Ken Terpstra	Date 1-13-13
FHWA Rep.:		Date
Environmental:		Date
Other (specify):		Date
Other (specify):		Date
District Prior Approval By:		Date
HQ (Issue Approve) By:		Date
Resident Engineer's Signature: William Howe		Date 01-10-13

ESTIMATE OF COST

	THIS REQUEST	TOTAL TO DATE
ITEMS	$0.00	$0.00
FORCE ACCOUNT	$125,000.00	$125,000.00
AGREED PRICE	$0.00	$0.00
ADJUSTMENT	$0.00	$0.00
TOTAL	$125,000.00	$125,000.00

FEDERAL PARTICIPATION

☐ PARTICIPATING ☐ PARTICIPATING IN PART ☑ NONE
☐ NON-PARTICIPATING (MAINTENANCE) ☐ NON-PARTICIPATING

FEDERAL SEGREGATION (if more than one Funding Source or P.I.P. type)
☐ CCO FUNDED PER CONTRACT ☐ CCO FUNDED AS FOLLOWS

FEDERAL FUNDING SOURCE	PERCENT

ADA Notice: For individuals with sensory disabilities, this document is available in alternate formats. For information, call (916) 654-6410, or write to Records and Forms Management, 1120 N Street, MS-89, Sacramento, CA 95814.

CONTRACT CHANGE ORDER

Change Requested by: Engineer

CCO 172	Suppl. No. 0	Contract No. 04 - 0120S4	Road SF-80-12.7/13.2	FED. AID LOC.: NO FED AID

To: **M C M CONSTRUCTION INC**

You are directed to make the following changes from the plans and specifications or do the following described work not included in the plans and specifications for this contract. ***NOTE: This change order is not effective until approved by the Engineer.***

Description of work to be done, estimate of quantities and prices to be paid. (Segregate between additional work at contract price, agreed price and force account.) Unless otherwise stated, rates for rental of equipment cover only such time as equipment is actually used and no allowance will be made for idle time. This last percentage shown is the net accumulated increase or decrease from the original quantity in the Engineer's Estimate.

Furnish four each security gates for the SAS Cable as specified on Plan Sheet Nos. 790AGS, 790AHS, and 790AJS, (Sheet Nos. 3 through 5 of this change order).

Extra Work at Force Account:

As directed by the Engineer, provide labor, equipment and materials to unload and store gates at a location within the project limits; paint gates; and other work as directed by the Engineer.

The security gates are to be painted in accordance with Contract Special Provision Section 10-1.82, CLEAN AND PAINT (MISCELLANEOUS FACILITIES), and shall include the following operations:
1) Mask off faying surfaces.
2) Use a wash primer coat (Galoseal WB or equal) over the hot dip galvanizing surfaces per manufacturer recommendations.
3) Caulk (Sika-Flex 1A or equivalent) all weep holes.
4) Apply two coats of finish paint using a Modified Siloxane Hybrid (Carboxane 2000 or equivalent) per Special Provisions Section 10-1.82, Clean and Paint (Miscellaneous Facilities, and the approved PQWP.

This work will be paid for in accordance with Section 5-1.17, "Force Account Payment", of the Special Provisions and Section 4-1.03D, "Extra Work", of the Standard Specifications.

Estimated Cost of Extra Work at Force Account = $10,000.00

Extra Work at Lump Sum:

Compensate the Contractor for all costs associated with furnishing security gates per attached drawings.

Work includes:

Provide required shop drawings, in accordance with measurements as provided by the Engineer;
Fabrication of gates; galvanizing; and shipping to the site.

For this work, the Contractor shall be compensated an Agreed Lump Sum of $34,559.00, which constitutes full and final compensation, including all taxes and markups, for all costs to furnish the security gates.

The Agreed Lump Sum constitutes full compensation, including all markups, complete in place, for this change.

Extra Work at Agreed Lump Sum = $34,559.00

All costs pertaining to the installation of these gates shall be provided for under a separate contract.

CONTRACT CHANGE ORDER

Change Requested by: Engineer

CCO 172	Suppl. No. 0	Contract No. 04 - 0120S4	Road SF-80-12.7/13.2	FED. AID LOC.: NO FED AID

Estimated Cost: Increase ☑ Decrease ☐ $44,559.00

By reason of this order the time of completion will be adjusted as follows: 0 days

Submitted by		
Signature William Howe	Resident Engineer William Howe, Senior R.E.	Date 07.17.13
Approval Recommended by		
Signature William Howe	Senior Resident Engineer William Howe	Date 07.17.13
Engineer Approval by		
Signature William Howe	Senior Resident Engineer William Howe	Date 08.05.13

We the undersigned contractor, have given careful consideration to the change proposed and agree, if this proposal is approved, that we will provide all equipment, furnish the materials, except as may otherwise be noted above, and perform all services necessary for the work above specified, and will accept as full payment therefor the prices shown above.

NOTE: If you, the contractor, do not sign acceptance of this order, your attention is directed to the requirements of the specifications as to proceeding with the ordered work and filing a written protest within the time therein specified.

Contractor Accepted by		
Signature	(Print name and title) Edmundo A Ruch - Treasurer	Date 7-31-2013

DIST.	COUNTY	ROUTE	KILOMETER POST TOTAL PROJECT	SHEET NO.	TOTAL SHEETS
04	SF	80	12.7/13.2	790 AGS	806

REGISTERED ENGINEER - CIVIL

01-16-13

PLANS APPROVAL DATE

REGISTERED PROFESSIONAL ENGINEER Marwan N. Nader No. C 054426 Exp. 12/31/13 CIVIL STATE OF CALIFORNIA

The State of California or its officers or agents shall not be responsible for the accuracy or completeness of electronic copies of this plan sheet.

T.Y. LIN / MOFFATT & NICHOL
TWO HARRISON STREET
SAN FRANCISCO, CA 94105

Caltrans now has a web site! To get to the web site, go to: http://www.dot.ca.gov

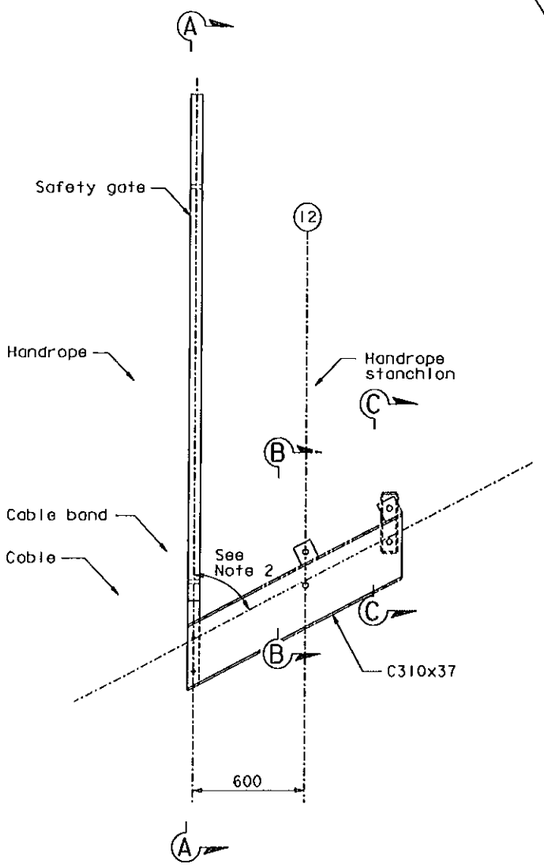

SECURITY GATE ELEVATION
1:15

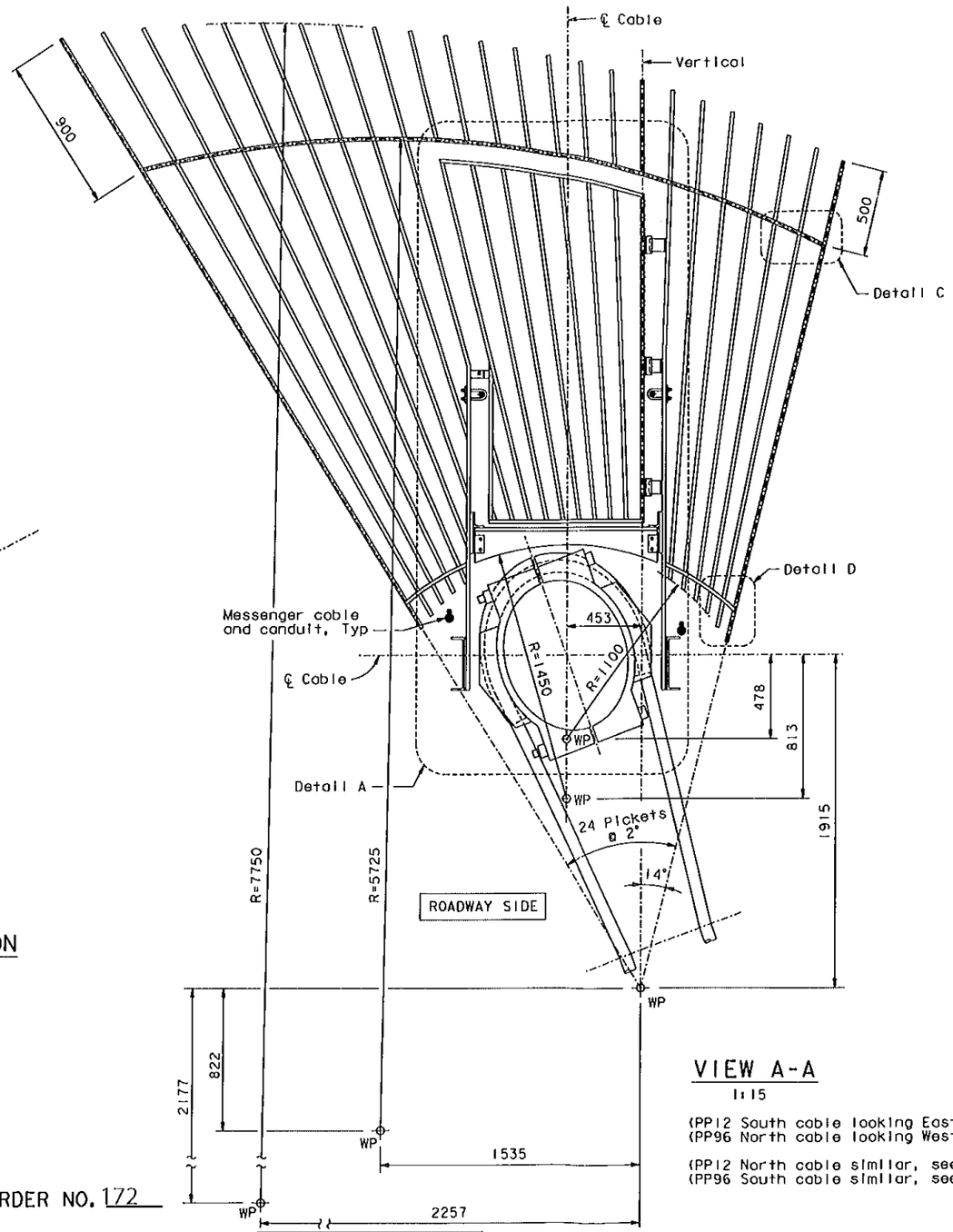

VIEW A-A
1:15

(PP12 South cable looking East shown)
(PP96 North cable looking West shown)

(PP12 North cable similar, see Note 1)
(PP96 South cable similar, see Note 1)

NOTES:

1. Security gates at PP12 North cable and at PP96 South cable shall be mirrored of View A-A and detailed such that the door opens downhill on the cable.
2. Security gate shall be installed vertical. Field verify angle at all four gate locations.
3. For Details A, C & D and details not shown, see "SAS Cable Security Gate No. 2 & No. 3" sheets.
4. For Sections B-B & C-C, see "Security Gate Details No. 2" sheet.

CONTRACT CHANGE ORDER NO. 172
SHEET 3 OF 5

SUPPLEMENT SHEET

REQUESTS FOR INFORMATION NOT ADDRESSED IN THIS CCO REMAIN IN FORCE

DESIGN OVERSIGHT
JOHN NOOK, BERNARD CHAN, JUAN F. CARPIO

HASAN EL-NATUR

SIGN OFF DATE

Rev. Date: 5-18-98

MARK	DATE	REVISIONS	BY	CH'D	CCO#
0	01/16/13	CABLE SECURITY GATE	DT	MN	

DESIGN	BY D. Turner	CHECKED M. Noder	
DETAILS	BY A. Baumberger	CHECKED D. Turner	
QUANTITIES	BY A. Baumberger	CHECKED D. Turner	

PREPARED FOR THE STATE OF CALIFORNIA DEPARTMENT OF TRANSPORTATION

Jal Birdy
PROJECT ENGINEER

BRIDGE NO. 34-0006 L/R
KILOMETER POST 12.8

SAN FRANCISCO OAKLAND BAY BRIDGE
EAST SPAN SEISMIC SAFETY PROJECT

YBI TRANSITION STRUCTURES

SAS CABLE SECURITY GATE NO. 1

CU 04251
EA 0120S1

ORIGINAL SCALE IN MILLIMETERS FOR REDUCED PLANS 0 10 20 30 40 50 60 70 80 90 100

DISREGARD PRINTS BEARING EARLIER REVISION DATES → 01/16/13

REVISION DATES (PRELIMINARY STAGE ONLY)

SHEET 1 OF 3

FILE => I:\bb\04-012001\sas\contract plans and cco\cco\security gate cco\1-original 01-15-13\dgn\agshr10a.dgn

USERNAME => grivera DATE PLOTTED => 16 JAN 2013 TIME PLOTTED => 11:07:09

Date

DIST.	COUNTY	ROUTE	KILOMETER POST TOTAL PROJECT	SHEET NO.	TOTAL SHEETS
04	SF	80	12.7/13.2	790 AHS	806

REGISTERED ENGINEER - CIVIL

01-16-13

PLANS APPROVAL DATE

REGISTERED PROFESSIONAL ENGINEER Marwan N. Nader No. C 054426 Exp. 12/31/13 CIVIL STATE OF CALIFORNIA

The State of California or its officers or agents shall not be responsible for the accuracy or completeness of electronic copies of this plan sheet.

T.Y. LIN / MOFFATT & NICHOL
TWO HARRISON STREET
SAN FRANCISCO, CA 94105

Caltrans now has a web site! To get to the web site, go to: http://www.dot.ca.gov

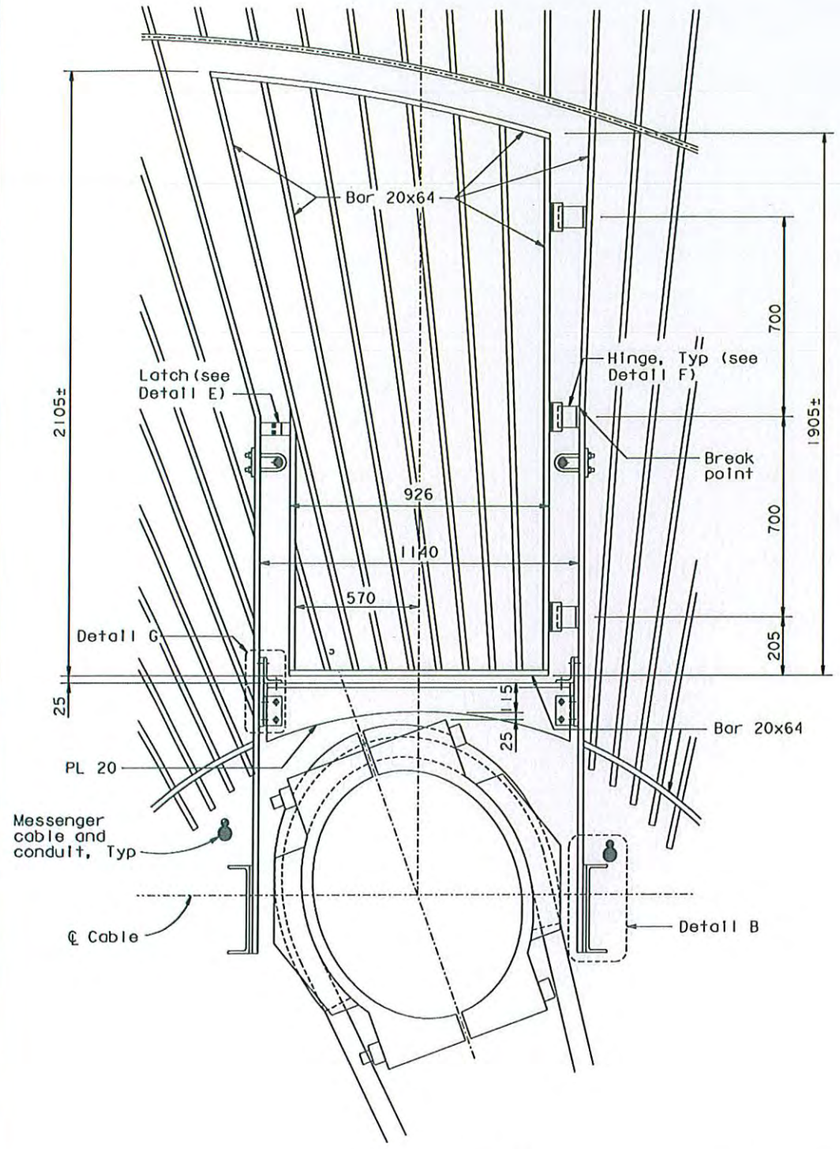

DETAIL A
1:10

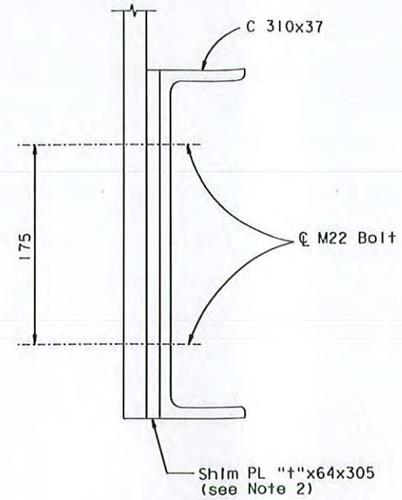

DETAIL B
1:2.5

SECURITY GATE LOCATIONS		
PP	UTILITY STANCHION TYPE	
	INBOARD	OUTBOARD
12N	1	2
12S	1	2
96N	2	1
96S	2	1

NOTES:

1. Remove existing Cap PL 6 and Install 70x70 bar.
2. Shim shall be sized to achieve door frame width. Shim shall be installed at inboard and outboard channels.
3. For Details E, F & G, see "SAS Cable Security Gate No. 3" sheet.
4. Shim PL 25 shall be installed on outboard side of cable band only.

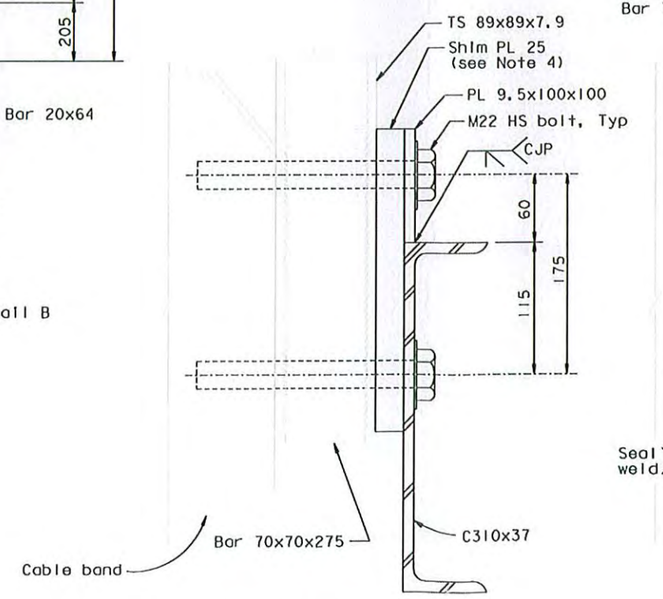

SECTION B-B
1:2.5

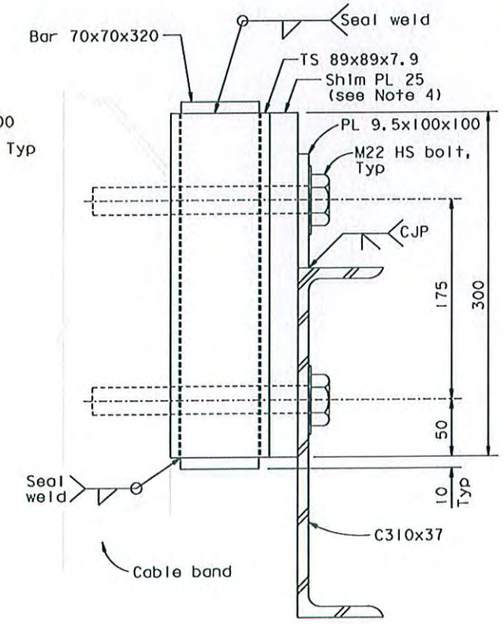

SECTION C-C (TYPE 1)
1:2.5

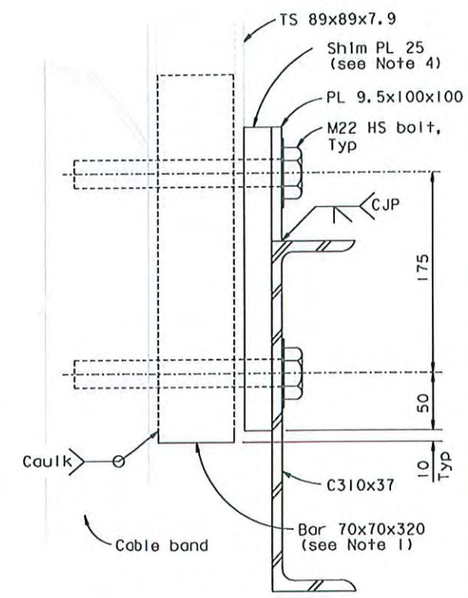

SECTION C-C (TYPE 2)
1:2.5

CONTRACT CHANGE ORDER NO. 172
SHEET 4 OF 5

REQUESTS FOR INFORMATION NOT ADDRESSED IN THIS CCO REMAIN IN FORCE

SUPPLEMENT SHEET

DESIGN OVERSIGHT
JOHN MOOK, BERNARD CHAN, JUAN F. CARPIO

HASAN EL-NATUR

SIGN OFF DATE

Rev. Date: 5-18-98

MARK	DATE	DESCRIPTIONS	BY	CH'D	CCO#.
0	01/16/13	CABLE SECURITY GATE	DT	MN	

REVISIONS

	BY	CHECKED
DESIGN	D. Turner	M. Nader
DETAILS	A. Bomberger	D. Turner
QUANTITIES	A. Bomberger	D. Turner

PREPARED FOR THE STATE OF CALIFORNIA DEPARTMENT OF TRANSPORTATION

Jal Birdy
PROJECT ENGINEER

BRIDGE NO. 34-0006 L/R
KILOMETER POST 12.8

SAN FRANCISCO OAKLAND BAY BRIDGE
EAST SPAN SEISMIC SAFETY PROJECT

YBI TRANSITION STRUCTURES

SAS CABLE SECURITY GATE NO. 2

ORIGINAL SCALE IN MILLIMETERS FOR REDUCED PLANS 0 10 20 30 40 50 60 70 80 90 100

CU 04251
EA 0120S1

DISREGARD PRINTS BEARING EARLIER REVISION DATES 01/16/13

REVISION DATES (PRELIMINARY STAGE ONLY)

SHEET 2 OF 3

FILE => I:\bb\04-012001\sas\contract plans and cco\cco\security gate cco\1-original 01-15-13\dgn\ogshr10b.dgn

USERNAME => ariverg DATE PLOTTED => 16 JAN 2013 TIME PLOTTED => 11:08:28

Date

DIST.	COUNTY	ROUTE	KILOMETER POST TOTAL PROJECT	SHEET NO.	TOTAL SHEETS
04	SF	80	12.7/13.2	790 AIS	806

REGISTERED ENGINEER - CIVIL

01-16-13

PLANS APPROVAL DATE

REGISTERED PROFESSIONAL ENGINEER Morwan N. Nader No. C 054426 Exp. 12/31/13 CIVIL STATE OF CALIFORNIA

The State of California or its officers or agents shall not be responsible for the accuracy or completeness of electronic copies of this plan sheet.

T.Y. LIN / MOFFATT & NICHOL
TWO HARRISON STREET
SAN FRANCISCO, CA 94105

Caltrans now has a web site! To get to the web site, go to: http://www.dot.ca.gov

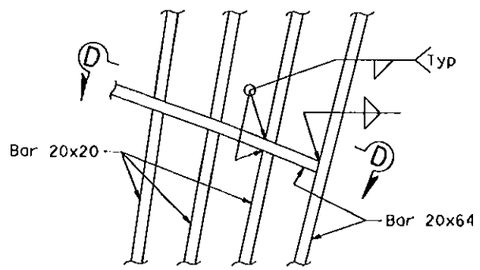

DETAIL C
1:5

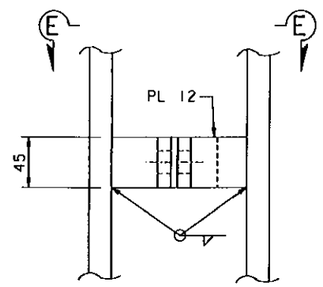

DETAIL E
1:2.5

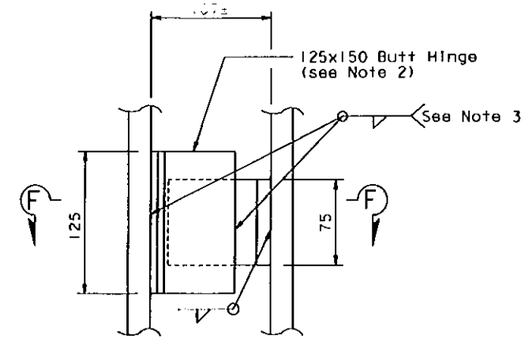

DETAIL F
1:2.5

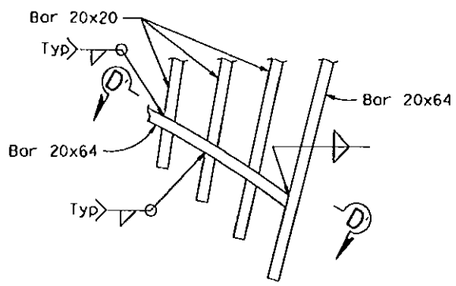

DETAIL D
1:5

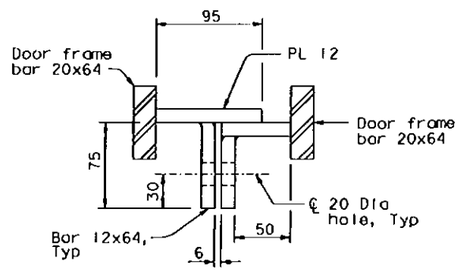

SECTION E-E
1:2.5

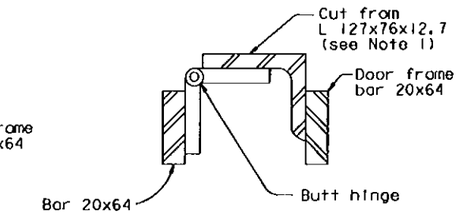

SECTION F-F
1:2.5

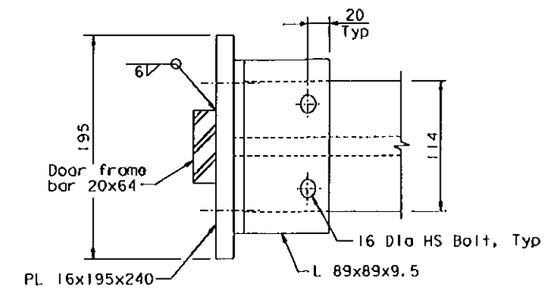

SECTION G-G
1:2.5

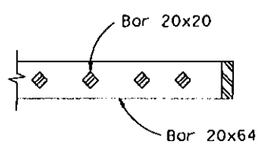

(ALT 1)

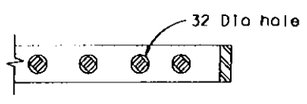

(ALT 2)

SECTION D-D (Section D'-D' Similar)
1:5

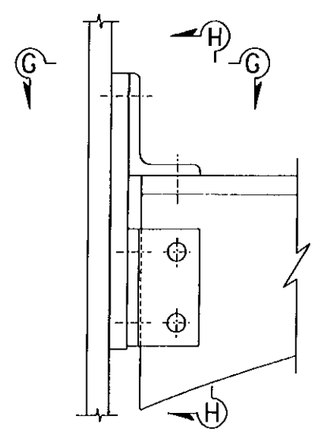

DETAIL G
1:2.5

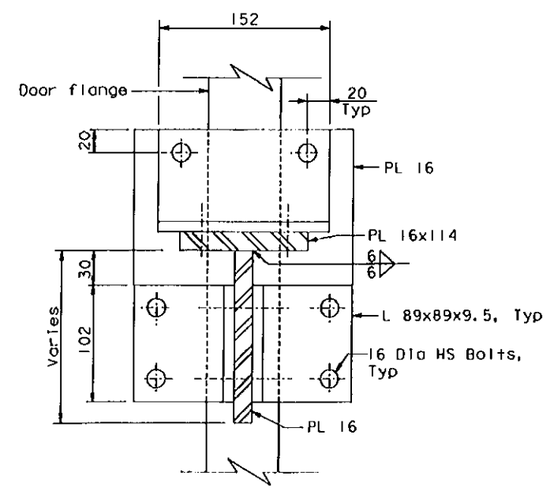

SECTION H-H
1:2.5

NOTES:

1. L 127x76 shall be cut and attached to butt hinge to fit gap between frame members.
2. Butt hinge shall be Type 304 Stainless Steel, non-removable, no holes, with 0.5" (13 mm) gauge.
3. Bottom butt hinge shall be field welded to L 127x76x12.7 to facilitate installation.

CONTRACT CHANGE ORDER NO. 172
SHEET 5 OF 5

DESIGN OVERSIGHT
JOHN COOK, BERNARD CHAN, JUAN F. CARPIO
HASAN EL-NATUR
SIGN OFF DATE

REQUESTS FOR INFORMATION NOT ADDRESSED IN THIS CCO REMAIN IN FORCE

SUPPLEMENT SHEET

MARK	DATE	DESCRIPTIONS	BY	CH'D	CCO#
0	01/16/13	CABLE SECURITY GATE	DT	MN	

REVISIONS

DESIGN	BY D. Turner	CHECKED M. Nader
DETAILS	BY A. Baumberger	CHECKED D. Turner
QUANTITIES	BY A. Baumberger	CHECKED D. Turner

PREPARED FOR THE STATE OF CALIFORNIA DEPARTMENT OF TRANSPORTATION

Jal Birdy
PROJECT ENGINEER

BRIDGE NO. 34-0006 L/R
KILOMETER POST 12.8

SAN FRANCISCO OAKLAND BAY BRIDGE
EAST SPAN SEISMIC SAFETY PROJECT

YBI TRANSITION STRUCTURES

SAS CABLE SECURITY GATE NO. 3

Rev. Date: 5-18-98

ORIGINAL SCALE IN MILLIMETERS FOR REDUCED PLANS 0 10 20 30 40 50 60 70 80 90 100

CU 04251
EA 0120S1

DISREGARD PRINTS BEARING EARLIER REVISION DATES

REVISION DATES (PRELIMINARY STAGE ONLY) 01/16/13

SHEET 3 OF 3

FILE => I:\bb\04-012001\sas\contract plans and cco\cco\security gate cco\1-original 01-15-13\dgn\agshr10c.dgn

USERNAME => ofrivera DATE PLOTTED => 16 JAN 2013 TIME PLOTTED => 11:09:25

Date

STATE OF CALIFORNIA - DEPARTMENT OF TRANSPORTATION

CONTRACT CHANGE ORDER MEMORANDUM

DATE: 7/16/2013 Page 1 of 1

TO: Deanna Vilcheck, ACM /	FILE: E.A. 04 - 0120S4
FROM: William Howe, Senior R.E.	CO-RTE-PM SF-80-12.7/13.2
	FED. NO. NO FED AID
CCO#: 172 SUPPLEMENT#: 0 Category Code: CGPT	CONTINGENCY BALANCE (Incl. this change) $27,069,853.15
COST: $44,559.00 INCREASE ☑ DECREASE ☐	HEADQUARTERS APPROVAL REQUIRED? ☐ YES ☑ NO
SUPPLEMENTAL FUNDS PROVIDED: $0.00	IS THIS REQUEST IN ACCORDANCE WITH ENVIRONMENTAL DOCUMENTS? ☑ YES ☐ NO
CCO DESCRIPTION: Fabricate SAS Cable Security Gates	**PROJECT DESCRIPTION:** YBITS-1 (Yerba Buena Island Transition Structures)

Original Contract Time:	Time Adj. This Change:	Previously Approved CCO Time Adjustments:	Percentage Time Adjusted: (including this change)	Total # of Unreconciled Deferred Time CCO(s): (including this change)
1390 Day(s)	0 Day(s)	0 Day(s)	0 %	9

THIS CHANGE ORDER PROVIDES FOR:

Fabricate 4 each security gates for the Bay Bridge East Span SAS Cable (Eastbound and Westbound).

This project, the Yerba Buena Island Transition Structure (YBITS), provides for the construction of two bridges, which will connect eastbound and westbound traffic on the new east span of the San Francisco Oakland Bay Bridge (SFOBB) to the existing Yerba Buena Island (YBI) tunnel. As part of the construction of the new East Span, the Engineer has designed security gates to close off unauthorized access to the SAS cable. This change order will provide for fabrication of these gates, which will be installed under a different CCO or contract.

This CCO provides for an Agreed Lump Sum of $34,559.00 for the fabrication and shipping of the gates to the site. An additional Force Account amount of $10,000.00 is included to cover the unloading, storing and painting for these gates, for a total amount of $44,559.00. This will be funded from the project's contingency fund. A cost analysis is on file.

This CCO was requested by Robert Kobal, Toll Bridge Construction Senior Engineer. The above-mentioned gates were originally requested by the California Highway Patrol (CHP). Refer to the attached CCO Submittal dated 1/16/13.

No adjustment of contract time is warranted as the work will not affect the controlling operation.

Maintenance concurrence will be obtained from Lina Ellis, Structures Maintenance.

CONCURRED BY:		
Construction Engineer:	William Howe WBH	Date 07-17-13
Bridge Engineer:	Mehran Ardakanian	Date
Project Engineer:	Bob Zandipour, Design	Date 7-22-13
Project Manager:	Ken Terpstra KT	Date 7/24/13
FHWA Rep.:		Date
Environmental:		Date
Other (specify):	Lina Ellis, Str. Maintenance	Date 7-19-13
Other (specify):		Date
District Prior Approval By:		Date
HQ (Issue Approve) By:		Date
Resident Engineer's Signature: William Howe		Date 07-17-13

ESTIMATE OF COST

	THIS REQUEST	TOTAL TO DATE
ITEMS	$0.00	$0.00
FORCE ACCOUNT	$10,000.00	$10,000.00
AGREED PRICE	$34,559.00	$34,559.00
ADJUSTMENT	$0.00	$0.00
TOTAL	$44,559.00	$44,559.00

FEDERAL PARTICIPATION

☐ PARTICIPATING ☐ PARTICIPATING IN PART ☑ NONE

☐ NON-PARTICIPATING (MAINTENANCE) ☐ NON-PARTICIPATING

FEDERAL SEGREGATION (if more than one Funding Source or P.I.P. type)

☐ CCO FUNDED PER CONTRACT ☐ CCO FUNDED AS FOLLOWS

FEDERAL FUNDING SOURCE	PERCENT

ADA Notice: For individuals with sensory disabilities, this document is available in alternate formats. For information call: (916) 654-6410 or TDD (916) 654-3880 or write Records and Forms Management, 1120 N Street, MS-89, Sacramento, CA 95814.

STATE OF CALIFORNIA - DEPARTMENT OF TRANSPORTATION

CONTRACT CHANGE ORDER

Change Requested by: Engineer

CCO 172	Suppl. No. 1	Contract No. 04 - 0120S4	Road SF-80-12.7/13.2	FED. AID LOC.: NO FED AID

To: **M C M CONSTRUCTION INC**

You are directed to make the following changes from the plans and specifications or do the following described work not included in the plans and specifications for this contract. ***NOTE: This change order is not effective until approved by the Engineer.***

Description of work to be done, estimate of quantities and prices to be paid. (Segregate between additional work at contract price, agreed price and force account.) Unless otherwise stated, rates for rental of equipment cover only such time as equipment is actually used and no allowance will be made for idle time. This last percentage shown is the net accumulated increase or decrease from the original quantity in the Engineer's Estimate.

Extra Work at Force Account:

Provide additional funds for the work specified under the original Change Order No. 172.

Estimated Cost of Extra Work at Force Account = $40,000.00

Estimated Cost: Increase ☑ **Decrease** ☐ **$40,000.00**

By reason of this order the time of completion will be adjusted as follows: 0 days

Signature	Resident Engineer	Date
William Howe	William Howe, Senior R.E.	08·23·13
Signature	**Area Construction Manager**	**Date**
Deanna Vilcheck	Deanna Vilcheck	8/25/13
Signature	**Area Construction Manager**	**Date**
Deanna Vilcheck	Deanna Vilcheck	8/29/13

We the undersigned contractor, have given careful consideration to the change proposed and agree, if this proposal is approved, that we will provide all equipment, furnish the materials, except as may otherwise be noted above, and perform all services necessary for the work above specified, and will accept as full payment therefor the prices shown above.

NOTE: If you, the contractor, do not sign acceptance of this order, your attention is directed to the requirements of the specifications as to proceeding with the ordered work and filing a written protest within the time therein specified.

Signature	(Print name and title)	Date
Signature not required		

STATE OF CALIFORNIA - DEPARTMENT OF TRANSPORTATION

CONTRACT CHANGE ORDER MEMORANDUM

DATE: 8/23/2013 Page 1 of 1

TO: Deanna Vilcheck, ACM

FROM: William Howe, Senior R.E.

CCO#: 172 | SUPPLEMENT#: 1 | Category Code: CGPT

COST: $40,000.00 INCREASE ☑ DECREASE ☐

SUPPLEMENTAL FUNDS PROVIDED: $0.00

FILE: E.A. 04 - 0120S4
CO-RTE-PM SF-80-12.7/13.2
FED. NO. NO FED AID

CONTINGENCY BALANCE (incl. this change) $20,882,521.15

HEADQUARTERS APPROVAL REQUIRED? ☐ YES ☑ NO

IS THIS REQUEST IN ACCORDANCE WITH ENVIRONMENTAL DOCUMENTS? ☑ YES ☐ NO

CCO DESCRIPTION:
Supplemental Funds-SAS Security Gates

PROJECT DESCRIPTION:
YBITS-1 (Yerba Buena Island Transition Structures)

Original Contract Time:	Time Adj. This Change:	Previously Approved CCO Time Adjustments:	Percentage Time Adjusted: (including this change)	Total # of Unreconciled Deferred Time CCO(s): (including this change)
1390 Day(s)	0 Day(s)	0 Day(s)	0 %	9

THIS CHANGE ORDER PROVIDES FOR:
Additional force account funding for the work defined under the original Change Order No. 172, SAS Security Gates, as directed by the Engineer.

CCO 172 provided a change order to add fabrication of 4 each security gates, to be located at the Bay Bridge East Span SAS. Since CCO 172 was approved, the architect determined that the paint should match the SAS paint, so additional funds will be required to complete this. The estimated costs to date are close to exhausting the initial allocation of $44,559.00, and additional funding will be required to complete painting. Compensation for this additional work shall be paid as Extra Work at force account, which can be financed from the project's contingency funds at an estimated cost of $40,000.00. A detailed cost analysis for this change order is on file.

The Contractor's signature is not required for additional funds for Extra Work at Force Account Change Orders.

Concurrence will be obtained from Lina Ellis, Structures Maintenance.

No adjustment in contract time of completion is warranted as this change does not affect the controlling operation.

CONCURRED BY:

Construction Engineer:	William Howe WBH	Date 08-23-13
Bridge Engineer:	Mehran Ardakanian	Date
Project Engineer:	Bob Zandipour, Design	Date 8-28-13
Project Manager:	Ken Terpstra	Date 8/27/13
FHWA Rep.:		Date
Environmental:		Date
Other (specify):	Lina Ellis, Str. Maintenance	Date 8-30-13
Other (specify):		Date
District Prior Approval By:		Date
HQ (Issue Approve) By:		Date
Resident Engineer's Signature:	William Howe	Date 08-23-13

ESTIMATE OF COST

	THIS REQUEST	TOTAL TO DATE
ITEMS	$0.00	$0.00
FORCE ACCOUNT	$40,000.00	$50,000.00
AGREED PRICE	$0.00	$34,559.00
ADJUSTMENT	$0.00	$0.00
TOTAL	$40,000.00	$84,559.00

FEDERAL PARTICIPATION

☐ PARTICIPATING ☐ PARTICIPATING IN PART ☑ NONE
☐ NON-PARTICIPATING (MAINTENANCE) ☐ NON-PARTICIPATING

FEDERAL SEGREGATION (if more than one Funding Source or P.I.P. type)
☐ CCO FUNDED PER CONTRACT ☐ CCO FUNDED AS FOLLOWS

FEDERAL FUNDING SOURCE	PERCENT

ADA Notice: For individuals with sensory disabilities, this document is available in alternate formats. For information call: (916) 654-6410 or TDD (916) 654-3880 or write Records and Forms Management, 1120 N Street, MS-89, Sacramento, CA 95814.

STATE OF CALIFORNIA - DEPARTMENT OF TRANSPORTATION

CONTRACT CHANGE ORDER

Change Requested by: Engineer

CCO 173	Suppl. No. 0	Contract No 04 - 0120S4	Road SF-80-12.7/13.2	FED. AID LOC.: NO FED AID

To: **M C M CONSTRUCTION INC**

You are directed to make the following changes from the plans and specifications or do the following described work not included in the plans and specifications for this contract. ***NOTE: This change order is not effective until approved by the Engineer.***

Description of work to be done, estimate of quantities and prices to be paid. (Segregate between additional work at contract price, agreed price and force account.) Unless otherwise stated, rates for rental of equipment cover only such time as equipment is actually used and no allowance will be made for idle time. This last percentage shown is the net accumulated increase or decrease from the original quantity in the Engineer's Estimate.

Extra Work at Force Account:

As directed by the Engineer, provide labor, equipment and materials to adjust handrail elevations; make repairs and improvements; clean, caulk and paint various bikepath handrail elements located at the Bay Bridge East Span Oakland Touchdown 1.

This work will be paid for in accordance with Section 5-1.17, "Force Account Payment", of the Special Provisions and Section 4-1.03D, "Extra Work", of the Standard Specifications.

Estimated Cost of Extra Work at Force Account = $30,000.00

Estimated Cost: Increase ☑ Decrease ☐ **$30,000.00**

By reason of this order the time of completion will be adjusted as follows: 0 days

Submitted by

Signature	Resident Engineer	Date
William Howe	William Howe, Senior R.E.	02.01.13

Approval Recommended by

Signature	Senior Resident Engineer	Date
William Howe	William Howe	02.01.13

Engineer Approval by

Signature	Senior Resident Engineer	Date
William Howe	William Howe	04.17.13

We the undersigned contractor, have given careful consideration to the change proposed and agree, if this proposal is approved, that we will provide all equipment, furnish the materials, except as may otherwise be noted above, and perform all services necessary for the work above specified, and will accept as full payment therefor the prices shown above.

NOTE: If you, the contractor, do not sign acceptance of this order, your attention is directed to the requirements of the specifications as to proceeding with the ordered work and filing a written protest within the time therein specified.

Contractor Acceptance by

Signature	(Print name and title)	Date
	EDMUNDO A. PUCHI, TREASURER	4/16/13

STATE OF CALIFORNIA - DEPARTMENT OF TRANSPORTATION

CONTRACT CHANGE ORDER MEMORANDUM

DATE: 2/1/2013 Page 1 of 1

TO: Deanna Vilcheck, ACM / DV	FILE: E.A. 04 - 0120S4
FROM: William Howe, Senior R.E.	CO-RTE-PM SF-80-12.7/13.2
	FED. NO. NO FED AID
CCO#: 173 SUPPLEMENT#: 0 Category Code: CHPT	CONTINGENCY BALANCE (incl. this change) $30,200,396.15
COST: $30,000.00 INCREASE ☑ DECREASE ☐	HEADQUARTERS APPROVAL REQUIRED? ☐ YES ☑ NO
SUPPLEMENTAL FUNDS PROVIDED: $0.00	IS THIS REQUEST IN ACCORDANCE WITH ENVIRONMENTAL DOCUMENTS? ☑ YES ☐ NO
CCO DESCRIPTION: Oakland Touchdown Bikepath Handrails	**PROJECT DESCRIPTION:** YBITS-1 (Yerba Buena Island Transition Structures)

Original Contract Time:	Time Adj. This Change:	Previously Approved CCO Time Adjustments:	Percentage Time Adjusted: (including this change)	Total # of Unreconciled Deferred Time CCO(s): (including this change)
1390 Day(s)	0 Day(s)	0 Day(s)	0 %	9

THIS CHANGE ORDER PROVIDES FOR:

Provide labor, equipment and materials to adjust handrail elevations; make repairs and improvements; clean, caulk and paint various bikepath handrail elements located at the Bay Bridge East Span Oakland Touchdown 1.

This project, the Yerba Buena Island Transition Structure (YBITS), provides for the construction of two bridges, which will connect eastbound and westbound traffic on the new east span of the San Francisco Oakland Bay Bridge (SFOBB) to the existing Yerba Buena Island (YBI) tunnel. As part of the earlier construction of the new East Span, a steel bikepath has been constructed under the previously completed Oakland Touchdown 1 (OTD1) (04-0120L4) contract.

Since the completion of the earlier contract (in 2010), the Department's design group has implemented a number of CCO's (on both the SAS contract and the YBITS contract) that have made improvements to the bikepath railings. The work done under these CCO's still requires adjusting to plumb and other elements to complete the work. In addition, the Department's architect has recommended that these railings be adjusted to plumbness. This CCO will be implemented to complete the adjustments, including any painting and any associated caulking.

This CCO provides for $30,000.00 in force account work, which will be paid for on an actual cost basis as provided in Section 5-1.17, "Force Account Payment", of the Special Provisions, and Section 4-1.03D, "Extra Work", of the Standard Specifications. This will be funded from the project's contingency fund. A cost analysis is on file.

This CCO was requested by Clive Endress, representative for the Corridor Architect.

No adjustment of contract time is warranted as the work will not affect the controlling operation.

Maintenance concurrence will be obtained from Lina Ellis, Structures Maintenance.

CONCURRED BY:		
Construction Engineer:	William Howe	Date 02.01.13
Bridge Engineer:	Mehran Ardakanian	Date
Project Engineer:	Jaime Gutierrez Bob Zandipour, Design	Date 2-6-13
Project Manager:	Ken Terpstra	Date 2/1/13
FHWA Rep.:		Date
Environmental:		Date
Other (specify):	Lina Ellis, Str. Maintenance	Date 2-1-13
Other (specify):		Date
District Prior Approval By:		Date
HQ (Issue Approve) By:		Date
Resident Engineer's Signature:	William Howe	Date 02.01.13

ESTIMATE OF COST

	THIS REQUEST	TOTAL TO DATE
ITEMS	$0.00	$0.00
FORCE ACCOUNT	$30,000.00	$30,000.00
AGREED PRICE	$0.00	$0.00
ADJUSTMENT	$0.00	$0.00
TOTAL	$30,000.00	$30,000.00

FEDERAL PARTICIPATION

☐ PARTICIPATING ☐ PARTICIPATING IN PART ☑ NONE
☐ NON-PARTICIPATING (MAINTENANCE) ☐ NON-PARTICIPATING

FEDERAL SEGREGATION (if more than one Funding Source or P.I.P. type)
☐ CCO FUNDED PER CONTRACT ☐ CCO FUNDED AS FOLLOWS

FEDERAL FUNDING SOURCE	PERCENT

ADA Notice: For individuals with sensory disabilities, this document is available in alternate formats. For information call: (916) 654-6410 or TDD (916) 654-3880 or write Records and Forms Management, 1120 N Street, MS-89, Sacramento, CA 95814.

STATE OF CALIFORNIA - DEPARTMENT OF TRANSPORTATION

CONTRACT CHANGE ORDER

Change Requested by: Engineer

CCO 173	Suppl. No. 1	Contract No. 04 - 0120S4	Road SF-80-12.7/13.2	FED. AID LOC.: NO FED AID

To: **M C M CONSTRUCTION INC**

You are directed to make the following changes from the plans and specifications or do the following described work not included in the plans and specifications for this contract. ***NOTE: This change order is not effective until approved by the Engineer.***

Description of work to be done, estimate of quantities and prices to be paid. (Segregate between additional work at contract price, agreed price and force account.) Unless otherwise stated, rates for rental of equipment cover only such time as equipment is actually used and no allowance will be made for idle time. This last percentage shown is the net accumulated increase or decrease from the original quantity in the Engineer's Estimate.

Extra Work at Force Account:

Provide additional funds for the work specified under the original Change Order No. 173.

Estimate of Extra Work at Force Account = $40,000.00

Estimated Cost: Increase ☑ Decrease ☐ **$40,000.00**

By reason of this order the time of completion will be adjusted as follows: 0 days

Signature William Howe	Resident Engineer William Howe, Senior R.E.	Date 05-03-13
Signature Deanna Vilcheck	Area Construction Manager Deanna Vilcheck	Date 5/3/13
Signature Deanna Vilcheck	Area Construction Manager Deanna Vilcheck	Date 5/3/13

We the undersigned contractor, have given careful consideration to the change proposed and agree, if this proposal is approved, that we will provide all equipment, furnish the materials, except as may otherwise be noted above, and perform all services necessary for the work above specified, and will accept as full payment therefor the prices shown above.

NOTE: If you, the contractor, do not sign acceptance of this order, your attention is directed to the requirements of the specifications as to proceeding with the ordered work and filing a written protest within the time therein specified.

Signature Not Required	(Print name and title)	Date

STATE OF CALIFORNIA - DEPARTMENT OF TRANSPORTATION

CONTRACT CHANGE ORDER MEMORANDUM

DATE: 5/1/2013 Page 1 of 1

TO: Deanna Vilcheck, ACM / DV	FILE: E.A. 04 - 0120S4
FROM: William Howe, Senior R.E.	CO-RTE-PM SF-80-12.7/13.2
	FED. NO. NO FED AID
CCO#: 173 SUPPLEMENT#: 1 Category Code: CHPT	CONTINGENCY BALANCE (incl. this change) $35,866,276.15
COST: $40,000.00 INCREASE ☑ DECREASE ☐	HEADQUARTERS APPROVAL REQUIRED? ☐ YES ☑ NO
SUPPLEMENTAL FUNDS PROVIDED: $0.00	IS THIS REQUEST IN ACCORDANCE WITH ENVIRONMENTAL DOCUMENTS? ☑ YES ☐ NO
CCO DESCRIPTION: supplemental funds-OTD bikepath handrail	PROJECT DESCRIPTION: YBITS-1 (Yerba Buena Island Transition Structures)

Original Contract Time:	Time Adj. This Change:	Previously Approved CCO Time Adjustments:	Percentage Time Adjusted: (including this change)	Total # of Unreconciled Deferred Time CCO(s): (including this change)
1390 Day(s)	0 Day(s)	0 Day(s)	0 %	9

THIS CHANGE ORDER PROVIDES FOR:

Additional force account funding for the work defined under the original Contract Change Order No. 173, Oakland Touchdown Bikepath Handrail, as directed by the Engineer.

Contract Change Order No. 173 provided a change order to adjust handrail elevations, make repairs and improvements, clean, caulk and paint various bikepath handrail elements located at the Bay Bridge East Span Oakland Touchdown. Since Contract Change Order No. 173 was approved in February 2013, the south rail portion of the work has been realigned, but the north rail remains to be completed. The estimated costs to date are close to exhausting the initial allocation of $30,000.00 and additional funding will be required to complete both railings.

Compensation for this additional work shall be paid as Extra Work at Force Account, which can be financed from the project's Contingency Funds at an estimated cost of $40,000.00. A detailed cost analysis for this change order is on file.

The Contractor's signature is not required for additional funds for Extra Work at Force Account change orders.

This CCO was requested by Clive Endress, representative for the Corridor Architect. and concurrence will be obtained from Lina Ellis, Structures Maintenance.

No adjustment in contract time of completion is warranted as this change does not affect the controlling operation.

CONCURRED BY:		
Construction Engineer:	William Howe WBH	Date 05-03-13
Bridge Engineer:	Mehran Ardakanian	Date
Project Engineer:	Bob Zandipour, Design	Date 5-6-13
Project Manager:	Ken Terpstra KT	Date 5-7-13
FHWA Rep.:		Date
Environmental:		Date
Other (specify):	Bill Zanetich for Lina Ellis, Str. Maintenance	Date 5-7-13
Other (specify):		Date
District Prior Approval By:		Date
HQ (Issue Approve) By:		Date
Resident Engineer's Signature:	William Howe	Date 05-03-13

ESTIMATE OF COST

	THIS REQUEST	TOTAL TO DATE
ITEMS	$0.00	$0.00
FORCE ACCOUNT	$40,000.00	$70,000.00
AGREED PRICE	$0.00	$0.00
ADJUSTMENT	$0.00	$0.00
TOTAL	$40,000.00	$70,000.00

FEDERAL PARTICIPATION

☐ PARTICIPATING ☐ PARTICIPATING IN PART ☑ NONE
☐ NON-PARTICIPATING (MAINTENANCE) ☐ NON-PARTICIPATING

FEDERAL SEGREGATION (if more than one Funding Source or P.I.P. type)
☐ CCO FUNDED PER CONTRACT ☐ CCO FUNDED AS FOLLOWS

FEDERAL FUNDING SOURCE	PERCENT

ADA Notice: For individuals with sensory disabilities, this document is available in alternate formats. For information call: (916) 654-6410 or TDD (916) 654-3880 or write Records and Forms Management, 1120 N Street, MS-89, Sacramento, CA 95814.

STATE OF CALIFORNIA - DEPARTMENT OF TRANSPORTATION

CONTRACT CHANGE ORDER

Change Requested by Engineer

CCO 174	Suppl. No. 0	Contract No 04 - 0120S4	Road SF-80-12.7/13.2	FED. AID LOC.: NO FED AID

To: **M C M CONSTRUCTION INC**

You are directed to make the following changes from the plans and specifications or do the following described work not included in the plans and specifications for this contract. ***NOTE: This change order is not effective until approved by the Engineer.***

Description of work to be done, estimate of quantities and prices to be paid. (Segregate between additional work at contract price, agreed price and force account.) Unless otherwise stated, rates for rental of equipment cover only such time as equipment is actually used and no allowance will be made for idle time. This last percentage shown is the net accumulated increase or decrease from the original quantity in the Engineer's Estimate

Extra Work at Force Account:

As directed by the Engineer, provide labor, equipment and materials to grind concrete deck surfaces, provide and place polyester concrete overlay, adjust deck manhole frame and cover elevations, and other measures in the vicinity of Hinge W7LA.

This work will be paid for in accordance with Section 5-1.17, "Force Account Payment", of the Special Provisions and Section 4-1.03D, "Extra Work", of the Standard Specifications.

Estimated Cost of Extra Work at Force Account = $30,000.00

Estimated Cost: Increase ✓ Decrease $30,000.00

By reason of this order the time of completion will be adjusted as follows: 0 days

Submitted by

Signature	Resident Engineer	Date
William Howe	William Howe, Senior R.E.	02.05.13

Approval Recommended by

Signature	Senior Resident Engineer	Date
William Howe	William Howe	02.05.13

Engineer Approval by

Signature	Senior Resident Engineer	Date
William Howe	William Howe	03-27.13

We the undersigned contractor, have given careful consideration to the change proposed and agree, if this proposal is approved, that we will provide all equipment, furnish the materials, except as may otherwise be noted above, and perform all services necessary for the work above specified, and will accept as full payment therefor the prices shown above

NOTE: If you, the contractor, do not sign acceptance of this order, your attention is directed to the requirements of the specifications as to proceeding with the ordered work and filing a written protest within the time therein specified.

Contractor Acceptance by

Signature	(Print name and title)	Date
	JAMES A. CARTER, PRESIDENT	3/26/13

STATE OF CALIFORNIA - DEPARTMENT OF TRANSPORTATION

CONTRACT CHANGE ORDER MEMORANDUM

DATE: 2/5/2013 Page 1 of 1

TO: Deanna Vilcheck, ACM /

FROM: William Howe, Senior R.E.

FILE: E.A. 04 - 0120S4
CO-RTE-PM SF-80-12.7/13.2
FED. NO. NO FED AID

CCO#: 174 SUPPLEMENT#: 0 Category Code: CJPT

CONTINGENCY BALANCE (incl. this change) $30,170,396.15

COST: $30,000.00 INCREASE ☑ DECREASE ☐

HEADQUARTERS APPROVAL REQUIRED? ☐ YES ☑ NO

SUPPLEMENTAL FUNDS PROVIDED: $0.00

IS THIS REQUEST IN ACCORDANCE WITH ENVIRONMENTAL DOCUMENTS? ☑ YES ☐ NO

CCO DESCRIPTION:
Hinge W7LA Poly Overlay

PROJECT DESCRIPTION:
YBITS-1 (Yerba Buena Island Transition Structures)

Original Contract Time	Time Adj. This Change	Previously Approved CCO Time Adjustments	Percentage Time Adjusted (including this change)	Total # of Unreconciled Deferred Time CCO(s) (including this change)
1390 Day(s)	0 Day(s)	0 Day(s)	0 %	9

THIS CHANGE ORDER PROVIDES FOR:

Provide labor, equipment and materials to grind concrete deck surfaces, provide and place polyester concrete overlay, adjust deck manhole frame and cover elevations, and other measures in the vicinity of Hinge W7LA, as directed by the Engineer.

This project, the Yerba Buena Island Transition Structure (YBITS), provides for the construction of two bridges, which will connect eastbound and westbound traffic on the new east span of the San Francisco Oakland Bay Bridge (SFOBB) to the existing Yerba Buena Island (YBI) tunnel.

In the vicinity of the Hinge W7LA, the deck grades have undergone adjustments as directed by the Engineer, which have been made in anticipation of the creep as calculated for this precast structure. This CCO will be implemented to complete the adjustments of final deck grades, utilizing grinding and a polyester concrete overlay.

This CCO provides for $30,000.00 in force account work, which will be paid for on an actual cost basis as provided in Section 5-1.17, "Force Account Payment", of the Special Provisions, and Section 4-1.03D, "Extra Work", of the Standard Specifications. This will be funded from the project's contingency fund. A cost analysis is on file.

This CCO was requested by Deanna Vilcheck, Construction Manager, for the SFO Bay Bridge Construction

No adjustment of contract time is warranted as the work will not affect the controlling operation.

Maintenance concurrence will be obtained from Lina Ellis, Structures Maintenance.

CONCURRED BY:

Construction Engineer	William Howe	Date 02-05-13
Bridge Engineer	Mehran Ardakanian	Date
Project Engineer	Bob Zandipour, Design	Date 2-5-13
Project Manager	Ken Terpstra	Date 2-5-13
FHWA Rep		Date
Environmental		Date
Other (specify):	Lina Ellis, Str. Maintenance	Date 2-7-13
Other (specify)		Date
District Prior Approval By		Date
HQ (Issue Approve) By		Date
Resident Engineer's Signature	William Howe	Date 02-05-13

ESTIMATE OF COST

	THIS REQUEST	TOTAL TO DATE
ITEMS	$0.00	$0.00
FORCE ACCOUNT	$30,000.00	$30,000.00
AGREED PRICE	$0.00	$0.00
ADJUSTMENT	$0.00	$0.00
TOTAL	$30,000.00	$30,000.00

FEDERAL PARTICIPATION

☐ PARTICIPATING ☐ PARTICIPATING IN PART ☑ NONE
☐ NON-PARTICIPATING (MAINTENANCE) ☐ NON-PARTICIPATING

FEDERAL SEGREGATION (if more than one Funding Source or P.I.P. type)
☐ CCO FUNDED PER CONTRACT ☐ CCO FUNDED AS FOLLOWS

FEDERAL FUNDING SOURCE PERCENT

ADA Notice: For individuals with sensory disabilities, this document is available in alternate formats. For information call (916) 654-6410 or TDD (916) 654-3880 or write Records and Forms Management, 1120 N Street, MS-89, Sacramento, CA 95814

STATE OF CALIFORNIA - DEPARTMENT OF TRANSPORTATION

CONTRACT CHANGE ORDER

Change Requested by: Engineer

CCO 174	Suppl. No. 1	Contract No. 04 - 0120S4	Road SF-80-12.7/13.2	FED. AID LOC.: NO FED AID

To: **M C M CONSTRUCTION INC**

You are directed to make the following changes from the plans and specifications or do the following described work not included in the plans and specifications for this contract. ***NOTE: This change order is not effective until approved by the Engineer.***

Description of work to be done, estimate of quantities and prices to be paid. (Segregate between additional work at contract price, agreed price and force account.) Unless otherwise stated, rates for rental of equipment cover only such time as equipment is actually used and no allowance will be made for idle time. This last percentage shown is the net accumulated increase or decrease from the original quantity in the Engineer's Estimate.

Extra Work at Force Account:

Provide additional funds.

Estimate of Extra Work at Force Account = $50,000.00

Estimated Cost: Increase ☑ Decrease ☐ **$50,000.00**

By reason of this order the time of completion will be adjusted as follows: 0 days

Signature	Resident Engineer	Date
William Howe	William Howe, Senior R.E.	08.07.13
Signature	**Area Construction Manager**	**Date**
Deanna Vilcheck	Deanna Vilcheck	8/7/13
Signature	**Area Construction Manager**	**Date**
Deanna Vilcheck	Deanna Vilcheck	8/7/13

We the undersigned contractor, have given careful consideration to the change proposed and agree, if this proposal is approved, that we will provide all equipment, furnish the materials, except as may otherwise be noted above, and perform all services necessary for the work above specified, and will accept as full payment therefor the prices shown above.

NOTE: If you, the contractor, do not sign acceptance of this order, your attention is directed to the requirements of the specifications as to proceeding with the ordered work and filing a written protest within the time therein specified.

Signature	(Print name and title)	Date
Not Required		

STATE OF CALIFORNIA - DEPARTMENT OF TRANSPORTATION

CONTRACT CHANGE ORDER MEMORANDUM

DATE: 8/7/2013 Page 1 of 1

TO: Deanna Vilcheck, ACM /	FILE: E.A. 04 - 0120S4
FROM: William Howe, Senior R.E.	CO-RTE-PM SF-80-12.7/13.2
	FED. NO. NO FED AID
CCO#: 174 SUPPLEMENT#: 1 Category Code: CJPT	CONTINGENCY BALANCE (incl. this change) $26,964,481.15
COST: $50,000.00 INCREASE ☑ DECREASE ☐	HEADQUARTERS APPROVAL REQUIRED? ☐ YES ☑ NO
SUPPLEMENTAL FUNDS PROVIDED: $0.00	IS THIS REQUEST IN ACCORDANCE WITH ENVIRONMENTAL DOCUMENTS? ☑ YES ☐ NO
CCO DESCRIPTION: additional funds-hinge W7LA poly overlay	**PROJECT DESCRIPTION:** YBITS-1 (Yerba Buena Island Transition Structures)

Original Contract Time:	Time Adj. This Change:	Previously Approved CCO Time Adjustments:	Percentage Time Adjusted: (including this change)	Total # of Unreconciled Deferred Time CCO(s): (including this change)
1390 Day(s)	0 Day(s)	0 Day(s)	0 %	9

THIS CHANGE ORDER PROVIDES FOR:

Provide labor, equipment and materials to grind concrete deck surfaces, provide and place polyester concrete overlay, adjust deck manhole frame and cover elevations, and other measures in the vicinity of Hinge W7LA, as directed by the Engineer.

This project, the Yerba Buena Island Transition Structure (YBITS), provides for the construction of two bridges, which will connect eastbound and westbound traffic on the new east span of the San Francisco Oakland Bay Bridge (SFOBB) to the existing Yerba Buena Island (YBI) tunnel.

In the vicinity of the Hinge W7LA, the deck grades have undergone adjustments as directed by the Engineer, which have been made in anticipation of the creep as calculated for this precast structure. CCO No. 174, S0 was implemented to complete the adjustments of final deck grades, utilizing grinding and a polyester concrete overlay. CCO No. 174, S1, provides for additional funds, which is required to cover the cost of the polyester material required to meet the grades in the field.

This CCO provides for additional funds of $50,000.00 in force account work, which will be paid for on an actual cost basis as provided in Section 5-1.17, "Force Account Payment", of the Special Provisions, and Section 4-1.03D, "Extra Work", of the Standard Specifications. This will be funded from the project's contingency fund. A cost analysis is on file.

This CCO was requested by Deanna Vilcheck, Construction Manager, for the SFO Bay Bridge Construction .

No adjustment of contract time is warranted as the work will not affect the controlling operation.

Maintenance concurrence will be obtained from Lina Ellis, Structures Maintenance.

CONCURRED BY:		
Construction Engineer:	William Howe WH	Date 08-07-13
Bridge Engineer:	Mehran Ardakanian	Date
Project Engineer:	Brian Wood for Bob Zandipour, Design	Date 8-7-13
Project Manager:	Ken Terpstra KT	Date 8-8-13
FHWA Rep.:		Date
Environmental:		Date
Other (specify):	Lina Ellis, Str. Maintenance	Date 8-7-13
Other (specify):		Date
District Prior Approval By:		Date
HQ (Issue Approve) By:		Date
Resident Engineer's Signature:	William Howe	Date 08-07-13

ESTIMATE OF COST

	THIS REQUEST	TOTAL TO DATE
ITEMS	$0.00	$0.00
FORCE ACCOUNT	$50,000.00	$80,000.00
AGREED PRICE	$0.00	$0.00
ADJUSTMENT	$0.00	$0.00
TOTAL	$50,000.00	$80,000.00

FEDERAL PARTICIPATION

☐ PARTICIPATING ☐ PARTICIPATING IN PART ☑ NONE
☐ NON-PARTICIPATING (MAINTENANCE) ☐ NON-PARTICIPATING

FEDERAL SEGREGATION (if more than one Funding Source or P.I.P. type)
☐ CCO FUNDED PER CONTRACT ☐ CCO FUNDED AS FOLLOWS

FEDERAL FUNDING SOURCE	PERCENT

ADA Notice: For individuals with sensory disabilities, this document is available in alternate formats. For information call: (916) 654-6410 or TDD (916) 654-3880 or write Records and Forms Management, 1120 N Street, MS-89, Sacramento, CA 95814.

STATE OF CALIFORNIA - DEPARTMENT OF TRANSPORTATION

CONTRACT CHANGE ORDER

Change Requested by: Engineer

CCO 178	Suppl. No. 0	Contract No 04 - 0120S4	Road SF-80-12.7/13.2	FED. AID LOC.: NO FED AID

To: **M C M CONSTRUCTION INC**

You are directed to make the following changes from the plans and specifications or do the following described work not included in the plans and specifications for this contract. ***NOTE: This change order is not effective until approved by the Engineer.***

Description of work to be done, estimate of quantities and prices to be paid. (Segregate between additional work at contract price, agreed price and force account.) Unless otherwise stated, rates for rental of equipment cover only such time as equipment is actually used and no allowance will be made for idle time. This last percentage shown is the net accumulated increase or decrease from the original quantity in the Engineer's Estimate.

Contractor shall complete all fabrication, including shop applied coatings, and deliver to the site by April 30, 2013, the seismic deck joints at the following locations: Bent W10AL, Abutment W11R, Abutment E23L and Abutment E23R.

This intent to complete the fabrication and delivery of the deck joints by April 30, 2013, is undertaken with the full comprehension of all Department delays or impacts incurred prior to February 25, 2013, including but not limited to impacts associated with Contract Change Order Nos. 7 and 7 Supplement 1; and Nos. 107 and 107 Supplement 1.

Adjustment of Compensation at Lump Sum:

Compensate the Contractor for all costs associated with providing additional resources towards the fabrication of the seismic deck joints at locations as noted in this CCO, in order to mitigate potential Department delays to this work.

The Contractor shall be paid an Agreed Lump Sum of $226,651.00 for the completion of fabrication and delivery to the site of all four deck joints specified herein by April 30, 2013. Upon delivery of the deck joints, said compensation shall be paid in one lump sum payment to the Contractor.

This lump sum compensation constitutes full and complete compensation, including all applicable sales tax and markups, for all costs associated with the compression of the Contractor's fabrication schedule to achieve the fabrication and delivery as noted.

Adjustment of Compensation at Lump Sum = $226,651.00

4-12-13

Estimated Cost: Increase ☑ Decrease ☐ **$226,651.00**

By reason of this order the time of completion will be adjusted as follows: 0 days

Submitted by

Signature	Resident Engineer	Date
William Howe	William Howe, Senior R.E.	03-13-13

Approval Recommended by

Signature	Area Construction Manager	Date
Deanna Vilcheck	Deanna Vilcheck	3/13/13

Engineer Approval by

Signature	Area Construction Manager	Date
Deanna Vilcheck	Deanna Vilcheck	4/12/13

We the undersigned contractor, have given careful consideration to the change proposed and agree, if this proposal is approved, that we will provide all equipment, furnish the materials, except as may otherwise be noted above, and perform all services necessary for the work above specified, and will accept as full payment therefor the prices shown above.

NOTE: If you, the contractor, do not sign acceptance of this order, your attention is directed to the requirements of the specifications as to proceeding with the ordered work and filing a written protest within the time therein specified.

Contractor Acceptance by

Signature	(Print name and title)	Date
	JAMES A. CARTER, PRESIDENT	4/10/13

STATE OF CALIFORNIA - DEPARTMENT OF TRANSPORTATION

CONTRACT CHANGE ORDER MEMORANDUM

DATE: 3/12/2013 Page 1 of 1

TO: Deanna Vilcheck, ACM / DV	FILE: E.A. 04 - 0120S4
FROM: William Howe, Senior R.E.	CO-RTE-PM SF-80-12.7/13.2
	FED. NO. NO FED AID
CCO#: 178 SUPPLEMENT#: 0 Category Code: CHMX	CONTINGENCY BALANCE (incl. this change) $27,905,851.15
COST: $226,651.00 INCREASE ☑ DECREASE ☐	HEADQUARTERS APPROVAL REQUIRED? ☑ YES ☐ NO
SUPPLEMENTAL FUNDS PROVIDED: $0.00	IS THIS REQUEST IN ACCORDANCE WITH ENVIRONMENTAL DOCUMENTS? ☑ YES ☐ NO
CCO DESCRIPTION: Deck Joints Fab. Delay Mitigation	**PROJECT DESCRIPTION:** YBITS-1 (Yerba Buena Island Transition Structures)

Original Contract Time:	Time Adj. This Change:	Previously Approved CCO Time Adjustments:	Percentage Time Adjusted: (including this change)	Total # of Unreconciled Deferred Time CCO(s): (including this change)
1390 Day(s)	0 Day(s)	0 Day(s)	0 %	9

THIS CHANGE ORDER PROVIDES FOR:

Compensating the Contractor for providing additional resources to mitigate potential Department delays.

This project, the Yerba Buena Island Transition Structure (YBITS), provides for the construction of two bridges, which will connect eastbound and westbound traffic on the new east span of the San Francisco Oakland Bay Bridge (SFOBB) to the existing Yerba Buena Island (YBI) tunnel. The structures are an integral part of the east span, which has a planned Seismic Safety Opening (SSO) scheduled for Labor Day Weekend 2013.

Contract Change Order Nos. 7 and 107 were previously issued under this contract to provide for modifications and additions to the deck joints at W11R, W10AL, E23R and E23L. Since then, the Department made numerous revisions to the joints. The direct costs of the fabrication changes are being covered by CCO supplement Nos. 7 S1 and 107 S1; but the Department changes have caused delays in the approval process of the Contractor's shop drawings, and there is additional fabrication time required, resulting in a potential delay to the SSO.

This CCO will provide for the Contractor to add resources to the fabrication of these deck joints in order to mitigate department caused delays. This work will be comprised mainly of extended labor shifts at the fabrication facility, resulting in premium time labor costs, and compensate for any associated loss of productivity. Additional equipment resources will also be provided as required to expedite the fabrication.

Compensation shall be paid as an Adjustment of Compensation at an Agreed Price of $226,651.00, which will be funded from the project's contingency fund. A cost analysis is on file.

This change order was requested by Deanna Vilcheck, Area Construction Manager.

Maintenance concurrence is not required as this is an administrative change, which does not affect any permanent roadway features.

CONCURRED BY:

Construction Engineer:	William Howe	Date 03.13.13
Bridge Engineer:	Mehran Ardakanian	Date 03/26/2013
Project Engineer:	Bob Zandipour, Design	Date 3-13-13
Project Manager:	Ken Terpstra	Date 3/26/13
FHWA Rep.:		Date
Environmental:		Date
Other (specify):		Date
Other (specify):		Date
District Prior Approval By:		Date
HQ (Issue Approve) By:	Larry Salhaney	Date 3-14-13
Resident Engineer's Signature:	William Howe	Date 03.13.13

ESTIMATE OF COST

	THIS REQUEST	TOTAL TO DATE
ITEMS	$0.00	$0.00
FORCE ACCOUNT	$0.00	$0.00
AGREED PRICE	$0.00	$0.00
ADJUSTMENT	$226,651.00	$226,651.00
TOTAL	$226,651.00	$226,651.00

FEDERAL PARTICIPATION

☐ PARTICIPATING ☐ PARTICIPATING IN PART ☑ NONE

☐ NON-PARTICIPATING (MAINTENANCE) ☐ NON-PARTICIPATING

FEDERAL SEGREGATION (if more than one Funding Source or P.I.P. type)

☐ CCO FUNDED PER CONTRACT ☐ CCO FUNDED AS FOLLOWS

FEDERAL FUNDING SOURCE	PERCENT

ADA Notice: For individuals with sensory disabilities, this document is available in alternate formats. For information call: (916) 654-6410 or TDD (916) 654-3880 or write Records and Forms Management, 1120 N Street, MS-89, Sacramento, CA 95814.

STATE OF CALIFORNIA - DEPARTMENT OF TRANSPORTATION

CONTRACT CHANGE ORDER

Change Requested by: Engineer

CCO 181	Suppl. No. 0	Contract No 04 - 0120S4	Road SF-80-12.7/13.2	FED. AID LOC.: NO FED AID

To: **M C M CONSTRUCTION INC**

You are directed to make the following changes from the plans and specifications or do the following described work not included in the plans and specifications for this contract ***NOTE: This change order is not effective until approved by the Engineer.***

Description of work to be done, estimate of quantities and prices to be paid (Segregate between additional work at contract price, agreed price and force account.) Unless otherwise stated, rates for rental of equipment cover only such time as equipment is actually used and no allowance will be made for idle time. This last percentage shown is the net accumulated increase or decrease from the original quantity in the Engineer's Estimate

Extra Work at Force Account:

As authorized by the Engineer, and in accordance with Section 4-1.03D, "Extra Work", Section 9-1.03, "Force Account Payment", of the Standard Specifications, and Section 5-1.17, "Force Account Payment", of the Special Provisions, provide all labor, equipment and materials necessary to remove previously installed concrete slope protection as directed by the Engineer.

Removal shall include chipping concrete and shotcrete; removing, hauling and disposal off-site of concrete, shotcrete, rebar, and other items; and other work as directed.

Estimated Cost of Extra Work at Force Account = $300,000.00

Estimated Cost: Increase ✓ Decrease $300,000.00

By reason of this order the time of completion will be adjusted as follows: 0 days

Submitted by

Signature	Resident Engineer	Date
William Howe	William Howe, Senior R.E	03-08-13

Approval Recommended by

Signature	Area Construction Manager	Date
Deanna Vilcheck	Deanna Vilcheck	3/11/13

Engineer Approval by

Signature	Area Construction Manager	Date
Deanna Vilcheck	Deanna Vilcheck	4/10/13

We the undersigned contractor, have given careful consideration to the change proposed and agree, if this proposal is approved, that we will provide all equipment, furnish the materials, except as may otherwise be noted above, and perform all services necessary for the work above specified, and will accept as full payment therefor the prices shown above.

NOTE: If you, the contractor, do not sign acceptance of this order, your attention is directed to the requirements of the specifications as to proceeding with the ordered work and filing a written protest within the time therein specified.

Contractor Acceptance by

Signature	(Print name and title)	Date
[signature]	Edmundo A. Pucky - Treasurer	4-4-2013

STATE OF CALIFORNIA - DEPARTMENT OF TRANSPORTATION

CONTRACT CHANGE ORDER MEMORANDUM

DATE: 3/8/2013 Page 1 of 1

TO: Deanna Vilcheck, ACM /

FROM: William Howe, Senior R.E.

FILE: E.A. 04 - 0120S4
CO-RTE-PM SF-80-12.7/13.2
FED. NO. NO FED AID

CCO#: 181 | SUPPLEMENT#: 0 | Category Code: BZZZ

CONTINGENCY BALANCE (incl. this change) $28,282,837.15

COST: $300,000.00 INCREASE ☑ DECREASE ☐

HEADQUARTERS APPROVAL REQUIRED? ☑ YES ☐ NO

SUPPLEMENTAL FUNDS PROVIDED: $0.00

IS THIS REQUEST IN ACCORDANCE WITH ENVIRONMENTAL DOCUMENTS? ☑ YES ☐ NO

CCO DESCRIPTION:
YBI Transition Structure Rem.Slope Conc.

PROJECT DESCRIPTION:
YBITS-1 (Yerba Buena Island Transition Structures)

Original Contract Time:	Time Adj. This Change:	Previously Approved CCO Time Adjustments:	Percentage Time Adjusted: (including this change)	Total # of Unreconciled Deferred Time CCO(s): (including this change)
1390 Day(s)	0 Day(s)	0 Day(s)	0 %	9

THIS CHANGE ORDER PROVIDES FOR:

This change order provides for removing previously constructed temporary concrete slope protection.

This change order is needed to remove the temporary slope protection, which had been previously installed under force account Contract Change Order No. 98. The slopes, which are very steep and unstable, were protected by the shotcrete; but now that the falsework is being removed, and construction of the duct bank and other related construction activities are completed, the temporary concrete slope protection will be removed in order to allow the final surface grading and stabilization measures to be installed.

Compensation for this additional work shall be paid as Extra Work at Force Account, which can be financed from the project's contingency fund at an estimated cost of $300,000.00. The detailed cost analysis for this change order is on file in the project records.

No adjustment in contract time of completion is warranted as this change does not affect the controlling operation.

This change was requested by Deanna Vilcheck, Supervising Engineer, Toll Bridge Construction.

Maintenance concurrence is not required, as this does not affect any permanent feature of the project.

CONCURRED BY:

Construction Engineer:	William Howe	Date 03-08-13
Bridge Engineer:	Mehran Ardakanian	Date
Project Engineer:	Bob Zandipour, Design	Date 3-11-13
Project Manager:	Ken Terpstra	Date 3-11-13
FHWA Rep.:		Date
Environmental:		Date
Other (specify):		Date
Other (specify):		Date
District Prior Approval By:		Date
HQ (Issue Approve) By:	Larry Salhaney	Date 3-12-13
Resident Engineer's Signature:	William Howe	Date 03-08-13

ESTIMATE OF COST

	THIS REQUEST	TOTAL TO DATE
ITEMS	$0.00	$0.00
FORCE ACCOUNT	$300,000.00	$300,000.00
AGREED PRICE	$0.00	$0.00
ADJUSTMENT	$0.00	$0.00
TOTAL	$300,000.00	$300,000.00

FEDERAL PARTICIPATION

☐ PARTICIPATING ☐ PARTICIPATING IN PART ☑ NONE
☐ NON-PARTICIPATING (MAINTENANCE) ☐ NON-PARTICIPATING

FEDERAL SEGREGATION (if more than one Funding Source or P.I.P. type)
☐ CCO FUNDED PER CONTRACT ☐ CCO FUNDED AS FOLLOWS

FEDERAL FUNDING SOURCE	PERCENT

ADA Notice: For individuals with sensory disabilities, this document is available in alternate formats. For information call: (916) 654-6410 or TDD (916) 654-3880 or write Records and Forms Management, 1120 N Street, MS-89, Sacramento, CA 95814.

STATE OF CALIFORNIA - DEPARTMENT OF TRANSPORTATION

CONTRACT CHANGE ORDER

Change Requested by: Engineer

CCO 181	Suppl. No. 1	Contract No. 04 - 0120S4	Road SF-80-12.7/13.2	FED. AID LOC.: NO FED AID

To: **M C M CONSTRUCTION INC**

You are directed to make the following changes from the plans and specifications or do the following described work not included in the plans and specifications for this contract. ***NOTE: This change order is not effective until approved by the Engineer.***

Description of work to be done, estimate of quantities and prices to be paid. (Segregate between additional work at contract price, agreed price and force account.) Unless otherwise stated, rates for rental of equipment cover only such time as equipment is actually used and no allowance will be made for idle time. This last percentage shown is the net accumulated increase or decrease from the original quantity in the Engineer's Estimate.

Extra Work at Force Account:

Provide additional funds.

Estimated Extra Work at Force Account = $300,000.00

Estimated Cost: **Increase** ☑ **Decrease** ☐ **$300,000.00**

By reason of this order the time of completion will be adjusted as follows: 0 days

Signature Deanna Vlicheck	**Resident Engineer** for William Howe, Senior R.E.	**Date** 10/8/13
Signature Deanna Vlicheck	**Area Construction Manager** Deanna Vlicheck	**Date** 10/8/13
Signature Deanna Vlicheck	**Area Construction Manager** Deanna Vlicheck	**Date** 10/8/13

We the undersigned contractor, have given careful consideration to the change proposed and agree, if this proposal is approved, that we will provide all equipment, furnish the materials, except as may otherwise be noted above, and perform all services necessary for the work above specified, and will accept as full payment therefor the prices shown above.

NOTE: If you, the contractor, do not sign acceptance of this order, your attention is directed to the requirements of the specifications as to proceeding with the ordered work and filing a written protest within the time therein specified.

Signature Not Required	**(Print name and title)**	**Date**

STATE OF CALIFORNIA - DEPARTMENT OF TRANSPORTATION

CONTRACT CHANGE ORDER MEMORANDUM

DATE: 10/3/2013 Page 1 of 1

TO: Deanna Vilcheck, ACM /	FILE: E.A. 04 - 0120S4
FROM: William Howe, Senior R.E.	CO-RTE-PM SF-80-12.7/13.2
	FED. NO. NO FED AID
CCO#: 181 SUPPLEMENT#: 1 Category Code: BZZZ	CONTINGENCY BALANCE (incl. this change) $20,202,601.99
COST: $300,000.00 INCREASE ☑ DECREASE ☐	HEADQUARTERS APPROVAL REQUIRED? ☑ YES ☐ NO
SUPPLEMENTAL FUNDS PROVIDED: $0.00	IS THIS REQUEST IN ACCORDANCE WITH ENVIRONMENTAL DOCUMENTS? ☑ YES ☐ NO
CCO DESCRIPTION: additional funds - remove slope concrete	**PROJECT DESCRIPTION:** YBITS-1 (Yerba Buena Island Transition Structures)

Original Contract Time:	Time Adj. This Change:	Previously Approved CCO Time Adjustments:	Percentage Time Adjusted: (including this change)	Total # of Unreconciled Deferred Time CCO(s): (including this change)
1390 Day(s)	0 Day(s)	0 Day(s)	0 %	9

THIS CHANGE ORDER PROVIDES FOR:
Removing previously constructed temporary concrete slope protection.

This change order is needed to remove the temporary slope protection, which had been previously installed under force account Contract Change Order No. 98. The slopes, which are very steep and unstable, were protected by the shotcrete; but now that the falsework is being removed, and construction of the duct bank and other related construction activities are completed, the temporary concrete slope protection will be removed in order to allow the final surface grading and stabilization measures to be installed.

The original CCO 181 S0 provided for $300,000.00; additional funds is now required to compensate the Contractor for this additional work for an estimated cost of $300,000.00 as Extra Work at Force Account, which can be financed from the project's contingency fund. The total cost of this CCO, including supplements, is $600,000.00. The detailed cost analysis for this change order is on file in the project records.

No adjustment in contract time of completion is warranted as this change does not affect the controlling operation.

This change was requested by Deanna Vilcheck, Supervising Engineer, Toll Bridge Construction.

Maintenance concurrence is not required, as this does not affect any permanent feature of the project.

CONCURRED BY:

Construction Engineer:	William Howe DV	Date 10/8/13
Bridge Engineer:	Mehran Ardakanian	Date
Project Engineer:	Bob Zandipour, Design	Date 10-8-13
Project Manager:	Ken Terpstra	Date 10-8-13
FHWA Rep.:		Date
Environmental:		Date
Other (specify):		Date
Other (specify):		Date
District Prior Approval By:		Date
HQ (Issue Approve) By:	Sey Hossnich	Date 10-8-13
Resident Engineer's Signature:	Deanna Vilcheck 10/8/13	Date

ESTIMATE OF COST

	THIS REQUEST	TOTAL TO DATE
ITEMS	$0.00	$0.00
FORCE ACCOUNT	$300,000.00	$600,000.00
AGREED PRICE	$0.00	$0.00
ADJUSTMENT	$0.00	$0.00
TOTAL	$300,000.00	$600,000.00

FEDERAL PARTICIPATION

☐ PARTICIPATING ☐ PARTICIPATING IN PART ☑ NONE
☐ NON-PARTICIPATING (MAINTENANCE) ☐ NON-PARTICIPATING

FEDERAL SEGREGATION (if more than one Funding Source or P.I.P. type)
☐ CCO FUNDED PER CONTRACT ☐ CCO FUNDED AS FOLLOWS

FEDERAL FUNDING SOURCE	PERCENT

ADA Notice: For individuals with sensory disabilities, this document is available in alternate formats. For information call: (916) 654-6410 or TDD (916) 654-3880 or write Records and Forms Management, 1120 N Street, MS-89, Sacramento, CA 95814.

CONTRACT CHANGE ORDER

Change Requested by: Engineer

CCO 182	Suppl. No. 0	Contract No 04 - 0120S4	Road SF-80-12.7/13.2	FED. AID LOC.: NO FED AID

To: **M C M CONSTRUCTION INC**

You are directed to make the following changes from the plans and specifications or do the following described work not included in the plans and specifications for this contract. ***NOTE: This change order is not effective until approved by the Engineer.***

Description of work to be done, estimate of quantities and prices to be paid. (Segregate between additional work at contract price, agreed price and force account.) Unless otherwise stated, rates for rental of equipment cover only such time as equipment is actually used and no allowance will be made for idle time. This last percentage shown is the net accumulated increase or decrease from the original quantity in the Engineer's Estimate.

Perform all work, as shown on attached revised drawings 551R8, 627R3, 708R6 and new drawing 710AS (Sheet numbers 2 through 5 of this change order).

Extra Work at Force Account:

Remove and dispose of previously installed concrete counterweights and associated holddown elements.

Install new counterweight system as shown on the attached plan sheets.

Provide threaded rods, support channels and angles, and timber sleepers.

Steel plates and anchoring pieces shall be painted per Section 10-1.82, "Clean and Paint (Miscellaneous Facilities)", of the Contract Special Provisions.

Timber sleepers should be painted per Section 59-4, "Painting Timber", of the Standard Specifications.

Extra Work at Force Account = $100,000.00

Extra Work at Lump Sum:

Provide and deliver to site 321 each steel plates 1143 mm x 3962 x 25.4 mm (3' - 9" x 13' - 0" x 1" thick), including 1 each centered coil nut per plate for lifting. Price includes non-skid coating, and deliver and unload with crane truck.

Extra Work at Agreed Lump Sum = $544,557.00

The Contractor shall be compensated an Agreed Lump Sum of $544,557.00, which constitutes full and final compensation, including all markups, for all costs as defined, including delivery, taxes, and all markups.

7.5.13

Estimated Cost: Increase ☑ Decrease ☐ **$644,557.00**

By reason of this order the time of completion will be adjusted as follows: 0 days

Submitted by

Signature	Resident Engineer	Date
William Howe	William Howe, Senior R.E.	06.03.13

Approval Recommended by

Signature	Area Construction Manager	Date
Deanna Vilcheck	Deanna Vilcheck	6/3/13

Engineer Approval by

Signature	Area Construction Manager	Date
Deanna Vilcheck	Deanna Vilcheck	7/8/13

We the undersigned contractor, have given careful consideration to the change proposed and agree, if this proposal is approved, that we will provide all equipment, furnish the materials, except as may otherwise be noted above, and perform all services necessary for the work above specified, and will accept as full payment therefor the prices shown above.

NOTE: If you, the contractor, do not sign acceptance of this order, your attention is directed to the requirements of the specifications as to proceeding with the ordered work and filing a written protest within the time therein specified.

Contractor Acceptance by

Signature	(Print name and title)	Date
[signature]	Edmundo A. Ricks Treasurer	6-27-2013

INDEX TO BRIDGE PLANS

SHEET NO.	TITLE
1	GENERAL PLAN
2	INDEX TO BRIDGE PLANS
3	GENERAL NOTES
4	WESTBOUND STRUCTURE PLAN NO.1
5	WESTBOUND STRUCTURE PLAN NO.2
6	EASTBOUND STRUCTURE PLAN NO.1
7	EASTBOUND STRUCTURE PLAN NO.2
8	WESTBOUND DECK CONTOURS PLAN NO.1
9	WESTBOUND DECK CONTOURS PLAN NO.2
10	EASTBOUND DECK CONTOURS PLAN NO.1
11	EASTBOUND DECK CONTOURS PLAN NO.2
12	FOUNDATION PLAN NO.1
13	FOUNDATION PLAN NO.2
14	PILE DETAILS
15	ABUTMENT W11R DETAILS NO.1
16	ABUTMENT W11R DETAILS NO.2
17	ABUTMENT W11R DETAILS NO.3
18	BENT ELEVATIONS W10AL TO W9
19	BENT ELEVATIONS W8 TO W7
20	BENT ELEVATIONS W6 TO W5
21	BENT ELEVATIONS W4 TO W3
22	BENT W10AL DETAILS NO.1
23	BENT W10AL DETAILS NO.2
24	BENT W10AL DETAILS NO.3
25	BENT W10AL DETAILS NO.4
25A	BENT W10AL DETAILS NO.5
26	BENT W10L DETAILS NO.1
27	BENT W10L DETAILS NO.2
28	BENT W10L DETAILS NO.3
29	BENT W9L DETAILS NO.1
30	BENT W9L DETAILS NO.2
31	BENT W9L DETAILS NO.3
32	BENT W9L DETAILS NO.4
32A	BENT W9L DETAILS NO.5
33	BENT W8L DETAILS NO.1
34	BENT W8L DETAILS NO.2
35	BENT W8L DETAILS NO.3
36	BENT W8L DETAILS NO.4
37	BENT W7L DETAILS NO.1
38	BENT W7L DETAILS NO.2
39	BENT W7L DETAILS NO.3
40	PRESTRESS DETAILS - BENTS W10AL TO W9L
41	PRESTRESS DETAILS - BENTS W8L & W7L
42	BENT W6L DETAILS NO.1
42A	BENT W6L DETAILS NO.2
43	BENT W5L DETAILS NO.1
44	BENT W5L DETAILS NO.2
44A	BENT W5L DETAILS NO.3
45	BENT W4L DETAILS NO.1
45A	BENT W4L DETAILS NO.2
45B	BENT W4L DETAILS NO.3
46	BENT W3L DETAILS NO.1
47	BENT W3L DETAILS NO.2
48	BENT W10R DETAILS NO.1
49	BENT W10R DETAILS NO.2
50	BENT W10R DETAILS NO.3
51	BENT W9R DETAILS NO.1
52	BENT W9R DETAILS NO.2
53	BENT W8R DETAILS NO.1
54	BENT W8R DETAILS NO.2
55	BENT W7R DETAILS NO.1
56	BENT W7R DETAILS NO.2
57	BENT W6R DETAILS NO.1
58	BENT W6R DETAILS NO.2
59	BENT W6R DETAILS NO.3
60	BENT W5R DETAILS NO.1
61	BENT W5R DETAILS NO.2
62	BENT W4R DETAILS
63	BENT W3R DETAILS
64	COLUMN ISOLATION SLEEVE DETAILS
65	WESTBOUND TYPICAL SECTION NO.1
66	WESTBOUND TYPICAL SECTION NO.2
67	WESTBOUND TYPICAL SECTION NO.3
68	WESTBOUND TYPICAL SECTION NO.4
69	WESTBOUND TYPICAL SECTION NO.5
70	WESTBOUND TYPICAL SECTION NO.6
71	WESTBOUND TYPICAL SECTION NO.7
72	WESTBOUND TYPICAL SECTION NO.8
4 72A	WESTBOUND TYPICAL SECTION NO.9
72B	ADDED REINF AT WB GIRDER HAUNCH AT BENT W3L
73	EASTBOUND TYPICAL SECTION NO.1
74	EASTBOUND TYPICAL SECTION NO.2
75	EASTBOUND TYPICAL SECTION NO.3
76	EASTBOUND TYPICAL SECTION NO.4
77	EASTBOUND TYPICAL SECTION NO.5
78	EASTBOUND TYPICAL SECTION NO.6
5 79	EASTBOUND TYPICAL SECTION NO.7
79A	ADDED REINF AT EB GIRDER HAUNCH AT BENT W3R
80	ON-RAMP SPINE EXTENSION DETAILS NO.1
81	ON-RAMP SPINE EXTENSION DETAILS NO.2
81A	FRAME WB2 SOFFIT PROJECTIONS NO.1
81B	FRAME WB2 SOFFIT PROJECTIONS NO.2 3
81C	FRAME WB2 SOFFIT PROJECTIONS NO.3
82	WESTBOUND GIRDER LAYOUT GEOMETRICS
83	WESTBOUND GIRDER LAYOUT NO.1
84	WESTBOUND GIRDER LAYOUT NO.2
85	WESTBOUND GIRDER LAYOUT NO.3
86	WESTBOUND GIRDER LAYOUT NO.4
87	WESTBOUND GIRDER LAYOUT NO.5
88	EASTBOUND GIRDER LAYOUT GEOMETRICS
89	EASTBOUND GIRDER LAYOUT NO.1
90	EASTBOUND GIRDER LAYOUT NO.2
91	EASTBOUND GIRDER LAYOUT NO.3
92	EASTBOUND GIRDER LAYOUT NO.4
93	EASTBOUND GIRDER LAYOUT NO.5
94	EASTBOUND GIRDER LAYOUT NO.6
95	GIRDER PRESTRESS DETAILS
96	GIRDER DIAPHRAGM DETAILS NO.1
97	GIRDER DIAPHRAGM DETAILS NO.2
97A	GIRDER DIAPHRAGM DETAILS NO.3 3
97B	GIRDER DIAPHRAGM DETAILS NO.4
98	MISC SUPERSTRUCTURE DETAILS NO.1
99	MISC SUPERSTRUCTURE DETAILS NO.2
100	WESTBOUND GIRDER TOP REINFORCEMENT NO.1
101	WESTBOUND GIRDER TOP REINFORCEMENT NO.2
102	WESTBOUND GIRDER TOP REINFORCEMENT NO.3
103	WESTBOUND GIRDER TOP REINFORCEMENT NO.4
104	WESTBOUND GIRDER TOP REINFORCEMENT NO.5
105	WESTBOUND GIRDER BOTTOM REINFORCEMENT NO.1
106	WESTBOUND GIRDER BOTTOM REINFORCEMENT NO.2
107	WESTBOUND GIRDER BOTTOM REINFORCEMENT NO.3
108	EASTBOUND GIRDER TOP REINFORCEMENT NO.1
109	EASTBOUND GIRDER TOP REINFORCEMENT NO.2
110	EASTBOUND GIRDER BOTTOM REINFORCEMENT NO.1
111	HINGE W7LA DETAILS NO.1
112	HINGE W7LA DETAILS NO.2
113	HINGE W7LA DETAILS NO.3
114	HINGE W6RB DETAILS NO.1
115	HINGE W6RB DETAILS NO.2
116	HINGE W6RB DETAILS NO.3
117	HINGE W6RB DETAILS NO.4
118	HINGE K CLOSURE DETAILS NO.1
119	HINGE K CLOSURE DETAILS NO.2
120	HINGE K CLOSURE DETAILS NO.3
121	HINGE K CLOSURE DETAILS NO.4
122	DELETED
123	DELETED
124	DELETED
125	DELETED
126	DELETED
127	DELETED
128	DELETED 1
129	DELETED
130	DELETED
131	HINGE K CLOSURE DETAILS NO.14
132	HINGE K CLOSURE DETAILS NO.15
133	CABLE RESTRAINER UNIT - TYPE 2
134	CABLE RESTRAINER UNIT - TYPE 2 DETAILS
135	SPHERICAL BEARING DETAILS
136	DECK JOINT DETAILS
6 137	SEISMIC JOINT
137A	SEISMIC JOINT
138	SEISMIC JOINT
139	SEISMIC JOINT
140	SEISMIC JOINT
141	SEISMIC JOINT
142	SEISMIC JOINT
143	SEISMIC JOINT
144	SEISMIC JOINT
145	SEISMIC JOINT
146	MODULAR DECK JOINT DETAILS NO.1 2
147	MODULAR DECK JOINT DETAILS NO.2
148	HINGE KE & KW EXPANSION JOINT DETAILS NO.1
149	HINGE KE & KW EXPANSION JOINT DETAILS NO.2
150	HINGE KE & KW EXPANSION JOINT DETAILS NO.3
151	HINGE KE & KW EXPANSION JOINT DETAILS NO.4 3a
152	HINGE KE & KW EXPANSION JOINT DETAILS NO.5
153	HINGE KE & KW EXPANSION JOINT DETAILS NO.6
154	HINGE KE & KW EXPANSION JOINT DETAILS NO.7
155	DELETED
156	DELETED
156A	DELETED 7
156B	DELETED
157	BIKE PATH DETAILS NO.1
158	BIKE PATH DETAILS NO.2
159	FUTURE BIKE PATH DETAILS NO.1
160	FUTURE BIKE PATH DETAILS NO.2
8 161	FUTURE BIKE PATH DETAILS NO.3
161A	BIKE PATH COUNTERWEIGHT DETAILS
162	BIKE PATH RAILING DETAILS NO.1
163	BIKE PATH RAILING DETAILS NO.2
164	BIKE PATH RAILING DETAILS NO.3
1 165	BIKE PATH RAILING DETAILS NO.4
165A	BIKE PATH FENCE DETAILS NO.1
165B	BIKE PATH FENCE DETAILS NO.2
166	CONCRETE BARRIER TYPE 732 (MOD)
167	STRUCTURE APPROACH TYPE EQ (3) - MOD
168	STRUCTURE APPROACH DRAINAGE DETAILS
169-189C	LOG OF TEST BORINGS (NO.1 TO NO.~~21~~ 24) 2
190-209	AS-BUILT LOG OF TEST BORINGS (NO.1 TO NO.20)

Caltrans Metric

DIST.	COUNTY	ROUTE	KILOMETER POST TOTAL PROJECT	SHEET NO.	TOTAL SHEETS
04	SF	80	12.7/13.2	551RB	806

REGISTERED ENGINEER - CIVIL

6-23-08

PLANS APPROVAL DATE

REGISTERED PROFESSIONAL ENGINEER A.L. ELY No. 18880 Exp. 6-30-09 CIVIL STATE OF CALIFORNIA

The State of California or its officers or agents shall not be responsible for the accuracy or completeness of electronic copies of this plan sheet.

T.Y. LIN / MOFFATT & NICHOL
TWO HARRISON STREET
SAN FRANCISCO, CA 94105

8

REGISTERED PROFESSIONAL ENGINEER JAL BIRDY No. 41547 Exp. 12-31-13 CIVIL STATE OF CALIFORNIA

FOR REVISION 1, 2, 3a, 4, 5, 6, 7 AND 8 ONLY

REGISTERED PROFESSIONAL ENGINEER A.L. ELY No. 18880 Exp. 6-30-11 CIVIL STATE OF CALIFORNIA

FOR REVISION 3 ONLY

APPLICABLE STANDARD PLANS (DATED JULY 2004)

A10A	ACRONYMS AND ABBREVIATIONS (A-L)
A10B	ACRONYMS AND ABBREVIATIONS (M-Z)
A10C	SYMBOLS (1 OF 2)
A10D	SYMBOLS (2 OF 2)
A62B	LIMITS OF PAYMENT FOR EXCAVATION AND BACKFILL - BRIDGE SURCHARGE AND WALL
A62C	LIMITS OF PAYMENT FOR EXCAVATION AND BACKFILL - BRIDGE
B0-1	BRIDGE DETAILS
B0-3	BRIDGE DETAILS
B0-5	BRIDGE DETAILS
B0-13	BRIDGE DETAILS
B3-1	RETAINING WALL TYPE 1 H=1200 THROUGH 9100
B3-8	RETAINING WALL DETAILS NO.1
B7-1	BOX GIRDER DETAILS
B7-5	DECK DRAINS
B7-6	DECK DRAINS TYPES D-1 AND D-2
B7-10	UTILITY OPENING BOX GIRDER
B7-11	UTILITY DETAILS
B8-5	CAST-IN-PLACE PRESTRESSED GIRDER DETAILS
B14-3	COMMUNICATION AND SPRINKLER CONTROL CONDUITS (CONDUIT LESS THAN SIZE 103)
B14-4	WATER SUPPLY LINE (BRIDGE) (PIPE SIZES LESS THAN NPS 4)
B14-5	WATER SUPPLY LINE (DETAILS) (PIPE SIZES LESS THAN NPS 4)

MARK	DATE	DESCRIPTIONS	BY	CH'D
8	4-16-13	Added "Bike Path Cwt Details" sheet	JB	TL
7	5-18-12	Deleted sheets 122-130 & 155-156B	TL	JB
6	3-29-12	Added Seismic Joint Layouts	TL	JB
5	10-5-11	Added Reinf at EB Girder Haunch	TL	JB
4	5-10-11	Added Reinf at WB Girder Haunch	TL	JB
3a	2-8-11	Revised Exp Jt at Hinge K	TL	JB
3	10-15-10	WB Ramp Revisions	TL	AE
2	10-14-10	Deleted Seismic Jt sheets for Hinges W7LA & W6RB, added Modular Jt sheets	TL	JB
1	9-1-10	Added Bike Path Fence Sheets	TL	JB

REVISIONS

CONTRACT CHANGE ORDER NO. 182
SHEET 2 OF 5

2 REVISED PER ADDENDUM No. 2 DATED JANUARY 22, 2009

8 REVISED PER ADDENDUM No. 8 DATED NOVEMBER 12, 2009

DESIGN OVERSIGHT
JOHN MOOK, BERNARD CHAN, JUAN F. CARPIO — HASAN EL-NATUR
March 3, 2008 — 4/22/2013
SIGN OFF DATE
Rev. Date: 5-18-98

	BY	CHECKED
DESIGN	Desai	Jain
DETAILS	van Ryn/Zucchi/Mai	Jain
QUANTITIES	Liao	E. Nichol

PREPARED FOR THE STATE OF CALIFORNIA DEPARTMENT OF TRANSPORTATION

Jal Birdy
PROJECT ENGINEER

BRIDGE NO. 34-0006 L/R
KILOMETER POST 12.8

CU 04251
EA 0120S1

ORIGINAL SCALE IN MILLIMETERS FOR REDUCED PLANS 0 10 20 30 40 50 60 70 80 90 100

DISREGARD PRINTS BEARING EARLIER REVISION DATES → 10/2/08 10/2/08 10/2/08 10/2/08 10/2/08 10/2/08 10/2/08 10/2/08 10/2/08 10/2/08

REVISION DATES (PRELIMINARY STAGE ONLY)

SHEET 2 OF 209

SAN FRANCISCO OAKLAND BAY BRIDGE
EAST SPAN SEISMIC SAFETY PROJECT

YBI TRANSITION STRUCTURES

INDEX TO BRIDGE PLANS

FILE => P:\4141-06\CADD\TS\Checked Plans\YBITS #1-100% No. 2_03-03-08 (Final Renamed)\041613 Counterweight T30 CCO\04-0120s1-34-006rl-a-ltp.dgn

April 16, 2013

USERNAME => FSamson DATE PLOTTED => 4/17/2013 TIME PLOTTED => 10:59:02 AM

DIST.	COUNTY	ROUTE	KILOMETER POST TOTAL PROJECT	SHEET NO.	TOTAL SHEETS
04	SF	80	12.7/13.2	627R3	806

Caltrans Metric

A.L. Ely
REGISTERED ENGINEER - CIVIL
6-23-08
PLANS APPROVAL DATE
The State of California or its officers or agents shall not be responsible for the accuracy or completeness of electronic copies of this plan sheet.

REGISTERED PROFESSIONAL ENGINEER A.L. ELY No. 18880 Exp. 6-30-09 CIVIL STATE OF CALIFORNIA

T.Y. LIN / MOFFATT & NICHOL
TWO HARRISON STREET
SAN FRANCISCO, CA 94105

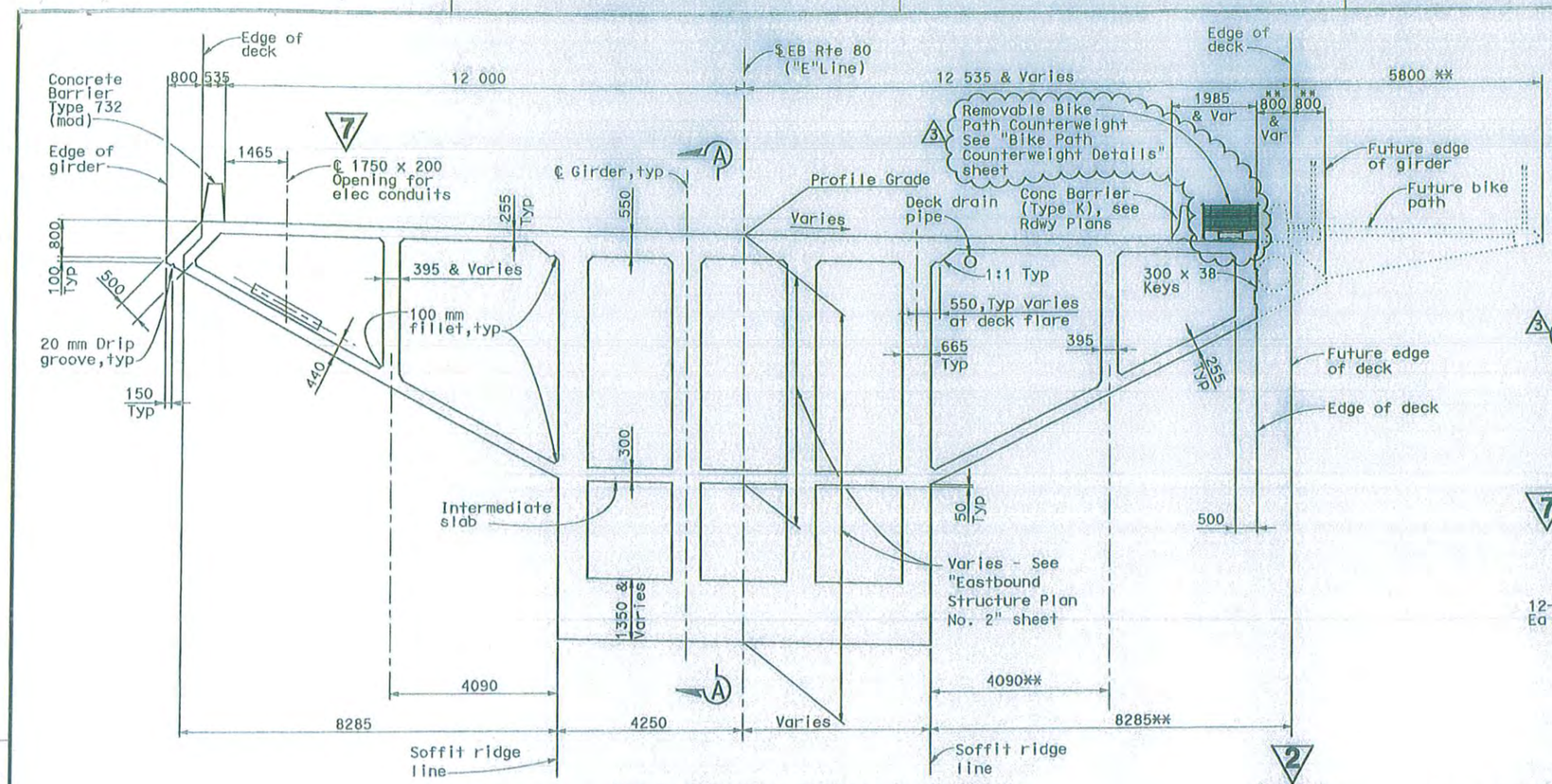

SECTION - BENT W4R TO HINGE K CLOSURE
1:60

** Dimension shown is perpendicular to future edge of deck.

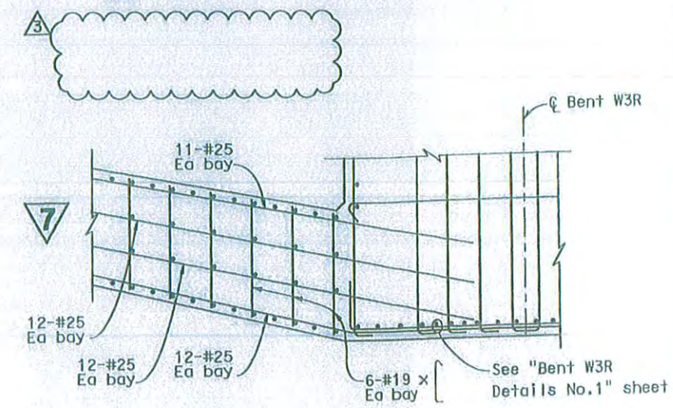

DETAIL B
1:30

JAL BIRDY No. 41547 Exp. 12-31-13 CIVIL STATE OF CALIFORNIA

REVISED PER ADDENDUM No. 2 DATED JANUARY 22, 2009

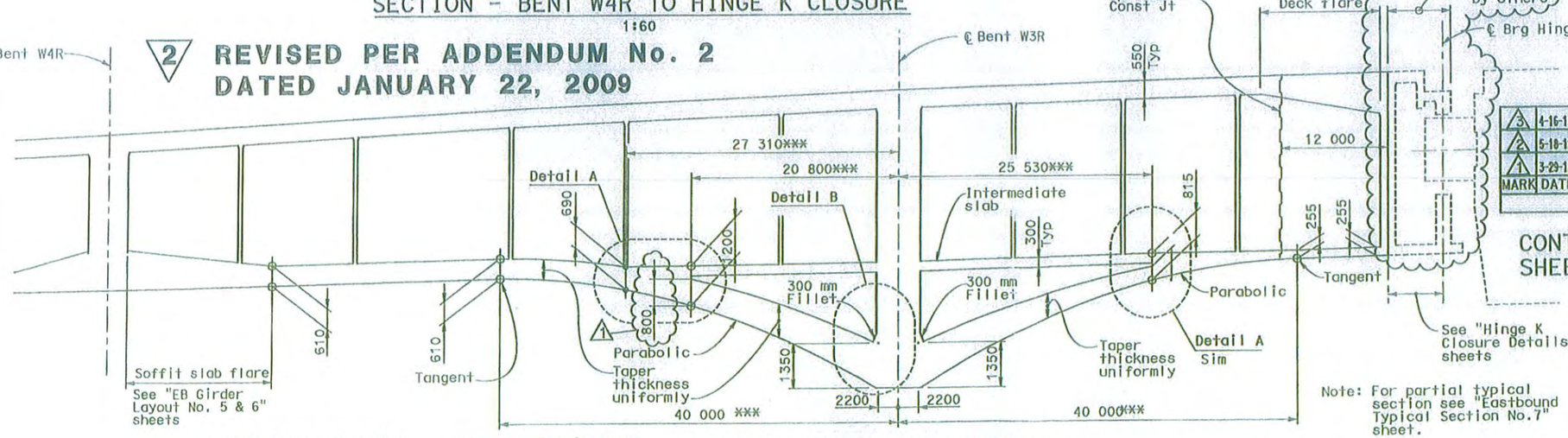

*** Indicates dimension measured along ℄ EB Rte 80

Note: For Detail A see "EB Typical Section No.7" sheet

LONGITUDINAL SECTION A-A
NO SCALE

Note: For partial typical section see "Eastbound Typical Section No.7" sheet.

FOR REVISION 1, 2, & 3 ONLY

MARK	DATE	DESCRIPTIONS	BY	CH'D
3	4-16-13	Replaced conc cwt with steel cwt	TL	JB
2	5-18-12	Denoted Hinge K Closure Pour by others	TL	JB
1	3-29-12	Clarified dimension	TL	JB

REVISIONS

CONTRACT CHANGE ORDER NO. 182
SHEET 3 OF 5

REVISED PER ADDENDUM No. 7 DATED OCTOBER 19, 2009

ALL DIMENSIONS ARE IN MILLIMETERS UNLESS OTHERWISE SHOWN

SAN FRANCISCO OAKLAND BAY BRIDGE
EAST SPAN SEISMIC SAFETY PROJECT

YBI TRANSITION STRUCTURES

EASTBOUND TYPICAL SECTION NO.6

DESIGN OVERSIGHT
JOHN MOOK, BERNARD CHAN, JUAN F. CARPIO
March 3, 2008
SIGN OFF DATE

HASAN EL-NATUR
4/22/2013

	BY	CHECKED
DESIGN	Dodd	Jain
DETAILS	van Ryn/Zucchi/Wai	Jain
QUANTITIES	Liao	E. Nichol

PREPARED FOR THE STATE OF CALIFORNIA DEPARTMENT OF TRANSPORTATION

Jal Birdy
PROJECT ENGINEER

BRIDGE NO. 34-0006 L/R
KILOMETER POST 12.8

CU 04251
EA 0120S1

DISREGARD PRINTS BEARING EARLIER REVISION DATES

REVISION DATES (PRELIMINARY STAGE ONLY)

SHEET 78 OF 209

ORIGINAL SCALE IN MILLIMETERS FOR REDUCED PLANS 0 10 20 30 40 50 60 70 80 90 100

FILE => P:\4141-06\CADD\TS\Checked Plans\YBITS #1-100% No. 2_03-03-08 (Final Renamed)\041613 Counterweight T30 CCO\04-0120S1-34-00E

Rev. Date: 5-18-99

April 16, 2013

USERNAME => FSamson DATE PLOTTED => 4/17/2013 TIME PLOTTED => 10:59:35 AM

DIST.	COUNTY	ROUTE	KILOMETER POST TOTAL PROJECT	SHEET NO.	TOTAL SHEETS
04	SF	80	12.7/13.2	708R6	806

REGISTERED ENGINEER - CIVIL

6-23-08
PLANS APPROVAL DATE

REGISTERED PROFESSIONAL ENGINEER A.L. ELY No. 18880 Exp. 6-30-09 CIVIL STATE OF CALIFORNIA

The State of California or its officers or agents shall not be responsible for the accuracy or completeness of electronic copies of this plan sheet.

T.Y. LIN / MOFFATT & NICHOL
TWO HARRISON STREET
SAN FRANCISCO, CA 94105

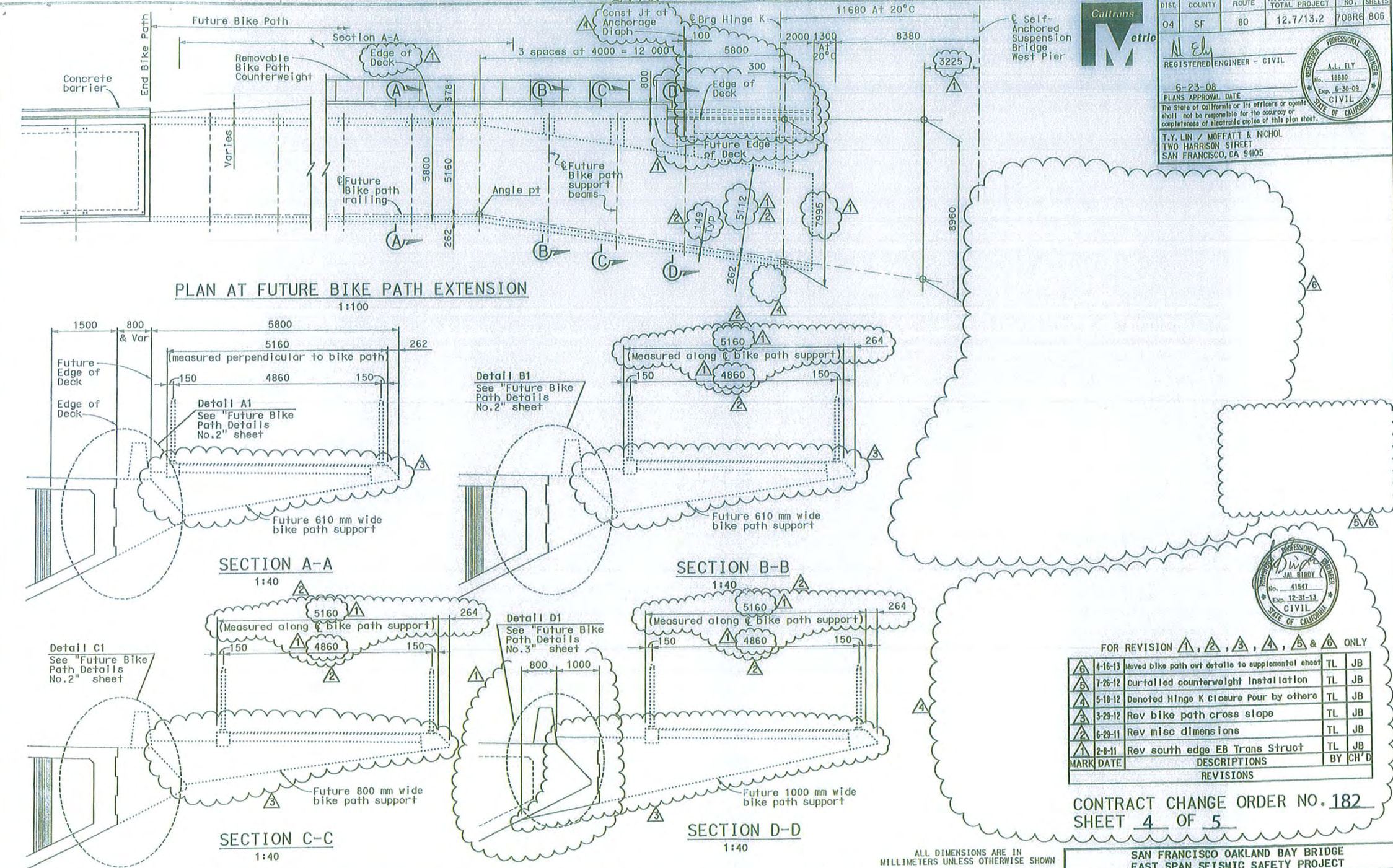

PROFESSIONAL ENGINEER JAL BIRDY No. 41547 Exp. 12-31-13 CIVIL STATE OF CALIFORNIA

FOR REVISION 1, 2, 3, 4, 5 & 6 ONLY

MARK	DATE	DESCRIPTIONS	BY	CH'D
6	4-16-13	Moved bike path cwt details to supplemental sheet	TL	JB
5	7-26-12	Curtailed counterweight installation	TL	JB
4	5-18-12	Denoted Hinge K Closure Pour by others	TL	JB
3	3-29-12	Rev bike path cross slope	TL	JB
2	6-29-11	Rev misc dimensions	TL	JB
1	2-8-11	Rev south edge EB Trans Struct	TL	JB

REVISIONS

CONTRACT CHANGE ORDER NO. 182
SHEET 4 OF 5

ALL DIMENSIONS ARE IN MILLIMETERS UNLESS OTHERWISE SHOWN

SAN FRANCISCO OAKLAND BAY BRIDGE
EAST SPAN SEISMIC SAFETY PROJECT

YBI TRANSITION STRUCTURES

FUTURE BIKE PATH DETAILS NO.1

DESIGN OVERSIGHT
JOHN MOOK, BERNARD CHAN, JUAN F. CARPIO — HASAN EL-NATUR — HASAN EL-NATUR 4/22/2013
SIGN OFF DATE

	BY	CHECKED
DESIGN	Atiqullah	Ahn
DETAILS	van Ryn/Zucchi/Mai	Jain
QUANTITIES	Liao	E. Nichol

PREPARED FOR THE STATE OF CALIFORNIA DEPARTMENT OF TRANSPORTATION

Jal Birdy
PROJECT ENGINEER

BRIDGE NO. 34-0006 L/R
KILOMETER POST 12.8

CU 04251
EA 0120S1

ORIGINAL SCALE IN MILLIMETERS FOR REDUCED PLANS 0 10 20 30 40 50 60 70 80 90 100

DISREGARD PRINTS BEARING EARLIER REVISION DATES

REVISION DATES (PRELIMINARY STAGE ONLY)

SHEET 159 OF 209

FILE => P:\4141-06\CADD\TS\Checked Plans\YBITS #1-100% No. 2_03-03-08 (Final Renamed)\041613 Counterweight T30 CCO\04-0120s1-34-006r1-u-fbikpdt01.dgn

April 16, 2013

USERNAME => F.Samson DATE PLOTTED => 4/17/2013 TIME PLOTTED => 10:59:12 AM

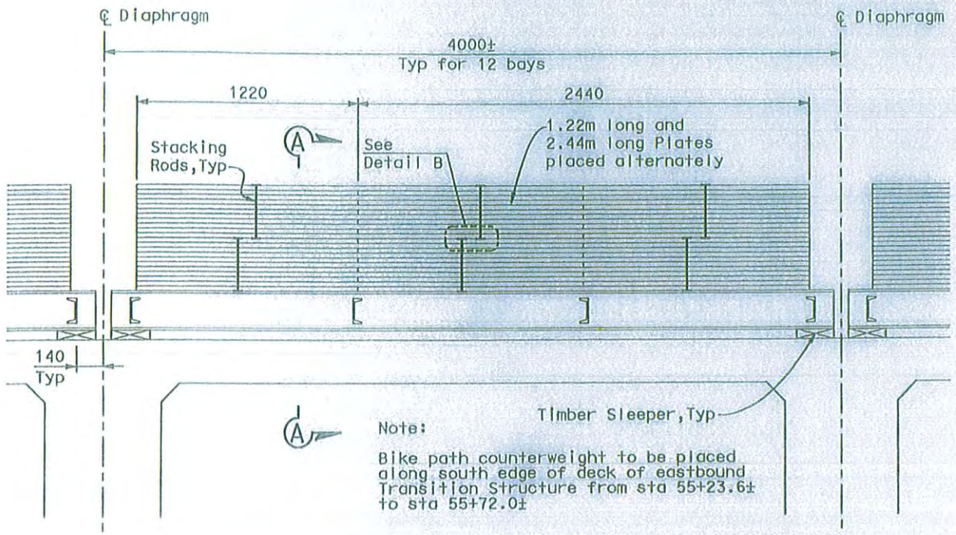

PARTIAL LONGITUDINAL SECTION - BIKE PATH COUNTERWEIGHT

1:15

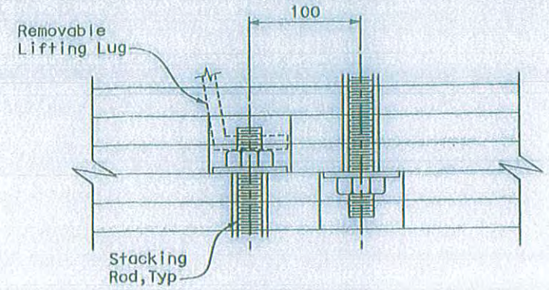

DETAIL B

1:2.5

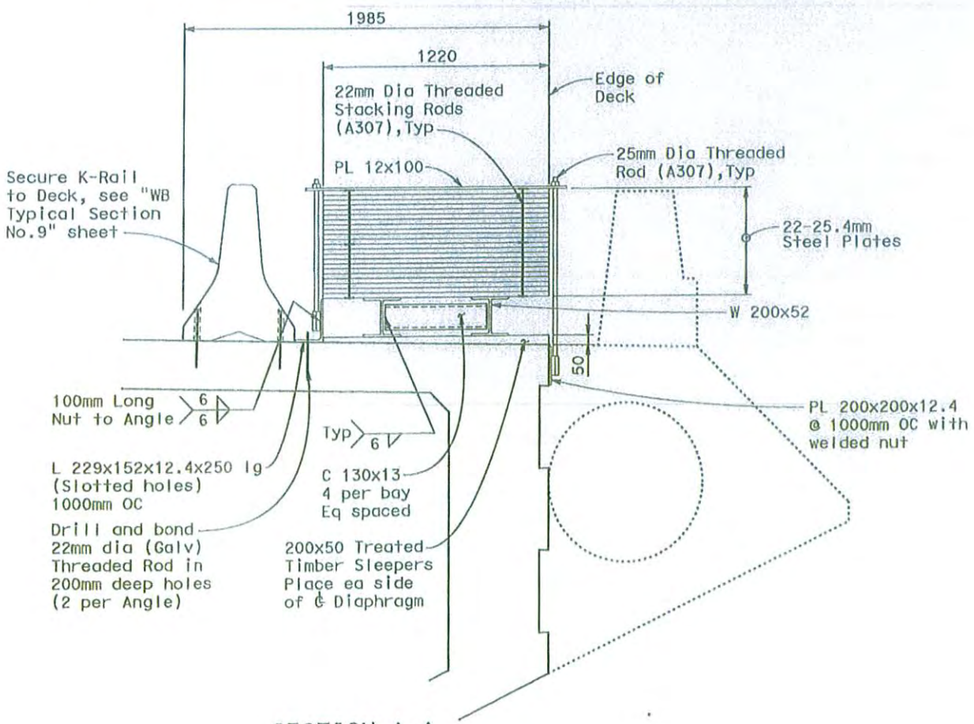

SECTION A-A

1:15

DIST.	COUNTY	ROUTE	KILOMETER POST TOTAL PROJECT	SHEET NO.	TOTAL SHEETS
04	SF	80	12.7/13.2	710AS	806

A. Ely

REGISTERED ENGINEER - CIVIL

PLANS APPROVAL DATE

The State of California or its officers or agents shall not be responsible for the accuracy or completeness of electronic copies of this plan sheet.

REGISTERED PROFESSIONAL ENGINEER A.L. ELY No. 18860 Exp. 6-30-13 CIVIL STATE OF CALIFORNIA

T.Y. LIN / MOFFATT & NICHOL
TWO HARRISON STREET
SAN FRANCISCO, CA 94105

Notes:

1. Contractor shall submit sequence for removal of existing counterweight and placement of new counterweight for Engineer's approval.
2. Structural steel shapes and plates shall conform to ASTM A36.

SUPPLEMENTAL SHEET

CONTRACT CHANGE ORDER NO. 182
SHEET 5 OF 5

ALL DIMENSIONS ARE IN MILLIMETERS UNLESS OTHERWISE SHOWN

SAN FRANCISCO OAKLAND BAY BRIDGE
EAST SPAN SEISMIC SAFETY PROJECT

YBI TRANSITION STRUCTURES

BIKE PATH COUNTERWEIGHT DETAILS

DESIGN OVERSIGHT Hasan El-Natur 4/22/2013
SIGN OFF DATE

	BY	CHECKED
DESIGN	Birdy	Ely
DETAILS	Samson	Ely
QUANTITIES	Lee	Ely

PREPARED FOR THE STATE OF CALIFORNIA DEPARTMENT OF TRANSPORTATION

Jal Birdy
PROJECT ENGINEER

BRIDGE NO. 34-0006 L/R
KILOMETER POST 12.8

CU 04251
EA 0120S1

DISREGARD PRINTS BEARING EARLIER REVISION DATES

REVISION DATES (PRELIMINARY STAGE ONLY)

SHEET 161A OF 209

Rev. Date: 5-18-98

ORIGINAL SCALE IN MILLIMETERS FOR REDUCED PLANS 0 10 20 30 40 50 60 70 80 90 100

FILE => P:\4141-06\CADD\TS\Checked Plans\YBITS #1-100% No. 2_03-03-08 (Final Renamed)\041613 Counterweight T30 CCO\04-0120s1-34-0006r1-u-fbikpdt03a.dgn

April 16, 2013

USERNAME => FSamson DATE PLOTTED => 4/17/2013 TIME PLOTTED => 10:59:21 AM

STATE OF CALIFORNIA - DEPARTMENT OF TRANSPORTATION

CONTRACT CHANGE ORDER MEMORANDUM

DATE: 4/22/2013 Page 1 of 1

TO: Deanna Vilcheck, ACM / DV	FILE: E.A. 04 - 0120S4
FROM: William Howe, Senior R.E.	CO-RTE-PM SF-80-12.7/13.2
	FED. NO. NO FED AID
CCO#: 182 SUPPLEMENT#: 0 Category Code: CHPT	CONTINGENCY BALANCE (incl. this change) $30,480,709.15
COST: $644,557.00 INCREASE ☑ DECREASE ☐	HEADQUARTERS APPROVAL REQUIRED? ☑ YES ☐ NO
SUPPLEMENTAL FUNDS PROVIDED: $0.00	IS THIS REQUEST IN ACCORDANCE WITH ENVIRONMENTAL DOCUMENTS? ☑ YES ☐ NO
CCO DESCRIPTION: Replace Conc.Bikepath Countrwts.w/stl.	**PROJECT DESCRIPTION:** YBITS-1 (Yerba Buena Island Transition Structures)

Original Contract Time:	Time Adj. This Change:	Previously Approved CCO Time Adjustments:	Percentage Time Adjusted: (including this change)	Total # of Unreconciled Deferred Time CCO(s): (including this change)
1390 Day(s)	0 Day(s)	0 Day(s)	0 %	9

THIS CHANGE ORDER PROVIDES FOR:

Remove and dispose of previously installed concrete counterweights, provide and install new counterweight system as shown on revised drawings 551R8, 627R3, 708R6 and new drawing 710AS (Sheet Nos. 2 through 5 of this change order), including painting.

For the revisions as noted, the Contractor will be compensated an Agreed Lump Sum for the fabrication of steel plates of $544,557.00. For the removal of the old and the installation, the Contractor will be paid Extra Work at Force Account for an estimated $100,000.00. The total cost of $644,557.00 will be financed from the contract contingency fund. A detailed cost analysis is on file.

No adjustment in contract time of completion is warranted as this change does not affect the controlling operation.

This CCO was discussed at the TBPOC meeting on January 3, 2013, copy attached; TBPOC approval was given at the March 7, 2013, meeting (refer to page 3 of 7), copy attached.

Maintenance concurrence will be obtained from Lina Ellis, Structures Maintenance.

CONCURRED BY:

Construction Engineer:	William Howe WBH	Date 6-12-13
Bridge Engineer:	Mehran Ardakanian	Date 7.5.13
Project Engineer:	Bob Zandipour, Design	Date 6-4-13
Project Manager:	Ken Terpstra	Date 6-12-13
FHWA Rep.:		Date
Environmental:		Date
Other (specify):	Lina Ellis, Str. Maintenance	Date 6-6-13
Other (specify):		Date
District Prior Approval By:		Date
HQ (Issue Approve) By:	Larry Salhaney	Date 6-4-13
Resident Engineer's Signature:	William Howe	Date 06.12.13

ESTIMATE OF COST

	THIS REQUEST	TOTAL TO DATE
ITEMS	$0.00	$0.00
FORCE ACCOUNT	$100,000.00	$100,000.00
AGREED PRICE	$544,557.00	$544,557.00
ADJUSTMENT	$0.00	$0.00
TOTAL	$644,557.00	$644,557.00

FEDERAL PARTICIPATION

☐ PARTICIPATING ☐ PARTICIPATING IN PART ☑ NONE
☐ NON-PARTICIPATING (MAINTENANCE) ☐ NON-PARTICIPATING

FEDERAL SEGREGATION (if more than one Funding Source or P.I.P. type)
☐ CCO FUNDED PER CONTRACT ☐ CCO FUNDED AS FOLLOWS

FEDERAL FUNDING SOURCE	PERCENT

ADA Notice: For individuals with sensory disabilities, this document is available in alternate formats. For information call: (916) 654-6410 or TDD (916) 654-3880 or write Records and Forms Management, 1120 N Street, MS 89, Sacramento, CA 95814.

CONTRACT CHANGE ORDER

Change Requested by: Engineer

CCO 184	Suppl. No. 0	Contract No. 04 - 0120S4	Road SF-80-12.7/13.2	FED. AID LOC.: NO FED AID

To: **M C M CONSTRUCTION INC**

You are directed to make the following changes from the plans and specifications or do the following described work not included in the plans and specifications for this contract. ***NOTE: This change order is not effective until approved by the Engineer.***

Description of work to be done, estimate of quantities and prices to be paid. (Segregate between additional work at contract price, agreed price and force account.) Unless otherwise stated, rates for rental of equipment cover only such time as equipment is actually used and no allowance will be made for idle time. This last percentage shown is the net accumulated increase or decrease from the original quantity in the Engineer's Estimate.

Perform deck joint repairs, grinding and polyester concrete overlay per plans, "YBI Tunnel Overlay Sheets 1 and 2" (attached Sheet Nos. 3 and 4 of this change order).

The Engineer may also direct grinding, repair, preparation and overlay for additional nearby areas.

Work shall be performed in accordance with the Section 10-1.69, " Polyester Concrete Overlay", of the Contract Special Provisions.

Work shall be done in accordance with schedule perimeters as directed by the Engineer. The lump sum prices within this CCO are based on the following assumed schedule, any changes in this schedule will be subject to a corresponding adjustment in compensation:

The work associated with this change order (including temporary striping and pavement marking) shall be performed during night shift lane closures prior to the full closure, which is currently scheduled to begin August 28, 2013. This schedule anticipates that there are significant electrical and other work activities, including replace the lighting in the same tunnel (both decks), that will cause limitations and delays in access for the operations required to complete this change order. The coordination by the Contractor as required to complete all these activities by August 28, 2013, is included in the prices for this change order.

Extra Work at Force Account:

Apply temporary and permanent striping and markers.
Traffic control and lane closures beyond the work covered in unit prices.
SWPP measures (including BMP's, Best Management Practices, and management of stockpiled grindings).
Measures as required to meet revisions to assumed schedule, as approved by the Engineer.

Estimate of Extra Work at Force Account = $150,000.00

Extra Work at Unit Price:

1) Mobilization for this operation.	1 LS	@ $66,550.00 = $	66,550.00
2) Grind and Remove Existing PCC Surface 19 mm (includes removal of rumble strips and pavement markers within the grinding area).	12,179 M2	@ $ 39.00 = $	474,981.00
3) Remove Unsound Concrete and Patch with Rapid Setting Concrete.	19 M3	@ $ 6,600.00 = $	125,400.00
4) Prepare Concrete Pavement Surface (including shot blasting and placing methacrylate resin prime coat and placing polyester concrete).	12,179 M2	@ $ 48.00 = $	584,592.00
5) Furnish Polyester Concrete Overlay.	290 M3	@ $ 3,493.00 = $	1,012,970.00
6) Bridge Removal (Portion)	2 M3	@ $44,000.00 = $	88,000.00
7) Structure Concrete (Bridge Deck)	2 M3	@ $ 8,800.00 = $	17,600.00
8) Bar Reinforcing Steel	152 KG	@ $ 17.00 = $	2,584.00
9) Expansion Joint Seal MR = 2 inches	25 M	@ $ 248.00 = $	6,200.00
10) Expansion Joint Seal MR = 1/2 inch	870 M	@ $ 165.00 = $	143,550.00
11) Sawcut Cold Joint	1468 M	@ $ 110.00 = $	161,480.00
12) Mainline I-80 Lane Night Closure (when labor rates are paid at straight time, Monday through Friday night into Saturday AM, 8 hour max. closure)	20 EA	@ $ 3,325.00 = $	66,500.00
13) Mainline I-80 Lane Night Closure (when labor rates are at time and one-half, Saturday night to Sunday AM, 8 hour maximum closure)	4 EA	@ $ 4,319.00 = $	17,276.00
14) Mainline I-80 Lane Night Closure (when labor rates are double time, Sunday night to Monday AM or holiday to following day, 8 hour maximum closure)	4 EA	@ $ 5,161.00 = $	20,644.00
15) Extending Mainline I-80 Lane Closure Additional Hours (when labor rates are at time and one-half)	20 HRS	@ $ 422.00 = $	8,440.00

CONTRACT CHANGE ORDER

Change Requested by: Engineer

CCO 184	Suppl. No. 0	Contract No. 04 - 0120S4	Road SF-80-12.7/13.2	FED. AID LOC.: NO FED AID

16) Extending Mainline I-80 Lane Closure Additional Hours (when labor rates are at double time) 16 HRS @ $ 528.00 = $ 8,448.00

EXTRA WORK AT UNIT PRICES = $2,805,215.00

The agreed unit prices for lane closure include labor, equipment and materials as required to close one, two or three lanes in one direction (Eastbound or Westbound Interstate 80), as determined by the Engineer

Full closures (all lanes in either direction) are not included in the unit prices of this change order.

Additional measures, such as directing traffic to or from an on-ramp or off-ramp, are not included in the unit prices of this change order.

The agreed prices excludes relocating, removing or installation of barrier rails (Type K or other), which will be paid for under a separate change order.

The agreed unit prices include all labor, equipment and materials as required. The agreed prices constitutes full payment, including all markups, for this change.

6.27.13

$2,955,215.00

Estimated Cost: Increase ☑ Decrease ☐ $2,955,215.00

By reason of this order the time of completion will be adjusted as follows: 0 days

Submitted by		
Signature	Resident Engineer for William Howe, Senior R.E.	Date 8/24/13
Approval Recommended by		
Signature	Region Construction Division Chief Tony Anziano	Date 6/7/13
Engineer Approval by		
Signature	Region Construction Division Chief Tony Anziano	Date 8/6/13

We the undersigned contractor, have given careful consideration to the change proposed and agree, if this proposal is approved, that we will provide all equipment, furnish the materials, except as may otherwise be noted above, and perform all services necessary for the work above specified, and will accept as full payment therefor the prices shown above.

NOTE: If you, the contractor, do not sign acceptance of this order, your attention is directed to the requirements of the specifications as to proceeding with the ordered work and filing a written protest within the time therein specified.

Contractor Acceptance by		
Signature	(Print name and title) Edmundo A. Rucki - Treasurer	Date 8-2-2013

DIST	COUNTY	ROUTE	KILOMETER POST TOTAL PROJECT	SHEET No.	TOTAL SHEETS
04	SF	80	12.7/13.2	790AE	806

Caltrans Metric

Reynaldo J. Castro 06-12-13
REGISTERED CIVIL ENGINEER DATE

REGISTERED PROFESSIONAL ENGINEER
REYNALDO J. CASTRO
No. C36731
Exp. 6-30-14
CIVIL
STATE OF CALIFORNIA

PLANS APPROVAL DATE

The State of California or its officers or agents shall not be responsible for the accuracy or completeness of electronic copies of this plan sheet.

To get to the Caltrans web site, go to: http://www.dot.ca.gov

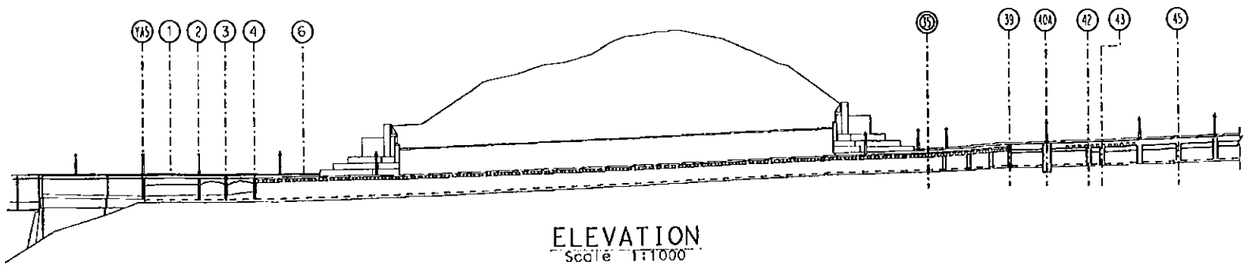

ELEVATION
Scale 1:1000

CONTRACT CHANGE ORDER NO. 184
SHEET 3 OF 4

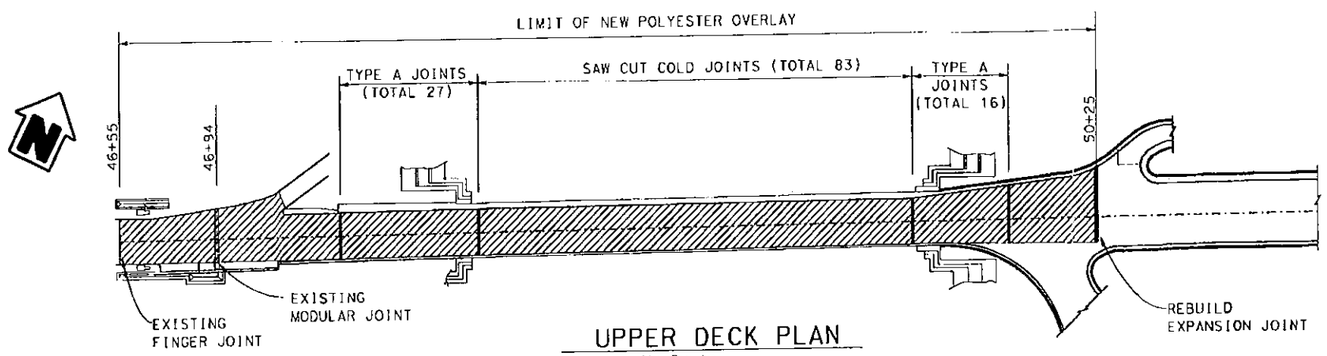

UPPER DECK PLAN
No Scale
SEE SHEET 2 FOR UPPER DECK JOINTS PLAN & DETAILS

LEGEND:

INDICATES LIMIT OF PREPARE CONCRETE BRIDGE DECK SURFACE, FURNISH AND PLACE NEW 3/4" MINIMUM DEPTH POLYESTER CONCRETE OVERLAY. PRIOR TO PLACING DECK OVERLAY, REMOVE CONCRETE DECK SURFACE 3/4" BY COLD MILLING OR HIGH PRESSURE WATER JETTING.

INDICATES LOCATION OF REMOVE EXISTING JOINT SEAL AND PLACE NEW JOINT SEAL.

INDICATES LOCATION OF REBUILD EXISTING EXPANSION JOINT. SEE "REBUILD JOINT DETAIL".

EXISTING FINGER JOINT
NOTE: CONTRACTOR SHALL PREVENT DAMAGE ON EXISTING FINGER JOINT ASSEMBLY.

INDICATES LOCATION OF EXISTING MODULAR JOINT SEAL.
NOTE: CONTRACTOR SHALL PREVENT DAMAGE ON EXISTING MODULAR JOINT SEAL CONCRETE BLOCKOUT.

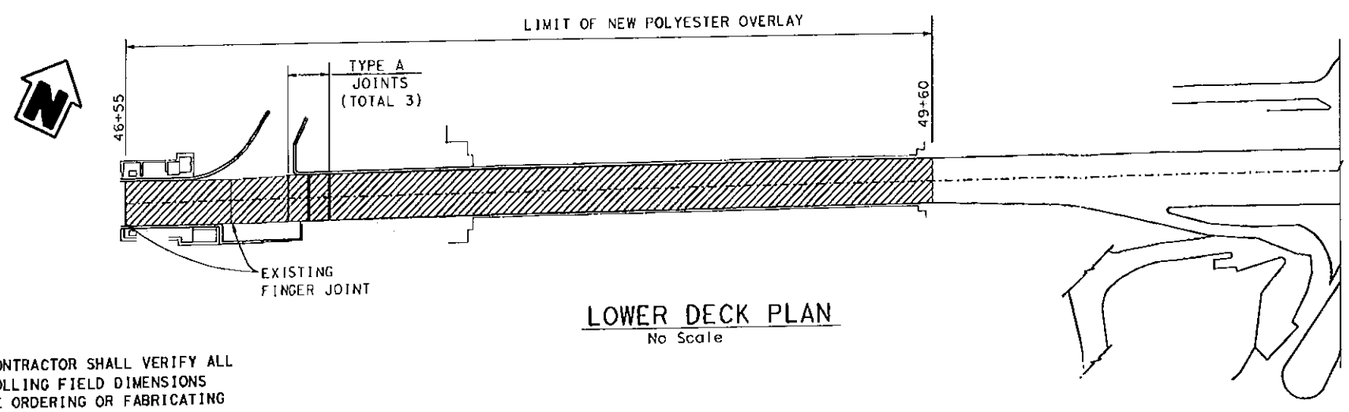

LOWER DECK PLAN
No Scale

NOTE:
THE CONTRACTOR SHALL VERIFY ALL CONTROLLING FIELD DIMENSIONS BEFORE ORDERING OR FABRICATING ANY MATERIAL.

DESIGN	BY R. CASTRO	CHECKED L. ELLIS	LOAD FACTOR DESIGN	LIVE LOADING: HS20-44 AND ALTERNATIVE AND PERMIT DESIGN LOAD
DETAILS	BY W.YU	CHECKED R. CASTRO	LAYOUT	BY W.YU / CHECKED
QUANTITIES	BY R.CASTRO	CHECKED L. ELLIS	SPECIFICATIONS	BY / PLANS AND SPECS COMPARED

Hongyuan Su 06-12-13
DESIGN ENGINEER

STRUCTURES MAINTENANCE GENERAL PLAN SHEET (METRIC) (REV. 10/27/05)

ALL DIMENSIONS ARE IN METERS UNLESS OTHERWISE SHOWN

ORIGINAL SCALE IN MILLIMETERS FOR REDUCED PLANS 0 10 20 30 40 50 60 70 80 90 100

STATE OF CALIFORNIA
DEPARTMENT OF TRANSPORTATION

DIVISION OF MAINTENANCE
STRUCTURE MAINTENANCE AND INVESTIGATIONS

CU
EA 04-012054

FILE => metric-rehab-engmet.dgn

BRIDGE No. 34-0004
KILOMETER POST 7.72

DISREGARD PRINTS BEARING EARLIER REVISION DATES →

REVISION DATES (PRELIMINARY STAGE ONLY) 5-11-13 6-12-13

SHEET 1 OF 2

SFOBB
YBI TUNNEL OVERLAY
GENERAL PLAN

USER NAME => s13087 DATE PLOTTED => 12-JUN-2013 TIME PLOTTED => 10:45

DIST	COUNTY	ROUTE	KILOMETER POST TOTAL PROJECT	SHEET No	TOTAL SHEETS
04	SF	80	12.7/13.2	790AF	806

Caltrans Metric

Reynaldo J. Castro 06-12-13
REGISTERED CIVIL ENGINEER DATE

REGISTERED PROFESSIONAL ENGINEER REYNALDO J. CASTRO No. C36231 Exp. 6-30-14 CIVIL STATE OF CALIFORNIA

PLANS APPROVAL DATE

The State of California or its officers or agents shall not be responsible for the accuracy or completeness of electronic copies of this plan sheet.

To get to the Caltrans web site, go to: Http://www.dot.ca.gov

CONTRACT CHANGE ORDER NO. 184
SHEET 4 OF 4

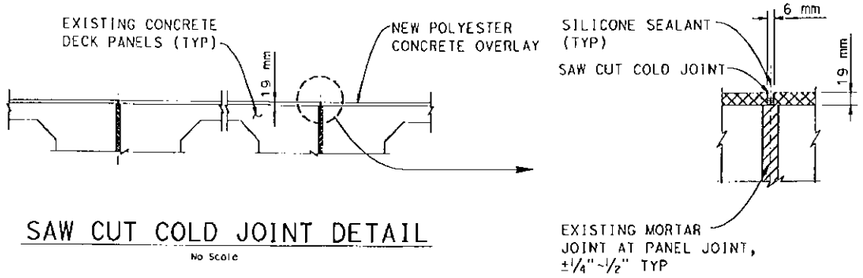

SAW CUT COLD JOINT DETAIL
No Scale

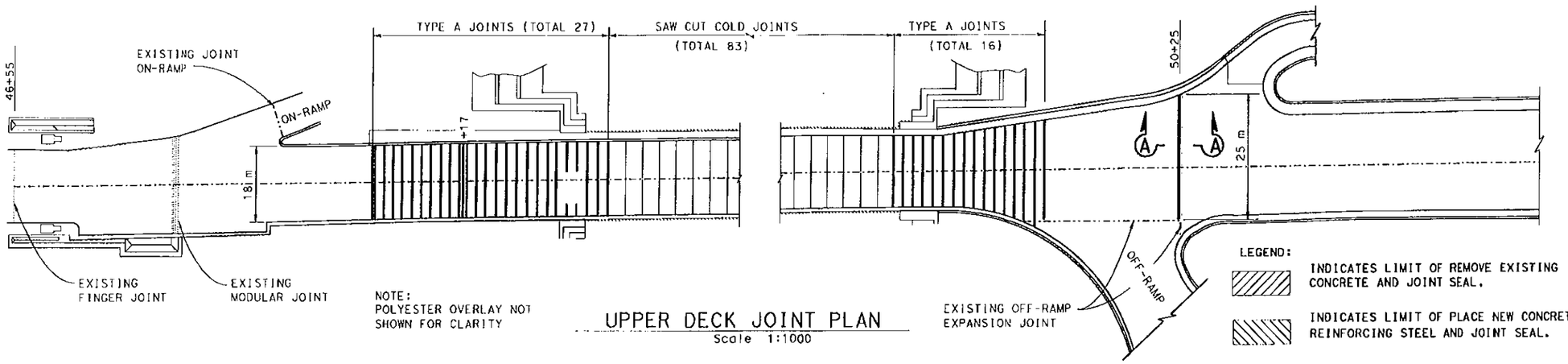

NOTE:
POLYESTER OVERLAY NOT SHOWN FOR CLARITY

UPPER DECK JOINT PLAN
Scale 1:1000

LEGEND:

- INDICATES LIMIT OF REMOVE EXISTING CONCRETE AND JOINT SEAL.
- INDICATES LIMIT OF PLACE NEW CONCRETE, REINFORCING STEEL AND JOINT SEAL.
- INDICATES LIMIT OF NEW POLYESTER OVERLAY
- INDICATES TYPE A JOINT, SAW CUT NEW POLYESTER OVERLAYED DECK AND PLACE NEW JOINT SEAL.
- INDICATES SAW CUT COLD JOINT AT PANEL JOINT INSIDE THE TUNNEL AND PLACE SILICONE SEAL, SEE SAW CUT COL JOINT DETAIL.
- INDICATES REBUILD JOINT SEE "REBUILD JOINT DETAIL".
- INDICATES EXISTING FINGER JOINT SEAL.
  NOTE: CONTRACTOR SHALL PREVENT DAMAGE ON EXISTING FINGER JOINT ASSEMBLY.
- INDICATES EXISTING MODULAR JOINT SEAL.
  NOTE: CONTRACTOR SHALL PREVENT DAMAGE ON EXISTING MODULAR JOINT SEAL CONCRETE BLOCKOUT.

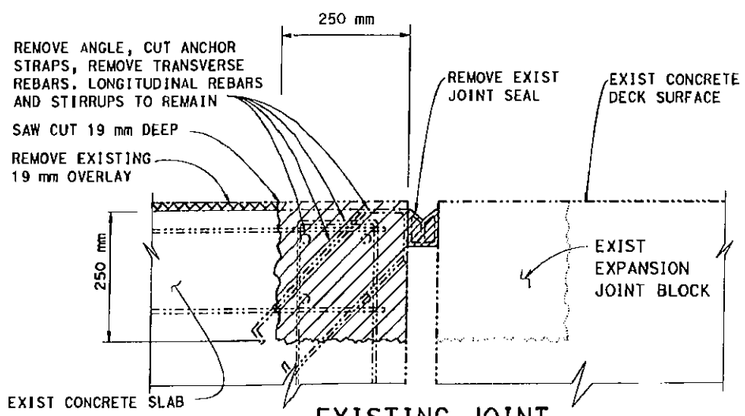

EXISTING JOINT
No scale

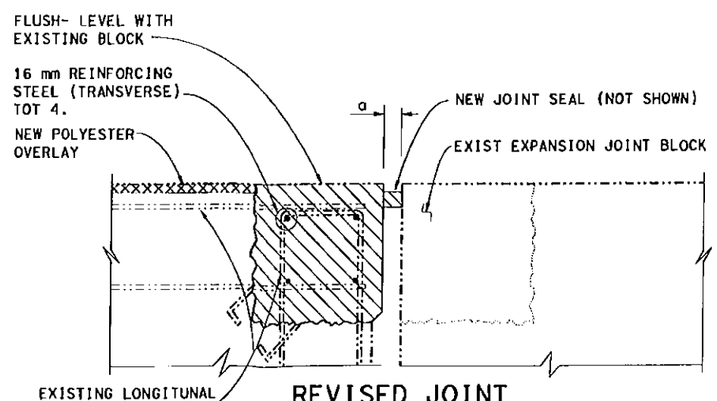

REVISED JOINT
No scale

SECTION A-A
REBUILD JOINT DETAIL
No scale

NOTE:
THE CONTRACTOR SHALL VERIFY ALL CONTROLLING FIELD DIMENSIONS BEFORE ORDERING OR FABRICATING ANY MATERIAL.

	BY	CHECKED
DESIGN	R. CASTRO	L. ELLIS
DETAILS	N. YU	R. CASTRO
QUANTITIES	R. CASTRO	L. ELLIS

STATE OF CALIFORNIA
DEPARTMENT OF TRANSPORTATION

DIVISION OF MAINTENANCE
STRUCTURE MAINTENANCE DESIGN

BRIDGE NO. 34-0004
KILOMETER POST 7.72

SFOBB
YBI TUNNEL OVERLAY
UPPER DECK JOINT PLAN & DETAILS

STRUCTURES MAINTENANCE DETAIL SHEET (METRIC) (REV. 10/27/05)

ALL DIMENSIONS ARE IN MILLIMETERS UNLESS OTHERWISE SHOWN

ORIGINAL SCALE IN MILLIMETERS FOR REDUCED PLANS 0 10 20 30 40 50 60 70 80 90 100

CU
EA 04-0120S4

DISREGARD PRINTS BEARING EARLIER REVISION DATES

REVISION DATES (PRELIMINARY STAGE ONLY) 3-17-13 6-12-13

SHEET 2 OF 2

FILE => metric-rehab-engmet_jst001.dgn

DGNNAME => 51.30817 / DATE PLOTTED => 12-JUN-2013 TIME PLOTTED => 10:45

STATE OF CALIFORNIA - DEPARTMENT OF TRANSPORTATION

CONTRACT CHANGE ORDER MEMORANDUM

DATE: 4/29/2013

TO: Deanna Vilcheck, ACM	FILE: E.A. 04 - 0120S4
FROM: William Howe, Senior R.E.	CO-RTE-PM SF-80-12.7/13.2
	FED. NO. NO FED AID
CCO#: 184 SUPPLEMENT#: 0 Category Code: CJPX	CONTINGENCY BALANCE (incl. this change) $33,492,310.15
COST: $2,955,215.00 INCREASE ☑ DECREASE ☐	HEADQUARTERS APPROVAL REQUIRED? ☑ YES ☐ NO
SUPPLEMENTAL FUNDS PROVIDED: $0.00	IS THIS REQUEST IN ACCORDANCE WITH ENVIRONMENTAL DOCUMENTS? ☑ YES ☐ NO
CCO DESCRIPTION: Polyester Conc.Overlay YBI Tunnel	**PROJECT DESCRIPTION:** YBITS-1 (Yerba Buena Island Transition Structures)

Original Contract Time:	Time Adj. This Change:	Previously Approved CCO Time Adjustments:	Percentage Time Adjusted: (including this change)	Total # of Unreconciled Deferred Time CCO(s): (Including this change)
1390 Day(s)	0 Day(s)	0 Day(s)	0 %	9

THIS CHANGE ORDER PROVIDES FOR:

This change order provides for performing deck joint repairs, grinding and polyester concrete overlay per plans, "YBI Tunnel Overlay Sheets 1 and 2", (attached sheet Nos. 3 and 4 of this change order).

This contract calls for the construction of the Yerba Buena Island Transition structures of the east span of the new San Francisco Oakland Bay Bridge (SFOBB). The existing Yerba Buena Island Tunnel is adjacent to the project site, with existing upper and lower concrete decks overlain by epoxy asphalt concrete. The riding surface is distressed with numerous failures in the asphalt concrete overlay. To provide a better riding surface and reduce the dead load on the support system, the existing overlay will be removed and replaced with a thinner, lighter, and more durable polyester concrete. This work is being done at the request of the Caltrans' Maintenance Department, which has responsibility for the upkeep of the tunnel. The overlay will also allow new bridge and existing deck surfaces to create a uniform riding surface, which will provide consistent traction and better lane line differentiation.

This change order provides for compensating the Contractor at Agreed Unit Prices for an amount of $2,805,215.00 for the work. The additional miscellaneous work required in this change order shall be paid as Extra Work at Force Account at an estimated cost of $150,000.00. The total amount estimated for this change order is $2,955,215.00, which will be financed through BATA Toll Bridge Rehabilitation funding. A copy of e-mail approval is attached. A detailed cost analysis for this change order is on file in the project records.

No adjustment in contract time of completion is warranted as this change does not affect the controlling operation.

This change was requested by Ken Brown, Office Chief, Structures Maintenance and Investigations, on March 11, 2013. Maintenance concurrence will be obtained from Lina Ellis, Structures Maintenance, for the final version of the CCO before issuing.

This change order was initially approved by TBPOC on May 9, 2013, for a NTE $2.3 million. At the June 6, 2013, TBPOC meeting, CCO 184 S0 was approved for $2,955,215.00 (copy attached).

ADA Notice: For individuals with sensory disabilities, this document is available in alternate formats. For information call: (916) 654-6410 or TDD (916) 654-3880 or write Records and Forms Management, 1120 N Street, MS-89, Sacramento, CA 95814.

CONCURRED BY:		
Construction Engineer:	William Howe WBH	Date 06-10-13
Bridge Engineer:	Mehran Ardakanian	Date 06.27.13
Project Engineer:	Bob Zandipour, Design	Date 6-26-13
Project Manager:	Ken Terpstra	Date 7-11-13
FHWA Rep.:		Date
Environmental:		Date
Other (specify):	Lina Ellis, Str. Maintenance	Date 7-3-13
Other (specify):		Date
District Prior Approval By:		Date
HQ (Issue Approve) By:	Larry Salhaney	Date 6-26-13
Resident Engineer's Signature: William Howe		Date 06-10-13

ESTIMATE OF COST

	THIS REQUEST	TOTAL TO DATE
ITEMS	$0.00	$0.00
FORCE ACCOUNT	$150,000.00	$150,000.00
AGREED PRICE	$2,805,215.00	$2,805,215.00
ADJUSTMENT	$0.00	$0.00
TOTAL	$2,955,215.00	$2,955,215.00

FEDERAL PARTICIPATION

☐ PARTICIPATING ☐ PARTICIPATING IN PART ☑ NONE
☐ NON-PARTICIPATING (MAINTENANCE) ☐ NON-PARTICIPATING

FEDERAL SEGREGATION (if more than one Funding Source or P.I.P. type)
☐ CCO FUNDED PER CONTRACT ☐ CCO FUNDED AS FOLLOWS

FEDERAL FUNDING SOURCE	PERCENT

ADA Notice: For individuals with sensory disabilities, this document is available in alternate formats. For information call: (916) 654-6410 or TDD (916) 654-3880 or write Records and Forms Management, 1120 N Street, MS-89, Sacramento, CA 95814.

STATE OF CALIFORNIA - DEPARTMENT OF TRANSPORTATION

CONTRACT CHANGE ORDER

Change Requested by: Engineer

CCO 188	Suppl. No. 0	Contract No. 04 - 0120S4	Road SF-80-12.7/13.2	FED. AID LOC.: NO FED AID

To: **M C M CONSTRUCTION INC**

You are directed to make the following changes from the plans and specifications or do the following described work not included in the plans and specifications for this contract. ***NOTE: This change order is not effective until approved by the Engineer.***

Description of work to be done, estimate of quantities and prices to be paid. (Segregate between additional work at contract price, agreed price and force account.) Unless otherwise stated, rates for rental of equipment cover only such time as equipment is actually used and no allowance will be made for idle time. This last percentage shown is the net accumulated increase or decrease from the original quantity in the Engineer's Estimate.

Extra Work at Force Account:

As directed by the Engineer, provide labor, equipment and materials to grind concrete deck surfaces, provide and place polyester concrete overlay, set and adjust deck manhole frame and covers, and other measures in the vicinity of Hinge KE, W10AL and W11R.

This work will be paid for in accordance with Section 5-1.17, "Force Account Payment", of the Special Provisions and Section 4-1.03D, "Extra Work", of the Standard Specifications.

Estimated Extra Work at Force Account = $150,000.00

06/11/2013

Estimated Cost: Increase ☑ Decrease ☐ **$150,000.00**

By reason of this order the time of completion will be adjusted as follows: 0 days

Signature William Howe	Resident Engineer William Howe, Senior R.E.	Date 06-11-13
Signature Deanna Vilcheck	Area Construction Manager Deanna Vilcheck	Date 06/11/13
Signature Deanna Vilcheck	Area Construction Manager Deanna Vilcheck	Date 7/29/13

We the undersigned contractor, have given careful consideration to the change proposed and agree, if this proposal is approved, that we will provide all equipment, furnish the materials, except as may otherwise be noted above, and perform all services necessary for the work above specified, and will accept as full payment therefor the prices shown above.

NOTE: If you, the contractor, do not sign acceptance of this order, your attention is directed to the requirements of the specifications as to proceeding with the ordered work and filing a written protest within the time therein specified.

Signature	(Print name and title) Edmundo A. Ruchi - Treasurer	Date 7-23-2013

STATE OF CALIFORNIA - DEPARTMENT OF TRANSPORTATION

CONTRACT CHANGE ORDER MEMORANDUM

DATE: 6/11/2013 Page 1 of 1

TO: Deanna Vilcheck, ACM	FILE: E.A. 04 - 0120S4
	CO-RTE-PM SF-80-12.7/13.2
FROM: William Howe, Senior R.E.	FED. NO. NO FED AID
CCO#: 188 SUPPLEMENT#: 0 Category Code: CJPT	CONTINGENCY BALANCE (incl. this change) $30,312,248.15
COST: $150,000.00 INCREASE ☑ DECREASE ☐	HEADQUARTERS APPROVAL REQUIRED? ☐ YES ☑ NO
SUPPLEMENTAL FUNDS PROVIDED: $0.00	IS THIS REQUEST IN ACCORDANCE WITH ENVIRONMENTAL DOCUMENTS? ☑ YES ☐ NO
CCO DESCRIPTION: Hinge KE, W10AL, W11R Poly Overlay	**PROJECT DESCRIPTION:** YBITS-1 (Yerba Buena Island Transition Structures)

Original Contract Time:	Time Adj. This Change:	Previously Approved CCO Time Adjustments:	Percentage Time Adjusted: (including this change)	Total # of Unreconciled Deferred Time CCO(s): (including this change)
1390 Day(s)	0 Day(s)	0 Day(s)	0 %	9

THIS CHANGE ORDER PROVIDES FOR:

Provide labor, equipment and materials to grind concrete deck surfaces, provide and place polyester concrete overlay, set and adjust deck manhole frame and cover elevations, and other measures in the vicinity of Hinges KE, W10LA and W11R, as directed by the Engineer.

This project, the Yerba Buena Island Transition Structure (YBITS), provides for the construction of two bridges, which will connect eastbound and westbound traffic on the new east span of the San Francisco Oakland Bay Bridge (SFOBB) to the existing Yerba Buena Island (YBI) tunnel.

In the vicinity of the Hinges KE, W10LA and W11R, the deck grades have undergone adjustments as directed by the Engineer, which have been made in anticipation of the creep as calculated for this precast structure and the variable movements of bridge elements during and after prestressing. This CCO will be implemented to complete the adjustments of final deck grades, utilizing grinding and a polyester concrete overlay.

This CCO provides for $150,000.00 in force account work, which will be paid for on an actual cost basis as provided in Section 5-1.17, "Force Account Payment", of the Special Provisions, and Section 4-1.03D, "Extra Work", of the Standard Specifications. This will be funded from the project's contingency fund. A cost analysis is on file.

This CCO was requested by Deanna Vilcheck, Construction Manager for the SFO Bay Bridge Construction .

No adjustment of contract time is warranted as the work will not affect the controlling operation.

Maintenance concurrence will be obtained from Lina Ellis, Structures Maintenance.

CONCURRED BY:		
Construction Engineer:	William Howe	Date 06-11-13
Bridge Engineer:	Mehran Ardakanian	Date 06/11/2013
Project Engineer:	Bob Zandipour, Design	Date 6-12-13
Project Manager:	Ken Terpstra	Date 6-11-13
FHWA Rep.:		Date
Environmental:		Date
Other (specify):	Lina Ellis, Str. Maintenance	Date 6-12-13
Other (specify):		Date
District Prior Approval By:		Date
HQ (Issue Approve) By:		Date
Resident Engineer's Signature: William Howe		Date 06-11-13

ESTIMATE OF COST

	THIS REQUEST	TOTAL TO DATE
ITEMS	$0.00	$0.00
FORCE ACCOUNT	$150,000.00	$150,000.00
AGREED PRICE	$0.00	$0.00
ADJUSTMENT	$0.00	$0.00
TOTAL	$150,000.00	$150,000.00

FEDERAL PARTICIPATION

☐ PARTICIPATING ☐ PARTICIPATING IN PART ☑ NONE
☐ NON-PARTICIPATING (MAINTENANCE) ☐ NON-PARTICIPATING

FEDERAL SEGREGATION (if more than one Funding Source or P.I.P. type)
☐ CCO FUNDED PER CONTRACT ☐ CCO FUNDED AS FOLLOWS

FEDERAL FUNDING SOURCE PERCENT

ADA Notice: For individuals with sensory disabilities, this document is available in alternate formats. For information call: (916) 654-6410 or TDD (916) 654-3880 or write Records and Forms Management, 1120 N Street, MS-89, Sacramento, CA 95814.

STATE OF CALIFORNIA - DEPARTMENT OF TRANSPORTATION

CONTRACT CHANGE ORDER

Change Requested by: Engineer

CCO 191	Suppl. No. 0	Contract No 04 - 0120S4	Road SF-80-12.7/13.2	FED. AID LOC.: NO FED AID

To: **M C M CONSTRUCTION INC**

You are directed to make the following changes from the plans and specifications or do the following described work not included in the plans and specifications for this contract. ***NOTE: This change order is not effective until approved by the Engineer.***

Description of work to be done, estimate of quantities and prices to be paid. (Segregate between additional work at contract price, agreed price and force account.) Unless otherwise stated, rates for rental of equipment cover only such time as equipment is actually used and no allowance will be made for idle time. This last percentage shown is the net accumulated increase or decrease from the original quantity in the Engineer's Estimate.

Extra Work at Force Account:

On the previously constructed San Francisco/Oakland Bay Bridge East Span Skyway Travelers, as directed by the Engineer, provide labor, equipment and materials to remove existing wood decking and replace with polymer decking material for the two each travelers. The decking material will be provided by the Department; other materials such as bolts and associated hardware are to be provided by the Contractor. Installation details are shown on attached drawings, "Traveler Alternate Decking Details No. 1", and "Traveler Alternate Decking Details No. 2", (Sheet Nos. 790AC and 790AD of 806), Sheet Nos. 2 and 3 of this change order, or as directed by the Engineer.

This work will be paid for in accordance with Section 5-1.17, "Force Account Payment", of the Special Provisions and Section 4-1.03D, "Extra Work", of the Standard Specifications.

Estimated Extra Work at Force Account = $60,000.00

5/19/2013

Estimated Cost: Increase ☑ Decrease ☐ **$60,000.00**

By reason of this order the time of completion will be adjusted as follows: 0 days

Signature William Howe	Resident Engineer William Howe, Senior R.E.	Date 05.06.13
Signature Deanna Vilcheck	Area Construction Manager Deanna Vilcheck	Date 5/7/13
Signature Deanna Vilcheck	Area Construction Manager Deanna Vilcheck	Date 5/30/13

We the undersigned contractor, have given careful consideration to the change proposed and agree, if this proposal is approved, that we will provide all equipment, furnish the materials, except as may otherwise be noted above, and perform all services necessary for the work above specified, and will accept as full payment therefor the prices shown above.

NOTE: If you, the contractor, do not sign acceptance of this order, your attention is directed to the requirements of the specifications as to proceeding with the ordered work and filing a written protest within the time therein specified.

Signature	(Print name and title)	Date

DIST.	COUNTY	ROUTE	KILOMETER POST TOTAL PROJECT	SHEET NO.	TOTAL SHEETS
08	SF	80	12.7/13.2	790AD	806

REGISTERED ENGINEER CIVIL

06-11-13

PLANS APPROVAL DATE

REGISTERED PROFESSIONAL ENGINEER No. C 36044 Exp. 06/30/14 CIVIL STATE OF CALIFORNIA

The State of California or its officers or agents shall not be responsible for the accuracy or completeness of electronic copies of this plan sheet.

Caltrans now has a web site! To get to the web site, go to: http://www.dot.ca.gov

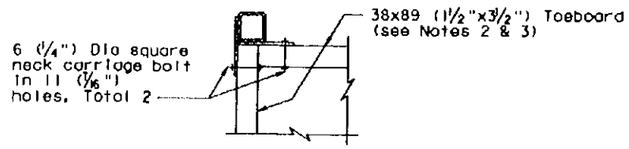

AT CORNER OF BALCONY
1:5

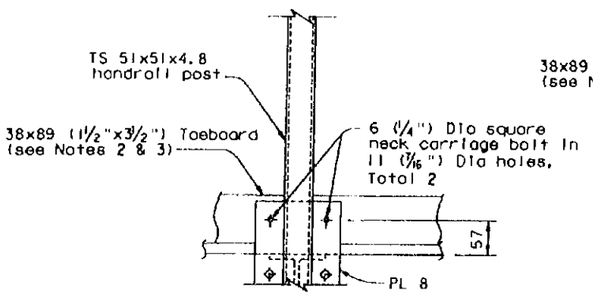

AT HANDRAIL POST
1:5

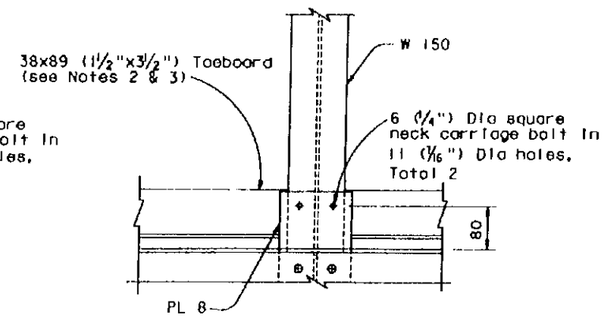

AT W150
1:5

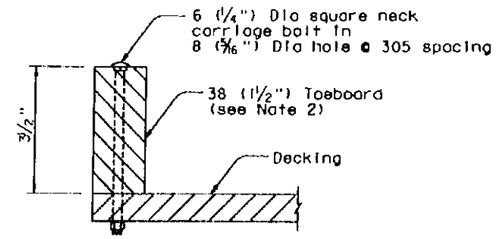

CONNECTION TO DECKING AT BALCONY
1:2

BIKEPATH TRAVELER
TOEBOARD DETAILS

NOTES:

1. For details not shown, see "Skyway Traveler Alternate Decking Details No. 1" sheet.
2. At the direction of the Engineer, King Storboard or King Storboard AS polymer may be used for all toeboards.
3. Lengths of toeboard pieces shall not exceed 2440 (8').

CONTRACT CHANGE ORDER NO. 191
SHEET 3 OF 3

REQUESTS FOR INFORMATION NOT ADDRESSED IN THIS CCO REMAIN IN FORCE

MARK	DATE	DESCRIPTIONS	BY	CH'D	CCO#
0	05/11/13	SKYWAY TRAVELER DECKING	AA	WL	191

REVISIONS

	BY	CHECKED
DESIGN	A. Aktnsonya	W. Long
DETAILS	A. Aktnsonya	W. Long
QUANTITIES	A. Aktnsonya	W. Long

STATE OF CALIFORNIA
DEPARTMENT OF TRANSPORTATION

DIVISION OF ENGINEERING SERVICES
STRUCTURE DESIGN
SPECIAL DESIGNS BRANCH

BRIDGE NO. 34-0006 L/R
KILOMETER POST 12.8

SAN FRANCISCO OAKLAND BAY BRIDGE
EAST SPAN SEISMIC SAFETY PROJECT

YBI TRANSITION STRUCTURES

SKYWAY TRAVELER ALTERNATE DECKING DETAILS NO. 2

ALL DIMENSIONS ARE IN MILLIMETERS UNLESS OTHERWISE SHOWN

ORIGINAL SCALE IN MILLIMETERS FOR REDUCED PLANS 0 10 20 30 40 50 60 70 80 90 100

CU 04
EA 0120F1

STANDARD PLANNING BEARING
FACTOR REVISION DATES _____

REVISION DATES (MM/DD/YY) STATE USE ONLY

SHEET 2 OF 2

FILE -> f:\bb\04-012001\bas\contract plans and cco\cco\ybi cco#191\2-update 06-11-13\dgn\aktrv036h.dgn

USERNAME -> arivera DATE PLOTTED -> 11 JUN 2013 TIME PLOTTED -> 17:06:08

March 3, 2008

DIST.	COUNTY	ROUTE	KILOMETER POST TOTAL PROJECT	SHEET NO.	TOTAL SHEETS
08	SF	80	12.7/13.2	790AC	806

REGISTERED ENGINEER - CIVIL

06-11-13

PLANS APPROVAL DATE

REGISTERED PROFESSIONAL ENGINEER Aleksandr O. Aktsevich No. C 36044 Exp. 06/30/14 CIVIL STATE OF CALIFORNIA

The State of California or its officers or agents shall not be responsible for the accuracy or completeness of electronic copies of this plan sheet.

Caltrans now has a web site! To get to the web site, go to: http://www.dot.ca.gov

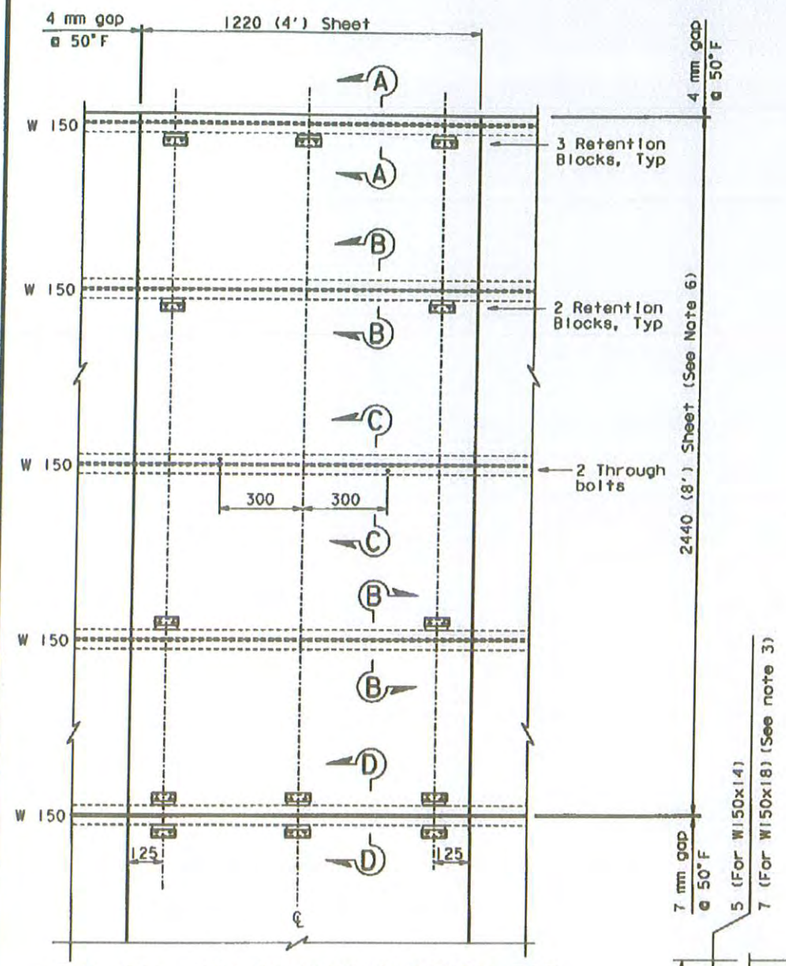

TYPICAL ATTACHMENT PATTERN FOR 1220x2440 (4'x8') SHEET OF DECKING

1:10

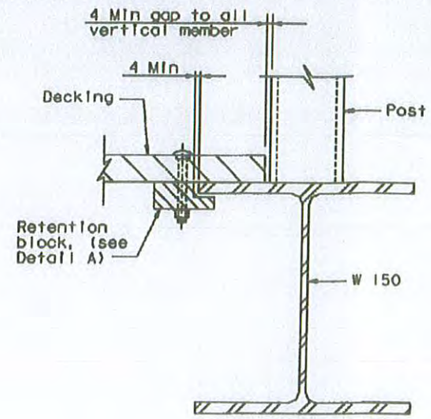

SECTION A-A

1:2

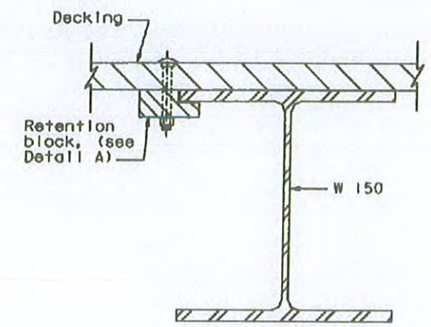

SECTION B-B

1:2

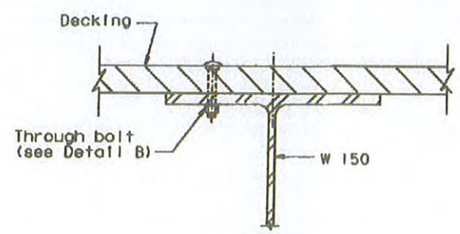

SECTION C-C

1:2

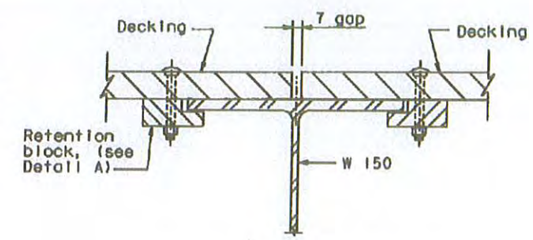

SECTION D-D

1:2

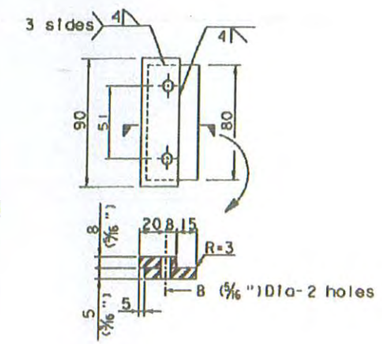

ALTERNATIVE RETENTION BLOCK (A36 STEEL GALVANIZED)

1:2

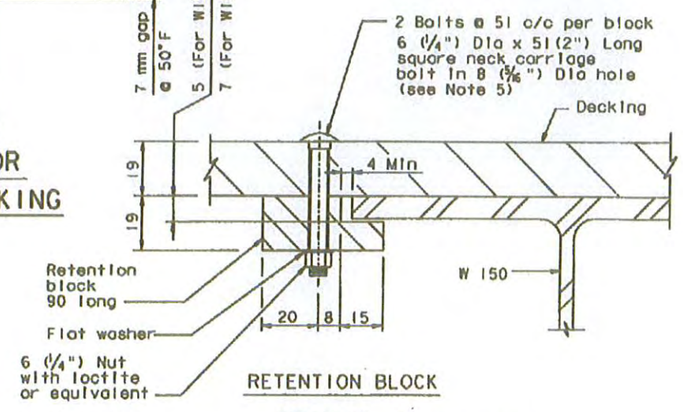

RETENTION BLOCK

DETAIL A (See Note 5)

1:1

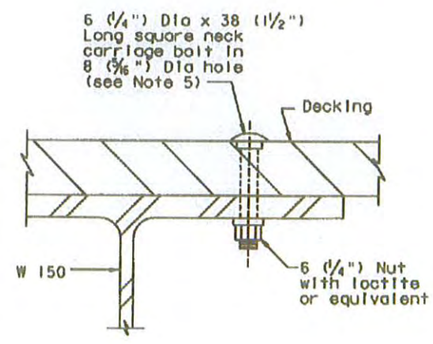

BOLTING AT CENTER OF EACH SHEET

DETAIL B

1:1

NOTES:

1. Decking material shall be King Starboard AS polymer decking, or an approved equal.
2. Decking material shall be 19 (3/4") thick, shall be white/white, and shall have the diamond pattern walking Surface.
3. Modify retention block detail if required to suit flange thickness of steel members.
4. Retention block is to be milled from same material as decking. At the Contractor's option, "Alternative Retention Block" detail may be used.
5. Carriage bolts, nuts and washers to be galvanized or plated to Caltrans requirements.
6. For deck pieces smaller than 1220x2440 (4'x8'), one stringer line shall be fixed (Detail B or similar) and other stringer lines shall use retention blocks (Detail A or similar).

CONTRACT CHANGE ORDER NO. 191
SHEET 2 OF 3

REQUESTS FOR INFORMATION NOT ADDRESSED IN THIS CCO REMAIN IN FORCE

MARK	DATE	DESCRIPTIONS	BY	CH'D	CCO#
1	06/11/13	SKYWAY TRAVELER DECKING	AA	WL	191

REVISIONS

ALL DIMENSIONS ARE IN MILLIMETERS UNLESS OTHERWISE SHOWN

ORIGINAL SCALE IN MILLIMETERS FOR REDUCED PLANS 0 10 20 30 40 50 60 70 80 90 100

DESIGN	BY A. Aktsevich	CHECKED	W. Long
DETAILS	BY A. Aktsevich	CHECKED	W. Long
QUANTITIES	BY A. Aktsevich	CHECKED	W. Long

STATE OF CALIFORNIA
DEPARTMENT OF TRANSPORTATION

DIVISION OF ENGINEERING SERVICES
STRUCTURE DESIGN
SPECIAL DESIGNS BRANCH

CU 04
EA 0120F1

BRIDGE NO. 34-0006 L/R
KILOMETER POST 12.8

SAN FRANCISCO OAKLAND BAY BRIDGE
EAST SPAN SEISMIC SAFETY PROJECT

YBI TRANSITION STRUCTURES

SKYWAY TRAVELER ALTERNATE DECKING DETAILS NO. 1

DISREGARD PRINTS BEARING EARLIER REVISION DATES

REVISION DATES (PRELIMINARY STAGE ONLY) 06/11/13

SHEET 1 OF 2

FILE => I:\bb\04-012001\sas\contract plans and ccos\ccos\ybi cco#191\2-update 06-11-13\dgn\aktrv036a.dgn

March 3, 2008

USERNAME => crivero DATE PLOTTED => 11 JUN 2013 TIME PLOTTED => 17:08:33

STATE OF CALIFORNIA - DEPARTMENT OF TRANSPORTATION

CONTRACT CHANGE ORDER MEMORANDUM

DATE: 5/6/2013 Page 1 of 1

TO: Deanna Vilcheck, ACM / DV

FROM: William Howe, Senior R.E.

FILE: E.A. 04 - 0120S4
CO-RTE-PM SF-80-12.7/13.2
FED. NO. NO FED AID

CCO#: 191 | SUPPLEMENT#: 0 | Category Code: CHPT

CONTINGENCY BALANCE (incl. this change) $35,720,741.15

COST: $60,000.00 INCREASE ☑ DECREASE ☐

HEADQUARTERS APPROVAL REQUIRED? ☐ YES ☑ NO

SUPPLEMENTAL FUNDS PROVIDED: $0.00

IS THIS REQUEST IN ACCORDANCE WITH ENVIRONMENTAL DOCUMENTS? ☑ YES ☐ NO

CCO DESCRIPTION:
Decking for Skyway Travelers

PROJECT DESCRIPTION:
YBITS-1 (Yerba Buena Island Transition Structures)

Original Contract Time:	Time Adj. This Change:	Previously Approved CCO Time Adjustments:	Percentage Time Adjusted: (including this change)	Total # of Unreconciled Deferred Time CCO(s): (including this change)
1390 Day(s)	0 Day(s)	0 Day(s)	0 %	9

THIS CHANGE ORDER PROVIDES FOR:
Provide labor, equipment and materials to remove existing wood decking and replace with plastic decking material for the two each travelers. Installation details are shown on attached drawing Nos. 790AC and 790AD of 806.

This project, the Yerba Buena Island Transition Structure (YBITS), provides for the construction of two bridges, which will connect eastbound and westbound traffic on the new east span of the San Francisco Oakland Bay Bridge (SFOBB) to the existing Yerba Buena Island (YBI) tunnel. As part of the earlier construction of the new East Span, two bikepath travelers (maintenance platforms) have been constructed under the previously completed Skyway (04-012024) contract.
Since the completion of the earlier contract (in 2008), the Department's Maintenance group has recommended that the wooden decking be replaced with polymer decking that should prove to be more stable and durable over the 150 year design life of the bridge. This CCO originally was implemented as SAS (Contract 04-0120F4) CCO Nos. 178 and 272; due to complications on that contract, the SAS Contractor has turned over the inventory of previously purchased materials to CT and will not do any further work. This means that for this YBITS CCO 191, the decking material will be provided by the Department; other materials such as bolts and associated hardware are to be provided by the YBITS Contractor.

This CCO provides for $60,000.00 in force account work, which will be paid for on an actual cost basis as provided in Section 5-1.17, "Force Account Payment", of the Special Provisions, and Section 4-1.03D, "Extra Work", of the Standard Specifications. This will be funded from the project's contingency fund. A cost analysis is on file.

This CCO was requested by Robert Kobal, coordinator of the completion of Skyway items.

No adjustment of contract time is warranted as the work will not affect the controlling operation.

Maintenance concurrence will be obtained from Lina Ellis, Structures Maintenance.

CONCURRED BY:

Construction Engineer:	William Howe	Date 05-06-13
Bridge Engineer:	Mehran Ardakanian	Date 06.19.13
Project Engineer:	Bob Zandipour, Design	Date 5-7-13
Project Manager:	Ken Terpstra	Date 5-7-13
FHWA Rep.:		Date
Environmental:		Date
Other (specify):	for Bill Zanetich Lina Ellis, Str. Maintenance	Date 5-7-13
Other (specify):	Clive Endress - Ldscp. Arch.	Date 5-7-13
District Prior Approval By:		Date
HQ (Issue Approve) By:		Date
Resident Engineer's Signature:	William Howe	Date 05-06-13

ESTIMATE OF COST

	THIS REQUEST	TOTAL TO DATE
ITEMS	$0.00	$0.00
FORCE ACCOUNT	$60,000.00	$60,000.00
AGREED PRICE	$0.00	$0.00
ADJUSTMENT	$0.00	$0.00
TOTAL	$60,000.00	$60,000.00

FEDERAL PARTICIPATION

☐ PARTICIPATING ☐ PARTICIPATING IN PART ☑ NONE
☐ NON-PARTICIPATING (MAINTENANCE) ☐ NON-PARTICIPATING

FEDERAL SEGREGATION (if more than one Funding Source or P.I.P. type)
☐ CCO FUNDED PER CONTRACT ☐ CCO FUNDED AS FOLLOWS

FEDERAL FUNDING SOURCE	PERCENT

ADA Notice: For individuals with sensory disabilities, this document is available in alternate formats. For information call: (916) 654-6410 or TDD (916) 654-3880 or write Records and Forms Management, 1120 N Street, MS-89, Sacramento, CA 95814.

STATE OF CALIFORNIA - DEPARTMENT OF TRANSPORTATION

CONTRACT CHANGE ORDER

Change Requested by Engineer

CCO 193	Suppl. No. 0	Contract No 04 - 0120S4	Road SF-80-12 7/13 2	FED. AID LOC.: NO FED AID

To: M C M CONSTRUCTION INC

You are directed to make the following changes from the plans and specifications or do the following described work not included in the plans and specifications for this contract ***NOTE: This change order is not effective until approved by the Engineer.***

Description of work to be done, estimate of quantities and prices to be paid (Segregate between additional work at contract price, agreed price and force account) Unless otherwise stated, rates for rental of equipment cover only such time as equipment is actually used and no allowance will be made for idle time This last percentage shown is the net accumulated increase or decrease from the original quantity in the Engineer's Estimate

Extra Work at Force Account:

On the previously constructed San Francisco/Oakland Bay Bridge East Span Skyway, as directed by the Engineer, provide labor, equipment and materials to assist the Engineer in developing leak investigation procedures and equipment, cut or drill investigation holes, make repairs and improvements, clean, caulk and paint various bikepath elements; and otherwise assist the Department as directed in the inspection for water, removal of water, and making improvements or repairs as required to eliminate leaks in the bikepath steel deck panels

This work will be paid for in accordance with Section 5-1.17, "Force Account Payment", of the Special Provisions and Section 4-1.03D, "Extra Work", of the Standard Specifications

Estimated Extra Work at Force Account = $100,000.00

Estimated Cost: Increase ✓ Decrease $100,000.00

By reason of this order the time of completion will be adjusted as follows: 0 days

Submitted by		
Signature William Howe	Resident Engineer William Howe, Senior R.E.	Date 05-06-13
Approval Recommended by		
Signature	Area Construction Manager Deanna Vichek	Date
Engineer Approval by		
Signature	Area Construction Manager Deanna Vichek	Date

We the undersigned contractor have given careful consideration to the change proposed and agree if this proposal is approved that we will provide all equipment furnish the materials except as may otherwise be noted above, and perform all services necessary for the work above specified and will accept as full payment therefor the prices shown above

NOTE: If you, the contractor, do not sign acceptance of this order, your attention is directed to the requirements of the specifications as to proceeding with the ordered work and filing a written protest within the time therein specified

Contractor Acceptance by		
Signature	(Print name and title)	Date

STATE OF CALIFORNIA - DEPARTMENT OF TRANSPORTATION

CONTRACT CHANGE ORDER MEMORANDUM

DATE: 5/6/2013 Page 1 of 1

TO: Deanna Vilcheck, ACM

FROM: William Howe, Senior R E

FILE E.A. 04 - 0120S4

CO-RTE-PM SF-80-12.7/13.2

FED. NO. NO FED AID

CCO# 193 | SUPPLEMENT# 0 | Category Code CHPT

CONTINGENCY BALANCE (incl. this change) $35,620,741.15

COST $100,000.00 INCREASE ✓ DECREASE

HEADQUARTERS APPROVAL REQUIRED? YES ✓ NO

SUPPLEMENTAL FUNDS PROVIDED $0.00

IS THIS REQUEST IN ACCORDANCE WITH ENVIRONMENTAL DOCUMENTS? ✓ YES NO

CCO DESCRIPTION:
Skyway Bikepath Leak Investigation

PROJECT DESCRIPTION:
YBITS-1 (Yerba Buena Island Transition Structures)

Original Contract Time	Time Adj. This Change	Previously Approved CCO Time Adjustments	Percentage Time Adjusted (including this change)	Total # of Unreconciled Deferred Time CCO(s) (including this change)
1390 Day(s)	0 Day(s)	0 Day(s)	0 %	9

THIS CHANGE ORDER PROVIDES FOR:

Provide labor, equipment and materials to assist the Engineer in developing leak investigation procedures and equipment, investigate and make repairs and improvements as required to eliminate leaks in the bikepath steel deck panels on the previously constructed San Francisco/Oakland Bay Bridge East Span Skyway

This project, the Yerba Buena Island Transition Structure (YBITS), provides for the construction of two bridges, which will connect eastbound and westbound traffic on the new east span of the San Francisco Oakland Bay Bridge (SFOBB) to the existing Yerba Buena Island (YBI) tunnel. As part of the earlier construction of the new East Span, a steel bikepath has been constructed under the previously completed Skyway (04-012024) contract. Since the completion of the earlier contract (in 2008), the Department's design group has found indications that water has somehow leaked into the bikepath sections that are designed to be sealed tight. This CCO will be implemented to assist the Engineer in an investigation into the cause(s) and extent of the leakage, and repair any destructive tests, including any painting and any associated caulking; and provide basic "fixes" for the work. Under the SAS Contract (04-0120F4), Caltrans issued a previous CCO No. 217 that addressed this work but due to other contract issues, they are no longer supporting this effort.

This CCO provides for $100,000.00 in force account work, which will be paid for on an actual cost basis as provided in Section 5-1.17, "Force Account Payment", of the Special Provisions, and Section 4-1.03D, "Extra Work" of the Standard Specifications. This will be funded from the project's contingency fund. A cost analysis is on file.

This CCO was requested by Robert Kobal, coordinator of the completion of Skyway items.

No adjustment of contract time is warranted as the work will not affect the controlling operation.

Maintenance concurrence is not required, as this does not affect any permanent feature of the project.

CONCURRED BY:

Construction Engineer	William Howe	Date 05-06-13
Bridge Engineer	Mehran Ardakanian	Date
Project Engineer	Bob Zandipour, Design	Date 5-7-13
Project Manager	Ken Terpstra	Date 5-7-13
FHWA Rep		Date
Environmental		Date
Other (specify)		Date
Other (specify)		Date
District Prior Approval By		Date
HQ (Issue Approval By)		Date
Resident Engineer's Signature		Date

ESTIMATE OF COST

	THIS REQUEST	TOTAL TO DATE
ITEMS	$0.00	$0.00
FORCE ACCOUNT	$100,000.00	$100,000.00
AGREED PRICE	$0.00	$0.00
ADJUSTMENT	$0.00	$0.00
TOTAL	$100,000.00	$100,000.00

FEDERAL PARTICIPATION

PARTICIPATING | PARTICIPATING IN PART | ✓ NONE

NON-PARTICIPATING (MAINTENANCE) | NON-PARTICIPATING

FEDERAL SEGREGATION (if more than one Funding Source or FTIP type)

CCO FUNDED PER CONTRACT | CCO FUNDED AS FOLLOWS

FEDERAL FUNDING SOURCE | PERCENT

CONTRACT CHANGE ORDER

Change Requested by: Engineer

CCO 197	Suppl. No. 0	Contract No. 04 - 0120S4	Road SF-80-12.7/13.2	FED. AID LOC.: NO FED AID

To: **M C M CONSTRUCTION INC**

You are directed to make the following changes from the plans and specifications or do the following described work not included in the plans and specifications for this contract. ***NOTE: This change order is not effective until approved by the Engineer.***

Description of work to be done, estimate of quantities and prices to be paid. (Segregate between additional work at contract price, agreed price and force account.) Unless otherwise stated, rates for rental of equipment cover only such time as equipment is actually used and no allowance will be made for idle time. This last percentage shown is the net accumulated increase or decrease from the original quantity in the Engineer's Estimate.

Add the following work:

Removal of existing surfacing and installing polyester concrete overlay for I-80 Station E 49+59.250 to 51+17.497 (lower deck) per revised Contract Drawings 2R2, 3R1, 5R2, 110R1, 111R3 and new sheets 2S1R1 and 14S1 (Sheet Nos. 4 through 10 of this change order); and for Station W 50+25 (approximately) to 51+28.340 (upper deck) per new sheets 790AKS and 790ALS (Sheet Nos. 11 and 12 of this change order).

Work is to be completed prior to the traffic shift onto the new Bay Bridge. The traffic shift will occur during a full bridge closure, currently scheduled for several days over Labor Day Weekend 2013, or at another time as determined by the Engineer. Traffic control for the full bridge closure will be performed by others.

After this overlay work is completed, the pavement delineation for the areas involved in this change order will be completed during the full bridge closure. The pavement delineation work is already included in the contract.

Pricing of this change order assumes that the following portions of the grinding and overlay are performed prior to the full bridge closure:

- All work on the closed side of K-rail that is accessible.
- Upper deck AC in the travelled lanes may be removed during the week before the planned full bridge closure, utilizing lane closures in accordance with Special Provision Section 10-1.31, "Maintaining Traffic". Lane closures may be provided either under this or another change order, or by others as directed by the Engineer.

The remaining portions of the grinding and polyester overlay (both decks) will be completed during the full bridge closure. All work shall be coordinated with other projects, as approved by the Engineer.

Construction operations on the westbound upper deck between Station 50+00 and 51+40 shall be limited to control the loads on the structure, as approved by the Engineer. For any polyester concrete operations prior to the full bridge closure, Lane 5 should be closed during the operation, and only one operation at a time will be allowed on the west tie-in structure.

Changes shown on the new or revised drawings that are associated with the barrier rails and crash cushions will be addressed under a separate change order.

Estimate of Decrease in Contract Item at Contract Price:

Item No. 40: REMOVE EPOXY ASPHALT CONCRETE SURFACING

-212.15 M2 (-106.08%) $40.00 /M2 = -$8,486.00 (-100.00%)

Estimated total cost for Decrease in Contract Item.....($8,486.00)

Any adjustment in compensation due in accordance with Section 4-1.03B(2), "Decreases of More Than 25 Percent", of the Standard Specifications for the above item is included in the Adjustment in Compensation at Lump Sum included below, and no further adjustment in compensation will be made.

Extra Work at Force Account:

As authorized by the Engineer, and in accordance with Section 4-1.03D, "Extra Work", and Section 9-1.03, "Force Account Payment", of the Standard Specifications, and Section 5-1.17, "Force Account Payment", of the Special Provisions, provide all labor, equipment and materials necessary to sawcut and install expansion joints; repair unsound underlying concrete; temporarily move and replace K-rails while performing upper deck AC removal before the full bridge closure; and perform other work as directed by the Engineer. The placement of K-rail to remain in place after the bridge opening is addressed in CCO No. 166.

CONTRACT CHANGE ORDER

Change Requested by: Engineer

CCO 197	Suppl. No. 0	Contract No. 04 - 0120S4	Road SF-80-12.7/13.2	FED. AID LOC.: NO FED AID

Estimate of Extra Work at Force Account = $100,000.00

Adjustment of Compensation at Unit Price:

1) FURNISH POLYESTER CONCRETE OVERLAY 212 M3 @ $3,492.00/M3 = $740,304.00

Lane closures for this work (not associated with full bridge closure by others):

2) Mainline I-80 Lane Night Closure (when labor rates are paid at straight time - Monday through Friday night into Saturday AM; 8 hour maximum closure), 10 EA @ $3,325.00/EA = $ 33,250.00

3) Mainline I-80 Lane Night Closure (when labor rates are at time and one-half - Saturday night to Sunday AM; 8 hour maximum closure) 2 EA @ $4,319.00/EA = $ 8,638.00

4) Mainline I-80 Lane Night Closure (when labor rates are double time - Sunday night to Monday AM or Holiday to following day; 8 hour maximum closure) 1 EA @ $5,161.00/EA = $ 5,161.00

5) Extending Mainline I-80 Lane Closure: Additional hours (when labor rates are at ime and one-half) 20 HR @ $ 422.00/HR = $ 8,440.00

6) Extending Mainline I-80 Lane Closure: Additional hours (when labor rates are at double time) 10 HR @ $ 528.00/HR = $ 5,280.00

The agreed unit prices for lane closures include the labor, equipment and materials as required to close one, two or three lanes in one direction (Eastbound or Westbound Interstate 80), as determined by the Engineer.

The agreed prices include all labor, equipment and material as required. The agreed prices constitute full payment, including all markups, for this change.

Adjustment of Compensation at Agreed Unit Price = $801,073.00

Adjustment of Compensation at Lump Sum:

Remove all epoxy asphalt and Portland Cement Concrete (PCC) surfacing as required; prepare concrete bridge deck surface; removal of all unsound concrete; place polyester concrete overlay. Price includes mobilization for this operation, and overtime premiums as required to complete the work as described.

This price includes all materials, labor and equipment to complete the work within the time span determined during the full bridge closure; and providing adequate backup equipment on-site to accommodate any breakdowns or unknowns that may exist during the closure. The price anticipates that when scheduled to do so through the full bridge closure, the Contractor will work continuously on these operations without long breaks or interruptions; this may require multiple shifts and crews; and include overtime and shift differential premiums.

The work for grinding and removing existing surfaces includes epoxy AC and the top portions of several existing PCC at-grade beams at the lower deck. The AC pavement also includes areas that were previously thickened to provide a higher grade elevation for the temporary roadway alignment. The additional removal of all these sections is included in the price of this change order.

The as-builts for the area show that there are joints in the area of removal; prior work in the area has indicated that some joints and existing steel plate manhole covers may not correctly show on the as-builts.

The price includes the cost for the time and effort to remove excess materials ordered from the project site at the end of the project. The Contractor will assure that enough material will be on-site so that there is no shortage of materials, and the cost of the effort to remove excess materials from the project is covered in this price, except that if the quantity of excess materials exceeds 14 M3, the restocking charge by the supplier will be reimbursed separately.

Adjustment of Compensation at Agreed Lump Sum = $887,332.00

CONTRACT CHANGE ORDER

Change Requested by: Engineer

CCO 197	Suppl. No. 0	Contract No. 04 - 012064	Road SF-80-12.7/13.2	FED. AID LOC.: NO FED AID

Estimated Cost: Increase ☑ Decrease ☐ $1,779,919.00

By reason of this order the time of completion will be adjusted as follows: 0 days

Signature William Howe	Resident Engineer William Howe, Senior R.E.	Date 07.26.13
Signature Tony Anziano	Region Construction Division Chief Tony Anziano	Date 7/29/13
Signature Tony Anziano	Region Construction Division Chief Tony Anziano	Date 9/12/13

We the undersigned contractor, have given careful consideration to the change proposed and agree, if this proposal is approved, that we will provide all equipment, furnish the materials, except as may otherwise be noted above, and perform all services necessary for the work above specified, and will accept as full payment therefor the prices shown above.

NOTE: If you, the contractor, do not sign acceptance of this order, your attention is directed to the requirements of the specifications as to proceeding with the ordered work and filing a written protest within the time therein specified.

Signature	(Print name and title) Edmunds Anfuchi-Treasurer	Date 9/10/2013

Dist	COUNTY	ROUTE	KILOMETER POST TOTAL PROJECT	SHEET No.	TOTAL SHEETS
04	SF	80	12.7/13.2	2R2	806

REGISTERED CIVIL ENGINEER 3-05-08 DATE

6-23-08
PLANS APPROVAL DATE

REGISTERED PROFESSIONAL ENGINEER T.T. Lai No. 63630 Exp. 9-30-08 CIVIL STATE OF CALIFORNIA

THE STATE OF CALIFORNIA OR ITS OFFICERS OR AGENTS SHALL NOT BE RESPONSIBLE FOR THE ACCURACY OR COMPLETENESS OF ELECTRONIC COPIES OF THIS PLAN SHEET.

Caltrans Metric

TYPICAL STRUCTURAL SECTIONS

1. 20 mm POLYESTER CONCRETE
   290 mm PCC
   BOND BREAKER (POLYETHYLENE FILM)
   150 mm PCC
   215 mm Cl 3 AB △2
2. Approx. 20 mm REMOVE EPOXY AC SURFACING OR PCC (COMPLETELY REMOVE EPOXY AC SURFACING)
   20 mm POLYESTER CONCRETE
3. 45 TO 300 mm HMA SURFACING (TYPE A)
4. 135 mm HMA (TYPE A)
   235 mm Cl 3 AB △2
5. 50 mm COLD PLANE AC SURFACING
   50 TO 150 mm POLYESTER CONCRETE

MARK	DATE	DESCRIPTIONS	REV.	CK	CCO NO.
△2	05/07/13	Eastbound Viaduct Overlay	BW	AS	
△1	12/07/10	Revised E-Line Typical Section	BW	NH	64

REVISIONS

CONTRACT CHANGE ORDER NO. 197
SHEET 4 OF 12

ABBREVIATIONS:

TCE TEMPORARY CONSTRUCTION EASEMENT

LEGEND:

REMOVE CONCRETE

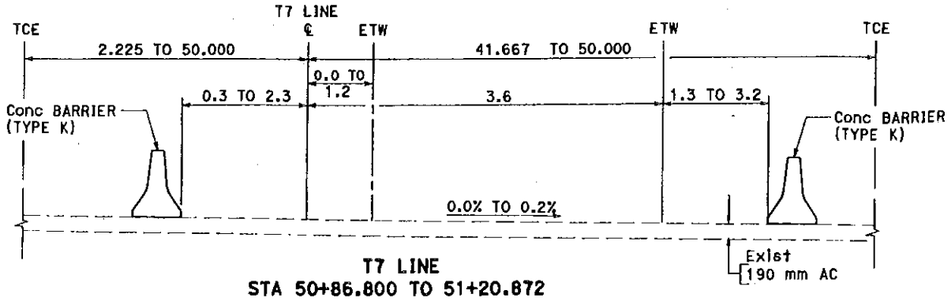

T7 LINE
STA 50+86.800 TO 51+20.872

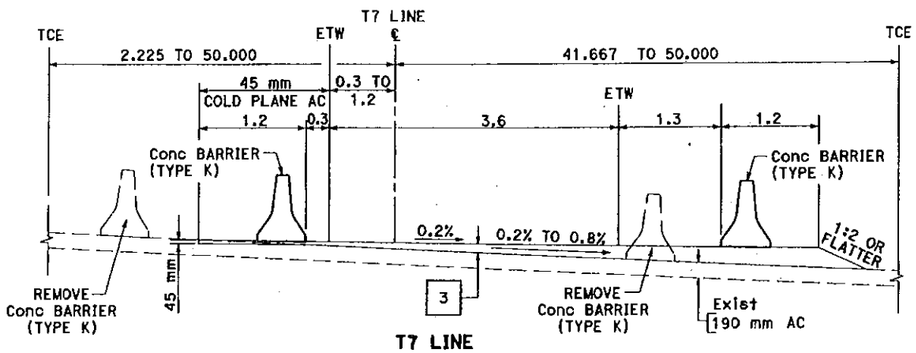

T7 LINE
STA 50+58.000 TO 50+86.800

Brian M. Wood No. 76969 Exp. 12-31-10 CIVIL STATE OF CALIFORNIA
Brian M Wood
FOR REVISIONS ONLY
12/07/10 △1

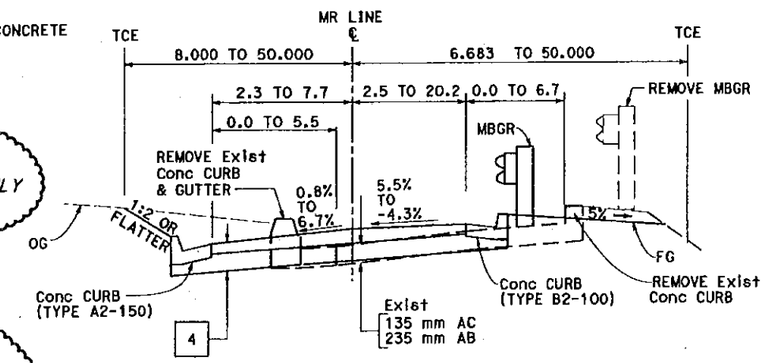

MR LINE
STA 0+92.53 TO 1+74.945

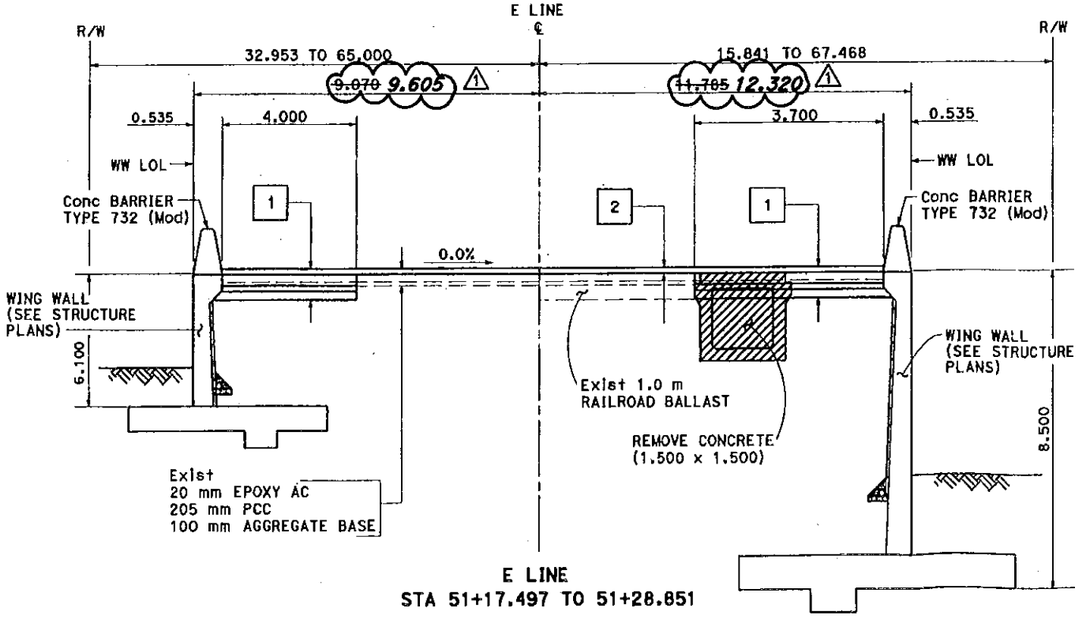

E LINE
STA 51+17.497 TO 51+28.851

Brian M. Wood No. 76969 Exp. 12-31-14 CIVIL STATE OF CALIFORNIA
FOR REVISION △2 ONLY
Brian M Wood
05/07/13

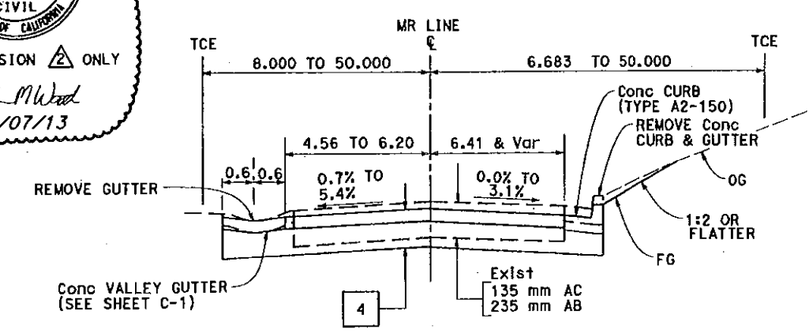

MR LINE
STA 0+80.00 TO 0+92.53

TYPICAL CROSS SECTIONS

NO SCALE

ALL DIMENSIONS ARE IN METERS UNLESS OTHERWISE SHOWN

X-1

STATE OF CALIFORNIA - DEPARTMENT OF TRANSPORTATION
Caltrans
DESIGN

FUNCTIONAL SUPERVISOR: BOB ZANDIPOUR
CALCULATED-DESIGNED BY: TRINH LAI
CHECKED BY: BOB ZANDIPOUR
REVISED BY: TL
DATE REVISED: 10/07

LAST REVISION 03-14-08
DATE PLOTTED => 18-JUL-2013
TIME PLOTTED => 13:40

BORDER LAST REVISED 3/1/2007
RELATIVE BORDER SCALE IS IN MILLIMETERS 0 20 40 60 80
USERNAME => s133768
DGN FILE => 40120sco001.cco
CU 04251
EA 0120S1

Dist	COUNTY	ROUTE	KILOMETER POST TOTAL PROJECT	SHEET No.	TOTAL SHEETS
04	SF	80	12.7/13.2	2 S1R1	806

Brian M Wood 05-07-13
REGISTERED CIVIL ENGINEER DATE

PLANS APPROVAL DATE

REGISTERED PROFESSIONAL ENGINEER Brian M. Wood No. 76969 Exp. 12-31-14 CIVIL STATE OF CALIFORNIA

THE STATE OF CALIFORNIA OR ITS OFFICERS OR AGENTS SHALL NOT BE RESPONSIBLE FOR THE ACCURACY OR COMPLETENESS OF ELECTRONIC COPIES OF THIS PLAN SHEET.

REGISTERED PROFESSIONAL ENGINEER Brian M. Wood No. 76969 Exp. 12-31-14 CIVIL STATE OF CALIFORNIA

FOR REVISION 1 ONLY
Brian M Wood
06/21/13

Caltrans Metric

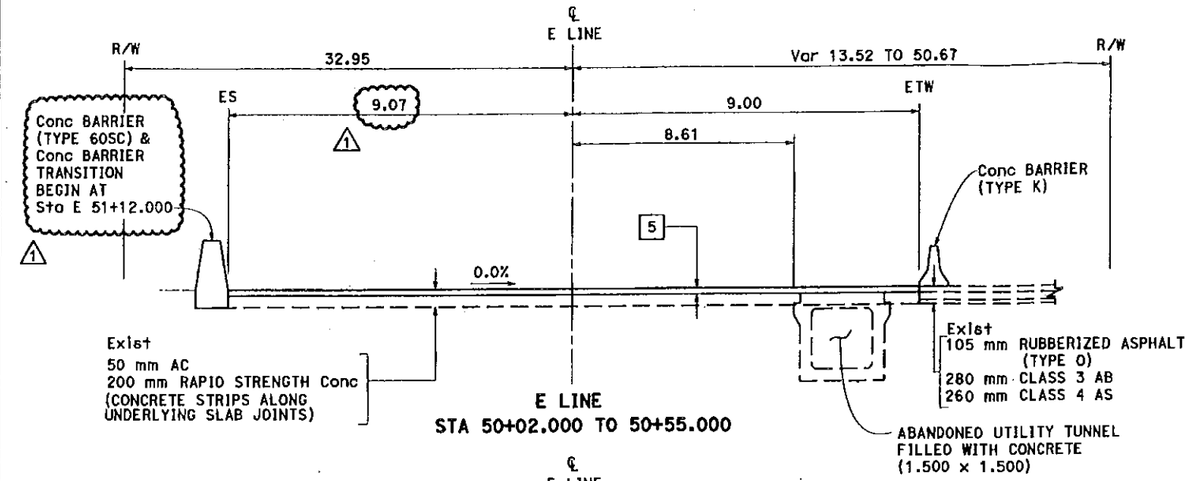

E LINE
STA 50+02.000 TO 50+55.000

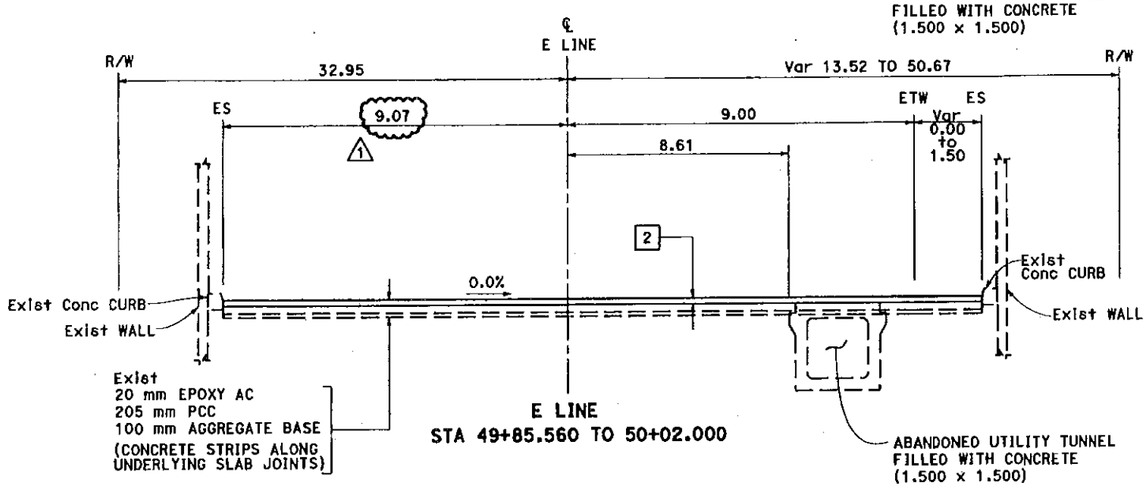

E LINE
STA 49+85.560 TO 50+02.000

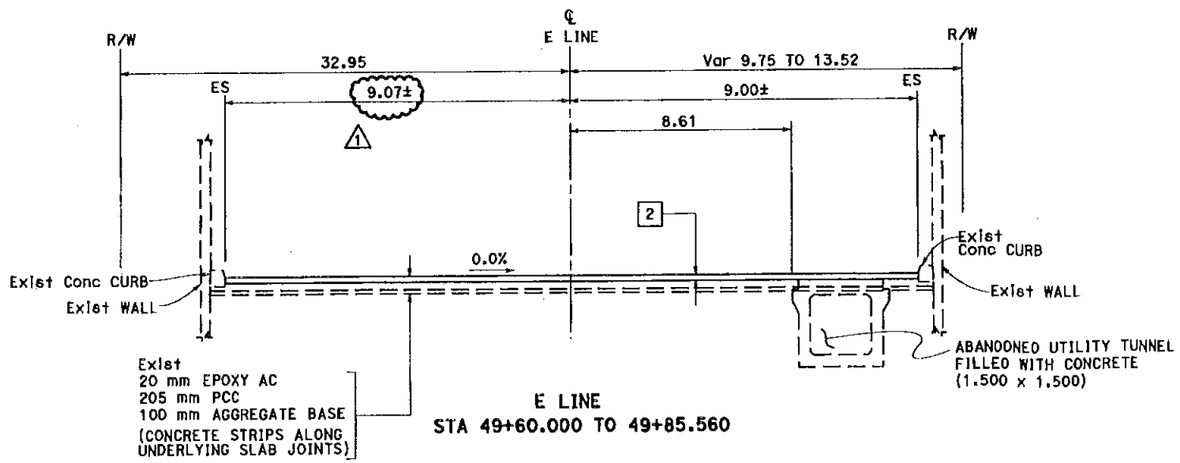

E LINE
STA 49+60.000 TO 49+85.560

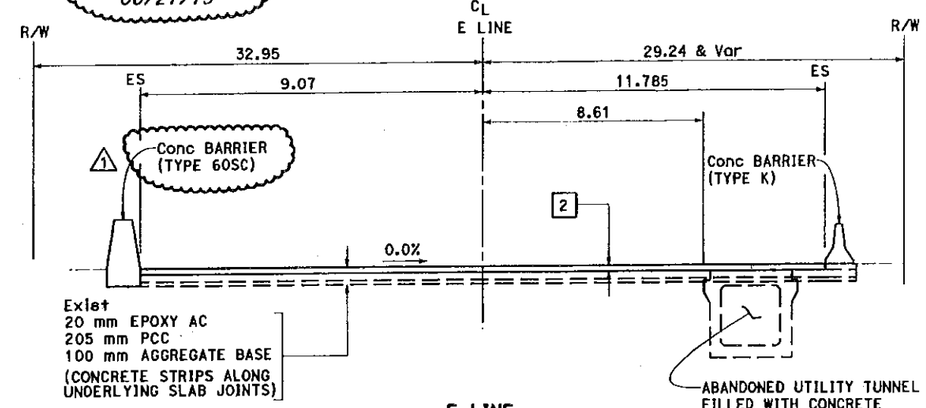

E LINE
STA 50+94.184 TO 51+17.497

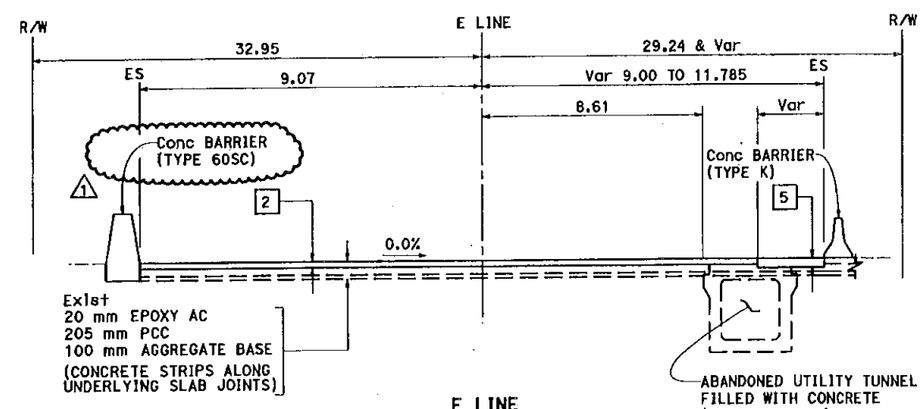

E LINE
STA 50+55.000 TO 50+94.184

MARK	DATE	DESCRIPTIONS	REV	CK	CCO NO.
1	06/21/13	Eastbound Viaduct Overlay (Barrier Modifications)	BW	AS	
0	05/07/13	Eastbound Viaduct Overlay	BW	AS	

REVISIONS

CONTRACT CHANGE ORDER NO. 197
SHEET 5 OF 12

TYPICAL CROSS SECTIONS

NO SCALE

ALL DIMENSIONS ARE IN METERS UNLESS OTHERWISE SHOWN

X-1A

CALCULATED-DESIGNED BY	BRIAN WOOD	REVISED BY	BW
CHECKED BY	BOB ZANDIPOUR	DATE REVISED	04/13
FUNCTIONAL SUPERVISOR	BOB ZANDIPOUR		

STATE OF CALIFORNIA - DEPARTMENT OF TRANSPORTATION
Caltrans
DESIGN

LAST REVISION 05-07-13 DATE PLOTTED => 18-JUL-2013 TIME PLOTTED => 15:25

Dist	COUNTY	ROUTE	KILOMETER POST TOTAL PROJECT	SHEET No.	TOTAL SHEETS
04	SF	80	12.7/13.2	3R1	806

REGISTERED CIVIL ENGINEER 3-05-08 DATE

6-23-08
PLANS APPROVAL DATE

REGISTERED PROFESSIONAL ENGINEER T.T. Lai No. 63630 Exp. 9-30-08 CIVIL STATE OF CALIFORNIA

THE STATE OF CALIFORNIA OR ITS OFFICERS OR AGENTS SHALL NOT BE RESPONSIBLE FOR THE ACCURACY OR COMPLETENESS OF ELECTRONIC COPIES OF THIS PLAN SHEET.

Caltrans Metric

FOR COMPLETE RIGHT OF WAY AND ACCURATE ACCESS DATA, SEE RIGHT OF WAY RECORD MAPS AT DISTRICT OFFICE.

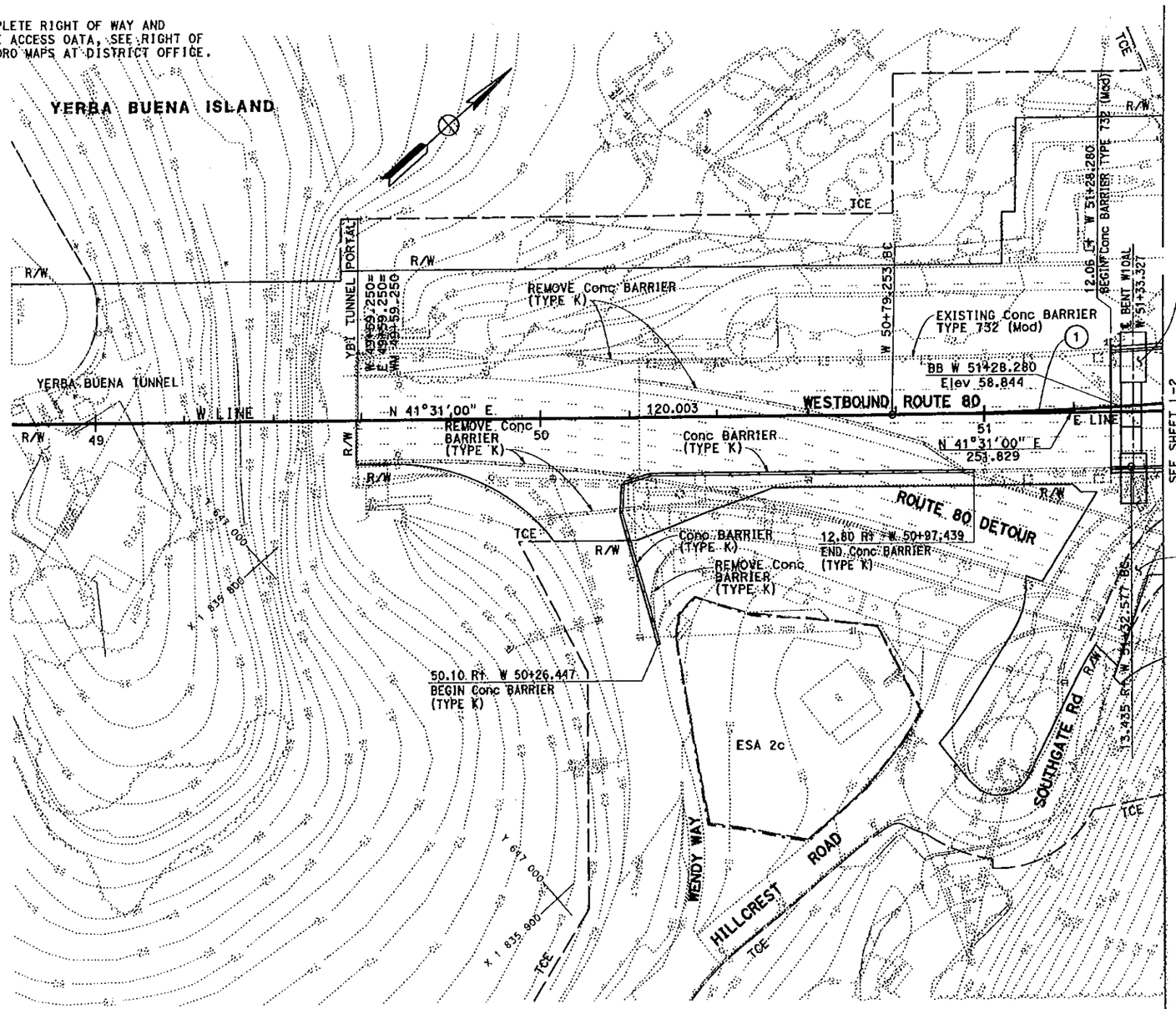

WESTBOUND SFOBB
Br No. 34-0006L

NOTES:

1. COORDINATES, DISTANCES AND BEARINGS ARE BASED ON CCS 1983 ZONE 3.
2. ELEVATIONS ARE BASED ON 1929 NATIONAL GEODETIC VERTICAL DATUM (NGVD).
3. SEE CONSTRUCTION DETAIL PLANS FOR ESA BOUNDARIES AND TEMPORARY CONSTRUCTION EASEMENT
4. FOR IRRIGATION CROSSOVER AND DETAILS NOT SHOWN, SEE CONSTRUCTION DETAIL PLANS.
5. SEE STRUCTURE PLANS FOR DETAILS OF BRIDGE No. 34-0006 L/R
6. FOR LAYOUT OF THE ELECTRICAL DUCT BANK, SEE UTILITY PLANS.
7. SEE CONSTRUCTION DETAIL PLAN FOR THE TEMPORARY EB ON-RAMP (T7 LINE) AND MACALLA ROAD (MR LINE) DETAILS.

ABBREVIATIONS:

ATM	AREA TO BE MONITORED DURING CONSTRUCTION
ESA	ENVIRONMENTALLY SENSITIVE AREA
SCA	SPECIAL CONSTRUCTION AREA
SFOBB	SAN FRANCISCO OAKLAND BAY BRIDGE
TCE	TEMPORARY CONSTRUCTION EASEMENT
USCG	UNITED STATES COAST GUARD
YBI	YERBA BUENA ISLAND

LEGEND:

- (No.) CURVE NUMBER
- ESA
- TCE
- BCDC
- EASEMENT
- PREPARE Conc DECK SURFACE & POLYESTER Conc OVERLAY
- COLD PLANE Conc/AC PAVEMENT OR REMOVE EPOXY AC SURFACING
- [No.] STRUCTURAL SECTION No.

REGISTERED PROFESSIONAL ENGINEER Brian M. Wood No. 76969 Exp. 12-31-14 CIVIL STATE OF CALIFORNIA

FOR REVISION 1 ONLY
Brian M Wood
05/07/13

CURVE DATA

No.	R	Δ	T	L	N-COORDINATE	E-COORDINATE
1	1070	05°03'59.970"	47.185	94.309	647836.231	1835069.849

MARK	DATE	DESCRIPTIONS	REV	CK	CCO NO.
1	05/07/13	Eastbound Viaduct Overlay	BW	AS	

REVISIONS

CONTRACT CHANGE ORDER NO. 197
SHEET 6 OF 12

ALL DIMENSIONS ARE IN METERS UNLESS OTHERWISE SHOWN

LAYOUT
SCALE 1:500

L-1

TRINH LAI	TL	CALCULATED-DESIGNED BY	FUNCTIONAL SUPERVISOR
BOB ZANDIPOUR	10/07	CHECKED BY	BOB ZANDIPOUR
REVISED BY	DATE REVISED		

STATE OF CALIFORNIA - DEPARTMENT OF TRANSPORTATION
Caltrans
DESIGN

LAST REVISION 03-14-08 | DATE PLOTTED => 18-JUL-2013 | TIME PLOTTED => 16:01

BORDER LAST REVISED 3/1/2007 | RELATIVE BORDER SCALE IS IN MILLIMETERS 0 20 40 60 80 | USERNAME => s133768 | DGN FILE => 40120seb001.cco | CU 04251 | EA 0120S1

Dist	COUNTY	ROUTE	KILOMETER POST TOTAL PROJECT	SHEET No.	TOTAL SHEETS
04	SF	80	12.7/13.2	5R2	806

REGISTERED CIVIL ENGINEER 3-05-08 DATE

6-23-08
PLANS APPROVAL DATE

REGISTERED PROFESSIONAL ENGINEER T.T. Lai No. 63630 Exp. 9-30-08 CIVIL STATE OF CALIFORNIA

THE STATE OF CALIFORNIA OR ITS OFFICERS OR AGENTS SHALL NOT BE RESPONSIBLE FOR THE ACCURACY OR COMPLETENESS OF ELECTRONIC COPIES OF THIS PLAN SHEET.

Caltrans Metric

FOR COMPLETE RIGHT OF WAY AND ACCURATE ACCESS DATA, SEE RIGHT OF WAY RECORD MAPS AT DISTRICT OFFICE.

YERBA BUENA ISLAND

TCE

R/W

Conc BARRIER TYPE 732 (Mod)

REMOVE Conc BARRIER (TYPE K)

YB1 TUNNEL PORTAL
9.07 LT+ E 50+24.000
END Conc BARRIER TRANSITION
BEGIN Conc BARRIER TYPE 60SC

9.07 LT+ E 50+12.000
BEGIN Conc BARRIER TRANSITION (SEE DETAIL A)

Conc BARRIER TYPE 60SC

Conc BARRIER TYPE 732 (Mod)

E 51+17.497
END Conc BARRIER (TYPE 60SC)
BEGIN Conc BARRIER (Type 732 Mod)

51+28.835 BB E 51+32.010 CONFORM Elev 51.336

℄ Abut W11R E 51+32.810

EASTBOUND SFOBB Br No. 34-0006R

N 41°31'00" E 251.829

EASTBOUND ROUTE 80

E LINE

9.070 9.070 9.070 9.070 11.785 11.785

RELOCATE Exist CRASH CUSHION

9.00 Rt E 49+83.647
BEGIN Conc BARRIER (TYPE K)

REMOVE Conc BARRIER (TYPE K)

E 50+02.000 TO E 50+35.000
SEE Const DETAILS FOR GRID GRADING

ROUTE 80 DETOUR

Conc BARRIER (TYPE K)

REMOVE Conc BARRIER (TYPE K)

ESA 2c

SOUTHGATE ROAD

11.79 Rt E 51+17.497
END Conc BARRIER (TYPE K)
BEGIN Conc BARRIER (TYPE 732 Mod)

11.890 Rt E 51+34.766 BC

SEE SHEET L-4

FUTURE SOUTHGATE Rd (BY OTHERS)

WENDY WAY

HILLCREST ROAD

S A N F R A N C I S C O

EASTBOUND

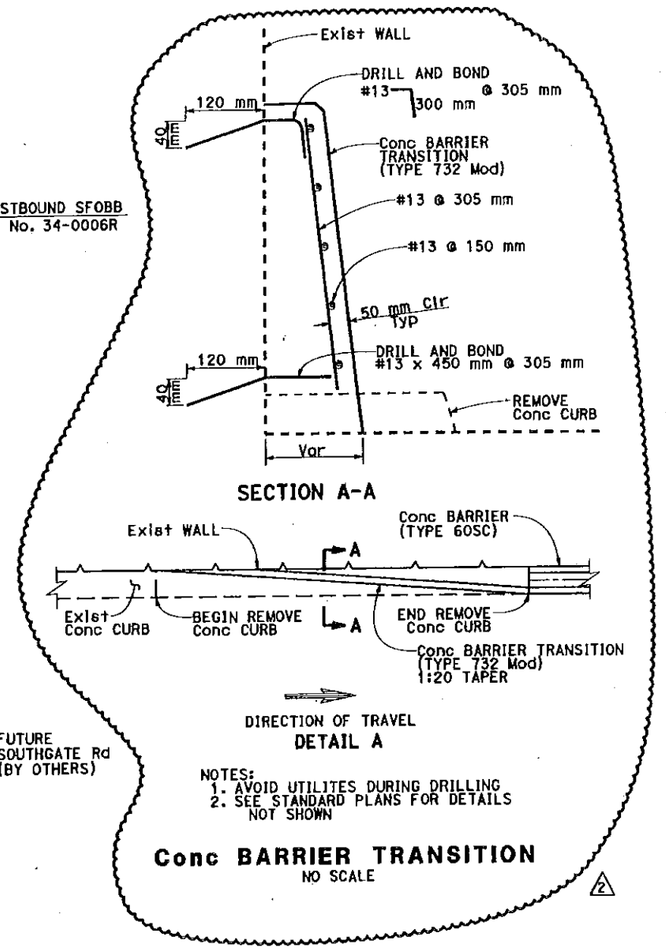

REGISTERED PROFESSIONAL ENGINEER Brian M. Wood No. 76969 Exp. 12-31-14 CIVIL STATE OF CALIFORNIA

FOR REVISIONS 1 AND 2 ONLY
Brian M Wood 06/21/13

MARK	DATE	DESCRIPTIONS	REV	CK	CCO NO.
2	06/21/13	Eastbound Viaduct Overlay (Barrier Modifications)	BW	AS	
1	05/07/13	Eastbound Viaduct Overlay	BW	AS	

REVISIONS

CONTRACT CHANGE ORDER NO. 197
SHEET 7 OF 12

LAYOUT
SCALE 1:500

FOR NOTES, ABBREVIATIONS &/OR LEGEND, SEE SHEET L-1

ALL DIMENSIONS ARE IN METERS UNLESS OTHERWISE SHOWN

L-3

STATE OF CALIFORNIA - DEPARTMENT OF TRANSPORTATION
Caltrans
DESIGN

FUNCTIONAL SUPERVISOR: BOB ZANDIPOUR
CALCULATED-DESIGNED BY: TRINH LAI
CHECKED BY: BOB ZANDIPOUR
REVISED BY: TL
DATE REVISED: 10/07

ASST. DESIGN ENGINEER: 03-14-08
DATE PLOTTED => 18-JUL-2013
TIME PLOTTED => 16:25

BORDER LAST REVISED 3/1/2007

RELATIVE BORDER SCALE IS IN MILLIMETERS 0 20 40 60 80

USERNAME => e133768
DGN FILE => 40120sea003.cco

CU 04251

EA 0120S1

MARK	DATE	DESCRIPTIONS	REV	CK	CCO NO.
0	05/07/13	Eastbound Viaduct Overlay	BW	AS	

REVISIONS

CONTRACT CHANGE ORDER NO. 197
SHEET 8 OF 12

District	COUNTY	ROUTE	KILOMETER POST TOTAL PROJECT	SHEET No.	TOTAL SHEETS
04	SF	80	12.7/13.2	14 S1	806

REGISTERED CIVIL ENGINEER 05-07-13 DATE

PLANS APPROVAL DATE

REGISTERED PROFESSIONAL ENGINEER Brian M. Wood No. 76969 Exp. 12-31-14 CIVIL STATE OF CALIFORNIA

THE STATE OF CALIFORNIA OR ITS OFFICERS OR AGENTS SHALL NOT BE RESPONSIBLE FOR THE ACCURACY OR COMPLETENESS OF ELECTRONIC COPIES OF THIS PLAN SHEET.

Caltrans Metric

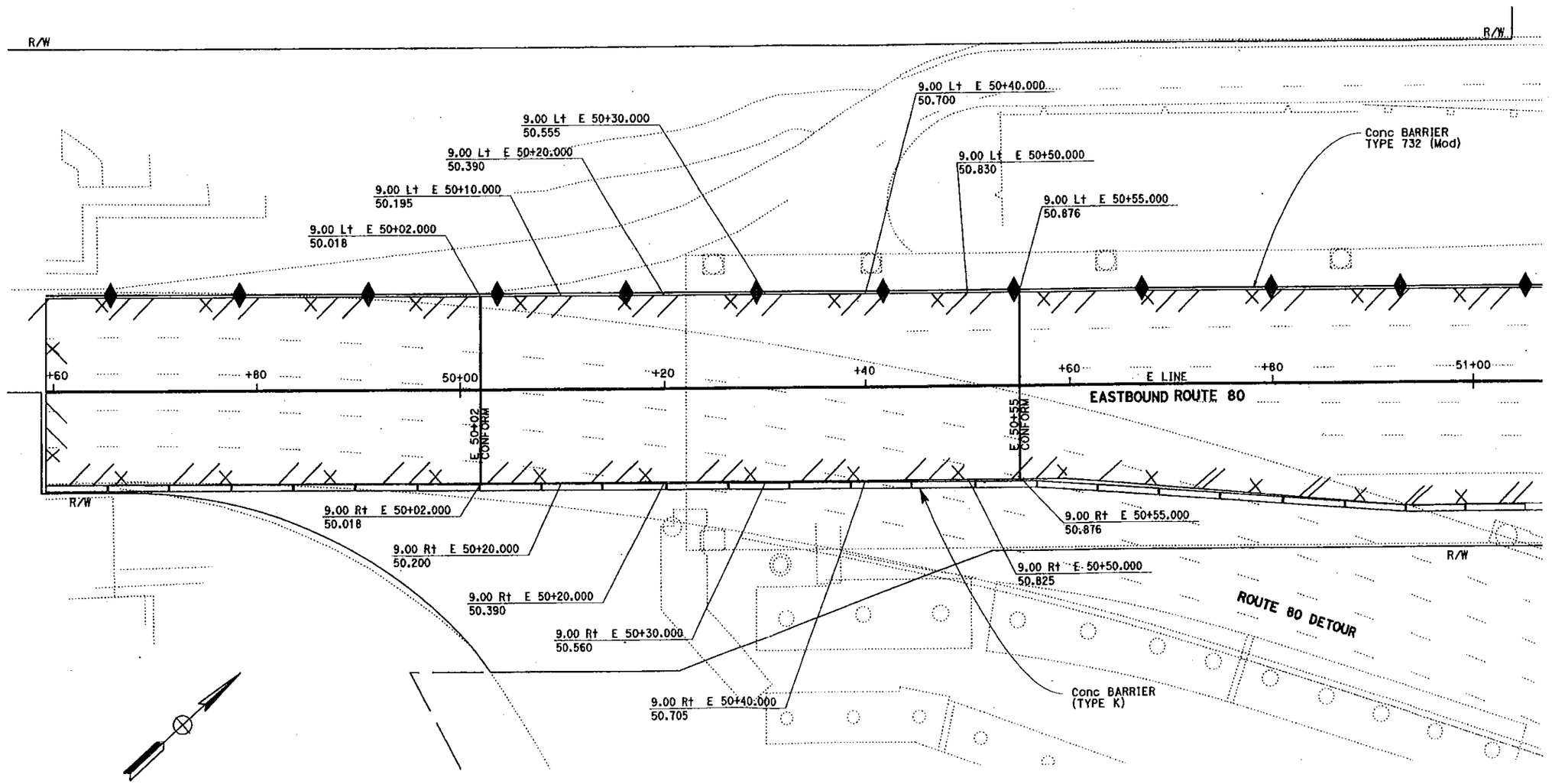

ALL DIMENSIONS ARE IN METERS UNLESS OTHERWISE SHOWN

CONSTRUCTION DETAILS
EB OVERLAY GRID GRADING
SCALE 1:200

C-2A

FOR NOTES, ABBREVIATIONS &/OR LEGEND, SEE SHEET C-1

STATE OF CALIFORNIA - DEPARTMENT OF TRANSPORTATION
Caltrans DESIGN

FUNCTIONAL SUPERVISOR: BOB ZANDIPOUR
CALCULATED-DESIGNED BY: BRIAN WOOD
CHECKED BY: BOB ZANDIPOUR
REVISED BY: BW
DATE REVISED: 04/13

LAST REVISION 05-07-13
DATE PLOTTED => 19-JUL-2013
TIME PLOTTED => 09:14

BORDER LAST REVISED 3/1/2007

RELATIVE BORDER SCALE IS IN MILLIMETERS 0 20 40 60 80

USERNAME => s133768
DGN FILE => 40120sgo002c.cco

CU 04251

EA 0120S1

Dist	COUNTY	ROUTE	KILOMETER POST TOTAL PROJECT	SHEET No.	TOTAL SHEETS
04	SF	80	12.7/13.2	111 R3	806

REGISTERED CIVIL ENGINEER 3-05-08 DATE

6-23-08
PLANS APPROVAL DATE

REGISTERED PROFESSIONAL ENGINEER T.T. Loi No. 63630 Exp. 9-30-08 CIVIL STATE OF CALIFORNIA

THE STATE OF CALIFORNIA OR ITS OFFICERS OR AGENTS SHALL NOT BE RESPONSIBLE FOR THE ACCURACY OR COMPLETENESS OF ELECTRONIC COPIES OF THIS PLAN SHEET.

Caltrans Metric

CONCRETE BARRIERS

SHEET No.	LOCATION		CONCRETE BARRIER (TYPE K)	CONCRETE BARRIER TYPE 732 (MOD)	CONCRETE BARRIER TYPE 60SC & TRANSITION	REMOVE CONCRETE BARRIER (TYPE K)	BARRIER COVER PLATE
			m				EA
L-1	W 50+05.000 TO 50+45.000	Lt				40	
L-1	W 50+21.000 TO 51+00.000	Lt, Rt				90	
L-1	W 49+60.000 TO 50+25.000	Rt				65	
L-1	W 50+00.000 TO 50+25.000	Rt				25	
L-1	W 50+18.000 TO 50+98.000	Rt	116				
L-1	W 50+24.000 TO 50+30.000	Rt				19	
L-3	E 50+12.000 TO 51+17.495	Lt		~~158~~	106		
L-3	E 50+00.000 TO 51+17.495	Lt				118	
L-3	E 51+22.104 TO 51+32.210	Lt		10		10	
L-3	E 51+17.495 TO 51+32.210	Rt		15			
L-3	E 50+98.000 TO 51+32.210	Rt				34	
L-3	E 49+60.000 TO 51+00.000	Lt				143	
L-3	E 50+02.000 TO 50+99.000	Rt	~~72~~ 99				
L-4	E 52+95.445 TO 54+21.447	Rt	~~12~~ 125				
L-4	E 53+05.000 TO 53+10.000	Rt	6				
L-4	E 54+18.000 TO 54+23.000	Rt	6				
L-5	E 54+21.447 TO 55+92.000	Rt	~~165~~ 167				
C-2	T7 50+58.000 TO 51+20.611	Lt, Rt				~~33~~ 24	
~~C-2~~	~~T7 50+60.000 TO 50+78.000~~	~~Rt~~				~~21~~ 0	
C-2	T7 50+53.000 TO 51+14.000	Lt	~~60~~ 32				2
C-2	T7 50+52.000 TO 51+21.000	Rt	~~60~~ 31				1
R-6	SG 11+16.000 TO 11+45.000	Rt		32			
SUBTOTAL			~~503~~ 568	~~213~~ 57	106	~~596~~ 568	3
FROM STRUCTURE PLANS		Lt, Rt		1599			
TOTAL			~~503~~ 568	~~1812~~ 1656	106	~~596~~ 568	3

1 2 3 2 3

REMOVE CONCRETE

SHEET No.	LOCATIONS		CONC DUCT BANK	CURB & GUTTER	CELL TOWER FOUNDATION
			m3		
X-1	E 51+17.497 TO 51+32.010	Rt	23		
C-1	MR 0+80.000 TO 1+74.940	Lt, Rt		18	
L-3	E 50+12.000 TO 50+24.000	Lt		2	
C-1	MR 1+15.000 TO 1+23.000	Lt			13
SUBTOTAL			23	~~18~~ 20	13
TOTAL				~~54~~ 56	

2

RELOCATE CRASH CUSHION

SHEET No.	LOCATION		RELOCATE CRASH CUSHION
			EA
L-3	E 50+02.000	Rt	1
C-2	T7 50+75.000	Rt	1
TOTAL			~~4~~ 2

2 3

CRASH CUSHION MODULE, SAND FILLED

SHEET No.	LOCATION		CRASH CUSHION MODULE
			EA
L-5	E 54+27.150	Rt	14
TOTAL			14

1

MINOR CONCRETE (MINOR STRUCTURE)

SHEET No.	LOCATIONS	m3
DO-2	DRAINAGE FACILITY	58
UO-1	UNDERGROUND UTILITY ENCASEMENT	40
TOTAL		98

MINOR CONCRETE (MISCELLANEOUS CONSTRUCTION)

SHEET No.	LOCATIONS	Conc VALLEY GUTTER	Conc CURB A2-150	Conc CURB B2-100	Std GUTTER DEPRESSION
		m3			
C-1	Lt MR 0+80.00 TO 0+92.53	2.8			
C-1	Lt & Rt MR 1+25.00 TO 1+74.945		18		
C-1	Rt MR 1+25.00 TO 1+74.945			7	
-	SUBTOTAL	27.8			
DO-2	DRAINAGE FACILITY				2.36
TOTAL		30.16			

IRRIGATION CROSSOVERS

LOCATION LINE	LOCATION STATION	SIDE Rt	SIDE Lt	CONDUIT TYPE 3 SIZE (mm) DN 200 LENGTH (m)	(N) WATER LINE CROSSOVER SIZE (mm) DN	(N) SPRINKLER CONTROL CROSSOVER SIZE (mm) DN
MR	0+44	X	X	9.0	75	50
MR	0+90	X	X	25.0	75	50
MR	0+96	X		16.0	75	50
MR	1+45	X	X	10.0	75	50
MR	1+74	X	X	8.0	75	50
TOTAL				68.0		

(N) - NOT A SEPARATE PAY ITEM FOR INFORMATION ONLY
DN - DIAMETER NOMINAL
X - DENOTES REQUIREMENT

CONDUIT TYPE
(APPLICABLE WHEN CIRCLED BELOW AND SHOWN UNDER THE 'CONDUIT TYPE' COLUMN HEADING

1 BITUMINOUS COATED CORRUGATED STEEL PIPE (1.626 mm THICK)
2 CORRUGATED STEEL PIPE (1.626 mm THICK)
3 CORRUGATED HIGH DENSITY POLYTHENE PIPE
4 ALTERNATIVE CONDUIT

REGISTERED PROFESSIONAL ENGINEER Brian M. Wood No. 76969 Exp. 12-31-14 CIVIL STATE OF CALIFORNIA

FOR REVISIONS 1, 2 and 3 ONLY
Brian M Wood
06/03/13

MARK	DATE	DESCRIPTIONS	BY	CH'D	CCO NO.
3	06/03/13	Revise T7 Alignment	BW	AS	
2	05/07/13	Eastbound Viaduct Overlay	BW	AS	
1	11/08/12	Revised K-Rail Alignment	BW	BZ	

REVISIONS

CONTRACT CHANGE ORDER NO. 197
SHEET 10 OF 12

SUMMARY OF QUANTITIES

Q-2

STATE OF CALIFORNIA - DEPARTMENT OF TRANSPORTATION
DESIGN
FUNCTIONAL SUPERVISOR BOB ZANDIPOUR
CALCULATED-DESIGNED BY TRINH LAI
CHECKED BY BOB ZANDIPOUR
REVISED BY TL
DATE REVISED 10/07

LAST REVISION 05-20-08 DATE PLOTTED => 19-JUL-2013 TIME PLOTTED => 09:31

DIST	COUNTY	ROUTE	KILOMETER POST TOTAL PROJECT	SHEET No	TOTAL SHEETS
04	SF	80	12.6/13.2	790	806

REGISTERED CIVIL ENGINEER — DATE 11-09-11 — AKS

PLANS APPROVAL DATE

The State of California or its officers or agents shall not be responsible for the accuracy or completeness of electronic copies of this plan sheet.

REGISTERED PROFESSIONAL ENGINEER — M. J. CULLEN — No. C 40620 — Exp. 03-31-13 — CIVIL — STATE OF CALIFORNIA

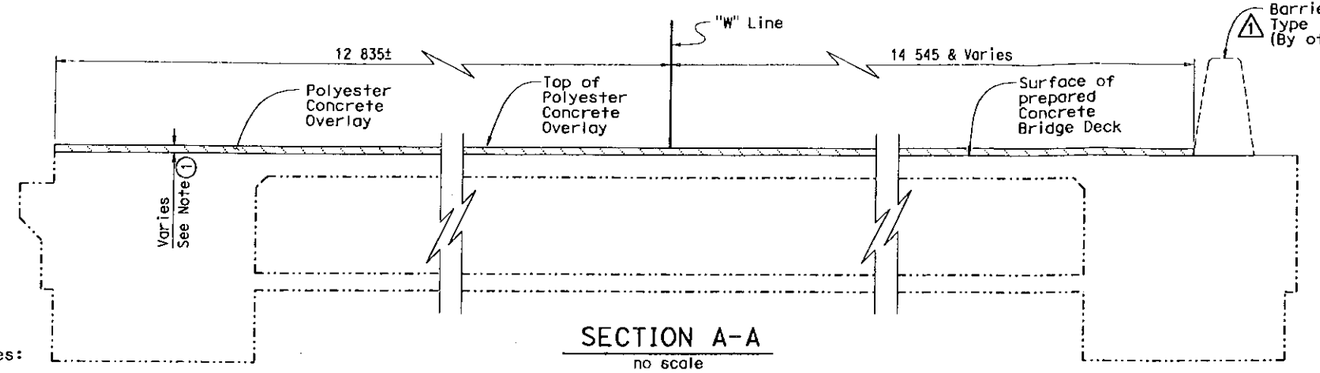

SECTION A-A

no scale

LEGEND:

- Prepare concrete bridge deck surface and place Polyester Concrete Overlay
- Remove 20 mm of existing concrete bridge deck surface and place Polyester Concrete Overlay

QUANTITIES

REMOVE CONCRETE DECK SURFACE	244	m^2
PREPARE CONCRETE BRIDGE DECK SURFACE	2 700	m^2
FURNISH POLYESTER CONCRETE OVERLAY	65	m^3
PLACE POLYESTER CONCRETE OVERLAY	2 980	m^2
PUBLIC SAFETY PLAN	LUMP SUM	
2 ~~CONCRETE BARRIER (TYPE 732 MODIFIED)~~	~~107~~	~~m~~

Notes:

1. Top of Polyester Concrete Overlay at Begin Bridge shall match deck grade of adjacent structure to the west. Thickness of Polyester Concrete will vary from 50 mm ± at Begin Bridge to 20 mm ± at 10 m east of Begin Bridge.
2. Limits of Seismic joint
3. This Portion of Barrier Rail (By others) shall be aligned with "YBI Transition Structure" Barrier. This Portion of Barrier Rail (By others) shall be modified for a 19 mm Cover Plate. For Limits and Details of modification, see "YBI Transition Structure, Deck Joint Details".

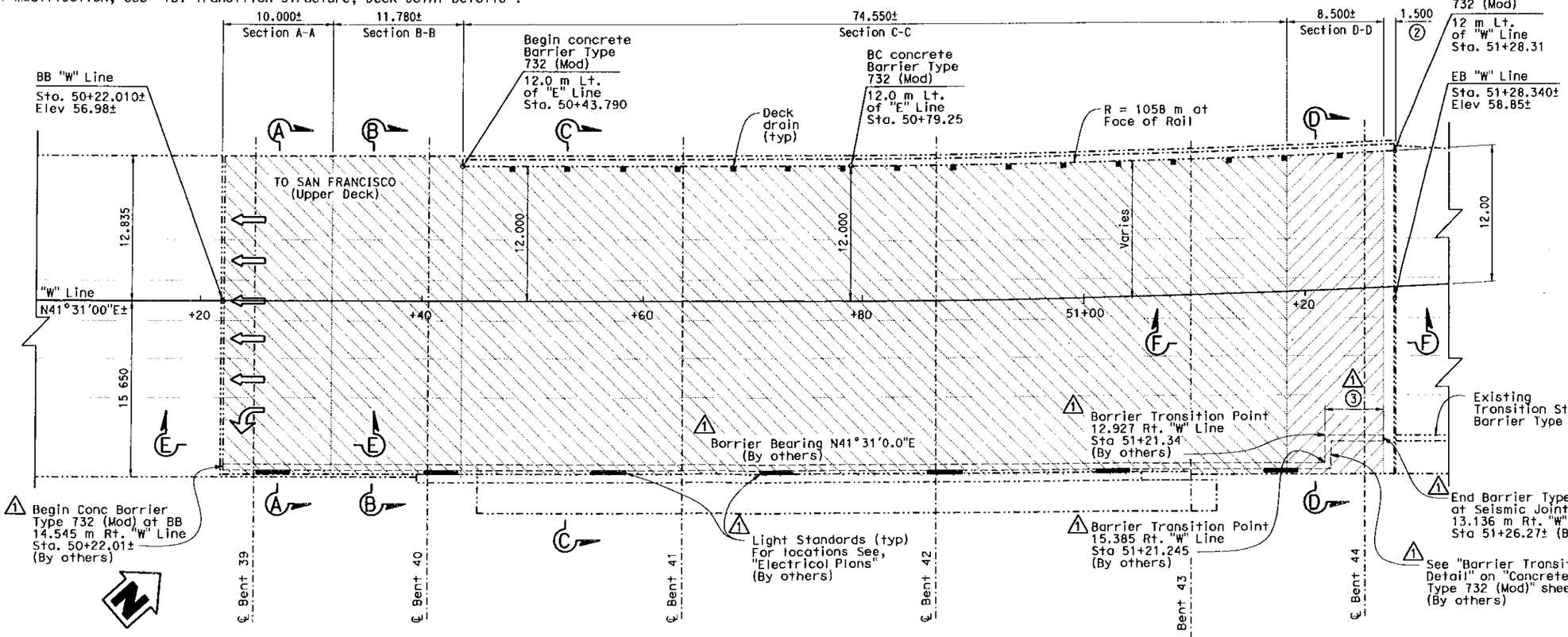

PLAN

1:200

MARK	DATE	REVISION(S) DESCRIPTIONS	DES	CHK	DET
2		DELETED NOTE			
1	07-01-13	MODIFIED NOTE	MJC	GS	GS

DATE: 07-10-13

REGISTERED CIVIL ENGINEER: M. J. Cullen

REGISTERED PROFESSIONAL ENGINEER — M. J. CULLEN — No. C 40620 — Exp. 03-31-13 — CIVIL — STATE OF CALIFORNIA

NOTE:
THE CONTRACTOR SHALL VERIFY ALL CONTROLLING FIELD DIMENSIONS BEFORE ORDERING OR FABRICATING ANY MATERIAL.

CONTRACT CHANGE ORDER NO. 197
SHEET 11 OF 12

Caltrans Metric

	BY	CHECKED
DESIGN	M. J. Cullen	G. M. Souza
DETAILS	G. M. Souza	M. J. Cullen
QUANTITIES	M. J. Cullen	G. M. Souza

DESIGN ENGINEER

LOAD & RESISTANCE FACTOR DESIGN — LIVE LOADING: HL93 W/"LOW-BOY" I PERMIT DESIGN VEHICLE

LAYOUT — BY M. J. Cullen — CHECKED G. M. Souza

SPECIFICATIONS — BY — PLANS AND SPECS COMPARED

ALL DIMENSIONS ARE IN METERS UNLESS OTHERWISE SHOWN

ORIGINAL SCALE IN MILLIMETERS FOR REDUCED PLANS 0 10 20 30 40 50 60 70 80 90 100

STATE OF CALIFORNIA
DEPARTMENT OF TRANSPORTATION

DIVISION OF ENGINEERING SERVICES
STRUCTURE DESIGN
DESIGN BRANCH 5

CU 04251
EA 0120S1

FILE => 34-0006-35-01-1a_dlgpS1.cco

BRIDGE NO. 34-0006 L/R
KILOMETER POST 12.8

DISREGARD PRINTS BEARING EARLIER REVISION DATES

REVISION DATES: 07-26-10 08-04-10 11-16-10 03-08-11 09-24-11 10-18-11

SHEET OF

SAN FRANCISCO OAKLAND BAY BRIDGE
EAST SPAN SEISMIC SAFETY PROJECT

YBI TRANSITION STRUCTURES

POLYESTER OVERLAY LAYOUT

STRUCTURES DESIGN GENERAL PLAN SHEET (METRIC) (REV.07-24-06)

USERNAME => s130021 DATE PLOTTED => 12-JUL-2013 TIME PLOTTED => 14:20

DIST	COUNTY	ROUTE	KILOMETER POST TOTAL PROJECT	SHEET No	TOTAL SHEETS
04	SF	80	12.6/13.9	790	806

ALS

REGISTERED CIVIL ENGINEER — DATE 11-09-11

2-21-12
PLANS APPROVAL DATE

REGISTERED PROFESSIONAL ENGINEER M. J. CULLEN No. C 40620 Exp. 03-31-13 CIVIL STATE OF CALIFORNIA

The State of California or its officers or agents shall not be responsible for the accuracy or completeness of electronic copies of this plan sheet.

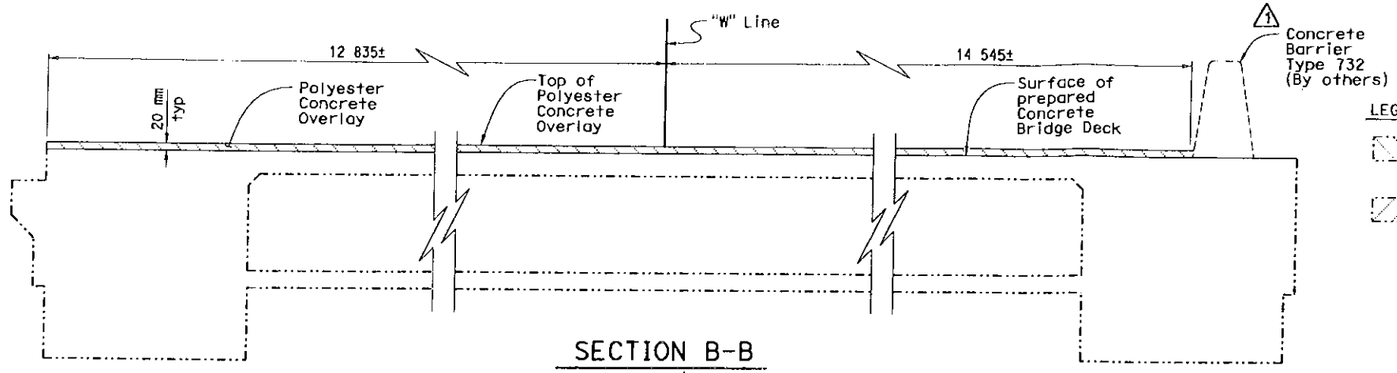

SECTION B-B
no scale

LEGEND:

Prepare concrete bridge deck surface and place Polyester Concrete Overlay

Remove 20 mm of existing concrete bridge deck surface and place Polyester Concrete Overlay

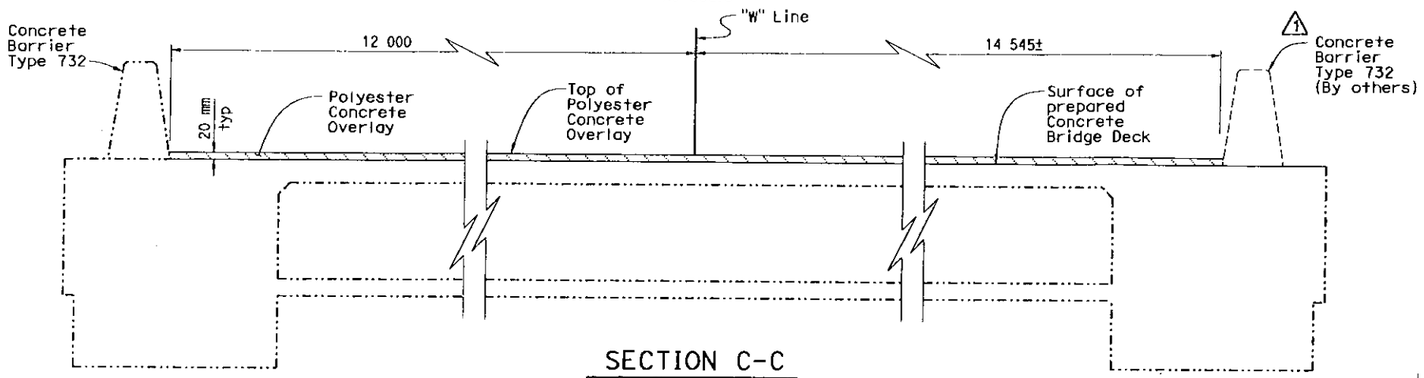

SECTION C-C
no scale

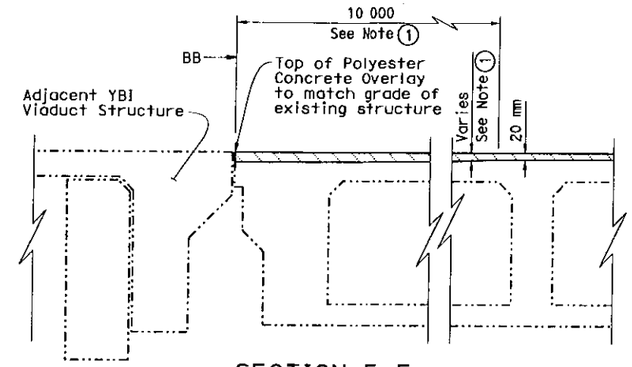

SECTION E-E
no scale

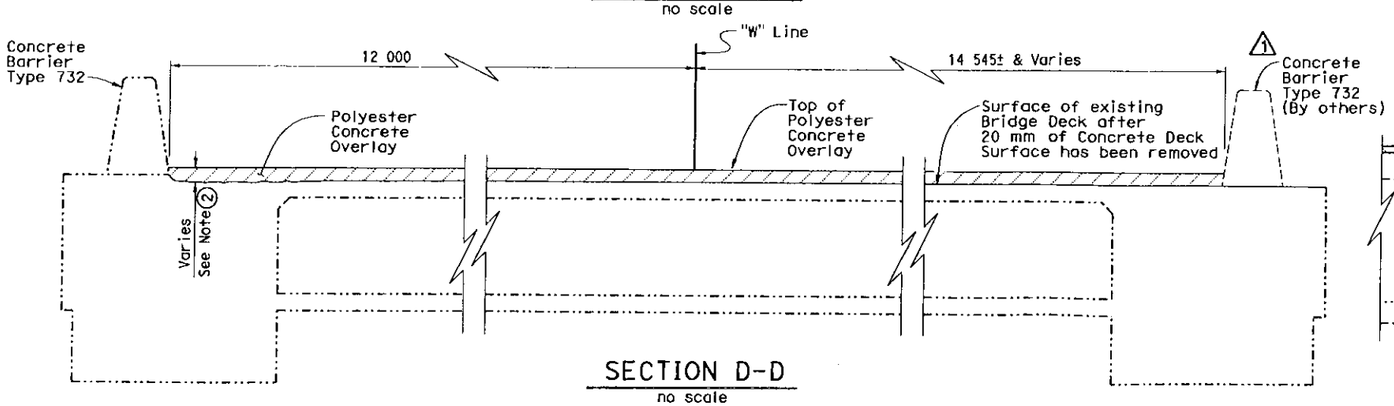

SECTION D-D
no scale

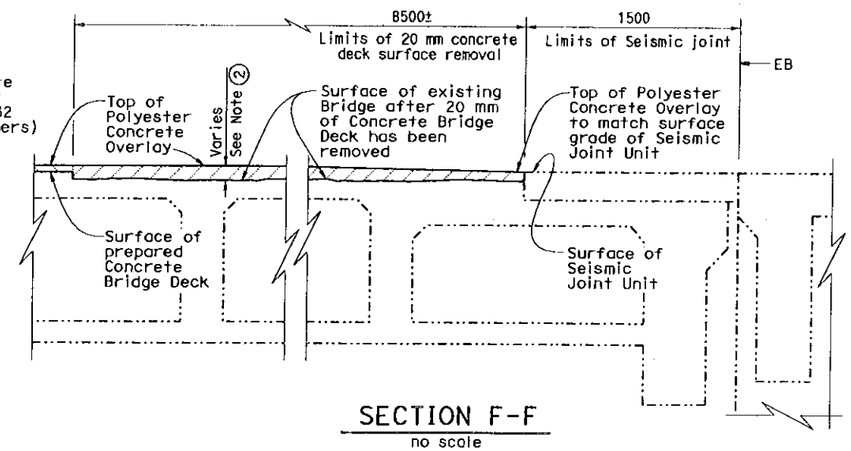

SECTION F-F
no scale

CONTRACT CHANGE ORDER NO. 197
SHEET 12 OF 12

NOTE:
THE CONTRACTOR SHALL VERIFY ALL CONTROLLING FIELD DIMENSIONS BEFORE ORDERING OR FABRICATING ANY MATERIAL.

REGISTERED PROFESSIONAL ENGINEER M. J. CULLEN No. C 40620 Exp. 03-31-15 CIVIL STATE OF CALIFORNIA

MARK	DATE	REVISION(S) DESCRIPTIONS	DES	CHK	DET
1	07-01-13	MODIFIED NOTE	MJC	GS	GS

REGISTERED CIVIL ENGINEER: M. J. Cullen — DATE: 07-10-13

Notes:

1. Top of Polyester Concrete Overlay at Begin Bridge shall match deck grade of adjacent structure to the west. Thickness of Polyester Concrete will vary from 50 mm ± at Begin Bridge to 20 mm ± at 10 m east of Begin Bridge.
2. Top of Polyester Concrete Overlay at End Bridge Seismic Joint unit shall match the surface grade of the Seismic Joint unit. Thickness of Polyester Concrete will vary from 40 mm ± at 10 m west of End Bridge to 20 mm ± at the Seismic Joint unit.

Caltrans Metric

	BY	CHECKED
DESIGN	M. J. Cullen	G. W. Souza
DETAILS	G. Souza/S. Jiang	M. J. Cullen
QUANTITIES	M. J. Cullen	G. W. Souza

ALL DIMENSIONS ARE IN MILLIMETERS UNLESS OTHERWISE SHOWN

ORIGINAL SCALE IN MILLIMETERS FOR REDUCED PLANS 0 10 20 30 40 50 60 70 80 90 100

STATE OF CALIFORNIA
DEPARTMENT OF TRANSPORTATION

DIVISION OF ENGINEERING SERVICES
STRUCTURE DESIGN
DESIGN BRANCH 5

CU 04251
EA 0120S1

FILE => 34-0006-36-02-2a-dt-detailsS1.cco

BRIDGE NO. 34-0006 L/R
KILOMETER POST 12.8

DISREGARD PRINTS BEARING EARLIER REVISION DATES → 07-06-10 08-06-10 11-06-10 03-02-11

REVISION DATES — SHEET — OF

SAN FRANCISCO OAKLAND BAY BRIDGE
EAST SPAN SEISMIC SAFETY PROJECT

YBI TRANSITION STRUCTURES

POLYESTER OVERLAY DETAILS

STRUCTURES DESIGN DETAIL SHEET (METRIC) (REV.03-17-04)

USERNAME => s130421 DATE PLOTTED => 12-JUL-2013 TIME PLOTTED => 14:20

STATE OF CALIFORNIA - DEPARTMENT OF TRANSPORTATION

CONTRACT CHANGE ORDER MEMORANDUM

DATE: 6/26/2013 Page 1 of 1

TO: Deanna Vilcheck, ACM	FILE: E.A. 04 - 0120S4
FROM: William Howe, Senior R.E.	CO-RTE-PM SF-80-12.7/13.2
	FED. NO. NO FED AID
CCO#: 197 SUPPLEMENT#: 0 Category Code: CJPT	CONTINGENCY BALANCE (incl. this change) $27,668,540.15
COST: $1,779,919.00 INCREASE ☑ DECREASE ☐	HEADQUARTERS APPROVAL REQUIRED? ☑ YES ☐ NO
SUPPLEMENTAL FUNDS PROVIDED: $0.00	IS THIS REQUEST IN ACCORDANCE WITH ENVIRONMENTAL DOCUMENTS? ☑ YES ☐ NO
CCO DESCRIPTION: Polyester Concrete Overlay @ West Tie-in	**PROJECT DESCRIPTION:** YBITS-1 (Yerba Buena Island Transition Structures)

Original Contract Time:	Time Adj. This Change:	Previously Approved CCO Time Adjustments:	Percentage Time Adjusted: (including this change)	Total # of Unreconciled Deferred Time CCO(s): (including this change)
1390 Day(s)	0 Day(s)	0 Day(s)	0 %	9

THIS CHANGE ORDER PROVIDES FOR:

This change order provides for revising the staging and additional changes related to the installation of polyester concrete overlay at the west tie-in structure on Yerba Buena Island. This work originally was included in the YBITS-2 contract, with the work scheduled for completion late 2014. The work is being advanced into the YBITS-1 contract in order to complete this portion of the poly overlay prior to the Seismic Safety Opening (SSO) of the Bridge. Since the other portions of the bridge (SAS, YBITS, OTD) and the YBI tunnel will have completed pavement surfaces for the SSO, this will allow all sections of the new bridge to have a completed pavement surface upon the SSO. Since the YBITS-2 Contractor has not yet moved appropriate field forces for this operation onto the contract site, the work will be deleted from the YBITS-2 contract (with a credit CCO being issued), and the YBITS-1 Contractor will complete this work under this CCO. The additional changes include repairs to the existing underlying pavement, and increased quantities due to making a transition from a roadway section with a grade break in the middle to a section with a planar cross-section.

The CCO will be issued as Extra Work at Force Account for $100,000.00; Adjustment of Compensation at Agreed Lump Sum for $887,332.00; Adjustment of Compensation at Agreed Unit Prices for $801,073.00; and Decrease in Contract Item for <$8,486.00>, for a total cost of $1,779,919.00, which will be financed from the contract's contingency fund. A cost analysis is on file.

This CCO was requested by Bob Zandipour, Toll Bridge Senior Transportation Engineer, Design, on May 7, 2013.

TBPOC approval was given at the 7/10/13 meeting (copy attached).

Maintenance concurrence will be obtained from Lina Ellis, Structures Maintenance.

No adjustment of contract time is warranted, as this change will not affect the controlling operation.

CONCURRED BY:			
Construction Engineer:	William Howe WBH	Date 07-26-13	
Bridge Engineer:	Mehran Ardakanian	Date	
Project Engineer:	Bob Zandipour, Design	Date 7-30-13	
Project Manager:	Ken Terpstra KT	Date 8-6-13	
FHWA Rep.:		Date	
Environmental:		Date	
Other (specify):	Lina Ellis, Str. Maintenance	Date 7-31-13	
Other (specify):		Date	
District Prior Approval By:		Date	
HQ (Issue Approve) By:	Larry Salhaney	Date 7-30-13	
Resident Engineer's Signature:	William Howe	Date 07.26.13	

ESTIMATE OF COST	THIS REQUEST	TOTAL TO DATE
ITEMS	($8,486.00)	($8,486.00)
FORCE ACCOUNT	$100,000.00	$100,000.00
AGREED PRICE	$0.00	$0.00
ADJUSTMENT	$1,688,405.00	$1,688,405.00
TOTAL	$1,779,919.00	$1,779,919.00

FEDERAL PARTICIPATION

☐ PARTICIPATING ☐ PARTICIPATING IN PART ☑ NONE
☐ NON-PARTICIPATING (MAINTENANCE) ☐ NON-PARTICIPATING

FEDERAL SEGREGATION (if more than one Funding Source or P.I.P. type)
☐ CCO FUNDED PER CONTRACT ☐ CCO FUNDED AS FOLLOWS

FEDERAL FUNDING SOURCE	PERCENT

ADA Notice: For individuals with sensory disabilities, this document is available in alternate formats. For information call: (916) 654-6410 or TDD (916) 654-3880 or write Records and Forms Management, 1120 N Street, MS-89, Sacramento, CA 95814

STATE OF CALIFORNIA - DEPARTMENT OF TRANSPORTATION

CONTRACT CHANGE ORDER

Change Requested by: Engineer

CCO 204	Suppl. No. 0	Contract No. 04 - 0120S4	Road SF-80-12.7/13.2	FED. AID LOC.: NO FED AID

To: M C M CONSTRUCTION INC

You are directed to make the following changes from the plans and specifications or do the following described work not included in the plans and specifications for this contract. ***NOTE: This change order is not effective until approved by the Engineer.***

Description of work to be done, estimate of quantities and prices to be paid. (Segregate between additional work at contract price, agreed price and force account.) Unless otherwise stated, rates for rental of equipment cover only such time as equipment is actually used and no allowance will be made for idle time. This last percentage shown is the net accumulated increase or decrease from the original quantity in the Engineer's Estimate.

Extra Work at Force Account:

As directed by the Engineer, provide labor, equipment and materials to clean, sandblast, waterblast, caulk, paint and patch tunnel walls, tunnel portal, barriers, curbs, gutters and various other elements located at or in the vicinity of the Bay Bridge Yerba Buena Island Tunnel.

This work will be paid for in accordance with Section 5-1.17, "Force Account Payment", of the Special Provisions and Section 4-1.03D, "Extra Work", of the Standard Specifications.

Estimated Cost of Extra Work at Force Account = $150,000.00

Estimated Cost: Increase ☑ Decrease ☐ $150,000.00

By reason of this order the time of completion will be adjusted as follows: 0 days

Signature	Resident Engineer FOR William Howe, Senior R.E.	Date 9-6-13
Signature	Area Construction Manager FOR Deanna Vilcheck	Date 9-6-13
Signature Deanna Vilcheck	Area Construction Manager Deanna Vilcheck	Date 10/8/13

We the undersigned contractor, have given careful consideration to the change proposed and agree, if this proposal is approved, that we will provide all equipment, furnish the materials, except as may otherwise be noted above, and perform all services necessary for the work above specified, and will accept as full payment therefor the prices shown above.

NOTE: If you, the contractor, do not sign acceptance of this order, your attention is directed to the requirements of the specifications as to proceeding with the ordered work and filing a written protest within the time therein specified.

Signature	(Print name and title) Edmundo A. Pucci - Treasurer	Date 9-30-2013

STATE OF CALIFORNIA - DEPARTMENT OF TRANSPORTATION

CONTRACT CHANGE ORDER MEMORANDUM

DATE: 9/4/2013 Page 1 of 1

TO: Deanna Vilcheck, ACM /	FILE: E.A. 04 - 0120S4
FROM: William Howe, Senior R.E.	CO-RTE-PM SF-80-12.7/13.2
	FED. NO. NO FED AID
CCO#: 204 SUPPLEMENT#: 0 Category Code: CHPT	CONTINGENCY BALANCE (incl. this change) $20,770,146.15
COST: $150,000.00 INCREASE ☑ DECREASE ☐	HEADQUARTERS APPROVAL REQUIRED? ☐ YES ☑ NO
SUPPLEMENTAL FUNDS PROVIDED: $0.00	IS THIS REQUEST IN ACCORDANCE WITH ENVIRONMENTAL DOCUMENTS? ☑ YES ☐ NO
CCO DESCRIPTION: clean/patch @ YBI tunnel & adjacent area	PROJECT DESCRIPTION: YBITS-1 (Yerba Buena Island Transition Structures)

Original Contract Time:	Time Adj. This Change:	Previously Approved CCO Time Adjustments:	Percentage Time Adjusted: (including this change)	Total # of Unreconciled Deferred Time CCO(s): (including this change)
1390 Day(s)	0 Day(s)	0 Day(s)	0 %	9

THIS CHANGE ORDER PROVIDES FOR:

Provide labor, equipment and materials to clean, sandblast, waterblast, caulk, paint and patch tunnel walls, tunnel portal, barriers, curbs, gutters and various other elements located at or in the vicinity of the Bay Bridge Yerba Buena Island Tunnel.

This project, the Yerba Buena Island Transition Structure (YBITS), provides for the construction of two bridges, which will connect eastbound and westbound traffic on the new east span of the San Francisco Oakland Bay Bridge (SFOBB) to the existing Yerba Buena Island (YBI) tunnel. With the opening of the new East Span involving a shutdown of all traffic, there was an opportunity to complete sandblasting and waterblasting to the existing tunnel and portal without the major concern of managing traffic through the area. This CCO will be implemented to complete the cleaning and patching of these items in a timely, safe and cost-effective manner.

This CCO provides for $150,000.00 in force account work, which will be paid for on an actual cost basis as provided in Section 5-1.17, "Force Account Payment", of the Special Provisions, and Section 4-1.03D, "Extra Work", of the Standard Specifications. This will be funded from the project's contingency fund. A cost analysis is on file.

No adjustment of contract time is warranted as the work will not affect the controlling operation.

Maintenance concurrence will be obtained from Lina Ellis, Structures Maintenance.

CONCURRED BY:		
Construction Engineer:	William Howe DISC	Date 9-6-13
Bridge Engineer:	Mehran Ardakanian	Date
Project Engineer:	Bob Zandipour, Design	Date 9-9-13
Project Manager:	Ken Terpstra	Date 9/20/13
FHWA Rep.:		Date
Environmental:		Date
Other (specify):	Lina Ellis, Str. Maintenance	Date 9-10-13
Other (specify):		Date
District Prior Approval By:		Date
HQ (Issue Approve) By:		Date
Resident Engineer's Signature:		Date 9-6-13

for Bill Howe

ESTIMATE OF COST	THIS REQUEST	TOTAL TO DATE
ITEMS	$0.00	$0.00
FORCE ACCOUNT	$150,000.00	$150,000.00
AGREED PRICE	$0.00	$0.00
ADJUSTMENT	$0.00	$0.00
TOTAL	$150,000.00	$150,000.00

FEDERAL PARTICIPATION

☐ PARTICIPATING ☐ PARTICIPATING IN PART ☑ NONE
☐ NON-PARTICIPATING (MAINTENANCE) ☐ NON-PARTICIPATING

FEDERAL SEGREGATION (if more than one Funding Source or P.I.P. type)
☐ CCO FUNDED PER CONTRACT ☐ CCO FUNDED AS FOLLOWS

FEDERAL FUNDING SOURCE	PERCENT

ADA Notice: For individuals with sensory disabilities, this document is available in alternate formats. For information call: (916) 654-6410 or TDD (916) 654-3880 or write Records and Forms Management, 1120 N Street, MS-89, Sacramento, CA 95814

STATE OF CALIFORNIA - DEPARTMENT OF TRANSPORTATION

CONTRACT CHANGE ORDER

Change Requested by: Engineer

CCO: 501	Suppl. No. 0	Contract No. 04 - 0120S4	Road SF-80-12.7/13.2	FED. AID LOC.: NO FED AID

To: **M C M CONSTRUCTION INC**

You are directed to make the following changes from the plans and specifications or do the following described work not included in the plans and specifications for this contract. ***NOTE: This change order is not effective until approved by the Engineer.***

Description of work to be done, estimate of quantities and prices to be paid. (Segregate between additional work at contract price, agreed price and force account.) Unless otherwise stated, rates for rental of equipment cover only such time as equipment is actually used and no allowance will be made for idle time. This last percentage shown is the net accumulated increase or decrease from the original quantity in the Engineer's Estimate.

Extra Work at Force Account:

Perform the following work as directed by the Engineer:

Investigate the location of existing utilities in the vicinity of the Oakland Touchdown Detour (OTDD), as directed by the Engineer.
The work involved will include: contacting Underground Service Alert (USA) ahead of time, coordinating with utility company locators; and potholing for various utilities as directed, using excavation equipment, hand digging, and "soft dig" technologies as appropriate.

Provide assistance in exposing and identifying existing utilities not shown on the Contract Plans or in the Special Provisions.

This work will be paid for in accordance with Section 5-1.17 "Force Account Payment" of the Special Provisions and Section 4-1.03D "Extra Work" of the Standard Specifications.

Estimated cost of Extra Work at Force Account $180,000.00

Estimated Cost: **Increase** ☑ **Decrease** ☐ **$180,000.00**

By reason of this order the time of completion will be adjusted as follows: 0 days

Submitted by

Signature	Resident Engineer	Date
Rajesh Oberoi	Rajesh Oberoi, Senior R.E.	11/9/10

Approval Recommended by

Signature	~~Resident Engineer~~	Date
Deanna Vilcheck	Area Construction Manager Deanna Vilcheck	11/10/10

Engineer Approval by

Signature	Area Construction Manager	Date
Deanna Vilcheck	Deanna Vilcheck	11/12/10

We the undersigned contractor, have given careful consideration to the change proposed and agree, if this proposal is approved, that we will provide all equipment, furnish the materials, except as may otherwise be noted above, and perform all services necessary for the work above specified, and will accept as full payment therefor the prices shown above.

NOTE: If you, the contractor, do not sign acceptance of this order, your attention is directed to the requirements of the specifications as to proceeding with the ordered work and filing a written protest within the time therein specified.

Contractor Acceptance by

Signature	(Print name and title)	Date
	EDMUNDO A. PUCHI, TREASURER	11/16/10

STATE OF CALIFORNIA - DEPARTMENT OF TRANSPORTATION

CONTRACT CHANGE ORDER MEMORANDUM

DATE: 10/19/2010 Page 1 of 1

TO: Deanna Vilcheck, ACM / DV

FROM: Rajesh Oberoi, Senior R.E.

FILE: E.A. 04 - 0120S4
CO-RTE-PM SF-80-12.7/13.2
FED. NO. NO FED AID

CCO#: 501 | SUPPLEMENT#: 0 | Category Code: CLXX

CONTINGENCY BALANCE (incl. this change) $27,813,732.00

COST: $180,000.00 INCREASE ☑ DECREASE ☐

HEADQUARTERS APPROVAL REQUIRED? ☐ YES ☑ NO

SUPPLEMENTAL FUNDS PROVIDED: $0.00

IS THIS REQUEST IN ACCORDANCE WITH ENVIRONMENTAL DOCUMENTS? ☑ YES ☐ NO

CCO DESCRIPTION:
OTDD Utility Investigation and Potholing

PROJECT DESCRIPTION:
YBITS-1 (Yerba Buena Island Transition Structures)

Original Contract Time:	Time Adj. This Change:	Previously Approved CCO Time Adjustments:	Percentage Time Adjusted: (including this change)	Total # of Unreconciled Deferred Time CCO(s): (including this change)
1390 Day(s)	0 Day(s)	0 Day(s)	0 %	0

THIS CHANGE ORDER PROVIDES FOR:

Compensating the Contractor for potholing and locating existing utilities in the vicinity of the Oakland Touchdown Detour (OTDD), as directed by the Engineer.

This contract calls for the construction of the Yerba Buena Island Transition structures of the east span of the new San Francisco Oakland Bay Bridge (SFOBB). In a memo dated October 3, 2010, Brian Maroney, Deputy Toll Bridge Program Manager recommended to the Toll Bridge Program Oversight Committee (TBPOC) that the advance work to the Temporary OTD Eastbound Detour work will be by Contract Change Order. This recommendation was approved by the TBPOC in their October 7, 2010 meeting.

As the first order of business for the design of this work, the contractor will conduct investigations of the existing utilities in the area.

Payment for this work will be made as Extra Work at Force Account for an estimated cost of $180,000.00, which can be financed from the projects contingency fund . A cost analysis is on file.

This Change Order received concurrence from Deanna Vilcheck, Area Construction Manager.

No adjustment of contract time is warranted, as this change will not affect the controlling operation.

Maintenance concurrence is not required, as this work does not affect any permanent features.

CONCURRED BY:

Construction Engineer:	Rajesh Oberoi	Date 11/9/10
Bridge Engineer:		Date
Project Engineer:		Date
Project Manager:	Ken Terpstra	Date 11-17-10
FHWA Rep.:		Date
Environmental:		Date
Other (specify):	Charles HO, PE	Date 11-18-10
Other (specify):	Jaime Gutierrez, PE	Date 11-18-10
District Prior Approval By:		Date
HQ (Issue Approve) By:		Date
Resident Engineer's Signature:	Rajesh Oberoi	Date 11/9/10

ESTIMATE OF COST

	THIS REQUEST	TOTAL TO DATE
ITEMS	$0.00	$0.00
FORCE ACCOUNT	$180,000.00	$180,000.00
AGREED PRICE	$0.00	$0.00
ADJUSTMENT	$0.00	$0.00
TOTAL	$180,000.00	$180,000.00

FEDERAL PARTICIPATION

☐ PARTICIPATING ☐ PARTICIPATING IN PART ☑ NONE
☐ NON-PARTICIPATING (MAINTENANCE) ☐ NON-PARTICIPATING

FEDERAL SEGREGATION (if more than one Funding Source or P.I.P. type)
☑ CCO FUNDED PER CONTRACT ☐ CCO FUNDED AS FOLLOWS

FEDERAL FUNDING SOURCE	PERCENT

ADA Notice: For individuals with sensory disabilities, this document is available in alternate formats. For information call: (916) 654-6410 or TDD (916) 654-3880 or write Records and Forms Management, 1120 N Street, MS-89, Sacramento, CA 95814.

STATE OF CALIFORNIA - DEPARTMENT OF TRANSPORTATION

CONTRACT CHANGE ORDER

Change Requested by: Engineer

CCO: 502	Suppl. No. 0	Contract No. 04 - 0120S4	Road SF-80-12.7/13.2	FED. AID LOC.: NO FED AID

To: **M C M CONSTRUCTION INC**

You are directed to make the following changes from the plans and specifications or do the following described work not included in the plans and specifications for this contract. ***NOTE: This change order is not effective until approved by the Engineer.***

Description of work to be done, estimate of quantities and prices to be paid. (Segregate between additional work at contract price, agreed price and force account.) Unless otherwise stated, rates for rental of equipment cover only such time as equipment is actually used and no allowance will be made for idle time. This last percentage shown is the net accumulated increase or decrease from the original quantity in the Engineer's Estimate.

Extra Work at Force Account:

Provide advance survey work pertaining to the proposed Oakland Touchdown detour as determined by the Engineer.

This work will be paid for in accordance with Section 5-1.17 "Force Account Payment" of the Special Provisions and Section 4-1.03D "Extra Work" of the Standard Specifications.

Estimated cost of Extra Work at Force Account $150,000.00

Estimated Cost: Increase ☑ **Decrease** ☐ **$150,000.00**

By reason of this order the time of completion will be adjusted as follows: 0 days

Submitted by

Signature	Resident Engineer	Date
Rajesh Oberoi	Rajesh Oberoi, Senior R.E.	11/9/10

Approval Recommended by

Signature	Area Construction Manager	Date
Deanna Vilcheck	Deanna Vilcheck	11/10/10

Engineer Approval by

Signature	Area Construction Manager	Date
Deanna Vilcheck	Deanna Vilcheck	11/22/10

We the undersigned contractor, have given careful consideration to the change proposed and agree, if this proposal is approved, that we will provide all equipment, furnish the materials, except as may otherwise be noted above, and perform all services necessary for the work above specified, and will accept as full payment therefor the prices shown above.

NOTE: If you, the contractor, do not sign acceptance of this order, your attention is directed to the requirements of the specifications as to proceeding with the ordered work and filing a written protest within the time therein specified.

Contractor Acceptance by

Signature	(Print name and title)	Date
	EDMUNDO A. PUCHI, TREASURER	11/16/10

STATE OF CALIFORNIA - DEPARTMENT OF TRANSPORTATION

CONTRACT CHANGE ORDER MEMORANDUM

TO: Deanna Vilcheck, ACM / DV	FILE: E.A. 04 - 0120S4
FROM: Rajesh Oberoi, Senior R.E.	CO-RTE-PM SF-80-12.7/13.2
	FED. NO. NO FED AID
CCO#: 502 SUPPLEMENT#: 0 Category Code: BZZZ	CONTINGENCY BALANCE (incl. this change) $28,407,142.00
COST: $150,000.00 INCREASE ☑ DECREASE ☐	HEADQUARTERS APPROVAL REQUIRED? ☐ YES ☑ NO
SUPPLEMENTAL FUNDS PROVIDED: $0.00	IS THIS REQUEST IN ACCORDANCE WITH ENVIRONMENTAL DOCUMENTS? ☑ YES ☐ NO
CCO DESCRIPTION: OTDD advance survey work	**PROJECT DESCRIPTION:** YBITS-1 (Yerba Buena Island Transition Structures)

Original Contract Time:	Time Adj. This Change:	Previously Approved CCO Time Adjustments:	Percentage Time Adjusted: (including this change)	Total # of Unreconciled Deferred Time CCO(s): (including this change)
1390 Day(s)	0 Day(s)	0 Day(s)	0 %	0

THIS CHANGE ORDER PROVIDES FOR:

Advance survey work pertaining to the proposed Oakland Touchdown (OTD) detour.

This project, the Yerba Buena Island Transition Structure (YBITS), provides for the construction of two bridges which will connect eastbound and westbound traffic on the new east span of the San Francisco Oakland Bay Bridge (SFOBB) to the existing Yerba Buena Island (YBI) tunnel. The structures are comprised of concrete box girder bridges each approximately 26 meters wide, 40 meters high and 450 meters in length.

Toll Bridge construction has recently developed a plan to construct a detour at the eastern end of the SFOBB that will advance the Department's goal of the seismic safety opening of the new east span by the end of 2013. The proposed detour would shift existing traffic to the south to allow for the partial removal of the eastern end of the existing westbound structure. This in turn would advance the construction of the new eastbound span of the new structure.

The Toll Bridge Program Oversight Committee (TBPOC) approved the advancement of the design of this proposed detour at their October 7, 2010 meeting. As part of this approval, this contract will provide field survey assistance to Project Development on an as needed basis. This change order provides for this survey work.

In anticipation of this and potentially other work being performed under this contract, Change Order No. 13 was executed to extend the project's job limits to include the area encompassing the proposed OTD detour.

Compensation shall be paid as extra work at force account at an estimated cost of $150,000.00 which shall be financed from the contract's contingency funds. A cost analysis is on file.

No adjustment of contract time is warranted as this work will not affect the controlling operation.

Maintenance concurrence is not required as this change doesn't affect any permanent roadway features.

ADA Notice: For individuals with sensory disabilities, this document is available in alternate formats. For information call: (916) 654-6410 or TDD (916) 654-3880 or write Records and Forms Management, 1120 N Street, MS-89, Sacramento, CA 95814.

CONCURRED BY:		
Construction Engineer:	Rajesh Oberoi	Date 11-9-10
Bridge Engineer:	Mehran Ardakanian	Date 11/23/10
Project Engineer:		Date
Project Manager:	Ken Terpstra	Date 11-17-10
FHWA Rep.:		Date
Environmental:		Date
Other (specify):	Charles HO, PE	Date 11-18-10
Other (specify):	Jaime Gutierrez, PE	Date 11-18-10
District Prior Approval By:		Date
HQ (Issue Approve) By:		Date
Resident Engineer's Signature:	Rajesh Oberoi	Date 11-18-10

ESTIMATE OF COST

	THIS REQUEST	TOTAL TO DATE
ITEMS	$0.00	$0.00
FORCE ACCOUNT	$150,000.00	$150,000.00
AGREED PRICE	$0.00	$0.00
ADJUSTMENT	$0.00	$0.00
TOTAL	$150,000.00	$150,000.00

FEDERAL PARTICIPATION

☐ PARTICIPATING ☐ PARTICIPATING IN PART ☑ NONE
☐ NON-PARTICIPATING (MAINTENANCE) ☐ NON-PARTICIPATING

FEDERAL SEGREGATION (if more than one Funding Source or P.I.P. type)
☑ CCO FUNDED PER CONTRACT ☐ CCO FUNDED AS FOLLOWS

FEDERAL FUNDING SOURCE	PERCENT

ADA Notice: For individuals with sensory disabilities, this document is available in alternate formats. For information call: (916) 654-6410 or TDD (916) 654-3880 or write Records and Forms Management, 1120 N Street, MS-89, Sacramento, CA 95814.